RCA Victor TV

SCHEMATIC DIAGRAMS

COLOR MODEL CT-100 INCLUDED

Wallace's TELAIDES

*Registered Trade Mark

Publication of this book was made possible through the Courtesy and Co-operation of R.C.A. Victor.

1946-1954

$2.50

....Talk about Convenience!

In response to your many requests, there will shortly be available the new **TELEBINDER**, designed especially for use with Wallace's **TELAIDES**. Ruggedly constructed, the binder has metal rings which open or close instantly for the addition or removal of material. Pages lie flat when the **TELEBINDER** is opened. The **TELAIDES** you now own are punched to fit exactly the rings of this new binder.

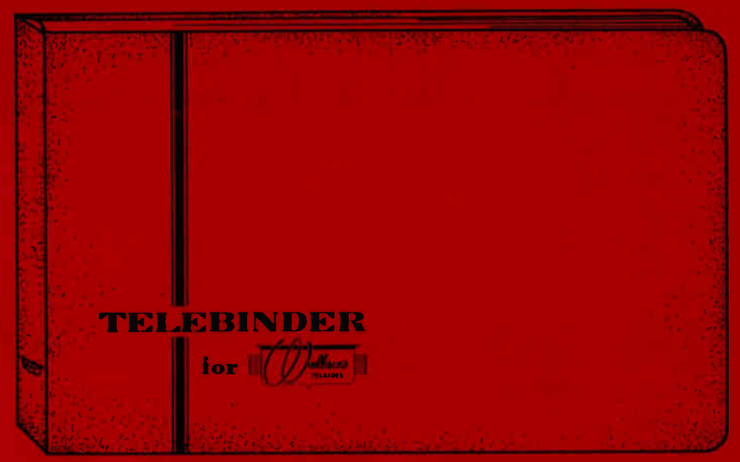

ANNOUNCING THE

TELEBINDER

THE TELEBINDER IS CONSTRUCTED SO AS TO HAVE A LONG AND USEFUL LIFE.

- Cover material is extremely tough, flexible and attractively stamped.
- No tugging at the rings, or jammed fingers--separate levers at opposite ends of the binder spine instantly open or close the twenty-two steel rings.
- Binder and cover are brass riveted.

USE TELEBINDERS FOR:

- Combining **TELAIDES** for several manufacturers into a single traveling service reference book!
- Combining 1954 and other added information for a single manufacturer, with the initial **TELAIDE** covering 1946-1953, into one convenient unit!
- Collating information in any other manner to fit your individual needs.

YOUR JOBBER WILL ACCEPT YOUR ORDER NOW, SO THAT YOU WILL BE ABLE TO ENJOY THE ADVANTAGES OF TELEBINDERS JUST AS SOON AS THEY ARE AVAILABLE.

Wallace's TELAIDES

134-136 DAY STREET, JAMAICA PLAIN 30, MASSACHUSETTS

RCA-1 8-54 10M

now ready!

Is your **TELAIDE** *library up to date?*

EMERSON
MOTOROLA
ADMIRAL
ZENITH
SYLVANIA
PHILCO
CROSLEY
RAYTHEON
WESTINGHOUSE
GENERAL ELECTRIC
R.C.A. VICTOR

COMBINATION No. 1:
Stromberg-Carlson, Kaye-Halbert, Starrett

COMBINATION No. 2:
Arvin, Trav-ler, Philmore

COMBINATION No. 3: (1954 Models)
Admiral, Motorola, Westinghouse
Sylvania, Arvin, Trav-ler

COMBINATION No. 4: (1954 Models)
Philco, Emerson, Zenith, Crosley
Raytheon, Stromberg-Carlson

RCA Victor TV

model-chassis index

Model	Chassis	Page
PTU-1*		2
621TS		3
630TCS		4
630TS		5
641TV		6
648PTK		7
648PV		8
721TCS		9
721TS		10
730TV1		11
730TV2		11
741PC5		12
8PCS41		13
8PCS41-B		13
8PCS41-C		13
8T241		14
8T243		14
8T244		14
8T270		15
8TC270		15
8TC271		15
8TK29		16
8TK320		17
8TR29		16
8T530		18
8TV41		19
8TV321		20
8TV323		20
9PC41		21
9T240		22
9T246		23
9T256		24
9T270		25
9TC240		22
9TC245		26
9TC247		26
9TC249		26
9TC272		25
9TC275		25
9TW309		27
9TW333		28
9TW390		29
S1000	KCS31-1	30
T100	KCS38	31
T120	KCS34C	32
T121	KCS34C	32
T164	KCS40	33
TA128	KCS42A	34
TA129	KCS41A-1	35
TA169	KC543	36
TC124	KCS34B	32

*Projection Model Chassis PTU-1 used in Berkshire Models B1, A, B, C; B2-C, F, G, H; B3-A, B; B4-A, B, C; B5-A, B; and Clubman Models CL-1, 2, 3, 4 and 5.

Model	Chassis	Page
TC125	KCS34B	32
TC127	KCS34B	32
TC165	KCS40A	33
TC166	KCS40A	33
TC167	KCS40A	33
TC168	KCS40A	33
2T51	KCS45	37
2T60	KCS45A	37
2T81	KCS46	38
4T101	KCS61	39
4T141	KC562	40
6T53	KCS47	41
6T53	KCS47T	42
6T54	KCS47	41
6T54	KCS47T	42
6T64	KCS47A	41
6T64	KCS47AT	42
6T65	KCS47A	41
6T65	KCS47AT	42
6T71	KCS47A	41
6T71	KCS47AT	42
6T72	KCS40B	43
6T74	KCS47A	41
6T74	KCS47AT	42
6T75	KCS47A	41
6T75	KCS47AT	42
6T76	KCS47A	41
6T76	KCS47AT	42
6T84	KCS48	47
6T84	KCS48T	45
6T86	KCS48	47
6T86	KCS48T	45
6T87	KCS48	47
6T87	KCS48T	45
7T103	KCS47B	46
7T103B	KCS47F	47
7T104	KCS47B	46
7T104B	KCS47F	47
7T111B	KCS47GF-2	48
7T112	KCS47C	46
7T112B	KCS47G	47
7T122	KCS47C	46
7T122B	KCS47G	47
7T123	KCS47C	46
7T123B	KCS47G	47
7T124	KCS47C	46
7T125B	KCS47G	47
7T132	KCS47D	49
7T143	KCS48A	50
9T57	KCS49	51
9T57	KCS49T	52
9T77	KCS49A	51
9T77	KCS49AT	52
9T79	KCS49A	51
9T79	KCS49AT	52
9T89	KC560	53
9T89	KCS60T	54

Model	Chassis	Page
9T105	KCS49B	55
9T105	KCS49BF	55
9T105	KCS49BF-2	56
9T126	KCS49C	55
9T126	KCS49F	55
9T126	KCS49CF-2	56
9T128	KCS49C	55
9T128	KCS49F	55
9T128	KCS49CF-2	56
9T147	KCS60A	57
16T152	KCS47E	58
17-S-350	KCS78F	69
17-S-350U	KCS78H	70
17-S-351	KCS78F	69
17-S-351U	KCS78H	70
17-S-360	KCS78F	69
17-S-360U	KCS78H	70
17-T-150	KCS66C	67
17-T-151	KCS66C	67
17 T-153	KCS66	59
17-T-154	KCS66	59
17-T-155	KCS66	59
17-T-160	KCS66	59
17-T-150	KCS66A	59
17-T-162	KCS66A	59
17-T-163	KCS66C	67
17-T-172	KCS66A	59
17-T-172K	KCS66D	60
17-T-173	KCS66A	59
17-T-173K	KCS66D	60
17-T-174	KCS66A	59
17-T-174K	KCS66D	60
17 T-200	KCS72	63
17-T-201	KCS72	63
17-T-202	KCS72	63
17-T-211	KCS72	63
17-T-220	KCS72	63
17-T-250DE	KCS74	64
17-T-261DE	KCS74	64
17-T-301	KCS78	71
17-T-301	KCS78A	72
17-T-301U	KCS78B	73
17-T-302	KCS78A	72
17-T-302	KCS78	71
17-T-302U	KCS78B	73
17-T-310	KCS78	71
17-T-310	KCS78A	72
17-T-310U	KCS78B	73
17-T-352U	KCS78J	74
17-T-361	KCS78F	69
17-T-361U	KCS78J	74
21-D-305	KCS81	75
21-D-305U	KCS81B	75
21-D-317	KCS81	75
21-D-317U	KCS81B	75
21-D-326	KCS81	75
21-D-326U	KCS81B	75

Model	Chassis	Page
21-D-327	KCS81	75
21-D-327U	KCS81B	75
21-D-328	KCS81	75
21-D-328U	KCS81B	75
21-D-329	KCS81	75
21-D-329U	KCS81B	75
21-D-330	KCS81	75
21-D-330U	KCS81B	75
21-D-346	KCS81D	76
21-D-346U	KCS81E	76
21-D-358	KCS81F	78
21-D-358U	KCS81J	77
21-D-368	KCS81F	78
21-D-368U	KCS81J	77
21-D-376	KCS81F	78
21-D-376U	KCS81J	77
21-D-377	KCS81F	78
21-D-377U	KCS81J	77
21-D-378	KCS81F	78
21-D-378U	KCS81J	77
21-D-379	KCS81F	78
21-D-379U	KCS81J	77
21-D-380	KCS81F	78
21-D-380U	KCS81J	77
21-D-395	KCS81H	79
21-D-395U	KCS81K	80
21-D-527	KC590	103
21-D-527U	KC590A	104
21-S-348	KCS83PJ	82
21-S-348U	KCS83PD	83
21-S-348G	KCS83PJ	82
21-S-348G	KCS83PL	81
21-S-348GU	KCS83PM	83
21-S-348K	KCS88 & A	97
21-S-348KU	KCS88F or H	98
21-S-353	KCS83C	82
21-S-353U	KCS83D	83
21-S-353G	KCS83C	82
21-S-353G	KCS83PC	82
21-S-353G	KCS83PK	81
21-S-353GU	KCS83D	83
21-S-353GU	KCS83PD	83
21-S-354	KCS83C	82
21-S-354U	KCS83D	83
21-S-354G	KCS83C	82
21-S-354G	KCS83PC	82
21-S-354G	KCS83PK	81
21-S-354GU	KCS83D	83
21-S-354GU	KCS83PD	83
21-S-355	KCS83C	82
21-S-355U	KCS83D	83
21-S-355G	KCS83C	82
21-S-355G	KCS83PC	82
21-S-355G	KCS83PK	81
21-S-355GU	KCS83D	83
21-S-355GU	KCS83PD	83
21-S-355K	KCS88 & A	97

Model	Chassis	Page
21-S-355KU	KCS88F or H	98
21-S-357G	KCS83C	82
21-S-357G	KCS83PC	82
21-S-357G	KCS83PK	81
21-S-357GU	KCS83D	83
21-S-357GU	KCS83PD	83
21-S-357K	KCS88 & A	97
21-S-357KU	KCS88F or H	98
21-S-359G	KCS83C	82
21-S-359G	KCS83PC-G	82
21-S-359G	KCS83PK	81
21-S-359GU	KCS83D	83
21-S-359GU	KCS83PD	83
21-S-362M	KCS83	82
21-S-362MU	KCS83A	83
21-S-362G	KCS83C	82
21-S-362G	KCS83PC	82
21-S-362G	KCS83PK	81
21-S-362GU	KCS83D	83
21-S-362GU	KCS83PD	83
21-S-362K	KCS88 & A	97
21-S-362KU	KCS88F or H	98
21-S-367	KCS83	82
21-S-367U	KCS83A	83
21-S-367G	KCS83C	82
21-S-367G	KCS83PC	82
21-S-367G	KCS83PK	81
21-S-367GU	KCS83D	83
21-S-367GU	KCS83PD	83
21-S-367K	KCS88 & A	97
21-S-367KU	KCS88F or H	98
21-S-369G	KCS83C	82
21-S-369G	KCS83PC	82
21-S-369G	KCS83PK	81
21-S-369GU	KCS83D	83
21-S-369GU	KCS83PD	83
21-S-369K	KCS88 & A	97
21-S-369KU	KCS88F or H	98
21-S-501	KCS88C	101
21-S-501U	KCS88K	102
21-S-502	KCS88C	101
21-S-502U	KCS88K	102
21-S-503	KCS88B	101
21-S-503U	KCS88J	102
21-S-504	KCS88B	101
21-S-504U	KCS88J	102
21-S-505	KCS88B	101
21-S-505U	KCS88J	102
21-S-506	KCS88B	101
21-S-506U	KCS88J	102
21-S-517	KCS88B	101
21-S-517U	KCS88J	102
21-S-518	KCS88C	101
21-S-518U	KCS88K	102
21-S-519	KCS88B	101
21-S-519U	KCS88J	102
21-S-521	KCS88B	101

Model	Chassis	Page
21-S-521U	KCS88J	102
21-S-522	KCS88B	101
21-S-522U	KCS88J	102
21-S-523	KCS88V	101
21-S-523U	KCS88VA	102
21-S-525	KCS88B	101
21-S-525U	KCS88J	102
21-S-526	KCS88E	101
21-S-526U	KCS88M	102
21-S-537	KCS88D	101
21-S-537U	KCS88L	102
21-S-5251	KCS88B	101
21-S-5251U	KCS88J	102
21-S-5252	KCS88B	101
21-S-5252U	KCS88J	102
21-T-159	KCS68E	61
21-T-159DE	KCS68F	62
21-T-165	KCS68E	61
21-T-166DE	KCS68F	62
21-T-174DE	KCS68F	62
21-T-176	KCS68C	61
21-T-177	KCS68C	61
21-T-178	KCS68C	61
21-T-178DE	KCS68F	62
21-T-179	KCS68C	61
21-T-179DE	KCS68F	62
21-T-197DE	KCS68F	65
21-T-207	KCS72A	66
21-T-207G	KCS72A	66
21-T-208	KCS72A	66
21-T217	KCS72A	66
21-T-218	KCS72A	66
21-T-227	KCS72A	66
21-T-228	KCS72A	66
21-T-229	KCS72A	66
21-T-242	KCS72D	68
21-T-244	KCS72D	68
21-T-303	KCS82	84
21-T-303	KCS82A	85
21-T-303U	KCS82B	86
21-T-313	KCS82	84
21-T-313	KCS82A	85
21-T-313U	KCS82B	86
21-T-314	KCS82	84
21-T-314	KCS82A	85
21-T-314U	KCS82B	86
21-T-315	KCS82	84
21-T-315	KCS82A	85
21-T-315U	KCS82B	86
21-T-316	KCS82	84
21-T-316	KCS82A	85
21-T-316U	KCS82B	86
21-T-322	KCS82	84
21-T-322	KCS82A	85
21-T-322U	KCS82B	86
21-T-323	KCS82	84
21-T-323	KCS82A	85

Model	Chassis	Page
21-T-323U	KCS82B	86
21-T-324	KCS82	84
21-T-324	KCS82A	85
21-T-324U	KCS82B	86
21-T-342	KCS82D	87
21-T-342U	KCS82E	87
21-T-344	KCS82D	87
21-T-344U	KCS82E	87
21-T-356		
21-T-356U	KCS83E	89
21-T-363	KCS83	88
21-T-363U	KCS83B	89
21-T-364	KCS83	88
21-T-364U	KCS83B	89
21-T-365	KCS83	88
21-T-365U	KCS83B	89
21-T-372	KCS83	88
21-T-372U	KCS83B	89
21-T-373	KCS83	88
21-T-373U	KCS83B	89
21-T-374	KCS83	88
21-T-374U	KCS83B	89
21-T-375	KCS83	88
21-T-375U	KCS83B	89
21-T-392	KCS83F	90
21-T-392U	KCS83H	91
21-T-393	KCS83F	90
21-T-393U	KCS83H	91
24-D-542	KCS89	105
24-D-542U	KCS89A	106
24-D-543	KCS89	105
24-D-543U	KCS89A	106
24-D-544	KCS89B	105
24-D-544U	KCS89C	106
24-S-529	KCS84F	99
24-S-529U	KCS84H	100
24-S-531	KCS84J	99
24-S-531U	KCS84K	100
24-S-532	KCS84F	99
24-S-532U	KCS84H	100
24-T-420	KCS84C	92
24-T-420U	KCS84E	93
24-T-435	KCS84C	92
24-T-435U	KCS84E	93
27-D-331	KCS77A	94
27-D-331U	KCS77B	94
27-D-382	KCS77C, F	95
27-D-382U	KCS77D, H	96
27-D-383	KCS77C, F	95
27-D-383U	KCS77D, H	96
27-D-384	KCS77C, F	95
27-D-384U	KCS77D, H	96

Model	Chassis	Page
COLOR TV		
CT100	CTC2	107, 8, 9
RADIOS		
RC1111A		111
RC1111B		111
RC1111C		111
RC1117B		111
UHF Convertors		110

PTU-1

PROJECTION MODEL

The PTU-1 is used in

Berkshire models B1-A, B, C; B2-C, F, G, H; B3-A, B; B4-A, B, C; B5-A, B;

Clubmon models CL-1, 2, 3, 5.

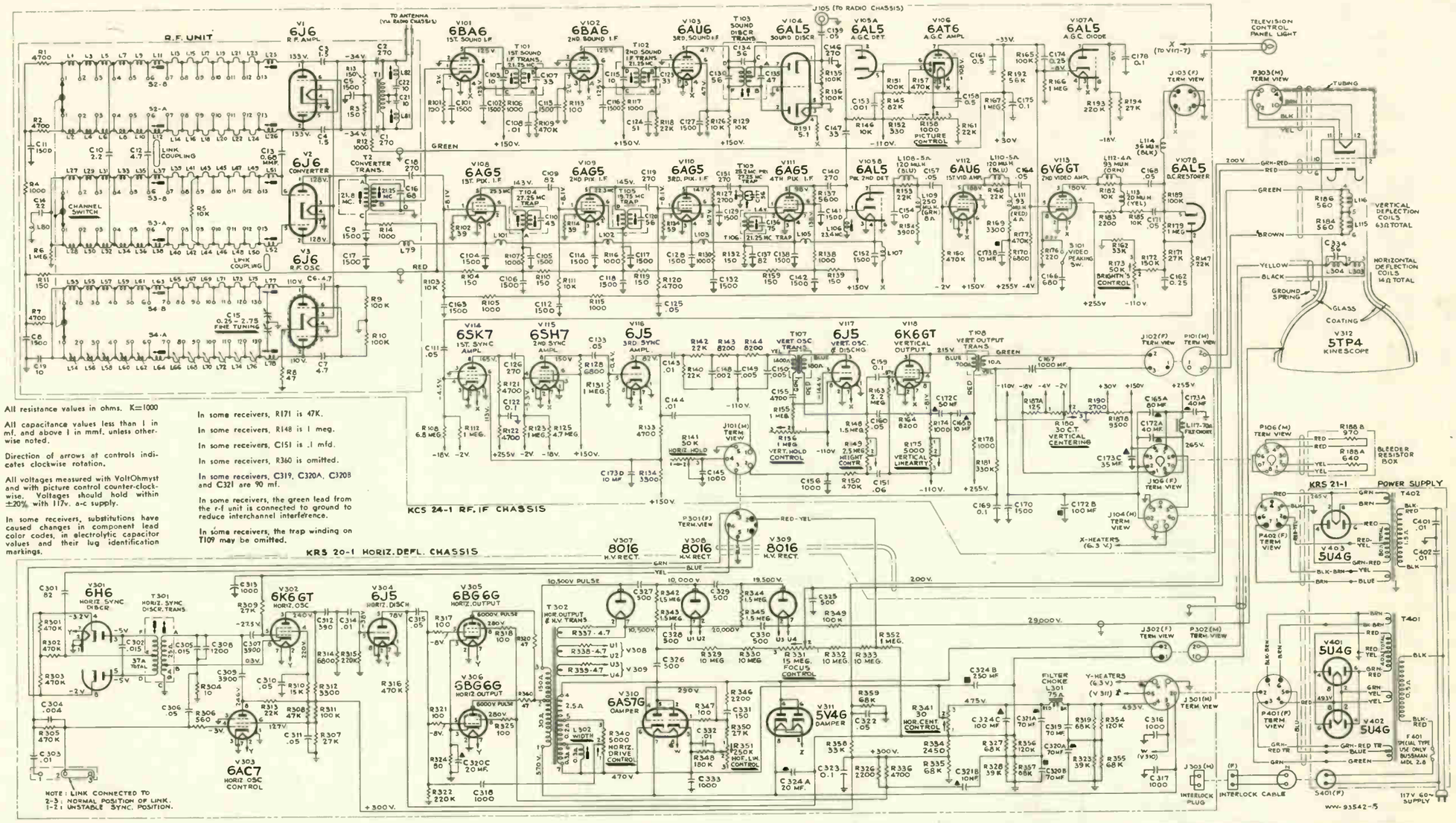

All resistance values in ohms. K=1000

All capacitance values less than 1 in mf. and above 1 in mmf. unless otherwise noted.

Direction of arrows at controls indicates clockwise rotation.

All voltages measured with VoltOhmyst and with picture control counter-clockwise. Voltages should hold within ±20% with 117v. a-c supply.

In some receivers, substitutions have caused changes in component lead color codes, in electrolytic capacitor values and their lug identification markings.

In some receivers, R171 is 47K.

In some receivers, R148 is 1 meg.

In some receivers, C151 is .1 mfd.

In some receivers, R360 is omitted.

In some receivers, C319, C320A, C320B and C321 are 90 mf.

In some receivers, the green lead from the r-f unit is connected to ground to reduce interchannel interference.

In some receivers, the trap winding on T109 may be omitted.

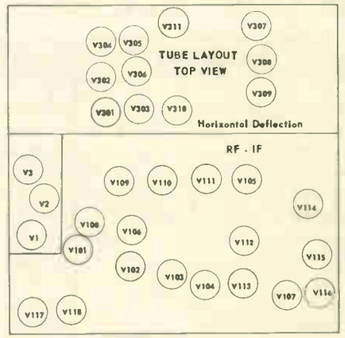

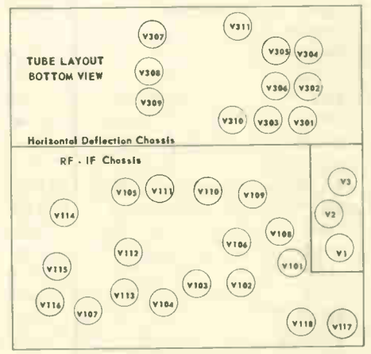

REF. NO.	PART NO.	DESCRIPTION
		ELECTROLYTICS
C167	72611	100 mfd, 3V.
C165A	71780	80 mfd, 450V.
C165B	71780	10 mfd, 450V.
C172A	72612	40 mfd, 450V.
C172B	72612	100 mfd, 150V.
C172C	72612	50 mfd, 50V.
C173A	72169	40 mfd, 450V.
C173B	72169	10 mfd, 450V.
C173C	72169	35 mfd, 350V.
C173D	72169	10 mfd, 350V.
C319	72621	70 mfd, 400V.
C320A	72622	70 mfd, 250V.
C320B	72622	70 mfd, 250V.
C320C	72622	20 mfd, 50V.
C321A	72623	70 mfd, 400V.
C321B	72623	10 mfd, 400V.
C324A	72624	20 mfd, 150V.
C324B	72624	250 mfd, 15V.
C324C	72623	100 mfd, 15V.
		RESISTORS
R141 R156	72758	Vert. & horiz. hold.
R149	71440	Height control.
R158, R173	71971	Brightness & pix.
R175	71441	Vertical linearity.
R180	72168	Vertical centering.
R183	72613	W.W. 2200 ohms 10 w.
R187A	72171	Volt- div. 9500 ohms 2 w.
R187B	72171	125 ohms 2.5 w.
R188A	72170	W.W. 970 ohms 9 w.
R188B	72170	640 ohms 10.5 w.
R312	48207	W.W. 3300 ohms 5 w.
R324	72631	W.W. 80 ohms 5 w.
R331	72183	Focus.
R340	71441	Horiz. drive.
R341	72181	Horiz. centering.
R351	72182	Horiz. linearity.
		COILS
L101, L102, L103, L105, L107	71505	Filament choke.
L106	71426	Fourth pix IF.
L110	71529	Peaking coil.
L112	72619	Peaking coil.
L117	72167	Filter choke.
L301	72179	Filter choke.
L302	72180	Width control.
		TRANSFORMERS
T1	71507	Antenna Xformer.
T2	71495	Converter Xformer.
T101	71424	1st or 2nd sound IF.
T103	71427	Sound discriminator.
T104	71423	1st picture IF.
T105	71425	2nd pix IF.
T106	71422	Sound trap.
T107	71775	Vertical oscillator.
T108	72952	Vertical output.
T109	73708	3rd pix IF.
T301	71428	Horiz. sync discriminator.
T302	72178	Horiz. output & hi-voltage.
T401	72176	Power 115V 60 cy. Hor. defl.
T402	72177	Power 115V 60 cy. RF & IF.
T401	73191	Power 115V 50 cy. Hor. defl.
T402	73192	Power 115V 50 cy. RF & IF.
		MISCELLANEOUS
	72196	Yoke, complete w/cables.

PROJECTION TELEVISION UNIT
Model PTU-1

The Model PTU-1 Projection Television Unit consists of four chassis which comprise a complete television receiver system except for the audio amplifier and speaker. This unit may be used in conjunction with a separate amplifier and speaker or the audio section of a radio receiver.

The unit employs 29 tubes plus 6 rectifiers and a projection kinescope. The reflective optical system provides a 15" x 20" picture on the screen.

NOTE: In some R-F Units, capacitor C14 is a variable trimmer and is connected between L80 and ground. L80 is connected to R6.

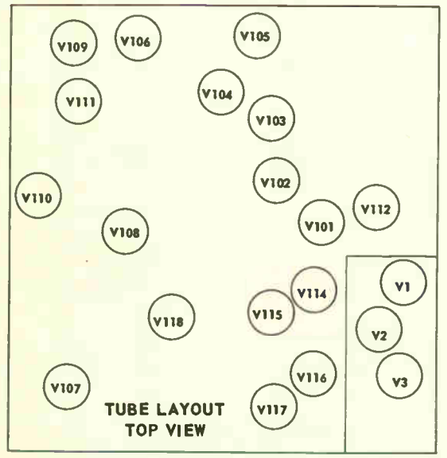

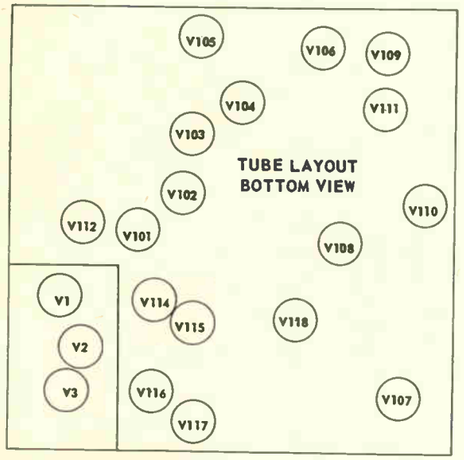

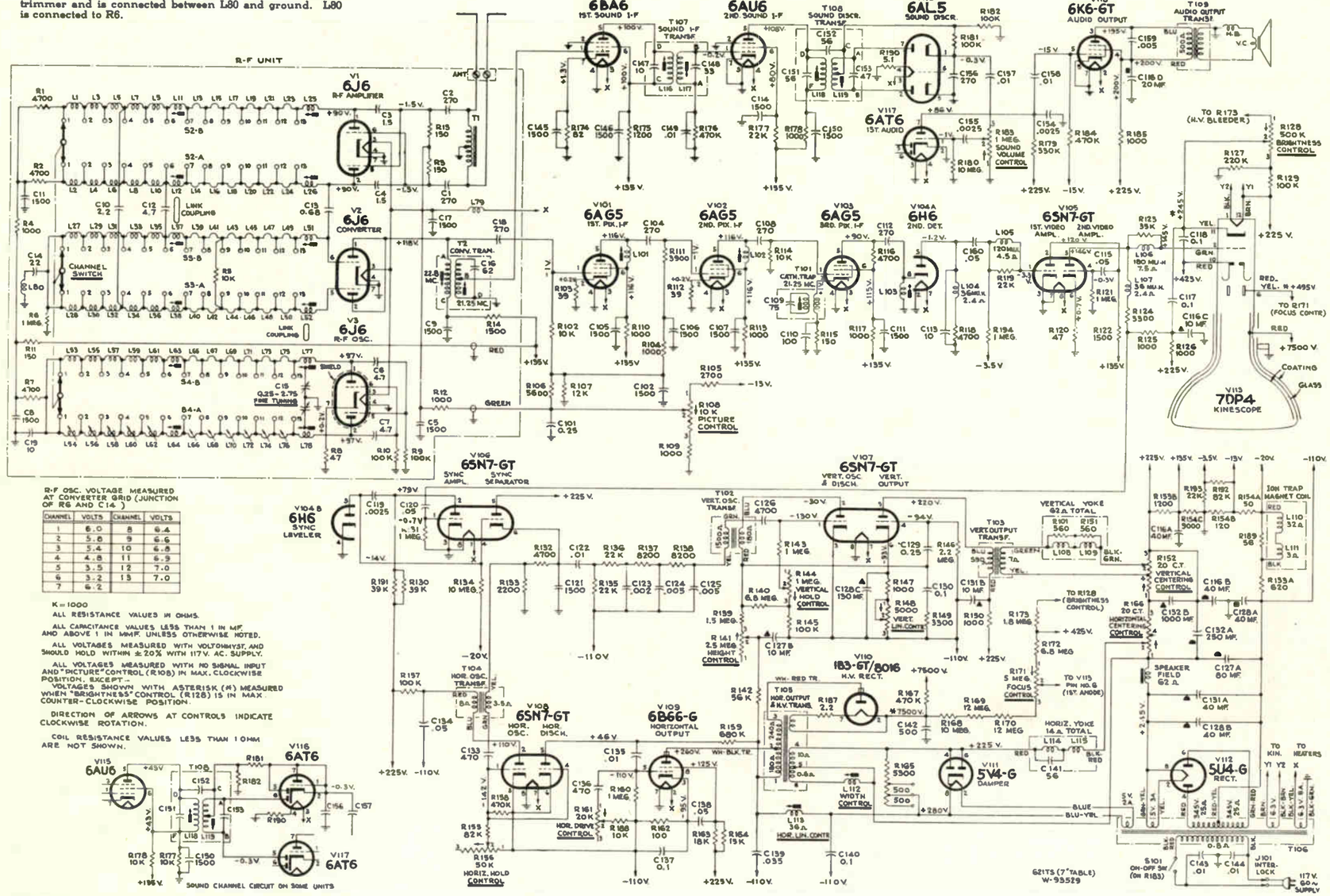

R-F OSC. VOLTAGE MEASURED AT CONVERTER GRID (JUNCTION OF R6 AND C14.)

CHANNEL	VOLTS	CHANNEL	VOLTS
1	6.0	8	6.4
2	5.8	9	6.6
3	5.4	10	6.8
4	4.8	11	6.9
5	3.5	12	7.0
6	3.2	13	7.0
7	6.2		

K = 1000

ALL RESISTANCE VALUES IN OHMS.

ALL CAPACITANCE VALUES LESS THAN 1 IN MF. AND ABOVE 1 IN MMF. UNLESS OTHERWISE NOTED.

ALL VOLTAGES MEASURED WITH VOLTOHMYST. AND SHOULD HOLD WITHIN ±20% WITH 117V. AC. SUPPLY.

ALL VOLTAGES MEASURED WITH NO SIGNAL INPUT AND "PICTURE" CONTROL (R108) IN MAX. CLOCKWISE POSITION. EXCEPT—

VOLTAGES SHOWN WITH ASTERISK (*) MEASURED WHEN "BRIGHTNESS" CONTROL (R128) IS IN MAX COUNTER-CLOCKWISE POSITION.

DIRECTION OF ARROWS AT CONTROLS INDICATE CLOCKWISE ROTATION.

COIL RESISTANCE VALUES LESS THAN 1 OHM ARE NOT SHOWN.

REF. NO.	PART NO.	DESCRIPTION
		ELECTROLYTICS
C116	71779	4 sect 40/300; 20/300; 10/300; 40/250.
C127	71780	80/450; 10/450.
C128	71781	40/450; 40/150; 130/50.
C131	71782	40/450; 10/350.
C132	71436	250/10; 1000/6.
		COILS
L79	71505	Heater choke.
L80	71506	Converter grid trap.
L101	71426	First IF.
L102	71426	Second IF.
L103	71426	Third IF.
L104	71793	Peaking coil.
L105	71529	Peaking coil and R119.
L106	71528	Peaking coil and R123.
L107	71793	Peaking coil.
	71777	Deflection yoke.
L113	71449	Horizontal linearity coil.
		RESISTORS
R108	71784	Brightness & picture.
R128	71784	Brightness and picture.
R141	71440	Height control.
R144	71445	Vertical and horizontal hold.
R148	71441	Vertical linearity.
R152	71443	Vertical centering.
R153	71786	W.W. 1200/8; 620/10.
R154	71787	Volt-div. 9000/2.5w; 120/2w; 50/1w.
R156	71445	Vertical and horizontal hold.
R161	71447	Horizontal drive control.
R165	71439	5300/20; 2/sec. 500/2.
R166	71443	Horizontal centering.
R171	71788	Focus control.
R183	71785	Volume and power switch.
		TRANSFORMERS
T1	71507	Antenna transformer.
T2	72811	Con. stamped 970144-4 & C16.
T101	71778	Cathode trap and C109.
T102	71775	Vertical oscillator.
T103	71774	Vertical output.
T104	71773	Horizontal oscillator.
T105	71416	Hi-Voltage.
T106	71772	Power, 110 V 60 cycles.
T107	71424	Sound IF.
T108	71427	Sound discriminator.
T109	71776	Audio output.
		MISCELLANEOUS
	71797	Speaker: 6" x 4" elliptical E.M.

630TCS MODEL

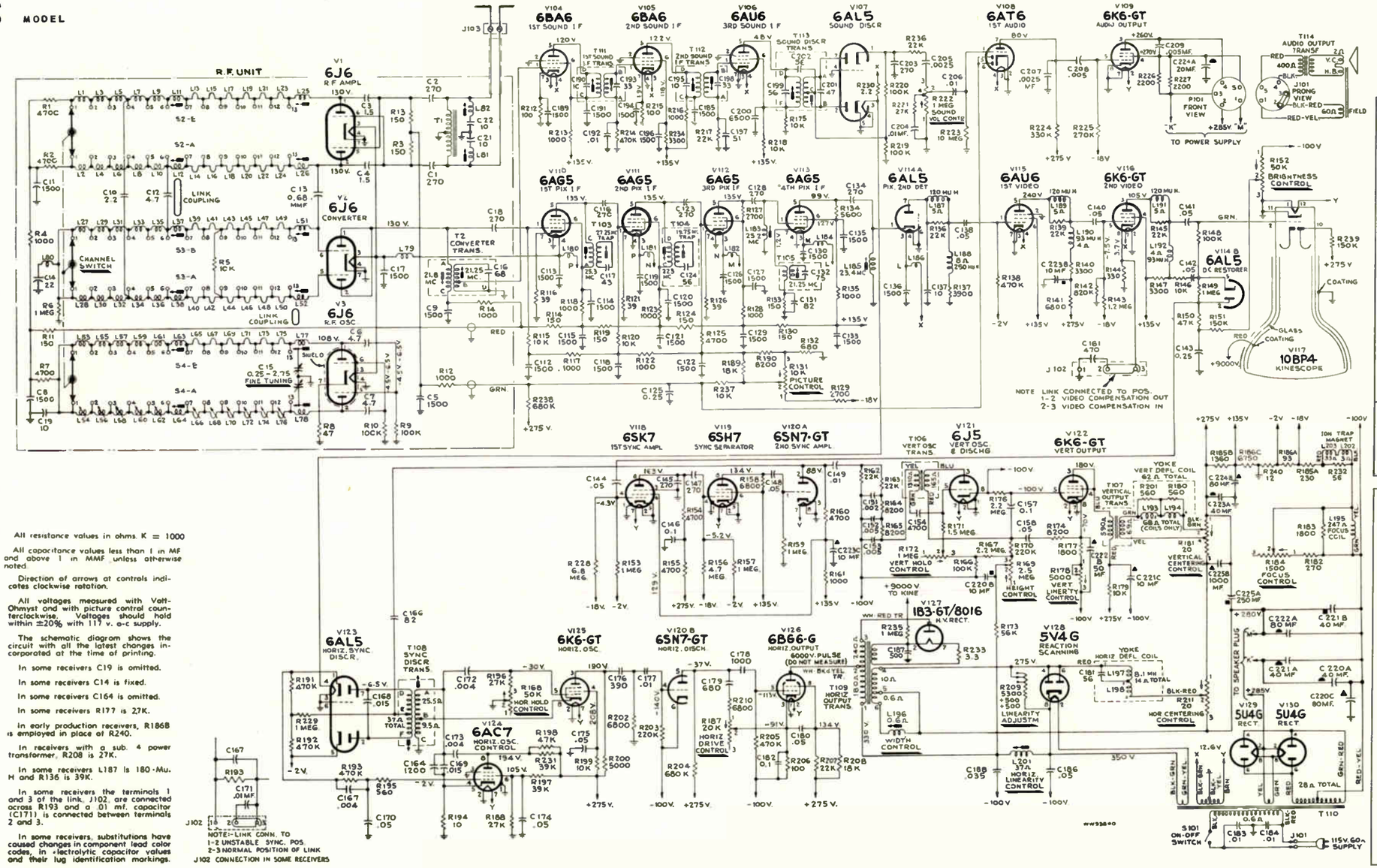

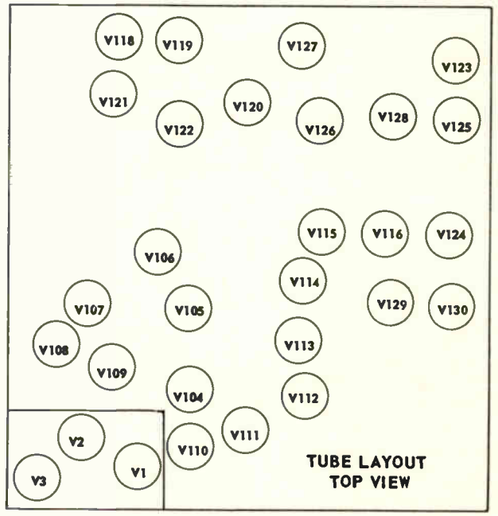

TUBE LAYOUT TOP VIEW

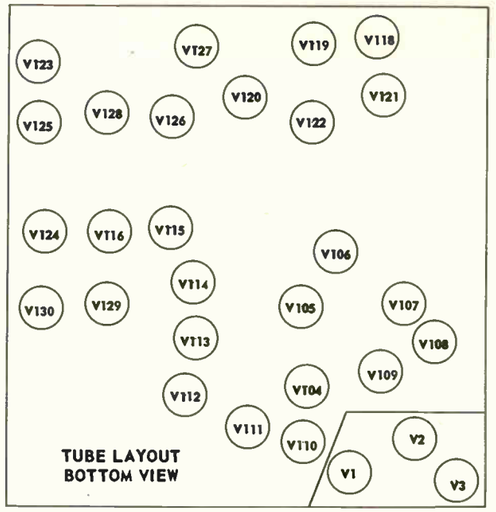

TUBE LAYOUT BOTTOM VIEW

All resistance values in ohms. K = 1000

All capacitance values less than 1 in MF and above 1 in MMF unless otherwise noted.

Direction of arrows at controls indicates clockwise rotation.

All voltages measured with Volt-Ohmyst and with picture control counterclockwise. Voltages should hold within ±20% with 117 v. a-c supply.

The schematic diagram shows the circuit with all the latest changes incorporated at the time of printing.

In some receivers C19 is omitted.

In some receivers C14 is fixed.

In some receivers C164 is omitted.

In some receivers R177 is 2.7K.

In early production receivers, R186B is employed in place of R240.

In receivers with a sub. 4 power transformer, R208 is 27K.

In some receivers L187 is 180-Mu. H and R136 is 39K.

In some receivers the terminals 1 and 3 of the link, J102, are connected across R193 and a .01 mf. capacitor (C171) is connected between terminals 2 and 3.

In some receivers, substitutions have caused changes in component lead color codes, in electrolytic capacitor values and their lug identification markings.

REF. NO.	PART NO.	DESCRIPTION
		ELECTROLYTICS
C187	71450	Hi-Voltage, filter 500 mmfd.
C220	71431	40/450; 10/450; 80/150.
C222	71433	80/450; 50/50.
C223	71434	40/450; 80/350.
C224	71435	20/450; 80/350.
C225	71436	250/10; 1000/6.
		COILS
L187	71528	Peaking coil 180 mfd, & R136.
L188	71526	Peaking coil 250 mfd.
L189	71529	Peaking coil and R139.
L190	71527	Peaking coil 93 mfd.
L191	71529	Peaking coil and R145.
L192	71527	Peaking coil 93 mfd.
L193	71420	Deflection yoke.
L194		See L193.
L195	71421	Focus coil.
L196	71429	Width control coil.
L197		See L193.
L198		See L193.
L201	71449	Horizontal linearity.

		RESISTORS
R131	71446	Pic. sound vol. on-off sw.
R152	71444	Brightness control.
R168	71445	Vertical & horizontal hold.
R169	71440	Vertical height.
R172	71445	Vertical & horizontal hold.
R178	71441	Vertical linearity.
R181	71443	Vertical centering.
R184	71442	Focus control.
R185	71458	W.W. 1360/17; 230/10.
R186	71459	V.D 6750/3.2; 12/0.5; 93/4.
R187	71447	Horizontal drive control.
R209	71439	W.W 5300/20; 500/2; 500/2.
R211	71443	Horizontal centering.
R222	71446	Pic. sound vol. on-off sw.
		TRANSFORMERS
T1	71507	Antenna transformer.
T2	71495	Converter, and C16.
T103	71423	First picture IF and C117.
T104	71425	Second picture IF and C124.
T105	71422	Cathode trap and C132.
T106	71418	Vertical oscillator.
T107	71417	Vertical output;
T108	71428	Horizontal sync disc.
T109	71416	Hor. output & hi-voltage.
T110	71415	Power, 115 V, 60 cycle.
T111	71424	1st sound IF, C190 & C193.
T112	71424	2nd sound IF, C195 & C198.
T113	71427	Sound disc. C199, C201, C202.

	MISCELLANEOUS
11469	Neutralizing coil.
71560	Plug-5 prong male plug/speaker.
71556	Speaker-12" E.M.
31301	Output transformer.

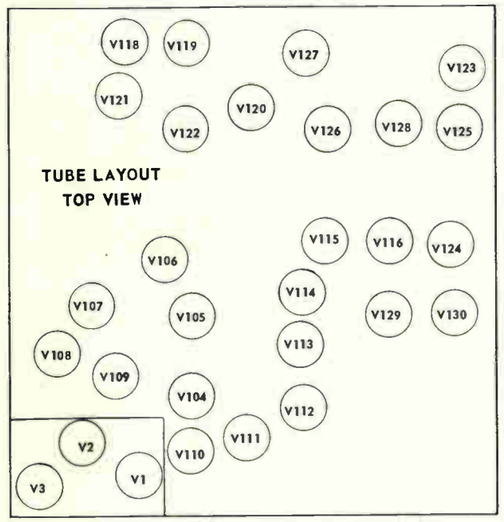

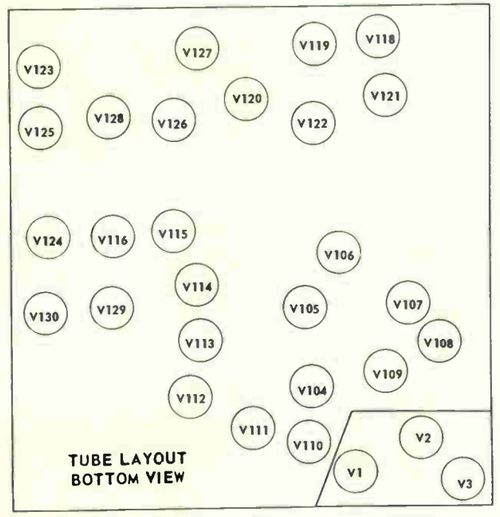

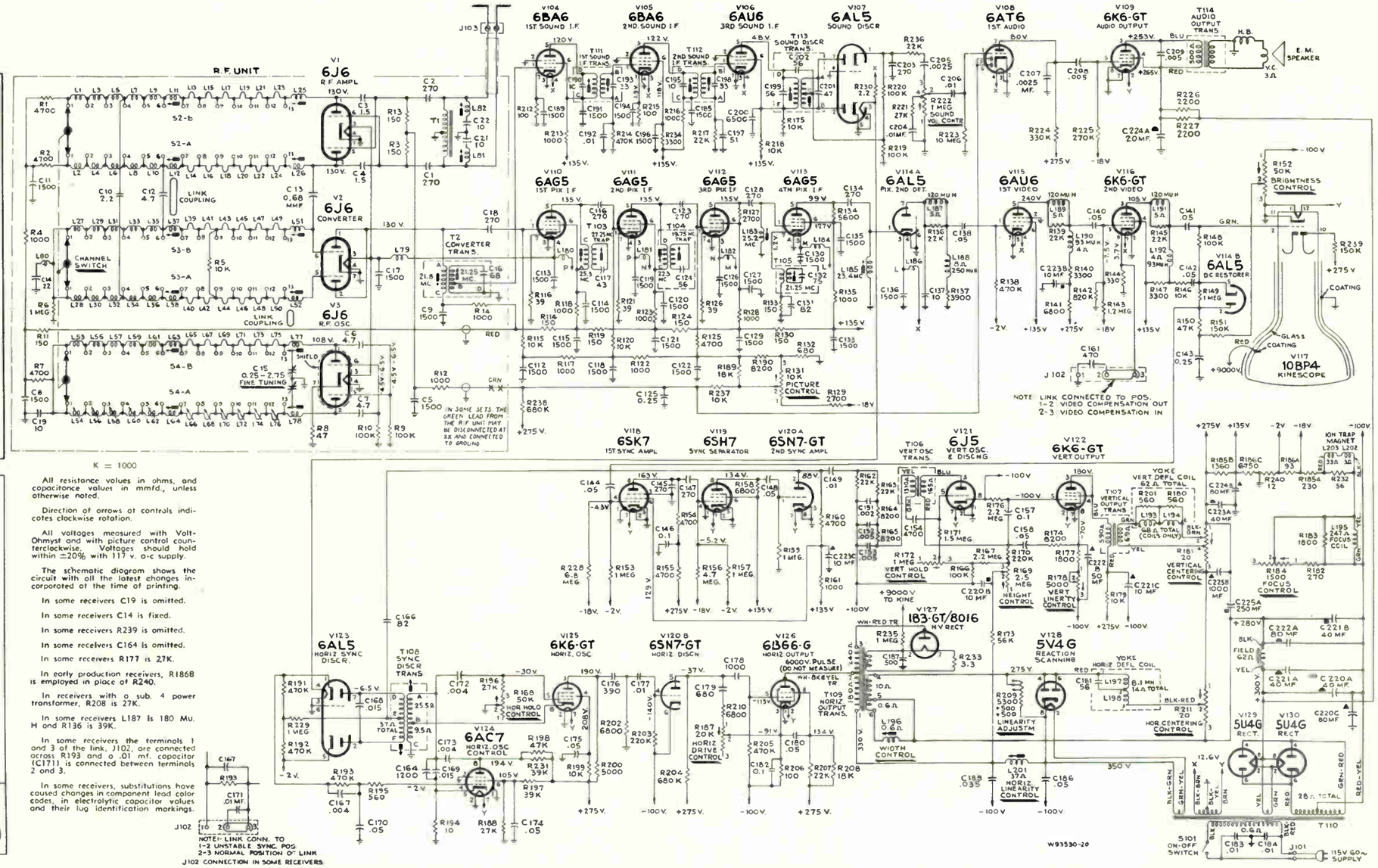

K = 1000

All resistance values in ohms, and capacitance values in mmfd., unless otherwise noted.

Direction of arrows at controls indicates clockwise rotation.

All voltages measured with Volt-Ohmyst and with picture control counterclockwise. Voltages should hold within ±20% with 117 v. a-c supply.

The schematic diagram shows the circuit with all the latest changes incorporated at the time of printing.

In some receivers C19 is omitted.

In some receivers C14 is fixed.

In some receivers R239 is omitted.

In some receivers C164 is omitted.

In some receivers R177 is 27K.

In early production receivers, R186B is employed in place of R240.

In receivers with a sub. 4 power transformer, R208 is 27K.

In some receivers L187 is 180 Mu. H and R136 is 39K.

In some receivers the terminals 1 and 3 of the link, J102, are connected across R193 and a .01 mf. capacitor (C171) is connected between terminals 2 and 3.

In some receivers, substitutions have caused changes in component lead color codes, in electrolytic capacitor values and their lug identification markings.

REF. NO.	PART NO.	DESCRIPTION
		ELECTROLYTICS
C187	71450	Hi-Voltage filter 500 mmfd.
C220	71431	40/450; 10/450; 80/150.
C221	71432	40/450; 40/450; 10/450.
C222	71433	80/450; 50/50.
C223	71434	40/450; 10/450; 10/350.
C224	71435	20/450; 80/350.
C225	71436	250/10; 1000-6.
		COILS
L77	71489	Tuner.
L78	71488	Tuner.
L79	71505	Heater choke.
L80	71506	Converter grid trap coil
L180	71505	Choke.
L181	71505	Choke.
L182	71505	Choke.
L183	71426	Third picture IF coil.
L184	71505	Choke coil.
L185	71426	Fourth picture IF.
L186	71505	Choke coil.
L187	71529	Peaking coil and R136.
L188	71526	Peaking coil and 250 mfd.
L189	71529	Peaking coil and R139.
L190	71527	Peaking coil, 90 mfd.
L191	71529	Peaking coil and R145.
L192	71527	Peaking coil, 90 mfd.
L193	71420	Deflecting yoke.
L194		See L193
L195	71421	Focus coil.
L196	71429	Width control coil.
L197		See L193.
L198		See L193.
L201	71449	Horizontal linearity.
L202	71522	Ion-Trap magnet.
L203	71522	Ion-Trap magnet.
		RESISTORS
R131	71446	Pic. sound vol. on-off sw.
R152	71444	Brightness control.
R168	72758	Vertical and horizontal hold.
R169	71440	Height control.
R172	72758	Vertical and horizontal hold.
R178	71441	Vertical linearity.
R181	71443	Vertical centering.
R184	71442	Focus coil.
R185	71458	W.W. 1360/17; 230/10.
R186	71459	Volt-Div. 6750/3.2w.,12/0.5w. 93/4w (early).
73097		Voltage Div. 6750-3.2w., 93/4w., (late).
R187	71447	Horizontal drive control.
R209	71439	W.W. 5300/20w.,500/2w.,500/2w.
R211	71443	Horizontal centering control.
R222	71446	Pic. sound vol. on-off sw.
R240	73098	W.W. 12/1w.,replaces R186B in late receivers.
		TRANSFORMERS
T1	71507	Antenna transformer.
T2	71495	Converter and C16.
T103	71423	1st picture IF. C117.
T104	71425	2nd picture IF and C124.
T105	71422	Sound trap and C132.
T106	71418	Vertical oscillator.
T107	71417	Vertical output.
T108	71428	Sync. discriminator.
T109	71416	Horiz. output and hi-voltage.
T110	71415	Power, 115 V, 60 cycle.
T111	71424	1st sound IF, C190, C193.
T112	71424	2nd sound IF, C195, C198.
T113	71427	Sound disc. C199, C202.
T114	71419	Audio output.
		MISCELLANEOUS
	71530	Speaker- 5" E.M.

641TV MODEL

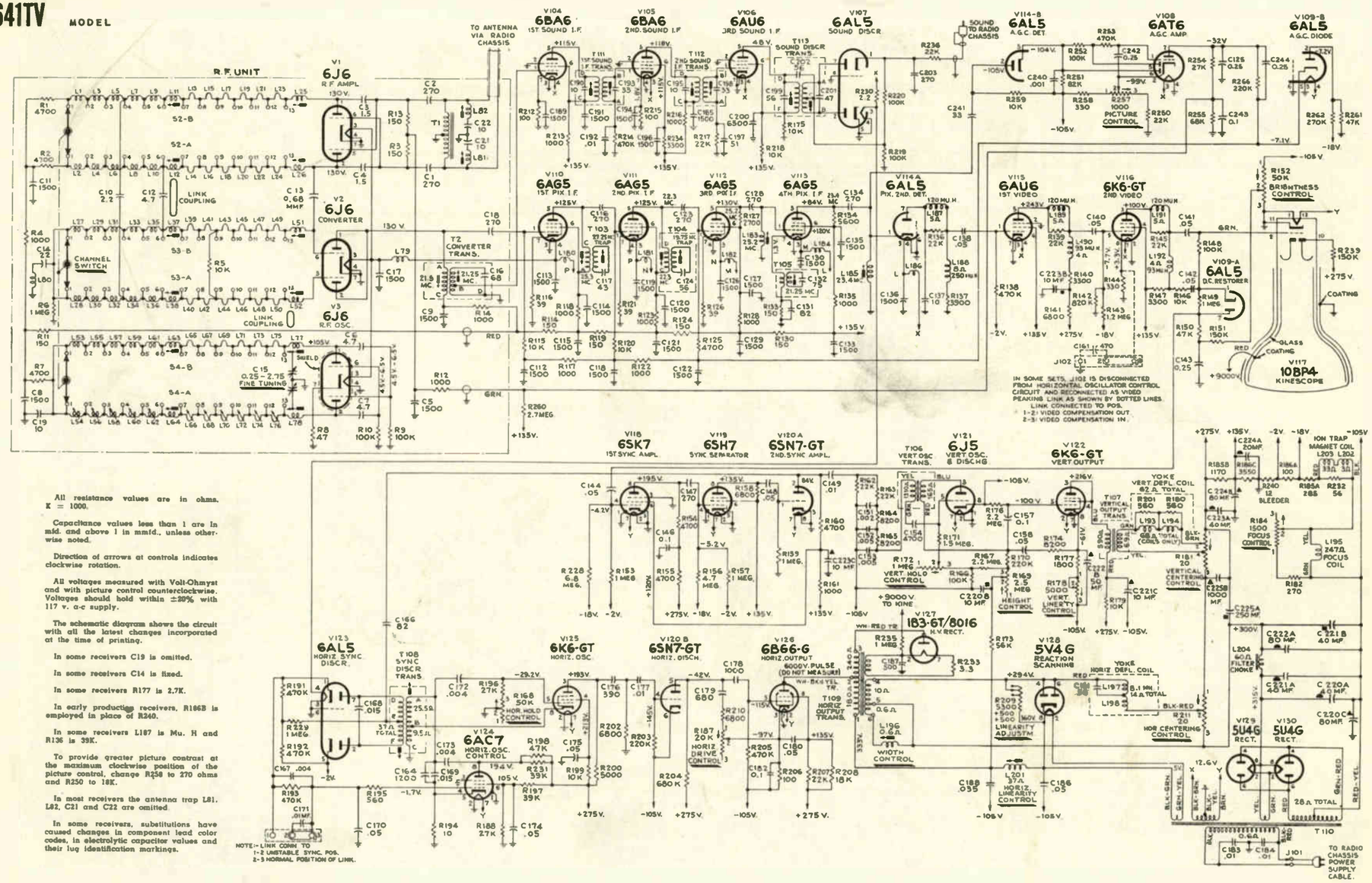

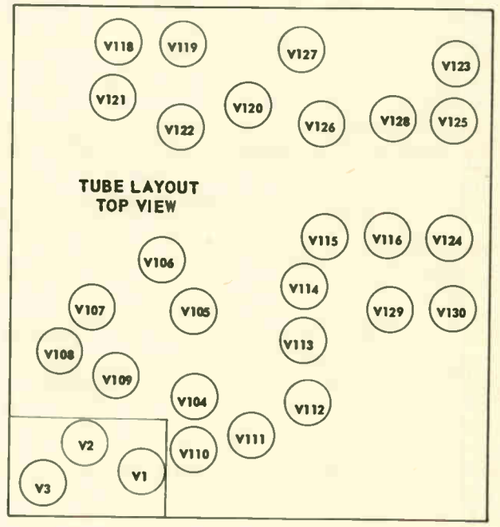

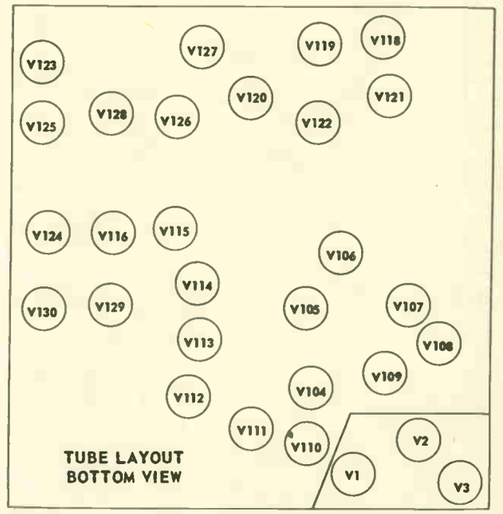

All resistance values are in ohms. K = 1000.

Capacitance values less than 1 are in mfd. and above 1 in mmfd., unless otherwise noted.

Direction of arrows at controls indicates clockwise rotation.

All voltages measured with Volt-Ohmyst and with picture control counterclockwise. Voltages should hold within ±20% with 117 v. a-c supply.

The schematic diagram shows the circuit with all the latest changes incorporated at the time of printing.

In some receivers C19 is omitted.

In some receivers C14 is fixed.

In some receivers R177 is 2.7K.

In early production receivers, R186B is employed in place of R240.

In some receivers L187 is Mu. H and R136 is 39K.

To provide greater picture contrast at the maximum clockwise position of the picture control, change R258 to 270 ohms and R250 to 18K.

In most receivers the antenna trap L81, L82, C21 and C22 are omitted.

In some receivers, substitutions have caused changes in component lead color codes, in electrolytic capacitor values and their lug identification markings.

REF. NO.	PART NO.	DESCRIPTION
		ELECTROLYTICS
C116	73091	Mica, 270 mmfd, 1000 V.
C187	71450	Hi-voltage filter cap. 500 mmfd.
C220	71431	40/450; 10/450; 80/150.
C221	71432	2sec: 40/450; 1sec: 10/450.
C222	71433	80/450; 50/50.
C223	71434	40/450; 10/450; 10/350.
C224	71435	20/450; 80/350.
C225	71436	250/10; 1000/6.

		COILS
L79	71505	Heater choke coil.
L80	71506	Converter grid IF.
L81	73239	Ant. trap L81, 2, C21.2.
L82		See L81.
	73239	Ant. trap.
L180	71505	Choke.
L181	71505	Choke.
L182	71505	Choke.
L183	71426	3rd picture IF.
L184	71505	Choke.
L185	71426	4th picture IF.

L186	71505	Choke.
L187	71529	Peaking incl. R136.
L188	71526	Peaking coil.
L189	71529	Peaking coil inc. R139.
L190	71527	Peaking coil.
L191	71529	Peaking coil.
L192	71527	Peaking coil.
L193	71420	Deflecting yoke.
L194		See L193.
L195	71421	Focus coil.
L196	71429	Width control.
L197		See L193.

L198		See L193.
L201	71449	Horiz. linearity.
L202	71522	Ion-trap magnet.
L203	71522	Ion-trap magnet.
L204	71970	Filter choke.
		RESISTORS
R152	71444	Brightness control.
R168	72758	Vertical & horiz. hold.
R169	71440	Height control.
R172	72758	Vertical & horiz. hold.
R178	71441	Vertical linearity.

R181	71443	Vertical centering.
R184	71442	Focus control.
R185	71973	W.W. 1170/25w., 285/8.5w.
R186	71974	Volt-div 3550/6w., 100/3w.
R187	71447	Horiz. drive.
R209	71439	W.W. 1sec: 5300/20w., 2 sec: 500/2w.
R211	71443	Horiz. centering control.
R240	73098	W.W. 12 ohms, 1 w.
R257	72064	Picture control.
		TRANSFORMERS
T1	71507	Antenna transformer.
T2	71495	Converter and C16.

T103	71423	1st picture IF & C117.
T104	71425	2nd picture IF & C124.
T105	71422	Sound trap and C132.
T106	71418	Vertical oscillator.
T107	71417	Vertical output.
T108	71428	Horiz. sync. disc.
T109	71416	Horiz. output & hi-voltage.
T110	71415	Power, 115 v, 60 cycle.
	72775	Power, 115 V, 50 cycle.
T111	71424	1st sound IF.
T112	71424	2nd sound IF.
T113	71427	Sound discriminator.
		MISCELLANEOUS
71144		Speaker-12" E.M.

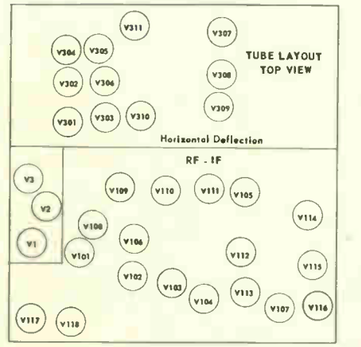

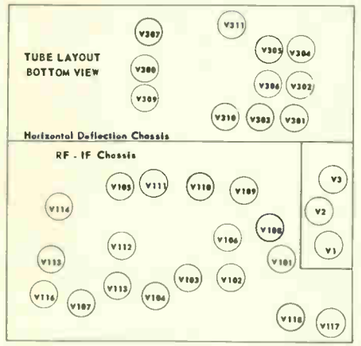

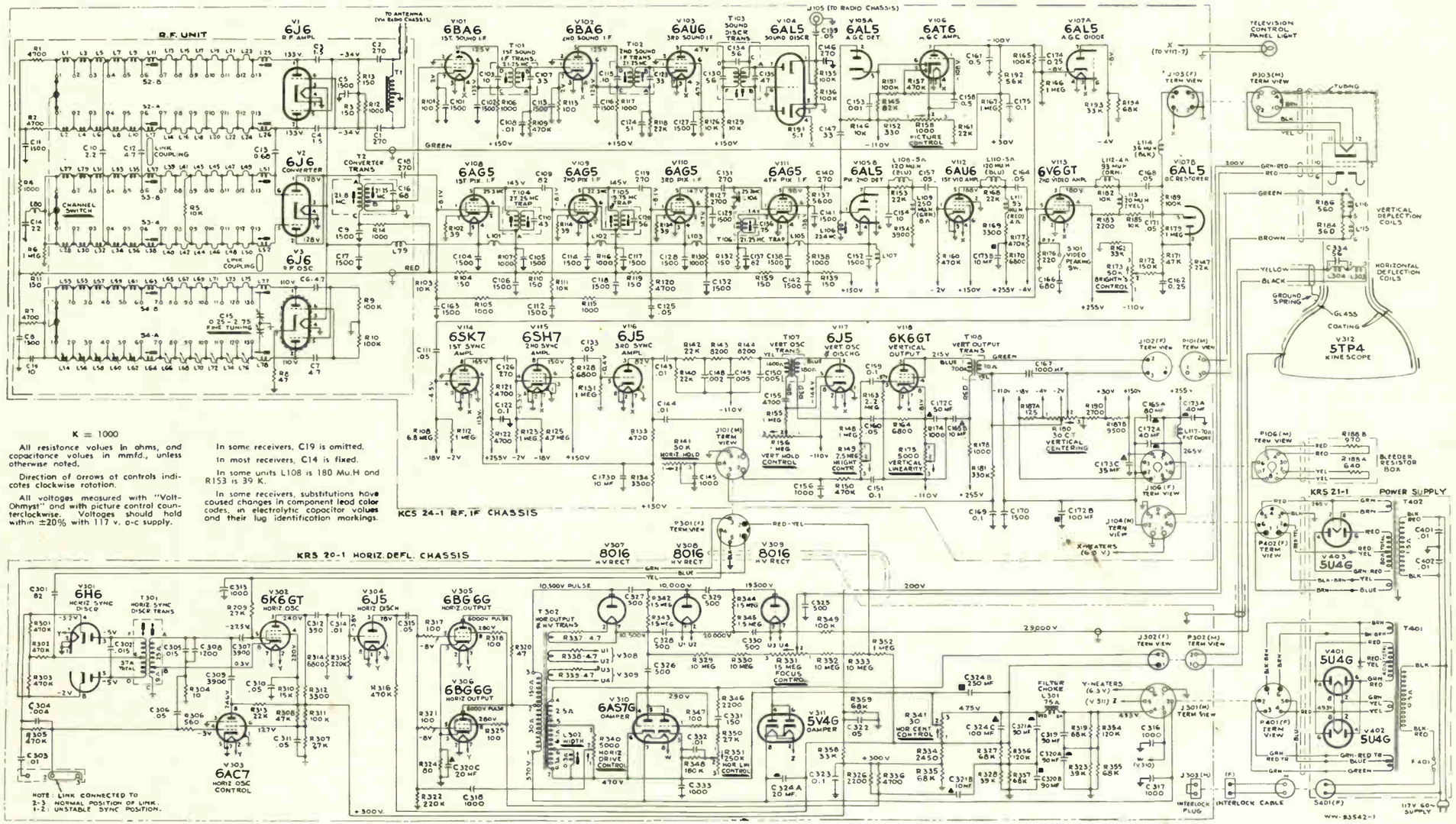

K = 1000

All resistance values in ohms, and capacitance values in mmfd., unless otherwise noted.

Direction of arrows at controls indicates clockwise rotation.

All voltages measured with "Volt-Ohmyst" and with picture control counterclockwise. Voltages should hold within ±20% with 117 v. a-c supply.

In some receivers, C19 is omitted.

In most receivers, C14 is fixed.

In some units L108 is 180 Mu.H and R153 is 39 K.

In some receivers, substitutions have caused changes in component lead color codes, in electrolytic capacitor values and their lug identification markings.

REF. NO.	PART NO.	DESCRIPTION
		ELECTROLYTICS
C165	71780	80-450; 10/450.
C167	72611	1000/3 nonpolarized.
C172	72612	3 sec: 40/450; 100/150;50/50.
C173	72169	3 sec: 40/450; 10/450; 35/350 10/350/
C319	72621	90/350.
C320	72622	2 sec: 90/200; 1 sec: 20/50.
C321	72623	90/350; 10/350.
C324	72624	20/150; 250/15; 100/15.

		COILS
L79	71505	Heater choke coil.
L80	71506	Converter grid IF.
L101	71505	Filament choke.
L102	71505	Filament choke.
L103	71505	Filament choke.
L104	71426	3rd picture IF coil.
L105	71505	Filament choke.
L106	71426	4th picture IF.
L107	71505	Filament choke.
L108	71529	Peaking coil and R153.
L109	71526	Choke.
L110	71529	Peaking coil and R168.
L111	71527	Choke.
L112	72619	Peaking coil and R182.
L113	72618	Choke.
L114	71793	Choke.
L115	72196	Deflecting yoke.
L116		See L115.
L115	72167	Filter.
L301	72179	Filter.
L302	72180	Width control.
L303		See L115.
L304		See L115.

		RESISTORS
R141	72758	Vertical & horiz. hold.
R149	71440	Height control.
R156	72758	Vertical and horiz. hold.
R158	71971	Brightness and picture.
R173	71971	Brightness and picture.
R175	71441	Vertical linearity.
R180	72168	Vertical centering.
R183	72613	W.W. 2200/10w.
R187	72171	Volt-div.9500/2w., 125/2.5w.
R188	72170	W.W. 970/9w., 640/10.5w.
R312	48207	W.W. 3300 ohms, 5 watts.
R324	72631	W.W. 80 ohms, 5 watts.
R340	71441	Horiz. drive.
R341	72181	Horiz. centering.
R351	72182	Horiz. linearity.
		TRANSFORMERS
T1	71507	Antenna transformer.
T2	71495	Converter and C16.
T101	71424	1st sound IF.
T102	71424	2nd sound IF.
T103	71427	Sound discriminator.
T104	71423	1st picture IF.
T105	71425	2nd picture IF.
T106	71422	Sound trap and C136.
T107	71775	Vertical oscillator.
T108	72952	Vertical output.
T301	71428	Horiz. sync. discriminator.
T302	72178	Horiz. output & hi-voltage.
T401	72176	Power for hor. defl. chassis.
T402	72177	Power for RF & IF chassis.
		MISCELLANEOUS
	71144	Speaker- 12" E.M.

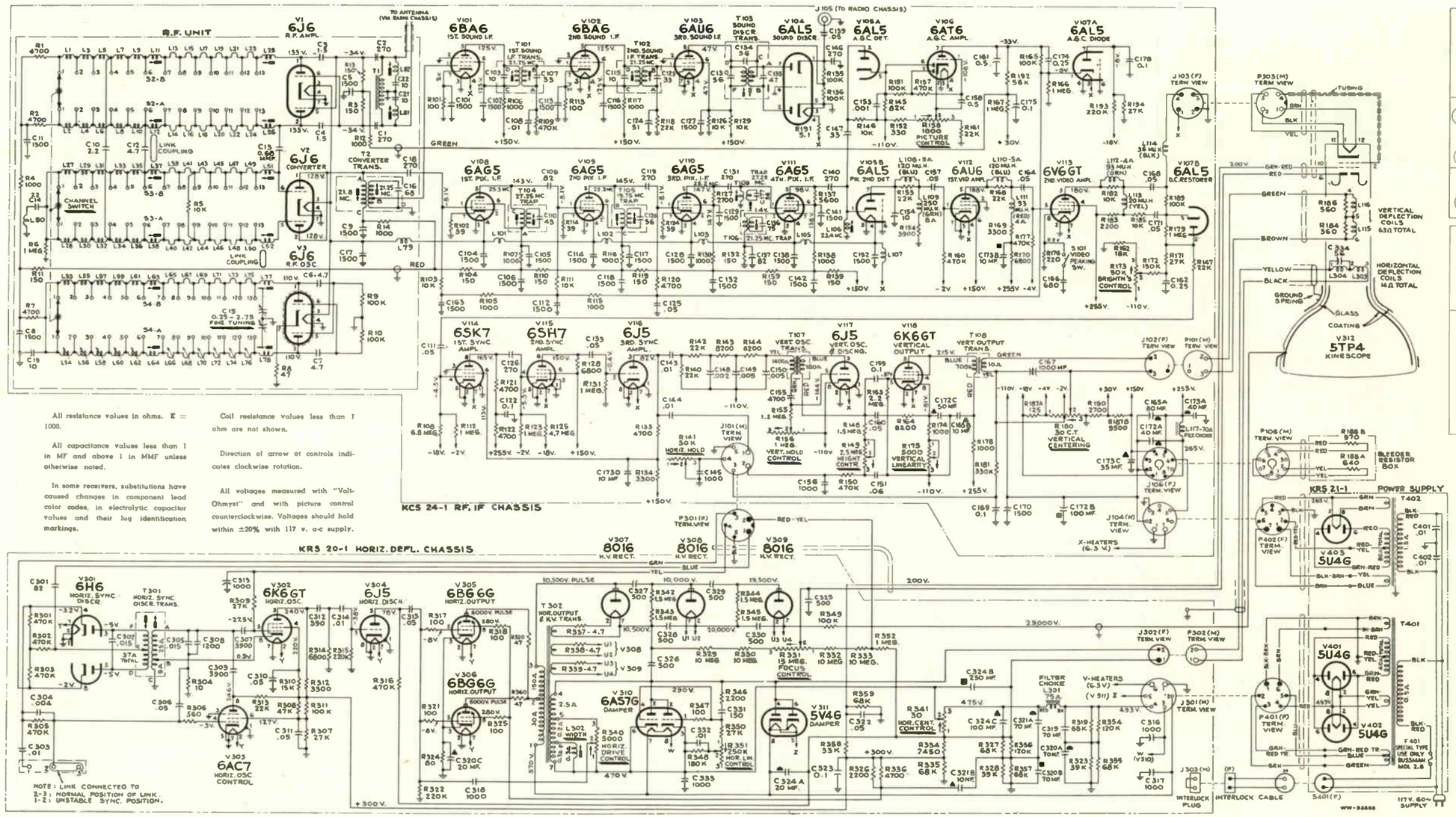

All resistance values in ohms. K = 1000.

All capacitance values less than 1 in MF and above 1 in MMF unless otherwise noted.

In some receivers, substitutions have caused changes in component lead color codes, in electrolytic capacitor values and their lug identification markings.

Coil resistance values less than 1 ohm are not shown.

Direction of arrow of controls indicates clockwise rotation.

All voltages measured with "Volt-Ohmyst" and with picture control counterclockwise. Voltages should hold within ±20% with 117 v. a-c supply.

The schematic diagram shows the circuit with all the latest changes incorporated at the time of printing.

In some receivers R162 may be 33K.

In some receivers, the trap winding of T109 may be omitted.

In some receivers R164 may be 6.8K. In some receivers R155 may be 1 Meg.

In some receivers R360 may be omitted.

REF. NO.	PART NO.	DESCRIPTION
C165	71780	2 sec: 80/450; 10/450.
C167	72611	1000/3, nonpolarized.
C172	72612	3 sec: 40/450; 100/150; 50/50.
C173	72169	4 sec: 40/450; 10/450; 35/350; 10/350.
C319	72621	90/350.
C320	72622	2 sec: 90/200; 1 sec: 20/50.
C321	72623	90/350; 10/350.
C324	72624	20/150; 250/15; 100/15.
L79	71505	Heater Choke coil.
L80	71506	Converter grid IF choke.
L81	73239	Antenna trap.
L82		See L81.
L101	71505	Filament choke.
L102	71505	Filament choke.
L103	71505	Filament choke.
L105	71505	Filament choke.
L106	71426	4th picture IF.
L107	71505	Filament choke.
L108	71529	Peaking coil and R153.
L109	71526	Peaking coil.
L110	71529	Peaking and R168.
L111	71527	Peaking coil.
L112	72619	Peaking and R182.
L113	72618	Peaking coil.
L114	71793	Peaking coil.
L115	72196	Deflecting yoke.
L116		See L115.
L117	72167	Filter choke.
L301	72179	Filter choke.
L302	72180	Width control.
L303		See L115.
L304		See L115.
R141	72758	Vertical & horiz. hold.
R149	71440	Height control.
R156	72758	Vertical & horiz hold.
R158	71971	Brightness & picture.
R173	71971	Brightness & picture.
R175	71441	Vertical linearity.
R180	72168	Vertical centering.
R183	72613	W.W. 2200 ohms, 10 w.,
R187	72171	Volt-div. 9500/2 w., 125/2.5 w,
R191	72067	W.W. 5.1 ohms, ½ w.
R312	48207	W.W. 3300 ohms, 2 w,.
R324	72631	W.W. 80 ohms, 5 watts.
R331	72183	Focus control.
R334	72184	W.W. 2450 ohms, 16.5 w.
R337	72633	W.W. 4.7 ohms, ½ w.
R338	72633	W.W. 4.7 ohms, ½w.
R339	72633	W.W. 4.7 ohms, ½ w.
R340	71441	Horiz. drive control.
T1	71507	Antenna transformer.
T2	71495	Converter and C16.
T101	71424	1st sound IF.
T102	71424	2nd sound IF.
T103	71427	Sound discriminator.
T104	71423	1st picture IF.
T105	71425	2nd picture IF.
T106	71422	Sound trap.
T107	71418	Vertical output.
T109	73708	3rd picture IF.
T301	71428	Horiz. sync discriminator.
T302	72178	Horiz. output hi-voltage.
T401	73191	Power trans. 115 V, 50 cy. Horiz defl. chassis.
	72176	Power, 115 V, 60 cycle, Horiz. defl. chassis.
T402	73192	Power, IF, 115 V, 50 cycle, RF TV chassis.
	72177	Power, IF, 115 V, 60 cycle. RF TV chassis.
	71146	Field coil-1060 ohms.
	11233	Neutralizing coil.
	71144	Speaker-12" E.M.
	71145	Suspension-Metal cone.

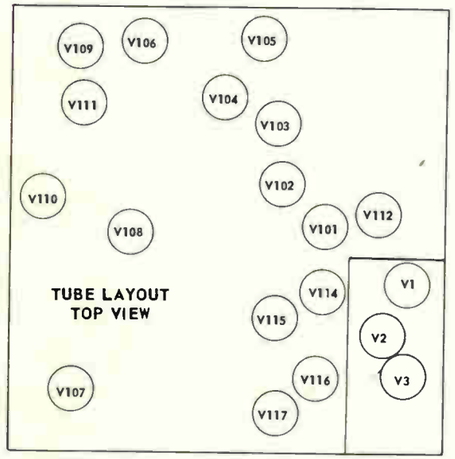

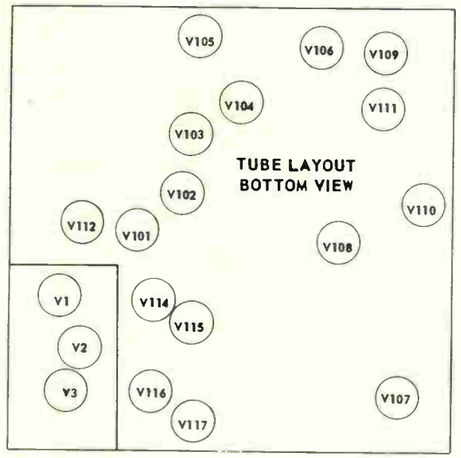

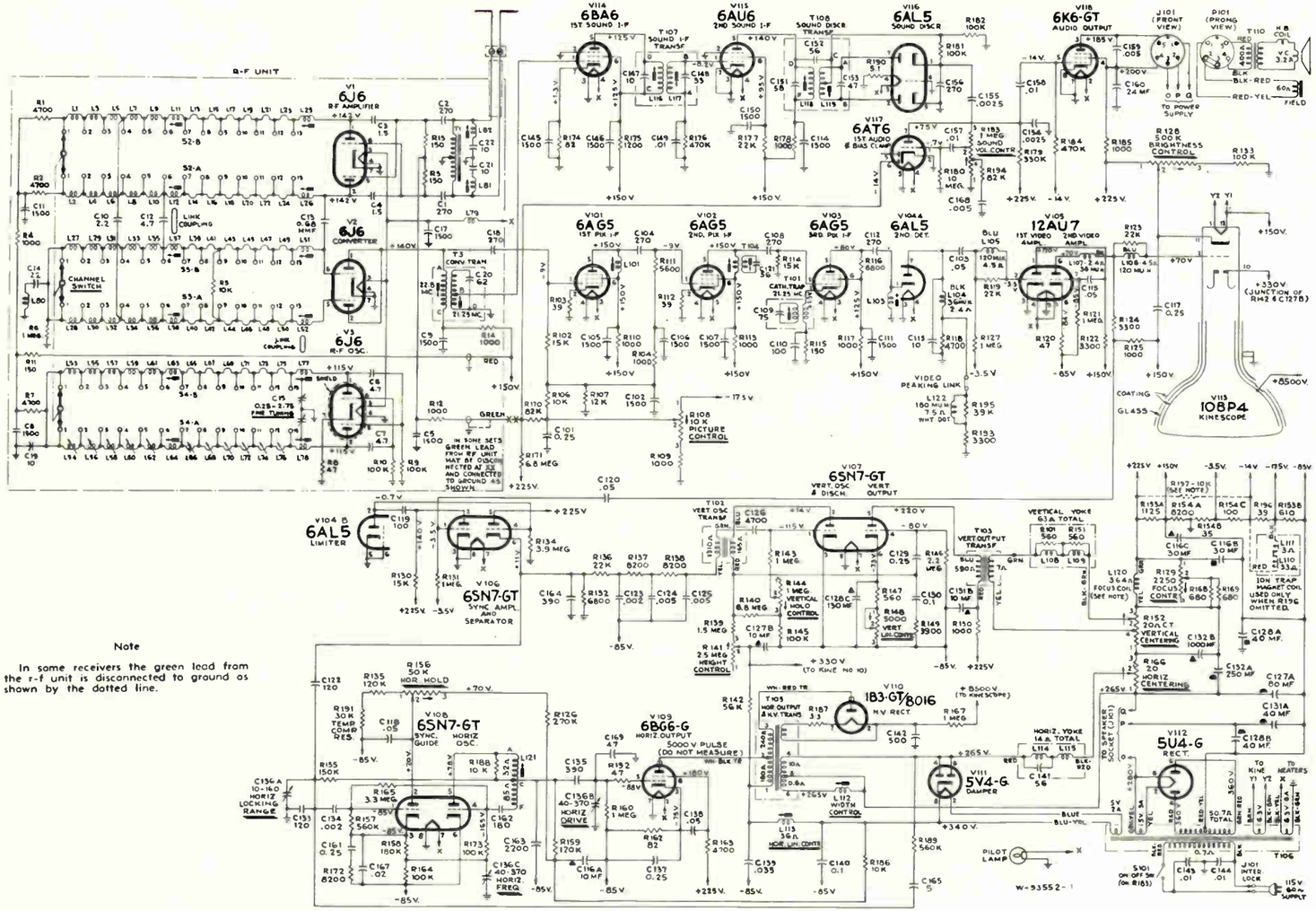

Note

In some receivers the green lead from the r-f unit is disconnected to ground as shown by the dotted line.

All resistance values in ohms. K = 1000.

All capacitance values less than 1 in MF and above 1 in MMF unless otherwise noted.

Direction of arrows at controls indicates clockwise rotation.

All voltages measured with "VoltOhmyst" and with picture control counterclockwise. Voltages should hold within ±20% with 117 v. a-c supply.

Coil resistance values less than 1 ohm are not shown.

R196 was omitted in receivers employing an EM type magnet.

In some receivers, R-149 was 3300 ohms.

In early production receivers the resistance at the focus coil was 247 ohms.

R197 was employed only in receivers with the 247-ohm focus coil.

In some receivers, substitutions have caused changes in component lead color codes, in electrolytic capacitor values and their lug identification markings.

Optional video peaking is provided by the video peaking link. Normally the link is connected in place. However, if transients are produced on high contrast pictures, the link should be opened.

In early production receivers an EM type of ion trap magnet was employed and was connected as shown by the dotted lines.

In some receivers, the trap winding of T104 was omitted and the primary coil was designated as L102.

REF. NO.	PART NO.	DESCRIPTION
		ELECTROLYTICS.
C116	72736	10/400; 30/350;30/250.
C127	71780	80/450; 10/450.
C128	71781	40/450; 40/150; 40/150.
C131	71782	40/450; 10/350.
C132	71436	250/10; 1000/6.
C136	72771	1 sec:10-160 mmfd. 2 sec: 40-370 mmfd.
C160	72740	24/300.
		COILS
L79	71505	Heater choke.
L80	71506	Converter grid IF.
L81	73239	Antenna trap.
L82		See L81.
L101	71426	1st pix IF.
L103	71426	3rd pix IF.
L104	71793	Peaking coil.
L105	71529	Peaking and R119.
L106	71529	Peaking and R123.
L107	71793	Peaking coil.
L108	71777	Deflecting yoke.
L109		See L108.
L110	71792	Ion-trap magnet.
	73301	Ion-trap magnet.
L111		See L110.
L112	71429	Width control.
L113	71449	Horiz. linearity.
L120	73233	Focus coil.
L121	72770	Horiz oscillator.
L122	71528	Peaking and R195.
		RESISTORS
R108	71784	Brightness pix.
	73193	Brightness pix.
R128	71784	Brightness pix.
	73193	Brightness pix.
R129	72735	Focus control.
R141	71440	Height control.
R144	72734	Vertical & horiz hold.
R148	71441	Vertical linearity.
R152	71443	Vertical centering.
R153	72738	W.W. 1125/20 w., 610/20w.
R154	72739	Volt-div. 8200/5w., 30/0.8w., 100/2 w.
R156	72734	Vertical & horiz. hold.
R166	71443	Horiz. centering.
R173	72893	100K, – 1%, ½ w.
R183	71785	Volume and power switch.
R187	71513	W.W. 3.3 ohms, 1/3 watt.
R190	72067	W.W. 5.1 ohms, ½ watt.
R196	32813	39 ohms, 1 watt.
R197	12876	W.W. 10K ohms, 10 watt.
		TRANSFORMERS
T1	71507	Antenna transformer.
T2	72811	Converter and C20.
T101	71778	Sound trap and C109.
T102	71775	Vertical oscillator.
T103	71774	Vertical output.
T104	73708	2nd pix IF and C121.
T105	71416	Horiz. output & H.V.
T106	71772	Power, 115 V, 60 cycle.
	73150	Power, 115 V, 50 cycle.
T107	71424	Sound IF.
T108	71427	Sound discriminator.
		MISCELLANEOUS
	71557	Filed coil-60 ohms.
	11469	Neutralizing coil.
	71556	Speaker- 12" E.M.
	71145	Metal cone suspension.
	31301	Output transf.

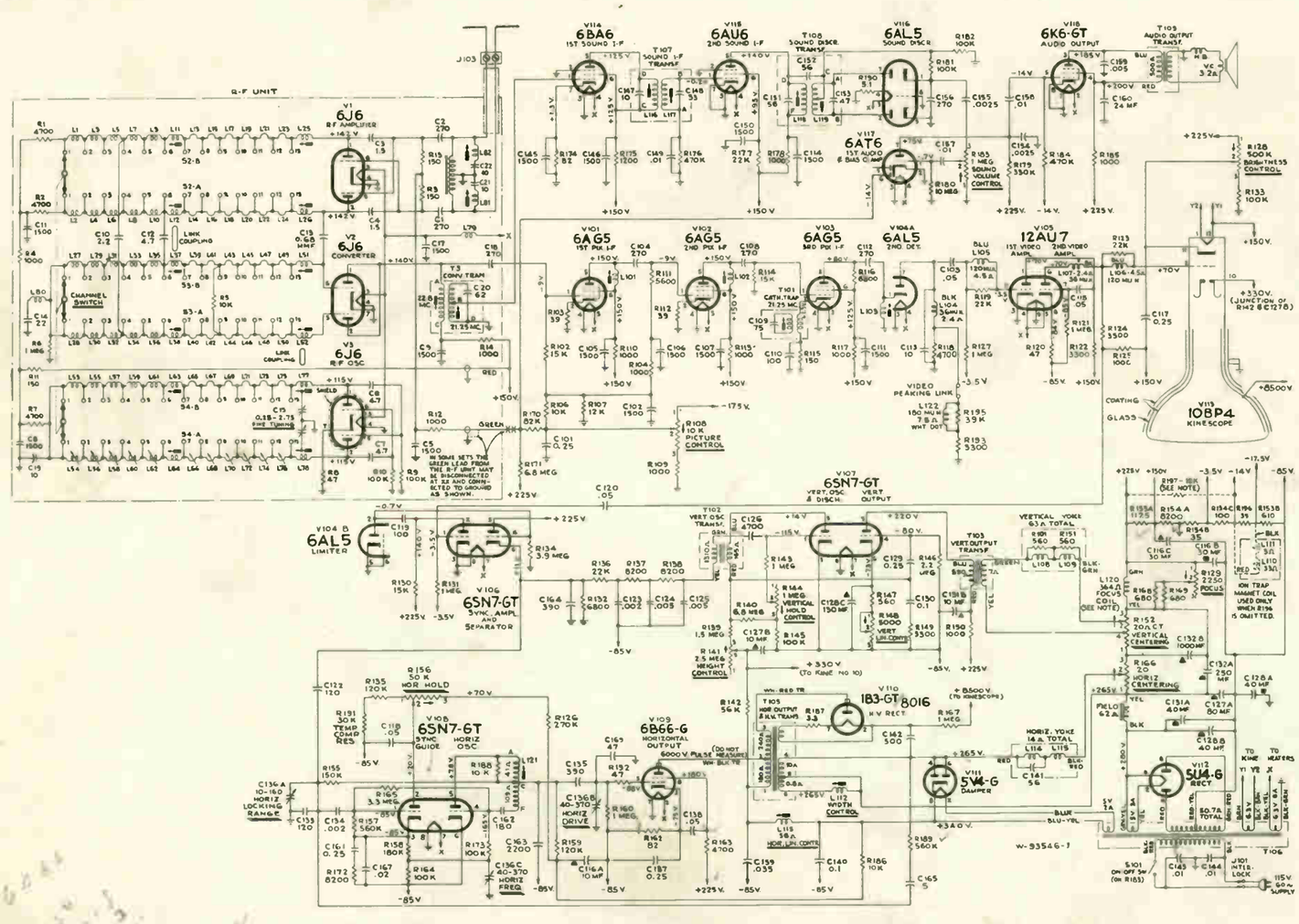

All resistance values in ohms. K = 1000

All capacitance values less than 1 in MF and above 1 in MMF unless otherwise noted

Direction of arrows at controls indicates clockwise rotation.

All voltages measured with "VoltOhmyst" and with picture control counterclockwise. Voltages should hold within ±20% with 117 v. a-c supply.

Coil resistance values less than 1 ohm are not shown.

In some receivers, substitutions have caused changes in component lead color codes, in electrolytic capacitor values and their lug identification markings.

In some sets R108 is connected to -14V.

In some sets, L122, R195 and R193 are omitted.

In early production receivers on EM type of ion trap magnet was employed and was connected as shown by the dotted lines.

R196 was omitted in receivers employing an EM type magnet.

In some receivers, the antenna trap (L81, L82, C21 and C221 may be omitted

In early production receivers the resistance of the focus coil was 247 ohms.

R197 was employed only in receivers with the 247-ohm focus coil.

Optional video peaking is provided by the video peaking link. Normally the link is connected in place. However, if transients are produced on high contrast pictures, the link should be opened.

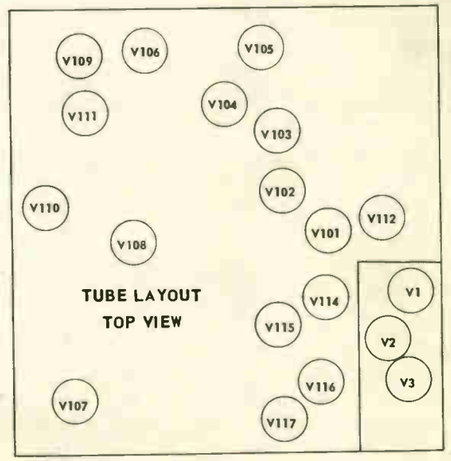

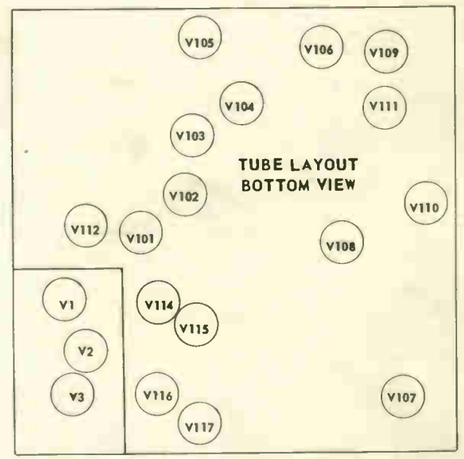

REF. NO.	PART NO.	DESCRIPTION
		ELECTROLYTICS
C116	72736	10/400; 30/350; 30/250.
C127	71780	80/450; 10/450.
C128	71781	40/450; 40/150; 130/50.
C131	71782	40/450; 10/350.
C132	71436	250/10; 1000/6.
C136	71771	1 sec: 10-160 mmfd. 2 sec: 40-370 mmfd.
C160	72740	24 mfd, 300 volts.

		COILS
L79	71505	Heater choke.
L80	71506	Converter grid IF choke.
L101	71426	First pix IF.
L102	71426	Second pix IF.
L103	71426	Third pix IF.
L104	71793	Peaking coil.
L105	71529	Peaking coil and R119.
L106	71529	Peaking coil and R123.
L107	71793	Peaking coil.
L108	71777	Deflecting yoke.
L109		See L108.
L110	71792	Ion-trap magnet.
L111	71792	Ion-trap magnet.
L112	71429	Width control.
L113	71449	Horiz. linearity.
L114		See L108.
L115		See L108.
L116		See T107.
L117		See T107.
L118		See T108.
L119		See T108.
L120	71421	Focus coil.
L121	72770	Horiz. oscillator.
L122	71528	Peaking coil and R195.

		RESISTORS
R108	71784	Brightness and picture.
	73193	Brightness and picture.
R128	71784	Brightness and picture.
	73193	Brightness and picture.
R129	72735	Focus control.
R141	71440	Height control.
R144	72734	Vertical & horiz. hold.
R148	71441	Vertical linearity.
R152	71443	Vertical centering.
R153	72738	W.W. 1125/20 w., 610/20 w.
R154	72739	Volt-div. 8200/5 w., 35/0.8 w, 100/2 w.
R156	72734	Vertical & horiz. hold.
R166	71443	Horiz. centering.
R183	71785	Volume and power switch.
R191	72928	30K, ohms, ¼ watt.
		TRANSFORMERS
S101	71785	Volume and power switch.
T1	71507	Antenna transformer.
T2	72811	Converter and C20.
T101	71778	Sound trap and C109.
T102	71775	Vertical oscillator.
T103	71774	Vertical Output.
T105	71416	Horiz. Output & H.V.
T106	71772	Power, 115 V., 60 cycle.
	73150	Power, 115 V., 50 cycle.
T107	71424	Sound IF.
T108	71427	Sound discriminator.
T109	71776	Audio output.
		MISCELLANEOUS
	71797	Speaker-4" x 6" elliptical E.M.

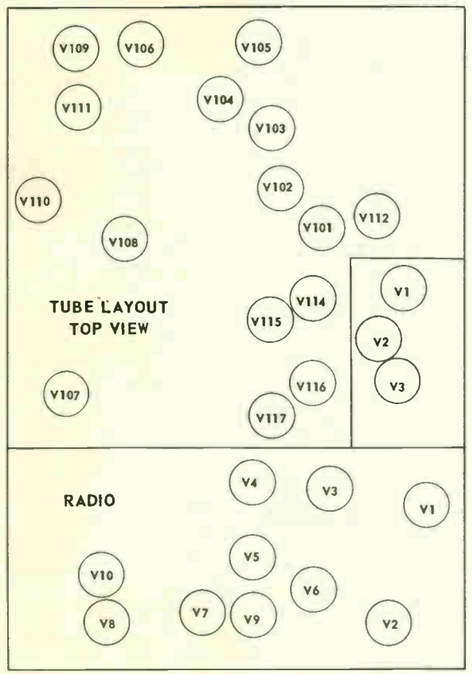

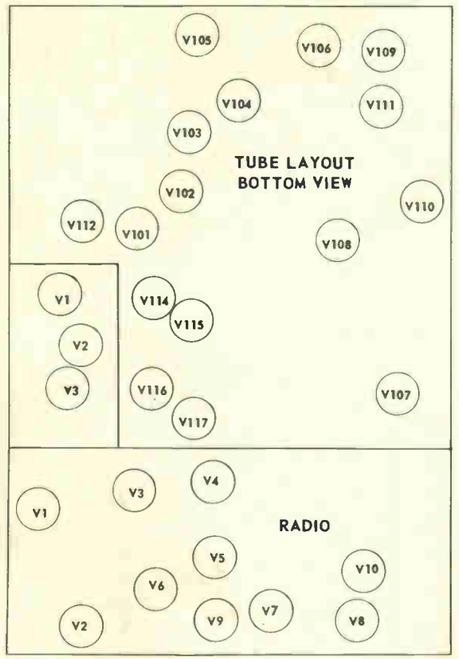

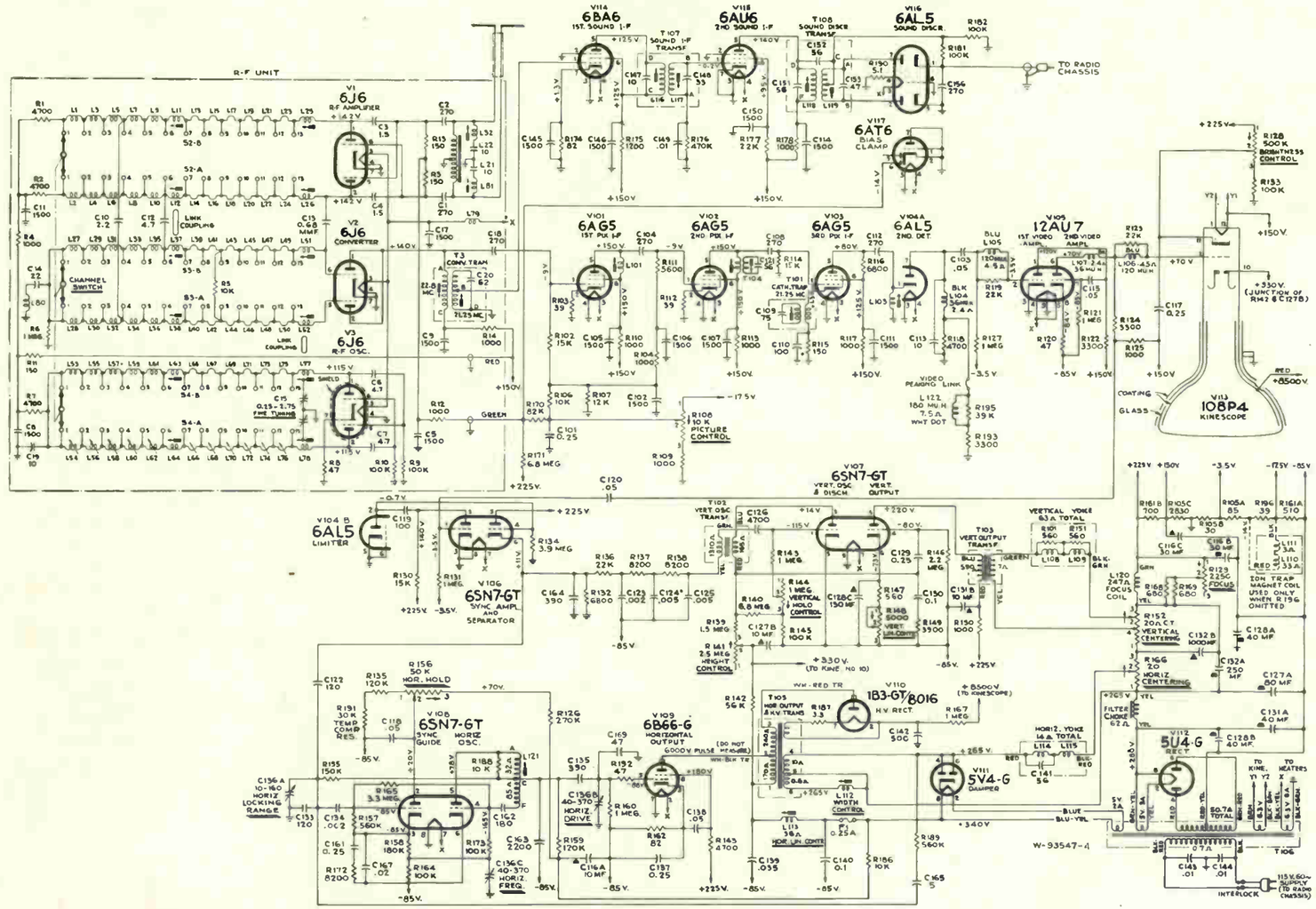

K = 1000

All resistance values in ohms, and capacitance values in mmfd., unless otherwise noted.

Coil resistance values less than 1 ohm are not shown.

Direction of arrows or controls indicates clockwise rotation.

All voltages measured with "Volt-Ohmyst" and with picture control, brightness control, vertical hold control and the horizontal hold control in the maximum counterclockwise position. Voltages should hold within ±20% with 117 v. a-c supply.

In some receivers the trap winding is omitted from T104.

Optional video peaking is provided by the video peaking link. Normally the link is connected in place. However, if transients are produced on high contrast pictures, the link should be opened.

In some receivers, substitutions have caused changes in component lead color codes, in electrolytic capacitor values and their lug identification markings.

In some sets R108 is connected to -14V.

In some sets, L122, R195 and R193 are omitted.

In some receivers, R149 is 3,300.

REF. NO.	PART NO.	DESCRIPTION
		ELECTROLYTICS
C116	72736	10/400; 30/350; 30/250.
C127	71780	80/450; 10/450.
C128	71781	40/450; 40/150; 130/50.
C131	71782	40/450; 10/350.
C132	71436	250/10; 1000/6.
C136	72771	1 sec: 10-160 mmfd., 2 sec: 40-370 mmfd.

		COILS
L79	71505	Heater choke.
L80	71506	Converter grid IF coil.
L101	71426	First pix IF.
L103	71426	Third pix IF.
L104	71793	Peaking coil.
L105	71529	Peaking coil.
L106	71529	Peaking coil.
L107	71793	Peaking coil.
L108	71420	Deflecting yoke.
L109		See L108.
L110	71792	Ion trap magnet.
L111	71792	Ion trap magnet.
L112	71429	Width control coil.
L113	71449	Horiz. linearity.
L114		See L108.
L115		See L108.
L116		See T107.
L117		See T107.
L118		See T108.
L119		See T108.
L120	73233	Focus coil.
L121	72770	Horiz. oscillator.
L122	71528	Peaking and R195.

		RESISTORS
R105	72849	Volt-div. 2830/7 w., 30/1 w., 85/2 w.
R108	71784	Brightness and pix control.
R108	73193	Brightness and pix control.
R128	71784	Brightness and pix control.
R128	73193	Brightness and pix control.
R129	72735	Focus control.
R141	71440	Height control.
R144	72734	Vertical & horiz. hold.
R148	71441	Vertical linearity.
R152	71443	Vertical centering.
R156	72734	Vertical & horiz. hold.
R161	72848	W.W. 700/12 w., 510/10 w.
R166	71443	Horiz. centering.
R173	72893	100K ohms, – 1%, ½ w.
R187	71513	W.W. 3.3 ohms, 1/3 watt.
R190	72067	W.W. 5.1 ohms, ½ watt.
R191	72928	30K ohms, ¼ watt.
		TRANSFORMERS
T1	71507	Antenna transformer.
T3		Converter and C20.
T7	37899	Output transformer.

T101	71778	Sound trap and C109.
T102	71775	Vertical oscillator.
T103	71774	Vertical output.
T104	73708	Second pix IF and C121.
T105	71416	Horiz. output & H.V.
T106	71772	Power, 115 V, 60 cycle.
T106	73150	Power, 115 V, 50 cycle.
T107	71424	Sound IF.
T108	71427	Sound discriminator.
		MISCELLANEOUS
	71961	Speaker-12" P.M.

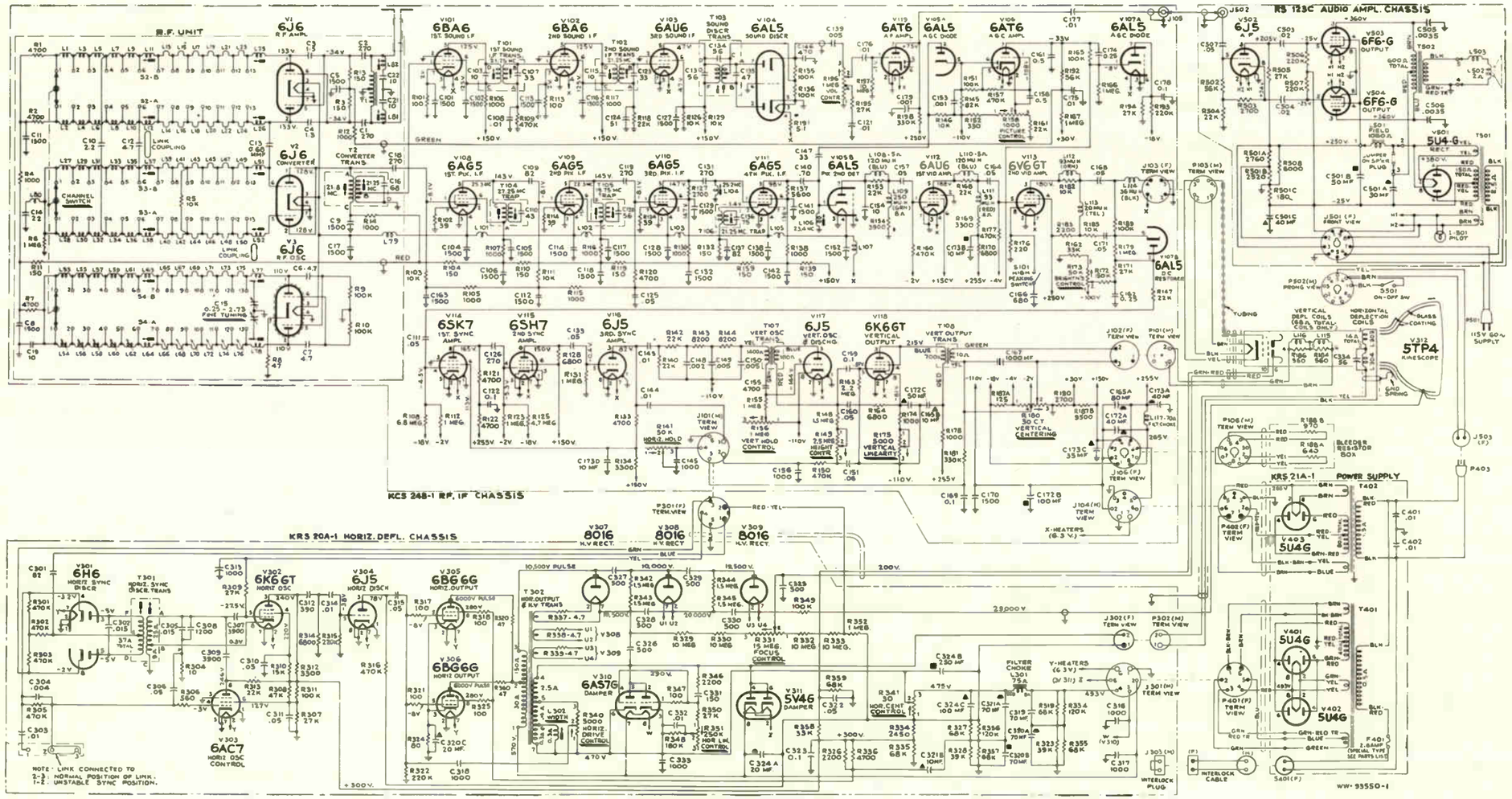

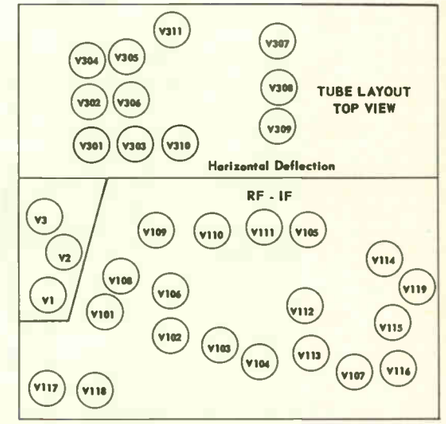

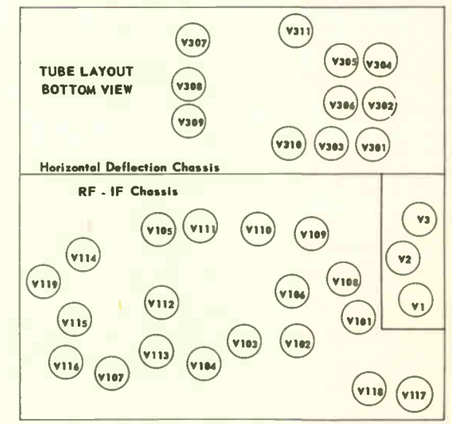

All resistance values in ohms. K = 1000.

All capacitance values less than 1 in MF and above 1 in MMF unless otherwise noted.

Coil resistance values less than 1 ohm are not shown.

Direction of arrows at controls indicates clockwise rotation.

All voltages measured with "VoltOhmyst" and with picture control counterclockwise. Voltages should hold within ±20% with 117 v. a-c supply.

In some receivers, substitutions have caused changes in component lead color codes, in electrolytic capacitor values and their lug identification markings.

In some receivers, C19 is omitted.

In most receivers, C14 is fixed.

In some receivers, R148 is 1 meg.

In some receivers, R360 is omitted.

REF. NO.	PART NO.	DESCRIPTION
C165	71780	80/450; 10/450.
C167	72611	1000/3.
C171	72996	.05 mfd, 600 V.
C172	72612	40/450; 100/150; 50/50.
C173	72169	40/450; 10/450; 35/350; 10/350.
C319	72621	70/400.
C320	72622	2 sec: 70/250; 1 sec: 20/50.
C321	72623	10/400; 10/400.
C324	72624	20/150; 250/15; 100/15.
C501	72955	30/450; 50/400; 40/25.
L80	71506	Converter grid IF choke.
L81	73239	Antenna trap.
L82		See L81.
L101	71505	Filament choke.
L102	71505	Filament choke.
L103	71505	Filament choke.
L104	71426	4th pix IF.
L105	71505	Filament choke.
L107	71505	Filament choke.
L108	71529	Peaking and R153.
L109	71526	Choke coil.
L110	71529	Peaking and R168.
L111	71527	Choke coil.
L112	72619	Peaking and R182.
L113	72618	Choke coil.
L114	71793	Choke coil.
L115	72196	Deflecting yoke.
L116		See L115.
L117	72167	Filter choke.
L301	72179	Filter choke.
L302	72180	Width control.
L303		See L115.
L304		See L115.
R141	72758	Vertical & horiz. hold.
R149	71440	Height control.
R156	72758	Vertical & horiz. hold.
R158	71971	Brightness & contrast.
R173	71971	Brightness & contrast.
R175	71441	Vertical linearity.
R180	72168	Vertical centering.
R183	72613	W.W. 2200 ohms, 10 watt.
R187	72171	Volt-div. 9500/2 w, 125/2.5 w
R188	72170	W.W. 970/9 w., 640/10.5 w.
R191	72067	W.W. 5.1 ohms, ½ watt.
R196	70143	Volume control.
R312	48207	W.W. 3300 ohms, 5 watt.
R324	72631	W.W. 80 ohms, 5 watt.
R331	72183	Focus control.
R334	72184	W.W. 2450 ohms, 16.5 watt.
R337	72633	W.W. 4.7 ohms 1/3 watt.
R338	72633	W.W. 4.7 ohms 1/3 watt.
R339	72633	W.W. 4.7 ohms 1/3 watt.
R340	71441	Horizontal drive.
R341	72181	Horizontal centering.
R351	72182	Horizontal linearity.
R501	71660	180/3.5 w., 2520/3.97 w., 2760/9.3 w.
R508	48344	W.W. 2000 ohms, 5 watt.
5101	30953	Video peaking switch.
T1	71507	Antenna transformer.
T2	71495	Converter and C16.
T101	71424	First sound IF
T102	71424	Second sound IF.
T103	71427	Sound discriminator.
T104	71423	First picture IF.
T105	71425	Second picture IF.
T106	71422	Sound trap and C136.
T107	71775	Vertical oscillator.
T108	72952	Vertical output.
T109	73708	Third picture IF.
T301	71428	Horizontal oscillator.
T302	72178	Horizontal output & H.V..
T401	73191	Power, 115 V, 50 cycle.
	72176	Power, 115 V, 60 cycle.
T402	73192	Power, 115 V, 50 cycle.
	72177	Power, 115 V, 60 cycle.
T501	37048	Power, 115 V, 50/60 cycle.
T502	71661	Output transformer.
		MISCELLANEOUS
	72188	Corrector lens.
	71287	Spherical mirror.
	71146	Field coil-1060 ohms.
	11469	Neutralizing coil.
	71144	Speaker- 12" E.M.

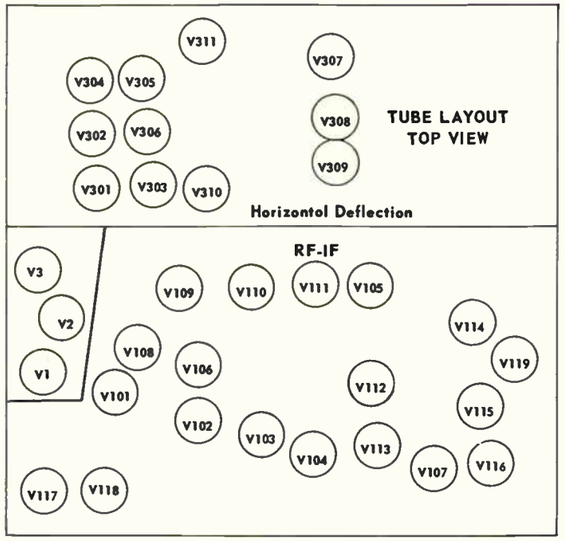

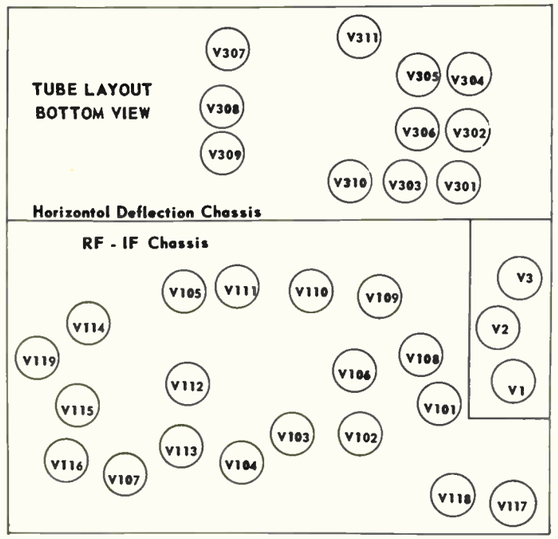

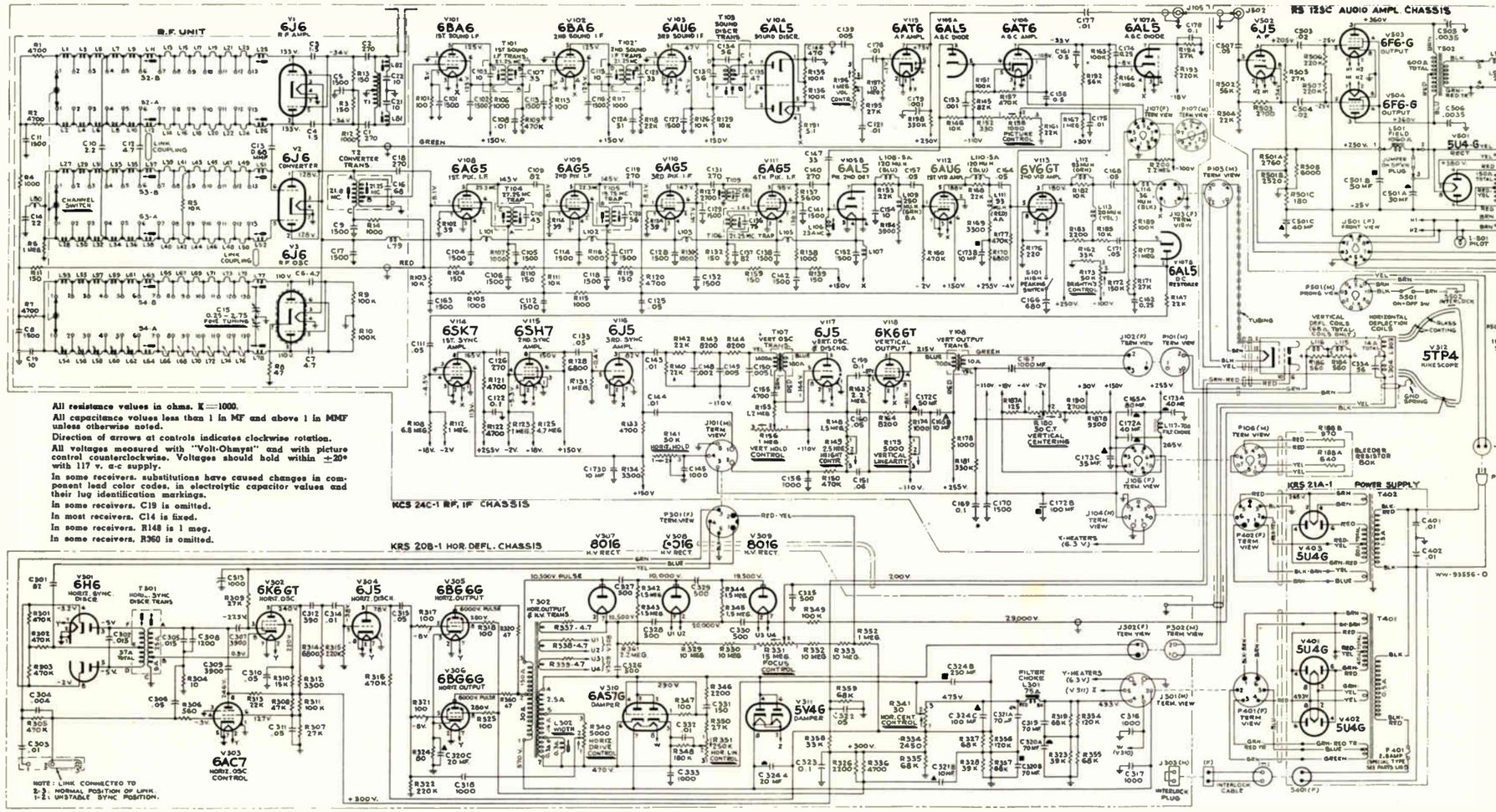

All resistance values in ohms. K=1000.
All capacitance values less than 1 in MF and above 1 in MMF unless otherwise noted.
Direction of arrows at controls indicates clockwise rotation.
All voltages measured with "Volt-Ohmyst" and with picture control counterclockwise. Voltages should hold within ±20% with 117 v. a-c supply.
In some receivers, substitutions have caused changes in component lead color codes, in electrolytic capacitor values and their lug identification markings.
In some receivers, C19 is omitted.
In most receivers, C14 is fixed.
In some receivers, R148 is 1 meg.
In some receivers, R360 is omitted.

The KCS24C-1 R-F, I-F chassis is wired so that a remote Brightness and Picture control can be connected. This connection is made to J107. The schematic for the Local-Remote switch and the Remote Control Box is shown to the left.

8PCS41 receivers employed a KCS24B-1 R-F, I-F chassis, the schematic and wiring diagram for which is shown in the 741PCS service data.

8PCS41-B and 8PCS41-C receivers employed a KCS24C-1 R-F, I-F chassis shown in the schematic above.

REF. NO.	PART NO.	DESCRIPTION
		ELECTROLYTICS
C165	71780	80/450; 10/450.
C166	72611	1000/3.
C172	72612	40/450; 100/150; 50/50.
C173	72169	40/450; 10/450; 35/350; 10/350
C319	72621	70/400.
C320	72622	2 sec: 70/250; 1 sec: 20/50.
C321	72623	70/400; 10/400.
C324	72624	20/150; 250/15; 100/15.
C501	72955	30/450; 50/400; 40/25.
		COILS
L80	71506	Converter grid IF choke.
L81	73239	Antenna trap.
L82		See L81.
L101	71505	Filament choke.
L102	71505	Filament choke.
L103	71505	Filament choke.
L105	71505	Filament choke.
L106	71426	Fourth pix IF.
L107	71505	Filament choke.
L108	71529	Peaking coil and R153.
L109	71526	Choke.
L110	71529	Peaking coil and R168.
L111	71527	Choke.
L112	72619	Peaking coil and R182.
L113	72618	Choke.
L114	71793	Choke.
L115	72196	Deflecting yoke.
L116		See L115.
L117	72167	Filter choke.
L301	72179	Filter choke.
L302	72180	Width control.
L303		See L115.
L304		See L115.
		RESISTORS
R142	72758	Vertical & horiz. hold.
R149	71440	Height control.
R156	72758	Vertical & horiz. hold.
R158	71971	Brightness & contrast.
R173	71971	Brightness & contrast.
R175	71441	Vertical linearity.
R180	72168	Vertical centering.
R183	72613	W.W. 2200 ohms, 10 watt.
R187	72171	Volt-div. 9500/2 w., 125/2.5 w.
R191	72067	W.W. 5.1 ohms, ½ watt.
R196	70143	Volume control.
R312	48207	W.W. 3300 ohms, 5 watt.
R318	72631	100 ohms, – 20%, ½ watt.
R324	72631	W.W. 80 ohms, 5 watt.
R325	72631	100 ohms, – 20%, ½ watt.
R331	72183	Focus control.
R334	72184	W.W. 2450 ohms, 16.5 w.
R337	72633	W.W. 4.7 ohms, 1/3 watt.
R338	72633	W.W. 4.7 ohms, 1/3 watt.
R339	72633	W.W. 4.7 ohms, 1/3 watt.
R340	71441	Horizontal drive.
R341	72181	Horizontal centering.
R347	72631	100 ohms, – 20%, ½ watt.
R351	72182	Horizontal linearity.
R501	71660	180/3.5 w, 2520/3.97 w 2760/9.3 w.
R508	48344	W.W. 2000/5 watts.
		TRANSFORMERS
S101	30953	Video peaking switch.
T1	71507	Antenna transformer.
T2	71495	Converter and C16.
T101	71424	First sound IF.
T102	71424	Second sound IF.
T103	71427	Sound discriminator.
T104	71423	First picture IF.
T105	71425	Second picture IF.
T106	71422	Sound trap.
T107	71775	Vertical oscillator.
T108	72952	Vertical output.
T109	73708	Third picture IF.
T301	71428	Horizontal oscillator.
T302	72178	Horizontal output & H.V.
T401	73191	Power, 115 V, 50 cycle.
	72176	Power, 115 V, 60 cycle.
T402	73192	Power, IF, 115 V, 50 cy. RF TV chassis.
T501	37048	Power, 115 V, 50/60 cy.
T502	71661	Output transformer. RF TV chassis.
	72177	Power, IF, 115 V, 60 cy.
		MISCELLANEOUS
	72188	Corrector lens (KRK 1A)
	72187	Spherical mirror (KRK 1A)
	72188	Corrector lens (KRK 4)
	73325	Spherical mirror (12") (KRK 4)
	71144	Speaker-12" E.M. (RL 70R 1)

8T241, 8T243, 8T244 MODELS

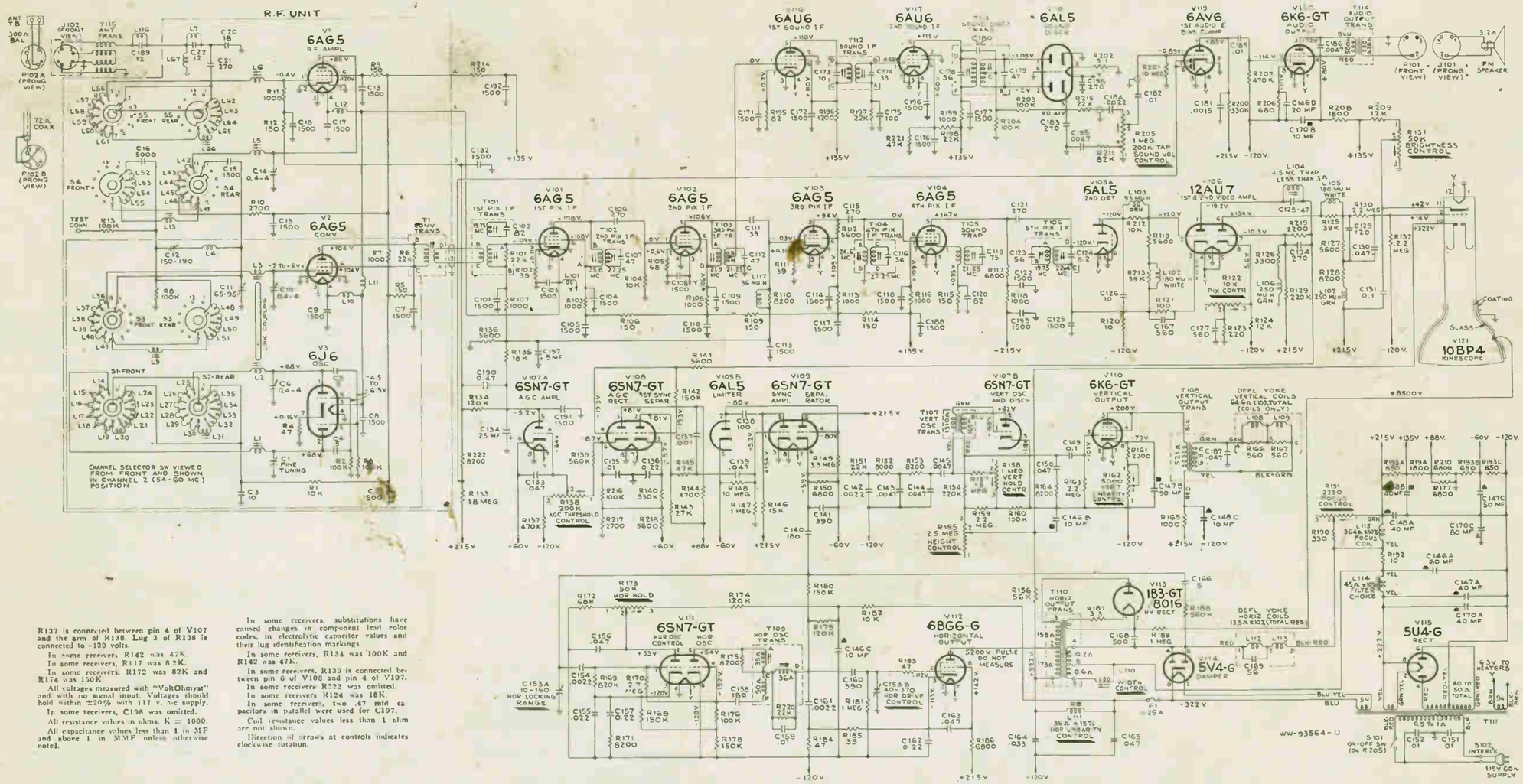

R137 is connected between pin 4 of V107 and the arm of R138. Lug 3 of R138 is connected to -120 volts.

In some receivers R142 was 47K.

In some receivers, R117 was 8.2K.

In some receivers, R172 was 82K and R174 was 150K

All voltages measured with "VoltOhmyst" and with no signal input. Voltages should hold within ±20% with 117 v. a-c supply.

In some receivers, C198 was omitted.

All resistance values in ohms. K = 1000.

All capacitance values less than 1 in MFF and above 1 in MMF unless otherwise noted.

In some receivers, substitutions have caused changes in component lead color codes, in electrolytic capacitor values and their lug identification markings.

In some receivers, R134 was 100K and R142 was 47K.

In some receivers, R139 is connected between pin 6 of V108 and pin 4 of V107.

In some receivers R222 was omitted.

In some receivers R124 was 18K.

In some receivers, two .47 mfd capacitors in parallel were used for C197.

Coil resistance values less than 1 ohm are not shown.

Direction of arrows at controls indicates clockwise rotation.

REF. NO.	PART NO.	DESCRIPTION
		ELECTROLYTICS
C11	73449	1 sec: 150-190 mmfd, 1 sec: 65-95 mmfd.
C134	53147	25 mfd, 50 V.
C146	73581	1 sec: 60/450; 2 sec: 10/450 1 sec: 20/150.
C147	73583	40/450; 90/150; 50/100.
C148	71432	2 sec: 40/450; 1 sec: 10/450.
C153	73580	1 sec: 10-160 mmfd, 1 sec: 40-370 mmfd.
C168	71450	H.V. 500/15K Volts.
C170	73582	40/450; 10/450; 80/200.
C197	74106	5 mfd, 50 volts.
L101	73477	Choke.
L102	71528	Peaking coil, 180 mfd.
L103	72619	Peaking coil, 93 mfd.
L104	73577	4.5 mc trap.
L105	71528	Peaking coil, 180 mfd.
L106	71526	Peaking coil 250 mfd,
L107	71526	Peaking coil 250 mfd.
L108	71420	Deflecting yoke.
L109		See L108.
L110	71429	Width control.
L111	71449	Horizontal linearity.
L112		See L108.
L113		See L108.
L114	73154	Filter choke.
L115	73566	Focus coil.
L116	73476	IF trap.
L117	74170	Peaking coil.
R101	73571	First pix IF.
R122	73910	Picture, volume & power sw.
R131	73156	Brightness control.
R138	73579	AGC threshold.
R155	71440	Height control.
R158	72734	Horiz. & vertical hold.
R162	71441	Vertical linearity.
R173	72734	Horiz. & vertical hold.
R187	71513	W.W. 3.3 ohms, 1/3 w.
R190	37502	W.W. 330 ohms, 2 watt.
R191	72735	Focus control.
R193	73588	Volt-div. 1 sec: 850/12 w., 2 sec: 650/6 w.
R202	72067	W.W. 5.1 ohms, ½ watt.
R205	73910	Picture, volume & power sw.
5101	73910	Picture, volume & power sw.
T1	73448	Converter and R6.
T101	73571	First pix IF.
T102	73572	Second pix IF.
T103	73573	Third pix IF.
T104	73574	Fourth pix IF.
T105	71778	Sound trap.
T106	73575	Fifth pix IF.
T107	73569	Vertical oscillator.
T108	73568	Vertical output.
T109	73576	Horizontal oscillator.
T110	73570	Horizontal output & H.V.
T111	73576	Power, 115 V-60 cycle.
T112	71424	Sound IF.
T113	71427	Sound discriminator.
T114	71419	Audio output.
T115	73591	Antenna less mounting bracket and socket.
	73578	Antenna complete w/socket and bracket incl. J102.
		MISCELLANEOUS
	73993	Speaker-5 x 7" PM.

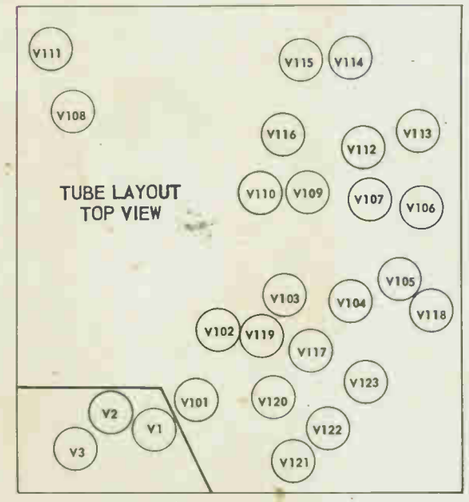

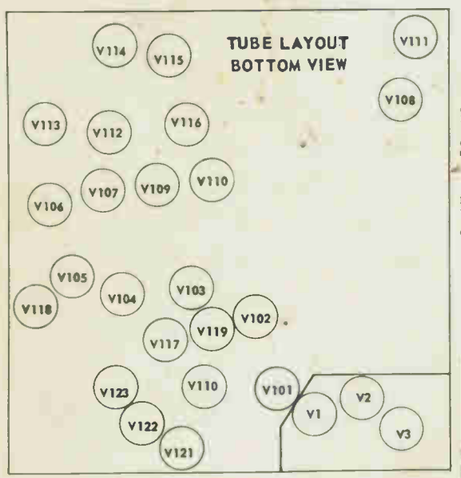

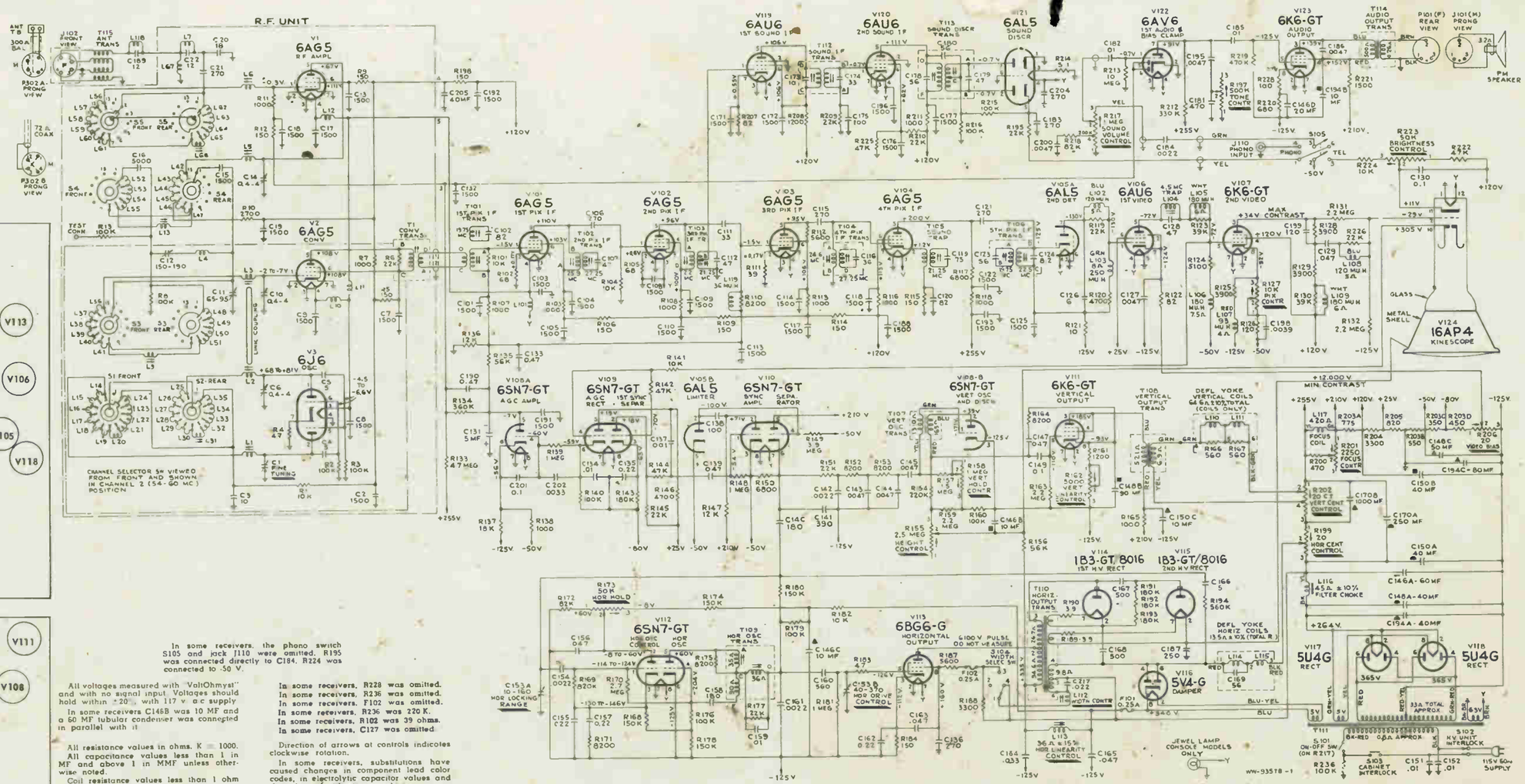

All voltages measured with "VoltOhmyst" and with no signal input. Voltages should hold within ±20%, with 117 v. a.c. supply.

In some receivers C148B was 10 MF and a 60 MF tubular condenser was connected in parallel with it.

All resistance values in ohms. K = 1000.
All capacitance values less than 1 in MF and above 1 in MMF unless otherwise noted.
Coil resistance values less than 1 ohm are not shown.

In some receivers, the phono switch S105 and jack J110 were omitted. R195 was connected directly to C184. R224 was connected to -50 V.

In some receivers, R228 was omitted.
In some receivers, R236 was omitted.
In some receivers, F102 was omitted.
In some receivers, R236 was 220 K.
In some receivers, R102 was 39 ohms.
In some receivers, C127 was omitted.

Direction of arrows at controls indicates clockwise rotation.

In some receivers, substitutions have caused changes in component lead color codes, in electrolytic capacitor values and their lug identification markings.

REF. NO.	PART NO.	DESCRIPTION
		ELECTROLYTICS
C11	73449	1 sec: 150-190 mmfd, 1 sec: 65-95 mmfd.
C131	74106	5 mfd, 50 volts.
C146	73581	1 sec: 60/450; 2 sec: 10/450 1 sec: 20/150.
C148	73583	40/450; 90/450; 50/150.
C150	71432	2 sec: 40/450; 1 sec: 10/450.
C170	71436	250/10; 1000/6.
C194	73582	40/450; 10/450; 80/200.
C205	74266	40/400.
		COILS
L102	71529	Peaking (120 mfd) & R119.
L103	71526	Peaking (250 mfd).
L104	73577	4.5 mc video trap.
L105	71528	Peaking (180 mfd) & R123.
L106	74214	Peaking (180 mfd).
L107	71527	Peaking (93 mfd).
L108	71529	Peaking (120 mfd) & R226.
L109	71528	Peaking (180 mfd) & R130.
L110	74141	Deflecting yoke.
L111		See L110.
L112	71429	Width control.
L113	71449	Horiz. linearity.
L114		See L110.
L115		See L110.
L116	73154	Filter choke.
L117	74142	Focus coil.
L118	73476	IF trapl
L119	74170	Peaking (36 mfd) & R110.
		RESISTORS
R127	74047	Brightness and picture control.
R155	71440	Height control.
R158	72734	Horiz. and vertical hold.
R162	71441	Vertical linearity.
R173	72734	Horiz. and vertical hold.
R189	74156	W.W. 3.9 ohms, 1/3 watt.
R190	74156	W.W. 3.9 ohms, 1/3 watt.
R197	74048	Tone, volume, power switch.
R198	74146	Horiz. centering.
R200	74197	W.W. 470 ohms, 4 watt.
R201	72735	Focus control.
R202	71443	Vertical centering.
R203	74155	Volt-div. 775/9.5 w, 550/5 w, 350/3 w, 450/5 w.
R204	48207	W.W. 3300 ohms, 10 w.
R205	74213	W.W. 820 ohms, 4 w.
R206	74146	Video bias control.
R214	72067	W.W. 5.1 ohms, ½ watt.
R217	74048	Tone, volume, power switch.
R223	74047	Brightness and picture.
S101	74060	TV phono switch.
		TRANSFORMERS
T1	73448	Converter and R6.
T101	73571	First pix IF.
T102	73572	Second pix IF.
T103	73573	Third pix IF.
T104	73574	Fourth pix IF.
T105	71778	Sound trapl
T106	73575	Fifth pix IF.
T107	74144	Vertical oscillator.
T108	73568	Vertical output.
T109	73576	Horizontal oscillator.
T110	74145	Horiz. output and H.V
T111	74143	Power, 115 V, 60 c
T112	71424	Sound IF.
T113	71427	Sound discrimir
T114	71419	Audio output.
T115	73578	Antenna ma w/sock
		MISCELLANE
	74169	Speak

8TK29, 8TR29 MODELS

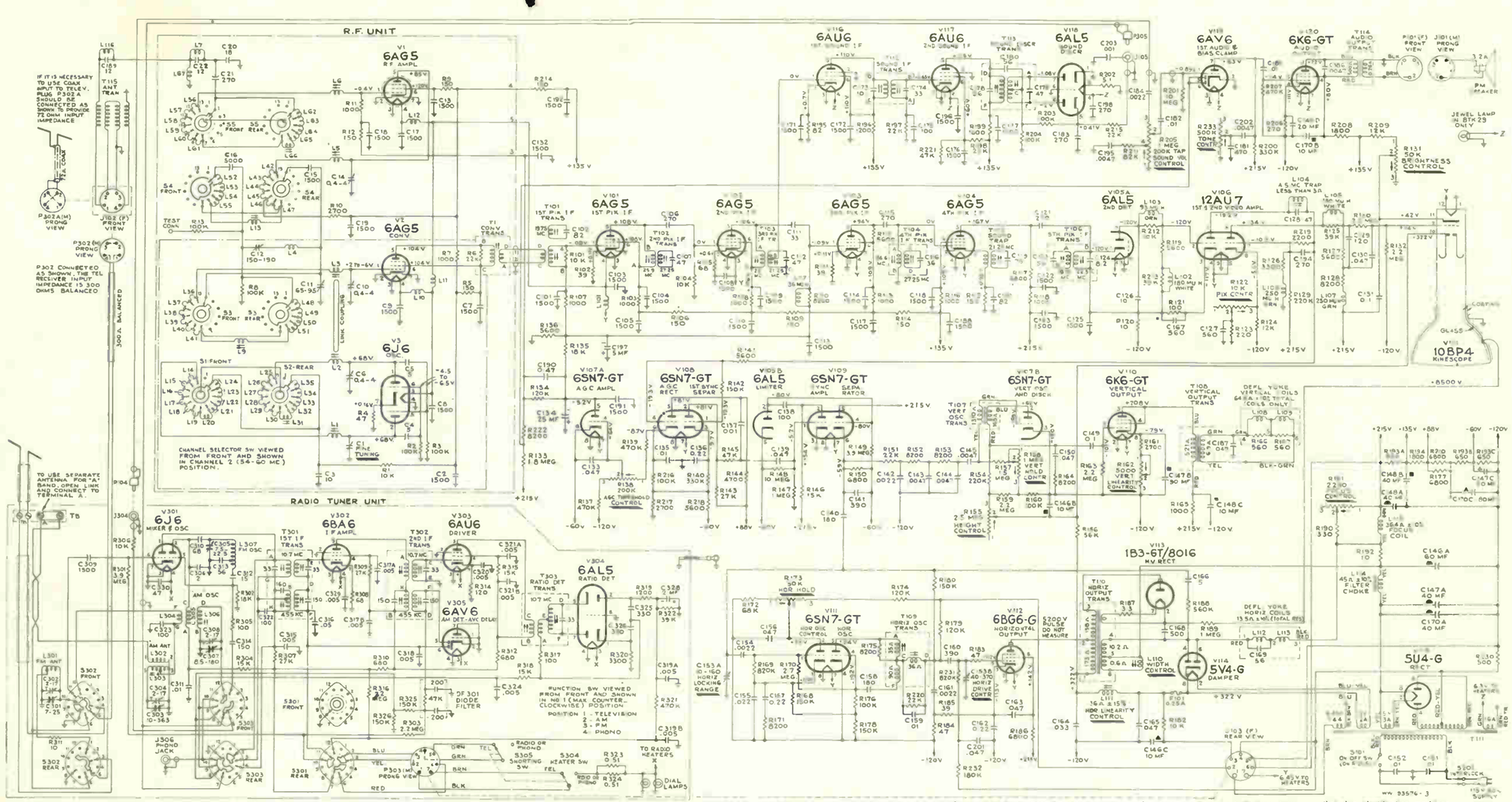

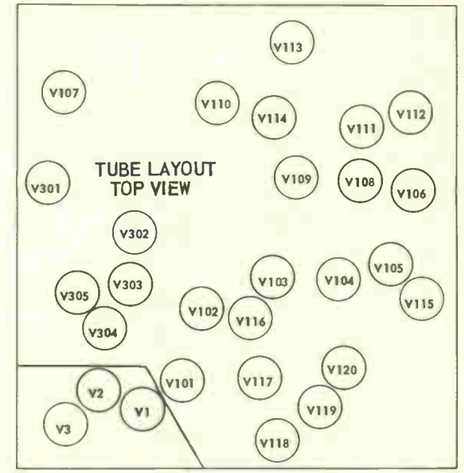

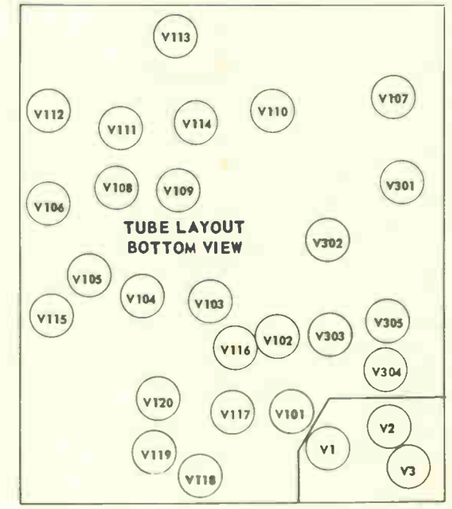

All resistance values in ohms K = 1,000.

All capacitance values less than 1 in MF and above 1 in MMF unless noted.

Coil resistance values less than 1 ohm are not shown.

Direction of arrows at controls indicates clockwise rotation.

In some receivers, R135 is 560K.

In some receivers, substitutions have caused changes in component lead color codes, in electrolytic capacitor values and their lug identification markings.

All voltages measured with "VoltOhmyst," no signal input and with 117 v. a-c supply.

REF. NO.	PART NO.	DESCRIPTION
		ELECTROLTICS
C11	73449	1 sec: 150-190 mmfd, 1 sec: 65-95 mmfd.
C134	53147	.01 mfd, 400 volts.
C146	73581	1 sec: 60/450, 1 sec: 2 sec: 10/450, 1 sec: 20/150.
	73583	40/450, 90/150, 50/150.
	73551	2 sec: 40/450, 1 sec: 10/450.
	73582	40/450, 10/450, 80/200.
	106	5/50.
		COILS
L101	73477	Choke coil.
L102	71528	Peaking, 180 mfd, R213.
L103	72619	Peaking, 93 mfd,.
L104	73577	4.5 mc trap.
L105	71528	Peaking, 180 mfd, R125.
L106	71526	Peaking, 250 mfd.
L107	71526	Peaking, 250 mfd.
L108	71420	Deflecting yoke.
L109		See L108.
L110	71429	Width control.
L111	71449	Horiz. linearity.
L112		See L108.
L113		See L108,
L114	73154	Filter choke.
L115	73566	Focus coil.
L116	73476	IF trap.
L117	74170	Peaking (36 mfd) L117.
		RESISTORS
R122	74047	Brightness and picture.
R131	74047	Brightness and picture.
R138	73579	AGC threshold control.
R155	71440	Height control.
R158	72734	Horiz. and vertical hold.
R162	71441	Vertical linearity.
R173	72734	Horiz. and vertical hold.
R187	71513	W.W. 3.3 ohms, 1/3 watt.
R190	37502	W.W. 330 ohms, 2 watt. 2 sec: 650/6 w.
	72325	W.W. 390 ohms, 2 watt.
R191	72735	Focus cont. (KC532, A)
	74442	Focus cont. (KC532B, C)
R193	73588	Volt-div. 1 sec: 850/12 w
R202	72067	W.W. 5.1 ohms, ½ w.
R205	74048	Volume, tone, power switch.
R230	74049	W.W. 500 ohms, 20 w.
R233	74048	Volume, tone, power switch.
5101	74048	Volume, tone, power switch.
		TRANSFORMERS
T1	73448	Converter and R6.
T101	73571	First pix IF.
T102	73572	Second pix IF.
T103	73573	Third pix IF.
T104	73574	Fourth pix IF.
T105	71778	Sound trap.
T106	73575	Fifth pix IF.
T107	73569	Vertical oscillator.
T108	73568	Vertical output.
T109	73576	Horizontal oscillator.
T110	73570	Horiz. output. H.V.
T111	74046	Power, 115 V, 60 cycle.
T112	71424	Sound IF.
T113	71427	Sound discriminator.
T114	71419	Audio output.
T115	73578	Antenna w/socket & bracket.
		MISCELLANEOUS
	73635	Speaker- 12" P.M. (8TK29)
	73993	Speaker-5" x 7" P.M. (8TR29)

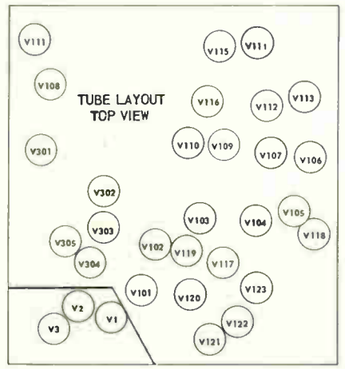

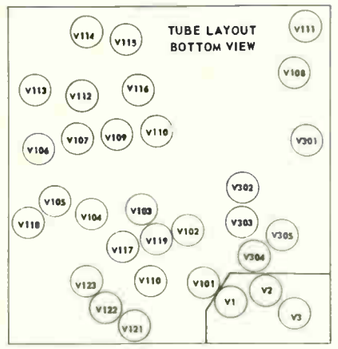

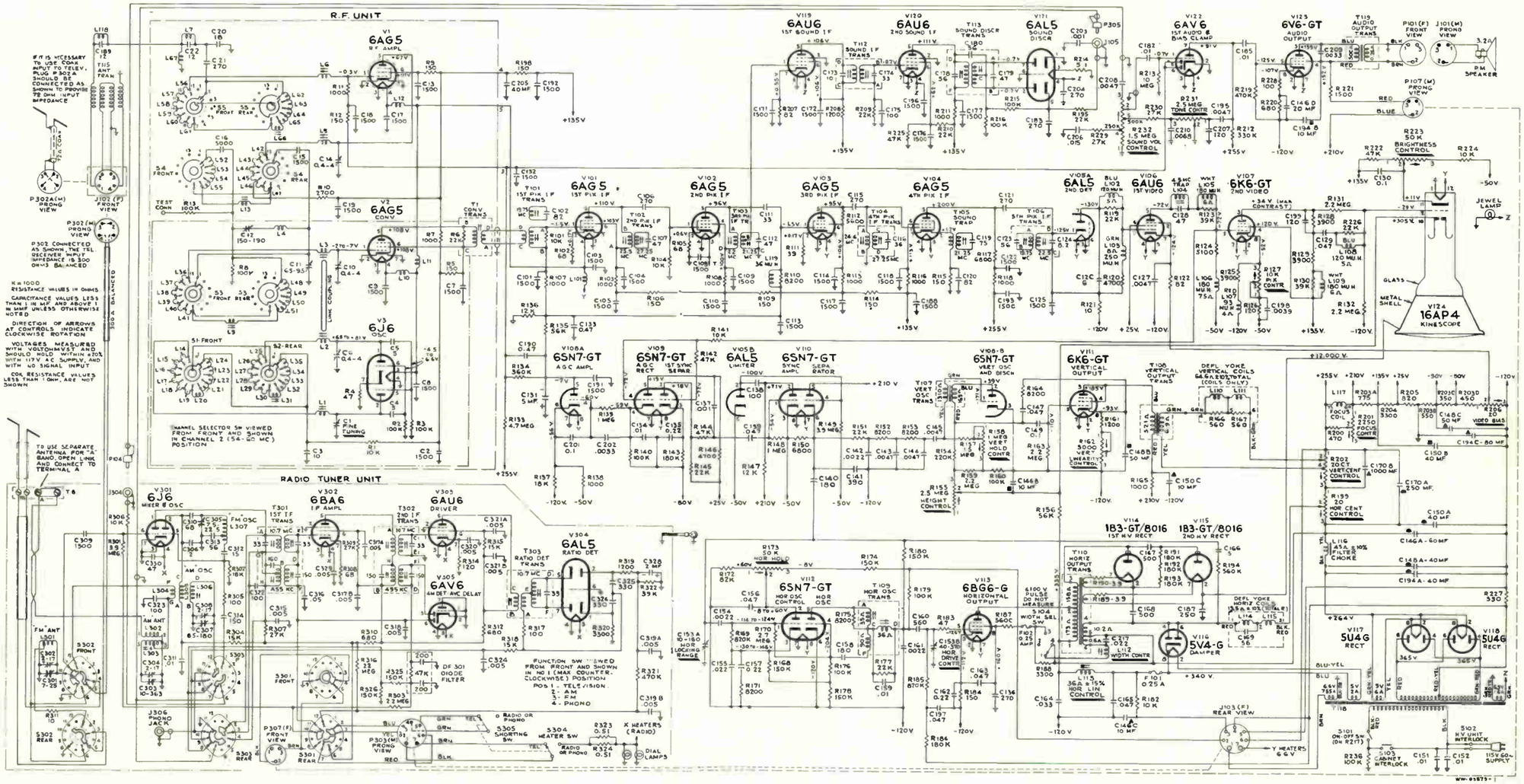

All resistance values in ohms. K = 1,000.
All capacitance values less than 1 in MF and above 1 in MMF unless noted.

Coil resistance values less than 1 ohm are not shown.
Direction of arrows at controls indicates clockwise rotation.

In some receivers, substitutions have caused changes in component lead color codes, in electrolytic capacitor values and their lug identification markings.

All voltages measured with "VoltOhmyst," no signal input with 117 v. a-c supply with the pix control fully clockwise and the brightness control set for average brightness.

In some receivers, R101 consists of two 22k resistors in parallel. One 22k resistor is inside T101 and the other is on the bottom of the terminal board.

In some receivers, R102 was 39 ohms.
In some receivers, C217 was omitted.

REF. NO.	PART NO.	DESCRIPTION
		ELECTROLYTICS
C11	73449	1 sec: 150-190 mmfd, 1 sec:
C131	74106	5 mfd, 50 volts.
C146	73581	1 sec: 60/450, 2 sec: 10/450 1 sec: 20/150.
C148	73583	40/450, 90/450, 50/150.
C150	71432	2 sec: 40/450, 1 sec: 10/450.
C153	73580	1 sec: 10-160 mmfd, 1 sec: 40-370 mmfd.
C170	71436	250 mfd, 10 V, 1K mfd 6 V.
C194	73582	40 mfd 450 V, 10 mfd 450 V 80 mfd 200 V.
C205	74266	40 mfd 400 V.

		COILS
L101	73477	Choke.
L102	71529	Peaking (250 mfd) & R119.
L103	71526	Peaking (250 mfd).
L104	73577	4.5 mc trap.
L105	71528	Peaking (180 mfd) & R123.
L106	74214	Peaking (180 mfd)
L107	71527	Peaking (93 mfd).
L108	71529	Peaking (120 mfd).
L109	71528	Peaking (180 mfd) & R130.
L110	74262	Deflecting yoke.
L111		See L110.
L112	71429	Width control.
L113	71449	Horiz. linearity.
L114		See L110.
L115		See L110.
L116	73154	Filter choke.
L117	74263	Focus coil.
L118	73476	IF trap.
L119	74170	Peaking (36 mfd) & R110.
		RESISTORS
R127	74047	Brightness and picture.
R155	71440	Height control.
R158	72734	Horiz. and vertical.
R162	71441	Vertical linearity.
R173	72734	Horiz. and vertical.
R189	74156	W.W. 3.9 ohms, 1/3 watt.
R190	74156	W.W. 3.9 ohms 1/3 watt.
R199	74146	Horiz. centering.
R200	74197	W.W. 470 ohms, 4 watt.
R201	72735	Focus control.
R202	71443	Vertical centering.
R203	74155	Volt-div. 775/9.5 w, 550/5 w, 350/3 w, 450/5 w.
R204	48207	W.W. 3300/10 w.
R205	74213	W.W. 820 ohms, 4 w.
R206	74213	Video bias control.
R214	72067	W.W. 5.1 ohms, ½ w.
R223	84047	Brightness and picture.
R227	74265	W.W. 330 ohms, 20 w.
R231	74359	Tone, volume, power switch.
R232	74359	Tone, volume, power switch.
5101	74359	Tone, volume, power switch.
5104	74147	Width selector switch.
		TRANSFORMERS
T1	73448	Converter and R6.
T101	73571	First pix IF.
T102	73572	Second pix IF.
T103	73573	Third pix IF.
T104	73574	Fourth pix IF.
T105	71778	Sound trap.
T106	73575	Fifth pix IF.
T107	74144	Vertical oscillator.
T108	73568	Vertical output.
T109	73576	Horiz. oscillator.
T110	74145	Horiz. output & H.V.
T112	71424	Sound IF.
T113	71427	Sound discriminator.
T115	73578	Antenna matching trans. complete w/socket & bracket.
T118	74264	Power, 117 V 60 cycle.
T119	74358	Audio transformer.
		MISCELLANEOUS
	74355	Metal cone suspension.

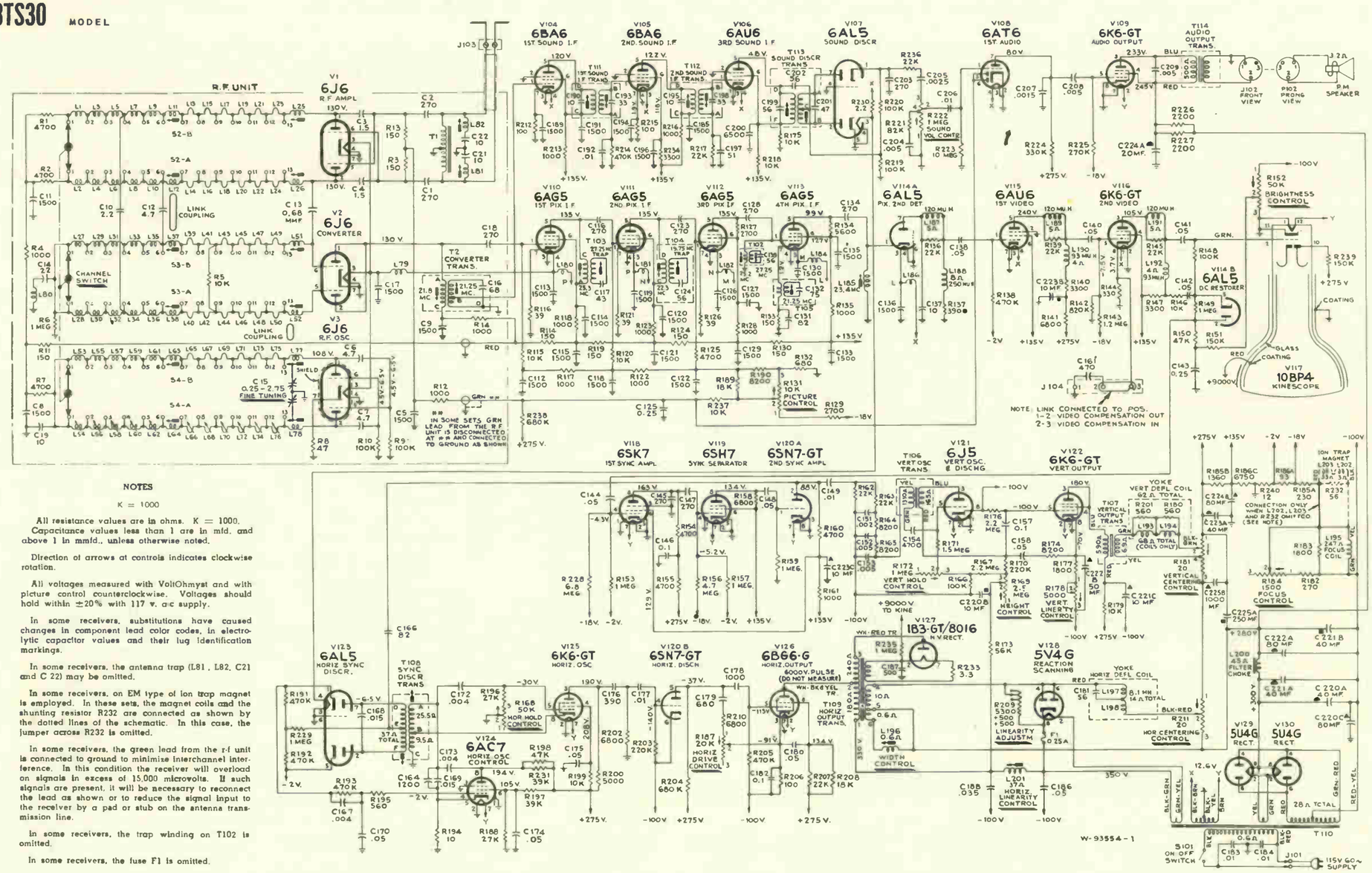

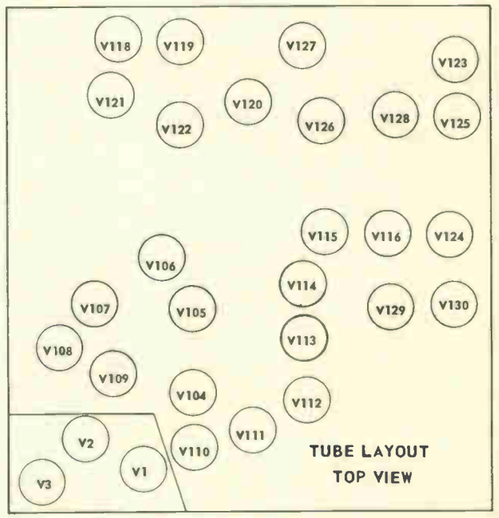

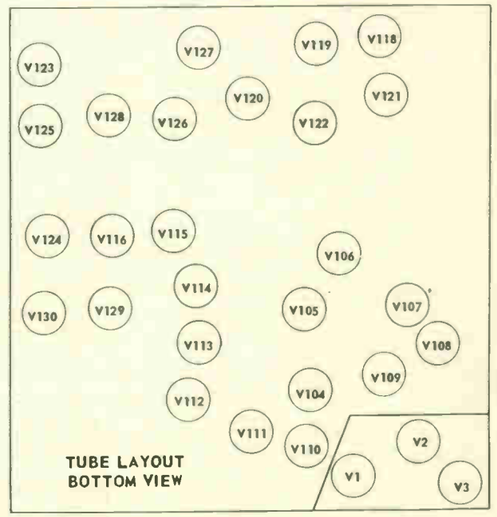

NOTES

K = 1000

All resistance values are in ohms. K = 1000.

Capacitance values less than 1 are in mfd. and above 1 in mmfd., unless otherwise noted.

Direction of arrows at controls indicates clockwise rotation.

All voltages measured with VoltOhmyst and with picture control counterclockwise. Voltages should hold within ±20% with 117 v. a-c supply.

In some receivers, substitutions have caused changes in component lead color codes, in electrolytic capacitor values and their lug identification markings.

In some receivers, the antenna trap (L81, L82, C21 and C 22) may be omitted.

In some receivers, on EM type of ion trap magnet is employed. In these sets, the magnet coils and the shunting resistor R232 are connected as shown by the dotted lines of the schematic. In this case, the jumper across R232 is omitted.

In some receivers, the green lead from the r-f unit is connected to ground to minimize interchannel interference. In this condition the receiver will overload on signals in excess of 15,000 microvolts. If such signals are present, it will be necessary to reconnect the lead as shown or to reduce the signal input to the receiver by a pad or stub on the antenna transmission line.

In some receivers, the trap winding on T102 is omitted.

In some receivers, the fuse F1 is omitted.

REF. NO.	PART NO.	DESCRIPTION
		ELECTROLYTICS
C187	71450	H.V. capacitor, 500 mmfd.
C220	71431	40/450, 10/450, 80/150.
C221	71432	2 sec: 40/450, 1 sec: 10/450.
C222	71433	80/450, 50/50.
C223	71434	40/450, 10/450, 10/350.
C224	71435	20/450, 80/350.
C225	71436	250/10, 1000/6.
		COILS
L182	71505	Choke.
L184	71505	Choke.
L185	71426	Fourth picture IF.
L186	71505	Choke.
L187	71529	Peaking and R136.
L188	71526	Peaking coil.
L189	71529	Peaking and R139.
L190	71527	Peaking coil.
L191	71529	Peaking and R145.
L192	71527	Peaking coil.
L193	71420	Deflecting yoke.
L194		See L193
L195	71421	Focus.
L196	71429	Width control.
L197		See L193.
L198		See L193.
L200	73154	Filter choke.
L201	71449	Horiz. linearity.
L202	71522	Ion-trap magnet, E.M.
	73301	Ion-trap magnet PM.
L203		See L202.
		RESISTORS
R131	73157	Picture, volume, power switch.
R152	73156	Brightness control.
R168	72734	Vertical and horiz. hold.
R169	71440	Height control.
R172	72734	Vertical and horiz. hold.
R178	71441	Vertical linearity.
R181	71443	Vertical and horiz. centering.
R182	39505	W.W. 270 ohms, 2 watts.
R183	71512	W.W. 1800 ohms, 1 watt.
R184	71442	Focus control.
R185	71458	W.W. 1360/17 w, 230/10 w.
R186	73097	Volt-div. 1 sec: 6750/3.2 w. 1 sec: 93/4 w.
R187	71447	Horiz. drive control.
R200	45876	W.W. 5000 ohms, 5 watts.
R209	71439	W.W. 1 sec: 5300/20 w, 2 sec: 500/2 w.
R211	71443	Vertical and horiz. centering.
R222	73157	Picture, volume, power switch.
R230	71918	W.W. 2.2 ohms, 1 watt.
R233	71513	3.3 ohms, 1/3 watt.
R240	73098	W.W. 12 ohms, 1 watt.
		TRANSFORMERS
T1	71507	Antenna transformer.
T2	71495	Converter transformer.
T102	73708	Third pix IF.
T103	71423	First pix IF.
T104	71425	Second pix IF.
T105	71422	Sound trap.
T106	71418	Vertical oscillator.
T107	71417	Vertical output.
T108	71428	Horiz. oscillator.
T109	71416	Horiz. output and H.V.
T110	72775	Power, 115 V, 50 cycle.
	71415	Power, 115 V, 60 cycle.
T111	71424	First sound IF.
T112	71424	Second sound IF.
T113	71427	Sound discriminator.
T114	71419	Audio output.
		MISCELLANEOUS
	73236	Speaker-5" x 7" PM.

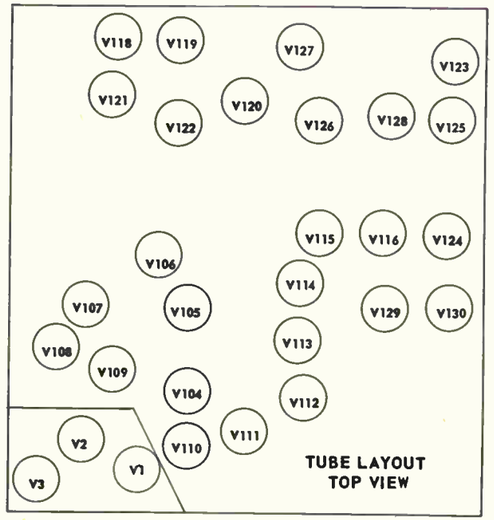

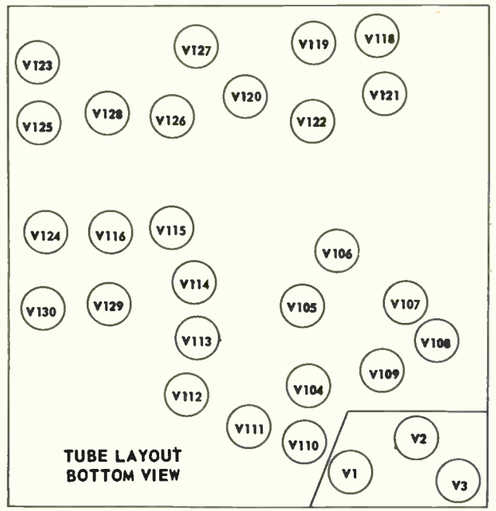

All resistance values in ohms. K = 1000.

All capacitance values less than 1 in MF and above 1 in MMF unless otherwise noted.

Direction of arrows at controls indicates clockwise rotation.

All voltages measured with "VoltOhmyst" and with picture control counterclockwise. Voltages should hold within ±20% with 117 v. a-c supply.

Coil resistance values less than 1 ohm are not shown.

In some receivers, substitutions have caused changes in component lead color codes, in electrolytic capacitor values and their lug identification markings.

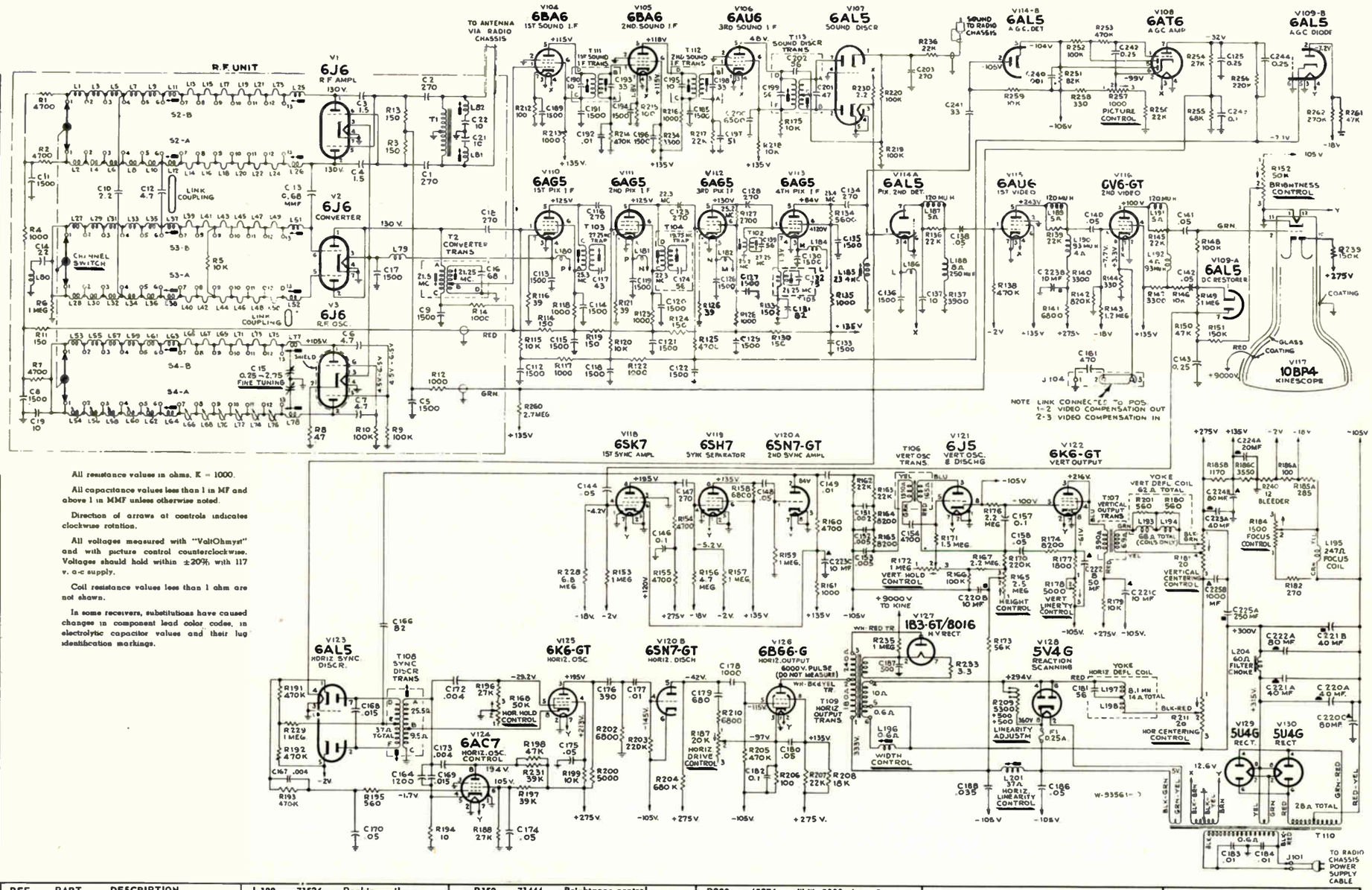

REF. NO.	PART NO.	DESCRIPTION
C187	71450	Hi-voltage 500 mmfd.
C220	71431	40/450, 10/450, 80/150.
C221	71432	2 sec: 40/450, 1 sec: 10/450.
C222	71433	80/450, 50/50.
C223	71434	40/450, 10/450, 10/350.
C224	71435	20/450, 80/350.
C225	71436	250/10, 1000/6.
L184	71505	Choke.
L185	71426	Fourth picture IF.
L186	71505	Choke.
L187	71529	Peaking and R136.
L188	71526	Peaking coil.
L189	71529	Peaking and R139.
L190	71527	Peaking coil.
L191	71529	Peaking and R145.
L192	71527	Peaking coil.
L193	71420	Deflecting yoke.
L194		See L193
L195	71421	Focus coil.
L196	71429	Width control.
L197		See L193.
L198		See L193.
L201	71449	Horiz. linearity.
L204	71970	Filter choke.
R152	71444	Brightness control.
R168	72758	Vertical and horiz. hold.
R169	71440	Height control.
R172	72758	Vertical and horiz. hold.
R178	71441	Vertical linearity.
R181	71443	Vertical centering.
R182	39505	W.W. 270 ohms, 2 watts.
R184	71442	Focus control.
R185	71973	1 sec: 1170/25 w, 1 sec: 285/8.5 w.
R186	73099	Volt-div. 1 sec: 3500/6 w, 1 sec: 100/3 w.
R187	71447	Horiz. drive.
R200	45876	W.W. 5000 ohms, 5 w.
R209	71439	W.W. 1 sec: 5300/20 w, 500/2 w.
R211	71443	Horiz. centering.
R230	71918	W.W. 2.2 ohms, 1 watt.
R233	71513	W.W. 3.3 ohms, ½ watt.
R240	73098	W.W. 12 ohms, 1 watt.
R257	72064	Picture control.
T1	71507	Antenna transformer.
T2	71495	Converter.
T102	73708	Third picture IF.
T103	71423	First picture IF.
T104	71425	Second picture IF.
T105	71422	Sound trap.
T106	71418	Vertical oscillator.
T107	71417	Vertical output.
T108	71428	Horiz. sync discriminator.
T109	71416	Horiz output and H.V.
T110	72775	Power, 115 V, 50 cycle.
	71415	Power, 115 V, 60 cycle.
T111	71424	First sound IF.
T112	71424	Second sound IF.
T113	71427	Sound discriminator.

MISCELLANEOUS

71146	Field coil, 1060 ohms.
11469	Neutralizing coil.
71144	Speaker-12" E.M.

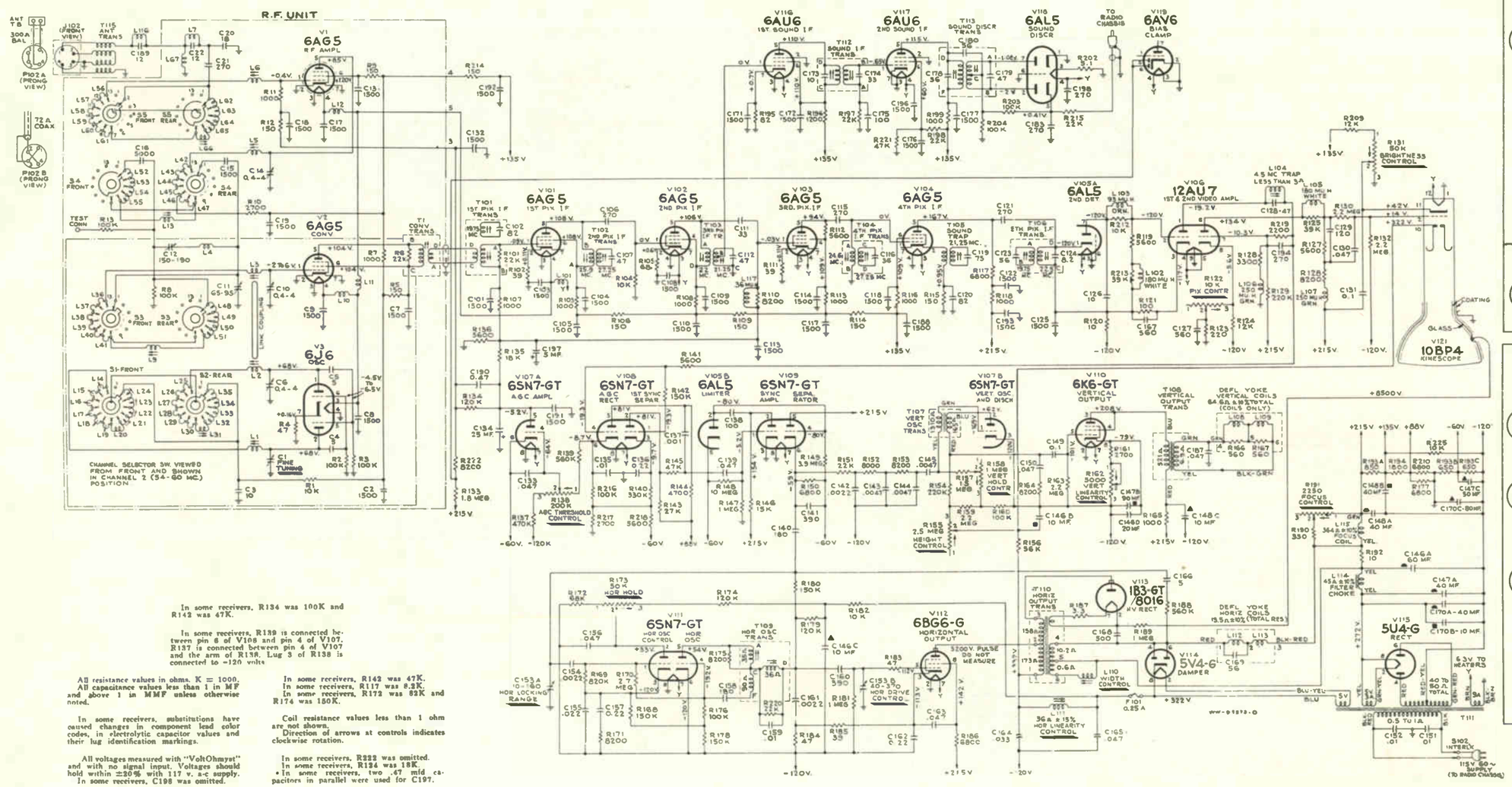

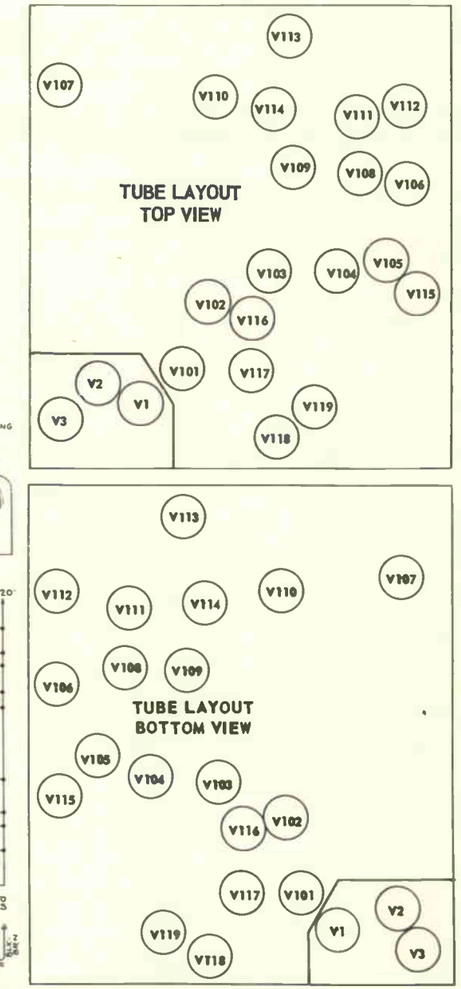

In some receivers, R134 was 100K and R142 was 47K.

In some receivers, R139 is connected between pin 6 of V108 and pin 4 of V107. R137 is connected between pin 4 of V107 and the arm of R138. Lug 3 of R138 is connected to -120 volts

All resistance values in ohms. K = 1000. All capacitance values less than 1 in MF and above 1 in MMF unless otherwise noted.

In some receivers, substitutions have caused changes in component lead color codes, in electrolytic capacitor values and their lug identification markings.

All voltages measured with "VoltOhmyst" and with no signal input. Voltages should hold within ±20% with 117 v. a-c supply.
In some receivers, C198 was omitted.

In some receivers, R142 was 47K.
In some receivers, R117 was 8.2K.
In some receivers, R172 was 82K and R174 was 180K.

Coil resistance values less than 1 ohm are not shown.
Direction of arrows at controls indicates clockwise rotation.

In some receivers, R222 was omitted.
In some receivers, R134 was 18K.
*In some receivers, two .47 mfd capacitors in parallel were used for C197.

REF. NO.	PART NO.	DESCRIPTION
		ELECTROLYTICS
C11	73449	1 sec: 150-190 mmfd, 1 sec: 65-95 mmfd.
C134	53147	25 mfd, 50 volts.
C146	73581	1 sec: 60/450, 1 sec: 20/150.
C147	73583	40/450, 90/150, 50/150.
C148	71432	2 sec: 40/450, 1 sec: 10/450.
C153	73580	10-160 mmfd, 40-370 mmfd.
C168	71450	500 mmfd, 15K volts.
C170	73582	40/450, 10/450, 80/200.
C197	74106	5 mfd, 50 volts.
		COILS
L101	73477	Choke.
L102	71528	Peaking 180 mfd, & R213.
L103	72619	Peaking 93 mfd,).
L104	73577	4.5 megacycle trapl
L105	71528	Peaking 180 mfd, & R125.
L106	71526	Peaking 250 mfd.
L107	71526	Peaking 250 mfd.
L108	71420	Deflecting yoke.
L109		See L108.
L110	71429	Width control coil.
L111	71449	Horiz. linearity.
L112		See L108.
L113		See L108.
L114	83154	Filter choke.
L115	73566	Focus coil.
L116	73476	IF trap.
L117	74170	Peaking 36 mfd.
		RESISTORS
R122	73663	Picture control.
R131	73156	Brightness control.
R138	73579	AGC threshold.
R155	71440	Height control.
R158	72734	Horiz. hold & vertical hold.
R162	71441	Vertical linearity.
R173	72734	Horiz. hold & vertical hold.
R187	71513	W.W. 3.3 ohms, 1/3 watt.
R190	37502	W.W. 330 ohms, 2 watts.
R191	72735	Focus control.
R193	73588	Volt-div. 1 sec: 850/12 w, 2 sec: 650/6 w.
R202	72067	W.W. 5.1 ohms, ½ watt.
R225	51869	W.W. 10K ohms, 10 watts.
		TRANSFORMERS
T1	73448	Converter and R6.
T5		See speaker assemblies.
T101	73571	Converter transformer.
T102	73572	First pix IF.
T103	73573	Second pix IF.
T104	73574	Third pix IF.
T105	71778	Sound trap.
T106	73575	Fourth pix IF.
T107	73569	Vertical oscillator.
T108	73568	Vertical output.
T109	73576	Horiz. oscillator.
T110	73570	Horiz. output & H.V.
T111	73567	Power, 115 V, 60 cycle.
T112	71424	Sound IF.
T113	71427	Sound discriminator.
T115	73578	Antenna w/ bracket & socket.
		MISCELLANEOUS
73635		Speaker- 12" P.M.
73636		Output transformer (T5). (92569-5W).
37899		Output Xformer (92569-1KX).

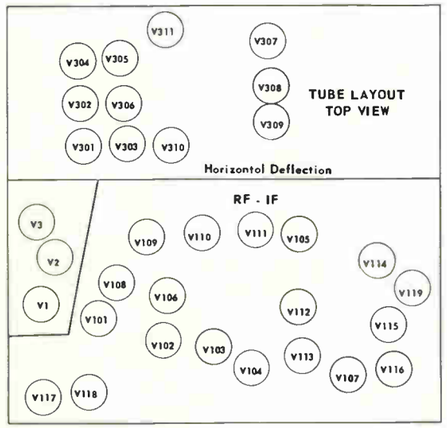

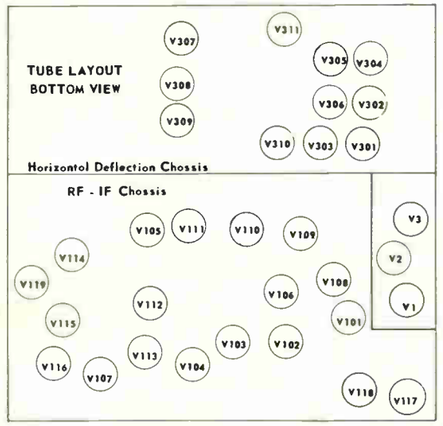

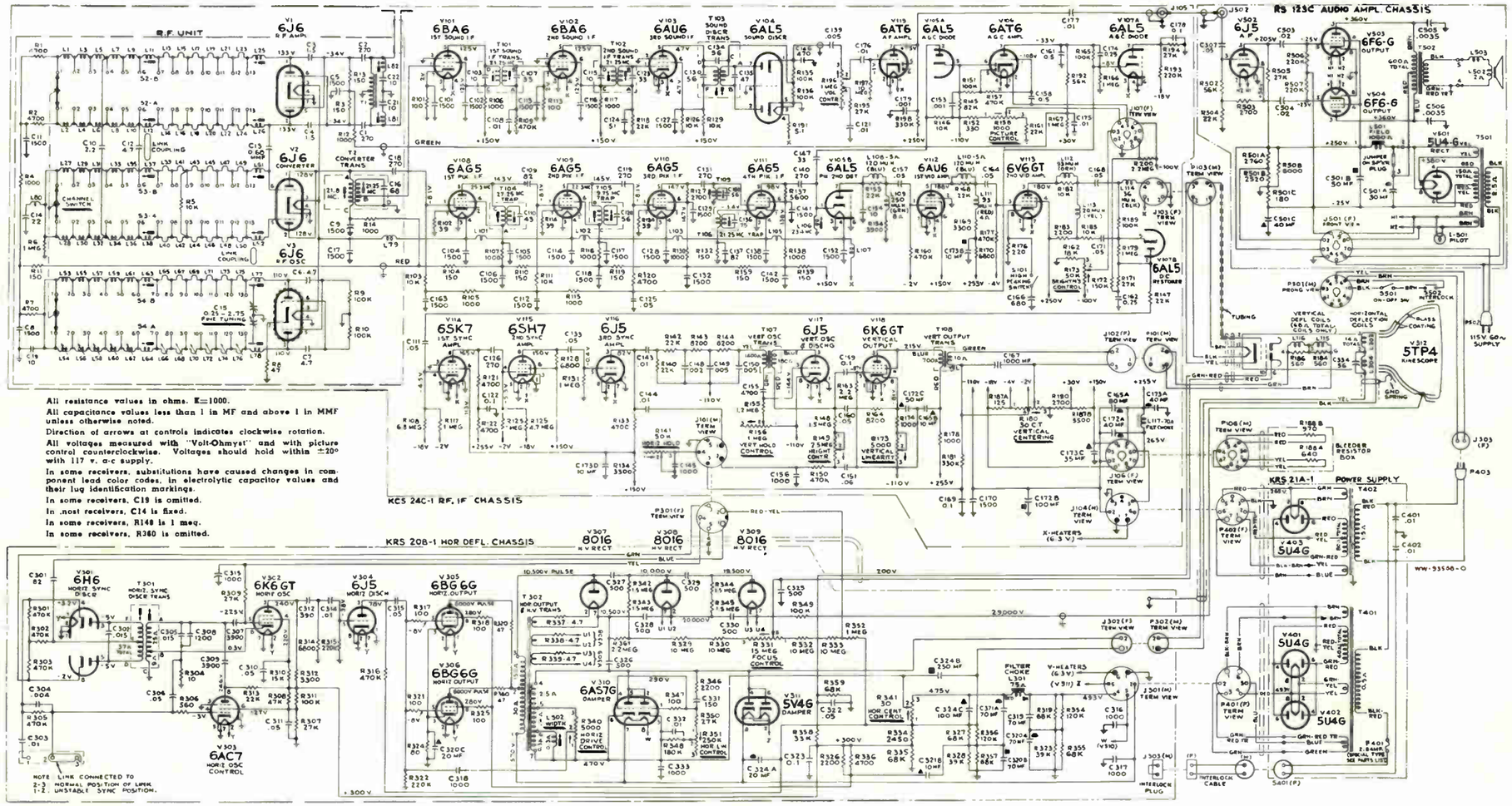

All resistance values in ohms. K=1000.
All capacitance values less than 1 in MF and above 1 in MMF unless otherwise noted.
Direction of arrows at controls indicates clockwise rotation.
All voltages measured with "Volt-Ohmyst" and with picture control counterclockwise. Voltages should hold within ±20% with 117 v. a-c supply.
In some receivers, substitutions have caused changes in component lead color codes, in electrolytic capacitor values and their lug identification markings.
In some receivers, C19 is omitted.
In most receivers, C14 is fixed.
In some receivers, R148 is 1 meg.
In some receivers, R360 is omitted.

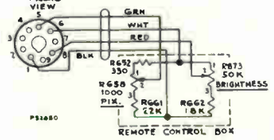

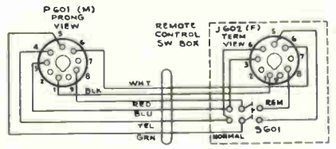

The R-F. I-F chassis is wired so that a remote Brightness and Picture control can be connected. This connection is made to J107. The schematic for the Local-Remote switch and the Remote Control Box is shown to the left.

KCS24 is the same as KCS24C-1, except that a channel-marker light is added as shown above.

REF. NO.	PART NO.	DESCRIPTION
		ELECTROLYTICS
C165	71780	80/450, 10/450.
C167	72611	1000/3, nonpolarized.
C172	72612	40/450, 100/150, 50/50.
C173	72169	40/450, 10/450, 35/350, 10/350.
C319	72621	70/400.
C320	72622	2 sec: 70/250, 1 sec: 20/50.
C321	72623	70/400, 10/400,
C501	72955	30/450, 50/400, 40/25.
		COILS
L106	71426	Fourth pix IF.
L107	71505	Filament choke.
L108	71529	Peaking and R153.
L109	71526	Choke.
L110	71529	Peaking and R168.
L111	71527	Choke.
L112	71619	Peaking and R182.
L113	72618	Choke.
L114	71793	Choke.
L115	72196	Deflecting yoke.
L118		See L115.
L117	72167	Filter choke.
L301	72179	Filter choke.
L302	72180	Width control.
L303		See L115.
L304		See L115.

		RESISTORS
R141	72758	Vertical & horiz. hold.
R149	71440	Height control.
R156	72758	Vertical & horiz. hold.
R158	71971	Brightness & contrast.
R173	71971	Brightness & contrast.
R175	71441	Vertical linearity.
R180	72168	Vertical centering.
R183	72613	W.W. 2200 ohms, 10 w.
R187	72171	Volt-div. 9500/2 w, 125/2.5 w.
R191	72067	W.W. 5.1 ohms, ½ w.
R196	70143	Volume control.
R312	48207	W.W. 3300/5 w.
R324	72631	W.W. 80 ohms, 5 w.
R331	72183	Focus control.
R334	72184	W.W. 2450/16.5 w.
R337	72633	W.W. 4.7 ohms, 1/3 w.
R338	72633	W.W. 4.7 ohms, 1/3 w.
R339	72633	W.W. 4.7 ohms, 1/3 w.
R340	71441	Horizontal drive.
R341	72181	Horizontal centering.
R351	72182	Horizontal linearity.
R501	71660	180/3.5 w, 2520/3.97 w, 2760/9.3 w.
R508	48344	W.W. 2000/5 w.
R658	71971	Picture & brightness.
R673	71971	Picture & brightness.
		TRANSFORMERS
T1	71507	Antenna transformer.
T2	71495	Converter transf.
T101	71424	First sound IF.
T102	71424	Second IF.
T103	71427	Sound discriminator.
T104	71423	First pix IF.
T105	71425	Second pix IF.
T106	71422	Sound trap.
T107	71775	Vertical oscillator.
T108	72952	Vertical Output.
T109	73708	Third pix IF.
T301	71428	Horiz. oscillator.
T302	72178	Horiz. output.
T401	73191	Power, 115 V, 50 cy. Hor. defl. chassis.
	72176	Power, 115 V, 60 cycle. Hor. defl. chassis.
T402	73192	Power, 115 V, 50 cy. (IF).
	73177	Power, IF, 115 V, 60 cycle.
T501	37048	Power, 115 V, 50/60 cy.
T502	71661	Output transformer.
		MISCELLANEOUS
	72188	Corrector lens.
	73325	Spherical mirror (12").
	71146	Field coil - 1060 ohms.
	11233	Neutralizing coil.
	71144	Speaker-12" E.M.

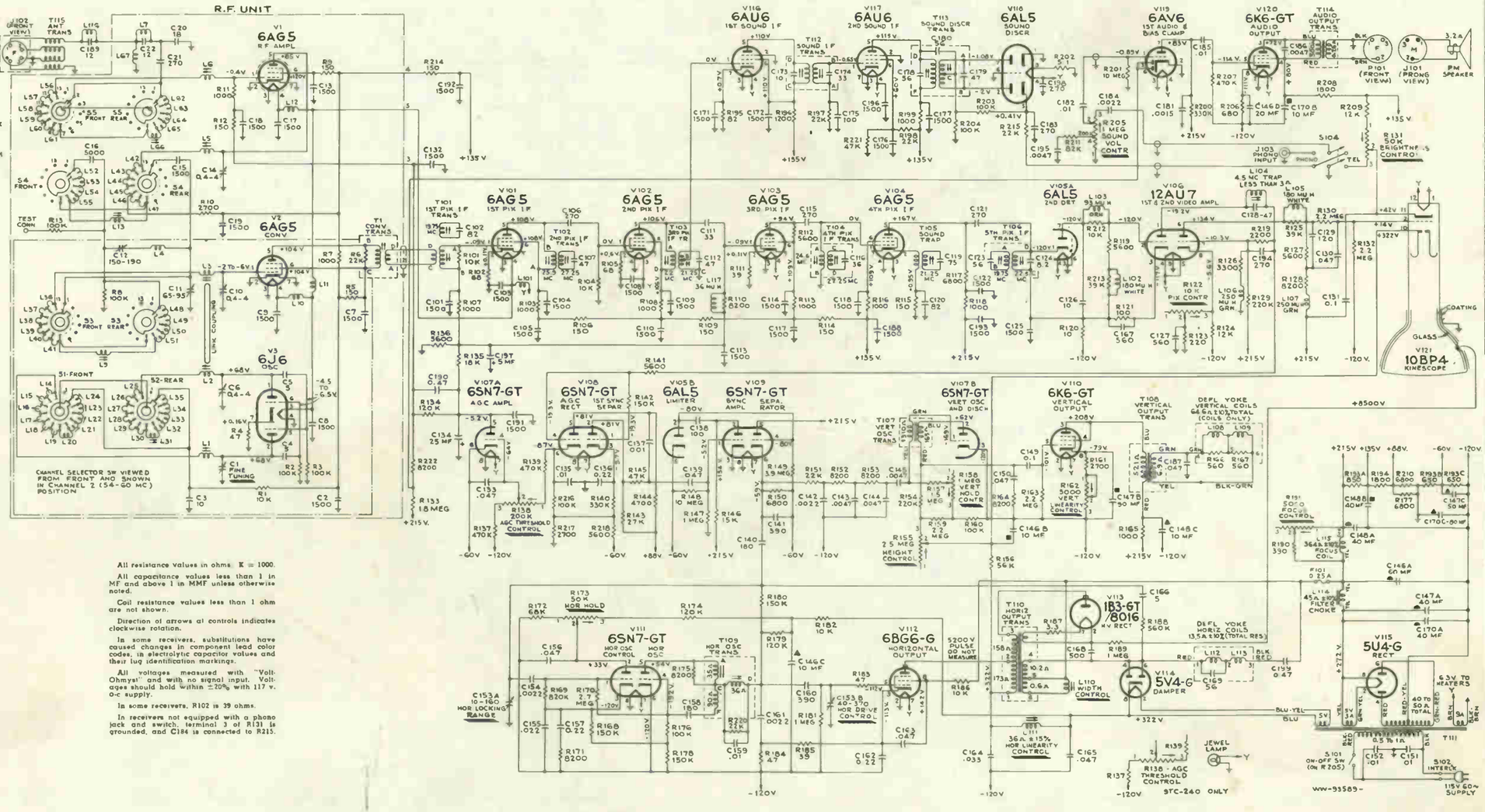

All resistance values in ohms. K = 1000.

All capacitance values less than 1 in MF and above 1 in MMF unless otherwise noted.

Coil resistance values less than 1 ohm are not shown.

Direction of arrows at controls indicates clockwise rotation.

In some receivers, substitutions have caused changes in component lead color codes, in electrolytic capacitor values and their lug identification markings.

All voltages measured with "Volt-Ohmyst" and with no signal input. Voltages should hold within ±20% with 117 v. a-c supply.

In some receivers, R102 is 39 ohms.

In receivers not equipped with a phono jack and switch, terminal 3 of R131 is grounded, and C184 is connected to R215.

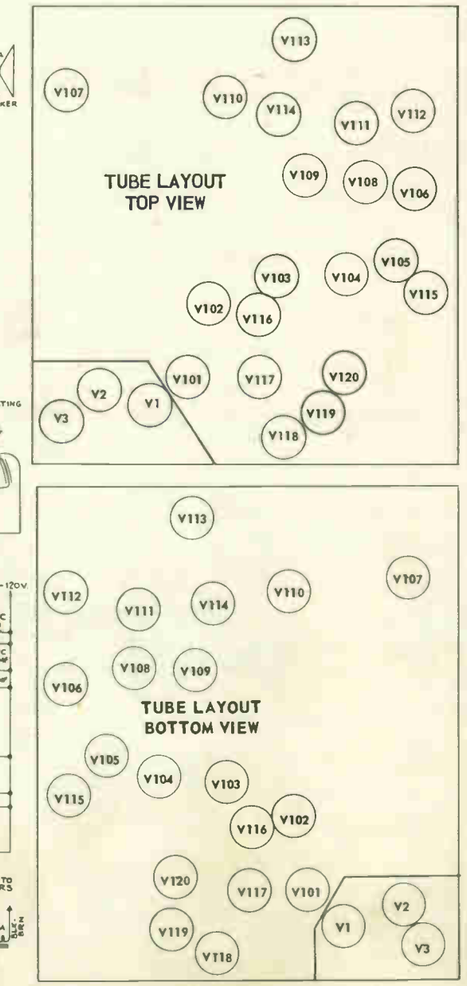

REF. NO.	PART NO.	DESCRIPTION
		ELECTROLYTICS
C11	73449	1 sec: 150-190 mmfd, 1 sec: 65-95 mmfd.
C134	53147	25 mfd, 50 volts.
C146	73581	1 sec: 60/450, 2 sec: 10/450, 20/150.
C147	73583	40/450, 90/150, 50/150.
C148	71432	2 sec: 40/450, 1 sec: 10/450.
C168	74153	Hi-voltage 500 mmfd, 15K V.
C170	73582	40/450, 10/450, 80/200.
C197	74106	5 mfd, 50 volts.
		COILS
L102	71528	Peaking and R213.
L103	72619	Peaking 93 mfd & R212.
L104	73577	4.5 mc trap.
L105	71528	Peaking and R125.
L106	71526	Peaking coil.
L107	71526	Peaking coil.
L108	71420	Deflecting yoke.
L109		See L108.
L110	71429	Width control.
L111	71449	Horiz. linearity.
L112		See L108.
L113		See L108.
L114	73154	Filter choke.
L115	73566	Focus coil.
L116	73476	IF trap.
L117	74170	Peaking 36 mfd & R110.
		RESISTORS
R122	73910	Picture, volume, power switch.
R131	73156	Brightness control.
R138	73579	AGC threshold (KCS28A).
	74475	AGC threshold (KCS28B).
R155	71440	Height control.
R158	72734	Horiz. & vertical hold.
R162	71441	Vertical linearity.
R174	72734	Horiz. & vertical hold.
R187	71513	W.W. 3.3 ohms, 1/3 w.
R190	72325	W.W. 390 ohms, 2 w.
R191	74442	Focus control.
R193	73588	Volt-div. 1 sec: 850/12 w, 2 sec: 650/6 w.
R202	72067	W.W. 5.1 ohms, ½ w.
R205	73910	Picture, volume, power switch.
S101	73910	Picture, volume, power switch.
		TRANSFORMERS
T1	73448	Converter and R6.
T101	73571	First pix IF.
T102	73572	Second pix IF.
T103	73573	Third pix IF.
T104	73574	Fourth pix IF.
T105	71778	Sound trap.
T106	73575	Fifth pix IF.
T107	73569	Vertical oscillator.
T108	73568	Vertical output.
T109	73576	Synchroguide transformer.
T110	73570	Horiz. output & H.V.
T111	73567	Power, 117 V, 60 cycle.
T112	71424	Sound IF.
T113	71427	Sound discriminator.
T114	71419	Audio transformer.
T115	73578	Antenna w/socket & bracket.
		MISCELLANEOUS
	73993	Speaker- 5" x 7" P.M. (92573-4W).
	73635	Speaker- 12" P.M. (92569-7W).

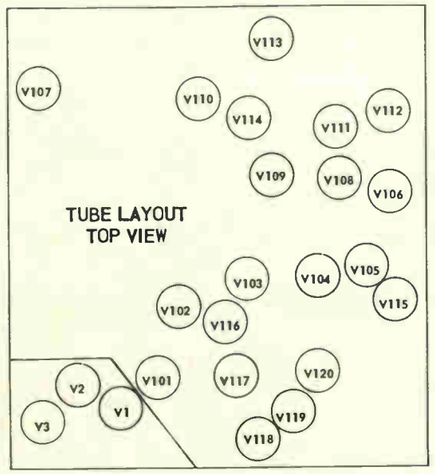

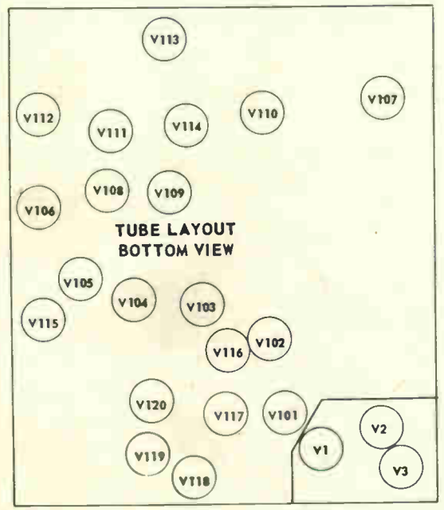

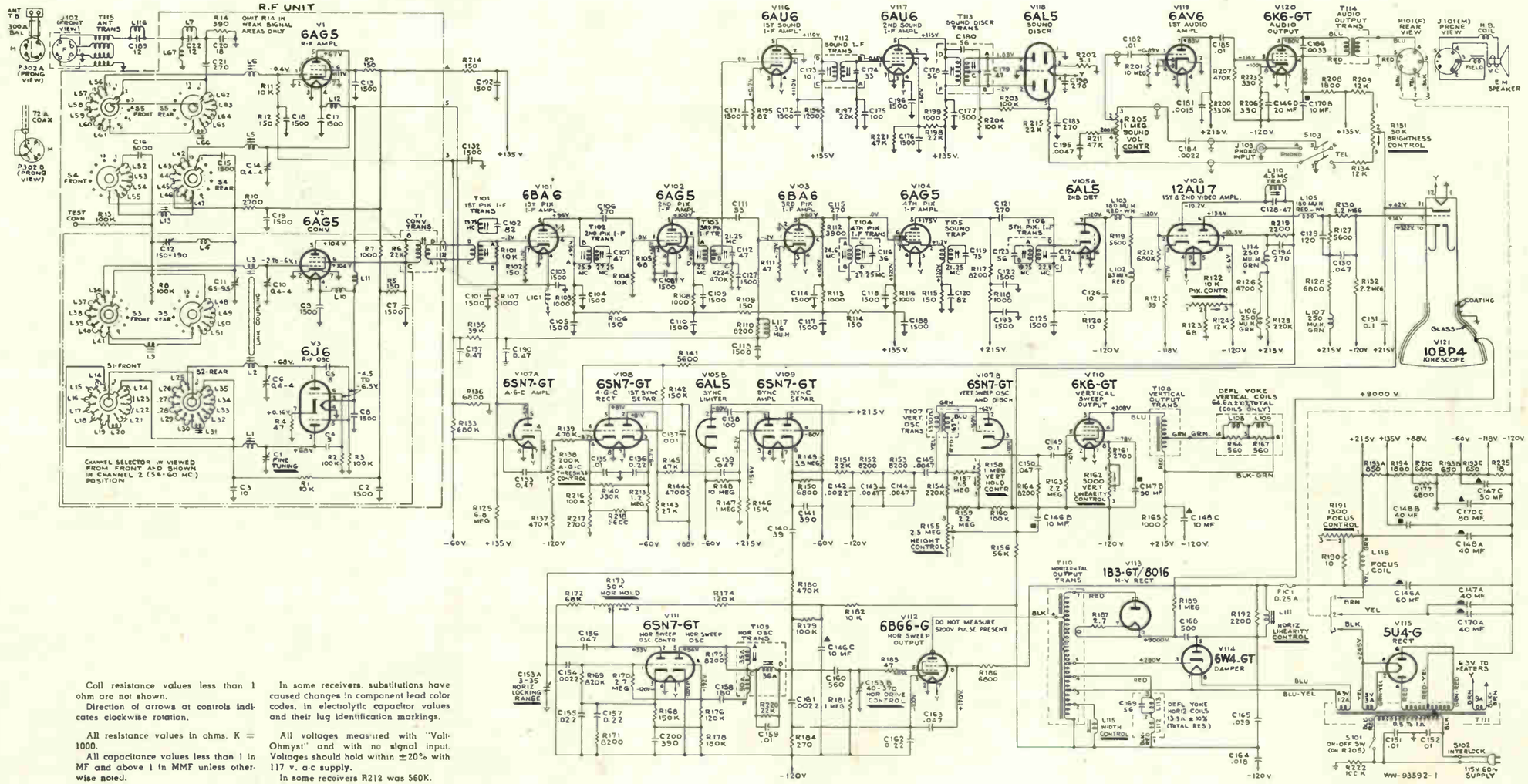

Coil resistance values less than 1 ohm are not shown.

Direction of arrows at controls indicates clockwise rotation.

All resistance values in ohms. K = 1000.

All capacitance values less than 1 in MF and above 1 in MMF unless otherwise noted.

In some receivers, substitutions have caused changes in component lead color codes, in electrolytic capacitor values and their lug identification markings.

All voltages measured with "Volt-Ohmyst" and with no signal input. Voltages should hold within ±20% with 117 v. a-c supply.

In some receivers R212 was 560K.

REF. NO.	PART NO.	DESCRIPTION
		ELECTROLYTICS
C134	**53147	25 mfd, 50 volts.
C146	73581	4 sec: 60/450V, 10-10/450V 20/150V.
C147	73583	3 sec: 40/450V, 90/150V 50/150V.
C148	71432	3 sec: 40-40/450V, 10/450V
C170	73582	3 sec: 40/450V, 10/450V, 80/200V.
C197	**74106	5 mfd, 50V.
C11	73449	Ceramic, trimmer.
C153	*74593	Mica, trimmer.
	**73580	Mica, trimmer.
C168	74153	Hi-voltage, 500 mmfd, 15K, V.
C191	*74597	Focus control.
		COILS
L102	*71527	Peaking coil.
	**71528	Peaking coil.
L103	*74214	Peaking coil.
	**72619	Peaking coil.
L104	**73577	4.5 mc trap.
L105	*74214	Peaking coil.
	**71528	Peaking coil
L106	*71526	Peaking coil 250 uh.
L107	*71526	Peaking coil 250 uh.
L108	71420	Deflecting yoke.
L109		See L108.
L110	**71429	Width control.
	*73577	4.5 mc trap.
L111	71449	Horiz. linearity.
L112		See L108.
L113		See L108.
L114	**73154	Filter choke.
	*71526	Peaking coil.
L115	**73556	Focus coil.
	*71429	Width control.
L116	73476	IF trap.
L117	74170	Peaking coil.
L118	*74585	Focus coil.
		RESISTORS
R122	*74047	Brightness & picture.
	**73910	Pix, vol., power switch.
R131	*74047	Brightness & picture.
	**73156	Brightness control.
R138	74475	AGC threshold cont.
R155	71440	Height control.
R158	72734	Horiz. & vertical hold.
R162	71441	Vertical linearity.
R173	72734	Horiz. & vertical hold.
R187	*74598	W.W. 2.7 ohms, 1/3 w.
	**71513	W.W. 3.3 ohms, 1/3 w.
R190	*18471	W.W. 10 ohms, ½ w.
	**72325	W.W. 390 ohms, 2 w.
R191	**74442	Focus control.
R202	72067	W.W. 5.1 ohms, ½ w.
R205	*38408	Sound vol., power sw.
	**73910	Pix, vol., power switch.
		TRANSFORMERS
T1	73448	Convertor and R6.
T101	*74589	First pix IF.
	**73571	First pix IF.
T102	*74590	Second pix IF.
	**73572	Second pix IF.
T103	*74591	Third pix IF.
	**73573	Third pix IF.
T104	*74592	Fourth pix IF.
	**73574	Fourth pix IF.
T105	71778	Sound trap.
T106	73575	Fifth pix IF.
T107	73569	Vertical oscillator.
T108	*74587	Vertical output.
	**73568	Vertical output.
T109	73576	Horiz. oscillator.
T110	**73570	Horiz. output & H.V.
	*74588	Horiz. output & H.V.
		MISCELLANEOUS
S101	*38408	Sound vol., power sw.
	**73910	Pix, vol., power switch.
	5118	3 contact male connector for speaker.
	73993	Speaker-5" x 7" P.M.

NOTE: * for KCS38.
** for KCS28C.

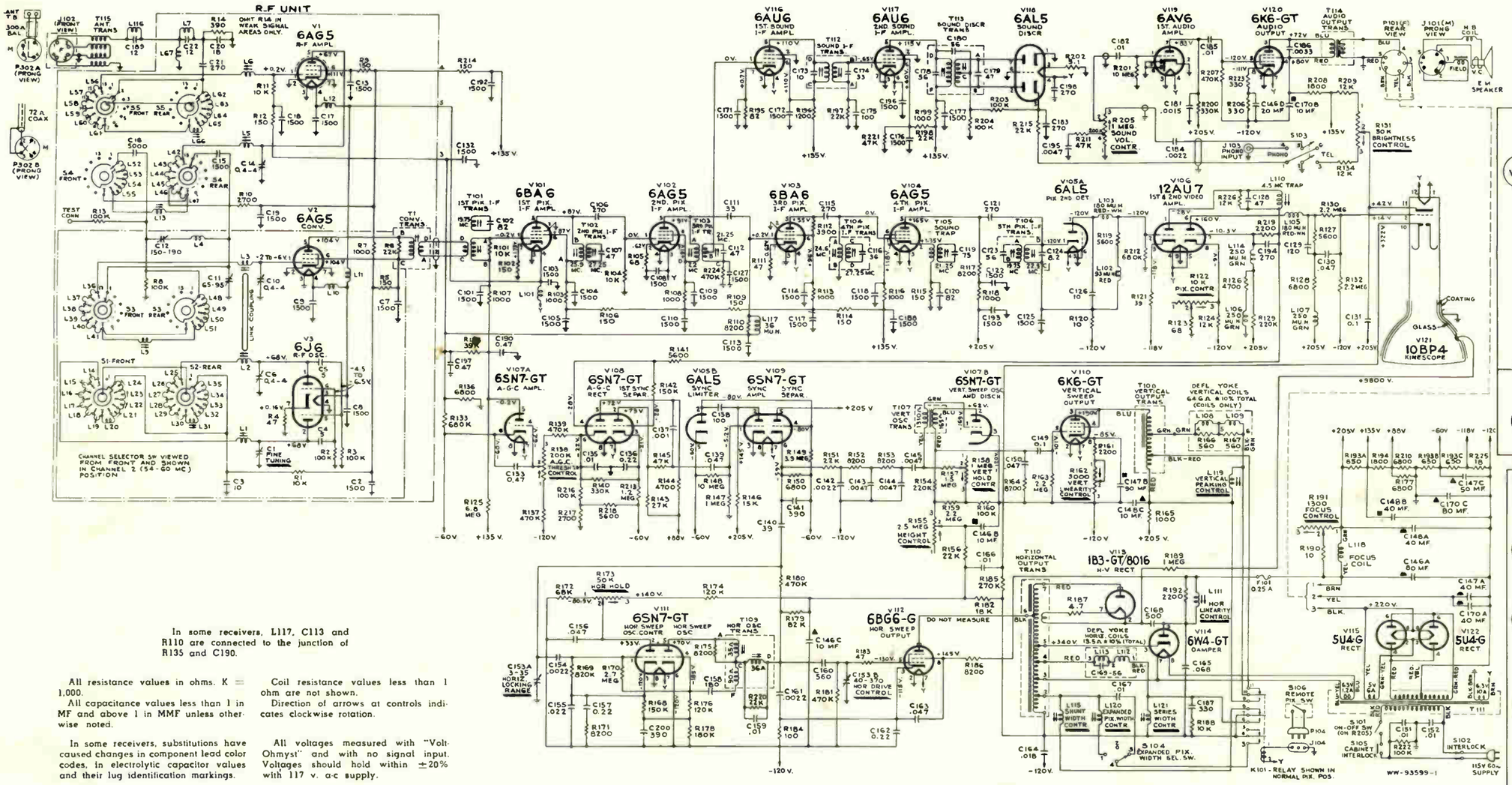

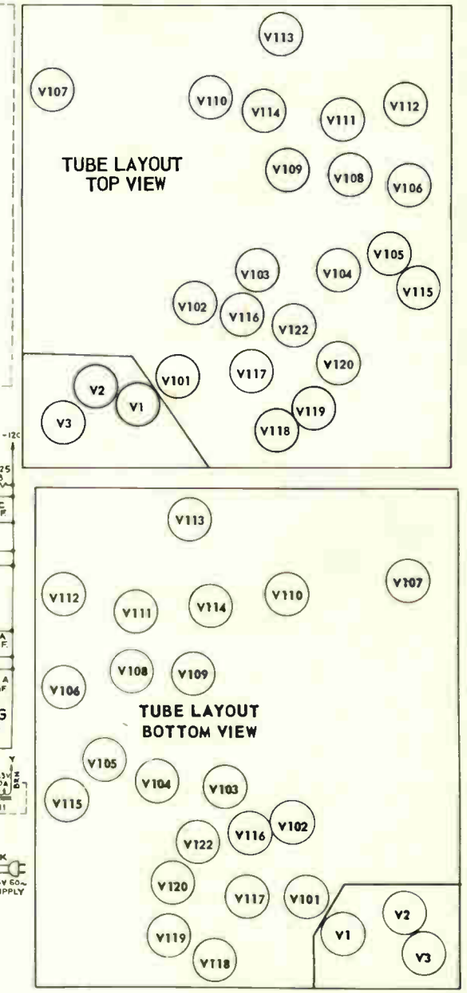

In some receivers, L117, C113 and R110 are connected to the junction of R135 and C190.

All resistance values in ohms. K = 1,000.

All capacitance values less than 1 in MF and above 1 in MMF unless otherwise noted.

In some receivers, substitutions have caused changes in component lead color codes, in electrolytic capacitor values and their lug identification markings.

Coil resistance values less than 1 ohm are not shown.

Direction of arrows at controls indicates clockwise rotation.

All voltages measured with "Volt-Ohmyst" and with no signal input. Voltages should hold within ±20% with 117 v. a-c supply.

REF. NO.	PART NO.	DESCRIPTION
		ELECTROLYTICS
C11	73449	1 sec: 150-190 mmfd, 1 sec: 65-95 mmfd,
C146	73581	1 sec: 60/450, 2 sec: 10/450, 1 sec: 20/150.
C147	73583	40/450, 90/150, 50/150.
C148	71432	2 sec: 40/450, 1 sec: 10/450.
C153	74593	1 sec: 3-35 mmfd, 1 sec: 40-370 mmfd.
C170	73582	40/450, 10/450, 80/200.

		COILS
L102	71527	Peaking coil.
L103	74214	Peaking coil.
L105	74214	Peaking coil.
L106	71526	Peaking coil.
L107	71526	Peaking coil.
L108	71420	Deflecting yoke.
L109		See L108.
L110	73577	4.5 mc trap.
L111	71449	Horiz. linearity.
L112		See L108.
L113		See L108.
L114	71526	Peaking coil.

L115	71429	Width control.
L116	73476	IF trap.
L117	74170	Peaking coil.
L118	74585	Focus coil.
L119	74877	Vertical peaking coil.
L120	71429	Width control coil.
L121	74878	Series width coil.
		RESISTORS
R122	74047	Brightness & picture.
R131	74047	Brightness & picture.
R138	74475	AGC threshold cont.
R155	71440	Height control.

R158	72734	Horiz. & vertical hold.
R162	71441	Vertical linearity.
R173	72734	Horiz. & vertical hold.
R187	72633	W.W. 4.7 ohms, 1/3 w.
R190	18471	W.W. 10 ohms, 1/2 w.
R191	74597	Focus control.
R193	73588	Volt-div. 1 sec: 850-12 w, 2 sec: 650-6 w.
R202	72067	W.W. 5.1 ohms, ½ w.
R205	38408	Sound volume, power switch.
S101	38408	Sound vol. power switch.
S104	74872	Width selector switch.
S106	74881	Electronic magnifier sw.

		TRANSFORMERS
T1	73448	Converter and R6.
T101	74589	First pix IF.
T102	74590	Second pix IF.
T103	74591	Third pix IF.
T104	74592	Fourth pix IF.
T105	71778	Sound trap.
T106	73575	Fifth pix IF.
T107	73569	Vertical oscillator.
T108	74875	Vertical output.
T109	73576	Horizontal oscillator.
T110	74876	Horizontal output & H.V.
T111	74874	Power, 115 V, 60 cy.

T112	71424	Sound IF.
T113	71427	Sound discriminator.
T114	71419	Sound output.
T115	73578	Antenna w/socket & bracket.
		MISCELLANEOUS
	74599	Speaker-5" x 7" E.M.

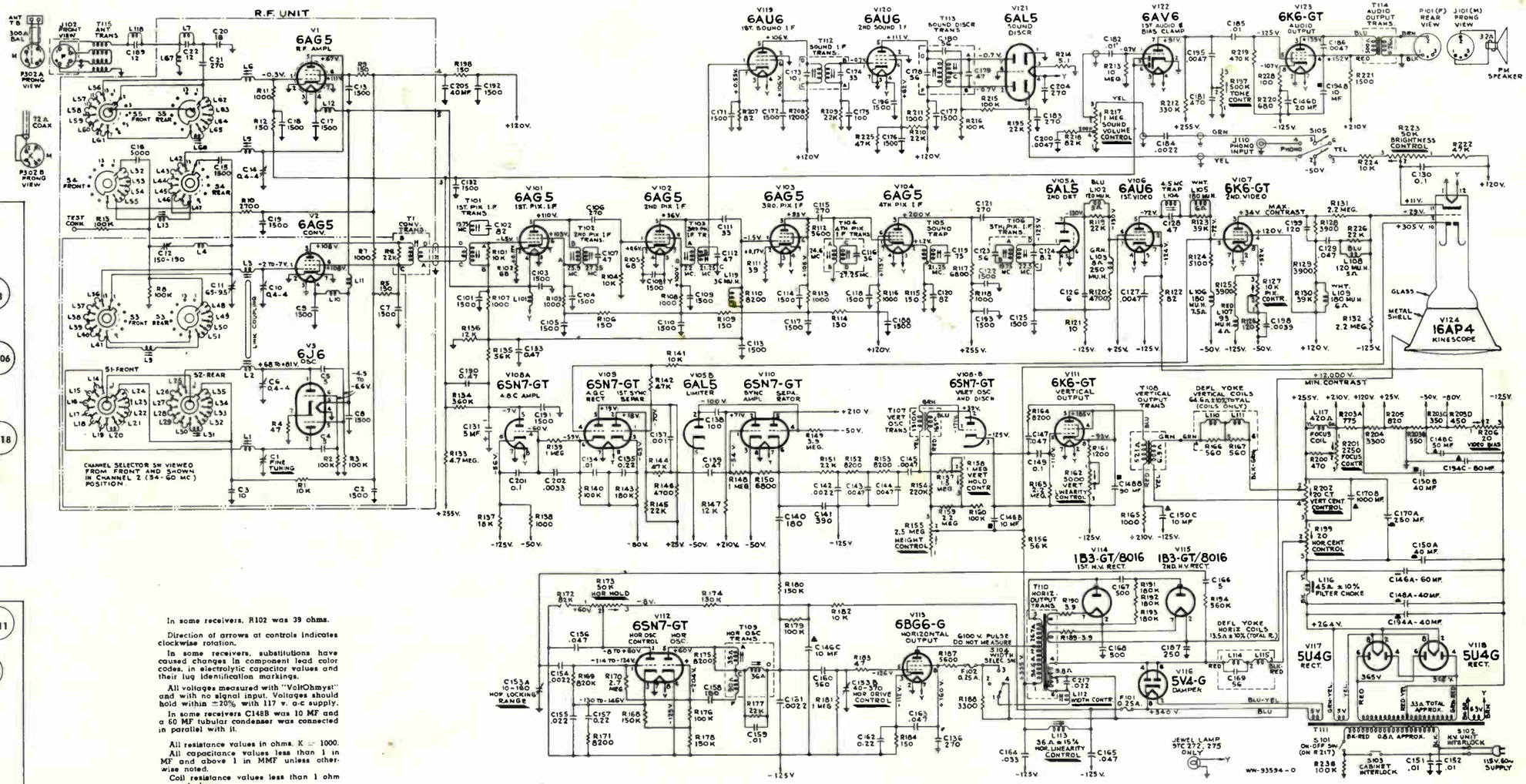

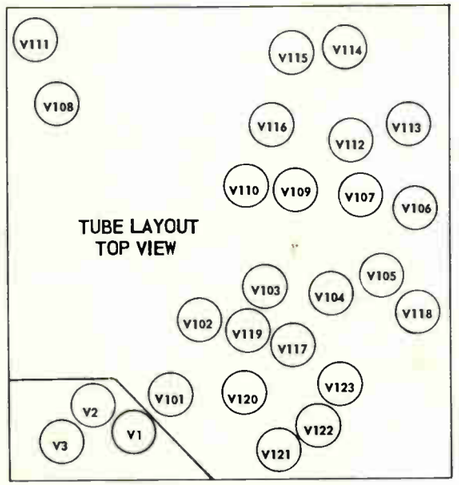

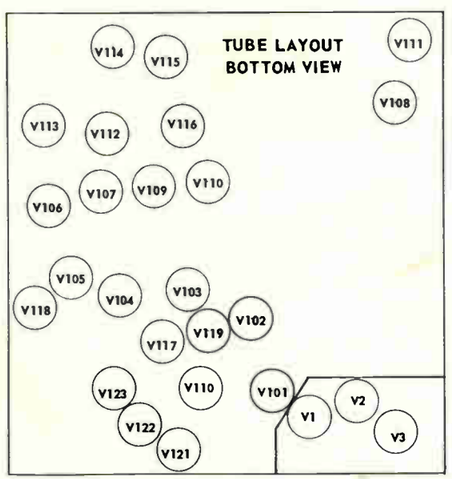

In some receivers, R102 was 39 ohms.

Direction of arrows at controls indicates clockwise rotation.

In some receivers, substitutions have caused changes in component lead color codes, in electrolytic capacitor values and their lug identification markings.

All voltages measured with "VoltOhmyst" and with no signal input. Voltages should hold within ±20% with 117 v. a-c supply.

In some receivers C148B was 10 MF and a 60 MF tubular condenser was connected in parallel with it.

All resistance values in ohms. K = 1000.

All capacitance values less than 1 in MF and above 1 in MMF unless otherwise noted.

Coil resistance values less than 1 ohm are not shown.

REF. NO.	PART NO.	DESCRIPTION
		ELECTROLYTICS
C11	73449	1 sec: 150-190 mmfd, 1 sec: 65-95 mmfd,
C131	74106	5 mfd, 50 volts.
C146	73581	1 sec: 60/450, 2 sec: 10/450, 1 sec: 20/150.
C148	73583	40/450, 90/450, 50/150,
C150	71432	2 sec: 40/450, 1 sec: 10/450.
C153	73580	10-160 mmfd, 40-370 mmfd.
C170	71436	250/10V, 1000/6 V.
C194	73582	40/450, 10/450, 80/200.
C205	74266	40 mfd, 400 volts.
		COILS
L102	71529	Peaking coil.
L103	71526	Peaking coil.
L104	73577	4,5 mc video trap.
L105	71528	Peaking coil.
L106	74214	Peaking coil.
L107	71527	Peaking coil.
L108	71529	Peaking coil.
L109	71528	Peaking coil.
L110	74141	Deflection yoke.
L111		See L110.
L112	71429	Width control.
L113	71449	Horiz. linearity.
L114		See L110.
L115		See L110.
L116	73154	Filter choke.
L117	74142	Filter coil.
L118	73476	IF trap.
L119	74170	Peaking coil.
		RESISTORS
R127	74047	Brightness & picture.
R155	71440	Height control.
R158	72734	Horiz. & vertical hold.
R162	71441	Vertical linearity.
R173	72734	Horiz. & vertical hold.
R189	74156	W.W. 3.9 ohms, 1/3 w.
R190	74156	W.W. 3.9 ohms, 1/3 w.
R197	74048	Tone, vol. power switch.
R199	74146	Horiz. centering.
R200	74197	W.W. 470 ohms, 4 w.
R201	72735	Focus control.
R202	74155	Volt-div. 775/9.5 w, 550/5 w, 350/3 w, 450/5 w.
R204	48207	W.W. 3300/10 w,
R205	74213	W.W. 820/4 w.
R206	74146	Video bias cont.
R214	72067	W.W. 5.1 ohms, ½ w.
R217	74048	Tone, vol. power switch.
R223	74047	Brightness & picture.
5101	74048	Tone, vol. power switch.
5104	74147	Width selector.
		TRANSFORMERS
T1	73448	Converter and R6.
T101	73571	First pix IF.
T102	73572	Second pix IF.
T103	73573	Third pix IF.
T104	73574	Fourth pix IF.
T105	71778	Sound trap.
T106	73575	Fifth pix IF.
T107	74144	Vertical oscillator.
T108	73568	Vertical output.
T109	73576	Horiz. oscillator.
T110	74145	Horiz. output & H.V.
T111	74143	Power, 115 V, 60 cy.
T112	71424	Sound IF.
T113	71427	Sound discriminator.
T114	71419	Audio output. (KC529 only)
	74600	Audio output. (KC529C).
T115	73578	Antenna w/socket & bracket.
		MISCELLANEOUS
	74169	Speaker-8" P.M. (92580-2W).
	73635	Speaker-12" P.M.(92569-7W).

9TC245, 9TC247, 9TC249

MODELS

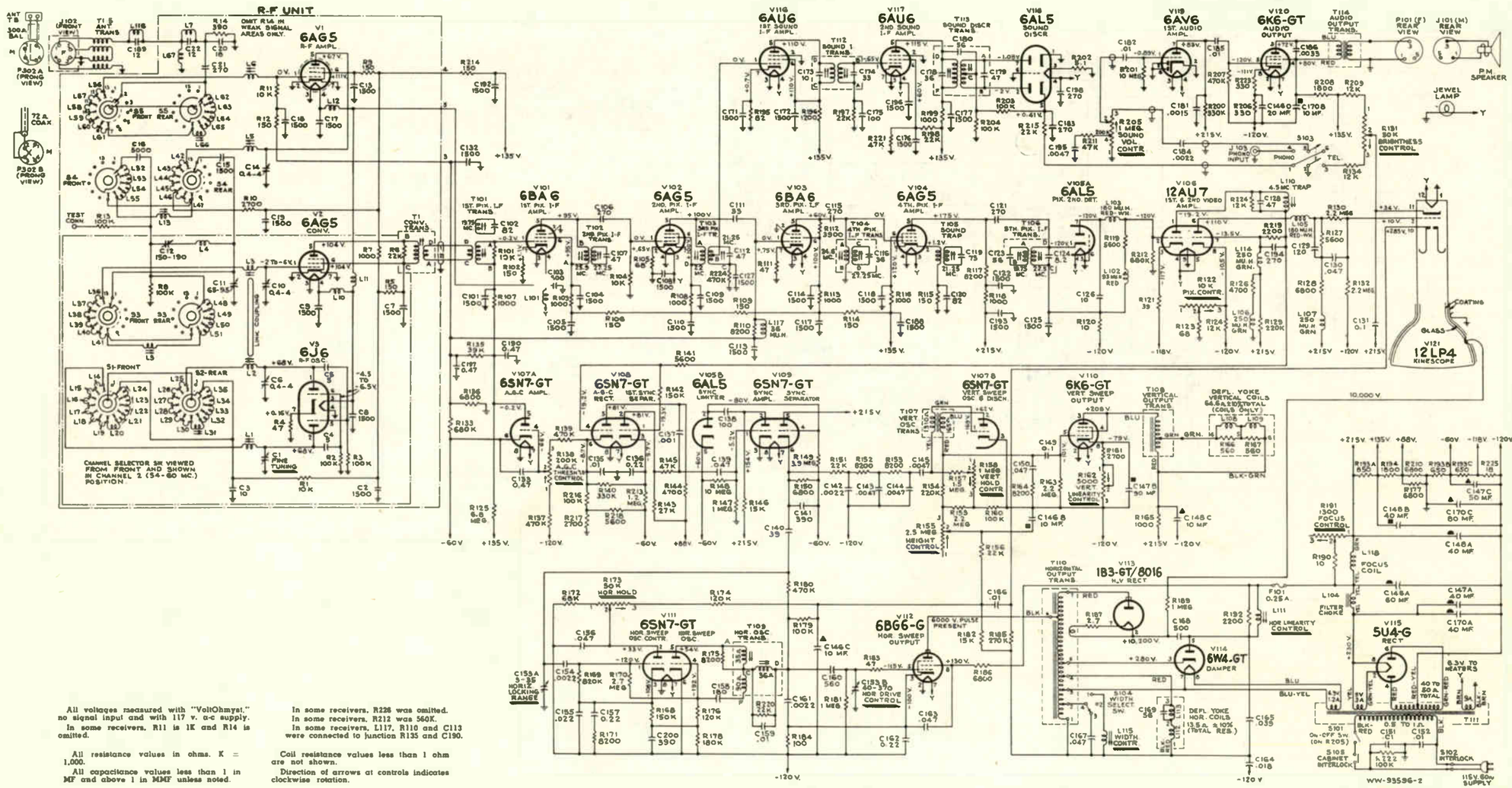

All voltages measured with "VoltOhmyst," no signal input and with 117 v. a-c supply.

In some receivers, R11 is 1K and R14 is omitted.

All resistance values in ohms. K = 1,000.

All capacitance values less than 1 in MF and above 1 in MMF unless noted.

In some receivers, R228 was omitted.
In some receivers, R212 was 560K.
In some receivers, L117, R110 and C113 were connected to junction R135 and C190.

Coil resistance values less than 1 ohm are not shown.

Direction of arrows at controls indicates clockwise rotation.

REF. NO.	PART NO.	DESCRIPTION
		ELECTROLYTICS
C11	73449	1 sec: 150-190 mmfd, 1 sec: 65-95 mmfd.
C146	73581	1 sec: 60/450, 2 sec: 10/450, 1 sec: 20/150.
C147	73583	40/450, 90/150, 50/150.
C148	71432	2 sec: 40/450, 1 sec: 10/450.
C153	74593	3-35 mmfd, 40-370 mmfd.
C170	73582	40/450, 10/450.
		COILS
L101	73477	Filament choke.
L102	71527	Peaking coil.
L103	74214	Peaking coil.
L104	73154	Filter choke.
L105	74214	Peaking coil.
L106	71526	Peaking coil.
L107	71526	Peaking coil.
L108	71420	Deflecting yoke.
L109		See L108.
L110	73577	4.5 mc video trap.
L111	71449	Horizontal linearity.
L112		See L108.
L113		See L108.
L114	71526	Peaking coil.
L115	71429	Width control.
L116	73476	IF trap.
L117	74170	Peaking coil.
L118	74585	Focus coil.
		RESISTORS
R122	74047	Picture and brightness.
R131	74047	Picture and brightness.
R138	74475	AGC threshold control.
R155	71440	Height control.
R158	72734	Horiz. & vertical hold.
R162	71441	Vertical linearity.
R173	72734	Horiz. & vertical hold.
R187	74598	W.W. 2.7 ohms, 1/3 w.
R190	18471	W.W. 10 ohms, ½ w.
R191	74597	Focus control.
R193	73588	1 sec: 850/12 w, 2 sec: 650/6 w.
R202	72067	W.W. 5.1 ohms, ½ w.
R205	38408	Volume and power switch.
		TRANSFORMERS
5101	38408	Volume and power switch.
5104	74147	Width selector switch.
T1	73448	Convertor and R6.
T101	74589	First pix IF.
T102	74590	Second pix IF.
T103	74591	Third pix IF.
T104	74592	Fourth pix IF.
T105	71778	Sound trap.
T106	73575	Fifth pix IF.
T107	73569	Vertical oscillator.
T108	74587	Vertical output.
T109	73576	Horiz. oscillator.
T110	74588	Horiz. output & H.V.
T111	74586	Power, 115 V, 60 cycle.
T112	71424	Sound IF.
T113	71427	Sound discriminator.
T114	71419	Audio output.
T115	73578	Antenna w/matching Xformer connector.
		MISCELLANEOUS
	73635	Speaker-12" P.M.

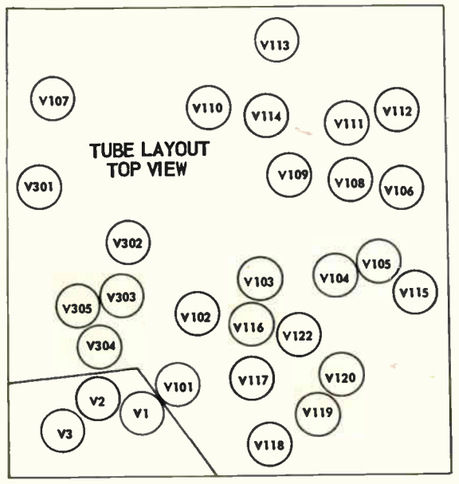

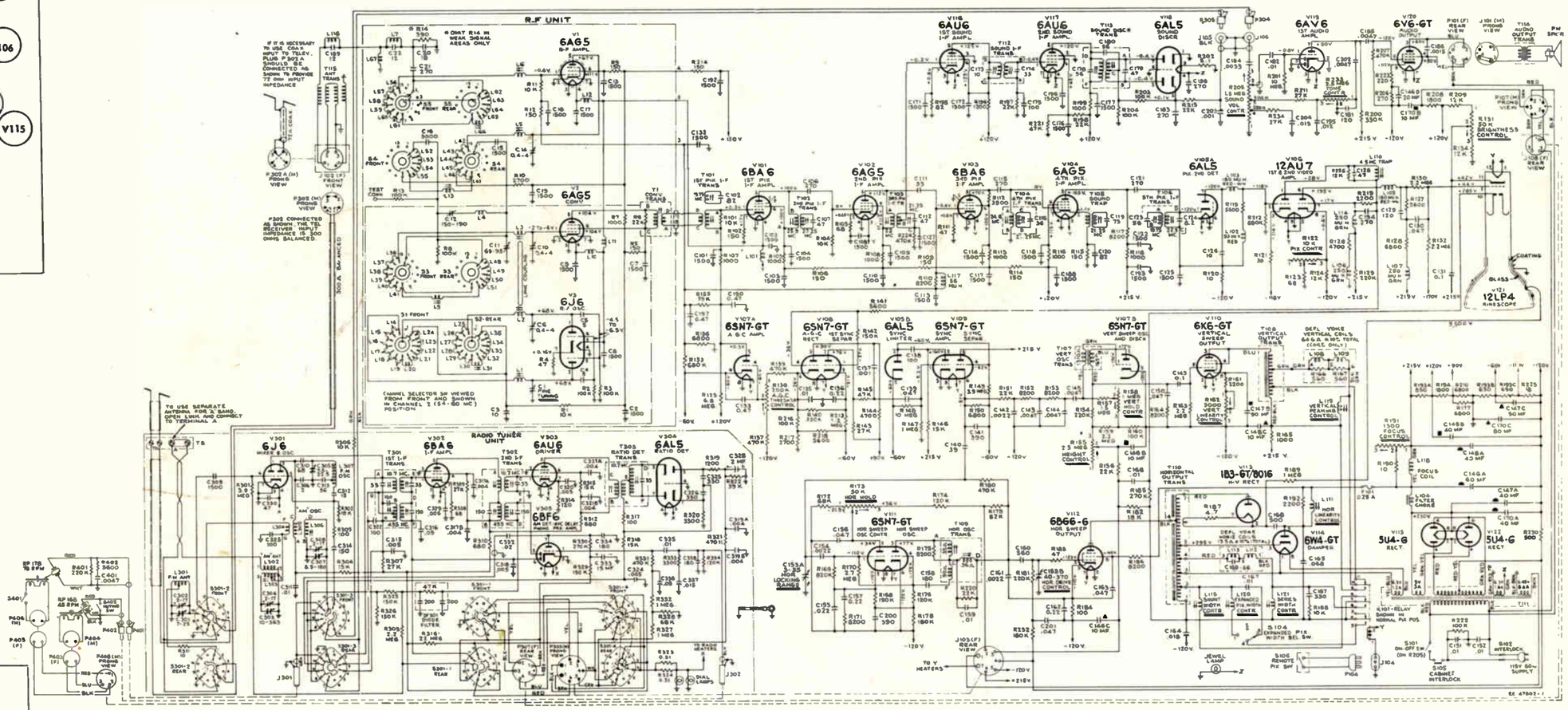

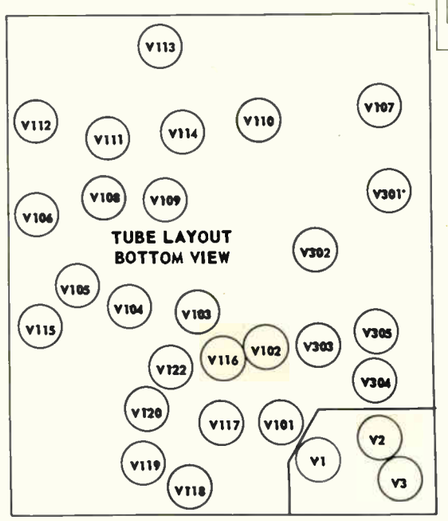

Function switch S301 viewed from front and shown in Number 1 (maximum counterclockwise position).

Switch position 1—Television.
Switch position 2—AM.
Switch position 3—FM.
Switch position 4—Phono 45 RPM.
Switch position 5—Phono 78 RPM.

All resistance values in ohms. K = 1,000.
All capacitance values less than 1 in MF and above 1 in MMF unless noted.

Coil resistance values less thru 1 ohm are not shown.
Direction of arrows at controls indicates clockwise rotation.

In some receivers, substitutions have caused changes in component lead color codes. In electrolytic capacitor values and their lug identification markings.

All voltages measured with "VoltOhmyst," no signal input with 117 v. a-c supply with the pix control fully clockwise and the brightness control set for average brightness.

Some receivers have been field modified to replace the RP178 changer with type 960282. Compensation was changed by adding a .0068 mfd capacitor in parallel with C184, another .0068 mfd capacitor in parallel with C185 and a 120K resistor in parallel with R334.

REF. NO.	PART NO.	DESCRIPTION
		ELECTROLYTICS
C11	73449	1 sec: 150-190 mmfd, 1 sec: 65-95 mmfd.
C146	73581	1 sec: 60/450, 2 sec: 10/450, 1 sec: 20/150.
C147	73583	40/450, 90/150, 50/150.
C148	71432	2 sec: 40/450, 1 sec: 10/450.
C168	74153	Hi-voltage, 500/15K volts.
C170	73582	40/450, 10/450, 80/200.
		COILS
L101	73477	Filament choke.
L102	71527	Peaking coil.
L103	74214	Peaking coil.
L104	73154	Filter choke.
L105	74214	Peaking coil.
L106	71526	Peaking coil.
L107	71526	Peaking coil.
L108	74262	Deflecting yoke.
L109		See L108.
L110	73577	4.5 mc trap.
L111	71449	Horizontal linearity.
L112		See L108.
L113		See L108.
L114	71526	Peaking coil.
L115	71429	Width control.
L116	73476	IF trap.
L117	74170	Peaking coil.
L118	74585	Focus coil.
L119	74877	Vertical peaking coil.
L120	71429	Width control.
L121	74878	Series width coil.
		RESISTORS
R122	74047	Brightness & picture.
R131	74047	Brightness & picture.
R138	74475	AGC threshold control.
R155	71440	Height control.
R158	72734	Horiz. & vertical hold.
R162	71441	Vertical linearity.
R173	72734	Horiz. & vertical hold.
R187	72633	W.W. 4.7 ohms, 1/3 w.
R190	18471	W.W. 10 ohms, ½ w.
R191	74597	Focus control.
R193	73588	Volt-div. 1 sec: 850/12 w, 2 sec: 650/6 w.
R202	72067	W.W. 5.1 ohms, ½ w.
R205	74359	Tone, vol. & power switch.
R230	74049	W.W. 500 ohms, 20 w.
R233	74359	Tone, vol. & power switch.
S101	74359	Tone, vol. & power switch.
S105	74157	Interlock switch.
		TRANSFORMERS
T1	73448	Converter and R6.
T101	74589	First pix IF.
T102	74590	Second pix IF.
T103	74591	Third pix IF.
T104	74592	Fourth pix IF.
T105	71778	Sound trap.
T106	73575	Fifth pix IF.
T107	73569	Vertical oscillator.
T108	74875	Vertical output.
T109	73576	Horiz. oscillator.
T110	74588	Horiz. output & H.V.
T111	74892	Power, 117 V, 60 cycle.
T112	71424	Sound IF.
T113	71427	Sound discriminator.
T114	74902	Output transformer.
T115	73578	Antenna 2 socket & bracket.
		MISCELLANEOUS
	74900	Speaker-12"P.M
	74902	Output transformer.

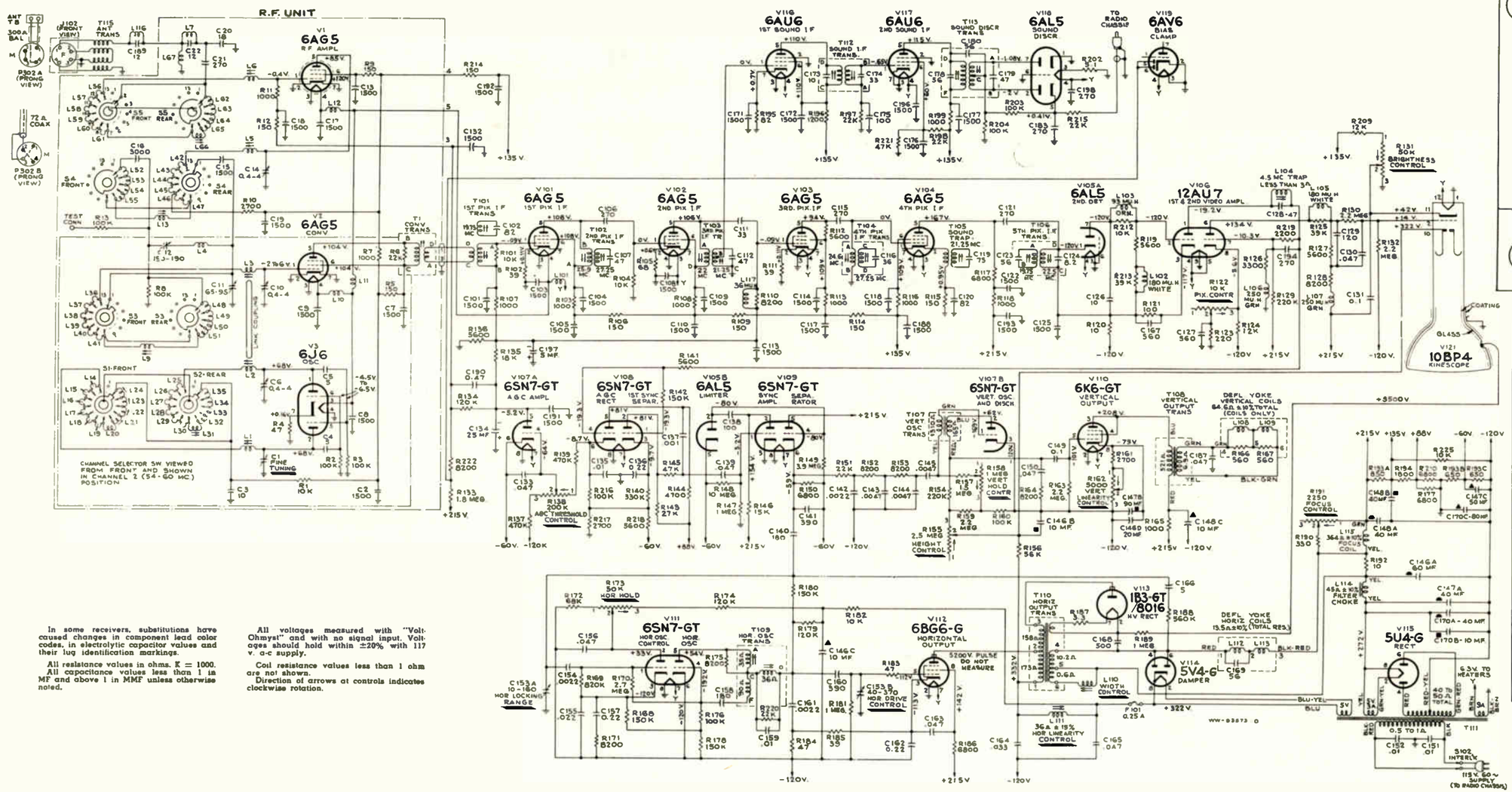

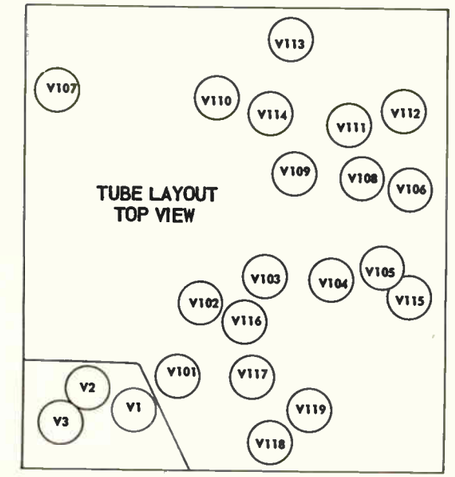

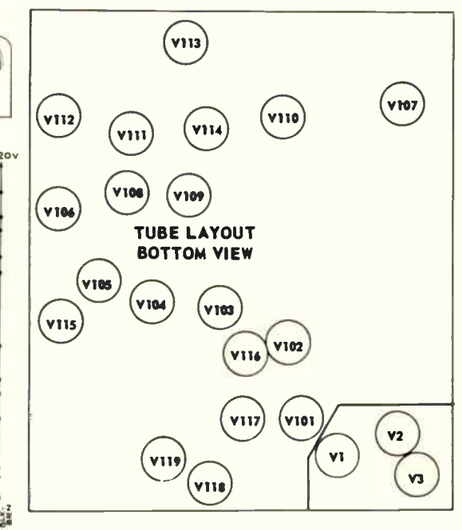

In some receivers, substitutions have caused changes in component lead color codes, in electrolytic capacitor values and their lug identification markings.

All resistance values in ohms. K = 1000.
All capacitance values less than 1 in MF and above 1 in MMF unless otherwise noted.

All voltages measured with "Volt-Ohmyst" and with no signal input. Voltages should hold within ±20% with 117 v. a-c supply.

Coil resistance values less than 1 ohm are not shown.
Direction of arrows at controls indicates clockwise rotation.

REF. NO.	PART NO.	DESCRIPTION
		ELECTROLYTICS
C11	73449	1 sec: 150-190 mmfd, 1 sec: 65-95 mmfd.
C134	53147	25 mfd, 50 volts.
C146	73581	1 sec: 60/450, 2 sec: 10/450, 1 sec: 20/150.
C147	73583	40/450, 90/150, 50/150.
C148	71432	2 sec: 40/450, 1 sec: 10/450.
C170	73582	40/450, 10/450, 80/200.
C197	74106	5 mfd, 50 volts.
		COILS
L101	73477	Choke.
L102	71528	Peaking coil.
L103	72619	Peaking coil.
L104	73577	Video trap.
L105	71528	Peaking coil.
L106	71526	Peaking coil.
L107	71526	Peaking coil.
L108	71420	Deflecting yoke.
L109		See L108.
L110	71429	Width control.
L111	71449	Horizontal linearity.
L112		See L108.
L113		See L108.
L114	73154	Filter choke.
L115	73566	Focus coil.
L116	73476	IF trap.
L117	74140	Peaking coil.
		RESISTORS
R122	73663	Picture control.
R131	73156	Brightness control.
R138	73579	AGC threshold control.
R155	71440	Height control.
R158	72734	Horiz. hold, vert. hold.
R162	71441	Vertical linearity.
R173	72734	Horiz. & vertical hold.
R187	71513	W.W. 3.3 ohms, ½ w.
R190	37502	W.W. 330 ohms, 2 w.
R191	72735	Focus control.
R193	73588	Volt-div. 1 sec: 850/12 w, 2 sec: 650/6 w.
R202	72067	W.W. 5.1 ohms, ½ w.
R225	51869	W.W. 1000 ohms, 10 w.
		TRANSFORMER
T1	73448	Converter and R6.
T5	73636	Output transformer.
T101	73571	Convertor Xformer.
T102	73572	First pix IF.
T103	73573	Second pix IF.
T104	73574	Third pix IF.
T105	71778	Cathode trap.
T106	73575	Fourth pix IF.
T107	73569	Vertical oscillator.
T108	73568	Vertical output.
T109	73576	Horiz. oscillator.
T110	73570	Horiz. output & H.V.
T111	73567	Power, 117 V, 60 cycle.
T112	71424	Sound IF.
T113	71427	Sound discriminator.
T115	73578	Antenna w/ bracket & socket.
		MISCELLANEOUS
73635		Speaker- 12" P.M.
73636		Output transformer.

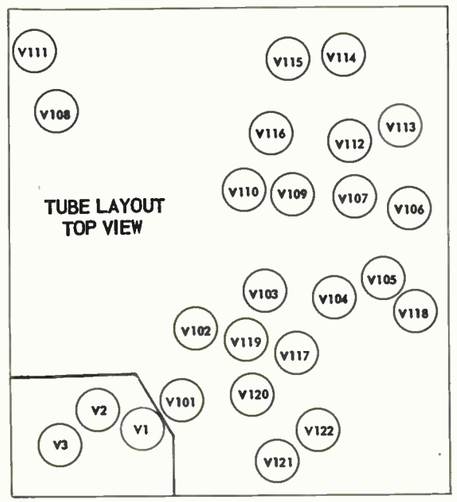

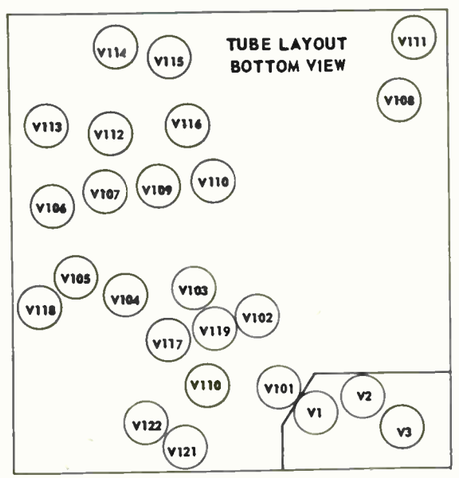

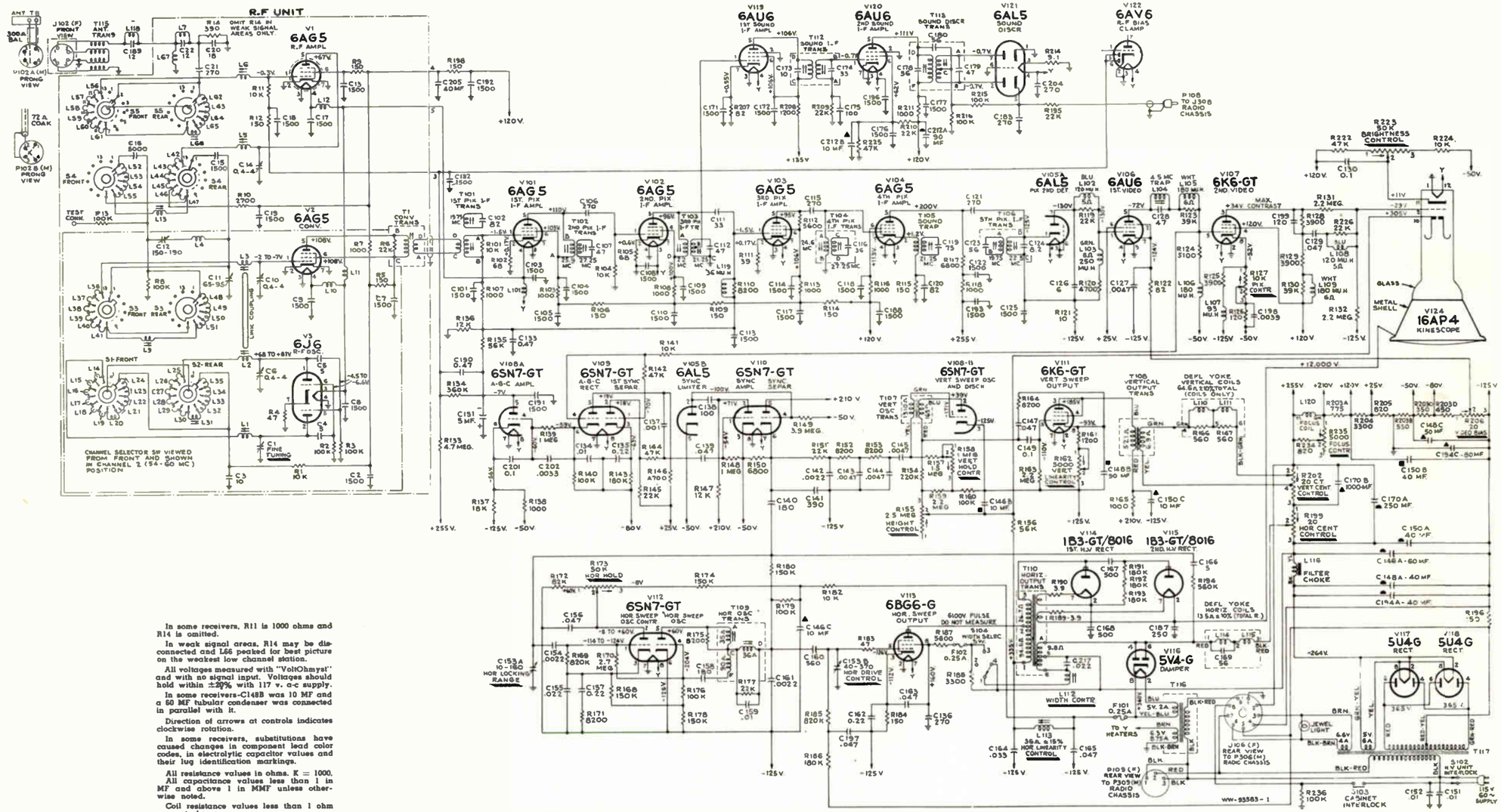

In some receivers, R11 is 1000 ohms and R14 is omitted.

In weak signal areas, R14 may be disconnected and L66 peaked for best picture on the weakest low channel station.

All voltages measured with "VoltOhmyst" and with no signal input. Voltages should hold within ±20% with 117 v. a-c supply.

In some receivers-C148B was 10 MF and a 60 MF tubular condenser was connected in parallel with it.

Direction of arrows at controls indicates clockwise rotation.

In some receivers, substitutions have caused changes in component lead color codes, in electrolytic capacitor values and their lug identification markings.

All resistance values in ohms. K = 1000. All capacitance values less than 1 in MF and above 1 in MMF unless otherwise noted.

Coil resistance values less than 1 ohm are not shown.

REF. NO.	PART NO.	DESCRIPTION
		ELECTROLYTICS
C11	73449	1 sec: 150-190 mmfd, 1 sec: 65-95 mmfd.
C131	74106	5 mfd, 50 volts.
C146	73581	1 sec: 60/450, 2 sec: 10/450, 1 sec: 20/150.
C148	73583	40/450, 90/450, 50/150.
C150	71432	2 sec: 40/450, 1 sec: 10/450.
C153	73580	10-160 mmfd, 40-370 mmfd.
C170	71436	250/10, 1000/6.
C194	73582	40/450, 10/450, 80/200. (B sec. not used.)
C205	74266	40 mfd, 400 volts.
C212	74433	90/350, 10/350.
		COILS
L101	73477	Choke.
L102	71529	Peaking coil.
L103	71526	Peaking coil.
L104	73577	Video trap.
L105	71528	Peaking coil.
L106	74214	Peaking coil.
L107	71527	Peaking coil.
L108	71529	Peaking coil.
L109	71528	Peaking coil.
L110	74141	Deflecting yoke.
L111		See L110.
L112	71429	Width control.
L113	71449	Horiz. linearity.
L114		See L110.
L115		See L110.
L118	73476	IF trap.
L119	74170	Peaking coil.
L120	74570	Focus coil.
		RESISTORS
R121	72067	10 ohms, – 20%, ½ watt.
R127	73663	Picture control.
R155	71440	Height control.
R158	72734	Horiz. & vertical hold.
R162	71441	Vertical linearity.
R173	72734	Vertical & horiz. hold.
R189	74156	W.W. 3.9 ohms, 1/3 w.
R190	74156	W.W. 3.9 ohms, 1/3 w.
R196	74375	W.W. 150 ohms, 20 w.
R199	74146	Horiz. centering.
R202	71443	Vertical centering.
R203	74155	Volt-div. 775/9.5 w, 550/5 w, 350/3 w, 450/5 w.
R204	48207	W.W. 330 ohms, 10 watts.
R205	74213	W.W. 820/4 w.
R206	74146	Video bias control.
R223	73156	Brightness control.
R234	74213	W.W. 820 ohms, 4 w.
R235	74442	Focus control.
S104	74147	Width cont. coil switch.
		TRANSFORMERS
T1	73448	Convertor and R6.
T101	73571	First pix IF.
T102	73572	Second pix IF.
T103	73573	Third pix IF.
T104	73574	Fourth pix IF.
T105	71778	Sound trap.
T106	73575	Fifth pix IF.
T107	74144	Vertical oscillator.
T108	73568	Vertical output.
T109	73576	Horiz. oscillator.
T110	74145	Horiz. output.
T112	71424	Sound IF.
T113	71427	Sound discriminator.
T115	73578	Antenna w/socket & bracket.
T116	74195	Filament Xformer, 117 V, 60 cy.
T117	74194	Power, 115 V, 60 cycle.
		MISCELLANEOUS
	74753	Speaker-12" P.M.
	73636	Output transformer.

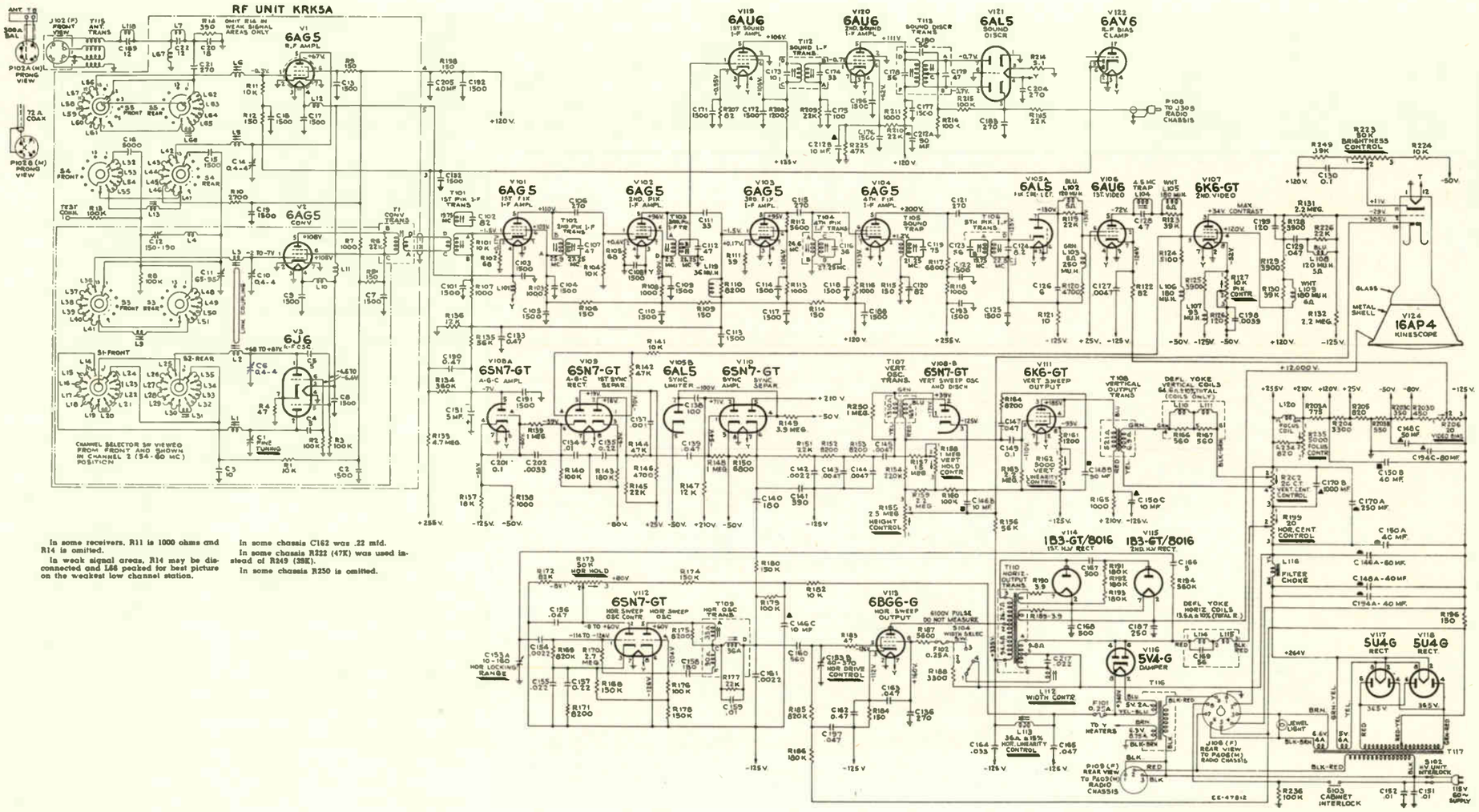

In some receivers, R11 is 1000 ohms and R14 is omitted.

In weak signal areas, R14 may be disconnected and L66 peaked for best picture on the weakest low channel station.

In some chassis C162 was .22 mfd.

In some chassis R322 (47K) was used instead of R249 (39K).

In some chassis R250 is omitted.

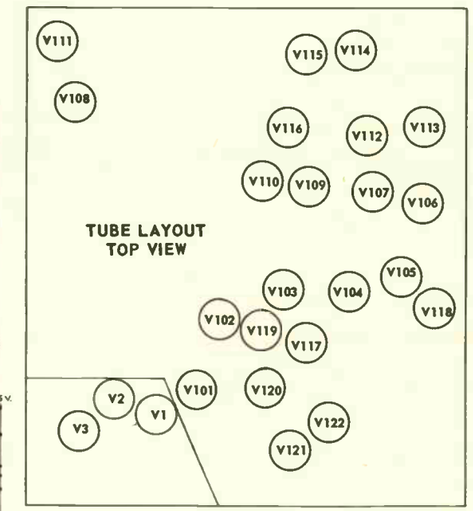

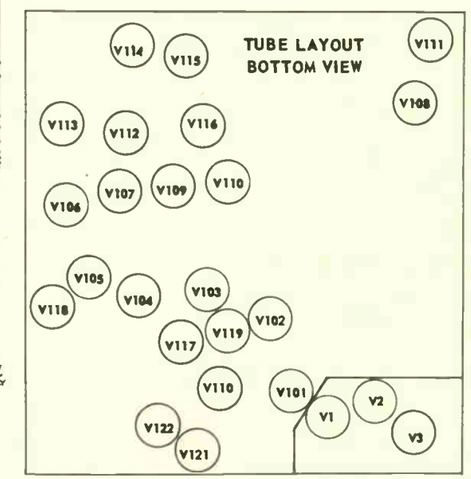

REF. NO.	PART NO.	DESCRIPTION
		ELECTROLYTICS
C131	74106	5 mfd, 50 volts.
C146	73581	1 sec: 60/450, 2 sec: 10/450 1 sec: 20/150.
C148	73583	40/450, 90/450, 50/150.
C150	71432	2 sec: 40/450, 1 sec: 10/450.
C170	71436	250/10, 1000/6.
C194	73582	40/450, 10/450, 80/200.
C205	74266	40 mfd, 400 volts.
C212	74433	90/350, 10/350.
C11	73449	Ceramic, trimmer.
C153	73580	Mica, trimmer.
		COILS
L67	73475	Antenna filter shunt.
L101	73477	Choke.
L102	71529	Peaking coil.
L103	71526	Peaking coil.
L104	73577	Video trap.
L105	71528	Peaking coil.
L106	74214	Peaking coil.
L107	71527	Peaking coil.
L108	71529	Peaking coil.
L109	71528	Peaking coil.
L110	74141	Deflecting yoke.
L111		See L110.
L112	71429	Width control.
L113	71449	Horiz. linearity.
L118	73476	IF trap.
L119	74170	Peaking coil.
L120	74570	Focus coil.
		RESISTORS
R127	73663	Picture control.
R155	71440	Height control.
R158	72734	Horiz. & vertical hold.
R162	71441	Vertical linearity.
R173	72734	Horiz. & vertical hold.
R189	74156	W.W. 3.9 ohms, 1/3 w.
R190	74156	W.W. 3.9 ohms, 1/3 w.
R196	74375	W.W. 150 ohms, 20 w.
R199	74146	Horiz. centering.
R202	71443	Vertical centering.
R203	74155	Volt-div. 775/9.5 w, 550/5 w, 350/3 w, 450/5 w.
R204	48207	W.W. 3300 ohms, 10 w.
R205	74213	W.W. 820/4 w.
R206	74146	Video bias control.
R223	73156	Brightness control.
R234	74213	W.W. 820/4 w.
R235	74442	Focus control.
		TRANSFORMERS
T1	73448	Convertor and R6.
T101	73571	First pix IF.
T102	73572	Second pix IF.
T103	73573	Third pix IF.
T104	73574	Fourth pix IF.
T105	71778	Sound trap.
T106	73575	Fifth pix IF.
T107	74144	Vertical oscillator.
T108	73568	Vertical output.
T109	73576	Horiz. oscillator.
T110	74145	Horiz. output.
T112	71424	Sound IF.
T113	71427	Sound discriminator.
T115	73578	Antenna w/socket & bracket.
T116	74195	Filament, 115 V, 60 cycle.
T117	74194	Power, 115 V, 60 cycle.
		MISCELLANEOUS
	74753	Speaker-12" P.M.
	73636	Output Xformer.

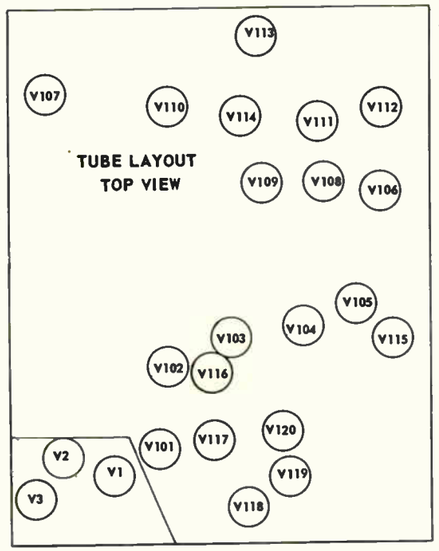

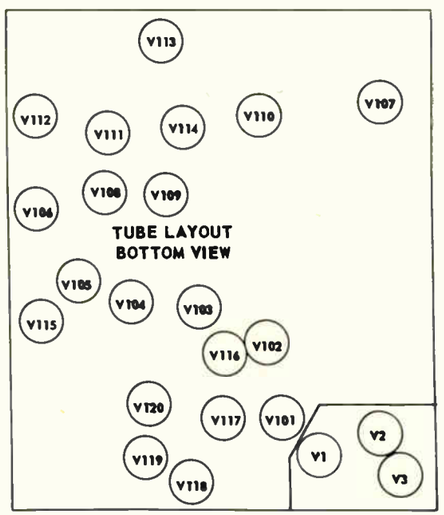

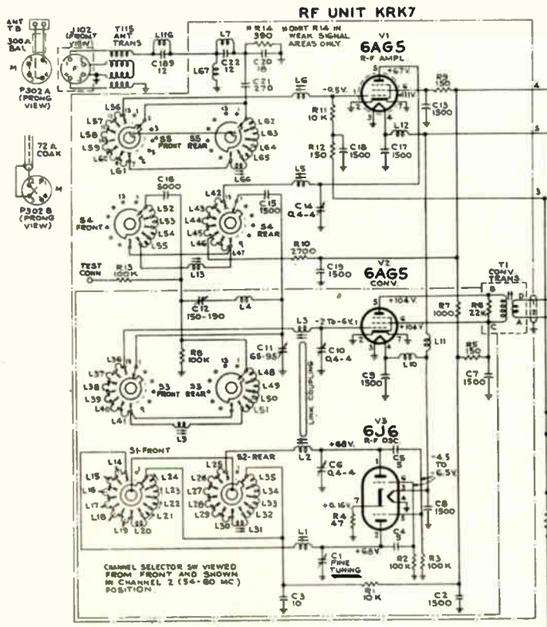

All resistance values in ohms. K = 1000.

All capacitance values less than 1 in MF and above 1 in MMF unless otherwise noted.

In some receivers, substitutions have caused changes in component lead color codes, in electrolytic capacitor values and their lug identification markings.

Coil resistance values less than 1 ohm are not shown.

Direction of arrows at controls indicates clockwise rotation.

All voltages measured with "Volt-Ohmyst" and with no signal input. Voltages should hold within ±20% with 117 v. a-c supply.

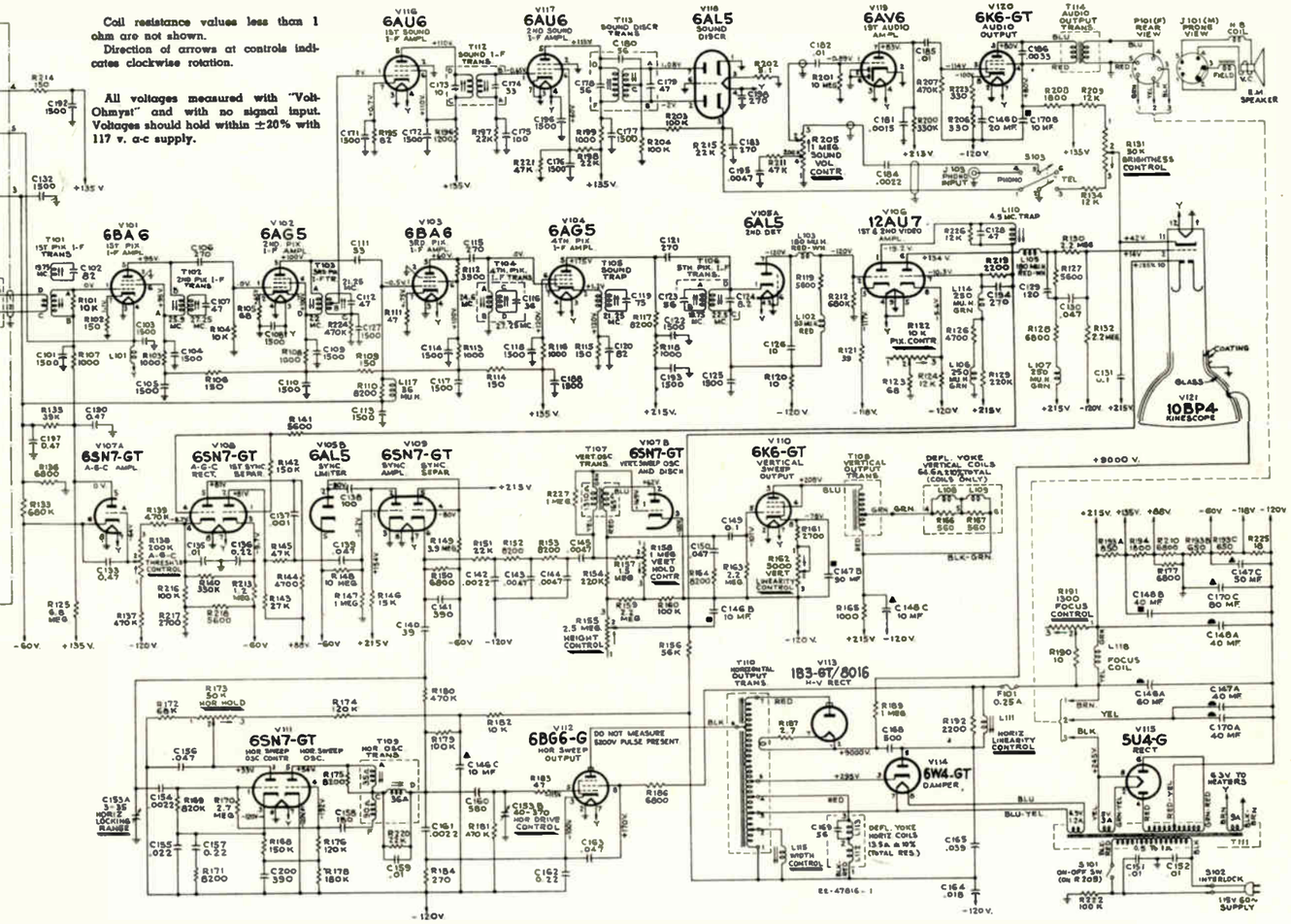

REF. NO.	PART NO.	DESCRIPTION
		ELECTROLYTICS
C146	73581	1 sec: 60/450 2 sec: 10/450, 1 sec: 20/150.
C147	73583	40/450, 90/150, 50/150.
C148	71432	2 sec: 40/450, 1 sec: 10/450.
C168	74153	H.V. 500 mmfd, 15K volts.
C170	73582	40/450, 10/450, 80/200.
C11	73449	Ceramic, trimmer.
C153	74593	Mica, trimmer.
		COILS
L67	73475	Antenna filter shunt.
L101	73477	Choke coil.
L102	71527	Peaking coil.
L103	74214	Peaking coil.
L105	74214	Peaking coil.
L106	71526	Peaking coil.
L107	71526	Peaking coil.
L108	71420	Deflecting yoke.
L109		See L108.
L110	73577	4.5 mc trap.
L111	71449	Horiz. linearity.
L112		See L108.
L113		See L108.
L114	71526	Peaking coil.
L115	71429	Width control.
L116	73476	IF trap.
L117	74170	Peaking coil.
L118	74585	Focus coil.
		RESISTORS
R122	47047	Brightness & picture.
R131	74047	Brightness & picture.
R138	74475	AGC threshold control.
R155	71440	Height control.
R158	72734	Horiz. & vertical hold.
R162	71441	Vertical linearity.
R173	72734	Horiz. & vertical hold.
R187	74598	W.W. 2.7 ohms, 1/3 w.
R190	18471	W.W. 10 ohms, ½ w.
R191	74597	Focus control.
R193	73588	Volt-div. 1 sec: 850/12 w, 2 sec: 650/6 watts.
R202	72067	W.W. 5.1 ohms, ½ w.
R205	38408	Sound vol., power switch.
S101	38408	Sound vol., power switch.
		TRANSFORMERS
T1	73448	Convertor and R6.
T101	74589	First pix IF.
T102	74590	Second pix IF.
T103	74591	Third pix IF.
T104	74592	Fourth pix IF.
T105	71778	Sound trap.
T106	73575	Fifth pix IF.
T107	73569	Vertical oscillator.
T108	74587	Vertical output.
T109	73576	Horizontal oscillator.
T110	74588	Horiz. output & H.V.
T111	74586	Power, 117 V, 60 cy.
T112	71424	Sound IF.
T113	71427	Sound discriminator.
T114	71419	Antenna w/socket & bracket.
		MISCELLANEOUS
	74599	Speaker-5"x 7" P.M.

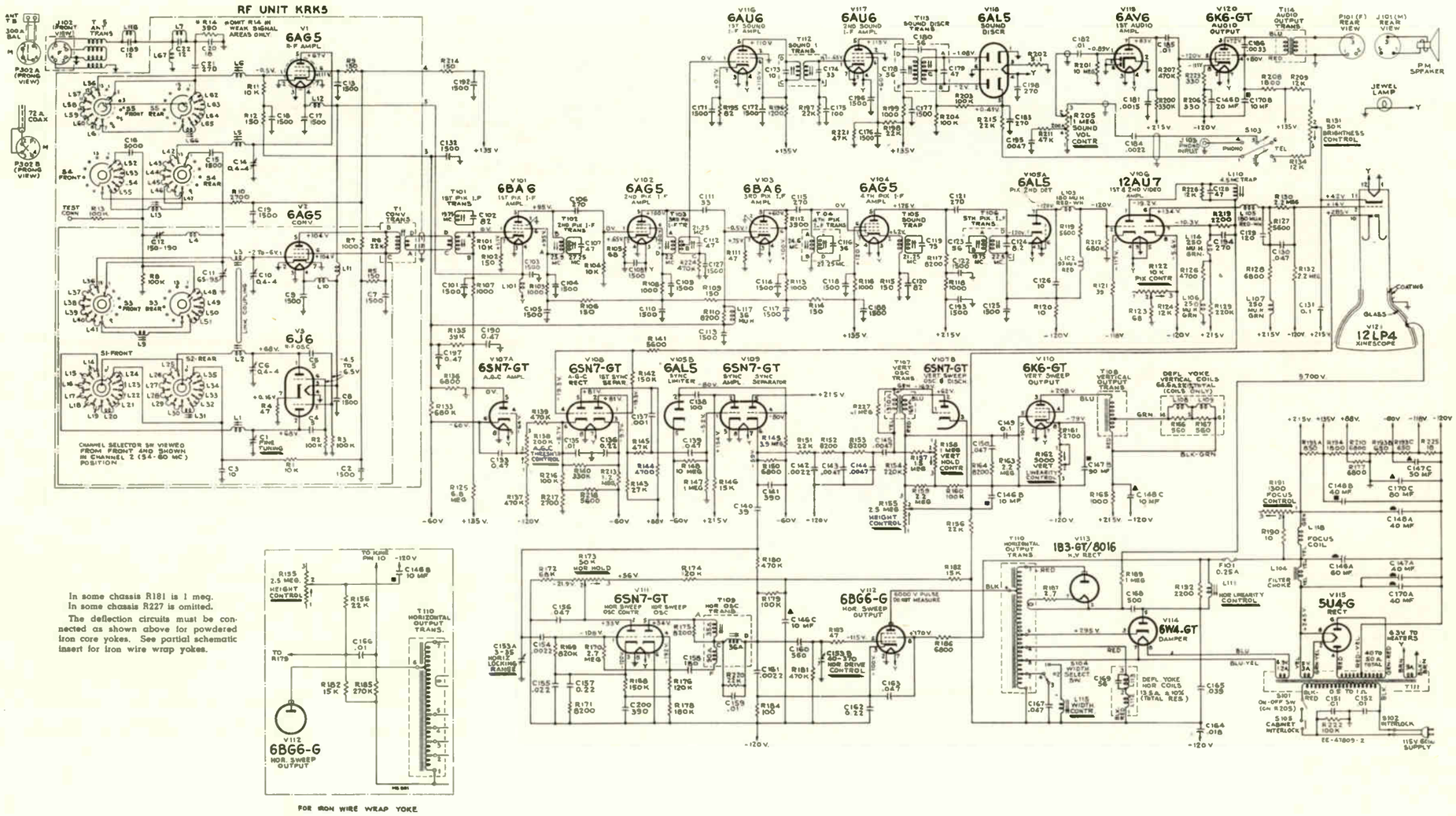

In some chassis R181 is 1 meg.
In some chassis R227 is omitted.

The deflection circuits must be connected as shown above for powdered iron core yokes. See partial schematic insert for iron wire wrap yokes.

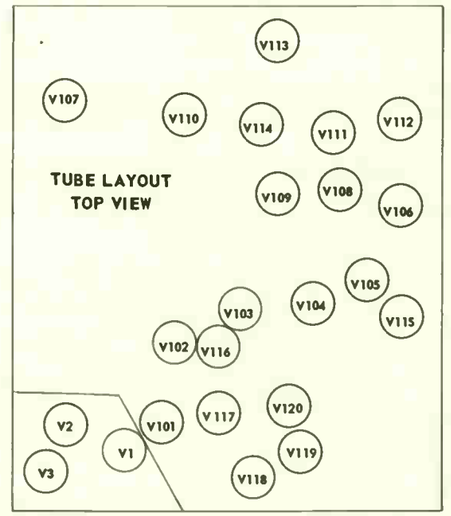

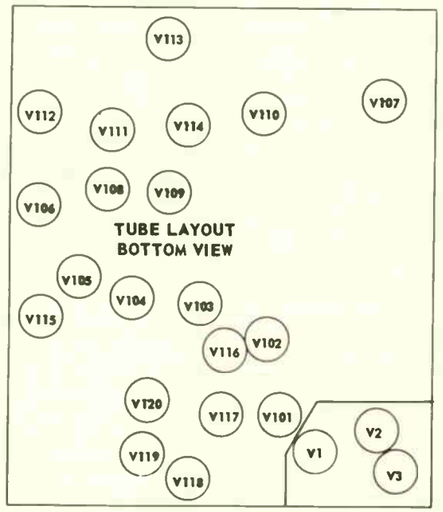

REF. NO.	PART NO.	DESCRIPTION
		ELECTROLYTICS
C11	73449	Ceramic, trimmer.
C146	73581	1 sec: 60/450, 2 sec: 10/450 1 sec: 20/150.
C147	73583	40/450, 90/150, 50/150.
C148	71432	2 sec: 40/450, 1 sec: 10/450.
C168	74153	H.V. 500 mmfd, 15K volts.
C170	73582	40/450, 10/450, 80/200.
C153	74593	Mica, trimmer.
		COILS
L67	73475	Antenna filter shunt.
L101	73477	Filament choke.
L102	71527	Peaking coil.
L103	74214	Peaking coil.
L104	73154	Filter choke.
L105	74214	Peaking coil.
L106	71526	Peaking coil.
L107	71526	Peaking coil.
L108	71420	Deflecting yoke.
L109		See L108.
L110	73577	4.5 mc trap.
L111	71449	Horiz. linearity.
L112		See L108.
L113		See L108.
L114	71526	Peaking coil.
L115	71429	Width control coil.
L116	73476	IF trap.
L117	74585	Peaking coil.
L118	74585	Focus coil.
		RESISTORS
R122	74047	Brightness & picture.
R131	74047	Brightness & picture.
R138	74475	AGC threshold control.
R155	71440	Height control.
R158	72734	Horiz. & vertical hold.
R162	71441	Vertical linearity.
R173	72734	Horiz. & vertical hold.
R187	74598	W.W. 2.7 ohms, 1/3 w.
R190	18471	W.W. 10 ohms, ½ w.
R191	74597	Focus control.
R193	73588	Volt-div. 1 sec: 850 & 2 sec: of 650/6 watts.
R202	72067	W.W. 5.1 ohms, ½ w.
R205	34808	Sound vol., power switch.
S101	34808	Sound vol., power switch.
S104	74147	Width selector switch.
		TRANSFORMERS
T1	73448	Convertor and R6.
T101	74589	First pix IF.
T102	74590	Second pix IF.
T103	74591	Third pix IF.
T104	74592	Fourth pix IF.
T105	71778	Sound trap.
T106	73575	Fifth pix IF.
T107	73569	Vertical oscillator.
T108	74587	Vertical output.
T109	73576	Horiz. oscillator.
T110	74588	Horiz. output & H.V.
T111	74586	Power, 115 V, 60 cy.
T112	71424	Sound IF.
T113	71427	Sound discriminator.
T114	71419	Sound output.
T115	73578	Antenna w/socket.
		MISCELLANEOUS
	73993	Speaker-5" x 7" P.M.

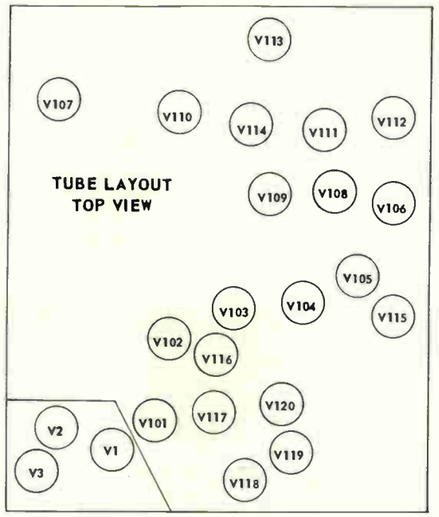

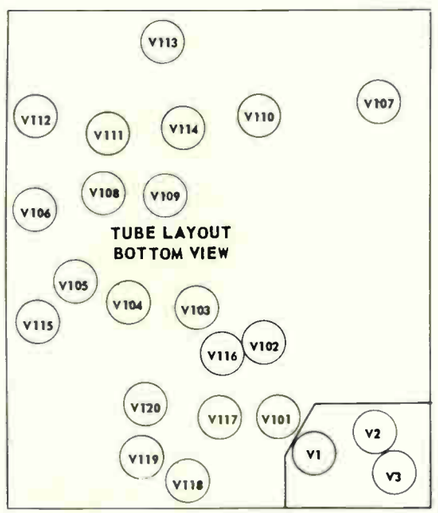

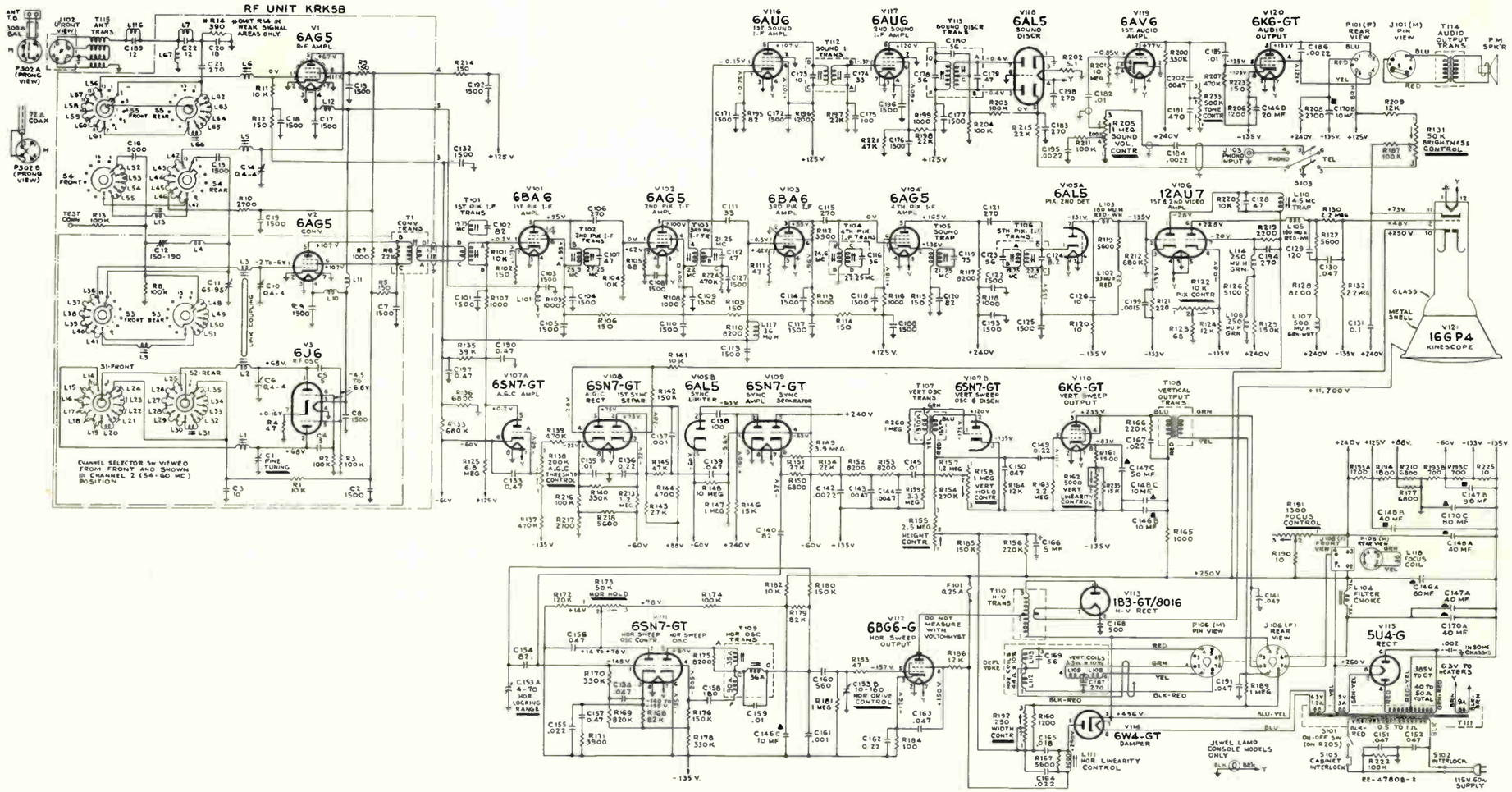

In some receivers, C141 was omitted.
In some receivers, R206 and R223 were 820 ohms.
In some receivers, R220 was 12K.

In some receivers, R121 was 39. R225 was 18. R128 was 6,800. R129 was 220K. L107 was 250 Muh and C199 was omitted.

In some receivers, R161 was 1,000 and R235 was omitted.
In some receivers, R160 and R167 were omitted.

In some receivers, R260 was 470K.
In some receivers, R187 was 150K and V121-10 was connected to arm (2) of height control R155. R188 (470K) was used between V121-11 and +125 v.
In some receivers, C151 and C152 were .01 mfd.

REF. NO.	PART NO.	DESCRIPTION
		ELECTROLYTICS
C146	73581	1 sec: 60/450, 2 sec: 10/450 1 sec: 20/150.
C147	73583	40/450, 90/150, 50/150.
C148	71432	2 sec: 40/450, 1 sec: 10/450.
C166	28417	5 mfd, 450 volts.
C170	73582	40/450, 10/450, 80/200.
C11	73449	Ceramic, trimmer.
C153	74946	Mica, trimmer.
C168	74947	Ceramic.

		COILS
L67	73475	Antenna filter shunt.
L101	73477	Filament choke coil.
L102	71527	Peaking coil.
L103	74214	Peaking coil.
L104	73154	Filter choke.
L105	74214	Peaking coil.
L106	71526	Peaking coil.
L107	75252	Peaking coil.
L108	74952	Deflecting yoke.
L109		See L108.
L110	73577	4.5 mc trap.
L111	71449	Horiz. linearity.
L112		See L108.
L113		See L108.
L114	71526	Peaking coil.
L116	73476	IF trap.
L117	74170	Peaking coil.
L118	74983	Focus coil & plug.

		RESISTORS
R122	74047	Brightness & picture.
R131	74047	Brightness & picture.
R138	74475	AGC threshold control.
R155	71440	Height control.
R158	72734	Horiz. & vertical hold.
R162	71441	Vertical linearity.
R173	72734	Horiz. & vertical hold.
R190	18471	W.W. 10 ohms, ½ w.
R191	74597	Focus control.
R192	74945	Width control.
R193	74955	Volt-div. 1 sec: 1200/16 w, 2 sec: 700/5½ w.
R202	72067	W.W. 5.1 ohms, ½ w.
R205	74048	Vol., tone, power switch.
R233	74048	Vol., tone, power switch.

		TRANSFORMERS
T1	73448	Convertor and R6.
T101	74589	First pix IF.
T102	74590	Second pix IF.
T103	74591	Third pix IF.
T104	74592	Fourth pix IF.
T105	71778	Sound trap.
T106	73575	Fifth pix IF.
T107	73569	Vertical oscillator.
T108	74950	Vertical output.
T109	73576	Horiz. oscillator.
T110	74951	High voltage Xformer.
T111	74949	Power, 115 V, 60 cy.
T112	71424	Sound IF.
T113	71427	Sound discriminator.
T114	75034	Output Xformer.
T115	73578	Antenna w/socket.

		MISCELLANEOUS
5101	74048	Vol., tone, power switch.
5103	46760	TV phono switch.
	75022	Speaker-8" P.M.
	75034	Output Xformer. (T114).

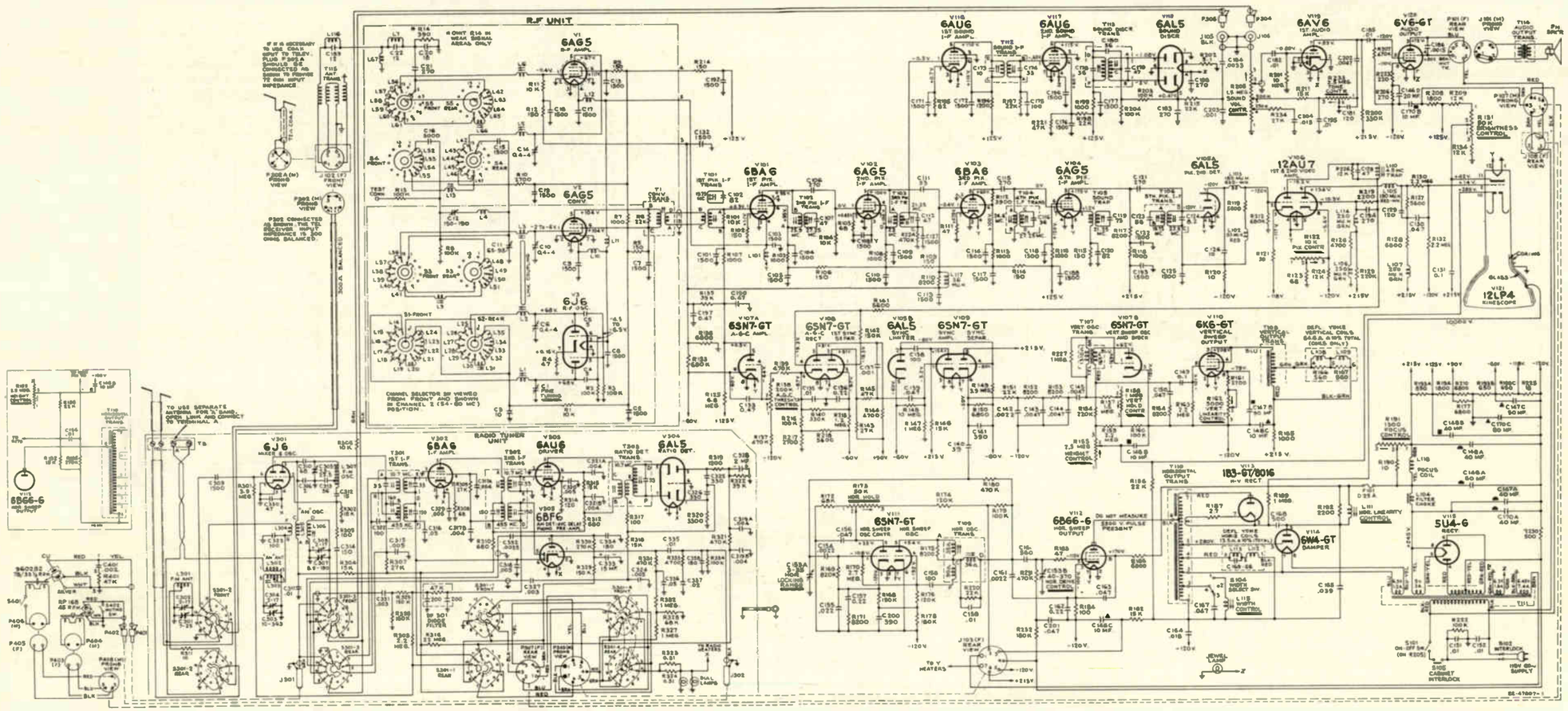

Function switch S301 viewed from front and shown in Number 1 (maximum counterclockwise position).
Switch position 1—Television.
Switch position 2—AM.
Switch position 3—FM.
Switch position 4—Phono 45 RPM.
Switch position 5—Phono 78 RPM.

All resistance values in ohms. K = 1,000.
All capacitance values less than 1 in MF and above 1 in MMF unless noted.

Coil resistance values less than 1 ohm are not shown.
Direction of arrows at controls indicates clockwise rotation.

In some receivers, substitutions have caused changes in component lead color codes, in electrolytic capacitor values and their lug identification markings.

All voltages measured with "VoltOhmyst," no signal input with 117 v. a-c supply with the pix control fully clockwise and the brightness control set for average brightness.

The deflection circuits must be connected as shown above for powdered iron core yokes. The partial schematic insert shows the method of connection employed in early production receivers which employed an iron wire wrap yoke.

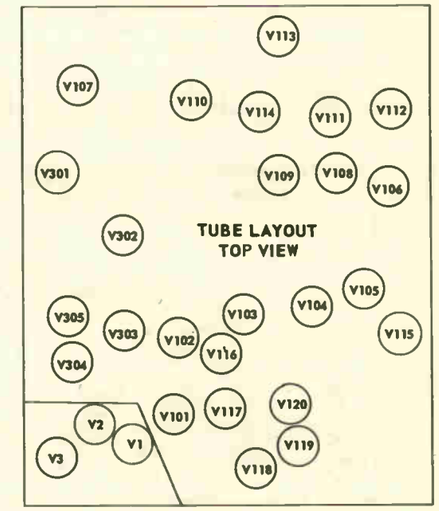

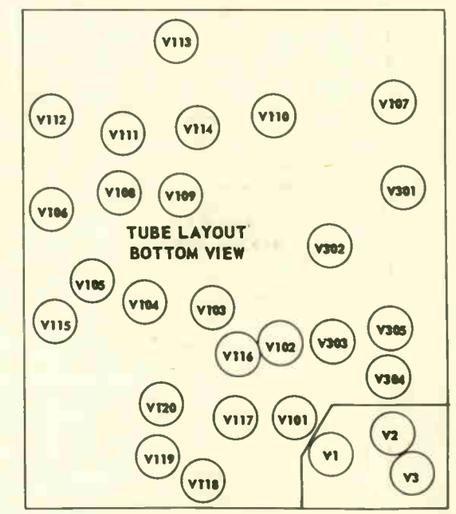

REF. NO.	PART NO.	DESCRIPTION
		ELECTROLYTICS
C146	73581	1 sect 60/450, 2 sect 10/450, 1 sect 20/150.
C147	73583	40/450, 90/150, 50/150.
C148	71432	2 sect 40/450, 1 sect 10/450.
C170	73582	40/450, 10/450 1 sect 80/200.
C11	73449	Ceramic, trimmer.
C153	74593	Mica, trimmer.
C168	74153	Ceramic.
		COILS
L67	73475	Antenna filter shunt.
L101	73477	Filament choke.
L102	71527	Peaking coil.
L103	74214	Peaking coil.
L104	73154	Filter choke.
L105	74214	Peaking coil.
L106	71526	Peaking coil.
L107	71526	Peaking coil.
L108	74262	Deflecting yoke.
L109		See L108.
L110	73577	4.5 mc trap.
L111	71449	Horiz. linearity.
L112		See L108.
L113		See L108.
L114	71526	Peaking coil.
L115	71429	Width control.
L116	73476	IF trap.
L117	74170	Peaking coil.
L118	74585	Focus coil.
		RESISTORS
R122	74047	Picture & brightness.
R131	74047	Picture & brightness.
R138	74475	AGC threshold control.
R155	71440	Height control.
R158	72734	Horiz. & vertical hold.
R162	71441	Vertical linearity.
R173	72734	Horiz. & vertical hold.
R187	74598	W.W. 2.7 ohms, 1/3 w.
R190	18471	W.W. 10 ohms, ½ w.
R191	74597	Focus control.
R193	73588	Volt-div. 1 sect 850/12 w, 2 sect 650/6 watts.
R202	72067	W.W. 5.1 ohms, ½ w.
R205	74359	Tone, vol., power switch.
R230	74049	W.W. 500 ohms, 20 w.
R233	74359	Tone, vol., power switch.
		TRANSFORMERS
T1	73448	Converter and R6.
T101	74589	First pix IF.
T102	74590	Second pix IF.
T103	74591	Third pix IF.
T104	74592	Fourth pix IF.
T105	71778	Sound trap.
T106	73575	Fifth pix IF.
T107	73569	Vertical oscillator.
T108	74587	Vertical output.
T109	73576	Horiz. oscillator.
T110	74588	Horiz. output & H.V.
T111	74981	Power, 115 V, 60 cy.
T112	71424	Sound IF.
T113	71427	Sound discriminator.
T114	74902	Output Xformer.
T115	73578	Antenna w/socket & bracket.
		MISCELLANEOUS
S101	74359	Tone, vol., power switch.
S104	74147	Width selector switch.
	74900	Speaker-12" P.M.
	74902	Output Xformer.

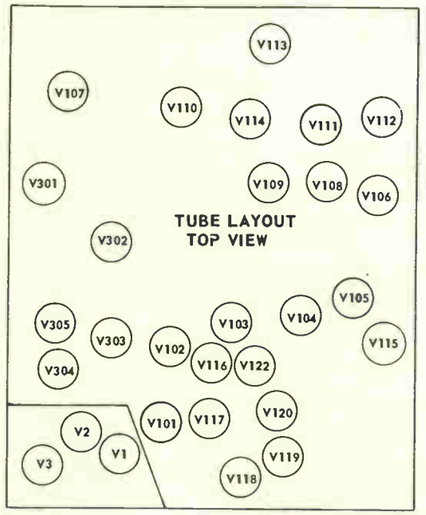

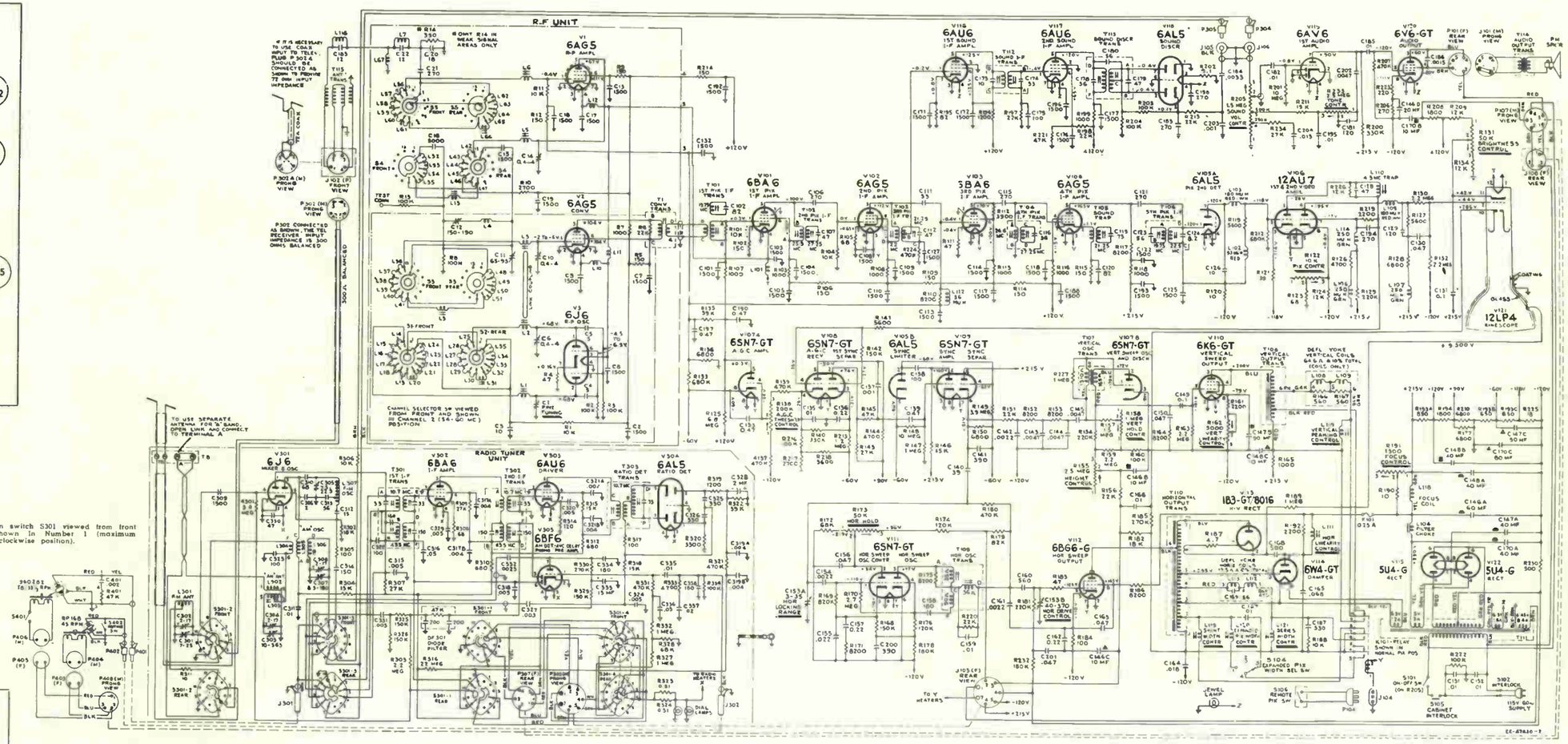

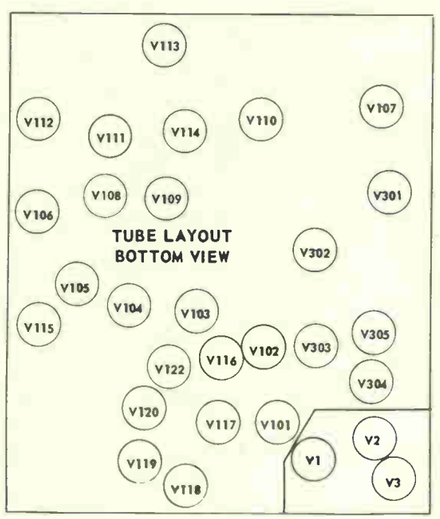

Switch position 1—Television.
Switch position 2—AM.
Switch position 3—FM.
Switch position 4—Phono 45 RPM.
Switch position 5—Phono 78 RPM.

All resistance values in ohms. K = 1,000.
All capacitance values less than 1 in MF and above 1 in MMF unless noted.

Coil resistance values less than 1 ohm are not shown.
Direction of arrows at controls indicates clockwise rotation.

In some receivers, substitutions have caused changes in component lead color codes, in electrolytic capacitor values and their lug identification markings.

All voltages measured with "VoltOhmyst," no signal input with 117 v. a-c supply with the pix control fully clockwise and the brightness control set for average brightness.

Some chassis marked KCS41B were employed in this model. C184 was .01, a 1 meg resistor was added across the RP168 mute switch and R401 was 18K.

In some sets, R227 was omitted.

REF. NO.	PART NO.	DESCRIPTION
		ELECTROLYTICS
C146	73581	1 sec: 60/450, 2 sec: 10/450 1 sec: 20/150.
C147	73583	40/450, 90/150, 50/150.
C148	71432	2 sec: 40/450, 1 sec: 10/450
C168	74153	H.V. 500 mmfd, 15K volts.
C170	73582	40/450, 10/450, 80/200.
C11	73449	Ceramic, trimmer.
C153	74593	Mica, trimmer.
		COILS
L67	73475	Antenna filter shunt.
L101	73477	Filament choke.
L102	71527	Peaking coil.
L103	74214	Peaking coil.
L104	73154	Filter choke.
L105	74214	Peaking coil.
L106	71526	Peaking coil.
L107	71526	Peaking coil.
L108	74262	Deflecting yoke.
L109		See L108.
L110	73577	4.5 mc trap.
L111	71449	Horiz. linearity.
L112		See L108.
L113		See L108.
L114	71526	Peaking coil.
L115	71429	Width control coil.
L116	73476	IF trap.
L117	74170	Peaking coil.
L118	74585	Focus coil.
L119	74877	Vertical peaking.
L120	71429	Width control coil.
L121	74878	Series width coil.
		RESISTORS
R122	74047	Brightness & picture.
R131	74047	Brightness & picture.
R138	74475	AGC threshold control.
R155	71440	Height control.
R158	72734	Horiz. & vertical hold.
R162	71441	Vertical linearity.
R173	72734	Horiz. & vertical hold.
R187	72633	W.W. 4.7 ohms, 1/3 w.
R190	18471	W.W. 10 ohms, ½ w.
R191	74597	Focus control.
R193	73588	Volt-div. 1 sec: 850/12 w, 2 sec: 650/6 watts.
R202	72067	W.W. 5.1 ohms, ½ w.
R205	74359	Tone, vol., power switch.
R230	74049	W.W. 500 ohms, 20 w.
R233	74359	Tone, vol., power switch.
		TRANSFORMERS
T1	73448	Convertor and R6.
T101	74589	First pix IF.
T102	74590	Second pix IF.
T103	74591	Third pix IF.
T104	74592	Fourth pix IF.
T105	71778	Sound trap.
T106	73575	Fifth pix IF.
T107	73569	Vertical oscillator.
T108	74875	Vertical cutout.
T109	73576	Horiz. oscillator.
T110	74588	Horiz. output & H.V.
T111	74892	Power, 115 V.
T112	71424	Sound IF.
T113	71427	Sound discriminator.
T114	74902	Audio output.
T115	73578	Antenna w/socket & bracket.
		MISCELLANEOUS
S101	74359	Tone, vol,. power switch.
S104	74872	Width selector switch.
	74900	Speaker-12" P.M.
	74902	Audio output Xformer.

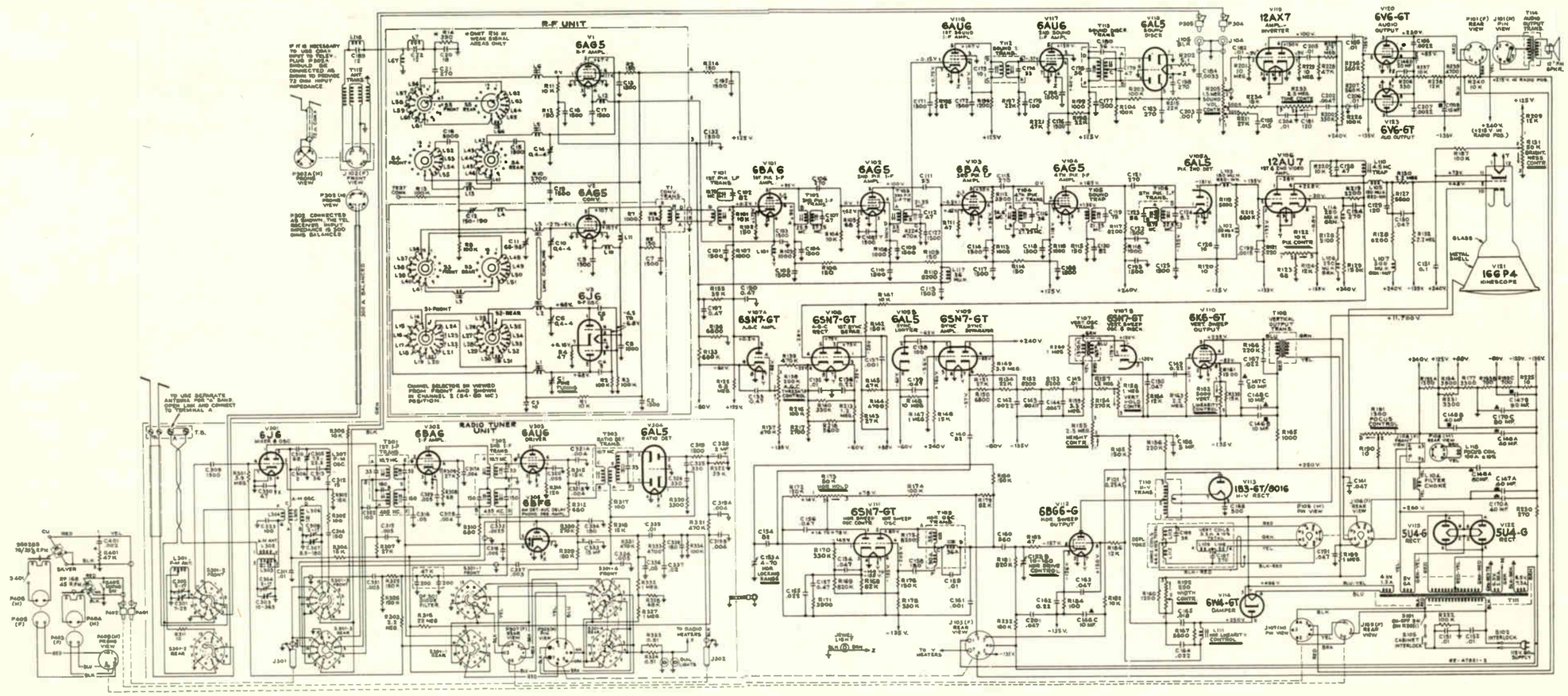

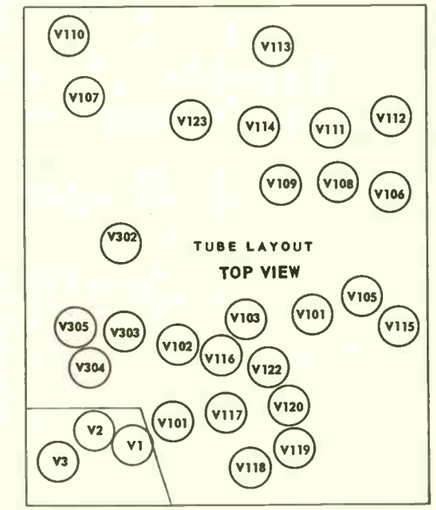

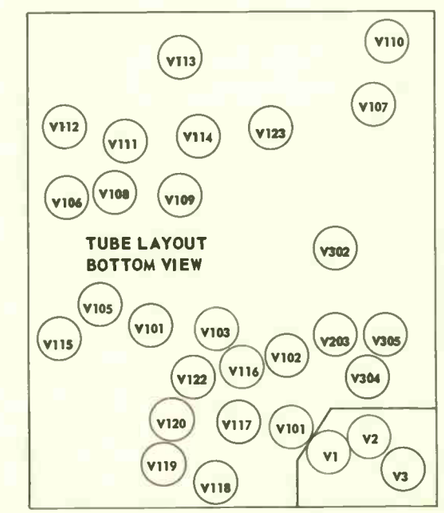

Switch position 2—AM.
Switch position 3—FM
Switch position 4—Phono 45 RPM.
Switch position 5—Phono 78 RPM.

All resistance values in ohms. K = 1,000.
All capacitance values less than 1 in MF and above 1 in MMF unless noted.

Coil resistance values less than 1 ohm are not shown.
Direction of arrows at controls indicates clockwise rotation.

All voltages measured with "VoltOhmyst," no signal input with 117 v. a-c supply with the pix control fully clockwise and the brightness control set for average brightness.

In some receivers, C141 was omitted.
In some receivers, R220 was 12 K.
In some receivers, R131 was 38, R225 was 18, R128 was 6,800, R129 was 220 K, L107 was 250 Muh. and C199 was omitted.

In some receivers, R161 was 1,000 and R235 was omitted.
In some receivers, R180 and R167 were omitted.

In some receivers, R187 was 150 K and R188 470 K was connected from V121-11 to +125 V and V121-10 was connected to the junction of R156 and C166.
In some receivers, R260 was omitted.

Function switch S301 viewed from front and shown in Number 1 (maximum counterclockwise position).
Switch position 1—Television.

REF. NO.	PART NO.	DESCRIPTION
		ELECTROLYTICS
C146	73581	1 sec: 60/450, 2 sec: 10/450 1 sec: 20/150.
C147	73583	40/450, 90/150, 50/150.
C148	71432	2 sec: 40/450, 1 sec: 10/450.
C166	28417	5 mfd, 450 volts.
C170	73582	40/450, 10/450, 80/200.
C11	73449	Ceramic, trimmer.
C153	74946	Mica, trimmer.
C168	74947	Ceramic.
		COILS
L67	73475	Antenna filter shunt.
L101	73477	Filament choke.
L102	71527	Peaking coil.
L103	74214	Peaking coil.
L104	73154	Filter choke.
L105	74214	Peaking coil.
L106	71526	Peaking coil.
L107	75252	Peaking coil.
L108	74952	Deflecting yoke.
L109		See L108.
L110	73577	4.5 mc trap.
L111	71449	Horiz. linearity.
L112		See L108.
L113		See L108.
L114	71526	Peaking coil.
L116	73476	IF trap.
L117	74170	Peaking coil.
L118	74983	Focus coil & plug.
		RESISTORS
R122	47047	Picture & brightness.
R131	74047	Picture & brightness.
R138	74475	AGC threshold control.
R155	71440	Height control.
R158	72734	Horiz. & vertical hold.
R162	71441	Vertical linearity.
R173	72734	Horiz. & vertical hold.
R177	48207	W.W. 3300 ohms, 10 w.
R190	18471	W.W. 10 ohms, ½ w.
R191	74597	Focus control.
R192	74945	Width control.
R193	74955	Volt-div. 1 sec: 1200/16 w, 2 sec: 700/5½ w.
R202	72067	W.W. 5.1 ohms, ½ w.
R205	74359	Tone, vol., power switch.
R230	75085	W.W. 270 ohms, 20 w.
R233	74359	Tone, vol., power switch.
		TRANSFORMERS
T1	73448	Convertor and R6.
T101	74589	First pix IF.
T102	74590	Second pix IF.
T103	74591	Third pix IF.
T104	74592	Fourth pix IF.
T105	71788	Sound trap.
T106	73575	Fifth pix IF.
T107	73569	Vertical oscillator.
T108	74950	Vertical output.
T109	73576	Horiz. oscillator.
T110	74951	Hi-voltage Xformer.
T111	75084	Power, 115 V, 60 cy.
T112	71424	Sound IF.
T113	71427	Sound discriminator.
T114	73636	Output Xformer.
T115	73578	Antenna w/socket.
		MISCELLANEOUS
S101	74359	Tone, vol., power switch.
	73636	Output Xformer.
	73635	Speaker-12" P.M.

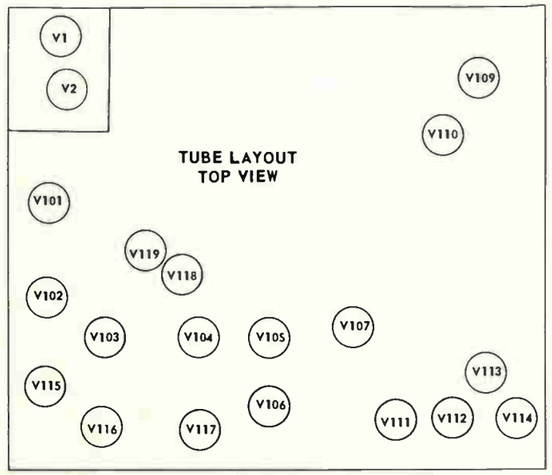

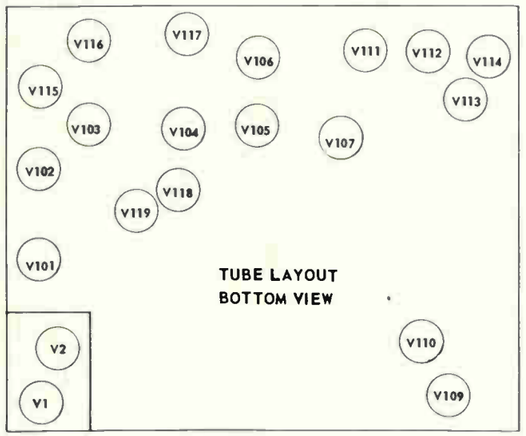

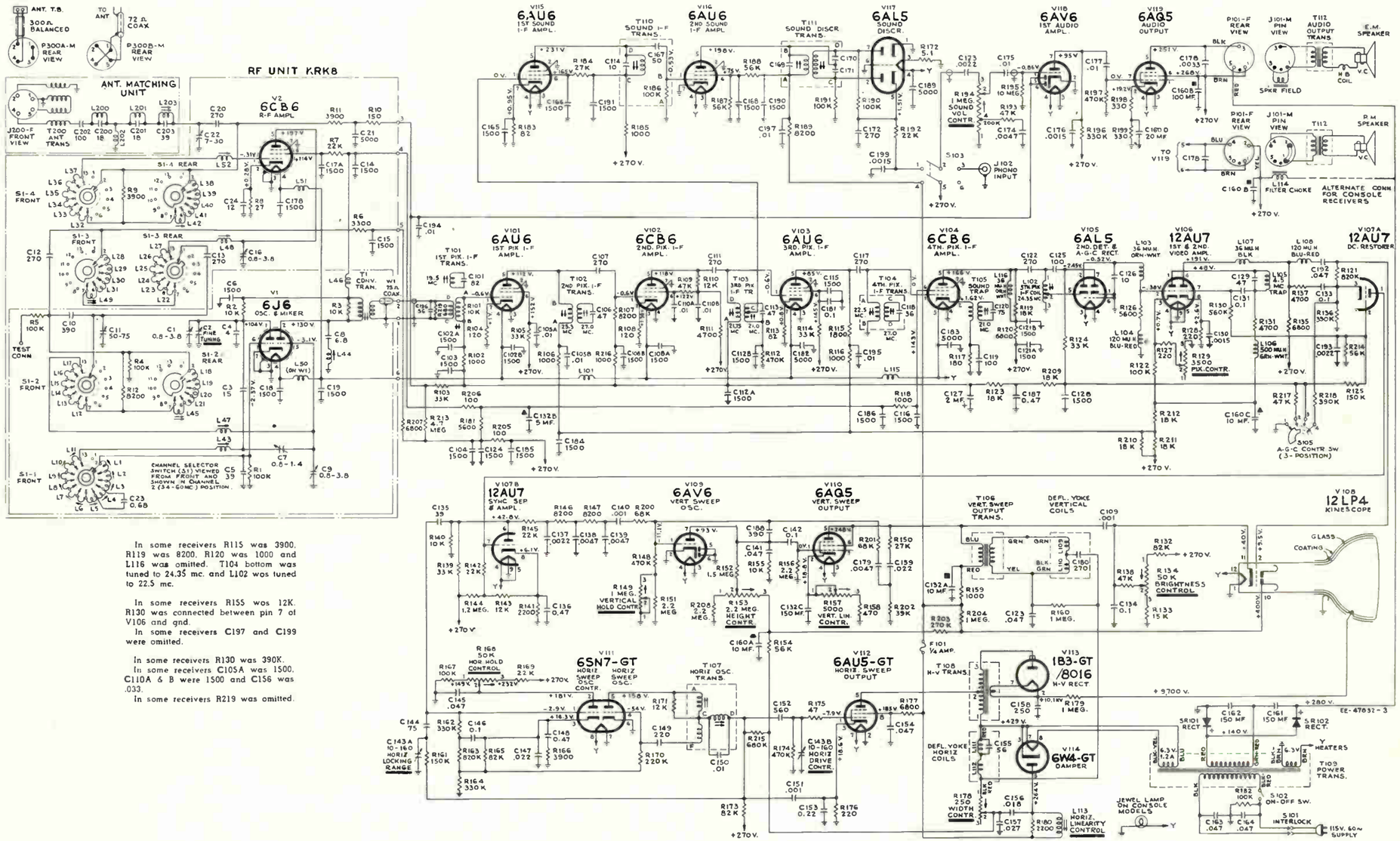

In some receivers R115 was 3900, R119 was 8200, R120 was 1000 and L116 was omitted. T104 bottom was tuned to 24.35 mc. and L102 was tuned to 22.5 mc.

In some receivers R155 was 12K. R130 was connected between pin 7 of V106 and gnd.

In some receivers C197 and C199 were omitted.

In some receivers R130 was 390K.

In some receivers C105A was 1500, C110A & B were 1500 and C156 was .033.

In some receivers R219 was omitted.

REF. NO.	PART NO.	DESCRIPTION
		ELECTROLYTICS
C127	73747	2 mfd, 50 volts.
C132	75218	3 sec: 10/350V, 5/350V, 150/50V.
C160	75219	4 sec: 10/450V, 100/350V 10/350V, 150/50V.
C161	75220	150 mfd, 200 volts.
C162	75220	150 mfd, 200 volts.
C1	75184	Ceramic, w/adj. stud.
C2	75186	Ceramic, fine tuning, plunger type.
C7	75172	Tubular, steatite, adj.
C11	75174	Ceramic, trimmer.
C22	75189	Adjustable.
C143	75217	Mica, trimmer.
		COILS
L51	73477	Choke coil.
L52		See L32.
L101	73477	Filament choke coil.
L102	75210	Fifth pix IF w/adj. core.
L103	75299	Peaking coil.
L104	75253	Peaking coil.
L105	75251	4.5 mc trap.
L106	75252	Peaking coil.
L107	71793	Peaking coil.
L108	75253	Peaking coil.
L109	75204	Deflection yoke.
L110		See L109.
L111		See L109.
L112		See L109.
L113	71449	Horizontal linearity.
L114	73154	Filter for model 2T51.
L115	73477	Filc+ent choke coil.
L116	76011	Peaking coil.
L200	75242	IF trap.
L201		See L200.
L202	75241	Antenna shunt coil.
L203	75449	FM trap.
		RESISTORS
R129	75216	Picture & brightness.
R149	75215	Horiz. & vertical hold.
R153	71440	Height control.
R157	71441	Vertical linearity.
R172	72067	W.W. 5.1 ohms, ½ w.
R178	74945	Width control.
R194	75237	Volume, power switch.
		TRANSFORMERS
T1	75181	Convertar Xformer.
T101	74589	First pix IF.
T102	74590	Second pix IF.
T103	75209	Third pix IF.
T104	73574	Fourth pix IF.
T105	71778	Sound trap.
T106	75208	Vertical output.
T107	75213	Horiz. oscillator.
T108	75240	High voltage.
T109	75207	Power, 117 V, 60 cy.
T110	75211	Sound IF.
T111	75212	Sound discriminator.
T112	71419	Sound output.
T200	75214	Antenna.
		MISCELLANEOUS
S103	33491	TV phono switch.
S105	75629	AGC switch.
SR101	75221	Selenium rectifier.
SR102	75221	Selenium rectifier.
	75628	Spk-5" x 7" EM. (970773-2)
	71419	Output (970773-2)
	75022	Speaker8" P.M. (92580-4W)
	75520	Output (92580-4W)

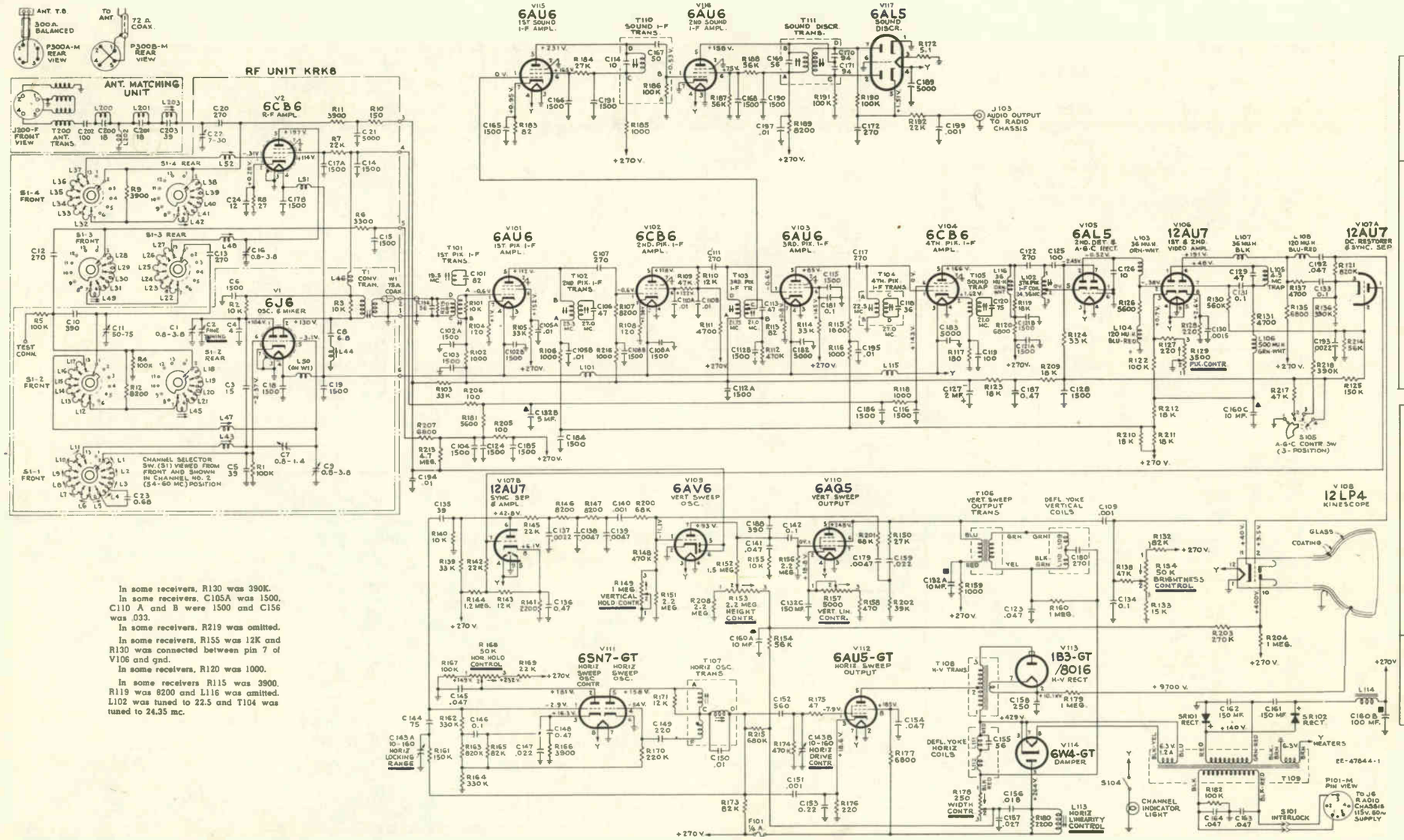

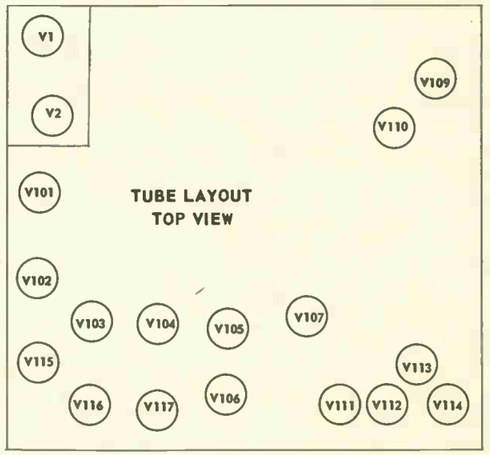

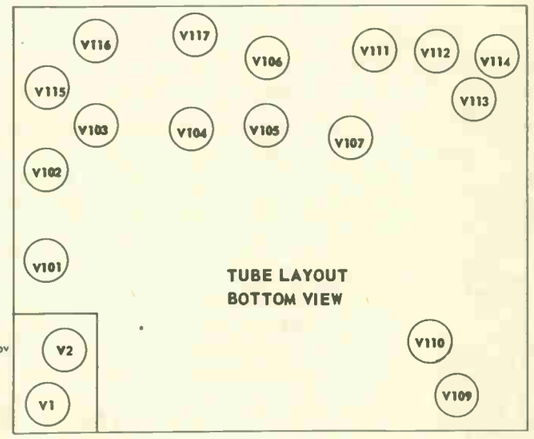

In some receivers, R130 was 390K.
In some receivers, C105A was 1500, C110 A and B were 1500 and C156 was .033.
In some receivers, R219 was omitted.
In some receivers, R155 was 12K and R130 was connected between pin 7 of V106 and gnd.
In some receivers, R120 was 1000.
In some receivers, R115 was 3900, R119 was 8200 and L116 was omitted. L102 was tuned to 22.5 and T104 was tuned to 24.35 mc.

REF NO.	PART NO.	DESCRIPTION
		ELECTROLYTICS
C127	73737	2 mfd, 50 volts.
C132	75218	3 sec: 10/350V 5/350V 150/50V.
C160	75219	4 sec: 10/450V 100/350V 10/350V (20/25V not used).
C161	75220	150 mfd, 200 volts.
C162	75220	150 mfd, 200 volts.
C1	75184	Ceramic, adj w/adjusting stud.
C2	75186	Ceramic, fine tun'g plunger. type.
C7	75172	Tubular, steatite, adj.
C11	75174	Ceramic, trimmer.
C22	75189	Adjustable, 7-30 mmfd.
C143	75217	Mica, trimmer. (dual)
		COILS
L44	75185	Convertor plate loading.
L45		See L12
L46	75202	Choke coil.
L47	75182	Trimmer (tunner).
L48	75183	Trimmer (tunner).
L49		See L22.
L50		See W1.
L51	73477	Choke coil.
L52		See L32.
L101	73477	Filament choke.
L102	75210	Fifth pix IF w/adj core.
L103	75299	Peaking coil.
L104	75253	Peaking coil.
L105	75251	4.5 mc trap.
L106	75252	Peaking coil.
L107	71793	Peaking coil.
L108	75253	Peaking coil.
L109	75204	Deflection yoke.
L110		See L109.
L111		See L109.
L112		See L109.
L113	71449	Horiz. linearity.
L114	73154	Filter choke.
L115	73477	Filament choke.
L116	76011	Peaking coil.
L200	75242	IF trap.
L201		See L200.
L202	75241	Antenna shunt coil.
L203	75449	FM trap w/adj core & stud.
		RESISTORS
R129	75216	Picture & brightness.
R149	75215	Horiz. & vertical hold.
R153	71440	Height control.
R157	71441	Vertical linearity.
R172	72067	W.W. 5.1 ohms, ½ w.
R178	74945	Width control.
		TRANSFORMERS
T1	75181	Convertor Xformer.
T101	74589	First pix IF.
T102	74590	Second pix IF.
T103	75209	Third pix IF.
T104	73574	Fourth pix IF.
T105	71778	Sound trap.
T106	75208	Vertical output.
T107	75213	Horiz. oscillator.
T108	75240	High voltage Xformer.
T109	75207	Power, 115V, 60 cycle.
T110	75211	Sound IF.
T111	75212	Sound discriminator.
T200	75214	Antenna w/IF traps, ant. shunt, ant. connector.
	73591	Antenna w/ mat. coil, 2 required.
		MISCELLANEOUS
S104	75590	Indicator light sw.
S105	75629	AGC switch.
SR101	75221	Selenium rectifier.
SR102	75221	Selenium rectifier.
	74974	Speaker-12" P.M.

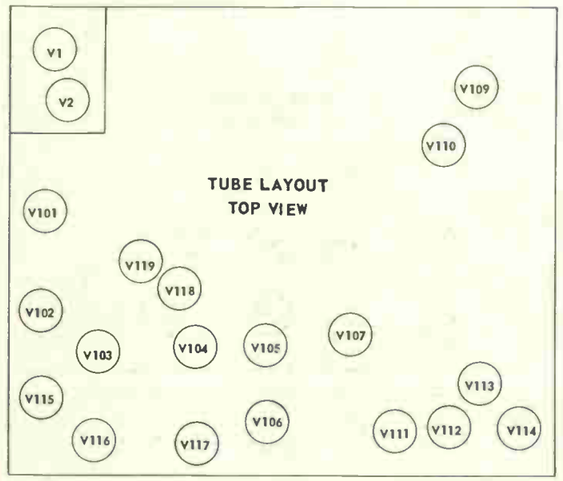

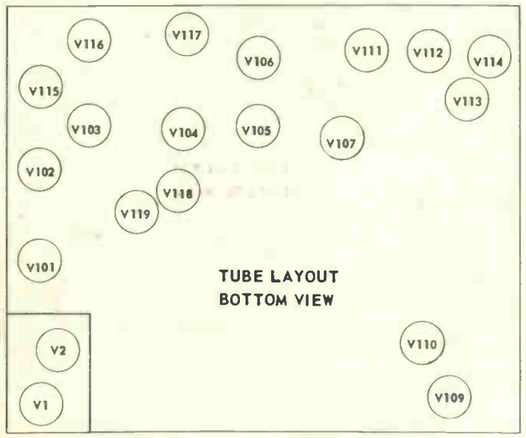

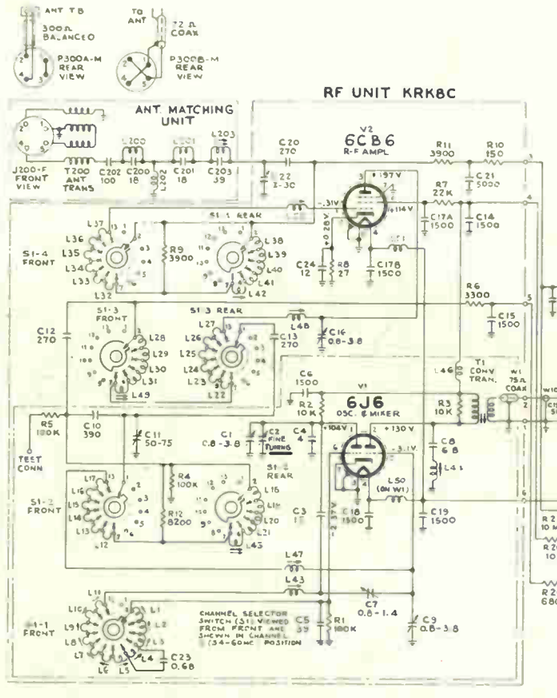

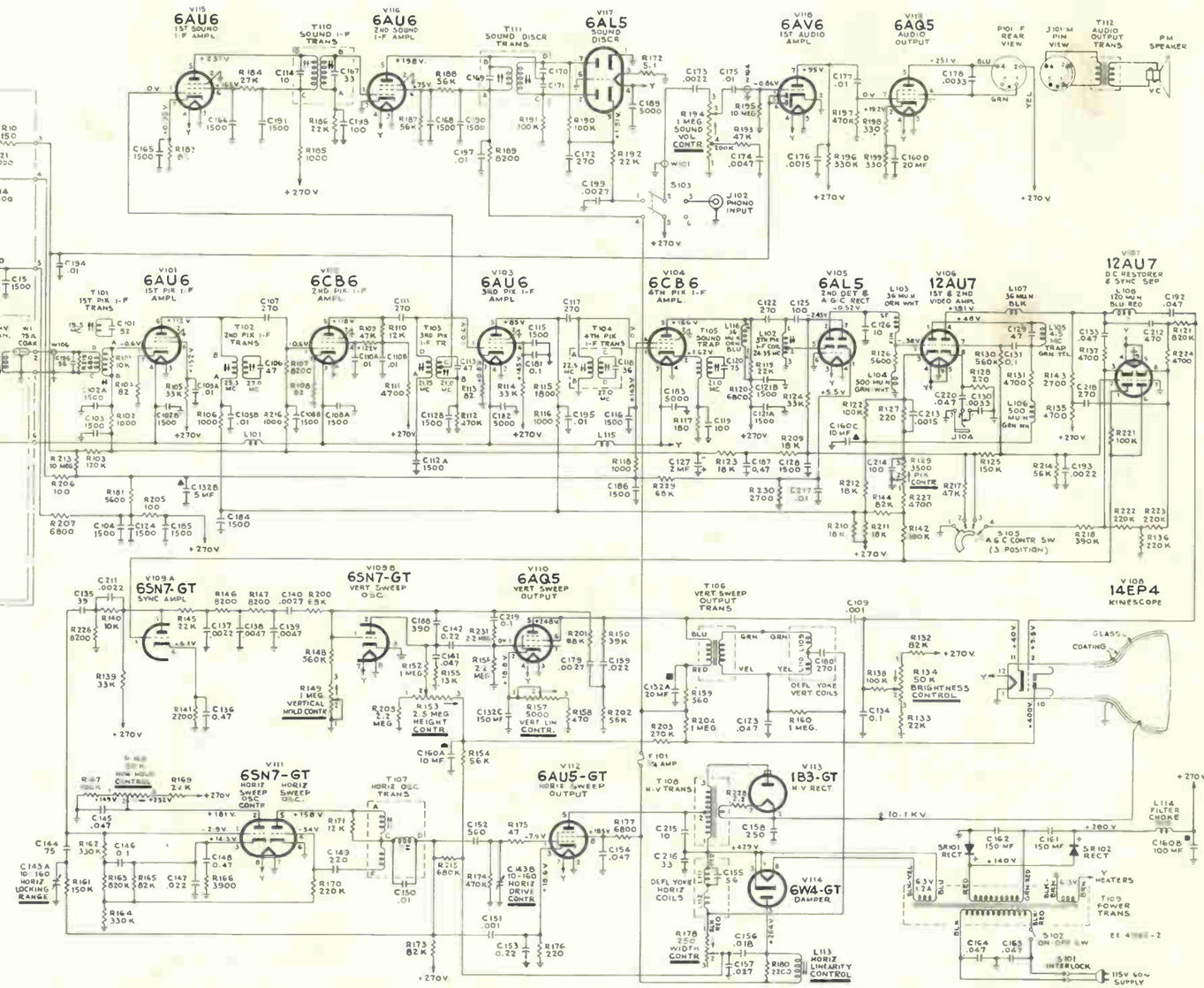

In some receivers, R142 was 47K, R144 was 100K, R150 was 27K, R155 was 12K, R202 was 39K, R227 was 3300, C140 was .001 and C179 was .0047 mfd. R231 and C219 were omitted. R220, 100K connected between V107-1 and R142 was removed.

In some receivers, R179, 1 meg was employed as high voltage filter and was connected between V113-2 and the kinescope.

In some receivers, R213 was 4.7 meg and was connected from R-F unit terminal 3 to junction of R207 and C104. R103 was 33K. C217 was omitted. R229 and R230 were omitted and pin 1 of V105 was connected to ground. C130 was .0015 mfd. R135 was 6800. L117 (500 muh) and R225 (10K) were removed and replaced by R143. C218 was omitted.

REF. NO.	PART NO.	DESCRIPTION
		ELECTROLYTICS
C127	73747	2 mfd, 50 volts.
C132	76142	3 sec: 20/350V, 5/350V 150/50V.
C160	75219	4 sec: 10/450V, 100/350V 10/350V, 20/25V.
C161	75220	150 mfd, 200 volts.
C162	75220	150 mfd, 200 volts.
C1	75184	Ceramic, w/adj stud.
C2	75186	Ceramic, fine tun'g plunger type.
C7	75172	Tubular, steatite, adj.
C11	75174	Ceramic, trimmer.
C22	75189	Adjustable 7-30 mmfd.
C143	75217	Mica trimmer (dual).
		COILS
L51	73477	Choke coil.
L52		See L32.
L101	73477	Filament choke.
L102	75210	Fifth pix IF.w/adj core.
L103	75299	Peaking coil.
L104	75252	Peaking coil.
L105	75251	4.5 mc trap.
L106	75252	Peaking coil.
L107	71793	Peaking coil.
L108	75253	Peaking coil.
L109	76136	Deflection yoke.
L110		See L109.
L111		See L109.
L112		See L109.
L113	71449	Horiz. linearity.
L114	76140	Filter choke.
L115	76140	Filter choke.
L116	76285	Peaking coil.
L200	75242	IF trap.
L201		See L200.
L202	75241	Antenna shunt coil.
L203	75449	FM trap w/adj core & stud.
		RESISTORS
R129	75216	Picture & brightness.
R149	75215	Horiz. & vertical hold.
R153	71440	Height control.
R157	71441	Vertical linearity.
R172	72067	W.W. 5.1 ohms, ½ w.
R176	76410	W.W. 220 ohms, 4 w.
R178	74945	Width control.
R181	76390	W.W. 5600 ohms, 5 w.
R194	75237	Vol., power switch.
R228	72066	W.W. 2.2 ohms, 1/3 w.
		TRANSFORMERS
T1	75181	Convertor Xformer.
T101	74589	First pix IF.
T102	74590	Second pix IF.
T103	76264	Third pix IF.
T104	73574	Fourth pix IF.
T105	71778	Sound trap.
T106	76139	Vertical output.
T107	75213	Horiz. oscillator.
T108	76154	High voltage.
T109	75207	Power, 117V, 60 cycle.
T110	71424	Sound IF.
T111	75212	Sound discriminator.
T112	76156	Audio output.
T200	75509	Antenna w/connector, IF & FM traps, ant. shunt.
	73591	Antenna mat. coil 2 required.
		MISCELLANEOUS
S103	33491	TV phono switch.
S105	76010	AGC switch.
SR101	75221	Selenium rectifier.
SR102	75221	Selenium rectifier.
	76156	Output Xformer.
	76155	Speaker-5" x 7" P.M.

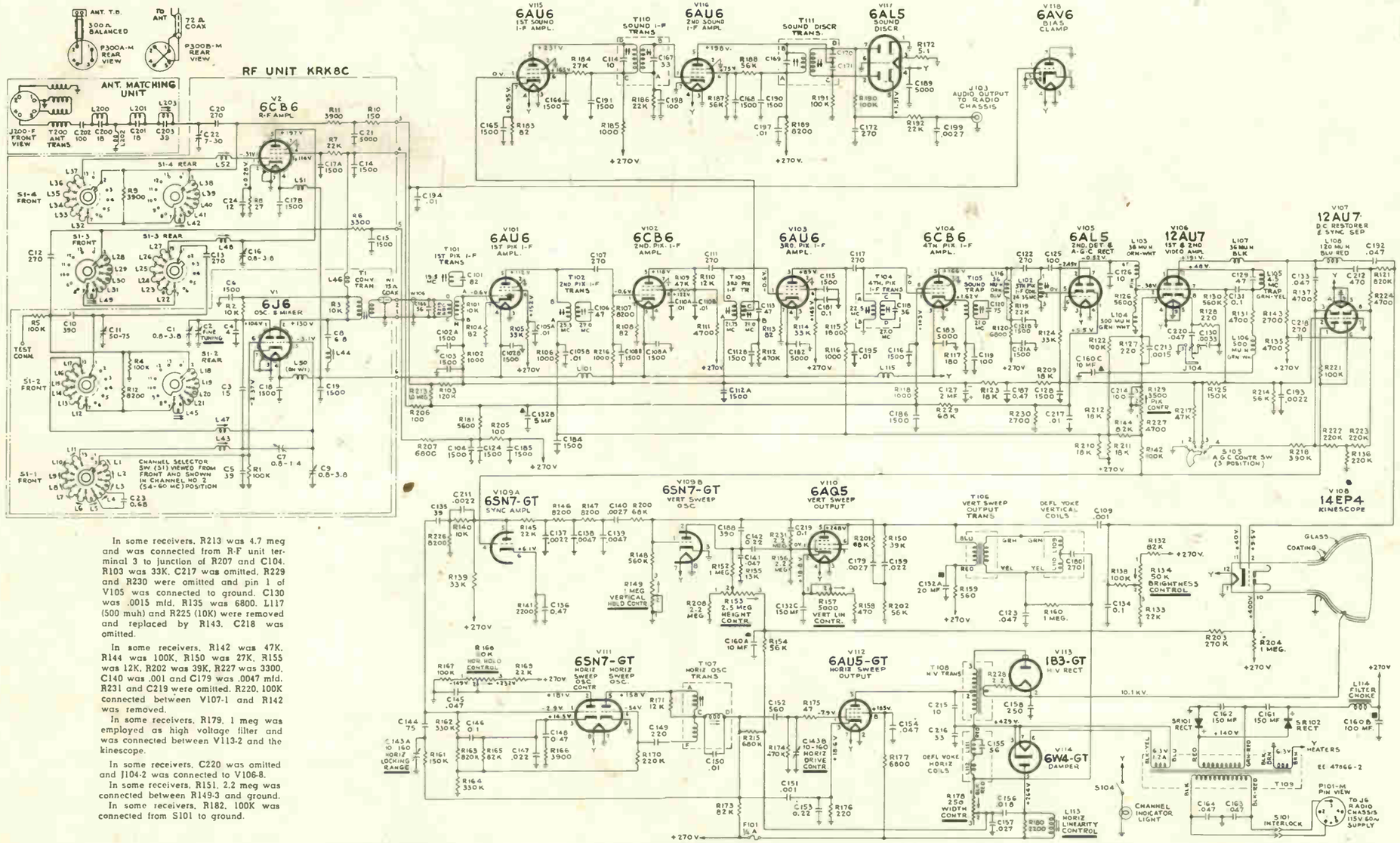

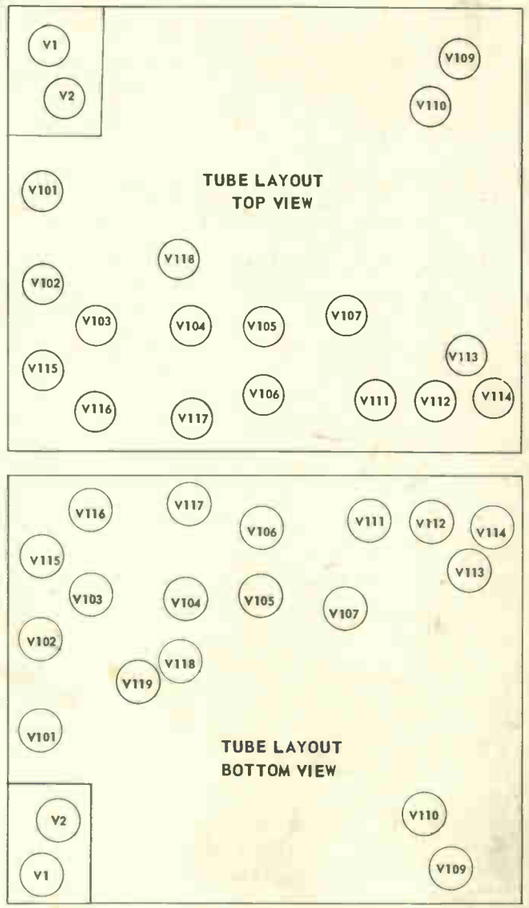

In some receivers, R213 was 4.7 meg and was connected from R-F unit terminal 3 to junction of R207 and C104. R103 was 33K. C217 was omitted. R229 and R230 were omitted and pin 1 of V105 was connected to ground. C130 was .0015 mfd. R135 was 6800. L117 (500 muh) and R225 (10K) were removed and replaced by R143. C218 was omitted.

In some receivers, R142 was 47K. R144 was 100K. R150 was 27K. R155 was 12K. R202 was 39K. R227 was 3300. C140 was .001 and C179 was .0047 mfd. R231 and C219 were omitted. R220. 100K connected between V107-1 and R142 was removed.

In some receivers, R179, 1 meg was employed as high voltage filter and was connected between V113-2 and the kinescope.

In some receivers, C220 was omitted and J104-2 was connected to V106-8.

In some receivers, R151, 2.2 meg was connected between R149-3 and ground.

In some receivers, R182, 100K was connected from S101 to ground.

REF. NO.	PART NO.	DESCRIPTION
		ELECTROLYTICS
C127	73747	2 mfd, 50 volts.
C132	76142	3 sec: 20/350V, 5/350V 150/50V.
C160	75219	4 sec: 10/450V, 100/350V 10/350V, 20/25V.
C161	75220	150 mfd, 200 volts.
C162	75220	150 mfd, 200 volts.
C1	75184	Ceramic, w/adj stud.
C2	75186	Ceramic, fine tuning plunger type.
C7	75172	Tubular, steatite, adj.
C11	75174	Ceramic, trimmer.
C22	75189	Adjustable, 7-30 mmfd.
C143	75217	Mica trimmer. (dual).
		COILS
L46	75202	Choke coil.
L47	75182	Trimmer (tuner).
L48	75183	Trimmer (tuner).
L51	73477	Choke coil.
L101	73477	Filament choke.
L102	75210	Fifth pix IF.
L103	75299	Peaking coil.
L104	75252	Peaking coil.
L105	75251	4.5 mc trap.
L106	75252	Peaking coil.
L107	71793	Peaking coil.
L108	75253	Peaking coil.
L109	76136	Deflection yoke.
L110		See L109.
L111		See L109.
L112		See L109.
L113	71449	Horiz. linearity.
L114	76140	Filter choke.
L115	73477	Filament choke.
L116	75299	Peaking coil.
L200	75242	IF trap.
L201		See L200.
L202	75241	Antenna shunt.
L203	75449	FM trap.
		RESISTORS
R129	75216	Picture & brightness.
R149	75215	Horiz. & vertical hold.
R153	71440	Height control.
R157	71441	Vertical linearity.
R172	72067	W.W. 5.1 ohms, ½w.
R176	16410	W.W. 220 ohms, 4 w.
R178	74945	Width control.
R181	76390	W.W. 5600 ohms, 5 w.
R228	72066	W.W. 2.2 ohms, 1/3 w.
		TRANSFORMERS
T1	75181	Convertor Xformer.
T101	74589	First pix IF.
T102	74590	Second pix IF.
T103	76264	Third pix IF.
T104	73574	Fourth pix IF.
T105	71778	Sound trap.
T106	76139	Vertical output.
T107	75213	Horiz. oscillator.
T108	76154	High voltage.
T109	75207	Power, 117V, 60 cycle.
T110	71424	Sound IF.
T111	75212	Sound discriminator.
T200	75214	Antenna w/connector IF & FM traps, ant. shunt.
	73591	Antenna mat. coil, 2 required.
		MISCELLANEOUS
S104	75590	Channel indicator light sw.
S105	76010	AGC switch.
SR101	75221	Selenium rectifier.
SR102	75221	Selenium rectifier.
W1	75201	75 ohms, coax cable (7¼").
	74974	Speaker-12" P.M. w/ cone & voice coil.

KCS 47 KCS 47A Chassis

MODELS 6T53 6T54 6T64 6T65 6T71 6T74 6T75 6T76

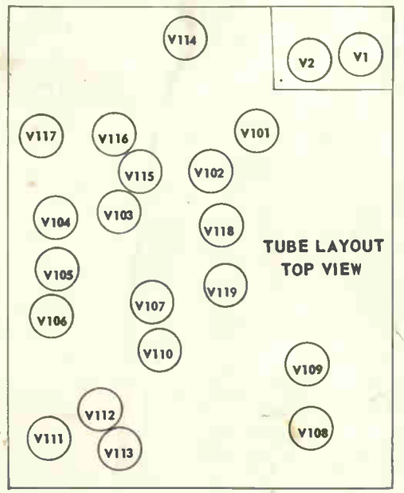

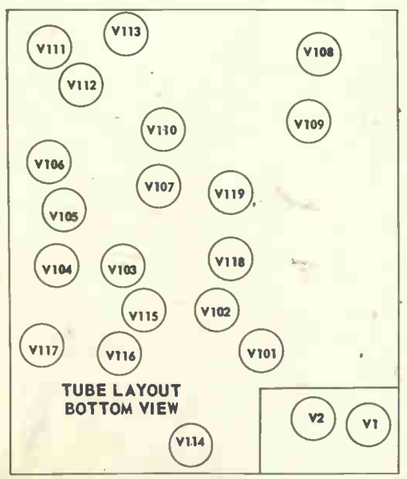

For circuit diagram of other chassis used in these models see page 42.

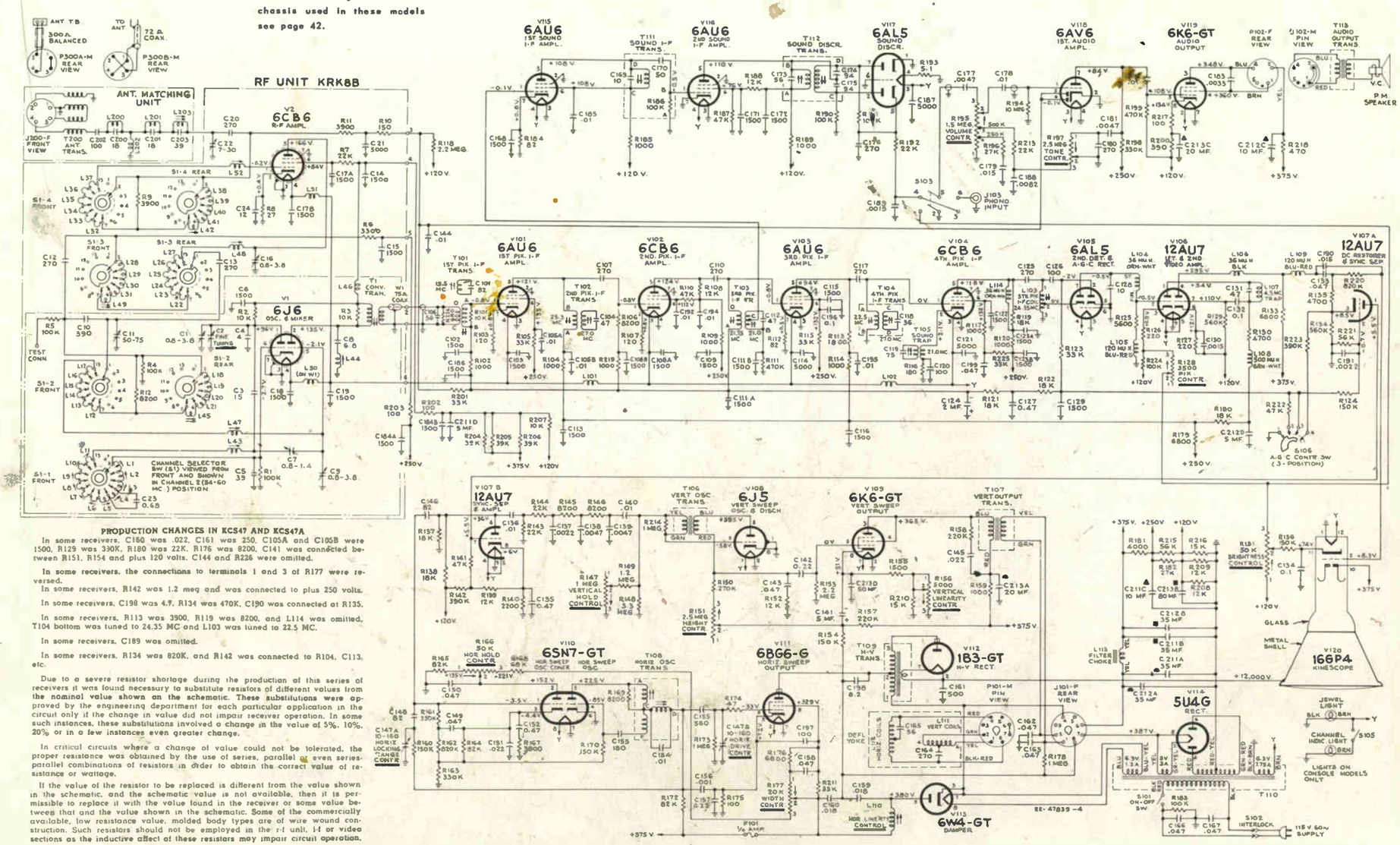

PRODUCTION CHANGES IN KCS47 AND KCS47A

In some receivers, C160 was .022, C161 was 250, C105A and C105B were 1500, R129 was 330K, R180 was 22K, R176 was 8200, C141 was connected between R151, R154 and plus 120 volts. C144 and R226 were omitted.

In some receivers, the connections to terminals 1 and 3 of R177 were reversed.

In some receivers, R142 was 1.2 meg and was connected to plus 250 volts.

In some receivers, C198 was 4.7, R134 was 470K, C190 was connected at R135.

In some receivers, R113 was 3900, R119 was 8200, and L114 was omitted. T104 bottom was tuned to 24.35 MC and L103 was tuned to 22.5 MC.

In some receivers, C189 was omitted.

In some receivers, R134 was 820K, and R142 was connected to R104, C113, etc.

Due to a severe resistor shortage during the production of this series of receivers it was found necessary to substitute resistors of different values from the nominal value shown on the schematic. These substitutions were approved by the engineering department for each particular application in the circuit only if the change in value did not impair receiver operation. In some such instances, these substitutions involved a change in the value of 5%, 10%, 20% or in a few instances even greater change.

In critical circuits where a change of value could not be tolerated, the proper resistance was obtained by the use of series, parallel or even series-parallel combinations of resistors in order to obtain the correct value of resistance or wattage.

If the value of the resistor to be replaced is different from the value shown in the schematic, and the schematic value is not available, then it is permissible to replace it with the value found in the receiver or some value between that and the value shown in the schematic. Some of the commercially available, low resistance values, molded body types are of wire wound construction. Such resistors should not be employed in the r-f unit, i-f or video sections as the inductive affect of these resistors may impair circuit operation.

REF. NO.	PART NO.	DESCRIPTION
		ELECTROLYTICS
C124	73747	2 mfd, 50 volts.
C141	28417	5 mfd, 450 volts.
C211	75510	4 sec: 35-35/450V, 10/450V, 5/450V.
C212	75510	4 sec: 35-35/450V, 10/450V, 5/450V.
C213	75511	4 sec: 20/450V, 80/200V 20/200V, 50/50V.
C1	75184	Ceramic w/adj. stud.
C2	75186	Ceramic, fine tuning plunger type.
C7	75172	Tubular, steatite, adj.
C11	75174	Ceramic, trimmer.
C22	75189	Adjustable, 7-30 mmfd.
C147	75217	Mica, trimmer. (dual).
		COILS
L46	75202	Choke coil.
L47	75182	Trimmer. (tuner).
L48	75183	Trimmer. (tuner).
L51	73477	Choke coil.
L101	73477	Choke coil.
L102	73477	Choke coil.
L103	75210	Fifth pix IF. w/adj core.
L104	75299	Peaking coil.
L105	75252	Peaking coil.
L106	71793	Peaking coil.
L107	75251	4.5 mc trap.
L108	75252	Peaking coil.
L109	75253	Peaking coil.
L110	.71449	Horiz. linearity.
L111	74952	Deflection yoke.
L112		See L111.
L113	73154	Filter choke.
L114	76285	Peaking coil.
L115	76132	Peaking coil.
L200	75242	IF trap.
L201		See L200.
L202	75241	Antenna shunt.
L203	74549	FM trap w/adj core & stud.
		RESISTORS
R128	75216	Picture & brightness.
	75514	Pix & brightness, chan. light sw. consoles only.
R147	75215	Horiz. & vertical hold.
R151	71440	Height control.
R156	71441	Vertical linearity.
R177	75516	Width control.
R181	75512	W.W. 4000 ohms, 10 w.
R193	72067	W.W. 5.1 ohms, ½ w.
R195	75513	Tone, vol., power switch.
		TRANSFORMERS
T1	75181	Convertor Xformer.
T101	74589	First pix IF.
T102	74590	Second pix IF.
T103	76264	Third pix IF.
T104	73574	Fourth pix IF.
T105	71778	Sound trap.
T106.	74144	Vertical oscillator.
T107	74950	Vertical output.
T108	75213	Horiz. oscillator.
T109	75519	High-voltage.
T110	75508	Power, 115V, 60 cycle.
T111	71424	Sound IF. (dual winding)
	75211	Sound IF (single winding)
T112	75212	Sound discriminator.
T113	75520	Audio output Xformer.
T200	75509	Antenna Xformer.
	73591	Antenna mat. coil 2 required.
		MISCELLANEOUS
	75022	Speaker-8" P.M. (92580-4)
	75520	Output Xformer, (92580-4)
	74974	Speaker-12" P.M. (92569-11W)
	75520	Output Xformer. (92569-11W)

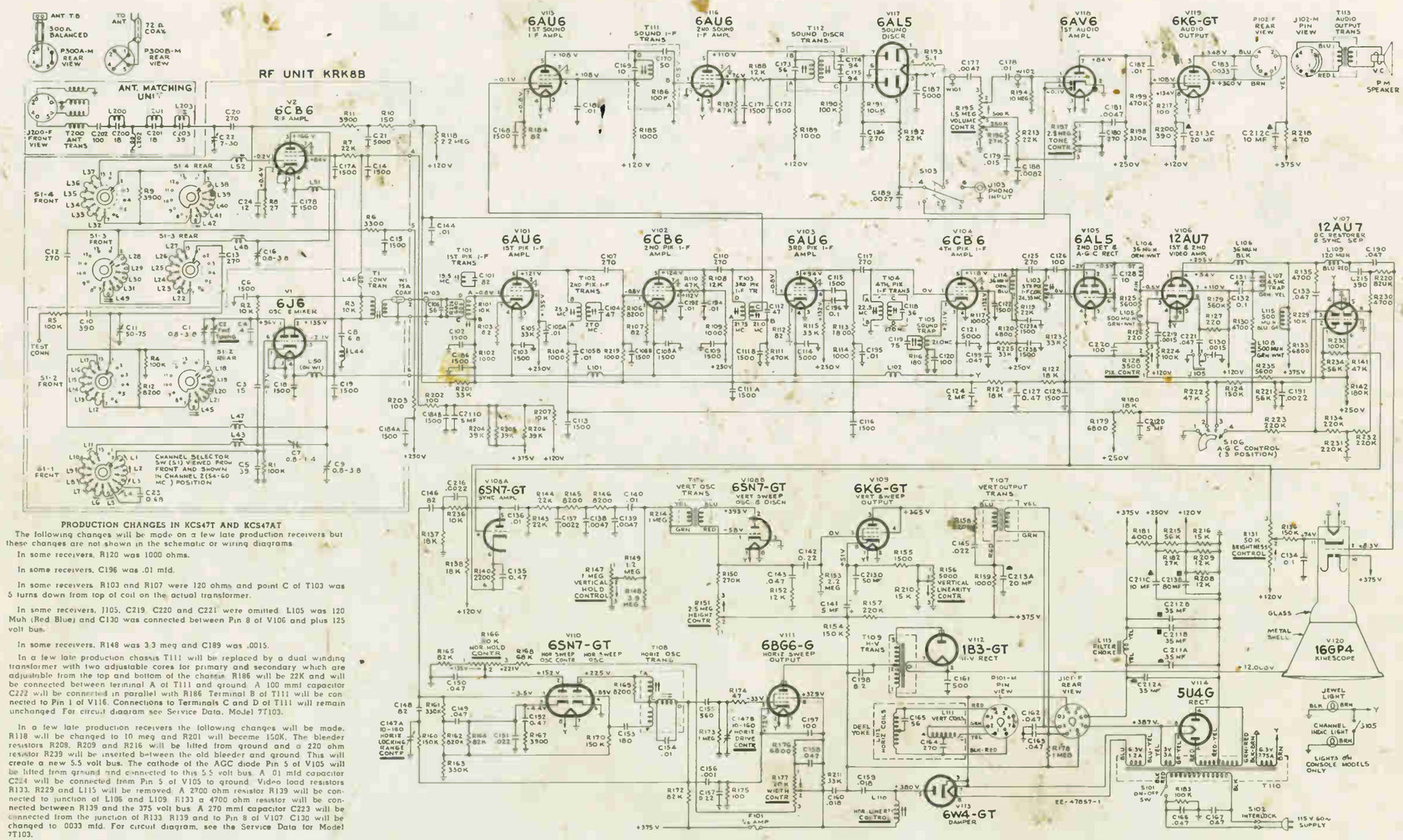

PRODUCTION CHANGES IN KCS47T AND KCS47AT

The following changes will be made on a few late production receivers but these changes are not shown in the schematic or wiring diagrams.

In some receivers, R120 was 1000 ohms.

In some receivers, C196 was .01 mfd.

In some receivers, R103 and R107 were 120 ohms and point C of T103 was 5 turns down from top of coil on the actual transformer.

In some receivers, L105, C219, C220 and C221 were omitted. L105 was 120 Muh (Red Blue) and C130 was connected between Pin 8 of V106 and plus 125 volt bus.

In some receivers, R148 was 3.3 meg and C189 was .0015.

In a few late production chassis T111 will be replaced by a dual winding transformer with two adjustable cores for primary and secondary which are adjustable from the top and bottom of the chassis. R186 will be 22K and will be connected between terminal A of T111 and ground. A 100 mmf capacitor C222 will be connected in parallel with R186. Terminal B of T111 will be connected to Pin 1 of V116. Connections to Terminals C and D of T111 will remain unchanged. For circuit diagram see Service Data, Model 7T103.

In a few late production receivers the following changes will be made. R118 will be changed to 10 meg and R201 will become 150K. The bleeder resistors R208, R209 and R216 will be lifted from ground and a 220 ohm resistor R239 will be inserted between the old bleeder and ground. This will create a new 5.5 volt bus. The cathode of the AGC diode Pin 5 of V105 will be lifted from ground and connected to this 5.5 volt bus. A .01 mfd capacitor C224 will be connected from Pin 5 of V105 to ground. Video load resistors R133, R229 and L115 will be removed. A 2700 ohm resistor R139 will be connected to junction of L106 and L109. R133 a 4700 ohm resistor will be connected between R139 and the 375 volt bus. A 270 mmf capacitor C223 will be connected from the junction of R133, R139 and to Pin 8 of V107. C130 will be changed to .0033 mfd. For circuit diagram, see the Service Data for Model 7T103.

REF. NO.	PART NO.	DESCRIPTION
		ELECTROLYTICS
C127	73747	2 mfd, 50 volts.
C141	28417	5 mfd, 450 volts.
C211	75510	4 sec: 35-35/450V, 10/450V 5/450V.
C212	75510	4 sec: 35-35/450V, 10/450V 5/450V.
C213	75511	4 sec: 20/450V, 80/200V 20/200V, 50/50V.
C1	75184	Ceramic, w/adj stud.
C2	75186	Ceramic, fine tuning-plunger type.
C7	75172	Tubular, steatite, adj.
C11	75174	Ceramic, trimmer.
C22	75189	Adjustable 7-30 mmfd.
C147	75217	Mica, trimmer. (dual).
		COILS
L46	75202	Choke coil.
L47	75182	Trimmer (tuner).
L48	75183	Trimmer (tuner).
L49		See L22.
L50		See W1.
L51	73477	Choke coil.
L52		See L32.
L101	73477	Choke coil.
L102	73477	Choke coil.
L103	75210	Fifth pix IF w/adj core.
L104	75299	Peaking coil.
L105	75252	Peaking coil.
L106	71793	Peaking coil.
L107	75251	4.5 mc trap.
L108	75252	Peaking coil.
L109	75253	Peaking coil.
L110	71449	Horiz. linearity.
L111	74952	Deflection yoke.
L112		See L111.
L113	73154	Filter choke.
L114	76285	Peaking coil.
L200	75242	IF trap.
L201		See L200.
L202	75241	Antenna shunt.
L203	75449	FM trap w/adj core & stud.
		RESISTORS
R128	75216	Picture & brightness.
	75514	Pix & brightness, chan. light sw. for consoles only.
R147	75215	Horiz. & vertical hold.
R151	71440	Height control.
R156	71441	Vertical linearity.
R177	75516	Width control.
R181	75512	W.W. 4000 ohms, 10 w.
R193	72067	W.W. 5.1 ohms, ½ w.
R195	75513	Tone, vol., power switch.
		TRANSFORMERS
T1	75181	Convertor Xformer.
T101	74589	First pix IF.
T102	74590	Second pix IF.
T103	76264	Third pix IF.
T104	73574	Fourth pix IF.
T105	71778	Sound trap.
T106	74144	Vertical oscillator.
T107	74950	Vertical output.
T108	75213	Horiz. oscillator.
T109	75519	High voltage.
T110	75508	Power, 115V, 60 cycle.
T111	71424	Sound IF. (dual winding)
	75211	Sound IF (single winding).
T112	75212	Sound discriminator.
T113	75520	Audio output.
T200	75509	Antenna w/ant. connector IF & FM traps, shunt coils.
	73591	Antenna mat. coil 2 required.
		MISCELLANEOUS
	75022	Speaker-8" P.M.
	75520	Output Xformer.

For circuit diagram of other chassis used in these models see page 41.

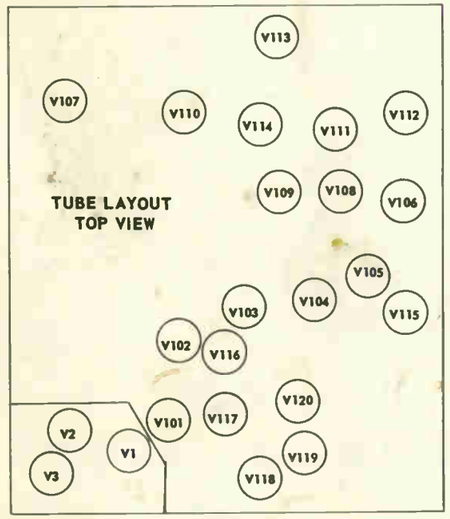

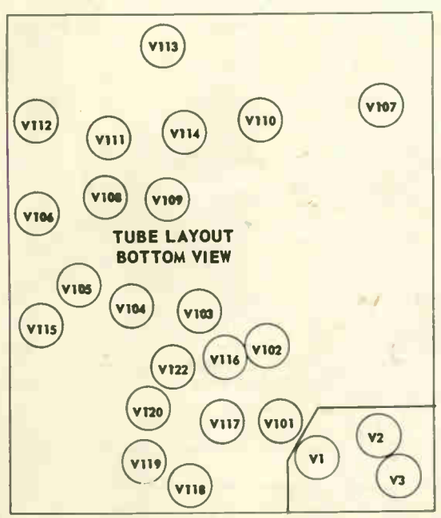

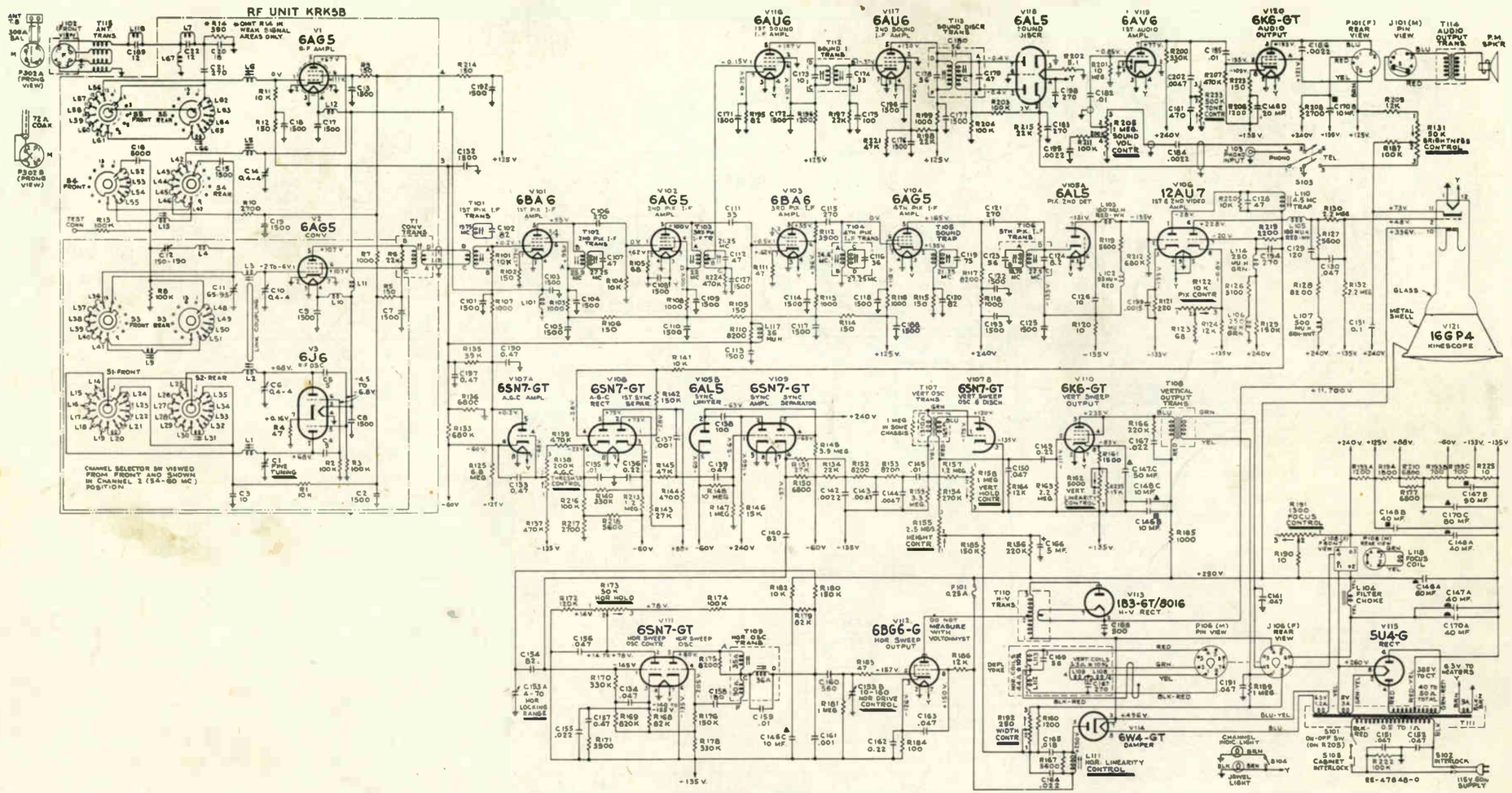

In some receivers, a 4.7 mmf, 5,000 volt capacitor (Stock No. 75646) is connected between terminal 2 of T110 and the 250 volt bus in order to increase picture width. If this capacitor is added in the field it should be connected to F101 and the red lead on the terminal board in the HV compartment.

The leads of the capacitor must be protected by spaghetti, and dressed away from the HV trans. the 6BG6G and the back cover of the HV compartment.

REF. NO.	PART NO.	DESCRIPTION
		ELECTROLYTICS
C146	73581	4 sec: 60/450V, 10-10/450V 20/150V.
C147	73583	3 sec: 40/450V, 90/150V 50/150V.
C148	71432	3 sec: 40-40/450V, 10/450V.
C166	28417	5 mfd, 450 volts.
C170	73582	3 sec: 40/450V 10/450V 80/200V.
C11	73449	Ceramic, trimmer.
C153	74946	Mica, trimmer.
		COILS
L67	73475	Antenna filter shunt.
L101	73447	Filament choke.
L102	71527	Peaking coil.
L103	74214	Peaking coil.
L104	73154	Filter choke.
L105	74214	Peaking coil.
L106	71526	Peaking coil.
L107	75252	Peaking coil.
L108	74952	Deflection yoke.
L109		See L108.
L110	73577	4.5 mc trap.
L111	71449	Horiz. linearity.
L112		See L108.
L113		See L108.
L114	71526	Peaking coil.
L116	73476	IF trap.
L117	74170	Peaking coil.
L118	74983	Focus coil.
		RESISTORS
R122	75452	Pix & brightness, chan. light switch.
R138	74475	AGC threshold.
R155	71440	Height control.
R158	72734	Horiz. & vertical hold.
R162	71441	Vertical linearity.
R190	18471	W.W. 10 ohms, ½ w.
R191	74597	Focus control.
R192	74945	Width control.
R193	74955	Volt-div. 3 sec: 1200/16 w, 700-700/5½ w.
R202	72067	W.W. 5.1 ohms, ½w.
R205	74048	Vol., tone, power switch.
		TRANSFORMERS
T1	73448	Convertor Xformer.
T101	74589	First pix IF.
T102	74590	Second pix IF.
T103	74591	Third pix IF.
T104	74592	Fourth pix IF.
T105	71778	Sound trap.
T106	73575	Fifth pix IF.
T107	73569	Vertical oscillator.
T108	74950	Vertical output.
T109	73576	Horiz. oscillator.
T110	74951	High-voltage.
T111	74949	Power, 117V, 60 cycle.
T112	71424	Sound IF.
T113	71427	Sound discriminator.
T114	75036	Output Xformer.
T115	73578	Antenna w/socket.
		MISCELLANEOUS
5105	74157	Cabinet interlock sw.
	75035	Speaker-12" P.M.
	75036	Output Xformer.

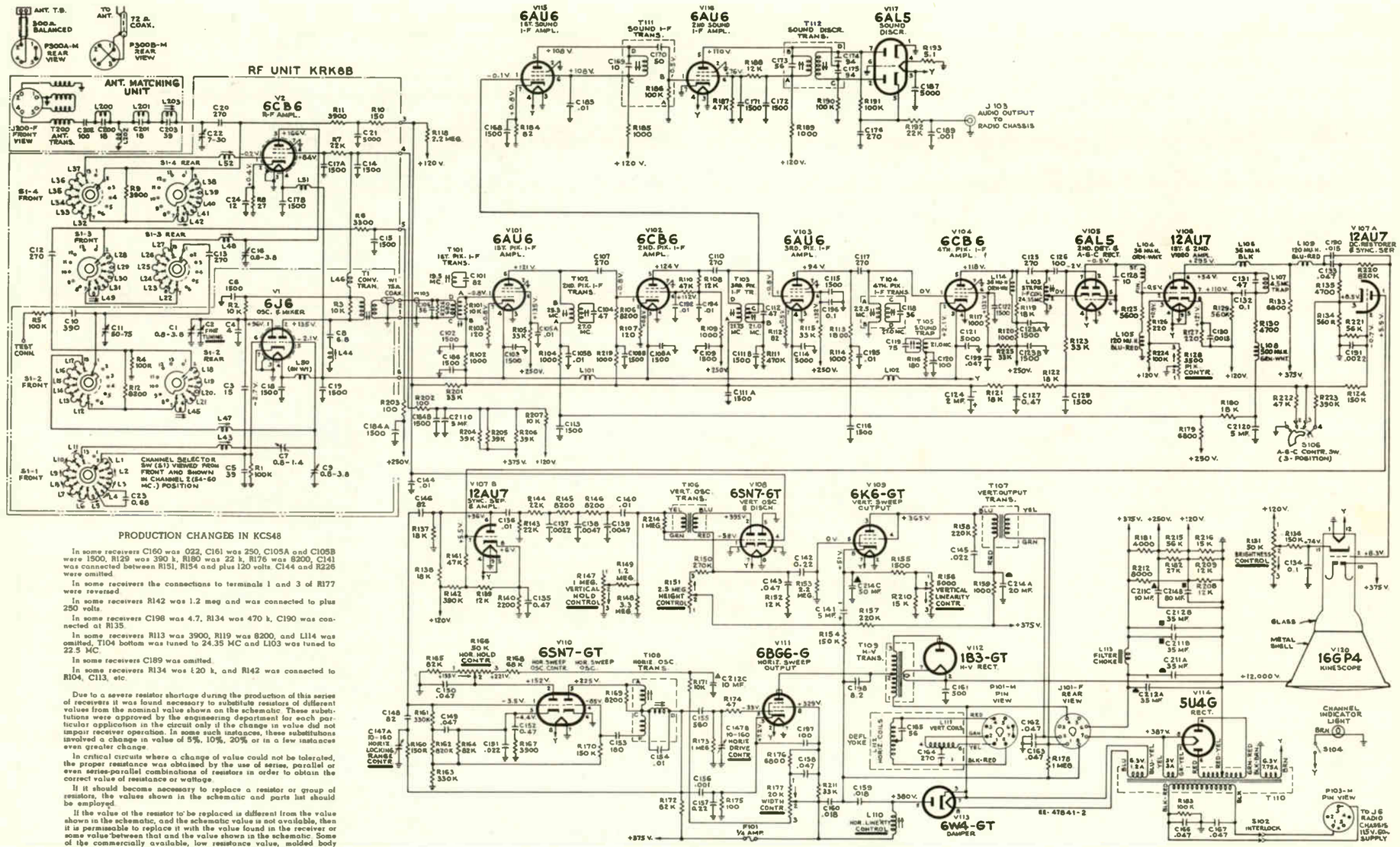

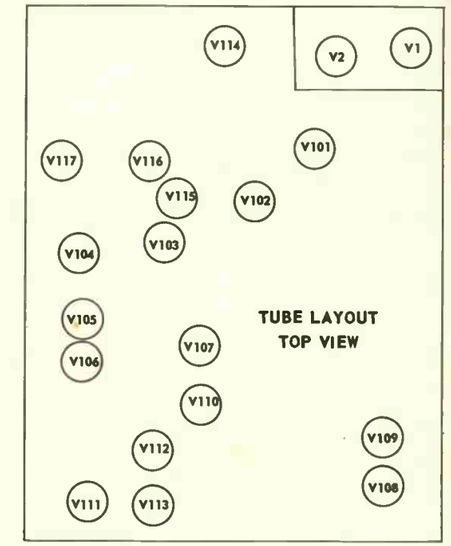

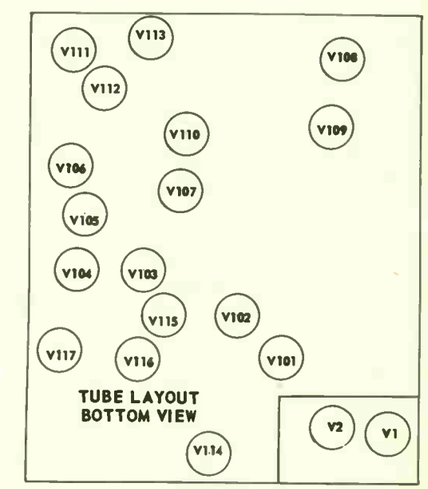

PRODUCTION CHANGES IN KCS48

In some receivers C160 was .022, C161 was 250, C105A and C105B were 1500, R129 was 390 k, R180 was 22 k, R176 was 8200, C141 was connected between R151, R154 and plus 120 volts. C144 and R226 were omitted.

In some receivers the connections to terminals 1 and 3 of R177 were reversed.

In some receivers R142 was 1.2 meg and was connected to plus 250 volts.

In some receivers C198 was 4.7, R134 was 470 k, C190 was connected at R135.

In some receivers R113 was 3900, R119 was 8200, and L114 was omitted, T104 bottom was tuned to 24.35 MC and L103 was tuned to 22.5 MC.

In some receivers C189 was omitted.

In some receivers R134 was 620 k, and R142 was connected to R104, C113, etc.

Due to a severe resistor shortage during the production of this series of receivers it was found necessary to substitute resistors of different values from the nominal value shown on the schematic. These substitutions were approved by the engineering department for each particular application in the circuit only if the change in value did not impair receiver operation. In some such instances, these substitutions involved a change in value of 5%, 10%, 20% or in a few instances even greater change.

In critical circuits where a change of value could not be tolerated, the proper resistance was obtained by the use of series, parallel or even series-parallel combinations of resistors in order to obtain the correct value of resistance or wattage.

If it should become necessary to replace a resistor or group of resistors, the values shown in the schematic and parts list should be employed.

If the value of the resistor to be replaced is different from the value shown in the schematic, and the schematic value is not available, then it is permissable to replace it with the value found in the receiver or some value between that and the value shown in the schematic. Some of the commercially available, low resistance value, molded body types are of wire wound construction. Such resistors should not be employed in the r-f unit, i-f or video sections as the inductive affect of tese resistors may impair circuit operation.

For circuit diagram of other chassis used in these models see page 45.

REF. NO.	PART NO.	DESCRIPTION
		ELECTROLYTICS
C124	73747	2 mfd, 50 volts.
C141	28417	5 mfd, 450 volts.
C211	75510	4 sec: 35-35/450V 10/450V, 5/450V.
C212	75510	4 sec: 35-35/450V 10/450V, 5/450V.
C214	75592	3 sec: 20/450V, 80/200V 50/50V.
C1	75184	Ceramic, w/adj. stud.
C2	75186	Ceramic, fine tuning plunger type.
C7	75172	Tubular, steatite, adj.
C11	75174	Ceramic, trimmer.
C147	75217	Mica, trimmer (dual).
C22	75189	Adjustable.
		COILS
L51	73477	Choke coil.
L101	73477	Choke coil.
L102	73477	Choke coil.
L103	75210	Fifth pix IF.
L104	75299	Peaking coil.
L105	75252	Peaking.
L106	71793	Peaking coil.
L107	75251	4.5 mc trap.
L108	75252	Peaking coil.
L109	75253	Peaking coil.
L110	71449	Horiz. linearity.
L111	74952	Deflection yoke.
L112		See L111.
L113	73154	Filter choke.
L114	76285	Peaking coil.
L115	76132	Peaking coil.
L131	75251	4.5 mc trap.
L200	75242	IF trap.
L201		See L200.
L202	75241	Antenna shunt coil.
L203	75449	FM trap w/ adj core & stud.
		RESISTORS
R128	75216	Picture & brightness.
R147	75215	Horiz. & vertical hold.
R151	71440	Height control.
R156	71441	Vertical linearity.
R177	75516	Width control.
R181	75512	W.W. 4000 ohms, 10 w.
R193	72067	W.W. 5.1 ohms, ½ w.
R212	75593	W.W. 8000 ohms, 15 w.
		TRANSFORMERS
T1	75181	Convertor Xformer.
T101	74589	First pix IF.
T102	74590	Second pix IF.
T103	76264	Third pix IF.
T104	73574	Fourth pix IF.
T105	71778	Sound trap.
T106	74144	Vertical oscillator.
T107	74950	Vertical output.
T108	75213	Horiz. oscillator.
T109	75519	High-voltage.
T110	75508	Power, 115 V, 60 cycle.
T111	71424	Sound IF (dual winding).
	75211	Sound IF (simple winding)
T112	75212	Sound discriminator.
T200	75509	Antenna w/ant. connector IF & FM traps, shunt coil.
	73591	Antenna mat. coil, 2 required.
		MISCELLANEOUS
	75681	Speaker-12" P.M. (models 6T86 & 6T87).
	74974	Speaker- 12" P.M. (model 6T84).

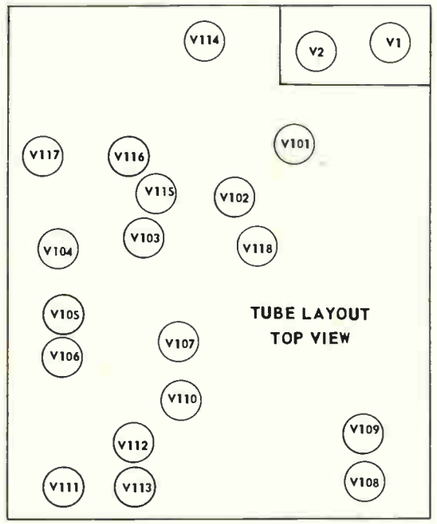

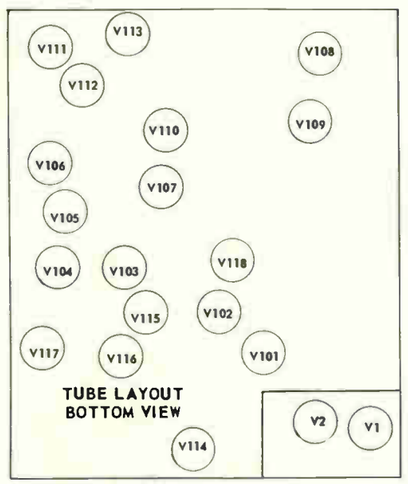

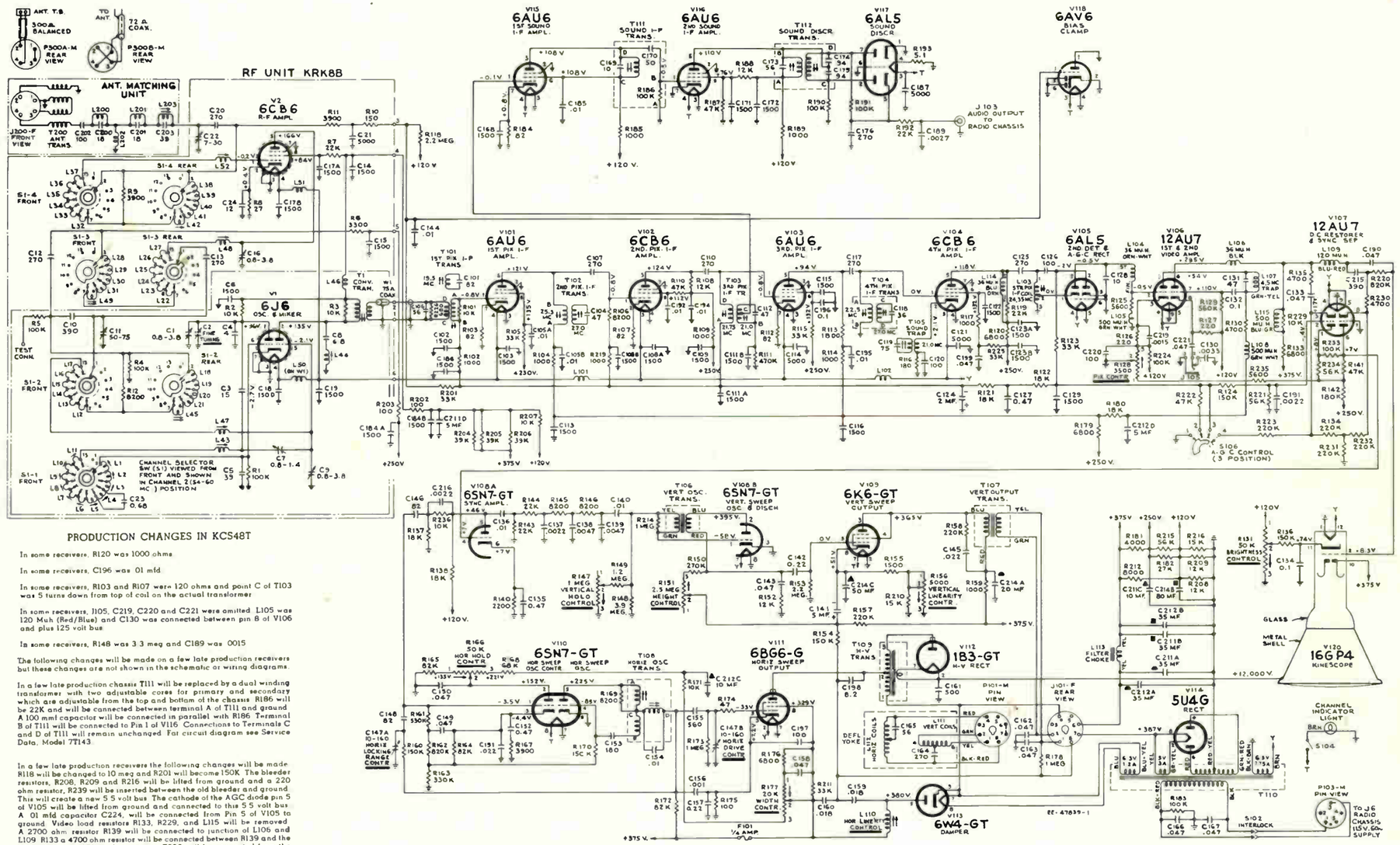

PRODUCTION CHANGES IN KCS48T

In some receivers, R120 was 1000 ohms.

In some receivers, C196 was .01 mfd.

In some receivers, R103 and R107 were 120 ohms and point C of T103 was 5 turns down from top of coil on the actual transformer.

In some receivers, J105, C219, C220 and C221 were omitted. L105 was 120 Muh (Red/Blue) and C130 was connected between pin 8 of V106 and plus 125 volt bus.

In some receivers, R148 was 3.3 meg and C189 was .0015.

The following changes will be made on a few late production receivers but these changes are not shown in the schematic or wiring diagrams.

In a few late production chassis T111 will be replaced by a dual winding transformer with two adjustable cores for primary and secondary which are adjustable from the top and bottom of the chassis. R186 will be 22K and will be connected between terminal A of T111 and ground. A 100 mmf capacitor will be connected in parallel with R186. Terminal B of T111 will be connected to Pin 1 of V116. Connections to Terminals C and D of T111 will remain unchanged. For circuit diagram see Service Data, Model 7T143.

In a few late production receivers the following changes will be made. R118 will be changed to 10 meg and R201 will become 150K. The bleeder resistors, R208, R209 and R216 will be lifted from ground and a 220 ohm resistor, R239 will be inserted between the old bleeder and ground. This will create a new 5.5 volt bus. The cathode of the AGC diode pin 5 of V105 will be lifted from ground and connected to this 5.5 volt bus. A .01 mfd capacitor C224, will be connected from Pin 5 of V105 to ground. Video load resistors R133, R229, and L115 will be removed. A 2700 ohm resistor R139 will be connected to junction of L106 and L109. R133 a 4700 ohm resistor will be connected between R139 and the 375 volt bus. A 270 mmf capacitor C223 will be connected from the junction of R133, R139 and to Pin 8 of V107. C130 will be changed to .0033 mfd. For circuit diagram, see the Service Data for Model 7T143.

REF. NO.	PART NO.	DESCRIPTION
		ELECTROLYTICS
C124	73747	2 mfd, 50 volts.
C141	28417	5 mfd, 450 volts.
C211	75510	4 sec: 35-34/450V, 10/450V 5/450V.
C212	75510	4 sec: 35-35/450V, 10/450V 5/450V.
C214	75592	3 sec: 20/450V, 80/200V 50/50V.
C1	75184	Ceramic, w/adj stud.
C2	75186	Ceramic, fine tuning plunger type.
C7	75172	Tubular, steatite, adj.
C11	75174	Ceramic, trimmer.
C22	75189	Adjustable, 7-30 mmfd.
C147	75217	Mica, trimmer, (dual).
		COILS
L46	75202	Choke coil.
L47	75182	Trimmer (tuner).
L48	75183	Trimmer (tuner).
L51	73477	Choke coil.
L101	73477	Choke coil.
L102	73477	Choke coil.
L103	75210	5th pix IF w/adj core.
L104	75299	Peaking coil.
L105	75252	Peaking coil.
L106	71793	Peaking coil.
L107	75251	4.5 mc trap.
L108	75252	Peaking coil.
L109	75253	Peaking coil.
L110	71449	Horiz. linearity.
L111	74952	Deflection yoke.
L112		See L111.
L113	73554	Filter choke.
L114	76285	Peaking coil.
L131	75251	4.5 mc trap.
L200	75242	IF trap.
L201		See L200.
L202	75241	Antenna shunt.
L203	75449	FM trap w/adj core & stud.
		RESISTORS
R128	75216	Pix & brightness.
R147	75215	Horiz. & vertical hold.
R151	71440	Height control.
R156	71441	Vertical linearity.
R177	75516	Width control.
R181	75512	W.W. 4000 ohms, 10 w.
R193	72067	W.W. 5.1 ohms, ½ w.
R212	75593	W.W. 8000 ohms, 15 w.
		TRANSFORMERS
T1	75181	Convertor Xformer.
T101	74589	First pix IF.
T102	74590	Second pix IF.
T103	76264	Third pix IF.
T104	73574	Fourth pix IF.
T105	71778	Sound trap.
T106	74144	Vertical oscillator.
T107	74950	Vertical output.
T108	75213	Horiz. oscillator.
T109	75519	High-voltage.
T110	75508	Power, 115V, 60 cycle.
T111	71424	Sound IF. Dual winding.
	75211	Sound IF. Single winding.
T112	75212	Sound discriminator.
T200	75509	Antenna w/ant. connector, IF
	73591	& FM traps, shunt coil.
	73591	Antenna mat. coil 2 required.
		MISCELLANEOUS
S104	75594	Indicator light switch.
S106	76010	AGC switch.
	75681	Speaker-12" P.M. Models 6T86 & 6T87.
	74974	Speaker-12" P.M. Model 6T84.

For circuit diagram of other chassis used in these models see page 44.

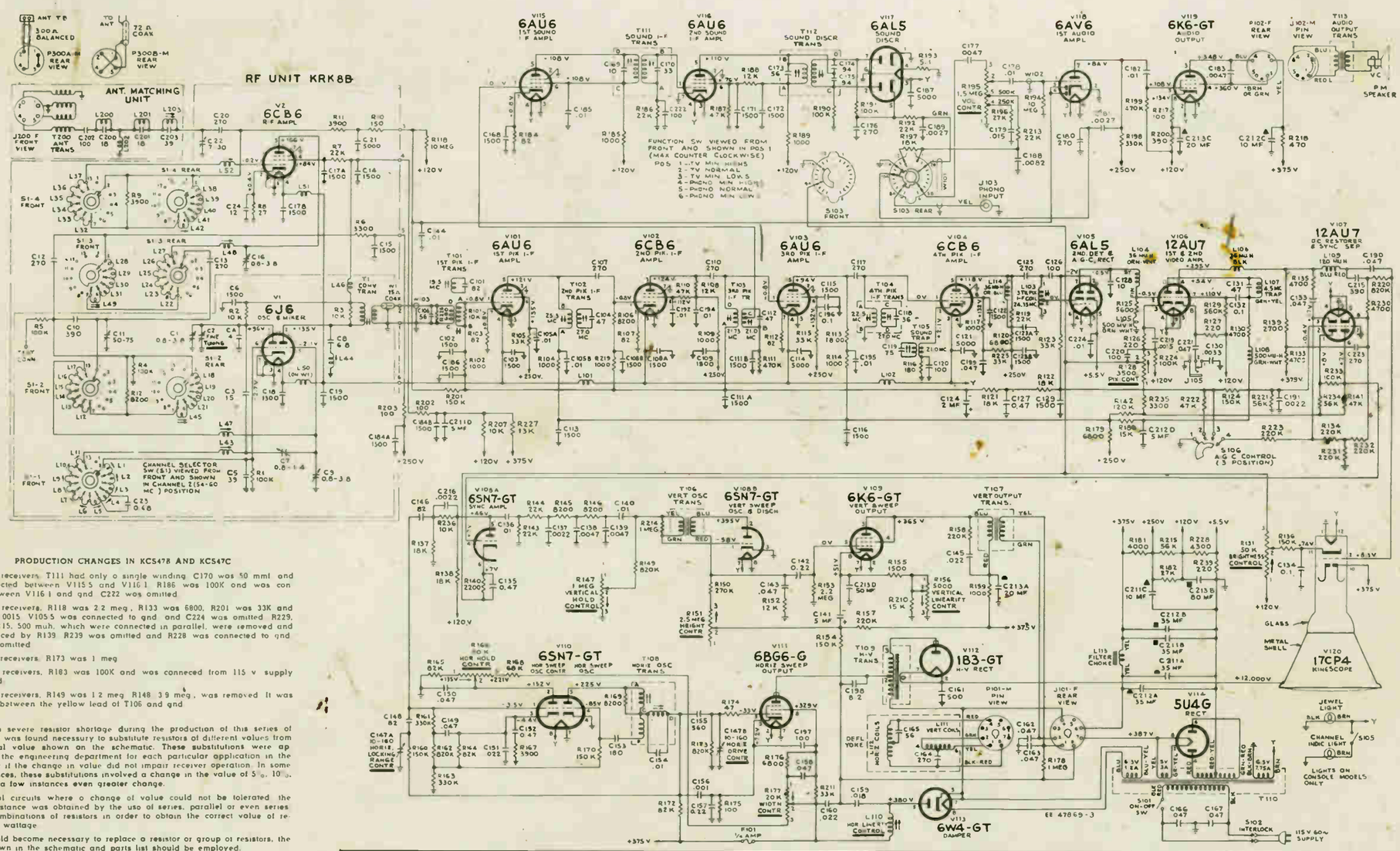

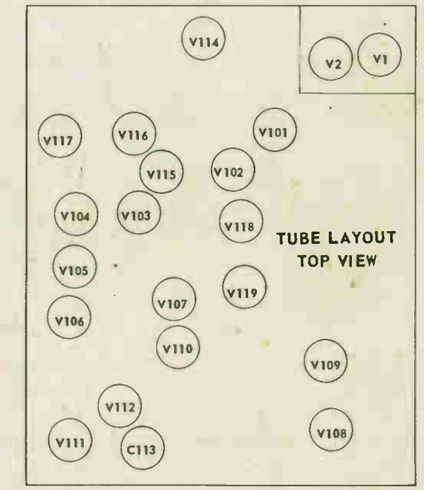

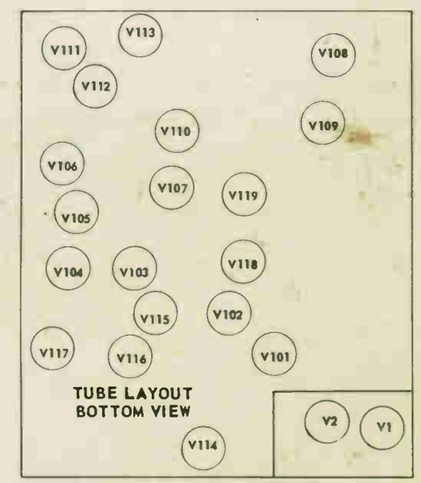

PRODUCTION CHANGES IN KCS47B AND KCS47C

In some receivers, T111 had only a single winding. C170 was 50 mmf and was connected between V115 5 and V116 1. R186 was 100K and was connected between V116 1 and gnd. C222 was omitted.

In some receivers, R118 was 2.2 meg., R133 was 6800, R201 was 33K and C130 was .0015. V105 5 was connected to gnd and C224 was omitted. R229, 10K and L115, 500 muh, which were connected in parallel, were removed and were replaced by R139. R239 was omitted and R228 was connected to gnd. C223 was omitted.

In some receivers, R173 was 1 meg.

In some receivers, R183 was 100K and was conneced from 115 v supply line, to gnd.

In some receivers, R149 was 1.2 meg. R148 3.9 meg., was removed. It was connected between the yellow lead of T106 and gnd.

Due to a severe resistor shortage during the production of this series of receivers it was found necessary to substitute resistors of different values from the nominal value shown on the schematic. These substitutions were approved by the engineering department for each particular application in the circuit only if the change in value did not impair receiver operation. In some such instances, these substitutions involved a change in the value of 5%, 10%, 20% or in a few instances even greater change.

In critical circuits where a change of value could not be tolerated, the proper resistance was obtained by the use of series, parallel or even series parallel combinations of resistors in order to obtain the correct value of resistance or wattage.

If it should become necessary to replace a resistor or group of resistors, the values shown in the schematic and parts list should be employed.

If the value of the resistor to be replaced is different from the value shown in the schematic, and the schematic value is not available, then it is permissible to replace it with the value found in the receiver or some value between that and the value shown in the schematic. Some of the commercially available, low resistance value, molded body types are of wire wound construction. Such resistors should not be employed in the r-f unit, i-f or video sections as the inductive affect of these resistors may impair circuit operation.

REF. NO.	PART NO.	DESCRIPTION
		ELECTROLYTICS
C124	73747	2 mfd, 50 volts.
C141	28417	5 mfd, 450 volts.
C211	75510	4 sec: 35-35/450V, 10/450V 5/450V.
C212	75510	4 sec: 35-35/450V, 10/450V 5/450V.
C213	75511	4 sec: 20/450V, 80/200V 20/200V, 50/50V.
C1	75184	Ceramic, w/adj. stud.
C2	75186	Ceramic, fine tuning plunger type.
C7	75172	Tubular, steatite, adj.
C11	75174	Ceramic, trimmer.
C22	75789	Adjustable.
C147	75217	Mica, trimmer (dual).
		COILS
L51	73477	Choke coil.
L101	73477	Choke coil.
L102	73477	Choke coil.
L103	75210	Fifth pix IF 2 adj core.
L104	75299	Peaking coil.
L105	75252	Peaking coil.
L106	71793	Peaking coil.
L107	75251	4.5 mc trap.
L108	75252	Peaking coil.
L109	75253	Peaking coil.
L110	71449	Horiz. linearity.
L111	74952	Deflection yoke.
L112		See L111.
L113	76284	Filter choke.
L114	76285	Peaking coil.
L200	75242	IF trap.
L201		See L200.
L202	75241	Antenna shunt coil.
L203	75449	FM trap w/adj core & stud.
		RESISTORS
R128	75216	Pix & brightness for KCS47B.
	75514	Pix & brightness for KCS47C.
R147	75215	Horiz. & vertical hold.
R151	71440	Height control.
R156	71441	Vertical linearity.
R177	75516	Width control.
R181	75512	W.W. 4000 ohms, 10 w.
R193	72067	W.W. 5.1 ohms, ½ w.
R195	76171	Volume & power switch.
R227	76065	W.W. 13,000 ohms, 5 w.
R228	76066	W.W. 4300 ohms, 5 w.
R239	76304	W.W. 220 ohms, ½ w.
		TRANSFORMERS
T1	75181	Convertor Xformer.
T101	74589	First pix IF.
T102	74590	Second pix IF.
T103	76264	Third pix IF.
T104	73574	Fourth pix IF.
T105	71778	Sound trap.
T106	74144	Vertical oscillator.
T107	74950	Vertical output.
T108	75213	Horiz. oscillator.
T109	75585	High-voltage.
T110	75508	Power, 117V, 60 cycle.
T111	71424	Sound IF.
T112	75212	Sound discriminator.
T113	75520	Output Xformer.
T200	75509	Antenna w/ant. connector IF & FM traps, ant. shunt coil.
	73591	Antenna mat. coil 2 required.
		MISCELLANEOUS
5103	76170	Tone, phono sw. less vol. & power switch.
5106	76010	AGC switch.
	75022	Speaker-8" P.M. (models 7T103, 7T104).
	75520	Output Xformer. (models 7T103, 7T104).
	74974	Speaker-12" P.M. (models 7T112, 7T122, 7T123, 7T124)
	75220	Output Xformer (models 7T112, 7T122, 7T123, 7T124)

KCS47F KCS47G KCS47GF Chassis

MODELS **7T103B 7T104B 7T112B 7T122B 7T123B 7T125B**

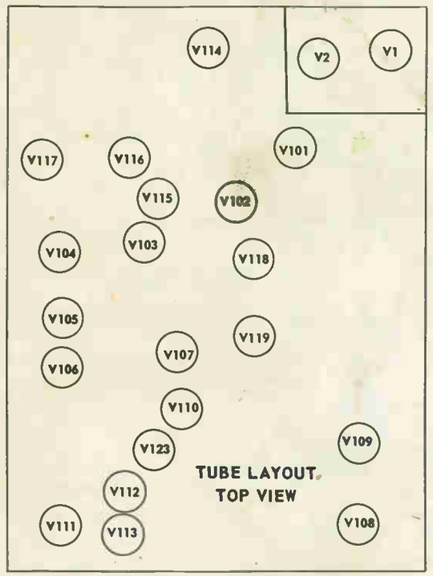

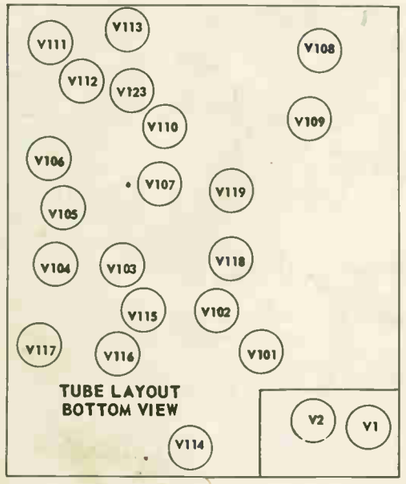

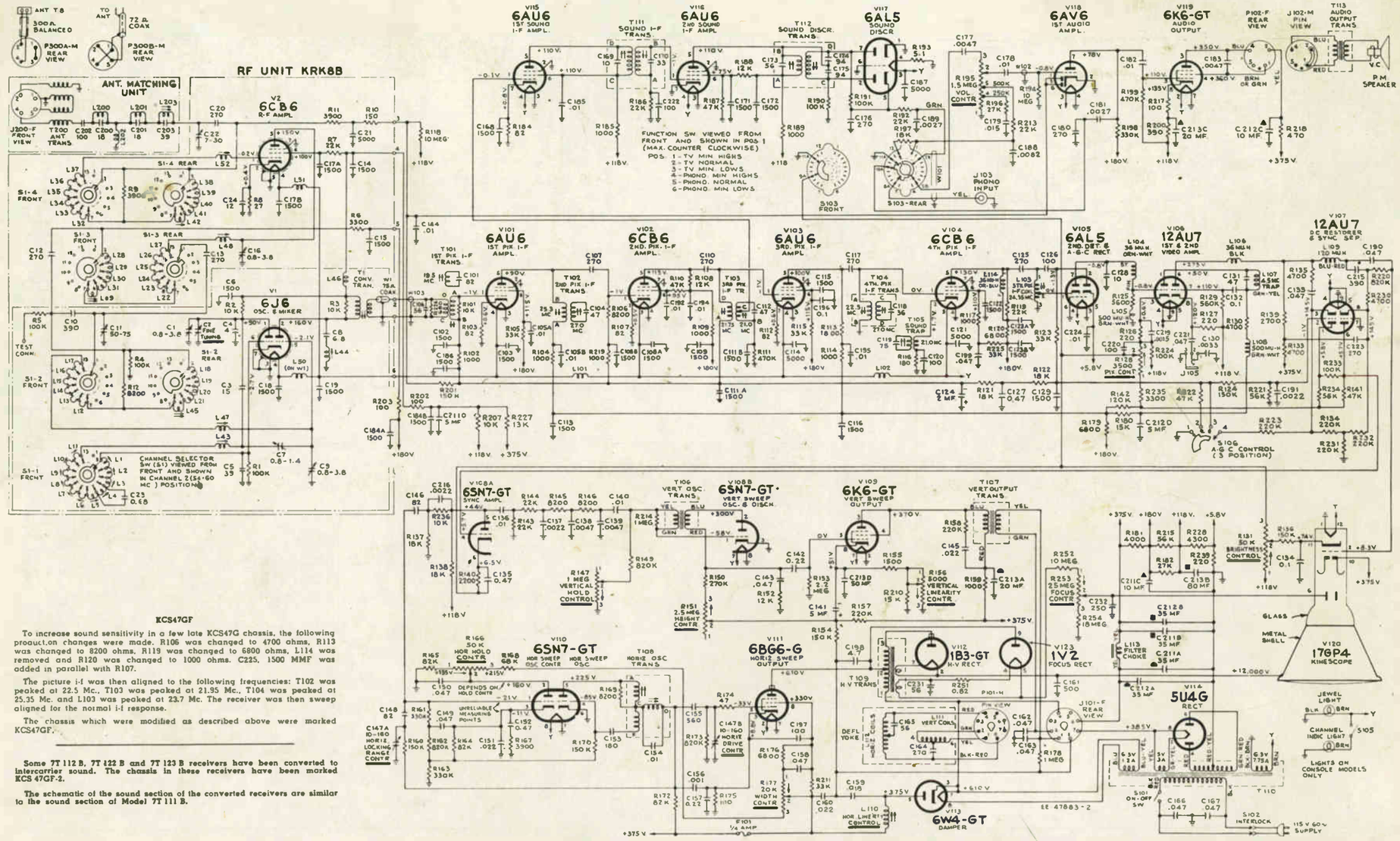

KCS47GF

To increase sound sensitivity in a few late KCS47G chassis, the following production changes were made. R106 was changed to 4700 ohms, R113 was changed to 8200 ohms, R119 was changed to 6800 ohms, L114 was removed and R120 was changed to 1000 ohms. C225, 1500 MMF was added in parallel with R107.

The picture i-f was then aligned to the following frequencies: T102 was peaked at 22.5 Mc., T103 was peaked at 21.95 Mc., T104 was peaked at 25.35 Mc. and L103 was peaked at 23.7 Mc. The receiver was then sweep aligned for the normal i-f response.

The chassis which were modified as described above were marked KCS47GF.

Some 7T 112 B, 7T 122 B and 7T 123 B receivers have been converted to intercarrier sound. The chassis in these receivers have been marked KCS 47GF-2.

The schematic of the sound section of the converted receivers are similar to the sound section of Model 7T 111 B.

REF. NO.	PART NO.	DESCRIPTION
		ELECTROLYTICS
C124	73747	2 mfd, 50 volts.
C141	28417	5 mfd, 450 volts.
C211	75510	4 sec: 35-35/450V, 10/450V 5/450V.
C212	75510	4 sec: 35-35/450V, 10/450V 5/450V.
C213	75511	4 sec: 20/450V, 80/200V 20/200V, 50/50V.
C1	75184	Ceramic, w/adj. stud.
C2	75186	Ceramic, fine tuning plunger type.
C7	75172	Tubular, steatite, adj.
C11	75174	Ceramic, trimmer.
C22	75189	Adjustable.
C147	75217	Mica, trimmer, (dual).
		COILS
L51	73477	Choke coil.
L101	73477	Choke coil.
L102	73477	Choke coil.
L103	75210	Fifth pix IF. w/adj core.
L104	75299	Peaking coil.
L105	75252	Peaking coil.
L106	71793	Peaking coil.
L107	75251	4.5 mc trap.
L108	75252	Peaking coil.
L109	75253	Peaking coil.
L110	71449	Horiz. linearity.
L111	74952	Deflection yoke.
L112		See L111.
L113	76284	Filter choke.
L114	76285	Peaking coil.
L200	76242	IF trap.
L201		See L200.
L202	75241	Antenna shunt coil.
L203	75449	FM trap.
		RESISTORS
R147	75215	Horiz. & vertical hold.
R151	71440	Height control.
R156	71441	Vertical linearity.
R177	75516	Width control.
R181	75512	W.W. 4000 ohms, 10 w.
R193	72067	W.W. 5.1 ohms, ½ w.
R195	76171	Vol., power switch.
R227	76065	W.W. 13,000 ohms, 5 w.
R228	76066	W.W. 4300 ohms, 5 w.
R239	76304	W.W. 220 ohms, ½ w.
R251	76382	W.W. 0.82 ohms, 1/3 w.
R253	76503	Focus control.
		TRANSFORMERS
T1	75181	Convertor Xformer.
T101	74589	First pix IF.
T102	74590	Second pix IF.
T103	76264	Third pix IF.
T104	73574	Fourth pix IF.
T105	71778	Sound trap.
T106	74144	Vertical oscillator.
T107	74950	Vertical output.
T108	75213	Horiz. oscillator.
T109	76381	High-voltage.
T110	75508	Power, 117V, 60 cycle.
T111	71424	Sound IF.
T112	75212	Sound discriminator.
T113	75520	Audio output.
T200	75509	Antenna w/ant. connector IF & FM traps, shunt coil.
	73591	Antenna mat. coil 2 required.
		MISCELLANEOUS
S103	76170	Tone, phono sw. less vol., power switch.
S106	76010	AGC switch.
	76389	Speaker-12" P.M. (971494-1W)
	75520	Output Xformer. (971494-1W)
	75022	Speaker-8" P.M. (92580-4W).
	75520	Output Xformer. (92580-4W).

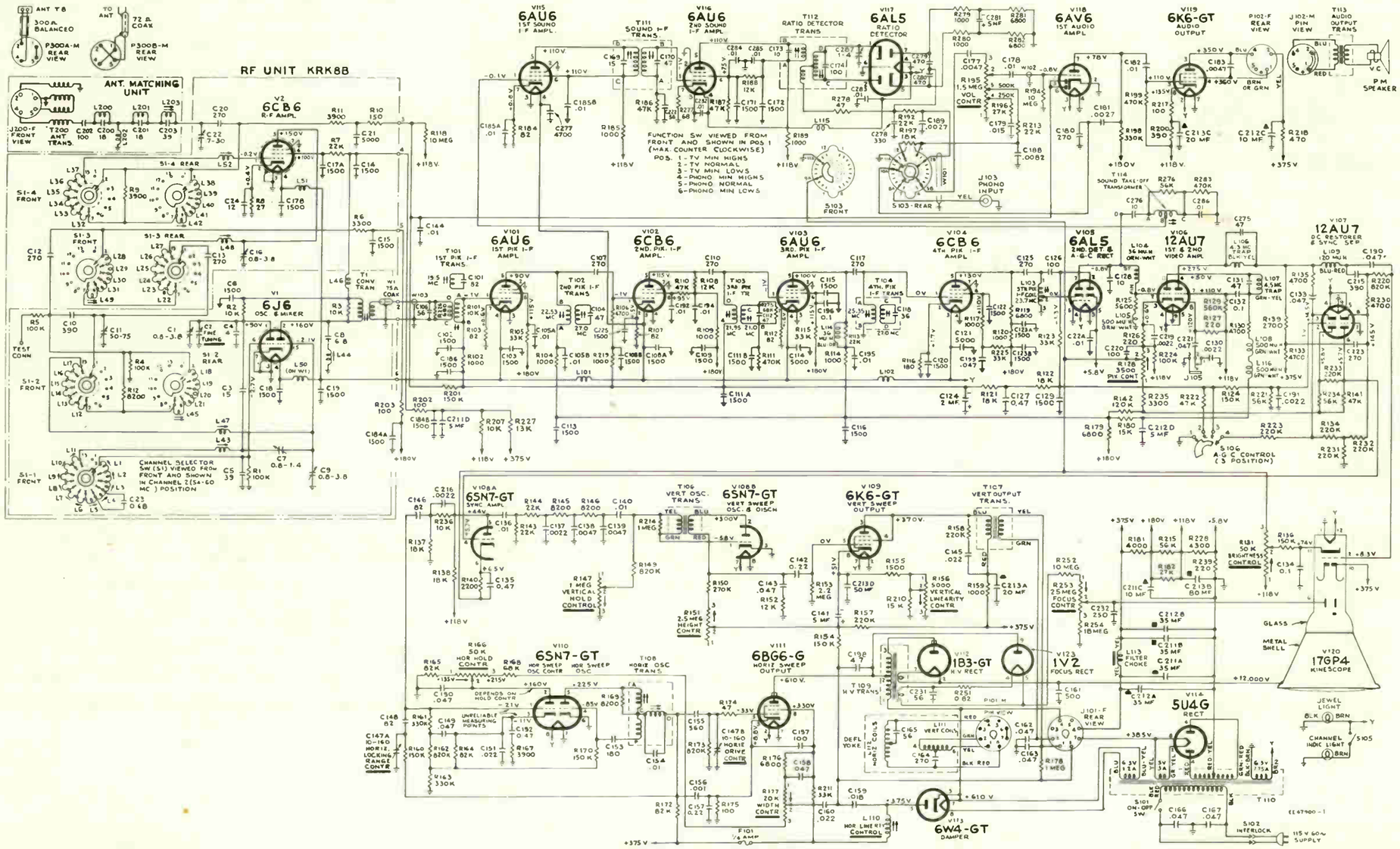

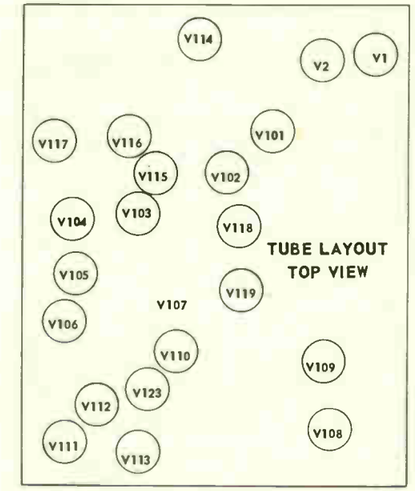

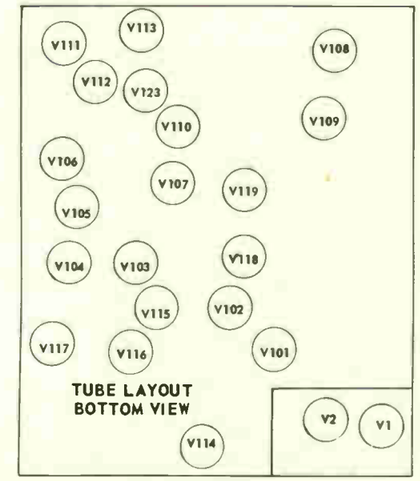

REF. NO.	PART NO.	DESCRIPTION
		ELECTROLYTICS
C124	73747	2 mfd, 50 volts.
C141	28417	5 mfd, 450 volts.
C211	75510	4 sec: 35-35/450V, 10/450V, 5/450V.
C212	75510	4 sec: 35-35/450V, 10/450V, 5/450V.
C213	75511	4 sec: 20/450V, 80/200V 20/200V, 50-50V.
C1	75184	Ceramic, adjustable stud.
C2	75186	Ceramic, fine tuning plunger type.
C7	75172	Tubular, steatite, adj.
C11	75174	Ceramic, trimmer.
C22	75189	Adjustable.
C147	75217	Mica, trimmer.
		COILS
L51	73477	Choke coil.
L101	73477	Choke coil.
L102	73477	Choke coil.
L103	75210	Fifth pix IF. w/ adj stud.
L104	75299	Peaking coil.
L105	75252	Peaking coil.
L106	76704	4.3 mc trap.
L107	75251	4.5 mc trap.
L108	75252	Peaking coil.
L109	75253	Peaking coil.
L110	71449	Horiz. linearity.
L111	74952	Deflection yoke.
L112		See L111.
L113	76284	Filter choke.
L114	76285	Peaking coil.
L115	73477	Choke coil.
L116	75252	Peaking coil.
L200	75242	IF trap.
L201		See L200.
L202	75241	Antenna shunt coil.
L203	75449	FM trap w/ core & stud.
		RESISTORS
R128	75514	Pix & brightness, channel light switch.
R147	75215	Horiz. & vertical hold.
R151	71440	Height control.
R156	71441	Vertical linearity.
R177	75516	Width control.
R181	75512	W.W. 4000 ohms, 10 w.
R195	76171	Vol., power switch.
R227	76065	W.W. 13,000 ohms, 5 w.
R228	76066	W.W. 4300 ohms, 2 w.
R239	76304	W.W. 220 ohms, ½ w.
R251	76382	W.W. 0.82 ohms, 1/3 w.
R253	76503	Focus control.
		TRANSFORMERS
T101	74589	First pix IF.
T102	74590	Second pix IF.
T103	76264	Third pix IF.
T104	73574	Fourth pix IF.
T106	74144	Vertical oscillator.
T107	74950	Vertical output.
T108	75213	Horiz. oscillator.
T109	76381	High-voltage.
T110	75508	Power, 117V, 60 cycle.
T111	76438	Sound IF.
T112	76702	Ratio detector.
T114	76703	Sound take-off.
		MISCELLANEOUS
	75022	Speaker-8" P.M.
	75520	Output Xformer.

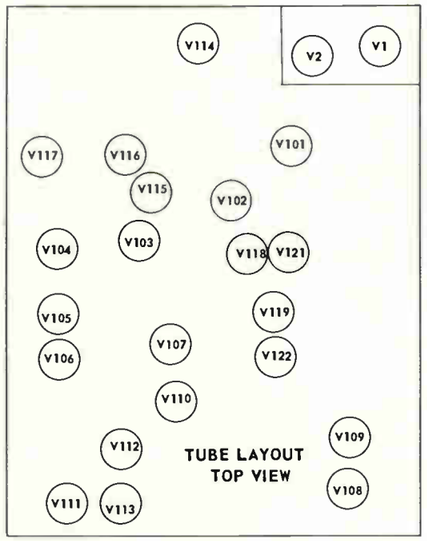

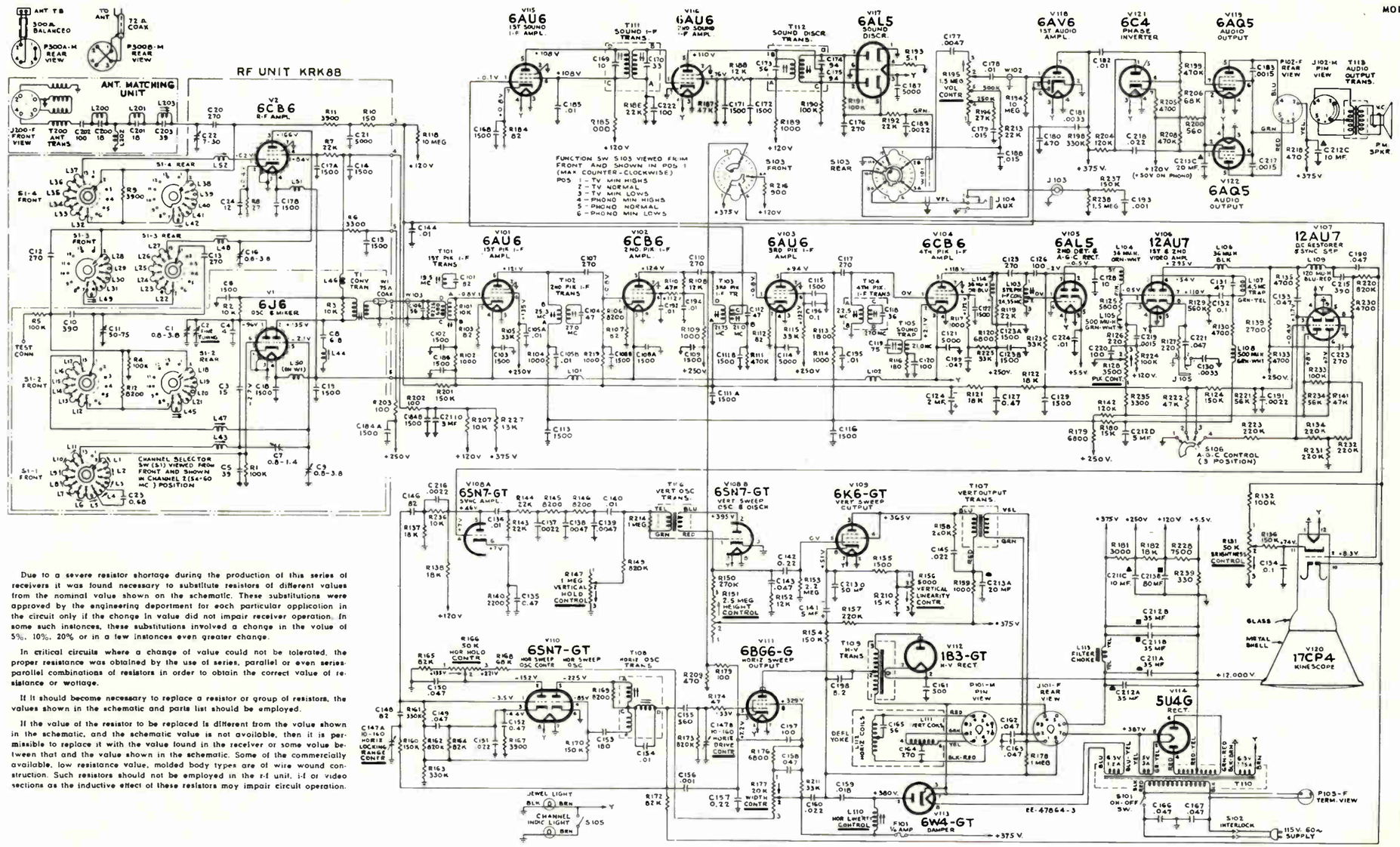

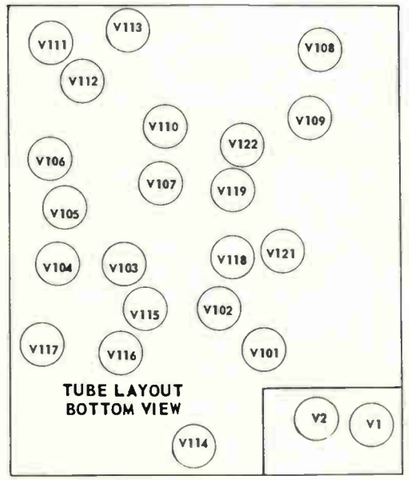

Due to a severe resistor shortage during the production of this series of receivers it was found necessary to substitute resistors of different values from the nominal value shown on the schematic. These substitutions were approved by the engineering department for each particular application in the circuit only if the change in value did not impair receiver operation. In some such instances, these substitutions involved a change in the value of 5%, 10%, 20% or in a few instances even greater change.

In critical circuits where a change of value could not be tolerated, the proper resistance was obtained by the use of series, parallel or even series-parallel combinations of resistors in order to obtain the correct value of resistance or wattage.

If it should become necessary to replace a resistor or group of resistors, the values shown in the schematic and parts list should be employed.

If the value of the resistor to be replaced is different from the value shown in the schematic, and the schematic value is not available, then it is permissible to replace it with the value found in the receiver or some value between that and the value shown in the schematic. Some of the commercially available, low resistance value, molded body types are of wire wound construction. Such resistors should not be employed in the r-f unit, i-f or video sections as the inductive effect of these resistors may impair circuit operation.

REF. NO.	PART NO.	DESCRIPTION
		ELECTROLYTICS
C124	73747	2 mfd, 50 volts.
C141	28417	5 mfd, 450 volts.
C211	75510	4 sec: 35-35/450V, 10/450V, 5/450V.
C212	75510	4 sec: 34-35/450V 10/450V, 5/450V.
C213	75511	4 sec: 20/450V, 80/200V 20/200V, 50/50V.
C1	75184	Ceramic, w/adj stud.
C2	75186	Ceramic, fine tuning plunger type.
C7	75172	Tubular, steatite, adj.
C11	75174	Ceramic, trimmer.
C22	75189	Adjustable.
C1-7	75217	Mica, trimmer.
		COILS
L51	73477	Choke coil.
L101	73477	Choke coil.
L102	73477	Choke coil.
L103	75210	Fifth pix IF w/ adj. core.
L104	75299	Peaking coil.
L105	75252	Peaking coil.
L107	75251	4.5 mc trap.
L108	75252	Peaking coil.
L109	75253	Peaking coil.
L110	71449	Horiz. linearity.
L111	74952	Deflection yoke.
L112		See L111.
L113	76284	Filter choke.
L114	76285	Peaking coil.
L200	75242	IF trap.
L201		See L200.
L202	75241	Antenna shunt coil.
L203	75449	FM trap w/adj core & stud.
		RESISTORS
R128	75514	Pix & brightness, channel light switch.
R147	75215	Horiz. & vertical hold.
R151	71440	Height control.
R156	71441	Vertical linearity.
R177	75516	Width control.
R181	76267	W.W. 3000 ohms, 15 w.
R182	76265	W.W. 18,000 ohms, 10 w.
R193	72067	W.W. 5.1 ohms, ½ w.
R195	76171	Vol., power switch.
R209	76260	W.W. 470 ohms, 4 w.
R216	76261	W.W. 900 ohms, 5 w.
R227	76262	W.W. 13,000 ohms, 10 w.
R228	76266	W.W. 7500 ohms, 10 w.
R239	76305	W.W. 330 ohms, ½ w.
		TRANSFORMERS
T1	75181	Convertor Xformer.
T101	74589	First pix IF.
T102	74590	Second pix IF.
T103	76264	Third pix IF.
T104	73574	Fourth pix IF.
T105	71778	Sound trap.
T106	74144	Vertical oscillator.
T107	74950	Vertical output.
T108	75213	Horiz. oscillator.
T109	75585	High-voltage.
T110	75508	Power, 117V, 60 cycle.
T111	71424	Sound IF.
T112	75212	Sound discriminator.
T113	73636	Audio output.
T200	75509	Antenna mat. Xformer complete.
	73591	Antenna mat. coil, 2 required.
		MISCELLANEOUS
S103	76172	Tone, phono sw. less vol., power switch.
S106	76010	AGC switch.
	75681	Speaker-12" P.M.
	73636	Output Xformer.

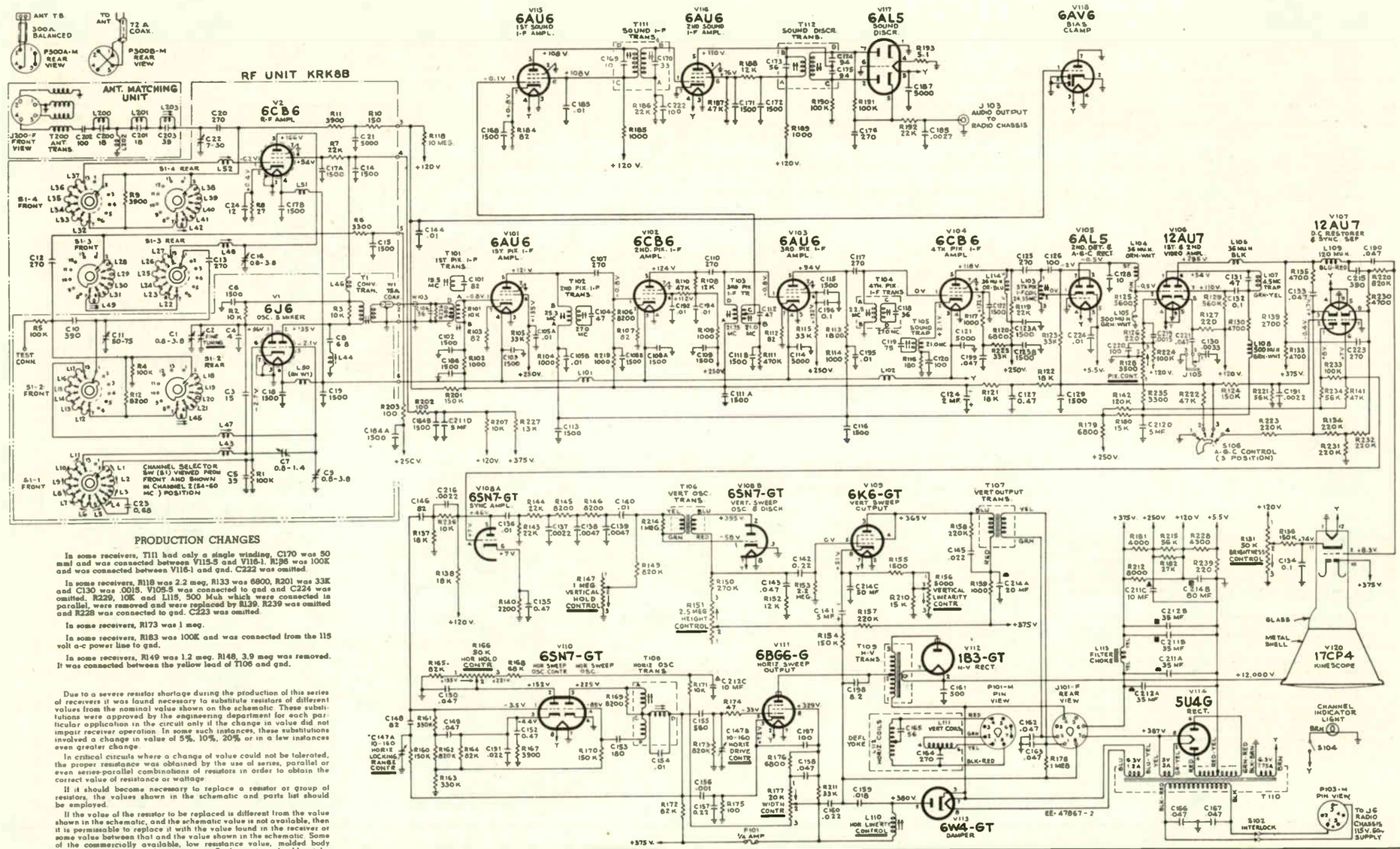

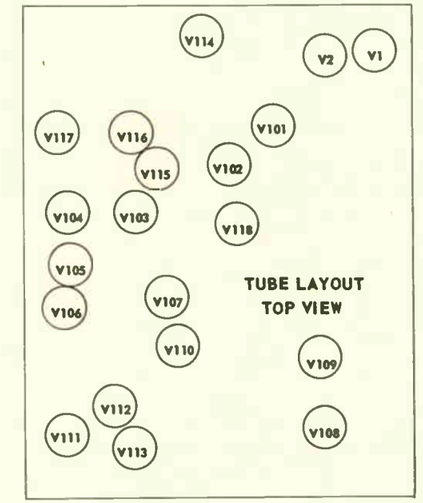

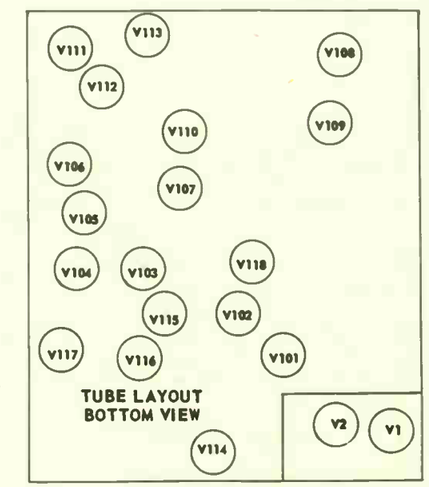

PRODUCTION CHANGES

In some receivers, T111 had only a single winding, C170 was 50 mmf and was connected between V115-5 and V116-1. R196 was 100K and was connected between V116-1 and gnd. C222 was omitted.

In some receivers, R118 was 2.2 meg, R133 was 6800, R201 was 33K and C130 was .0015. V105-5 was connected to gnd and C224 was omitted. R229, 10K and L115, 500 Muh which were connected in parallel, were removed and were replaced by RL39. R239 was omitted and R228 was connected to gnd. C223 was omitted.

In some receivers, R173 was 1 meg.

In some receivers, R183 was 100K and was connected from the 115 volt a-c power line to gnd.

In some receivers, R149 was 1.2 meg. R148, 3.9 meg was removed. It was connected between the yellow lead of T106 and gnd.

Due to a severe resistor shortage during the production of this series of receivers it was found necessary to substitute resistors of different values from the nominal value shown on the schematic. These substitutions were approved by the engineering department for each particular application in the circuit only if the change in value did not impair receiver operation. In some such instances, these substitutions involved a change in value of 5%, 10%, 20% or in a few instances even greater change.

In critical circuits where a change of value could not be tolerated, the proper resistance was obtained by the use of series, parallel or even series-parallel combinations of resistors in order to obtain the correct value of resistance or wattage.

If it should become necessary to replace a resistor or group of resistors, the values shown in the schematic and parts list should be employed.

If the value of the resistor to be replaced is different from the value shown in the schematic, and the schematic value is not available, then it is permissable to replace it with the value found in the receiver or some value between that and the value shown in the schematic. Some of the commercially available, low resistance value, molded body types are of wire wound construction. Such resistors should not be employed in the r-f unit, i-f or video sections as the inductive effect of these resistors may impair circuit operation.

REF. NO.	PART NO.	DESCRIPTION
		ELECTROLYTICS
C124	73747	2 mfd, 50 volts.
C141	28417	5 mfd, 450 volts.
C211	75510	4 sec: 35-35/450V, 10/450V, 5/450V.
C212	75510	4 sec: 35-35/450V, 10/450V, 5/450V.
C214	75592	3 sec: 20/450V, 80/200V 50/50V.
C1	75184	Ceramic, w/adj stud.
C2	75186	Ceramic, fine tuning plunger type.
C7	75172	Tubular, steatite, adj.
C11	75174	Ceramic, trimmer.
C22	75189	Adjustable.
C147	75217	Mica, trimmer, (dual).
		COILS
L51	73477	Choke coil.
L101	73477	Choke coil.
L102	73477	Choke coil.
L103	75210	Fifth pix IF w/adj core.
L104	75299	Peaking coil.
L105	75252	Peaking coil.
L106	71793	Peaking coil.
L107	75251	4.5 mc trap.
L108	75252	Peaking coil.
L109	75253	Peaking coil.
L110	71449	Horiz. linearity.
L111	74952	Deflection yoke.
L112		See L111.
L113	75284	Filter choke.
L114	76285	Peaking coil.
L200	71242	IF trap.
L201		See L200.
L202	75241	Antenna shunt coil.
L203	75449	FM trap w/adj core & stud.
		RESISTORS
R128	75216	Pix & Brightness.
R147	75215	Horiz. & vertical hold.
R151	71440	Height control.
R156	71441	Vertical linearity.
R177	75516	Width control.
R181	75512	W.W. 4000 ohms, 10 w.
R193	72067	W.W. 5.1 ohms, ½ w.
R212	75593	W.W. 8000 ohms, 10 w.
R227	76065	W.W. 13,000 ohms, 5 w.
R228	76066	W.W. 4300 ohms, 5 w.
R239	76304	W.W. 220 ohms, ½ w.
		TRANSFORMERS
T1	75181	Convertor Xformer.
T101	74589	First pix IF.
T102	74590	Second pix IF.
T103	76264	Third pix IF.
T104	73574	Fourth pix IF.
T105	71778	Sound trap.
T106	74144	Vertical oscillator.
T107	74950	Vertical output.
T108	75213	Horiz. oscillator.
T109	75585	High-voltage.
T110	75508	Power, 117V, 60 cycle.
T111	71424	Sound IF.
T112	75212	Sound discriminator.
T200	75509	Antenna mat. Xformer complete.
	73591	Antenna mat. coil 2 required.
		MISCELLANEOUS
	75681	Speaker-12" P.M. (92569-12W).
	76389	Speaker-12" P.M. (971494-2W).

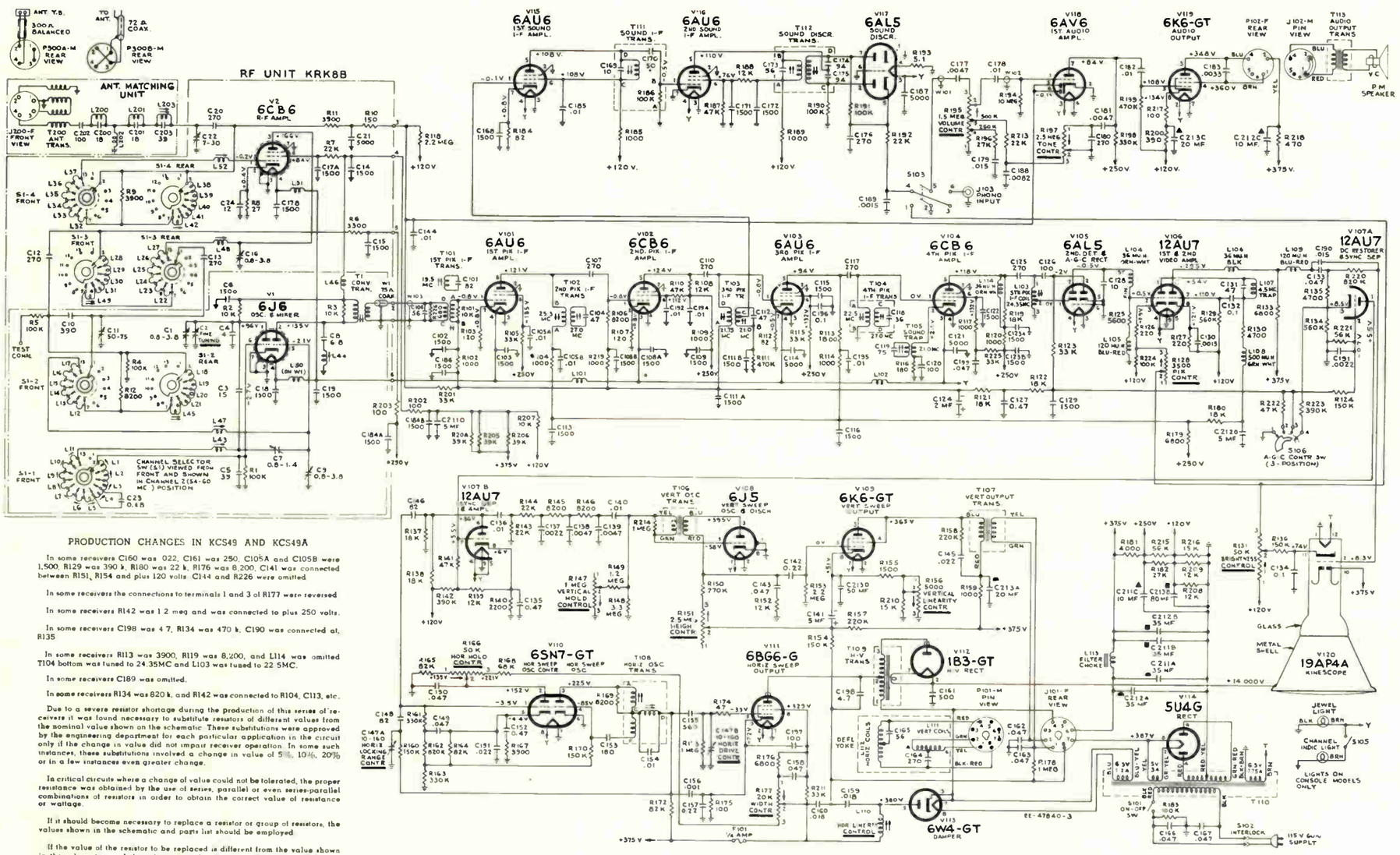

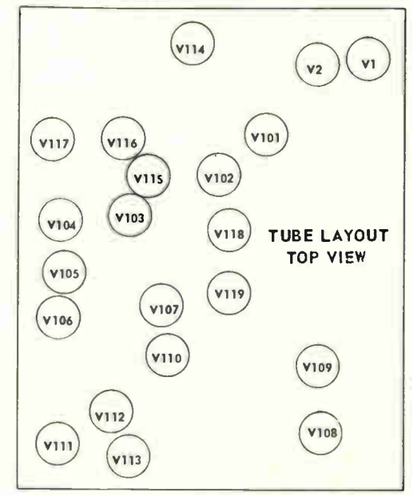

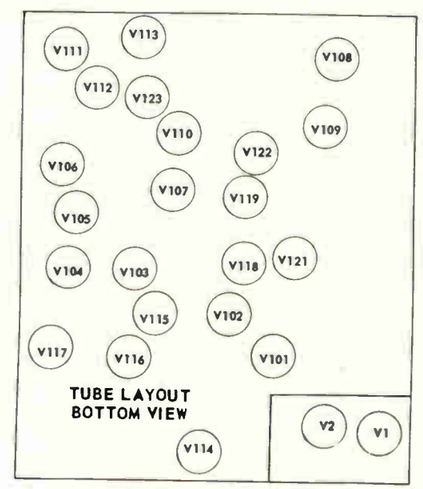

PRODUCTION CHANGES IN KCS49 AND KCS49A

In some receivers C160 was .022, C161 was 250, C105A and C105B were 1,500, R129 was 390 k, R180 was 22 k, R176 was 8,200, C141 was connected between R151, R154 and plus 120 volts. C144 and R226 were omitted.

In some receivers the connections to terminals 1 and 3 of R177 were reversed.

In some receivers R142 was 1.2 meg and was connected to plus 250 volts.

In some receivers C198 was 4.7, R134 was 470 k, C190 was connected at, R135.

In some receivers R113 was 3900, R119 was 8,200, and L114 was omitted. T104 bottom was tuned to 24.35MC and L103 was tuned to 22.5MC.

In some receivers C189 was omitted.

In some receivers R134 was 820 k, and R142 was connected to R104, C113, etc.

Due to a severe resistor shortage during the production of this series of receivers it was found necessary to substitute resistors of different values from the nominal value shown on the schematic. These substitutions were approved by the engineering department for each particular application in the circuit only if the change in value did not impair receiver operation. In some such instances, these substitutions involved a change in value of 5%, 10%, 20% or in a few instances even greater change.

In critical circuits where a change of value could not be tolerated, the proper resistance was obtained by the use of series, parallel or even series-parallel combinations of resistors in order to obtain the correct value of resistance or wattage.

If it should become necessary to replace a resistor or group of resistors, the values shown in the schematic and parts list should be employed.

If the value of the resistor to be replaced is different from the value shown in the schematic, and the schematic value is not available, then it is permissible to replace it with the value found in the receiver or some value between that and the value shown in the schematic. Some of the commercially available, low resistance value, molded body types are of wire wound construction. Such resistors should not be employed in the r-f unit, i-f or video sections as the inductive effect of these resistors may impair circuit operation.

For circuit diagram of other chassis used in these models see page 52.

REF. NO.	PART NO.	DESCRIPTION
		ELECTROLYTICS
C124	73747	2 mfd, 50 volts.
C141	28417	5 mfd, 450 volts.
C211	75510	4 sec: 35-35/450V, 10/450V, 5/450V.
C212	75510	4 sec: 35-35/450V 10/450V, 5/450V.
C213	75511	4 sec: 20/450V, 80/200V 20/200V, 50/50V.
C1	75184	Ceramic, w/adj stud.
C2	75186	Ceramic, fine tuning plunger type.
C7	75172	Tubular, steatite, adj.
C11	75174	Ceramic, trimmer.
C22	75189	Adjustable.
C147	75217	Mica, trimmer, (dual).
		COILS
L51	73477	Choke coil.
L101	73477	Choke coil.
L102	73477	Choke coil.
L103	75210	Fifth pix IF w/adj core.
L104	75299	Peaking coil.
L105	75252	Peaking coil.
L106	71793	Peaking coil.
L107	75251	4.5 mc trap.
L108	75252	Peaking coil.
L109	75253	Peaking coil.
L110	71449	Horiz. linearity.
L111	74952	Deflection yoke.
L112		See L111.
L113	73154	Filter choke.
L114	76285	Peaking coil.
L200	75242	IF trap.
L201		See L200.
L202	75241	Antenna shunt coil.
L203	75449	FM trap w/adj core & stud.
		RESISTORS
R128	75216	Pix & brightness.
	75514	Pix & brightness, channel light switch for consoles.
R147	75215	Horiz. & vertical hold.
R151	71440	Height control.
R156	71441	Vertical linearity.
R177	75516	Width control.
R181	75512	W.W. 4000 ohms, 10 w.
R193	72067	W.W. 5.1 ohms, ½ w.
R195	75513	Tone, vol., power sw.
		TRANSFORMERS
T1	75181	IF convertor Xformer.
T101	74589	First pix IF.
T102	74590	Second pix IF.
T103	76264	Third pix IF.
T104	73574	Fourth pix IF.
T105	71778	Sound trap.
T106	74144	Vertical oscillator.
T107	74950	Vertical output.
T108	75213	Horiz. oscillator.
T109	75585	High-voltage.
T110	75508	Power, 115 V, 60 cycle.
T111	71424	Sound IF. (dual winding)
	75211	Sound IF (single winding)
T112	75212	Sound discriminator.
T113	75520	Audio output.
T200	75509	Antenna mat. Xformer. complete.
	73591	Antenna mat. coil 2 required.

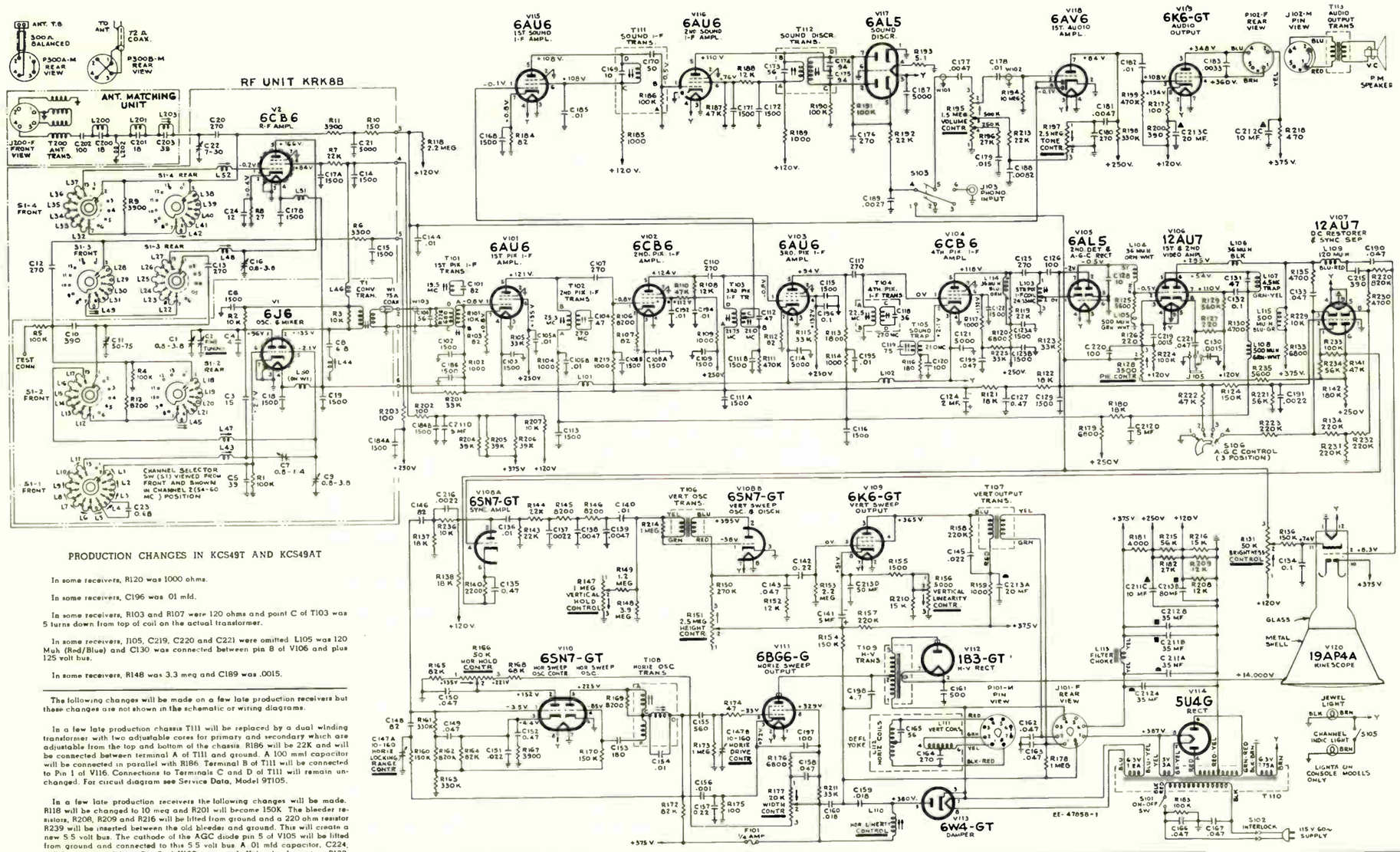

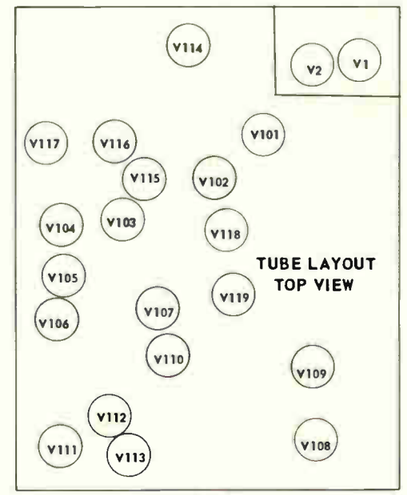

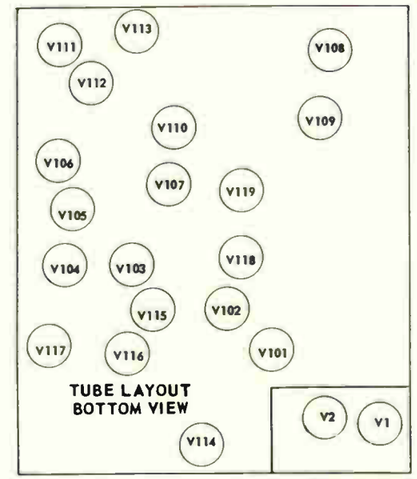

PRODUCTION CHANGES IN KCS49T AND KCS49AT

In some receivers, R120 was 1000 ohms.

In some receivers, C196 was .01 mfd.

In some receivers, R103 and R107 were 120 ohms and point C of T103 was 5 turns down from top of coil on the actual transformer.

In some receivers, J105, C219, C220 and C221 were omitted. L105 was 120 Muh (Red/Blue) and C130 was connected between pin 8 of V106 and plus 125 volt bus.

In some receivers, R148 was 3.3 meg and C189 was .0015.

The following changes will be made on a few late production receivers but these changes are not shown in the schematic or wiring diagrams.

In a few late production chassis T111 will be replaced by a dual winding transformer with two adjustable cores for primary and secondary which are adjustable from the top and bottom of the chassis. R186 will be 22K and will be connected between terminal A of T111 and ground. A 100 mmf capacitor will be connected in parallel with R186. Terminal B of T111 will be connected to Pin 1 of V116. Connections to Terminals C and D of T111 will remain unchanged. For circuit diagram see Service Data, Model 9T105.

In a few late production receivers the following changes will be made. R118 will be changed to 10 meg and R201 will become 150K. The bleeder resistors, R208, R209 and R216 will be lifted from ground and a 220 ohm resistor R239 will be inserted between the old bleeder and ground. This will create a new 5.5 volt bus. The cathode of the AGC diode pin 5 of V105 will be lifted from ground and connected to this 5.5 volt bus. A .01 mfd capacitor, C224, will be connected from Pin 5 of V105 to ground. Video load resistors R133, R229, and L115 will be removed. A 2700 ohm resistor R139 will be connected to junction of L106 and L109. R133, a 4700 ohm resistor will be connected between R139 and the 375 volt bus. A 270 mmf capacitor C223 will be connected from the junction of R133, R139 and to Pin 8 of V107. C130 will be changed to .0033 mfd. For circuit diagram, see the Service Data for Model 9T105.

For circuit diagram of other chassis used in these models see page 51

REF. NO.	PART NO.	DESCRIPTION
		ELECTROLYTICS
C124	73747	2 mfd, 50 volts.
C141	28417	5 mfd, 450 volts.
C211	75510	4 sec: 35-35/450V, 10/450V 5/450V.
C212	75510	4 sec: 35-35/450V, 10/450V, 5/450V.
C213	75511	4 sec: 20/450V, 20/200V 20/200V, 50/50V.
C1	75184	Ceramic, adj. stud.
C2	75186	Ceramic, fine tuning plunger type.
C7	75172	Tubular, steatite, adj.
C11	75174	Ceramic, trimmer.
C22	75189	Adjustable.
C147	75217	Mica, trimmer.
		COILS
L51	73477	Choke coil.
L101	73477	Choke coil.
L102	73477	Choke coil.
L103	75210	Fifth pix IF w/adj core.
L104	75299	Peaking coil.
L105	75252	Peaking coil.
L106	71793	Peaking coil.
L107	75251	4.5 mc trap.
L108	75252	Peaking coil.
L109	75253	Peaking coil.
L110	71449	Horiz linearity.
L111	74952	Deflection yoke.
L112		See L111.
L113	73154	Filter choke.
L114	76285	Peaking coil.
L115	76132	Peaking coil.
L200	75242	IF trap.
L201		See L200.
L202	75241	Antenna shunt coil.
L203	75449	FM trap w/adj core & stud.

RESISTORS		
R128	75216	Pix & brightness for 9T57.
	75514	Pix & brightness for 9T77 and model 9T79.
R147	75215	Horiz. & vertical hold.
R151	71440	Height control.
R156	71441	Vertical linearity.
R177	75516	Width control.
R181	75512	W.W. 4000 ohms, 10 w.
R193	72067	W.W. 5.1 ohms, ½ w.
R192	75513	Tone, vol., power switch.

TRANSFORMERS		
T1	75181	IF convertor Xformer.
T101	74589	First pix IF.
T102	74590	Second pix IF.
T103	76264	Third pix IF.
T104	73574	Fourth pix IF.
T105	71778	Sound trap.
T106	74144	Vertical oscillator.
T107	74950	Vertical output.
T108	75213	Horiz. oscillator.
T109	75585	High-voltage.
T110	75508	Power, 115V, 60 cycle.
T111	71424	Sound IF, dual winding.
	75211	Sound IF, single winding.
T112	75212	Sound discriminator.
T113	75520	Output Xformer.
T200	75509	Antenna matching, complete.
	73591	Antenna mat. coil, 2 required.
		MISCELLANEOUS
	75022	Speaker-8" P.M. (model 9T57)
	75520	Output Xformer (model 9T57).
	74974	Speaker-12" P.M. (models 9T77, 9T79).
	75520	Output Xformer. (models 9T77, 9T79).

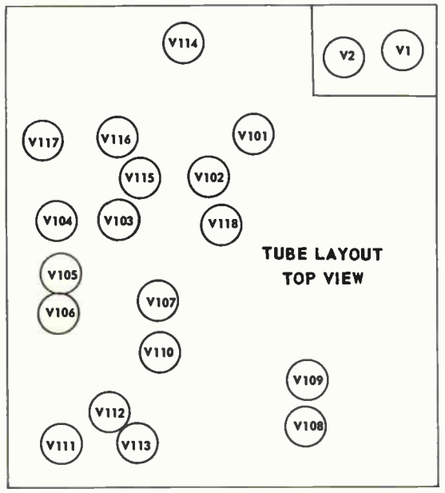

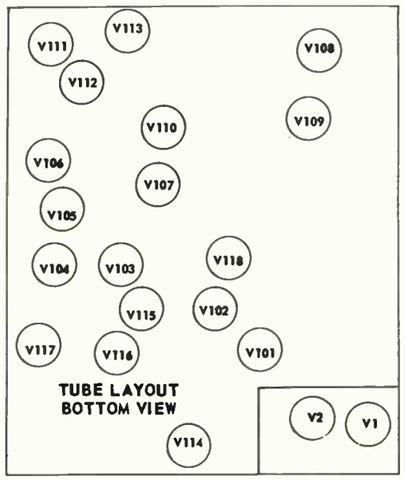

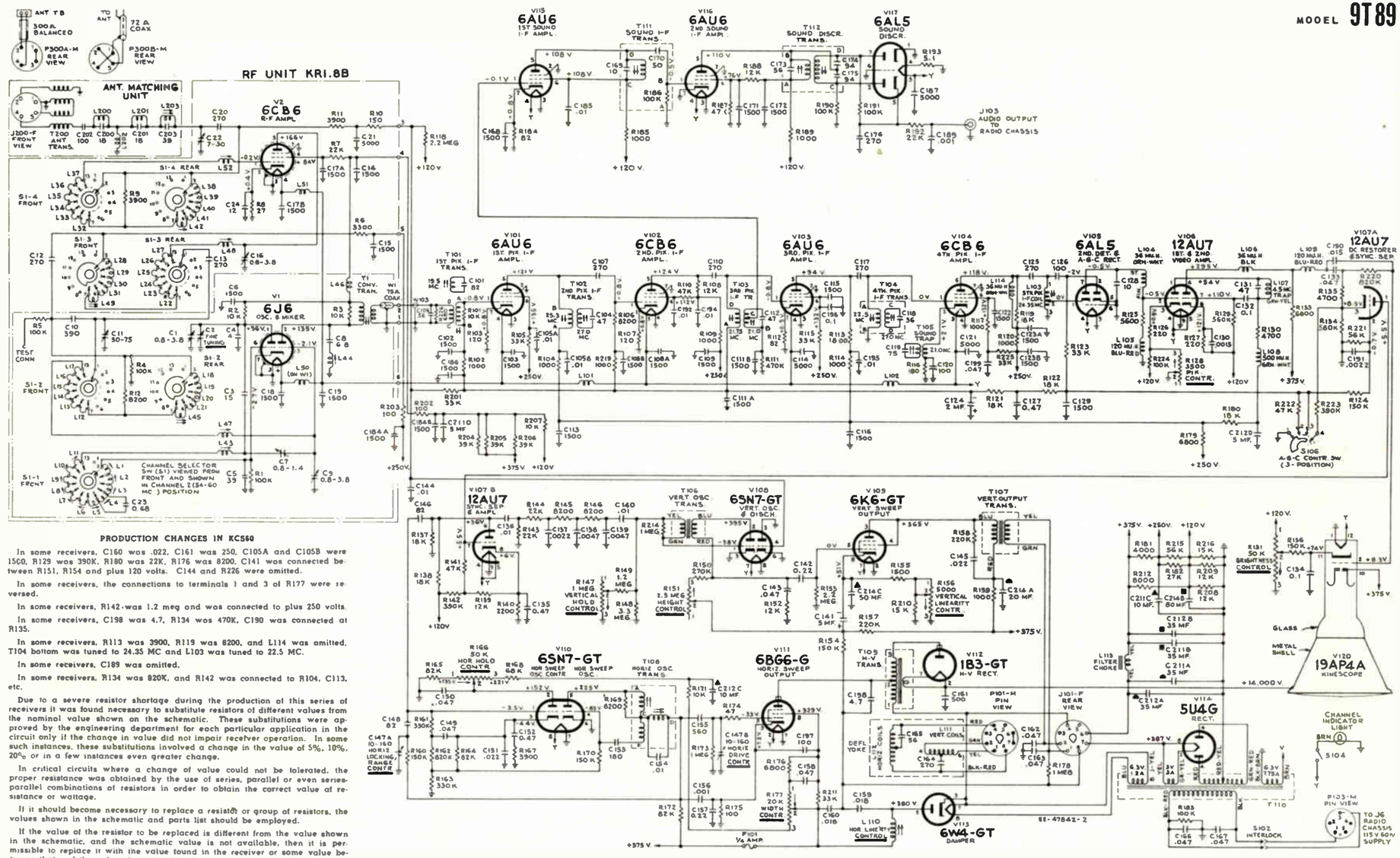

PRODUCTION CHANGES IN KCS60

In some receivers, C160 was .022, C161 was 250, C105A and C105B were 1500, R129 was 390K, R180 was 22K, R176 was 8200, C141 was connected between R151, R154 and plus 120 volts. C144 and R226 were omitted.

In some receivers, the connections to terminals 1 and 3 of R177 were reversed.

In some receivers, R142 was 1.2 meg and was connected to plus 250 volts.

In some receivers, C198 was 4.7, R134 was 470K, C190 was connected at R135.

In some receivers, R113 was 3900, R119 was 8200, and L114 was omitted. T104 bottom was tuned to 24.35 MC and L103 was tuned to 22.5 MC.

In some receivers, C189 was omitted.

In some receivers, R134 was 820K, and R142 was connected to R104, C113, etc.

Due to a severe resistor shortage during the production of this series of receivers it was found necessary to substitute resistors of different values from the nominal value shown on the schematic. These substitutions were approved by the engineering department for each particular application in the circuit only if the change in value did not impair receiver operation. In some such instances, these substitutions involved a change in the value of 5%, 10%, 20% or in a few instances even greater change.

In critical circuits where a change of value could not be tolerated, the proper resistance was obtained by the use of series, parallel or even series-parallel combinations of resistors in order to obtain the correct value of resistance or wattage.

If it should become necessary to replace a resistor or group of resistors, the values shown in the schematic and parts list should be employed.

If the value of the resistor to be replaced is different from the value shown in the schematic, and the schematic value is not available, then it is permissable to replace it with the value found in the receiver or some value between that and the value shown in the schematic. Some of the commercially available, low resistance value, molded body types are of wire wound construction. Such resistors should not be employed in the r-f unit, i-f or video sections as the inductive affect of these resistors may impair circuit operation.

For circuit diagram of other chassis used in these models see page 54.

REF. NO.	PART NO.	DESCRIPTION
		ELECTROLYTICS
C124	73747	2 mfd, 50 volts.
C141	28417	5 mfd, 450 volts.
C211	75510	4 sec: 35 35/450V 10/450V, 5/450V.
C212	75510	4 sec: 35-35/450V 10/450V, 5/450V.
C214	75592	3 sec: 20/450V, 80/200v, 50/50V.
C1	75184	Ceramic, w/adj. stud.
C2	75186	Ceramic, fine tuning plunger type.
C7	75172	Tubular, steatite, adj.
C11	75174	Ceramic, trimmer.
C22	75189	Adjustable.
C147	75217	Mica, trimmer, (dual).
		COILS
L51	73477	Choke coil.
L101	73477	Choke coil.
L102	73477	Choke coil.
L103	75210	Fifth pix IF w/adj core.
L104	75299	Peaking coil.
L105	75252	Peaking coil.
L106	71793	Peaking coil.
L107	75251	4.5 mc trap.
L108	75252	Peaking coil.
L109	75253	Peaking coil.
L110	71449	Horiz. linearity.
L111	74952	Deflection yoke.
L112		See L111.
L113	73154	Peaking coil.
L200	75242	IF trap.
L201		See L200.
L202	75241	Antenna shunt coil.
L203	75449	FM trap w/adj core & stud.
		RESISTORS
R128	75216	Pix & brightness.
R147	75215	Horiz. & vertical hold.
R151	71440	Height control.
R156	71441	Vertical linearity.
R177	75516	Width control.
R181	75512	W.W. 4000 ohms, 10 w.
R193	72067	W.W. 5.1 ohms, ½ w.
R212	75593	W.W. 8000 ohms, 15 w.
		TRANSFORMERS
T1	75181	Convertor Xformer.
T101	74589	First pix IF.
T102	74590	Second pix IF.
T103	76264	Third pix IF.
T104	73574	Fourth pix IF.
T105	71778	Sound trap.
T106	74144	Vertical oscillator.
T107	74950	Vertical output.
T108	75213	Horiz. oscillator.
T109	75585	High-voltage.
T110	75508	Power, 115V, 60 cycle.
T111	71424	Sound IF, dual winding.
	75211	Sound IF, single winding.
T112	75212	Sound discriminator.
T200	75509	Antenna matching Xformer complete.
	73591	Antenna mat. coil, 2 required.
		MISCELLANEOUS
	75681	Speaker-12" P.M.

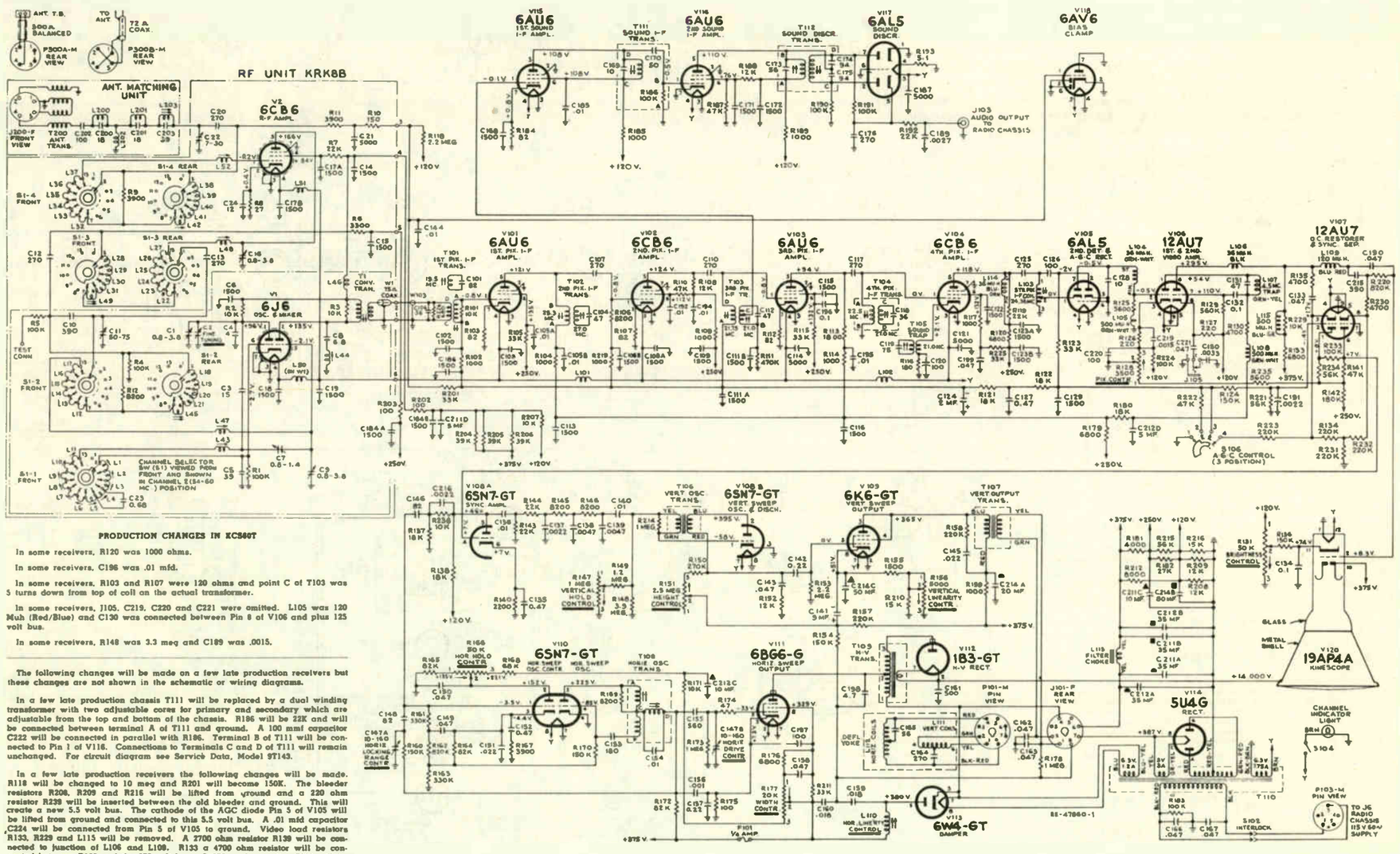

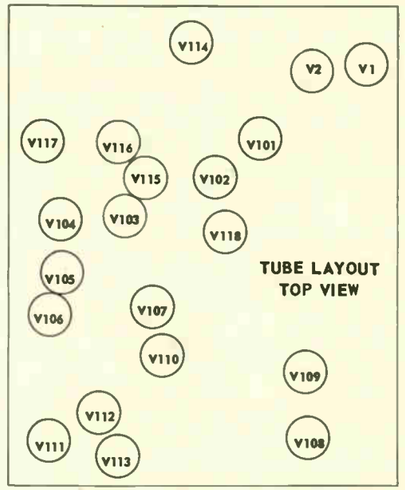

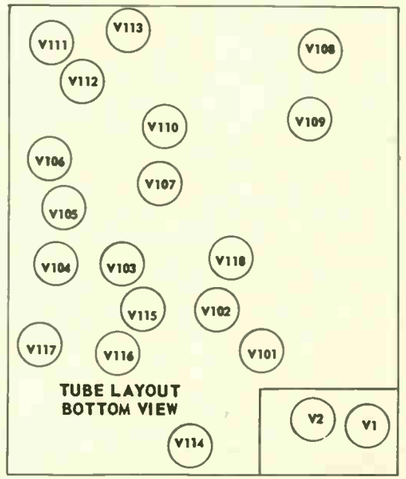

PRODUCTION CHANGES IN KCS60T

In some receivers, R120 was 1000 ohms.

In some receivers, C196 was .01 mfd.

In some receivers, R103 and R107 were 120 ohms and point C of T103 was 5 turns down from top of coil on the actual transformer.

In some receivers, J105, C219, C220 and C221 were omitted. L105 was 120 Muh (Red/Blue) and C130 was connected between Pin 8 of V106 and plus 125 volt bus.

In some receivers, R148 was 3.3 meg and C189 was .0015.

The following changes will be made on a few late production receivers but these changes are not shown in the schematic or wiring diagrams.

In a few late production chassis T111 will be replaced by a dual winding transformer with two adjustable cores for primary and secondary which are adjustable from the top and bottom of the chassis. R186 will be 22K and will be connected between terminal A of T111 and ground. A 100 mmf capacitor C222 will be connected in parallel with R186. Terminal B of T111 will be connected to Pin 1 of V116. Connections to Terminals C and D of T111 will remain unchanged. For circuit diagram see Service Data, Model 9T143.

In a few late production receivers the following changes will be made. R118 will be changed to 10 meg and R201 will become 150K. The bleeder resistors R208, R209 and R216 will be lifted from ground and a 220 ohm resistor R228 will be inserted between the old bleeder and ground. This will create a new 5.5 volt bus. The cathode of the AGC diode Pin 5 of V105 will be lifted from ground and connected to this 5.5 volt bus. A .01 mfd capacitor C224 will be connected from Pin 5 of V105 to ground. Video load resistors R133, R229 and L115 will be removed. A 2700 ohm resistor R139 will be connected to junction of L106 and L109. R133 a 4700 ohm resistor will be connected between R139 and the 375 volt bus. A 270 mmf capacitor C223 will be connected from the junction of R133, R139 and to Pin 8 of V107. C130 will be changed to .0033 mfd. For circuit diagram, see the Service Data for Model 9T143.

For circuit diagram of other chassis used in these models see page 53.

REF. NO.	PART NO.	DESCRIPTION
		ELECTROLYTICS
C124	73747	2 mfd 50 volts.
C141	27417	5 mfd, 450 volts.
C211	75510	4 sect: 35-35/450V 10/450V, 5/450V.
C212	75510	4 sect: 35-35/450V 10/450V, 5/450V.
C214	75592	3 sect: 20/450V 80/200V, 50/50V.
C1	75184	Ceramic, adj stud.
C2	75186	Ceramic, fine tuning plunger type.
C7	75172	Tubular, steatite, adj.
C11	75174	Ceramic, trimmer.
C22	75189	Adjustable.
C147	75217	Mica, trimmer, (dual).
		COILS
L51	73477	Choke coil.
L101	73477	Choke coil.
L102	73477	Choke coil.
L103	75210	Fifth pix IF w/adj core.
L104	75299	Peaking coil.
L105	75252	Peaking coil.
L106	71793	Peaking coil.
L107	75251	4.5 mc trap.
L108	75252	Peaking coil.
L109	75253	Peaking coil.
L110	71449	Horiz. linearity.
L111	74952	Deflection yoke.
L112		See L111.
L113	73154	Filter choke.
L114	76285	Peaking coil.
L115	76132	Peaking coil.
L200	75242	IF trap.
L201		See L200.
L202	75241	Antenna shunt coil.
L203	75449	FM trap w/adj core & stud.
		RESISTORS
R128	75216	Pix & brightness.
R147	75215	Horiz. & vertical hold.
R151	71440	Height control.
R156	71441	Vertical linearity.
R177	75516	Width control.
R181	75512	W.W. 4000 ohms, 10 w.
R193	72067	W.W. 5.1 ohms, ½ w.
R212	75593	W.W. 8000 ohms, 15 w.
		TRANSFORMERS
T1	75181	Convertor Xformer.
T101	74589	First pix IF.
T102	74590	Second pix IF.
T103	76264	Third pix IF.
T105	71778	Sound trap.
T106	74144	Vertical oscillator.
T107	74950	Vertical output.
T108	75213	Horiz oscillator.
T109	75585	High-voltage.
T110	75508	Power, 115V, 60 cycle.
T111	71424	Sound IF, dual winding.
	75211	Sound IF, single winding.
T112	75212	Sound discriminator.
T200	75509	Antenna matching Xformer complete.
	73591	Antenna mat. coil, 2 required.
		MISCELLANEOUS
	75681	Speaker-12" P.M.

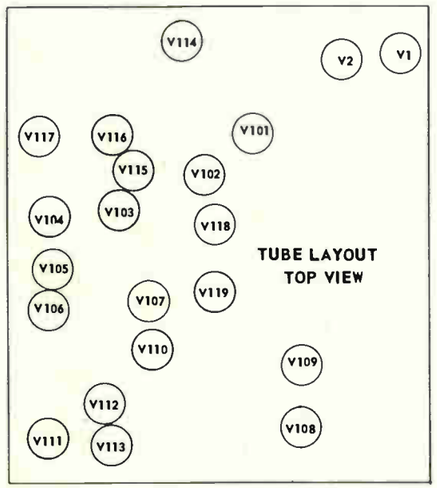

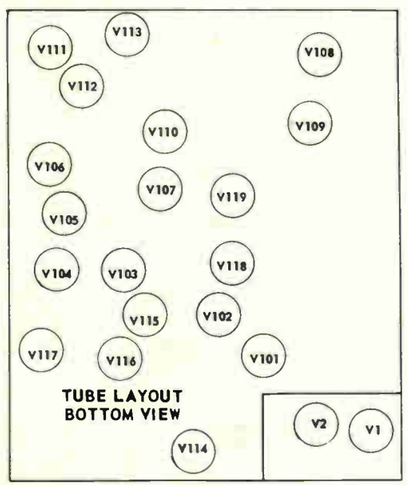

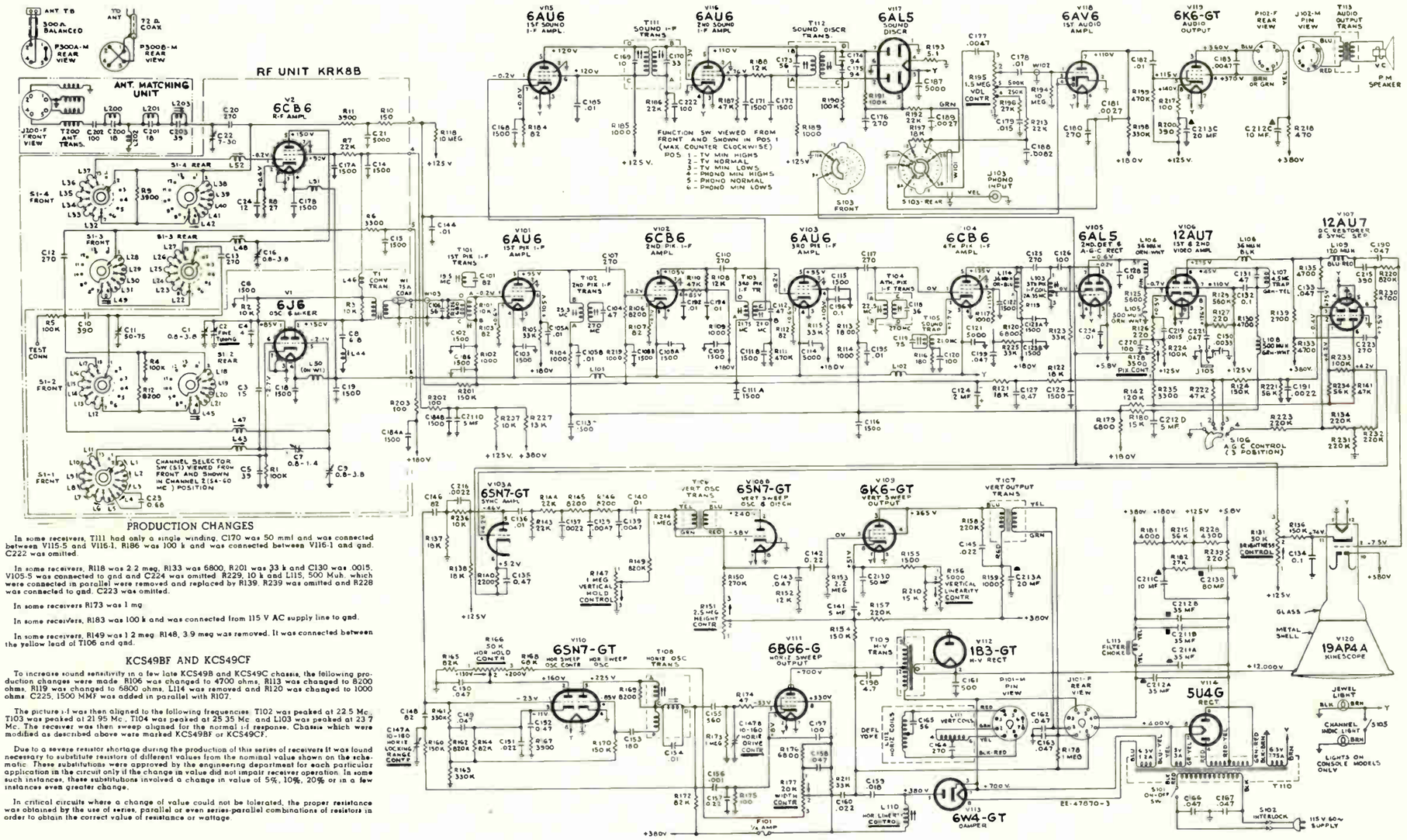

PRODUCTION CHANGES

In some receivers, T111 had only a single winding. C170 was 50 mmf and was connected between V115-5 and V116-1. R186 was 100 k and was connected between V116-1 and gnd. C222 was omitted.

In some receivers, R118 was 2.2 meg, R133 was 6800, R201 was 33 k and C130 was .0015. V105-5 was connected to gnd and C224 was omitted. R229, 10 k and L115, 500 Muh, which were connected in parallel were removed and replaced by R139. R239 was omitted and R228 was connected to gnd. C223 was omitted.

In some receivers R173 was 1 meg.

In some receivers, R183 was 100 k and was connected from 115 V AC supply line to gnd.

In some receivers, R149 was 1.2 meg. R148, 3.9 meg was removed. It was connected between the yellow lead of T106 and gnd.

KCS49BF AND KCS49CF

To increase sound sensitivity in a few late KCS49B and KCS49C chassis, the following production changes were made. R106 was changed to 4700 ohms. R113 was changed to 8200 ohms. R119 was changed to 6800 ohms. L114 was removed and R120 was changed to 1000 ohms. C225, 1500 MMF was added in parallel with R107.

The picture i-f was then aligned to the following frequencies. T102 was peaked at 22.5 Mc. T103 was peaked at 21.95 Mc. T104 was peaked at 25.35 Mc. and L103 was peaked at 23.7 Mc. The receiver was then sweep aligned for the normal i-f response. Chassis which were modified as described above were marked KCS49BF or KCS49CF.

Due to a severe resistor shortage during the production of this series of receivers it was found necessary to substitute resistors of different values from the nominal value shown on the schematic. These substitutions were approved by the engineering department for each particular application in the circuit only if the change in value did not impair receiver operation. In some such instances, these substitutions involved a change in value of 5%, 10%, 20% or in a few instances even greater change.

In critical circuits where a change of value could not be tolerated, the proper resistance was obtained by the use of series, parallel or even series-parallel combinations of resistors in order to obtain the correct value of resistance or wattage.

It it should become necessary to replace a resistor or group of resistors, the values shown in the schematic and parts list should be employed.

If the value of the resistor to be replaced is different from the value shown in the schematic, and the schematic value is not available, then it is permissible to replace it with the value found in the receiver or some value between that and the value shown in the schematic. Some of the commercially available, low resistance value, molded body types are of wire wound construction. Such resistors should not be employed in the r-f unit, i-f or video sections as the inductive effect of these resistors may impair circuit operation.

For circuit diagram of other chassis used in these models see page 56.

REF. NO.	PART NO.	DESCRIPTION
		ELECTROLYTICS
C124	73747	2 mfd, 50 volts.
C141	28417	5 mfd, 450 volts.
C211	75510	4 sec: 35-35/450V, 10/450V, 5/450V.
C212	75510	4 sec: 35-35/450V, 10/450V, 5/450V.
C213	76611	4 sec: 20/450V, 80/200V 20/200V, 50/50V.
C1	75184	Ceramic, w/adj stud.
C2	75186	Ceramic, fine tuning plunger type.
C7	75172	Tubular, steatite adj.
C11	75174	Ceramic, trimmer.
C22	75189	Adjustable.
C147	75217	Mica, trimmer, dual.
		COILS
L51	73477	Choke coil.
L101	73477	Choke coil.
L102	73477	Choke coil.
L103	75210	Fifth pix IF w/adj coil.
L104	75299	Peaking coil.
L105	75252	Peaking coil.
L106	71793	Peaking coil.
L107	75251	4.5 mc trap.
L108	75252	Peaking coil.
L109	75253	Peaking coil.
L110	71449	Horiz. linearity.
L111	74952	Deflection yoke.
L112		See L111.
L113	76284	Filter choke.
L114	76285	Peaking coil
L200	75242	IF trap.
L201		See L200.
L202	75241	Antenna shunt coil.
L203	75449	FM trap w/adj core & stud.
		RESISTORS
R128	75216	Pix & brightness for 9T105 only.
	75514	Pix & brightness, channel light switch.
R147	75215	Horiz. & vertical hold.
R151	71440	Height control.
R156	71441	Vertical linearity.
R177	75516	Width control.
R181	75512	4000 ohms, 10 w.
R193	72067	W.W. 5.1 ohms, ½ w.
R195	76171	Vol., power switch.
R227	76065	W.W. 13,000 ohms, 5 w.
R228	76066	W.W. 4300 ohms, 5 w.
R239	76304	W.W. 220 ohms, ½ w.
		TRANSFORMERS
T1	75181	Convertor Xformer.
T101	74589	First pix IF.
T102	74590	Second pix IF.
T103	76264	Third pix IF.
T104	73574	Fourth pix IF.
T105	71778	Sound trap.
T106	74144	Vertical oscillator.
T107	74950	Vertical output.
T108	75213	Horiz. oscillator.
T109	75585	High-voltage.
T110	75508	Power, 117V, 60 cycle.
T111	71424	Sound IF.
T112	75212	Sound discriminator.
T113	75520	Audio output.
T200	75509	Antenna matching Xformer complete.
	73591	Antenna mat. coil, 2 required.
		MISCELLANEOUS
5103	76170	Tone, phono switch.
5106	76010	AGC switch.
	75022	Speaker-8" P.M. (model 9T105)
	75520	Output Xformer (model 9T105)
	74974	Speaker-12" P.M. (models 9T126, 9T128)
	75520	Output Xformer. (models 9T126, 9T128)

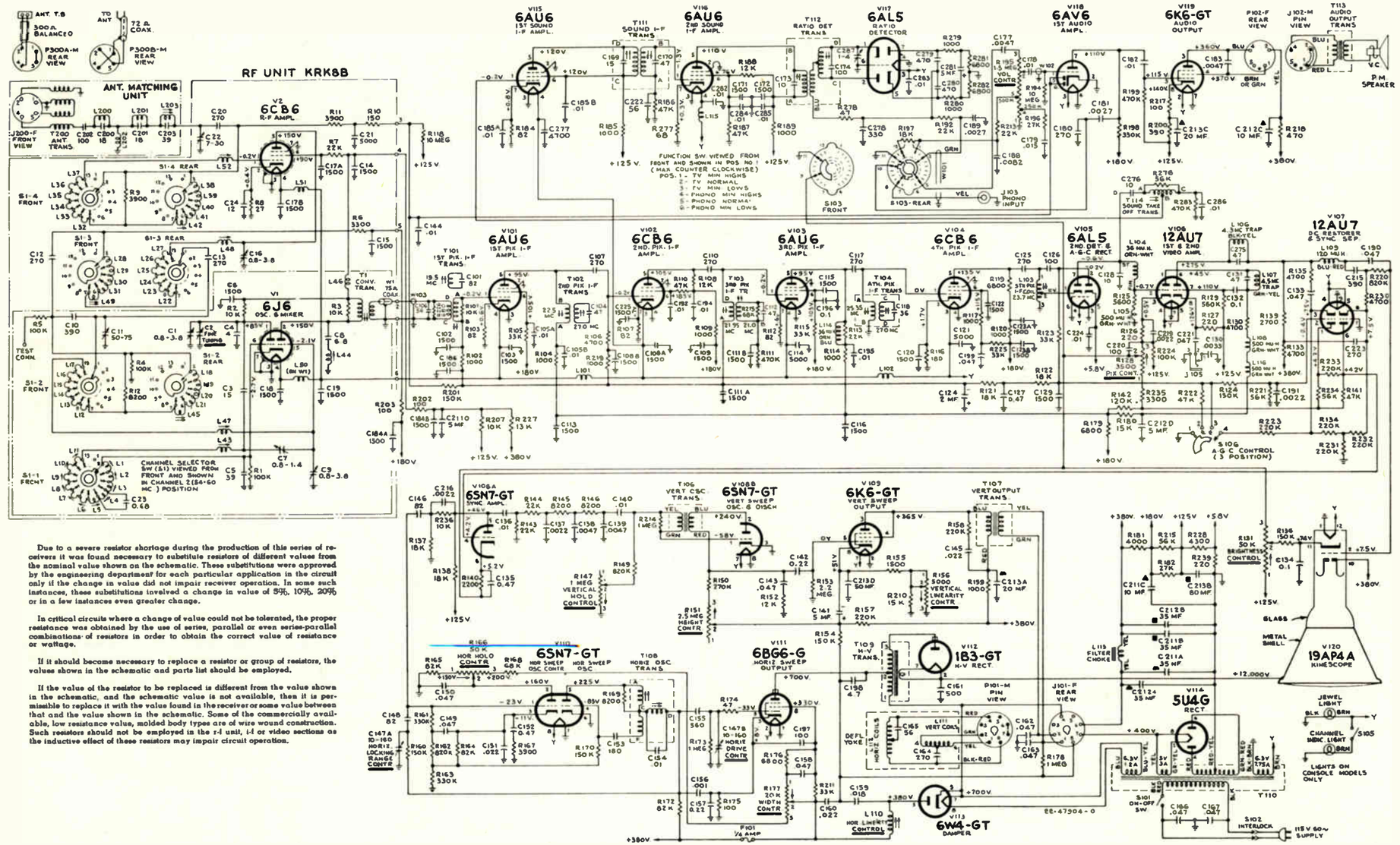

Due to a severe resistor shortage during the production of this series of receivers it was found necessary to substitute resistors of different values from the nominal value shown on the schematic. These substitutions were approved by the engineering department for each particular application in the circuit only if the change in value did not impair receiver operation. In some such instances, these substitutions involved a change in value of 5%, 10%, 20% or in a few instances even greater change.

In critical circuits where a change of value could not be tolerated, the proper resistance was obtained by the use of series, parallel or even series-parallel combinations of resistors in order to obtain the correct value of resistance or wattage.

If it should become necessary to replace a resistor or group of resistors, the values shown in the schematic and parts list should be employed.

If the value of the resistor to be replaced is different from the value shown in the schematic, and the schematic value is not available, then it is permissible to replace it with the value found in the receiver or some value between that and the value shown in the schematic. Some of the commercially available, low resistance value, molded body types are of wire wound construction. Such resistors should not be employed in the r-f unit, i-f or video sections as the inductive effect of these resistors may impair circuit operation.

For circuit diagram of other chassis used in these models see page 55.

REF. NO.	PART NO.	DESCRIPTION
		ELECTROLYTICS
C124	73747	2 mfd, 50 volts.
C141	28417	5 mfd, 450 volts.
C211	75510	4 sec: 35-35/450V, 10/450V, 5/450V.
C212	75511	4 sec: 35-35/450V 10/450V, 5/450V.
C213	75511	4 sec: 20/450V, 80/200V 20/200V, 50/50V.
C1	75184	Ceramic, w/adj. stud.
C2	75186	Ceramic, fine tuning plunger type.
C7	75172	Tubular, steatite, adj.
C11	75174	Ceramic, trimmer.
C22	75189	Adjustable.
C147	75217	Mica, trimmer, dual.
		COILS
L51	73477	Choke coil.
L101	73477	Choke coil.
L102	73477	Choke coil.
L103	75210	Fifth pix IF w/adj coil.
L104	75299	Peaking coil.
L105	75252	Peaking coil.
L106	76704	4.3 mc trap.
L107	75251	4.5 mc trap.
L114	75253	Peaking coil.
L115	74477	Choke coil.
L116	75252	Peaking coil.
L200	75242	IF trap.
L201		See L200.
L202	75241	Antenna shunt coil.
L203	75449	FM trap w/adj core & stud.
		RESISTORS
R128	75216	Pix & brightness for model 9T105 only.
	75514	Pix & brightness, channel light switch.
R147	75215	Horiz. & vertical hold.
R151	71440	Height control.
R156	71441	Vertical linearity.
R177	75516	Width control.
R181	75512	W.W. 4000 ohms, 10 w.
R195	76171	Vol., power switch.
R227	76065	W.W. 13,000 ohms, 5 w.
R228	76066	W.W. 4300 ohms, 5 w.
R239	76304	W.W. 220 ohms, ½ w.
		TRANSFORMERS
T1	75181	Convertor Xformer.
T101	74589	First pix IF.
T102	74590	Second pix IF.
T103	76264	Third pix IF.
T104	73574	Fourth pix IF.
T105	71778	Sound trap.
T106	74144	Vertical oscillator.
T107	74950	Vertical output.
T108	75213	Horiz. oscillator.
T109	75585	High-voltage.
T110	75508	Power, 117V, 60 cycle.
T111	76438	Sound IF.
T112	76702	Ratio detector.
T113	75520	Audio output.
T114	76703	Sound take-off.
T200	75509	Antenna matching Xformer complete.
	73591	Antenna mat. coil, 2 required.
		MISCELLANEOUS
75022		Speaker-8" P.M. (model 9T105)
75520		Output Xformer. (model 9T105)
74974		Speaker-12" P.M. (models 9T126, 9T128)
75520		Output Xformer. (models 9T126, 9T128)

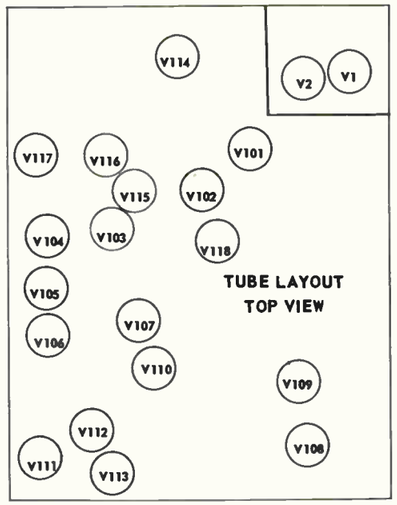

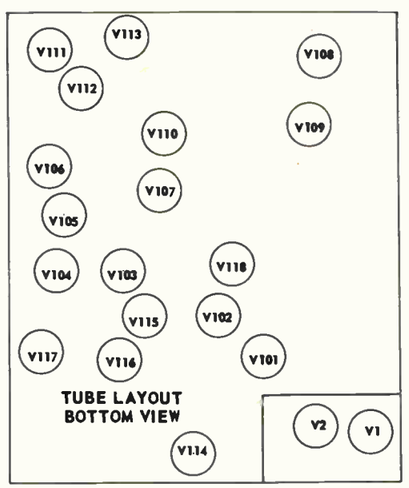

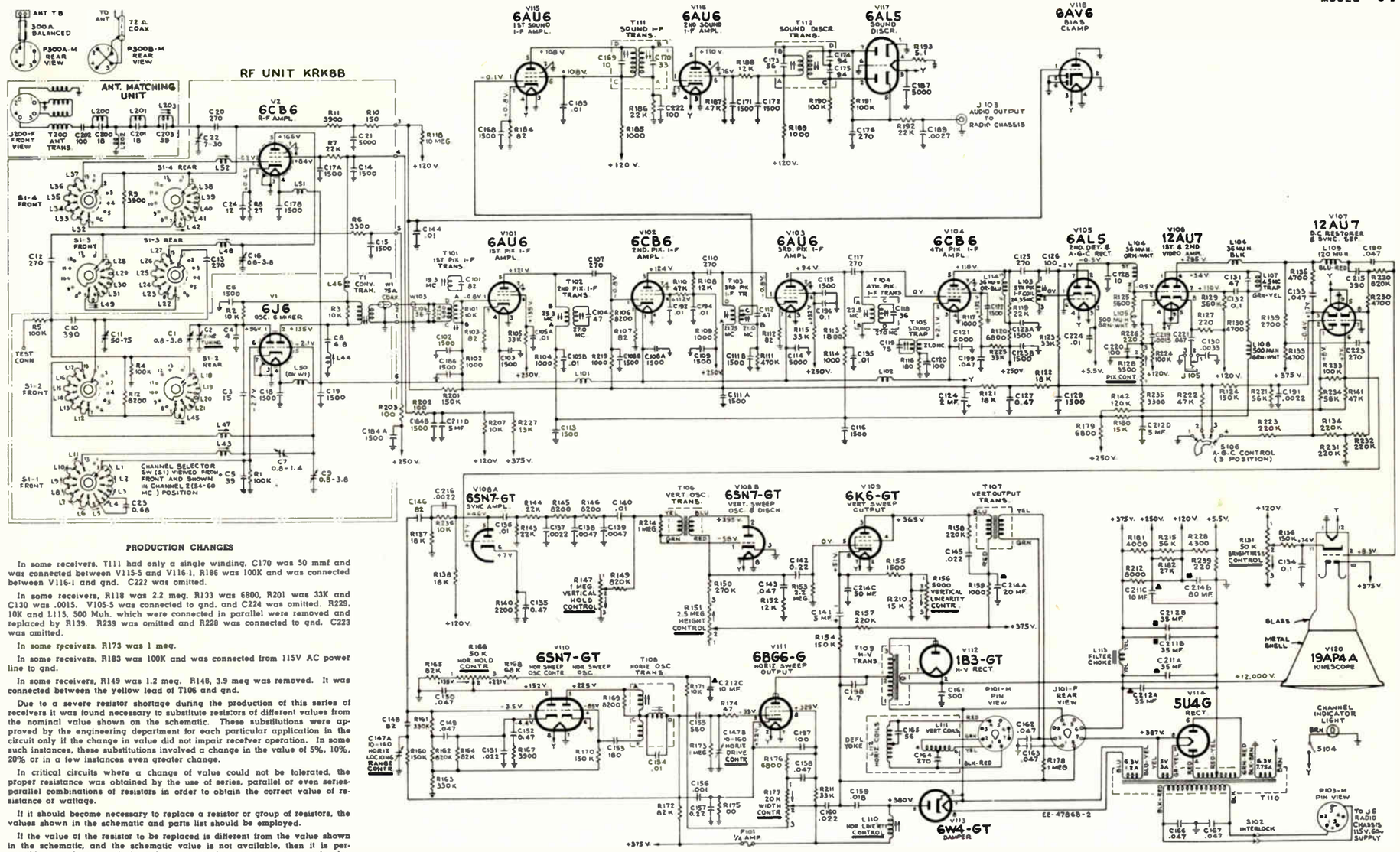

PRODUCTION CHANGES

In some receivers, T111 had only a single winding, C170 was 50 mmf and was connected between V115-5 and V116-1, R186 was 100K and was connected between V116-1 and gnd. C222 was omitted.

In some receivers, R118 was 2.2 meg, R133 was 6800, R201 was 33K and C130 was .0015. V105-5 was connected to gnd, and C224 was omitted. R229, 10K and L115, 500 Muh. which were connected in parallel were removed and replaced by R139. R239 was omitted and R228 was connected to gnd. C223 was omitted.

In some receivers, R173 was 1 meg.

In some receivers, R183 was 100K and was connected from 115V AC power line to gnd.

In some receivers, R149 was 1.2 meg. R148, 3.9 meg was removed. It was connected between the yellow lead of T106 and gnd.

Due to a severe resistor shortage during the production of this series of receivers it was found necessary to substitute resistors of different values from the nominal value shown on the schematic. These substitutions were approved by the engineering department for each particular application in the circuit only if the change in value did not impair receiver operation. In some such instances, these substitutions involved a change in the value of 5%, 10%, 20% or in a few instances even greater change.

In critical circuits where a change of value could not be tolerated, the proper resistance was obtained by the use of series, parallel or even series-parallel combinations of resistors in order to obtain the correct value of resistance or wattage.

If it should become necessary to replace a resistor or group of resistors, the values shown in the schematic and parts list should be employed.

If the value of the resistor to be replaced is different from the value shown in the schematic, and the schematic value is not available, then it is permissible to replace it with the value found in the receiver or some value between that and the value shown in the schematic. Some of the commercially available, low resistance value, molded body types are of wire wound construction. Such resistors should not be employed in the r-f unit, i-f or video sections as the inductive effect of these resistors may impair circuit operation.

REF. NO.	PART NO.	DESCRIPTION
		ELECTROLYTICS
C124	73747	2 mfd, 50 volts.
C141	28417	5 mfd, 450 volts.
C211	75510	4 sec: 35-35/450V, 10/450V, 5/450V.
C212	75510	4 sec: 35-35/450V 10/450V, 5/450V.
C214	75592	3 sec: 20/450V, 80/200V, 50/50V.
C1	75184	Ceramic, w/adj. stud.
C2	75186	Ceramic, fine tuning plunger type.
C7	75172	Tubular, steatite, adj.
C11	75174	Ceramic, trimmer.
C22	75189	Adjustable.
C147	75217	Mica, trimmer, dual.
		COILS
L51	73477	Choke coil.
L101	73477	Choke coil.
L102	73477	Choke coil.
L103	75210	Fifth pix IF. Adj. core.
L104	75299	Peaking coil.
L105	75252	Peaking coil.
L106	71793	Peaking coil.
L107	75251	4.5 mc trap.
L108	75252	Peaking coil.
L109	75253	Peaking coil.
L110	71449	Horiz. linearity.
L111	74952	Deflection yoke.
L112		See L111.
L113	76284	Filter reactor.
L114	76285	Peaking coil.
L200	75242	IF trap.
L201		See L200.
L202	75241	Antenna shunt coil.
L203	75449	FM trap w/adj core & stud.
		RESISTORS
R128	75216	Pix & brightness.
R147	75215	Horiz. & vertical hold.
R151	71440	Height control.
R156	71441	Vertical linearity.
R177	75516	Width control.
R181	75512	W.W. 4000 ohms, 10 w.
R193	72067	W.W. 5.1 ohms, ½w.
R212	75593	W.W. 8000 ohms, 10 w.
R227	76065	W.W. 13,000 ohms, 5 w.
R228	76066	W.W. 4300 ohms, 5 w.
R239	76304	W.W. 220 ohms, ½ w.
		TRANSFORMERS
T1	75181	Convertor Xformer.
T101	74589	First pix IF.
T102	74590	Second pix IF.
T103	76264	Third pix IF.
T104	73574	Fourth pix IF.
T105	71778	Sound trap.
T106	74144	Vertical oscillator.
T107	74950	Vertical output.
T108	75213	Horiz. oscillator.
T109	75585	High-voltage.
T110	75508	Power, 117V, 60 cycle.
T111	71424	Sound IF.
T112	75212	Sound discriminator.
T200	75509	Antenna matching Xformer complete.
	73591	Antenna mat. coil, 2 required.

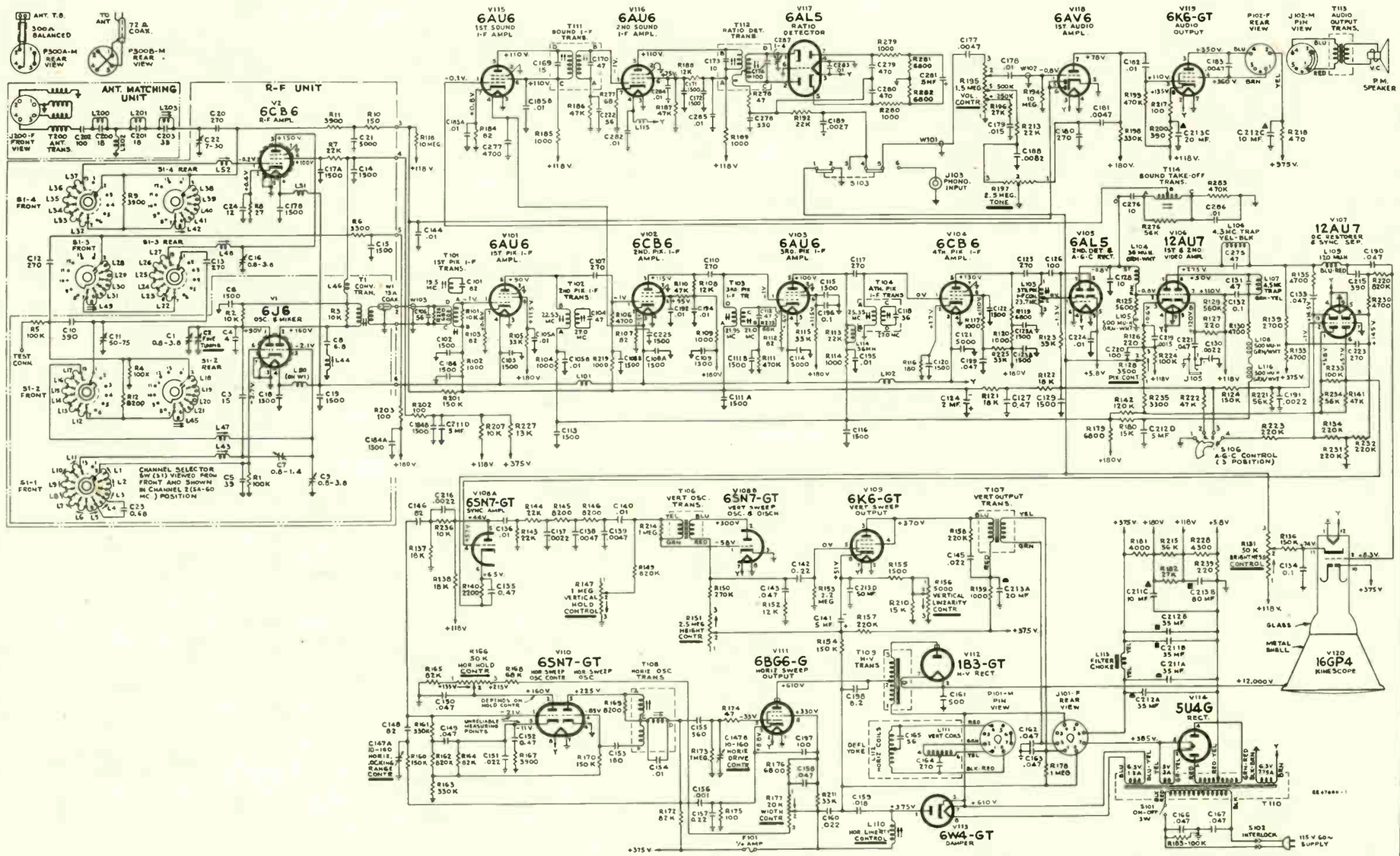

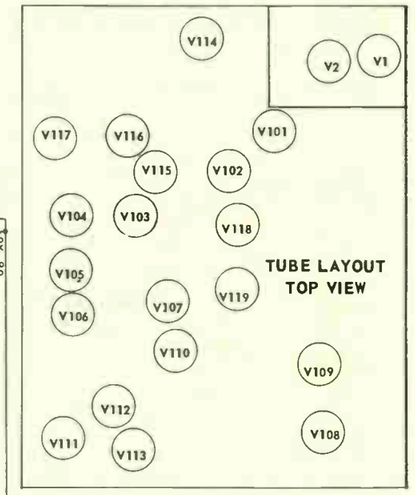

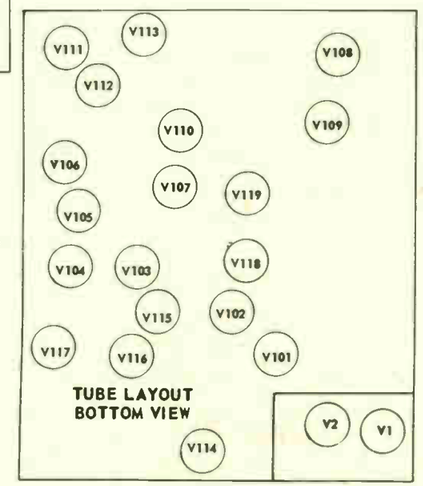

REF. NO.	PART NO.	DESCRIPTION
		ELECTROLYTICS
C124	73747	2 mfd, 50 volts.
C141	28417	5 mfd, 450 volts.
C211	75510	4 sect 35-35/450V 10/450V, 5/450V.
C212	75510	4 sect 35-35/450V 10/450V, 5/450V.
C213	75511	4 sect 20/450V, 80/200V 20/200V, 50/50V.
C1	75184	Ceramic, w/adj stud.
C2	75186	Ceramic, fine tuning plunger type.
C7	75172	Tubular, steatite, adj.
C11	75174	Ceramic, trimmer.
C22	75189	Adjustable.
C147	75217	Mica, trimmer, dual.
		COILS
L51	73477	Choke coil.
L101	73477	Choke coil.
L102	73477	Choke coil.
L103	75210	Fifth pix IF w/adj core.
L104	75299	Peaking coil.
L105	75252	Peaking coil.
L106	76704	4.3 mc trap.
L107	75251	4.5 mc trap.
L108	75252	Peaking coil.
L109	75253	Peaking coil.
L110	71449	Horiz. linearity.
L111	74952	Deflection yoke.
L112		See L111.
L113	73154	Filter choke.
L114	76285	Peaking coil.
L115	73477	Choke coil.
L116	75252	Peaking coil.
L200	75242	IF trap.
L201		See L200.
L202	75241	Antenna shunt coil.
L203	75449	FM trap w/adj core & stud.
		RESISTORS
R128	75216	Pix & brightness.
R147	75215	Horiz. & vertical hold.
R151	76448	Height control.
R156	76701	Vertical linearity.
R177	75516	Width control.
R181	75512	W.W. 4000 ohms, 10 w.
R195	75513	Tone, vol., power switch.
R227	76065	W.W. 13,000 ohms, 5 w.
R228	76066	W.W. 4300 ohms, 5 w.
R239	76304	W.W. 220 ohms, ½ w.
		TRANSFORMERS
T1	75181	IF convertor Xformer.
T101	74589	First pix IF.
T102	74590	Second pix IF.
T103	76264	Third pix IF.
T104	73574	Fourth pix IF.
T106	74144	Vertical oscillator.
T107	74950	Vertical output.
T108	75213	Horiz. oscillator.
T109	75519	High-voltage.
T110	75508	Power, 115V, 60 cycle.
T111	76438	Sound IF.
T112	76702	Ratio detector w/adj cores.
T114	76703	Sound take-off.
T200	75509	Antenna matching Xformer. complete.
	73591	Antenna mat. coil, 2 required.

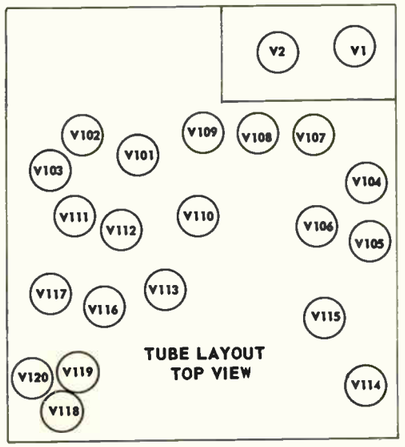

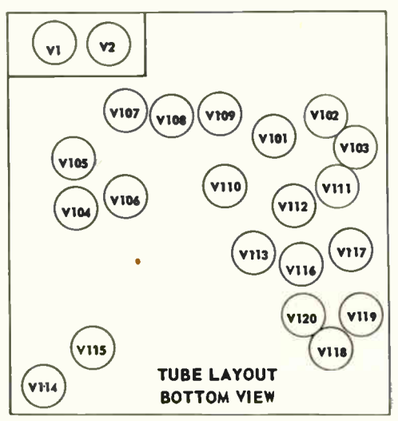

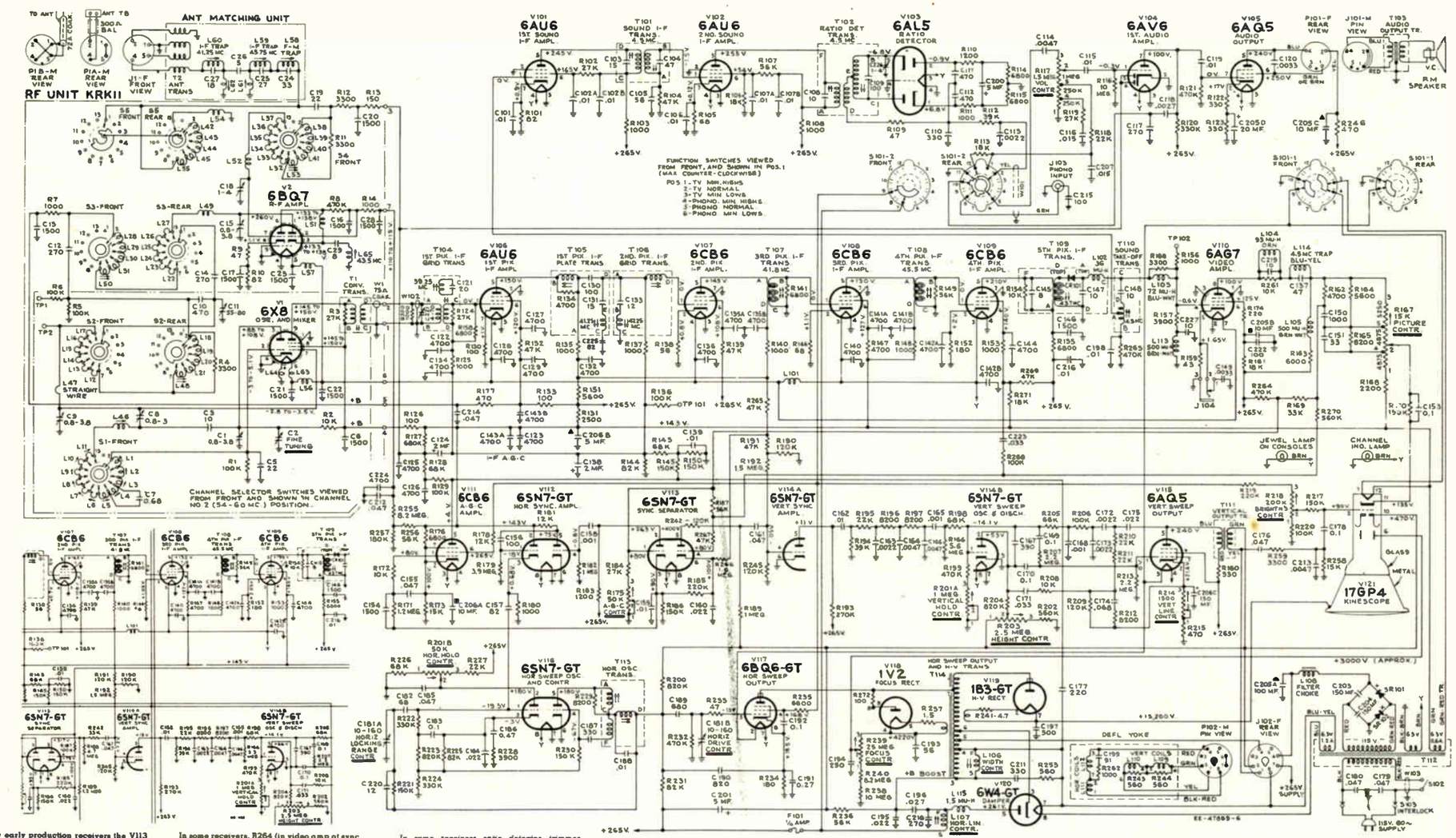

In a few early production receivers the V113 sync separator circuit was wired as shown in the above partial schematic diagram.

In some receivers, focus bleeder resistors R238 was 12 meg and R240 was 15 meg. In some receivers, R238 and R240 are combined into one 18 meg resistor.

In some receivers, R264 (in video amp at sync take-off) was 220 k.

In some receivers, r-f unit terminal 7 by-pass capacitor C224 was omitted.

In some receivers, terminal C of I-F trans. T105 was connected to ground and C225 was omitted.

In some receivers ratio detector trimmer C226 was omitted

In some receivers, C193 was connected from V118-5 to ground.

In some receivers, a capacitor, C152, 7 mmf was connected between terminals 1 and 4 of the picture control R167.

In some receivers, the V110 screen resistor R174 was omitted.

In some receivers the r-f unit was wired as shown in the partial schematic shown on page 13. R-F units wired as shown above are marked "M1".

In some receivers, R300 across T104 A and B was omitted.

In some receivers a 30 mfd capacitor C202 was connected between V115-6 and V115-2 and a resistor R216, 470 ohms was connected between V115-6 and the 265 volt bus.

In some receivers, the junction of R209 and R212 near V115 was connected to ground.

In some receivers a 22 k resistor, R142 was connected from V110-8 to junction of L105, L114.

In some receivers, C227 (at video amp) was omitted.

In some receivers, R272 at V118 was omitted.

In some receivers, R271 in the fourth pix i-f screen circuit was omitted.

In some receivers integrator resistor R185 was 3.3 megs.

REF. NO.	PART NO.	DESCRIPTION
		ELECTROLYTICS
G124	75742	2 mfd, 10 ovlts
C138	75742	2 mfd, 10 volts.
C200	74521	5 mfd, 50 volts.
C201	28417	5 mfd, 450 volts.
C203	75520	150 mfd, 200 volts.
C204	75220	150 mfd, 200 volts.
C205	76451	4 sec: 100/350V, 10-10/350V, 20/50V.
C206	75218	3 sec: 10/350V, 5/350V, 150/50V.
C1	75184	Ceramic, w/adj stud.
C2	75186	Ceramic, fine tuning plunger type.
C8	76545	Tubular, steatite, adj. (early production).
	76781	Tubular, steatite, adj. (prod. marked M1.)
C9	75184	Ceramic, adj. stud.
C11	76527	Mica, trimmer.
C18	76532	Adjustable, trimmer, steatite.
C181	75217	Mica, trimmer, dual.
C226	76800	Adjustable, trimmer, steatite.
CR101	76675	Pix detector crystal rectifier.
		COILS
L57	73477	Choke coil.
L58	76540	FM trap w/adj core.
L59	76541	IF trap w/core.
L60	76542	IF trap w/core.
L61	76537	Shunt w/adj core.
L62	76538	Shunt w/adj core.
L63	76763	Filament choke coil.
L64	76763	Filament choke coil.
L65	76535	IF trap.
L101	73477	Choke coil.
L103	76646	Peaking coil.
L104	72619	Peaking coil.
L105	75252	Peaking coil.
L106	76441	Width complete adj core.
L107	76442	Horiz. linearity w/adj core.
L108	76498	Filter choke.
L109	76616	Deflection yoke w/6 contact male connector.
L110		See L109.
L111		See L109.
L112		See L109.
L113	75252	Peaking coil.
L114	76482	4.5 mc trap.
L115	76640	RF choke.
		RESISTORS
R117	76171	Volume & power switch.
R122	76465	W.W. 330 ohms, 1 w.
R123	76465	W.W. 330 ohms, 1 w.
R131	76469	W.W. 2500 ohms, 10 w.
R151	76390	W.W. 5600 ohms, 5 w.
R163	76638	W.W. 6000 ohms, 10 w.
R167	76445	Picture control.
R175	76447	AGC control.
R201	76443	Horiz. & vertical hold.
R203	76448	Height control.
R214	76449	Vertical linearity.
R218	76444	Brightness control.
R234	76639	W.W. 180 ohms, 2 w.
R237	76468	W.W. 5.1 ohms, 1/3 w.
R239	76503	Focus control.
R241	72633	W.W. 4.7 ohms, 1/3 w.
		TRANSFORMERS
T1	76528	Converter.
T2	76536	Antenna mat. Xformer complete.
T101	76438	Sound IF.
T102	76439	Ratio detector w/adj cores.
T104	76432	First pix IF. Grid w/adj cores.
T105	76434	First pix IF plate w/adj cores.
T106	76435	Second pix IF, grid w/adj cores.
T107	76433	3rd or 4th pix IF.
T108	76433	3rd or 4th pix IF.
T109	76436	Fifth pix IF.
T110	76437	Sound take-off w/adj cores.
T111	76431	Vertical output.
T112	76429	Power, 115V, 60 cycle.
T113	76440	Horiz. oscillator.
T114	76430	High-voltage.
		MISCELLANEOUS
SR101	76452	Selenium rectifier.
SR102	76452	Selenium rectifier.
	75520	Output Xformer. (971490-2W).
	75520	Output Xformer, for models 17T172 & 17T173.
	75520	Output Xformer, model 17T172.

17T172K 17T173K 17T174K MODELS

Chassis KCS 66 D

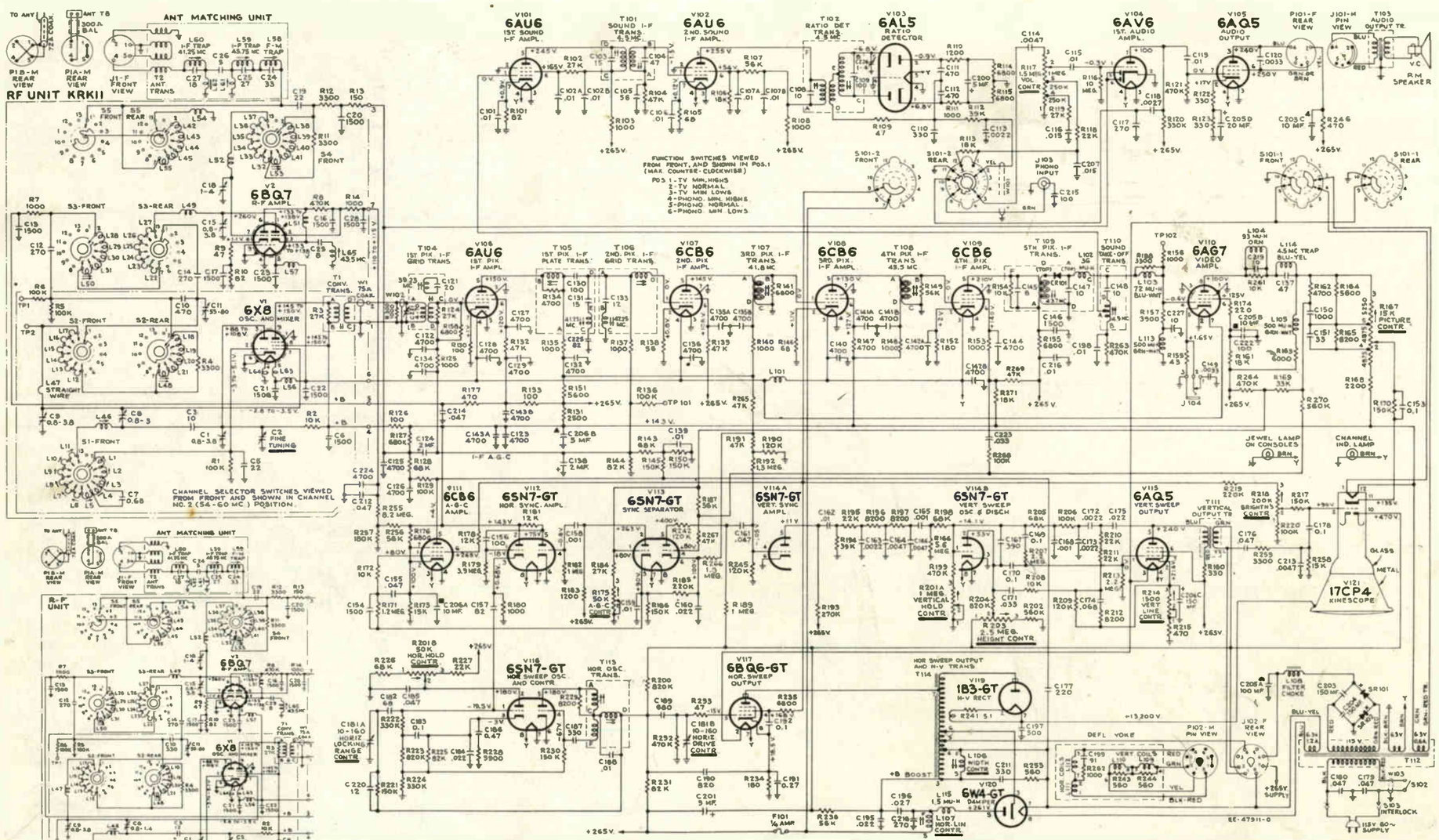

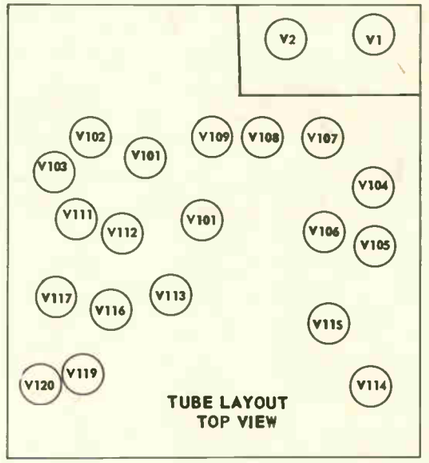

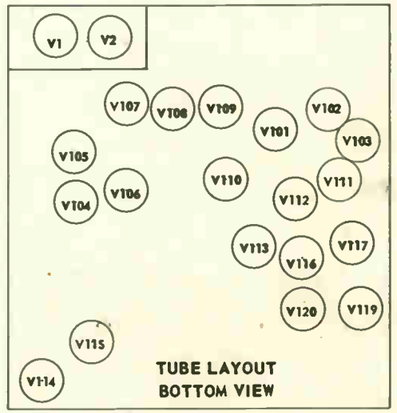

In early production units of all models, the r-f unit was wired as shown in the partial schematic insert to the left. All r-f units wired as shown in figures 19 and 20 are coded "M1".

REF. NO.	PART NO.	DESCRIPTION
		ELECTROLYTICS
C124	76742	2 mfd, 10 volts.
C138	76742	2 mfd, 10 volts.
C200	74521	5 mfd, 59 volts.
C201	28417	5 mfd, 450 volts.
C203	75220	150 mfd, 200 volts.
C204	75220	150 mfd, 200 volts.
C205	76451	4 sec: 100/350V, 10-10/350V, 20/50V.
C206	75218	3 sec: 10/350V, 5/350V, 150/50V.
C1	75184	Ceramic, w/adj stud.
C2	75186	Ceramic fine tuning plunger type.
C8	76545	Tubular, steatite, adj. (early production)
	76781	Tubular, steatite, adj. (prod. marked M1)
C9	75184	Ceramic, w/adj stud.
C11	76527	Mica, trimmer.
C18	76532	Adjustable, trimmer, steatite.
C181	75217	Mica, trimmer, dual.
C197	76461	Ceramic.
C225	76800	Adjustable, steatite, trimmer.
CR101	76675	Pix detector crystal rectifier.
		COILS
L57	73477	Choke coil.
L58	76540	FM trap w/adj core.
L59	76541	IF trap w/core.
L60	76542	IF trap w/core.
L61	76537	Shunt w/adj core.
L62	76538	Shunt w/adj core.
L63	76763	Filament choke coil.
L64	76763	Filament choke coil.
L65	76535	IF trap.
L101	73477	Choke coil.
L103	73477	Peaking coil.
L104	76646	Peaking coil.
L105	75252	Peaking coil.
L106	76441	Width complete w/adj core.
L107	76442	Horiz. linearity w/adj core.
L108	76498	Filter choke.
L109	76616	Deflection yoke w/y contact male connector.
L110		See L109.
L111		See L109.
L112		See L109.
L113	75252	Peaking coil.
L114	76482	4.5 mc trap.
L115	76640	RF choke.
		RESISTORS
R117	76171	Volume, power switch.
R122	76465	W.W. 330 ohms, 1 w.
R123	76465	W.W. 330 ohms, 1 w.
R131	76469	W.W. 2500 ohms, 10 w.
R151	76390	W.W. 5600 ohms, 5 w.
R163	76638	W.W. 6000 ohms, 10 w.
R167	76445	Picture control.
R175	76447	AGC control.
R201	76443	Horiz. & vertical hold.
R203	76448	Height control.
R214	76449	Vertical linearity.
R218	76444	Brightness control.
R234	76639	W.W. 180 ohms, 2 w.
R241	76796	W.W. 5.1 ohms, 1/3 w.
		TRANSFORMERS
T1	76528	Convertor Xformer.
T2	76536	Antenna matching Xformer complete.
T101	76438	Sound IF w/adj cores.
T102	76439	Ratio detector w/adj cores.
T104	76432	First pix IF, grid w/adj cores.
T105	76434	First pix IF plate w/adj cores.
T106	76435	Second pix IF grid w/adj cores.
T107	76433	3rd or 4th pix IF.
T108	76433	3rd or 4th pix IF.
T109	76436	Fifth pix IF.
T110	76437	Sound take-off w/adj cores.
T111	76431	Vertical output.
T112	76429	Power, 115V, 60 cycle.
T113	76440	Horiz. oscillator w/adj cores.
T114	76795	High-voltage.
		MISCELLANEOUS
SR101	76452	Selenium rectifier.
SR102	76452	Selenium rectifier.
	75520	Output Xformer. (model 17T172 17T173).
	75520	Output Xformer, (971490-2W).
	75520	Output Xformer. (model 17T172).

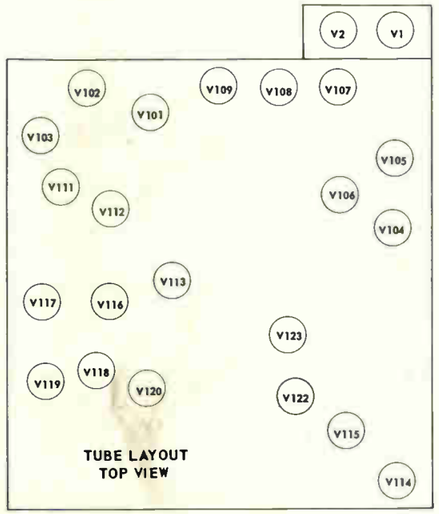

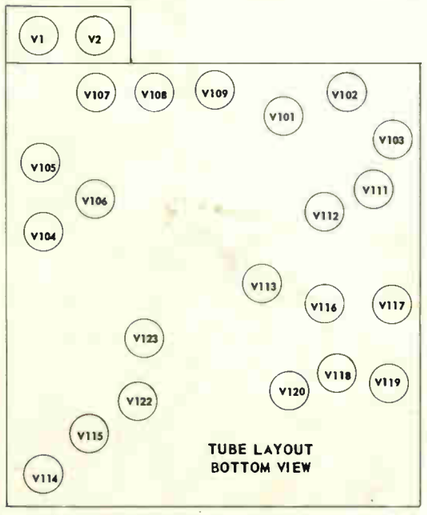

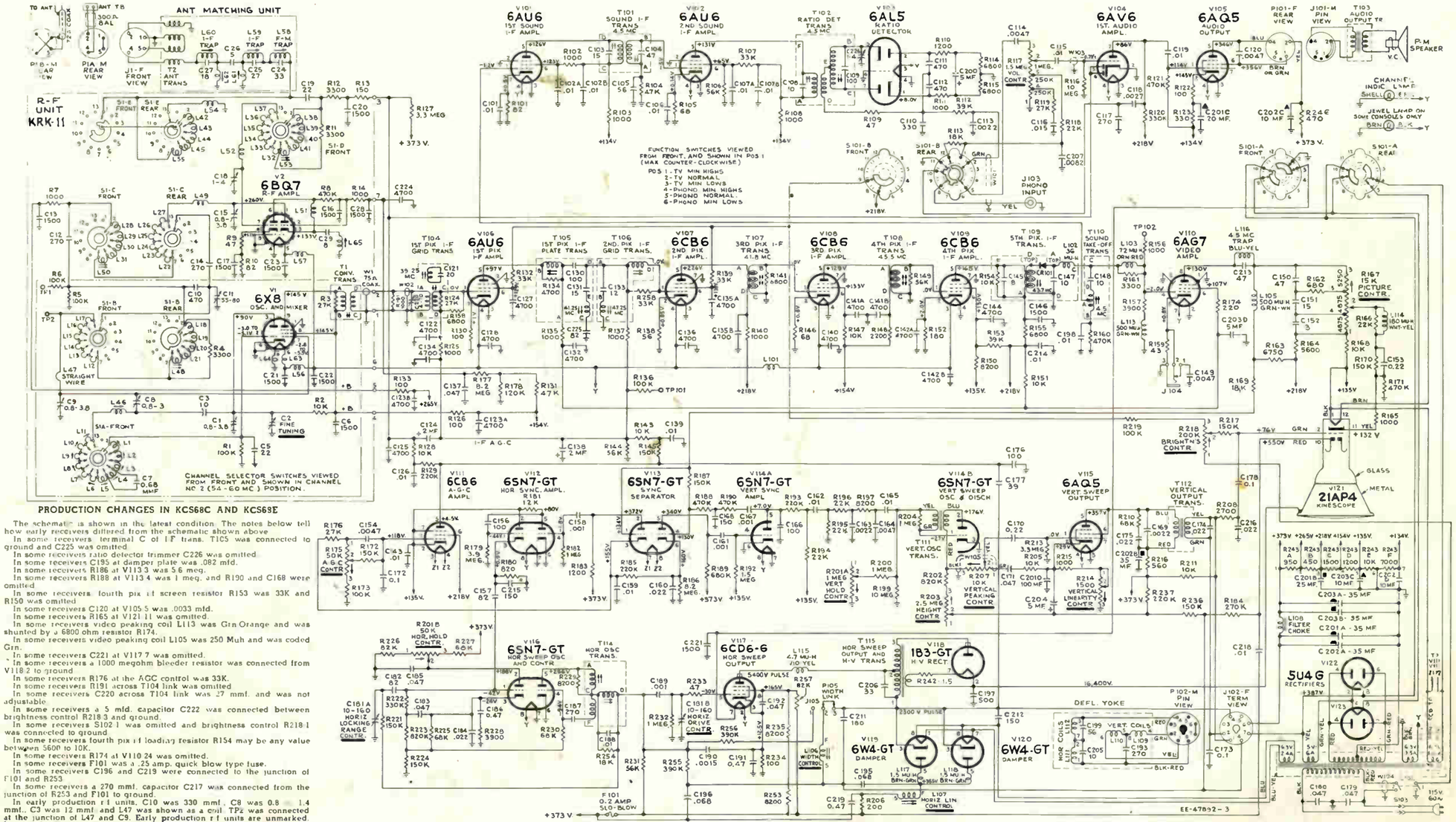

PRODUCTION CHANGES IN KCS68C AND KCS68E

The schematic is shown in the latest condition. The notes below tell how early receivers differed from the schematic shown above.

In some receivers terminal C of I-F trans. T105 was connected to ground and C225 was omitted.
In some receivers ratio detector trimmer C226 was omitted.
In some receivers C195 at damper plate was .082 mfd.
In some receivers R186 at V113-3 was 5.6 meg.
In some receivers R188 at V113-4 was 1 meg. and R190 and C168 were omitted.
In some receivers fourth pix i-f screen resistor R153 was 33K and R150 was omitted.
In some receivers C120 at V105-5 was .0033 mfd.
In some receivers R165 at V121-11 was omitted.
In some receivers video peaking coil L113 was Grn-Orange and was shunted by a 6800 ohm resistor R174.
In some receivers video peaking coil L105 was 250 Muh and was coded Grn.
In some receivers C221 at V117-7 was omitted.
In some receivers a 1000 megohm bleeder resistor was connected from V118-2 to ground.
In some receivers R176 at the AGC control was 33K.
In some receivers R191 across T104 link was omitted.
In some receivers C220 across T104 link was 27 mmf. and was not adjustable.
In some receivers a 5 mfd. capacitor C222 was connected between brightness control R218-3 and ground.
In some receivers S102-1 was omitted and brightness control R218-1 was connected to ground.
In some receivers fourth pix i-f loading resistor R154 may be any value between 5600 to 10K.
In some receivers R174 at V110-24 was omitted.
In some receivers F101 was a .25 amp. quick blow type fuse.
In some receivers C196 and C219 were connected to the junction of F101 and R253.
In some receivers a 270 mmf. capacitor C217 was connected from the junction of R253 and F101 to ground.
In early production r-f units, C10 was 330 mmf., C8 was 0.8 - 1.4 mmf., C3 was 12 mmf. and L47 was shown as a coil. TP2 was connected at the junction of L47 and C9. Early production r-f units are unmarked. Late production r-f units are marked M1. Replacement parts are affected.

The schematic is shown in the latest condition at the time of printing.

All resistance value in ohms. K = 1000.

All capacitance values less than 1 in FM and above 1 in MMF unless otherwise noted.

Direction of arrows at controls indicates clockwise rotation.

All voltages measured with "VoltOhmyst" and with no signal input. Voltages should hold within ±20% with 117 v. a-c supply.

REF. NO.	PART NO.	DESCRIPTION
		ELECTROLYTICS
C1, C9	75184	Ceramic, adj. 0.74-4 mmf.
C8		Tubular adj. 0.8-2.25 mmf
	76545	(early prod. M1 KRK11).
C8	77151	Tubular adj 0.8-3.0 mmf (KRK11A).
C8		Tubular adj. 0.8-2.25 mmf
	76781	(prod."M1" KRK11).
C11	76527	Mica trimmer 55-80 mmf.
C18	76532	Adj trimmer 1.0-4.0 mmf.
C22	71496	Adj 5-70 mmf.
C124	76742	2 mfd, 10V.
C181A	75217	Mica, trimmer.
C181B	75217	Duol 10-160 mmf.
C200	74521	5 mfd, 50V.
C201A	76486	35 mfd, 450V.
C201B	76486	25 mfd, 450V.
C201C	76486	20 mfd, 200V.
C201D	76486	100 mfd, 50V.
C202A	76485	35 mfd, 450V.
C202B	76485	35 mfd, 450V.
C202C	76485	10 mfd, 450V.
C202D	76485	10 mfd, 200V.
C203A	75510	35 mfd, 450V.
C203B	75510	35 mfd, 450V.
C202C	75510	10 mfd, 450V.
C203D	75510	5 mfd, 450V.
C204	28417	5 mfd, 450V.

		RESISTORS
R117	76803	Volume. (KCS68C, KCS68E).
R117	77223	Volume (KCS68F).
R167	76445	Picture.
R175	76447	AGC.
R201A	76443	Hor. hold (KCS68C, KCS68E)
R201B	76443	Vert. hold (KCS68C, KCS68E)
R201A	77201	Hor. hold (KCS68F).
R201B	77201	Vert. hold (KCS68F).
R203	76448	Height.
R207	76497	Vertical peaking.
R214	76449	Vertical linearity.
R218	76444	Brightness.

		COILS
L101	73477	Choke coil.
L103	76646	Peaking 72 mic.
L105	75252	Peaking 500 mic.
L106	76484	Width coil complete.
L107	76483	Horiz. linearity.
L108	76498	Filter choke.
	76653	Yoke.
L114	76647	Peaking 180 mic.
L115	76510	RF choke 4.7 mic.
L116	76482	Trap 4.5 mc.
L117	76640	RF choke 1.5 mic.
		TRANSFORMERS
T1	77148	Convertor (KRK11A).
	76528	Convertor (KRK11).
T2	76536	Ant. matching complete.
T101	76438	Sound IF.
T102	76439	Ratio detector.
T104	76432	1st pix IF grid complete, (KCS68C, KCS68E).
T104	77198	1st pix IF grid complete, (KCS68F).
T105	76434	1st pix IF plate complete, (KCS68C, KCS68E).
T105	77197	1st pix IF plate complete.
T106	76435	2nd pix IF grid.
T107	76433	3rd pix IF.
T108	76433	4th pix IF.
T109	76436	5th pix IF.
T110	76437	Sound take-off.
T111	741444	Vertical oscillator.
T112	76494	Vertical output.
T113	76495	Power 115V, 60 cycle.
T114	76440	Horiz. oscillator.
T115		Hi voltage less filament
	76501	winding.
		MISCELLANEOUS
CR101	76675	Rec. pix det. Xtal.
	76652	Focus magnet.
	76141	Magnet-Ion trap PM
	75022	Spk-8" PM 3.2 ohms.
	76833	Spk-12" PM (92569-14W).
	76389	Spk-12" PM 3.2 ohms.

21T159DE, 21T166DE, 21T174DE, 21T175DE, 21T178DE, 21T179DE MODELS

Chassis KCS68F

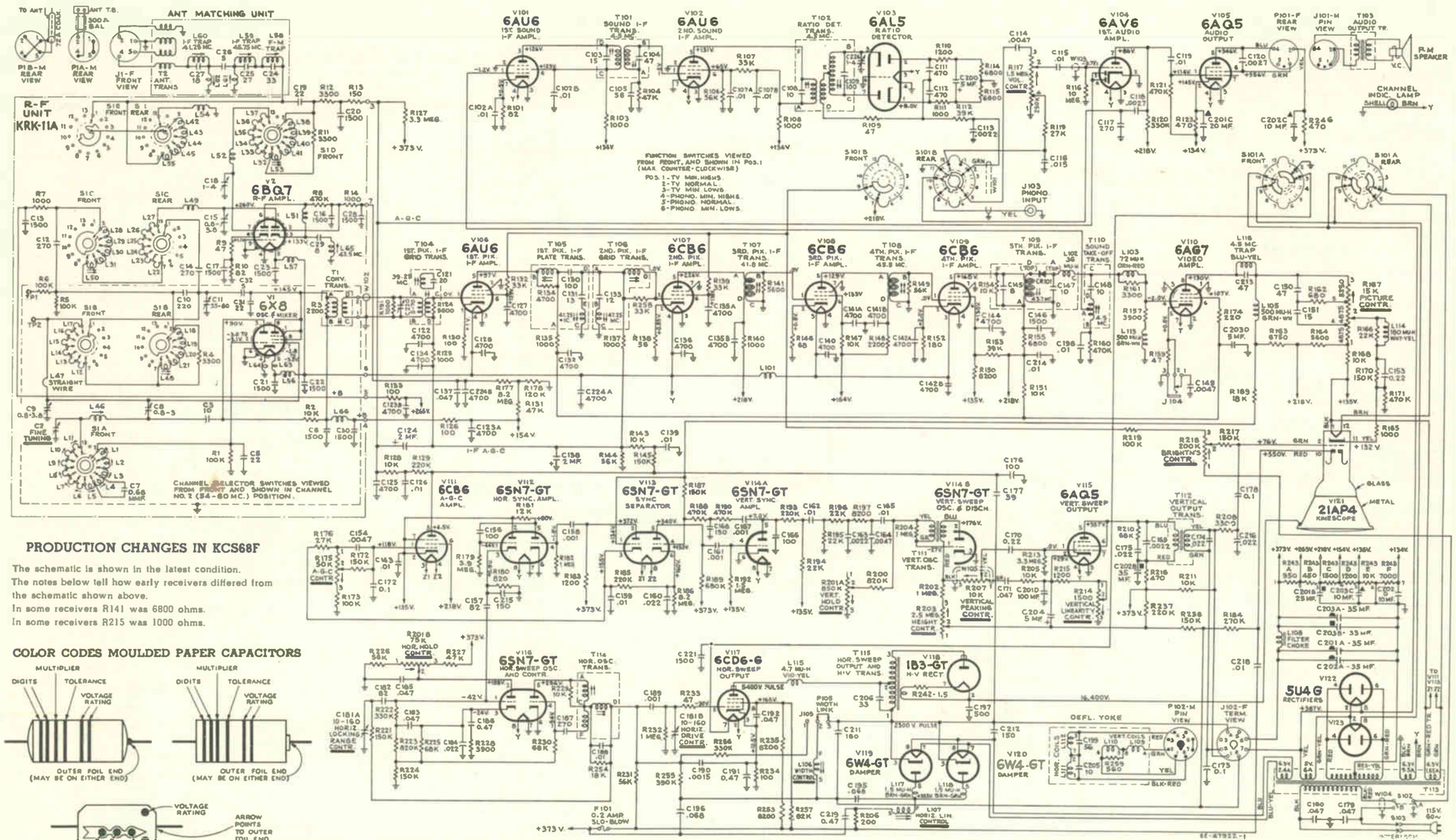

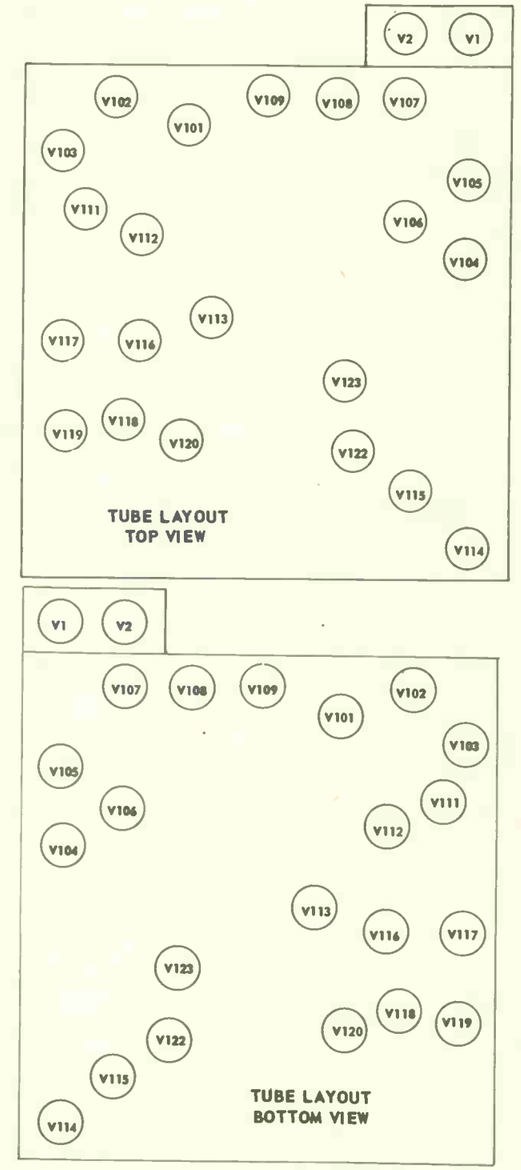

PRODUCTION CHANGES IN KCS68F

The schematic is shown in the latest condition.
The notes below tell how early receivers differed from the schematic shown above.
In some receivers R141 was 6800 ohms.
In some receivers R215 was 1000 ohms.

COLOR CODES MOULDED PAPER CAPACITORS

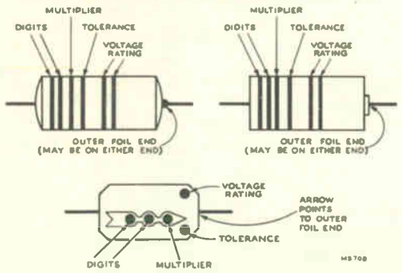

The schematic is shown in the latest condition at the time of printing.

All resistance values in ohms. K = 1000.

All capacitance values less than 1 in MF and above 1 in MMF unless otherwise noted.

All voltages measured with "VoltOhmyst" and with no signal input. Voltages should hold within ±20% with 117 v. a-c supply.

Direction of arrows at controls indicates clockwise rotation.

REF. NO.	PART NO.	DESCRIPTION
		ELECTROLYTICS
C1, C9	75184	Ceramic, adj. 0.74-4 mmf.
C8		Tubular adj. 0.8-2.25 mmf
	76545	(early prod. M1 KRK11).
C8	77151	Tubular adj 0.8-3.0 mmf (KRK11A).
C8		Tubular adj. 0.8-2.25 mmf
	76781	(prod."M1" KRK11).
C11	76527	Mica trimmer 55-80 mmf.
C18	76532	Adj trimmer 1.0-4.0 mmf.
C22	71496	Adj 5-70 mmf.
C124	76742	2 mfd, 10V.
C181A	75217	Mica, trimmer.
C181B	75217	Dual 10-160 mmf.
C200	74521	5 mfd, 50V.
C201A	76486	35 mfd, 450V.
C201B	76486	25 mfd, 450V.
C201C	76486	20 mfd, 200V.
C201D	76486	100 mfd, 50V.
C202A	76485	35 mfd, 450V.
C202B	76485	35 mfd, 450V.
C202C	76485	10 mfd, 450V.
C202D	76485	10 mfd, 200V.
C203A	75510	35 mfd, 450V.
C203B	75510	35 mfd, 450V.
C202C	75510	10 mfd, 450V.
C203D	75510	5 mfd, 450V.
C204	28417	5 mfd, 450V.

		RESISTORS
R117	76803	Volume. (KC568C, KC568E).
R117	77223	Volume (KC568F).
R167	76445	Picture.
R175	76447	AGC.
R201A	76443	Hor. hold (KC568C, KC568E)
R201B	76443	Vert. hold (KC568C, KC568E)
R201A	77201	Hor. hold (KC568F).
R201B	77201	Vert. hold (KC568F).
R203	76448	Height.
R207	76497	Vertical peaking.
R214	76449	Vertical linearity.
R218	76444	Brightness.

		COILS
L101	73477	Choke coil.
L103	76646	Peaking 72 mic.
L105	75252	Peaking 500 mic.
L106	76484	Width coil complete.
L107	76483	Horiz. linearity.
L108	76498	Filter choke.
	76653	Yoke.
L114	76647	Peaking 180 mic.
L115	76510	RF choke 4.7 mic.
L116	76482	Trap 4.5 mc.
L117	76640	RF choke 1.5 mic.
		TRANSFORMERS
T1	77148	Convertor (KRK11A).
	76528	Convertor (KRK11).
T2	76536	Ant. matching complete.
T101	76438	Sound IF.
T102	76439	Ratio detector.
T104	76432	1st pix IF grid complete, (KC568C, KC568E).
T104	77198	1st pix IF grid complete, (KC568F).
T105	76434	1st pix IF plate complete, (KC568C, KC568E).
T105	77197	1st pix IF plate complete.
T106	76435	2nd pix IF grid.
T107	76433	3rd pix IF.
T108	76433	4th pix IF.
T109	76436	5th pix IF.

T110	76437	Sound take-off.
T111	741444	Vertical oscillator.
T112	76494	Vertical output.
T113	76495	Power 115V, 60 cycle.
T114	76440	Horiz. oscillator.
T115		Hi voltage less filament
	76501	winding.
		MISCELLANEOUS
CR101	76675	Rec. pix det. Xtal.
	76652	Focus magnet.
	76141	Magnet-Ion trap PM
	75022	Spk-8" PM 3.2 ohms.
	76833	Spk-12" PM (92569-14W).
	76389	Spk-12" PM 3.2 ohms.

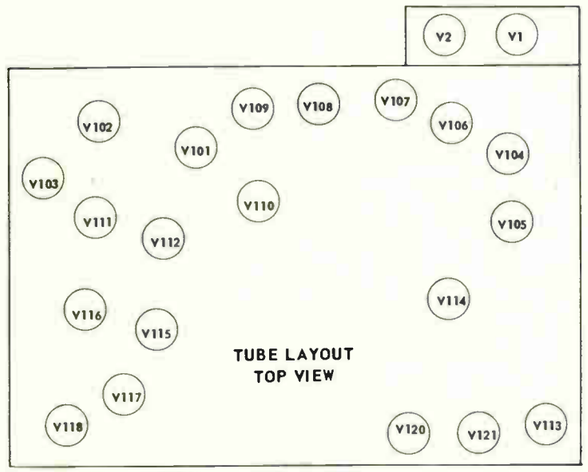

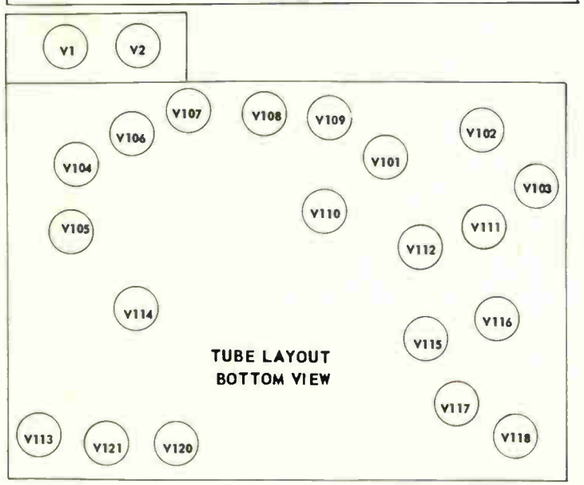

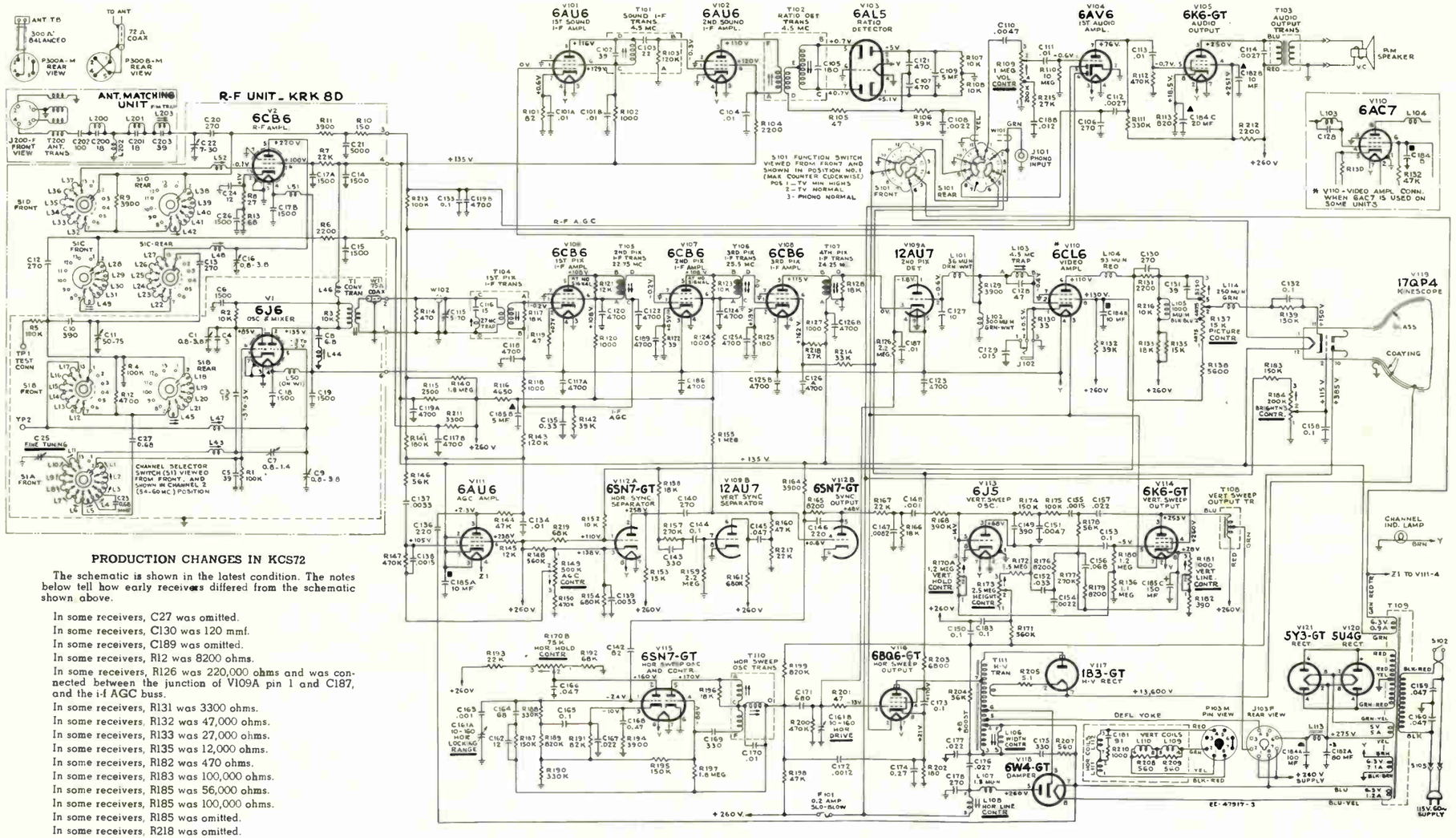

PRODUCTION CHANGES IN KCS72

The schematic is shown in the latest condition. The notes below tell how early receivers differed from the schematic shown above.

In some receivers, C27 was omitted.
In some receivers, C130 was 120 mmf.
In some receivers, C189 was omitted.
In some receivers, R12 was 8200 ohms.
In some receivers, R126 was 220,000 ohms and was connected between the junction of V109A pin 1 and C187, and the i-f AGC buss.
In some receivers, R131 was 3300 ohms.
In some receivers, R132 was 47,000 ohms.
In some receivers, R133 was 27,000 ohms.
In some receivers, R135 was 12,000 ohms.
In some receivers, R182 was 470 ohms.
In some receivers, R183 was 100,000 ohms.
In some receivers, R185 was 56,000 ohms.
In some receivers, R185 was 100,000 ohms.
In some receivers, R185 was omitted.
In some receivers, R218 was omitted.
In some receivers, R219 was omitted.
In some receivers, V119-10 was connected to the junction of R171 and C183.

All resistance values in ohms. K=1000.

All capacitance values less than 1 in MF and above 1 in MMF unless otherwise noted.

Direction of arrows at controls indicates clockwise rotation.

All voltages measured with "VoltOhmyst" and with no signal input. Voltages should hold within ±20% with 117 v. a-c supply.

* In KCS72 V110 was a 6AC7.
In KCS72M1 V110 was a 6AG7 (same pin connections as 6AC7).

REF. NO.	PART NO.	DESCRIPTION
		ELECTROLYTICS
C1	75184	Ceramic adj. 0.74-4 mmf.
C7	75172	Tubular adj. 0.65-1.2 mmf.
C11	75174	Ceramic, trimmer 50-75 mmf.
C22	75189	Adjustable 7-30 mmf.
C109	74521	5 mfd, 50V.
C115	71496	Adj. mica 5-70 mmf.
C161A	75217	Mica trimmer.
C161B	75217	Dual 10-160 mmf.
C182A	76987	80 mfd, 400V.
C182B	76987	10 mfd, 350V.
C184A	76970	100 mfd, 400V.
C184B	76970	10 mfd, 350V.
C184C	76970	20 mfd, 50V.
C185A	75218	10 mfd, 350V.
C185B	75218	5 mfd, 350V.
C185C	75218	150 mfd, 50V.
		RESISTORS
R109	77010	Volume.
R137	76445	Picture.
R149	76975	AGC.
R170A	76974	Horiz. hold.
R170B	76974	Vertical hold.
R173	76448	Height.
R181	76976	Vertical linearity.
R184	76444	Brightness.
		COILS
L101	76011	Peaking 36 mic.
L102	75252	Peaking 500 mic.
L103	76983	Trap 4.5 mc.
L104	71527	Peaking 93 mic.
L105	77124	Peaking 1000 mic.
L106	76441	Width.
L107	76640	Peaking 1.5 mic.
L108	76442	Horiz. linearity.
	76616	Yoke.
L113	76498	Filter choke.
L114	71526	Peaking 250 mic.
L200, L201	75242	Trap IF.
L202	75241	Antenna shunt coil.
L203	75449	FM trap.
		TRANSFORMERS
T1	75181	Convertor.
T101	76981	Sound IF.
T102	77112	Ratio detector.
T103	76982	Output.
T104	76979	1st pix IF.
T105	76980	2nd pix IF.
T106	76980	3rd pix IF.
T107	76980	4th pix IF.
T108	76978	Vertical output.
T109	76984	Power 117V, 60 cycle.
T110	76440	Horiz. oscillator.
T111	76795	Hi-voltage.
T200	76977	Ant. match. Xformer. Complete.
		MISCELLANEOUS
	76168	Focus magnet.
	76141	Magnet-ion trap PM.
	76633	Magnet-pin cushion complete.
	77000	5pk-5" PM complete 3.2 ohms, (971636-1W)
	75022	5pk-8" PM complete 3.2 ohms (971490-3W).

17T250DE, 17T261DE MODELS

Chassis No. KCS74 or KCS74M1

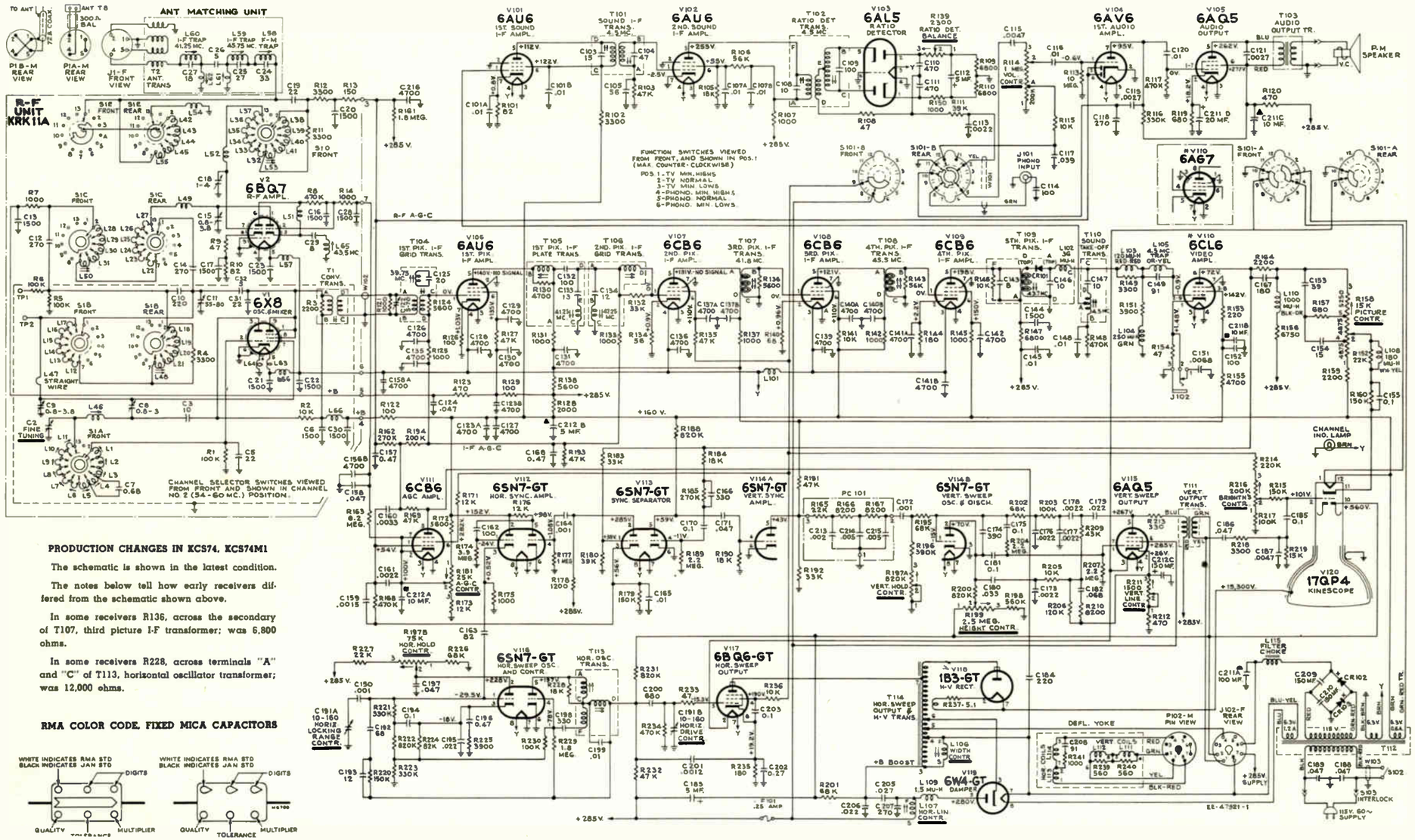

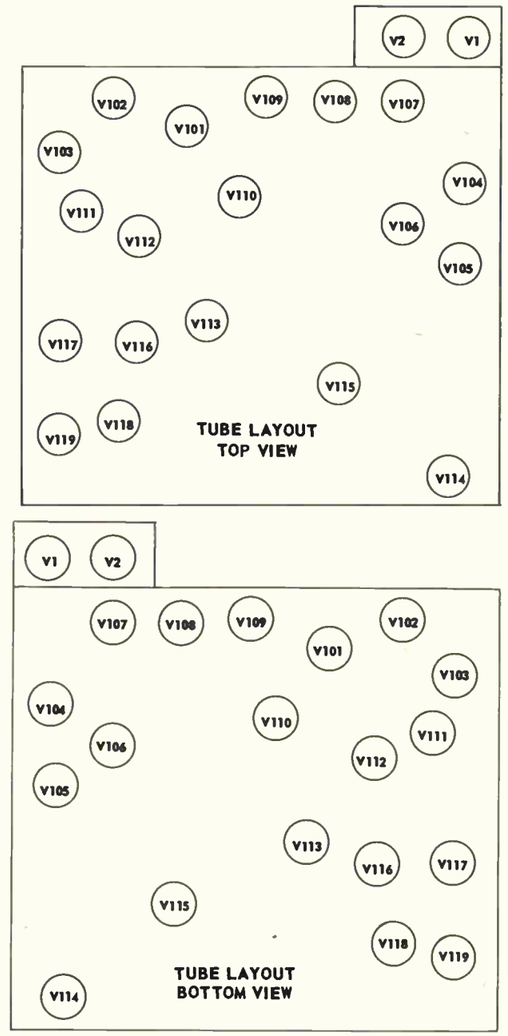

PRODUCTION CHANGES IN KCS74, KCS74M1

The schematic is shown in the latest condition.

The notes below tell how early receivers differed from the schematic shown above.

In some receivers R136, across the secondary of T107, third picture I-F transformer; was 6,800 ohms.

In some receivers R228, across terminals "A" and "C" of T113, horizontal oscillator transformer; was 12,000 ohms.

RMA COLOR CODE, FIXED MICA CAPACITORS

REF. NO.	PART NO.	DESCRIPTION
ELECTROLYTICS		
B8	77151	Tubular, adj. 0.8-3.0 mmf.
C9	75184	Ceramic adj. 0.8-3.8 mmf
C11	76527	Mica trimmer 55-80 mmf.
C18	76532	Adj trimmer 1.-4 mmf.
C112	74521	5 mfd, 50V.
C122	71496	Adj trimmer 5-70 mmf.
C191A	75217	Mica trimmer.
C191B	75217	Dual 10-160 mmf.
C183	28417	5 mfd, 450V.
C209, C210	75220	150 mfd, 200V.
C211A	76451	100 mfd, 350V.
C211B	76451	10 mfd, 350V.
C211C	76451	10 mfd, 350V.
C211D	76451	20 mfd, 50V.
C212A	75218	10 mfd, 350V.
C212B	75218	5 mfd, 350V.
C212C	75218	150 mfd, 50V.
RESISTORS		
R114	77010	Volume.
R139	77199	Ratio detector balance.
R158	76445	Picture.
R181	77200	AGC.
R197A	77201	Horizontal hold.
R197B	77201	Vertical hold.
R199	76448	Height.
R211	76449	Vertical linearity.
R216	76444	Brightness.
COILS		
L101	73477	Choke coil.
L103	77195	Peaking 120 mic.
L104	71526	Peaking 250 mic.
L105	77225	Trap 4.5 mc.
L106	76441	Width complete.
L107	76442	Horiz. linearity
L108	76647	Peaking 180 mic.
L109	76640	RF choke 1.5 mic.
L110	77194	Peaking 1000 mic.
TRANSFORMERS		
T101	76438	Sound IF complete.
T102	76439	Ratio detector
T103	76997	Output.
T104	77198	1st pix IF grid
T105	77197	1st pix IF plate
T106	76435	2nd pix IF grid
T107	76433	3rd pix IF
T108	76433	4th pix IF
T109	76436	5th pix IF.
T110	76437	Sound take-off
T111	76431	Vertical output.
T112	76429	Power.
T113	76440	Horiz. oscillator
T114	76795	Hi-voltage.
T2	76536	Ant. match. complete.
T1, R3	77148	Convertor.
MISCELLANEOUS		
	76168	Focus magnet.
	76141	Magnet-Ion trap P.M.
	76633	Magnet-pin cushion correction complete w/support arm.
CR101	76675	Rectifier-Pix detector Xtal.
CR102 CR103		
CR103	76452	Selenium rectifier.
	75022	Spk-8" PM comp. 3.2 ohms. (971490-3W).
	76389	Spk-12" PM comp. 3.2 ohms, (92569-12W).

All resistance values in ohms. K = 1000.
All capacitance values less than 1 in MF and above 1 in MMF unless otherwise noted.

Direction of arrows at controls indicates clockwise rotation.

* In some receivers, a 6AG7 tube was employed in place of the 6CL6 video amplifier, and was connected as shown in inset above.

All voltages measured with "VoltOhmyst" and with no signal input. Voltages should hold within ±20% with 117 v. a-c supply.

Chassis Nos. Television Chassis KCS68H
Radio Chassis RC1111A, Audio Amplifier RS141A

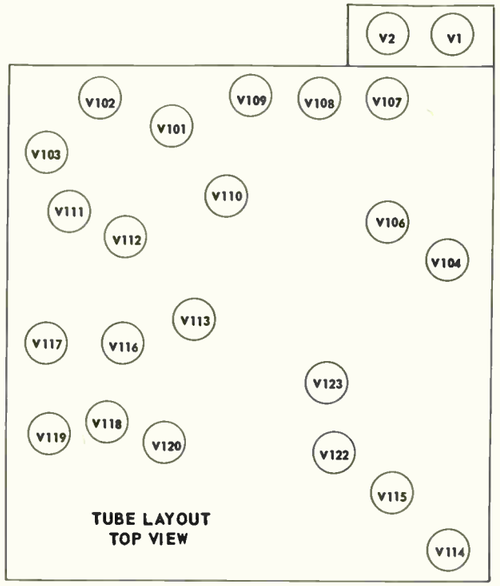

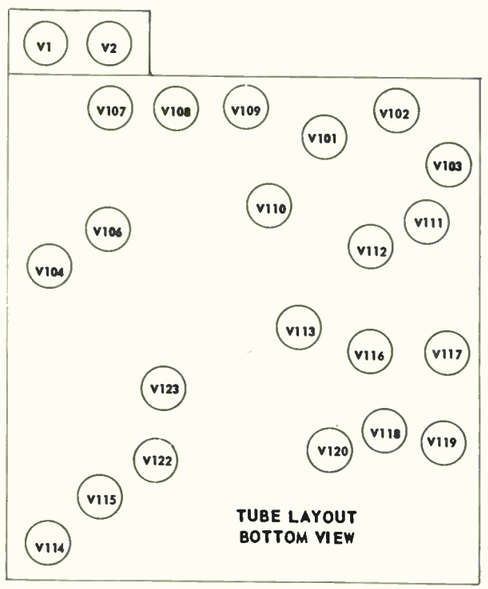

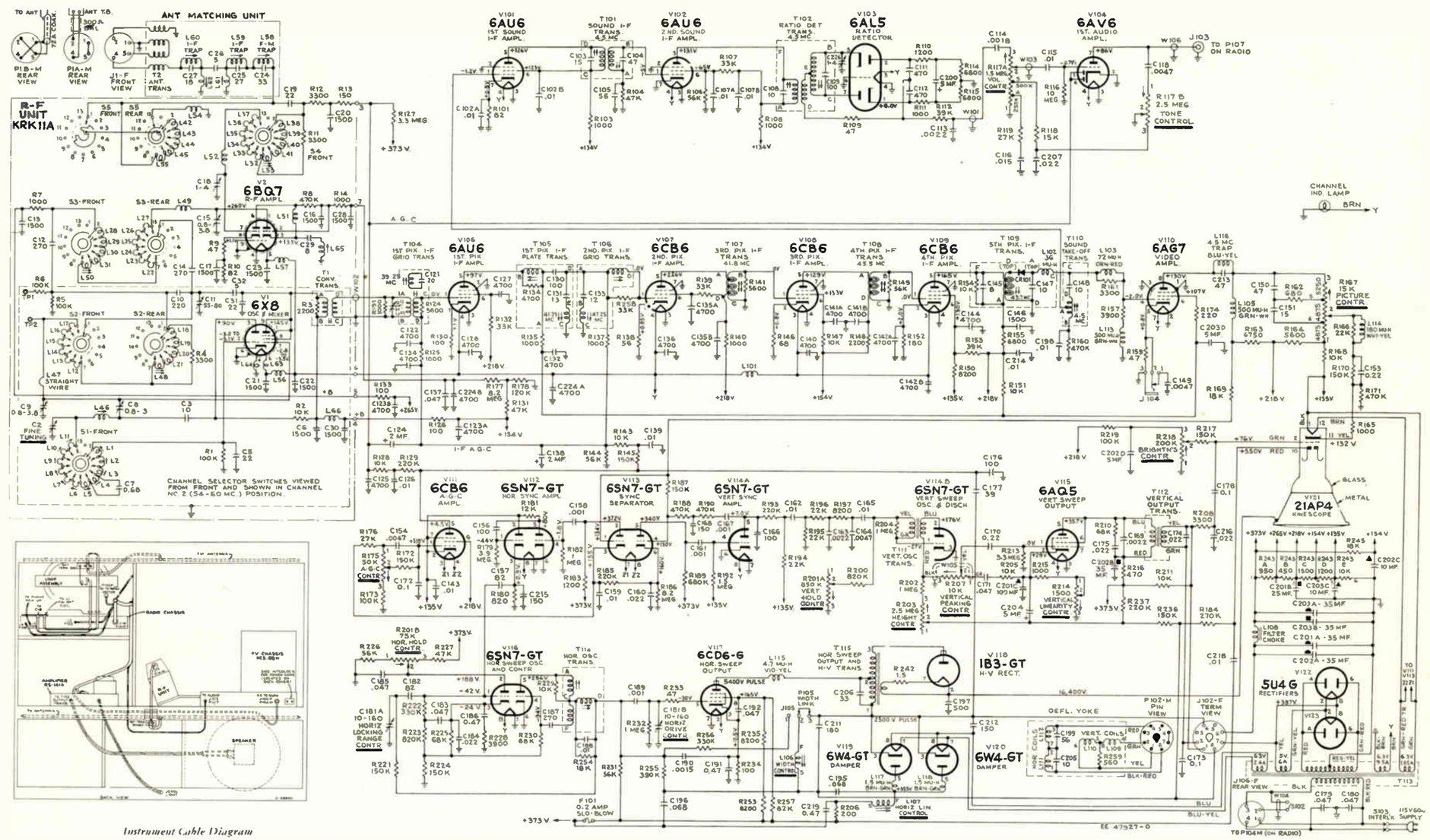

Instrument Cable Diagram

All resistance values in ohms. K = 1000.
All capacitance values less than 1 in MF and above in 1 MMF unless otherwise noted

Direction of arrows at controls indicates clockwise rotation

All voltages measured with "VoltOhmyst" and with no signal input Voltages should hold within ±20% with 117 v a-c supply

Radio RC1111A (page 111) used with 21-T-197DE.

REF. NO.	PART NO.	DESCRIPTION
		ELECTROLYTICS
C8	77151*	Tubular adj. 0.8-3.0 mmf.
C9	75184*	Ceramic, adj. 0.8-3.8 mmf.
C11	76527*	Mica trimmer 55-80 mmf.
C18	76532*	Adj. trimmer 1.-4. mmf.
C101A	77324**	30 mfd, 450V.
C101B	77324**	30 mfd, 350V.
C101C	77324**	40 mfd, 25V.
C124	76742	2 mfd, 10V.
C181A, C181B		Mica trimmer
	75217	dual 10-160 mmf.
C200	74521	5 mfd, 50V.
C201A	77474	35 mfd, 450V.
C201B	77474	25 mfd, 450V.
C201C	77474	100 mfd, 50V.
C202A	75510	35 mfd, 450V.
C202B	75510	35 mfd, 450V.
C202C	75510	10 mfd, 450V.
C202D	75510	5 mfd, 450V.
C203A	75510	35 mfd, 450V.
C203B	75510	35 mfd, 450V.
C203C	75510	10 mfd, 450V.
C203D	75510	5 mfd, 450V.
C204	28417	5 mfd, 450V.
C220	71496	Adj trimmer 5-70 mmf.
C226	76800	Adj trimmer 1-4 mmf.
		RESISTORS
R117A	77473	Tone.
R117B	77473	Volume.
R167	76445	Picture.
R175	76447	AGC.
R201A	77201	Horiz. hold.
R201B	77201	Vertical hold.
R203	76448	Height.
R207	76497	Vertical peaking.
R214	76449	Vertical linearity.
R218	76444	Brightness.
		COILS
L101	73477	Choke.
L103	76646	Peaking 72 mic.
L105	75252	Peaking 500 mic.
L106	76484	Width.
L107	76483	Horiz. linearity.
L108	76498	Filter choke.
	76653	Yoke.
L114	76647	Peaking 180 mic.
L115	76510	RF choke 4.7 mic.
L116	76482	Trap 4,5 mc.
L117	76640	RF choke 1.5 mic.
L202	75241	Antenna shunt.
		TRANSFORMERS
T1	77148*	Convertor.
T2	76536*	Ant. matching, complete.
T101	75566**	Power 117V, 60 cycle.
T101	76438	Sound IF.
T102	77323**	Output.
T102	76439	Ratio detector.
T105	77197	1st pix IF plate.
T104	77198	1st pix IF grid.
T106	76434	2nd pix IF grid.
T107	76433	3rd pix IF.
T108	76433	4th pix IF.
T109	76436	5th pix IF.
T110	76437	Sound take-off.
T111	74144	Vertical oscillator.
T112	76494	Vertical output.
T113	76495	Power 117V, 60 cycle.
T114	76440	Horiz. oscillator.
Part of		Hi voltage less
	76501	filament winding.
		MISCELLANEOUS
CR101	76675	Rec. pix det. Xtal.
	76652	Focus magnet.
	76141	Magnet-lon trap PM.
	76093	Spk-12" PM 3.2 ohms.

NOTE: * for KRK11A.
** for RS141A. Audio Amp.

21T207, 21T207G 21T208, 21T217, 21T218, 21T227, 21T228, 21T229 MODELS

Chassis KCS72A

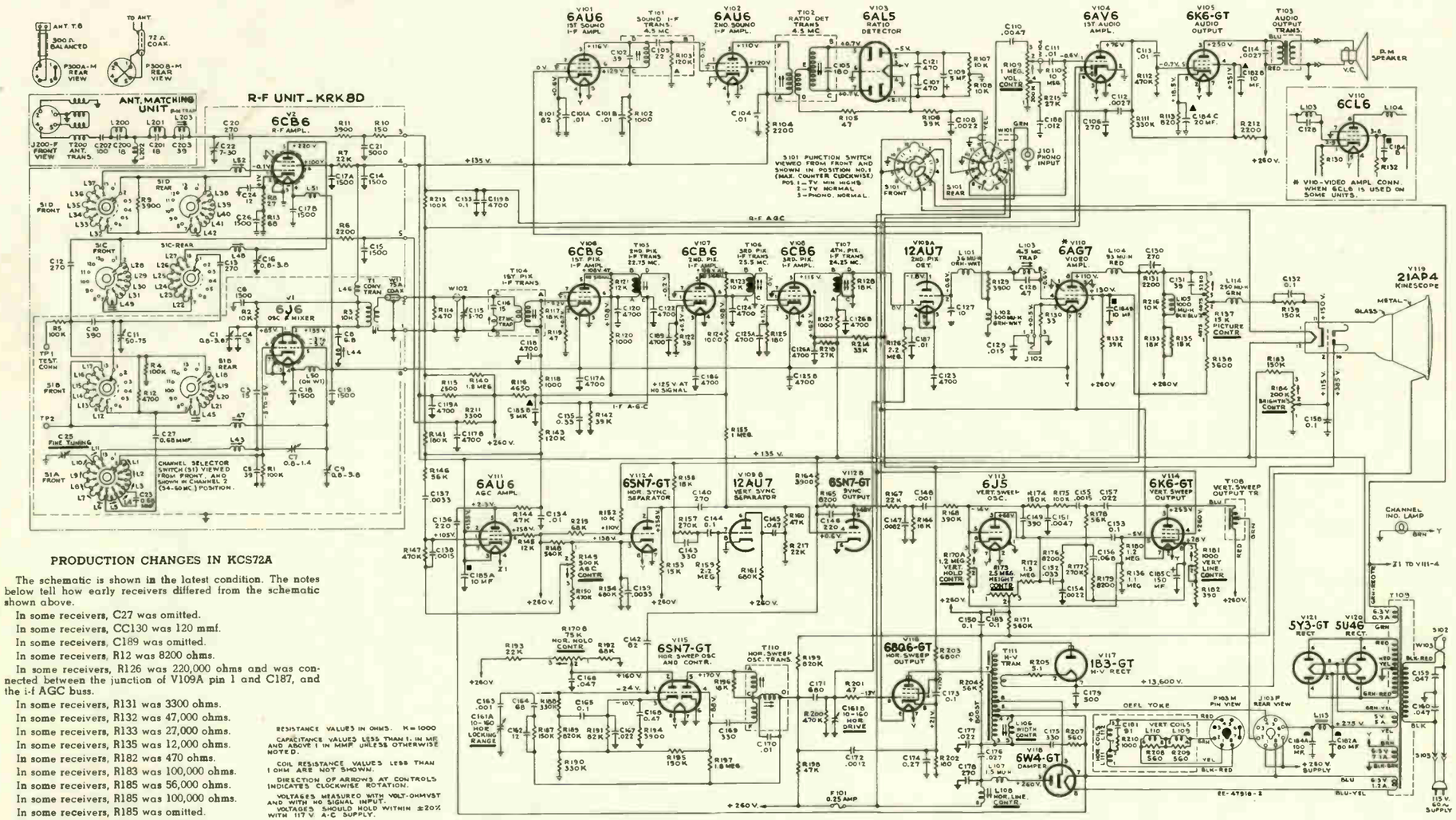

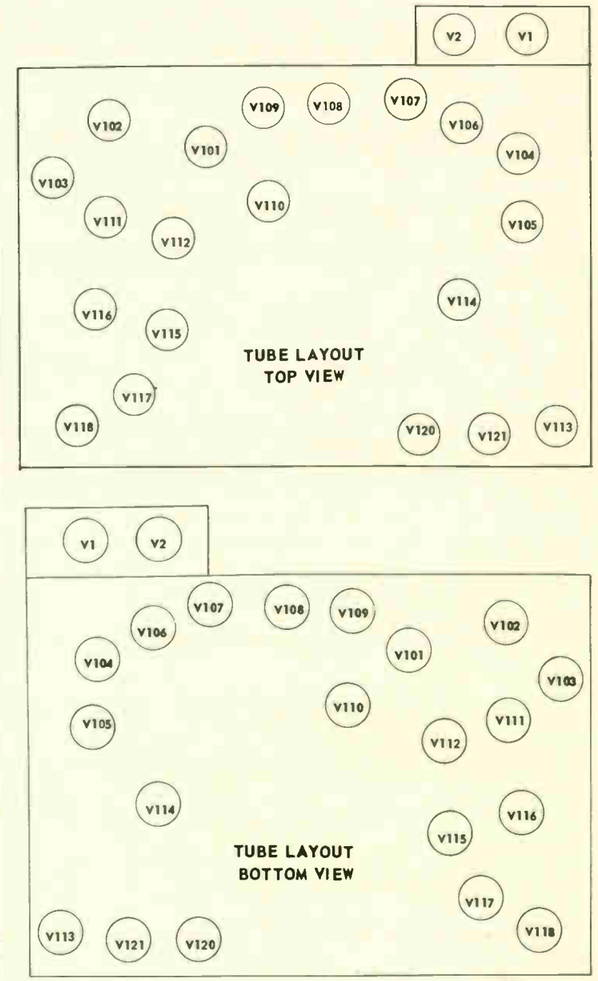

PRODUCTION CHANGES IN KCS72A

The schematic is shown in the latest condition. The notes below tell how early receivers differed from the schematic shown above.

In some receivers, C27 was omitted.
In some receivers, CC130 was 120 mmf.
In some receivers, C189 was omitted.
In some receivers, R12 was 8200 ohms.
In some receivers, R126 was 220,000 ohms and was connected between the junction of V109A pin 1 and C187, and the i-f AGC buss.
In some receivers, R131 was 3300 ohms.
In some receivers, R132 was 47,000 ohms.
In some receivers, R133 was 27,000 ohms.
In some receivers, R135 was 12,000 ohms.
In some receivers, R182 was 470 ohms.
In some receivers, R183 was 100,000 ohms.
In some receivers, R185 was 56,000 ohms.
In some receivers, R185 was 100,000 ohms.
In some receivers, R185 was omitted.
In some receivers, R218 was omitted.
In some receivers, R219 was omitted.
In some receivers, V119-10 was connected to the junction of R171 and C183.
In some receivers, V110 used 6AC7 tube.

RESISTANCE VALUES IN OHMS. K=1000

CAPACITANCE VALUES LESS THAN 1, IN MF AND ABOVE 1 IN MMF UNLESS OTHERWISE NOTED.

COIL RESISTANCE VALUES LESS THAN 1 OHM ARE NOT SHOWN.

DIRECTION OF ARROWS AT CONTROLS INDICATES CLOCKWISE ROTATION.

VOLTAGES MEASURED WITH VOLT-OHMYST AND WITH NO SIGNAL INPUT. VOLTAGES SHOULD HOLD WITHIN ±20% WITH 117 V. A-C SUPPLY.

All resistance values in ohms. K = 1000.
KCS72A-M1 chassis uses 6AG7 video amplifier.
KCS72A-M2 chassis uses 6CL6 video amplifier.

All capacitance values less than 1 in MF and above 1 in MMF unless otherwise noted.
Model 21T207G uses glass Kinescope 21EP4.

Directions of arrows at controls indicates clockwise rotation.

All voltages measured with "Volt-Ohmyst" and with no signal input. Voltages should hold within ±20% with 117 v. a-c supply.

REF. NO.	PART NO.	DESCRIPTION
		ELECTROLYTICS
C1	75184	Ceramic adj. 0.75-4 mmf.
C7	75172	Tubular, adj. 0.65-1.2 mmf.
C11	75174	Ceramic trimmer 50-75 mmf.
C22	75189	Adj. 7-30 mmf.
C109	74521	5 mfd, 50V.
C115	71496	Adj. mica 5-70 mmf.
C182A	76987	80 mfd, 400V.
C182B	76987	10 mfd, 350V.
C184A	76970	100 mfd, 400V.
C184B	76970	10 mfd, 350V.
C184C	76970	20 mfd, 50V.
C185A	75218	10 mfd, 350V.
C185B	75218	5 mfd, 350V.
C185C	75218	150 mfd, 50V.
		RESISTORS
R109	77010	Volume.
R137	76445	Picture.
R149	76975	AGC.
R170A	76974	Horiz. hold.
R170B	76974	Vertical hold.
R173	76448	Height.
R184	76444	Brightness.
		COILS
L101	76011	Peaking 36 mic.
L102	75252	Peaking 500 mic.
L103	76983	Trap 4.5 mc.
L104	71527	Peaking 93 mic.
L105	77124	Peaking 1000 mic.
L106	76441	Width coil.
L107	76640	Peaking 1.5 mic.
L108	76442	Horiz. linearity.
	76616	Yoke.
L113	76498	Filter choke.
L200, L201	75242	IF Trap.
L202	75241	Antenna shunt coil.
L203	75449	FM Trap.
		TRANSFORMERS
T1	75181	Convertor.
T101	76981	Sound IF.
T102	77112	Ratio detector.
T103	76997	Output.
T104	76979	1st pix IF.
T105	76980	2nd pix IF.
T106	76980	3rd pix IF.
T107	76980	4th pix IF.
T108	76978	Vertical output.
T109	76984	Power 115V, 60 cycle.
T110	76440	Horiz. oscillator.
T111	76795	Hi-voltage.
T200	76977	Ant. match. Xformer.
		MISCELLANEOUS
	76168	Focus magnet.
	76141	Magnet-ion trap PM.
	76633	Magnet-pin cushion correction (21T207G).
	75022	Spk-8" PM complete 3.2 ohms,
	76389	Spk-12" PM, 3.2 ohms.
	77000	Spk-5" PM, 3.2 ohms.

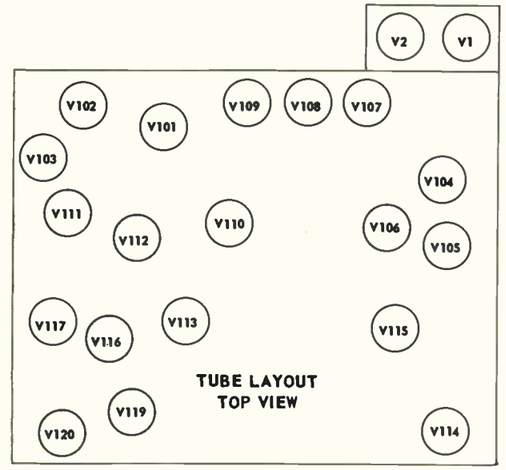

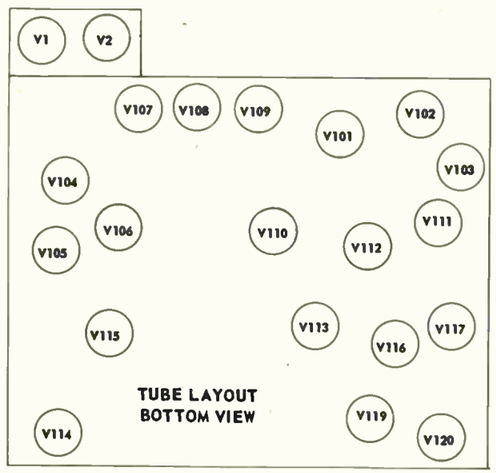

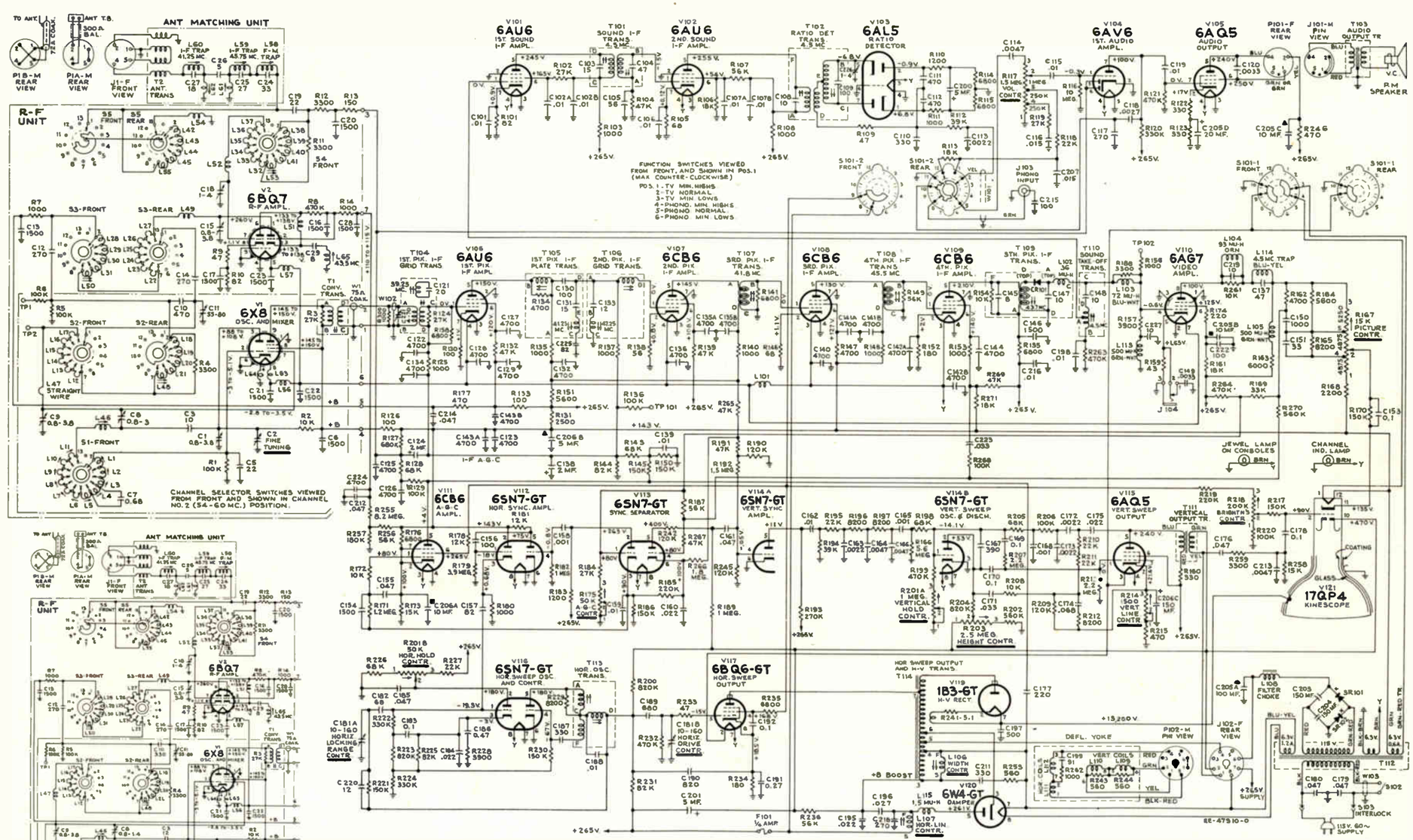

Some early production RF units may be wired as shown in the partial schematic diagram. Later production units wired as shown in schematics above are marked "M1". Replacement parts are affected.

All resistance values in ohms. K = 1000.
All capacitance values less than 1 in MF and above 1 in MMF unless otherwise noted.

Coil resistance values less than 1 ohm are not shown.
Direction of arrows at controls indicates clockwise rotation.

All voltages measured with "VoltOhmyst" and with no signal input. Voltages should hold within ±20% with 117 v. a-c supply.

REF. NO.	PART NO.	DESCRIPTION
		ELECTROLYTICS
C124, C138		
	76742	2 mfd, 10V.
C200	74521	5 mfd, 50V.
C201	28417	5 mfd, 450V.
C205A	76451	100 mfd, 350V.
C205B	76451	10 mfd, 350V.
C205C	76451	10 mfd, 350V.
C206A	75218	10 mfd, 350V.
C206B	75218	5 mfd, 350V.
C206C	75218	150 mfd, 50V.
C203, C204		
	75220	150 mfd, 200V.
		COILS
L101	73477	Choke coil.
L103	76646	Peaking 72 muh.
L104	72619	Peaking 93 muh.
L105, L113		
	75252	Peaking 500 muh.
L106	76441	Width complete w/adj core.
L107	76442	Horiz. linearity.
L108	76498	Filter choke.
L115	76640	Choke coil 1.5 muh.
		RESISTORS
R117	76171	Volume & power switch.
R175	76447	AGC control.
R167	76445	Picture control.
R201A, R201B		
	76443	Horiz. & vert. hold.
R203	76448	Height control.
R218	76444	Brightness control.
R214	76449	Vertical linearity.
R131	76469	W.W. 2500 ohms, 10W.
R122, R123		
		W.W. 330 ohms, 1W.
R151	76390	W.W. 5600 ohms, 5W.
R163	76638	W.W. 6000 ohms, 6W.
R234	76639	W.W. 180 ohms, 2W.
R241	76796	W.W. 5.1 ohms, 1/3 W.
		TRANSFORMERS
T101	76438	Sound IF.
T102	76439	Ratio detector
T104	76432	First pix IF grid.
T105	76434	First pix IF plate.
T106	76435	Second pix IF grid.
T108	76433	3rd or 4th pix IF.
T109	76436	5th pix IF.
T110	76437	Sound take-off.
T111	76431	Vertical output.
T112	76429	Power 115V, 60 cy.
T113	76440	Horiz. oscillator.
		MISCELLANEOUS
	76616	Yoke.
CR101	76675	Pix detector crystal rectifier.
SR101, SR102		
	76452	Selenium rectifier.
	76834	Spk-4" x 6" PM less Xfmr & connector.
	75022	Spk-8" PM less Xfmr & plug.

21-T-242, 21-T-244 MODELS

Chassis No. KCS72D-1 or KCS72D-2 and RC1117B or RC1111B and RS141C

Radio RC1111B used with 21-T-244 and RC1117B used with 21-T-242. (See page 111).

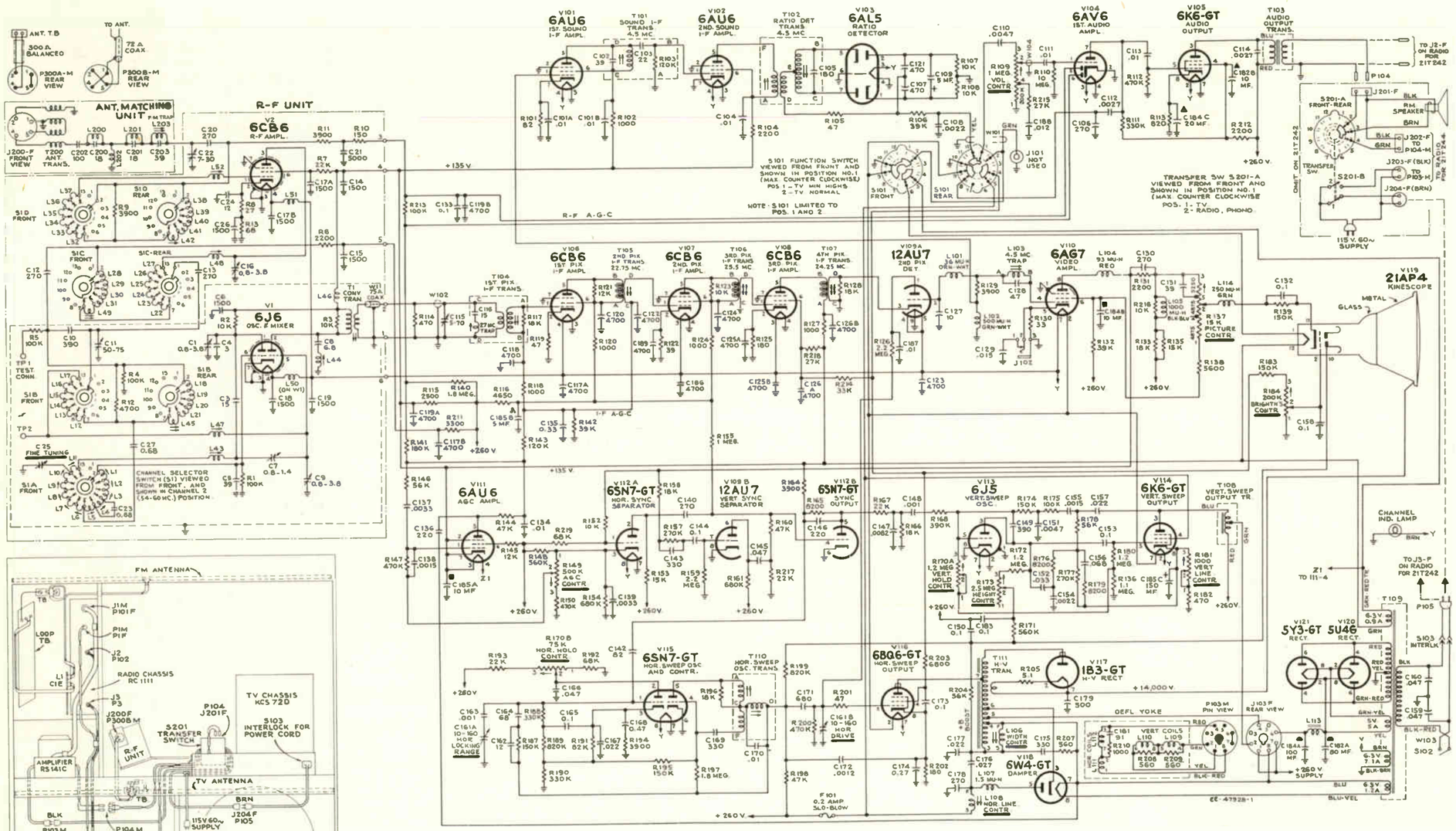

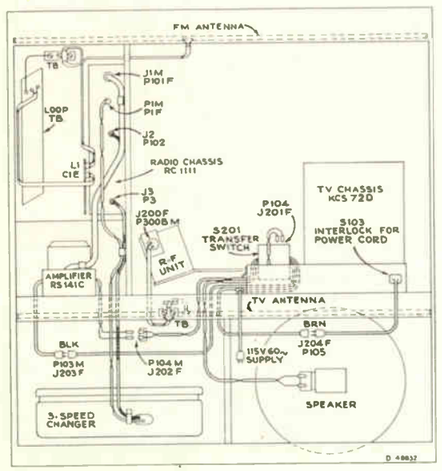

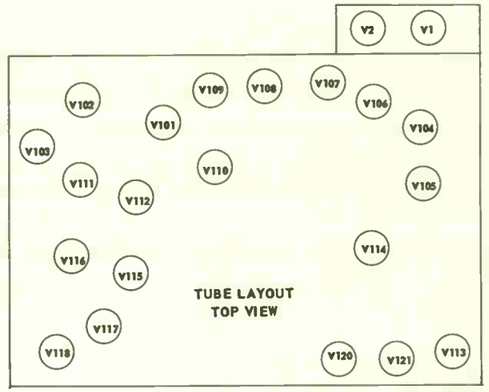

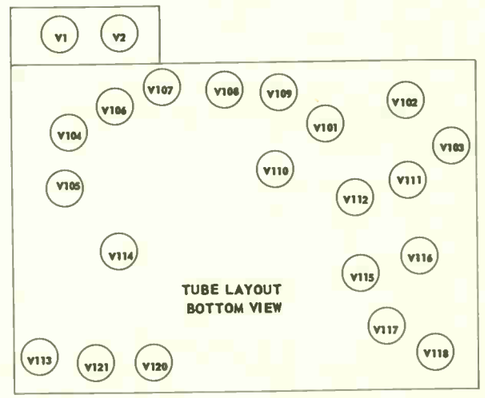

Model 21T244 Cable Diagram

All resistance values in ohms. K=1000.

All capacitance values less than 1 in MF and above 1 in MMF unless otherwise noted.

Direction of arrows at controls indicates clockwise rotation.

All voltages measured with "Volt Ohmyst" and with no signal input. Voltages should hold within ±20% with 117 v. a-c supply.

REF. NO.	PART NO.	DESCRIPTION
ELECTROLYTICS		
C1	75184	Ceramic w/adj. stud.
C22	75189	Adj., 7-30 mmf.
C109	74521	5 mfd, 50V.
C161A C161B	75217	Mica trimmer dual 10-160 mmf.
C182A	76987	80 mfd, 400V.
C182B	76987	10 mfd, 350V.
C184A	76970	100 mfd, 400V.
C184B	76970	10 mfd, 350V.
C184C	76970	20 mfd, 50V.
C185A	75218	10 mfd, 350V.
C185B	75218	5 mfd, 350V.
C185C	75218	150 mfd, 50V.
COILS		
L101	76011	Peaking 36 mic.
L102	75252	Peaking 500 mic.
L104	71527	Peaking 93 mic.
L105	77124	Peaking 1000 mic.
L106	76441	Width, complete.
L107	76640	Peaking, 1.5 mic.
L108	76442	Horiz. linearity.
L114	71526	Peaking 250 mic.
RESISTORS		
R109	77010	Vol., power switch.
R137	76445	Picture control.
R149	76975	AGC control.
R170A	76974	Horiz. hold.
R170B	76974	Vertical hold.
R173	76448	Height control.
R181	76976	Vertical linearity.
R184	76444	Brightness control.
TRANSFORMERS		
T1	75181	IF converter.
T101	76981	Sound IF.
T102	77112	Ratio detector.
T103	76997	Output Xformer.
T104	76979	First pix IF.
T105, T106, T107	76980	2nd, 3rd, or 4th pix IF.
T108	76978	Vertical output.
T109	76984	Power 115V, 60 cycle.
T110	76440	Horiz. oscillator.
T111	76795	H i voltage.
MISCELLANEOUS		
	76616	Yoke.
	76093	Speaker-12" PM 3.2 ohms.

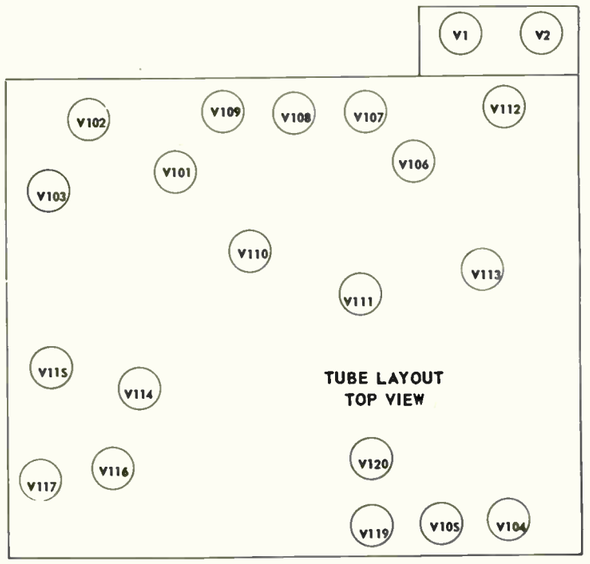

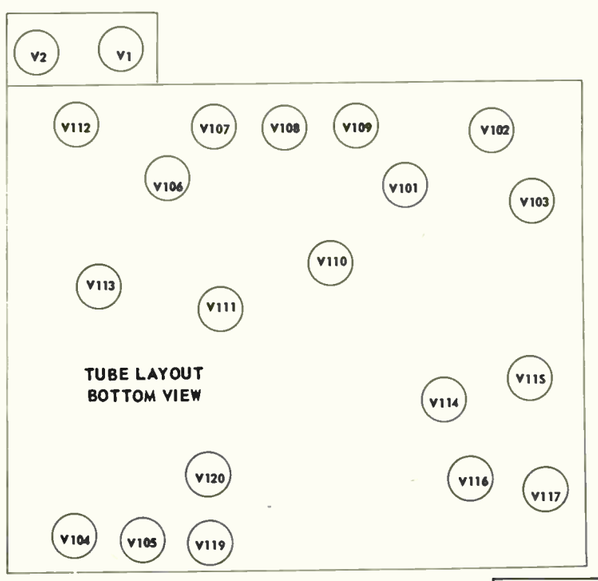

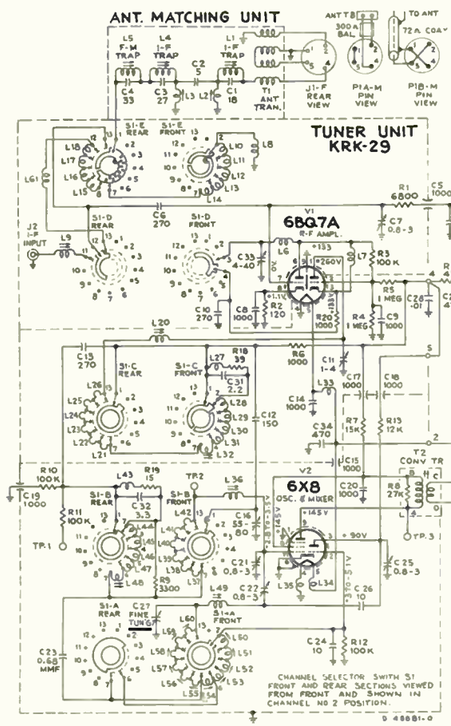

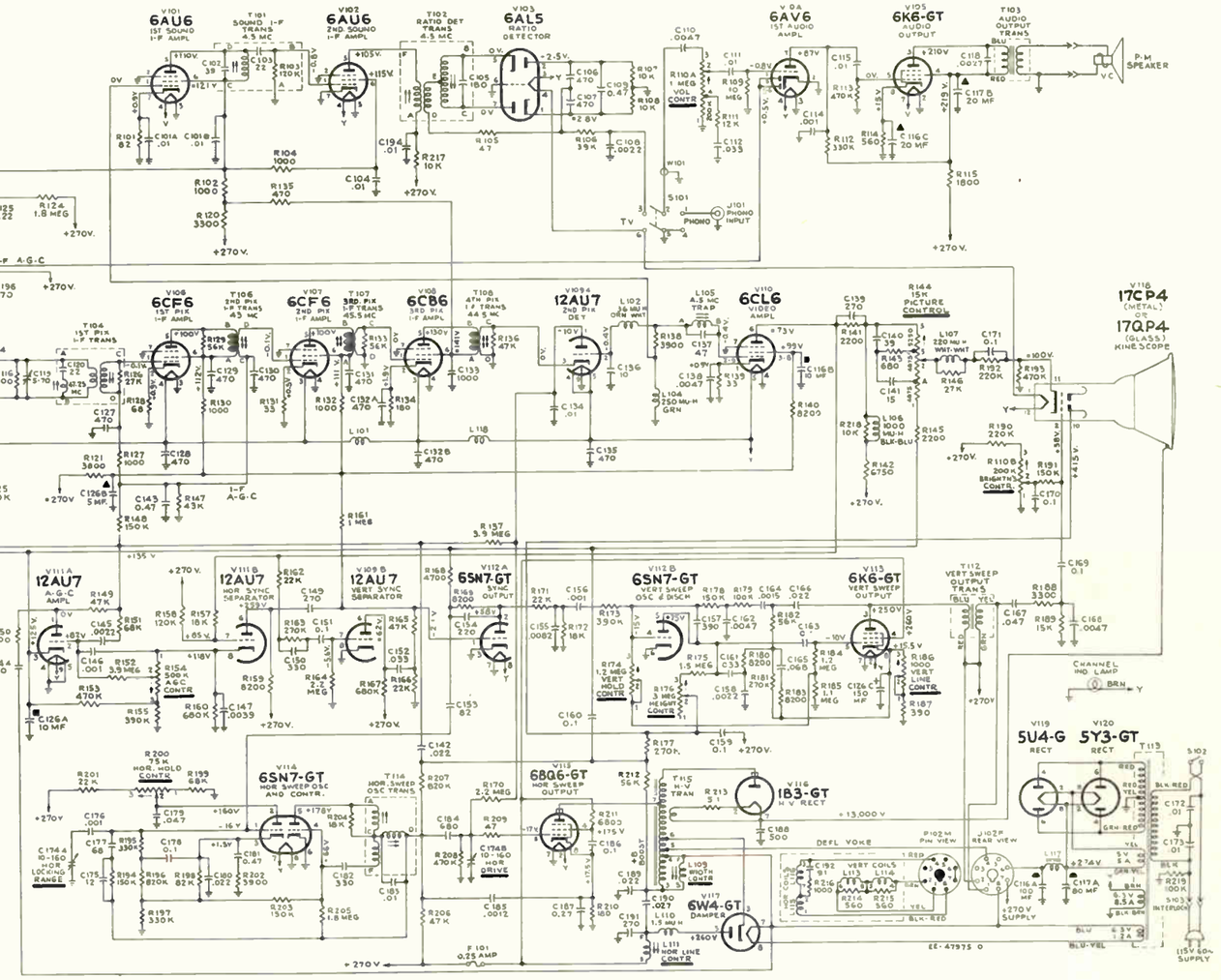

COLOR CODES MOULDED PAPER CAPACITORS

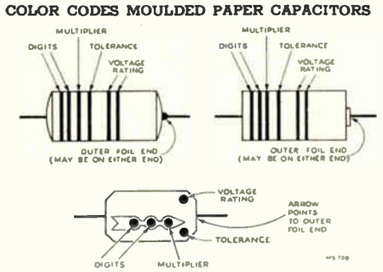

RMA COLOR CODE, FIXED MICA CAPACITORS

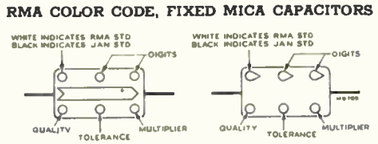

All resistance values in ohms. K = 1000.

All capacitance values less than 1 in MF and above 1 in MMF unless otherwise noted.

Direction of arrows at controls indicates clockwise rotation.

All voltages measured with "VoltOhmyst" and with no signal input. Voltages should hold within ±20% with 117 v. a-c supply.

REF. NO.	PART NO.	DESCRIPTION
		ELECTROLYTICS
C7	76532	Adj 1-4 mmf.
C7, C8	78259*	Adj 0.6-1.4 mmf.
C11, C21, C25	77151	0.8-3.0 mmf.
C16	78397	Mica trimmer 80-150 mmf.
C22	77913	Adj. 0.8-3.0 mmf.
C33	77616	Adj. 4-40 mmf.
C116A	76970	100 mfd, 400V.
C116B	76970	10 mfd, 350V.
C116C	76970	20 mfd, 50V.
C117A	77644	80 mfd, 400V.
C117B	77644	20 mfd, 400V.
C119	71496	Mica trimmer 5-70 mmf.
C126A	75218	10 mfd, 350V.
C126B	75218	5 mfd, 350V.
C126C	75218	150 mfd, 50V.
		RESISTORS
R110A	77641	Brightness.
R110B	77641	Volume.
R144	76445	Picture.
R154	76975	AGC.
R174	77642	Vertical hold.
R176	77924	Height.
R186	77643	Vertical linearity.
R200	77639	Horizontal hold.
		COILS
L101, L118	73477	Choke coil.
L102	76011	Peaking 36 mic.
L105	76983	Trap 4.5 mc.
L106	77124	Peaking 1000 mic.
L107	77925	Peaking 220 mic.
L109	76441	Width coil complete.
L110	76640	RF choke 1.5 mic.
L111	76442	Horiz. linearity.
L117	77676	Choke- filter.
		TRANSFORMERS
T1	78396	Antenna matching.
T1	77849*	Antenna input IN82.
T2, R8	78399	Convertor.
T101	76981	Sound IF.
T102	77112	Ratio detector.
T103	76982	Output.
T104	77637	1st pix IF.
T106	77638	2nd pix IF.
T107	76433	3rd pix IF.
T108	76433	4th pix IF.
T112	77636	Vertical output.
T113	77635	Power.
T114	76440	Horiz. oscillator.
T115	76795	Hi-voltage.
		MISCELLANEOUS
CR1	77849*	Xtal rectifier IN82.
	77000	Spk-5" PM 3.2 ohms, complete (971636-1W).
	75022	Spk-8" PM 3.2 ohms, complete.

NOTE: * Tuner KRK27 only.

17-S-350U, 17-S-351U, 17-S-360U MODELS

Chassis KCS78H

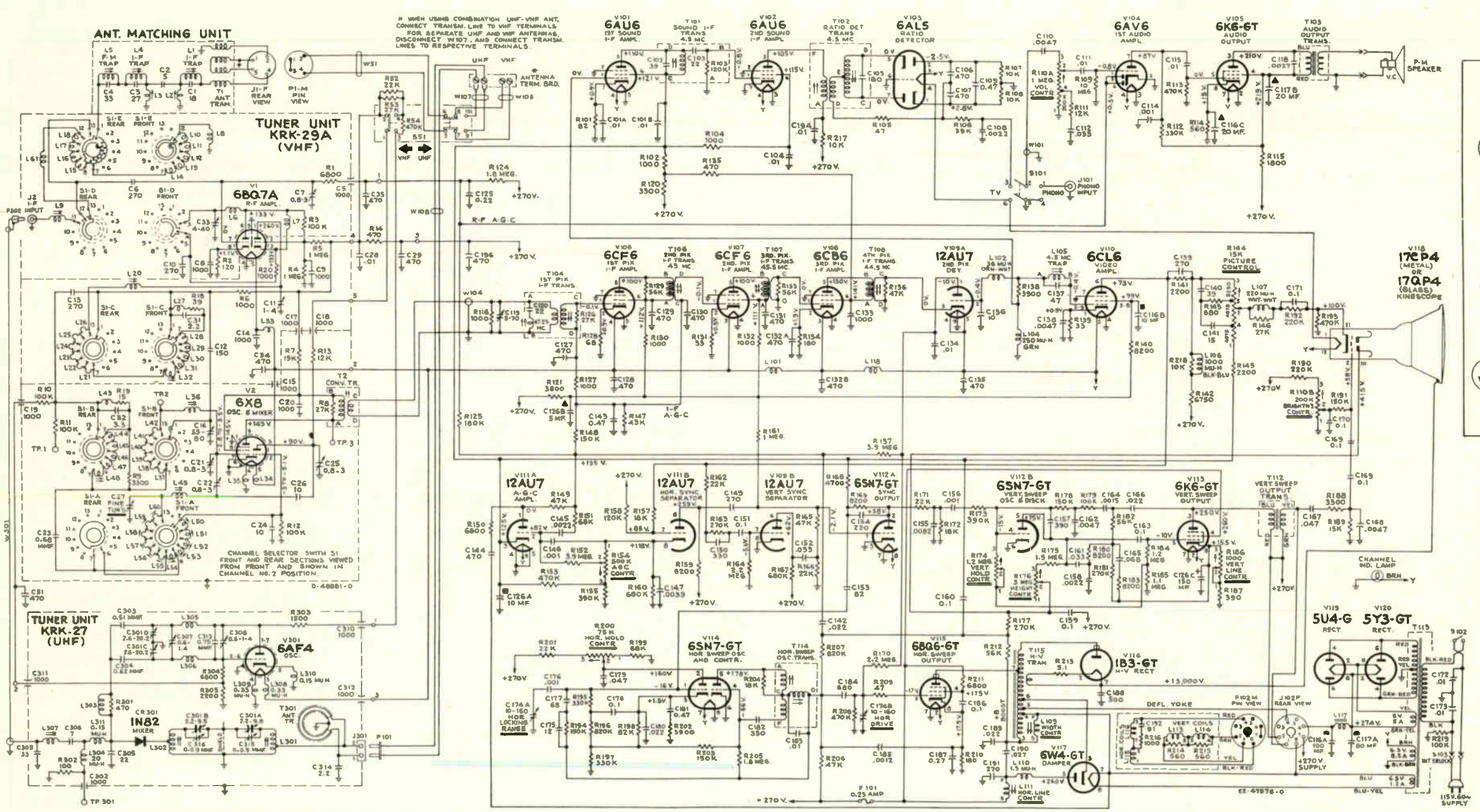

The schematic is shown in the latest condition at the time of printing.
All resistance value in ohms. K = 1000.

All voltages measured with "VoltOhmyst" and with no signal input. Voltages should hold within ±20% with 117 v. a-c supply.

Direction of arrows at controls indicates clockwise rotation.

REF. NO.	PART NO.	DESCRIPTION
		ELECTROLYTICS
C7	76532	Adj 1-4 mmf.
C7, C8	78259*	Adj 0.6-1.4 mmf.
C11, C21, C25	77151	0.8-3.0 mmf.
C16	78397	Mico trimmer 80-150 mmf.
C22	77913	Adj. 0.8-3.0 mmf.
C33	77616	Adj. 4-40 mmf.
C116A	76970	100 mfd, 400V.
C116B	76970	10 mfd, 350V.
C116C	76970	20 mfd, 50V.
C117A	77644	80 mfd, 400V.
C117B	77644	20 mfd, 400V.
C119	71496	Mica trimmer 5-70 mmf.
C126A	75218	10 mfd, 350V.
C126B	75218	5 mfd, 350V.
C126C	75218	150 mfd, 50V.
		RESISTORS
R110A	77641	Brightness.
R110B	77641	Volume.
R144	76445	Picture.
R154	76975	AGC.
R174	77642	Vertical hold.
R176	77924	Height.
R186	77643	Vertical linearity.
R200	77639	Horizontal hold.
		COILS
L101, L118	73477	Choke coil.
L102	76011	Peaking 36 mic.
L105	76983	Trap 4.5 mc.
L106	77124	Peaking 1000 mic.
L107	77925	Peaking 220 mic.
L109	76441	Width coil complete.
L110	76640	RF choke 1.5 mic.
L111	76442	Horiz. linearity.
L117	77676	Choke- filter.
		TRANSFORMERS
T1	78396	Antenna matching.
T1	77849*	Antenna input IN82.
T2, R8	78399	Convertor.
T101	76981	Sound IF.
T102	77112	Ratio detector.
T103	76982	Output.
T104	77637	1st pix IF.
T106	77638	2nd pix IF.
T107	76433	3rd pix IF.
T108	76433	4th pix IF.
T112	77636	Vertical output.
T113	77635	Power.
T114	76440	Horiz. oscillator.
T115	76795	Hi-voltage.
		MISCELLANEOUS
CR1	77849*	Xtal rectifier IN82.
	77000	Spk-5" PM 3.2 ohms, complete (971636-1W).
	75022	Spk-8" PM 3.2 ohms, complete.

NOTE: * Tuner KRK27 only.

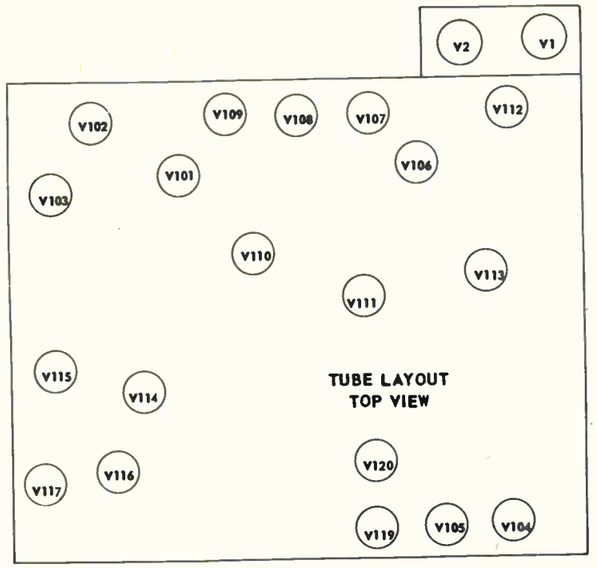

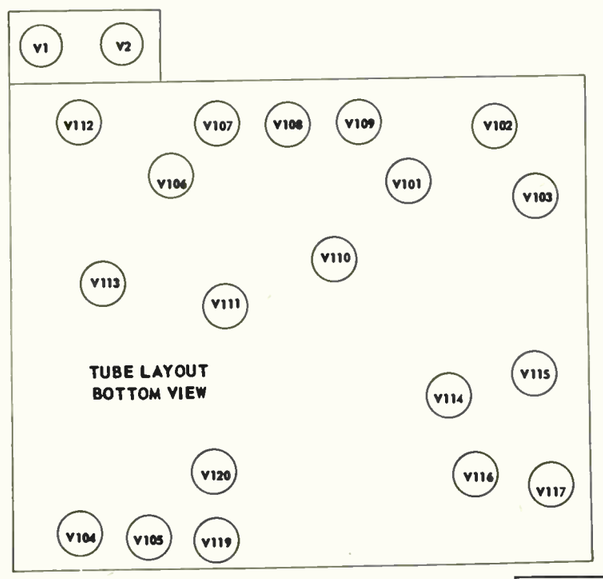

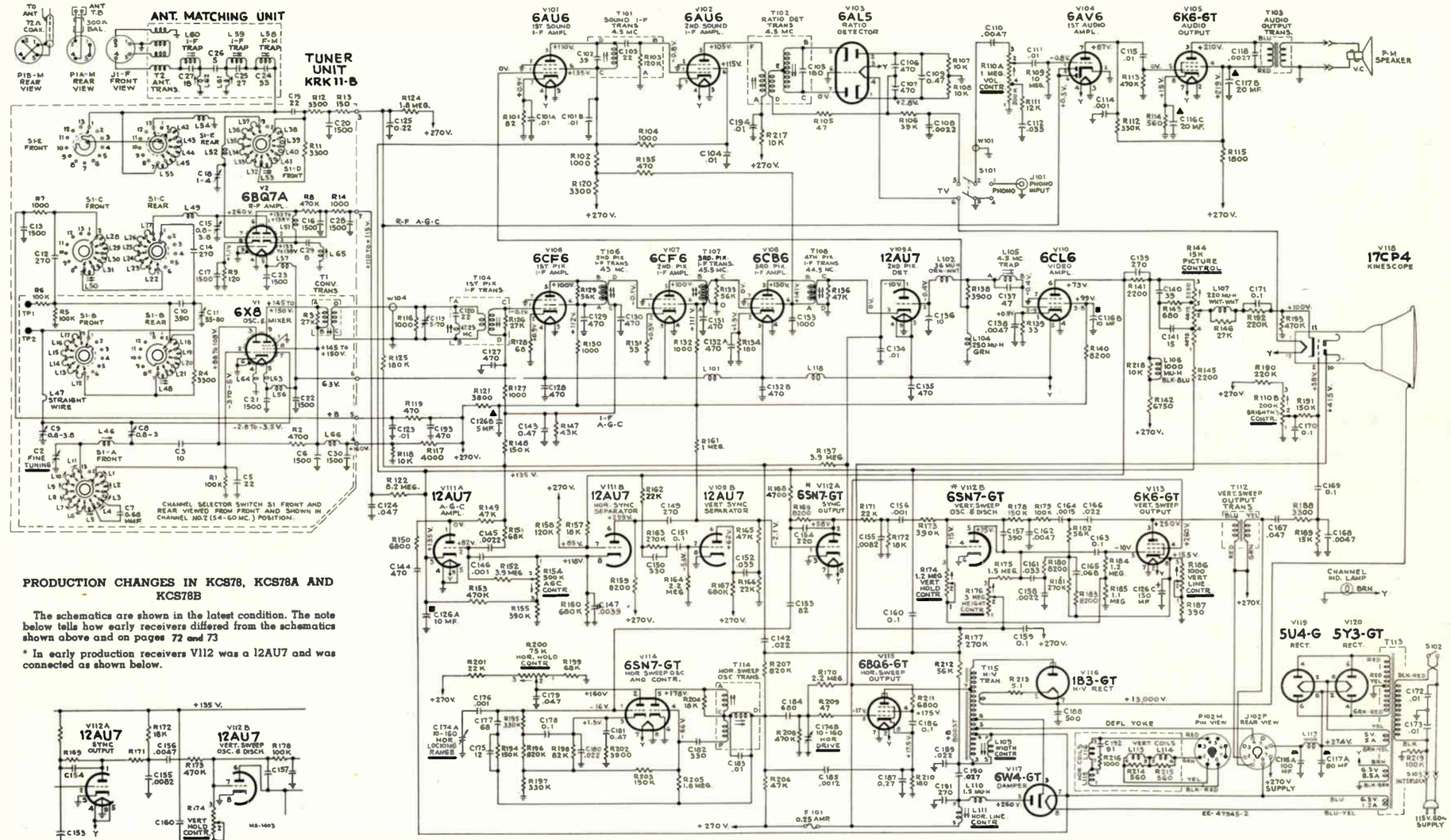

PRODUCTION CHANGES IN KCS78, KCS78A AND KCS78B

The schematics are shown in the latest condition. The note below tells how early receivers differed from the schematics shown above and on pages 72 and 73

* In early production receivers V112 was a 12AU7 and was connected as shown below.

The schematic is shown in the latest condition at the time of printing. All resistance value in ohms. K = 1000.

All capacitance values less than 1 in FM and above 1 in MMF unless otherwise noted.

Direction of arrows at controls indicates clockwise rotation.

All voltages measured with "VoltOhmyst" and with no signal input. Voltages should hold within ±20%, with 117 v. a-c supply.

REF. NO.	PART NO.	DESCRIPTION
		ELECTROLYTICS
C116A	76970	100 mfd, 400V.
C116B	76970	10 mfd, 350V.
C116C	76970	20 mfd, 50V.
C117A	77644	80 mfd, 400V.
C117B	77644	20 mfd, 400V.
C119	71496	Mica trimmer 5-70 mmf.
C126A	75218	10 mfd, 350V.
C126B	75218	5 mfd, 350V.
C126C	75218	150 mfd, 50V.
C174A C174B	75217	Mica trimmer dual 10-160 mmf.
		RESISTORS
R110A, R110B	77641	Brightness, vol., power sw.
R117	77668	W.W. 4000 ohms, 7 W for KC578.
R118	77669	W.W. 10K ohms 5 W for KC578.
R120	77670	W.W. 3300 ohms 7 W.
R121	77671	W.W. 3800 ohms, 7 W.
R144	76445	Picture control.
R154	76975	AGC control.
R174	77642	Vertical hold.
R176	77924	Height control.
R186	77643	Vertical linearity.
R200	77639	Horiz. hold.
R210	76639	W.W. 180 ohms, 2 W.
R213	76796	W.W. 5.1 ohms, 1/3 W.
R142	76642	W.W. 6750 ohms 10 W.
		COILS
L102	76011	Peaking 36 mic.
L104	71526	Peaking 250 mic.
L106	77124	Peaking 1000 mic.
L107	77925	Peaking 220 mic.
L109	76441	Width complete adj core.
L110	76640	RF choke 1.5 mic.
L111	76442	Horiz. linearity.
		TRANSFORMERS
T101	76981	Sound IF, complete.
T102	77112	Ratio detector.
T103	76982	Output Xformer.
T104	77637	1st pix IF.
T106	77638	2nd pix IF.
T107, T108	76433	3rd or 4th pix IF.
T112	77636	Vertical output.
T113	77635	Power 117V, 60 cy.
T114	76440	Horiz. oscillator.
T115	76795	Hi voltage.
		MISCELLANEOUS
	77697	Yoke.
	77000	Spk-5" PM 3.2 ohms.
	75022	Spk-8" PM 3.2 ohms.
	71807	Mica trimmer 10-160 mmf for 17T301U, 302U & 310U.

17-T-301, 17-T-302, 17-T-310 MODELS

Chassis KCS78A

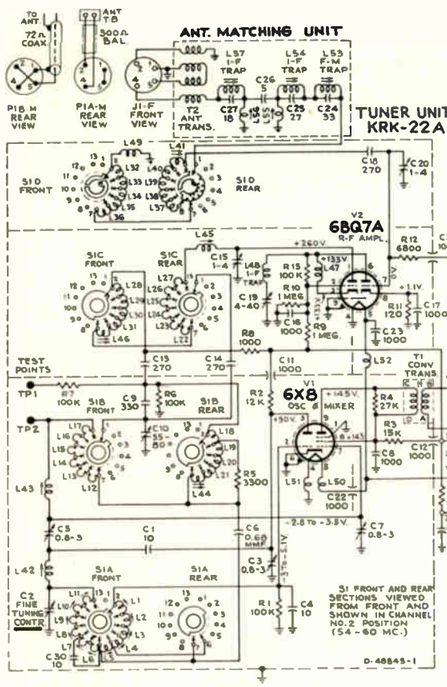

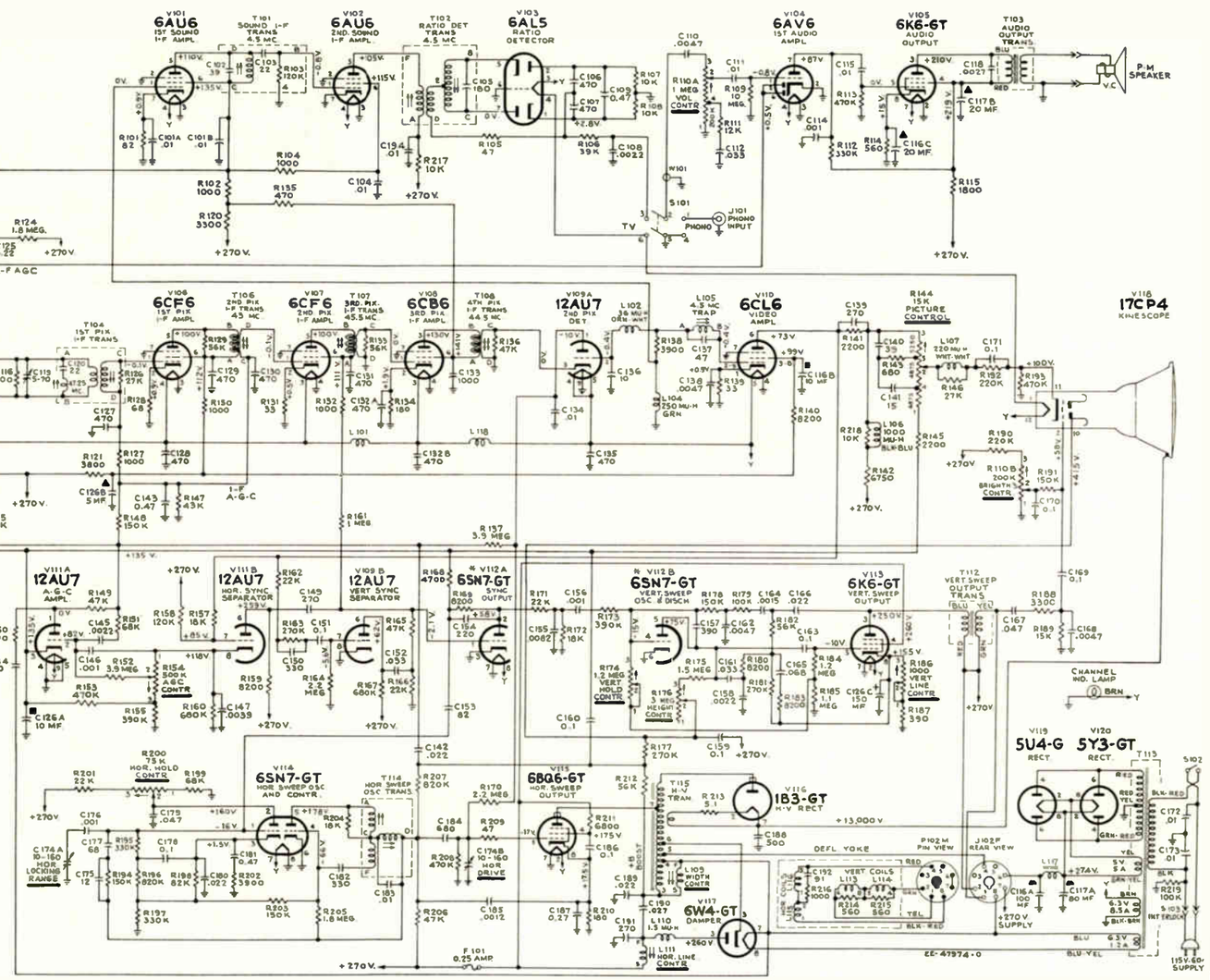

PRODUCTION CHANGES IN KCS78, KCS78A AND KCS78B

The schematics are shown in the latest condition. The notes below tell how early receivers differed from the schematics shown above and on pages 71 and 73.

In some receivers C133, at pin 6 of V108, was 470 mmf.
In some receivers C156, at V112, was .001 mfd.
In some receivers C156, at V112, was .0047 mfd.
In some receivers L107, at terminal 2 of the contrast control, was 250 μh.
In some receivers L118, between pin 3 of V108 and pin 4 of V109A, was omitted.
In some receivers R140, at pins 3 and 8 of V110, was 5600 ohms.
In some receivers R147, from the I-F AGC bus to ground at T106, was 39,000 ohms.
In some receivers R148, at terminal C of T106, was 120,000 ohms.
In some receivers R168, at V112A, was 3900 ohms.
In some receivers R172, at V112A, was connected to +135 v. instead of to ground.
In some receivers R173, at V112B, was 390,000 ohms.
In some receivers R173 was 470,000 ohms.
In some receivers R175, off terminal 3 of the height control, was 1.2 megohms.
In some receivers the height control R176 was 2.5 megohms.
In some receivers R178, at V112B, was 100,000 ohms.
In some receivers R187, between terminal 1 of the vertical linearity control and ground, was 470 ohms.
In some receivers R218, across L106 at V110, was omitted.
In some receivers R219, at the A.C. input, was omitted.
In some receivers V106 was a 6CB6 (same pin connections as 6CF6)
In some receivers V107 was a 6CB6 (same pin connections as 6CF6)

* In some receivers V112 was a 12AU7

The schematic is shown in the latest condition at the time of printing. All resistance value in ohms. K = 1000.

All capacitance values less than 1 in FM and above 1 in MMF unless otherwise noted.

Direction of arrows at controls indicates clockwise rotation.

All voltages measured with "VoltOhmyst" and with no signal input. Voltages should hold within ±20% with 117 v. a-c supply.

REF. NO.	PART NO.	DESCRIPTION
		ELECTROLYTICS
C116A	76970	100 mfd, 400V.
C116B	76970	10 mfd, 350V.
C116C	76970	20 mfd, 50V.
C117A	77644	80 mfd, 400V.
C117B	77644	20 mfd, 400V.
C119	71496	Mica trimmer 5-70 mmf.
C126A	75218	10 mfd, 350V.
C126B	75218	5 mfd, 350V.
C126C	75218	150 mfd, 50V.
C174A	C174B 75217	Mica trimmer dual 10-160 mmf.
		RESISTORS
R110A, R110B	77641	Brightness, vol., power sw.
R117	77668	W.W. 4000 ohms, 7 W for KCS78.
R118	77669	W.W. 10K ohms 5 W for KCS78.
R120	77670	W.W. 3300 ohms 7 W.
R121	77671	W.W. 3800 ohms, 7 W.
R144	76445	Picture control.
R154	76975	AGC control.
R174	77642	Vertical hold.
R176	77924	Height control.
R186	77643	Vertical linearity.
R200	77639	Horiz. hold.
R210	76639	W.W. 180 ohms, 2 W.
R213	76796	W.W. 5.1 ohms, 1/3 W.
R142	76642	W.W. 6750 ohms 10 W.
		COILS
L102	76011	Peaking 36 mic.
L104	71526	Peaking 250 mic.
L106	77124	Peaking 1000 mic.
L107	77925	Peaking 220 mic.
L109	76441	Width complete adj core.
L110	76640	RF choke 1.5 mic.
L111	76442	Horiz. linearity.
		TRANSFORMERS
T101	76981	Sound IF, complete.
T102	77112	Ratio detector.
T103	76982	Output Xformer.
T104	77637	1st pix IF.
T106	77638	2nd pix IF.
T107, T108	76433	3rd or 4th pix IF.
T112	77636	Vertical output.
T113	77635	Power 117V, 60 cy.
T114	76440	Horiz. oscillator.
T115	76795	Hi voltage.
		MISCELLANEOUS
	77697	Yoke.
	77000	Spk-5" PM 3.2 ohms.
	75022	Spk-8" PM 3.2 ohms.
	71807	Mica trimmer 10-160 mmf for 17T301U, 302U & 310U.

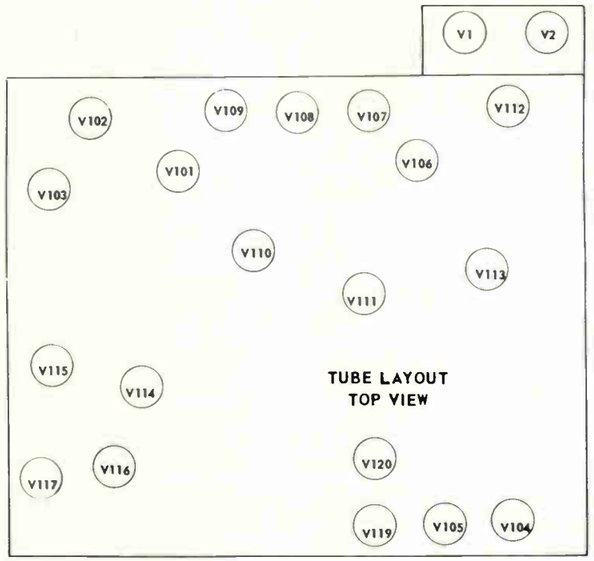

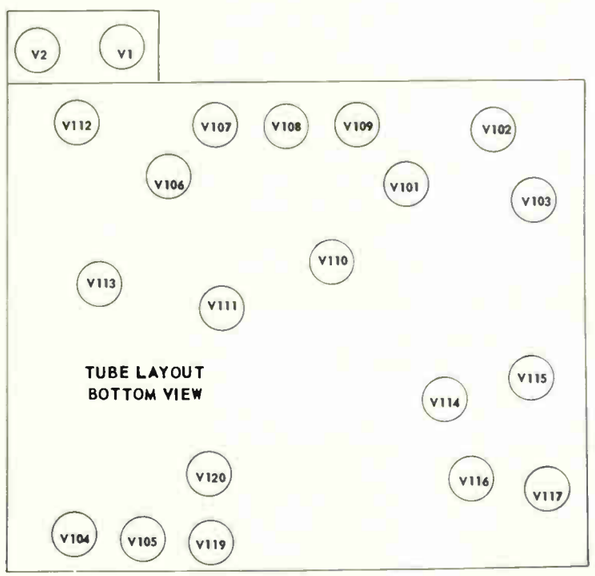

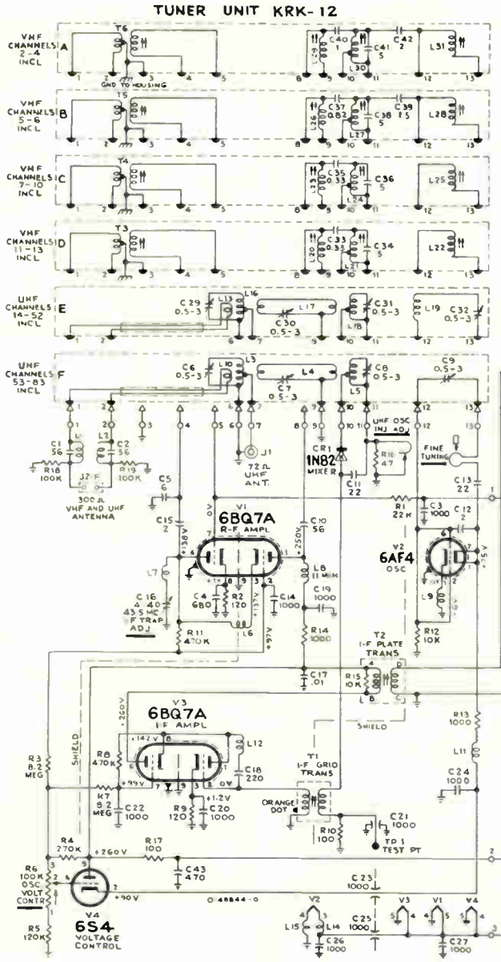

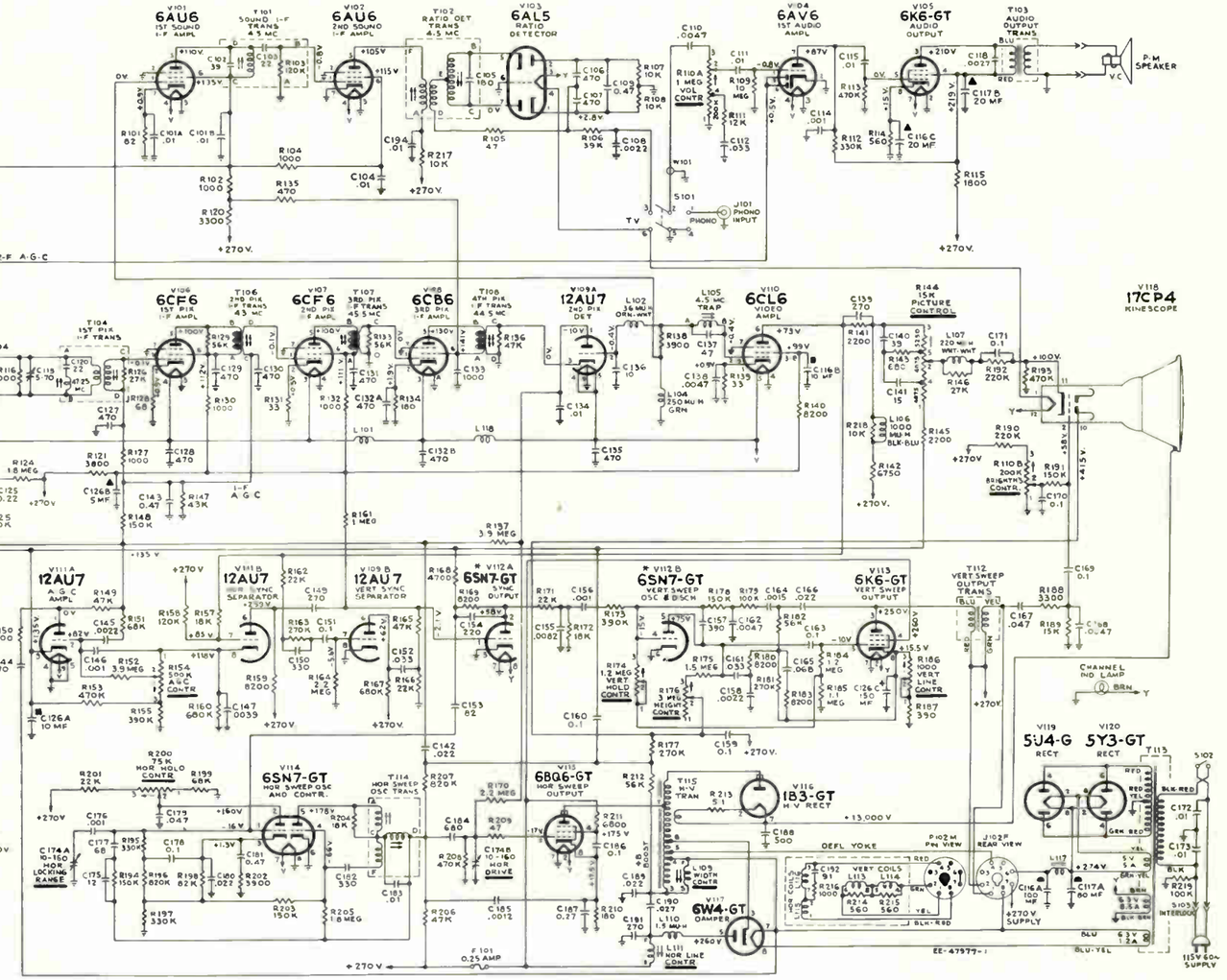

PRODUCTION CHANGES IN KCS78, KCS78A AND KCS78B

*The schematics are shown in the latest condition. The notes on pages **71 and 72** tell how early receivers differed from the schematic shown above.

The schematic is shown in the latest condition at the time of printing.
All resistance value in ohms. K = 1000.

All capacitance values less than 1 in FM and above 1 in MMF unless otherwise noted.

Direction of arrows at controls indicates clockwise rotation.

All voltages measured with "VoltOhmyst" and with no signal input. Voltages should hold within ±20%, with 117 v. a-c supply.

REF. NO.	PART NO.	DESCRIPTION
ELECTROLYTICS		
C116A	76970	100 mfd, 400V.
C116B	76970	10 mfd, 350V.
C116C	76970	20 mfd, 50V.
C117A	77644	80 mfd, 400V.
C117B	77644	20 mfd, 400V.
C119	71496	Mico trimmer 5-70 mmf.
C126A	75218	10 mfd, 350V.
C126B	75218	5 mfd, 350V.
C126C	75218	150 mfd, 50V.
C174A C174B	75217	Mico trimmer dual 10-160 mmf.
RESISTORS		
R110A, R110B	77641	Brightness, vol., power sw.
R117	77668	W.W. 4000 ohms, 7 W for KC578.
R118	77669	W.W. 10K ohms 5 W for KC578.
R120	77670	W.W. 3300 ohms 7 W.
R121	77671	W.W. 3800 ohms, 7 W.
R144	76445	Picture control.
R154	76975	AGC control.
R174	77642	Vertical hold.
R176	77924	Height control.
R186	77643	Vertical linearity.
R200	77639	Horiz. hold.
R210	76639	W.W. 180 ohms, 2 W.
R213	76796	W.W. 5.1 ohms, 1/3 W.
R142	76642	W.W. 6750 ohms 10 W.
COILS		
L102	76011	Peaking 36 mic.
L104	71526	Peaking 250 mic.
L106	77124	Peaking 1000 mic.
L107	77925	Peaking 220 mic.
L109	76441	Width complete adj core.
L110	76640	RF choke 1.5 mic.
L111	76442	Horiz. linearity.
TRANSFORMERS		
T101	76981	Sound IF, complete.
T102	77112	Ratio detector.
T103	76982	Output Xformer.
T104	77637	1st pix IF.
T106	77638	2nd pix IF.
T107, T108	76433	3rd or 4th pix IF.
T112	77636	Vertical output.
T113	77635	Power 117V, 60 cy.
T114	76440	Horiz. oscillator.
T115	76795	Hi voltage.
MISCELLANEOUS		
	77697	Yoke.
	77000	5pk-5" PM 3.2 ohms.
	75022	5pk-8" PM 3.2 ohms.
	71807	Mico trimmer 10-160 mmf for 17T301U, 302U & 310U.

17-T-352U, 17-T-361U MODELS

Chassis KCS78J

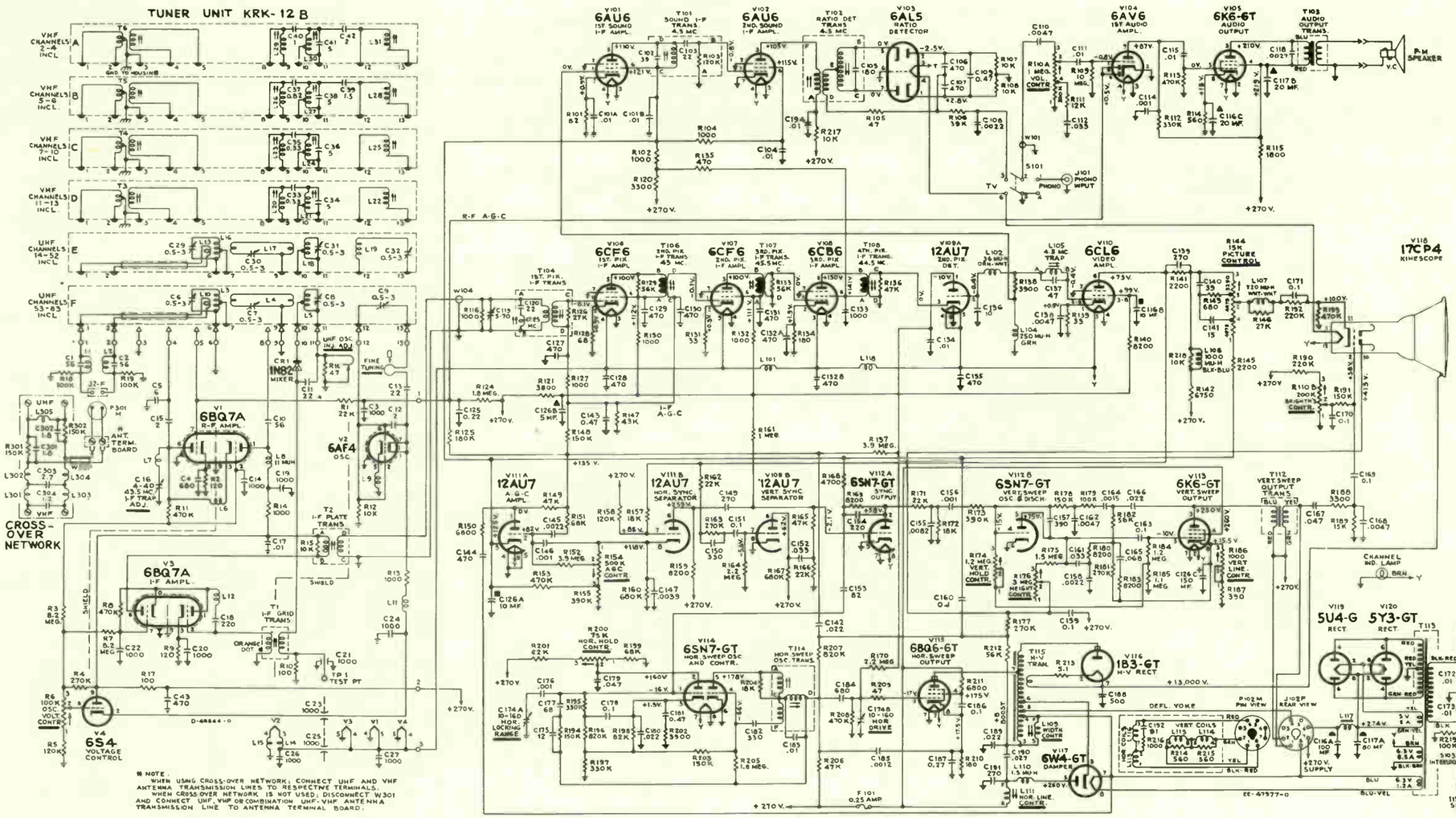

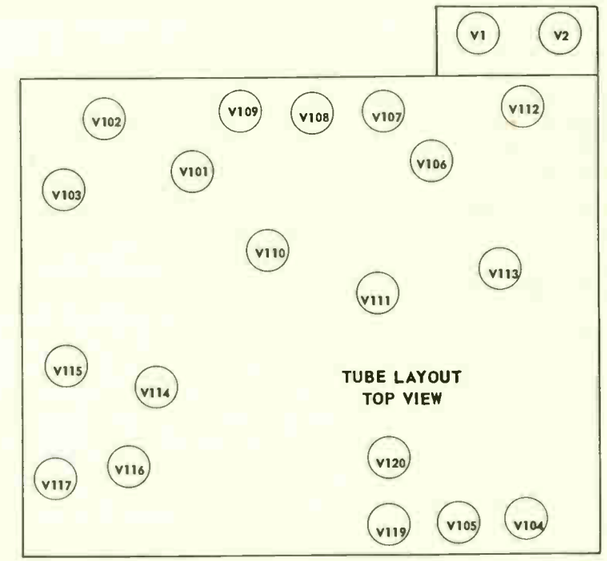

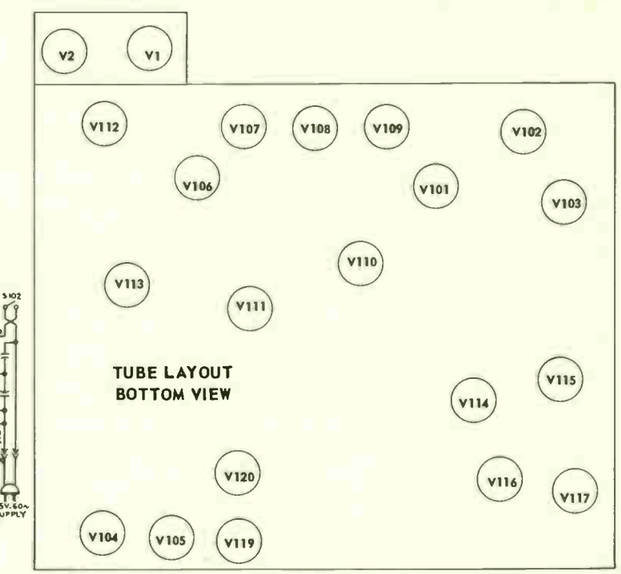

All resistance values in ohms. K = 1000.

All capacitance values less than 1 in MF and above 1 in MMF unless otherwise noted.

Direction of arrows at controls indicates clockwise rotation.

All voltages measured with "VoltOhmyst" and with no signal input. Voltages should hold within ±20% with 117 v. a-c supply.

REF. NO.	PART NO.	DESCRIPTION
		ELECTROLYTICS
C7	76532	Adj. 1-4 mmf.
C11, C21, C25	77151	0.8-3.0 mmf.
C16	78397	Mica trimmer 80-150 mmf.
C22	77913	Adj. 0.8-3.0 mmf.
C33	77616	Adj. mica, 4-40 mmf.
C116A	76970	100 mfd, 400V.
C116B	76970	20 mfd, 50V.
C116C	76970	20 mfd, 50V.
C117A	77644	80 mfd, 400V.
C117B	77644	20 mfd, 400V.
C119	71496	Mica trimmer 5-70 mmf.
C126A	75218	10 mfd, 350V.
C126B	75218	5 mfd, 350V.
C126C	75218	150 mfd, 50V.
C174A	75217	Mica trimmer.
C174B	75217	Dual 10-160 mmf.

		RESISTORS
R6	77614	Osc. voltage UHF osc. injection adjustable.
R110A	77641	Brightness.
R110B	77641	Volume.
R114	76445	Picture.
R154	76975	AGC.
R174	77642	Vertical hold.
R176	77924	Height.
R186	77643	Vertical linearity.
R200	77639	Horiz. hold.

		COILS
L101, L118	73477	Choke coil.
L102	76011	Peaking 36 mic.
L104	71526	Peaking 250 mic.
L105	76983	Trap 4.5 mc.
L106	77124	Peaking 1000 mic.
L107	77925	Peaking 220 mic.
L109	76441	Width.
L110	76640	RF choke 1.5 mic.
L111	76442	Horiz. linearity.
L117	77676	Filter choke.

		TRANSFORMERS
T1	78396	Ant. matching complete.
T2, R8	76540	FM trap complete.
T101	76981	Sound IF.
T102	77112	Ratio detector.
T103	76982	Output.
T104	77637	1st pix IF.
T106	77638	2nd pix IF.
T107	76433	3rd pix IF.
T108	76433	4th pix IF.
T112	77636	Vertical output.
T113	77635	Power 117V, 60 cycle.
T114	76440	Horiz. oscillator.
T115	76795	HI voltage.

		MISCELLANEOUS
CR1	77489	Germanium rectifier IN82.
	77000	Spk-5" PM complete 3.2 ohms, 971636-1W.
	75022	Spk-8" PM 3.2 ohms.

MODELS **21-D-305, 21-D-305U, 21-D-317, 21-D-317U, 21-D-326, 21-D-326U, 21-D-327, 21-D-327U, 21-D-328, 21-D-328U, 21-D-329, 21-D-329U, 21-D-330, 21-D-330U**

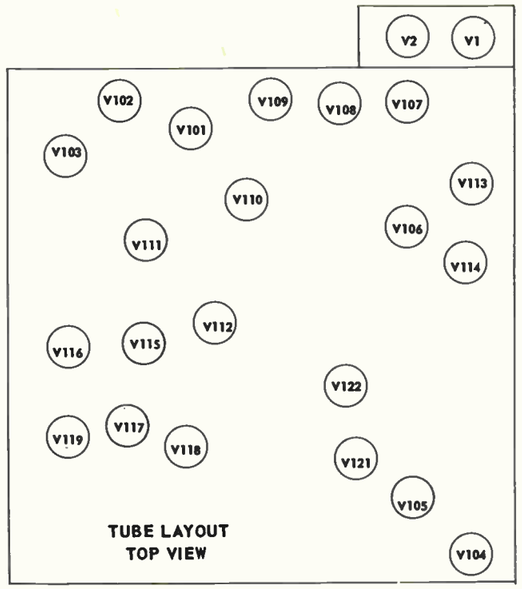

TUBE LAYOUT TOP VIEW

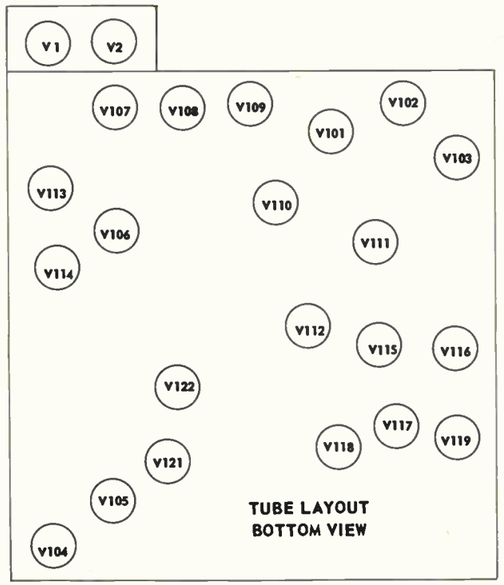

TUBE LAYOUT BOTTOM VIEW

Chassis Nos. KCS81 or KCS81B (KCS81B WITH KRK12 TUNER)

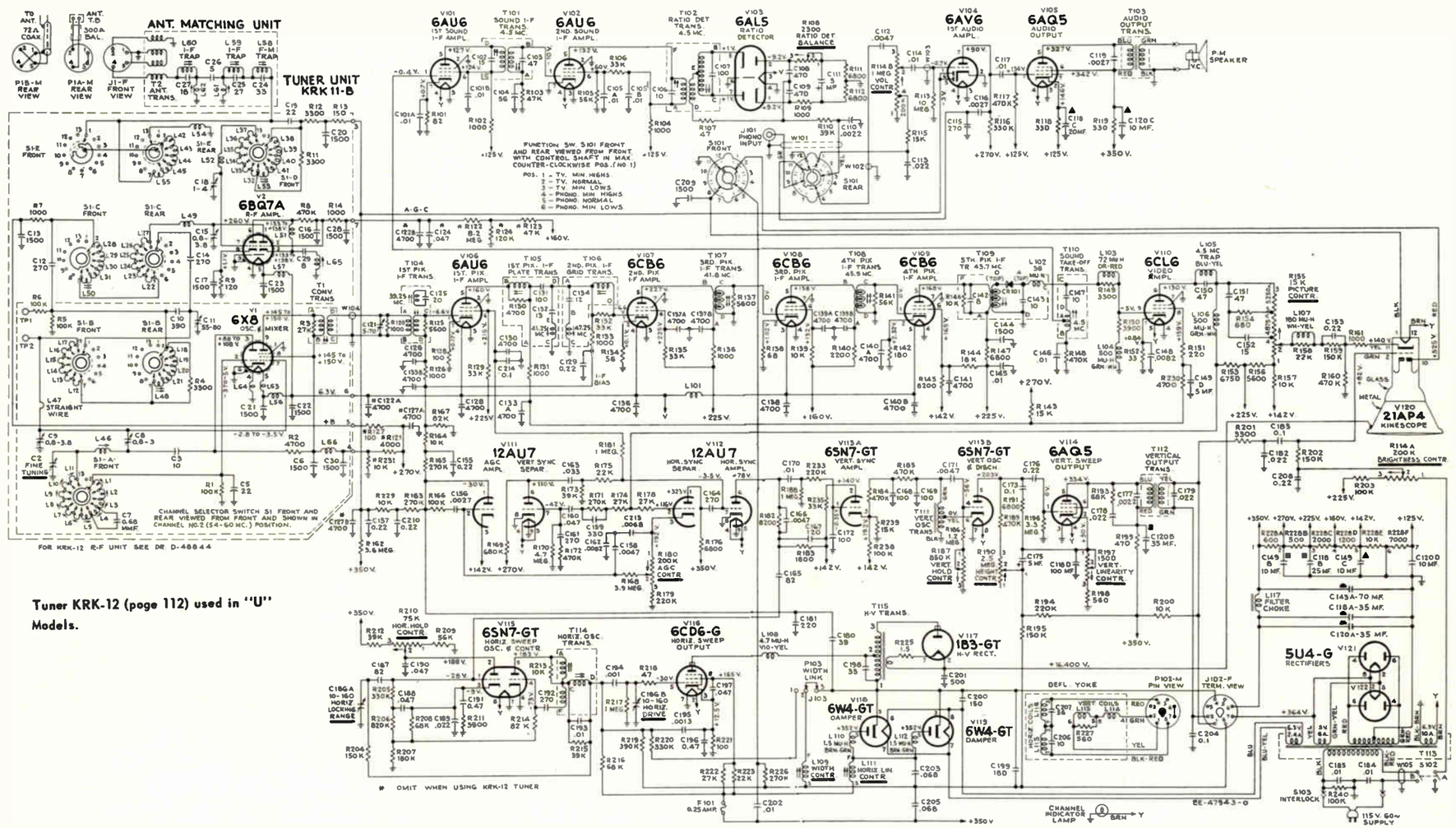

Tuner KRK-12 (page 112) used in "U" Models.

The schematic is shown in the latest condition at the time of printing. All resistance values in ohms. K = 1000.

All capacitance values less than 1 in MF and above 1 in MMF unless otherwise noted.

Direction of arrows at controls indicates clockwise rotation.

All voltages measured with "Volt-Ohmyst" and with no signal input. Voltages should hold within ±20% with 117 v. a-c supply.

REF. NO.	PART NO.	DESCRIPTION
		ELECTROLYTICS
C8	77151*	Tubular adj. 0.8-3 mmf.
C9	75184*	Ceramic, adj. 0.8-3.8 mmf.
C11	76527*	Mica trimmer 55-80 mmf.
C16	77616**	Adj. mica 4-40 mmf.
C18	76532*	Adj. trimmer 1-4 mmf.
C111	74521	5 mfd, 50V.
C118A	76486	35 mfd, 450V.
C118B	76486	25 mfd, 450V.
C118C	76486	20 mfd, 200V.
C118D	76486	100 mfd, 50V.
C120A	76485	35 mfd, 450V.
C120B	76485	35 mfd, 450V.
C120C	76485	10 mfd, 450V.
C120D	76485	10 mfd, 200V.
C121	71496	Mica trimmer 5-70 mmf.
C149A	77657	70 mfd, 450V.
C149B	77657	10 mfd, 450V.
C149C	77657	10 mfd, 450V.
C149D	77657	5 mfd, 450V.
C175	28417	5 mfd, 450V.
C186A	75217	Mica trimmer.
C186B	75217	Dual 10-160 mmf.

		RESISTORS
R6	77614**	Oscillator voltage control
	77617**	UHF osc. inj. adj.
R108	77199	Ratio detector balance.
R114A	77655	Brightness.
R114B	77655	Volume.
R155	76445	Picture.
R180	77654	AGC.
R187	77652	Vertical hold.
R190	77640	Height.
R197	77653	Vertical linearity.
R210	76639	Horiz. hold.

		COILS
L101	73477	Choke coil.
L103	76646	Peaking 72 mic.
L104	75252	Peaking 50 mic.
L105	76482	Trap 4,5 mc.
L107	76647	Peaking 180 mic.
L108	76510	RF choke 4.7 mic.
L109	76484	Width coil.
L110	76640	RF choke 1.5 mic.
L111	76483	Horiz. linearity.
L117	77676	Filter choke.

		TRANSFORMERS
T1	77663*	Convertor, complete.
T1	77609 **	Mixer IF, complete.
T2	76536*	Ant. matching complete.
T2	77610**	Primary IF link complete.
T101	76438	Sound IF.
T102	76439	Ratio detector.
T103	76997	Output.
T104	77198	1st pix IF grid, complete.
T105	77197	1st pix IF plate, complete.
T106	76435	2nd pix IF grid, complete.
T107	76433	3rd pix IF.
T108	76433	4th pix IF.
T109	76436	5th pix IF.
T110	76437	Sound take-off.
T111	77650	Vertical oscillator.
T112	76494	Vertical output.
T113	77649	Power 117V, 60 cycle.
T114	76440	Horiz. oscillator.
Part of T115	76501	Hi-voltage.

		MISCELLANEOUS
CR101	76675	Pix det Xtal rectifier.
	76168	Magnet-focus.
	76141	Magnet-ion tra..
	75022	Spk-8" PM 3.2 ohms.
	76093	Spk-12" PM 3.2 ohms.

NOTE: * for unit KRK11B.
** for unit KRK12.

21-D-346, 21-D-346U MODELS

Chassis Nos.-Television Chassis KCS81D or KCS81E
Radio Chassis RC1111A, Audio Amplifier RS141A

(KCS81E with KRK12)

Tuner KRK-12 (page 112) used in Model 21-D-346U.

All resistance values in ohms. K = 1000.

All capacitance values less than 1 in MF and above 1 in MMF unless otherwise noted.

All voltages measured with "VoltOhmyst" and with no signal input. Voltages should hold within ± 20% with 117 v. a-c supply.

Direction of arrows at controls indicates clockwise rotation.

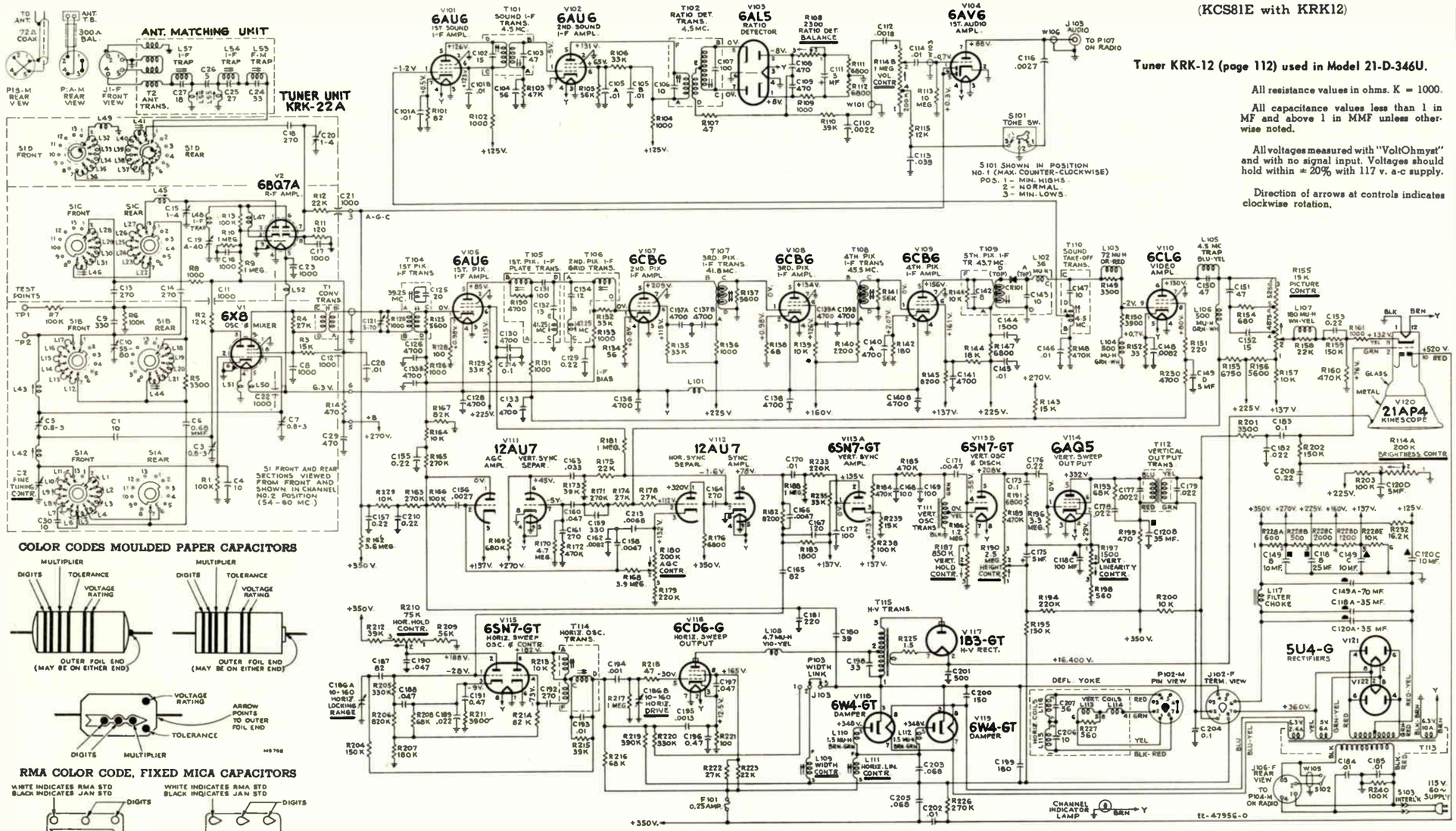

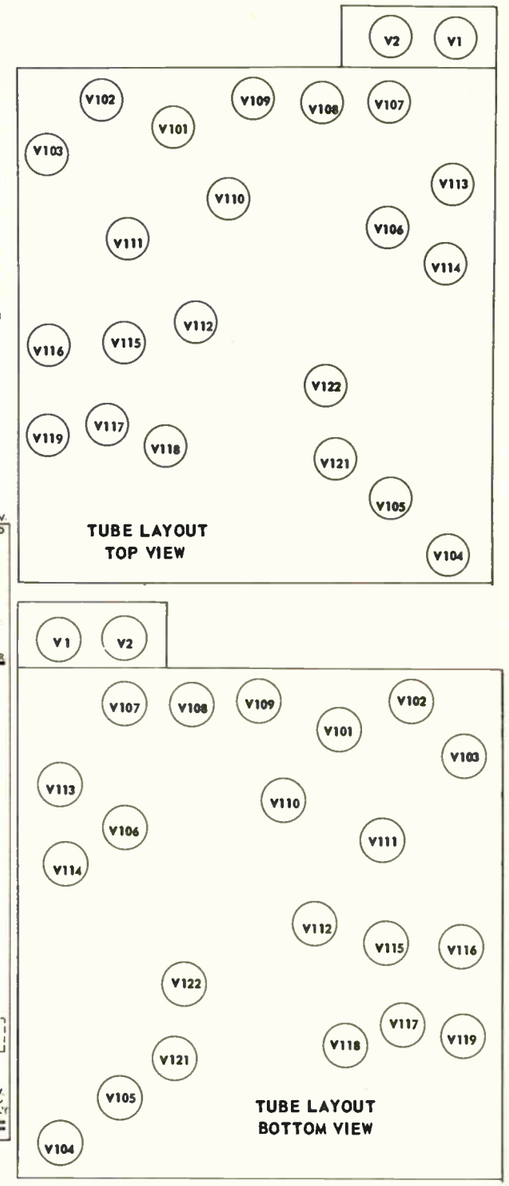

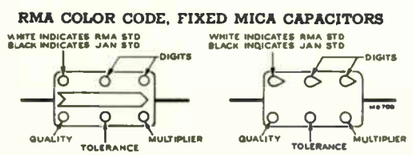

Radio RC1111A (page 111) used with 21-D-346 and 21-D-346U.

REF. NO.	PART NO.	DESCRIPTION
ELECTROLYTICS		
C111	74521	5 mfd, 50V.
C118A	74474	35 mfd, 450V.
C118B	77474	25 mfd, 450V.
C118C	77474	100 mfd, 50V.
C120A	75510	35 mfd, 450V.
C120B	75510	35 mfd, 450V.
C120C	75510	10 mfd, 450V.
C120D	75510	5 mfd, 450V.
C121	71496	Mica trimmer 5-70 mmf.
C149A	77657	70 mfd, 450V.
C149B	77657	10 mfd, 450V.
C149C	77657	10 mfd, 450V.
C149D	77657	5 mfd, 450V.
C175	28417	5 mfd, 450V.
RESISTORS		
R108	77199	Ratio detector balance.
R114A	77814	Brightness.
R114B	77814	Volume.
R155	76445	Picture.
R180	77654	AGC.
R187	77652	Vertical hold.
R190	77640	Height.
R197	77653	Vertical linearity.
R210	77639	Horiz. hold.
COILS		
L101	73477	Choke.
L103	76646	Peaking 72 mic.
L104, L106	75252	Peaking 500 mic.
L105	76482	Trap 4.5 mc.
L107	76647	Peaking 180 mic.
L108	76510	RF choke 4.7 mic.
L109	76484	Width coil.
L110, L112	76640	RF choke.
L111	76483	Horiz. linearity.
Part of T115	76672	Filament winding for hi-voltage.
TRANSFORMERS		
T101	76438	Sound IF.
T102	76439	Ratio detector.
T104	77198	1st pix IF grid.
T105	77197	1st pix IF plate.
T106	76435	2nd pix IF grid.
T107	76433	3rd pix IF.
T108	76433	4th pix IF.
T109	76436	5th pix IF.
T110	76437	Sound take-off.
T111	77650	Vertical oscillator.
T112	76494	Vertical output.
T113	77649	Power 117V, 60 cycle.
T114	76440	Horiz. oscillator.
Part of T115	76501	Hi-voltage.
MISCELLANEOUS		
CR101	77675	Rectifier pix detector Xtal.
	76093	Spk-12" PM 3.2 ohms, (92569-12W).

Chassis KCS81J

MODELS 21-D-358U, 21-D-368U, 21-D-376U, 21-D-377U, 21-D-378U, 21-D-379U, 21-D-380U

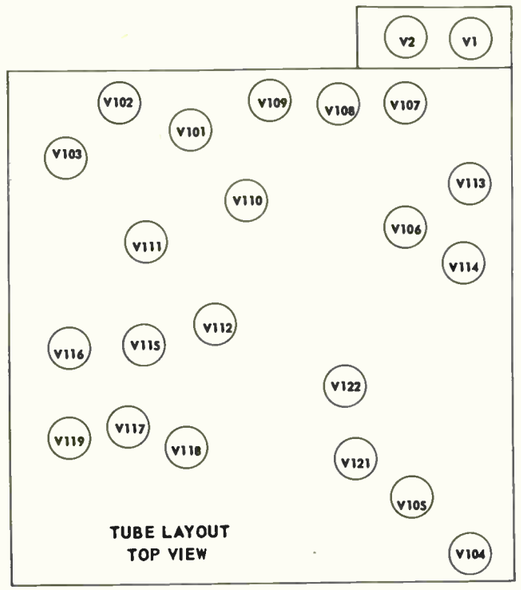

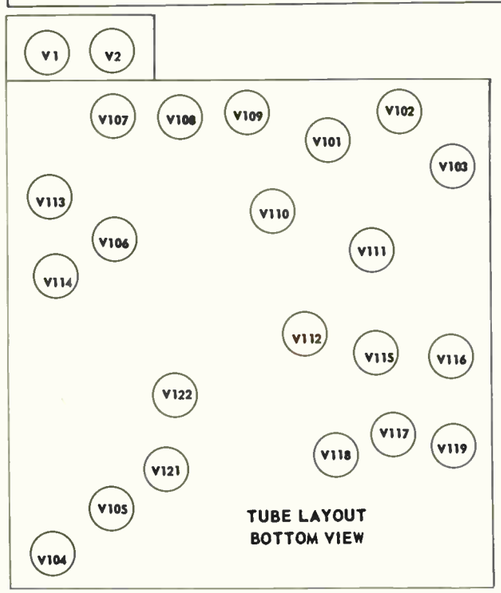

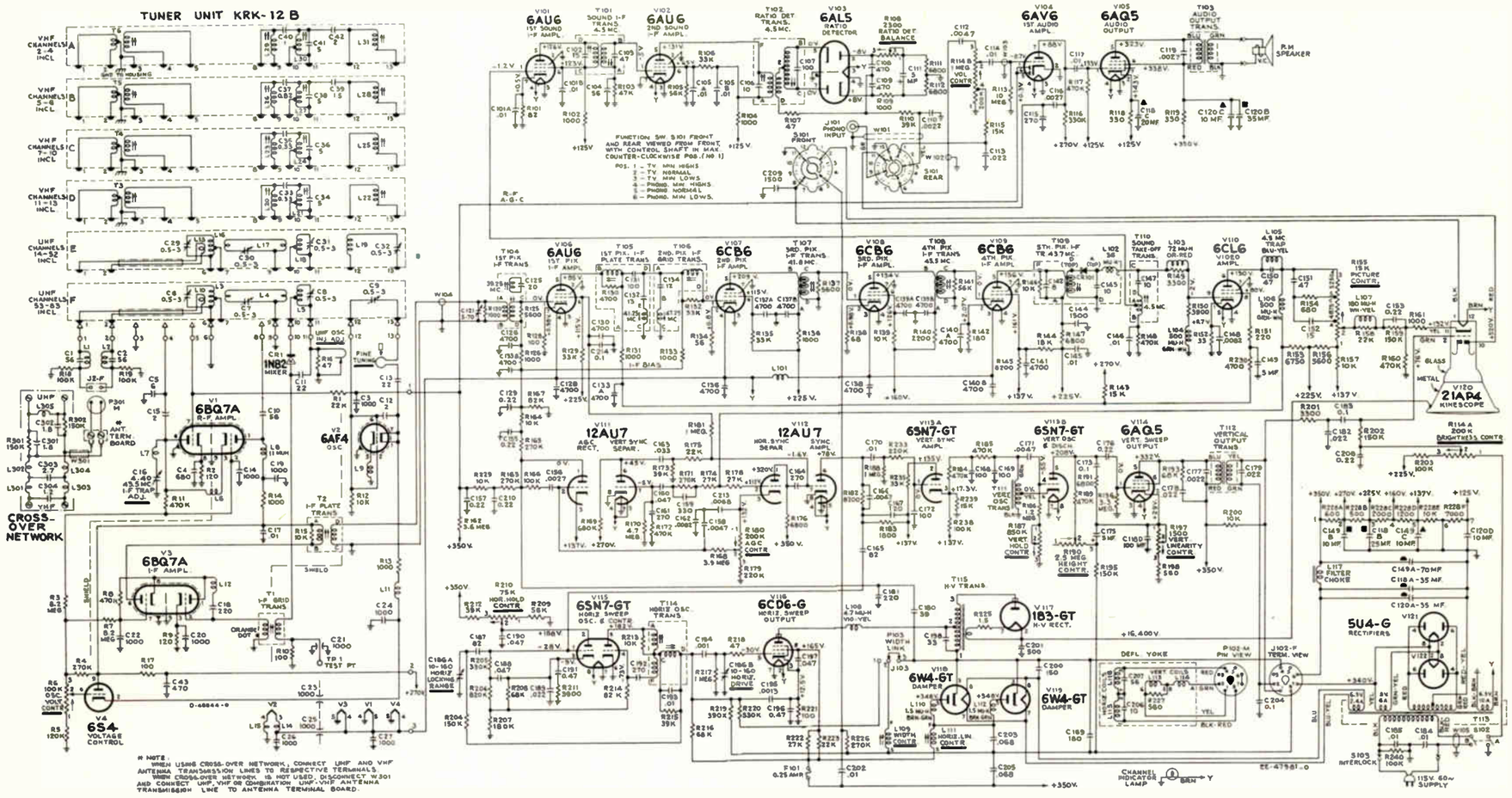

The schematic is shown in the latest condition at the time of printing.
All resistance values in ohms. K = 1000.

All capacitance values less than 1 in MF and above 1 in MMF unless otherwise noted.

Direction of arrows at controls indicates clockwise rotation.

All voltages measured with "Volt-Ohmyst" and with no signal input. Voltages should hold within ±20% with 117 v. a-c supply.

REF. NO.	PART NO.	DESCRIPTION
		ELECTROLYTICS
C7	76532*	Adj. 1-4 mmf.
C11, C21, C25	77151*	Adj. 0.8-3.0 mmf.
C16	78397*	Mica trimmer 80-150 mmf.
C16	77616**	Adj mica 4-40 mmf.
C22	77913*	Adj 0.8-3.0 mmf.
C33	77616*	Adj mica 4-40 mmf.
C111	74521	5 mfd, 50V.
C118A	76486	35 mfd, 450V.
C118B	76486	25 mfd, 450V.
C118C	76486	20 mfd, 200V.
C118D	76486	100 mfd, 50V.
C120A	76485	35 mfd, 450V.
C120B	76485	35 mfd, 450V.
C120C	76485	10 mfd, 450V.
C120D	76485	10 mfd, 200V.
C121	71496	Mica trimmer 5-70 mmf.
C149A	77657	70 mfd, 450V.
C149B	77657	10 mfd, 450V.
C149C	77657	10 mfd, 450V.
C149D	77657	5 mfd, 450V.
C175	28417	5 mfd, 450V.
C186A	75217	Mica trimmer.
C186B	75217	Dual 10-160 mmf.
		RESISTORS
R108	77199	Ratio detector balance.
R114A	77655	Brightness.
R114B	77655	Volume.
R155	76445	Picture.
R180	77654	AGC.
R187	77652	Vertical hold.
R190	77640	Height.
R197	77653	Vertical linearity.
R210	77639	Horiz. hold.
		COILS
L101	73477	Choke coil.
L103	76646	Peaking 72 mic.
L104	75252	Peaking 500 mic.
L105	76482	Trap 4.5 mc.
L107	76647	Peaking 180 mic.
L108	76510	RF choke 4.7 mic.
L109	76484	Width coil.
L110, L112	76640	RF choke 1.5 mic.
L111	76483	Horiz. linearity.
	78278	Yoke.
L117	77676	Filter choke.
		TRANSFORMERS
T1	78396*	Ant. matching complete.
T1	77609**	Mixer IF complete.
T2	78399*	Convertor.
T2	77610**	Primary IF link, complete.
T101	76438	Sound IF.
T102	76439	Ratio detector.
T103	76997	Output.
T104	77198	1st pix IF grid.
T105	77197	1st pix IF plate.
T106	76435	2nd pix IF grid.
T107	76433	3rd pix IF.
T108	76433	4th pix IF.
T109	76436	5th pix IF.
T110	76437	Sound take-off.
T111	77650	Vertical oscillator.
T112	76494	Vertical output.
T113	77649	Power 117V, 60 cycle.
T114	76440	Horiz. oscillator.
Part of T115	76501	Hi voltage.
		MISCELLANEOUS
CR101	76675	Rect. pix detector Xtal.
	75022	Spk-8" PM 3.2 ohms.
	76093	Spk-12" PM 3.2 ohms.

NOTE: * for tuner KRK29.
** for tuner KRK12B.

21-D-358, 21-D-368, 21-D-376, 21-D-377, 21-D-378, 21-D-379, 21-D-380 MODELS

Chassis KCS81F

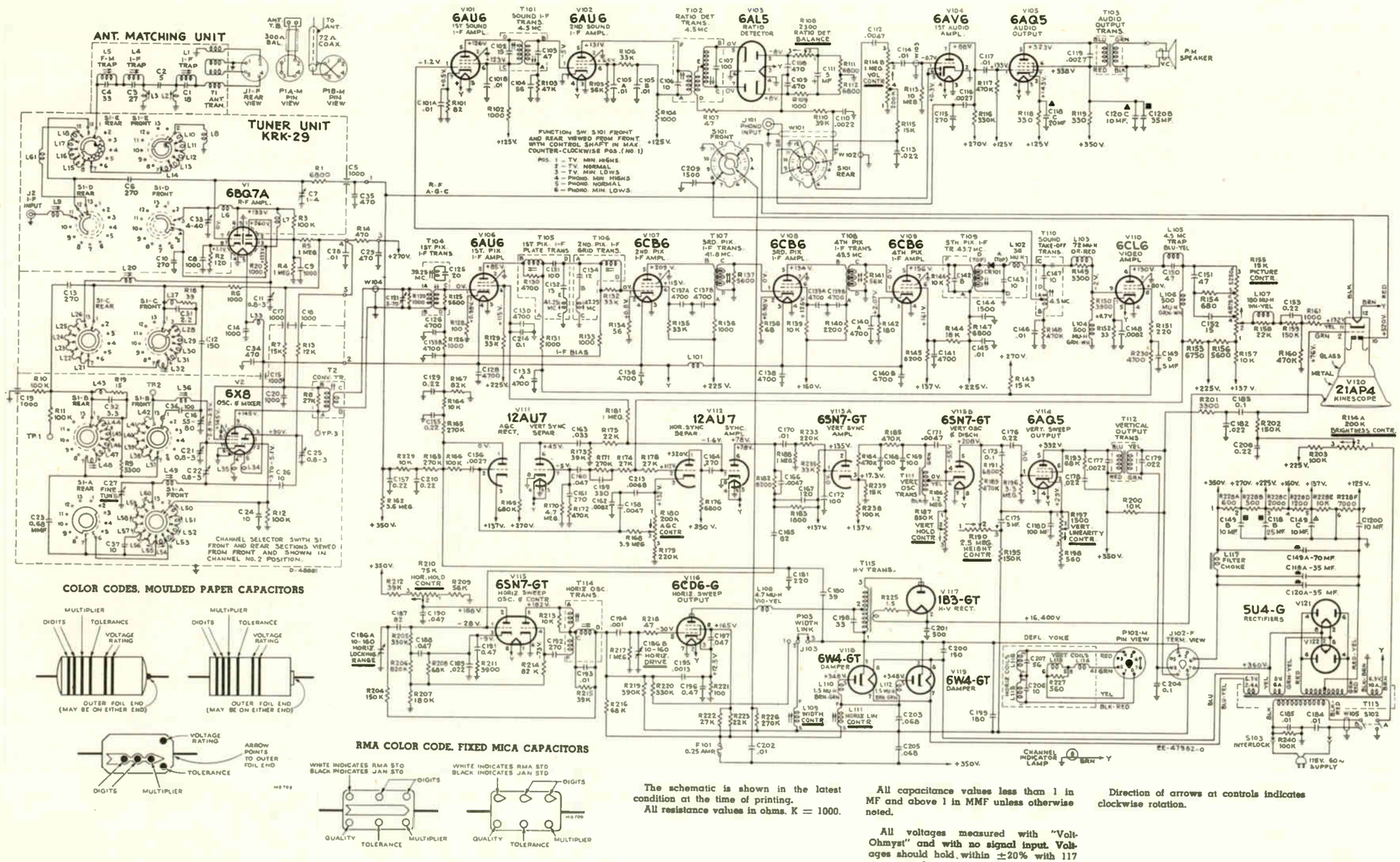

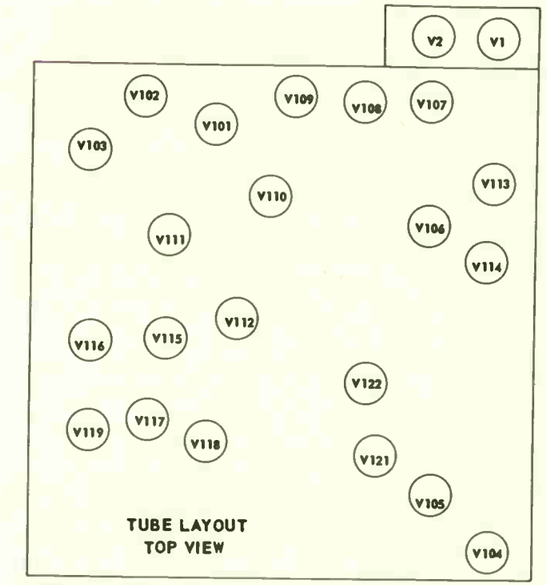

TUBE LAYOUT
TOP VIEW

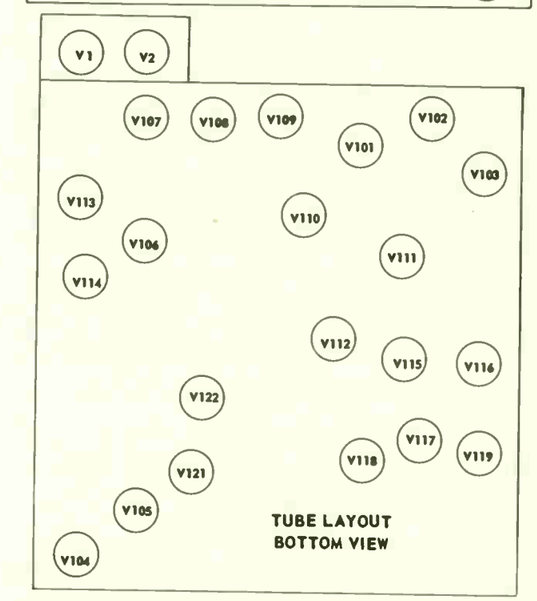

TUBE LAYOUT
BOTTOM VIEW

COLOR CODES, MOULDED PAPER CAPACITORS

RMA COLOR CODE. FIXED MICA CAPACITORS

The schematic is shown in the latest condition at the time of printing.
All resistance values in ohms. K = 1000.

All capacitance values less than 1 in MF and above 1 in MMF unless otherwise noted.

All voltages measured with "Volt-Ohmyst" and with no signal input. Voltages should hold within ±20% with 117 v. a-c supply.

Direction of arrows at controls indicates clockwise rotation.

REF. NO.	PART NO.	DESCRIPTION
		ELECTROLYTICS
C7	76532*	Adj. 1-4 mmf.
C11, C21, C25	77151*	Adj. 0.8-3.0 mmf.
C16	78397*	Mica trimmer 80-150 mmf.
C16	77616**	Adj mica 4-40 mmf.
C22	77913*	Adj 0.8-3.0 mmf.
C33	77616*	Adj mica 4-40 mmf.
C111	74521	5 mfd, 50V.
C118A	76486	35 mfd, 450V.
C118B	76486	25 mfd, 450V.
C118C	76486	20 mfd, 200V.
C118D	76486	100 mfd, 50V.
C120A	76485	35 mfd, 450V.
C120B	76485	35 mfd, 450V.
C120C	76485	10 mfd, 450V.
C120D	76485	10 mfd, 200V.
C121	71496	Mica trimmer 5-70 mmf.
C149A	77657	70 mfd, 450V.
C149B	77657	10 mfd, 450V.
C149C	77657	10 mfd, 450V.
C149D	77657	5 mfd, 450V.
C175	28417	5 mfd, 450V.
C186A	75217	Mica trimmer.
C186B	75217	Dual 10-160 mmf.
		RESISTORS
R108	77199	Ratio detector balance.
R114A	77655	Brightness.
R114B	77655	Volume.
R155	76445	Picture.
R180	77654	AGC.
R187	77652	Vertical hold.
R190	77640	Height.
R197	77653	Vertical linearity.
R210	77639	Horiz. hold.
		COILS
L101	73477	Choke coil.
L103	76646	Peaking 72 mic.
L104	75252	Peaking 500 mic.
L105	76482	Trap 4.5 mc.
L107	76647	Peaking 180 mic.
L108	76510	RF choke 4.7 mic.
L109	76484	Width coil.
L110, L112	76640	RF choke 1.5 mic.
L111	76483	Horiz. linearity.
	78278	Yoke.
L117	77676	Filter choke.
		TRANSFORMERS
T1	78396*	Ant. matching complete.
T1	77609**	Mixer IF complete.
T2	78399*	Convertor.
T2	77610**	Primary IF link, complete.
T101	76438	Sound IF.
T102	76439	Ratio detector.
T103	76997	Output.
T104	77198	1st pix IF grid.
T105	77197	1st pix IF plate.
T106	76435	2nd pix IF grid.
T107	76433	3rd pix IF.
T108	76433	4th pix IF.
T109	76436	5th pix IF.
T110	76437	Sound take-off.
T111	77650	Vertical oscillator.
T112	76494	Vertical output.
T113	77649	Power 117V, 60 cycle.
T114	76440	Horiz. oscillator.
Part of T115	76501	Hi voltage.
		MISCELLANEOUS
CR101	76675	Rect. pix detector Xtal.
	75022	Spk-8" PM 3.2 ohms.
	76093	Spk-12" PM 3.2 ohms.

NOTE: * for tuner KRK29.
** for tuner KRK12B.

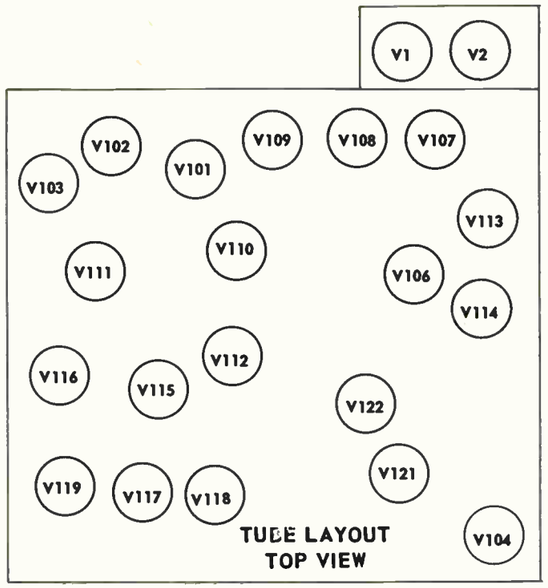

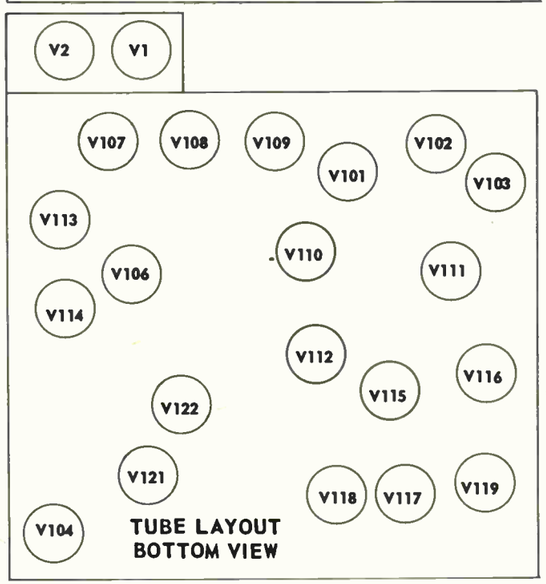

Chassis KCS81H

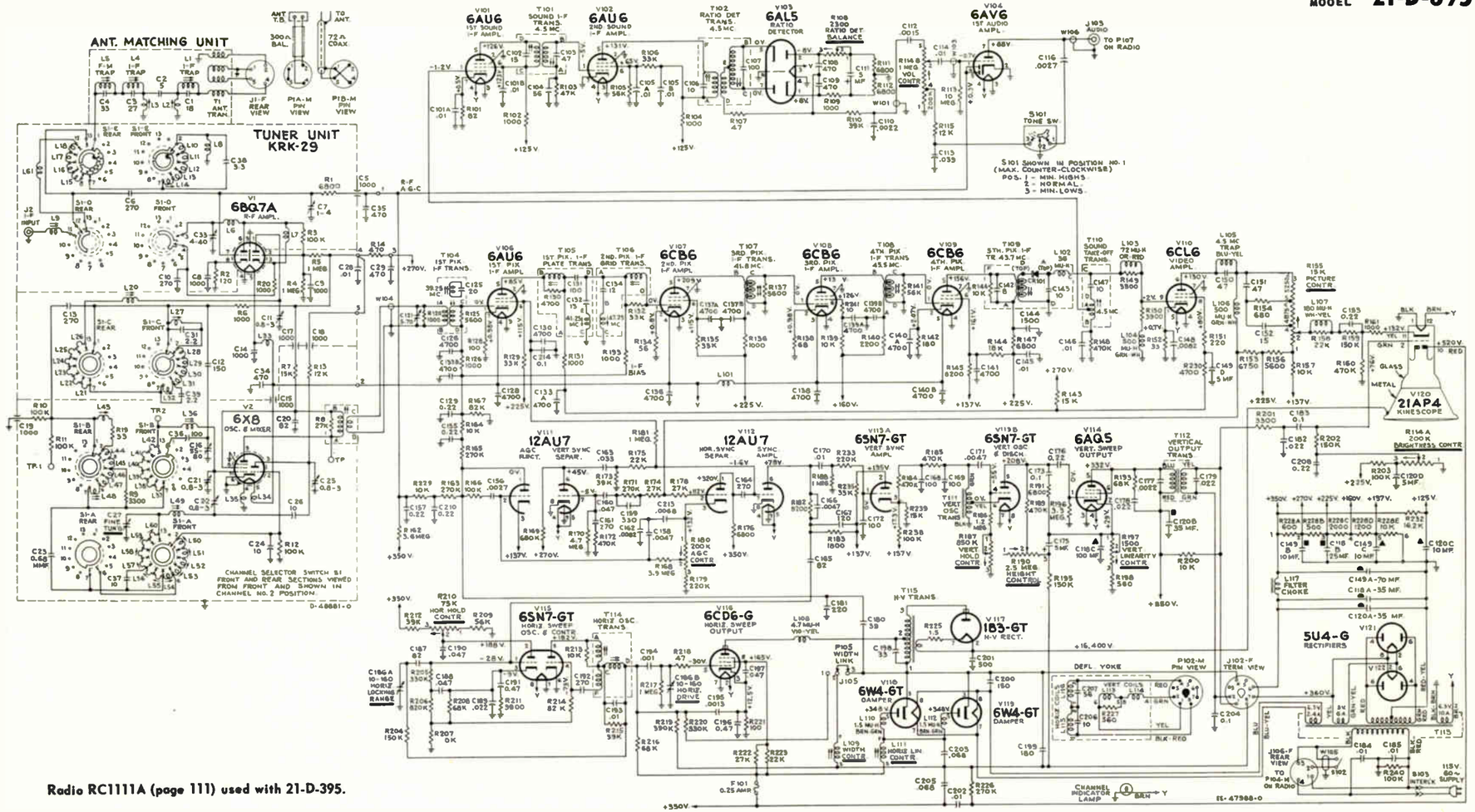

Radio RC1111A (page 111) used with 21-D-395.

The schematic is shown in the latest condition at the time of printing.
All resistance values in ohms. K = 1000.

All capacitance values less than 1 in MF and above 1 in MMF unless otherwise noted.

Direction of arrows at controls indicates clockwise rotation.

All voltages measured with "Volt-Ohmyst" and with no signal input. Voltages should hold within ±20% with 117 v. a-c supply.

REF. NO.	PART NO.	DESCRIPTION
		ELECTROLYTICS
C111	74521	5 mfd, 50V.
C118A	77474	35 mfd, 450V.
C118B	77474	25 mfd, 450V.
C118C	77474	100 mfd, 50V.
C120A,B	77510	35 mfd, 450V.
C120C	77510	10 mfd, 450V.
C120D	77510	5 mfd, 450V.
C121	71496	Mica trimmer 5-70 mmf.
C175	28417	5 mfd, 450V.
C149A	77657	70 mfd, 450V.
C149B,C	77657	10 mfd, 450V.
C149D	77657	5 mfd, 450V.
C186A,B	75217	dual 10-160 mmf.
		COILS
L101	73477	Choke coil.
L103	76646	Peaking 72 muh.
L104,L106	75252	Peaking 500 muh.
L107	76647	Peaking 180 muh.
L108	78598	RF choke- 6.8 muh.
L109	76484	Width complete w/adj core.
L110, L112	76640	RF choke 1.5 muh.
L111	76483	Horiz. linearity.
L117	77676	Filter choke.
		RESISTORS
R108	77199	Ratio detector balance.
R114A,B	77814	Brightness, vol., power sw.
R155	76445	Picture control.
R180	77654	AGC control.
R187	77652	Vertical hold.
R190	77640	Height control.
R197	77653	Vertical linearity.
R210	77639	Horiz. hold.
R153	76642	6750 ohms, 10W.
R228A	77812	600 ohms, 16W.
R228B	77812	500 ohms, 6W.
R228C	77812	2000 ohms, 5W.
R228D	77812	1200 ohms, 1W.
R228E	77812	10,000 ohms, 5W.
R232	77815	16,200 ohms, 10W.
		TRANSFORMERS
T101	76438	Sound IF.
T102	76439	Ratio detector.
T104	77198	First pix IF grid.
T105	77197	First pix OI plate.
T106	76435	2nd pix IF. grid.
T107,108	76433	3rd, or 4th pix IF.
T109	76436	5th pix IF.
T110	76437	Sound take-off.
T111	77650	Vertical oscillator.
T112	76494	Vertical output.
T113	77649	Power 117V, 60 cy.
T114	76440	Horiz. oscillator.
Part of T115	76501	Hi voltage.
		MISCELLANEOUS
CR101	76675	Pix detector crystal rect.
T1	77323	Output for Ampl. R5141E.
T2	75566	Power 117V 60 cy. for ampl. R5141E.
	76093	Spk-12" PM 3.2 ohms.

Chassis KCS81K

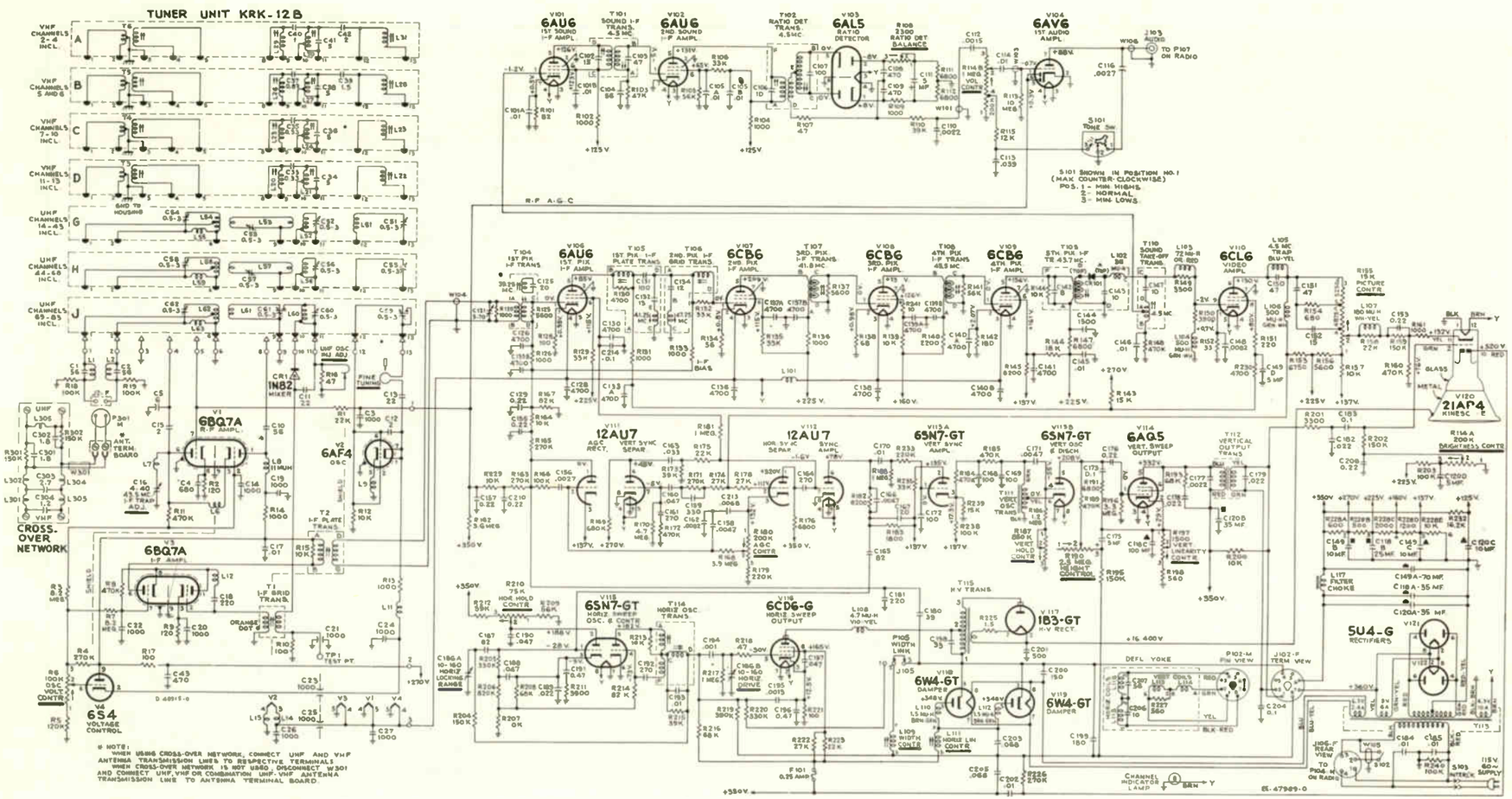

Radio RC1111A (page 111) used with 21-D-395U.

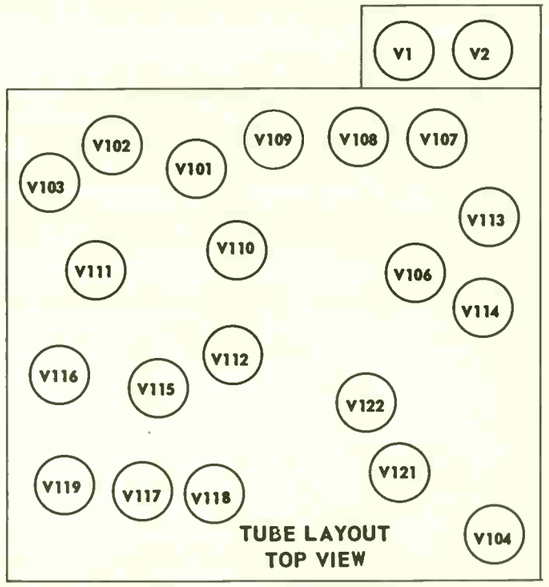

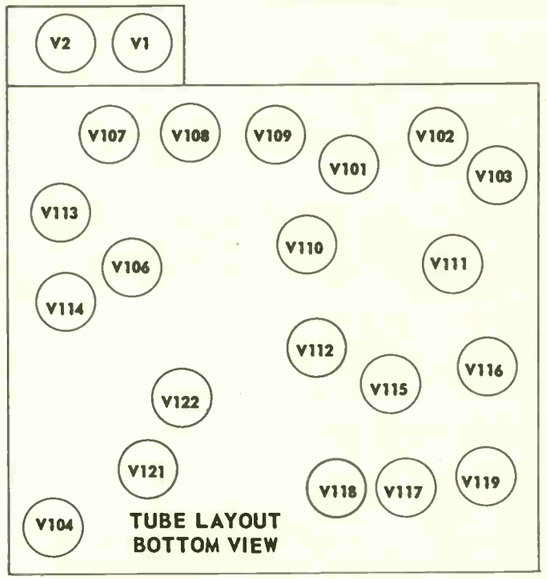

The schematic is shown in the latest condition at the time of printing.
All resistance values in ohms. K = 1000.

All capacitance values less than 1 in MF and above 1 in MMF unless otherwise noted.

Direction of arrows at controls indicates clockwise rotation.

All voltages measured with "Volt-Ohmyst" and with no signal input. Voltages should hold within ±20% with 117 v. a-c supply.

REF. NO.	PART NO.	DESCRIPTION
		ELECTROLYTICS
C111	74521	5 mfd, 50V.
C118A	77474	35 mfd, 450V.
C118B	77474	25 mfd, 450V.
C118C	77474	100 mfd, 50V.
C120A,B	77510	35 mfd, 450V.
C120C	77510	10 mfd, 450V.
C120D	77510	5 mfd, 450V.
C121	71496	Mico trimmer 5-70 mmf.
C175	28417	5 mfd, 450V.
C149A	77657	70 mfd, 450V.
C149B,C	77657	10 mfd, 450V.
C149D	77657	5 mfd, 450V.
C186A,B	75217	dual 10-160 mmf.
		COILS
L101	73477	Choke coil.
L103	76646	Peaking 72 muh.
L104,L106	75252	Peaking 500 muh.
L107	76647	Peaking 180 muh.
L108	78598	RF choke- 6.8 muh.
L109	76484	Width complete w/odj core.
L110, L112	76640	RF choke 1.5 muh.
L111	76483	Horiz. linearity.
L117	77676	Filter choke.
		RESISTORS
R108	77199	Ratio detector balance.
R114A,B	77814	Brightness, vol., power sw.
R155	76445	Picture control.
R180	77654	AGC control.
R187	77652	Vertical hold.
R190	77640	Height control.
R197	77653	Vertical linearity.
R210	77639	Horiz. hold.
R153	76642	6750 ohms, 10W.
R228A	77812	600 ohms, 16W.
R228B	77812	500 ohms, 6W.
R228C	77812	2000 ohms, 5W.
R228D	77812	1200 ohms, 1W.
R228E	77812	10,000 ohms, 5W.
R232	77815	16,200 ohms, 10W.
		TRANSFORMERS
T101	76438	Sound IF.
T102	76439	Ratio detector.
T104	77198	First pix IF grid.
T105	77197	First pix OI plate.
T106	76435	2nd pix IF. grid.
T107,108	76433	3rd, or 4th pix IF.
T109	76436	5th pix IF.
T110	76437	Sound take-off.
T111	77650	Vertical oscillator.
T112	76494	Vertical output.
T113	77649	Power 117V, 60 cy.
T114	76440	Horiz. oscillator.
Part of T115	76501	Hi voltage.
		MISCELLANEOUS
CR101	76675	Pix detector crystal rect.
T1	77323	Output for Ampl. RS141E.
T2	75566	Power 117V 60 cy. for ampl. RS141E.
	76093	Spk-12" PM 3.2 ohms.

MODELS 21-S-348G 21-S-353G 21-S-354G 21-S-355G 21-S-357G 21-S-359G 21-S-362G 21-S-367G 21-S-369G

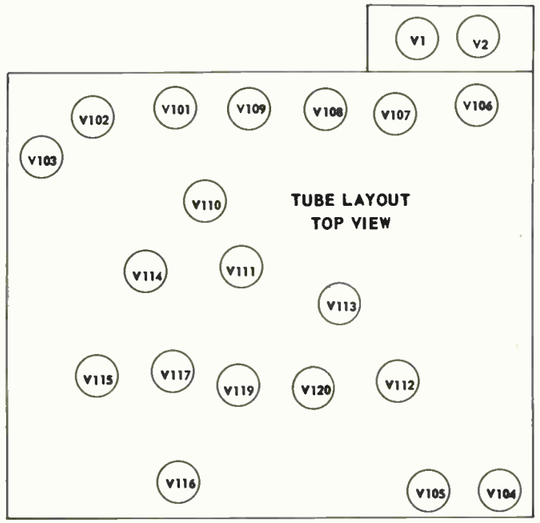

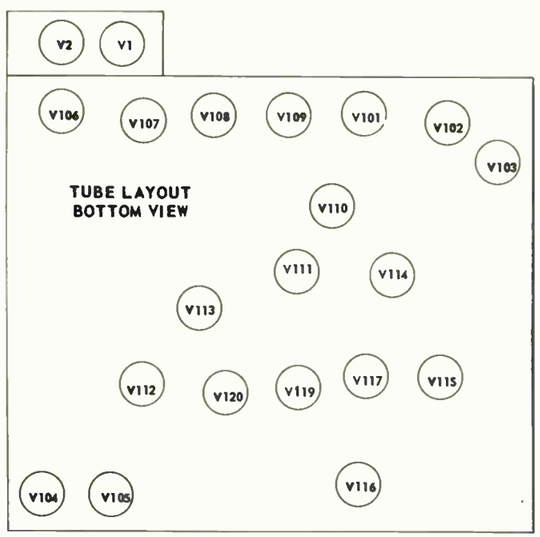

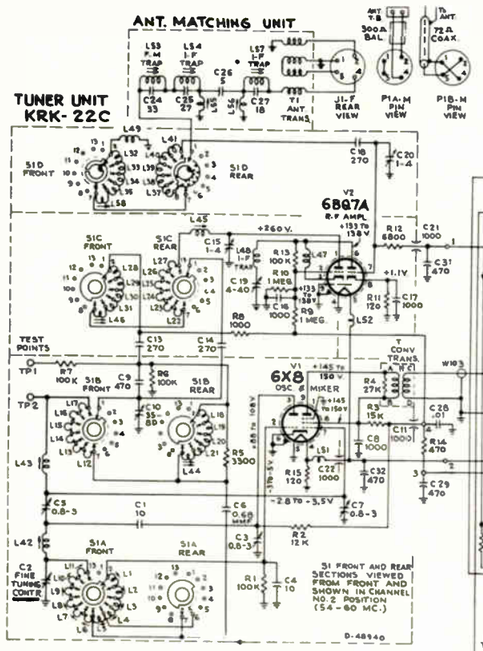

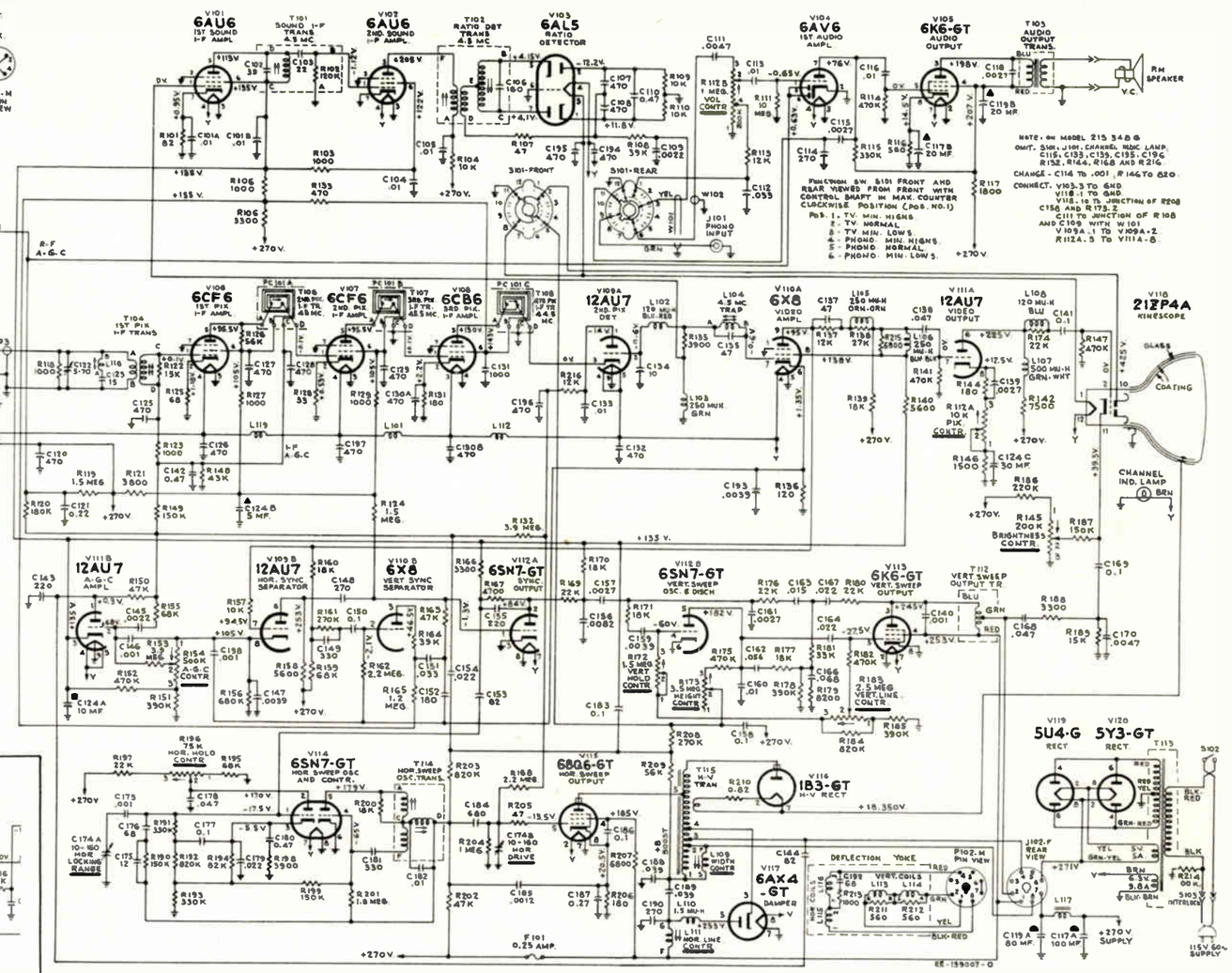

PRODUCTION CHANGES IN KCS83 SERIES CHASSIS

The schematics are shown in the latest condition. The note below tells how early receivers differed from the schematics shown above and on pages 82 and 83. See page 82 for additional changes.

In early production receivers IF transformers T106, T107 and T108 were individual and were connected as shown below.

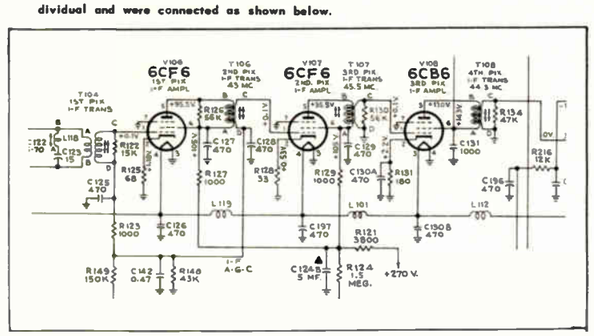

The schematic is shown in the latest condition at the time of printing.
All resistance value in ohms. K = 1000.

All capacitance values less than 1 in MF and above 1 in MMF unless otherwise noted.

Direction of arrows at controls indicates clockwise rotation.

All voltages measured with "VoltOhmyst" and with no signal input. Voltages should hold within ±20% with 117 v. a-c supply.

ELECTROLYTICS

C117A	78212	100 mfd, 400V.
C117B	78212	20 mfd, 50V.
C119A	77644	80 mfd, 400V.
C119B	77644	20 mfd, 400V.
C122	78220	Adj mica 5-70 mmf.
C124A	78213	10 mfd, 350V.
C124B	78213	5 mfd, 350V.
C124C	78213	30 mfd, 50V.
C174A	C174B 75217	Mica trimmer dual 10-160 mmf.

COILS

L102	75253	Peaking, 120 mic.
L103	71526	Peaking 250 mic.
L105	77674	Peaking, 250 mic.
L106	78222	Peaking, 250 mic.
L107	75252	Peaking, 500 mic.
L108	71529	Peaking, 120 mic.
L110	76640	RF choke 1.5 mic.
L109	78205	Width complete w/adj. core.
L111	76442	Horiz. linearity w/adj. core.

RESISTORS

R112A, R112B	78208	Pix, vol., & power sw.
R145	78209	Brightness, except KCS83PJ, KCS83PL, KCS83PM.
	79088	Brightness for KCS83PJ, KCS83PL, KCS83PM.
R154	76975	AGC control.
R172	78210	Vertical hold.
R173	78206	Height control.
R183	78207	Vertical linearity.
R196	77639	Horizontal hold.

TRANSFORMERS

T101	76981	Sound IF w/adj. core.
T102	77112	Ratio detector.
T103	76997	Output Xformer.
T104	78203	1st IF pix.
T106, T107, T108	76433*	2nd, 3rd, 4th, IF.
T106, T107, T108	78743*	IF printed circuit.
T112	78202	Vertical output.
T113	78200	Power 117V, 60 cycle.
T114	76440	Horiz. oscillator.
T115	78201	Hi-voltage.

MISCELLANEOUS

76616	Yoke.
77697	Yoke, w/printed circuit chassis IF.
77000	Spk-5" PM 3.2 ohms.
75022	Spk-8" PM 3.2 ohms.

* 78743 used in KCS83PC, KCS83PD, KCS83PJ, KCS83PK, KCS83PL, KCS83PM.

*76433 used in all others.

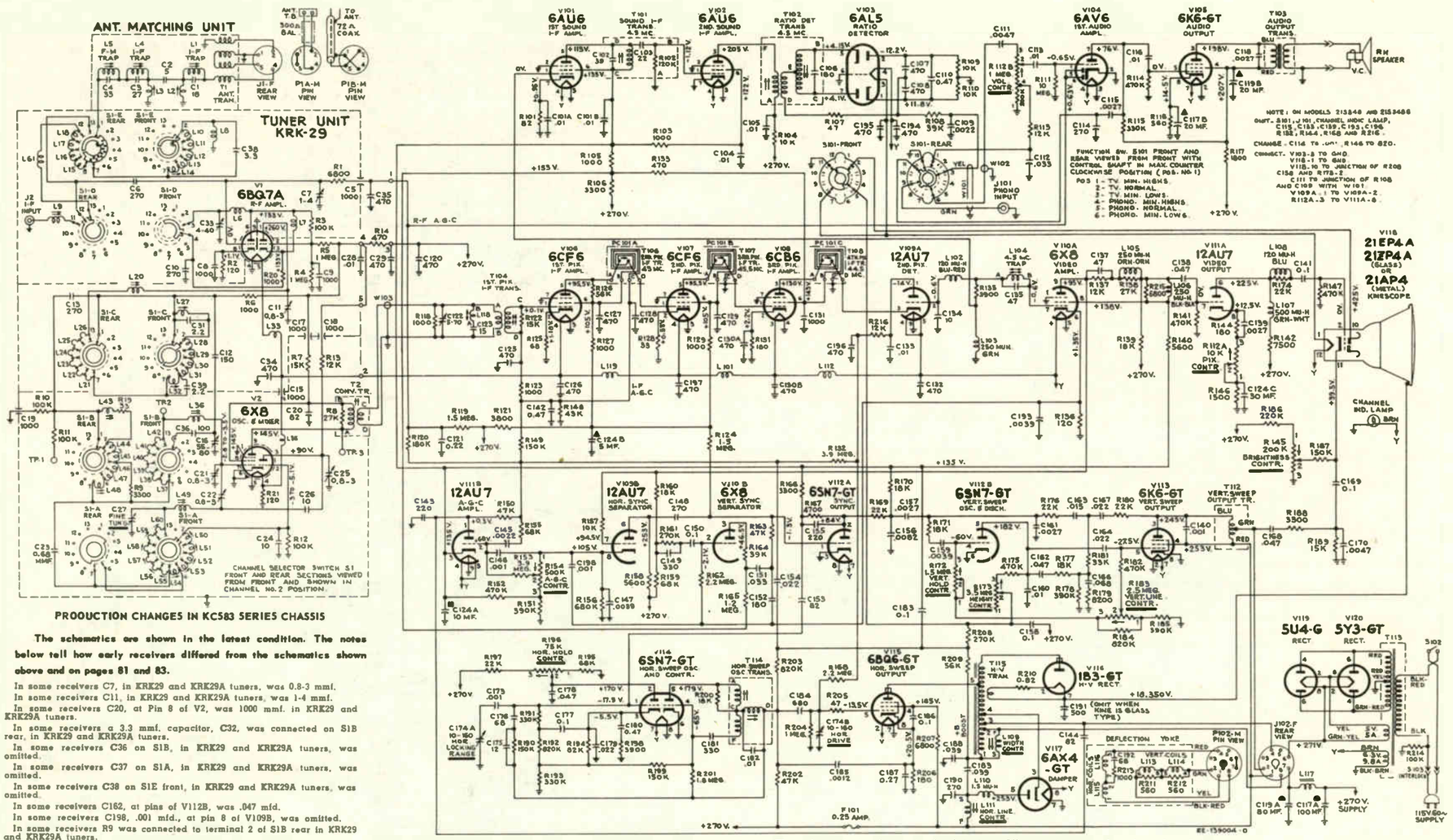

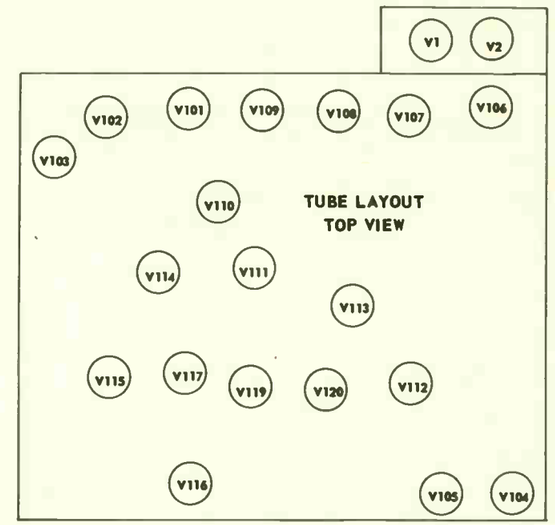

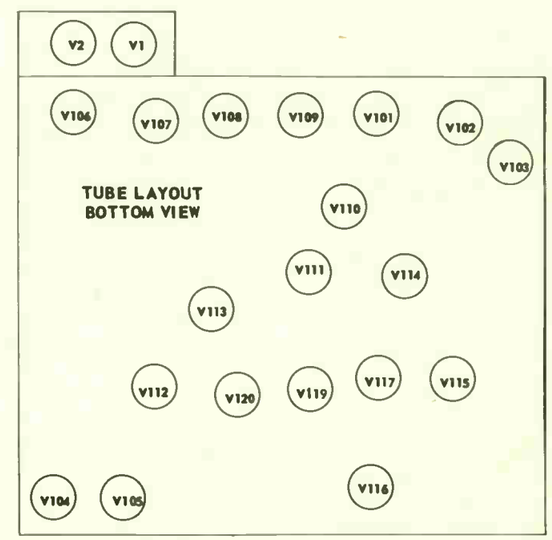

PRODUCTION CHANGES IN KC583 SERIES CHASSIS

The schematics are shown in the latest condition. The notes below tell how early receivers differed from the schematics shown above and on pages 81 and 83.

In some receivers C7, in KRK29 and KRK29A tuners, was 0.8-3 mmf.

In some receivers C11, in KRK29 and KRK29A tuners, was 1-4 mmf.

In some receivers C20, at Pin 8 of V2, was 1000 mmf. in KRK29 and KRK29A tuners.

In some receivers a 3.3 mmf. capacitor, C32, was connected on S1B rear, in KRK29 and KRK29A tuners.

In some receivers C36 on S1B, in KRK29 and KRK29A tuners, was omitted.

In some receivers C37 on S1A, in KRK29 and KRK29A tuners, was omitted.

In some receivers C38 on S1E front, in KRK29 and KRK29A tuners, was omitted.

In some receivers C162, at pins of V112B, was .047 mfd.

In some receivers C198, .001 mfd., at pin 8 of V109B, was omitted.

In some receivers R9 was connected to terminal 2 of S1B rear in KRK29 and KRK29A tuners.

In some receivers a 39 ohm resistor R-18, was connected on S1C front from L27 to L28 in KRK29 and KRK29A tuners.

In some receivers R158, at pin 6 of V109B, was 6800 ohms.

In some receivers R185, at terminal 1 of the vertical linearity control R183, was 470,000 ohms.

In some receivers R187, at pin 11 of the Kinescope, was 270,000 ohms.

In some receivers T106, T107 and T108 were individual transformers (see page 81.)

In some receivers pin 6 of V110A was connected to the junction of R162 and C152.

The schematic is shown in the latest condition at the time of printing.
All resistance value in ohms. K = 1000.

All capacitance values less than 1 in MF and above 1 in MMF unless otherwise noted.

Direction of arrows at controls indicates clockwise rotation.

All voltages measured with "VoltOhmyst" and with no signal input. Voltages should hold within ±20% with 117 v. a-c supply.

ELECTROLYTICS

C117A	78212	100 mfd, 400V.
C117B	78212	20 mfd, 50V.
C119A	77644	80 mfd, 400V.
C119B	77644	20 mfd, 400V.
C122	78220	Adj mica 5-70 mmf.
C124A	78213	10 mfd, 350V.
C124B	78213	5 mfd, 350V.
C124C	78213	30 mfd, 50V.
C174A C174B	75217	Mica trimmer dual 10-160 mmf.

COILS

L102	75253	Peaking, 120 mic.
L103	71526	Peaking 250 mic.
L105	77674	Peaking, 250 mic.
L106	78222	Peaking, 250 mic.
L107	75252	Peaking, 500 mic.
L108	71529	Peaking, 120 mic.
L110	76640	RF choke 1.5 mic.
L109	78205	Width complete w/adj. core.
L111	76442	Horiz. linearity w/adj. core.

RESISTORS

R112A, R112B	78208	Pix, vol., & power sw.
R145	78209	Brightness, except KC583PJ, KC583PL, KC583PM.
	79088	Brightness for KC583PJ, KC583PL, KC583PM.
R154	76975	AGC control.
R172	78210	Vertical hold.
R173	78206	Height control.
R183	78207	Vertical linearity.
R196	77639	Horizontal hold.

TRANSFORMERS

T101	76981	Sound IF w/adj. core.
T102	77112	Ratio detector.
T103	76997	Output Xformer.
T104	78203	1st IF pix.
T106, T107, T108	76433*	2nd, 3rd, 4th, IF.
T106, T107, T108	78743*	IF printed circuit.
T112	78202	Vertical output.
T113	78200	Power 117V, 60 cycle.
T114	76440	Horiz. oscillator.
T115	78201	Hi-voltage.

MISCELLANEOUS

76616	Yoke.
77697	Yoke, w/printed circuit chassis IF.
77000	Spk-5" PM 3.2 ohms.
75022	Spk-8" PM 3.2 ohms.

* 78743 used in KC583PC, KC583PO, KC583PJ, KC583PK, KC583PL, KC583PM.

*76433 used in all others.

MODELS 21-S-348U 21-S-348GU 21-S-353U 21-S-353GU 21-S-354U 21-S-354GU 21-S-355U 21-S-355GU 21-S-357GU 21-S-359GU 21-S-362MU 21-S-362GU 21-S-367U 21-S-367GU 21-S-369GU

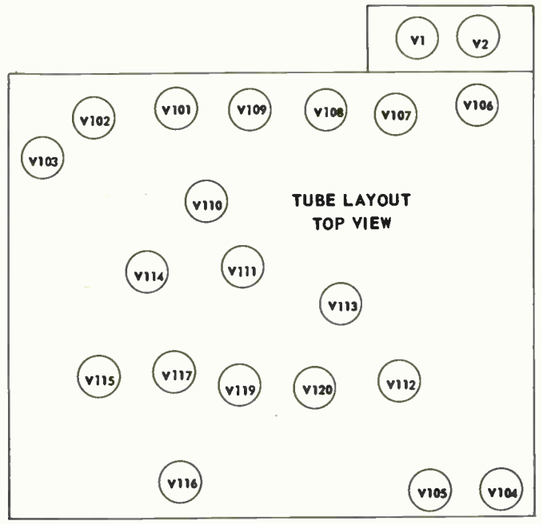

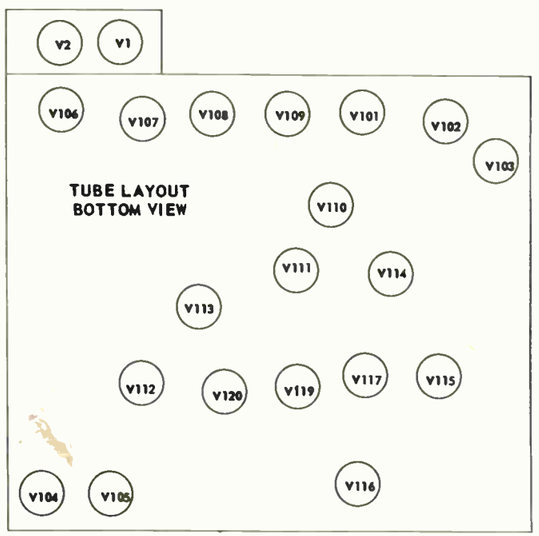

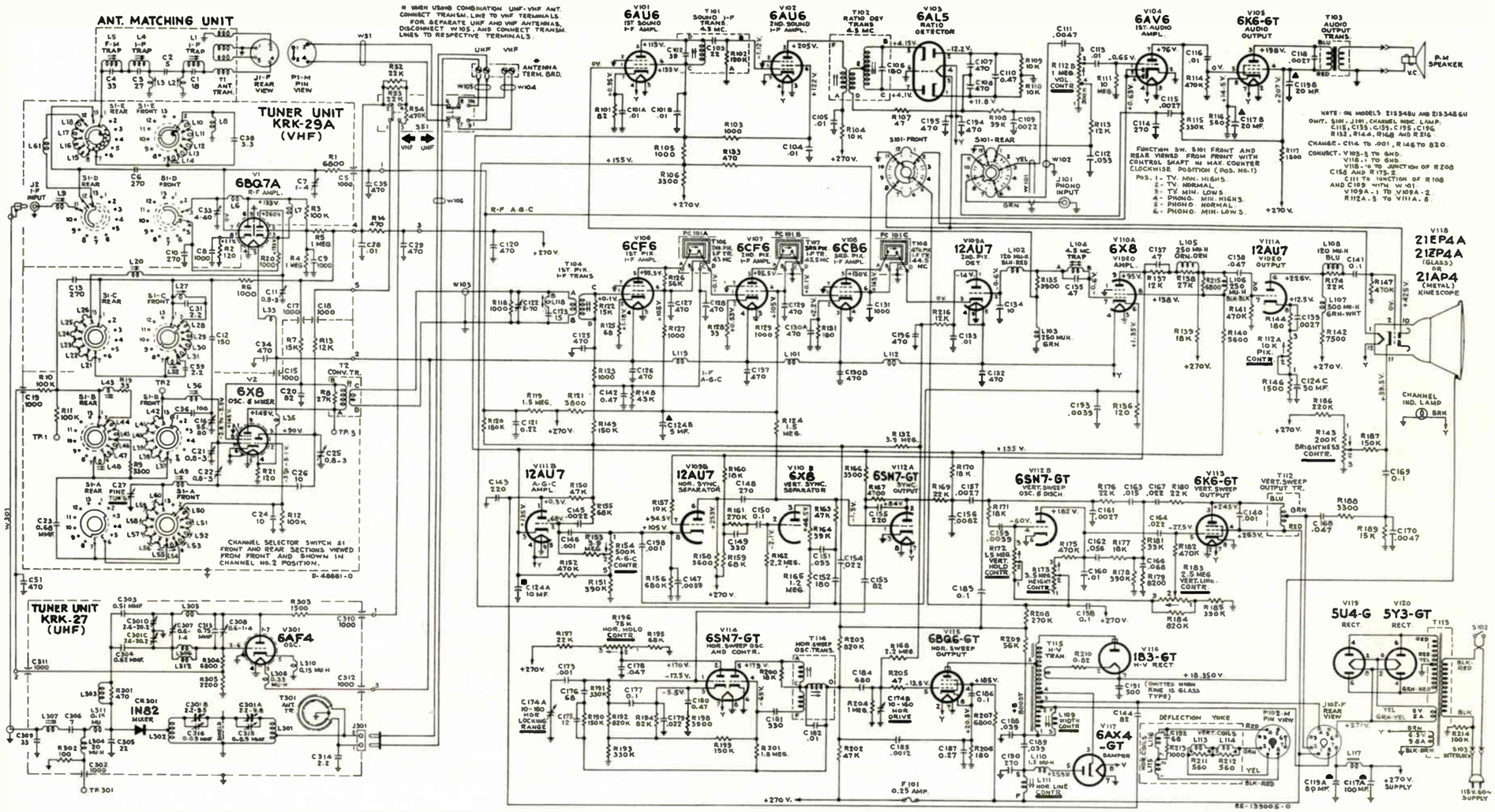

The schematic is shown in the latest condition at the time of printing.
All resistance value in ohms. K = 1000.

All capacitance values less than 1 in MF and above 1 in MMF unless otherwise noted.

Direction of arrows at controls indicates clockwise rotation.

All voltages measured with "VoltOhmyst" and with no signal input. Voltages should hold within ±20% with 117 v. a-c supply.

PRODUCTION CHANGES IN KCS83 SERIES CHASSIS

The schematics are shown in the latest condition. The notes on pages 81 and 82 tell how early receivers differed from the schematic shown above.

ELECTROLYTICS		
C117A	78212	100 mfd, 400V.
C117B	78212	20 mfd, 50V.
C119A	77644	80 mfd, 400V.
C119B	77644	20 mfd, 400V.
C122	78220	Adj mico 5-70 mmf.
C124A	78213	10 mfd, 350V.
C124B	78213	5 mfd, 350V.
C124C	78213	30 mfd, 50V.
C174A C174B	75217	Mica trimmer dual 10-160 mmf.

COILS		
L102	75253	Peaking, 120 mic.
L103	71526	Peaking 250 mic.
L105	77674	Peaking, 250 mic.
L106	78222	Peaking, 250 mic.
L107	75252	Peaking, 500 mic.
L108	71529	Peaking, 120 mic.
L110	76640	RF choke 1.5 mic.
L109	78205	Width complete w/adj. core.
L111	76442	Horiz. linearity w/adj. core.

RESISTORS		
R112A, R112B	78208	Pix, vol., & power sw.
R145	78209	Brightness, except KCS83PJ, KCS83PL, KCS83PM.
	79088	Brightness for KCS83PJ, KCS83PL, KCS83PM.
R154	76975	AGC control.
R172	78210	Vertical hold.
R173	78206	Height control.
R183	78207	Vertical linearity.
R196	77639	Horizontal hold.

TRANSFORMERS		
T101	76981	Sound IF w/adj. core.
T102	77112	Ratio detector.
T103	76997	Output Xformer.
T104	78203	1st IF pix.
T106, T107, T108	76433*	2nd, 3rd, 4th, IF.
T106, T107, T108	78743*	IF printed circuit.
T112	78202	Vertical output.
T113	78200	Power 117V, 60 cycle.
T114	76440	Horiz. oscillator.
T115	78201	Hi-voltage.

MISCELLANEOUS	
76616	Yoke.
77697	Yoke, w/printed circuit chassis IF.
77000	Spk-5" PM 3.2 ohms.
75022	Spk-8" PM 3.2 ohms.

* 78743 used in KCS83PC, KCS83PD, KCS83PJ, KCS83PK, KCS83PL, KCS83PM.
*76433 used in all others.

21-T-303, 21-T-313, 21-T-313G, 21-T-314, 21-T-314G, 21-T-315, 21-T-316, 21-T-322, 21-T-323, 21-T-324 MODELS

Chassis KCS82

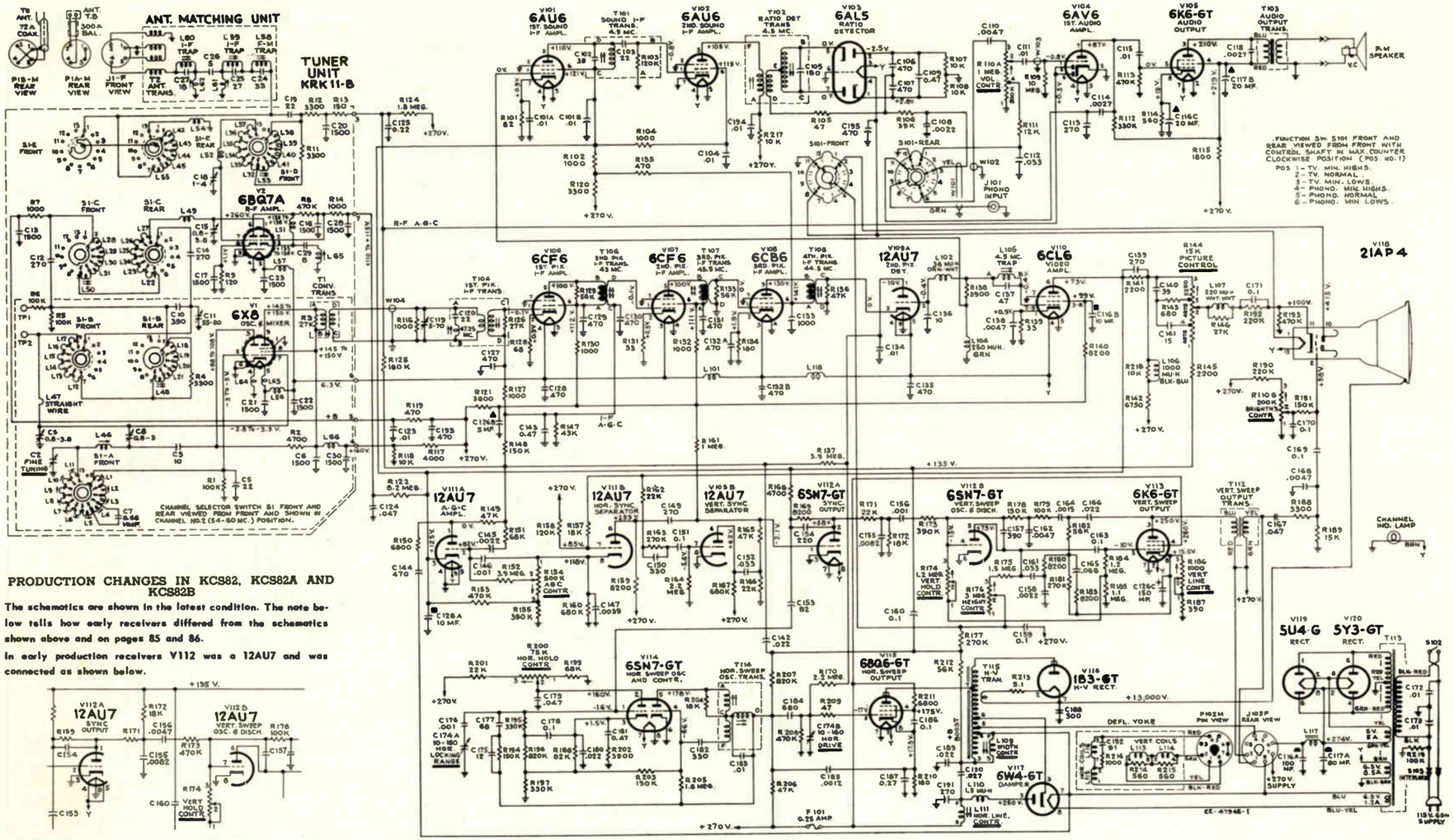

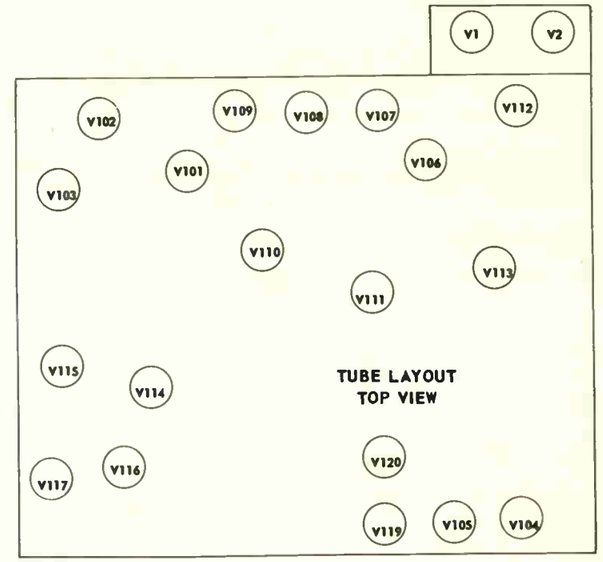

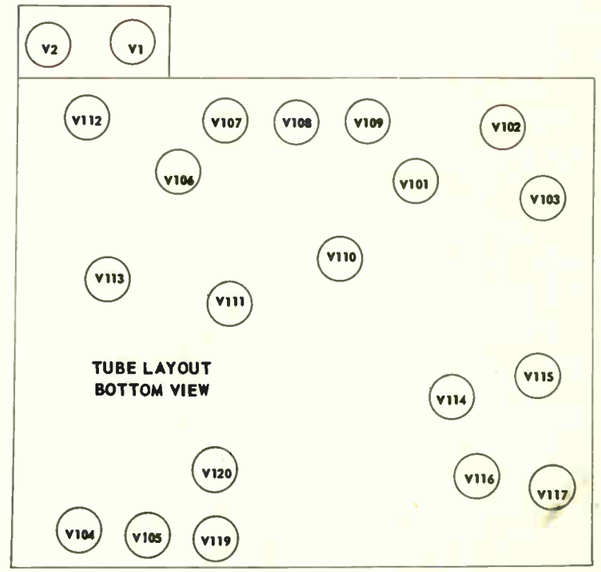

PRODUCTION CHANGES IN KCS82, KCS82A AND KCS82B

The schematics are shown in the latest condition. The note below tells how early receivers differed from the schematics shown above and on pages 85 and 86.

In early production receivers V112 was a 12AU7 and was connected as shown below.

(See page 85 for additional changes).

The schematic is shown in the latest condition at the time of printing.
All resistance value in ohms. K = 1000.

All capacitance values less than 1 in FM and above 1 in MMF unless otherwise noted.

Direction of arrows at controls indicates clockwise rotation.

All voltages measured with "VoltOhmyst" and with no signal input. Voltages should hold within ±20% with 117 v. a-c supply.

REF. NO.	PART NO.	DESCRIPTION
		ELECTROLYTICS
C3, C7	77151	Adj. 0.8-3.0 mmf.
C5	77913	Tubular adj. 0.8-3.0 mmf.
C10	76527	Mica trimmer 55-80 mmf.
C19	77616	Adj mica 4-40 mmf.
C15, C20	76532	Adj. 1-4 mmf.
C116A	76970	100 mfd, 400V.
C116B	76970	10 mfd, 350V.
C116C	76970	20 mfd, 50V.
C117A	77644	80 mfd, 400V.
C117B	77644	20 mfd, 400V.
C119	71496	Mica trimmer 5-70 mmf.
C126A	75218	10 mfd, 350V.
C126B	75218	5 mfd, 350V.
C126C	75218	150 mfd, 50V.
C174A	75217	Mica trimmer.
C174B	75217	Dual 10-160 mmf.
		RESISTORS
R110A	77655	Brightness.
R110B	77655	Volume.
R144	76445	Picture.
R154	76975	AGC.
R174	77642	Vertical hold.
R176	77924	Height.
R186	77643	Vertical linearity.
R200	77639	Horiz. hold.
		COILS
L101, L118	73477	Choke coil.
L102	76011	Peaking 36 mic.
L104	71526	Peaking 250 mic.
L105	76983	Trap 4.5 mc.
L106	77124	Peaking 1000 mic.
L107	77925	Peaking 220 mic.
L109	76441	Width coil.
L110	76640	RF choke 1.5 mic.
L111	76442	Horiz. linearity.
L117	77676	Filter choke.
		TRANSFORMERS
T1	77857	Convertor.
T2	77858	Ant. matching, complete.
T101	76981	Sound IF.
T102	77112	Ratio detector.
T103	76997	Output.
T104	77637	1st pix IF.
T106	77638	2nd pix IF.
T107	76433	3rd pix IF.
T108	76433	4th pix IF.
T112	77636	Vertical output.
T113	77635	Power 117V, 60 cycle.
T114	76440	Horiz. oscillator.
T115	76795	Hi-voltage.
		MISCELLANEOUS
76168		Focus magnet.
76141		Magnet-Ion trap.
76633		Magnet-pin cushion connection, complete.
77000		Spk-5" PM complete 3.2 ohms (971636-1W).
75022		Spk-8" PM complete 3.2 ohms.
76093		Spk-12" PM 3.2 ohms.

Chassis KCS82A

MODELS 21-T-303, 21-T-313, 21-T-313G, 21-T-314, 21-T-314G, 21-T-315, 21-T-316, 21-T-322, 21-T-323, 21-T-324

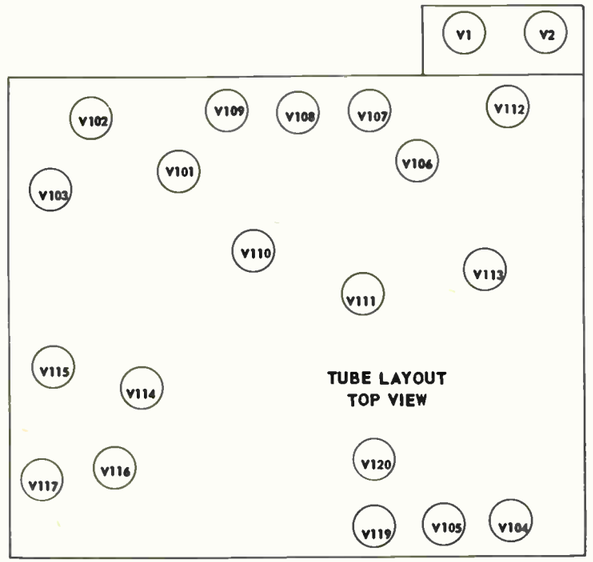

TUBE LAYOUT
TOP VIEW

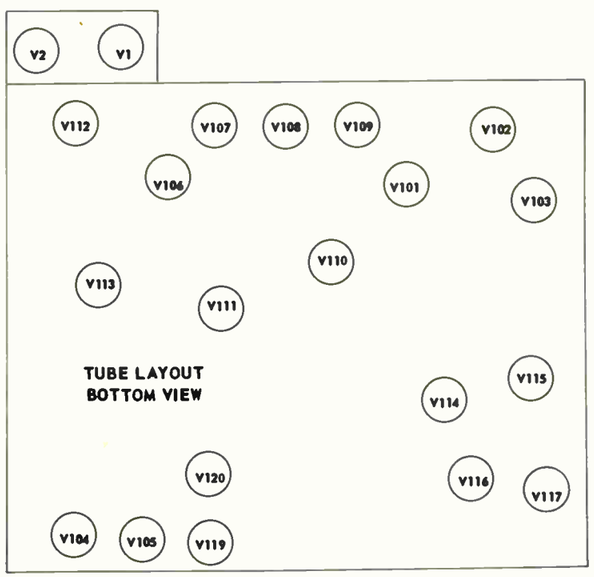

TUBE LAYOUT
BOTTOM VIEW

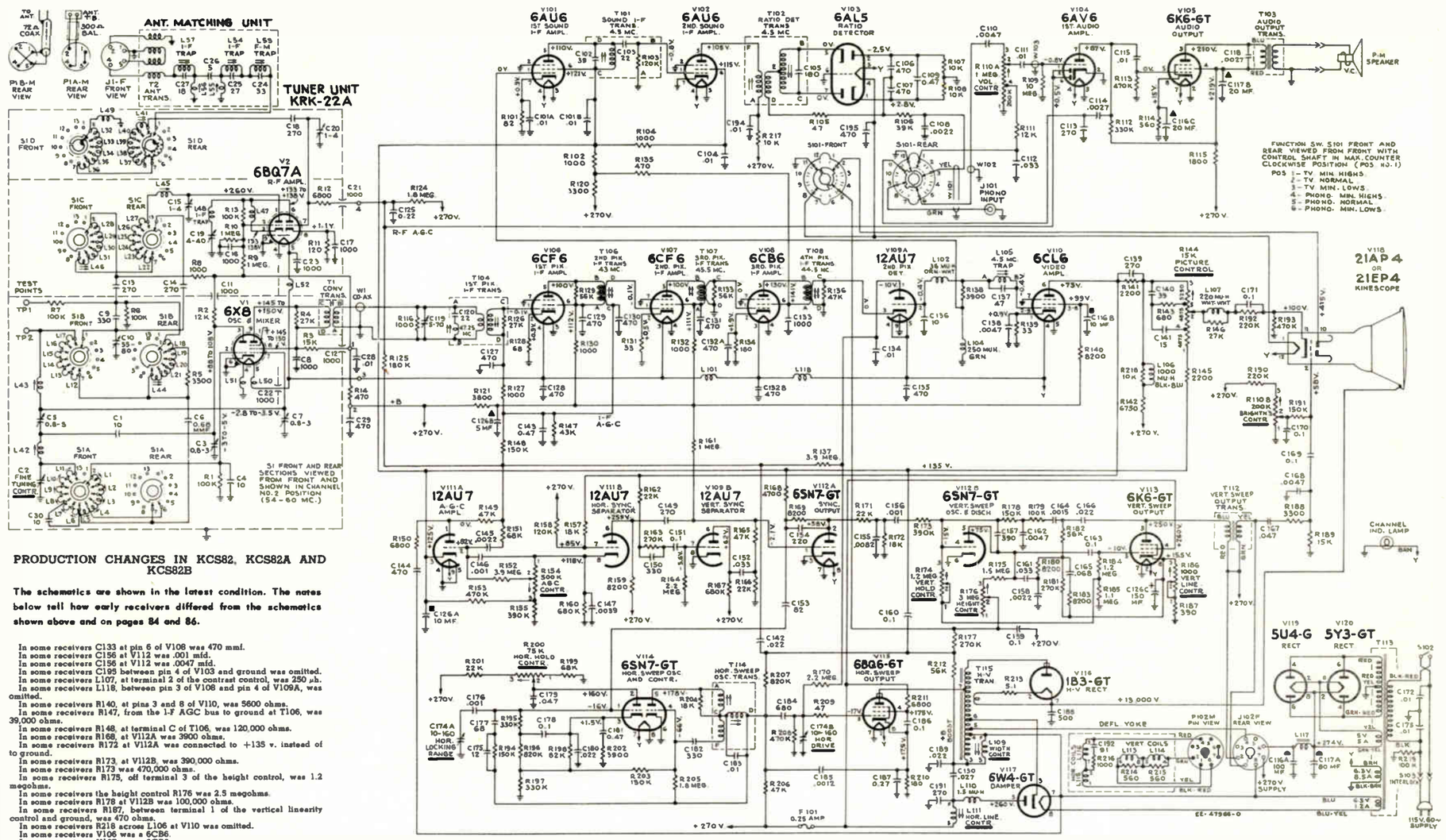

PRODUCTION CHANGES IN KCS82, KCS82A AND KCS82B

The schematics are shown in the latest condition. The notes below tell how early receivers differed from the schematics shown above and on pages 84 and 86.

In some receivers C133 at pin 6 of V108 was 470 mmf.
In some receivers C156 at V112 was .001 mfd.
In some receivers C156 at V112 was .0047 mfd.
In some receivers C195 between pin 4 of V103 and ground was omitted.
In some receivers L107, at terminal 2 of the contrast control, was 250 μh.
In some receivers L118, between pin 3 of V108 and pin 4 of V109A, was omitted.
In some receivers R140, at pins 3 and 8 of V110, was 5600 ohms.
In some receivers R147, from the I-F AGC bus to ground at T106, was 39,000 ohms.
In some receivers R148, at terminal C of T106, was 120,000 ohms.
In some receivers R168, at V112A was 3900 ohms.
In some receivers R172 at V112A was connected to +135 v. instead of to ground.
In some receivers R173, at V112B, was 390,000 ohms.
In some receivers R173 was 470,000 ohms.
In some receivers R175, off terminal 3 of the height control, was 1.2 megohms.
In some receivers the height control R176 was 2.5 megohms.
In some receivers R178 at V112B was 100,000 ohms.
In some receivers R187, between terminal 1 of the vertical linearity control and ground, was 470 ohms.
In some receivers R218 across L106 at V110 was omitted.
In some receivers V106 was a 6CB6.
In some receivers V107 was a 6CB6.
In Models 21-T-313G, 314G, 313GU and 314GU the kinescope V118 is a 21EP4.
In some receivers the heater terminals 2 and 7 of V105 were reversed.
In some receivers V112 was a 12AU7 **(see page 84 for wiring).**

In some receivers the heater terminals 2 and 7 of V115 were reversed.

The schematic is shown in the latest condition at the time of printing.
All resistance value in ohms. K = 1000.

All capacitance values less than 1 in FM and above 1 in MMF unless otherwise noted.

Direction of arrows at controls indicates clockwise rotation.

All voltages measured with "VoltOhmyst" and with no signal input. Voltages should hold within ±20% with 117 v. a-c supply.

REF. NO.	PART NO.	DESCRIPTION
		ELECTROLYTICS
C3, C7	77151	Adj. 0.8-3.0 mmf.
C5	77913	Tubular adj. 0.8-3.0 mmf.
C10	76527	Mica trimmer 55-80 mmf.
C19	77616	Adj mica 4-40 mmf.
C15, C20	76532	Adj. 1-4 mmf.
C116A	76970	100 mfd, 400V.
C116B	76970	10 mfd, 350V.
C116C	76970	20 mfd, 50V.
C117A	76644	80 mfd, 400V.
C117B	77644	20 mfd, 400V.
C119	71496	Mica trimmer 5-70 mmf.
C126A	75218	10 mfd, 350V.
C126B	75218	5 mfd, 350V.
C126C	75218	150 mfd, 50V.
C174A	75217	Mica trimmer.
C174B	75217	Dual 10-160 mmf.
		RESISTORS
R110A	77655	Brightness.
R110B	77655	Volume.
R144	76445	Picture.
R154	76975	AGC.
R174	77642	Vertical hold.
R176	77924	Height.
R186	77643	Vertical linearity.
R200	77639	Horiz. hold.
		COILS
L101, L118	73477	Choke coil.
L102	76011	Peaking 36 mic.
L104	71526	Peaking 250 mic.
L105	76983	Trap 4.5 mc.
L106	77124	Peaking 1000 mic.
L107	77925	Peaking 220 mic.
L109	76441	Width coil.
L110	76640	RF choke 1.5 mic.
L111	76442	Horiz. linearity.
L117	77676	Filter choke.
		TRANSFORMERS
T1	77857	Convertor.
T2	77858	Ant. matching, complete.
T101	76981	Sound IF.
T102	77112	Ratio detector.
T103	76997	Output.
T104	77637	1st pix IF.
T106	77638	2nd pix IF.
T107	76433	3rd pix IF.
T108	76433	4th pix IF.
T112	77636	Vertical output.
T113	77635	Power 117V, 60 cycle.
T114	76440	Horiz. oscillator.
T115	76795	Hi-voltage.
		MISCELLANEOUS
76168		Focus magnet.
76141		Magnet-Ion trap.
76633		Magnet-pin cushion connection, complete.
77000		Spk-5" PM complete 3.2 ohms (971636-1W).
75022		Spk-8" PM complete 3.2 ohms.
76093		Spk-12" PM 3.2 ohms.

21-T-303U, 21-T-313U, 21-T-313GU, 21-T-314U, 21-T-314GU, 21-T-315U, 21-T-316U, 21-T-322U, 21-T-323U, 21-T-324U MODELS

Chassis KCS82B

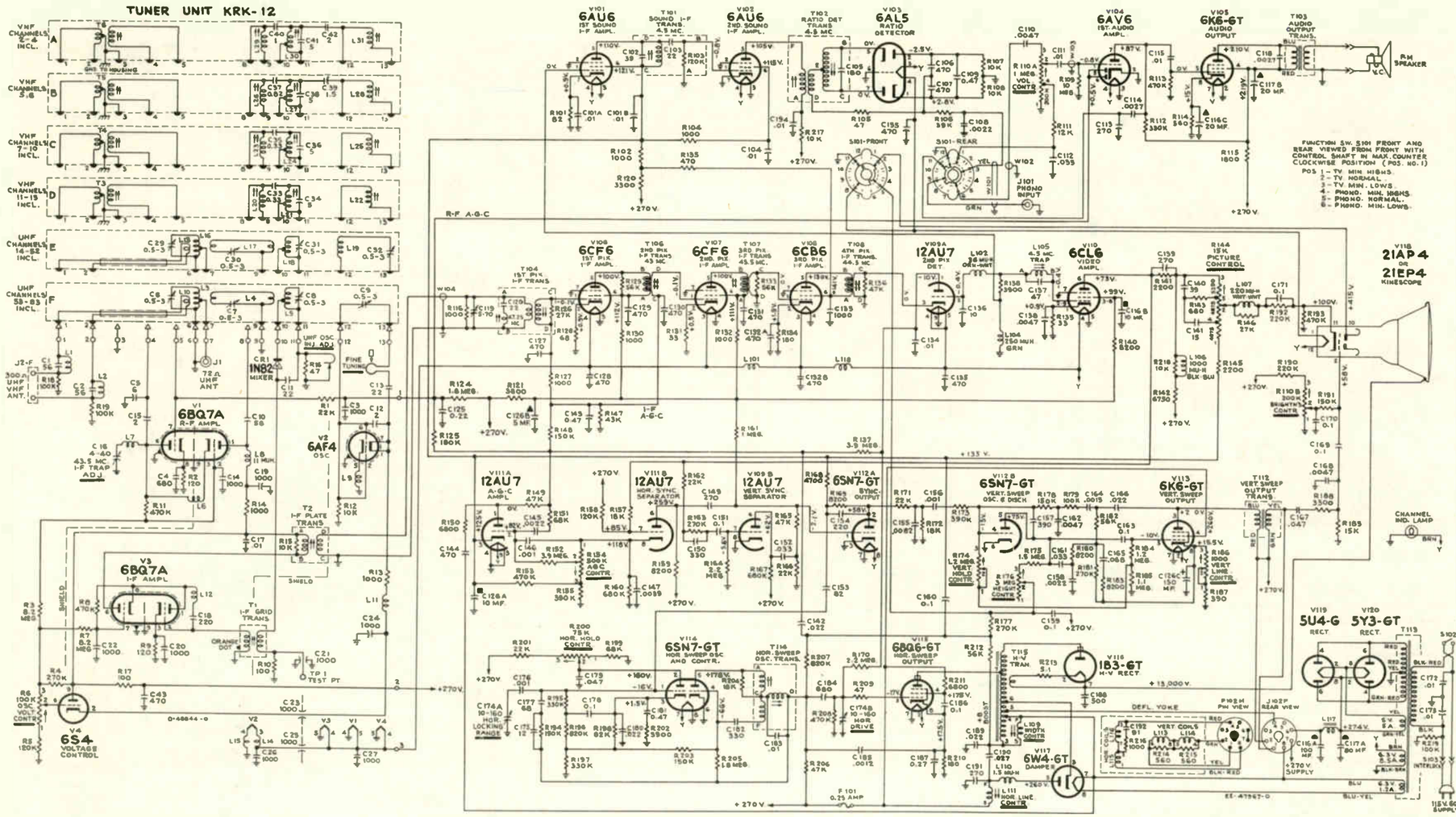

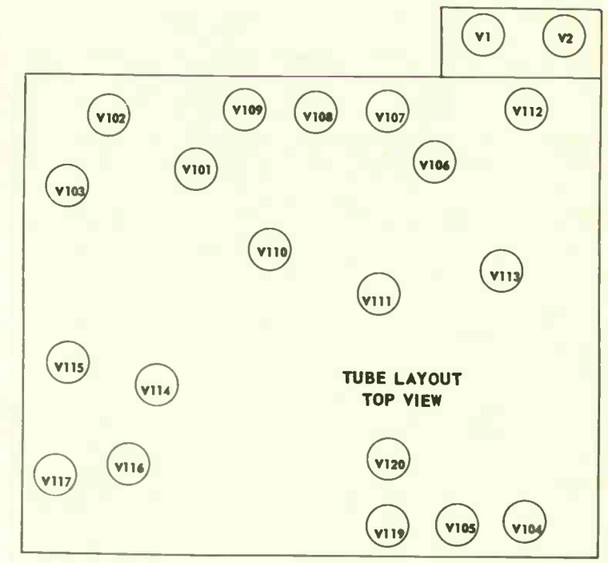

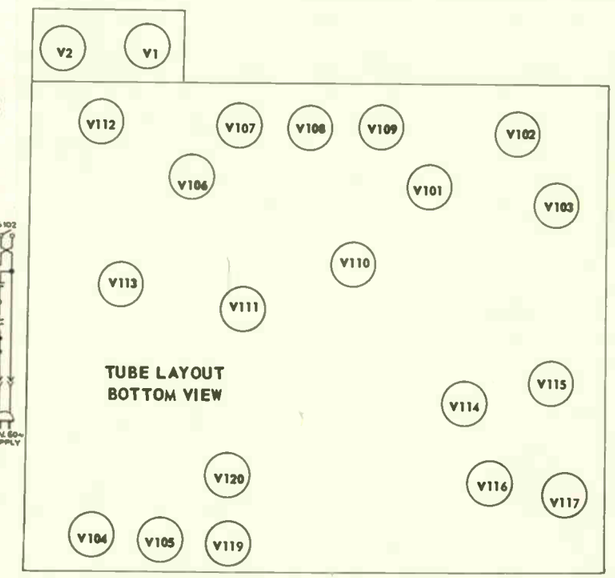

PRODUCTION CHANGES IN KCS82, KCS82A AND KCS82B

The schematics are shown in the latest condition. The notes on pages 84 and 85 tell how early receivers differed from the schematic shown above.

The schematic is shown in the latest condition at the time of printing.
All resistance value in ohms. K = 1000.

All capacitance values less than 1 in FM and above 1 in MMF unless otherwise noted.

Direction of arrows at controls indicates clockwise rotation.

All voltages measured with "VoltOhmyst" and with no signal input. Voltages should hold within ±20% with 117 v. a-c supply.

REF. NO.	PART NO.	DESCRIPTION
ELECTROLYTICS		
C3, C7	77151	Adj. 0.8-3.0 mmf.
C5	77913	Tubular adj. 0.8-3.0 mmf.
C10	76527	Mica trimmer 55-80 mmf.
C19	77616	Adj mica 4-40 mmf.
C15, C20	76532	Adj. 1-4 mmf.
C116A	76970	100 mfd, 400V.
C116B	76970	10 mfd, 350V.
C116C	76970	20 mfd, 50V.
C117A	77644	80 mfd, 400V.
C117B	77644	20 mfd, 400V.
C119	71496	Mica trimmer 5-70 mmf.
C126A	75218	10 mfd, 350V.
C126B	75218	5 mfd, 350V.
C126C	75218	150 mfd, 50V.
C174A	75217	Mica trimmer.
C174B	75217	Dual 10-160 mmf.
RESISTORS		
R110A	77655	Brightness.
R110B	77655	Volume.
R144	76445	Picture.
R154	76975	AGC.
R174	77642	Vertical hold.
R176	77924	Height.
R186	77643	Vertical linearity.
R200	77639	Horiz. hold.
COILS		
L101, L118	73477	Choke coil.
L102	76011	Peaking 36 mic.
L104	71526	Peaking 250 mic.
L105	76983	Trap 4.5 mc.
L106	77124	Peaking 1000 mic.
L107	77925	Peaking 220 mic.
L109	76441	Width coil.
L110	76640	RF choke 1.5 mic.
L111	76442	Horiz. linearity.
L117	77676	Filter choke.
TRANSFORMERS		
T1	77857	Convertor.
T2	77858	Ant. matching, complete.
T101	76981	Sound IF.
T102	77112	Ratio detector.
T103	76997	Output.
T104	77637	1st pix IF.
T106	77638	2nd pix IF.
T107	76433	3rd pix IF.
T108	76433	4th pix IF.
T112	77636	Vertical output.
T113	77635	Power 117V, 60 cycle.
T114	76440	Horiz. oscillator.
T115	76795	Hi-voltage.
MISCELLANEOUS		
76168		Focus magnet.
76141		Magnet-ion trap.
76633		Magnet-pin cushion connection, complete.
77000		Spk-5" PM complete 3.2 ohms (971636-1W).
75022		Spk-8" PM complete 3.2 ohms.
76093		Spk-12" PM 3.2 ohms.

Chassis KCS82D or KCS82E (KCS82E with KRK12)

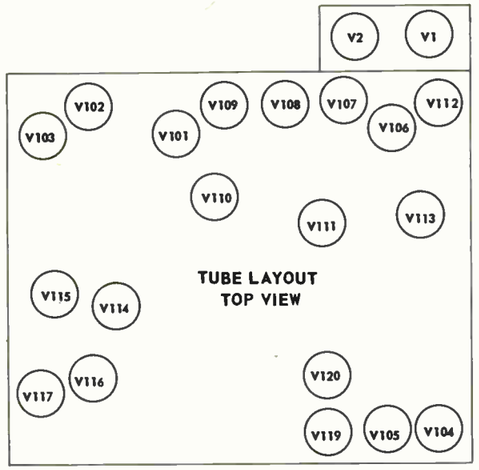

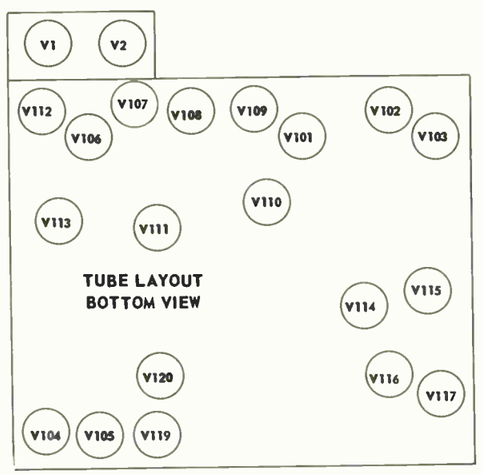

Tuner KRK-12 (page 112) used in "U" Models.

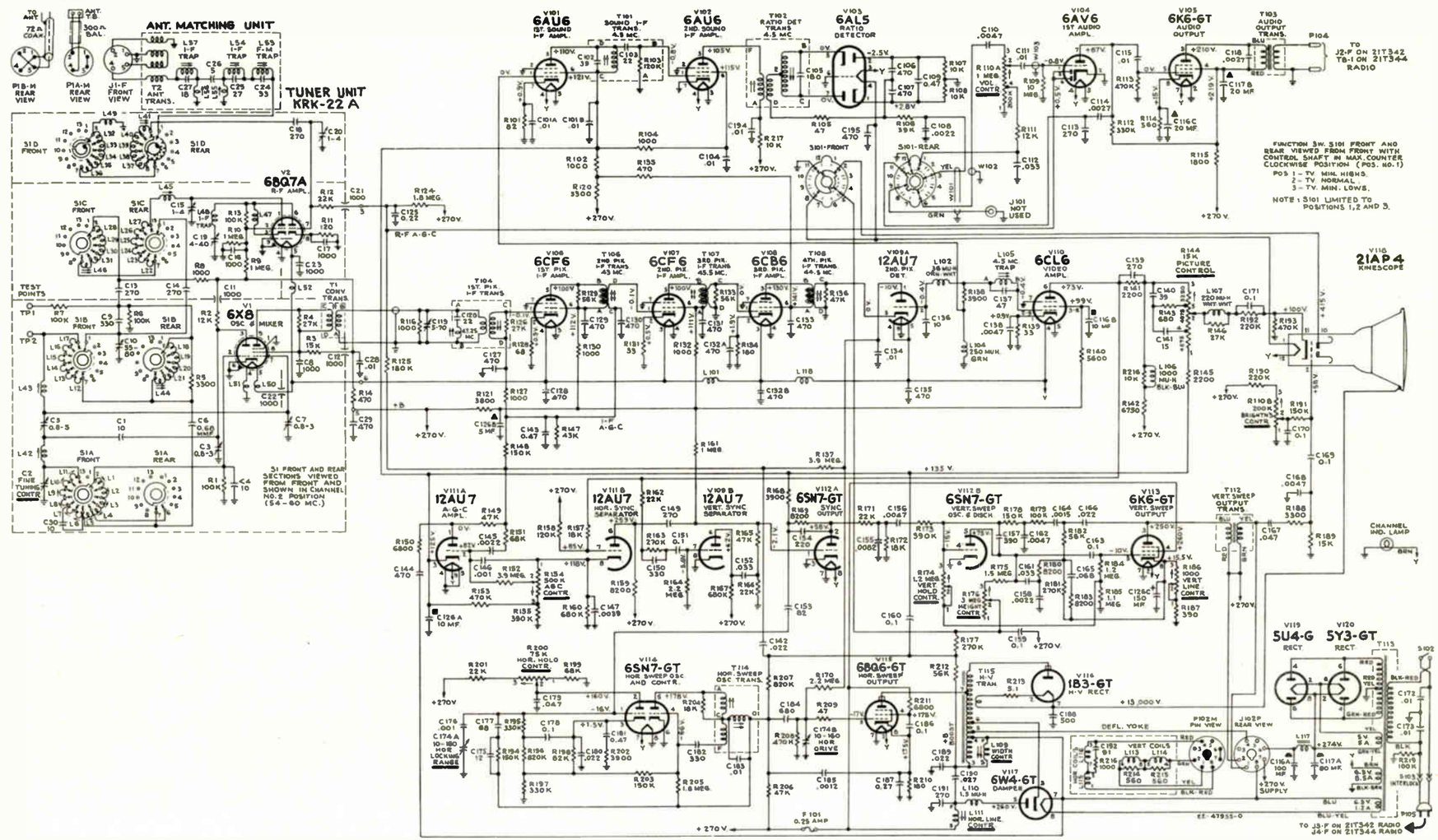

All resistance values in ohms. K = 1000.

All capacitance values less than 1 in MF and above 1 in MMF unless otherwise noted.

Direction of arrows at controls indicates clockwise rotation.

All voltages measured with "VoltOhmyst" and with no signal input. Voltages should hold within ±20% with 117 v. a-c supply.

Radio RC1111C (page 111) used with 21-T-344 and 21-T-344U.

Radio RC1117B (page 111) used with 21-T-342 and 21-T-342U.

REF. NO.	PART NO.	DESCRIPTION
ELECTROLYTICS		
C116A	76970	100 mfd, 400V.
C116B	76970	10 mfd, 350V.
C116C	76970	20 mfd, 50V.
C117A	77644	80 mfd, 400V.
C117B	77644	20 mfd, 400V.
C119	71496	Mica trimmer, 5-70 mmf.
C126A	75218	10 mfd, 350V.
C126B	75218	5 mfd, 350V.
C126C	75218	150 mfd, 50V.
C174A,B	75217	Dual 10-160 mmf.

COILS		
L101, 118	73477	Choke coil.
L102	76011	Peaking, 36 muh.
L104	71526	Peaking, 250 muh.
L106	77124	Peaking, 1000 muh.
L109	76441	Width complete w/adj core.
L110	76640	RF choke coil.
L111	76442	Horiz. linearity.
L117	77676	Filter choke.
L118	73477	Choke coil.

RESISTORS		
R144	76445	Picture control.
R174	77642	Vertical hold.
R176	77924	Height control.
R186	77643	Vertical linearity.
R200	77639	Horiz. hold.
TRANSFORMERS		
T101	76981	Sound IF w/adj core
T102	77112	Ratio detector.
T103	76997	Output Xformer.

T104	77637	1st pix IF.
T106	77638	2nd pix IF.
T108	76433	3rd or 4th pix IF.
T112	77636	Vertical output.
T113	77635	Power Xformer.
T114	76440	Horiz. oscillator.
T115	76795	Hi-voltage.
MISCELLANEOUS		
	77697	Yoke.
	76093	Spk-12" PM 3.2 ohms.

21-T-363, 21-T-364, 21-T-365, 21-T-372, 21-T-373, 21-T-374, 21-T-375 MODELS

Chassis KCS83

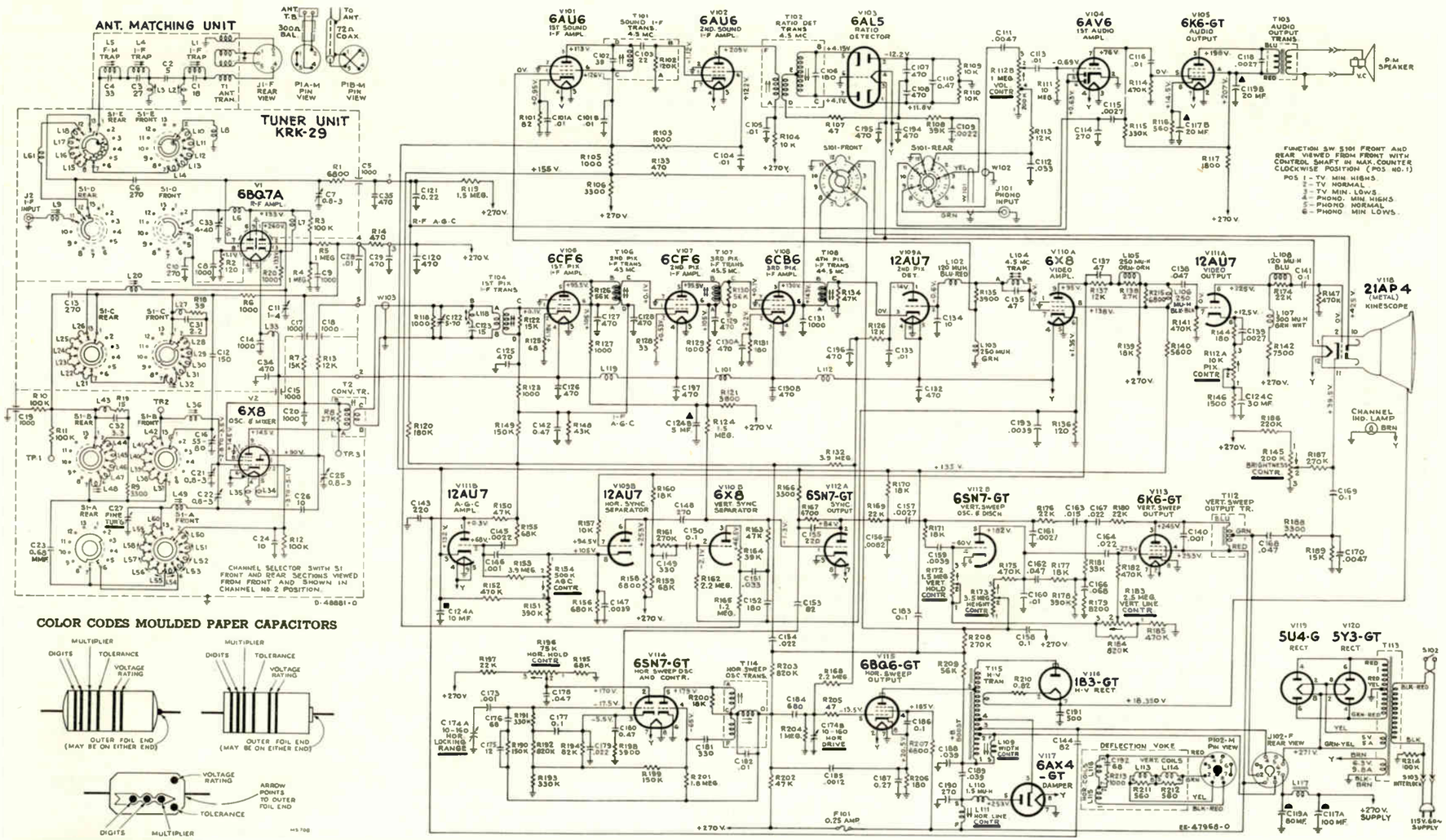

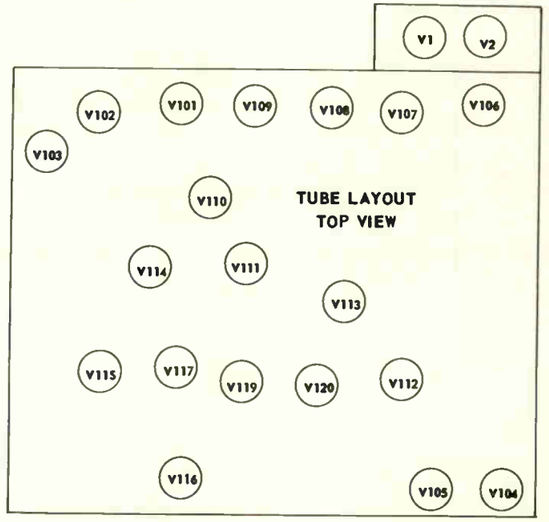

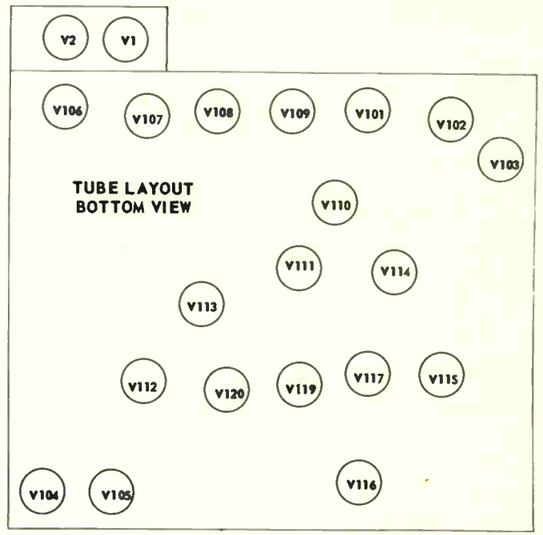

COLOR CODES MOULDED PAPER CAPACITORS

RMA COLOR CODE, FIXED MICA CAPACITORS

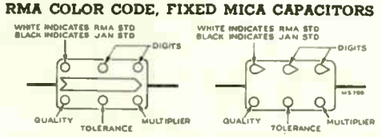

The schematic is shown in the latest condition at the time of printing. All resistance values in ohms. K = 1000.

All capacitance values less than 1 in FM and above 1 in MMF unless otherwise noted.

Direction of arrows at controls indicates clockwise rotation.

All voltages measured with "VoltOhmyst" and with no signal input. Voltages should hold within ±20% with 117 v. a-c supply.

REF. NO.	PART NO.	DESCRIPTION
		ELECTROLYTICS
C117A	78212	100 mfd, 400V.
C117B	78212	20 mfd, 50V.
C119A	77644	80 mfd, 400V.
C119B	77644	20 mfd, 400V.
C122	78220	Adj mica 5-70 mmf.
C124A	78213	10 mfd, 350V.
C124B	78213	5 mfd, 350V.
C124C	78213	30 mfd, 50V.
C174A	75217	Mica trimmer.
C174B	75217	Dual 10-160 mmf.
		RESISTORS
R112A	78208	Picture.
R112B	78208	Volume.
R145	78209	Brightness.
R154	76975	AGC.
R172	78210	Vertical hold.
R173	78206	Height.
R183	78207	Vertical linearity.
R196	77639	Horiz. hold.
		COILS
L101, L112, L119	73477	Filament choke.
L102	75253	Peaking 120 mic.
L103	71526	Peaking 250 mic.
L104	76983	Trap 4.5 mc.
L105	77674	Peaking 250 mic.
L106	78222	Peaking 250 mic.
L107	75252	Peaking 500 mic.
L108	71529	Peaking 120 mic.
L109	78205	Width.
L110	76640	RF choke 1.5 mic.
L111	76442	Horiz. linearity.
	76616	Yoke.
L117	77676	Filter choke.
L118	78204	1st IF grid trap.
		TRANSFORMERS
T101	76981	Sound IF.
T102	77112	Ratio detector.
T103	76997	Output.
T104	78203	1st IF pix.
T106	76433	2nd IF.
T107	76433	3rd IF.
T108	76433	4th IF.
T112	78202	Vertical output.
T113	78200	Power 117V, 60 cycle.
T114	76440	Horiz oscillator.
T115	78201	Hi voltage.
		MISCELLANEOUS
76168		Focus magnet.
76141		Magnet-Ion trap.
76633		Magnet-pin cushion corr. magnet complete.
77000		Spk-5" PM 3.2 ohms.
75022		Spk-8" PM 3.2 ohms.
77777		Spk-10" PM 3.2 ohms.
76093		Spk-12" PM 3.2 ohms.

KCS83B (KCS83E with 21EP4A Kinescope)

MODELS **21-T-356 U, 21-T-363 U, 21-T-364 U, 21-T-365 U, 21-T-372 U, 21-T-373 U, 21-T-374 U, 21-T-375 U**

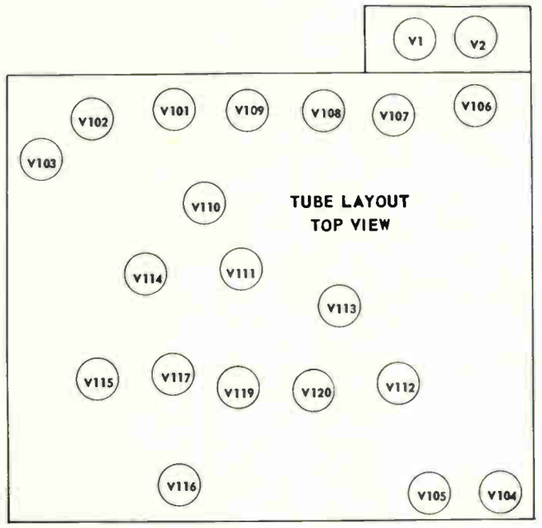

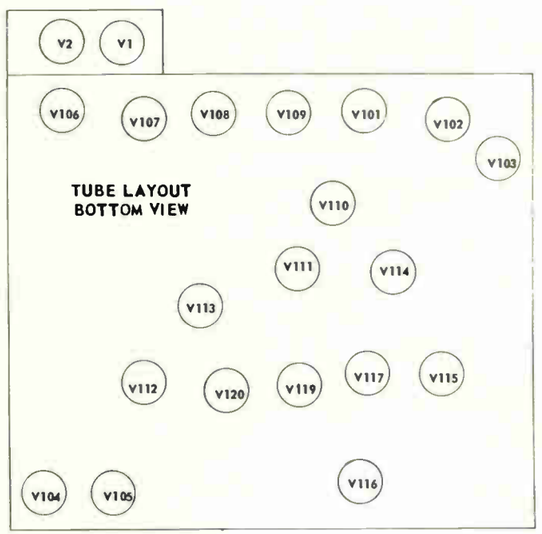

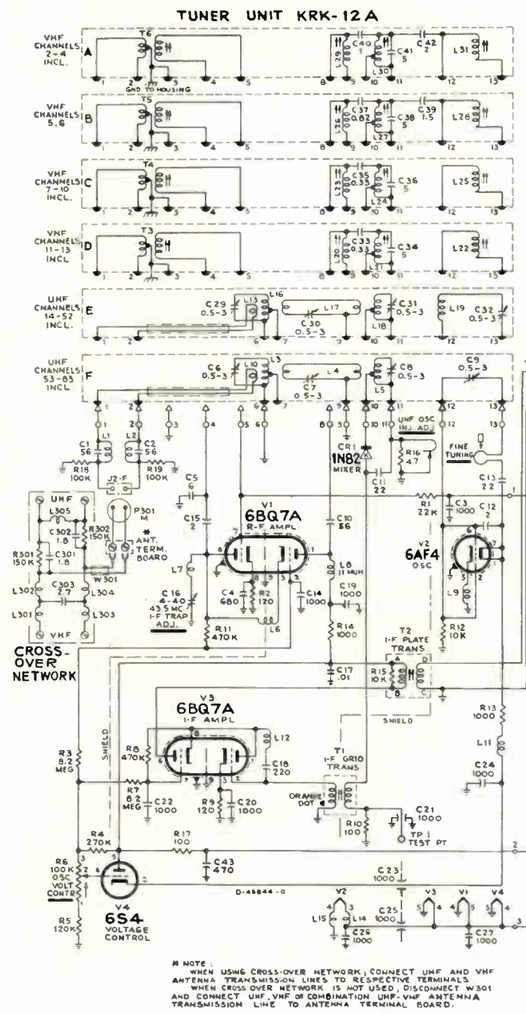

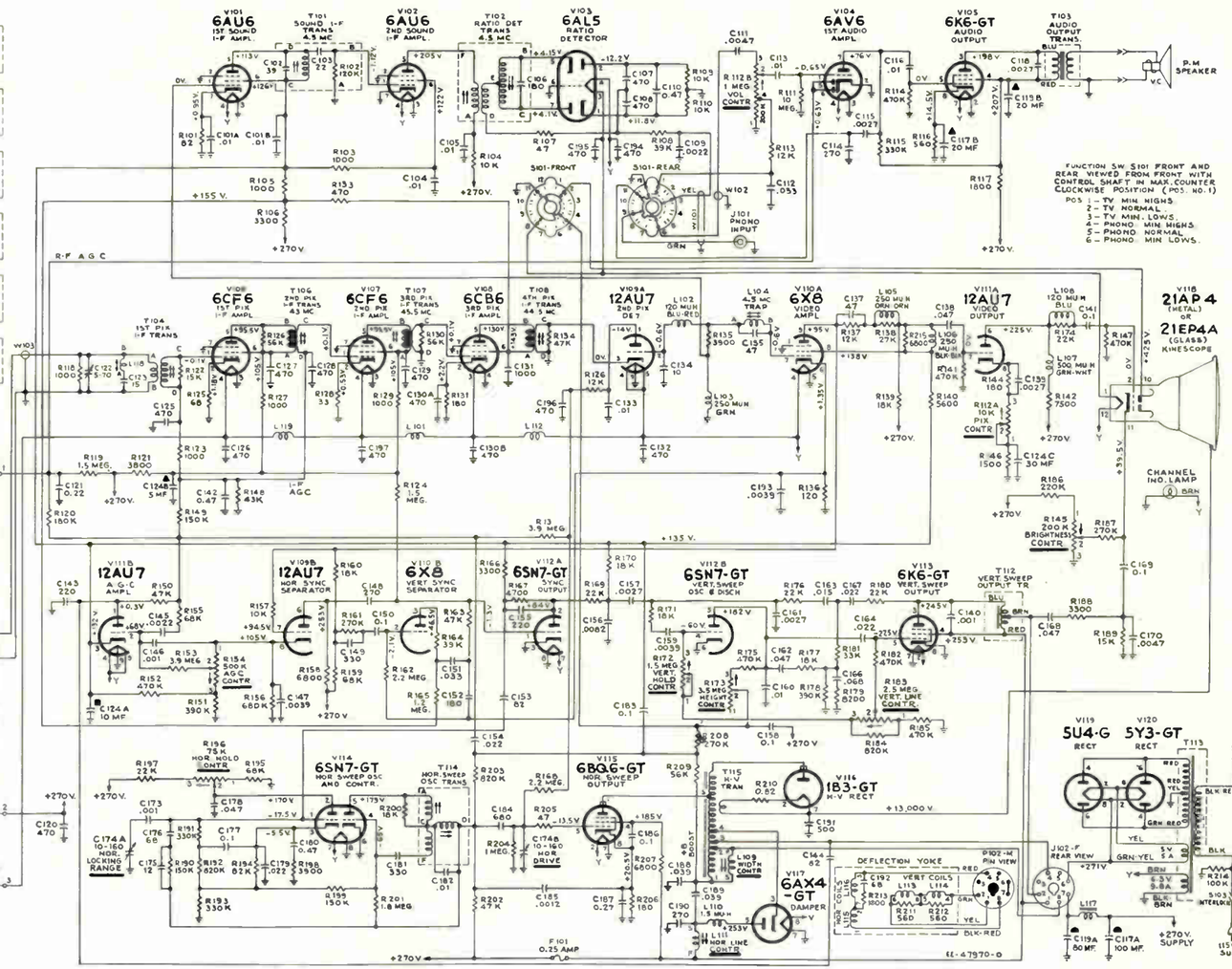

The schematic is shown in the latest condition at the time of printing.
All resistance values in ohms. K = 1000.

All capacitance values less than 1 in FM and above 1 in MMF unless otherwise noted.

Direction of arrows at controls indicates clockwise rotation.

All voltages measured with "VoltOhmyst" and with no signal input. Voltages should hold within ±20% with 117 v. a-c supply.

REF. NO.	PART NO.	DESCRIPTION
		ELECTROLYTICS
C117A	78212	100 mfd, 400V.
C117B	78212	20 mfd, 50V.
C119A	77644	80 mfd, 400V.
C119B	77644	20 mfd, 400V.
C122	78220	Adj mica 5-70 mmf.
C124A	78213	10 mfd, 350V.
C124B	78213	5 mfd, 350V.
C124C	78213	30 mfd, 50V.
C174A	75217	Mica trimmer.
C174B	75217	Dual 10-160 mmf.
		RESISTORS
R112A	78208	Picture.
R112B	78208	Volume.
R145	78209	Brightness.
R154	76975	AGC.
R172	78210	Vertical hold.
R173	78206	Height.
R183	78207	Vertical linearity.
R196	77639	Horiz. hold.
		COILS
L101, L112, L119	73477	Filament choke.
L102	75253	Peaking 120 mic.
L103	71526	Peaking 250 mic.
L104	76983	Trap 4.5 mc.
L105	77674	Peaking 250 mic.
L106	78222	Peaking 250 mic.
L107	75252	Peaking 500 mic.
L108	71529	Peaking 120 mic.
L109	78205	Width.
L110	76640	RF choke 1.5 mic.
L111	76442	Horiz. linearity.
	76616	Yoke.
L117	77676	Filter choke.
L118	78204	1st IF grid trap.
		TRANSFORMERS
T101	76981	Sound IF.
T102	77112	Ratio detector.
T103	76997	Output.
T104	78203	1st IF pix.
T106	76433	2nd IF.
T107	76433	3rd IF.
T108	76433	4th IF.
T112	78202	Vertical output.
T113	78200	Power 117V, 60 cycle.
T114	76440	Horiz oscillator.
T115	78201	Hi voltage.
		MISCELLANEOUS
76168		Focus magnet.
76141		Magnet-Ion trap.
76633		Magnet-pin cushion corr. magnet complete.
77000		Spk-5" PM 3.2 ohms.
75022		Spk-8" PM 3.2 ohms.
77777		Spk-10" PM 3.2 ohms.
76093		Spk-12" PM 3.2 ohms.

21-T-392, 21-T-393 MODELS

Chassis KCS83F

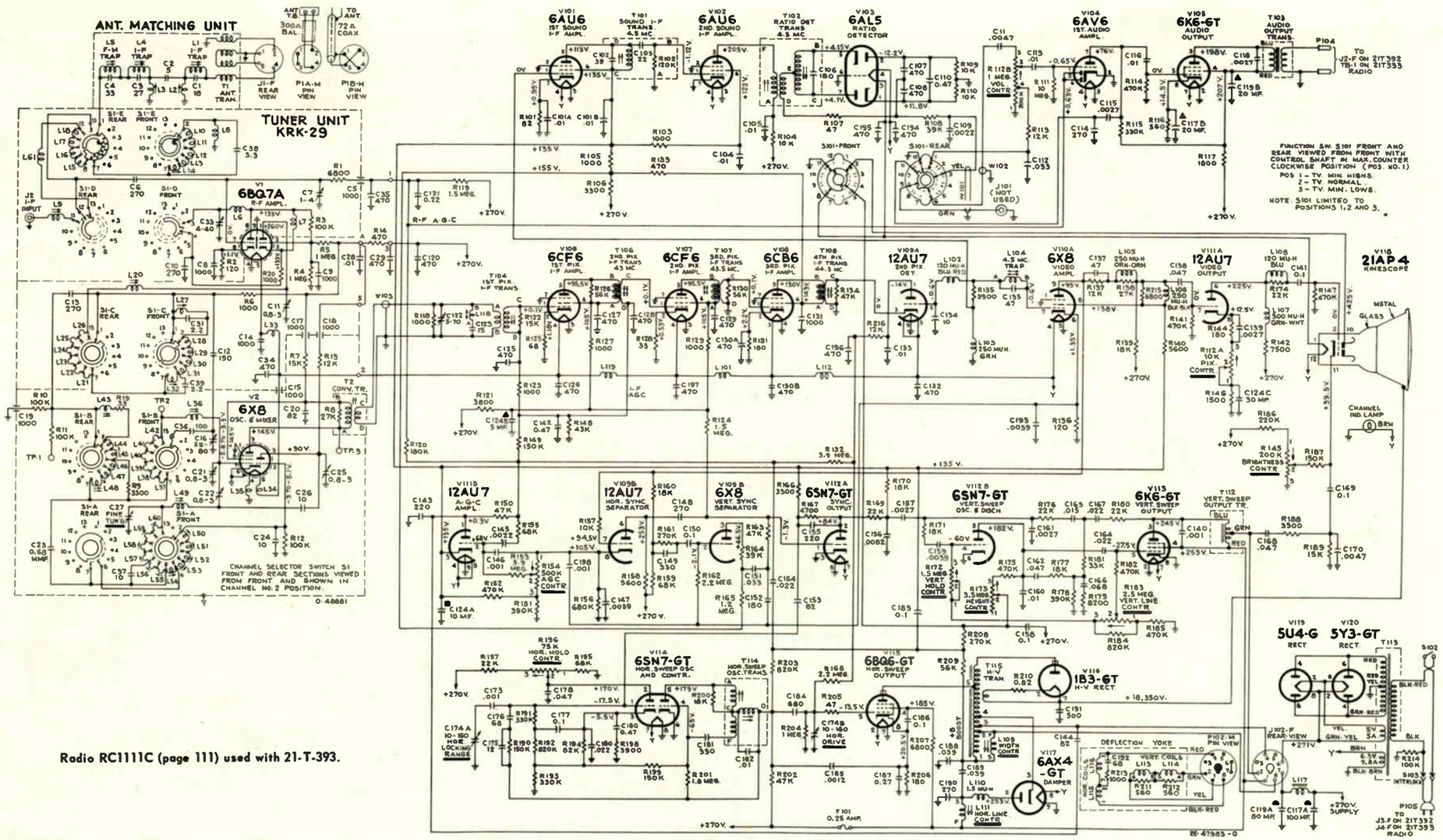

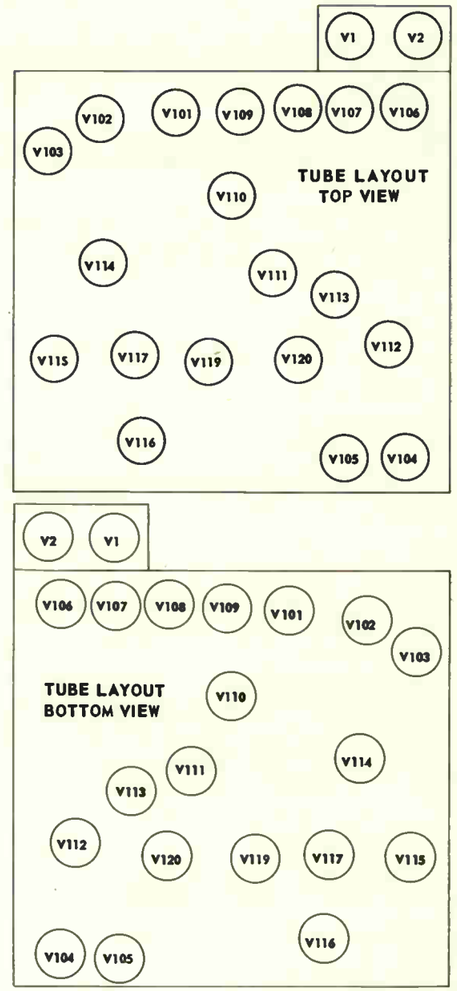

Radio RC1111C (page 111) used with 21-T-393.

The schematic is shown in the latest condition at the time of printing.
All resistance values in ohms. K = 1000.

All capacitance values less than 1 in FM and above 1 in MMF unless otherwise noted.

Direction of arrows at controls indicates clockwise rotation.

All voltages measured with "VoltOhmyst" and with no signal input. Voltages should hold within ±20% with 117 v. a-c supply.

REF. NO.	PART NO.	DESCRIPTION
		ELECTROLYTICS
C117A	78212	100 mfd, 400V.
C117B	78212	20 mfd, 50V.
C119A	77644	80 mfd, 400V.
C119B	77644	20 mfd, 400V.
C122	78220	Adj. mica 5-70 mmf.
C124A	78213	10 mfd, 350V.
C124B	78213	5 mfd, 350V.
C124C	78213	30 mfd, 50V.

COILS		
L102	75253	Peaking 120 muh.
L103	71526	Peaking 250 muh.
L105	77674	Peaking 250 muh.
L106	78222	Peaking 250 muh.
L107	75252	Peaking 500 muh.
L108	71529	Peaking 120 muh.
L109	78205	Width complete w/adj core.
L110	76640	RF choke 1.5 muh.
L111	76442	Horiz. linearity.
L117	77676	Filter choke.

RESISTORS		
R112A	78208	Pix, vol, power switch.
R112B	78208	Pix, vol., power switch.
R145	78209	Brightness control.
R154	76975	AGC control.
R172	78210	Vertical hold.
R173	78206	Height control.
R183	78207	Vertical linearity.
R196	77639	Horiz. hold.

TRANSFORMERS		
T101	76981	Sound IF.
T102	77112	Ratio detector.
T103	76997	Output Xformer.
T104	78203	1st IF pix.
T106, T107, T108	76433	2nd, 3rd, or 4th IF.
T112	78202	Vertical output.
T113	78200	Power 117V 60 cy.
T114	76440	Horiz. oscillator.
T115	78201	Hi voltage.

MISCELLANEOUS	
76093	Spk-12" PM 3.2 ohms.
76616	Yoke.

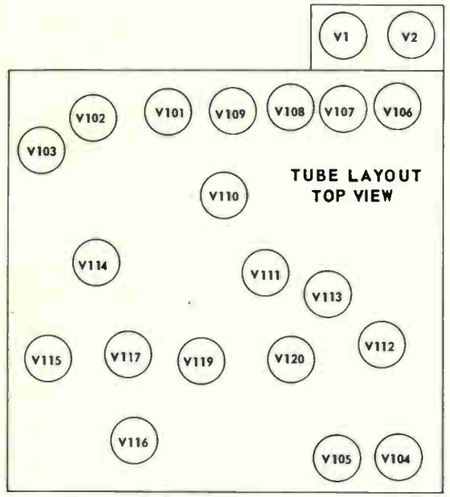

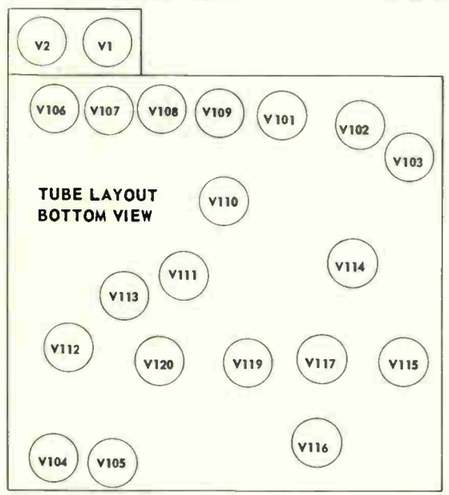

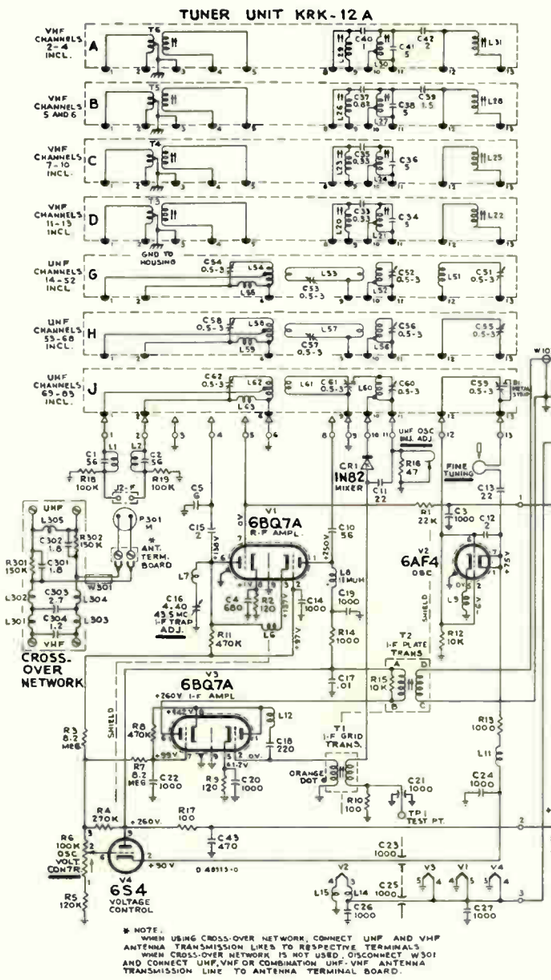

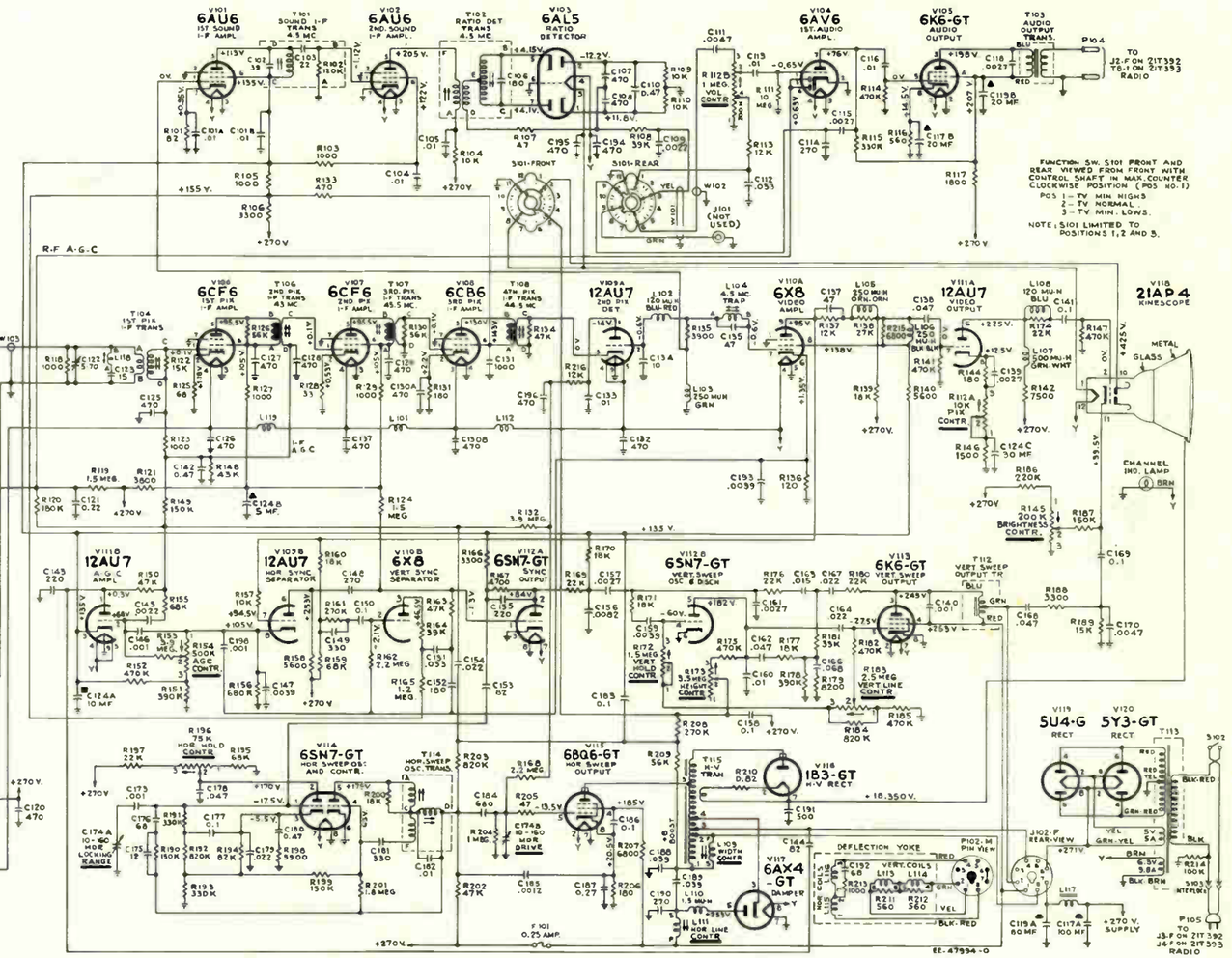

All resistance values in ohms. K = 1000.

All capacitance values less than 1 in MF and above 1 in MMF unless otherwise noted.

Direction of arrows at controls indicates clockwise rotation.

All voltages measured with "VoltOhmyst" and with no signal input. Voltages should hold within ±20% with 117 v. a-c supply.

REF. NO.	PART NO.	DESCRIPTION
		ELECTROLYTICS
C117A	78212	100 mfd, 400V.
C117B	78212	20 mfd, 50V.
C119A	77644	80 mfd, 400V.
C119B	77644	20 mfd, 400V.
C122	78220	Adj. mica 5-70 mmf.
C124A	78213	10 mfd, 350V.
C124B	78213	5 mfd, 350V.
C124C	78213	30 mfd, 50V.

COILS		
L102	75253	Peaking 120 muh.
L103	71526	Peaking 250 muh.
L105	77674	Peaking 250 muh.
L106	78222	Peaking 250 muh.
L107	75252	Peaking 500 muh.
L108	71529	Peaking 120 muh.
L109	78205	Width complete w/adj core.
L110	76640	RF choke 1.5 muh.
L111	76442	Horiz. linearity.
L117	77676	Filter choke.

RESISTORS		
R112A	78208	Pix, vol, power switch.
R112B	78208	Pix, vol., power switch.
R145	78209	Brightness control.
R154	76975	AGC control.
R172	78210	Vertical hold.
R173	78206	Height control.
R183	78207	Vertical linearity.
R196	77639	Horiz. hold.

TRANSFORMERS		
T101	76981	Sound IF.
T102	77112	Ratio detector.
T103	76997	Output Xformer.
T104	78203	1st IF pix.
T106, T107, T108	76433	2nd, 3rd, or 4th IF.
T112	78202	Vertical output.
T113	78200	Power 117V 60 cy.
T114	76440	Horiz. oscillator.
T115	78201	Hi voltage.

MISCELLANEOUS	
76093	Spk-12" PM 3.2 ohms.
76616	Yoke.

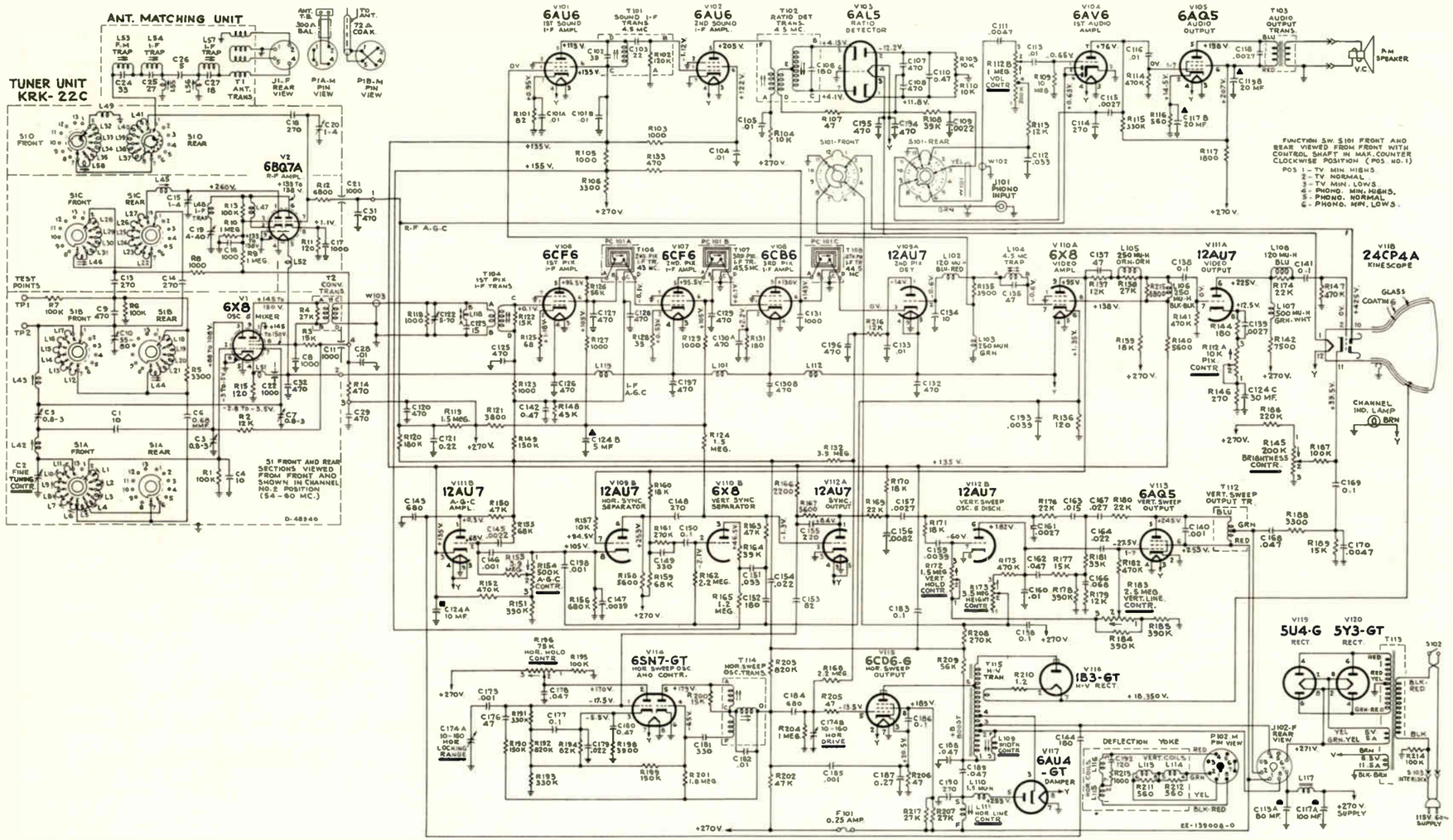

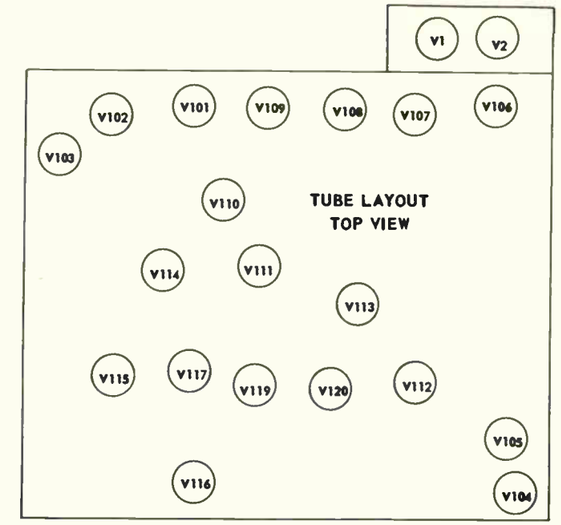

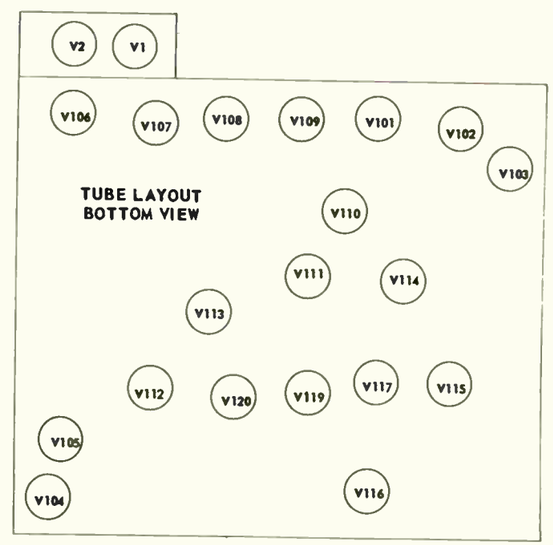

The schematic is shown in the latest condition at the time of printing.
All resistance values in ohms. K = 1000.

Direction of arrows at controls indicates clockwise rotation.

All voltages measured with "VoltOhmyst" and with no signal input. Voltages should hold within ±20% with 117 v. a-c supply.

ELECTROLYTICS		
C117A	78212	100 mfd, 400V.
C117B	78212	20 mfd, 50V.
C119A	77644	80 mfd, 400V.
C119B	77644	20 mfd, 400V.
C122	78220	5-70 mmf, 200V. Trimmer.
C124A	78213	10 mfd, 350V.
C124B	78213	5 mfd, 350V.
C124C	78213	30 mfd, 50V.
C174A, C174B	75217	Mica trimmer, dual 10-160 mmf

COILS		
L101, L112, L119	73477	Choke coil.
PC101	78743	Printed IF circuit assem.
L102	75253	Peaking, 120 mic.
L103	98482	Peaking, 250 mic.
L105	77674	Peaking, 250 mic.
L106	78222	Peaking, 250 mic.
L107	75252	Peaking, 500 mic.
L108	71529	Peaking, 120 mic.
L109	76441	Width, complete w/adj core.
L110	76640	RF choke, 1.5 mic.
L111	76442	Hor. lin. complete, w/adj core.
L117	77676	Filter choke.
L118	78204	1st IF grid trap.

RESISTORS		
R112A, R112B	78208	Pix cont., vol., power sw.
R145	78209	Brightness, vol., power sw.
R154	78808	AGC control.
R172	78210	Vertical hold.
R173	78806	Height control.
R183	78807	Vertical linearity.
R196	77639	Horiz. hold.

TRANSFORMERS		
T101	76981	Sound IF w/adj. core.
T102	77112	Ratio detector.
T103	76997	Output Xformer.
T106	78203	1st IF pix w/adj. core.
T112	78809	Vertical output.
T113	78805	Power, 117V, 60 cycle.
T114	76440	Hor. osc. w/adj. core.
T115	78810	Hor. deflection output.

MISCELLANEOUS		
78869	Yoke, w/male connector.	
77777	Spk-10" PM, 3.2 ohms.	

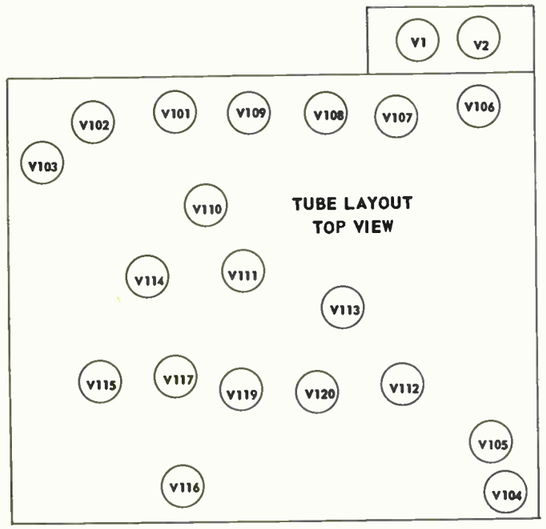

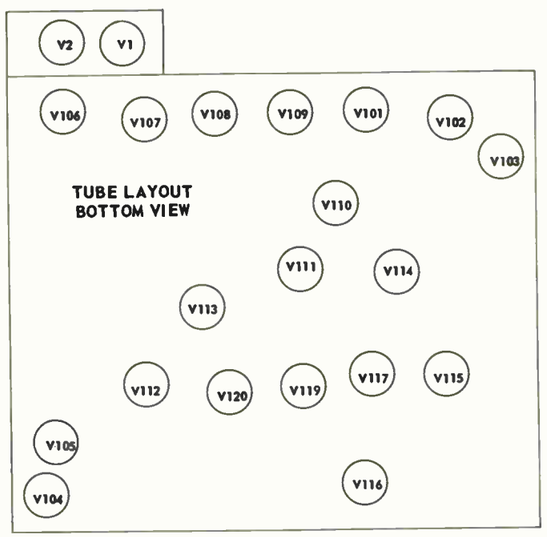

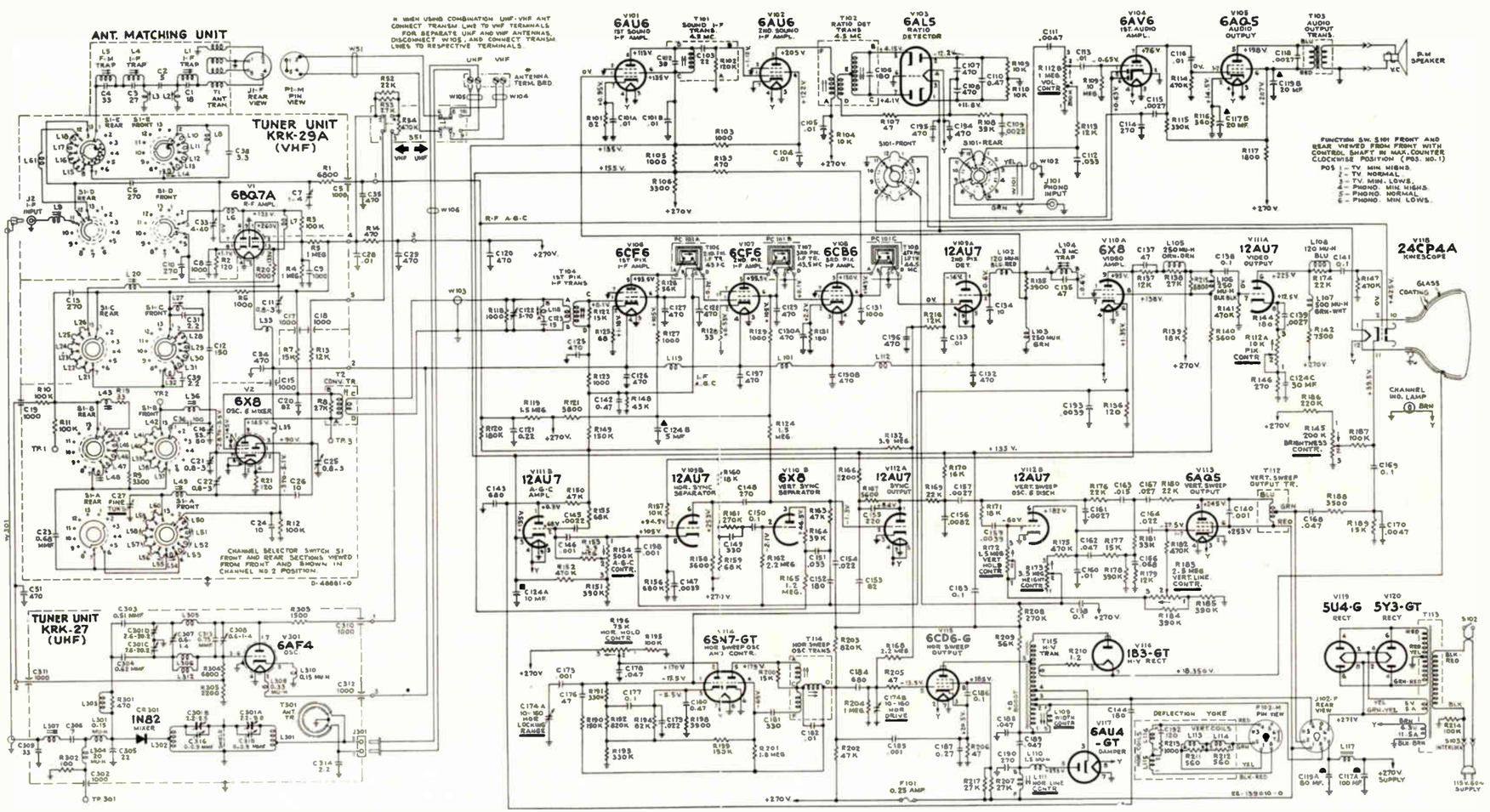

The schematic is shown in the latest condition at the time of printing.
All resistance values in ohms. K = 1000.

Direction of arrows at controls indicates clockwise rotation.

All voltages measured with "VoltOhmyst" and with no signal input. Voltages should hold within ±20% with 117 v. a-c supply.

ELECTROLYTICS		
C117A	78212	100 mfd, 400V.
C117B	78212	20 mfd, 50V.
C119A	77644	80 mfd, 400V.
C119B	77644	20 mfd, 400V.
C122	78220	5-70 mmf, 200V. Trimmer.
C124A	78213	10 mfd, 350V.
C124B	78213	5 mfd, 350V.
C124C	78213	30 mfd, 50V.
C174A, C174B	75217	Mica trimmer, dual 10-160 mmf

COILS		
L101, L112, L119	73477	Choke coil.
PC101	78743	Printed IF circuit assem.
L102	75253	Peaking, 120 mic.
L103	98482	Peaking, 250 mic.
L105	77674	Peaking, 250 mic.
L106	78222	Peaking, 250 mic.
L107	75252	Peaking, 500 mic.
L108	71529	Peaking, 120 mic.
L109	76441	Width, complete w/adj core.
L110	76640	RF choke, 1.5 mic.
L111	76442	Hor. lin. complete, w/adj core.
L117	77676	Filter choke.
L118	78204	1st IF grid trap.

RESISTORS		
R112A, R112B	78208	Pix cont., vol., power sw.
R145	78209	Brightness, vol., power sw.
R154	78808	AGC control.
R172	78210	Vertical hold.
R173	78806	Height control.
R183	78807	Vertical linearity.
R196	77639	Horiz. hold.

TRANSFORMERS		
T101	76981	Sound IF w/adj. core.
T102	77112	Ratio detector.
T103	76997	Output Xformer.
T106	78203	1st IF pix w/adj. core.
T112	78809	Vertical output.
T113	78805	Power, 117V, 60 cycle.
T114	76440	Hor. osc. w/adj. core.
T115	78810	Hor. deflection output.

MISCELLANEOUS		
	78869	Yoke, w/mole connector.
	77777	Spk-10" PM, 3.2 ohms.

27-D-331, 27-D-331U MODELS

Chassis Nos. KCS77A or KCS77B

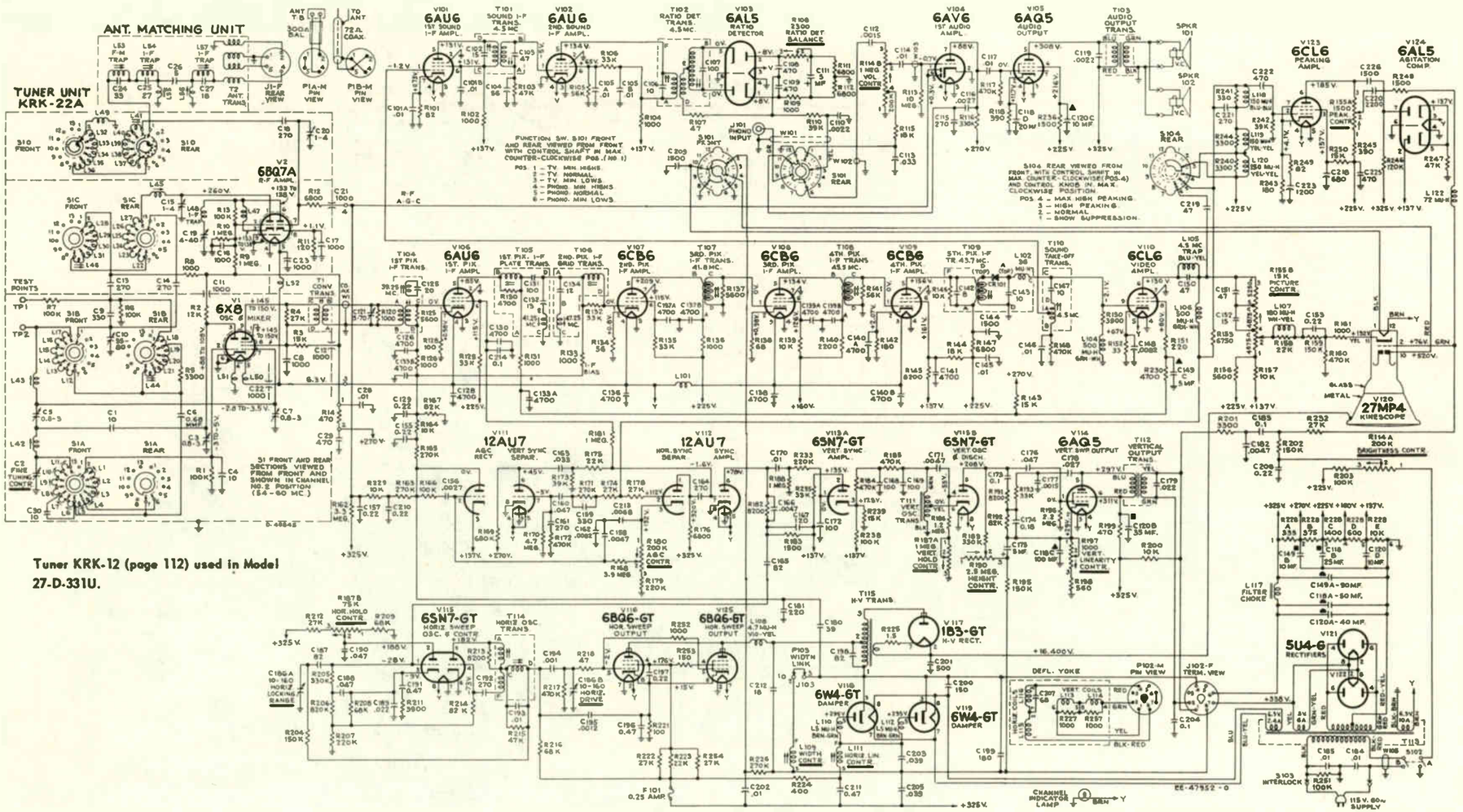

Tuner KRK-12 (page 112) used in Model 27-D-331U.

The schematic is shown in the latest condition at the time of printing. All resistance values in ohms. K = 1000.

All capacitance values less than 1 in MF and above 1 in MMF unless otherwise noted.

Direction of arrows at controls indicates clockwise rotation.

All voltages measured with "Volt-Ohmyst" and with no signal input. Voltages should hold within ±20% with 117 v. a-c supply.

REF. NO.	PART NO.	DESCRIPTION
		ELECTROLYTICS
C5	77913 *	Tubular adj. 0.8-3.0 mmf.
C7	77151*	Adj. 0.8-3.0 mmf.
C10	76527*	Mica trimmer 55-80 mmf.
C15, C20	76532*	Adj 1-4 mmf.
C16	77616**	Adj. mica 4-40 mmf.
C19	77616*	Adj mica 4-40 mmf.
C111	74521	5 mfd, 50V.
C118A	77817	50 mfd, 400V.
C118B	77817	25 mfd, 400V.
C118C	77817	100 mfd, 50V.
C118D	77817	20 mfd, 25V.
C120A	77819	40 mfd, 400V.
C120B	77819	35 mfd, 400V.
C120C	77819	10 mfd, 400V.
C120D	77819	10 mfd, 400V.
C121	71496	Mica trimmer 5-70 mmf.
C149A	77820	90 mfd, 400V.
C149B	77820	10 mfd, 400V.
C149C	77820	5 mfd, 400V.
C175	28417	5 mfd, 450V.
C186A	75217	Mica trimmer.
C186B	75217	Dual 10-160 mmf.

		RESISTORS
R6	77614	Oscillator voltage
	77617	UHF oscillator inj. adj.
R108	77199	Ratio detector balance.
R114A	77655	Brightness.
R114B	77655	Volume.
R155A	77818	Contrast.
R155B	77818	Peaking.
R180	77654	AGC.
R187A	77826	Horiz. hold.
R187B	77826	Vertical hold.
R190	77640	Height.
R197	77643	Vertical linearity.

		COILS
L101	73477	Choke.
L104	75252	Peaking 500 mic.
L105	76482	Trap 4.5 mc.
L107	76647	Peaking 180 mic.
L108	76510	RF choke 4.7 mic.
L109	76484	Width, complete.
L110, L122	76640	RF choke.
L111	78197	Horiz. linearity.
Part of L115	76772	Filament winding for hi voltage.

L117	77824	Filter choke.
L118	77840	Peaking 150 mic.
L119	77841	Peaking 150 mic.
L122	77842	Peaking 72 mic.
		TRANSFORMERS
T1	77857*	Convertor.
T1	77609**	Mixer IF complete.
T2	77610**	Primary IF link.
T101	76438	Sound IF.

T102	76439	Ratio detector.
T103	77821	Output.
T104	77198	1st pix IF grid.
T105	77197	1st pix IF plate.
T106	76435	2nd pix IF grid.
T107	76433	3rd pix IF.
T108	76433	4th pix IF.
T109	76436	5th pix IF.
T110	76437	Sound take-off.
T111	77650	Vertical oscillator.
T112	77823	Vertical output.

T113	77822	Power 117V, 60 cycle.
T114	76440	Horiz. oscillator.
Part of T115	77833	Hi voltage.
		MISCELLANEOUS
CR1	77489**	Rectifier germanium IN82.
CR101	76675	Pix det. Xtal rect.
	77872	Spk-8" PM 3.2 ohms.

NOTE: * for tuner KRK22A
** for tuner KRK12.

Chassis KCS77G, KCS77F

MODELS **27-D-382, 27-D-383, 27-D-384**

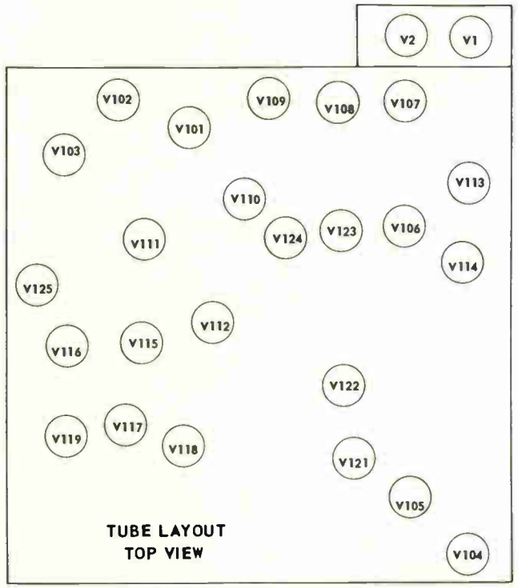

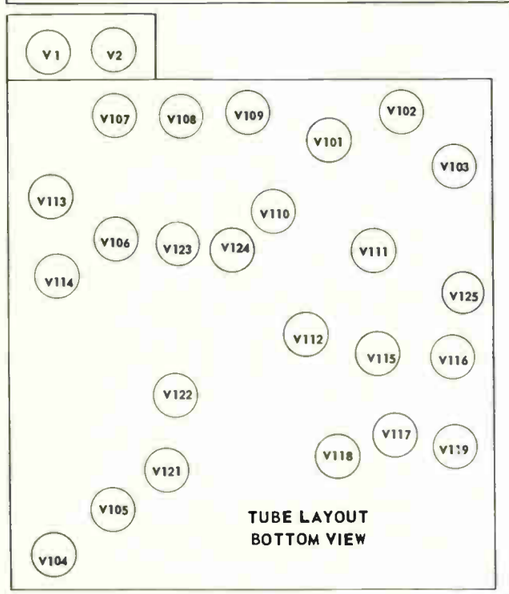

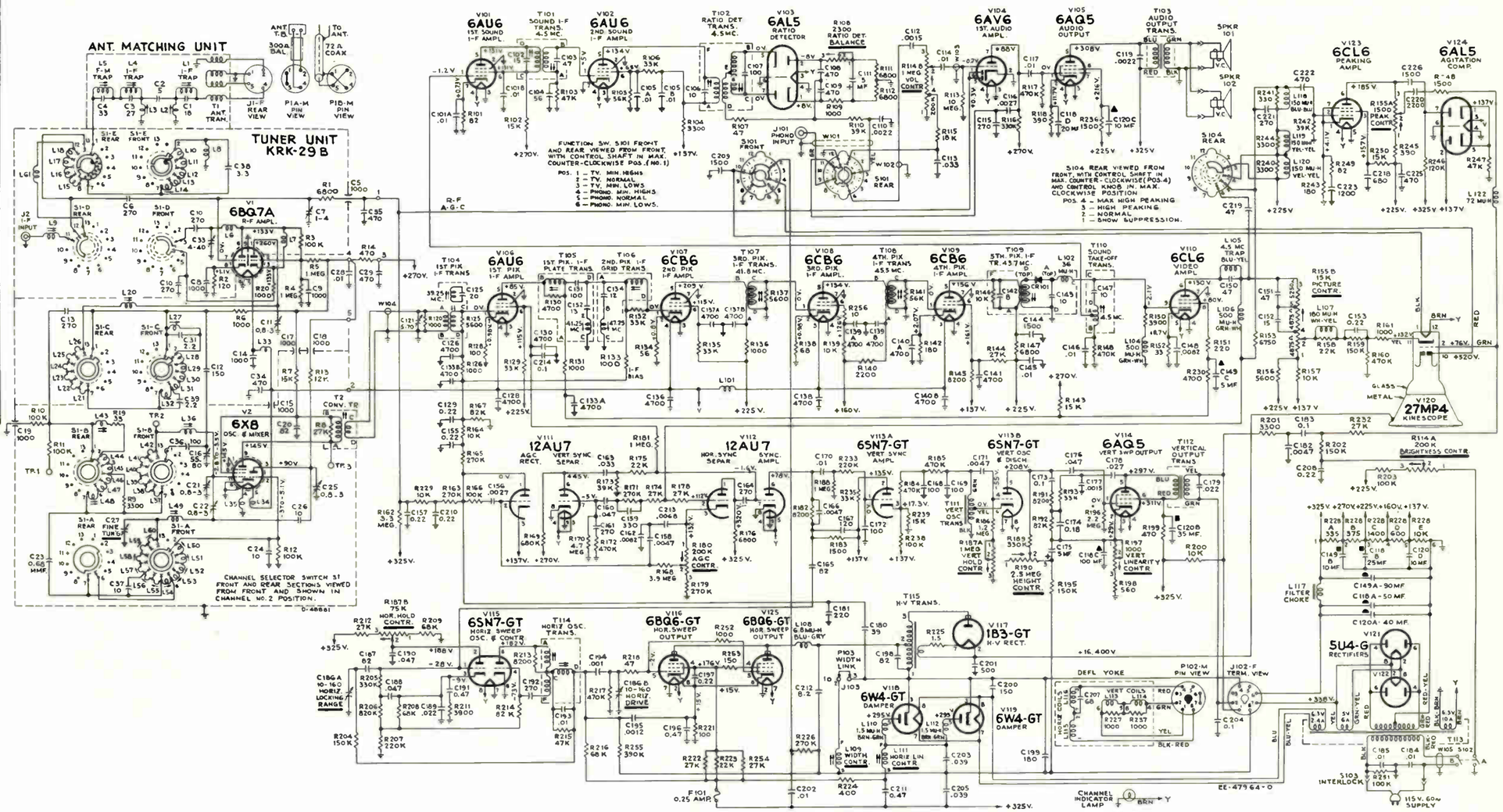

The schematic is shown in the latest condition at the time of printing.
All resistance values in ohms. K = 1000.

All capacitance values less than 1 in MF and above 1 in MMF unless otherwise noted.

Direction of arrows at controls indicates clockwise rotation.

All voltages measured with "Volt-Ohmyst" and with no signal input. Voltages should hold within ± 20% with 117 v. a-c supply.

REF. NO.	PART NO.	DESCRIPTION
		ELECTROLYTICS
C7	76532*	Adj. 1-4 mmf.
C11, C21, C25	77151*	Adj. 0.8-3.0 mmf.
C16	78397*	Mica trimmer 80-150 mmf.
C16	77616**	Adjustable mica.
C22	77913*	Adj. 0.8-3.0 mmf.
C33	77616*	Adj. mica 4-40 mmf.
C111	74521	5 mfd, 50V.
C118A	77817	50 mfd, 400V.
C118B	77817	25 mfd, 400V.
C118C	77817	100 mfd, 50V.
C118D	77817	20 mfd, 25V.
C120A	77819	40 mfd, 400V.
C120B	77819	35 mfd, 400V.
C120C	77819	10 mfd, 400V.
C120D	77819	10 mfd, 400V.
C121	71496	Mica trimmer 5-70 mmf.
C149A	77820	90 mfd, 400V.
C149B	77820	10 mfd, 400 V.
C149C	77820	5 mfd, 400 V.
C175	28417	5 mfd, 450V.
C186A	75217	Mica trimmer.
C186B	75217	Dual 10-160 mmf.

		RESISTORS
R6	77614	Oscillator voltage
	77617	UHF osc. inj. adj.
R108	77199	Ratio detector balance.
R114A	77655	Brightness.
R114B	77655	Volume.
R155A	77818	Picture.
R155B	78818	Peaking.
R180	77654	AGC.
R187A	77826	Horiz. hold.
R187B	77826	Vertical hold.
R190	77640	Height.
R197	77643	Vertical linearity.

		COILS
L101	73477	Choke coil.
L104	75252	Peaking 500 mic.
L105	76482	Trap 4.5 mc.
L107	76647	Peaking 180 mic.
L108	78598	RF choke 6.8 mic.
L109	76484	Width, complete.
L110, L112	76640	RF choke 1.5 mic.
L111	78197	Horiz. linearity.
Part of T115	76672	Filament winding only for hi voltage.
L118	77840	Peaking 150 mic.
L119	77841	Peaking 150 mic.
L122	77842	Peaking 72 mic.

		TRANSFORMERS
T1	78396*	Ant. matching, complete.
T1	77609**	Mixer IF complete.
T2	78299*	Convertor.
T2	77610**	Primary IF link complete.
T101	76438	Sound IF.
T102	76439	Ratio detector.
T103	77821	Output.
T104	77198	1st pix IF grid complete.
T105	77197	1st pix IF plate complete.
T106	76435	2nd pix IF grid complete.
T107	76433	3rd pix IF.
T108	76433	4th pix IF.
T109	78488	5th pix IF.
T110	76437	Sound take-off.
T111	77650	Vertical oscillator.
T112	77823	Vertical output.
T113	78822	Power 117V, 60 cycle.
T114	76440	Horiz. oscillator.
Part of T115	77833	Hi voltage.

		MISCELLANEOUS
CR101	76675	Rec. pix det. Xtal.
CR1	77489**	Rectifier germanium IN82.
	77872	5pk-8" PM 3.2 ohms.

NOTE: * for tuner KRK29B.
** for tuner KRK12B.

27-D-382U, 27-D-383U, 27-D-384U MODELS

Chassis KCS77D, KCS77H

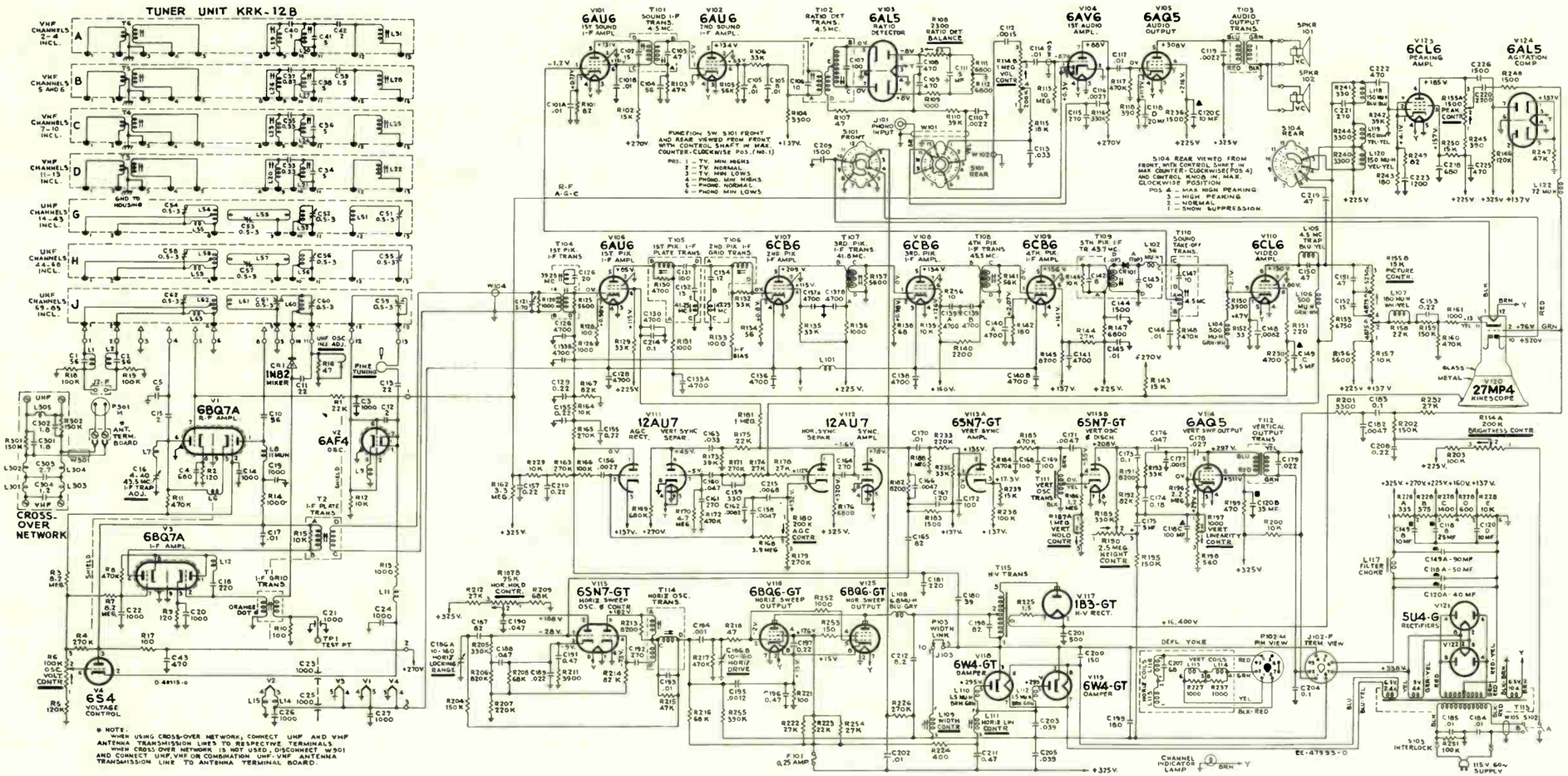

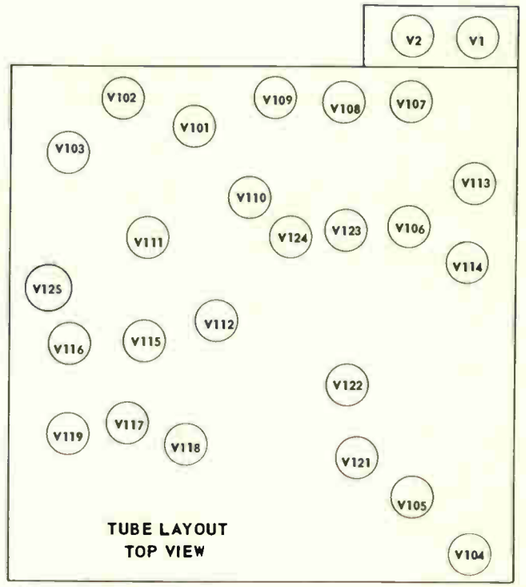

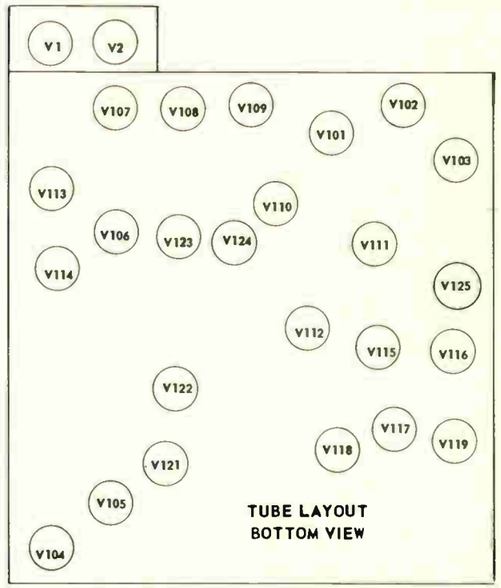

The schematic is shown in the latest condition at the time of printing.
All resistance values in ohms. K = 1000.

All capacitance values less than 1 in MF and above 1 in MMF unless otherwise noted.

Direction of arrows at controls indicates clockwise rotation.

All voltages measured with "Volt-Ohmyst" and with no signal input. Voltages should hold within ±20% with 117 v. a-c supply.

REF. NO.	PART NO.	DESCRIPTION
		ELECTROLYTICS
C7	76532*	Adj. 1-4 mmf.
C11, C21, C25	77151*	Adj. 0.8-3.0 mmf.
C16	78397*	Mica trimmer 80-150 mmf.
C16	77616**	Adjustable mica.
C22	77913*	Adj. 0.8-3.0 mmf.
C33	77616*	Adj. mica 4-•0 mmf.
C111	74521	5 mfd, 50V.
C118A	77817	50 mfd, 400V.
C118B	77817	25 mfd, 400V.
C118C	77817	100 mfd, 50V.
C118D	77817	20 mfd, 25V.
C120A	77819	40 mfd, 400V.
C120B	77819	35 mfd, 400V.
C120C	77819	10 mfd, 400V.
C120D	77819	10 mfd, 400V.
C121	71496	Mica trimmer 5-70 mmf.
C149A	77820	90 mfd, 400V.
C149B	77820	10 mfd, 400V.
C149C	77820	5 mfd, 400V.
C175	28417	5 mfd, 450V.
C186A	75217	Mica trimmer.
C186B	75217	Dual 10-160 mmf.

REF. NO.	PART NO.	DESCRIPTION
		RESISTORS
R6	77614	Oscillator voltage
	77617	UHF osc. inj. adj.
R108	77199	Ratio detector balance.
R114A	77655	Brightness.
R114B	77655	Volume.
R155A	77818	Picture.
R155B	78818	Peaking.
R180	77654	AGC.
R187A	77826	Horiz. hold.
R187B	77826	Vertical hold.
R190	77640	Height.
R197	77643	Vertical linearity.

REF. NO.	PART NO.	DESCRIPTION
		COILS
L101	73477	Choke coil.
L104	75252	Peaking 500 mic.
L105	76482	Trap 4.5 mc.
L107	76647	Peaking 180 mic.
L108	78598	RF choke 6.8 mic.
L109	76484	Width, complete.
L110, L112	76640	RF choke 1.5 mic.
L111	78197	Horiz. linearity.
Part of T115	76672	Filament winding only for hi voltage.
L118	77840	Peaking 150 mic.
L119	77841	Peaking 150 mic.
L122	77842	Peaking 72 mic.

REF. NO.	PART NO.	DESCRIPTION
		TRANSFORMERS
T1	78396*	Ant. matching, complete.
T1	77609**	Mixer IF complete.
T2	78299*	Convertor.
T2	77610**	Primary IF link complete.
T101	76438	Sound IF.
T102	76439	Ratio detector.
T103	77821	Output.
T104	77198	1st pix IF grid complete.
T105	77197	1st pix IF plate complete.
T106	76435	2nd pix IF grid complete.
T107	76433	3rd pix IF.
T108	76433	4th pix IF.
T109	78488	5th pix IF.
T110	76437	Sound take-off.
T111	77650	Vertical oscillator.
T112	77823	Vertical output.
T113	78822	Power 117V, 60 cycle.
T114	76440	Horiz. oscillator.
Part of T115	77833	Hi voltage.

REF. NO.	PART NO.	DESCRIPTION
		MISCELLANEOUS
CR101	76675	Rec. pix det. Xtal.
CR1	77489**	Rectifier germanium IN82.
	77872	Spk-8" PM 3.2 ohms.

NOTE: * for tuner KRK29B.
** for tuner KRK12B.

MODELS 21-S-348K, 21-S-355K, 21-S-357K, 21-S-362K, 21-S-367K, 21-S-369K,

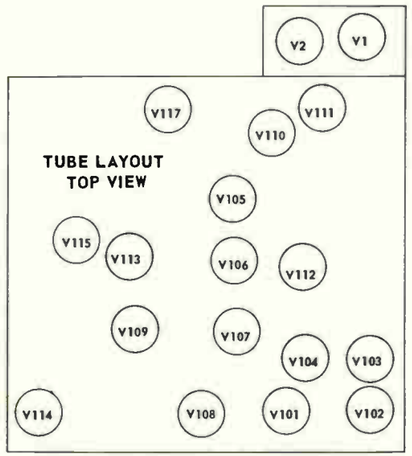

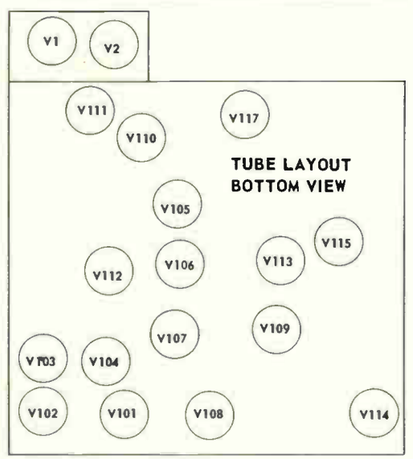

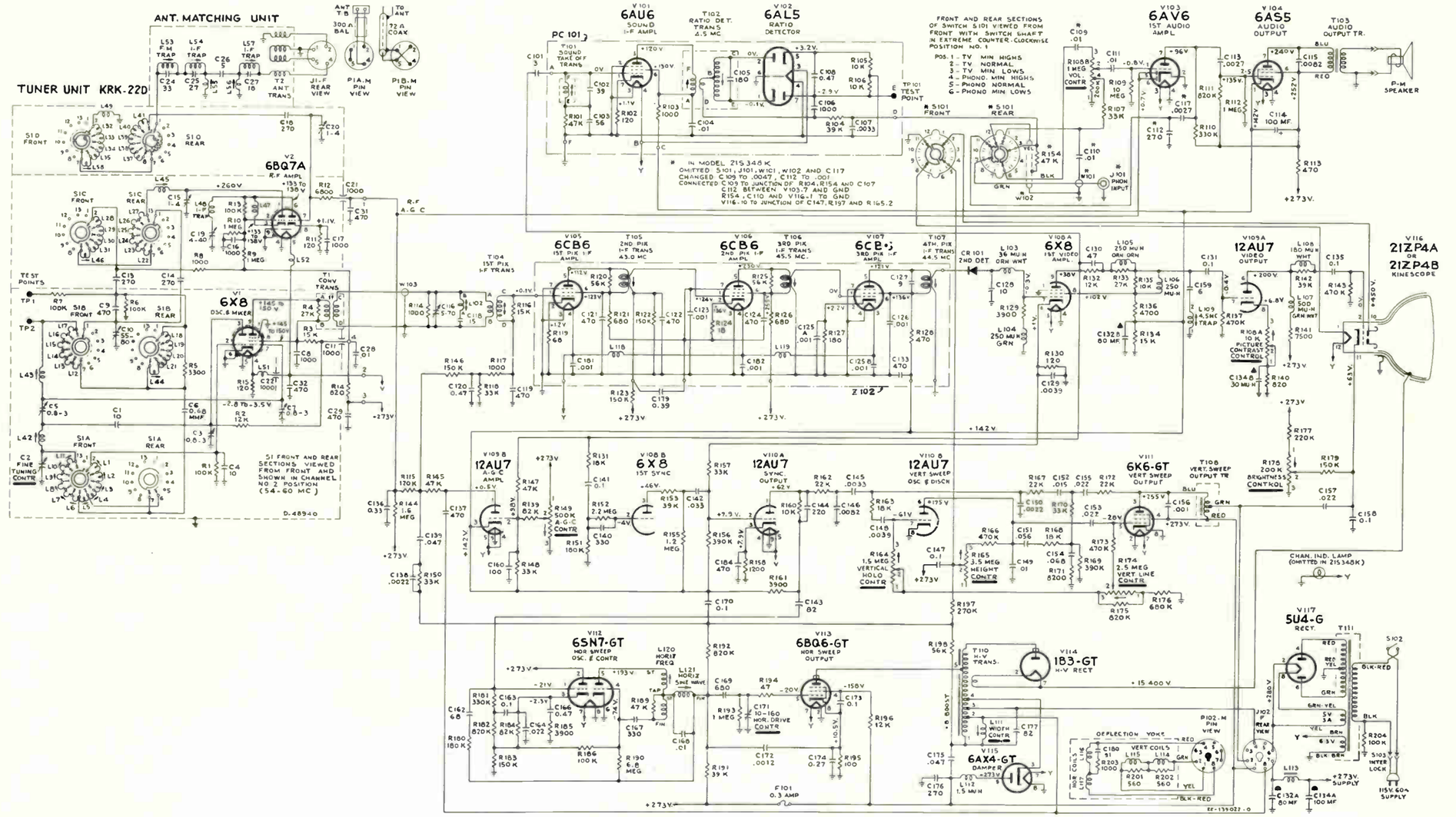

The schematic is shown in the latest condition at the time of printing.
All resistance value in ohms. K = 1000.

All capacitance values less than 1 in MF and above 1 in MMF unless otherwise noted.

Direction of arrows at controls indicates clockwise rotation.

All voltages measured with "VoltOhmyst" and with no signal input. Voltages should hold within ±20% with 117 v. a-c supply.

REF. NO.	PART NO.	DESCRIPTION
		ELECTROLYTICS
C114	79314	100 mf. 250V.
C116	78220	Adj. 5-70 mmf, mico.
C132A	79147	80 mfd, 400V.
C132B	79147	80 mfd, 200V.
C134A	79146	100 mfd, 400V.
C134B	79146	30 mfd, 50V.
C171	71807	Mico trimmer 10-160 mmf.
		RESISTORS
R149	78808	AGC control.
R164	78210	Vertical hold.
R165	78806	Height control.
R174	78807	Vertical linearity.
R178	79139	Brightness control.
		COILS
L103	76011	Peaking, 36 mh.
L104	98482	Peaking, 250 mh.
L105	77674	Peaking 250 mh.
L106	79321	Peaking, 250 mh.
L107	75252	Peaking 500 mh.
L108	71528	Peaking, 180 mh.
L111	79144	Width complete.
		TRANSFORMERS
T102	79141	IF ratio detector.
T103	79159	Audio Xformer.
T104	78203	1st pix IF grid complete.
T105, T106, T107	76433	1st, 2nd & 3rd pix IF
T108	79143	Vertical output.
T110	79145	High voltage.
T111	79162	Power 117V, 60 cy.
		MISCELLANEOUS
	77000	Spk-5" PM 3.2 ohms.
	77872	Spk-8" PM 3.2 ohms.
S102	78211	TV phono-tone sw. for KCS88 & 88F.
PC101	79142	Printed IF sound assem.

21-S-348KU, 21-S-355KU, 21-S-357KU, 21-S-362KU, 21-S-367KU, 21-S-369KU. MODELS

Chassis KCS88F, KCS88H

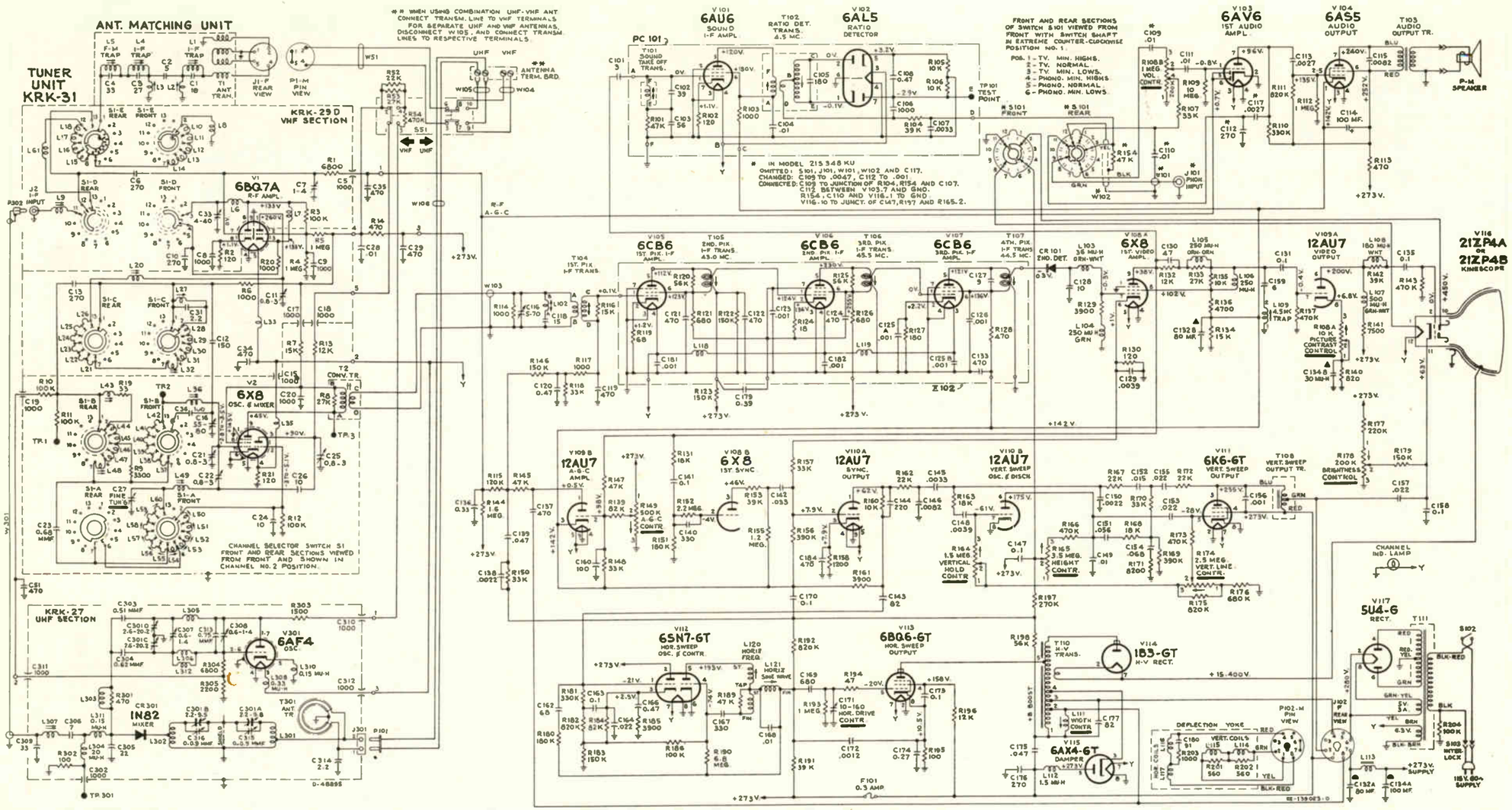

NOTE: Chassis KCS88H is identical to chassis 88F except as noted on schematic diagram.

The schematic is shown in the latest condition at the time of printing. All resistance value in ohms. K = 1000.

All capacitance values less than 1 in MF and above 1 in MMF unless otherwise noted.

Direction of arrows at controls indicates clockwise rotation.

All voltages measured with "VoltOhmyst" and with no signal input. Voltages should hold within ±20% with 117 v. a-c supply.

REF. NO.	PART NO.	DESCRIPTION
		ELECTROLYTICS
C114	79314	100 mf. 250V.
C116	78220	Adj. 5-70 mmf, mica.
C132A	79147	80 mfd, 400V.
C132B	79147	80 mfd, 200V.
C134A	79146	100 mfd, 400V.
C134B	79146	30 mfd, 50V.
C171	71807	Mica trimmer 10-160 mmf.
		RESISTORS
R149	78808	AGC control.
R164	78210	Vertical hold.
R165	78806	Height control.
R174	78807	Vertical linearity.
R178	79139	Brightness control.
		COILS
L103	76011	Peaking, 36 mh.
L104	98482	Peaking, 250 mh.
L105	77674	Peaking 250 mh.
L106	79321	Peaking, 250 mh.
L107	75252	Peaking 500 mh.
L108	71528	Peaking, 180 mh.
L111	79144	Width complete.
		TRANSFORMERS
T102	79141	IF ratio detector.
T103	79159	Audio Xformer.
T104	78203	1st pix IF grid complete.
T105, T106, T107	76433	1st, 2nd & 3rd pix IF
T108	79143	Vertical output.
T110	79145	High voltage.
T111	79162	Power 117V, 60 cy.
		MISCELLANEOUS
	77000	Spk-5" PM 3.2 ohms.
	77872	Spk-8" PM 3.2 ohms.
S102	78211	TV phono-tone sw. for KCS88 & 88F.
PC101	79142	Printed IF sound assem.

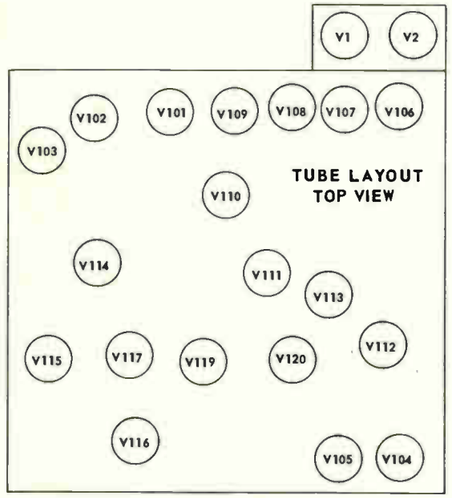

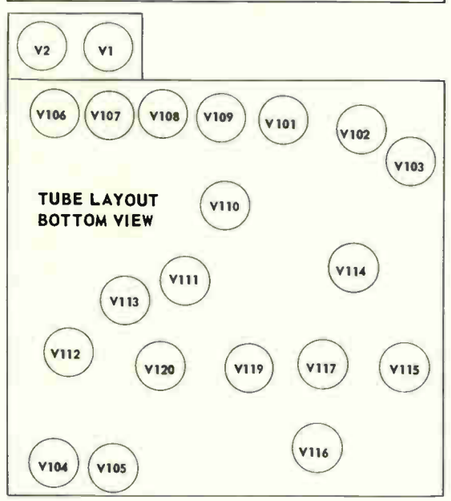

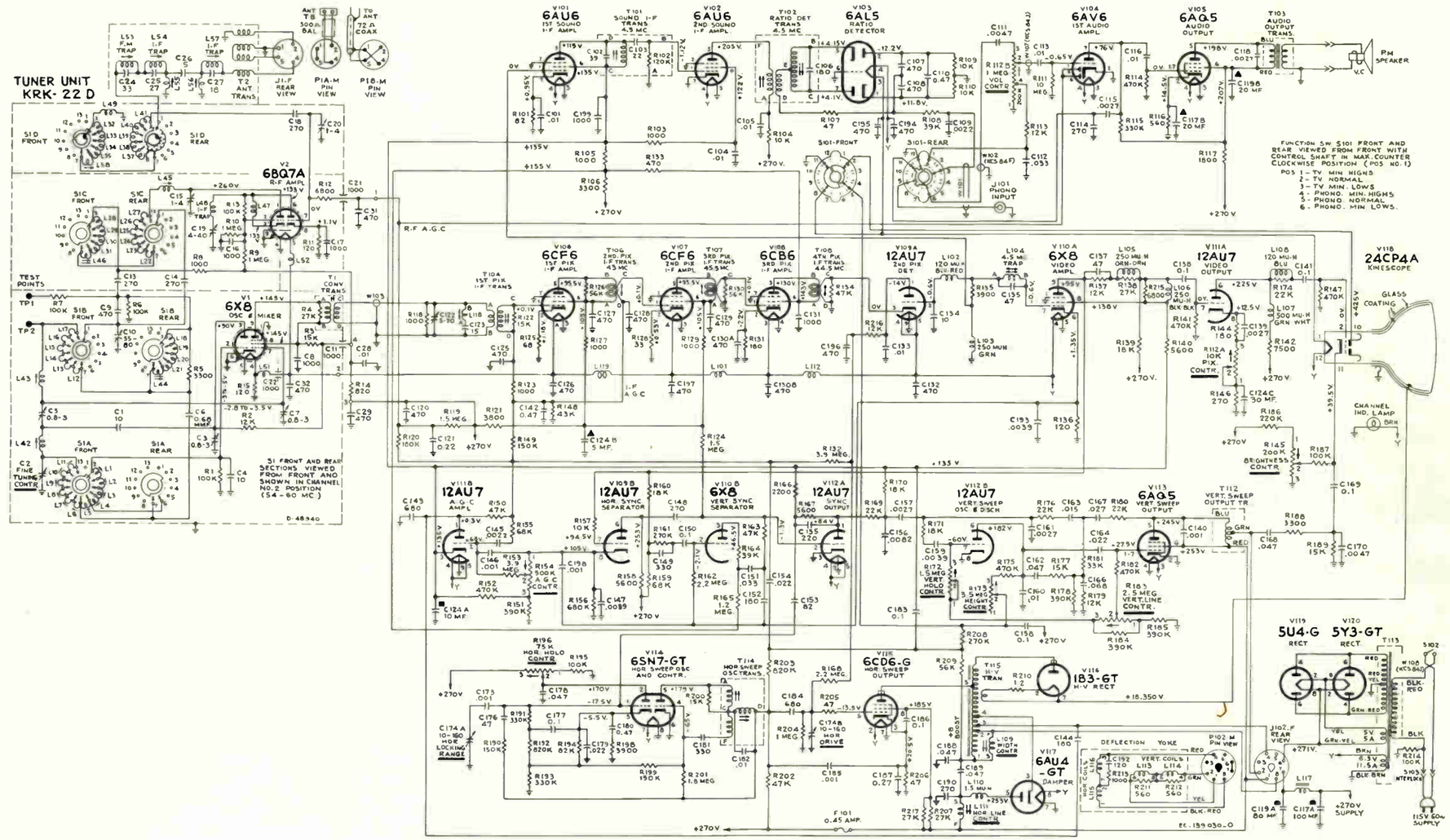

The schematic is shown in the latest condition at the time of printing.
All resistance values in ohms. K = 1000.

Direction of arrows at controls indicates clockwise rotation.

All voltages measured with "Volt-Ohmyst" and with no signal input. Voltages should hold within ±20% with 117 v. a-c supply.

REF. NO.	PART NO.	DESCRIPTION
		ELECTROLYTICS
C117A,B	78212	100/20 mf., 400/50V DC.
C119A,B	77644	80/20 mf., 400/400V DC.
C124A, B, C	78213	10/5/30 mf., 350/350/50V DC.
C174A,B	75217	Dual trimmer 10-160 mmf.
		COILS
L101	73477	Filament choke coil.
L102	75253	Peaking 120 mic.
L103	98482	Peaking 250 mic.
L104	76983	4.5 mc trap.
L105	77674	Peaking 250 mic.
L106	78222	Peaking 250 mic.
L107	75252	Peaking 500 mic.
L108	71529	Peaking 120 mic.
L109	76441	Width coil.
L110	76640	RF choke, 1.5 mic.
L111	76442	Horiz. linearity.
L117	77676	Filter choke.
L118	78204	1st IF grid trap.
L119	73477	Filter choke.

		RESISTORS
R112A,B	78208	Power, vol., pix cont.
R145	78209	Brightness control.
R154	78808	AGC Control.
R172	78210	Vertical hold.
R173	78806	Height control.
R183	78807	Vertical linearity.
R196	77639	Horiz. hold.
		TRANSFORMERS
PC101	76433	1st, 2nd & 3rd pix IF includes T106, 107 & 108.
T101	76981	Sound IF.
T102	77112	Ratio detector.
T103	76997	Audio output.
T104	78203	1st IF grid.
T112	78809	Vertical output.
T113	78805	Power Xformer.
T114	76440	Syncroguide Xformer.
T115	78810	HI voltage.
		MISCELLANEOUS
78869		Yoke. Models 245529 &U, 245532 & U.
79490		Yoke. Models 245531 & U.
77777		Spk-10" PM 3.2 ohms.

24-S-529U 24-S-531U 24-S-532U MODELS

Chassis KCS84H, KCS84K

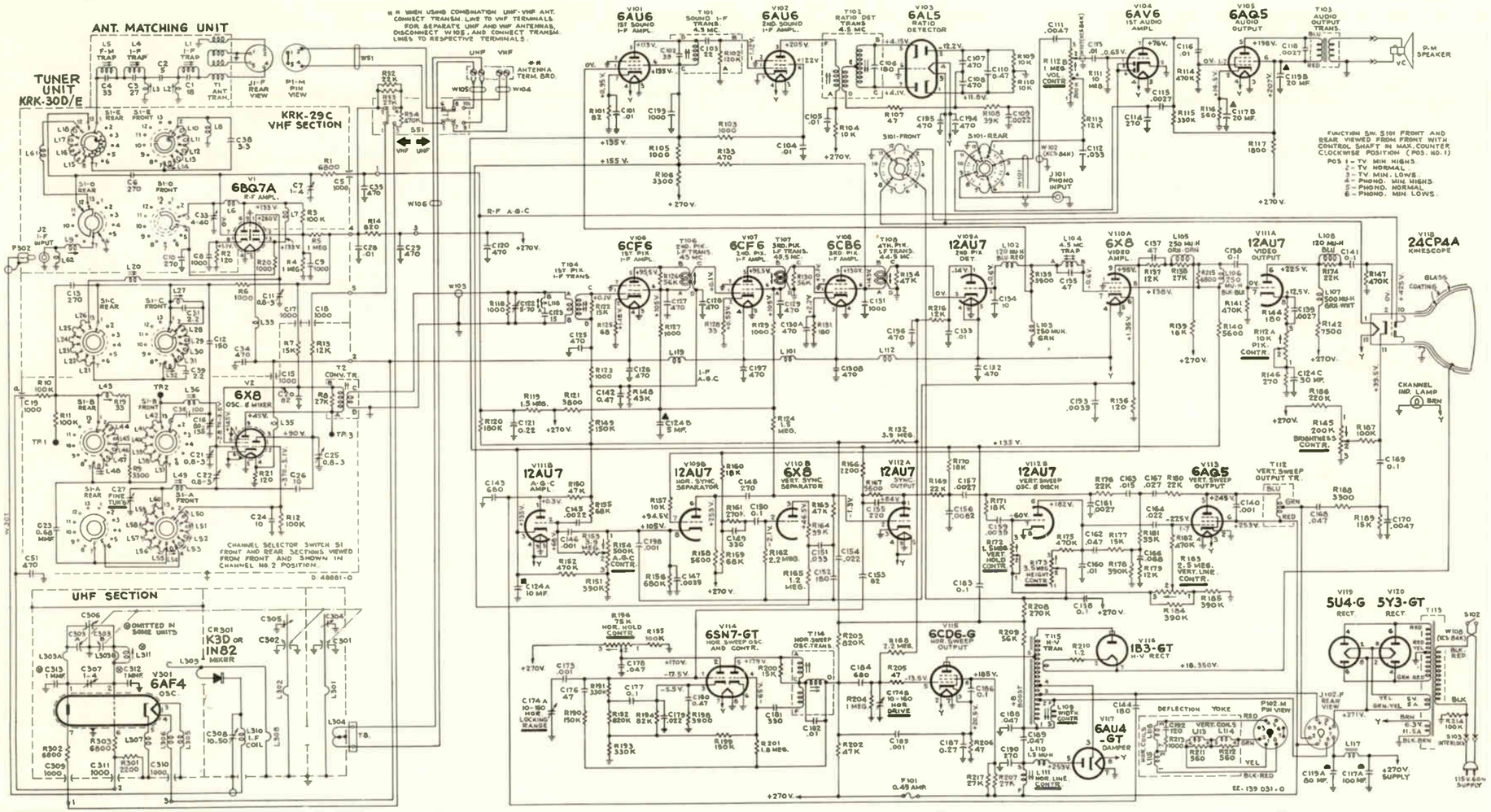

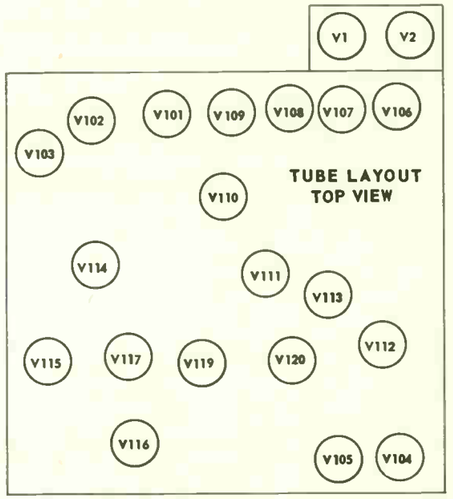

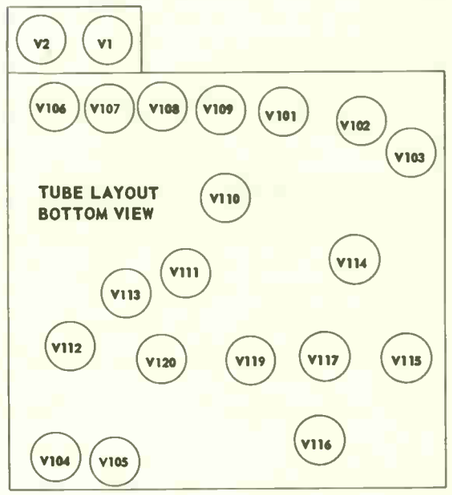

The schematic is shown in the latest condition at the time of printing.
All resistance values in ohms. K = 1000.

Direction of arrows at controls indicates clockwise rotation.

All voltages measured with "Volt-Ohmyst" and with no signal input. Voltages should hold within ±20% with 117 v. a-c supply.

REF. NO.	PART NO.	DESCRIPTION
		ELECTROLYTICS
C117A,B	78212	100/20 mf., 400/50V DC.
C119A,B	77644	80/20 mf., 400/400V DC.
C124A, B, C	78213	10/5/30 mf., 350/350/50V DC.
C174A,B	75217	Dual trimmer 10-160 mmf.
		COILS
L101	73477	Filament choke coil.
L102	75253	Peaking 120 mic.
L103	98482	Peaking 250 mic.
L104	76983	4.5 mc trap.
L105	77674	Peaking 250 mic.
L106	78222	Peaking 250 mic.
L107	75252	Peaking 500 mic.
L108	71529	Peaking 120 mic.
L109	76441	Width coil.
L110	76640	RF choke, 1.5 mic.
L111	76442	Horiz. linearity.
L117	77676	Filter choke.
L118	78204	1st IF grid trap.
L119	73477	Filter choke.

RESISTORS		
R112A,B	78208	Power, vol., pix cont.
R145	78209	Brightness control.
R154	78808	AGC Control.
R172	78210	Vertical hold.
R173	78806	Height control.
R183	78807	Vertical linearity.
R196	77639	Horiz. hold.

TRANSFORMERS		
PC101	76433	1st, 2nd & 3rd pix IF includes T106, 107 & 108.
T101	76981	Sound IF.
T102	77112	Ratio detector.
T103	76997	Audio output.
T104	78203	1st IF grid.
T112	78809	Vertical output.
T113	78805	Power Xformer.
T114	76440	Syncroguide Xformer.
T115	78810	Hi voltage.

MISCELLANEOUS	
78869	Yoke. Models 245529 &U, 245532 & U.
79490	Yoke. Models 245531 & U.
77777	Spk-10" PM 3.2 ohms.

Chassis KCS88B, C, D, E, V

MODELS 21-S-501 21-S-503 21-S-505 21-S-517 21-S-519 21-S-522 21-S-525 21-S-537 21-S-5251
21-S-502 21-S-504 21-S-506 21-S-518 21-S-521 21-S-523 21-S-526 21-S-5252

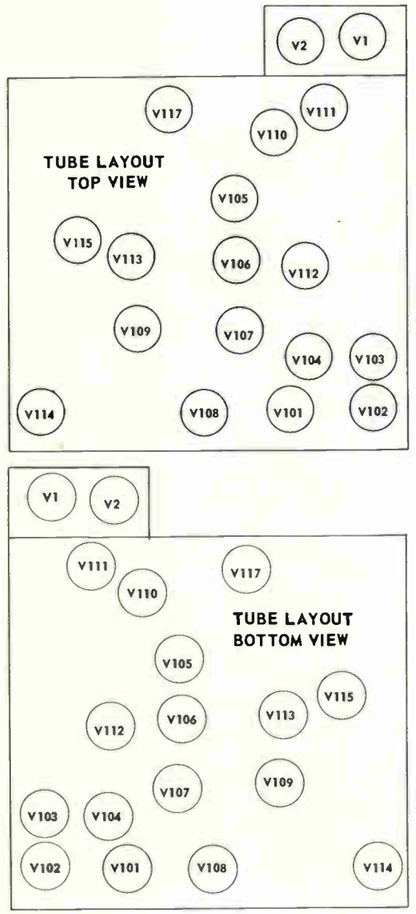

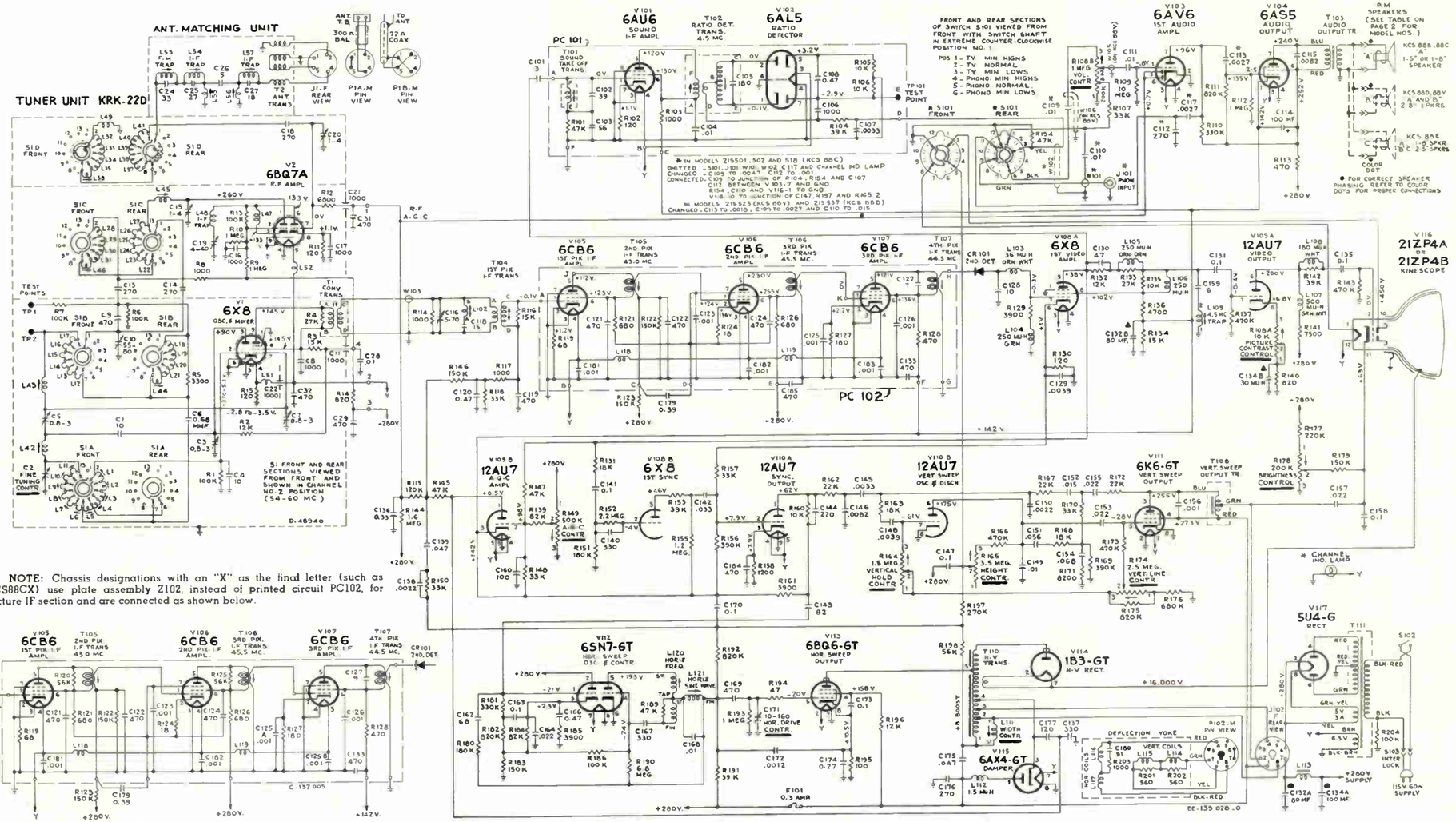

NOTE: Chassis designations with an "X" as the final letter (such as KCS88CX) use plate assembly Z102, instead of printed circuit PC102, for picture IF section and are connected as shown below.

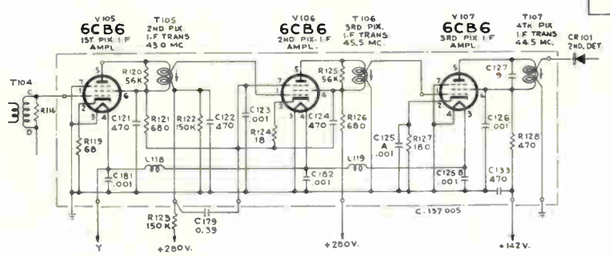

All chassis listed above are identical except as noted on schematic diagram. The physical location of controls S102/R108A&B and S101 are interchanged on vertically mounted chassis KCS88V. (Refer to pages 6 and 7.) For speaker information refer to table on page 2.

The schematic is shown in the latest condition at the time of printing.
All resistance value in ohms. K = 1000.

All capacitance values less than 1 in MF and above 1 in MMF unless otherwise noted.

Direction of arrows at controls indicates clockwise rotation.

All voltages measured with "Volt-Ohmyst" and with no signal input. Voltages should hold within ±20% with 117 v. a-c supply.

REF. NO.	PART NO.	DESCRIPTION
		ELECTROLYTICS
C116	78220	Variable mica, 5-70 trimmer.
C132A	79147	80 mfd, 400V. DC.
C132B	79147	80 mfd, 200V DC.
C134A	79146	100 mfd, 400V. DC.
C134B	79146	30 mfd, 50V. DC.
C171	71807	Trimmer-horiz. drive 10-160 mmf.

		COILS
L103	76011	Peaking 36 mic.
L104	98482	Peaking 250 mic
L105	77674	Peaking 250 mic (R133).
L106	79321	Peaking 250 mic.
L107	75252	Peaking 500 mic
L108	71528	Peaking 180 mic. (R142).
L111	79144	Width coil
* L120	79534	Horiz. frequency. Sq. nut on adj. core.
L120	79160	Horiz. frequency. Hexogon nut on core.
L121	79161	Horiz. sine wave.
		RESISTORS
R108A,B	78208	On-Off vol., pix control.
R149	78808	AGC Control.
R164	78210	Vertical hold
R165	78806	Height adjustment.
R174	78807	Vertical linearity.
R178	79139	Brightness control.

		TRANSFORMERS
T103	79159	Audio, for KCS88B C, J, K only.
T103	79476	Audio, for KCS88D, E, L, M, V, VA, only.
T104	78203	1st IF grid.
T108	79143	Vertical output.
T110	79145	High voltage.
T111	79162	Power Xformer.

		MISCELLANEOUS
CR101	76675	Crystal-2nd detector.
F101	78214	Fuse-.3 amps. 250V.
PC101	79142	Sound IF circuit (Inc. T101,102).
PC102	79479	Pix IF circuit (Inc. T105,6,7).
Z102	79156	Pix IF circuit plate assem.
	79510	Yoke for 215523 & U.
	77697	Yoke for all models except 215523 & U.
	77000	5pk-5" PM 3.2 ohms.
	74664	5pk-8" PM 3.2 ohms.

21-S-501U 21-S-503U 21-S-505U 21-S-517U 21-S-519U 21-S-522U 21-S-525U 21-S-537U 21-S-5251U MODELS
21-S-502U 21-S-504U 21-S-506U 21-S-518U 21-S-521U 21-S-523U 21-S-526U 21-S-5252U

Chassis KCS88J, K, L, M, VA

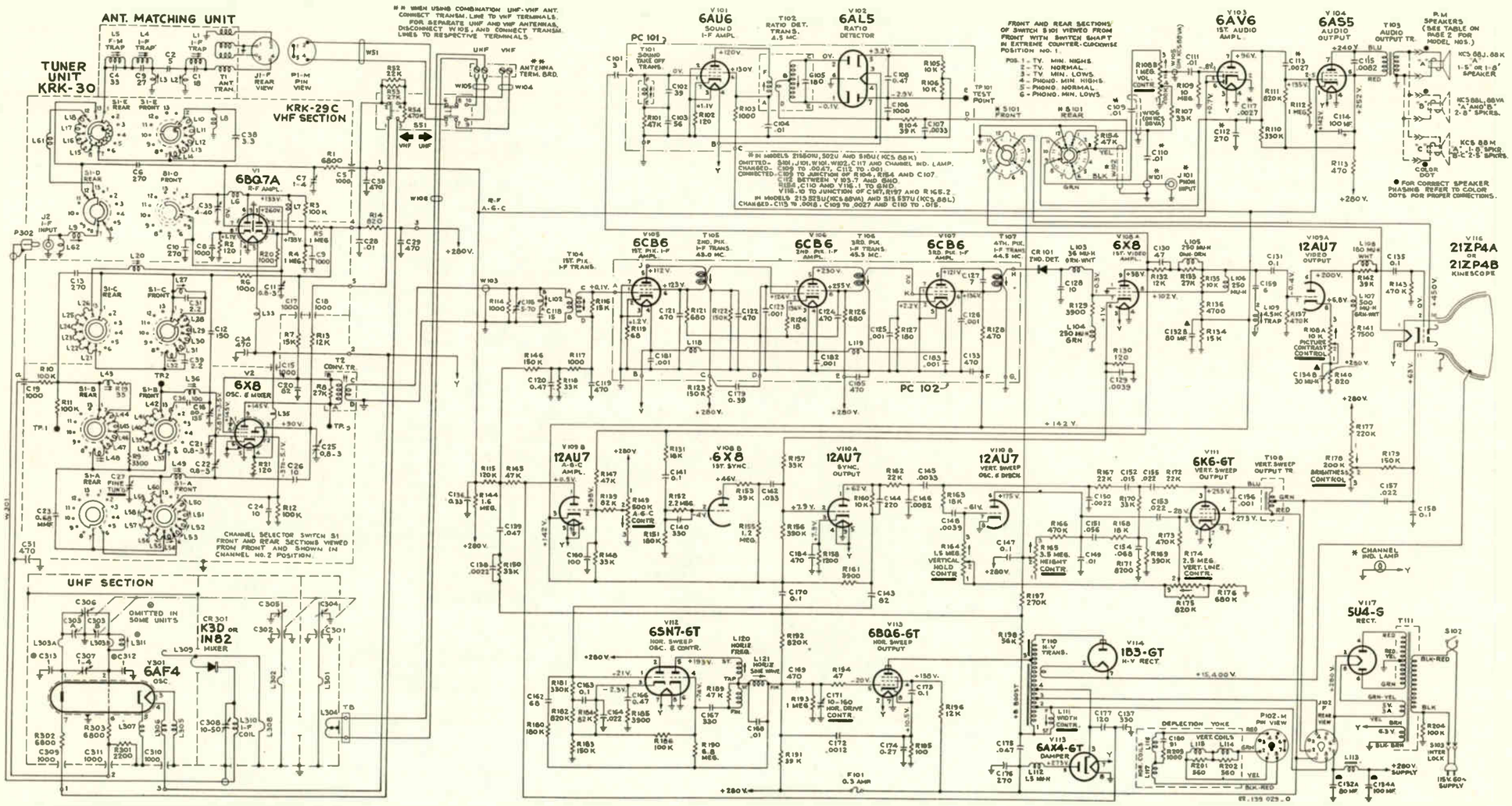

NOTE: All chassis listed above are identical except as noted on schematic diagram and in Note on page 19. The physical location of controls S102/R108A&B and S101 are interchanged on vertically mounted chassis KCS88VA. (Refer to pages 6 and 7.) For speaker information refer to table on page 2

The schematic is shown in the latest condition at the time of printing.
All resistance value in ohms. K = 1000.

All capacitance values less than 1 in MF and above 1 in MMF unless otherwise noted.

Direction of arrows at controls indicates clockwise rotation.

All voltages measured with "Volt-Ohmyst" and with no signal input. Voltages should hold within ±20% with 117 v. a-c supply.

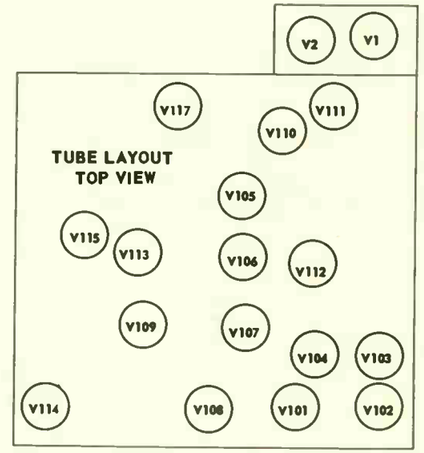

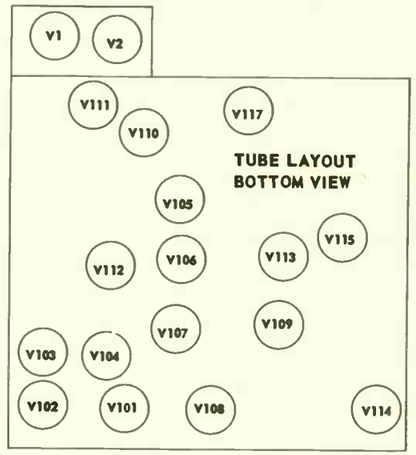

REF. NO.	PART NO.	DESCRIPTION
		ELECTROLYTICS
C116	78220	Variable mica, S-70 trimmer.
C132A	79147	80 mfd, 400V. DC.
C132B	79147	80 mfd, 200V DC.
C134A	79146	100 mfd, 400V. DC.
C134B	79146	30 mfd, 50V. DC.
C171	71807	Trimmer-horiz. drive 10-160 mmf.

		COILS
L103	76011	Peaking 36 mic.
L104	98482	Peaking 250 mic
L105	77674	Peaking 250 mic (R133).
L106	79321	Peaking 250 mic.
L107	75252	Peaking 500 mic
L108	71528	Peaking 180 mic (R142).
L111	79144	Width coil
L120	79534	Horiz frequency. Sq. nut on adj. core.
L120	79160	Horiz. frequency. Hexagon nut on core.
L121	79161	Horiz. sine wave.
		RESISTORS
R108A,B	78208	On-Off vol., pix control.
R149	78808	AGC Control.
R164	78210	Vertical hold
R165	78806	Height adjustment.
R174	78807	Vertical linearity.
R178	79139	Brightness control.

		TRANSFORMERS
T103	79159	Audio, for KC588B C, J, K only.
T103	79476	Audio, for KC588D, E, L, M, V, VA, only.
T104	78203	1st IF grid.
T108	79143	Vertical output.
T110	79145	High voltage.
T111	79162	Power Xformer.

		MISCELLANEOUS
CR101	76675	Crystal-2nd detector.
F101	78214	Fuse-.3 amps. 250V.
PC101	79142	Sound IF circuit (inc. T101,102).
PC102	79479	Pix IF circuit (inc. T105,6,7).
Z102	79156	Pix IF circuit plate assem.
	79510	Yoke for 21S523 & U.
	77697	Yoke for all models except 21S523 & U.
	77000	Spk-5" PM 3 2 ohms.
	74664	Spk-8" PM 3.2 ohms.

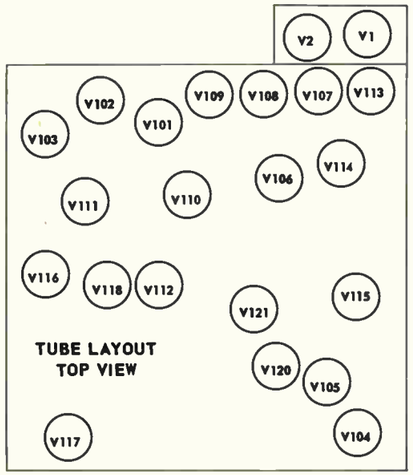

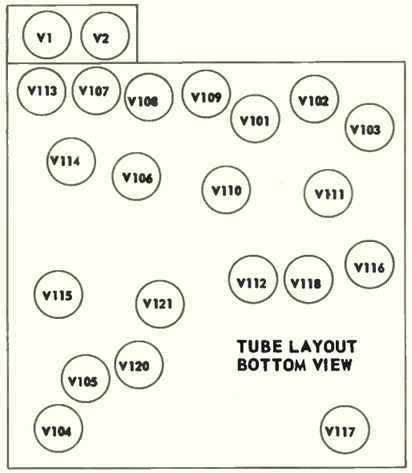

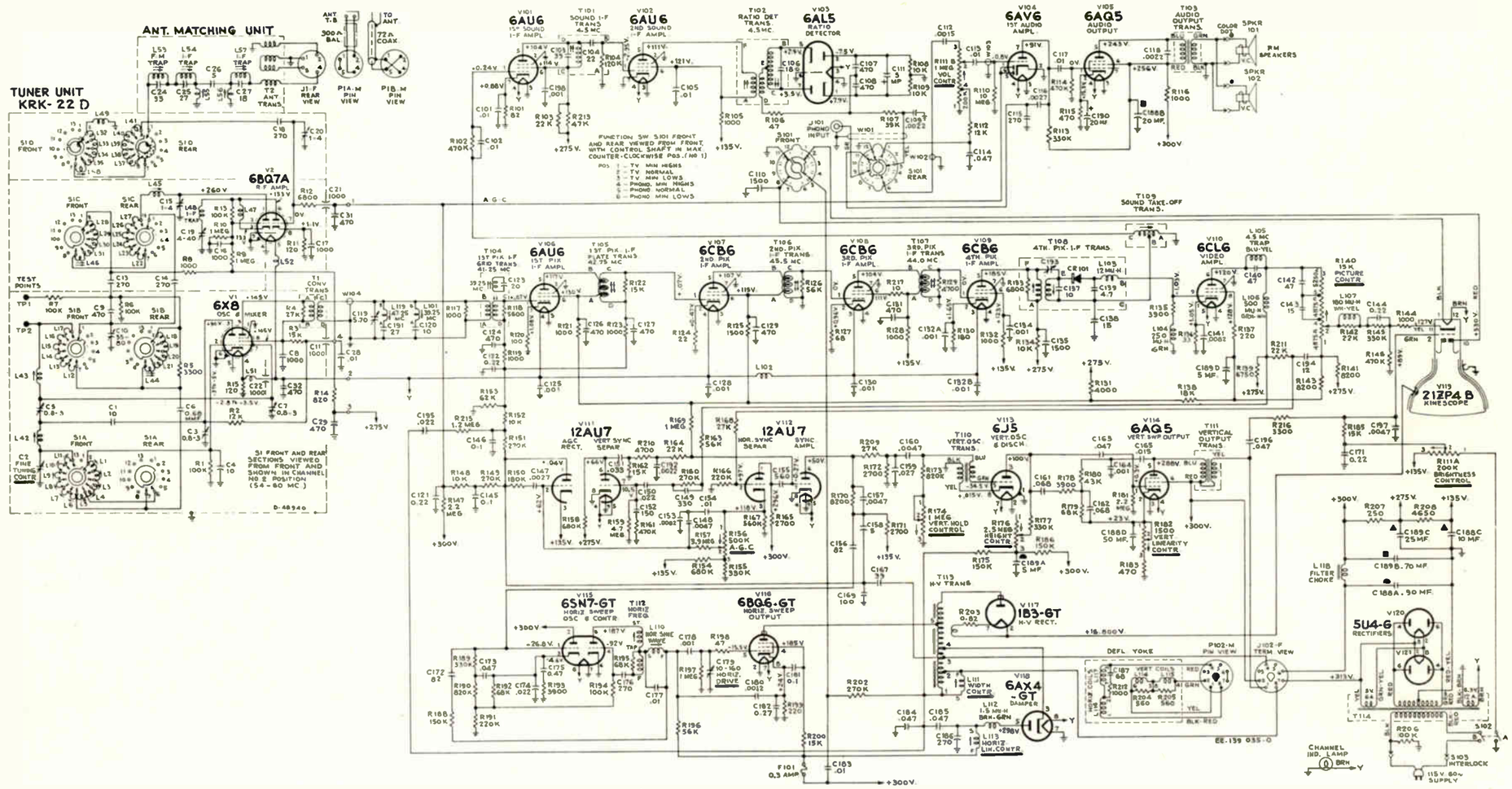

The schematic is shown in the latest condition at the time of printing. All resistance value in ohms. K = 1000.

All capacitance values less than 1 in MF and above 1 in MMF unless otherwise noted.

Direction of arrows at controls indicates clockwise rotation.

All voltages measured with "VoltOhmyst" and with no signal input. Voltages should hold within ±20% with 117 v. a-c supply.

REF. NO.	PART NO.	DESCRIPTION
		ELECTROLYTICS
C111	74521	5 mf, 50V.
C119	71496	Adj mica, 5/70 mmf.
C179	79376	Mica trimmer, 10-160 mmf.
C188A	79391	90 mfd, 400V.
C188B	79391	20 mfd, 400V.
C188C	79391	10 mfd, 400V
C188D	79391	50 mfd 50V.
C189A	79392	5 mfd, 450V.
C189B	79392	70 mfd, 400V.
C189C	79392	25 mfd 400V.
C189D	79392	5 mfd, 400V.
C190	79380	20 mf, 25V.
		COILS
L102	73477	Choke coil.
L104	98482	Peaking 250 mic.
L106	75252	Peaking 500 mic.
L107	76647	Peaking 180 mic.
L110	79161	Horiz. sine wave
L111	76441	Width coil.
L112	76640	RF choke 1.5 mic.
L113	76442	Horiz linearity.
L119	79390	1st IF grid trap
T112	79160	Horiz. frequency
		RESISTORS
R111A,B	77655	Vol. On-Off brightness.
R140	76445	Contrast control.
R156	78808	AGC Control.
R174	79384	Vertical hold.
R176	78807	Height control.
R182	79491	Vertical linearity.
		TRANSFORMERS
L101	79383	1st IF grid trap.
T101	76981	1st sound.
T102	77112	Ratio detector.
T103	77821	Audio output
T104	79388	1st IF grid.
T105 T106 T107	76433	1st, 2nd, 3rd pix.
T108	79389	4th pix IF.
T109	79386	Sound take-off.
T110	79379	Vertical oscillator.
T111	79394	Vertical output.
T113	78810	High voltage.
T114	79387	Power Xformer.
		MISCELLANEOUS
5101	77656	Rotary sw. control tone.
F101	78214	Fuse-0.3 amp
	77625	Yoke.
	74664	Spk-8" PM 3.2 ohms.

21-D-527U MODEL

Chassis KCS90A

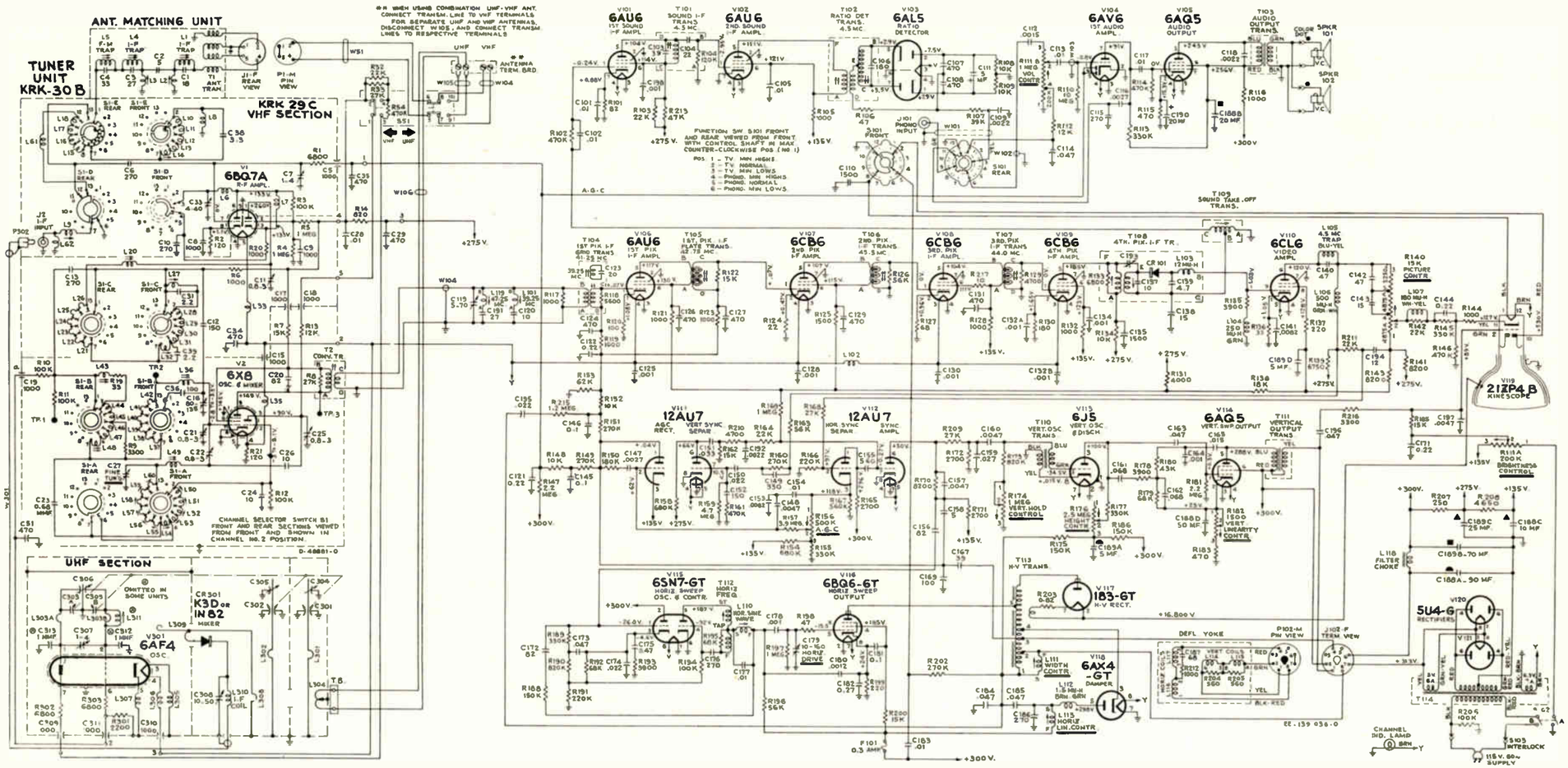

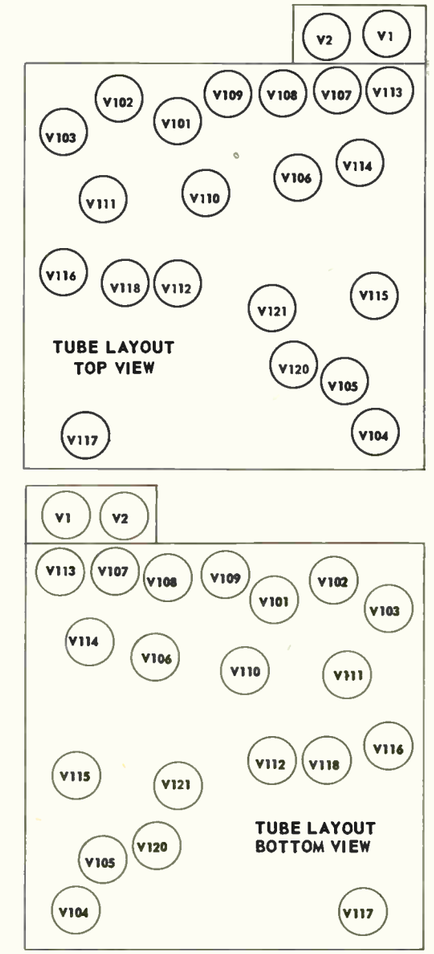

The schematic is shown in the latest condition at the time of printing. All resistance value in ohms. K = 1000.

All capacitance values less than 1 in MF and above 1 in MMF unless otherwise noted.

Direction of arrows at controls indicates clockwise rotation.

All voltages measured with "VoltOhmyst" and with no signal input. Voltages should hold within ±20% with 117 v. a-c supply.

REF. NO	PART NO.	DESCRIPTION
		ELECTROLYTICS
C111	74521	5 mf, 50V.
C119	71496	Adj mica, 5/70 mmf.
C179	79376	Mica trimmer, 10-160 mmf
C188A	79391	90 mfd, 400V.
C188B	79391	20 mfd, 400V.
C188C	79391	10 mfd 400V
C188D	79391	50 mfd 50V.
C189A	79392	5 mfd, 450V
C189B	79392	70 mfd, 400V.
C189C	79392	25 mfd 400V.
C189D	79392	5 mfd, 400V.
C190	79380	20 mf, 25V
		COILS
L102	73477	Choke coil
L104	98482	Peaking 250 mic.
L106	75252	Peaking 500 mic.
L107	76647	Peaking 180 mic
L110	79161	Horiz. sine wave
L111	76441	Width coil.
L112	76640	RF choke 1.5 mic.
L113	76442	Horiz linearity
L119	79390	1st IF grid trap
T112	79160	Horiz frequency
		RESISTORS
R111A,B	77655	Vol. On-Off brightness.
R140	76445	Contrast control.
R156	78808	AGC Control.
R174	79384	Vertical hold.
R176	78807	Height control.
R182	79491	Vertical linearity.
		TRANSFORMERS
L101	79383	1st IF grid trap.
T101	76981	1st sound.
T102	77112	Ratio detector.
T103	77821	Audio output
T104	79388	1st IF grid.
T105 T106 T107	76433	1st, 2nd, 3rd pix.
T108	79389	4th pix IF.
T109	79386	Sound take-off.
T110	79379	Vertical oscillator.
T111	79394	Vertical output.
T113	78810	High voltage
T114	79387	Power Xformer.
		MISCELLANEOUS
S101	77656	Rotary sw. control tone
F101	78214	Fuse-0.3 amp
	77625	Yoke.
	74664	Spk-8" PM 3.2 ohms

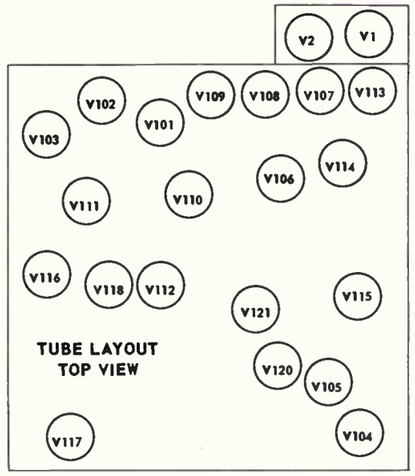

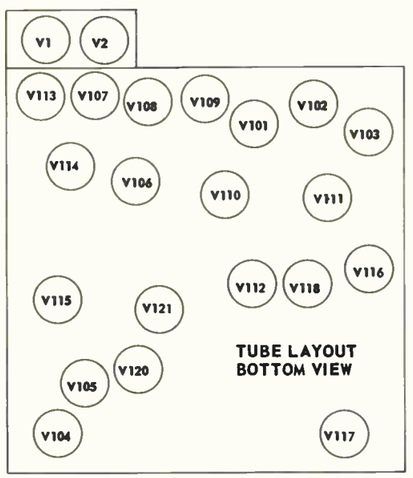

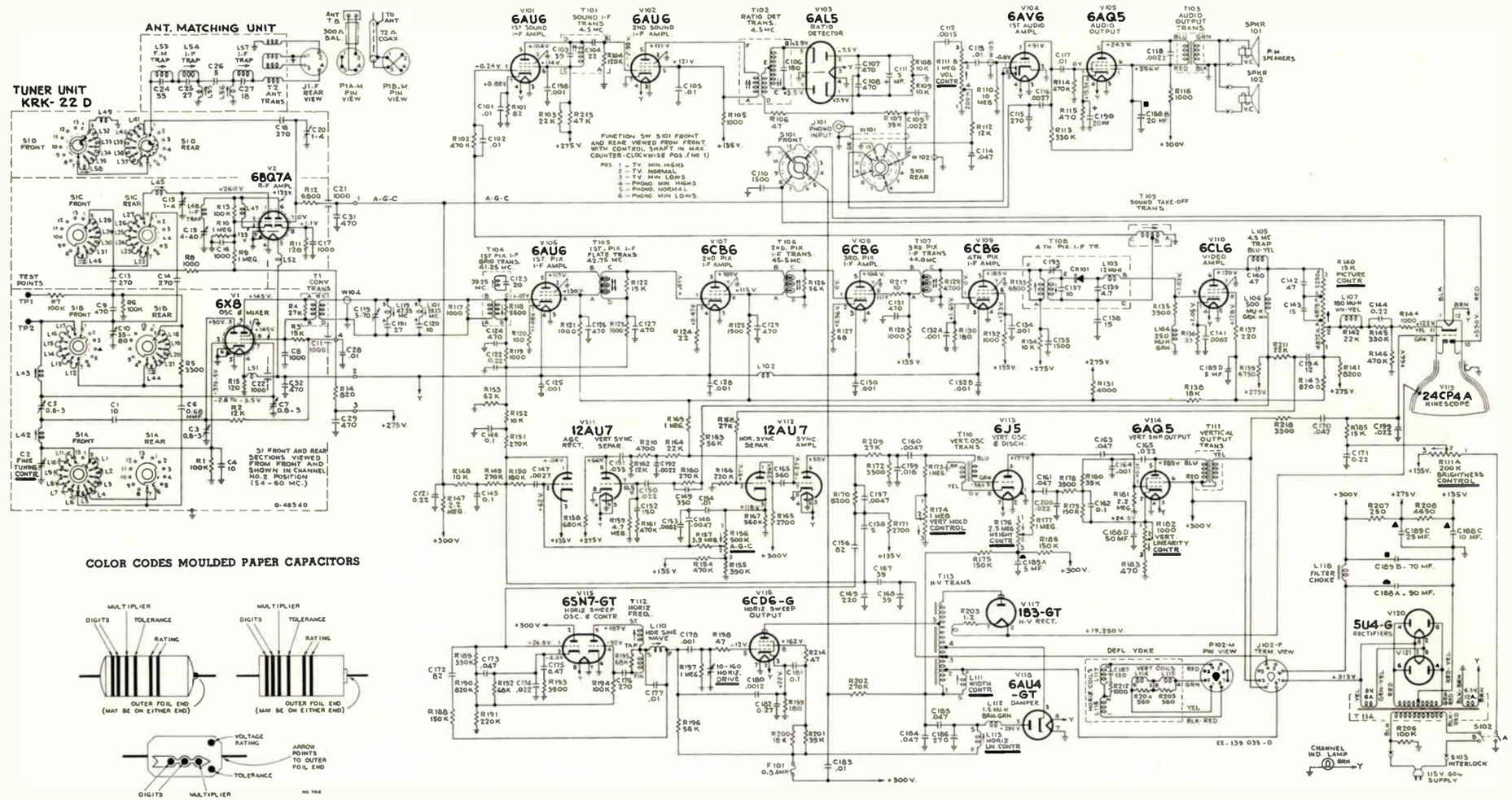

The schematic is shown in the latest condition at the time of printing.
All resistance value in ohms. K = 1000.

All capacitance values less than 1 in MF and above 1 in MMF unless otherwise noted.

Direction of arrows at controls indicates clockwise rotation.

All voltages measured with "VoltOhmyst" and with no signal input. Voltages should hold within ±20% with 117 v. a-c supply.

REF. NO.	PART NO.	DESCRIPTION
		ELECTROLYTICS
C111	74521	5 mfd 50V.
C119	71496	Adj. mica 4-70 mmf
C179	79376	Trimmer 10-160 mmfd.
C188A	79391	90 mf,
C190	79380	20 mf, 25V.

		COILS
L102	73477	Choke coil.
L104	98482	Peaking 250 mh.
L105	76482	4.5 MC trap includes C140
L106	75252	Peaking 500 mh.
L107	76647	Peaking 180 mh inc. R142.
L110	79161	Horiz. sine wave.
L111	76441	Width coil.
L112	76640	RF choke 1.5 mh.
L113	76442	Horiz. linearity.
L118	77676	Filter choke.
T112	79160	Horiz. frequency.

		RESISTORS
R111A,B	77655	On-Off vol. brightness.
R140	76445	Contrast control.
R156	78808	AGC Control.
R174	79384	Vertical hold.
R182	79385	Vertical linearity.

		TRANSFORMERS
T101	76981	1st IF sound 4.5 mc.
T102	77112	Ratio detector center freq. 4.5 MC.
T103	77821	Audio output
T104	79386	IF sound take-off 4.5 MC.
T105, T106 T107	76433	1st, 2nd and 3rd pix
T108	79389	4th IF pix, 44 MC.
T109	79388	1st IF grid
T110	79379	Vertical oscillator
T111	79382	Vertical output.
T113	78810	High voltage
T114	79387	Power Xformer.

		MISCELLANEOUS
F101	78214	Fuse-.3 amp.
	79490	Yoke.
	74664	5pk-8" PM 3.2 ohms
	77777	5pk-10" PM.

24-D-542U 24-D-543U 24-D-544U

Chassis KCS89A or KCS89C

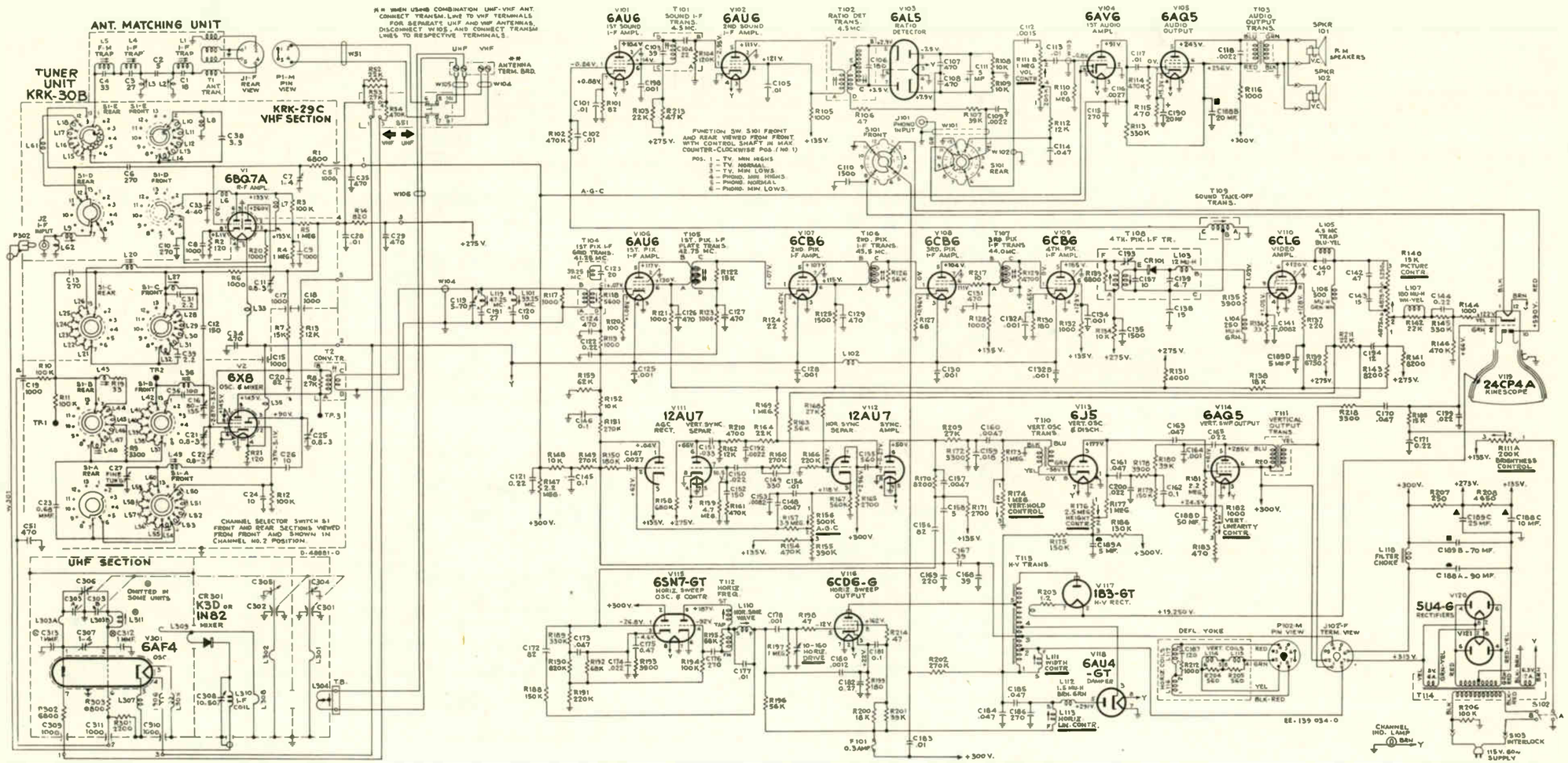

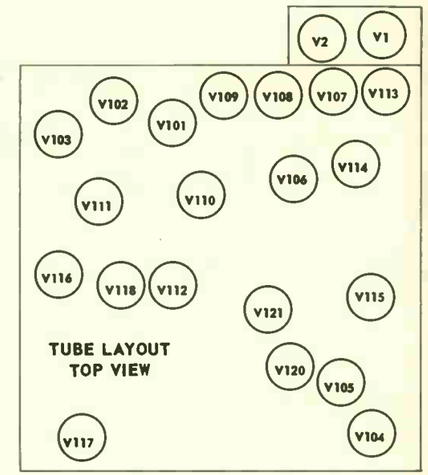

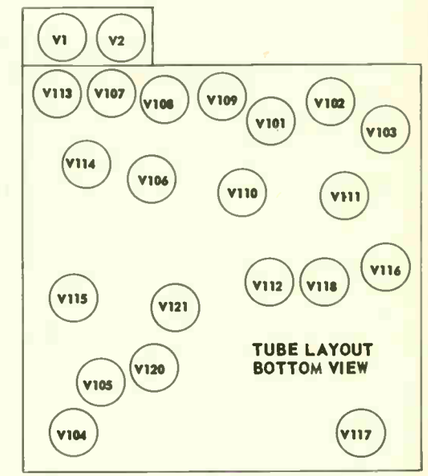

The schematic is shown in the latest condition at the time of printing. All resistance value in ohms. K = 1000.

All capacitance values less than 1 in MF and above 1 in MMF unless otherwise noted.

Direction of arrows at controls indicates clockwise rotation.

All voltages measured with "VoltOhmyst" and with no signal input. Voltages should hold within ±20% with 117 v. a-c supply.

REF. NO.	PART NO.	DESCRIPTION
		ELECTROLYTICS
C111	74521	5 mfd 50V
C119	71496	Adj. mica 4-70 mmf
C179	79376	Trimmer 10-160 mmfd.
C188A	79391	90 mf,
C190	79380	20 mf, 25V.

		COILS
L102	73477	Choke coil.
L104	98482	Peaking 250 mh
L105	76482	4.5 MC trap includes C140
L106	75252	Peaking 500 mh
L107	76647	Peaking 180 mh inc R142.
L110	79161	Horiz sine wave
L111	76441	Width coil.
L112	76640	RF choke 1 5 mh
L113	76442	Horiz. linearity.
L118	77676	Filter choke
T112	79160	Horiz frequency.

		RESISTORS
R111A,B	77655	On-Off vol. brightness
R140	76445	Contrast control.
R156	78808	AGC Control
R174	79384	Vertical hold.
R182	79385	Vertical linearity.

		TRANSFORMERS
T101	76981	1st IF sound 4.5 mc.
T102	77112	Ratio detector center freq 4.5 MC.
T103	77821	Audio output
T104	79386	IF sound take-off 4.5 MC.
T105, T106 T107	76433	1st, 2nd and 3rd pix
T108	79389	4th IF pix, 44 MC.
T109	79388	1st IF grid
T110	79379	Vertical oscillator
T111	79382	Vertical output.
T113	78810	High voltage
T114	79387	Power Xformer.

		MISCELLANEOUS
F101	78214	Fuse-.3 amp.
	79490	Yoke
	74664	Spk-8" PM 3.2 ohms
	77777	Spk-10" PM.

See schematic on pages 108 and 109.

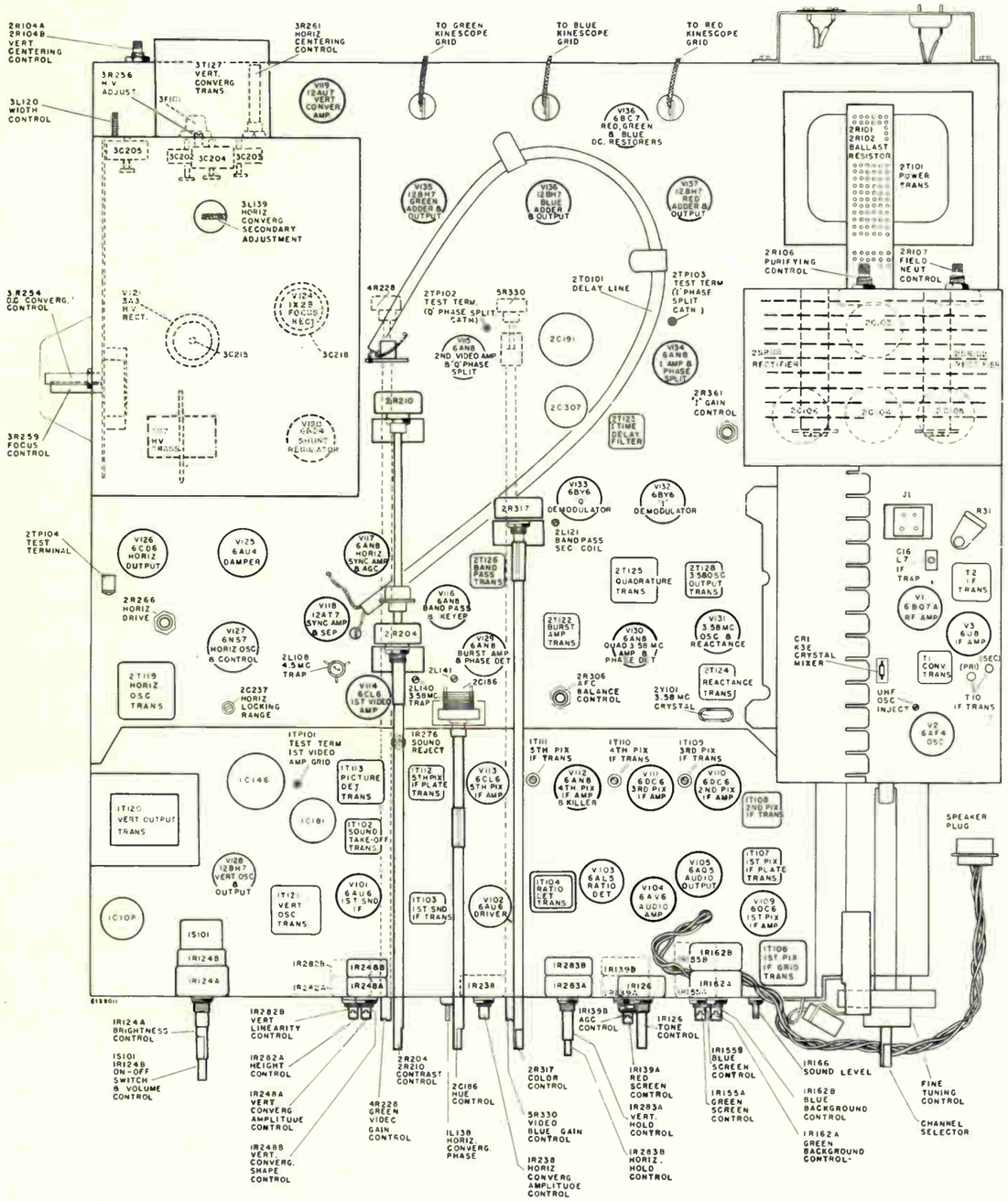

CHASSIS TOP VIEW

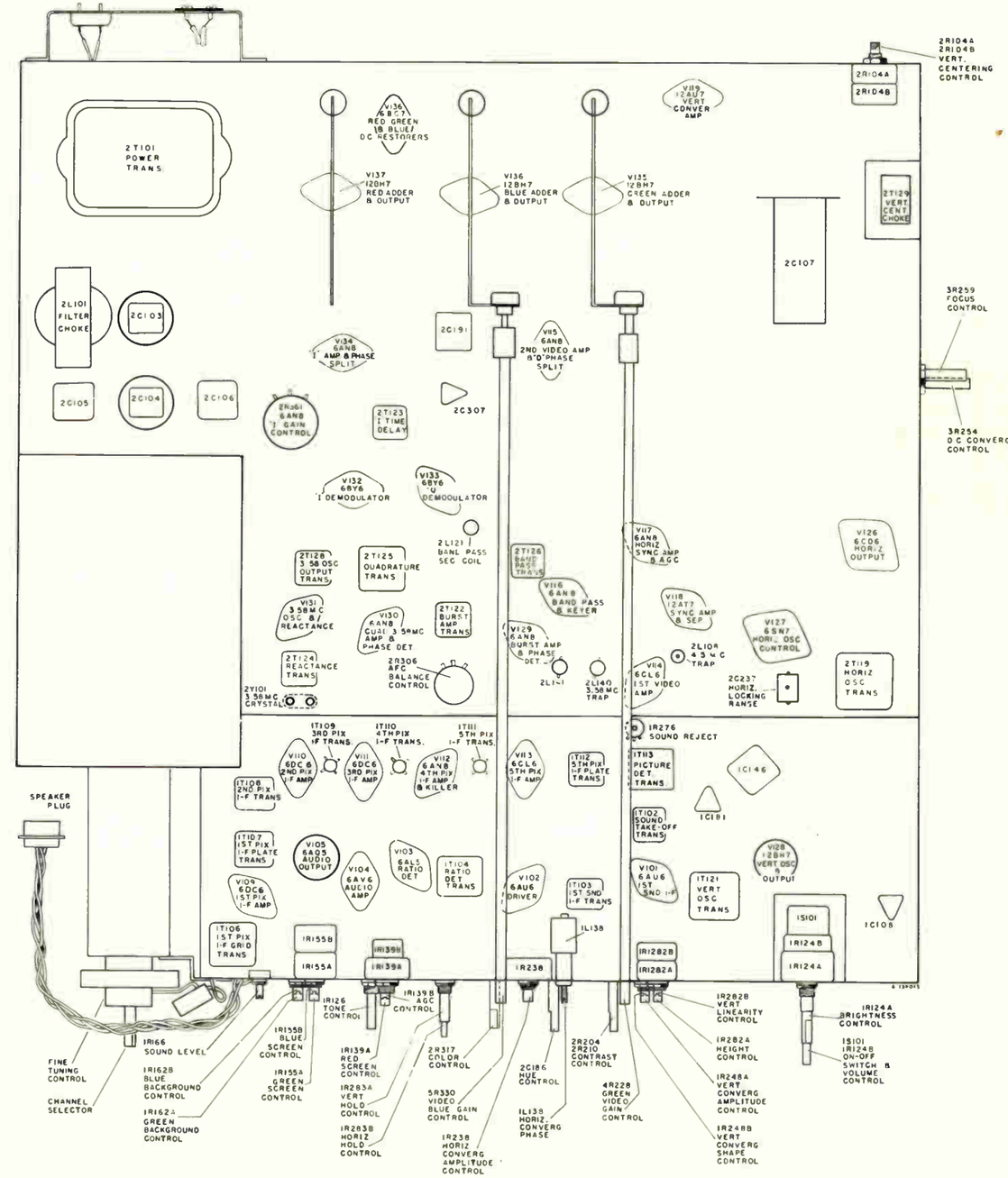

CHASSIS BOTTOM VIEW

For tube layouts see page 107.

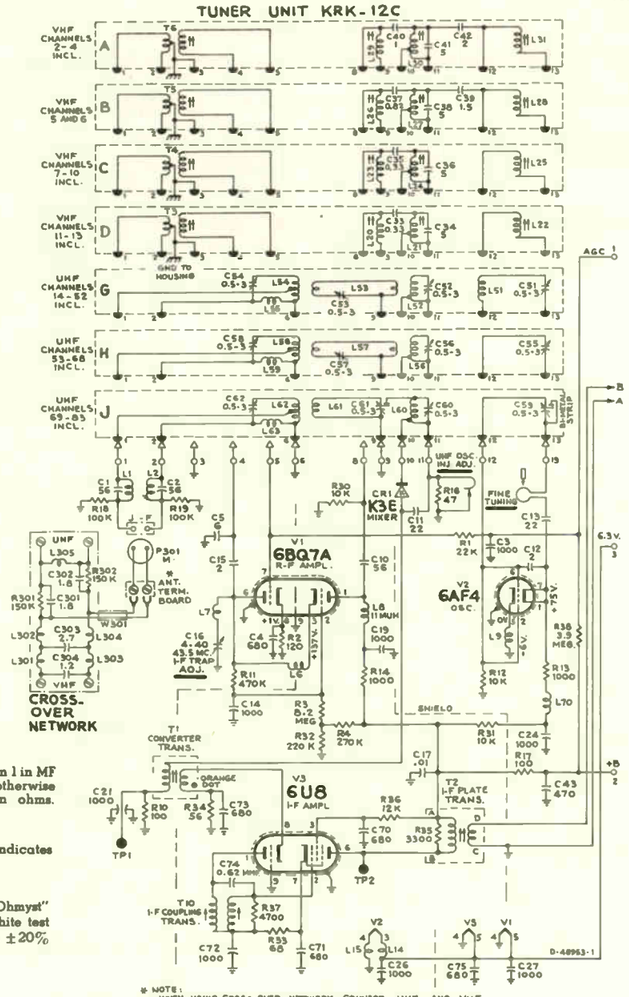

All capacitance values less than 1 in MF and above 1 in MMF unless otherwise noted. All resistance values in ohms. K=1000.

Direction of arrows at controls indicates clockwise rotation.

All voltages measured with "VoltOhmyst" and with a 500 ℧V black and white test signal. Voltages should hold within ±20% with 117 v. a-c supply.

* NOTE: WHEN USING CROSS-OVER NETWORK, CONNECT UHF AND VHF ANTENNA TRANSMISSION LINES TO RESPECTIVE TERMINALS. WHEN CROSS-OVER NETWORK IS NOT USED, DISCONNECT W301 AND CONNECT UHF, VHF OR COMBINATION UHF-VHF ANTENNA TRANSMISSION LINE TO ANTENNA TERMINAL BOARD.

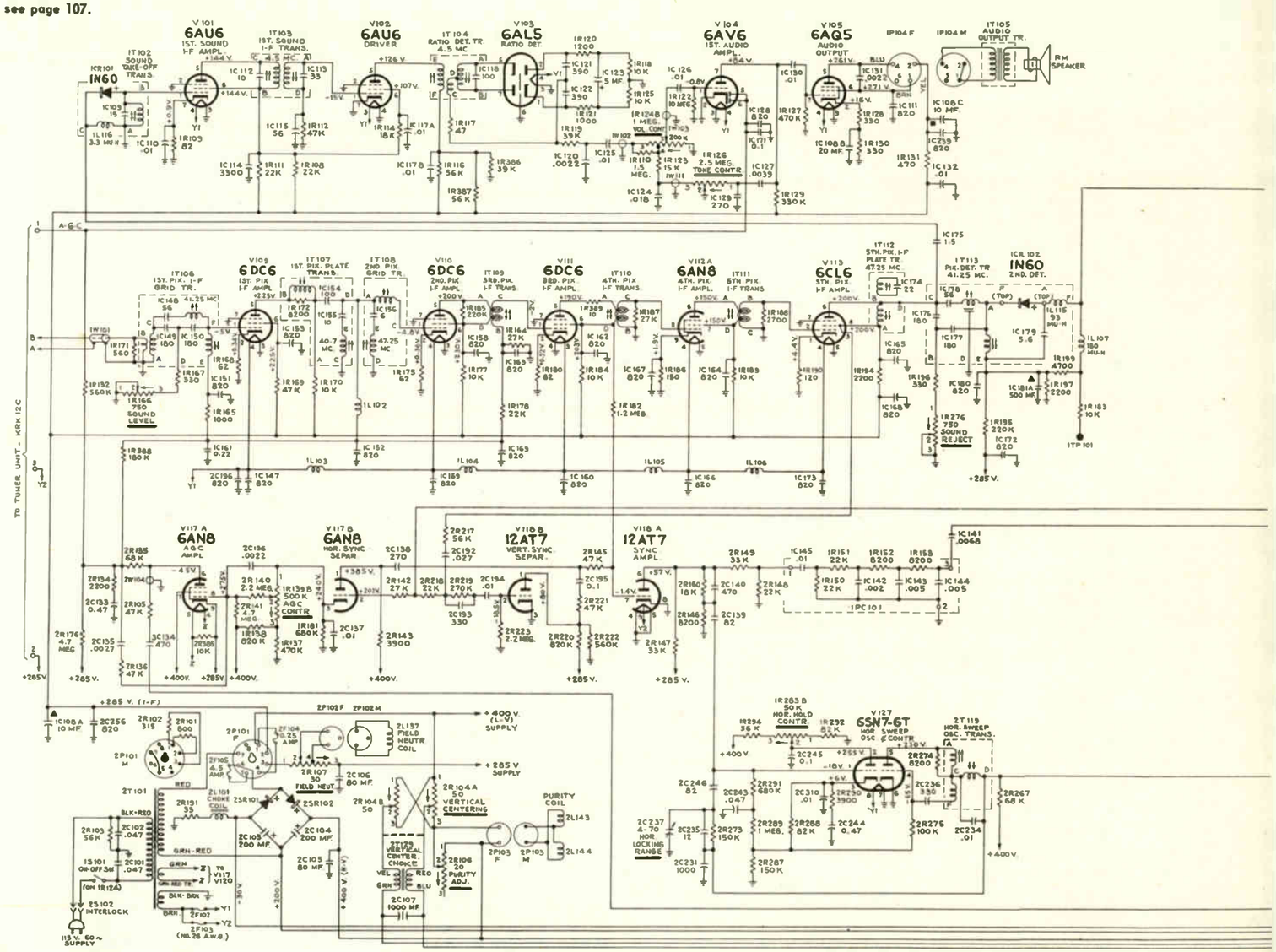

REF. NO.	PART NO.	DESCRIPTION
RF-IF CHASSIS		
ELECTROLYTICS		
1C108A	78929	10 mfd, 450V.
1C108B	78929	10 mfd, 450V.
1C108C	78929	20 mfd, 25V.
1C123	78943	5 mf, 50V.
1C146A	78931	10 mfd, 450V.
1C146B	78931	10 mfd, 450V.
1C146C	78931	10 mfd, 150V.
1C146D	78931	60 mfd, 25V.
1C181A	78930	35 mfd, 300V.
1C181B	78930	500 mfd, 6V.
RESISTORS		
1R124A,B	78940	On-Off vol. & brightness.
1R126	78941	Tone control.
1R155A,B	78939	Blue & green screen cont.
1R162A,B	78935	Green & blue background.
1R166	78933	Sound rejection or level.
1R238	78942	Horiz. convergence ampl.
1R248A	78937	Vertical convergence ampl.
1R248B	78937	Vert. convergence shape cont.
1R282A	78936	Vertical linearity.
1R282B	78936	Height control.
1R283A	78934	Vertical hold.
1R283B	78934	Horiz. hold.
COILS		
1L107	74214	Peaking, 180 mh.
TRANSFORMERS		
1T102	78995	IF sound take-off.
1T103	78996	IF 1st sound 4.5 MC.
1T104	78997	IF ratio-detector.
1T106	78987	IF link pix 41.24 MC.
1T107	78988	IF 1st pix 40.7 MC.
1T108	78989	IF 1st pix 47.25 MC.
1T109	78990	IF 2nd pix.
1T110	78991	IF 3rd pix.
1T111	78992	IF 4th pix.
1T112	78993	IF 5th pix. 47.25 MC.
1T113	78994	IF 5th pix.
1T120	77823	Vertical output.
1T121	74144	Vertical oscillator.

MAIN BASE ASSEMBLIES		
2C105	18950	80 mfd, 450V D.C.
2C106	18950	80 mfd, 450V D.C.
2C107	72611	1000 mf, 3V.
2C186	78962	Hue trimmer air dielectric.
2C191A	78946	20 mfd, 450V.
2C191B	78946	20 mfd. 450V.
2C191C	78946	20 mfd, 450V.
2C191D	78946	100 mfd, 50V.
2C237	74923	Horiz. locking range.
2C251	79181	2 mf, 50V.
2C261	78573	50 mf, 6V.
2C268	78920	2 mf. 350V.
2C307A	78930	35 mfd 300V D.C.
2C307B	78930	500 mfd 6V D.C.
2C313	78917	15 mf 450V.
RESISTORS		
2R104A,B	78953	Vertical centering.
2R106	78955	Purifying control.
2R107	78954	Field neutralization.
2R191	79039	W.W. 33 ohms, 15W.
2R201	79182	W.W. 10K ohms 10W.
2R204	78948	Contrast control.
2R210	78956	Contrast control.
2R266	78950	Horiz. drive.
2R306	78952	A.F.C. balance.
2R317	78951	Color control.
COILS		
2L109	71526	Peaking, 250 mh.
2L111	71793	Peaking, 36 mh.
2L112	71526	Peaking, 250 mh.
2L122	78902	Peaking 6.7 mh.
2L123	78903	Peaking 1.9 mh.

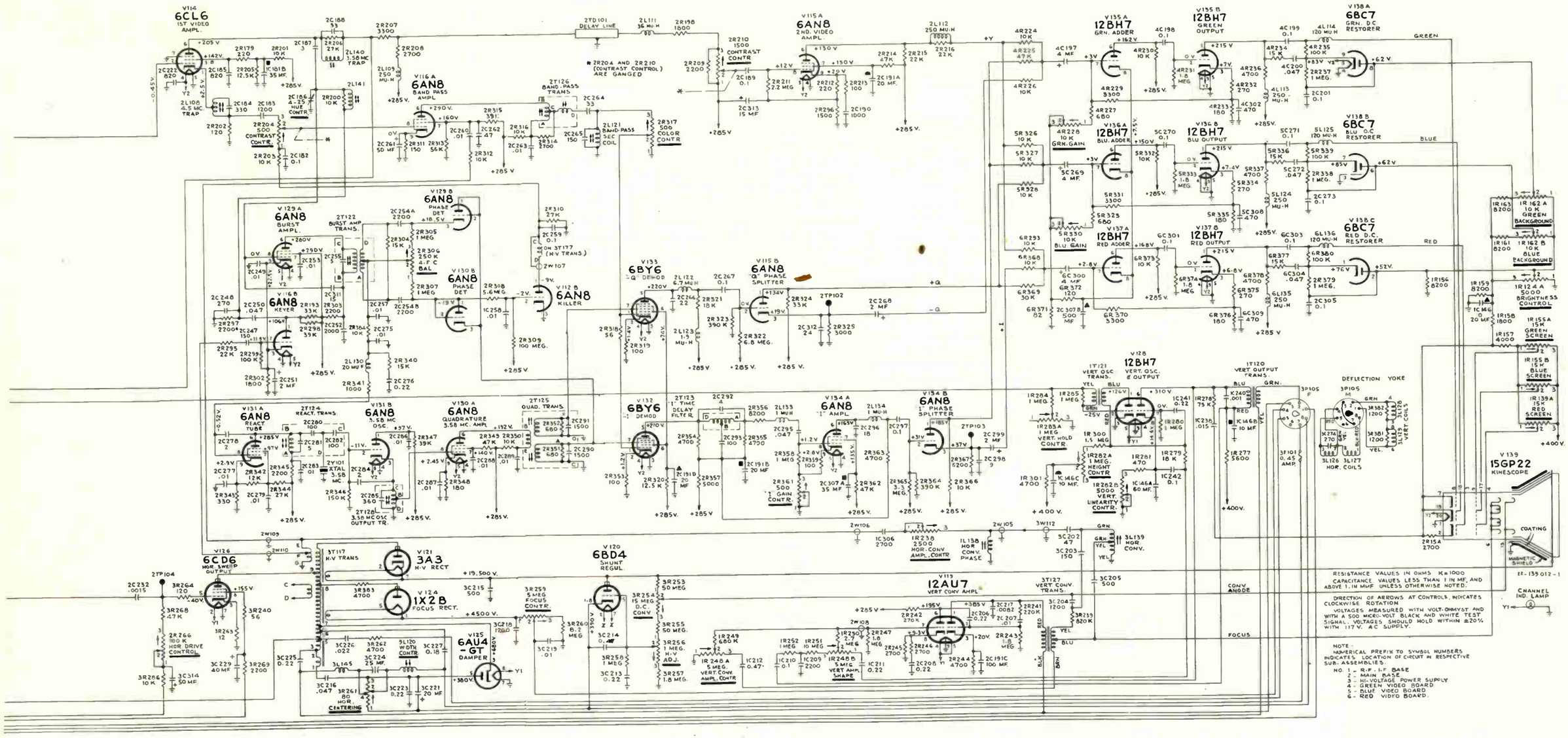

2L130	72618	Peaking 20 mic.
2L133,4	79185	Peaking 1 mh.
2L137	79119	Field neutralizing.
2L140,1	78892	Burst input 3.58 MC trap.
2L143,4	79126	Purifying coil.
TRANSFORMERS		
2T123	78890	"I" time delay filter.
2T124	78891	Reactance tube plate.
2T126	78887	Band pass primary.
2T128	78889	Osc. output adj. 3.6-9.5 mic.
2T129	78900	Vertical centering.
2Y101	78896	Plug in type 3,579.545 KC.

HIGH VOLTAGE ASSEMBLIES

ELECTROLYTICS		
3C221	78927	20 mf 50V.
3C224	78924	25 mf 10V.
3C229	79040	40 mf 200V.
3C314	91392	50 mf 50V.
RESISTORS		
3R256	79030	High voltage adjustment.
3R259	79028	Focus adjusting control.
3R261	79031	Horiz. centering.

COILS		
3L120	79010	Width control coil.
3L139	79009	Horiz. convergence output.
3L145	76441	Horiz. linearity.
TRANSFORMERS		
3T117	79012	High voltage.
3T127	79006	Vert. dynamic converging & focusing.
MISCELLANEOUS		
77129		5pk-8" PM 3.2 ohms.
79116		Yoke.

VIDEO BOARD-GREEN

4C197	78919	4 mf 350V.
4L113	98482	Peaking 250 mh.
4L114	75253	Peaking 120 mh.
4R228	78949	Gain control.

VIDEO BOARD-BLUE

5C269	78919	4 mf 350V.
5L124	98482	Peaking 250 mh.
5L125	75253	Peaking 120 mh.
5R330	78949	Gain control.

VIDEO BOARD-RED

6C300	78919	4 mf 350V.
6L135	98482	Peaking 250 mh.
6L136	75253	Peaking 120 mh.

UHF SELECTORS

MODELS
U1A, U1B
U2, U2A
U70

PARTS LIST - U1A, U1B

STOCK No.	DESCRIPTION
77273	Capacitor—Tubular trimmer, 0.5—3 mmf., complete with adjustable core (C13)
27272	Capacitor—Tubular trimmer, 0.5—5.0 mmf., complete with adjustable core (C1)
77290	Capacitor—Tubular Trimmer, 1.0—8.0 mmf., complete with adjustable core (C3)
77277	Capacitor—Ceramic, 3 mmf. (C4)
76557	Capacitor—Ceramic, 22 mmf. (C5)
77278	Capacitor—Ceramic, disc, 47 mmf. (C8, C9)
77280	Coil—Cathode choke coil (L8, R3)
77279	Coil—Heater choke coil (L3, L6, L7)
77281	Coil—Oscillator coil (L9)
77271	Printed Circuit—Input printed circuit comprising two inductances and one capacitance (L1, L2, C2)
77282	Rectifier—Germanium crystal rectifier (CR1)
	Resistor—Fixed, composition:
503210	1000 ohms, ±10%, ½ watt (R2)
523282	8200 ohms, ±10%, 2 watts (R6)
503310	10,000 ohms, ±10%, ½ watt (R1)
523333	33,000 ohms, ±10%, 2 watts (R4, R5)
75192	Shield—Tube shield for V1
77274	Socket—Tube socket, 7 pin, miniature, steatite saddle-mounted for V1
76961	Spring—Retaining spring for tube shield
46760	Switch—"UHF-VHF" switch (S1, S2)
77283	Transformer—I-F transformer (T1)

PARTS LIST - U2, U2A

REF. NO.	PART NO.	DESCRIPTION
		ELECTROLYTICS
C1, C2, C3, C4, C18, C19		
	77290	Tubular trimmer 1-8 mmf.
C14, C15	77340	Tubular trimmer 1.0-10.0 mmf.
C21A	77086	50 mfd, 200V.
C21B	77086	30 mfd, 200V.
C21C	77086	30 mfd, 200V.
		COILS
L9, L10	77296	Fundamental oscillator.
L11, L12	77297	Harmonic tank.
L13	77298	Choke coil.
		TRANSFORMERS
T1	77287	Power 117V 60 cycle.
T2	77288	IF Xformer.
T3	78578	Antenna input.
		MISCELLANEOUS
CR1	77282	Germanium rectifier.
CR2	77292	Selenium rectifier.

PARTS LIST - U70

REF. NO.	PART NO.	DESCRIPTION
		ELECTROLYTICS
C19A	77086	50 mfd, 200V.
C19B	77086	30 mfd, 200V.
C19C	77086	30 mfd, 200V.
		COILS
L4	72618	Peaking, 20 mic.
L5	77083	Cathode peaking.
L6, L7, L8, L10		
	77109	Choke coil.
L9	77224	Oscillator tuning.
		TRANSFORMERS
T1	77081	1st IF, complete.
T2	77082	2nd IF, complete.
T3	77080	Power 117V, 60 cycles.
		MISCELLANEOUS
S1, S2	77089	Function & power sw.
CR1	77489	Crystal rectifier IN82.

UHF SELECTOR
Models U1A, U1B

UHF Selector U1A is provided with a 52 inch power cable with a 7 pin miniature adapter socket for use with television receivers which employ a 6AQ5 audio output stage.

UHF Selector U1B is provided with a similar power cable except that it employs an octal adapter socket for use with television receivers which use a 6K6GT or 6V6 audio output tube.

Mount the UHF Selector on the back cover of the cabinet with the adjustment screw holes facing up. Be sure to locate the selector so that the selector switch may be reached conveniently from the top or side of the cabinet and so that the cables may be easily attached.

Mount the selector VHF terminal board on the back of the cabinet.

To install the UHF Selector power cable, remove the television receiver audio output tube and plug the adapter socket into the receiver audio tube socket. In all television-radio combinations, except models 21T242 and 21T244 plug the adapter into the radio's audio output tube socket. Insert the audio output tube into the adapter socket. Ground the black lead with the space terminal under the most convenient screw on the chassis. Dress the power cable out the back of the cabinet in the most convenient and orderly manner. With the end of the power cable hanging out the back of the cabinet fasten the receiver back cover in place making sure that the cable is not pinched under at any point. Connect the power cable to the selector.

Connect the UHF antenna to the UHF Selector UHF antenna terminals.

Connect the VHF antenna to the Selector's VHF antenna terminals.

Connect the UHF Selector output leads to the television receiver antenna terminals.

The UHF Selector is wired with a jumper across R6 as shown in the schematic diagram for receivers which provide 270 volts at the adapter socket. If the receiver provides 370 volts at the adapter socket, the jumper across R6 should be removed.

USE ON OTHER MAKES OF RECEIVERS

The U1A and U1B UHF Selector will provide satisfactory UHF reception on other makes of receivers provided that the proper voltages for operation of the selector can be obtained from the receiver.

The U1A and U1B UHF selectors were designed for use on receivers in which the tube filaments are fed in parallel from a 6.3 volt transformer winding. Since the black lead of the selector power cable is connected to the selector chassis, the U1 series selectors should not be employed with any receiver in which a direct connection exists between the AC power line and the receiver DC power supply.

The plate voltage available from the receiver may not be optimum for operation of the selector as wired. It is very important that between 60 and 90 volts should be present at the junction of R2 and R6 in order to obtain optimum crystal current. The voltage at the junction of R2 and R6 should be measured with a "VoltOhmyst" and with the UHF Selector shield in place. To obtain voltage at R2 and R6, shunt R4, R5 and R6 as necessary with resistors of adequate wattage to obtain the desired voltage.

The television receiver operating voltages should not be materially altered by the installation of the UHF Selector.

In some makes of receivers it may be necessary to rewire the adapter socket and cable to suit the particular type of audio output tube. In some instances where filament wiring difficulties are encountered, it may be necessary to remove the adapter socket and wire the power cable into the television receiver.

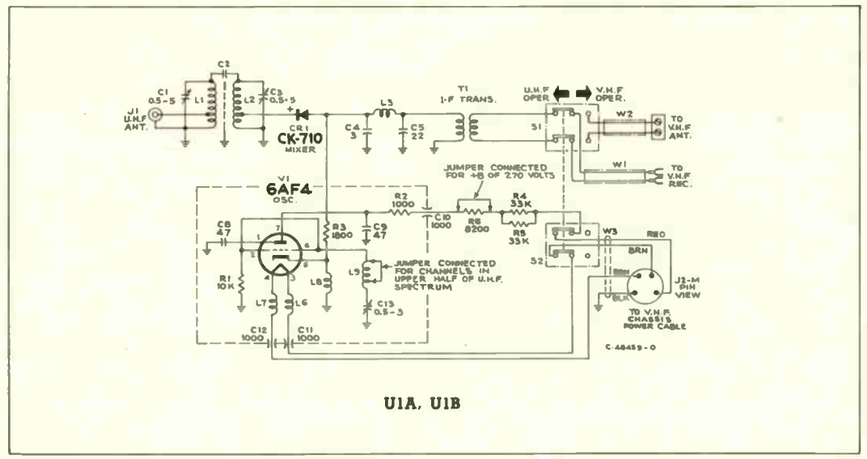

U1A, U1B

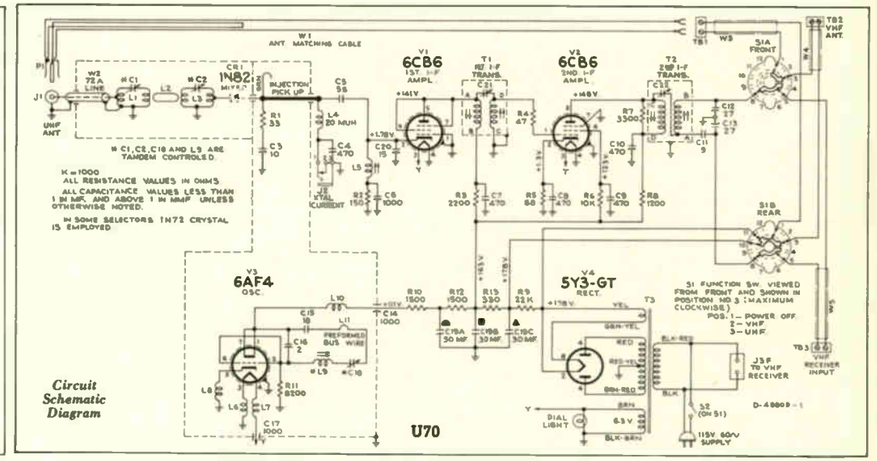

Circuit Schematic Diagram

U70

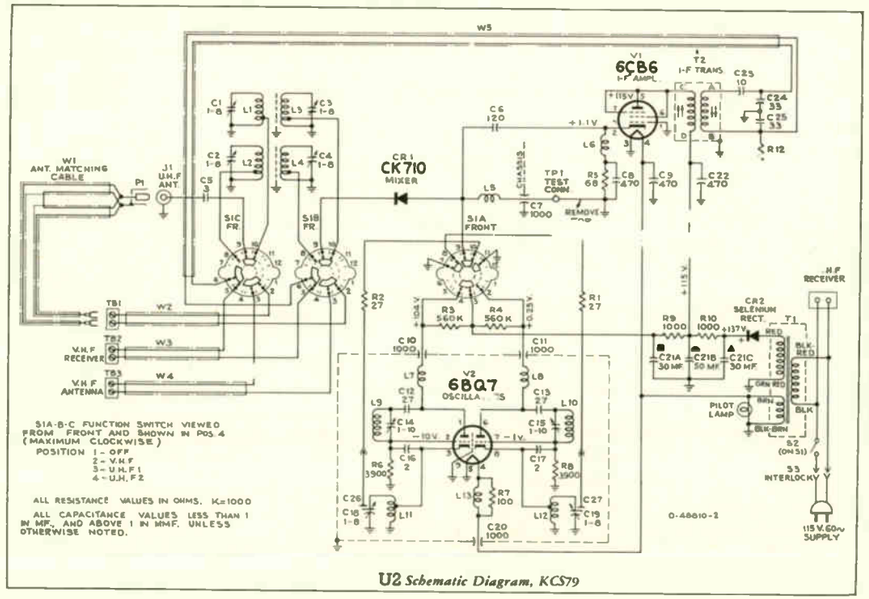

U2 *Schematic Diagram, KCS79*

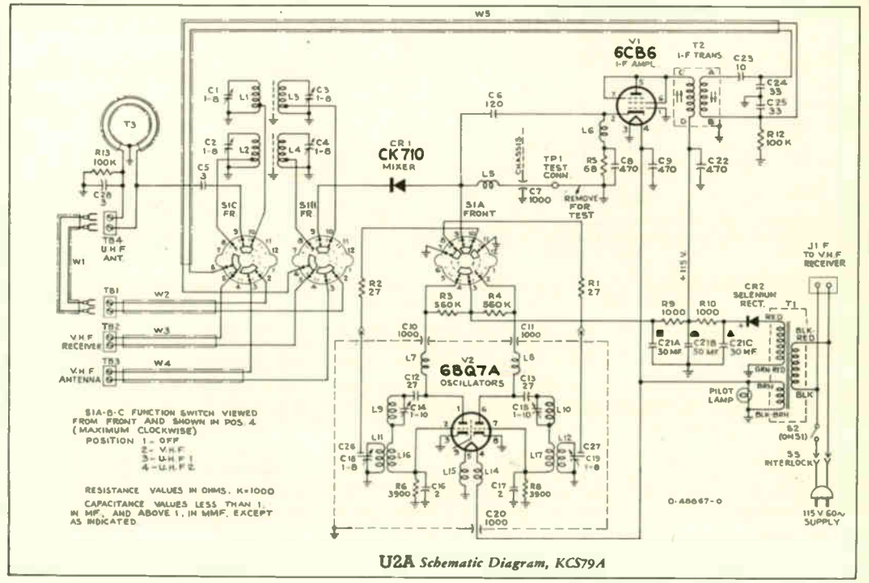

U2A *Schematic Diagram, KCS79A*

RADIO PARTS LISTS

REF. NO.	PART NO.	DESCRIPTION
RADIO CHASSIS RC1111A		
ELECTROLYTICS		
C39	73747	2 mfd, 50V.
COILS		
L1	77313	Antenna-FM.
L2	77314	RF FM.
L3, L4, L5	75569	Oscillator AM complete.
L6, L7	77305	RF AM complete.
L8	77315	Oscillator FM.
L9, L10	71942	Filament choke.
RESISTORS		
R16	75561	Tone LF.
R19, S2	75537	Volume & power switch.
R29	75562	Tone HF.
TRANSFORMERS		
T1	75559	1st IF FM complete.
T2	75558	1st IF AM complete.
T3	75560	2nd IF FM complete.
T4	76328	2nd IF AM complete.
T5	73743	Ratio detector complete.

REF. NO.	PART NO.	DESCRIPTION
RADIO RC1111B and RC1111C		
ELECTROLYTICS		
C39	73747	2 mfd, 50 volts.
COILS		
L2	77314	RF coil - FM.
L3, L4, L5	75569	AM oscillator coil.
L6, L7	77305	RF AM coil complete.
L8	77315	FM oscillator coil.
RESISTORS		
R16	75561	Tone control. L.F.
R19	75537	Volume & power switch.
R29	75562	Tone control. H.F.
TRANSFORMERS		
S1	77307	Function switch.
T1	75559	1st IF, FM complete.
T2	75558	1st IF AM complete.
T3	75560	Second IF FM complete.
T4	76328	Second IF AM complete.
T5	73743	Ratio detector.
T1	75566*	Power, 117V, 60 cy.
T2	77323*	Output Xformer.

NOTE: * for RS141D Amplifier.

REF. NO.	PART NO.	DESCRIPTION
RADIO RC1117B		
ELECTROLYTICS		
C5	76872	Adj. trimmer 2.5-30 mmf.
C17A	73013	80 mfd, 150V.
C17B	73013	30 mfd, 150V.
C17C	73013	10 mfd, 150V.
COILS		
L2, L3	76866	Oscillator coil.
RESISTORS		
R11	76874	Volume control.
SR1	76871	Selenium rectifier.
R22	77379	W.W. 66 ohms, 5W.
TRANSFORMERS		
S3, S4	77377	Radio TV switch.
T2	73037	Second IF.
T3	77122	Output Xformer.

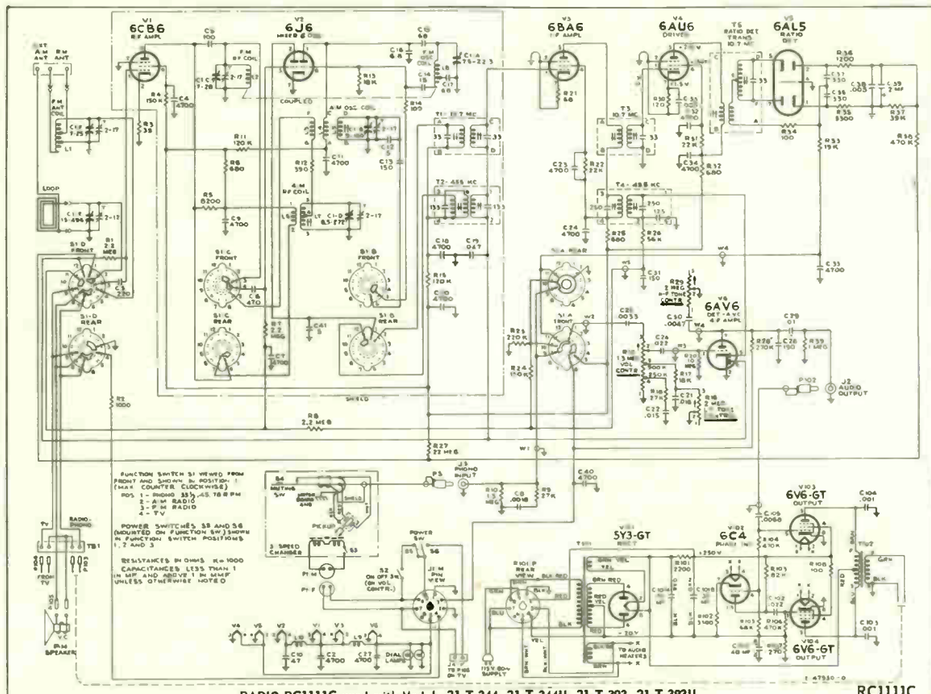

RADIO RC1111C used with Models 21-T-344, 21-T-344U, 21-T-393, 21-T-393U — RC1111C

RADIO VOLTAGE CHART

Voltages shown are as read with "VoltOhmyst" between indicated terminal and chassis, with receiver operating on 117 volts, and with no signal input. Voltages should hold within ±20% with 117 v. a-c supply.

Tube	Pin No.	AM	FM	Phono
V1 6CB6 R-F Amp	5	215	180	—
	6	74	62	—
	2	0.4	0.4	—
	1	−0.8	0.4	—
V2 6J6 Osc & Mixer	2	55	58	—
	5	−1.2	−1.3	—
	1	63	48	—
	6	−1.2	−1.3	—
V3 6BA6 I-F Amp	5	210	210	—
	6	126	118	—
	7	0.9	0.7	—
	1	0.8	0.8	—
V4 6AU6 Driver	8	216	216	—
	6	190	190	—
	7	1.5	1.5	—
	1	0	0	—
V5 6AL5 Ratio Det.	—	—	—	—
V6 6AV6 Audio Amp	7	88	88	104
	1	0.7	−0.7	0.8
V102 6C4 Phase Invert.	5	88	88	120
	7	−11	−11	−13
	6	−16	−16	−19
V103 & V104 6V6GT Audio Output	3	300	300	298
	4	224	224	292
	8	0		0
	9	−17	−17	−21
V101 5Y3GT Rect.	8	305	305	307

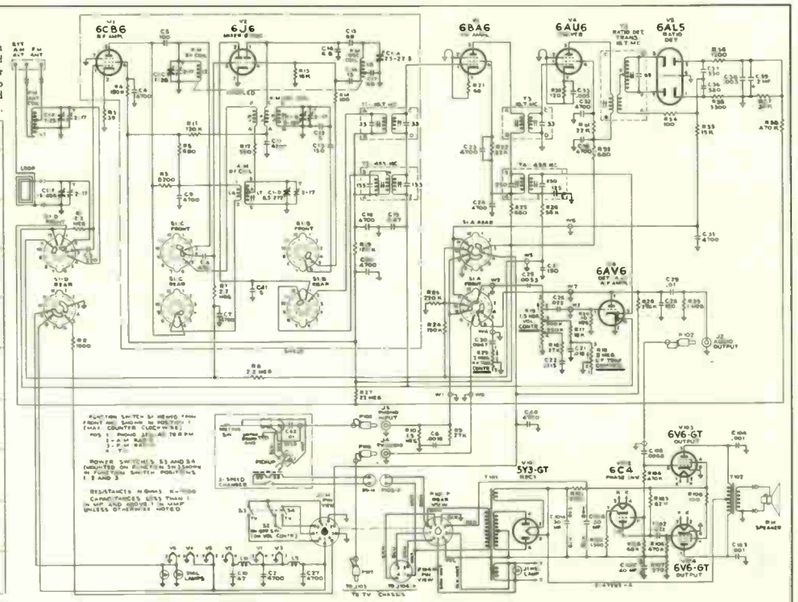

CRITICAL LEAD DRESS

1. The 1st FM i-f plate lead should be dressed away from the r-f amp plate.
2. Dress the 1st AM i-f plate lead to the S2 water away from the AM i-f coil.
3. Dress the a-c power switch wires away from all audio components.
4. Dress C26 down toward the base between the terminal board and the side apron.
5. The C18 bypass ground should be as close to the r-f shell ground strap as possible.
6. Dress C25 away from the arm contact of the volume control.
8. All leads from the r-f shell leaving through the shields must be kept as short as possible.
9. All leads for FM should be kept short especially on the r-f shell.
10. Dress the a-c leads to the RS141 chassis away from the audio input leads and components.
11. Dress all leads away from R101 in RS141.

All resistance values in ohms K = 1000

All capacitance values less than 1 in MF and above 1 in MMF unless otherwise noted.

Direction of arrows at controls indicates clockwise rotation.

RADIO RC1111A

RADIO RC1111A used with Models 21-D-346, 21-D-346U, 21-T-197DE, 21-D-395, 21-D-395U

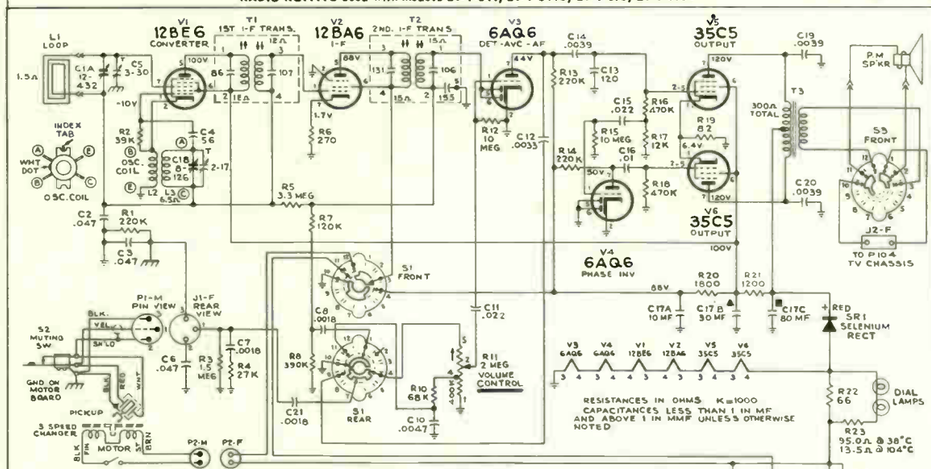

RADIO RC1117B used with Models 21-T-242, 21-T-392, 21-T-392U, 21-T-342, 21-T-342U — RADIO RC1117B

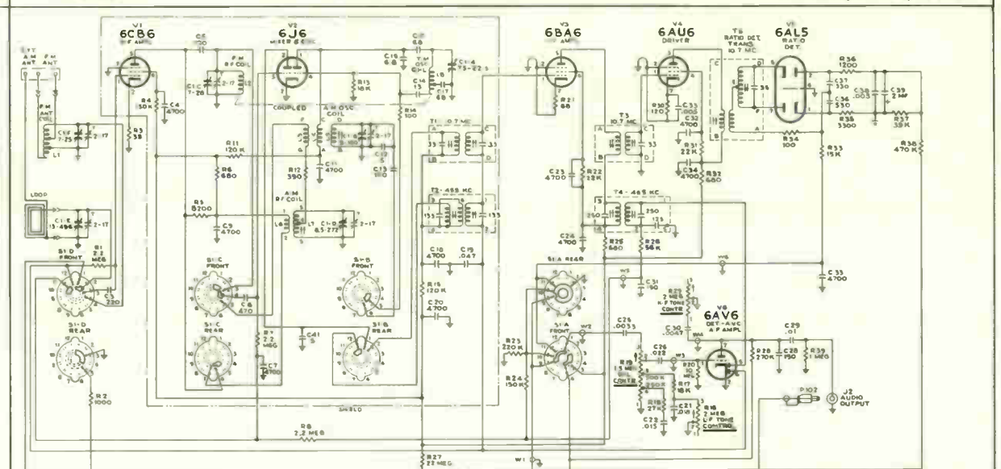

RADIO RC1111B

RADIO RC1111B used with Model 21-T-244.

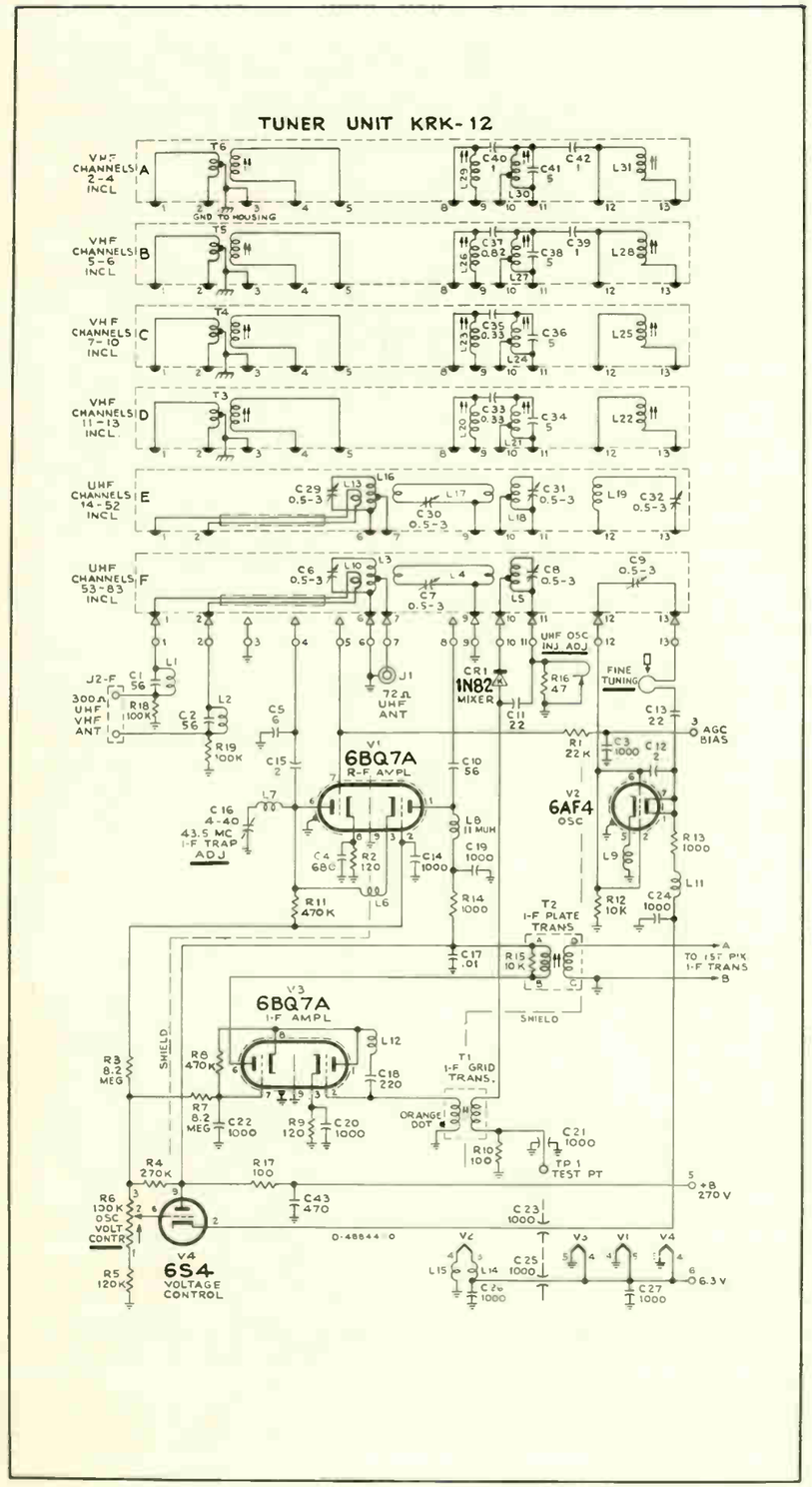

VHF-UHF Tuner KRK-12 used in Chassis:

KCS81B (page 75).

KCS81E (page 76).

KCS82E (page 87).

KCS77B (page 94).