ROCKWELL INTERNATIONAL

DESIGN REPORT - 65407 - 32

FOR: HOUSTON LIGHTING & POWER COMPANY
P.O. 35-1197-4028, UNIT 1
P.O. 35-1197-8028, UNIT 2

FROM: ROCKWELL INTERNATIONAL
HOUSE ORDER 65407, UNIT 1, SEISMIC CATAGORY 1.
ACTIVE BUTTERFLY VALVES.

HOUSE ORDER 65408, UNIT 2, SEISMIC CATAGORY 1.
ACTIVE BUTTERFLY VALVES.

DESCRIPTION: 18" 150 CLASS LUGGED BODY BUTTERFLY VALVE

ANSI RATING: CLASS 150

VALVE BODY MATERIAL: CARBON STEEL
WITH LIMITORQUE ACTUATOR

CUSTOMER P.O. ITEM NO.	CUSTOMER VALVE I.D. NO.
23	18 ACT BM 62 LS 2A-ERXX
24	18 ACT BM 62 LS 2B-ERXX
25	18 ACT BM 62 LS 3A-CRXX

Calculations by Ching-Lung Wu

14926-4028-00015-EHM
14926-8028-00014-EHM

[illegible] 2

This is to certify that this design report has been reviewed and that to the best of my knowledge and belief it meets the requirements of subarticle NC/ND - 3500 of ASME Boiler and Pressure Vessel Code, Section III - 1974, Nuclear Power Plant Components and Addenda through Winter 1975, and the requirements of Brown & Root - Specification 2L529TS0103.

Signature: T.E. Rost 9-22-81
Title: Registered Professional Engineer
Reg. No.: 19246
State: Illinois

Approved by: W. Priese 9-22-81
W.K. Priese
Sr. Vice President and
Chief Technical Officer

ROCKWELL INTERNATIONAL

DESIGN REPORT - 65407-32

INDEX

ROCKWELL INTERNATIONAL

REVISION APPROVAL RECORD

DESIGN REPORT NO.: 65407-32

FOR: HOUSTON LIGHTING AND POWER COMPANY

ORIGINAL DATE: 9-2-81

Revisions:

Rev. *	Description of Revisions	Revision Approvals	
		Eng.	V.P. Eng.
Orig.	9-2-81	—	—
A	Appendix B - Limitorque letter dated Oct.29,1980 added. Appendix E - Completely revised to show in detail source data to meet B & R specification and applicable IEEE requirements. Index page 3 and approval record page 4 of this report changed as shown. Other pages not effected. 11-10-81	LGRoot 11-10-81	W. Ruick 11-12-81
Rev. B 2/10/84	Pages 1 thru 47 changed "Hills-McCanna" to "Rockwell", and changes spec. no. from 2L529TS103D to 2L529TS0103. Added par. 1.3.8 on page 14. Added par. 2.8 on page 46. Revised Appendix A (to Rev. A) to provide more detail. Added pages 10.1 and 10.2 to appendix E (Loca Profile Justification). Added pages 11.1 and 12.1. Added reference item (r) to appendix E, page 2.	LGRoot 2-21-84	21 Feb 84

* Revision letter applies to this page, page 4, only.

PURPOSE

The purpose of this report is to show that the valves meet the design requirements of Brown & Root Specification 2L520TS0103.

SCOPE

The scope of this report covers the determination of the structural integrity of the valve-actuator assembly, under the specified combined loadings, by analytical methods. The functional operability of the valve is also demonstrated. (See Appendix "A" Qualification of Rockwell Butterfly Valves, for additional details).

OTHER DOCUMENTS

Other documents which support this report but are transmitted seperately are:

1) Wyle Laboratories Test Report No. 45116-1 Dynamic Evaluation Test Program.
2) Wyle Laboratories Test Report No. 45116-2 Seismic Test Program.
3) Limitorque Valve Actuator Qualification Report B0058.
4) Limitorque Seismic Test Reports SMB-000/HOBC, SMB-1/H3BC and SMB-3/H5BC.
5) Motor Sizing Sheets - Approved by Brown & Root

Other valve sizes are covered in indivicual design reports. They are identified as DR-65407-no. where the dash number is that of the Specification Sheet Number of Spec. 2L529TS0103. The appendices of each of the reports are alike.

Technical Descriptive Data

Brown & Root, Inc.

P.O. Item No.	Spec. Sheet No.	Valve I.D. No.
23	32	18ACT BM62 LS2A - ERXX
24	33	18ACT BM62 LS2B - ERxx
25	34	18ACT BM62 LS3A - CRxx

ROCKWELL INTERNATIONAL

Valve Fig. No.	Valve B/M No.	Design Pressure
18"L151 C1-Z-S6	L3411 0204	60 PSIG
18"L151 C1-Z-S6	L3411 0204	60 PSIG
18"L151 C1-Z-S6	L3411 0204	150 PSIG

Design Temperature	Design Class ASME Sect. III
150 °F	CLASS 2 ACTIVE VALVE
150 °F	CLASS 2 ACTIVE VALVE
250 °F	CLASS 3 ACTIVE VALVE

Actuator Mounting B/M No.	Limitorque Actuator Model No.	Sales Drawing No. CBFA-
H381 A0217	SMB-00-15-H3BC	366
H381 A0217	SMB-00-15-H3BC	462
H381 A0217	SMB-00-15-H3BC	371

DR-65407-32
PAGE 7
REV. B
FIG. 1
CBFA 366
SHEET 1 OF 2

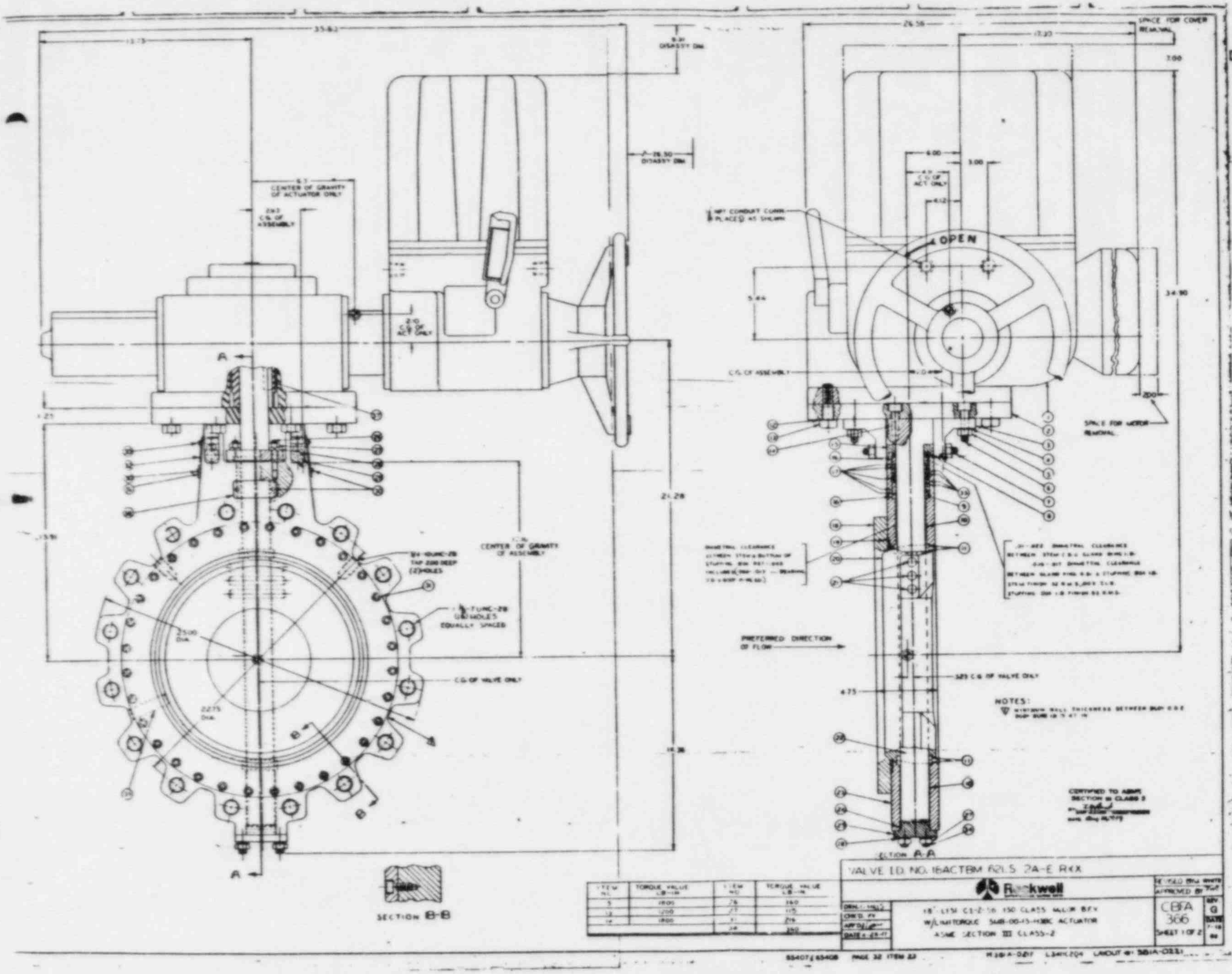

ITEM NO.	TORQUE VALUE LB-IN	ITEM NO.	TORQUE VALUE LB-IN
5	1800	26	160
12	1200	27	115
14	1800	31	219
		34	350

VALVE I.D. NO. 16ACTBM 62LS 2A-E RKX

Rockwell

18" LTSI C1-Z-16 150 CLASS MULLR BFV
W/LIMITORQUE SMB-00-15-H3BC ACTUATOR
ASME SECTION III CLASS-2

CBFA
366
SHEET 1 OF 2
REV. G

65407/65408 PAGE 32 ITEM 23

DR-65407-32
PAGE 8
REV. B

FIG. 1
CBFA 366
SHEET
2 OF 2

NO.	DESCRIPTION	QTY.	PART NO.	MATERIAL	FINISH
1.	ACTUATOR	1	SMB-00-15-H3BC	CAST IRON HOUSING	LIMITORQUE DIV. OF PHILADELPHIA GEAR
2.	MOUNTING PLATE	1	341-25-…1T	CARBON STEEL 20/30 C	PAINTED
3.	MOUNTING BRACE	4	361-37…02T	CARBON STEEL 10/20 C	PAINTED
4.	LOCKWASHER .75 INT. TOOTH	8	935-2502-110	MEDIUM CARBON STEEL	MFR. STD. FINISH
5	~~HVY.HEX.NUT~~ 3/4-10 UNC	8	919-2513-020	CARBON STEEL A194 GR 2 OR 2H	MFR. STD. FINISH
6.	SOCKET HEAD CAPSCREW 3/4-10 UNC X 2.25 LG.	4	902-2514-C20	CARBON STEEL-SAE GR 5	MFR. STD. FINISH
7.	STUD 3/4-10 UNC X 7.25 LG.	2	380-3301-11P	STEEL A193 GR B7	ENDURION COATED
8.	BELLEVILLE SPRING WASHER	4	341-1001-69	AISI SS302	
9.	GROUNDING WASHER	1	341-2702-69	AISI SS302	
10.	BEARING	2	341-4201-96	TEFZEL GR 200	
11.	DISC SPACER .31 THK.	4	341-2703-61	AISI SS316	
12.	LOCKWASHER .75 INT. TOOTH	8	935-2502-110	MEDIUM CARBON STEEL	MFR. STD. FINISH
13.	HEX. HD. CAPSCREW 3/4-10 UNC X 2.50 LG.	8	901-2518-020	CARBON STEEL SAE GR 5	MFR. STD. FINISH
14.	SOCKET HD. CAPSCREW 3/4-10 UNC X 1.50 LG.	4	902-2526-C20	CARBON STEEL GR 5	MFR. STD. FINISH
15.	GLAND RETAINER	1	341-4002-8PT	SA 516 GR 70 CS	PAINTED
16	GLAND RING	2	341-1603-61	AISI SS316	
17.	STEM SEAL 2.88 O.D. X 2.25 I.D. X .31 THK.	5	341-1501-1L	JOHN CRANE GRAPHITE 1625 GF	
18.	SEAT RETAINER	1	341-0401-8PT	SA 516 GR 70	PAINTED
19	SEAT ASSY	1	341-0804-6F	TEFZEL/EPDM	
20.	DISC	1	341-0702-1M	SA 351 GR CF8M SS316	PLATED PER SPEC. K
21.	TAPER PIN 10 X 4.00 LG.	3	844-2505-39	SS 17-4 PH TYPE 630 H 1100	
22.	STEM	1	341-1405-9M	SA 564 TYPE 630 SS17-4PH H1075	
23	BODY	1	341-0115-8P	SA 516 GR 70	(SEE NOTE NO. 13)
24.	O-RING	1	952-0228-77	EPDM	
25.	LOCATING PLUG	1	341-2603-8PT	SA 516 GR 70 CS	PAINTED
26.	STUD 1/2-13 UNC X 2.35 LG.	4	341-3301-6N	SA 193 GR B8M	
27.	HEX. NUT 1/2-13 UNC	4	919-2409-4F	ASME SA 194 GR8M	
28.	LOCKWASHER 1/2 X .125 THK.	8	935-2403-03	AISI SS18-8	
29.	NAME PLATE	1	334-1101-G7	AISI SS304	
30.	DRIVESCREW 4 X .25 LG.	8	964-2104-02E	CARBON STEEL	CADMIUM PLATED
31.	SOCKET HD. CAPSCREW 3/8-16 UNC X 1.25 LG.	32	902-2318-C20	CARBON STEEL GR 5	MFR. STD. FINISH
32.	NAMEPLATE FOR "N" STAMP	1	231-1109-G7	AISI SS304	
33.	TRAVEL STOP PIN	1	341-1801-3N	SA 479 TYPE 316	
34.	STUD 1/2-13 UNC X 2.05 LG.	4	229-3310-6N	SA 193 GR B8M	
35.	STEM SEAL 2.88 O.D. X 2.25 I.D. X .31 THK.	4	341-1501-2L	JOHN CRANE GRAFOIL 380	
36	FLOW DIRECTION PLATE	1	340-4301-07	AISI SS304	
37	KEY .50 X .38 X 2.80 LG.	2	371-1609-36	SS 17-4 PH TYPE 630 H 1100	
38.	NAMEPLATE	1	226-1138-07	AISI SS 304	

NOTES:

1. VALVE WEIGHT = 440 LBS
2. DESIGN PRESSURE IS 66 P.S.I.
3. DESIGN TEMPERATURE IS 150°F
4. SEAT LEAKAGE TEST AND PACKING LEAKAGE TEST AT 275 P.S.I.G. FOR 10 MINUTES.
5. VALVE HYDROSTATIC TEST PRESSURE AT 425 P.S.I.G. FOR 10 MINUTES.
6. NO POSITIONAL LIMITATIONS ON ACTUATOR MOUNTING
7. ROCKWELL HOUSE ORDER PROCESS SPECIFICATION CONTAINS INSTRUCTIONS FOR MANUFACTURING TO MEET REQUIREMENTS OF P.O. NO 35-1197-4028 & 36-1197-8028. SPECIFICATIONS
8. A SLING MAY BE PLACED UNDER ACTUATOR TO LIFT VALVE ASSEMBLY.
9. C_v = 10,750
10. STEM & DISC ASSY ARE A SET & MUST BE REPLACED IN PAIRS.
11. THE ARRANGEMENT OF ACTUATOR & VALVE SHOWN IS REFERRED TO AS POSITION "B". THIS POSITION PROVIDES FOR THE CORRECT OPEN & CLOSE ROTATION FOR OUR VALVES (COUNTER-CLOCKWISE TO OPEN-CLOCKWISE TO CLOSE)
12. ACTUATOR WEIGHT = 450 LBS. BRACKET ASSY. WEIGHT = 77 LBS.
13. BODY TO BE PAINTED AT ASSEMBLY WITH TRAVEL STOP PIN.
14. NOT TO SCALE

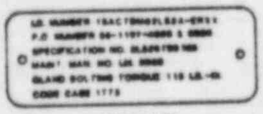

NAMEPLATE
228-1108
PART NO. 38

NAMEPLATE
834-1101
PART NO. 29

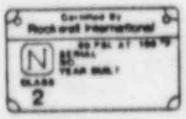

NAMEPLATE
231-1109
PART NO. 32

CERTIFIED TO ASME
SECTION III CLASS 2
BY F.A.Clark
DATE Aug 26, 1979

VALVE I.D. NO. 1BACTEM 62 S 2A-E RXX

Rockwell

DRN. CHK'D. APP'D. DATE 5-4-77	18"-L151 C1-2-56 150 CLASS MALOK B.F.V. W/LIMITORQUE SMB-00-15-H3BC ACTUATOR ASME SECTION III CLASS - 2	REVISED BY J. WHITE APPROVED BY CBFA 366 SHEET 2 OF 2	REV. G DATE 7-16-80

OC. 9

85467-65408 PAGE 432 ITEM 23 H381A-0217, L341102-X LAYOUT #: P81A-0221

DR-13967-32
Page 9 of 47
Rev. B

FIG. 2
BODY MACH. DWG.
341-0119

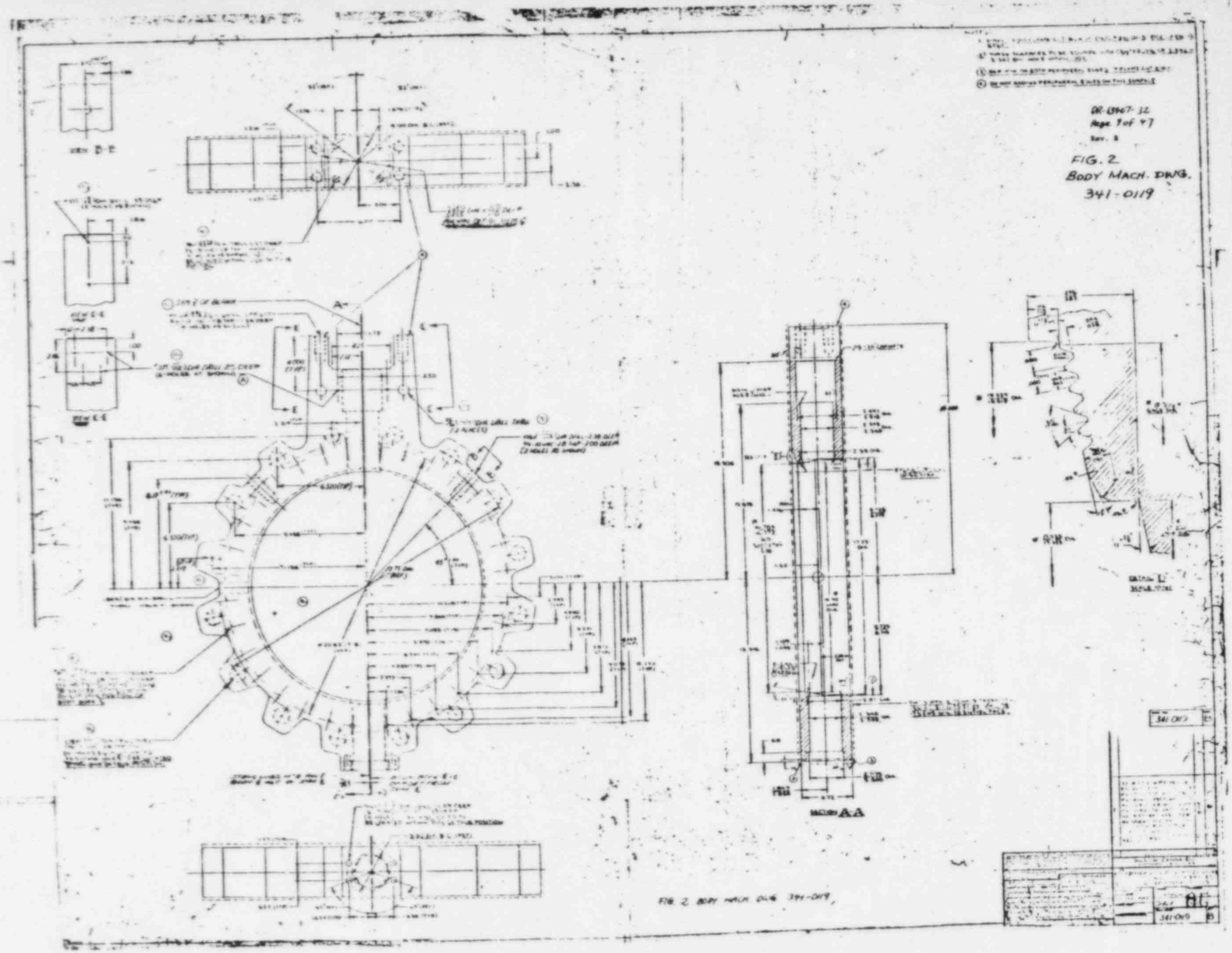

DR-65407-32
Page 10 of 97
Rev. 3

FIG. 3
BODY BLANK
341-0115

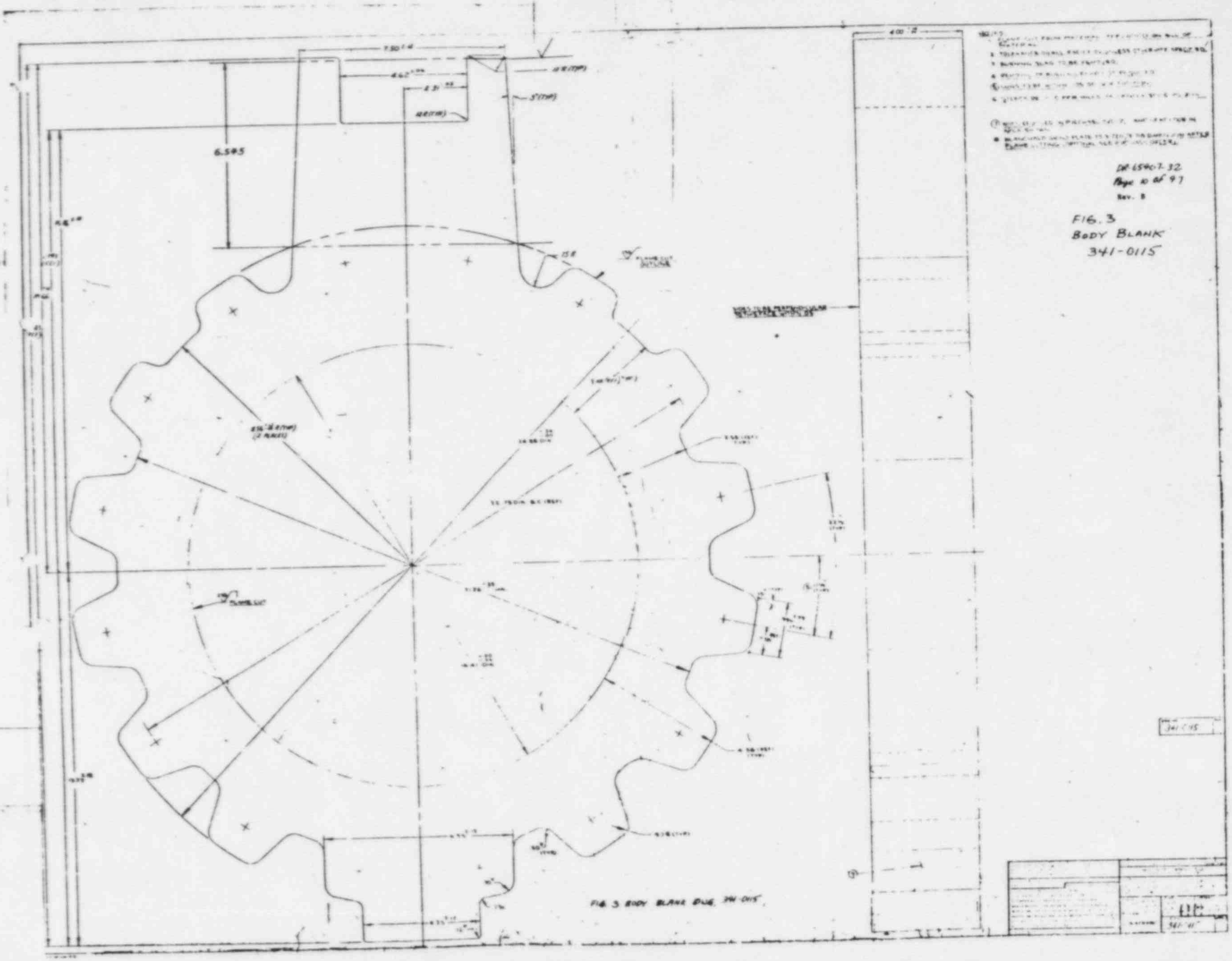

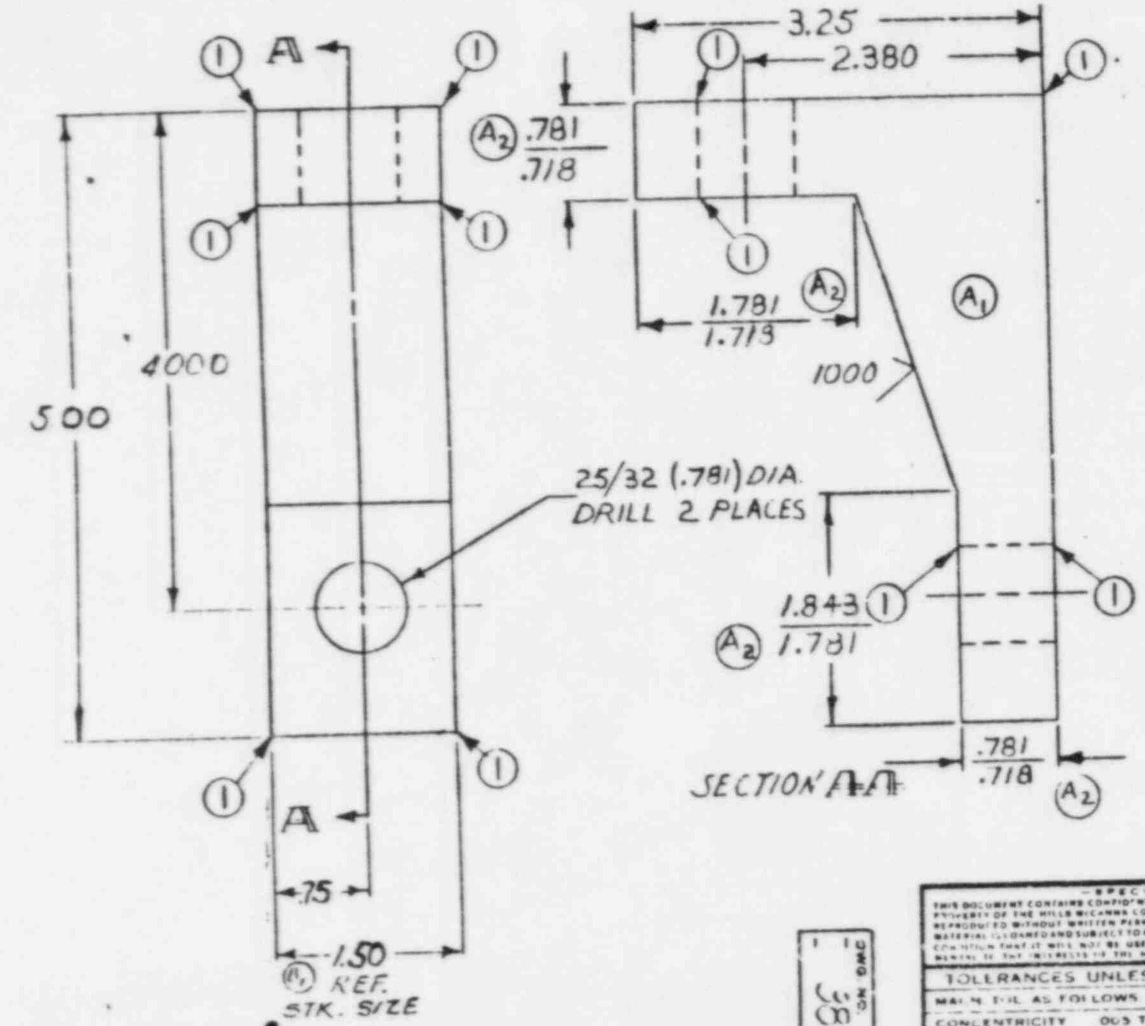

NOTE:
① .06 R (MIN) ON PERIPHERAL EDGES (ALL SIDES)

FIG.4 ANGLE BRACE

B	B_1 - 1.50 REF. STK. SIZE WAS 1.50 B_2 - 1.50 WAS 1.75	2/6/80	RS
A	A_2 REDIMENSIONED A_1 REMOVED SECT. LINES	7-24-79	28
REV	DESCRIPTION	DATE	BY

—SPECIAL NOTICE—
THIS DOCUMENT CONTAINS CONFIDENTIAL AND PROPRIETARY MATERIAL WHICH IS THE PROPERTY OF THE HILLS McCANNA COMPANY AND AS SUCH MAY NOT BE COPIED OR REPRODUCED WITHOUT WRITTEN PERMISSION OF THE HILLS-McCANNA COMPANY. THIS MATERIAL IS LOANED AND SUBJECT TO RETURN UPON DEMAND AND UPON THE EXPRESSED CONDITION THAT IT WILL NOT BE USED DIRECTLY OR INDIRECTLY IN ANY WAY DETRIMENTAL TO THE INTERESTS OF THE HILLS-McCANNA COMPANY

TOLERANCES UNLESS OTHERWISE SPECIFIED
MACH. TOL. AS FOLLOWS XX ± .01 XXX ± .005
CONCENTRICITY .005 T.I.R. ANGULAR ± 1°
CHAMFER ALL THREADS 45° ONE THREAD DEEP
BREAK SHARP CORNERS 45° BY .020 MAX. OR RADIUS
SURFACES OR ℄ SHOWN = MUST BE PARALLEL .005/IN
SURFACES OR ℄ SHOWN ⊥ MUST BE PERPENDICULAR .005/IN
℄ SHOWN INTERSECTING MUST MEET WITHIN .005
MACHINE SURFACE FINISH 125 RMS OR SMOOTHER
CSTG. TOL. AS FOLLOWS XX ± .03 XXX ± .015
ANGULAR ± 1°

HILLS-McCANNA COMPANY
CARPENTERSVILLE, ILLINOIS

TITLE ANGLE BRACE FOR 18" 150 LE McCAN REV AND MOUNTING PLATE WITH ROUNDED PERIPHERAL EDGES

SCALE FULL
MAT'L SPEC. 1.50 x 3.25 x 5.25 LONG AS SPECIFIED
APPROX. WT. IN STEEL 260.1 LBS
DRAWN G. MILLS
CHECKED
APPR'D
DATE 6-9-77
DWG. NO. 381-3701
REV. B

DWG. NO. 381-3701 REV. B

DR-65407-32
PAGE 11.1 OF 47
REV. B.

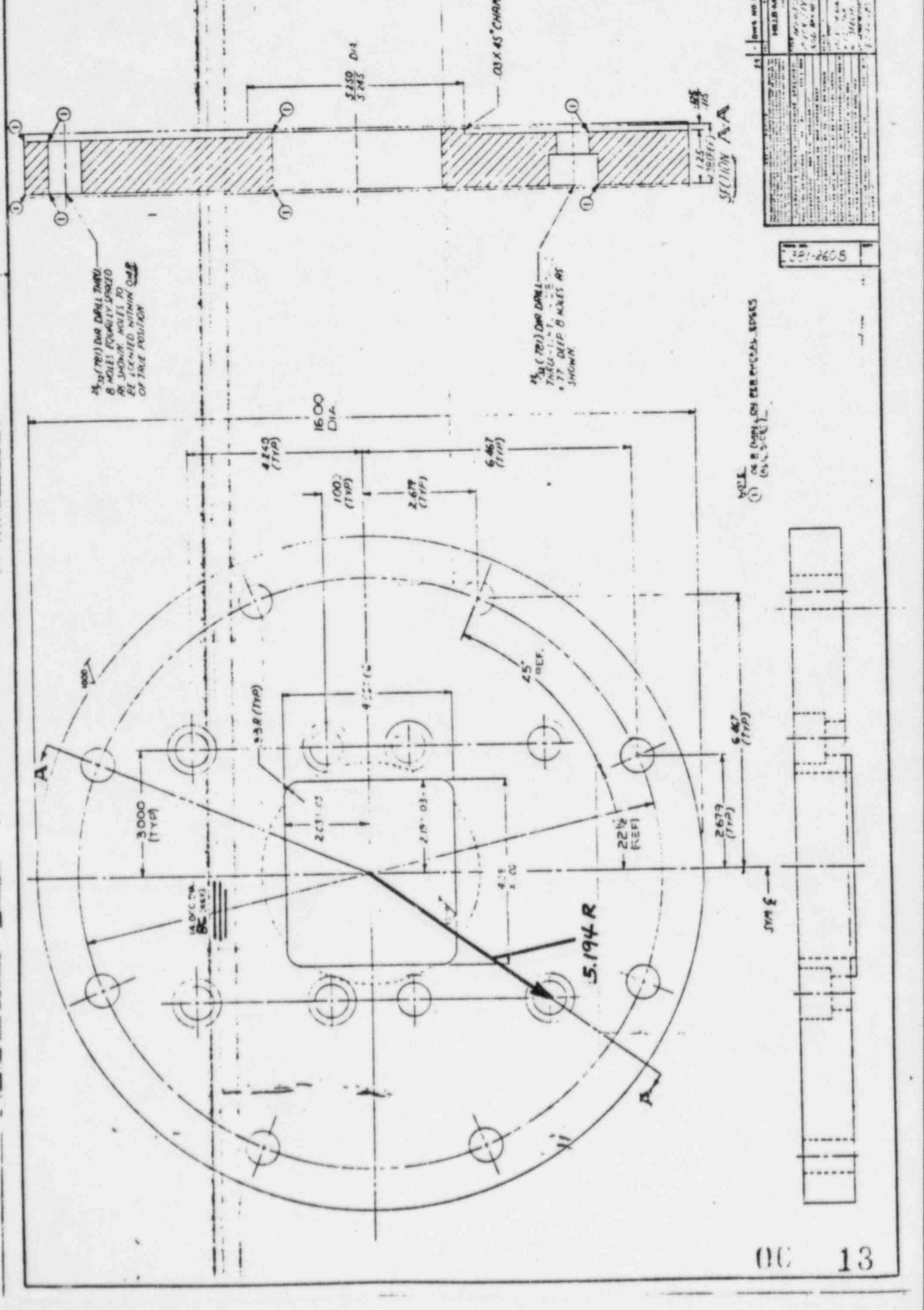

OC 13

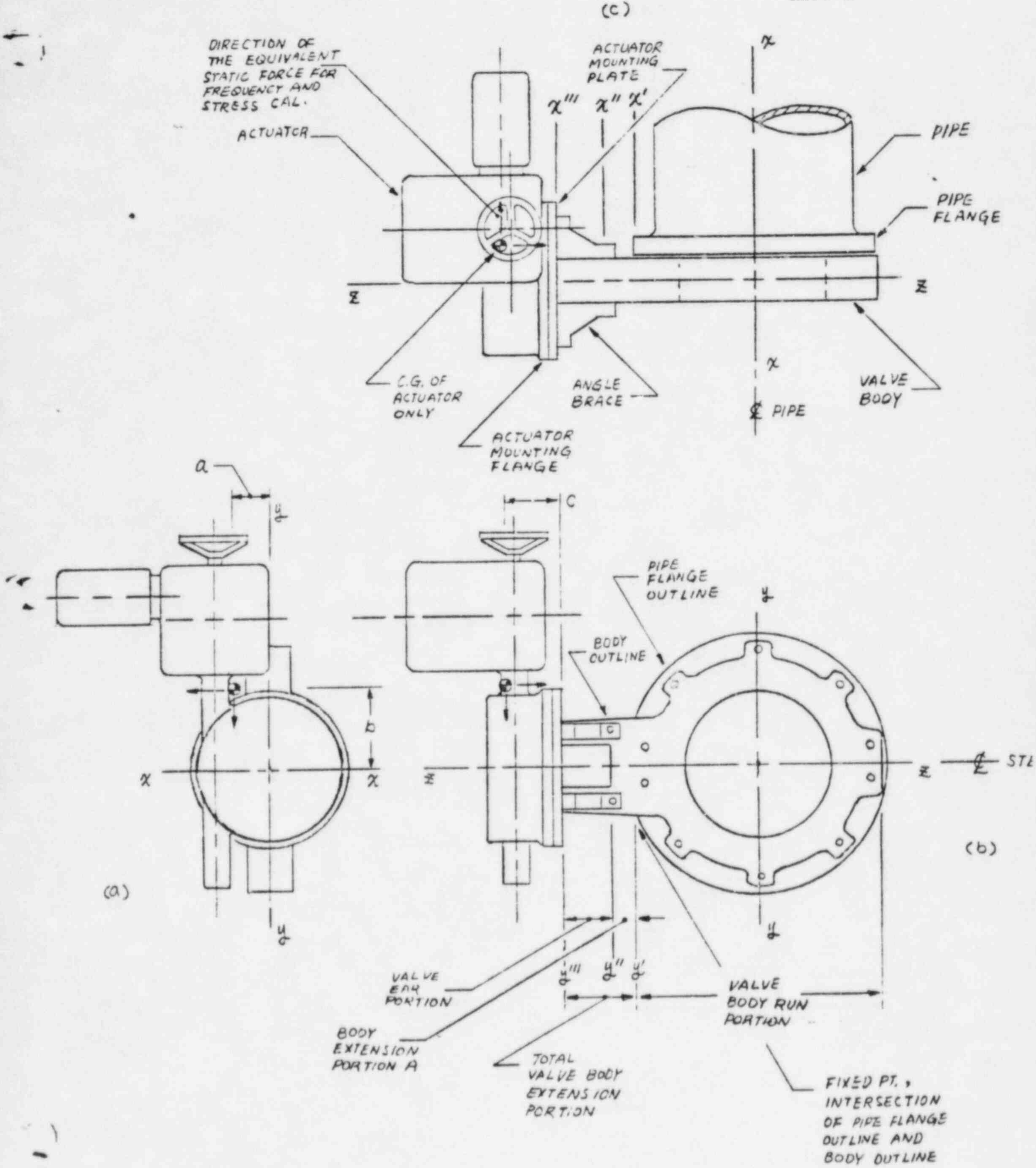

FIG. 5 VALVE-ACTUATOR ASS'Y, DEFINITION, AND COORDINATE.

The valve orientation for the analysis in this case is with the stem in the horizontal plane. This is to represent, initially, the largest moment arm (beam length) under normal g load conditions in the determination of deflection and resultant natural frequency. Where the deflection may be greater in another plane because of the material cross section (I in ^{4}) this has been considered, and is indicated in the analysis. This orientation also then covers the seismic loads at the greatest overhung load condition for the purpose of stress analysis.

1. SUMMARY:

1.1 Frequency-Wyle Laboratories Test Report No. 45116-1 for the frequency search tests shows the lowest fundamental frequency of the assembly to be 52 hertz. This is well above the required 33 hertz for static stress analysis. Therefore, the stress analysis calculations are made on the static basis.

1.2 Functional - Seismic Test at Wyle Laboratories (Wyle Labs. Report No. 45116-2) and Static Test at Rockwell. For operability under seismic loads and combined loadings, show that the valve is operable under these conditions.

1.3 Maximum Stresses - The maximum stress points in the valve assembly are listed below with a comparison of the applicable stress limit in each case.

1.3.1 Valve Body Stress at Cross-Section A-A.
The equivalent stress is 20510 psi. as calculated in Para. 2.4.1. The stress limit is 1.75 S = 1.75 (17500) = 30625 psi. (SA516 GR 70 material) and is not exceeded. Where 1.75 S is indicated in Para. 2.1.2.

1.3.2 Valve Body Stress at Cross-Section B-B.
The equivalent stress is 10500 psi. as calculated in Para. 2.4.2 and 2.4.3. The stress limit is 30625 psi. (refer to Para. 1.3.1 above) and is not exceeded.

1.3.3 Stress in the Angle Brace.
The equivalent stress is 20680 psi. as calculated in Para. 2.5. The minimum yield strength of material is 30000 psi. and is not exceeded.

1.3.4 Loads on the Mounting Bolts (Mounting Plate-Angle Brace).
As calculated in Para. 2.6, both the preload F_p = 13590 lb and shear force F_{sp} = 2718 lb of this bolt joint are larger than the resultant tension F_t = 1205 lb and resultant shear F_5 = 2685 lb, respectively. Therefore this is a rigid joint.

1.3.5 Loads on the Mounting Bolts (Angle Brace-Valve Body).
As calculated in Para. 2.7, both the preload F_{p1} = 13590 lb and shear force F_{sp1} = 2718 lb of this bolt joint are larger than the resultant tension F_r = 604 lb and resultant shear F_t = 1205 lb, respectively. Therefore this is a rigid joint.

1.3.6 Stall Torque Values of Limitorque Actuator.
The tested stall torque values are listed in App. B and are greater than break-away torques of valves, respectively.

1.3.7 Stem Key and Disc Taper Pin Stress.
The torque capacities of stem key and disc taper pins are calculated and listed in App. C and are greater than stall torque values of actuators.

1.3.8 Nozzle Loads and Stress Results.

The loading requirements are given in Appendix D of the specification. The loading components are given in Paragraph 2.3.4 of this report. The stresses caused by the nozzle loads are given in paragraph 2.4.3.

1.4 Conclusions - From the above paragraphs, it is shown that the valve assembly meets the requirements of Bechtel Spec. 2L529TS0103 and will function properly during and after the seismic event.

2. STRESSES IN THE COMPONENTS OF THE VALVE ACTUATOR ASSEMBLY

From Brown & Root Specification 2L529TS0103 Appendix C, paragraph 4.0, the seismic qualification of the valve assembly includes the structural integrity which will be performed by static analysis to verify that the components will not fail under the design load combinations as specified.

2.1 General

2.1.1 Loading combinations for this particular valve assembly are:

a) Load = sustained load + SSE + nozzle loads + operating load where sustained load = actuator weight, W.

b) SSE = seismic load = 3.0g in two horizontal directions and 3.0g in the vertical direction (2.0g + 1.0g (weight)).

c) Nozzle loads include internal pressure and temperature and are specified.

d) Operating Load = operating torque of the actuator.

2.1.2 The stress limit of the components is 1.75 S, 1.75 is the multiplier as agreed upon in Brown & Root, Inc. letter ST-BR-HM110, ST-BR-HA-105 dated October 1, 1980. S is the allowable stress from ASME Section III tables.

2.1.3 The stresses are investigated for each component part individually.

2.2 Assumptions

2.2.1 The angle brace and total valve body extension portion can be treated as one whole piece.

2.2.2 The actuator and attached mounting plate is a rigid structure.

2.3 Mathematical Model

2.3.1 General Mathematical Model.

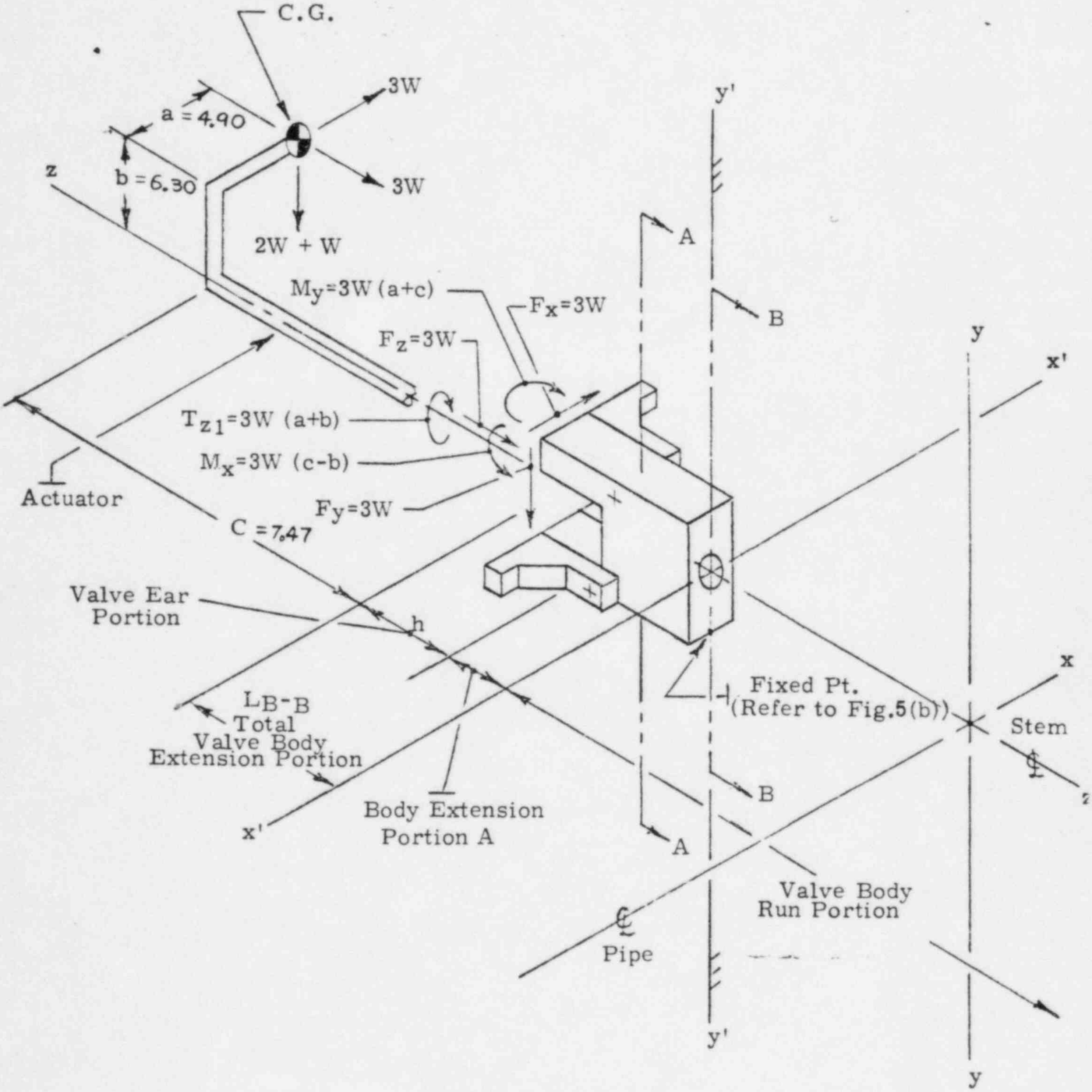

FIG. 2. 1. Mathematical Model for Stress Calculations.

2.3.2 Loadings Caused by the SSE and Dead Weight.

The loadings are,

W = Actuator weight = 450 lb (2.1)

$F_x = 3W = 3(450) = 1350$ lb (2.2)

$F_y = 3W = 1350$ lb (2.3)

$F_z = 3W = 1350$ lb (2.4)

$M_x = 3W(c-b)$ (2.5)

$= 3(450)(7.47-6.30) = 1580$ in-lb

$M_y = 3W(a+c) = 3(450)(4.90+7.47) = 16700$ in-lb (2.6)

$T_{z1} = 3W(a+b) = 3(450)(4.90+6.30) = 15120$ in-lb (2.7)

2.3.3 Loading Caused by the Operating Load.

The operating torque T_o will be a torque about the Z axis, as shown in Fig. 2.2 below.

$T_o = 62400$ in-lb from APP. B. (2.8)

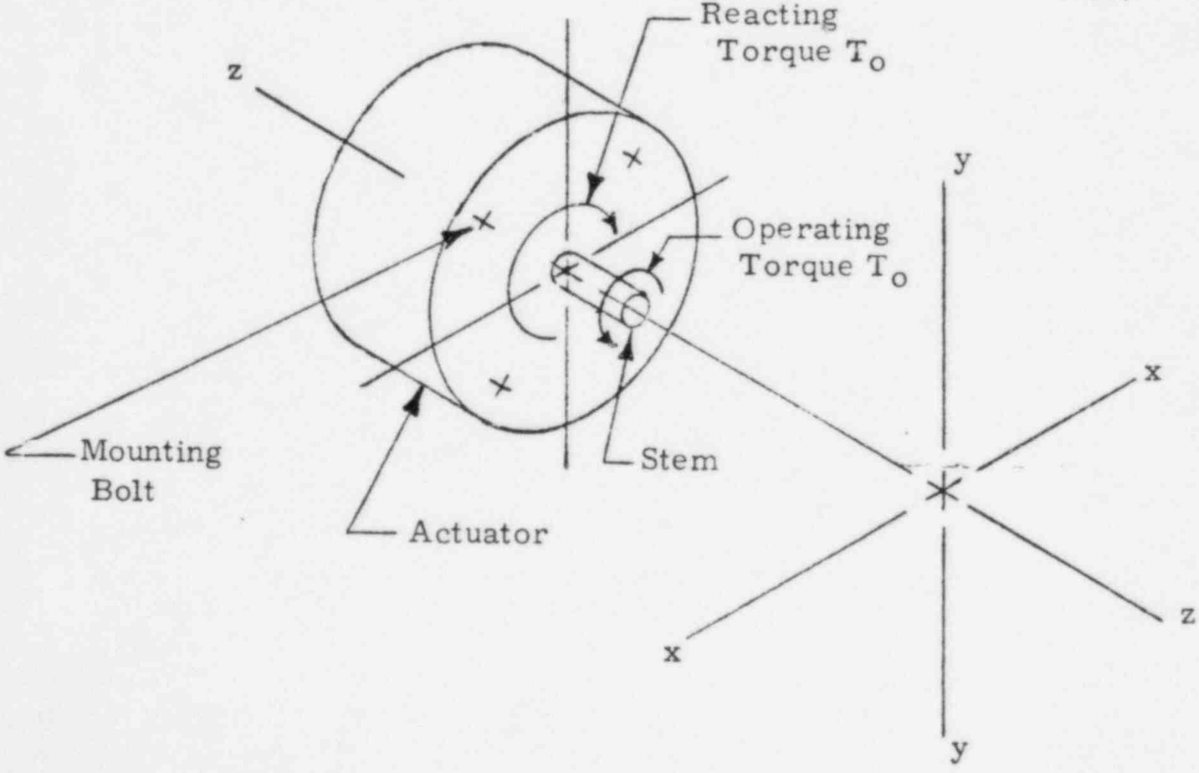

FIG. 2.2. Operating Torque of the Valve Assembly.

2.3.4 Loading Caused by the Nozzle Loads.

The specified Nozzle Loads have 6 loading components and are shown in Fig. 2.3 below with the proper axis orientations.

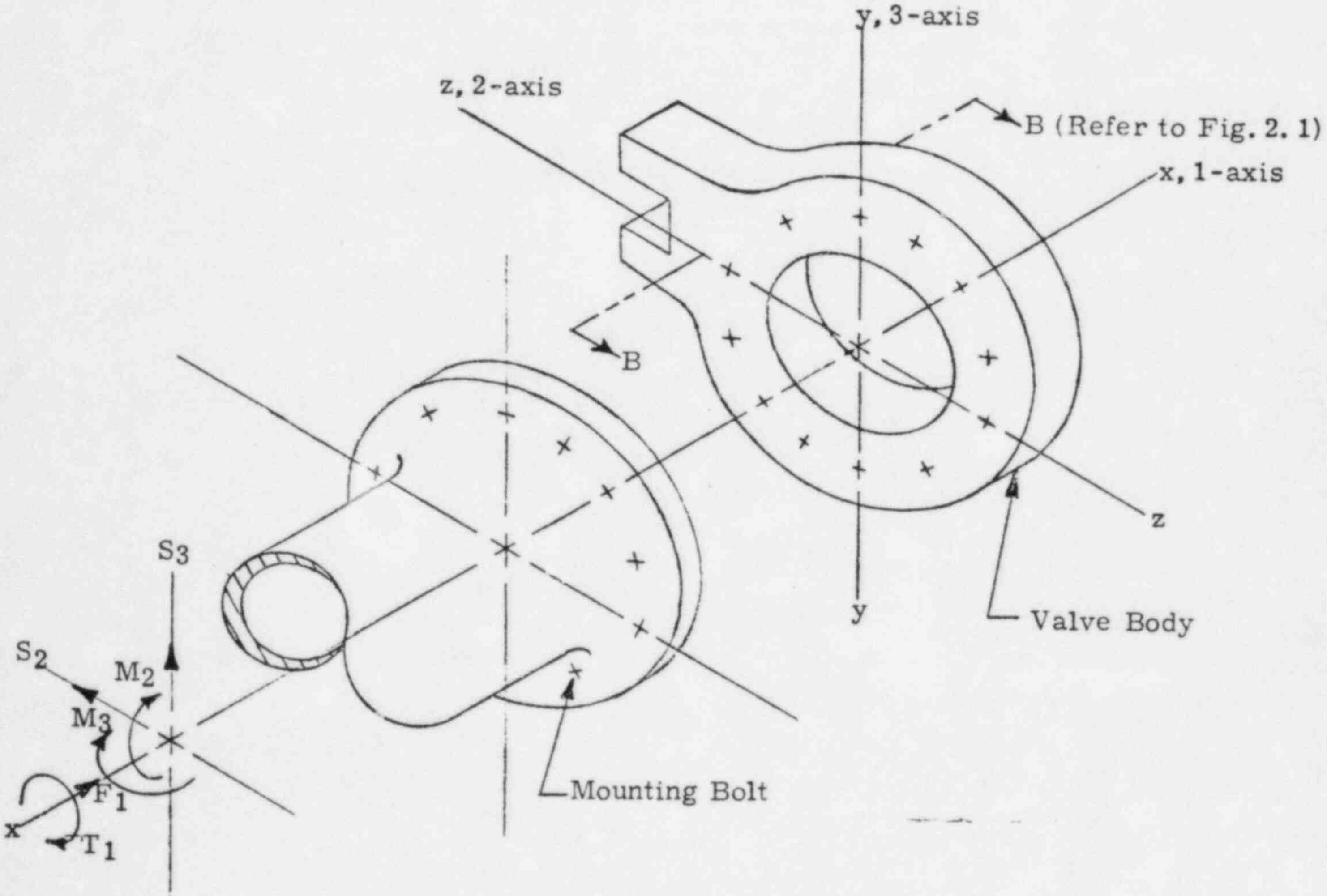

FIG. 2.3 Nozzle Loads.

Where the loadings are arranged to provide the most severe loading conditions, from Fig. 2.3 above, it is found that the loadings S_2, S_3, M_2 and T_1 will only produce the stresses in the Pipe Flange Mounting Bolts but not the Valve Body; and the loadings F_1 and M_3 will produce the compressive stress in the Valve Body at cross-section B-B (refer to Fig. 2.1 and 2.3), as shown in Fig. 2.4 below.

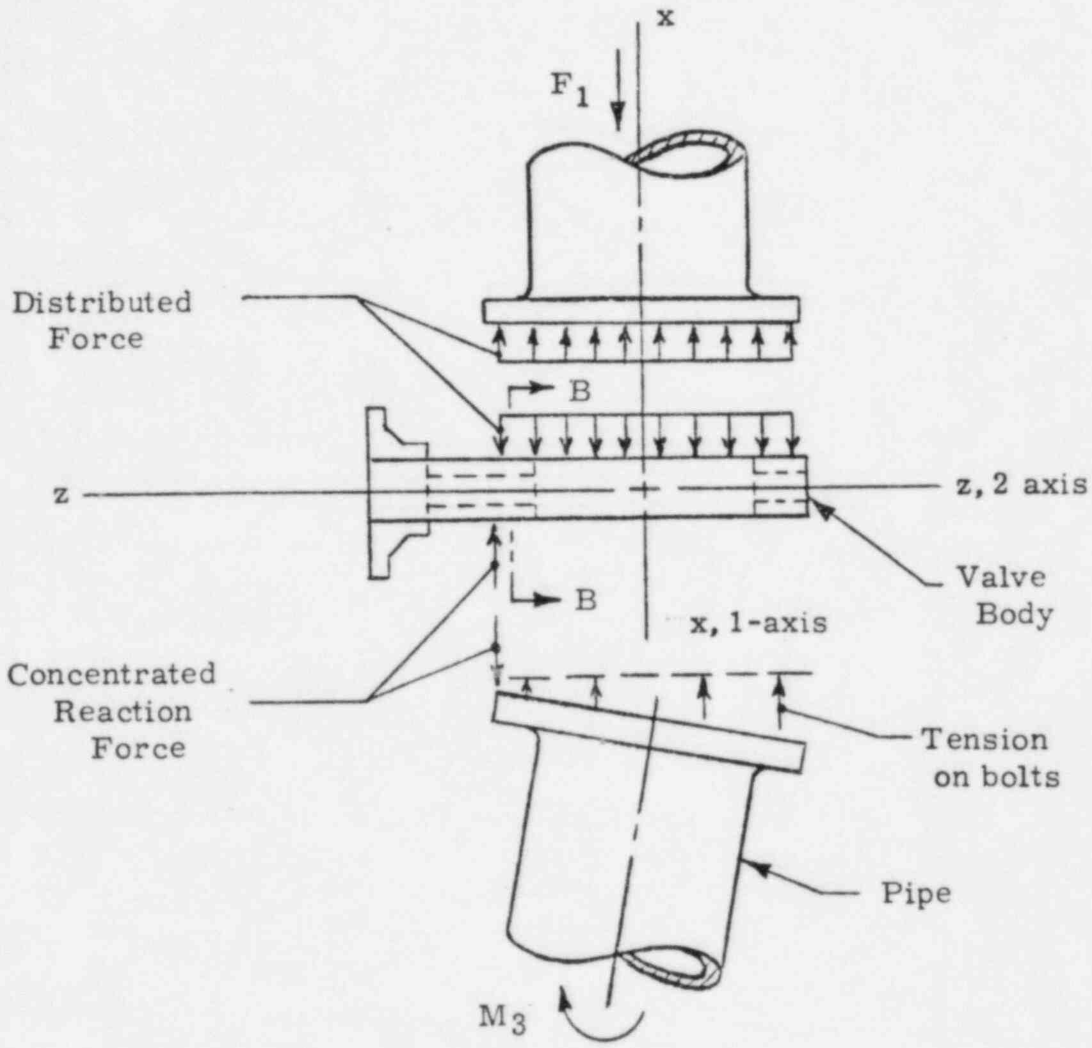

Verification that the nozzle loadings will not cause distortion in the valve is shown by tests and is reported in Appendix D.

FIG. 2.4. Compressive Loadings on the Valve Body by the Applicable Nozzle Loads.

From Para 2.3.1 through 2.3.4, it is found that for most of the components (except cross-section B-B in Fig. 2.1), the loadings will be the ones illustrated in eqs. 2.1 through 2.7, plus the Operating Torque T_o (refer to Fig. 2.2), which makes the torque about the z-axis as

$$T_z = T_{z1} + T_o \qquad (2.9)$$

$$= 15120 + 62400$$

$$= 77520 \text{ in-lb}$$

2.4 Stresses in the Valve Body.

As shown in Fig. 2.1, there are two valve body cross-sections, namely, Section A-A and B-B; which will have a high stress value under the loading combinations, this is based on the following:

1. Cross-section A-A has the weaker cross-section,
2. Cross-section B-B is located at the lowest point of the cantilever beam, which in turn, will have the largest bending moment value; plus it will have a high local stress caused by the Pipe Nozzle Loads (refer to Para. 2.3.4).

Therefore the stresses will be investigated based on each cross-section, respectively.

2.4.1 Valve Body Stress at Cross-Section A-A.

The loadings and the three view drawings are shown in Fig. 2.5 below, and the stresses will be investigated for each view, respectively.

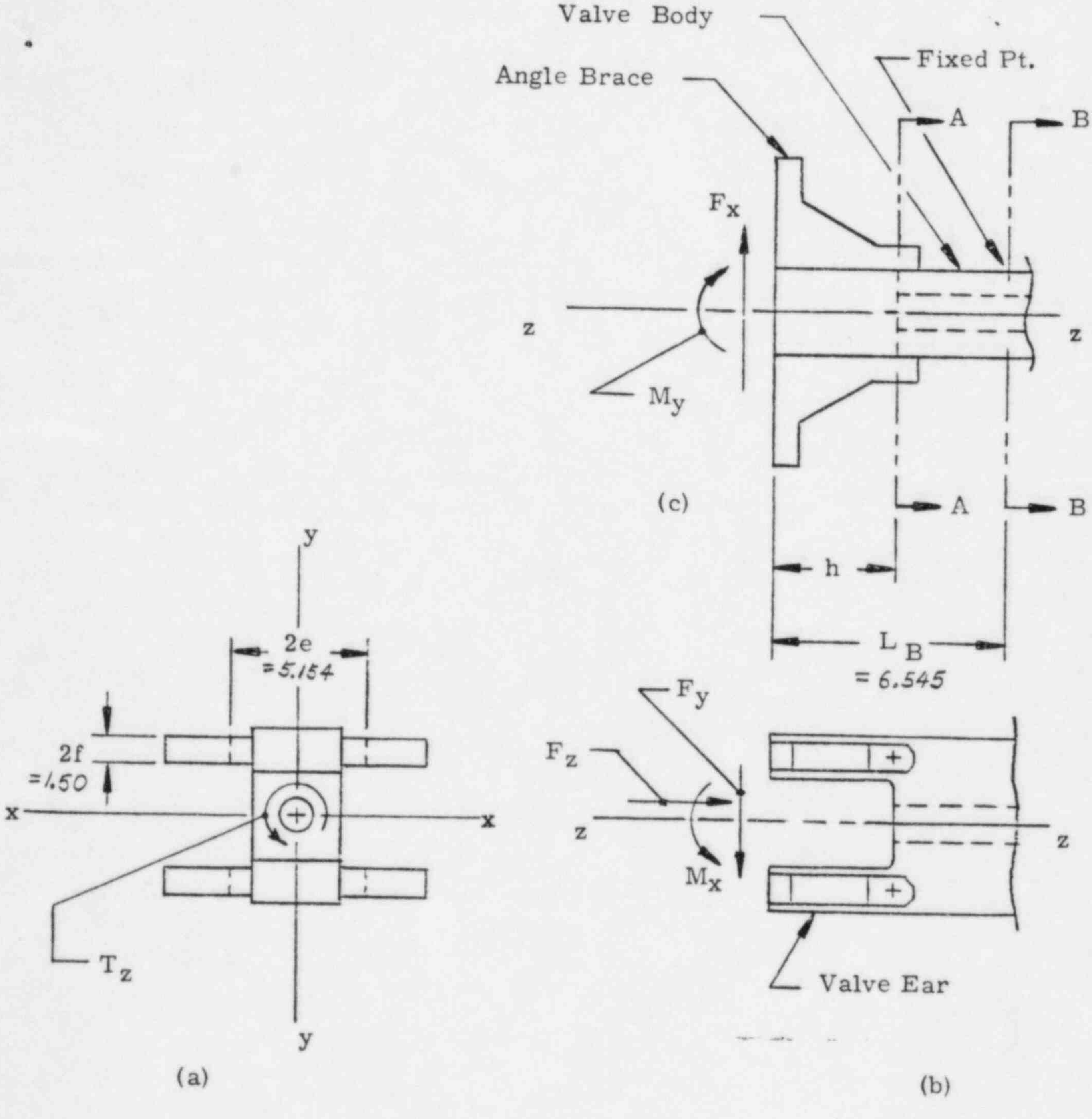

FIG. 2.5 Loadings for Valve Body Cross-Section A-A and B-B.

2.4.1 (a) Stress From Fig. 2.5 (a).

The stress will be a shear stress caused by the torque T_z, and from reference [1]*, page 290, case 4, the shear stress under the torsional loading is

$$\tau_{①} = \left(\frac{1}{2}\right) \frac{T_z\,(3e + 1.8f)}{8e^2\ f^2} \qquad (2.10)$$

$$= \left(\frac{1}{2}\right) \frac{77520\,[\,3(2.577) + 1.8(.750)]}{8(2.577)^2\,(.750)^2}$$

$$= 11780\ PSi.$$

Where $\frac{1}{2}$ stands for the two rectangular sections for this cross-section A-A; e and f are the length and width of each rectangle, respectively.

2.4.1 (b) Stress From Fig. 2.5 (b).

The loadings that cause the stresses are Fy, M_x and F_z. The valve ear, together with the angle brace, is simulated as a Fixed Rectangular Frame. The reactions under each loading are investigated seperately as follows.

2.4.1.(b).1. Reactions And Stresses Caused by Loading Fy.

The simulated structure is shown in Fig. 2.6 below with the cross-section properties.

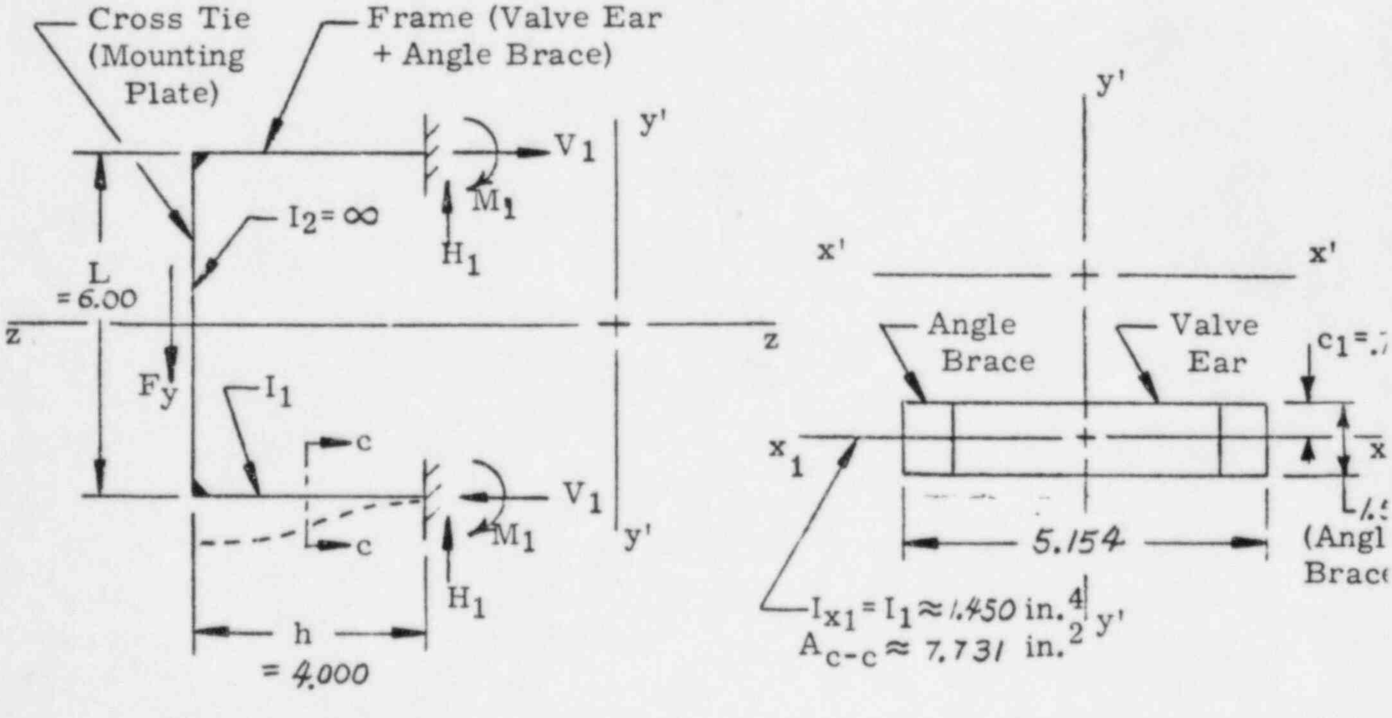

(a)Fixed Rectangular Frame (b) Cross-Section C-C.

Fig. 2.6 Rectangular Frame and Cross-Section.

* See bibliography for references in bracket [ ].

As a simplification, dimension L will be the distance between the center line of the angle brace, h will be the height of the angle brace from the lower bolt hole center, the width of the cross-section will be that of the angle brace and the length of the cross-section is as shown in Fig. 2.6 (b).

From reference [2], page 276, case 16, the reactions are

$$H_1 = \frac{F_y}{2} = \frac{1350}{2} = 675 \text{ lb} \qquad (2.11)$$

$$V_1 = \frac{F_y h}{2L} = \frac{1350\ (4.000)}{2\ (6.00)} = 450 \text{ lb} \qquad (2.12)$$

$$M_1 = \frac{F_y h}{4} = \frac{1350\ (4.000)}{4} = 1350 \text{ in-lb} \qquad (2.13)$$

The stresses will be (refer to Fig. 2.9)

$$\text{Direct stress } \sigma_{V_1} = \frac{V_1}{A_{c-c}} = \frac{450}{7.731} = 58.21 \text{ PSI.} \qquad (2.14)$$

$$\text{Bending stress } \sigma_{M_1} = \frac{M_1 C_1}{I_{x_1}} = \frac{1350\ (.750)}{1.450} = 698.3 \text{ PSI.} \qquad (2.15)$$

2.4.1.(b).2. Reaction And Stress Caused by Loading M_x.

The loading, frame and the reaction are shown in Fig. 2.7 below.

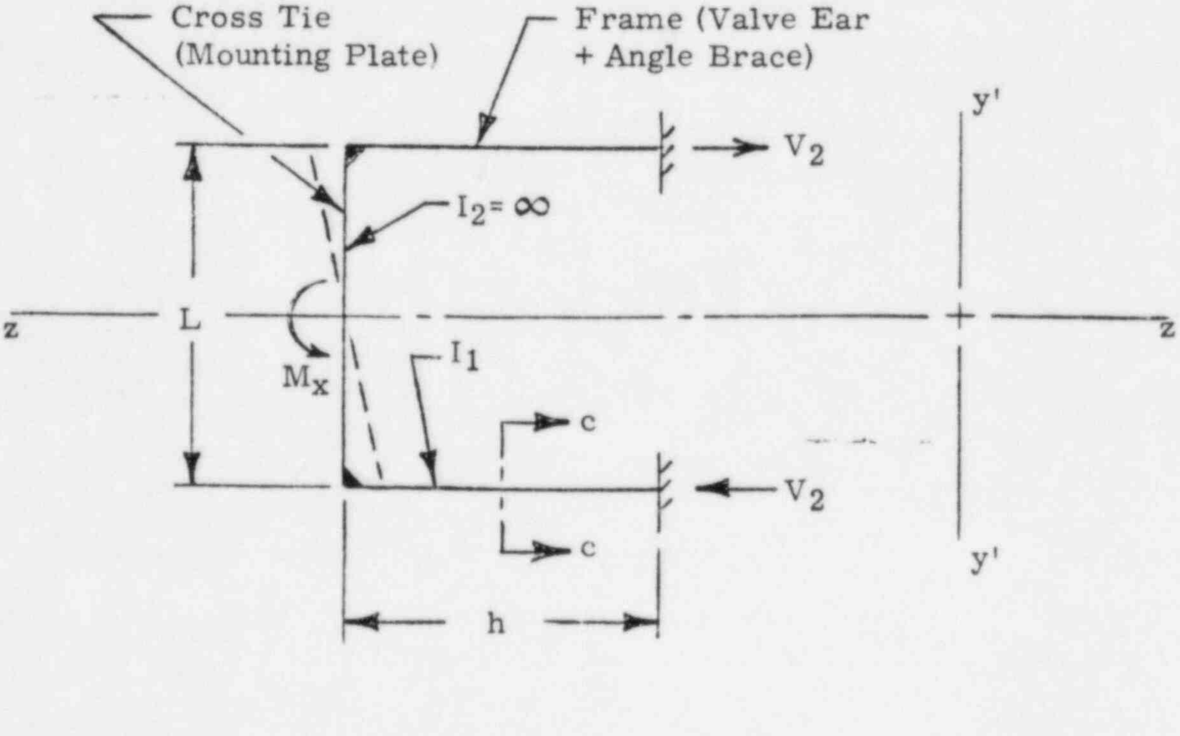

Fig. 2.7 Rectangular Frame.

From reference [2], page 276, case 14, the reaction is

$$V_2 = \frac{M_x}{L} = \frac{1580}{6.00} = 263.3 \text{ lb} \qquad (2.16)$$

The stress is (refer to Fig. 2.9).

$$\text{Direct stress } \sigma_{V_2} = \frac{V_2}{A_{c-c}} = \frac{263.3}{7.731} = 34.06 \text{ PSi.} \qquad (2.17)$$

2.4.1.(b).3. Reaction And Stress Caused by Loading F_z.

The loading, frame and the reaction are shown in Fig. 2.8 below.

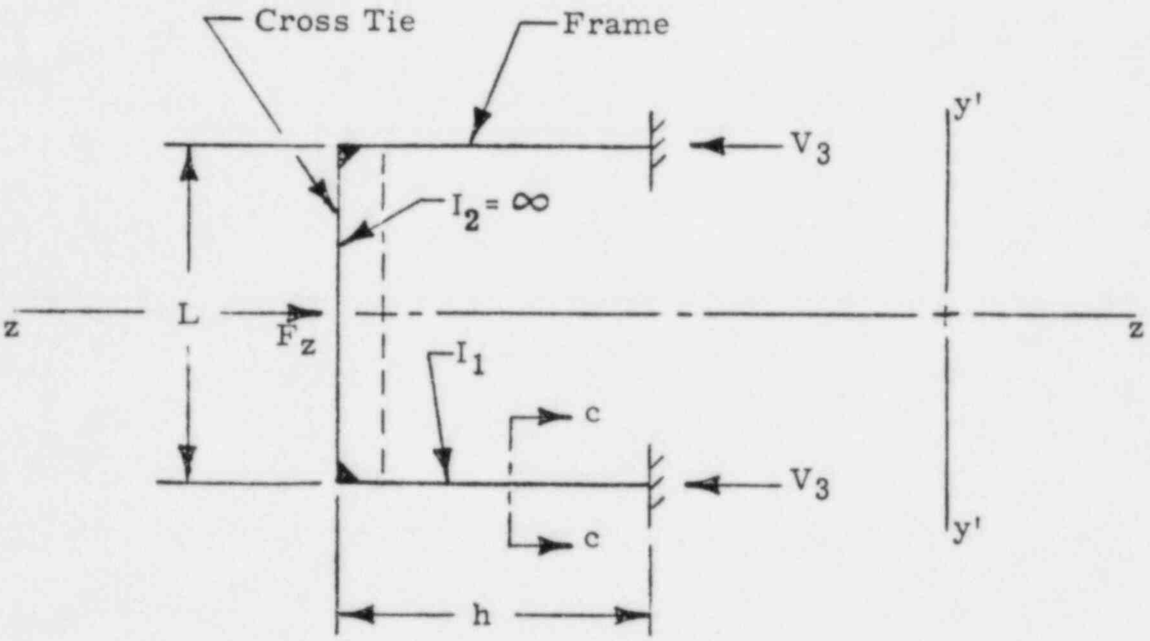

Fig. 2.8 Rectangular Frame.

From reference [2], page 275, case 11, the reaction is

$$V_3 = \frac{F_z}{2} = \frac{1350}{2} = 675 \text{ lb} \qquad (2.18)$$

The stress is (refer to Fig. 2.9)

$$\text{Direct stress } \sigma_{V_3} = \frac{V_3}{A_{c-c}} = \frac{675}{7.731} = 87.31 \text{ PSi.} \qquad (2.19)$$

From Para. 2.4.1.(b).1 through 2.4.1.(b).3, the combined stress is (refer to Fig. 2.9).

$$\sigma_{\textcircled{1}} = \sigma_{V_1} + \sigma_{M_1} + \sigma_{V_2} + \sigma_{V_3} \qquad (2.20)$$

$$= 58.21 + 698.3 + 34.06 + 87.31 = 877.9 \text{ psi.}$$

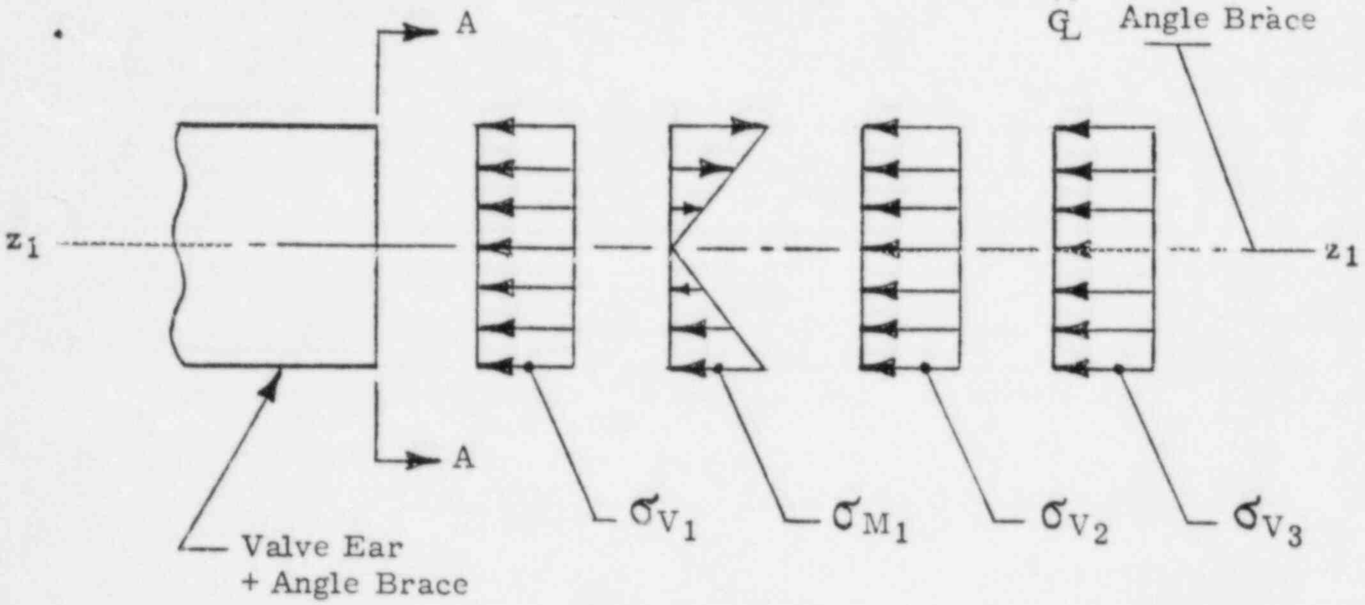

Fig. 2.9 Combined Stress.

2.4.1.(c). Stresses from Fig. 2.5 (c).

The loadings that cause the stresses are F_x and M_y, and the bending moment at this cross-section (section A-A), which is the reaction at this cross-section that will cause the interested stress, is (refer to Fig. 2.5 (c))

$$M_{\textcircled{2}} = M_y + F_x h \qquad (2.21)$$

$$= 16700 + 1350(4.000)$$

$$= 22100 \text{ in-lb}$$

which will cause the bending stress of (refer to Fig. 2.10)

$$\text{Bending Stress } \sigma_{\textcircled{2}} = \frac{M_{\textcircled{2}} C_2}{I_y''} \qquad (2.22)$$

$$= \frac{22100(1.859)}{34.23}$$

$$= 1200 \text{ psi.}$$

Where $I_{y''}$ is the moment of inertia of this cross-section, and C_2 is the distance from the neutral axis to the extreme fibers (refer to Fig. 2.10 below).

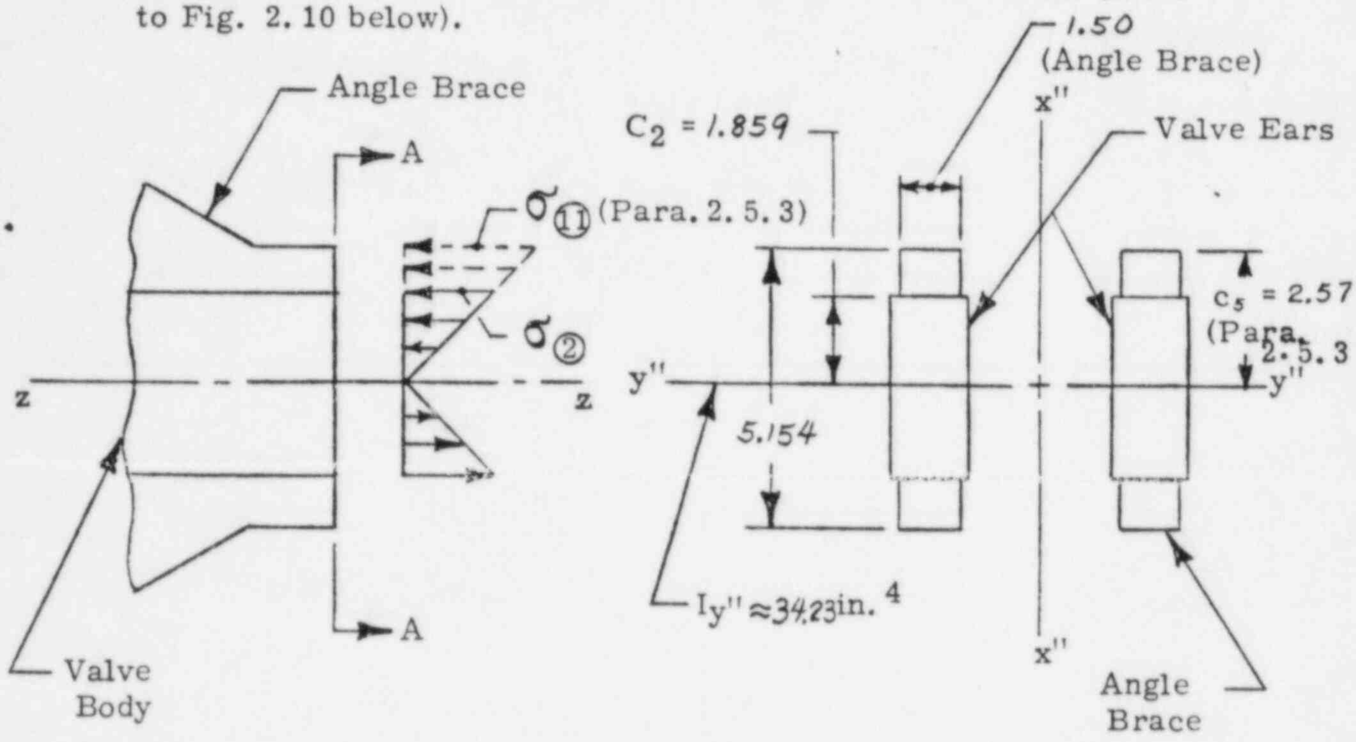

(a) Stress from Fig. 2.5 (c).   (b) Section A-A.

Fig. 2.10 Section A-A and Bending Stress.

From Para. 2.4.1.(a) through 2.4.1.(c), the resultant stresses on the most severe stress element which located at the corner of the cross-section A-A (refer to Fig. 2.11) are (refer to Fig. 2.12)

Shear Stress $\tau_{①} = 11780$ psi. (2.23)

Compressive Stress $\sigma_{A-A} = \sigma_{①} + \sigma_{②}$ (2.24)

$= 877.9 + 1200$

$= 2078$ psi.

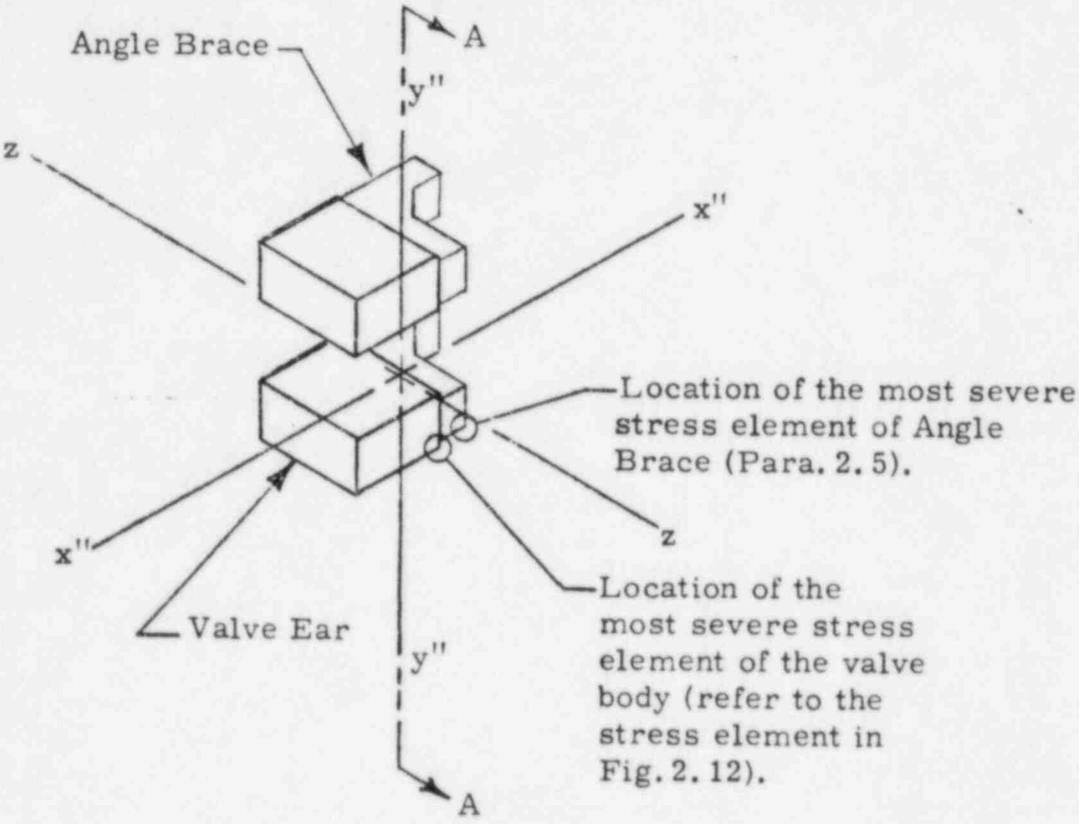

Fig. 2.11 Location of the most severe stress element.

From reference [3], page 87, eq. 5.6, the Equivalent Stress is (refer Fig. 2.12)

$$\sigma_{e,A-A} = (\sigma_{A-A}^2 + 3\,\tau_{①}^2)^{1/2} \qquad (2.25)$$

$$= [(-2078)^2 + 3(11780)^2]^{1/2}$$

$$= 20510 \text{ PSi.}$$

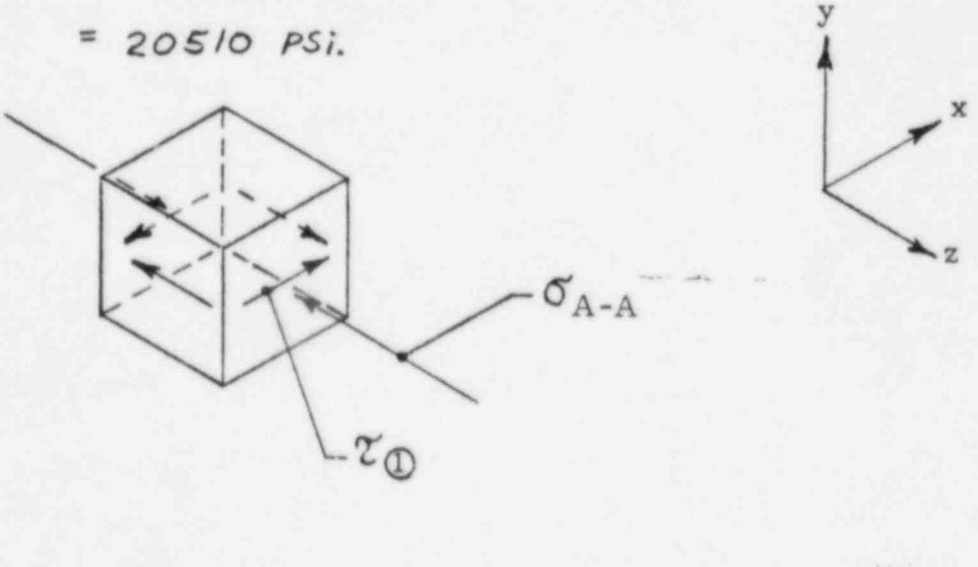

Fig. 2.12 Stress Element and the Stresses.

2.4.2 Valve Body Stress At Cross-Section B-B.

The loadings and three view drawings are shown in Fig. 2.5. The stresses are investigated for each view, respectively.

2.4.2.(a). Stress from Fig. 2.5 (a).

The stress will be the shear stress caused by the torque T_z, and from reference [1], page 293, case 16, the shear stress under the torsional loading is

$$\tau_{\textcircled{2}} = \frac{T_z}{2t_1\,(m-t)(n-t_1)} \qquad (2.26)$$

$$= \frac{77520}{2(.4175)(7.50-2.308)(3.718-.4175)}$$

$$= 5418 \text{ PSI.}$$

Where t, t_1, m and n are shown in Fig. 2.13 below.

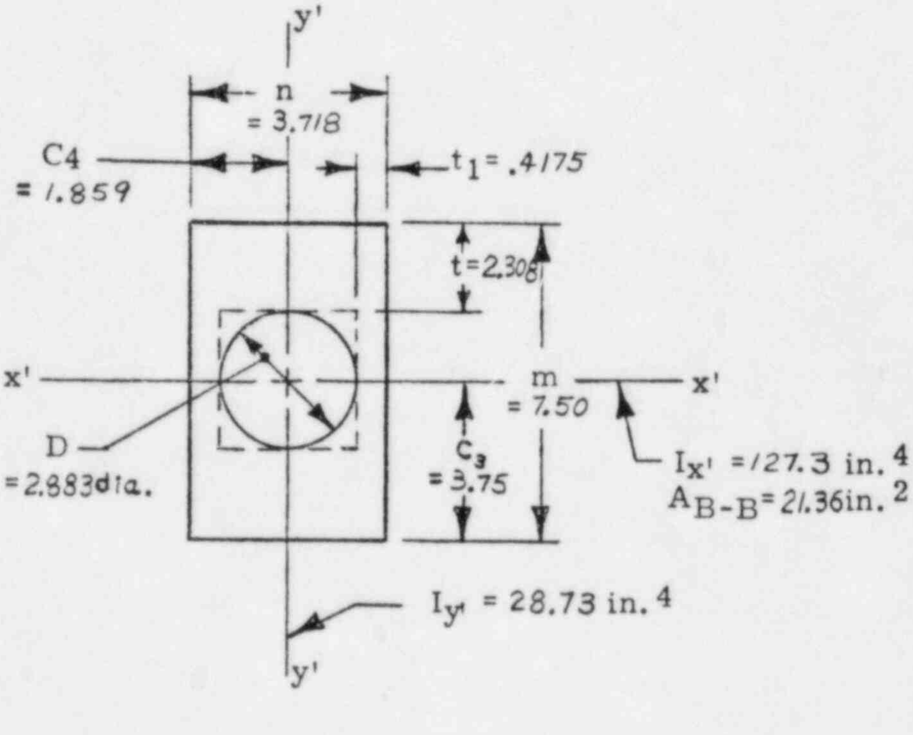

Fig. 2.13 Hollow Rectangle For Torsional Properties.

2.4.2.(b). Stresses from Fig. 2.5(b).

The loadings that cause the stresses are F_y, M_x and F_z. Because this portion is simulated as a beam structure, only the bending moment at this cross-section (section B-B), and the direct compressive force will cause the interested stresses.

2.4.2.(b).1. Stress Caused by the Bending Moment.

The bending moment that causes the stress is (refer to Fig. 2.5(b)).

$$\begin{aligned} M_{\textcircled{3}} &= M_x + F_y L_B \qquad (2.27) \\ &= 1580 + 1350(6.545) \\ &= 10420 \text{ in-lb} \end{aligned}$$

Where L_B is the length of the Total Valve Body Extension Portion (refer to Fig. 5(b) and Fig. 2.5(c)).

Therefore the bending stress is (refer to Fig. 2.14).

$$\begin{aligned} \sigma_{\textcircled{3}} &= \frac{M_{\textcircled{3}} C_3}{I_{x'}} \qquad (2.28) \\ &= \frac{10420(3.75)}{127.3} \\ &= 306.8 \text{ PSi.} \end{aligned}$$

Where $I_{x'}$ is the moment of inertia of this cross-section, and C_3 is the distance from the neutral axis to the extreme fibers of the valve body (refer to Fig. 2.13 and Fig. 2.14).

2.4.2.(b).2. Stress Caused by the Loading F_z.

The stress caused by the loading F_z is (refer to Fig. 2.5.(b) and Fig. 2.14).

$$\begin{aligned} \text{Direct stress } \sigma_{\textcircled{4}} &= \frac{F_z}{A_{B-B}} \qquad (2.29) \\ &= \frac{1350}{21.36} \\ &= 63.20 \text{ PSi.} \end{aligned}$$

Where A_{B-B} is the area of this cross-section (refer to Fig. 2.13).

From Para. 2.4.2.(b).1 and 2.4.2.(b).2, the compressive stress components can be summed together as (refer to Fig. 2.14).

$$\begin{aligned} \sigma_{\textcircled{5}} &= \sigma_{\textcircled{3}} + \sigma_{\textcircled{4}} \qquad (2.30) \\ &= 306.8 + 63.20 \\ &= 370.0 \text{ PSi.} \end{aligned}$$

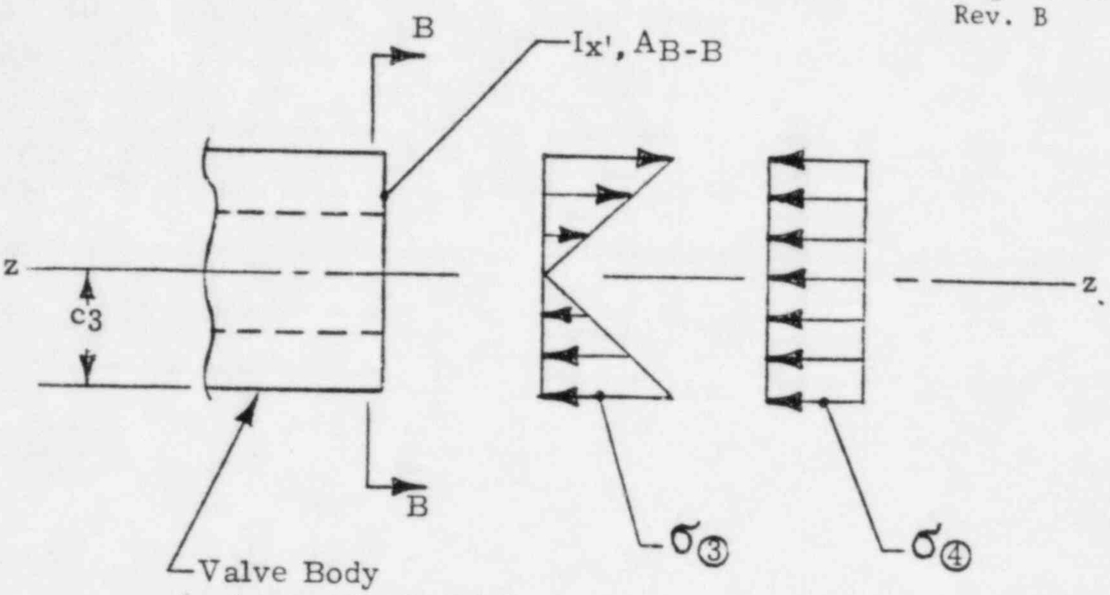

Fig. 2. 14 Stresses from Fig. 2. 5(b).

2. 4. 2. (c). Stress from Fig. 2. 5. (c).

The loadings are F_x and M_y, and from the beam structure approach, the bending moment at this cross-section (section B-B) is (refer to Fig. 2. 5. (c)).

$$M_{\textcircled{4}} = M_y + F_x L_B \qquad (2.31)$$

$$= 16700 + 1350 \, (6.545)$$

$$= 25540 \text{ in-lb}$$

Therefore the bending stress is (refer to Fig. 2. 15)

$$\text{Bending stress } \sigma_{\textcircled{6}} = \frac{M_{\textcircled{4}} C_4}{I_{y'}} \qquad (2.32)$$

$$= \frac{25540 \, (1.859)}{28.73}$$

$$= 1652 \text{ psi.}$$

Where $I_{y'}$ is the moment of inertia of this cross-section, and C_4 is the distance from the neutral axis to the extreme fibers of the valve body (refer to Fig. 2. 13 and Fig. 2. 15).

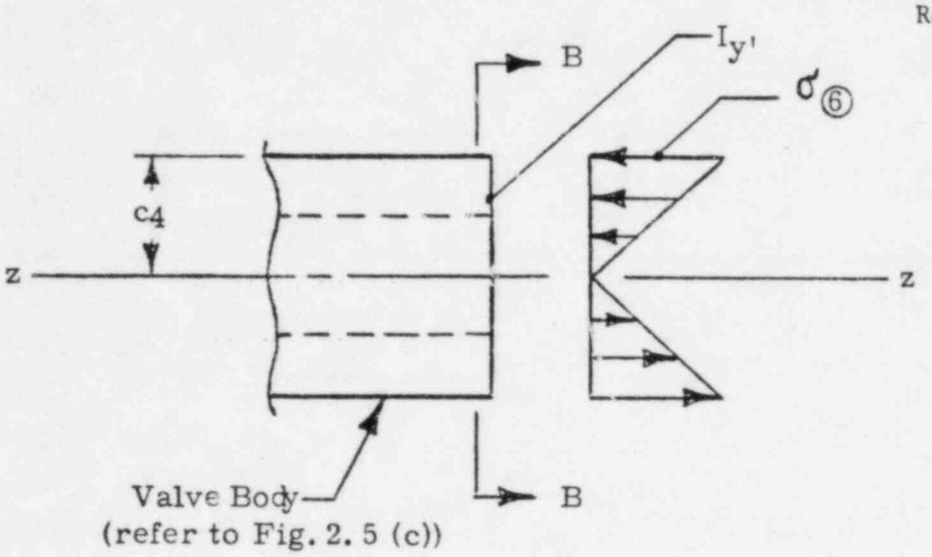

Fig. 2.15. Stress from Fig. 2.5.(c).

2.4.3. Stress Caused by the Nozzle Loads.

From Para. 2.3.4, only the loading components F_1 and M_3 of the nozzle loads will produce the interested stress in the valve body.

2.4.3.1. Stress Caused by Loading F_1.

From Fig. 2.4, loading F_1 is an axial force in x direction; use the gasket ring area as the bearing area, then the stress will be

Compress stress $\sigma_⑦ = \frac{F_1}{A_{G1}}$ (2.33)

Where $F_1 = 0.17 \sigma_y A$ (2.34)

with $\sigma_y = 28300$ psi. (2.35)

$A = 20.764$ in.^{2} (2.36)

$F_1 = (.17)(28300)(20.764)$

$= 99900$ lb

$A_{G1} = \frac{\pi}{4}(OD_G^2 - ID_G^2)$ (2.37)

OD_G = gasket outside diameter (2.38)

$= 21.62$ in.

ID_G = gasket inside diameter

$= 18.68$ in.

$$A_{G_1} = \frac{\pi}{4}\left[(21.62)^2 - (18.68)^2\right]$$

$= 93.06$ in.^{2}

Therefore $\sigma_{\textcircled{7}} = \dfrac{99900}{93.06} = 1074$ psi.

2.4.3.2. Stress Caused by Loading M_3.

From Fig. 2.4, the moment M_3 will cause the tension in the flange mounting bolts and a concentrated compressive force on the valve body. The reaction forces are derived as following (refer to Fig. 2.16 below).

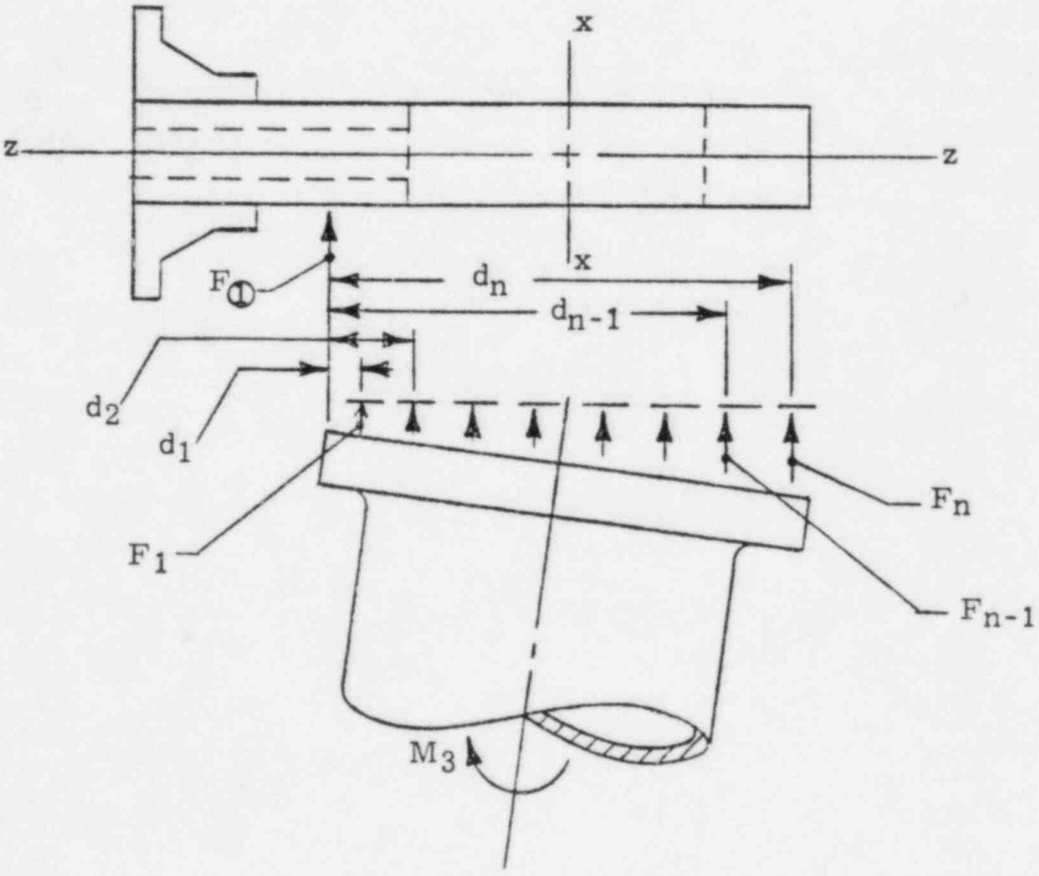

Fig. 2.16 Nozzle Load M_3.

By balancing the moment M_3,

$$M_3 = F_1 d_1 + F_2 d_2 + --- + F_{n-1} + F_n d_n \qquad (2.40)$$

Where n is one half of the number of the mounting bolts. Assume that neither the pipe flange nor the valve body will be bent under the moment M_3, then the forces F_1, F_2, ----, F_{n-1} and F_n will be proportional to the distance d_1, d_2, ----, d_{n-1} and d_n, respectively.

Therefore,

$$\frac{F_1}{d_1} = \frac{F_2}{d_2} = ----- = \frac{F_{n-1}}{d_{n-1}} = \frac{F_n}{d_n} \qquad (2.41)$$

$$\Rightarrow \quad F_1 = \frac{d_1}{d_n} F_n \qquad (2.42)$$

$$F_2 = \frac{d_2}{d_n} F_n \qquad (2.43)$$

$$\vdots$$

$$F_{n-1} = \frac{d_{n-1}}{d_n} F_n \qquad (2.44)$$

Therefore eq. 2.40 becomes

$$M_3 = \frac{d_1}{d_n} F_n d_1 + \frac{d_2}{d_n} F_n d_2 + ---- + \frac{d_{n-1}}{d_n} F_n d_{n-1} + F_n d_n \qquad (2.40a)$$

$$\Rightarrow \quad M_3 d_n = (d_1^2 + d_2^2 + --- + d_{n-1}^2 + d_n^2)\, F_n \qquad (2.40b)$$

$$\Rightarrow \quad F_n = \frac{M_3\, d_n}{d_1^2 + d_2^2 + ---- + d_{n-1}^2 + d_n^2} \qquad (2.40c)$$

For this valve assembly,

$$M_3 = 0.33\, \sigma_y\, Z \qquad (2.45)$$

with $\sigma_y = 28300$ psi (2.35)

$Z = 89.60$ in.^{3} (2.46)

$M_3 = (.33)\,(28300)\,(89.60)$

$= 836800$ in-lb$_f$

the number of bolts is 16 , therefore

$$n = \frac{16}{2} = 8 \qquad (2.47)$$

and $d_1 = 1.284$ in. (2.48a)

$d_2 = 2.982$ in. (2.48b)

$d_3 = 6.120$ in. (2.48c)

$d_4 = 10.22$ in. (2.48d)

$d_5 = 14.66$ in. (2.48e)

$d_6 = 18.76$ in. (2.48f)

$d_7 = 21.90$ in. (2.48g)

$d_8 = 23.60$ in. (2.48h)

therefore $$F_8 = \frac{836800\ (23.60)}{(1.284)^2+(2.982)^2+(6.120)^2+(10.22)^2+(14.66)^2+(18.76)^2+(21.90)^2+(23.60)^2}$$

$$= \frac{1.975 \times 10^7}{1756} \qquad (2.40C)$$

$$= 11250 \quad lb_f$$

and $F_1 = \frac{1.284}{23.60}(11250) = 612$ lb

$F_2 = \frac{2.982}{23.60}(11250) = 1422$ lb

$F_3 = \frac{6.120}{23.60}(11250) = 2917$ lb

$F_4 = \frac{10.22}{23.60}(11250) = 4872$ lb

$F_5 = \frac{14.66}{23.60}(11250) = 6988$ lb

$F_6 = \frac{18.76}{23.60}(11250) = 8943$ lb

$F_7 = \frac{21.90}{23.60}(11250) = 10440$ lb

From the force balance,

$$F_{①} = F_1 + F_2 + F_3 + F_4 + F_5 + F_6 + F_7 + F_8 \quad (2.49)$$

$$= 612 + 1422 + 2917 + 4872 + 6988 + 8943 + 10440 + 11250$$

$$= 47440 \text{ lb}$$

The force $F_{①}$ is assumed to act on an area A_{G_2} as shown in Fig. 2.17 below.

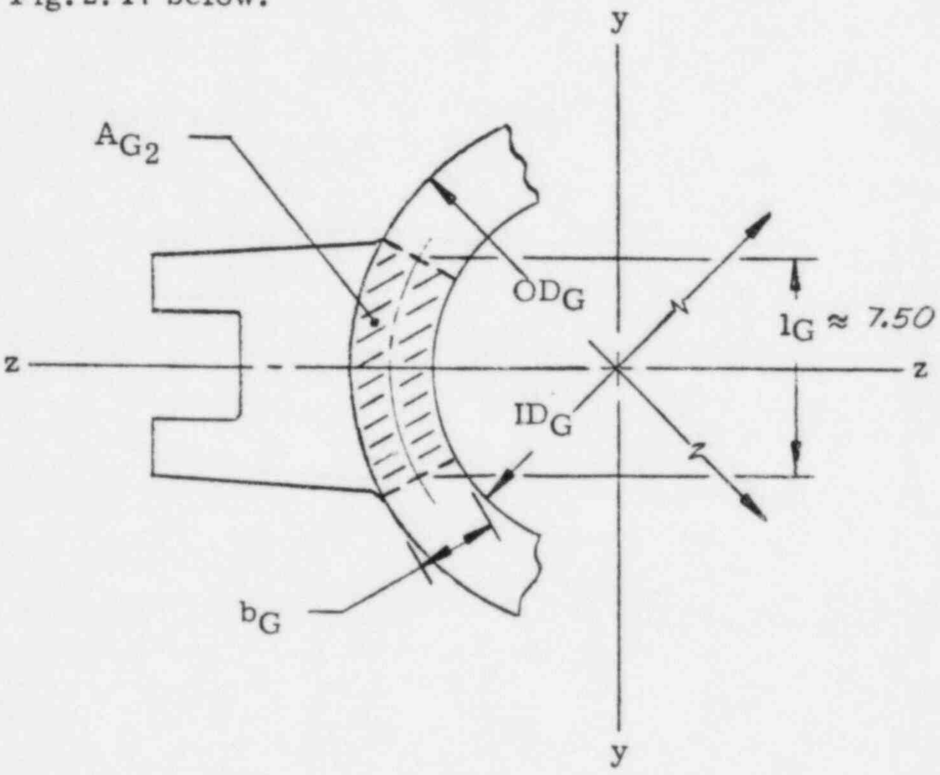

Fig. 2.17 Bearing Area for $F_{①}$.

Therefore the stress is

$$\text{Compressive stress } \sigma_{⑧} = \frac{F_{①}}{A_{G_2}} \quad (2.50)$$

$$\text{Where } A_{G_2} = b_G l_G \quad (2.51)$$

$$b_G = \frac{OD_G - ID_G}{2} \quad (2.52)$$

$$= \frac{21.62 - 18.68}{2}$$

$$= 1.47 \text{ in.}$$

$$A_{G_2} = 1.47\,(7.50) = 11.02 \text{ in}^2$$

$$\sigma_{\textcircled{8}} = \frac{47440}{11.02} = 4305 \text{ PSi.}$$

From Para. 2.4.3.1 and 2.4.3.2, the stress due to the nozzle load is

Compressive stress $\sigma_{\textcircled{9}} = \sigma_{\textcircled{7}} + \sigma_{\textcircled{8}}$ (2.53)

$$= 1074 + 4305$$

$$= 5379 \text{ si.}$$

From Para. 2.4.2.(a) through 2.4.3.2, the resultant stress on the most severe stress element of the cross-section B-B is (refer to Fig. 2.18 and 2.19).

Shear stress $\tau_{\textcircled{2}} = 5418$ PSi. (2.26)

Compressive stress in z direction $\sigma_{\textcircled{10}} = \sigma_{\textcircled{5}} + \sigma_{\textcircled{6}}$ (2.54)

$$= 370.0 + 1652$$

$$= 2022 \text{ PSi.}$$

Compressive stress in x direction $\sigma_{\textcircled{9}} = 5379$ PSi. (2.55)

Therefore the equivalent stress is

$$\sigma_{e,\,B\text{-}B} = \left\{\sigma_{\textcircled{10}}^{\,2} - \left[(\sigma_{\textcircled{10}})(\sigma_{\textcircled{9}})\right] + \sigma_{\textcircled{9}}^{\,2} + 3\tau_{\textcircled{2}}^{\,2}\right\}^{1/2} \quad (2.56)$$

$$= \left\{(-2022)^2 - \left[(-2022)(-5379)\right] + (-5379)^2 + 3(5418)^2\right\}^{1/2}$$

$$= 10500 \text{ PSi.}$$

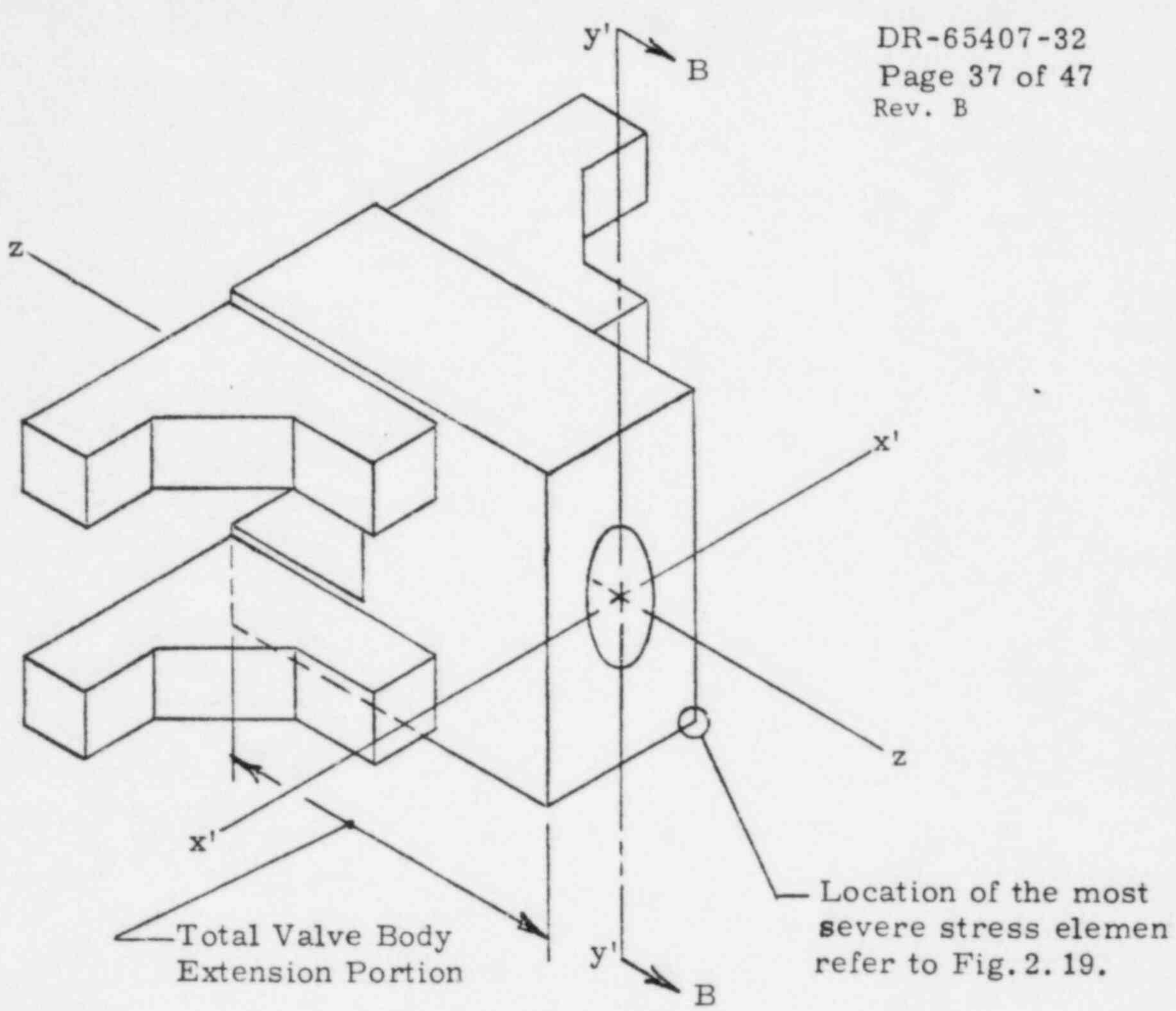

Total Valve Body Extension Portion

Location of the most severe stress elemen refer to Fig. 2. 19.

Fig. 2. 18 Cross-Section B-B.

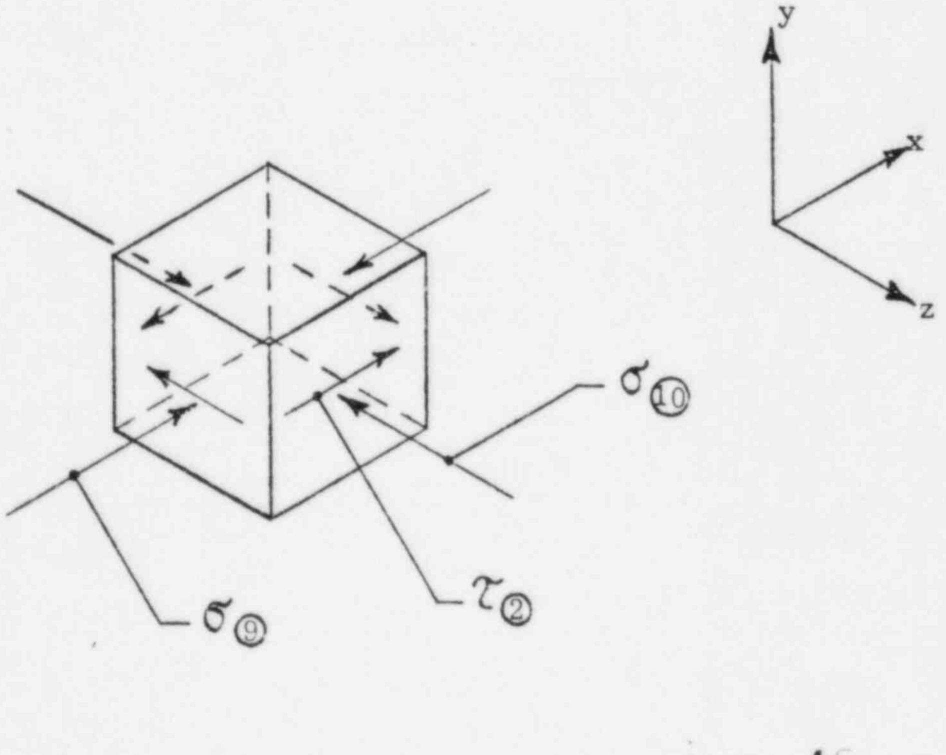

Fig. 2. 19 Stress Element Of Section B-B.

2.5 Stress in the Angle Brace.

The stresses are much the same as those calculated in Para. 2.4.1, stresses at section A-A. Refer to Fig. 2.5, the stresses are calculated as follows.

2.5.1 Stress From Fig. 2.5.(a).

The stress is the shear stress caused by T_z and is calculated in Para. 2.4.1.(a) with the value of

$$\tau_{\textcircled{1}} = 11780 \text{ psi.} \qquad (2.10)$$

2.5.2 Stress From Fig. 2.5.(b).

The stresses are calculated in Para. 2.4.1.(b).1 through 2.4.1.(b).3 with the combined stress value of

$$\sigma_{\textcircled{1}} = 877.9 \text{ psi.} \qquad (2.20)$$

2.5.3 Stress From Fig. 2.5.(c).

The stress is a bending stress as it is shown in Para. 2.4.1.(c), except the distance from neutral axis to outer fiber is c_5 (refer to Fig. 2.10(b)) and the stress is $\sigma_{\textcircled{11}}$ (refer to Fig. 2.10 (a)). The bending stress is

$$\sigma_{\textcircled{11}} = \frac{M_{\textcircled{2}} \quad c_5}{I_{y''}} \qquad (2.57)$$

$$= \frac{22100\,(2.577)}{34.23}$$

$$= 1664 \text{ PSI.}$$

From Para. 2.5.2 and 2.5.3, the combined stress is compressive stress $\sigma_{\textcircled{12}} = \sigma_{\textcircled{1}} + \sigma_{\textcircled{11}}$ (2.58)

$$= 877.9 + 1664$$

$$= 2542 \text{ PSI.}$$

2.5.4 Stress Caused by the Preload of the Stud.

The stress in the angle brace caused by preload of the stud is a compressive stress, from reference [4], page 240, para. 6-5, the stress is calculated as follows.

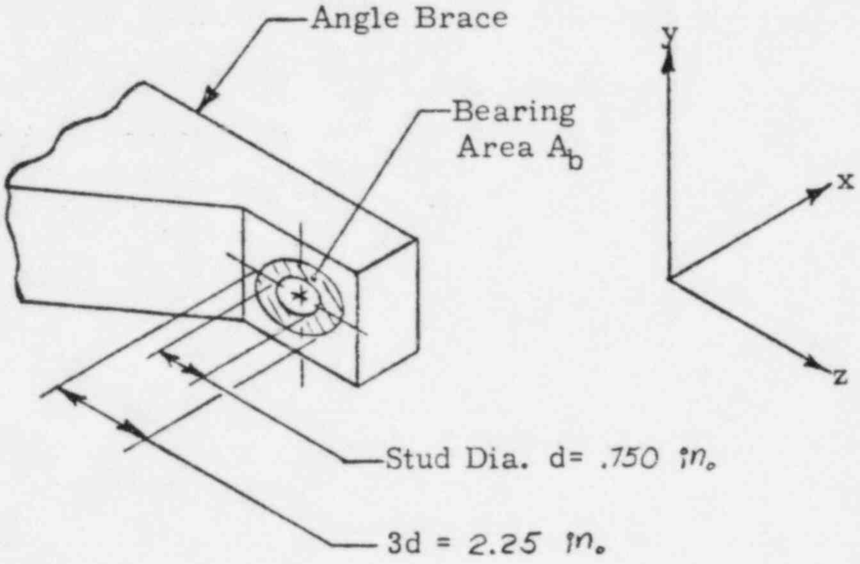

Fig. 2.20 Bearing Area of Angle Brace.

The Bearing Area for compression is

$$A_b = \frac{\pi\left[(3d)^2 - d^2\right]}{4} \quad (2.59)$$

$$= 2\pi d^2 \quad (2.59\text{ a})$$

and the stress is

$$\text{Compressive stress } \sigma_p = \frac{F_{p2}}{A_b} \quad (2.60)$$

$$= \frac{F_{p2}}{2\pi d^2} \quad (2.60\text{ a})$$

Where F_{p2} =13590lb is the preload of the stud.

$$\text{Therefore } \sigma_p = \frac{F_{p2}}{2\pi d^2} \quad (2.60\text{a})$$

$$= \frac{13590}{2\pi(.750)^2}$$

$$= 3845 \text{ PSi.}$$

From Para. 2.5.1 through 2.5.4, the resultant stress in the angle brace are (refer to Fig. 2.11 and 2.21)

Shear stress $\tau_{\textcircled{1}} = 11780$ PSi. (2.10)

Compressive stress in z direction $\sigma_{\textcircled{12}} = 2542$ PSi. (2.58)

Compressive stress in x directinn $\sigma_p = 3845$ PSi. (2.60a)

Therefore the equivalent stress is

$$\sigma_{e,A.B.} = (\sigma_{\textcircled{12}}^2 - \sigma_{\textcircled{12}} \sigma_p + \sigma_p^2 + 3\tau_{\textcircled{1}}^2)^{1/2} \tag{2.61}$$

$$= [(-2542)^2 - (-2542)(-3845)^2 + (-3845)^2 + 3(11780)^2]^{1/2}$$

$$= 20680 \text{ PSi.}$$

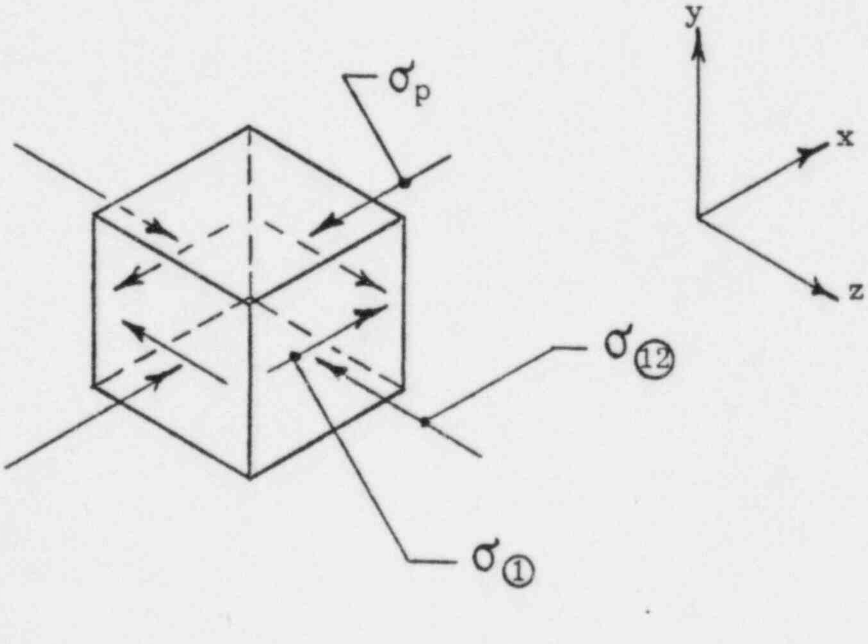

Fig. 2.21 Stress Element and Stresses.

2.6 Loads On The Mounting Bolt (Mounting Plate - Angle Brace)

These mounting bolts are located at the top of the valve body, therefore, the loadings applied on these bolts are the same as those specified in para. 2.4.1 and are shown in Fig. 2.22. Since the bolts are preloaded to maintain surface contact during the loading cycle, only tension on the bolts will be considered, shear force on the bolt will be neglected (refer to reference [4], page 240, para. 6-5). The amount of the bolt preload depends on the magnitudes of the reaction loads in Fig. 2.22 and the yield strength of the bolts. Fig. 2.22 shows that the Mounting Plate-Angle Brace Bolts are located further from the Valve Center Line than that of the Mounting Plate-Valve Body Bolt. Since both of them are of the same size (bolt diameter), the Mounting Plate-Angle Brace Bolt will have the higher stress value and therefore will be the limit of the joint. In the following discussions the above reaction loads will be calculated and used to determine the required bolt preload.

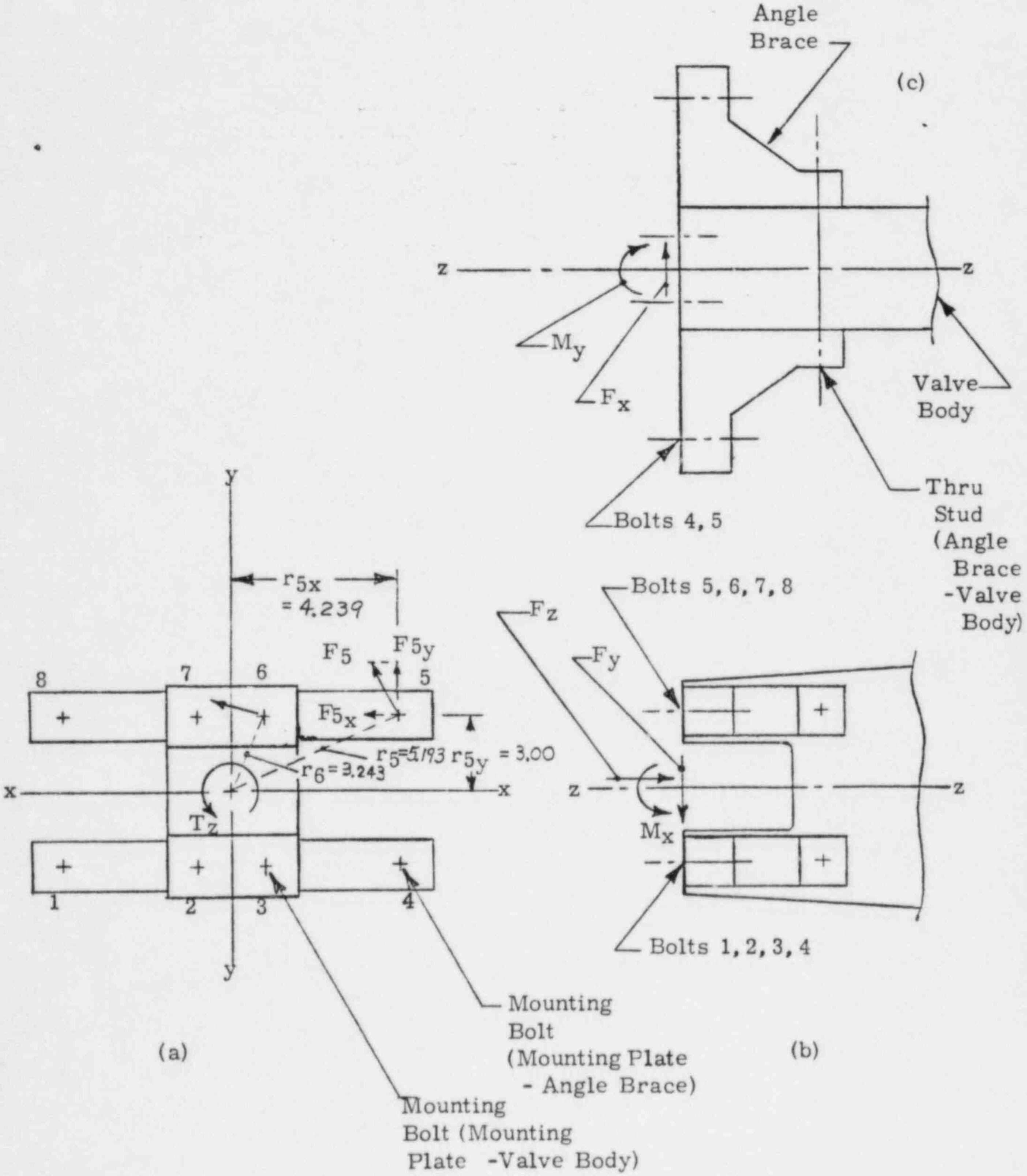

Fig. 2.22 Loadings for the mounting bolt (Mounting Plate-Angle Brace)

2.6.1 Reaction Loads on the Bolt Joint.

Due to the preload, the loadings F_x, F_y and T_z will not add load on the bolt. The reaction load from loading M_x is V_2 as derived in para. 2.4.1.(b).2. With 4 bolts, the tension on each bolt will be

$$\text{Direct tension } F_{②} = \frac{V_2}{4} = \frac{263.3}{4} = 65.82 \text{ lb} \quad (2.62)$$

The reaction loads from M_y are shown in Fig. 2.23. The Angle Brace and the Valve Body are assumed to behave like a single structure. Also, the mounting plate is assumed to rotate as a rigid body about the center line of the valve.

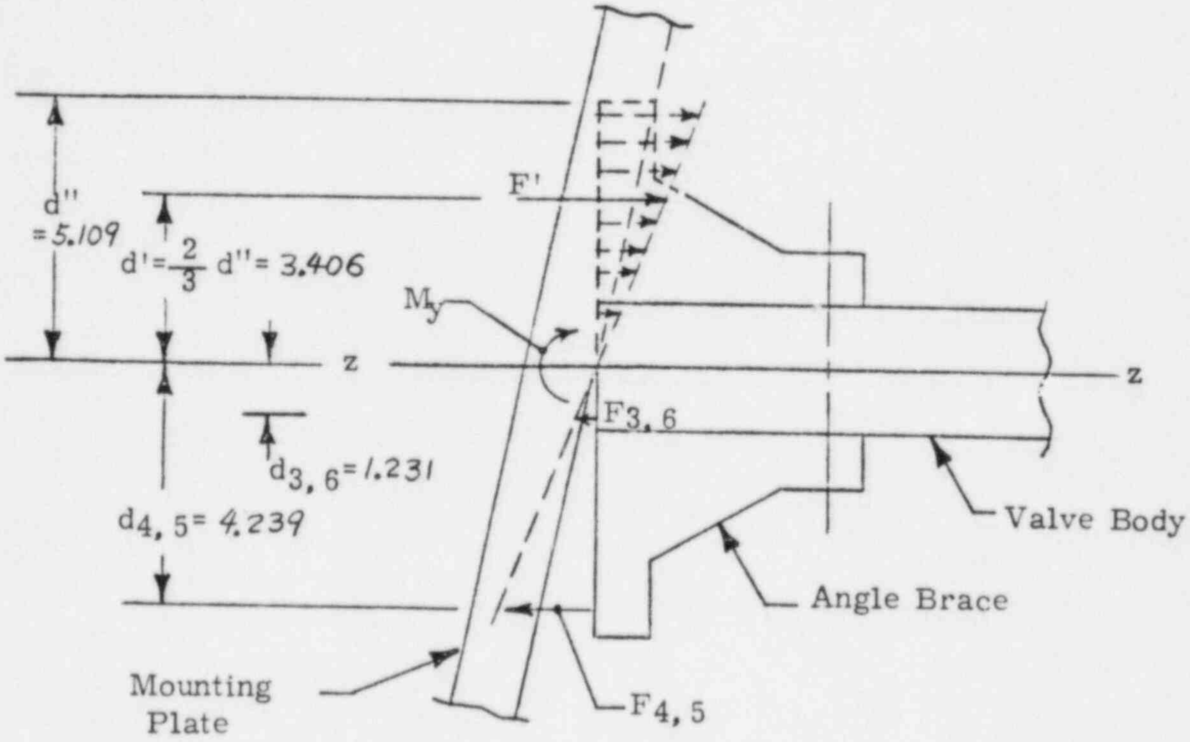

Fig. 2.23 Reaction loads on the bolt from My.

The distributed compressive force is substituted by a concentrated compressive force F', located at the distance $d' = \frac{2}{3} d''$.

By balancing the moment M_y,

$$M_y = (F_{4,5})(d_{4,5}) + (F_{3,6})(d_{3,6}) + F' d' \qquad (2.63)$$

With the same approachs as those in para. 2. 4. 3. 2, that is, the forces are proportional to their distance to the pivot point. Then

$$F_{4,5} = \frac{M_y \, d_{4,5}}{d^2_{4,5} + d^2_{3,6} + (d')^2} \qquad (2.64)$$

Therefore the tension on one bolt is

$$F_{\textcircled{3}} = \frac{1}{2} F_{4,5} \qquad (2.65)$$

$$= (\frac{1}{2}) \frac{M_y \, d_{4,5}}{d^2_{4,5} + d^2_{3,6} + (d')^2} \qquad (2.65\ a)$$

$$= (\frac{1}{2}) \frac{16700 (4.239)}{(4.239)^2 + (1.231)^2 + (3.406)^2}$$

$$= 1139 \text{ lb}$$

2.6.2 Bolt Preload Requirements.

The amount of preload must be greater than the maximum resultant tensile and shear loads on the bolt joint.
The resultant tension on the joint is

$$F_t = F_{\textcircled{2}} + F_{\textcircled{3}} \qquad (2.66)$$

$$= 65.82 + 1139$$

$$= 1205 \text{ lb}$$

From the reference [5], page 303, para. 16, the shear force can be calculated as (refer to Fig. 2. 22).

$$\text{Shear force } F_5 = c \, r_5 \qquad (2.67)$$

$$\text{with } c = \frac{T_z}{N_5 \, r_5^2 + N_6 \, r_6^2} \qquad (2.68)$$

where $T_z = 77520$ in-lb (2.9)

$N_5 = N_6 = 4$ (2.69)

$$C = \frac{77520}{4(5.193)^2 + 4(3.243)^2} = 517 \text{ lb/in}$$

$F_5 = 517(5.193) = 2685$ lb

The preload of the bolt will produce a shear force of

$F_{sp} = \mu F_p = (.2)(13590) = 2718$ lb (2.70)

where μ = coefficient of friction = .2 (2.71)

F_p = preload of the bolt = 13590 lb (2.72)

Both the preload F_p = 13590 lb and the shear force F_{sp} = 2718 lb are larger than resultant tension F_t = 1205 lb and the resultant shear F_5 = 2685 lb, respectively, therefore it is a rigid joint.

The resultant tension and shear force will not add a significant stress in the bolt as long as the preloads are larger than the resultant loads, respectively.

2.7 Load On The Mounting Bolt (Angle Brace-Valve Body).

The major resultant force on this bolt joint will be the tensile force, and with the same approaches as that in para. 2.6, the resultant forces and the preload are calculated as follows.

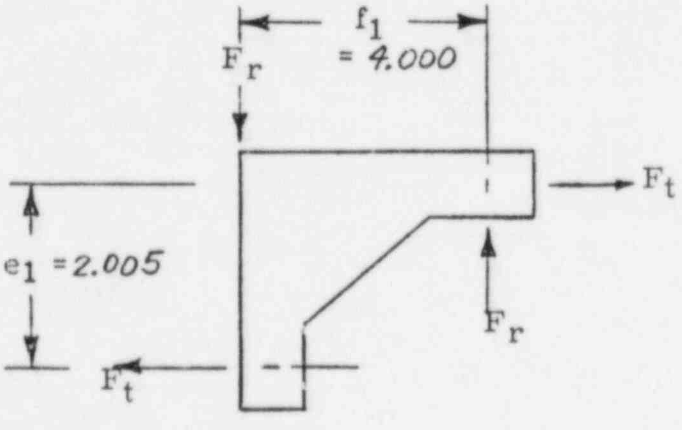

Fig. 2.24 Angle Brace.

Assume the angle brace will rotate against its edge, therefore, from the moment balancing,

$$F_t \, e_1 = F_r \, f_1 \qquad (2.73)$$

$$\Rightarrow F_r = F_t \, \frac{e_1}{f_1} \qquad (2.74)$$

$$= (1205) \, \frac{2.005}{4.000} = 604 \ \ell b$$

The resultant tension and shear force on this bolt joint is F_r and F_t, respectively.

The resultant tension and the shear force will not add a significant stress in the bolt as long as the joint is rigid.

The preload of the bolt is

$$F_{p1} = 13590 \ \ell b \qquad (2.75)$$

Which will produce a shear force of

$$F_{sp1} = \mu \, F_{p1} \qquad (2.76)$$

$$= (.2)(13590) = 2718 \ \ell b$$

Both the preload $F_{p1} = 13590 \ell b$ and shear force $F_{sp1} = 2718 \ \ell b$ are larger than the resultant tension $F_r = 604 \ \ell b$ and $F_t = 1205 \ \ell b$, respectively. Therefore it is a rigid joint.

2.8 Mounting Plate to Actuator Loads.

The bolts from mounting plate to actuator consist of 8-3/4-10 UNC hex. head capscrews. These bolts are located at a radius larger (7.00 vs. 5.194) than the above analysis, therefore the stress in these bolts will be less than the ones between the mounting plate and body. (See Page 11.1)

Bibliography

1. R. J. Roark and Y. C. Young "Formulas for Stress and Strain", 5th Ed., McGraw-Hill Book Company.

2. W. Griffel "Handbook of Formulas for Stress and Strain", Frederick Ungar Publishing Company.

3. R. C. Juvinall "Engineering Considerations of Stress, Strain and Strength", McGraw-Hill Book Company.

4. J. E. Shigley "Mechanical Engineering Design", 3rd Ed., McGraw-Hill Book Company.

5. M. F. Spotts "Design of Machine Elements", 4th Ed., Prentice-Hall, Inc.

6. Catalog 60 published by Crane Valve Company.

DR-65407-32

APPENDIX "A"

QUALIFICATION PROGRAM
FOR
McCANNALOK HIGH PERFORMANCE BUTTERFLY VALVES

ROCKWELL INTERNATIONAL

Appendix "A" - Qualification Program for McCannalok Butterfly Valves with Limitorque Actuators.

1. PURPOSE - The qualification program is designed to meet the requirements of Bechtel specification 2L529TS0103, for a range of McCannalok butterfly valves. The sizes range from 4" to 30", and there is some variation in construction materials. Design factors, seismic requirements, nozzle loadings, classification, and other data are given in the Bechtel specification.

2. METHOD - Qualification of the valves is accomplished by a combination of testing and analysis. Two valves were selected as representative of the range - the 8" and 18" sizes.

   These valves are given a complete test program and a parallel analytical stress study, to determine factors for qualification of the remaining valve sizes by similarity and further analysis as required, and to provide proof that the analytical methods selected are correct and conservative.

3. TESTING - The representative valves are tested as follows:

   3.1 FREQUENCY SEARCH - See Wyle Labs Report No. 45116-1. The purpose of the frequency search test is to show that the fundamental frequencies of the valve are greater than 33 hertz, and that the stress analysis of the valves, on a static basis, is valid.

   Sweep testing results of fundamental frequency were 43.2 hertz for the 8" valve and 52 hertz for the 18" valve. Further data listed under references tests show that various mountings of the actuators have no resulting frequencies below 33 hertz.

   Since the remaining valves have a similar shape, layout, and components and the two tests results are well above the minimum frequency requirement; the remaining valves were analyzed for stresses by rigid body, or static methods. See comparisons in para. 3.4 of this appendix.

   3.2 FUNCTIONAL TEST - See Wyle Laboratories Report No. 45116-2. This test consists of Seismic Test and Static Test of 8" and 18" valves. The purpose of this test is to show that the valve assembly will operate properly under simulated seismic conditions and combined loadings. The tests were performed at Wyle Laboratories (seismic) and Rockwell Flow Control Division (static), respectively, and the test results and means of extrapolations (to the other sizes) are presented.

3.3 MAXIMUM STRESS CONSIDERATIONS - For the 8" and 18" valves, a complete static stress analysis is performed to determine the locations and magnitudes of the maximum stresses under combined loading, and to show that these stresses do not exceed the maximum allowed stresses. The stress analysis also shows members and locations where the stresses are very low, or insignificant.

Correlation of results from the stress analysis of the 8" and 18" valves are used as a basis for simplification, by similarity, of the stress values for the remaining valve sizes. As examples - points having very low stresses, need not be calculated, and the maximum stress calculations are performed at similar locations on the other sizes of valve.

Other simplifications are utilized such as: A smaller operator on the same valve size will result in lower stresses by similarity and separate calculations are not required.

3.4 EXTRAPOLATIONS OF FREQUENCIES - By examining the section properties of the valve body extension portion it is found that the torsional vibration mode will give the lowest natural frequency. (This was determined by preliminary calculation of the various sizes of valves, but not included in the body of the report because of the volume of steps and calculations. Also by examining Wyle test report number 45116-1 it can be visually seen that the greatest deflection is in the torsional mode. See page 24 of the report and a copy included here in as page 5 . Therefore it will be the base for extrapolation. The frequency equation is,

$$f_1 = \left(\frac{1}{2\pi} \sqrt{\frac{GK}{Jl}} \right)_1 \qquad (A.1)$$

Where G is the modulus of rigidity in torsion, psi.
K is the torsional constant, in.^{4}
$J = mr^2$, mass moment of inertia, lb_f - in - s^2.
l is the length of the extended valve body, in.

$$\text{Therefore} \quad \frac{f_2}{f_1} = \left[\frac{K_2 \, (Jl)_1}{K_1 \, (Jl)_2} \right]^{1/2} \qquad (A.2)$$

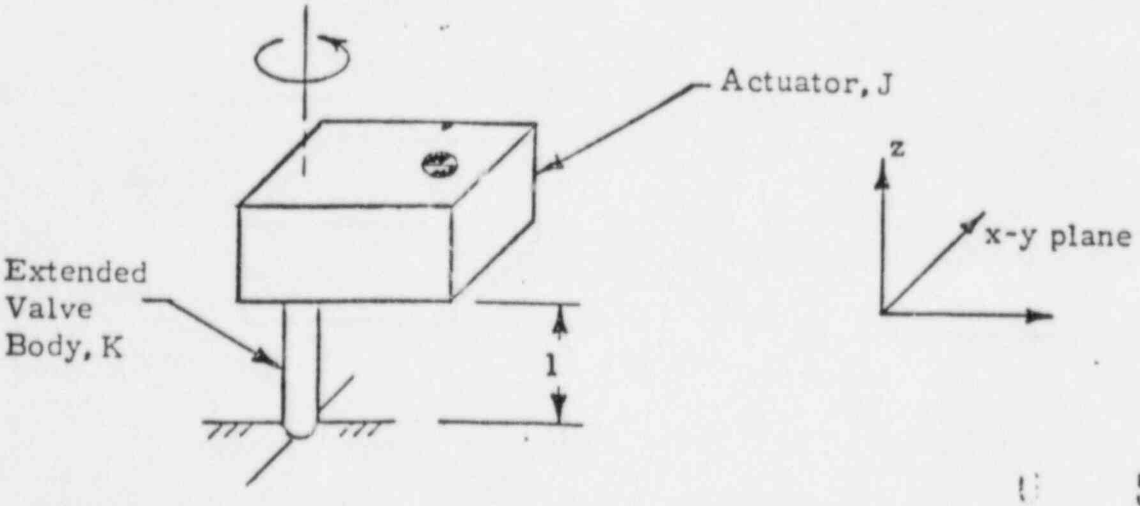

Fig. A. 1 Torsional Vibration.

Table A1 shows the frequency trend based on this approach.

TABLE A1

Fundamental frequency based on ratio using torsional modulus.

Valve Size (in.)	J (lb_f-in-s^2)	K (in.^{4})	l (in.)	f Tested (Hz)	f Extrapolated (Hz)	
4	44.12	1.762	1.30	----	53.6	↑
6	44.12	0.683	1.25	----	34.0	
8	44.12	1.655	1.88	43.2		Based on 8" BFV
10	31.20	1.843	1.88	----	54.2	
12	63.60	3.965	2.34	----	49.9	↓
14	66.86	4.613	2.34	----	49.9	↑
16	66.86	8.698	4.00	----	52.4	Based on 18"BFV
18	74.18	9.472	4.00	51.9		
24	103.1	18.858	4.50	----	58.6	
30	193.9	32.216	4.50	----	55.8	↓

Table A1 Notes:

1. m, mass moment of inertia is based on the Limitorque actuator weight and can be found on page 7 or 8 of the report.
2. r, radius from valve stem centerline to actuator c.g. is $(a^2+b^2)^{1/2}$ where a and b can be found on Fig. 2.1, generally page 16 or 17 of the report.
3. K is twice the value of K from Roark (bibliography ref. 1) page 290, case 4. Where 2a = 2e and 2b=2f, and 2e and 2f can be found in Fig. 2.5, of page 21 of the reports. For section A-A. Except for the 4" size which is given on page 24 of report DR-65407-3.
4. l=h where h is shown in Fig. 2.6 (a). Pages 22, 23 or 24 of the reports.

3.4.1 Examples of extrapolation.

(1) $$\frac{f_6}{f_8} = \left[\frac{K_6 J_8 L_8}{K_8 J_6 L_6}\right]^{1/2} = \left[\frac{0.683X44.12X1.88}{1.655X44.12X1.25}\right]^{1/2} = 0.7878$$

$$f_6 = f_8 X0.7878 = 43.2X0.7878 = 34.03$$

(2) $$\frac{f_{18}}{f_{30}} = \left[\frac{K_{18} J_{30} L_{30}}{K_{30} J_{18} L_{18}}\right]^{1/2} = \left[\frac{9.472X193.9X4.50}{32.216X74.18X4.00}\right]^{1/2} = 0.9300$$

$$f_{30} = \frac{f_{18}}{0.93} = \frac{51.9}{.93} = 55.81$$

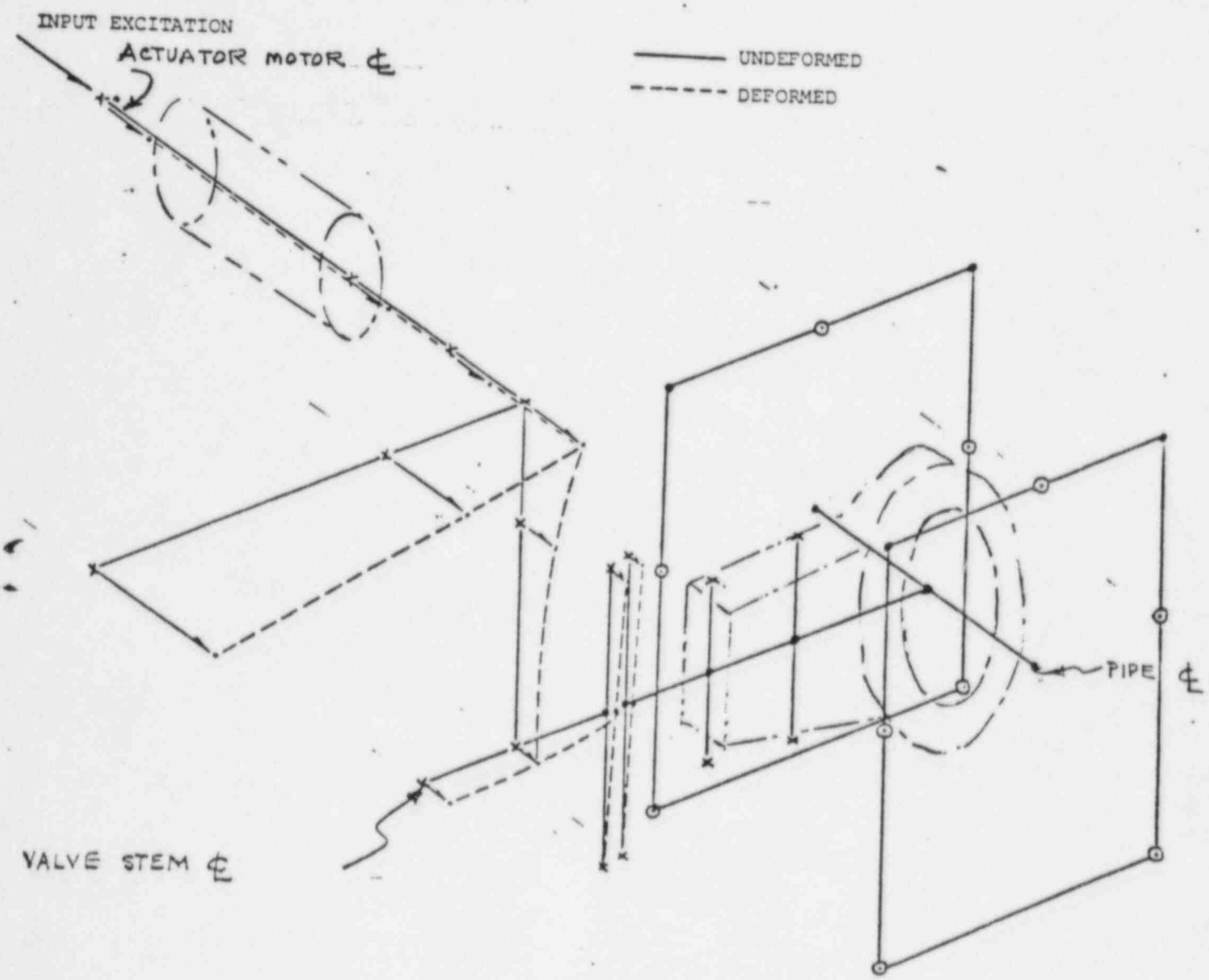

SPECIMEN 1 (8" VALVE)
LONGITUDINAL AXIS
FREQUENCY = 43.1 Hz

DR- 65407- 32

APPENDIX B

Tested Stall Torque Value Of Limitorque Actuators.

The torque values are from Mr. C. Doremus of Limitorque Corporation, letter dated October 29, 1980. The stall torque values of actuators are by actual measurement. The highest stall torque values are used in Appendix C for stem key and taper pin stress calculations.

LIMITORQUE CORPORATION

5114 Woodall Road • P. O. Box 11318 • Lynchburg, Virginia 24506
Telephone—804-528-4400 • Telex—82-9448

Reply to:
101 East Midway Drive
Willowbrook, (Hinsdale), Illinois 60
Phone: (312) 887-7170

October 29, 1980

Hills McCanna Company
400 Maple Avenue
Carpentersville, IL 60110

Attention: Mr. Tom Rost

Reference: Hills McCanna Order No. B-69000
Limitorque Order No. 3B7779, Item E

Dear Tom:

In our discussions of September 18, 1980, you expressed a concern that some of the units on the above referenced order and item would not function your valve. This concern was developed from some relatively low stall torque figures. At my request, Mr. Pat McQuillan of our Lynchburg facility has reviewed the stall torque figures and the operating torque figures of your valve and has stated unequivocally that the units are capable of opening the torque switch, and thus supplying the necessary torque required to operate your valve.

If I can be of further assistance in this or any other matter, please do not hesitate to contact me.

Very truly yours,

LIMITORQUE CORPORATION

Chuck

Chuck Doremus
SALES REPRESENTATIVE

CD/ral

cc: Pat McQuillan/Lybg

P. S. This is a correction of the September 23, 1980 letter.

Automated Valve Operators and Jacks for Industry

3B7779 ITEM	UNIT	S/N	STALL TORQUE ('#)	Valve Size (in.)
A-1	SMB-000/H0BC	275424	190	4
A-2	" H0BC	275425	185	
A-3	" H0BC	275426	190	
A-4	" H0BC	275427	185	
B-1	" H0BC	275432	215	
B-2	" H0BC	275433	230 (A)	
C-1	" H0BC	314353	515	6
C-2	" H0BC	314354	620(A)	
C-3	" H0BC	314355	505	
C-4	" H0BC	314356	550	
D-1	" H0BC	273792	415	8
D-2	" H0BC	273793	405	
D-3	" H0BC	273794	355	
D-4	" H0BC	273795	410	
D-5	" H0BC	273796	355	
D-6	" H0BC	273797	355	
D-7	" H0BC	273798	620	
D-8	" H0BC	273799	565	
D-9	" H0BC	273800	580	
D-10	" H0BC	273801	515	
D-11	" H0BC	273802	695	
D-12	" H0BC	273803	700(A)	
E-1	" H1BC	274398	375	10
E-2	" H1BC	274399	360	
E-3	" H1BC	274400	340	
E-4	" H1BC	274401	405	
E-5	" H1BC	274402	530	
E-6	" H1BC	274403	545	
E-7	" H1BC	274404	315	
E-8	" H1BC	274405	345	
E-9	" H1BC	274406	315	
E-10	" H1BC	274407	515	
E-11	" H1BC	274408	380	
E-12	" H1BC	274409	535	
E-13	" H1BC	274410	485	
E-14	" H1BC	274411	330	
E-15	" H1BC	274412	365	
E-16	" H1BC	274413	350	
E-17	" H1BC	274414	470	
E-18	" H1BC	274415	385	
E-19	" H1BC	274416	420	
E-20	" H1BC	274417	340	
E-21	" H1BC	274418	375	
E-22	" H1BC	274419	410	
E-23	" H1BC	274420	580 (A)	
E-24	" H1BC	274421	335	

3B7779 ITEM	UNIT	S/N	STALL TORQUE ('#)	Valve Size (in.)
F-1	SMB-00 /H1BC	272026	2,235 (A)	12
F-2	" H1BC	272027	1,840	
F-3	" H1BC	272028	1,635	
F-4	" H1BC	272029	1,475	
G-1	SMB-000 H1BC	273816	1,565	
G-2	" H1BC	273817	910	
G-3	" H1BC	273818	860	
G-4	" H1BC	273819	1,020	
G-5	" H1BC	273820	910	
G-6	" H1BC	273821	965	
H-1	" H1BC	273828	1,225	
H-2	" H1BC	273829		
H-3	" H1BC	273830	1,125	
H-4	" H1BC	273831	1,190	
I-1	" H1BC	273836	2,155	14 (CBFA-362) Non-Active Valves
I-2	" H1BC	273837	2,270	
I-3	" H1BC	273838	1,940	
I-4	" H1BC	273839	1,705	
I-5	" H1BC	273840	1,770	
I-6	" H1BC	273841	1,645	
J-1	SMB-00/H2BC	273848	1,955	14 (CBFA-363) Active Valves
J-2	" H2BC	273849	2,100	
J-3	" H2BC	273850	2,320	
J-4	" H2BC	273851	2,425	
J-5	" H2BC	273852	2,235	
J-6	" H2BC	273853	2,395	
J-7	" H2BC	273854	2,360	
J-8	" H2BC	273855	2,360	
J-9	" H2BC	273856	1,965	
J-10	" H2BC	273857	2,100	
J-11	" H2BC	273858	2,290	
J-12	" H2BC	273859	2,675 (A)	
K-1	" H2BC	273872	1,740	16
K-2	" H2BC	273873	1,820	
K-3	" H2BC	273874	2,060	
K-4	" H2BC	273875	1,890	
K-5	" H2BC	273876	1,920	
K-6	" H2BC	273877	2,115	
K-7	" H2BC	273878	2,360	
K-8	" H2BC	273379	2,490	
K-9	" H2BC	273880	2,200	

3B7779 ITEM	UNIT	S/N	STALL TORQUE ('#)	Valv Size (in.)
K-10	SMB-00/H2BC	273881	2,470	16
K-11	" H2BC	273882	2,440	
K-12	" H2BC	273883	2,020	
K-13	" H2BC	295881	2,665 (A)	
K-14	" H2BC	295882	2,145	
K-15	" H2BC	295883	2,495	
K-16	" H2BC	295884	2,350	
K-17	" H2BC	295885	2,180	
K-18	" H2BC	295886	2,100	
L-1	" H2BC	275530	2,000	
L-2	" H2BC	275531	2,155	
L-3	" H2BC	275532	2,040	
L-4	" H2BC	275533	2,040	
L-5	" H2BC	275534	1,815	
L-6	" H2BC	275535	2,610	
M-1	" H3BC	273896	4,200	18
M-2	" H3BC	273897	3,750	
M-3	" H3BC	273898	4,250	
M-4	" H3BC	273899	4,050	
N-1	" H3BC	273904	3,600	
N-2	" H3BC	273905	3,650	
N-3	" H3BC	273906	3,200	
N-4	" H3BC	273907	3,500	
N-5	" H3BC	273908	5,100	
N-6	" H3BC	272909	5,090	
N-7	" H3BC	273910	5,200 (A)	
N-8	" H3BC	273911	4,535	
O-1	" H3BC	275929	3,600	
O-2	" H3BC	275930	3,400	
O-3	" H3BC	275931	3,225	
O-4	" H3BC	275932	3,400	
O-5	" H3BC	275933	4,390	
O-6	" H3BC	275934	4,195	
O-7	" H3BC	275935	3,775	
O-8	" H3BC	275936	5,160	
P-1	SMB-0/H3BC	280513	7,960	24
P-2	" H3BC	280514	7,000	
P-3	" H3BC	280515	7,700	
P-4	" H3BC	280516	6,800	
P-5	" H3BC	280517	6,700	
P-6	" H3BC	280518	5,400	

3B7779 ITEM	UNIT	S/N	STALL TORQUE ('#)	Valve Size (in.)
P-7	SMB-0/H3BC	280519	8,000	24
P-8	" H3BC	280520	8,945	
P-9	" H3BC	280521	9,315	
P-10	" H3BC	280522	10,530	
P-11	" H3BC	280523	9,170	
P-12	" H3BC	280524	9,200	
P-13	" H3BC	293723	9,625	
P-14	" H3BC	293724	9,060	
P-15	" H3BC	293725	9,085	
P-16	" H3BC	293726	10,005	
P-17	" H3BC	293727	11,000 (A)	
P-18	" H3BC	293728	10,475	
Q-1	" H4BC	286379	10,875	30
Q-2	" H4BC	286380	12,475 (A)	
Q-3	" H4BC	286381	10,675	
Q-4	" H4BC	286382	11,940	
Q-5	" H4BC	286383	12,200	
Q-6	" H4BC	286384	11,810	

(A) Torque values are used in App. C calculations.

DR-65407-32

APPENDIX C

Shear stress calculations for stem key and taper pins.

Summary of taper pin vs. motor stall torque and key vs. motor stall torque.

1) 36" AL-BRZ. is on ANSI orders.

2) Limitorque values are based on tested stall torque listed in App. B.

3) EIM (36") is based on value furnished by EIM (calculated stall torque not given).

4) Brown & Root Spec. 2L529TS0103 Para. 3.2.2.2 (ASME)
Spec. 7L539TS502D Para. 3.2.2.2 (ANSI)

TABLE C1

Torque Capacity % Greater Than Motor Stall Torque Based On Material Yield.

1 Valve Size (in.)	2 PIN (%)	3 Key (%)
4	56	65
6	46	1.3
8	130	12
10	388	118
12	109	41
14	74	18
16	190	20
18	149	97
24	100	56
30	50	30
36	258	350

1. Taper Pin Torque Capacity Calculations.

$$T_3 = 2 \left(\frac{\pi}{4} d^2 \right) \tau_y \times n \frac{D}{2}$$

T_3 = Transmitting Torque

d = Mean Diameter of Disc Taper Pins

τ_{up} = Ultimate Shear Stress

n = Number of Taper Pins

D = Stem Diameter

τ_y = Yield Stress in shear

$T'_3 = A\tau$ $\qquad\qquad$ $A = \frac{\pi}{4} d^2 n D$

TABLE C2

Torque Capacity Calculations For Taper Pins.

1 Valve Size (in.)	2 d (in.)	3 D (in.)	4 n	5 A ($in.^3$)	
4	.235	.75	2	.0651	
6	.323	1.00	2	.1639	
8	.385	1.25	2	.2910	
10	.466	1.50	2	.5117	
12	.554	1.75	2	.8437	
14	.554	1.75	2	.8437	
16	.667	2.00	2	1.3977	
18	.665	2.25	3	2.3444	
24	.649	3.00	4	3.9697	
30	.970	3.50	3	7.7593	AL.-BRZ.
36	.970	3.75	3	8.3136	AL.-BRZ. w/EIM Actuator

1) For 17-4PH. SA 564 GR. 630 H1100

Tensile stress - 140000 psi

Yield stress - 115000 psi

τ_y = 66355 psi shear (.577 x 115000)

2) For Aluminum Bronze

ASME: SB150 Alloy 630

Tensile stress - 100,000 psi

Yield stress - 50,000 psi

τ_y = 28850 psi shear (.577 x 50000)

TABLE C2 (continued)

1 Valve Size (in.)	6 Tested Motor stall torque from App. B (lb. - in.)	7 T_3' based on 17-4PH (lb. - in.)	8 % greater than stall torque (C)
4	2760	4320	56
6	7440	10875	46
8	8400	19309	130
10	6960	33954	388
12	26820	55984	109
14	32100 (A)	55984	74
16	31980	92744	190
18	62400	155562	149
24	132000	263409	100
30	149700	223855 (B)	50 (B)
36	66996	239847 (B)	258 (B)

(A) Based on the higher value of two sizes.
(B) 30" & 36" based on AL.-BRZ. pins.

2. Stem Key Torque Capacity Calculations.

$$T_c = \frac{HL}{2} \times \sigma_c \times \frac{D}{2}$$

T_c = Torque to crush in pound inches

D = Shaft diameter

σ_c = Yield compressive stress

= 115000 psi yield for 17-4PH H1100

$$B = \frac{HLD}{4}$$

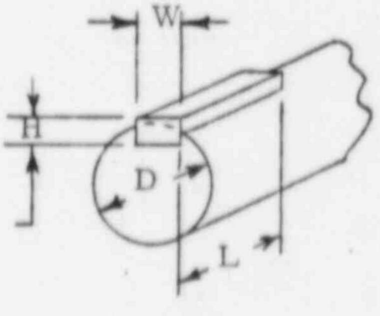

Fig. C1.
Stem and Key.

TABLE C3

Torque Capacity Calculations for Stem Key.

1	2	3	4	5	6	7
Valve Size (in.)	H (in.)	L (in.)	D (in.)	B (in.^{3})	T_c (lb-in.)	%greater than stall torque
4	.12	1.12	.75	.0252	2898	5
6	.19	.94	1.00	.0446	10260 (A)	38
8	.19	1.38	1.25	.0819	9422	12
10	.25	1.41	1.50	.1322	15201	118
12	.25	1.50	1.75	.1641	37734 (A)	41
14	.25	1.50	1.75	.1641	37734 (A)	18
16	.38	1.75	2.00	.3325	38237	20
18	.38	2.50	2.25	.5344	122912 (A)	97
24	.50	2.38	3.00	.8925	205274 (A)	56
30	.62	3.12	3.50	1.6926	194649	30
36	.62	4.51	3.75	2.6214	301461	350

(A) Two keys 90° apart.

DR-65407-32

APPENDIX D

Static Test Of Representive Valves

The purpose of this test is to demonstrate the functional operability of the valve-actuator assembly under all design loading conditions as per Brown & Root Spec. 2L529TS0103, App. C & D. The test is performed on two represenitive valves, 8" & 18" valves, as per Hills-McCanna PS-2-2.43, PS-3-2.7 & PS-3-2.10, respectively.

Test results of these two representive valves are included herein. It shows that both of the representive valves successfully passed the tests and fulfilled the requirements of Brown & Root Specification.

HILLS-McCANNA PRODUCT DEVELOPMENT TESTING

REPORT NUMBER	PRODUCT	DATE ISSUED
1041-BFV 50	Butterfly Valve	9-17-81

TITLE 8" L151-CI-Z-S6 Butterfly Valve With Limitorque Actuator Model SMB-000-2-HOBC./ Reference: CBFA 356; Valve B/M L31510229 and Fixture Dwg. BFV-81-27.

Requested By	Engineer Assigned	P.D.T. Assignment
C.Wu	T.E.Rost	81-BFV-17

Tested By	Conclusions By	Reviewed By	Approved By
Laboratory Staff Date: 8-18-81/8-28-81	A.J.Wild Date: 9-15-81	T.E.Rost Date: 9-16-81	W. Thiere Date: 9-17-81

Object Of Test:

To demonstrate the functional operability of the valve-actuator assembly under all design loading conditions. The pipe nozzle loads and flow dynamic torque are applied. The seismic load is simulated by a static side loading as a result of natural frequency being greater than 33 Hz. Reference: PS-3-2.7 Dated 7-23-81

Conclusions:

The 8" L151-CI-Z-S6 butterfly valve with Limitorque actuator model SMB-000-2-HOBC was subjected to the static deflection test outlined in PS-3-2.7 and compliance to the specification requirements were obtained.

PRODUCT DEVELOPMENT TESTING SUMMARY OF RESULTS

ASSIGNMENT NUMBER	81-BFV-17	8" BFV Test Report
Test Report Number	1041-BFV 50	Page 2 of 5 Pages

Prepared By	Tests Witnessed By	Reviewed By JLPost
A. J. Wild	A. J. Wild (P. D. T.)	Director of Nuclear Prod.
P. D. T. Manager	C. Wu C. Wu (Engineering)	
Date 8-21-81/8-28-81	G. Smid Smid (Quality Control)	Date 9-16-81

Static deflection test per PS-3-2.7 of 8" L151-C1-Z-S6 butterfly valve. Ref. CBFA 356 and BFV-81-27.

I. Pre-test seat leakage; nozzle loading not applied.
285 psig ambient temperature water. (max. 2.7cc or 54 drops in 10 minutes)

There was no leakage across the seat through the entire 10 minute test period. (Tested 8-21-81)

II. Operation of valve from closed to open position; nozzle loads applied. (a)

A. Full Voltage: 460 Volts. (Tested 8-28-81)

Cycle No.	Timed 30° Operation	Calculated 90° Operation	Remarks on Valve Operation
1	3.00 seconds	9.00 seconds	smooth
2	2.84 seconds	8.52 seconds	smooth
3	2.99 seconds	8.97 seconds	smooth

B. Reduced Voltage: 368 Volts. (Tested 8-28-81)

Cycle No.	Timed 30° Operation	Calculated 90° Operation	Remarks on Valve Operation
1	3.03 seconds	9.09 seconds	smooth
2	3.06 seconds	9.18 seconds	smooth
3	3.07 seconds	9.21 seconds	smooth

III. Post- test seat leakage; nozzle loading not applied.
285 psig ambient temperature water. (Max. 2.7cc or 54 drops in 10 minutes)

There was no leakage across the seat through the entire 10 minute test period. (Tested 8-28-81)

IV. Post-test Inspection (b)

There were no visual or liquid penetrant defects noted on any of the valve components. (9-14-81)

NOTES: (a) Reference Appendix A on Page 3 for schematic of load application and applied loads. (Max. 10 seconds for 90° operation)

(b) Reference Appendix C on Page 5 for certificate of examination.

PRODUCT DEVELOPMENT TESTING SUMMARY OF RESULTS

ASSIGNMENT NUMBER	81-BFV-17	8" BFV Test Report
Test Report Number	1041-BFV 50	Page 3 of 5 Pages
Prepared By	Reviewed By	Approved By
Laboratory Staff	C. R. Kersten	A. J. Wild
	Laboratory Supervisor	P. D. T. Manager
Date 8-21-81/8-28-81	Date 8-28-81	Date 8-28-81

Static deflection test per PS-3-2.7 of 8" L151-C1-Z-S6 butterfly valve. Ref. CBFA 356 and BFV-81-27.

Appendix A

I. Schematic of load application.

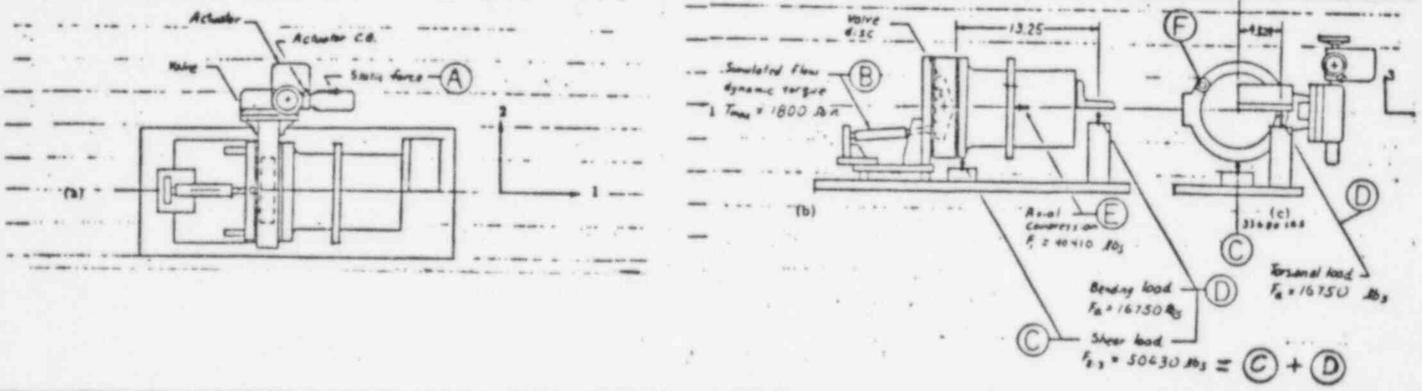

II. Applied loads. (*)

Ⓐ Static Force 2168 Lbs.	Miller cylinder S/N 80501932 Calibration: 12.005 Lbs/psig pressure set at 181 psig to obtain 2173 Lb
Ⓑ Simulated flow dynamic torque T_{max} 1800 Lb. - In.	Bellows cylinder S/N 1175-S Calibration: 2.8401 Lbs/psig pressure set at 125 psig to obtain 1890 ± 90 Lb-In valve operating torque.
Ⓒ Shear load 33680 Lbs.	OTC cylinder S/N 25104 Calibration: 9.127 Lbs/psig pressure set at 3690 psig to obtain 33679 Lbs
Ⓓ Bending (F_a), Torsional (F_a) and Shear load 16,750 Lbs.	185 Lb-Ft torque applied to lubricated 3/4-10 bolt.
Ⓔ Axial compression 40410 Lbs.	149 Lb-Ft torque applied to three (3) lubricated 3/4 - 10 bolts
Ⓕ Companion and fixture flange bolting torque	275 Lb-Ft torque applied to lubricated stud nut fasteners

NOTE: (*) Reference Appendix B on page 4 for equipment calibration record.

PRODUCT DEVELOPMENT TESTING SUMMARY OF RESULTS

ASSIGNMENT NUMBER	81-BFV-17	8" BFV Test Report
Test Report Number	1041-BFV 50	Page 4 of 5 Pages

Prepared By	Reviewed By	Approved By
Laboratory Staff	C. R. Kersten	A. J. Wild
	Laboratory Supervisor	P. D. T. Manager
Date 8-18-81/8-20-81	Date 8-28-81	Date 8-28-81

Static deflection test per PS-3-2.7 of 8" L151-C1-Z-S6 butterfly valve. Rev. CBFA 356 and BFV-81-27.

Appendix B
Equipment Calibration Record

Ⓐ	Miller cylinder S/N 80501932, 8-19-81 (Dillon Force Gage 0-5000 Lbs)
	Pressure gage 0-1000 psig, 8-18-81 (Dead Weight Test)
Ⓑ	Bellows cylinder S/N 1175-S, 8-19-81 (Dillon Force Gage 0-5000 Lbs)
	Pressure gage 0-600 psig, 8-19-81 (Dead Weight Test)
	0-450 Lb-Ft torque wrench, 2-28-81 (Q. C. Department Record)
Ⓒ	O. T. C. cylinder S/N 25104, 8-19-81 (Dillon Force Gage 0-5000 Lbs)
	Pressure gage 0-10,000 psig, 8-18-81 (Dead Weight Test)
Ⓓ	0-450 Lb. Ft torque wrench, 2-28-81 (Q. C. Department Record)
Ⓔ	200 Lb capacity spring scale, 8-20-81 (Instron Calibration Weights)
Ⓕ	0-450 Lb-Ft torque wrench, 2-28-81 (Q. C. Department Record)

HILLS-McCANNA COMPANY

APPENDIX C

CERTIFICATE OF EXAMINATION

DATE 9-14-81

CUSTOMER Houston Lighting & Power Company CUSTOMER P.O. NO. 35-1197-4028 (Unit 1) 35-1197-8028 (Unit 2)

HILLS-McCANNA SALES ORDER NO. N65407 N65408 SHOP ORDER NO. 65407

PRODUCT DESCRIPTION: 8" 150 Class Butterfly valve which has been seismic and static deflection functional tested (with Limitorque actuator). This certificate covers post test inspection of parts.

The following described parts have been liquid penetrant tested and accepted in compliance to the ASME Boiler and Pressure Vessel Code Sect. III, Div. 1.

Body, retainer, disc, stem, gland flange and gland flange studs.

Method and acceptance in accordance with Document No. QSN 8-6 Rev. C

The balance of the parts were visually inspected andno signs of inceptive failure were found.

BATCH NUMBER: 81B03W penetrant, 79B091 developer

Certified Liquid Penetrant Inspector Timothy McLaughlin Level II

By Hills-McCanna Co. Q.A. Kathryn Campbell 9/15/81

HILLS-McCANNA PRODUCT DEVELOPMENT TESTING

REPORT NUMBER	PRODUCT	DATE ISSUED
1042-BFV 51	Butterfly Valve	9-22-81

TITLE 18" L151-CI-Z-S6 Butterfly Valve With Limitorque Actuator Model SMB-00-15-H3BC. Reference: CBFA-366; Valve B/M L34110204 and Fixture Dwg. BFV-80-45.

Requested By	Engineer Assigned	P.D.T. Assignment
C. Wu	T. E. Rost	81-BFV-18

Tested By	Conclusions By	Reviewed By	Approved By
Laboratory Staff Date:8-20-81/9-11-81	A. J. Wild Date: 9-21-81	T. E. Rost TER Date: 9-21-81	W. Pulere Date: 9-22-81

Object Of Test:

To demonstrate the functional operability of the valve-actuator assembly under all design loading conditions. The pipe nozzle loads and flow dynamic torque are applied. The seismic load is simulated by a static side loading as a result of natural frequency being greater than 33 H_z. Reference: PS-3-2.10 Dated 7-23-81

Conclusions:

The 18" L151-CI-Z-S6 butterfly valve with Limitorque actuator model SMB-00-15-H3BC was subjected to the static deflection test outlined in PS-3-2.10 and compliance to the specification requirements were obtained.

PRODUCT DEVELOPMENT TESTING SUMMARY OF RESULTS

ASSIGNMENT NUMBER	81-BFV-18	18" BFV Test Report
Test Report Number	1042-BFV-51	Page 2 of 5 Pages

Prepared By	Test Witnessed By	Reviewed By
A. J. Wild	A. J. Wild (P.D.T.)	T. E. Rost TERost
P.D.T. Manager	C. Wu (Engineering) C. Wu	Director of Nuclear Prod. E
Date 8-20-81/9-21-81	G. Smid (Quality Control) G. Smid	Date 9-21-81

Static deflection test per PS-3-2.10 of 18" L151-CI-Z-S6 butterfly valve. Ref. CBFA 366 and BFV-80-45

I. Pre-test seat leakage; nozzle loading not applied. 285 psig ambient temperature water.

There was no leakage across the seat through the entire 10 minute test period. (Tested 8-20-81)

II. Operation of Valve from closed to open position; nozzle loads applied(a)

A. Full Voltage; 460 Volts (Tested 9-11-81)

Cycle No.	Timed 30° Operation	Calculated 90° Operation	Remarks on Valve Operation
1	3.20 seconds	9.60 seconds	Smooth
2	3.19 seconds	9.57 seconds	Smooth
3	3.10 seconds	9.30 seconds	Smooth

B. Reduced Voltage; 368 Volts (Tested 9-11-81)

Cycle No.	Timed 30° Operation	Calculated 90° Operation	Remarks on Valve Operation
1	3.17 seconds	9.51 seconds	Smooth
2	3.20 seconds	9.60 seconds	Smooth
3	3.17 seconds	9.51 seconds	Smooth

III. Post-test seat leakage; nozzle loading not applied. 285 psig ambient temperature water.

One drop of water formed during the 10 minute test period. (Tested 9-11-81)

IV. Post-test Inspection(b)

There were no visual or liquid penatrant defects noted on any of the valve components. (9-21-81)

Notes: (a) Reference Appendix A on Page 3 for schematic of load application and applied loads. (Max. 10 seconds for 90° operation.)

(b) Reference Appendix C on Page 5 for certificate of examination.

PRODUCT DEVELOPMENT TESTING SUMMARY OF RESULTS

ASSIGNMENT NUMBER	81-BFV-18	18" BFV Test Report
Test Report Number	1042-BFV 51	Page 3 of 5 Pages

Prepared By	Reviewed By	Approved By
Laboratory Staff	C. R. Kersten Laboratory Supervisor	A. J. Wild P.D.T. Manager
Date 8-18-81/9-11-81	Date 9-11-81	Date 9-11-81

- Static deflection test per PS-3-2.10 of 18" L151-CI-Z-S6 butterfly valve. Ref. CBFA 366 and BFV-80-45.

Appendix A

I. Schematic of Load Application

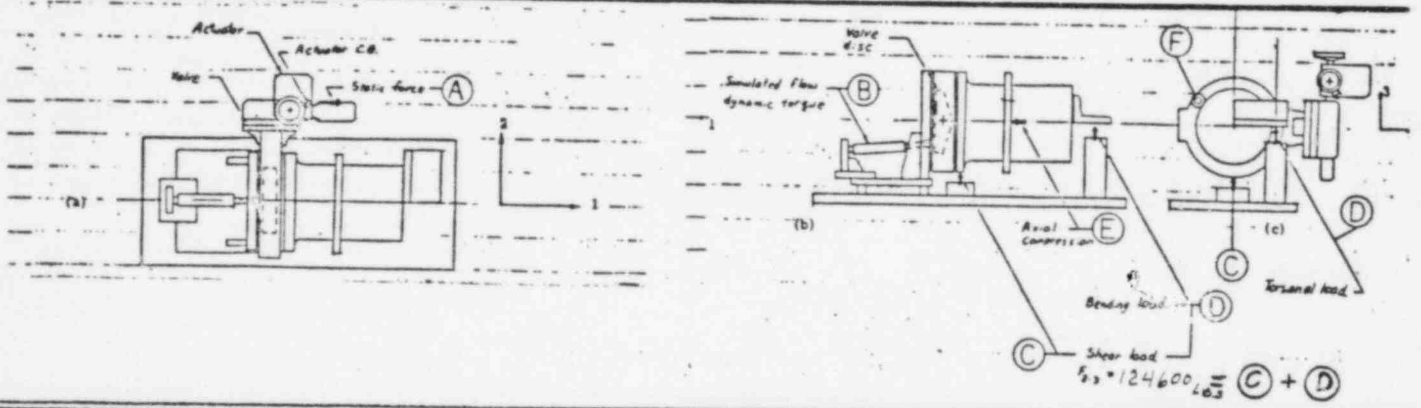

II. Applied Loads (*)

Ⓐ Static Force 3995 Lbs.	Miller cylinder S/N 80501932 Calibration: 12.005 Lbs./psig Pressure set at 333 psig to obtain 3998 Lb
Ⓑ Simulated Flow Dynamic Torque T_{max} 15,000 Lb.-In.	Bellows cylinder S/N 9792 Calibration: 2.795 Lbs./psig Pressure set at 500 psig to obtain 14,880 Lb-In valve operating torque.
Ⓒ Shear Load 69,100 Lbs.	O.T.C. Cylinder S/N 25104 Calibration: 9.127 Lbs/psig Pressure set at 7571 psig to obtain 69100 Lb
Ⓓ Bending (F_a), Torsional (F_a) and Shear Load 55,530 Lbs.	O.T.C. Cylinder S/N 25265 Calibration: 9.51 Lbs/psig Pressure set at 5839 psig to obtain 55,530 Lb
Ⓔ Axial Compression 99,900 Lbs.	511 Lb-Ft torque applied to four (4) lubricated 1-1/4 - 7 UNC bolts.
Ⓕ Companion and Fixture Flange Bolting Torque 975 Lb.-Ft.	975 Lb-Ft torque applied to lubricated stud nut fasteners.

Note: (*) Reference Appendix B on Page 4 for equipment calibration record.

PRODUCT DEVELOPMENT TESTING SUMMARY OF RESULTS

ASSIGNMENT NUMBER	81-BFV-18	18" BFV Test Report
Test Report Number	1042-BFV 51	Page 4 of 5 Pages

Prepared By	Reviewed By	Approved By
Laboratory Staff	C. R. Kersten	A. J. Wild
	Laboratory Supervisor	P.D.T. Manager
Date 8-18-81/9-11-81	Date 9-11-81	Date 9-11-81

Static deflection test per PS-3-2.10 of 18" L151-CI-Z-S6 butterfly valve. Ref. CBFA366 and BFV-80-45.

Appendix B

Equipment Callibration Record

Ⓐ	Miller Cylinder S/N 80501932, 8-19-81	(Dillon Force Gage)
	Pressure Gage 0 - 1000 psig, 8-18-81	(Dead Weight Test)
Ⓑ	Bellows Cylinder S/N 9792, 8-19-81	(Dillon Force Gage)
	Pressure Gage 0 - 3000 psig, 8-19-81	(Dead Weight Test)
	0 - 1550 Lb-Ft Torque Wrench, 8-18-81	(Q.C. Torque Calibrator)
Ⓒ	O.T.C. Cyliner S/N 25104, 8-19-81	(Dillon Force Gage)
	Pressure Gage 0 - 10,000 psig, 8-19-81	(Dead Weight Test)
Ⓓ	O.T.C. Cylinder S/N 25265, 9-11-81	(Dillon Force Gage)
	Pressure Gage 0 - 10,000 psig, 9-03-81	(Dead Weight Test)
Ⓔ	0 - 639 Lb-Ft Torque Wrench, 9-10-81	(Q.C. Torque Calibrator)
Ⓕ	0 - 1550 Lb-Ft Torque Wrench, 8-18-81	(Q.C. Torque Calibrator)

400 MAPLE AVENUE, CARPENTERSVILLE, ILLINOIS 60110 312/426-4100 CABLE HILLSCANA TELEX 722-442

HILLS-McCANNA COMPANY

APPENDIX C

CERTIFICATE OF EXAMINATION

DATE 9-21-81

CUSTOMER Houston Lighting & Power Company CUSTOMER P.O. NO. 35-1197-4028 (Unit 1) 35-1197-8028 (Unit 2)

HILLS-McCANNA SALES ORDER NO. N65407 N65408 SHOP ORDER NO. 65407

PRODUCT DESCRIPTION: 18" 150 Class Butterfly valve which has been seismic and static deflection functional tested (with Limitorque actuator). This certificate covers post test inspection of parts.

The following described parts have been liquid penetrant tested and accepted in compliance to the ASME Boiler and Pressure Vessel Code Sect. III, Div. 1.

Body, retainer, disc, stem, gland flange and gland flange studs.

Method and acceptance in accordance with Document No. QSN 8-6 Rev. C

The balance of the parts were visually inspected andno signs of inceptive failure were found.

BATCH NUMBER: 81B03W penetrant, 79B091 developer

Certified Liquid Penetrant Inspector Kathy McLaughlin Level II

By Hills-McCanna Co. Q.A. Kathryn Campbell 9/21/81

STATIC DEFLECTION TEST OF 8" BFV

INDEX

HILLS-McCANNA COMPANY

REVISION STATUS SHEET

APPROVAL RECORD

DOCUMENT NUMBER: PS-3-2.7

DOCUMENT TITLE: Static Deflection of 8" BFV

ORIGINAL DATE: July 23, 1981

Original Approval:

Prepared by: Ching Wu (Engineering) Reviewed: (Engineering) Approved: W. Pierce (Engineering)

Reviewed: ------ (Quality Assurance) Reviewed: ------ (Mfg. Engineering)

Revisions:

Rev.		Revision Approvals			
Date	Description of Revisions	Eng.	Q.A.	Mfg. Eng.	V.P. Eng.
A	Revised pages 3, 4 and 5. Added Ref. to DR-65407-14 and footnote to static force. 8-17-81	JER 8-17-81	---	---	W. Pierce 8-17-81

Revised form 7/13/81

77-B

STATIC DEFLECTION TEST OF 8" BFV

1. Purpose of the Test:

The purpose of this test is to demonstrate the functional operability of the valve-actuator assembly under all design loading conditions. The pipe nozzle loads and flow dynamic torque are applied. The seismic load is simulated by a static side loading as a result of natural frequency being greater than 33 Hz, Reference 3. (3).

2. Descriptive Information:

(1) Customer Valve I.D. No. 08 ACT BM 62 LS 2A-C RXX
(2) Valve Size & Fig. No. 8" L151 C1-Z-S6
(3) Valve B/M No. L31510229
(4) Actuator Description Limitorque SMB-000-2-HOBC
(5) Actuator Mounting Bracket B/M No. H35510218
(6) Sales Dwg. No. CBFA 356
(7) Fixture Dwg. No. BFV-81-27

3. Reference:

(1) Brown & Root Spec. 2L529TS103D
(2) Hills-McCanna PS-2-2.43, Rev. D
(3) Wyle Labs. Test Report No. 45116-1
(4) Wyle Labs. Test Report No. 45116-2
(5) Hills-McCanna DR-65407-14.
(6) Hills-McCanna Eng. Lab. Test Request No. ____________

4. Calculated Data:

(1) Nozzle Loads Based on App. D of Reference 3. (1):

F_1 = 40410 lbs

F_2 = 35660 lbs

F_3 = 35660 lbs

T_1 = 80870 lb. - in.

M_2 = 157000 lb. - in.

M_3 = 157000 lb. - in.

(2) Combined Nozzle Loads:
Loads have been combined because symmetry of body lends itself to this simplification.

Tension/Compression $F_1 = 40410$

Shear Load $F_{2-3} = 50430$ lbs.

Torsion $T_1 = 80870$ lb. - in.

Bending $M_{2-3} = 222000$ lb. - in.

(3) Simulated Flow Dynamic Torque:

$T_{max.} = 1800$ lb. - in. based on $\Delta P = 150$ psi.

Fluid pressure in the hydraulic circuit $P = 262$ psig.

(4) Static Force Calculation:

Actuator Mass $M_a = 230\ lb_m$

Combined Seismic Acceleration $a = 8.57g$ as per Reference 3.(4).

Static Force $F = (1.1)(a)(M_a) = (1.1)(8.57)(230) = 2168$ lbs.*

(5) Full Voltage of Actuator 460 volts

Time limit 10 sec. max. per quarter turn based on Full Voltage.

Reduced voltage .80 x 460 = 368 volts

* A 10% margin is added as per Brown & Root suggestions.
Air pressure for the loading cylinder is 173 psig.
As shown in Fig. 1, the location of static force application is offsetted from actuator C.G. pt. The torsional load, therefore, is increased. This will lead to a conservative result as the torsional stress is the dominant factor in stress analysis, refer to eq. 2.25 of DR-65407-14.

5. Test Fixture and Applied Loads:

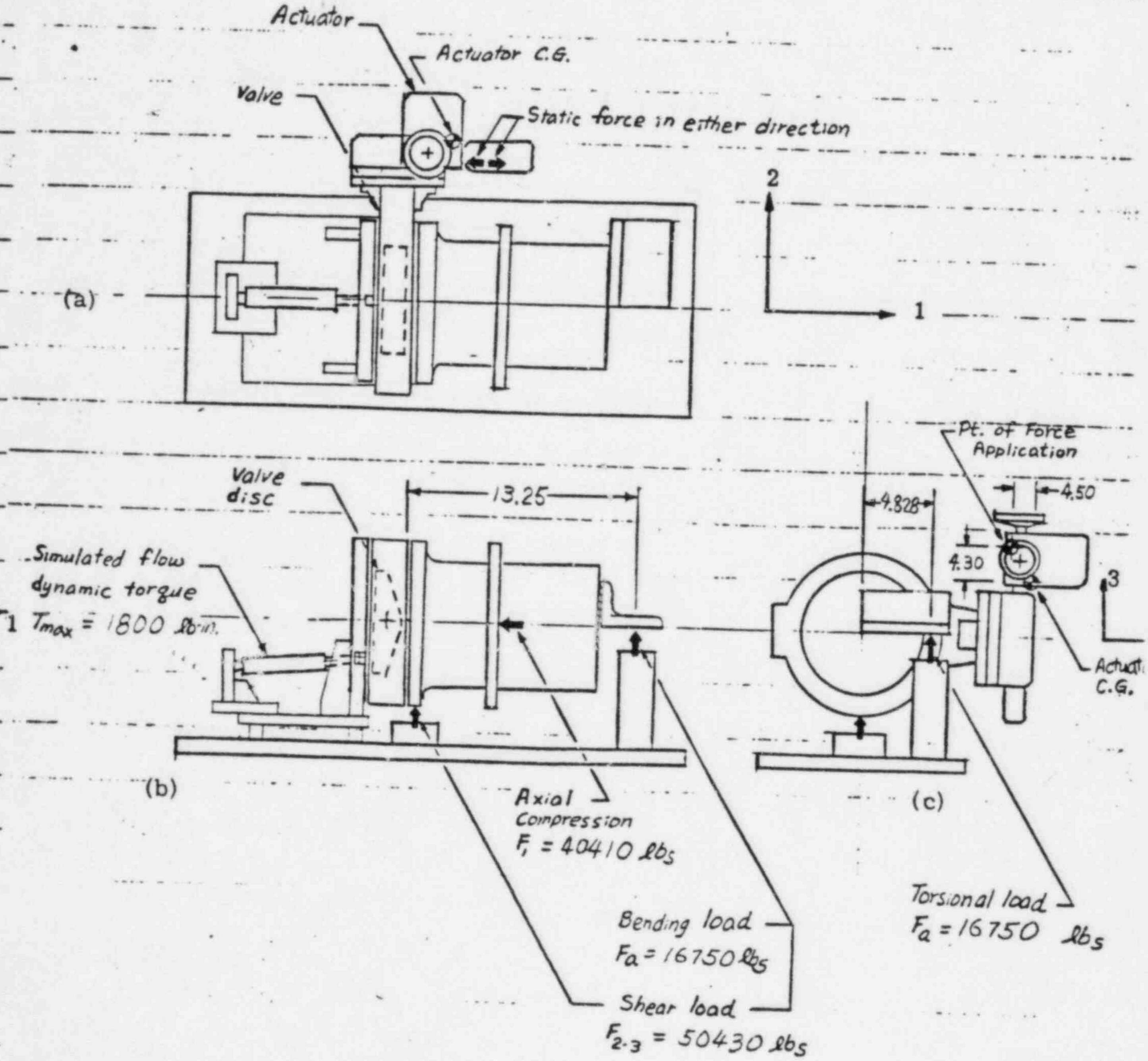

Fig. 1 Test Fixture and Applied Loads.

77-E

6. Test Procedure:

(1) This valve and actuator had previously been seismically tested at Wyle Laboratories, Wyle Seismic Simulated Test Report No. 45116-2, and also had performed on it a Resonant Search, Wyle Report No. 45116-1.

(2) Assemble valve and fixture and apply loads as specified in Fixture Dwg. No. BFV-81-27.

(3) Apply and maintain the specified loads (nozzle loads, flow dynamic torque and static force). The nozzle loads are applied and maintained by torque bolts and loading cylinder, the flow dynamic torque is applied by the hydraulic circuit, and the static force is applied by a loading cylinder.

(4) Operate valve by actuator at full voltage, record cycle time (cycle time should be within specified time limit). Repeat operating cycle for two additional cycles. Observe any binding, seizing or unsmooth cycling.

(5) Operate valve by actuator at reduced voltage, record cycle time. Repeat operating cycle for two additional cycles. Observe any binding, seizing or unsmooth cycling.

7. Test Results:

(1) Pre seat leakage test: * 1

(a) Test medium Tap Water

(b) Test pressure 285 psig.

(c) Test time 10 min.

(d) Leakage ______________ * 2

(2) Full Voltage (460 Volts) Cycling Test:

(a) Due to the mechanism of the test fixture, the valve disc can only perform 0° thru 30° open and close cycle. The test cycle time, therefore, is calculated for 90° comparison purpose.

---

* 1 Pipe flange bolts can be retightened and sealant can be applied should leakage happen between valve and pipe flange surfaces.

* 2 Refer to Para. 7. (4). (e) for acceptable leakage rate.

(2) Continued

(b) 1st cycling test:

30° cycling time __________sec.

Calculated quarter turn cycling time __________sec.

Time limit 10 Sec. per quarter turn.

(c) 2nd cycling test:

30° cycling time __________sec.

Calculated quarter turn cycling time __________sec.

(d) 3rd cycling test:

30° cycling time _________sec.

Calculated quarter turn cycling time _________sec.

(e) Was operation smooth ? ___________. If no, describe______
yes/no

____.

(3) Reduced Voltage (368 volts) test:

(a) As per Para. 7.(2).(a), the valve disc can only be cycled from 0° thru 30°. The test time is again calculated for 90° operation.

(b) 1st cycling test:

30° cycling time __________sec.

Calculated quarter turn cycling time __________sec.

The cycling time at this voltage does not have to meet 10 sec. per quarter turn limit.

(c) 2nd cycling test:

30° cycling time __________sec.

Calculated quarter turn cycling time __________sec.

(3) Continued

(d) 3rd cycling test:

30° cycling time __________sec.

Calculated quarter turn cycling time _________sec.

(e) Was operation smooth? ___________, If no, describe_______
yes/no

____.

(4) Post seat leakage test: *

(a) Test medium Tap Water

(b) Test pressure 285 psig.

(c) Test time 10 min.

(d) Leakage _________________

(e) Acceptable seat leakage 2.7 cc per 10 min., 54 drops of water equivalent.

8. Post Test Inspection:

(a) The valve assembly shall be disassembled and inspected. This shall include as a minimum Liquid Penetrate Inspection (per HMC QSN-8-6) of body, retainer, disc, stem, gland flange and gland flange studs and visual inspection of other parts.

Report finding (s)____

____

9. Test Location and Date:

(a) Test performed at ______________________________by__________

______________, date________________.

(b) Witnessed by _______________________Title__________________,

date____________________.

---

* Pipe flange bolts can be retightened and sealant can be applied should leakage happen between valve and pipe flange surfaces.

77- H

STATIC DEFLECTION TEST OF 18" BFV

INDEX

HILLS-McCANNA COMPANY

REVISION STATUS SHEET

APPROVAL RECORD

DOCUMENT NUMBER: PS-3-2.10

DOCUMENT TITLE: Static Deflection of 18" BFV

ORIGINAL DATE: July 23, 1981

Original Approval:

Prepared by: Ching Wu (Engineering) Reviewed: (Engineering) Approved: (Engineering)

Reviewed: --------- (Quality Assurance) Reviewed: ----------- (Mfg. Engineering)

Revisions:

Rev. Date	Description of Revisions	Revision Approvals			
		Eng.	Q.A.	Mfg. Eng.	V.P. Eng.
A	Revised pages 3, 4 and 5. Added Ref. to DR-65407-32 and footnote to static force. 8-17-81	8/17/81	---	---	8-17-81

Revised form 7/13/81

77-5

STATIC DEFLECTION TEST OF 18" BFV

1. Purpose of the Test:

The purpose of this test is to demonstrate the functional operability of the valve-actuator assembly under all design loading conditions. The pipe nozzle loads and flow dynamic torque are applied. The seismic load is simulated by a static side loading as a result of natural frequency being greater than 33 Hz, Reference 3. (3).

2. Descriptive Information:

(1) Customer Valve I.D. No. 18 ACT BM 62 LS2A-ERXX
(2) Valve Size & Fig. No. 18" L151 C1 Z-S6
(3) Valve B/M No. L34110204
(4) Actuator Description Limitorque SMB-0015-H3BC
(5) Actuator Mounting Bracket B/M No. H381A0217
(6) Sales Dwg. No. CBFA 366
(7) Fixture Dwg. No. BFV-80-45

3. Reference:

(1) Brown & Root Spec. 2L529TS103D
(2) Hills-McCanna PS-2-2.43, Rev. D
(3) Wyle Labs. Test Report No. 45116-1
(4) Wyle Labs. Test Report No. 45116-2
(5) Hills-McCanna DR-65407-32.
(6) Hills-McCanna Eng. Lab. Test Request No. ______________

4. Calculated Data:

(1) Nozzle Loads Based on App. D of Reference 3. (1):

$F_1 = 99900$ lbs

$F_2 = 88140$ lbs

$F_3 = 88140$ lbs

$T_1 = 431100$ lb. - in.

$M_2 = 836800$ lb. - in.

$M_3 = 836800$ lb. - in.

(2) Combined Nozzle Loads:
Loads have been combined because symmetry of body lends itself to this simplification.

Tension/Compression F_1 = 99900 lbs.

Shear Load F_{2-3} = 124600 lbs.

Torsion T_1 = 431100 lb. - in.

Bending M_{2-3} = 1184000 lb. - in.

(3) Simulated Flow Dynamic Torque:

$T_{max.}$ = 15000 lb. - in. based on Δ P = 150 psi.

Fluid pressure in the hydraulic circuit P = 852 psig.

(4) Static Force Calculation:

Actuator Mass M_a = 450 lb_m

Combined Seismic Acceleration a = 8.07g as per Reference 3.(4).

Static Force F = $(1.1)(a)(M_a)$ = (1.1)(8.07)(450) = 3995 lbs.*

(5) Full Voltage of Actuator 460 volts

Time limit 10 sec. max. per quarter turn based on Full Voltage.

Reduced voltage .80 x 460 = 368 volts

* A 10% margin is added as per Brown & Root suggestions.
Air pressure for the loading cylinder is 318 psig.
As shown in Fig. 1, the location of static force application is offsetted from actuator C.G. pt. The torsional load, therefore, is increased. This will lead to a conservative result as the torsional stress is the dominant factor in stress analysis, refer to eq. 2.25 of DR-65407-32.

77- L

5. Test Fixture and Applied Loads:

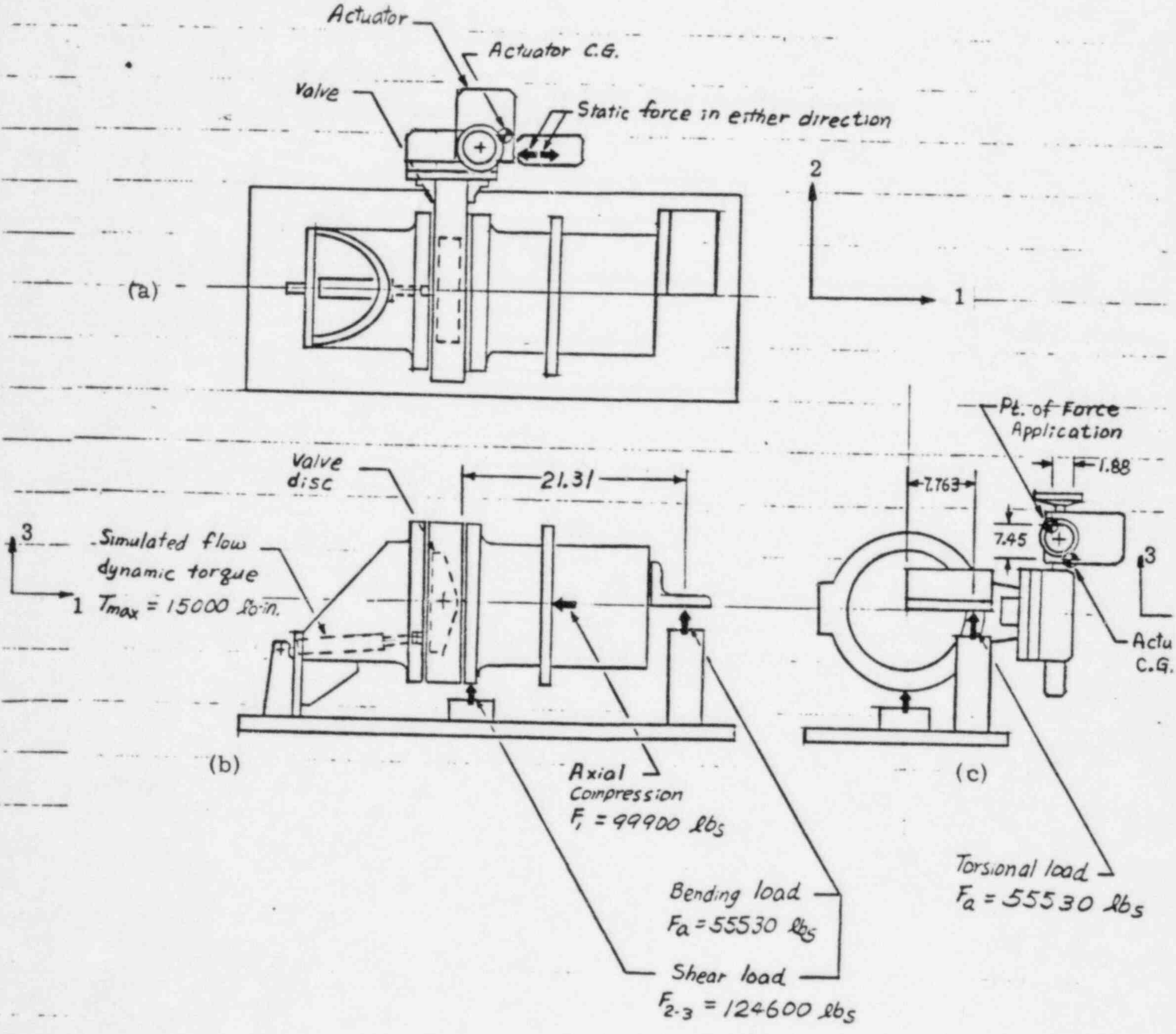

Fig. 1 Test Fixture and Applied Loads.

6. Test Procedure:

(1) This valve and actuator had previously been seismically tested at Wyle Laboratories, Wyle Seismic Simulated Test Report No. 45116-2, and also had performed on it a Resonant Search, Wyle Report No. 45116-1.

(2) Assemble valve and fixture and apply loads as specified in Fixture Dwg. No. BFV-80-45.

(3) Apply and maintain the specified loads (nozzle loads, flow dynamic torque and static force). The nozzle loads are applied and maintained by torque bolts and loading cylinder, the flow dynamic torque is applied by the hydraulic circuit, and the static force is applied by a loading cylinder.

(4) Operate valve by actuator at full voltage, record cycle time (cycle time should be within specified time limit). Repeat operating cycle for two additional cycles. Observe any binding, seizing or unsmooth cycling.

(5) Operate valve by actuator at reduced voltage, record cycle time. Repeat operating cycle for two additional cycles. Observe any binding, seizing or unsmooth cycling.

7. Test Results:

(1) Pre seat leakage test: * 1

(a) Test medium Tap Water

(b) Test pressure 285 psig.

(c) Test time 10 min.

(d) Leakage ______________ * 2

(2) Full Voltage (460 Volts) Cycling Test:

(a) Due to the mechanism of the test fixture, the valve disc can only perform 0° thru 30° open and close cycle. The test cycle time, therefore, is calculated for 90° comparison purpose.

---

* 1 Pipe flange bolts can be retightened and sealant can be applied should leakage happen between valve and pipe flange surfaces.

* 2 Refer to Para. 7. (4). (e) for acceptable leakage rate.

77- N

(2) Continued

(b) 1st cycling test:

30° cycling time __________ sec.

Calculated quarter turn cycling time __________ sec.

Time limit 10 Sec. per quarter turn.

(c) 2nd cycling test:

30° cycling time __________ sec.

Calculated quarter turn cycling time _________ sec.

(d) 3rd cycling test:

30° cycling time _________ sec.

Calculated quarter turn cycling time ________ sec.

(e) Was operation smooth ? ___________ . If no, describe ______
yes/no

____.

(3) Reduced Voltage (368 volts) test:

(a) As per Para. 7.(2).(a), the valve disc can only be cycled from 0° thru 30°. The test time is again calculated for 90° operation.

(b) 1st cycling test:

30° cycling time __________ sec.

Calculated quarter turn cycling time __________ sec.

The cycling time at this voltage does not have to meet 10 sec. per quarter turn limit.

(c) 2nd cycling test:

30° cycling time __________ sec.

Calculated quarter turn cycling time __________ sec.

77-0

(3) Continued

(d) 3rd cycling test:

30° cycling time ________ sec.

Calculated quarter turn cycling time ________ sec.

(e) Was operation smooth? __________ (yes/no), If no, describe ______

____________________________________.

(4) Post seat leakage test: *

(a) Test medium Tap Water

(b) Test pressure 285 psig.

(c) Test time 10 min.

(d) Leakage ______________

(e) Acceptable seat leakage 6cc per 10 min., 120 drops of water equivalent.

8. Post Test Inspection:

(a) The valve assembly shall be disassembled and inspected. This shall include as a minimum Liquid Penetrate Inspection (per HMC QSN-8-6) of body, retainer, disc, stem, gland flange and gland flange studs and visual inspection of other parts.

Report finding (s) ____________________________________

____

9. Test Location and Date:

(a) Test performed at ______________________ by _________

____________, date ______________.

(b) Witnessed by ____________________ Title ________________,

date __________________.

---

* Pipe flange bolts can be retightened and sealant can be applied should leakage happen between valve and pipe flange surfaces.

DR-65407-32

APPENDIX E

LIMITORQUE DATA

INDEX

A. General.

Limitorque actuators used in this order shall comply with requirements of Brown & Root Specification 2L529TS0103. The following paragraphs list Brown & Root requirements and Limitorque compliance.

1. References:

(a) Brown & Root Specification 2L529TS0103. Note 1.
(b) IEEE Standard 382-1972. Note 1.
(c) IEEE Standard 344-1971. Note 1
(d) NEMA Standard MG1-1972. Note 1.
(e) Limitorque House Order 3B7779. Note 1.
(f) Limitorque correspondences and Nuclear Qualification Data Sheet. Attached.
(g) Limitorque dimensional drawings, Note 2, Wiring diagrams, Note 2, and actuator units.
(h) Limitorque catalog and instruction manual, Rockwell instruction manual IM-3002 includes Limitorque data. Sent seperately.
(i) Limitorque Test Report B0058. Sent seperately.
(j) Limitorque motor sizing sheet, Note 2, and stall torque test data, Appendix B of this Report.
(k) Limitorque motor test report. Note 1.
(l) Rockwell sales drawings. Note 2.
(m) Rockwell HOPS 65407. Note 2.
(n) Rockwell DR-65407. This Report.
(o) Rockwell PS-2-2.43. Note. 2.
(p) Rockwell Static Test Reports 1041-BFV 50 and 1042-BFV 51. Appendix D of this Report.
(q) Wyle Test Reports 45116-1 and 2. Note 2.
(r) Limitorque Test Report B0119. Sent Separately.

Note 1. Not attached.

Note 2. Sent seperately and approved by Brown & Root.

2. Limitorque Actuator Model List.

Table 1 Limitorque Actuator Model List.
Hills-McCanna Company. Butterfly Valves with Limitorque Actuators
ASME Section III. For Houston Light & Power. South Texas Project
Brown & Root Specification 2L529TS103D.

Hills-McCanna P.O.C-69000
Hills-McCanna H.O.65407,65408
Limitorque No.3B7779,
A through Q

1	2	3	4	5	6	7	8	9	10
Spec.Sht Pg.No.	Valve Size (in.)	Limitorque Actuator Unit Size	Item (C)	In Containment	Active Valve (A)	NEMA Class H 90%	80% (B)	NEMA Class B	OP. Time (seconds)
3	4	SMB-0001/HOBC	A	NO	YES	--	YES	----	10
4	4	SMB-0001/HOBC	B	YES	YES	--	YES	----	10
10	6	SMB-0002/HOBC	C	YES	YES	--	YES	----	10
14	8	SMB-0001/HOBC	D	NO	YES	--	YES	----	10
16	10	SMB-0001/HIBC	E	YES	NO	YES	----	----	75
19	12	SMB-0005-HIBC	F	NO	YES	---	YES	----	10
20	12	SMB-0005/HIBC	G	NO	YES	---	YES	----	10
21	12	SMB-0005/HIBC	H	YES	YES	---	YES	----	10
22	14	SMB-0010/H2BC	I	YES	YES	---	YES	----	10
24	14	SMB-0010/H2BC	J	NO	YES	---	YES	----	10
29	16	SMB-0010/H2BC	K	NO	YES	---	YES	----	10
30	16	SMB-0010/H2BC	L	YES	YES	---	YES	----	10
32	18	SMB-0015/H3BC	M	NO	YES	---	YES	----	10
33	18	SMB-0015/H3BC	N	YES	YES	---	YES	----	10
34	18	SMB-0015/H3BC	O	NO	YES	---	YES	----	10
36	24	SMB-025/H3BC	P	NO	YES	---	YES	----	10
40	30	SMB-025/H4BC	Q	NO	YES	---	YES	----	10

NOTES: A-Must meet Appendix C. B-Must meet Appendix H. C-From Limit.Dwg.No.02-416-0004-3.

B. Limitorque Actuator Qualification Finder Listing.
The following reference list applies primarily to technical design requirements.

Specification Paragraph References	Location *	Brief Description
3.1-m	Refer to discussions under Para.3.2.2.3-i.	Seismic stress analysis.
3.2.2.1-a,b,c	DR-Appendices B & C,Ref.(n), HMC HOPS 65407,Para.9,Ref.(m).	Motor sizing and Actuator Cycling.
3.2.2.2-a,b,c,	DR-, Ref.(n), DR-Appendices B & C,Ref.(n), Limitorque correspondence,Ref.(f).	Motor sizing and stall torque stress analysis.
3.2.2.3-a,b	Limitorque Std.design, Limitorque catalog,Ref. (h).	Handwheel mechanism and double acting torque switch.
-c,d	Furnished on actuator, Limitorque dimensional dwg.,Ref.(g).	Drain plugs and position indicator.
-e	Limitorque Std. design, Limitorque manual.Ref.(h), test report, Ref.(i) and correspondence,Ref.(f).	Motor lubricant.
-f	Limitorque motor test report, Ref.(k),40°C motor temp.rise tested.	Motor temp. rise, 135°C max. per NEMA Std.
-g	Limitorque Std.design, 15 minutes duty cycle on motor name plate.	15 minutes motor duty cycle.
-h	Furnished on actuator.	Actuator lifting eyes.
-i	Refer to Qualification Tests under Table 2 of this Appendix.	Aging per IEEE 382 and Seismic Testing per IEEE 344 and Spec.,App.C.
-j	Refer to Qualification Tests under Table 2 of this Appendix.	Accident Enviroment Profile per Spec., App.H.
-k	Not applicable.	NEMA Class B insulation actuators.

* Where "DR-" is shown it means DR-65407, Ref. (n).

Specification Paragraph References	Location	Brief Description
-l	Valve design feature, HMC sales dwgs,Ref.(l).	Stuffing box design for Stem packing.
-m	Furnished on actuator.	Motor controls mounted on actuator.
-n,o	Limitorque Std.design, Limitorque manual,Ref.(h), wiring diagram,Ref.(g), and catalog, Ref.(h).	Adjustable limit switches, contact development requirements, terminal block device and lead connection design.
-p	Limitorque wiring diagram,Ref.(g), space heaters maintain 10°~15°F above ambient as per Limitorque.	Motor and limit switch space heaters, 6°C min. ambient temp.
-q	Limitorque Std. design, rated NEMA A600 as per Limitorque.	Limit switch, torque switch and contacts current ratings.
-r	Limitorque Std.electric practice, Limitorque wiring diagram and furnished on actuator,Ref.(g).	Electric control wiring per Spec.,App.G.

C. Limitorque Actuator Qualifications per Brown & Root Spec. 2L529TS103D, Para.3.2.2.3-i and j.
Table 2 Type Test Procedures per IEEE 382-1972, IEEE 344-1971, Brown & Root Spec.2L529TS103D and Limitorque Test Reports, respectively.

IEEE 382-1972 and IEEE 344-1971.	Brown & Root Spec.2L529TS103D, Para.3.2.2.3-i and -j.	Limitorque type test procedures, sequentially listed according to tests performed.*
1. Design Data (not applicable).	1. Design Data (3.2.2.3-i) (a) 1.5 x 10^8 rads integrated radiation dose. (b) 122°F temperature. (c) 80% max. and 20% min. relative humidity. (d) 0.3 psig. pressure.	1. Design Data (Nuclear Qualification Data Sheet) (a) 40 years (2000 cycles) design life. (b) 140°F ambient temperature (continuous). (c) 60-100% ambient humidity.
2. Aging Simulation (382, Part II). (a) 4 M rad total radiation per 40 years (Part II,1). (b) 140°F temperature to the equivalent of 40 years (Part II,2). (c) 55% relative humidity to the equivalent of 40 years (Part II,2). (d) 500 operating cycles minimum (Part II,3).	2. Aging Qualification Procedure must comply with IEEE 382-1972 (3.2.2.3-i).	2. Aging Simulation on SMB-0-40 (B0058 and 600456). (a) Generic qualification by this model and conclusions are presented in Paragraph D of this Appendix. (b) Thermal aging on motor stators at 180°C for 100 hrs. (600456, pg.3), which equivalent to theoretically aged at 60°C for 135 yrs. (B0058, pg.11). Refer to 600456, App.A for certificate of compliance. (c) Mechanical aging for 1208 cycles at room ambient conditions (600456, pg.3,4 & 11). Refer to 600456, App.B for test data. (d) Seismic qualification found no resonance from 5 to 35 Hz. Seismic dwell tests at 3g's accel. from 6 Hz to 34 Hz, in each of the three major axis. Seismic dwell tests at 6g's at 35 Hz, in each of the three major axis. Actuator operated properly during the above dwell tests (600456,pg.4, 5 & 12.) Refer to 600456, App.D for seismic test report. (e) Radiation aging with total dose of 204 megarads (600456,pg.6 & 12). Refer to 600456, App.C for Test Certification.
3. Seismic Qualification Test 9344,3.2.3): (a) Vibratory forces applied to each of the three axes independently (3.2.3.1). (b) Natural frequency search by continuous sweep with sine input of 0.2g (3.2.3.2). (c) Seismic test at one of the following frequencies (3.2.3.4): Natural Frequency, Predetermined Frequency, or at all frequencies within the qualified range. (d) One of the following test methods (3.2.3.4): Sine Dwell Test with 20 to 30 sec. duration, or Sine Beat Test with 5 beats and 10 cycles per beat.	3. Seismic Testing Qualification Procedure must comply with (3.2.2.3-i): (a) IEEE 344-1971. (b) Additional guidelines stated in Specification, App.C: (1) Natural Frequency ≥ 33 Hz (App.C,4.1). (2) 3.0g in two horizontal directions and 2.0g in vertical direction (App.D). (3) One of the following vibratory motions (App.C,4.3.1): Random Motion, Time History, Sine Beat, or Sweep & Dwell.	3. Seismic Qualification Tests on SMB-000-5-HOBC (14331-2 and 3), SMB-1-60-H3BC (B0048), SMB-3-150-H5BC (B0047), SMB-000-2-HOBC (8" BFV) and SMB-00-15-H3BC (18"BFV) (Both covered in 45116-1 and 2, and 1041-BFV 50 and 1042-BFV 51). (a) Generic qualification by these models and conclusions are presented in paragraph E of this Appendix. (b) SMB-000-5-HOBC (14331-2 and 3). (1) Fundamental Natural Frequency of 37.5 Hz detected (B0045,pg.4). (2) Sine dwell tests at 33 Hz frequency, 30 sec. per g level (B0045,pg.3) H_2 axis at 3,4,5,5.5 g's, H_1 axis at 3,4,5,6 g's, V axis at 3,4,5,6,7,8,9,10,11,12 g's. Actuator operated properly open-close-open during each dwell with rated torque output (B0045, pg.4 & 5). Actuator operated properly between each axis change (B0045,pg.4 & 6). Actuator operated properly after test (B0045,pg.5). (c) SMB-1-60-H3BC (B0048). (1) Fundamental Natural Frequency of 34 Hz detected (B0048,pg.16). (2) Sine dwell tests, actuator with seismic support bracket (B0048,pg. 11 & 12): Total of 30 dwell tests performed in three orthogonal axes. Frequency range from 5 Hz through 35 Hz. Input g level from 1 g through 6 g's. 15 sec. per dwell. Actuator was cycled open and closed once per dwell (B0048,pg.6). Actuator operated properly during each dwell (B0048,pg.17).

---

* Limitorque qualifications are found in: (1) Limitorque Nuclear Qualification Data Sheet, (2) Limitorque Test Report B0058, (3) B0058, Appendix C (600456) and its Appendices, (4) B0058, Appendix F (B0037) and its Appendices 10 (14331-2 and 3) and 11 (B0048 and B0047), (5) Wyle Test Reports 45116-1 and 2, and (6) Hills-McCanna DR-65407, App.D, Static Test Reports 1041-BRV 50 and 1042-BFV 51, respectively.

TABLE 2 Continued

IEEE 382-1971 and IEEE 344-1971,	Brown & Root Spec. 2L529TS103D, Para.3.2.2.3-i and -j.	Limitorque type test procedures, sequentially listed according to tests performed. Refer to footnote on page 6 for references.

(3) Biaxial multiple frequency (random frequency) tests, actuator with seismic support bracket (B0048,pg.13 & 14):
4 multiple frequency tests performed.
5% damping.
30 sec. duration for each run.
Comparison of test curve and RRS curve for SSE condition is presented in paragraph E.3 of theis Appendix.
Actuator was cycled open and closed once per run (B0048,pg.6).
Actuator operated properly during each run (B0048,pg.18).

(4) Plant vibration aging test, actuator with seismic support bracket (B0048, pg.15).
3 aging tests performed.
Sine curve used.
Frequency range from 10 through 100 Hz and back to 10 Hz.
Sweep rate of 2 octaves per minute.
Peak acceleration of 0.75 g.
Time duration of 90 minutes per test.
Actuator was cycled once every 15 minutes during the tests (B0048, pg.6).
Actuator operated properly during the tests (B0048,pg.19).

(d) SMB-3-150-H5BC (B0047).

(1) Fundamental Natural Frequency of 35 Hz (B0047, pg.13 & 20) and 32.2 Hz (B0047,pg.10 & 18) detected by two different test methods, respectively.

(2) Biaxial multiple frequency (random frequency) tests, actuator with seismic support bracket (B0047, pg.11 & 12):
4 multiple frequency tests performed.
5% damping. 30 sec. duration for each run.
Comparison of test curve and RRS curve for SSE condition is presented in paragraph E.3 of this Appendix.
Actuator was cycled open and closed once per run (B0047,pg.6).
Actuator operated properly during each run (B0047,pg.19).

(3) Sine dwell tests at 35 Hz frequency, 30 sec. duration per dwell (B0047, pg.16 & 11):
H_1 axis 5 dwells at 2.2 g's and 1 dwell at 4.4 g's,
H_2 axis 5 dwells at 2.2 g's and 1 dwell at 4.4 g's,
V^2axis 5 dwells at 2.2 g's and 1 dwell at 4.4 g's.
Actuator was cycled open and closed once per dwell (B0047,pg.6).
Actuator operated properly during each dwell (B0047, pg.22).

(4) Plant vibration aging test, actuator with seismic support bracket (B0047,pg.17):
3 aging tests performed.
Sine curve used.
Frequency range from 10 through 100 Hz and back to 10 Hz.
Sweep rate of 2 octaves per minute.
Peak acceleration of 0.75 g.
Time duration of 90 minutes per test.
Actuator was cycled once every 15 minutes during the tests (B0047,pg.6).
Actuator operated properly during the tests (B0047, pg.23).

TABLE 2 Continued

IEEE 382-1972 and IEEE 344-1971.	Brown & Root Spec.2L529TS103D, Para.3.2.2.3-i and -j.	Limitorque type test procedures, sequentially listed according to tests performed. Refer to footnote on page 6 for references.
		(e) SMB-000-2-HOBC with 8" BFV (45116-1 and 2, 1041-BFV 50). (1) Fundamental Natural Frequency of 43.1 Hz detected (45116-1, pg.8). (2) Sine beat tests (45116-2, pg.5 & 10): Total of 23 tests performed. Frequency range at 33 Hz, 34 Hz and 35 Hz. Horizontal (longitudinal or lateral) at 3.0 g's and vertical at 2.0 g's. 10 oscillations per beat and 6.6 sec. duration approx. per test. Actuator operated properly during each test (45116.2, pg.1). (3) Static test with static force equivalent to 9.4 g's (FS-3-2.7, pg.4). Actuator operated properly under the side loading (1041-BFV 50, pg.2). (f) SMB-00-15-H3BC with 18" BFV (45116-1 and 2, 1042-BFV 51). (1) Fundamental Natural Frequency of 51.9 Hz detected (45116-1,pg.8). (2) Sine beat tests (45116-2,pg.5 & 10): Total of 13 tests performed. Frequency range at 33 Hz, 34 Hz and 35 Hz. Horizontal (longitudinal or lateral) at 3.0 g's and vertical at 2.0 g's. 10 oscillations per beat and 6.6 sec. duration approx. per test. Actuator operated properly during each test (45116-2, pg.1). (3) Static test with static force equivaltn to 9.4 g's (PS-3-2.10,pg.4). Actuator operated properly under the side loading (1042-BFV 51,pg.2).
4. Accident Ebvironmental Simulation (382, 4.4 & Part III). (a) Radiation of 200 M rad equivalent air dose (Part III,(1)). (b) Steam exposure with temperature and pressure profile per Table 1 and Fig.1 (Part III,(3) & (4)). (c) Chemical spray exposure (Part III,(3). (a) & Table 1): 24 hrs.continuously spray. Solution contents per Table 1. Flow rate of 0.15 (gal/min)/ft^2 of area of the test sample. (d) Operate actuator accordingly (Part III, (1) through (4) and Fig.1).	4. Accident condition operability (3.2.2.3-j): (a) 100% relative humidity. (b) 1.5×10^8 integrated radiation dose. (c) Pressure and temperature transients per App.H.	4. Accident Environmental Simulation on SMB-0 -40 (600456). (a) Generic qualification by this model and conclusions are presented in paragraph D of this Appendix. (b) Radiation aging with total dose of 204 Megarads (600456, pg.6 & 12). this is the same test as that specified in para.2. (e) above. (c) Stram spray to the required temperature and pressure transients. Comparisons of Limitorque profiles versus Brown & Root's App.H are presented in Para. D.3 of this Appendix (600456, pg.8 thru 10 & 12 thru 17). (d) Chemical spray during the temperature and pressure test profiles (600456,pg.8). Chemical mixture per IEEE 382, pg.12, Table 1, with overall flow rate of 1.2 gal/min (600456,pg.17). (e) 100% relative humidity (600456,pg.18). (f) Actuator operated properly during the test, summary of cycling data is presented in para.D.3 of this Appendix (600456, pg.18). (g) Post test inspection found no damage to the unit (600456, pg.22). (h) Actuator operated properly for additional 794 cycles after the above test (600456, pg.11, 22 & 24). Refer to 600456, App.B for cycle test data. (i) Accumulated 4195 load cycles were performed on the test unit throughout the above type test procedures as per Para.2 and 4 above (600456, pg.25).

D. Limitorque Qualifications per IEEE Standard 382-1972.

Concluded per Limitorque Test Report B0058 and Appendix C, Test Report 600456, PWR Containment Qualification.

1. Generic Qualification - directly quoted per Limitorque Test Report B0058, pages 3 and 22 , respectively.

   (a) "The qualifications were conducted to encompass the entire family of Limitorque actuators - SMB, SB, SBD, and SMB/HBC in all available unit size (SMB-000 to SMB-5). This was accomplished by conducting the qualification testing on a mid size unit (SMB-0) subjecting the actuator to simulated seating loads equivalent to the actuators published unit rating during the test procedure."

   (b) "The qualification of the Limitorque size SMB-0, as reported in the documentation of each of the four tests, was used to generically qualify all sizes of Limitorque operators for the enviromental test conditions in accordance with IEEE 382-1972. The size SMB-0 actuators is an average mid-size unit, and all other sizes of the type SMB, SB, SBD, and SMB/HBC are also deemed qualified."

2. Conclusions - directly quoted per Limitorque Test Report B0058, page 30 and Appendix C, Test Report 600456, page 29, respectively.

   (a) "All the qualifications were conducted per IEEE 382-1972 and meet the requirements of IEEE 323-1974 and IEEE 344-1975 as they apply to valve actuators. Further, since the actuators performed satisfactorily without maintenance throughout the various qualifications, the Limitorque valve actuators are fully qualified for use in Nuclear Power Generating Plants."

   (b) "Since the unit performed satisfactorily, throughout the test, it is concluded this test qualifies similar Limitorque Valve Actuators for use in a PWR containment chamber where enviromental conditions depicted by Table I in IEEE Std. 382-'72' are encountered."

3. For Table 2 of this Appendix, Para.4.(c), plots of Limitorque test profile versus Brown & Root test profile, both temperature and pressure, are presented in pg.10 and 11 , respectively, for comparison purpose. Original test profile for temperature, as per Limitorque Test Report 600456, is included in pg. 12 . For Table 2 of this Appendix, Para.4.(f), actuator cycling data, as per Limitorque Test Report 600456, is included in pg. 13 .

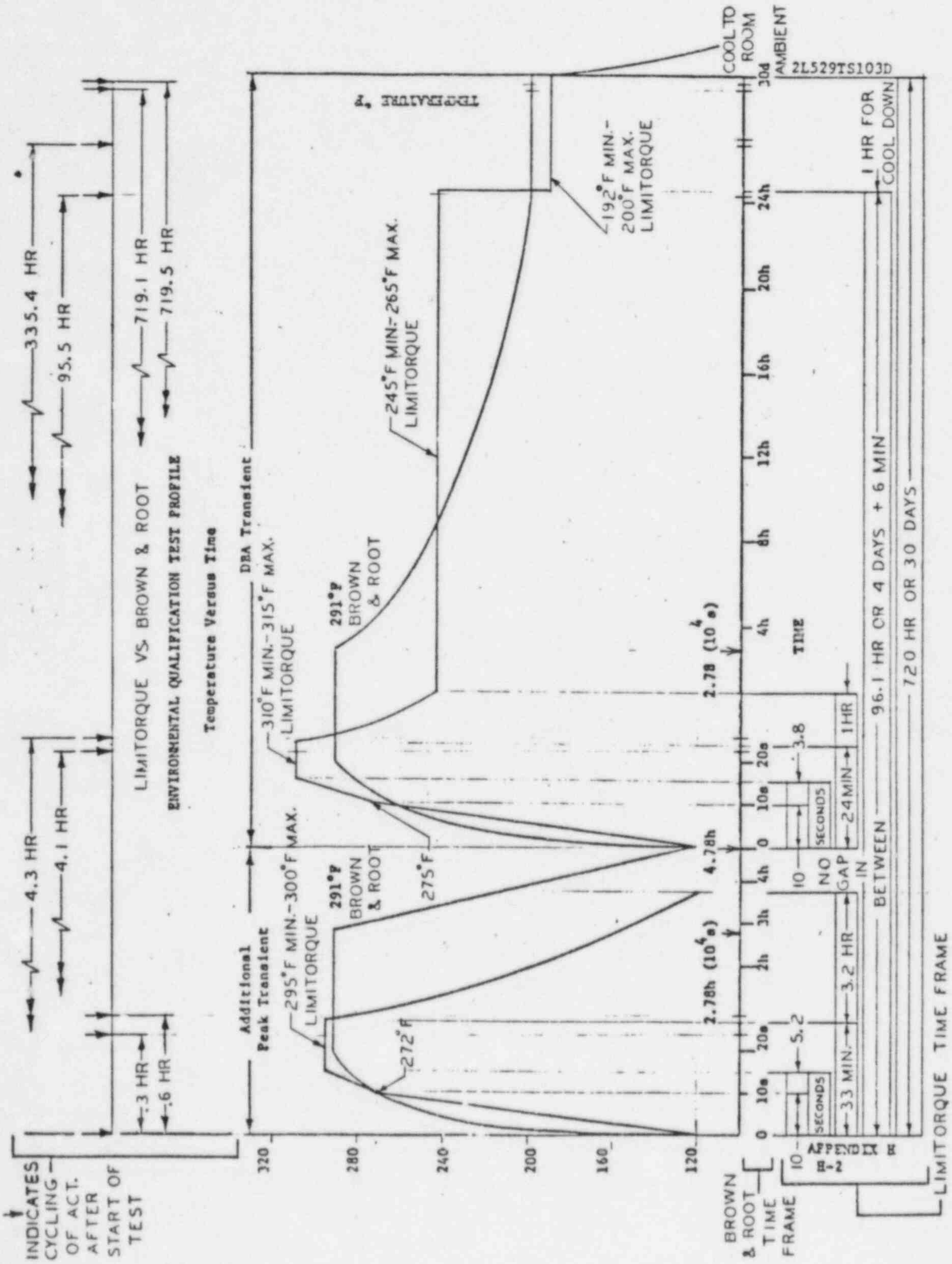

LIMITORQUE VS BROWN & ROOT

ENVIRONMENTAL QUALIFICATION TEST PROFILE

Temperature Versus Time

Environmental Qualification Test Profile
Temperature VS. Time
Limitorque Actuator Qualification VS. H.L.&P. Specification
2L529TS0103 - Appendix H.

The environmental temperature versus time profiles depicted represent the application, stabilization, and dissipation of thermal energy at the rates shown without definition of the mass or masses of equipment under study, rates of heat transfer, or location within the containment or test chamber. The plots assume sufficient energy release to create the environmental temperature rise at the rates, and within the time periods shown.

The area in question on the plots occurs from start (0), through the first 33 minutes of a theoretical LOCA with a peak transient temperature of 291°F (H.L.&P.), and 295-300°F reached by Limitorque in their testing. The temperature rates of change are linear under the Limitorque profile through the first 33 minute test period, and non-linear through the first 20 seconds under the H.L.&P. profile.

It is to be noted that <u>both</u> the H.L&P. and Limitorque profiles presented depict a environmental temperature rise from 120°F to 272°F after the first 10 seconds of LOCA occurrence. Assuming an equivalent mass of the same equipment in containment, and in the Limitorque test chamber, both equipment masses will have experienced the same temperature differential throughout the same time period, (i.e. the first 10 seconds of LOCA), and hence the same degree of thermal aging. By applying the rules and rationale for Normal Service Thermal Aging (Arrhenius Law) outlined in IEEE Std. 382-1980 Appendix C for Safety - Related Valve Actuators, to the profiles presented in the first 10 seconds of LOCA, this period can be shown to be insignificant when compared to the subsequent 32 minutes 50 seconds of LOCA, where the Limitorque test profile depicts a larger differential temperature than required by the H.L.&P. profile.

From IEEE-382-1980 Appendix C:

$$t_1 = t_2 \, e^{\frac{\phi}{K}\left(\frac{1}{T_1} - \frac{1}{T_2}\right)}$$

where,

t_2 = accelerated aging time (hrs.) = 10 seconds ÷ 3600 = 0.00278 HRS.

T_2 = accelerated thermal aging temperature (°K) = 272°F = 133.33°C + 273.15 = 406.48°K

K = Boltzmann constant = 0.8617×10^{-4} eV/°K

ϕ = Activation energy of reaction = 0.8 eV (Conservative estimate for actuator materials)

T_1 = Normal service temperature = 120°F (Taken from test profile)
120°F = 48.89°C + 273.15 = 322.04°K
solving for t_1,

$$t_1 = 0.00278 \, e^{\frac{(0.8)\left(\frac{1}{322.04} - \frac{1}{406.48}\right)}{0.00008617}}$$

$t_1 = 0.00278 \, e^{5.9936} = \underline{\underline{1.1144 \text{ HOURS}}}$

Since both equipment masses profiled during the first 10 seconds of LOCA will have been subject to thermal aging equivalent to exposure to 120°F for 1.1144 hours (Negligible), it is evident that the Limitorque test profile presented through the first 33 minutes of LOCA represents a more stringent test than that profiled by H.L.&P.

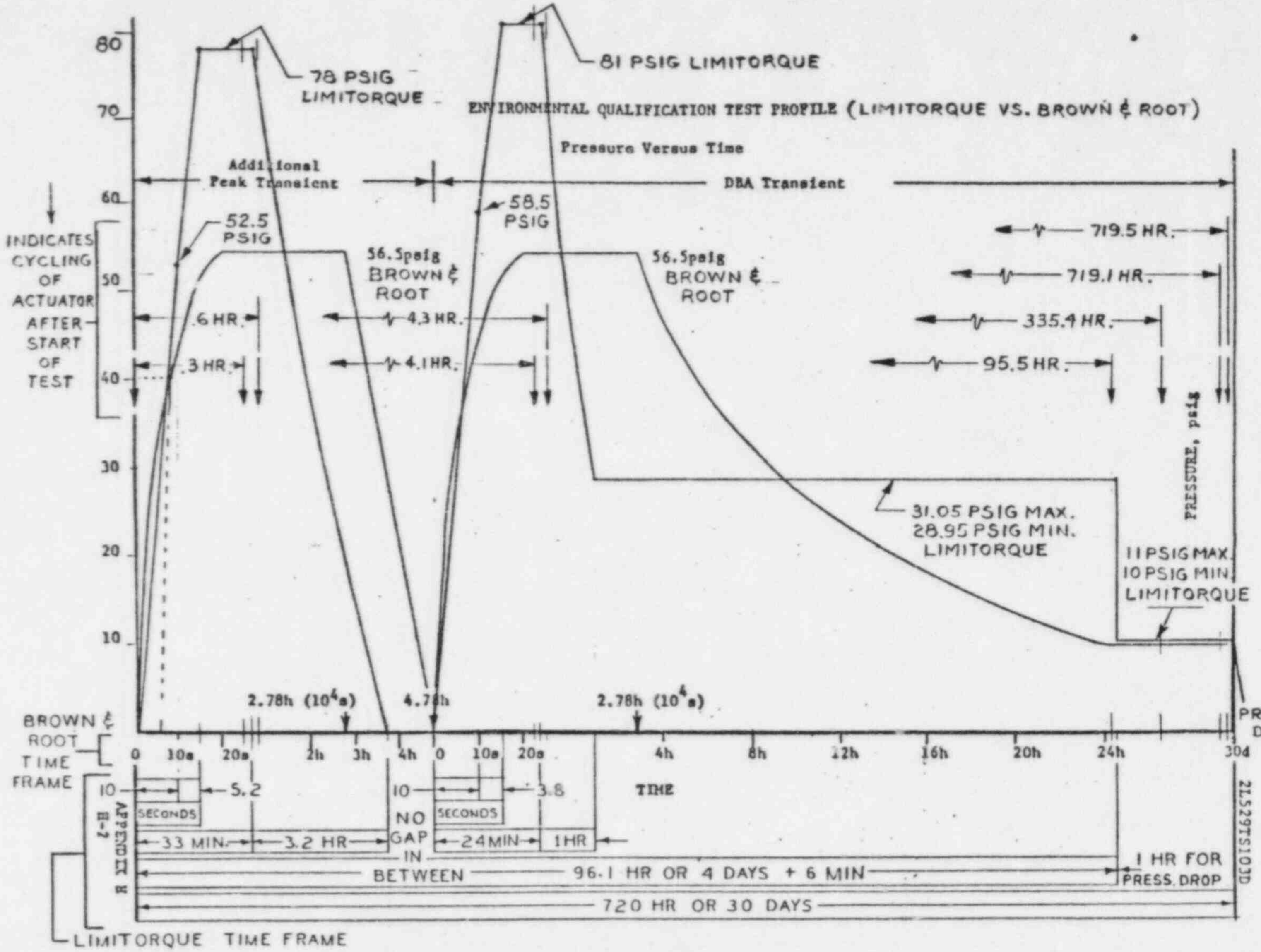

ENVIRONMENTAL QUALIFICATION TEST PROFILE (LIMITORQUE VS. BROWN & ROOT)

Pressure Versus Time

ACTUAL ACCIDENT PROFILE

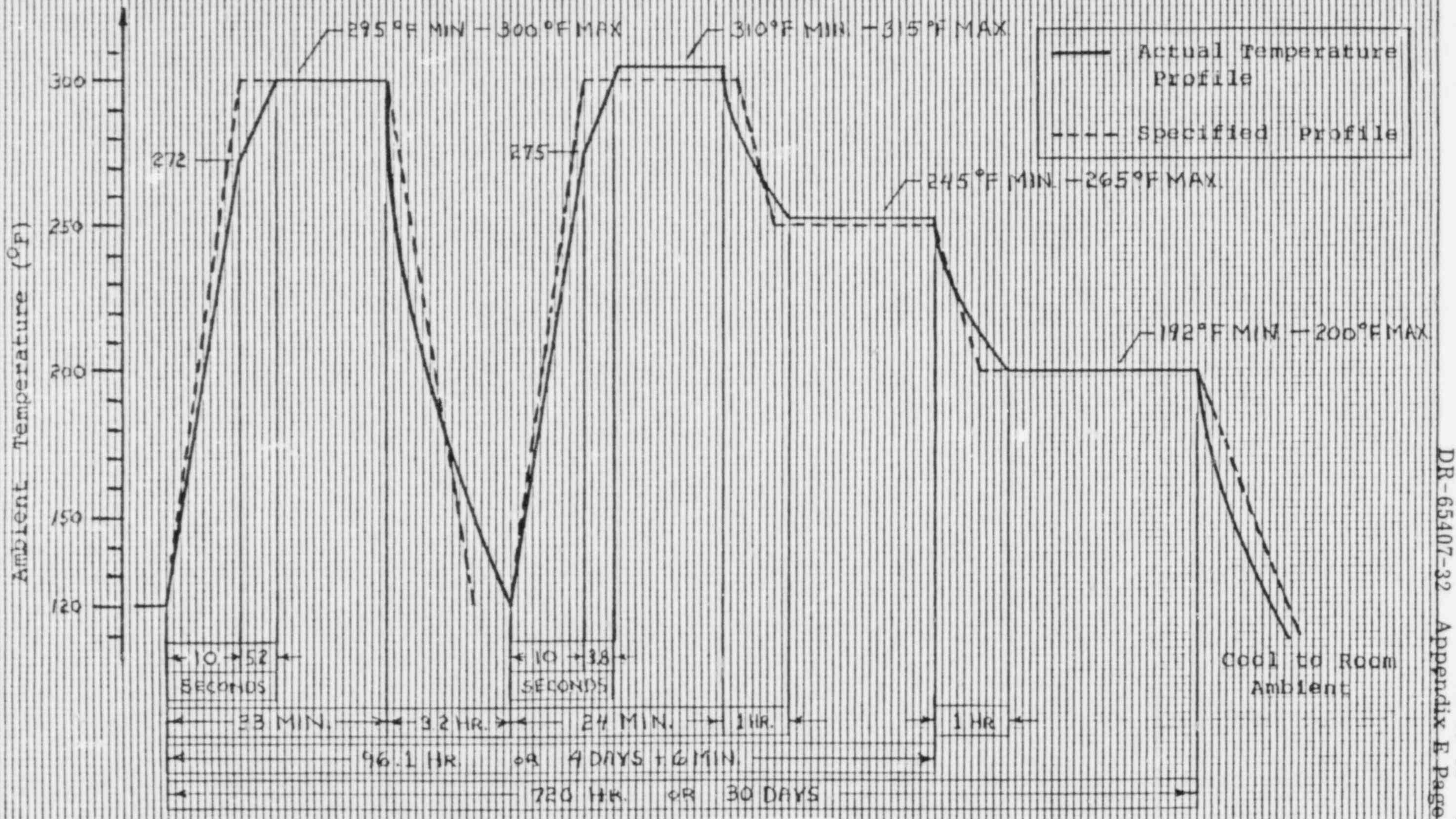

FIGURE 6

TABLE III

VALVE ACTUATOR CYCLING DATA

Time After Start of Test (hr.)	Potential (volts)			OPEN STROKE					CLOSE STROKE							
				Run Current (Amps)			Power (Watts)	Stroke Time (Secs)	Run Current (Amps)			Peak Current * (Amps) (T-3)	Power (Watts)		Stroke Time (Secs)	Seating Thrust (lbs)
	T-1 T-3	T-1 T-2	T-2 T-3	T-1	T-2	T-3			T-1	T-2	T-3		Run	*Peak		
** 0	490	495	490	4.6	4.8	4.6	620	42	4.6	4.8	4.4	5.0	620	1350	42	19,375
.3	475	480	480	4.5	4.6	4.5	620	42	4.3	4.3	4.2	5.1	600	1300	43	19,425
.6	485	490	485	4.7	4.8	4.6	680	42	4.8	4.9	4.5	5.1	680	1320	43	20,825
4.1	485	490	485	4.8	4.9	4.6	620	42	4.8	5.0	4.6	5.1	610	1300	43	21,600
4.3	490	490	480	4.8	5.0	4.7	650	42	4.8	5.0	4.6	5.1	640	1350	43	22,150
95.5	495	500	495	5.1	5.2	5.0	725	42	5.2	5.3	4.9	5.3	750	1500	43	22,650
335.4	485	490	485	4.8	4.9	4.6	650	41	4.9	5.0	4.6	5.0	650	1400	42	21,600
719.1	495	500	490	4.9	5.2	4.9	675	42	5.0	5.2	4.7	5.0	675	1500	42	18,550
719.5	495	500	490	5.0	5.2	4.9	700	42	5.0	5.2	4.7	5.6	675	1900	42	21,350

* Due to rapid rise of current and power, considering the slow meter response times, these values to be considered as approximation of actual peak.

** Check prior to start of test.

E. Limitorque Qualifications per IEEE Standard 344-1971.

Concluded per Limitorque Test Report B0037, Seismic Qualification Envelope, Appendices 10 and 11, Wyle Test Reports 45116-1 and 2, and Hills-McCanna Test Reports 1041-BFV 50 and 1042-BFV 51.

1. Generic Qualification - listed and directly quoted per Limitorque Test Report B0037, Appendices 10 and 11, respetively, also listed per Wyle Test Reports 45116-1 and 2, and Hills-McCanna Test Reports 1041-BFV 50 and 1042-BFV 51.

   (a) Limitorque actuator model SMB-000-5-HOBC was seismically tested per Appendix 10. This qualifies Limitorque actuator models SMB-000-1-HOBC and SMB-000-2-HOBC as being furnished with 4", 6" and 8" butterfly valves.

   (b) Limitorque actuator models furnished with butterfly valve sizes 10" through 30" are generically qualified per Appendix 11, as stated per page 2 of such appendix.
   "Engineering evaluation of our entire generic family of SMB/HBC type actuators disclosed the fact that the SMB-1-60/H3BC and SMB-3-150/H5BC reflected the worst case conditions in all of our actuator combinations. The largest motor available for the SMB actuators (normally not used in actual sizing) were used to provide conservatism in the seismic tests."

   (c) Limitorque actuator models SMB-000-2-HOBC and SMB-00-15-H3BC, mounted on 8" and 18" butterfly valves, respectively, were seismically tested per Wyle Test Reports 45116-1 and 45116-2, and statically tested per Hills-McCanna Test Reports 1041-BFV 50 and 1042-BFV 51.

2. Conclusions - directly quoted per following Limitorque Test Reports, Wyle Test Reports and Hills-McCanna Test Reports, respectively.

   (a) B0058, page 30.
   "All the qualifications were conducted per IEEE 382-1972 and meet the requirements of IEEE 323-1974 and IEEE 344-1975 as they apply to valve actuators. Further, since the actuators performed satisfactorily without maintenance throughout the various qualifications, the Limitorque valve actuators are fully qualified for use in Nuclear Power Generating Plants."

   (b) Appendix F, B0037, page 16.
   "The SMB/HBC or SMC/HBC assemblies, without spur gear attachments, are considered qualified per IEEE 344-1975 up to levels of 3g acceleration without seismic bracket in any of the three orthogonal axis."

   (c) Appendix 10, Action Report 14331-2 and 3, Limitorque model SMB-000-5-HOBC tested, page 6.
   "The SMB-000-5/HOBC is qualified to IEEE 344 (1975) to a level of 5g's."

   (d) Appendix 11, B0048 and B0047, page 15.
   "The entire generic family of SMB/HBC and SMC-04/HBC without seismic brackets are qualified to 3g's acceleration from 1 to 35 Hz frequency per IEEE 344-1975."

   (e) Wyle Test Report 45116-1, resonance frequencies search, page 1.
   "The specimens exhibited no resonances at or below 40 Hz during the Dynamic Evaluation Test Program."

(f) Wyle Test Report 45116-2, seismic tests, page 1.
"The 18" valve demonstrated sufficient integrity to withstand, without compromise of structure, electrical functions or mechanical functions, the prescribed simulated seismic environment."
"The 8" valve demonstrated sufficient integrity to withstand, without compromise of structure, electrical function or mechanical functions, the prescribed simulated seismic environment with the exceptions outlined in the following (reference paragraphs 6.2.1 and 6.2.7, Table I, and Notise of Anomaly No.1)."

(g) Hills-McCanna Test Reports 1041-BFV 50, page 1,and 1042-BFV 51, page 1, respectively.
"The 8" L151-C1-Z-S6 Butterfly valve with Limitorque actuator model SMB-000-2-HOBC was subjected to the static deflection test outlined in PS-3-2.7 and compliance to the specification requirements were obtained."
"The 18" L151-C1-Z-S6 Butterfly valve with Limitorque actuator model SMB-00-15-H3BC was subjected to the static deflection test outlined in PS-3-2.10 and compliance to the specification requirements were obtained."

3. For Table 2 of this Appendix, para.3.(c).(3), plot of test curve for multiple frequency test versus the RRS curve for SSE condition, both from Limitorque Test Report B0048, is presented in pg. 16 for comparison purpose.

For Table 2 of this Appendix, para.3.(d).(2), plot of test curve for multiple frequency test versus the RRS curve for SSE condition, both from Limitorque Test Report B0047, is presented in pg. 17 for comparison purpose.

GRAPH PAPER ®

PRINTED IN U.S.A.

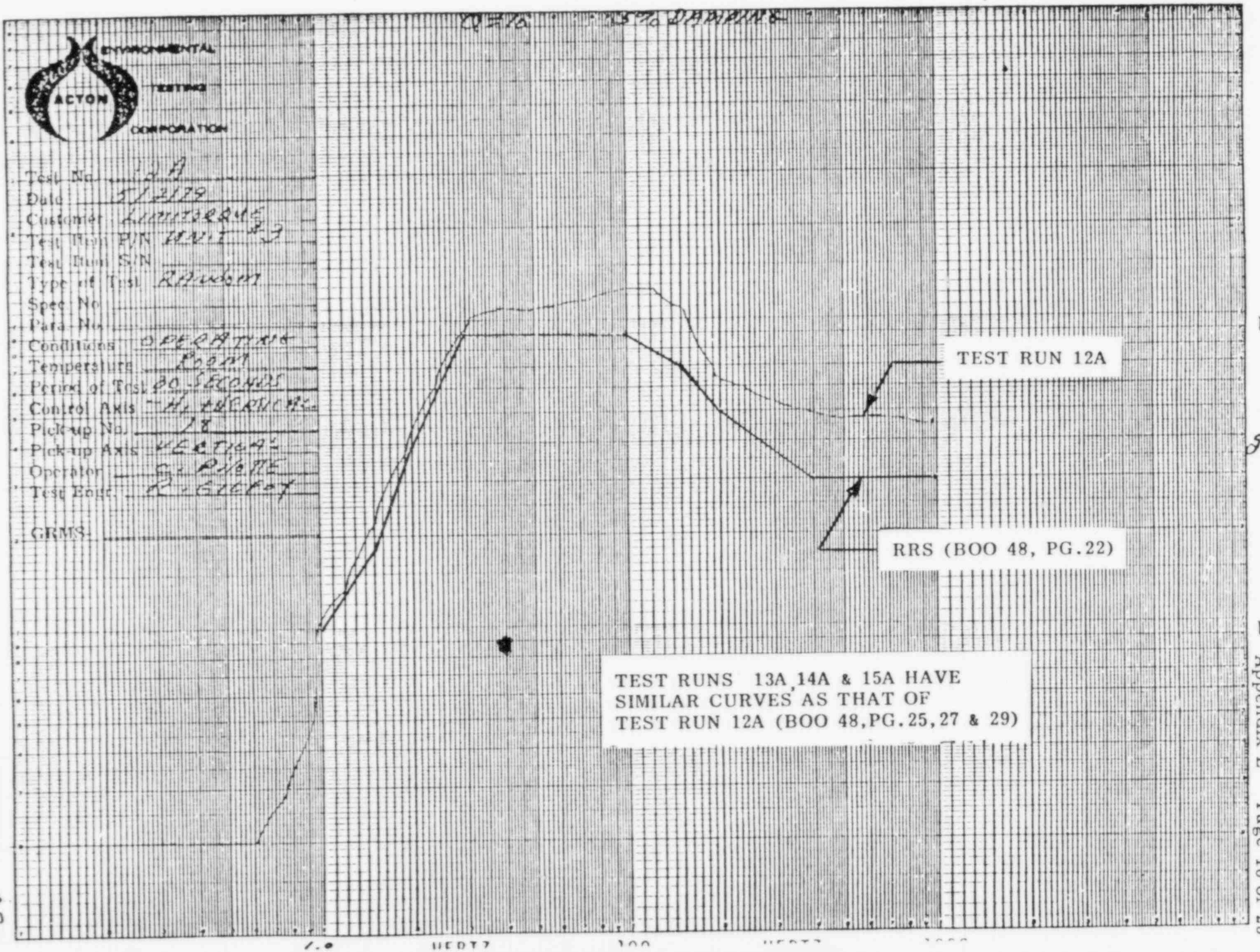

Q=16 3% DAMPING

Test No. 12A
Date 5/21/79
Customer LIMITORQUE
Test Item P/N HN-1 #3
Test Item S/N
Type of Test RANDOM
Spec No.
Para No.
Conditions OPERATING
Temperature ROOM
Period of Test 30 SECONDS
Control Axis H, HORZNTAL
Pick-up No. 18
Pick-up Axis VERTICAL
Operator G. PIETTE
Test Engr. R. GILBOY

GRMS

TEST RUN 12A

RRS (BOO 48, PG.22)

TEST RUNS 13A, 14A & 15A HAVE SIMILAR CURVES AS THAT OF TEST RUN 12A (BOO 48, PG.25, 27 & 29)

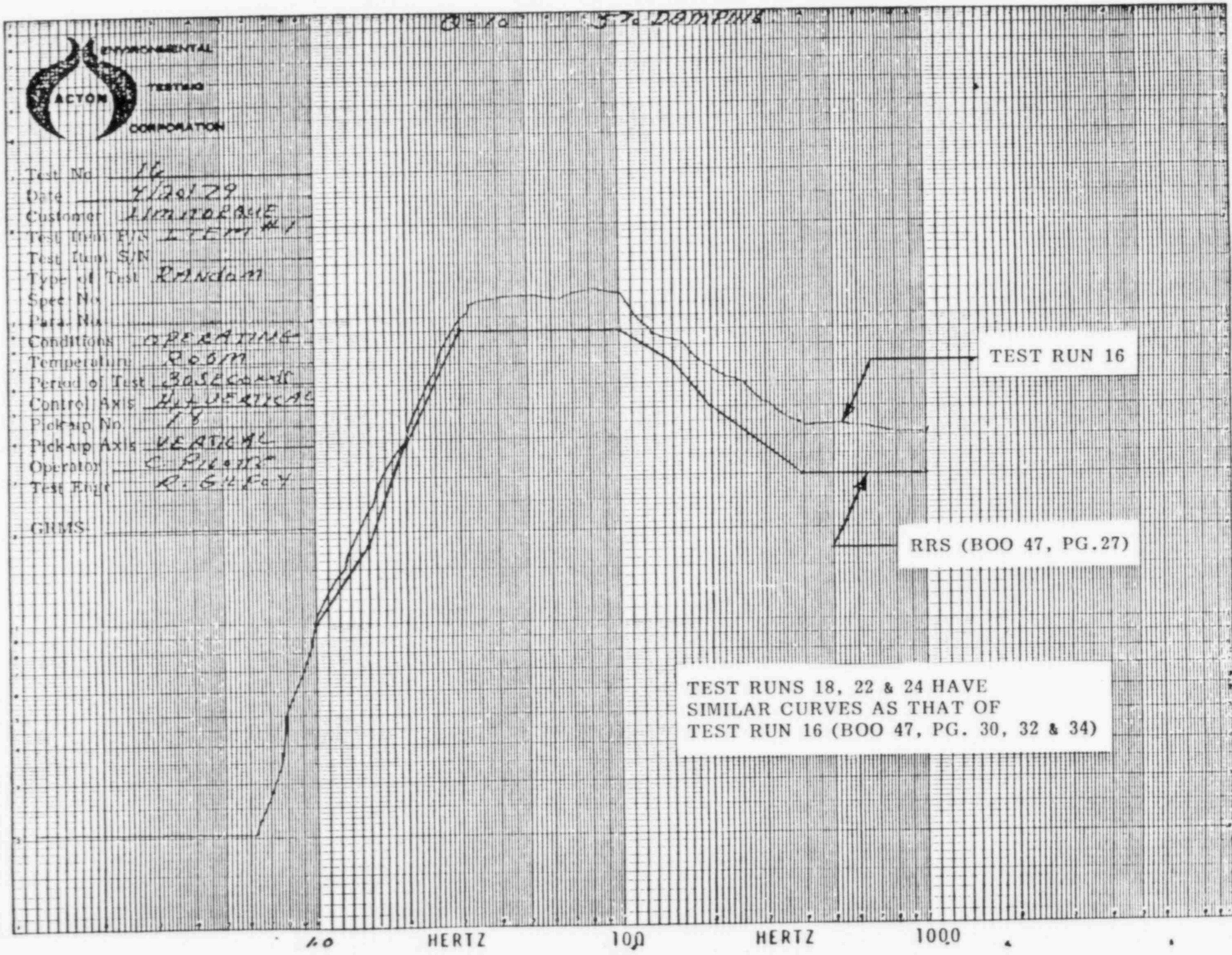

ACTON ENVIRONMENTAL TESTING CORPORATION

Test No 16
Date 4/20/79
Customer LIMITORQUE
Test Item P/N ITEM #1
Test Item S/N
Type of Test Random
Spec No
Para. No
Conditions OPERATING
Temperature ROOM
Period of Test 30 SECONDS
Control Axis H & VERTICAL
Pickup No. 18
Pickup Axis VERTICAL
Operator C. PICOTTE
Test Engr R. GILFOY

GRMS:

TEST RUN 16

RRS (BOO 47, PG.27)

TEST RUNS 18, 22 & 24 HAVE
SIMILAR CURVES AS THAT OF
TEST RUN 16 (BOO 47, PG. 30, 32 & 34)

F. Limitorque correspondence.
1. Hills-McCanna correspondence to Limitorque.

HILLS-McCANNA COMPANY

INTER-OFFICE CORRESPONDENCE

DATE July 22, 1980

TO B. Sarley

FROM T. Rost TRR

SUBJECT: Limitorque Information

References:
1) Hills-McCanna P.O. C69000
2) Brown & Root Specification 2L529TS103D (copy enclosed)
3) Hills-McCanna House Order 65407 & 65408
4) Limitorque Order Number 3B7779
5) Work Sheet (copy enclosed)

Hills-McCanna Company is presently trying to finish up the software (documentation requirements) on this order in order to be able to start assembly and ship. Many of the last items on this order are Safety Related Active Valves with Limitorque Actuators.

Please ask Limitorque to furnish the following items as required by Brown & Root specifications:

1. Para. 1.5h. "Certificate of compliance shall be required regarding seismic requirements where applicable. This certificate ----- per the requirements of Appendix C."

   Hills-McCanna has no such certificate . Mr. Drab was kind enough to furnish me a copy of Limitorque's seismic test on SMB 000/HOBC, SMB-3/H5BC and SMB-1/H3BC. However this does not constitute a certificate of compliance nor does it cover the range of Limitorque sizes involved in the order.

2. Para. 3.1.m. For Hills-McCanna to complete the "Seismic stressanalysis------." portion we require from Limitorque the natural frequency of the actuators. We presume they all exceed 33Hz so we can apply a static analysis to the valve-actuator assembly.

3. Para. 3.2.2.1a, 3.2.2.2b and 3.2.2.2c. Hills-McCanna needs up-to-date motor sizing sheets. The sheets I presently have are dated from 1976 thru June 1979. (for item Q). Only recently (July 1980) I received a copy of the actual performance testing and the motor sizing sheets should be reconciled with actual data.

4. Para. 3. 2. 2. 3e. What are the lubricants and will they meet the design requirements?

5. Para. 3. 2. 2. 3i and 3. 2. 2. 3j. Hills-McCanna needs data which verifies that the actuators meet the requirements of these and referenced Appendix. What is the basis of meeting IEEE 344 and IEEE 382, including aging? Will the actuators with class H insulation meet the requirements of the specification Appendix H?

6. Appendix C. As stated before Hills-McCanna has assumed the Limitorque actuators are rigid, above 33Hz. If Limitorque has qualified some of these by analysis they should furnish data in accordance with Appendix C.

7. Note that according to Limitorque drawing 02-416-0004-3 items A, D, K and F are indicated as being for containment service whereas the Brown & Root specification sheets do not indicate these are in containment. Limitorque should check this.

TR/sc

cc: W. Priese
J. Heidenreich
V. Thakkar

LIMITORQUE CORPORATION

5114 Woodall Road • P. O. Box 11318 • Lynchburg, Virginia 24506
Telephone—804-528-4400 • Telex—82-9448

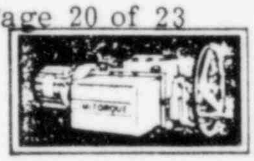

August 11, 1981

Hills-McCanna Company
400 Maple Avenue
Carpentersville, IL 60110

Attention: Mr. Tom Rost, Engineer

Gentlemen:

Subject: Hills-McCanna Purchase Order No. C-69000
Brown and Root Specification 2L529TS103D
Hills-McCanna House Order 65407 and 65408
Limitorque Order No. 3B7779A through Q Inclusive

In reply to a letter by your Mr. Bob Sarley dated July 22, 1980, to your Mr. Tom Rost, which listed several questions regarding the nuclear operators supplied on this order.

Your Mr. Ching Wu's, Engineer, assistance with formulating the answers to your questions was most valuable.

Following are the answers to Items required by the Brown and Root specifications:

1. Paragraph 1.5h - Limitorque qualification is in compliance with the applicable paragraphs of Appendix C of the Brown and Root specification for requirements of seismic qualification of valve operators. Our operators were qualified in accordance with IEEE-344-1975 guidelines to the parameters given on the Nuclear Qualification Data Sheet, LC-40 5/80, which is enclosed. Since all operators on this order were built for inside containment chamber service, the data on the first column of the qualification data sheet for nuclear containment service applies.

   Copies of Limitorque Seismic Test Reports SMB-000/H0BC, SMB-1/H3BC, and SMB-3/H5BC which were forwarded to you previously by our Mr. Drab were prototype test reports for qualifying our units seismically to the parameters given. Since no resonant frequencies were found from 1 to 35 hertz, these test reports

RECEIVED
AUG 14 1981
NUCLEAR ENGR.

were valid. We generically qualified our whole range of units based on these typical prototype test reports. All seismic reports are contained in our test volume B-0058.

2. Paragraph 3.1m - The natural frequency of the operators all exceed 33 hertz so Hills-McCanna can apply a static analysis to the valve actuator assembly. Refer to Section 2.0.6, Appendix F, of our Report B-0058.

3. Paragraph 3.2.2.1a, 3.2.2.2b, and 3.2.2.2c - On talking with Mr. Ching Wu, I understand that up-to-date motor sizing sheets are at your company. If there is further consideration to be given to these motor sizing sheets as to be reconciled with actual data, I would be glad to discuss this with you in depth in the future. At this time, I know of no further consideration that has to be given to this question.

4. Paragraph 3.2.2.3e - The lubricant used in the nuclear operators on this order is Exxon Nebula EP-1. This lubricant meets the parameters shown on the Nuclear Qualification Data Sheet for nuclear containment chamber service. The prototype test operators were tested with the Nebula EP-1 lubricant.

5. Paragraph 3.2.2.3i and 3.2.2.3j - Refer to Section 2.1 of our Report B-0058 for the basis for meeting IEEE-344 and IEEE-382. Also refer to Section 3.2 of the same volume for the qualification on thermal aging. All operators on this order are constructed with Class RH insulated motors and built to containment chamber service requirements. They will meet the environmental qualification test profiles for temperature and pressure specified in Appendix H.

6. Appendix C - The Limitorque actuators are rigid above 33 hertz; however, at present, we cannot furnish you with any analysis above this range at present.

7. Items A, D, K, and F are shown as being constructed for containment chamber service because these items were listed as active components which have to be qualified for functional

operation during and after emergency and faulted conditions. For this reason, they were built for containment chamber service even though they are being used outside the containment.

I hope the above answers your questions directly; however, if you should have further questions, kindly send your request to the writer.

Very truly yours,

LIMITORQUE CORPCRATION

Carl F. Koenig

Carl F. Koenig, Jr.
Application Engineer

jhb

cc: P. McQuillan
C. Doremus/Chicago

LIMITORQUE
VALVE CONTROLS

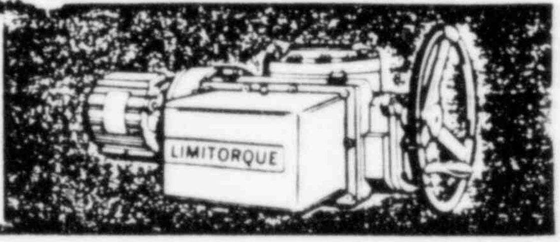

LIMITORQUE CORPORATION • P. O. BOX 11318 • LYNCHBURG, VIRGINIA 24506

IEEE 323 (1974) and IEEE 382 (1972)
NUCLEAR QUALIFICATION DATA
FOR SAFETY RELATED SERVICE

	THREE PHASE ONLY		D.C.
	Nuclear Containment (See Option 8 Price Adders)	Outside Containment (Standard Prices)††	Containment—Inside or Outside (See Option 8 Price Adders)
Design Life	40 years (2000 cycles)*	40 years (2000 cycles)*	40 years (2000 cycles)*
Ambient Temperature (Continuous)	140°F	120°F	120°F
Ambient Humidity	60-100%	30-100%	30-100%
Aging	Motor Stator only 180°C for 100 hours	Entire Unit 165°F for 200 hours at 100% relative humidity	Motor Armature, Field Coils, & Brush Box only 180°C for 100 hours
Total Radiation (40 yrs. integrated)	2.04x10^{8} rads	2x10^{7} rads	1.0x10^{7} rads
Seismic Ref: IEEE344	**6.0 g's (SMB/SB) ***3.0 g's (SMB/HBC) ****6.0 g's (SMB/HBC)	** 6.0 g's (SMB/SB) *** 3.0 g's (SMB/HBC) **** 6.0 g's (SMB/HBC)	**6.0 g's (SMB/SB) ***3.0 g's (SMB/HBC) ****6.0 g's (SMB/HBC)
Number of transients	2	2	1
Transient Temperature	340°F (BWR) 300°F (PWR)	250°F	340°F
Test Humidity	100% (saturated)	100% (saturated)	100% (saturated)
Profile	PWR/IEEE382-72 Page 12, Table 1 BWR/IEEE382-72 Page 12, Table 2	ANSI (yet to be published)	Special
Length of Test	30 Days	15 Days	25 Hours
Completed Test Date	PWR—September 1974 (600456) BWR—September 1972 (600 376)	February 1975 (600461)	October 31, 1975 (B0009)

*During BWR test, 500 cycles were used as a design life per IEEE382.

During PWR test, 2000 cycles were used as a design life of which 500 were incorporated prior to test and 1500 after test.

During test for outside containment, 200 cycles were incorporated while the actuators were being aged, and 1800 were added prior to irradiating.

During D.C. test, all 2000 cycles were incorporated prior to irradiating.

**As of 7/26/75, seismic tests were completed to IEEE344-1975 for both SMB and SB units to 6.0 g's vertical and 3.2 g's horizontal. Since no cross coupling was noted between axes, the test qualifies the SMB/SB to 6.0 g's in both vertical and horizontal axis. Maximum g-level dwells in each of the three axes qualify the units for any mounting position. (Seismic Qualification Report No. B0037). Qualification extends through 35 Hz.

††Standard Class "B" insulated motors only.

***Standard units without spur attachments.

****Standard units with seismic support bracket and without spur attachments.

NOTE: SMC-04 and SMC-05 actuators are qualified for "Outside Containment" service per above levels based on their similarity to the SMB actuator.

DR-65407-32

APPENDIX F

OTHER DOCUMENTS

Design Report Finder Listing

Brown & Root Specification 2L529TS103D
The following reference list applies primarily to technical design requirements.

Specification Paragraph References	Location *		Brief Description
3.1-d 3.1-m, n, o	DR- DR-Appendices D & E Wyle Report		Design Reports cover all of this Design load combinations
3.2.2.1-a, b, c	DR-Appendices B & C		Motor sizing sheets Corr. No. ST-BR-HM-0047
3.2.2.2-c	DR-Appendix B		Stall Torques
3.2.2.3	DR-Appendix E		Limitorque features
Appendix A 1.0-e	DR-Appendix F		SDR No. 4028-3
Appendix C 4.0	DR-Appendix A		Method of Seismic Qualification
6.1-a.1, a.2, a.3, a.4	DR-	page 1	Various identification data
a.5	DR-	page 1 & 2	Calc. by & approvals
a.6	DR-	ea. pg. where practical	Date
a.7	DR-	pg. 4	Revision sheet
b.1, b.2, b.4, b.5	DR-	pg. 1	Various identification data
b.3	DR-	pg. 6	Tech. Description
b.6	DR-	pg. 2	ASME Section III
c.1	DR-	pg. 2	Certification

* Where "DR" is shown it means DR-65407.

Specification Paragraph References	Location	Brief Description
-d	DR- pg. 3	Index
-e. 1	DR- pgs. 2 & 5	Applicable Codes & Stds.
-e. 2, e. 3	DR- pgs. 7 thru 46	Dwgs., Calc., formulas
-e. 4	DR- various pages	Material properties
-e. 5	N. A.	
6. 2 -a. 1 thru a. 4	DR- Appendix A	
-b. 1, b. 2, b. 3	N. A.	
-b. 4	DR-Appendix E	Actuator frequency
-c	DR- pg. 13	Summary
-d	DR- pg. 14	Conclusions
-e. 1 & e. 2	DR- pgs. 13 thru 46	Calc. & Simplifications
6. 3. 1-a	DR-Appendices A, D & E	
-b. 1, b. 3	N. A.	
-b. 2	DR- all	Loadings
-c, d, e	DR-Appendices D & E	Test facilities data
-f, g	DR- all	
6. 3. 2	DR- all	

SDR 467 initiated
2L529TS103D/DCN/8-15-78
DR-65407-32
Appendix F Page 4 of 9
9-2-81

Brown & Root, Inc.

SUPPLIER DEVIATION REQUEST

2L529TS103D

SUPPLIER USE		BROWN & ROOT USE	
Supplier SDR No. 4028-3	Date Submitted 7-7-78	*SDR No. 467	*Date Received 7-18-78

1. Supplier Name: Hills-McCanna Company Address: 400 Maple Avenue City & State: Carpentersville IL Zip 60110

2. Supplier's Order No. 65407 & 65408	3. Supplier's Part No. N. A.	4. Supplier's Part Name N. A.	5. Date Deviation Determined	6. Deviation Found During specification review
7. Buyer's P.O. No. 4028/8028	8. Buyer's Part No. N. A.	9. Buyer's Part Name N. A.	10. B&R Inspector Notified N. A.	11. B&R Eng. Notified by this transmittal

12. Qty or Serial No.	13. Deviation Description (Attach photographs, sketches, etc. as necessary)
All Butterfly Valves	Resilient seats demonstrate different characteristics than specification 2L529TS103D, Appendix "A", paragraph 1.0-e. Non-resilient seats meet the requirements of the specification. Attached-Hills-McCanna Company disc & seat gap study for McCannalok butterfly Valve dated 7-15-77, rev. 11-8-77.

14. Supplier's Disposition Classification: ☒ Accept As Is ☐ Repair ☐ Modify Requirements

15. Proposed Disposition and Technical Justification, and Cost and Schedule Impact (If Any):

Accept the disc and seat gap study for McCannalok butterfly valves (HMC study dated 7-15-77) Technical justification: Resilient and non-resilient seats demonstrate different disc and seat gap characteristics.

16. Associated Supplier Document Change(s): None

17. Suppliers Authorized Representative
Signature: Jac B. Flynn
Name: Jac B. Flynn
Title: Program Manager
Date: 7-7-78

*18. Brown & Root Engrg. Action: ☑ Accepted ☐ Rejected ☐ Rejected-Resubmit

Engrg. Follow-up: ☐ Dwg Change ☒ Spec/Req. Change ☐ No Change Required ☐ Other

*19. Brown & Root Disposition Statement Including Justification (Attach extra sheets, sketches, etc. as necessary)

The disc and seat gap study for McCannalok Butterfly valves is accepted as demonstration of meeting the intent of paragraph 1.0e of Appendix A, Specification 2L529TS103D. No cost impact is involved.
2L529TS103D/DCN/8-15-78

*20. Brown & Root Approval	Date	Verification Signature	Date
PE	[illegible]	21. Supplier Jac B. Flynn	9-8-78
CE	8-16-78		
EPM	8/17/78		
VER.	8/15/78		
QA	8/16/78		
CLIENT	[illegible]		

Form 200.60-1 5/76 NOTE: The reverse side of this form contains the instructions for its preparation and use. Items marked with an asterisk (*) are for Brown & Root entries only.

DR-65407-32
Appendix F Page 5 of
H.O. 65407-08 9-2-

SUPPLIER DEVIATION REQUEST

SOUTH TEXAS PROJECT-ASME BUTTERFLY VALVES

SUPPLIER USE		BROWN & ROOT USE	
Supplier SDR No. 4028-8	Date Submitted 10-05-79	*SDR No. 1213	*Date Received 11-12-79

1. Supplier Name: Hills-McCanna Company Address: 400 Maple Avenue City & State: Carpentersville, IL Zip: 60110

2. Supplier's Order No. N-65407/08	3. Supplier's Part No. --	4. Supplier's Part Name --	5. Date Deviation Determined 8-15-79	6. Deviation Found During Notifi. by Limitorque
7. Buyer's P.O. No. 35-1197-4028/8028	8. Buyer's Part No. --	9. Buyer's Part Name --	10. B&R Inspector Notified --	11. B&R Eng. Notified By this transmittal

12. Qty or Serial No.	13. Deviation Description (Attach photographs, sketches, etc. as necessary)
Item 12 on above P.O. Total of 22 pieces.	Brown and Root Tag No. 10 BM 22 LS 3B-C PXH. Motor Operator Vendor (Limitorque) is unable to meet 60 second operating time while meeting allowable stall torques for referenced Tag Nos. as specified in Spec. 2L529TS103D, Para. 3.2.2.1 and applicable specification sheets pertaining to these valves.

14. Supplier's Disposition Classification: ☐ Accept As Is ☐ Repair ☒ Modify Requirements

15. Proposed Disposition and Technical Justification, and Cost and Schedule Impact (If Any).

Propose increase in operating time of 25% (from 60 to 75 seconds).

16. Associated Supplier Document Change(s):

17. Supplier Authorized Representative
Signature: John D. Romano
Name: John D. Romano
Title: Project Manager
Date: 11-05-79

*18. Brown & Root Engrg. Action: ☒ Accepted ☐ Rejected ☐ Rejected-Resubmit

Engrg. Follow-up: ☐ Dwg Change ☒ Spec/Req. Change ☐ No Change Required ☐ Other DCN/12-3-79 ATTACHED

*19. Brown & Root Disposition Statement Including Justification (Attach extra sheets, sketches, etc. as necessary)

The Proposed increase in operating time from 60 to 75 seconds is acceptable. The total no. of valves on above P.O's 4028 &8028 for Item #12 are 24 (12 on each P.O.). This SDR applies only to Item #12 of P. O. 4028/8028.

*20. Brown & Root Approval	Date
PM	12-5-79
DE	12-5-79
EPM	12-11-79
VERSUR	12-4-79
QA	12-2-79
CLIENT	3/5/80

Verification Signature
21. Supplier John D. Romano
John D. Romano
Date 3/19/80

Form 200.60-1 5/76
NOTE: The reverse side of this form contains the instructions for its preparation and use. Items marked with an asterisk (*) are for Brown & Root entries only.

Brown & Root, Inc. Post Office Box Three, Houston, Texas 77001

DATE: April 24, 1979

Hills-McCanna Co.
400 Maple Avenue
Carpentersville, IL 60110

CORRES. NO.: ST-BR-HM-0047
SFN: P-4028/8028, B-3500
JOB NO.: CR-0241

Attention: W. Yovic
Contract Administrator

RECEIVED
MAY 1 1979
PROJECT MANAGEMENT
BY ____________

SUBJECT: CALCULATION APPROVAL

Gentlemen:

Enclosed ~~are~~ is one (1) **copy/~~copies~~ of the following:**

DESCRIPTION

- ( ) Vendor's Review Comments
- ( ) Vendor's Review Drawings
- ( ) Vendor's Certified Drawings
- ( ) B&R Drawings/Reproducibles
- ( ) Data Sheets
- ( ) Instruction Manuals
- ( ) Spare Parts List
- ( ) System Design Descriptions
- ( ) Specifications
- ( ) Bidder's Lists
- ( ) Purchase Orders
- ( ) Telephone Conversations
- ( ) Document Change Notice
- (X) Limitorque Sizing Calculation

ACTION/STATUS DESIGNATIONS

- A - Your files and/or information
- B - Construction
- C - Released for Fabrication Return ____ Certified copies
- D - Released for Fabrication after corrections as noted. Return ____ Certified copies.
- E - Make changes and resubmit
- F - Review and/or Comment by ____________
- G - Preliminary
- H - For Approval
- [✓ I -] Approved
- J - Approved as Noted
- K - Comments as Noted
- L - Use

Remarks:

Document No.	Document Title	Action/Status
L849XC578AHM	Limitorque Sizing Calculation (Lim. Quote No. 3B779) Sht. 2 thru 8, 10, 11	I

STP File No.: L849TR

cc: A. J. Granger - HL&P w/o
A. Schoeneberg - HL&P w/o
J. R. Molleda - HL&P w/o
R. A. Gustafson w/o
A. F. Holbrook w/o
M. Claypool w/o
EDCC w/a (2)
A. Freeman w/o
Proc. File w/a

Very truly yours,
~~BROWN & ROOT~~, INC.

L. E. Hayden, Jr.
Engineering/Project Manager
South Texas Project
Electric Generating Station

RLJ 5/17
LEH/RLJ/STY/kmh

200.71-B

Brown & Root, Inc. Post Office Box Three, Houston, Texas 77001
A Halliburton Company

DATE: September 23,1980

Hills McCanna Company
400 Maple Avenue
Carpentersville, Ill. 60110

CORRES. NO.: ST-BR-HM-109
SFN: B-3500 P-4028/8028
JOB NO.: CR-0241

RECEIVED
SEP [illegible] 1980
PROJECT MANAGEMENT
BY ____

Attention: J.D. Romano
Contract Administrator

SUBJECT: Review of Seismic Simulation Test Report

Gentlemen:

Enclosed ~~are~~ is one (1) copy~~/copies~~ of the following:

DESCRIPTION

- ( ) Vendor's Review Comments
- ( ) Vendor's Review Drawings
- ( ) Vendor's Certified Drawings
- ( ) B&R Drawings/Reproducibles
- ( ) Data Sheets
- ( ) Instruction Manuals
- ( ) Spare Parts List
- ( ) System Design Descriptions
- ( ) Specifications
- ( ) Bidder's Lists
- ( ) Purchase Orders
- ( ) Telephone Conversations
- ( ) Document Change Notice
- (XX) Seismic Simulation Test Report

ACTION/STATUS DESIGNATIONS

- A - Your files and/or information
- B - Construction
- C - Released for Fabrication Return ____ Certified copies
- D - Released for Fabrication after corrections as noted. Return ____ Certified copies.
- E - Make changes and resubmit
- F - Review and/or Comment by ____
- G - Preliminary
- H - For Approval
- [✓ I -] Approved
- J - Approved as Noted
- K - Comments as Noted
- L - Use

Remarks:

Document No.	Document Title	Action/Status
	See Page 2	

STP File No.: L849TR
cc: See Page 2 (PVD-4A)

Very truly yours,
BROWN & ROOT, INC.

J L Hawks
J. L. Hawks
Engineering/Project Manager
South Texas Project
Electric Generating Station

gew gws gaw PKB
JLH/EWL/GWS/GAW/PKB/jr

Date Sept.23,1980

Page 2 of 2

DOCUMENT TRANSMITTAL

Continuation

Document Number	Document Title	Action/Status
L849XR1377AHM	Seismic Simulation Test Report # 45116-1	I

cc: A.J. Granger-HL&P w/o
A. Schoeneberg-HL&P w/o
J.R. Molleda-HL&P w/o
J.K. Webb w/o
Expediting w/o
M.J. McGinnis w/o
Mech-P&V VLF-w/o

R.E. Ruff w/o
B&R QA STP Project QA Mgr. w/o
B&R Site QA w/o
Mech-P&V File w/a
EDCC w/a (3-L, 2-Attachments)
SDCC w/a

M. Koslosky-w/o
Mech-P&V FDC-w/o

File No. L849TR

Corres. No. ST-BR-HM-109 /GM -

200.52-8

PVD-4A
7-28-80

Brown & Root, Inc. Post Office Box Three, Houston, Texas 77001

October 1, 1980

ST-BR-HM-110, ST-BR-HA-105
SFN: B-3500
P.O. #35-1197-4028/8028
4029/8029
JOB NO.: CR-0241

Hills McCanna Company
400 Maple Avenue
Carpentersville, IL 60110

Attention: T. E. Rost

Reference: Hills McCanna letter ST-HM-BR-0128 &
ST-HA-BR-0115 dated August 28, 1980

Subject: Stress Limits for Active Valves -
Spec. 2L529TS103D (Butterfly Valves) &
1L529TS102D (Ball Valves)

Dear Mr. Rost:

This has reference to your discussion with Jim Yorke of B&R Stress Group during which the contents of the above referenced letter was discussed. This is to confirm that the contents are acceptable except the following: Last paragraph in the letter states that the stall torque load of the actuator is included in the load summary. As discussed, Hills McCanna is advised to use 'breakway torque' rather than 'stall torque' in the summary and compare calculated stresses with a maximum stress allowed of 1.75S. This is for demonstration of structural integrity. Operability will be demonstrated by static loading tests, as discussed earlier. Paragraph 3.2.2.2.a of the specifications 1L529TS102D and 2L529TS103D still applies for components under operator stalled torque loadings. If there are any questions please call P. K. Bahl at (713) 676-7445.

Very truly yours,

BROWN & ROOT, INC.

J. L. Hawks
Engineering Project Manager
South Texas Project
Electric Generating Station

JLH/EWL/GWS/GAW/PKB/sfh

File No.: L859TR
L849TR
cc: R. A. Witthauer
G. Z. Girgis
J. E. Yorke
D. L. Carathers - HL&P
A. Schoeneberg - HL&P
R. A. Childers

H-McC
cc. W. Priese
J. Romano
C-L. Wu

Requested by: Bernie Krause
Hills-McCanna Co.
Date 10/28/75 PO 54188
Charge No

Performed by:
Date

Witnessed by:
Project Mn.Gr

FIGURE 1

Test outline and/or purpose:

Flow test 14" BFV w/welded disc (compare w/cast disc).

Torque measurements @ various angles of opening.

Page 1

Procedure and/or recommendation	Reference data and specifications	Test results attach record sheets
1. Provide valve with numbered index plate using 0° to 90° positions.		
2. Install valve between 14" inlet-and disch. lines in flow loop.		
3. Install 7.496" dia. orifice.		
4. Manometer hook-up over orifice.		
5. Flush system & bleed.		
6. Inspect pumps, connections, flow-/pressure control valves.		
7. Open test valve, start pumps for 1st test run.		
8. Control bypass valve (max. 45 psi).		
9. Close test valve: IN ONE NOTCH intervals (10°?). Record flow-and pressure drop over valve versus disc position using index plate (Notice tonque on handle).		
0. Adjust by-pass valve to syst. press. of 45psi.		
1. Open test valve in one notch intervals (10°?). Record flow and pressure drop over valve versus disc position (Notice torque on handle).		
2. Stop pumps.		
3. Remove Orifice plate.		
4. Install torque wrench on handle of test valve.		
5. Open test valve, start pump for 2nd test run.		
6. Close the test valve in continues motion - recording torque versus disc position and press. drop over valve.		
7. Adjust by-pass valve to system press. of 45 psi.		
8. Open the test valve in continues motion-recording torque versus disc position and press. drop over valve.		
9. Stop pumps.		
0. Plot results graphically.		

Conclusions and/or remarks:

Project:

C-66

C_V VERSUS VALVE DEGREES OPEN

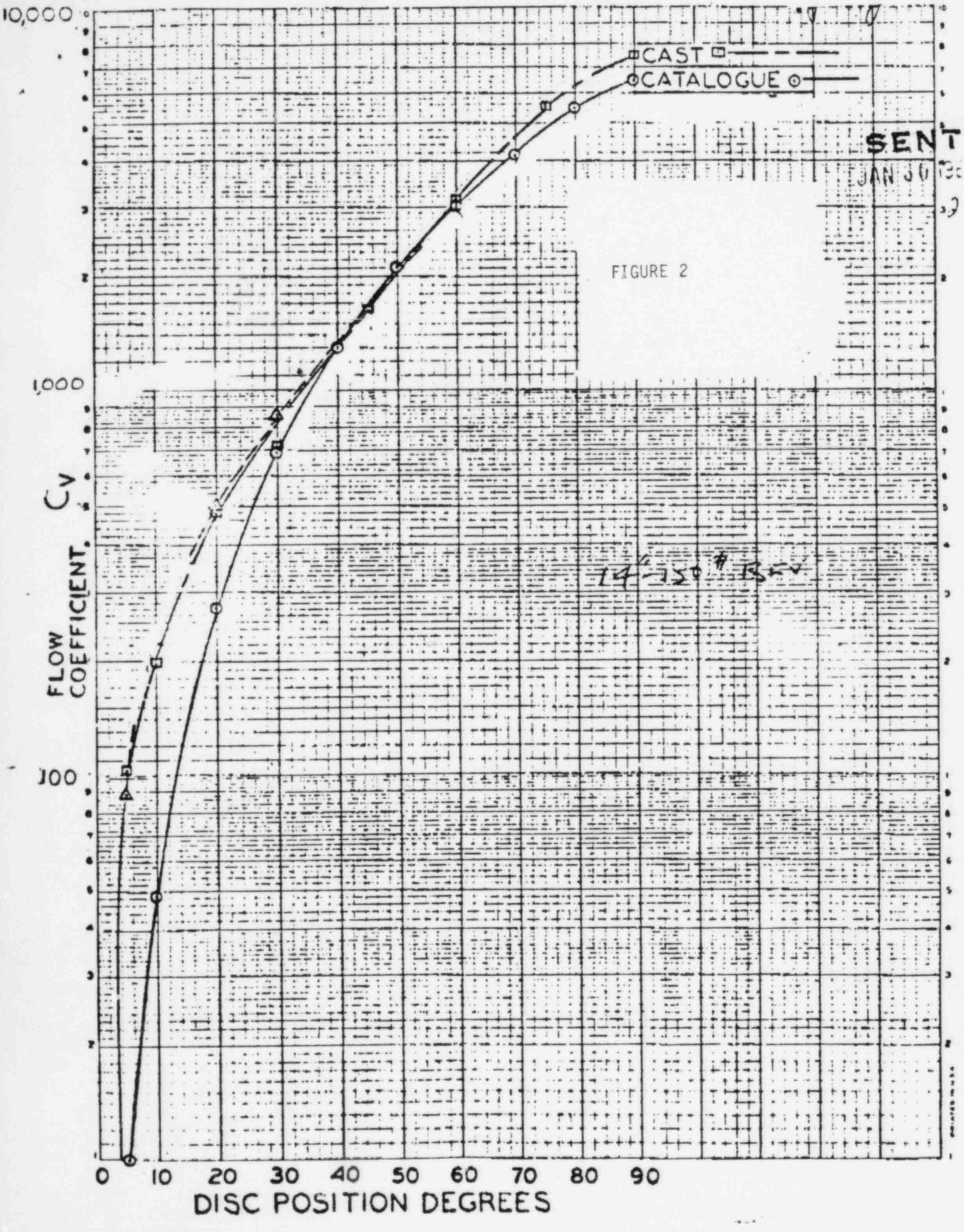

FIGURE 2

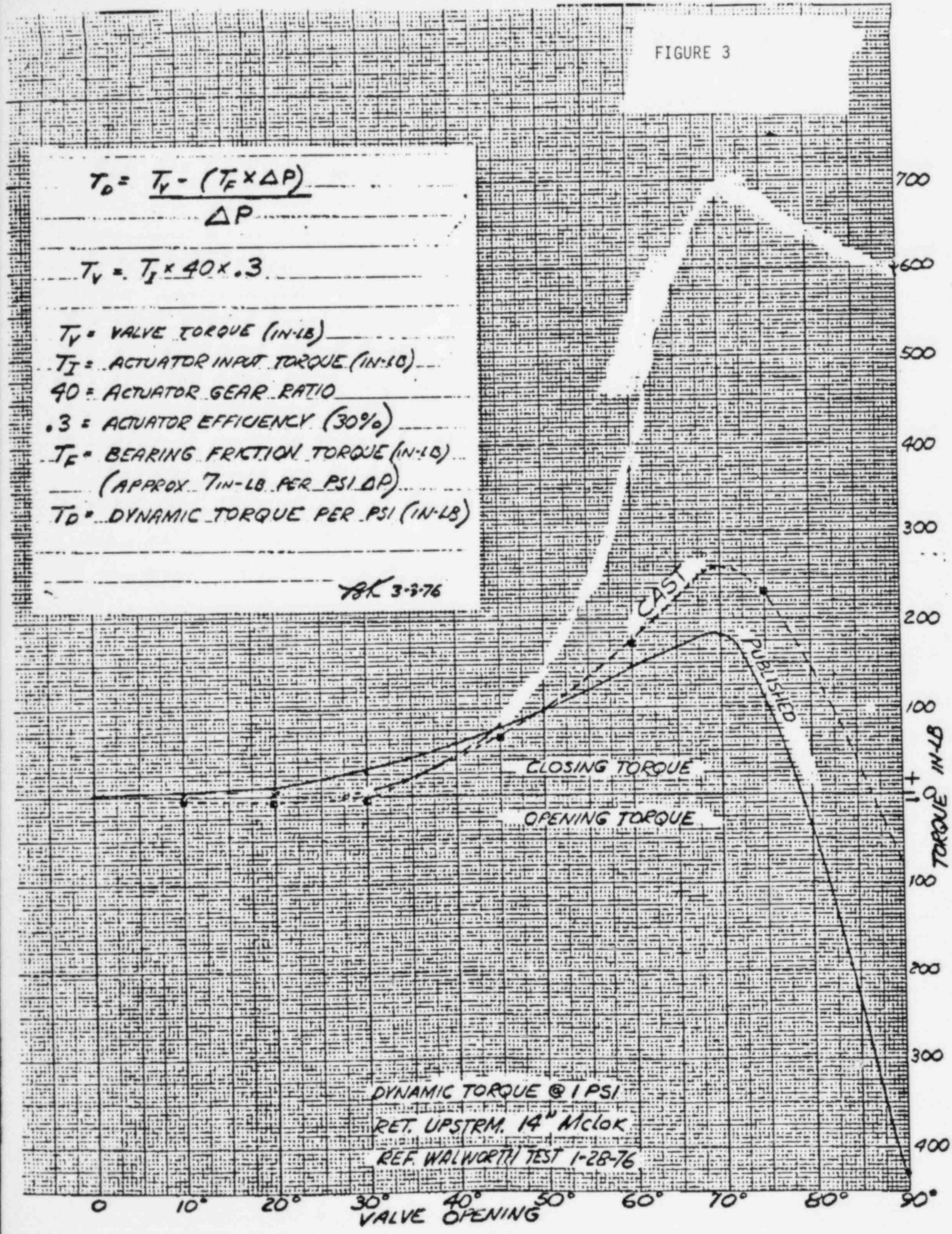

FIGURE 3

$$T_D = \frac{T_V - (T_F \times \Delta P)}{\Delta P}$$

$$T_V = T_I \times 40 \times .3$$

T_V = VALVE TORQUE (IN-LB)
T_I = ACTUATOR INPUT TORQUE (IN-LB)
40 = ACTUATOR GEAR RATIO
.3 = ACTUATOR EFFICIENCY (30%)
T_F = BEARING FRICTION TORQUE (IN-LB)
(APPROX 7IN-LB PER PSI ΔP)
T_D = DYNAMIC TORQUE PER PSI (IN-LB)

3-3-76

DYNAMIC TORQUE @ 1 PSI
RET. UPSTRM. 14" Mclok
REF. WALWORTH TEST 1-28-76

Date Sept.23,1980

Page 2 of 2

DOCUMENT TRANSMITTAL

Continuation

Document Number	Document Title	Action/Status
L849XR1377AHM	Seismic Simulation Test Report # 45116-1	I

cc: A.J. Granger-HL&P w/o
A. Schoeneberg-HL&P w/o
J.R. Molleda-HL&P w/o
J.K. Webb w/o
Expediting w/o
M.J. McGinnis w/o
Mech-P&V VLF-w/o

R.E. Ruff w/o
B&R QA STP Project QA Mgr. w/o
B&R Site QA w/o
Mech-P&V File w/a
EDCC w/a (3-L, 2-Attachments)
SDCC w/a

M. Koslosky-w/o
Mech-P&V FDC-w/o

File No. L849TR

Corres. No. ST-BR-HM-109 /GM -

200.52-B

PVD-4A
7-28-80

Requested by: Bernie Krause
Hills-McCanna Co.

Date 10/28/75 PO 54188

Charge No:

Performed by:

Date

FIGURE 1

Witnessed by:

Project Mn.Gr

Test outline and/or purpose:

Flow test 14" BFV w/welded disc (compare w/cast disc).

Torque measurements @ various angles of opening.

Page 1

Procedure and/or recommendation	Reference data and specifications	Test results attach record sheets
1. Provide valve with numbered index plate using 0° to 90° positions.		
2. Install valve between 14" inlet-and disch. lines in flow loop.		
3. Install 7.496" dia. orifice.		
4. Manometer hook-up over orifice.		
5. Flush system & bleed.		
6. Inspect pumps, connections, flow-/pressure control valves.		
7. Open test valve, start pumps for 1st test run.		
8. Control bypass valve (max. 45 psi).		
9. Close test valve: IN ONE NOTCH intervals (10°?). Record flow-and pressure drop over valve versus disc position using index plate (Notice tonque on handle).		
0. Adjust by-pass valve to syst. press. of 45psi.		
1. Open test valve in one notch intervals (10°?). Record flow and pressure drop over valve versus disc position (Notice torque on handle).		
2. Stop pumps.		
3. Remove Orifice plate.		
4. Install torque wrench on handle of test valve.		
5. Open test valve, start pump for 2nd test run.		
6. Close the test valve in continues motion - recording torque versus disc position and press. drop over valve.		
7. Adjust by-pass valve to system press. of 45 psi.		
8. Open the test valve in continues motion-recording torque versus disc position and press. drop over valve.		
9. Stop pumps.		
0. Plot results graphically.		

Conclusions and/or remarks:

Project:

C-66

C_V VERSUS VALVE DEGREES OPEN

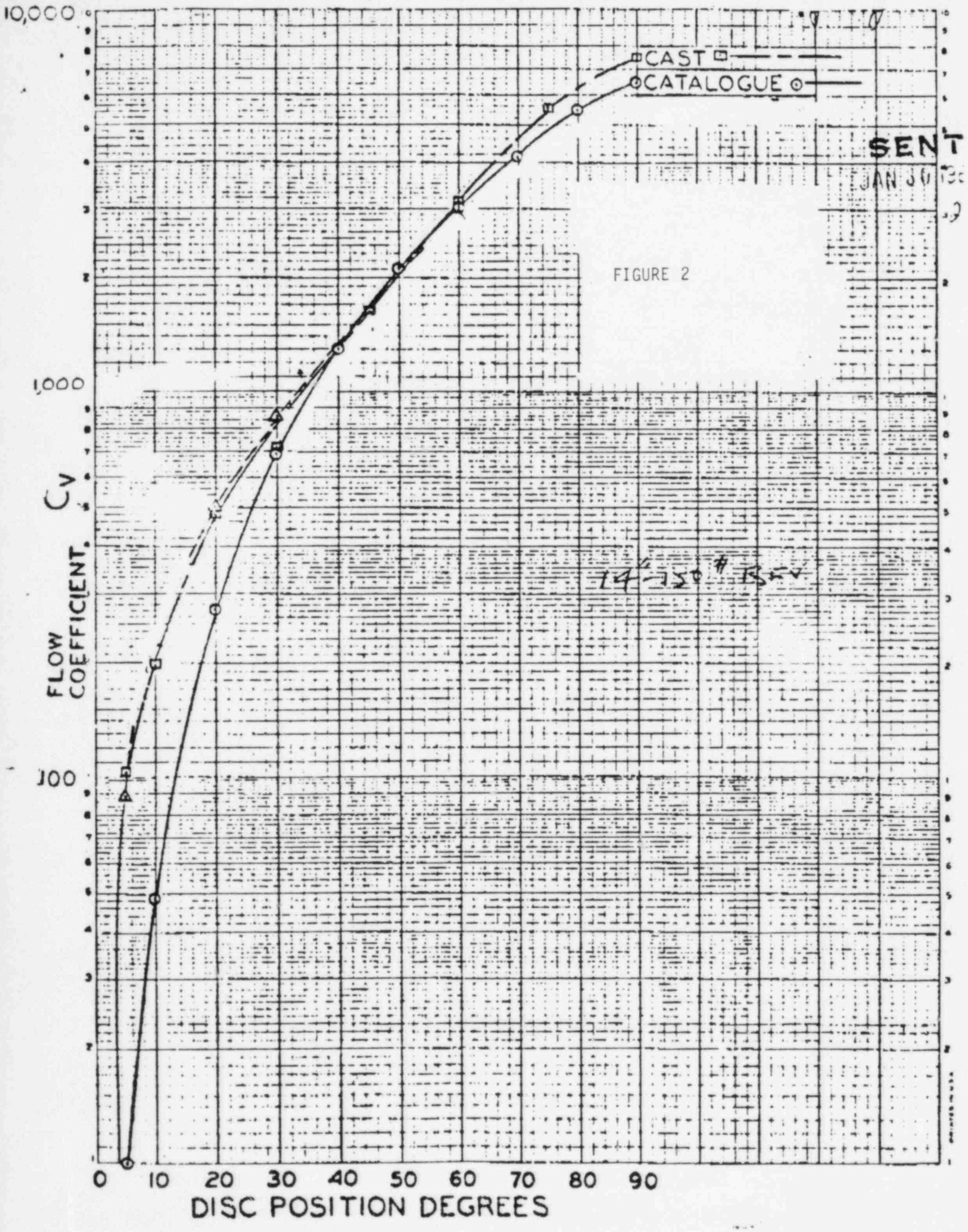

FIGURE 2

FIGURE 3

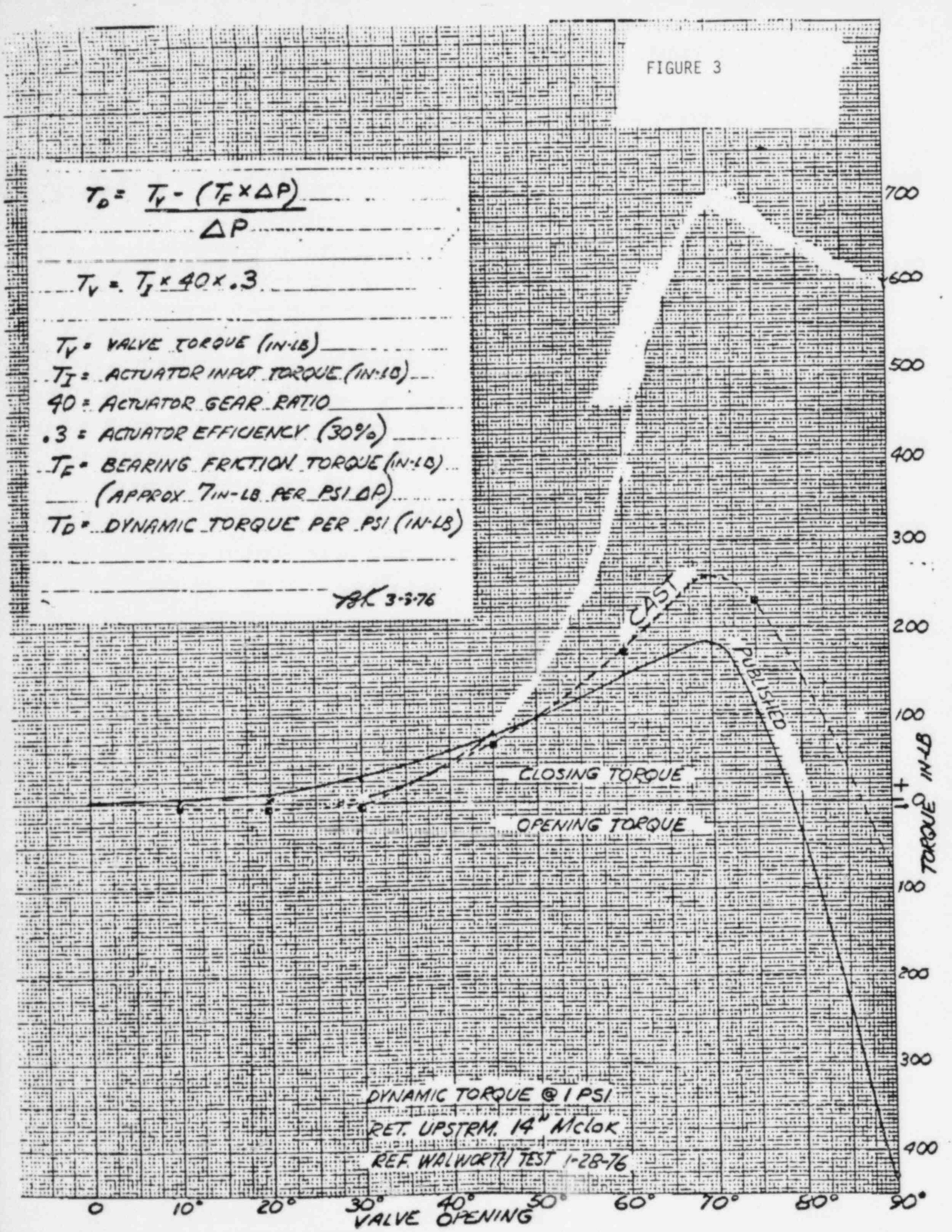

$$T_D = \frac{T_V - (T_F \times \Delta P)}{\Delta P}$$

$$T_V = T_I \times 40 \times .3$$

T_V = VALVE TORQUE (IN-LB)

T_I = ACTUATOR INPUT TORQUE (IN-LB)

40 = ACTUATOR GEAR RATIO

.3 = ACTUATOR EFFICIENCY (30%)

T_F = BEARING FRICTION TORQUE (IN-LB) (APPROX 7IN-LB PER PSI ΔP)

T_D = DYNAMIC TORQUE PER PSI (IN-LB)

3-3-76

DYNAMIC TORQUE @ 1 PSI

RET. UPSTRM. 14" Mclok

REF. WALWORTH TEST 1-28-76

HILLS-McCANNA PRODUCT DEVELOPMENT TESTING

REPORT NUMBER	PRODUCT	DATE ISSUED
1041-BFV 50	Butterfly Valve	9-17-81

TITLE 8" L151-CI-Z-S6 Butterfly Valve With Limitorque Actuator Model SMB-000-2-HOBC./ Reference: CBFA 356; Valve B/M L31510229 and Fixture Dwg. BFV-81-27.

Requested By	Engineer Assigned	P.D.T. Assignment
C.Wu	T.E. Rost	81-BFV-17

Tested By	Conclusions By	Reviewed By	Approved By
Laboratory Staff Date: 8-18-81/8-28-81	A. J. Wild Date: 9-15-81	T.E. Rost Date: 9-16-81	W. Thiele Date: 9-17-81

Object Of Test:

To demonstrate the functional operability of the valve-actuator assembly under all design loading conditions. The pipe nozzle loads and flow dynamic torque are applied. The seismic load is simulated by a static side loading as a result of natural frequency being greater than 33 Hz. Reference: PS-3-2.7 Dated 7-23-81

Conclusions:

The 8" L151-CI-Z-S6 butterfly valve with Limitorque actuator model SMB-000-2-HOBC was subjected to the static deflection test outlined in PS-3-2.7 and compliance to the specification requirements were obtained.

PRODUCT DEVELOPMENT TESTING SUMMARY OF RESULTS

ASSIGNMENT NUMBER	81-BFV-17	8" BFV Test Report
Test Report Number	1041-BFV 50	Page 2 of 5 Pages

Prepared By	Tests Witnessed By	Reviewed By JLPost
A. J. Wild	A. J. Wild (P.D.T.)	Director of Nuclear Prod.E
P.D.T. Manager	C. Wu C. Wu (Engineering)	
Date 8-21-81/8-28-81	G. Smid Smid (Quality Control)	Date 9-16-81

Static deflection test per PS-3-2.7 of 8" L151-C1-Z-S6 butterfly valve. Ref. CBFA 356 and BFV-81-27.

I. Pre-test seat leakage; nozzle loading not applied.
285 psig ambient temperature water. (max. 2.7cc or 54 drops in 10 minutes)

There was no leakage across the seat through the entire 10 minute test period. (Tested 8-21-81)

II. Operation of valve from closed to open position; nozzle loads applied. (a)

A. Full Voltage: 460 Volts. (Tested 8-28-81)

Cycle No.	Timed 30° Operation	Calculated 90° Operation	Remarks on Valve Operation
1	3.00 seconds	9.00 seconds	smooth
2	2.84 seconds	8.52 seconds	smooth
3	2.99 seconds	8.97 seconds	smooth

B. Reduced Voltage: 368 Volts. (Tested 8-28-81)

Cycle No.	Timed 30° Operation	Calculated 90° Operation	Remarks on Valve Operation
1	3.03 seconds	9.09 seconds	smooth
2	3.06 seconds	9.18 seconds	smooth
3	3.07 seconds	9.21 seconds	smooth

III. Post- test seat leakage; nozzle loading not applied.
285 psig ambient temperature water. (Max. 2.7cc or 54 drops in 10 minutes)

There was no leakage across the seat through the entire 10 minute test period. (Tested 8-28-81)

IV. Post-test Inspection (b)

There were no visual or liquid penetrant defects noted on any of the valve components. (9-14-81)

NOTES: (a) Reference Appendix A on Page 3 for schematic of load application and applied loads. (Max. 10 seconds for 90° operation)

(b) Reference Appendix C on Page 5 for certificate of examination.

PRODUCT DEVELOPMENT TESTING SUMMARY OF RESULTS

ASSIGNMENT NUMBER	81-BFV-17	8" BFV Test Report
Test Report Number	1041-BFV 50	Page 3 of 5 Pages

Prepared By	Reviewed By	Approved By
Laboratory Staff	C. R. Kersten	A. J. Wild
	Laboratory Supervisor	P. D. T. Manager
Date 8-21-81/8-28-81	Date 8-28-81	Date 8-28-81

Static deflection test per PS-3-2.7 of 8" L151-C1-Z-S6 butterfly valve. Ref. CBFA 356 and BFV-81-27.

Appendix A

I. Schematic of load application.

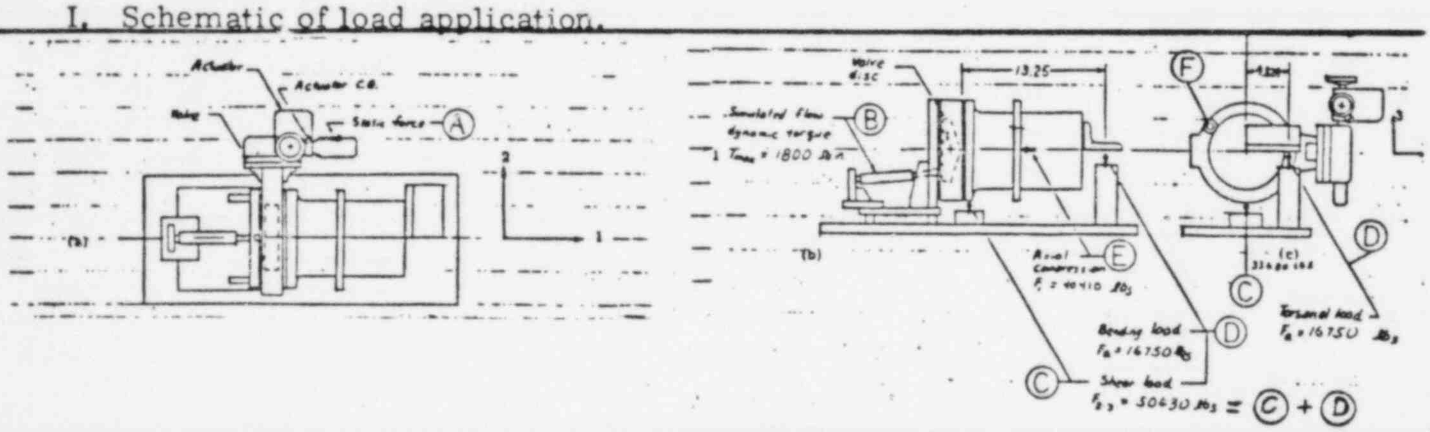

II. Applied loads. (*)

Ⓐ Static Force 2168 Lbs.	Miller cylinder S/N 80501932 Calibration: 12.005 Lbs/psig pressure set at 181 psig to obtain 2173 Lb
Ⓑ Simulated flow dynamic torque T_{max} 1800 Lb. - In.	Bellows cylinder S/N 1175-S Calibration: 2.8401 Lbs/psig pressure set at 125 psig to obtain 1890 ± 90 Lb-In valve operating torque.
Ⓒ Shear load 33680 Lbs.	OTC cylinder S/N 25104 Calibration: 9.127 Lbs/psig pressure set at 3690 psig to obtain 33679 Lbs
Ⓓ Bending (F_a), Torsional (F_a) and Shear load 16,750 Lbs.	185 Lb-Ft torque applied to lubricated 3/4-10 bolt.
Ⓔ Axial compression 40410 Lbs.	149 Lb-Ft torque applied to three (3) lubricated 3/4 - 10 bolts
Ⓕ Companion and fixture flange bolting torque	275 Lb-Ft torque applied to lubricated stud nut fasteners

NOTE: (*) Reference Appendix B on page 4 for equipment calibration record.

PRODUCT DEVELOPMENT TESTING SUMMARY OF RESULTS

ASSIGNMENT NUMBER	81-BFV-17	8" BFV Test Report
Test Report Number	1041-BFV 50	Page 4 of 5 Pages
Prepared By	Reviewed By	Approved By
Laboratory Staff	C. R. Kersten	A. J. Wild
	Laboratory Supervisor	P. D. T. Manager
Date 8-18-81/8-20-81	Date 8-28-81	Date 8-28-81

Static deflection test per PS-3-2.7 of 8" L151-C1-Z-S6 butterfly valve. Rev. CBFA 356 and BFV-81-27.

Appendix B

Equipment Calibration Record

Ⓐ	Miller cylinder S/N 80501932, 8-19-81 (Dillon Force Gage 0-5000 Lbs) Pressure gage 0-1000 psig, 8-18-81 (Dead Weight Test)
Ⓑ	Bellows cylinder S/N 1175-S, 8-19-81 (Dillon Force Gage 0-5000 Lbs) Pressure gage 0-600 psig, 8-19-81 (Dead Weight Test) 0-450 Lb-Ft torque wrench, 2-28-81 (Q.C. Department Record)
Ⓒ	O.T.C. cylinder S/N 25104, 8-19-81 (Dillon Force Gage 0-5000 Lbs) Pressure gage 0-10,000 psig, 8-18-81 (Dead Weight Test)
Ⓓ	0-450 Lb. Ft torque wrench, 2-28-81 (Q. C. Department Record)
Ⓔ	200 Lb capacity spring scale, 8-20-81 (Instron Calibration Weights)
Ⓕ	0-450 Lb-Ft torque wrench, 2-28-81 (Q. C. Department Record)

400 MAPLE AVENUE, CARPENTERSVILLE, ILLINOIS 60110 312/426-4100 CABLE HILLSCANA TELEX 722-442

HILLS-McCANNA COMPANY

APPENDIX C

CERTIFICATE OF EXAMINATION

DATE 9-14-81

CUSTOMER Houston Lighting & Power Company CUSTOMER P.O. NO. 35-1197-4028 (Unit 1) 35-1197-8028 (Unit 2)

HILLS-McCANNA SALES ORDER NO. N65407 N65408 SHOP ORDER NO. 65407

PRODUCT DESCRIPTION: 8" 150 Class Butterfly valve which has been seismic and static deflection functional tested (with Limitorque actuator). This certificate covers post test inspection of parts.

The following described parts have been liquid penetrant tested and accepted in compliance to the ASME Boiler and Pressure Vessel Code Sect. III, Div. 1.

Body, retainer, disc, stem, gland flange and gland flange studs.

Method and acceptance in accordance with Document No. QSN 8-6 Rev. C

The balance of the parts were visually inspected andno signs of inceptive failure were found.

BATCH NUMBER: 81B03W penetrant, 79B091 developer

Certified Liquid Penetrant Inspector Timothy McLaughlin Level II

By Hills-McCanna Co. Q.A. Kathryn Campbell 9/15/81

HILLS-McCANNA PRODUCT DEVELOPMENT TESTING

REPORT NUMBER	PRODUCT	DATE ISSUED
1042-BFV 51	Butterfly Valve	9-22-81

TITLE 18" L151-CI-Z-S6 Butterfly Valve With Limitorque Actuator Model SMB-00-15-H3BC. Reference: CBFA-366; Valve B/M L34110204 and Fixture Dwg. BFV-80-45.

Requested By	Engineer Assigned	P.D.T. Assignment
C. Wu	T. E. Rost	81-BFV-18

Tested By	Conclusions By	Reviewed By	Approved By
Laboratory Staff Date:8-20-81/9-11-81	A. J. Wild Date: 9-21-81	T. E. Rost TER Date: 9-21-81	W. Pierce Date: 9-22-81

Object Of Test:

To demonstrate the functional operability of the valve-actuator assembly under all design loading conditions. The pipe nozzle loads and flow dynamic torque are applied. The seismic load is simulated by a static side loading as a result of natural frequency being greater than 33 H_z. Reference: PS-3-2.10 Dated 7-23-81

Conclusions:

The 18" L151-CI-Z-S6 butterfly valve with Limitorque actuator model SMB-00-15-H3BC was subjected to the static deflection test outlined in PS-3-2.10 and compliance to the specification requirements were obtained.

PRODUCT DEVELOPMENT TESTING SUMMARY OF RESULTS

ASSIGNMENT NUMBER	81-BFV-18	18" BFV Test Report
Test Report Number	1042-BFV-51	Page 2 of 5 Pages

Prepared By	Test Witnessed By	Reviewed By
A. J. Wild	A. J. Wild (P.D.T.)	T. E. Rost TERost
P.D.T. Manager	C. Wu (Engineering) C. Wu	Director of Nuclear Prod. E
Date 8-20-81/9-21-81	G. Smid (Quality Control) G. Smid	Date 9-21-81

Static deflection test per PS-3-2.10 of 18" L151-CI-Z-S6 butterfly valve. Ref. CBFA 366 and BFV-80-45

I. Pre-test seat leakage; nozzle loading not applied. 285 psig ambient temperature water.

There was no leakage across the seat through the entire 10 minute test period. (Tested 8-20-81)

II. Operation of Valve from closed to open position; nozzle loads applied (a)

A. Full Voltage; 460 Volts (Tested 9-11-81)

Cycle No.	Timed 30° Operation	Calculated 90° Operation	Remarks on Valve Operation
1	3.20 seconds	9.60 seconds	Smooth
2	3.19 seconds	9.57 seconds	Smooth
3	3.10 seconds	9.30 seconds	Smooth

B. Reduced Voltage; 368 Volts (Tested 9-11-81)

Cycle No.	Timed 30° Operation	Calculated 90° Operation	Remarks on Valve Operation
1	3.17 seconds	9.51 seconds	Smooth
2	3.20 seconds	9.60 seconds	Smooth
3	3.17 seconds	9.51 seconds	Smooth

III. Post-test seat leakage; nozzle loading not applied. 285 psig ambient temperature water.

One drop of water formed during the 10 minute test period. (Tested 9-11-81)

IV. Post-test Inspection (b)

There were no visual or liquid penatrant defects noted on any of the valve components. (9-21-81)

Notes: (a) Reference Appendix A on Page 3 for schematic of load application and applied loads. (Max. 10 seconds for 90° operation.)

(b) Reference Appendix C on Page 5 for certificate of examination.

PRODUCT DEVELOPMENT TESTING SUMMARY OF RESULTS

ASSIGNMENT NUMBER	81-BFV-18	18" BFV Test Report
Test Report Number	1042-BFV 51	Page 3 of 5 Pages

Prepared By	Reviewed By	Approved By
Laboratory Staff	C. R. Kersten	A. J. Wild
	Laboratory Supervisor	P.D.T. Manager
Date 8-18-81/9-11-81	Date 9-11-81	Date 9-11-81

- Static deflection test per PS-3-2.10 of 18" L151-CI-Z-S6 butterfly valve. Ref. CBFA 366 and BFV-80-45.

Appendix A

I. Schematic of Load Application

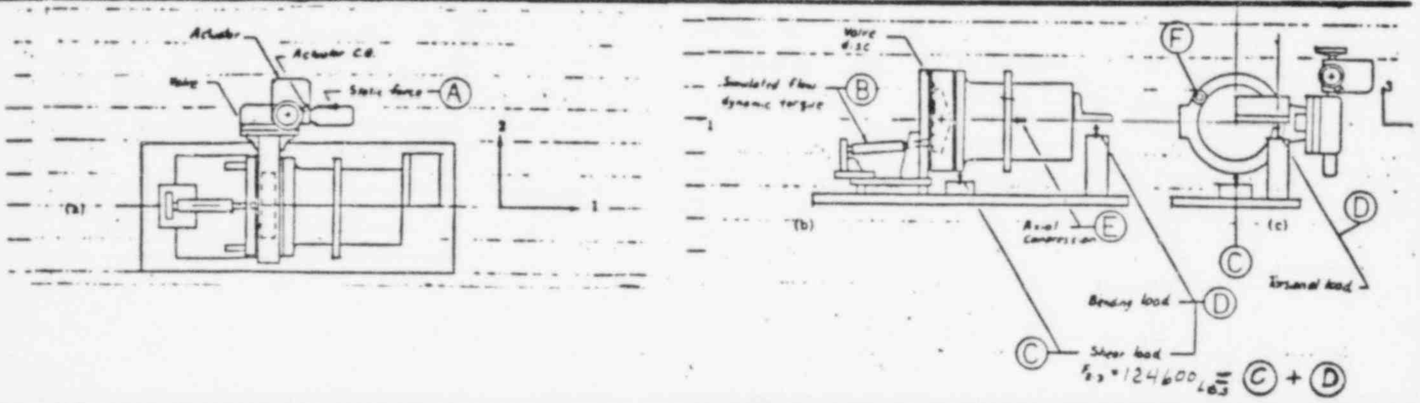

II. Applied Loads (*)

Ⓐ Static Force 3995 Lbs.	Miller cylinder S/N 80501932 Calibration: 12.005 Lbs./psig Pressure set at 333 psig to obtain 3998 Lb
Ⓑ Simulated Flow Dynamic Torque T_{max} 15,000 Lb.-In.	Bellows cylinder S/N 9792 Calibration: 2.795 Lbs./psig Pressure set at 500 psig to obtain 14,880 Lb-In valve operating torque.
Ⓒ Shear Load 69,100 Lbs.	O.T.C. Cylinder S/N 25104 Calibration: 9.127 Lbs/psig Pressure set at 7571 psig to obtain 69100 Lb
Ⓓ Bending (F_a), Torsional (F_a) and Shear Load 55,530 Lbs.	O.T.C. Cylinder S/N 25265 Calibration: 9.51 Lbs/psig Pressure set at 5839 psig to obtain 55,530 Lb
Ⓔ Axial Compression 99,900 Lbs.	511 Lb-Ft torque applied to four (4) lubricated 1-1/4 - 7 UNC bolts.
Ⓕ Companion and Fixture Flange Bolting Torque 975 Lb.-Ft.	975 Lb-Ft torque applied to lubricated stud nut fasteners.

Note: (*) Reference Appendix B on Page 4 for equipment calibration record.

PRODUCT DEVELOPMENT TESTING SUMMARY OF RESULTS

ASSIGNMENT NUMBER	81-BFV-18	18" BFV Test Report
Test Report Number	1042-BFV 51	Page 4 of 5 Pages

Prepared By	Reviewed By	Approved By
Laboratory Staff	C. R. Kersten	A. J. Wild
	Laboratory Supervisor	P.D.T. Manager
Date 8-18-81/9-11-81	Date 9-11-81	Date 9-11-81

Static deflection test per PS-3-2.10 of 18" L151-CI-Z-S6 butterfly valve. Ref. CBFA366 and BFV-80-45.

Appendix B
Equipment Callibration Record

Ⓐ	Miller Cylinder S/N 80501932, 8-19-81	(Dillon Force Gage)
	Pressure Gage 0 - 1000 psig, 8-18-81	(Dead Weight Test)
Ⓑ	Bellows Cylinder S/N 9792, 8-19-81	(Dillon Force Gage)
	Pressure Gage 0 - 3000 psig, 8-19-81	(Dead Weight Test)
	0 - 1550 Lb-Ft Torque Wrench, 8-18-81	(Q.C. Torque Calibrator)
Ⓒ	O.T.C. Cyliner S/N 25104, 8-19-81	(Dillon Force Gage)
	Pressure Gage 0 - 10,000 psig, 8-19-81	(Dead Weight Test)
Ⓓ	O.T.C. Cylinder S/N 25265, 9-11-81	(Dillon Force Gage)
	Pressure Gage 0 - 10,000 psig, 9-03-81	(Dead Weight Test)
Ⓔ	0 - 639 Lb-Ft Torque Wrench, 9-10-81	(Q.C. Torque Calibrator)
Ⓕ	0 - 1550 Lb-Ft Torque Wrench, 8-18-81	(Q.C. Torque Calibrator)

400 MAPLE AVENUE, CARPENTERSVILLE, ILLINOIS 60110 312/426-4100 CABLE HILLSCANA TELEX 722-442

HILLS-McCANNA COMPANY

APPENDIX C

CERTIFICATE OF EXAMINATION

DATE 9-21-81

CUSTOMER Houston Lighting & Power Company CUSTOMER P.O. NO. 35-1197-4028 (Unit 1) 35-1197-8028 (Unit 2)

HILLS-McCANNA SALES ORDER NO. N65407 N65408 SHOP ORDER NO. 65407

PRODUCT DESCRIPTION: 18" 150 Class Butterfly valve which has been seismic and static deflection functional tested (with Limitorque actuator). This certificate covers post test inspection of parts.

The following described parts have been liquid penetrant tested and accepted in compliance to the ASME Boiler and Pressure Vessel Code Sect. III, Div. 1.

Body, retainer, disc, stem, gland flange and gland flange studs.

Method and acceptance in accordance with Document No. QSN 8-6 Rev. C

The balance of the parts were visually inspected andno signs of inceptive failure were found.

BATCH NUMBER: 81B03W penetrant, 79B091 developer

Certified Liquid Penetrant Inspector McLaughlin Level II

By Hills-McCanna Co. Q.A. Kathryn Campbell 9/21/81

Attachment E

Sheet 1 OF 1

INDEX SHEETS

P.O. ~~8028~~ 4028 SEQ. ~~01091~~ 01092 SUB. B ACKN. HM

TITLE Seismic Test Report (comment letter) REV. N/R

Supplier No. 45116-2

A - ADDED SHEETS
R - REVISED SHEETS
D - DELETED SHEETS

PKG. # 4638

SHEET NUMBER	REV	DATE	DESCRIPTION	A-R-D
			* INSERT AS BECHTEL	
			PAGES 49, 50, & 51	

DISTRIBUTION TO: FOR: REVIEW INFO.

- ● MECHANICAL
- ● BALANCE OF PLANT
- ● BOILER/NSSS
- PLANT UTILITIES
- ● PLANT DESIGN
- ● CONTROL SYSTEMS ✓
- ● ELECTRICAL EQ
- WIRING
- CONDUIT
- ● MOS
- ● PAINTING & COATINGS
- ● CIVIL/STRUCTURAL
- ● NUCLEAR
- ● STRESS
- ● ARCHITECTURAL
- ● STARTUP
- ● CONSTRUCTION
- ● NOT REQ'D BY ENGRG
- ● CLIENT

IDENTIFYING TITLE OF THIS DOCUMENT

Bechtel Log No.
14926-4028-01092-BHM
14926-8028-01091-BHM

IMPORTANT
Permission to proceed does not constitute acceptance or approval of design details, calculations, analyses, test methods or materials developed or selected by the supplier and does not relieve supplier from full compliance with contractual obligations.

DATE RECEIVED 10-5-83

Signed SRY

Date 11-7-83

DOCUMENT STATUS
1 ☒ WORK MAY PROCEED.
2 ☐ REVISE AND RESUBMIT. WORK MAY PROCEED SUBJECT TO INCORPORATION OF CHANGES INDICATED.
3 ☐ REVISE AND RESUBMIT. WORK MAY NOT PROCEED
4 ☐ REVIEW NOT REQUIRED. WORK MAY PROCEED.
☐ INFORMATION ONLY
☐ DISTRIBUTION REQ'D

HO86012(2/78)