NIS-2

VOLUME-2

EXHIBIT-1----------ATTACHMENT AND SUMMARY REPORT

Tennessee Valley Authority
Browns Ferry Nuclear Plant

Form 164
BF 18.8

MAY 8 1984

ASME SECTION XI SUMMARY REPORT

Unit 2 Cycle 5

Plant Browns
System RHR
TVA Class 1
Workplan/MR No. A-F3060

Furnish the following for the repair or replacement for the "as left" condition of the component (after field work is complete). Mark all blanks (indicate N/A for items which do not apply).

National Board Number of repaired or replaced component NA

Name of the components and description (include size, capacity, material, and location)--These requirements may be satisfied by attaching an applicable drawing
7/8" stud & nuts (SA194 GR 2H Nuts) (SA193 GR B7 Studs)
On valve 2-FCV-74-54 inside drywell 1st elevation

Name of Manufacturer Studs - R.E.C. Corp; Nuts - Cardinal
Cardinal - 5200 Harvard Ave, Cleveland, OH 44105

Address of Manufacturer (if known) RECCorp: New Rochelle, NY 10801

Manufacturer's component identification numbers (i.e., serial number, subassembly number, heat number, etc.) If more than one component is replaced, attach weld map and identify items by item number. Studs - Ht # 90190
Nuts - Ht # 2K 30161

Brief description of repair or replacement work performed, including conditions observed and corrective measures taken, as applicable (Reference DCR, CAR, etc., drawing may be attached with affected area circled). Replaced flange studs and nuts on valve 2-FCV-74-54

Brief description of post repair or replacement tests and examinations (if required) by instruction or procedure number N-VT-1, LLRT per SI 4.7.A.2.c, Hydro test per SI 3.3.1.a, ~~Eddy Current~~ Chilling SI 3.3.2.

ANI/ANII name, employer, and business address Roosevelt Russel
Hartford Boiler and Inspection Co.
Atlanta, GA 30355

Date work completed 1-15-85

J. Rawlins 1-30-85
Cognizant Engineer Date

Retention: Period - Lifetime, Responsibility - OMM Supervisor

Tennessee Valley Authority
Browns Ferry Nuclear Plant

Form BF 166
BF 17.8
Page 1
MAY 8 1984

ASME SECTION XI
REPAIR/REPLACEMENT CHECKLIST

I. GENERAL

Workplan (MR) Number A-183060 Description of work REPLACE BLIND FLANGE STUDS AND NUTS ON 2-FCV-74-54

Construction Code of Record B31.1 1967 ED.

ASME Code Equivalent Class I

NOTE: For Sections II and III, Enter Procedure Number or explain why the activity is not required.

II. REPAIRS AND REPLACEMENTS USING WELDING

Flaw removal method (repairs only) N/A

Method of Measuring Cavity (repairs only) N/A

Welding N/A

Heat Treatment N/A

Construction Code NDE N/A

Preservice NDE* N/A

Preservice Pump/Valve Test N/A

System Pressure Test N/A

III. REPLACEMENTS NOT USING WELDING

Torque or Tension Values 160 ft-lbs PER MMI 51 TO BE PERFORMED ON MR # A16272.40

Preservice NDE* VISUAL INSPECTION OF BOLTING PER N-VT-1

Preservice Pump/Valve Test LLRT PER SI 4.7.A.2.g; CYCLING PER SI 3.2.2

System Pressure Test HIGH PRESSURE LEAK CHECK PER S.I. 3.3.1.a

IV. REMARKS

*Attach form BF 169 if preservice NDE is required.

JS Collins 1/24/85 Initiator Date

Retention: Period - Lifetime; Responsibility - OMM Supervisor

TENNESSEE VALLEY AUTHORITY
BROWNS FERRY NUCLEAR PLANT
SITE DIRECTOR STANDARD PRACTICE

SEP 22 1989

FORM PAGE 1 OF 1
FORM SDSP-403
SDSP 13.3

FORM SDSP-403
FORM NIS-2 ATTACHMENT

1. (OWNER) TENNESSEE VALLEY AUTHORITY
NUCLEAR POWER
DATE 6-27-90

2. (PLANT) BROWNS FERRY NUCLEAR PLANT
P.O. BOX 2000
DECATUR, ALABAMA
SHEET [a] 1 OF 259

MR# 815987

3. WORK PERFORMED BY: TVA (COMPANY)
P.O. Box 2000 (ADDRESS)
Decature, Alabama (CITY AND STATE)
TYPE CODE SYMBOL STAMP [b] NA
AUTHORIZATION NO. [b] NA
EXPIRATION DATE [b] NA

4. IDENTIFICATION OF SYSTEM SYS 85, Control Rod Drive

5(A). APPLICATION CONSTRUCTION CODE Section III 19 74
EDITION with ADDENDA 1975 CODE CASE NA

5(B). APPLICATION EDITION OF SECTION XI UTILIZED FOR REPAIRS OR REPLACEMENTS: 1980

6(A). NAME OF COMPONENT(S) AND DESCRIPTION (INCLUDE SIZE, CAPACITY, MATERIAL, AND LOCATION AS NEEDED TO AID IN IDENTIFICATION)
BWR-6 CRD from Hartsville modified by GE for use at BFNP BWR-4

6(B). NAME OF MANUFACTURER GE
ADDRESS OF MANUFACTURER (IF KNOWN) UNKNOWN

6(C). MANUFACTURER'S SERIAL NUMBER BWR-6 y/A5030

6(D). NATIONAL BOARD NUMBER (IF APPLICABLE) N/A

6(E). OTHER IDENTIFICATION (SUBASSEMBLY NUMBER, HEAT NUMBER, ETC.)
2-CRD-85-5023

6(F). YEAR BUILT UNKNOWN CODE CLASS ☒ 1 ☐ 2

6(G). REPAIRED ☐ REPLACED ☒ [c] REPLACEMENT ☐ [d]

6(H). ASME CODE STAMPED YES ☒ NO ☐

7. BRIEF DESCRIPTION OF REPAIR OR REPLACEMENT WORK PERFORMED.
Replaced BWR-4 CRD with modified BWR-6 CRD

8. TESTS CONDUCTED: HYDROSTATIC ☒ PNEUMATIC ☐
NOMINAL OPERATING PRESSURE ☐ OTHER ☐
PRESSURE 1158 PSI TEST TEMPERATURE 182 F°

9. REMARKS: Hydrostatic Test to be conducted during vessel hydro per 2-SI-3.2.1.B, REF. WO. 90-08936-00

( ) APPLICABLE MANUFACTURERS DATA REPORT [e] TO BE ATTACHED. M. Martin 7-3-91
RESPONSIBLE ENGR. Michael R. Martin (Michael Martin) DATE 6-27-90
ORGANIZATION *
ANII _____ DATE _____

* REF. CAQR# CHA890003713

[a] SHEET NOS. FILLED IN BY TESTING AND DIAGNOSTIC PROGRAMS BRANCH.
[b] FOR WORK PERFORMED BY CERTIFICATE HOLDER
[c] REPLACED (LIKE OR EQUIVALENT).
[d] REPLACEMENT (MODIFICATION).
[e] WHEN REQUIRED BY CONSTRUCTION CODE.

RETENTION PERIOD: LIFETIME RESPONSIBLE ORGANIZATION: NM-PROCESSES/SPECIAL PROGRAMS

TENNESSEE VALLEY AUTHORITY
BROWNS FERRY NUCLEAR PLANT
SITE DIRECTOR STANDARD PRACTICE

SEP 22 1989

FORM SDSP-403
FORM NIS-2 ATTACHMENT

1. (OWNER) TENNESSEE VALLEY AUTHORITY
NUCLEAR POWER
DATE 5-18-90

2. (PLANT) BROWNS FERRY NUCLEAR PLANT
P.O. BOX 2000
DECATUR, ALABAMA
SHEET [a] 2 OF 259
MR# 815988

3. WORK PERFORMED BY: TVA (COMPANY)
P.O. Box 2000 (ADDRESS)
Decature, Alabama (CITY AND STATE)
TYPE CODE SYMBOL STAMP [b] NA
AUTHORIZATION NO. [b] NA
EXPIRATION DATE [b] NA

4. IDENTIFICATION OF SYSTEM SYS 85, Control Rod Drive

5(A). APPLICATION CONSTRUCTION CODE Section III 19 74
EDITION with ADDENDA 1975 CODE CASE NA

5(B). APPLICATION EDITION OF SECTION XI UTILIZED FOR REPAIRS OR REPLACEMENTS: 1980

6(A). NAME OF COMPONENT(S) AND DESCRIPTION (INCLUDE SIZE, CAPACITY, MATERIAL, AND LOCATION AS NEEDED TO AID IN IDENTIFICATION)
BWR-6 CRD from Hartsville modified by GE for use at BFNP BWR-4

6(B). NAME OF MANUFACTURER GE
ADDRESS OF MANUFACTURER (IF KNOWN) UNKNOWN

6(C). MANUFACTURER'S SERIAL NUMBER A4812

6(D). NATIONAL BOARD NUMBER (IF APPLICABLE) N/A

6(E). OTHER IDENTIFICATION (SUBASSEMBLY NUMBER, HEAT NUMBER, ETC.)
2-CRD-85-5035 Serial # A4812 BWR-6

6(F). YEAR BUILT UNKNOWN. CODE CLASS ☒ 1 ☐ 2

6(G). REPAIRED ☐ REPLACED ☒ [c] REPLACEMENT ☐ [d]

6(H). ASME CODE STAMPED YES ☒ NO ☐

7. BRIEF DESCRIPTION OF REPAIR OR REPLACEMENT WORK PERFORMED.
Replaced BWR-4 CRD with modified BWR-6 CRD

8. TESTS CONDUCTED: HYDROSTATIC ☒ PNEUMATIC ☐
NOMINAL OPERATING PRESSURE ☐ OTHER ☐
PRESSURE 1158. PSI TEST TEMPERATURE 182 F°

9. REMARKS: Hydrostatic Test to be conducted during vessel hydro per A-SE-3.3.1.B ; REF. WO. 90-08936-00

( ) APPLICABLE MANUFACTURERS DATA REPORTS TO BE ATTACHED. M. Martin 7-3-91
RESPONSIBLE ENGR. * Curtis J. Williams Tech Spt DATE 5/18/90
ORGANIZATION
ANII _____ DATE _____

* REF CAQR # CHA 890003713

[a] SHEET NOS. FILLED IN BY TESTING AND DIAGNOSTIC PROGRAMS BRANCH.
[b] FOR WORK PERFORMED BY CERTIFICATE HOLDER
[c] REPLACED (LIKE OR EQUIVALENT).
[d] REPLACEMENT (MODIFICATION).
[e] WHEN REQUIRED BY CONSTRUCTION CODE.

RETENTION PERIOD: LIFETIME RESPONSIBLE ORGANIZATION: NM-PROCESSES/SPECIAL PROGRAMS

TENNESSEE VALLEY AUTHORITY
BROWNS FERRY NUCLEAR PLANT
SITE DIRECTOR STANDARD PRACTICE

SEP 22 1989

FORM SDSP-403
FORM NIS-2 ATTACHMENT

1. (OWNER) TENNESSEE VALLEY AUTHORITY
NUCLEAR POWER

DATE 5-17-90

2. (PLANT) BROWNS FERRY NUCLEAR PLANT
P.O. BOX 2000
DECATUR, ALABAMA

SHEET [a] 3 OF 259

MR# 815989

3. WORK PERFORMED BY: TVA (COMPANY)
P.O. Box 2000 (ADDRESS)
Decature, Alabama (CITY AND STATE)

TYPE CODE SYMBOL STAMP [b] NA
AUTHORIZATION NO. [b] NA
EXPIRATION DATE [b] NA

4. IDENTIFICATION OF SYSTEM SYS 85, Control Rod Drive

5(A). APPLICATION CONSTRUCTION CODE Section III 19 74
EDITION with ADDENDA 1975 CODE CASE NA

5(B). APPLICATION EDITION OF SECTION XI UTILIZED FOR REPAIRS OR REPLACEMENTS: 1980

6(A). NAME OF COMPONENT(S) AND DESCRIPTION (INCLUDE SIZE, CAPACITY, MATERIAL, AND LOCATION AS NEEDED TO AID IN IDENTIFICATION)
BWR-6 CRD from Hartsville modified by GE for use at BFNP BWR-4.

6(B). NAME OF MANUFACTURER GE
ADDRESS OF MANUFACTURER (IF KNOWN) UNKNOWN

6(C). MANUFACTURER'S SERIAL NUMBER A4788

6(D). NATIONAL BOARD NUMBER (IF APPLICABLE) N/A

6(E). OTHER IDENTIFICATION (SUBASSEMBLY NUMBER, HEAT NUMBER, ETC.)
2-CRD-85-5029 Serial # A4788

6(F). YEAR BUILT UNKNOWN CODE CLASS ☒ 1 ☐ 2

6(G). REPAIRED ☐ REPLACED ☒ [c] REPLACEMENT ☐ [d]

6(H). ASME CODE STAMPED YES ☒ NO ☐

7. BRIEF DESCRIPTION OF REPAIR OR REPLACEMENT WORK PERFORMED.
Replaced BWR-4 CRD with modified BWR-6 CRD

8. TESTS CONDUCTED: HYDROSTATIC ☒ PNEUMATIC ☐
NOMINAL OPERATING PRESSURE ☐ OTHER ☐
PRESSURE 1158 PSI TEST TEMPERATURE 182 F°

9. REMARKS: Hydrostatic Test to be conducted during vessel hydro per 2-SI-3.3.1.B. REF. W.O. 90-08936-00

( ) APPLICABLE MANUFACTURERS DATA REPORT [e] TO BE ATTACHED. M. Manton 7-3-91
RESPONSIBLE ENGR. Ernest L. Williams/Tech Spec DATE 5/17/90
ORGANIZATION
ANII _____ DATE _____

* REF. CAQR# CHA890003713

[a] SHEET NOS. FILLED IN BY TESTING AND DIAGNOSTIC PROGRAMS BRANCH.
[b] FOR WORK PERFORMED BY CERTIFICATE HOLDER
[c] REPLACED (LIKE OR EQUIVALENT).
[d] REPLACEMENT (MODIFICATION).
[e] WHEN REQUIRED BY CONSTRUCTION CODE.

RETENTION PERIOD: LIFETIME RESPONSIBLE ORGANIZATION: NM-PROCESSES/SPECIAL PROGRAMS

TENNESSEE VALLEY AUTHORITY
BROWNS FERRY NUCLEAR PLANT
SITE DIRECTOR STANDARD PRACTICE

SEP 22 1989

FORM SDSP-403
FORM NIS-2 ATTACHMENT

1. (OWNER) TENNESSEE VALLEY AUTHORITY
NUCLEAR POWER — DATE 5-18-90

2. (PLANT) BROWNS FERRY NUCLEAR PLANT
P.O. BOX 2000
DECATUR, ALABAMA — SHEET [a] 4 OF 259

MRA 815990

3. WORK PERFORMED BY: TVA (COMPANY) — TYPE CODE SYMBOL STAMP [b] NA
P.O. Box 2000 (ADDRESS) — AUTHORIZATION NO. [b] NA
Decature, Alabama (CITY AND STATE) — EXPIRATION DATE [b] NA

4. IDENTIFICATION OF SYSTEM SYS 85, Control Rod Drive

5(A). APPLICATION CONSTRUCTION CODE Section III 19 74
EDITION with ADDENDA 1975 CODE CASE NA

5(B). APPLICATION EDITION OF SECTION XI UTILIZED FOR REPAIRS OR REPLACEMENTS: 1980

6(A). NAME OF COMPONENT(S) AND DESCRIPTION (INCLUDE SIZE, CAPACITY, MATERIAL, AND LOCATION AS NEEDED TO AID IN IDENTIFICATION)
BWR-6 CRD from Hartsville modified by GE for use at BFNP BWR-4

6(B). NAME OF MANUFACTURER GE
ADDRESS OF MANUFACTURER (IF KNOWN) UNKNOWN

6(C). MANUFACTURER'S SERIAL NUMBER A5126

6(D). NATIONAL BOARD NUMBER (IF APPLICABLE) N/A

6(E). OTHER IDENTIFICATION (SUBASSEMBLY NUMBER, HEAT NUMBER, ETC.)
2-CRD-85-5423 Serial # A5126 BWR-6

6(F). YEAR BUILT UNKNOWN CODE CLASS ☒ 1 ☐ 2

6(G). REPAIRED ☐ REPLACED ☒ [c] REPLACEMENT ☐ [d]

6(H). ASME CODE STAMPED YES ☒ NO ☐

7. BRIEF DESCRIPTION OF REPAIR OR REPLACEMENT WORK PERFORMED.
Replaced BWR-4 CRD with modified BWR-6 CRD

8. TESTS CONDUCTED: HYDROSTATIC ☒ PNEUMATIC ☐
NOMINAL OPERATING PRESSURE ☐ OTHER ☐
PRESSURE 1158 PSI TEST TEMPERATURE 182 F°

9. REMARKS: Hydrostatic Test - to be conducted during vessel hydro per A-SE-3.3.1.B, REF. W.O. 90-08936-00

( ) APPLICABLE MANUFACTURERS DATA REPORTS [e] TO BE ATTACHED. M. Martin 7-3-91
RESPONSIBLE ENGR. * E. L. Williams / Sch Sys DATE 5/18/90
ORGANIZATION
ANII DATE

* REF. CAQR # CHA 890003713

[a] SHEET NOS. FILLED IN BY TESTING AND DIAGNOSTIC PROGRAMS BRANCH.
[b] FOR WORK PERFORMED BY CERTIFICATE HOLDER
[c] REPLACED (LIKE OR EQUIVALENT).
[d] REPLACEMENT (MODIFICATION).
[e] WHEN REQUIRED BY CONSTRUCTION CODE.

RETENTION PERIOD: LIFETIME RESPONSIBLE ORGANIZATION: NM-PROCESSES/SPECIAL PROGRAMS

TENNESSEE VALLEY AUTHORITY
BROWNS FERRY NUCLEAR PLANT
SITE DIRECTOR STANDARD PRACTICE

SEP 22 1989

FORM PAGE 1 OF 1
FORM SDSP-403
SDSP 13.3

FORM SDSP-403
FORM NIS-2 ATTACHMENT

1. (OWNER) TENNESSEE VALLEY AUTHORITY
NUCLEAR POWER.
DATE 5-18-90

2. (PLANT) BROWNS FERRY NUCLEAR PLANT
P.O. BOX 2000
DECATUR, ALABAMA
SHEET [a] 5 OF 259
MR# 815991

3. WORK PERFORMED BY: TVA (COMPANY)
P.O. Box 2000 (ADDRESS)
Decature, Alabama (CITY AND STATE)
TYPE CODE SYMBOL STAMP [b] NA
AUTHORIZATION NO. [b] NA
EXPIRATION DATE [b] NA

4. IDENTIFICATION OF SYSTEM SYS 85 ; Control Rod Drive

5(A). APPLICATION CONSTRUCTION CODE Section III 19 74
EDITION with ADDENDA 1975 CODE CASE NA

5(B). APPLICATION EDITION OF SECTION XI UTILIZED FOR REPAIRS OR REPLACEMENTS: 1980

6(A). NAME OF COMPONENT(S) AND DESCRIPTION (INCLUDE SIZE, CAPACITY, MATERIAL, AND LOCATION AS NEEDED TO AID IN IDENTIFICATION)
BWR-6 CRD from Hartsville modified by GE for use at BFNP BWR-4

6(B). NAME OF MANUFACTURER GE
ADDRESS OF MANUFACTURER (IF KNOWN) UNKNOWN

6(C). MANUFACTURER'S SERIAL NUMBER A4268

6(D). NATIONAL BOARD NUMBER (IF APPLICABLE) N/A

6(E). OTHER IDENTIFICATION (SUBASSEMBLY NUMBER, HEAT NUMBER, ETC.)
2-CRD-85-5427 Serial # A4268 BWR-6

6(F). YEAR BUILT UNKNOWN CODE CLASS ☒ 1 ☐ 2

6(G). REPAIRED ☐ REPLACED ☒ [c] REPLACEMENT ☐ [d]

6(H). ASME CODE STAMPED YES ☒ NO ☐

7. BRIEF DESCRIPTION OF REPAIR OR REPLACEMENT WORK PERFORMED.
Replaced BWR-4 CRD with modified BWR-6 CRD

8. TESTS CONDUCTED: HYDROSTATIC ☒ PNEUMATIC ☐
NOMINAL OPERATING PRESSURE ☐ OTHER ☐
PRESSURE 1158 PSI TEST TEMPERATURE 182 F°

9. REMARKS: Hydrostatic Test - to be conducted during vessel hydro per 2-SI-2.2.1.B, REF. W.O. 90-08936-00J

( ) APPLICABLE MANUFACTURERS DATA REPORT [e] TO BE ATTACHED. M. Martin 7-3-91
RESPONSIBLE ENGR. * Robert J. Williams Tech Spec DATE 5/18/90
ORGANIZATION
ANII _____ DATE _____

* REF. CAQR# CHA 890003713

[a] SHEET NOS. FILLED IN BY TESTING AND DIAGNOSTIC PROGRAMS BRANCH.
[b] FOR WORK PERFORMED BY CERTIFICATE HOLDER
[c] REPLACED (LIKE OR EQUIVALENT).
[d] REPLACEMENT (MODIFICATION).
[e] WHEN REQUIRED BY CONSTRUCTION CODE.

RETENTION PERIOD: LIFETIME RESPONSIBLE ORGANIZATION: NM-PROCESSES/SPECIAL PROGRAMS

TENNESSEE VALLEY AUTHORITY
BROWNS FERRY NUCLEAR PLANT
SITE DIRECTOR STANDARD PRACTICE

SEP 22 1989

FORM PAGE 1 OF 1
FORM SDSP-403
SDSP 13.3

FORM SDSP-403
FORM NIS-2 ATTACHMENT

1. (OWNER) TENNESSEE VALLEY AUTHORITY
NUCLEAR POWER — DATE 5-18-90

2. (PLANT) BROWNS FERRY NUCLEAR PLANT
P.O. BOX 2000
DECATUR, ALABAMA — SHEET [a] 6 OF 259

MR# 815942

3. WORK PERFORMED BY: TVA (COMPANY) — TYPE CODE SYMBOL STAMP [b] NA
P.O. Box 2000 (ADDRESS) — AUTHORIZATION NO. [b] NA
Decature, Alabama (CITY AND STATE) — EXPIRATION DATE [b] NA

4. IDENTIFICATION OF SYSTEM SYS 85, Control Rod Drive

5(A). APPLICATION CONSTRUCTION CODE Section III 19 74
EDITION with ADDENDA 1975 CODE CASE NA

5(B). APPLICATION EDITION OF SECTION XI UTILIZED FOR REPAIRS OR REPLACEMENTS: 1980

6(A). NAME OF COMPONENT(S) AND DESCRIPTION (INCLUDE SIZE, CAPACITY, MATERIAL, AND LOCATION AS NEEDED TO AID IN IDENTIFICATION)
BWR-6 CRD from Hartsville modified by GE for use at BFNP BWR-4

6(B). NAME OF MANUFACTURER GE
ADDRESS OF MANUFACTURER (IF KNOWN) UNKNOWN

6(c). MANUFACTURER'S SERIAL NUMBER A 5120

6(D). NATIONAL BOARD NUMBER (IF APPLICABLE) N/A

6(E). OTHER IDENTIFICATION (SUBASSEMBLY NUMBER, HEAT NUMBER, ETC.)
2-CRD-85-5439 Serial # A5120 BWR-6

6(F). YEAR BUILT UNKNOWN CODE CLASS [X] 1 [ ] 2

6(G). REPAIRED [ ] REPLACED [X] [c] REPLACEMENT [ ] [d]

6(H). ASME CODE STAMPED YES [X] NO [ ]

7. BRIEF DESCRIPTION OF REPAIR OR REPLACEMENT WORK PERFORMED.
Replaced BWR-4 CRD with modified BWR-6 CRD

8. TESTS CONDUCTED: HYDROSTATIC [X] PNEUMATIC [ ]
NOMINAL OPERATING PRESSURE [ ] OTHER [ ]
PRESSURE 1158. PSI TEST TEMPERATURE 182 F°

9. REMARKS: Hydrostatic Test to be conducted during vessel hydro per A-SE-3.3.1.B. REF. W.O. 90-038 90-08936-00 MRM 6-27-90

( ) APPLICABLE MANUFACTURERS DATA REPORTS TO BE ATTACHED M. Martin 7-3-91
RESPONSIBLE ENGR. Ernest J. Williams Tech Spt DATE 5/18/90
ORGANIZATION
ANII DATE

* REF. CAQR # CHA 890003713

[a] SHEET NOS. FILLED IN BY TESTING AND DIAGNOSTIC PROGRAMS BRANCH.
[b] FOR WORK PERFORMED BY CERTIFICATE HOLDER
[c] REPLACED (LIKE OR EQUIVALENT).
[d] REPLACEMENT (MODIFICATION).
[e] WHEN REQUIRED BY CONSTRUCTION CODE.

RETENTION PERIOD: LIFETIME RESPONSIBLE ORGANIZATION: NM-PROCESSES/SPECIAL PROGRAMS

TENNESSEE VALLEY AUTHORITY
BROWNS FERRY NUCLEAR PLANT
SITE DIRECTOR STANDARD PRACTICE

SEP 22 1989

FORM PAGE 1 OF 1
FORM SDSP-403
SDSP 13.3

FORM SDSP-403
FORM NIS-2 ATTACHMENT

1. (OWNER) TENNESSEE VALLEY AUTHORITY
NUCLEAR POWER

DATE 5-18-90

2. (PLANT) BROWNS FERRY NUCLEAR PLANT
P.O. BOX 2000
DECATUR, ALABAMA

SHEET [a] 7 OF 259

MRA 815993

3. WORK PERFORMED BY: TVA
COMPANY

TYPE CODE SYMBOL STAMP [b] NA

P.O. Box 2000
ADDRESS

AUTHORIZATION NO. [b] NA

Decature, Alabama
CITY AND STATE

EXPIRATION DATE [b] NA

4. IDENTIFICATION OF SYSTEM SYS 85, Control Rod Drive

5(A). APPLICATION CONSTRUCTION CODE Section III 19 74
EDITION with ADDENDA 1975 CODE CASE NA

5(B). APPLICATION EDITION OF SECTION XI UTILIZED FOR REPAIRS OR REPLACEMENTS: 1980

6(A). NAME OF COMPONENT(S) AND DESCRIPTION (INCLUDE SIZE, CAPACITY, MATERIAL, AND LOCATION AS NEEDED TO AID IN IDENTIFICATION)
BWR-6 CRD from Hartsville modified by GE for use at BFNP BWR-4

6(B). NAME OF MANUFACTURER GE

ADDRESS OF MANUFACTURER (IF KNOWN) UNKNOWN

6(c). MANUFACTURER'S SERIAL NUMBER A 4837

6(D). NATIONAL BOARD NUMBER (IF APPLICABLE) N/A

6(E). OTHER IDENTIFICATION (SUBASSEMBLY NUMBER, HEAT NUMBER, ETC.)
2-CRD-85-5447 Serial # A-4837 5/18/90 A4837

6(F). YEAR BUILT UNKNOWN CODE CLASS ☒ 1 ☐ 2

6(G). REPAIRED ☐ REPLACED ☒ [c] REPLACEMENT ☐ [d]

6(H). ASME CODE STAMPED YES ☒ NO ☐

7. BRIEF DESCRIPTION OF REPAIR OR REPLACEMENT WORK PERFORMED.
Replaced BWR-4 CRD with modified BWR-6 CRD

8. TESTS CONDUCTED: HYDROSTATIC ☒ PNEUMATIC ☐
NOMINAL OPERATING PRESSURE ☐ OTHER ☐
PRESSURE 1158 PSI TEST TEMPERATURE 182 °F

9. REMARKS: Hydrostatic Test - to be conducted during vessel hydro per 2-SI-2.2.1.B. REF. W.O. 90-08936-00 J

( ) APPLICABLE MANUFACTURERS DATA REPORT [e] TO BE ATTACHED. M. Martin 7-3-91
RESPONSIBLE ENGR. Ernest L. Williams / Tech Staff DATE 5/18/90
ORGANIZATION

ANII _____ DATE _____

* REF. CAQR # CHA 890003713

[a] SHEET NOS. FILLED IN BY TESTING AND DIAGNOSTIC PROGRAMS BRANCH.
[b] FOR WORK PERFORMED BY CERTIFICATE HOLDER
[c] REPLACED (LIKE OR EQUIVALENT).
[d] REPLACEMENT (MODIFICATION).
[e] WHEN REQUIRED BY CONSTRUCTION CODE.

RETENTION PERIOD: LIFETIME RESPONSIBLE ORGANIZATION: NM-PROCESSES/SPECIAL PROGRAMS

TENNESSEE VALLEY AUTHORITY
BROWNS FERRY NUCLEAR PLANT
SITE DIRECTOR STANDARD PRACTICE

SEP 22 1989

FORM PAGE 1 OF 1
FORM SDSP-403
SDSP 13.3

FORM SDSP-403
FORM NIS-2 ATTACHMENT

1. (OWNER) TENNESSEE VALLEY AUTHORITY
NUCLEAR POWER

DATE 5-24-90

2. (PLANT) BROWNS FERRY NUCLEAR PLANT
P.O. BOX 2000
DECATUR, ALABAMA

SHEET [a] 8 OF 259

MR# 815994

3. WORK PERFORMED BY: TVA (COMPANY)
P.O. Box 2000 (ADDRESS)
Decature, Alabama (CITY AND STATE)

TYPE CODE SYMBOL STAMP [b] NA
AUTHORIZATION NO. [b] NA
EXPIRATION DATE [b] NA

4. IDENTIFICATION OF SYSTEM SYS 85, Control Rod Drive

5(A). APPLICATION CONSTRUCTION CODE Section III 19 74
EDITION with ADDENDA 1975 CODE CASE NA

5(B). APPLICATION EDITION OF SECTION XI UTILIZED FOR REPAIRS OR REPLACEMENTS: 1980

6(A). NAME OF COMPONENT(S) AND DESCRIPTION (INCLUDE SIZE, CAPACITY, MATERIAL, AND LOCATION AS NEEDED TO AID IN IDENTIFICATION)
BWR-6 CRD from Hartsville modified by GE for use at BFNP BWR-4

6(B). NAME OF MANUFACTURER GE
ADDRESS OF MANUFACTURER (IF KNOWN) UNKNOWN

6(c). MANUFACTURER'S SERIAL NUMBER Unk-6 A56163

6(D). NATIONAL BOARD NUMBER (IF APPLICABLE) N/A

6(E). OTHER IDENTIFICATION (SUBASSEMBLY NUMBER, HEAT NUMBER, ETC.)
2-CRD-85-5833

6(F). YEAR BUILT UNKNOWN CODE CLASS ☒ 1 ☐ 2

6(G). REPAIRED ☐ REPLACED ☒ [c] REPLACEMENT ☐ [d]

6(H). ASME CODE STAMPED YES ☒ NO ☐

7. BRIEF DESCRIPTION OF REPAIR OR REPLACEMENT WORK PERFORMED.
Replaced BWR-4 CRD with modified BWR-6 CRD

8. TESTS CONDUCTED: HYDROSTATIC ☒ PNEUMATIC ☐
NOMINAL OPERATING PRESSURE ☐ OTHER ☐
PRESSURE 1158 PSI TEST TEMPERATURE 182 F°

9. REMARKS: Hydrostatic Test to be conducted during vessel hydro per 2-SI-3.3.1.B, REF. W.O. 90-08936-00

( ) APPLICABLE MANUFACTURERS DATA REPORT [e] TO BE ATTACHED. M. Maxey 7-3-91
RESPONSIBLE ENGR. Ernest L. Williams/Tech Spl. DATE 5/24/90
ORGANIZATION *

ANII _____ DATE _____

* REF. CAQR# CHA890003713

[a] SHEET NOS. FILLED IN BY TESTING AND DIAGNOSTIC PROGRAMS BRANCH.
[b] FOR WORK PERFORMED BY CERTIFICATE HOLDER
[c] REPLACED (LIKE OR EQUIVALENT).
[d] REPLACEMENT (MODIFICATION).
[e] WHEN REQUIRED BY CONSTRUCTION CODE.

RETENTION PERIOD: LIFETIME RESPONSIBLE ORGANIZATION: NM-PROCESSES/SPECIAL PROGRAMS

TENNESSEE VALLEY AUTHORITY
BROWNS FERRY NUCLEAR PLANT
SITE DIRECTOR STANDARD PRACTICE

SEP 22 1989

FORM PAGE 1 OF 1
FORM SDSP-403
SDSP 13.3

FORM SDSP-403
FORM NIS-2 ATTACHMENT

1. (OWNER) TENNESSEE VALLEY AUTHORITY
NUCLEAR POWER — DATE 5-18-90

2. (PLANT) BROWNS FERRY NUCLEAR PLANT
P.O. BOX 2000
DECATUR, ALABAMA — SHEET [a] 9 OF 259

MR# 815995

3. WORK PERFORMED BY: TVA (COMPANY) — TYPE CODE SYMBOL STAMP [b] NA
P.O. Box 2000 (ADDRESS) — AUTHORIZATION NO. [b] NA
Decature, Alabama (CITY AND STATE) — EXPIRATION DATE [b] NA

4. IDENTIFICATION OF SYSTEM SYS 85, Control Rod Drive

5(A). APPLICATION CONSTRUCTION CODE Section III 19 74
EDITION with ADDENDA 1975 CODE CASE NA

5(B). APPLICATION EDITION OF SECTION XI UTILIZED FOR REPAIRS OR REPLACEMENTS: 1980

6(A). NAME OF COMPONENT(S) AND DESCRIPTION (INCLUDE SIZE, CAPACITY, MATERIAL, AND LOCATION AS NEEDED TO AID IN IDENTIFICATION)
BWR-6 CRD from Hartsville modified by GE for use at BFNP BWR-4 S/N A5430

6(B). NAME OF MANUFACTURER GE
ADDRESS OF MANUFACTURER (IF KNOWN) UNKNOWN

6(C). MANUFACTURER'S SERIAL NUMBER A 5430

6(D). NATIONAL BOARD NUMBER (IF APPLICABLE) N/A

6(E). OTHER IDENTIFICATION (SUBASSEMBLY NUMBER, HEAT NUMBER, ETC.)
2-CRD-85-5831 S/N A5430

6(F). YEAR BUILT UNKNOWN CODE CLASS ☒ 1 ☐ 2

6(G). REPAIRED ☐ REPLACED ☒ [c] REPLACEMENT ☐ [d]

6(H). ASME CODE STAMPED YES ☒ NO ☐

7. BRIEF DESCRIPTION OF REPAIR OR REPLACEMENT WORK PERFORMED.
Replaced BWR-4 CRD with modified BWR-6 CRD

8. TESTS CONDUCTED: HYDROSTATIC ☒ PNEUMATIC ☐
NOMINAL OPERATING PRESSURE ☐ OTHER ☐
PRESSURE 1158 PSI TEST TEMPERATURE 182 F°

9. REMARKS: Hydrostatic Test to be conducted during vessel hydro per 2-SI-3.2.1.B, REF. W.O. 90-08936-003

( ) APPLICABLE MANUFACTURERS DATA REPORT [e] TO BE ATTACHED. M. Martin 7-3-91
RESPONSIBLE ENGR. Ernest L. Williams Jr. Lead Spt. DATE 5/18/90
ORGANIZATION
ANII _____ DATE _____

* REF. CAQR# CHA890003713

[a] SHEET NOS. FILLED IN BY TESTING AND DIAGNOSTIC PROGRAMS BRANCH.
[b] FOR WORK PERFORMED BY CERTIFICATE HOLDER
[c] REPLACED (LIKE OR EQUIVALENT).
[d] REPLACEMENT (MODIFICATION).
[e] WHEN REQUIRED BY CONSTRUCTION CODE.

RETENTION PERIOD: LIFETIME RESPONSIBLE ORGANIZATION: NM-PROCESSES/SPECIAL PROGRAMS

TENNESSEE VALLEY AUTHORITY
BROWNS FERRY NUCLEAR PLANT
SITE DIRECTOR STANDARD PRACTICE

SEP 22 1989

FORM SDSP-403
FORM NIS-2 ATTACHMENT

1. (OWNER) TENNESSEE VALLEY AUTHORITY
NUCLEAR POWER — DATE 5-18-90

2. (PLANT) BROWNS FERRY NUCLEAR PLANT
P.O. BOX 2000
DECATUR, ALABAMA — SHEET [a] 10 OF 259

MR# 815996

3. WORK PERFORMED BY: TVA (COMPANY) — TYPE CODE SYMBOL STAMP [b] NA
P.O. Box 2000 (ADDRESS) — AUTHORIZATION NO. [b] NA
Decature, Alabama (CITY AND STATE) — EXPIRATION DATE [b] NA

4. IDENTIFICATION OF SYSTEM SYS 85, Control Rod Drive

5(A). APPLICATION CONSTRUCTION CODE Section III 19 74
EDITION with ADDENDA 1975 CODE CASE NA

5(B). APPLICATION EDITION OF SECTION XI UTILIZED FOR REPAIRS OR REPLACEMENTS: 1980

6(A). NAME OF COMPONENT(S) AND DESCRIPTION (INCLUDE SIZE, CAPACITY, MATERIAL, AND LOCATION AS NEEDED TO AID IN IDENTIFICATION)
BWR-6 CRD from Hartsville modified by GE for use at BFNP BWR-4

6(B). NAME OF MANUFACTURER GE
ADDRESS OF MANUFACTURER (IF KNOWN) UNKNOWN

6(C). MANUFACTURER'S SERIAL NUMBER A5443

6(D). NATIONAL BOARD NUMBER (IF APPLICABLE) N/A

6(E). OTHER IDENTIFICATION (SUBASSEMBLY NUMBER, HEAT NUMBER, ETC.)
2-CRD-85-58335 Serial # A5443

6(F). YEAR BUILT UNKNOWN CODE CLASS [X] 1 [ ] 2

6(G). REPAIRED [ ] REPLACED [X] [c] REPLACEMENT [ ] [d]

6(H). ASME CODE STAMPED YES [X] NO [ ]

7. BRIEF DESCRIPTION OF REPAIR OR REPLACEMENT WORK PERFORMED.
Replaced BWR-4 CRD with modified BWR-6 CRD

8. TESTS CONDUCTED: HYDROSTATIC [X] PNEUMATIC [ ]
NOMINAL OPERATING PRESSURE [ ] OTHER [ ]
PRESSURE 1158 PSI TEST TEMPERATURE 182 F°

9. REMARKS: Hydrostatic Test to be conducted during vessel hydro per A-SI-3.3.1.B. REF. W.O. 90-08936-000

( ) APPLICABLE MANUFACTURERS DATA REPORT [e] TO BE ATTACHED. M. Martin 7-3-91
RESPONSIBLE ENGR. Earl L. Wilmore Tech Spt. DATE 5/18/90
* ORGANIZATION
ANII _____ DATE _____

* REF. CAQR# CHA 890103713

[a] SHEET NOS. FILLED IN BY TESTING AND DIAGNOSTIC PROGRAMS BRANCH.
[b] FOR WORK PERFORMED BY CERTIFICATE HOLDER
[c] REPLACED (LIKE OR EQUIVALENT).
[d] REPLACEMENT (MODIFICATION).
[e] WHEN REQUIRED BY CONSTRUCTION CODE.

RETENTION PERIOD: LIFETIME RESPONSIBLE ORGANIZATION: NM-PROCESSES/SPECIAL PROGRAMS

TENNESSEE VALLEY AUTHORITY
BROWNS FERRY NUCLEAR PLANT
SITE DIRECTOR STANDARD PRACTICE

SEP 22 1989

FORM PAGE 1 OF 1
FORM SDSP-403
SDSP 13.3

FORM SDSP-403
FORM NIS-2 ATTACHMENT

1. (OWNER) TENNESSEE VALLEY AUTHORITY
NUCLEAR POWER

DATE 5-18-90

2. (PLANT) BROWNS FERRY NUCLEAR PLANT
P.O. BOX 2000
DECATUR, ALABAMA

SHEET [a] 11 OF 259

MR# 815997

3. WORK PERFORMED BY: TVA (COMPANY)
P.O. Box 2000 (ADDRESS)
Decature, Alabama (CITY AND STATE)

TYPE CODE SYMBOL STAMP [b] NA
AUTHORIZATION NO. [b] NA
EXPIRATION DATE [b] NA

4. IDENTIFICATION OF SYSTEM SYS 85, Control Rod Drive

5(A). APPLICATION CONSTRUCTION CODE Section III 19 74
EDITION with ADDENDA 1975 CODE CASE NA

5(B). APPLICATION EDITION OF SECTION XI UTILIZED FOR REPAIRS OR REPLACEMENTS: 1980

6(A). NAME OF COMPONENT(S) AND DESCRIPTION (INCLUDE SIZE, CAPACITY, MATERIAL, AND LOCATION AS NEEDED TO AID IN IDENTIFICATION)
BWR-6 CRD from Hartsville modified by GE for use at BFNP BWR-4

6(B). NAME OF MANUFACTURER GE
ADDRESS OF MANUFACTURER (IF KNOWN) UNKNOWN

6(C). MANUFACTURER'S SERIAL NUMBER A 5068

6(D). NATIONAL BOARD NUMBER (IF APPLICABLE) N/A

6(E). OTHER IDENTIFICATION (SUBASSEMBLY NUMBER, HEAT NUMBER, ETC.)
2-CRD-85-0333 S/N-A5068

6(F). YEAR BUILT UNKNOWN CODE CLASS ☒ 1 ☐ 2

6(G). REPAIRED ☐ REPLACED ☒ [c] REPLACEMENT ☐ [d]

6(H). ASME CODE STAMPED YES ☒ NO ☐

7. BRIEF DESCRIPTION OF REPAIR OR REPLACEMENT WORK PERFORMED.
Replaced BWR-4 CRD with modified BWR-6 CRD

8. TESTS CONDUCTED: HYDROSTATIC ☒ PNEUMATIC ☐
NOMINAL OPERATING PRESSURE ☐ OTHER ☐
PRESSURE 1158 PSI TEST TEMPERATURE 182 F°

9. REMARKS: Hydrostatic Test to be conducted during vessel hydro per A-SI-2.2.1.A, REF. W.O. 90-08936-001

( ) APPLICABLE MANUFACTURERS DATA REPORT [e] TO BE ATTACHED. M. Manty 7-3-91
RESPONSIBLE ENGR. Ernest L. Williams/Tech Spt. DATE 5/18/90
ORGANIZATION

ANII _____ DATE _____

* REF. CAQR# CHA890003713

[a] SHEET NOS. FILLED IN BY TESTING AND DIAGNOSTIC PROGRAMS BRANCH.
[b] FOR WORK PERFORMED BY CERTIFICATE HOLDER
[c] REPLACED (LIKE OR EQUIVALENT).
[d] REPLACEMENT (MODIFICATION).
[e] WHEN REQUIRED BY CONSTRUCTION CODE.

RETENTION PERIOD: LIFETIME _ RESPONSIBLE ORGANIZATION: NM-PROCESSES/SPECIAL PROGRAMS

TENNESSEE VALLEY AUTHORITY
BROWNS FERRY NUCLEAR PLANT
SITE DIRECTOR STANDARD PRACTICE

SEP 22 1989

FORM PAGE 1 OF 1
FORM SDSP-403
SDSP 13.3

FORM SDSP-403
FORM NIS-2 ATTACHMENT

1. (OWNER) TENNESSEE VALLEY AUTHORITY
NUCLEAR POWER
DATE 5-18-90

2. (PLANT) BROWNS FERRY NUCLEAR PLANT
P.O. BOX 2000
DECATUR, ALABAMA
SHEET [a] 12 OF 259
MRF# 815948

3. WORK PERFORMED BY: TVA (COMPANY)
TYPE CODE SYMBOL STAMP [b] NA
P.O. Box 2000 (ADDRESS)
AUTHORIZATION NO. [b] NA
Decature, Alabama (CITY AND STATE)
EXPIRATION DATE [b] NA

4. IDENTIFICATION OF SYSTEM SYS 85, Control Rod Drive

5(A). APPLICATION CONSTRUCTION CODE Section III 19 74
EDITION with ADDENDA 1975 CODE CASE NA

5(B). APPLICATION EDITION OF SECTION XI UTILIZED FOR REPAIRS OR REPLACEMENTS: 1980

6(A). NAME OF COMPONENT(S) AND DESCRIPTION (INCLUDE SIZE, CAPACITY, MATERIAL, AND LOCATION AS NEEDED TO AID IN IDENTIFICATION)
BWR-6 CRD from Hartsville modified by GE for use at BFNP BWR-4

6(B). NAME OF MANUFACTURER GE
ADDRESS OF MANUFACTURER (IF KNOWN) UNKNOWN

6(C). MANUFACTURER'S SERIAL NUMBER A5508

6(D). NATIONAL BOARD NUMBER (IF APPLICABLE) N/A

6(E). OTHER IDENTIFICATION (SUBASSEMBLY NUMBER, HEAT NUMBER, ETC.)
2-CRD-85-0635 S/N - A5508

6(F). YEAR BUILT UNKNOWN CODE CLASS ☒ 1 ☐ 2

6(G). REPAIRED ☐ REPLACED ☒ [c] REPLACEMENT ☐ [d]

6(H). ASME CODE STAMPED YES ☒ NO ☐

7. BRIEF DESCRIPTION OF REPAIR OR REPLACEMENT WORK PERFORMED.
Replaced BWR-4 CRD with modified BWR-6 CRD

8. TESTS CONDUCTED: HYDROSTATIC ☒ PNEUMATIC ☐
NOMINAL OPERATING PRESSURE ☐ OTHER ☐
PRESSURE 1158 PSI TEST TEMPERATURE 182 F°

9. REMARKS: Hydrostatic Test to be conducted during vessel hydro per R-SE-2.2.1.B. REF. W.O. 90-08936-00

( ) APPLICABLE MANUFACTURERS DATA REPORT [e] TO BE ATTACHED.
RESPONSIBLE ENGR. Ernest E. Williams / Tech Spt. DATE 5/18/90 M. R. Martin 7-3-91
ORGANIZATION
ANII DATE

* REF. CAQR # CHA 890003713

[a] SHEET NOS. FILLED IN BY TESTING AND DIAGNOSTIC PROGRAMS BRANCH.
[b] FOR WORK PERFORMED BY CERTIFICATE HOLDER
[c] REPLACED (LIKE OR EQUIVALENT).
[d] REPLACEMENT (MODIFICATION).
[e] WHEN REQUIRED BY CONSTRUCTION CODE.

RETENTION PERIOD: LIFETIME RESPONSIBLE ORGANIZATION: NM-PROCESSES/SPECIAL PROGRAMS

3485 0269

TENNESSEE VALLEY AUTHORITY
BROWNS FERRY NUCLEAR PLANT
SITE DIRECTOR STANDARD PRACTICE

SEP 22 1989

FORM PAGE 1 OF 1
FORM SDSP-403
SDSP 13.3

FORM SDSP-403
FORM NIS-2 ATTACHMENT

1. (OWNER) TENNESSEE VALLEY AUTHORITY
NUCLEAR POWER

DATE 5-18-90

2. (PLANT) BROWNS FERRY NUCLEAR PLANT
P.O. BOX 2000
DECATUR, ALABAMA

SHEET [a] 13 OF 259

MR# 815999

3. WORK PERFORMED BY: TVA (COMPANY)
P.O. Box 2000 (ADDRESS)
Decature, Alabama (CITY AND STATE)

TYPE CODE SYMBOL STAMP [b] NA
AUTHORIZATION NO. [b] NA
EXPIRATION DATE [b] NA

4. IDENTIFICATION OF SYSTEM SYS 85, Control Rod Drive

5(A). APPLICATION CONSTRUCTION CODE Section III 19 74
EDITION with ADDENDA 1975 CODE CASE NA

5(B). APPLICATION EDITION OF SECTION XI UTILIZED FOR REPAIRS OR REPLACEMENTS: 1980

6(A). NAME OF COMPONENT(S) AND DESCRIPTION (INCLUDE SIZE, CAPACITY, MATERIAL, AND LOCATION AS NEEDED TO AID IN IDENTIFICATION)
BWR-6 CRD from Hartsville modified by GE for use at BFNP BWR-4

6(B). NAME OF MANUFACTURER GE
ADDRESS OF MANUFACTURER (IF KNOWN) UNKNOWN

6(C). MANUFACTURER'S SERIAL NUMBER A5646

6(D). NATIONAL BOARD NUMBER (IF APPLICABLE) N/A

6(E). OTHER IDENTIFICATION (SUBASSEMBLY NUMBER, HEAT NUMBER, ETC.)
2-CRD-85-1039 S/N A5646

6(F). YEAR BUILT UNKNOWN CODE CLASS [X] 1 [ ] 2

6(G). REPAIRED [ ] REPLACED [X] [c] REPLACEMENT [ ] [d]

6(H). ASME CODE STAMPED YES [X] NO [ ]

7. BRIEF DESCRIPTION OF REPAIR OR REPLACEMENT WORK PERFORMED.
Replaced BWR-4 CRD with modified BWR-6 CRD

8. TESTS CONDUCTED: HYDROSTATIC [X] PNEUMATIC [ ]
NOMINAL OPERATING PRESSURE [ ] OTHER [ ]
PRESSURE 1158 PSI TEST TEMPERATURE 182 F°

9. REMARKS: Hydrostatic Test to be conducted during vessel hydro per A-SI-2.3.1.B, REF. W.O. 90-08936-00 J

( ) APPLICABLE MANUFACTURERS DATA REPORT [e] TO BE ATTACHED. M. Martin 7-3-91
RESPONSIBLE ENGR. * Ernest L. Williams / Tech Spl. DATE 5/18/90
ORGANIZATION

ANII _____ DATE _____

* REF. CAQR# CHA 890003713

[a] SHEET NOS. FILLED IN BY TESTING AND DIAGNOSTIC PROGRAMS BRANCH.
[b] FOR WORK PERFORMED BY CERTIFICATE HOLDER
[c] REPLACED (LIKE OR EQUIVALENT).
[d] REPLACEMENT (MODIFICATION).
[e] WHEN REQUIRED BY CONSTRUCTION CODE.

RETENTION PERIOD: LIFETIME RESPONSIBLE ORGANIZATION: NS-PROCESSES/SPECIAL PROCESS

3485 0262

TENNESSEE VALLEY AUTHORITY
BROWNS FERRY NUCLEAR PLANT
SITE DIRECTOR STANDARD PRACTICE

SEP 22 1989

FORM PAGE 1 OF 1
FORM SDSP-403
SDSP 13.3

FORM SDSP-403
FORM NIS-2 ATTACHMENT

1. (OWNER) TENNESSEE VALLEY AUTHORITY
NUCLEAR POWER

DATE 5-18-90

2. (PLANT) BROWNS FERRY NUCLEAR PLANT
P.O. BOX 2000
DECATUR, ALABAMA

SHEET [a] 14 OF 259

MR# 816000

3. WORK PERFORMED BY: TVA (COMPANY)
P.O. Box 2000 (ADDRESS)
Decature, Alabama (CITY AND STATE)

TYPE CODE SYMBOL STAMP [b] NA
AUTHORIZATION NO. [b] NA
EXPIRATION DATE [b] NA

4. IDENTIFICATION OF SYSTEM SYS 85, Control Rod Drive

5(A). APPLICATION CONSTRUCTION CODE Section III 19 74
EDITION with ADDENDA 1975 CODE CASE

5(B). APPLICATION EDITION OF SECTION XI UTILIZED FOR REPAIRS OR REPLACEMENTS: 1980

6(A). NAME OF COMPONENT(S) AND DESCRIPTION (INCLUDE SIZE, CAPACITY, MATERIAL, AND LOCATION AS NEEDED TO AID IN IDENTIFICATION)
BWR-6 CRD from Hartsville modified by GE for use at BFNP BWR-4

6(B). NAME OF MANUFACTURER GE
ADDRESS OF MANUFACTURER (IF KNOWN) UNKNOWN

6(C). MANUFACTURER'S SERIAL NUMBER A4688

6(D). NATIONAL BOARD NUMBER (IF APPLICABLE) N/A

6(E). OTHER IDENTIFICATION (SUBASSEMBLY NUMBER, HEAT NUMBER, ETC.)
2-CRD-85-1042 S/N-A4688

6(F). YEAR BUILT UNKNOWN CODE CLASS: ☒ 1 ☐ 2

6(G). REPAIRED ☐ REPLACED ☒ [c] REPLACEMENT ☐ [d]

6(H). ASME CODE STAMPED YES ☒ NO ☐

7. BRIEF DESCRIPTION OF REPAIR OR REPLACEMENT WORK PERFORMED.
Replaced BWR-4 CRD with modified BWR-6 CRD.

8. TESTS CONDUCTED: HYDROSTATIC ☒ PNEUMATIC ☐
NOMINAL OPERATING PRESSURE ☐ OTHER ☐
PRESSURE 1158 PSI TEST TEMPERATURE 182 F°

9. REMARKS: Hydrostatic Test to be conducted during vessel hydro per 2-SI-3.3.1.B, REF. W.O. 90-08936-00 *

( ) APPLICABLE MANUFACTURERS DATA REPORT [e] TO BE ATTACHED. M. Maydm 7-3-91
RESPONSIBLE ENGR. Ernest L. Williams / Tech Spt. DATE 5/17/90
ORGANIZATION

ANII DATE

* REF. CAQR# CHA890003713.

[a] SHEET NOS. FILLED IN BY TESTING AND DIAGNOSTIC PROGRAMS BRANCH.
[b] FOR WORK PERFORMED BY CERTIFICATE HOLDER
[c] REPLACED (LIKE OR EQUIVALENT).
[d] REPLACEMENT (MODIFICATION).
[e] WHEN REQUIRED BY CONSTRUCTION CODE.

RETENTION PERIOD: LIFETIME RESPONSIBLE ORGANIZATION: NM-PROCESSES/SPECIAL PROGRAMS

Tennessee Valley Authority
Browns Ferry Nuclear Plant
Site Director Standard Practice

JUL 1 1 1988

Form SDSP-26
SDSP-13.3
Page 4 of 5

ASME SECTION XI SUMMARY REPORT

Tennessee Valley Authority
Office of Nuclear Power, 1750 CST2-C
Browns Ferry Nuclear Plant Unit 2
P.O. Box 2000
Decatur, Alabama

Comm. Service Date 3-1-75
System RCIC
TVA Class D
Workplan/MR No. 819786

Furnish the following for the repair or replacement for the as-left condition of the component (after field work is complete). Mark all blanks (indicate NA for items which do not apply).

National Board Number of repaired or replaced component. N/A

Name of the components and description (include size, capacity, material, and location)—Theses requirements may be satisfied by attaching an applicable drawing.
Flange 2-FLG-071: Replace existing stud: 7/8" x 6" lg SA193 Gr 7B
Flange to RCIC pump

Name of Manufacturer N/A MBT 11/1/88

Address of Manufacturer (if known) N/A 11/1/88 MBT

Manufacturer's component identification numbers (i.e., serial number, subassembly number, heat number). If more than one component is replaced, attach weld map and identify items by item number. N/A MBT 11/2/88

Repair [ ] Replacement/Modification [X]

Brief description of repair or replacement work performed, including conditions observed and corrective measures taken, as applicable (reference DCR, CAR, etc.; drawing may be attached with attached affected area circled).
Replaced existing stud with a longer stud of the same size and matl. Spec. existing stud was lacking full thread engagement

Brief description of post repair or replacement tests and examinations (if required) by instruction or procedure number, Weld performed per MME-51
Torquing per MMI-51: 160 Ft-Lbs/MMI-51

ANII/ANI name, employer, and business address Roosevelt Russell Jr: THE HARTFORD STEAM BOILER INSPECTION AND INSURANCE COMPANY, Atlanta, Ga

Date work completed 11/2/88

Michael Thomason 11/2/88
Responsible Engineer Date

Retention: Period - Lifetime; Responsibility - ERCU Supervisor

Tennessee Valley Authority
Browns Ferry Nuclear Plant
Site Director Standard Practice

JUL 1 1 1988

Form SDSP-26
SDSP-13.3
Page 4 of 5

SHEET 16 of 259

ASME SECTION XI SUMMARY REPORT

Tennessee Valley Authority
Office of Nuclear Power, 1750 CST2-C
Browns Ferry Nuclear Plant Unit 2
P.O. Box 2000
Decatur, Alabama

Comm. Service Date MARCH 1, 1975
System 075
TVA Class NEAT D
Workplan/MR No. A-817791

Furnish the following for the repair or replacement for the as-left condition of the component (after field work is complete). Mark all blanks (indicate NA for items which do not apply).

National Board Number of repaired or replaced component. N/A

Name of the components and description (include size, capacity, material, and location)—Theses requirements may be satisfied by attaching an applicable drawing.
1" ϕ X 6 1/2" FLANGE STUD - ASTM A 193 GRADE B7

Name of Manufacturer N/A

Address of Manufacturer (if known) N/A

Manufacturer's component identification numbers (i.e., serial number, subassembly number, heat number). If more than one component is replaced, attach weld map and identify items by item number.
HT.# 97668

Repair [ ] Replacement/Modification [✓]

Brief description of repair or replacement work performed, including conditions observed and corrective measures taken, as applicable (reference DCR, CAR, etc.; drawing may be attached with attached affected area circled).
REPLACED FLANGE STUD TO ENSURE FULL THREAD ENGAGEMENT

Brief description of post repair or replacement tests and examinations (if required) by instruction or procedure number.
TORQUING PER BF-MMI-51

ANII/ANI name, employer, and business address

Date work completed 10/17/87

Mark Hill 10/20/87
Responsible Engineer Date

Retention: Period - Lifetime; Responsibility - EXCU Supervisor

ASME SECTION XI SUMMARY REPORT

SHEET 17 of 259

Tennessee Valley Authority
Office of Nuclear Power, 1750 CST2-C
Browns Ferry Nuclear Plant Unit 2
P.O. Box 2000
Decatur, Alabama

Comm. Service Date 3-1-75
System 71
TVA Class C ASME CLASS II
Workplan (MR) No. 819841

Furnish the following for the repair or replacement for the as-left condition of the component (after field work is complete). Mark all blanks (indicate NA for items which do not apply).

National Board Number of repaired or replaced component. NA

Name of the components and description (include size, capacity, material, and location)--Theses requirements may be satisfied by attaching an applicable drawing.
2-FCV-71-0010, 3 inch Angle Valve Model GS

Name of Manufacturer TERRY STM TURBINE Co.

Address of Manufacturer (if known) N/A

Manufacturer's component identification numbers (i.e., serial number, subassembly number, heat number). If more than one component is replaced, attach weld map and identify items by item number. Model GS Terry Steam Turbine Co.

Repair /X/ Replacement/Modification /___/

Brief description of repair or replacement work performed, including conditions observed and corrective measures taken, as applicable (reference DCR, CAR, etc.; drawing may be attached with attached affected area circled).
REPLACED ~~MRC~~ RCIC SYSTEM GOVERNOR VALVE (2-FCV-71-10) PLUG.

Brief description of post repair or replacement tests and examinations (if required) by instruction or procedure number. No Valve Testing Required.

ANII/ANI name, employer, and business address ROOSEVELT RUSSELL JR., BILL RICE, THE HARTFORD STEAM BOILER INSPECTION AND INSURANCE Co., ATLANTA, GA 30338, 1117 PERIMETER CENTER WEST, SUITE E-301

Date work completed 5-23-88

* Albert E Cooke 5/19/90
Responsible Engineer Date

*REF CAQR # CHA 890003713

Retention: Period - Lifetime; Responsibility - DCRM

Tennessee Valley Authority
Browns Ferry Nuclear Plant

NOV 10 1986

Form SDSP-26
SDSP-13.3
Page 4 of 5

ASME SECTION XI SUMMARY REPORT

Tennessee Valley Authority
Office of Nuclear Power, 1750 CST2-C
Browns Ferry Nuclear Plant Unit 2
P.O. Box 2000
Decatur, Alabama

Comm. Service Date 1974
System RESIDUAL HEAT REMOVAL
TVA Class II
Workplan (MR) No. A-862866

Furnish the following for the repair or replacement for the as-left condition of the component (after field work is complete). Mark all blanks (indicate NA for items which do not apply).

National Board Number of repaired or replaced component. N/A

Name of the components and description (include size, capacity, material, and location)--Theses requirements may be satisfied by attaching an applicable drawing.
12" 300lb CAST STEEL Globe VALVE RHR SYSTEM II Pump TEST VALVE, TOP OF TORUS 541' ELEVATION

Name of Manufacturer WALWORTH COMPANY

Address of Manufacturer (if known) GREENSBURGH, PA.

Manufacturer's component identification numbers (i.e., serial number, subassembly number, heat number). If more than one component is replaced, attach weld map and identify items by item number. VENDOR DRAWING NO. A-12335-M-1-E, T.V.A CONTRACT NO. 90744 & 91750. TVA TAG. NO. 2-FCV-74-073.

Brief description of repair or replacement work performed, including conditions observed and corrective measures taken, as applicable (reference DCR, CAR, etc.; drawing may be attached with attached affected area circled).
Remove Tack weld between Disc lock Nut and Disc, Install New Stem and Re weld (Tacks) Disc lock Nut To Disc.

Brief description of post repair or replacement tests and examinations (if required) by instruction or procedure number. N-VT-3; N-PT-1.

ANII/ANI name, employer, and business address ROOSEVELT RUSSELL JR., THE HARTFORD STEAM BOILER INSPECTION AND INSURANCE CO., 1117 PERIMETER CENTER WEST, Suite E-301, ATlanta, Ga. 30338

Date work completed 3-17-88

Albert E. Cooke / 3-18-88
Cognizant Engineer Date

Retention: Period - Lifetime; Responsibility - Modifications Supervisor

TENNESSEE VALLEY AUTHORITY
BROWNS FERRY NUCLEAR PLANT
SITE DIRECTOR STANDARD PRACTICE

SEP 22 1989

FORM SDSP-403
FORM NIS-2 ATTACHMENT

1. (OWNER) TENNESSEE VALLEY AUTHORITY
NUCLEAR POWER

DATE 6-18-90

2. (PLANT) BROWNS FERRY NUCLEAR PLANT
P.O. BOX 2000
DECATUR, ALABAMA

SHEET [a] 19 OF 259

MR# 870014

3. WORK PERFORMED BY: TVA (COMPANY)
P.O. Box 2000 (ADDRESS)
Decature, Alabama (CITY AND STATE)

TYPE CODE SYMBOL STAMP [b] NA
AUTHORIZATION NO. [b] NA
EXPIRATION DATE [b] NA

4. IDENTIFICATION OF SYSTEM SYS 85, Control Rod Drive

5(A). APPLICATION CONSTRUCTION CODE ~~Section VIII Div 1 to 71~~ MRA 7-3-91 ANSI B31.1, 1967
EDITION MRA 7-3-91 ~~with~~ 1967 ADDENDA MRA 7-3-91 ~~75 WINTER~~ CODE CASE NA

5(B). APPLICATION EDITION OF SECTION XI UTILIZED FOR REPAIRS OR REPLACEMENTS: 1980

6(A). NAME OF COMPONENT(S) AND DESCRIPTION (INCLUDE SIZE, CAPACITY, MATERIAL, AND LOCATION AS NEEDED TO AID IN IDENTIFICATION)
HCU 30-39 — new accumulator, piston, o-rings
2-HCU-85-30-39

6(B). NAME OF MANUFACTURER GE
ADDRESS OF MANUFACTURER (IF KNOWN) UNKNOWN

6(c). MANUFACTURER'S SERIAL NUMBER C0200

6(D). NATIONAL BOARD NUMBER (IF APPLICABLE) NA

6(E). OTHER IDENTIFICATION (SUBASSEMBLY NUMBER, HEAT NUMBER, ETC.)
2-HCU-85-30-39

6(F). YEAR BUILT 1978 CODE CLASS ☐ 1 ☒ 2

6(G). REPAIRED ☐ REPLACED ☒ [c] REPLACEMENT ☐ [d]

6(H). ASME CODE STAMPED YES ☐ NO ☒

7. BRIEF DESCRIPTION OF REPAIR OR REPLACEMENT WORK PERFORMED.
~~[illegible]~~ water accumulator in HCU
replaced old accumulator with new one from Huntsville

8. TESTS CONDUCTED: HYDROSTATIC ☒ PNEUMATIC ☐
NOMINAL OPERATING PRESSURE ☐ OTHER ☐
PRESSURE 1925 PSI TEST TEMPERATURE >40 F°

9. REMARKS: MRA 6-26-90 ~~SI-3027 performed NRC 86; retested 5/17/87~~
REF. W.O. 90-08938-00

( ) APPLICABLE MANUFACTURERS DATA REPORTS TO BE ATTACHED.
RESPONSIBLE ENGR. [illegible] 6/18/9 DATE M. Mann Tech. Spec. 7-3-91
ORGANIZATION
ANII DATE

* REF. CAQR # CHA890003713

[a] SHEET NOS. FILLED IN BY TESTING AND DIAGNOSTIC PROGRAMS BRANCH.
[b] FOR WORK PERFORMED BY CERTIFICATE HOLDER
[c] REPLACED (LIKE OR EQUIVALENT).
[d] REPLACEMENT (MODIFICATION).
[e] WHEN REQUIRED BY CONSTRUCTION CODE.

RETENTION PERIOD: LIFETIME RESPONSIBLE ORGANIZATION: NM-PROCESSES/SPECIAL PROGRAMS

TENNESSEE VALLEY AUTHORITY
BROWNS FERRY NUCLEAR PLANT
SITE DIRECTOR STANDARD PRACTICE

SEP 22 1989

FORM PAGE 1 OF
FORM SDSP-403
SDSP 13.3

FORM SDSP-403
FORM NIS-2 ATTACHMENT SHEET 20 of 259

*REF. CAQR# 890063713

1. (OWNER) TENNESSEE VALLEY AUTHORITY
NUCLEAR POWER

DATE 06/09/90
RLB 06/09/90

2. (PLANT) BROWNS FERRY NUCLEAR PLANT
P.O. BOX 2000
DECATUR, ALABAMA

SHEET [a] 1 OF 1

MR# 870583

3. WORK PERFORMED BY: TVA
COMPANY

PO BOX 2000
ADDRESS

DECATUR ALABAMA
CITY AND STATE

TYPE CODE SYMBOL STAMP [b] N/A

AUTHORIZATION NO. [b] N/A

EXPIRATION DATE [b] N/A

4. IDENTIFICATION OF SYSTEM SYSTEM-68

5(A). APPLICATION CONSTRUCTION CODE USA B31.1.0 19 67
EDITION THRU ADDENDA N/A CODE CASE N/A

5(B). APPLICATION EDITION OF SECTION XI UTILIZED FOR REPAIRS OR REPLACEMENTS: 1980

6(A). NAME OF COMPONENT(S) AND DESCRIPTION (INCLUDE SIZE, CAPACITY, MATERIAL, AND LOCATION AS NEEDED TO AID IN IDENTIFICATION)
UNIT-2, EL-550, SS8A, (RECIR-2-SS6) RX BLDG, 2-SNUB-68-R-2-SS8A

6(B). NAME OF MANUFACTURER TVA
ADDRESS OF MANUFACTURER (IF KNOWN) PO BOX 2000 DECATUR ALABAMA

6(c). MANUFACTURER'S SERIAL NUMBER N/A

6(D). NATIONAL BOARD NUMBER (IF APPLICABLE) N/A

6(E). OTHER IDENTIFICATION (SUBASSEMBLY NUMBER, HEAT NUMBER, ETC.) N/A

6(F). YEAR BUILT N/A CODE CLASS ☒ 1 ☐ 2

6(G). REPAIRED ☒ REPLACED ☐ [c] REPLACEMENT ☐ [d]

6(H). ASME CODE STAMPED YES ☐ NO ☒

7. BRIEF DESCRIPTION OF REPAIR OR REPLACEMENT WORK PERFORMED.
REMOVE LINEAR INDICATION BY GRINDING

8. TESTS CONDUCTED: HYDROSTATIC ☐ PNEUMATIC ☐
NOMINAL OPERATING PRESSURE ☐ OTHER ☐
PRESSURE N/A PSI TEST TEMPERATURE N/A F°

9. REMARKS:

( ) APPLICABLE MANUFACTURERS DATA REPORT [e] TO BE ATTACHED.

RESPONSIBLE ENGR. R.W. Hycke /SYSTEM DATE 06/09/90
ORGANIZATION

ANII * DATE

[a] SHEET NOS. FILLED IN BY TESTING AND DIAGNOSTIC PROGRAMS BRANCH.
[b] FOR WORK PERFORMED BY CERTIFICATE HOLDER
[c] REPLACED (LIKE OR EQUIVALENT).
[d] REPLACEMENT (MODIFICATION).
[e] WHEN REQUIRED BY CONSTRUCTION CODE.

RETENTION PERIOD: LIFETIME RESPONSIBLE ORGANIZATION: NM-PROCESSES/SPECIAL PROGRAMS

ASME SECTION XI SUMMARY REPORT

SHEET 21 of 259

Tennessee Valley Authority
Office of Nuclear Power, 1750 CST2-C
Browns Ferry Nuclear Plant Unit 2
P.O. Box 2000
Decatur, Alabama

Comm. Service Date 3-1-75
System ~~8~~ 5/9/89 75 - CORE SPRAY
TVA Class D
Workplan/MR No. A-875075

Furnish the following for the repair or replacement for the as-left condition of the component (after field work is complete). Mark all blanks (indicate NA for items which do not apply).

National Board Number of repaired or replaced component. NA 5/9/89

Name of the components and description (include size, capacity, material, and location)—Theses requirements may be satisfied by attaching an applicable drawing. ½" DIA - 13UNC ASTM 194 GR 2H NUT FOR USE ON BONNET BOLT FOR 2½" POWELL GLOBE VALVE

Name of Manufacturer NA 5/9/89

Address of Manufacturer (if known) NA 5/9/89

Manufacturer's component identification numbers (i.e., serial number, subassembly number, heat number). If more than one component is replaced, attach weld map and identify items by item number. NONE FOR NUT

Repair / / Replacement/Modification /X/

Brief description of repair or replacement work performed, including conditions observed and corrective measures taken, as applicable (reference DCR, CAR, etc.; drawing may be attached with attached affected area circled). REPLACED A MISSING NUT TO EXISTING BONNET BOLT

Brief description of post repair or replacement tests and examinations (if required) by instruction or procedure number. ~~NO REQUIRED~~ 5/9/89
NONE REQUIRED

ANII/ANI name, employer, and business address HARTFORD STEAM BOILER, ROSEVELT RUSSELL/BILL RICE, 1117 PERIMETER CENTER WEST, SUITE E301 ATLANTA GA 30338

Date work completed 5/9/89

Responsible Engineer 5/9/89 Date

Retention: Period - Lifetime; Responsibility - ERCU Supervisor

TENNESSEE VALLEY AUTHORITY
BROWNS FERRY NUCLEAR PLANT
SITE DIRECTOR STANDARD PRACTICE

SEP 22 1989

FORM PAGE 1 OF 1
FORM SDSP-403
SDSP 13.3

FORM SDSP-403
FORM NIS-2 ATTACHMENT

SHEET 22 of 259

REFERENCE CAQR# CHA890003713

1. (OWNER) TENNESSEE VALLEY AUTHORITY
NUCLEAR POWER

DATE 05/02/90

2. (PLANT) BROWNS FERRY NUCLEAR PLANT
P.O. BOX 2000
DECATUR, ALABAMA

SHEET [a] 1 OF 1

MRH 877016

3. WORK PERFORMED BY: TVA
COMPANY

TYPE CODE SYMBOL STAMP [b] N/A

PO BOX 2000
ADDRESS

AUTHORIZATION NO. [b] N/A

DECATUR ALABAMA
CITY AND STATE

EXPIRATION DATE [b] N/A

4. IDENTIFICATION OF SYSTEM SYSTEM 71-RCIC

5(A). APPLICATION CONSTRUCTION CODE USAS B31.1.0 19 67
EDITION THRU ADDENDA N/A CODE CASE N/A

5(B). APPLICATION EDITION OF SECTION XI UTILIZED FOR REPAIRS OR REPLACEMENTS: 1980

6(A). NAME OF COMPONENT(S) AND DESCRIPTION (INCLUDE SIZE, CAPACITY, MATERIAL, AND LOCATION AS NEEDED TO AID IN IDENTIFICATION)
UNIT-2, RX BLDG EL-528, NW QUAD, PUMP SUCTION LINE

6(B). NAME OF MANUFACTURER BERGEN PATERSON
ADDRESS OF MANUFACTURER (IF KNOWN) N/A

6(c). MANUFACTURER'S SERIAL NUMBER NA

6(D). NATIONAL BOARD NUMBER (IF APPLICABLE) N/A

6(E). OTHER IDENTIFICATION (SUBASSEMBLY NUMBER, HEAT NUMBER, ETC.) N/A

6(F). YEAR BUILT UNKNOWN CODE CLASS ☐ 1 ☒ 2

6(G). REPAIRED ☐ REPLACED ☒ [c] REPLACEMENT ☐ [d]

6(H). ASME CODE STAMPED YES ☐ NO ☒

7. BRIEF DESCRIPTION OF REPAIR OR REPLACEMENT WORK PERFORMED.
SNUBBER WAS DUE FOR REBUILDING. SNUBBER WAS REMOVED AND A DIFFERENT SNUBBER WAS INSTALLED

8. TESTS CONDUCTED: HYDROSTATIC ☐ PNEUMATIC ☐
NOMINAL OPERATING PRESSURE ☐ OTHER ☐
PRESSURE N/A PSI TEST TEMPERATURE N/A F°

9. REMARKS:

( ) APPLICABLE MANUFACTURERS DATA REPORT [e] TO BE ATTACHED. Mike R. Marks 6-19-91
RESPONSIBLE ENGR. RW AYCOCK / SYSTEMS DATE 05/02/90
ORGANIZATION

ANII DATE

*RCR CAQR# CHA:890003713

[a] SHEET NOS. FILLED IN BY TESTING AND DIAGNOSTIC PROGRAMS BRANCH.
[b] FOR WORK PERFORMED BY CERTIFICATE HOLDER
[c] REPLACED (LIKE OR EQUIVALENT).
[d] REPLACEMENT (MODIFICATION).
[e] WHEN REQUIRED BY CONSTRUCTION CODE.

RETENTION PERIOD: LIFETIME RESPONSIBLE ORGANIZATION: NM-PROCESSES/SPECIAL PROGRAMS

TENNESSEE VALLEY AUTHORITY
BROWNS FERRY NUCLEAR PLANT
SITE DIRECTOR STANDARD PRACTICE

SEP 22 1989

FORM PAGE 1 OF 1
FORM SDSP-403
SDSP 13.3

FORM SDSP-403
FORM NIS-2 ATTACHMENT

SHEET 23 of 259

REFERENCE CAQR# 890003713

1. (OWNER) TENNESSEE VALLEY AUTHORITY
NUCLEAR POWER

DATE 05/03/98

2. (PLANT) BROWNS FERRY NUCLEAR PLANT
P.O. BOX 2000
DECATUR, ALABAMA

SHEET [a] 1 OF 1

MR# 877017

3. WORK PERFORMED BY: TVA
COMPANY

TYPE CODE SYMBOL STAMP [b] N/A

PO BOX 2000
ADDRESS

AUTHORIZATION NO. [b] N/A

DECATUR ALABAMA
CITY AND STATE

EXPIRATION DATE [b] N/A

4. IDENTIFICATION OF SYSTEM SYSTEM 71-RCIC

5(A). APPLICATION CONSTRUCTION CODE USAS B31.1.0 19 67
EDITION THRU ADDENDA N/A CODE CASE N/A

5(B). APPLICATION EDITION OF SECTION XI UTILIZED FOR REPAIRS OR REPLACEMENTS: 1980

6(A). NAME OF COMPONENT(S) AND DESCRIPTION (INCLUDE SIZE, CAPACITY, MATERIAL, AND LOCATION AS NEEDED TO AID IN IDENTIFICATION)
UNIT-2, EL-538, RX BLDG, NW QUAD, RCIC, ROS EAST

6(B). NAME OF MANUFACTURER BERGEN PATERSON
ADDRESS OF MANUFACTURER (IF KNOWN) UNKNOWN

6(c). MANUFACTURER'S SERIAL NUMBER UNKNOWN

6(D). NATIONAL BOARD NUMBER (IF APPLICABLE) N/A

6(E). OTHER IDENTIFICATION (SUBASSEMBLY NUMBER, HEAT NUMBER, ETC.) N/A

6(F). YEAR BUILT UNKNOWN CODE CLASS ☐ 1 ☒ 2

6(G). REPAIRED ☒ REPLACED ☒ [c] REPLACEMENT ☐ [d]

6(H). ASME CODE STAMPED YES ☐ NO ☒

7. BRIEF DESCRIPTION OF REPAIR OR REPLACEMENT WORK PERFORMED.
SNUBBER WAS DUE FOR REBUILD SNUBBER WAS REMOVED & INSTALLED WITH ANOTHER SNUBBER. THE SNUBBER THAT WAS REMOVED WAS REBUILD.

8. TESTS CONDUCTED: HYDROSTATIC ☐ PNEUMATIC ☐
NOMINAL OPERATING PRESSURE ☐ OTHER ☐
PRESSURE N/A PSI TEST TEMPERATURE N/A F°

9. REMARKS: TVA S/N# M0078

( ) APPLICABLE MANUFACTURERS DATA REPORT [e] TO BE ATTACHED.

RESPONSIBLE ENGR. RW WAYCOCK / SYSTEMS DATE 05/03/98
ORGANIZATION

ANII _____ DATE _____

[a] SHEET NOS. FILLED IN BY TESTING AND DIAGNOSTIC PROGRAMS BRANCH.
[b] FOR WORK PERFORMED BY CERTIFICATE HOLDER
[c] REPLACED (LIKE OR EQUIVALENT).
[d] REPLACEMENT (MODIFICATION).
[e] WHEN REQUIRED BY CONSTRUCTION CODE.

RETENTION PERIOD: LIFETIME RESPONSIBLE ORGANIZATION: NM-PROCESSES/SPECIAL PROGRAMS

TENNESSEE VALLEY AUTHORITY
BROWNS FERRY NUCLEAR PLANT
SITE DIRECTOR STANDARD PRACTICE

SEP 22 1989

FORM SDSP-403
FORM NIS-2 ATTACHMENT

SHEET 24 of 259

REFERENCE CAQR # CHA890003713

1. (OWNER) TENNESSEE VALLEY AUTHORITY
NUCLEAR POWER

DATE 05/02/90

2. (PLANT) BROWNS FERRY NUCLEAR PLANT
P.O. BOX 2000
DECATUR, ALABAMA

SHEET [a] 1 OF 1

MR# 877018

3. WORK PERFORMED BY: TVA
COMPANY

TYPE CODE SYMBOL STAMP [b] N/A

PO BOX 2000
ADDRESS

AUTHORIZATION NO. [b] N/A

DECATUR ALABAMA
CITY AND STATE

EXPIRATION DATE [b] N/A

4. IDENTIFICATION OF SYSTEM 71-RCIC

5(A). APPLICATION CONSTRUCTION CODE USAS B 31.1.0 19 67
EDITION THRU ADDENDA N/A CODE CASE N/A

5(B). APPLICATION EDITION OF SECTION XI UTILIZED FOR REPAIRS OR REPLACEMENTS: 1980

6(A). NAME OF COMPONENT(S) AND DESCRIPTION (INCLUDE SIZE, CAPACITY, MATERIAL, AND LOCATION AS NEEDED TO AID IN IDENTIFICATION)
UNIT-2, EL-538, RXBLDG, NW QUAD ROS SOUTH TURBINE EXHAUST LINE.

6(B). NAME OF MANUFACTURER BERGEN PATERSON
ADDRESS OF MANUFACTURER (IF KNOWN) UNKNOWN

6(c). MANUFACTURER'S SERIAL NUMBER I.E.T. G15/98-1B

6(D). NATIONAL BOARD NUMBER (IF APPLICABLE) N/A

6(E). OTHER IDENTIFICATION (SUBASSEMBLY NUMBER, HEAT NUMBER, ETC.) N/A

6(F). YEAR BUILT UNKNOWN CODE CLASS ☐ 1 ☒ 2

6(G). REPAIRED ☒ REPLACED ☒ [c] REPLACEMENT ☐ [d]

6(H). ASME CODE STAMPED YES ☐ NO ☒

7. BRIEF DESCRIPTION OF REPAIR OR REPLACEMENT WORK PERFORMED.
SNUBBER WAS DUE FOR REBUILDING. SNUBBER WAS REMOVED AND A DIFFERENT SNUBBER WAS INSTALLED. THE SNUBBER REMOVED WAS REBUILT.

8. TESTS CONDUCTED: HYDROSTATIC ☐ PNEUMATIC ☐
NOMINAL OPERATING PRESSURE ☐ OTHER ☐
PRESSURE N/A PSI TEST TEMPERATURE N/A F°

9. REMARKS:

( ) APPLICABLE MANUFACTURERS DATA REPORT [e] TO BE ATTACHED.

RESPONSIBLE ENGR. RW ADCOCK / SYSTEMS DATE 05/02/90
ORGANIZATION

ANII DATE

* REF CAQR# CHA 890003713

[a] SHEET NOS. FILLED IN BY TESTING AND DIAGNOSTIC PROGRAMS BRANCH.
[b] FOR WORK PERFORMED BY CERTIFICATE HOLDER
[c] REPLACED (LIKE OR EQUIVALENT).
[d] REPLACEMENT (MODIFICATION).
[e] WHEN REQUIRED BY CONSTRUCTION CODE.

RETENTION PERIOD: LIFETIME RESPONSIBLE ORGANIZATION: NM-PROCESSES/SPECIAL PROGRAMS

TENNESSEE VALLEY AUTHORITY
BROWNS FERRY NUCLEAR PLANT
SITE DIRECTOR STANDARD PRACTICE

SEP 22 1989

FORM PAGE 1 OF 1
FORM SDSP-403
SDSP 13.3

FORM SDSP-403
FORM NIS-2 ATTACHMENT

SHEET 25 of 259

REFERENCE CAQR#CHA890003713

1. (OWNER) TENNESSEE VALLEY AUTHORITY
NUCLEAR POWER

DATE 05/04/90

2. (PLANT) BROWNS FERRY NUCLEAR PLANT
P.O. BOX 2000
DECATUR, ALABAMA

SHEET [a] 1 OF 1

MR# 877019

3. WORK PERFORMED BY: TVA
COMPANY

TYPE CODE SYMBOL STAMP [b] N/A

PO BOX 2000
ADDRESS

AUTHORIZATION NO. [b] N/A

DECATUR ALABAMA
CITY AND STATE

EXPIRATION DATE [b] N/A

4. IDENTIFICATION OF SYSTEM SYSTEM 74-RHR

5(A). APPLICATION CONSTRUCTION CODE USAS B31.1.0 19 67
EDITION THRU ADDENDA N/A CODE CASE N/A

5(B). APPLICATION EDITION OF SECTION XI UTILIZED FOR REPAIRS OR REPLACEMENTS: 1980

6(A). NAME OF COMPONENT(S) AND DESCRIPTION (INCLUDE SIZE, CAPACITY, MATERIAL, AND LOCATION AS NEEDED TO AID IN IDENTIFICATION)
UNIT-2, RX BLDG, HEAT EXCHANGE ROOM A+C, EL-571, R-59

6(B). NAME OF MANUFACTURER BERGEN PATERSON
ADDRESS OF MANUFACTURER (IF KNOWN) UNKNOWN

6(c). MANUFACTURER'S SERIAL NUMBER I L6 G15198-1B

6(D). NATIONAL BOARD NUMBER (IF APPLICABLE) N/A

6(E). OTHER IDENTIFICATION (SUBASSEMBLY NUMBER, HEAT NUMBER, ETC.) N/A

6(F). YEAR BUILT UNKNOWN CODE CLASS ☐ 1 ☒ 2

6(G). REPAIRED ☒ REPLACED ☒ [c] REPLACEMENT ☐ [d]

6(H). ASME CODE STAMPED YES ☐ NO ☒

7. BRIEF DESCRIPTION OF REPAIR OR REPLACEMENT WORK PERFORMED.
SNUBBER WAS DUE FOR REBUILD. SNUBBER WAS REMOVED AND ANOTHER UNIT WAS INSTALLED. THE SNUBBER REMOVED WAS REBUILD.

8. TESTS CONDUCTED: HYDROSTATIC ☐ PNEUMATIC ☐
NOMINAL OPERATING PRESSURE ☐ OTHER ☐
PRESSURE N/A PSI TEST TEMPERATURE N/A F°

9. REMARKS:

( ) APPLICABLE MANUFACTURERS DATA REPORT [e] TO BE ATTACHED.

RESPONSIBLE ENGR. RW AVCOCK / SYSTEMS DATE 05/04/90
ORGANIZATION

ANII DATE

* REF CAQR# CHA890003713

[a] SHEET NOS. FILLED IN BY TESTING AND DIAGNOSTIC PROGRAMS BRANCH.
[b] FOR WORK PERFORMED BY CERTIFICATE HOLDER
[c] REPLACED (LIKE OR EQUIVALENT).
[d] REPLACEMENT (MODIFICATION).
[e] WHEN REQUIRED BY CONSTRUCTION CODE.

RETENTION PERIOD: LIFETIME RESPONSIBLE ORGANIZATION: NM-PROCESSES/SPECIAL PROGRAMS

TENNESSEE VALLEY AUTHORITY
BROWNS FERRY NUCLEAR PLANT
SITE DIRECTOR STANDARD PRACTICE

SEP 22 1989

FORM PAGE 1 OF 1
FORM SDSP-403
SDSP 13.3

FORM SDSP-403
FORM NIS-2 ATTACHMENT

SHEET 26 of 259

REF. CAQR#CHA890003713

1. (OWNER) TENNESSEE VALLEY AUTHORITY
NUCLEAR POWER

DATE 05/27/90

2. (PLANT) BROWNS FERRY NUCLEAR PLANT
P.O. BOX 2000
DECATUR, ALABAMA

SHEET [a] 1 OF 1

MR# 877020

3. WORK PERFORMED BY: TVA
COMPANY

TYPE CODE SYMBOL STAMP [b] N/A

PO BOX 2000
ADDRESS

AUTHORIZATION NO. [b] N/A

DECATUR ALABAMA
CITY AND STATE

EXPIRATION DATE [b] N/A

4. IDENTIFICATION OF SYSTEM RHR SYSTEM-74

5(A). APPLICATION CONSTRUCTION CODE USAS B31.1.0 19 67
EDITION THRU ADDENDA N/A CODE CASE N/A

5(B). APPLICATION EDITION OF SECTION XI UTILIZED FOR REPAIRS OR REPLACEMENTS: 1980

6(A). NAME OF COMPONENT(S) AND DESCRIPTION (INCLUDE SIZE, CAPACITY, MATERIAL, AND LOCATION AS NEEDED TO AID IN IDENTIFICATION)
UNIT-2, RBLDG EL-572, HEAT EXCHANGER ROOM A+C
R-60 WEST

6(B). NAME OF MANUFACTURER BERGEN PATERSON
ADDRESS OF MANUFACTURER (IF KNOWN) UNKNOWN

6(c). MANUFACTURER'S SERIAL NUMBER F84806-2

6(D). NATIONAL BOARD NUMBER (IF APPLICABLE) N/A

6(E). OTHER IDENTIFICATION (SUBASSEMBLY NUMBER, HEAT NUMBER, ETC.) N/A

6(F). YEAR BUILT N/A CODE CLASS ☐ 1 ☒ 2

6(G). REPAIRED ☒ REPLACED ☒ [c] REPLACEMENT ☐ [d]

6(H). ASME CODE STAMPED YES ☐ NO ☒

7. BRIEF DESCRIPTION OF REPAIR OR REPLACEMENT WORK PERFORMED
REMOVED ONE SCRUBBER AND REPLACED WITH ANOTHER ONE
THE ONE REMOVED WAS REBUILT.

8. TESTS CONDUCTED: HYDROSTATIC ☐ PNEUMATIC ☐
NOMINAL OPERATING PRESSURE ☐ OTHER ☐
PRESSURE N/A PSI TEST TEMPERATURE N/A F°

9. REMARKS:

( ) APPLICABLE MANUFACTURERS DATA REPORT [e] TO BE ATTACHED.

RESPONSIBLE ENGR. R.W. AYCOCK / SYSTEM DATE 05/27/90
ORGANIZATION

ANII DATE

* REF CAQR# CHA890003713

[a] SHEET NOS. FILLED IN BY TESTING AND DIAGNOSTIC PROGRAMS BRANCH.
[b] FOR WORK PERFORMED BY CERTIFICATE HOLDER
[c] REPLACED (LIKE OR EQUIVALENT).
[d] REPLACEMENT (MODIFICATION).
[e] WHEN REQUIRED BY CONSTRUCTION CODE.

RETENTION PERIOD: LIFETIME RESPONSIBLE ORGANIZATION: NM-PROCESSES/SPECIAL PROGRAMS

TENNESSEE VALLEY AUTHORITY
BROWNS FERRY NUCLEAR PLANT
SITE DIRECTOR STANDARD PRACTICE

SEP 22 1989

FORM PAGE 1 OF 1
FORM SDSP-403
SDSP 13.3

FORM SDSP-403
FORM NIS-2 ATTACHMENT

SHEET 27 of 259

REFERENCE CAQR# CHA890003713

1. (OWNER) TENNESSEE VALLEY AUTHORITY
NUCLEAR POWER

DATE 051031.90

2. (PLANT) BROWNS FERRY NUCLEAR PLANT
P.O. BOX 2000
DECATUR, ALABAMA

SHEET [a] 1 OF 1

MR# 877021

3. WORK PERFORMED BY: TVA
COMPANY

TYPE CODE SYMBOL STAMP [b] N/A

PO BOX 2000
ADDRESS

AUTHORIZATION NO. [b] N/A

DECATUR ALABAMA
CITY AND STATE

EXPIRATION DATE [b] N/A

4. IDENTIFICATION OF SYSTEM SYSTEM 74 - RHR

5(A). APPLICATION CONSTRUCTION CODE USAS B31.1.0 19 67
EDITION THRU ADDENDA N/A CODE CASE N/A

5(B). APPLICATION EDITION OF SECTION XI UTILIZED FOR REPAIRS OR REPLACEMENTS: 1980

6(A). NAME OF COMPONENT(S) AND DESCRIPTION (INCLUDE SIZE, CAPACITY, MATERIAL, AND LOCATION AS NEEDED TO AID IN IDENTIFICATION)
UNIT-2, RHR, EL-598, NEMZ COLUMN R-12 AND S-LINE.

6(B). NAME OF MANUFACTURER BERGEN PATERSON
ADDRESS OF MANUFACTURER (IF KNOWN) UNKNOWN

6(c). MANUFACTURER'S SERIAL NUMBER UNKNOWN

6(D). NATIONAL BOARD NUMBER (IF APPLICABLE) N/A

6(E). OTHER IDENTIFICATION (SUBASSEMBLY NUMBER, HEAT NUMBER, ETC.) N/A

6(F). YEAR BUILT N/A CODE CLASS ☐ 1 ☒ 2

6(G). REPAIRED ☒ REPLACED ☒ [c] REPLACEMENT ☐ [d]

6(H). ASME CODE STAMPED YES ☐ NO ☒

7. BRIEF DESCRIPTION OF REPAIR OR REPLACEMENT WORK PERFORMED.
SNUBBER WAS DUE FOR REBUILD. SNUBBER WAS REMOVED AND REPLACED WITH ANOTHER SNUBBER. THE SNUBBER REMOVED WAS REBUILD.

8. TESTS CONDUCTED: HYDROSTATIC ☐ PNEUMATIC ☐
NOMINAL OPERATING PRESSURE ☐ OTHER ☐
PRESSURE N/A PSI TEST TEMPERATURE N/A F°

9. REMARKS:

( ) APPLICABLE MANUFACTURERS DATA REPORT [e] TO BE ATTACHED.
RESPONSIBLE ENGR. RW AYCOCK / SYSTEMS DATE 05/03/90
ORGANIZATION

ANII DATE

* REF CAQR# CHA890003713

[a] SHEET NOS. FILLED IN BY TESTING AND DIAGNOSTIC PROGRAMS BRANCH.
[b] FOR WORK PERFORMED BY CERTIFICATE HOLDER
[c] REPLACED (LIKE OR EQUIVALENT).
[d] REPLACEMENT (MODIFICATION).
[e] WHEN REQUIRED BY CONSTRUCTION CODE.

RETENTION PERIOD: LIFETIME RESPONSIBLE ORGANIZATION: NM-PROCESSES/SPECIAL PROGRAMS

TENNESSEE VALLEY AUTHORITY
BROWNS FERRY NUCLEAR PLANT
SITE DIRECTOR STANDARD PRACTICE

SEP 22 1989

FORM PAGE 1 OF 1
FORM SDSP-403
SDSP 13.3

FORM SDSP-403
FORM NIS-2 ATTACHMENT

SHEET 28 of 259

REFERENCE CAQR # CHA 890003713

1. (OWNER) TENNESSEE VALLEY AUTHORITY
NUCLEAR POWER
DATE 05/30/90

2. (PLANT) BROWNS FERRY NUCLEAR PLANT
P.O. BOX 2000
DECATUR, ALABAMA
SHEET [a] 1 OF 1

MR # 877022

3. WORK PERFORMED BY: TVA (COMPANY)
PO BOX 2000 (ADDRESS)
DECATUR ALABAMA (CITY AND STATE)
TYPE CODE SYMBOL STAMP [b] N/A
AUTHORIZATION NO. [b] N/A
EXPIRATION DATE [b] N/A

4. IDENTIFICATION OF SYSTEM SYSTEM 74-RHR, R-6 UPPER

5(A). APPLICATION CONSTRUCTION CODE USAS B31.0 19 67
EDITION THRU ADDENDA N/A CODE CASE N/A

5(B). APPLICATION EDITION OF SECTION XI UTILIZED FOR REPAIRS OR REPLACEMENTS: 1980

6(A). NAME OF COMPONENT(S) AND DESCRIPTION (INCLUDE SIZE, CAPACITY, MATERIAL, AND LOCATION AS NEEDED TO AID IN IDENTIFICATION)
UNIT-2, RX BLDG. EL-398, NEAR COLUMN R-12 & S-LINE R6, UPPER

6(B). NAME OF MANUFACTURER BERGEN PATERSON
ADDRESS OF MANUFACTURER (IF KNOWN) UNKNOWN

6(c). MANUFACTURER'S SERIAL NUMBER 119613-14

6(D). NATIONAL BOARD NUMBER (IF APPLICABLE) N/A

6(E). OTHER IDENTIFICATION (SUBASSEMBLY NUMBER, HEAT NUMBER, ETC.) N/A

6(F). YEAR BUILT N/A CODE CLASS ☐ 1 ☒ 2

6(G). REPAIRED ☒ REPLACED ☒ [c] REPLACEMENT ☐ [d]

6(H). ASME CODE STAMPED YES ☐ NO ☒

7. BRIEF DESCRIPTION OF REPAIR OR REPLACEMENT WORK PERFORMED
SNUBBER WAS DUE FOR TESTING, AND ANOTHER UNIT WAS INSTALLED IN ITS PLACE

8. TESTS CONDUCTED: HYDROSTATIC ☐ PNEUMATIC ☐
NOMINAL OPERATING PRESSURE ☐ OTHER ☐
PRESSURE N/A PSI TEST TEMPERATURE N/A F[e]

9. REMARKS:

( ) APPLICABLE MANUFACTURERS DATA REPORT[e] TO BE ATTACHED.
RESPONSIBLE ENGR. R.W. HAYCOCK / SYSTEMS DATE 05/30/90
ORGANIZATION
ANII DATE

* REF CAQR # CHA 890003713

[a] SHEET NOS. FILLED IN BY TESTING AND DIAGNOSTIC PROGRAMS BRANCH.
[b] FOR WORK PERFORMED BY CERTIFICATE HOLDER
[c] REPLACED (LIKE OR EQUIVALENT).
[d] REPLACEMENT (MODIFICATION).
[e] WHEN REQUIRED BY CONSTRUCTION CODE.

RETENTION PERIOD: LIFETIME RESPONSIBLE ORGANIZATION: NM-PROCESSES/SPECIAL PROGRAMS

TENNESSEE VALLEY AUTHORITY
BROWNS FERRY NUCLEAR PLANT
SITE DIRECTOR STANDARD PRACTICE

SEP 22 1989

FORM SDSP-403
FORM NIS-2 ATTACHMENT

SHEET 29 of 259

REFERENCE CAQR# CHA 890003713

1. (OWNER) TENNESSEE VALLEY AUTHORITY
NUCLEAR POWER

DATE 05/30/90

2. (PLANT) BROWNS FERRY NUCLEAR PLANT
P.O. BOX 2000
DECATUR, ALABAMA

SHEET [a] 1 OF 1

MR# 877023

3. WORK PERFORMED BY: TVA
COMPANY

TYPE CODE SYMBOL STAMP [b] N/A

PO BOX 2000
ADDRESS

AUTHORIZATION NO. [b] N/A

DECATUR ALABAMA
CITY AND STATE

EXPIRATION DATE [b] N/A

4. IDENTIFICATION OF SYSTEM SYSTEM-74, RHR, R-62

5(A). APPLICATION CONSTRUCTION CODE USAS B31.1.0 19 67
EDITION THRU ADDENDA N/A CODE CASE N/A

5(B). APPLICATION EDITION OF SECTION XI UTILIZED FOR REPAIRS OR REPLACEMENTS: 1980

6(A). NAME OF COMPONENT(S) AND DESCRIPTION (INCLUDE SIZE, CAPACITY, MATERIAL, AND LOCATION AS NEEDED TO AID IN IDENTIFICATION)
UNIT-2, RHR, EL-598, COLUMN R-12 & S-LINE

6(B). NAME OF MANUFACTURER BERGEN PATERSON
ADDRESS OF MANUFACTURER (IF KNOWN) UNKNOWN

6(c). MANUFACTURER'S SERIAL NUMBER 21-65199

6(D). NATIONAL BOARD NUMBER (IF APPLICABLE) N/A

6(E). OTHER IDENTIFICATION (SUBASSEMBLY NUMBER, HEAT NUMBER, ETC.) N/A

6(F). YEAR BUILT N/A CODE CLASS ☐ 1 ☒ 2

6(G). REPAIRED ☒ REPLACED ☒ [c] REPLACEMENT ☐ [d]

6(H). ASME CODE STAMPED YES ☐ NO ☒

7. BRIEF DESCRIPTION OF REPAIR OR REPLACEMENT WORK PERFORMED.
SNUBBER WAS DUE FOR TESTING, SNUBBER WAS REMOVED AND ANOTHER UNIT WAS INSTALLED IN ITS PLACE.

8. TESTS CONDUCTED: HYDROSTATIC ☐ PNEUMATIC ☐
NOMINAL OPERATING PRESSURE ☐ OTHER ☐
PRESSURE N/A PSI TEST TEMPERATURE N/A F[e]

9. REMARKS:

( ) APPLICABLE MANUFACTURERS DATA REPORT [e] TO BE ATTACHED.

RESPONSIBLE ENGR. R.W. AVCOCK / SYSTEMS DATE 05/30/90
ORGANIZATION

ANII _____ DATE _____

* REF CAQR# CHA 890003713

[a] SHEET NOS. FILLED IN BY TESTING AND DIAGNOSTIC PROGRAMS BRANCH.
[b] FOR WORK PERFORMED BY CERTIFICATE HOLDER
[c] REPLACED (LIKE OR EQUIVALENT).
[d] REPLACEMENT (MODIFICATION).
[e] WHEN REQUIRED BY CONSTRUCTION CODE.

RETENTION PERIOD: LIFETIME RESPONSIBLE ORGANIZATION: NM-PROCESSES/SPECIAL PROGRAMS

TENNESSEE VALLEY AUTHORITY
BROWNS FERRY NUCLEAR PLANT
SITE DIRECTOR STANDARD PRACTICE

SEP 22 1989

FORM PAGE 1 OF 1
FORM SDSP-403
SDSP 13.3

FORM SDSP-403
FORM NIS-2 ATTACHMENT

SHEET 30 of 259

REF. CAQR# CHA 890003713

1. (OWNER) TENNESSEE VALLEY AUTHORITY
NUCLEAR POWER

DATE 05/04/90

2. (PLANT) BROWNS FERRY NUCLEAR PLANT
P.O. BOX 2000
DECATUR, ALABAMA

SHEET [a] 1 OF 1

MR# 877024

3. WORK PERFORMED BY: TVA (COMPANY)
PO BOX 2000 (ADDRESS)
DECATUR ALABAMA (CITY AND STATE)

TYPE CODE SYMBOL STAMP [b] N/A
AUTHORIZATION NO. [b] N/A
EXPIRATION DATE [b] N/A

4. IDENTIFICATION OF SYSTEM: SYSTEM 74 - RHR

5(A). APPLICATION CONSTRUCTION CODE USAS B31.1.0 19 67
EDITION THRU ADDENDA N/A CODE CASE N/A

5(B). APPLICATION EDITION OF SECTION XI UTILIZED FOR REPAIRS OR REPLACEMENTS: 1980

6(A). NAME OF COMPONENT(S) AND DESCRIPTION (INCLUDE SIZE, CAPACITY, MATERIAL, AND LOCATION AS NEEDED TO AID IN IDENTIFICATION)
UNIT-2, RHR, E-12 LOWER, RX BLDG, EL-535, AZ 300°, TOP OF TORUS
HSSA-420

6(B). NAME OF MANUFACTURER BERGEN PATERSON
ADDRESS OF MANUFACTURER (IF KNOWN) UNKNOWN

6(C). MANUFACTURER'S SERIAL NUMBER F 93500

6(D). NATIONAL BOARD NUMBER (IF APPLICABLE) N/A

6(E). OTHER IDENTIFICATION (SUBASSEMBLY NUMBER, HEAT NUMBER, ETC.) N/A

6(F). YEAR BUILT UNKNOWN CODE CLASS ☐ 1 ☒ 2

6(G). REPAIRED ☒ REPLACED ☒ [c] REPLACEMENT ☐ [d]

6(H). ASME CODE STAMPED YES ☐ NO ☒

7. BRIEF DESCRIPTION OF REPAIR OR REPLACEMENT WORK PERFORMED.
SNUBBER WAS DIS-RO FOR REBUILD. SNUBBER WAS REMOVED AND ANOTHER SNUBBER WAS REINSTALLED THE SNUBBER THAT WAS REMOVED WAS REBUI

8. TESTS CONDUCTED: HYDROSTATIC ☐ PNEUMATIC ☐
NOMINAL OPERATING PRESSURE ☐ OTHER ☐
PRESSURE N/A PSI TEST TEMPERATURE N/A F°

9. REMARKS:

( ) APPLICABLE MANUFACTURERS DATA REPORT [e] TO BE ATTACHED.
RESPONSIBLE ENGR. RW AYCOCK / SYSTEMS DATE 05/04/90
ORGANIZATION

ANII DATE

* REF CAQR# CHA 890003713

[a] SHEET NOS. FILLED IN BY TESTING AND DIAGNOSTIC PROGRAMS BRANCH.
[b] FOR WORK PERFORMED BY CERTIFICATE HOLDER
[c] REPLACED (LIKE OR EQUIVALENT).
[d] REPLACEMENT (MODIFICATION).
[e] WHEN REQUIRED BY CONSTRUCTION CODE.

RETENTION PERIOD: LIFETIME RESPONSIBLE ORGANIZATION: NM-PROCESSES/SPECIAL PROGRAMS

TENNESSEE VALLEY AUTHORITY
BROWNS FERRY NUCLEAR PLANT
SITE DIRECTOR STANDARD PRACTICE

SEP 22 1989

FORM PAGE 1 OF 1
FORM SDSP-403
SDSP 13.3

FORM SDSP-403
FORM NIS-2 ATTACHMENT

REFERENCE CAQR#CHA890003713

SHEET 31 of 259

1. (OWNER) TENNESSEE VALLEY AUTHORITY
NUCLEAR POWER

DATE 06-01-90

2. (PLANT) BROWNS FERRY NUCLEAR PLANT
P.O. BOX 2000
DECATUR, ALABAMA

SHEET [a] 1 OF 1

MIC 877033

3. WORK PERFORMED BY: TVA
COMPANY

TYPE CODE SYMBOL STAMP [b] N/A

P.O. BOX 2000
ADDRESS

AUTHORIZATION NO. [b] N/A

DECATUR ALABAMA
CITY AND STATE

EXPIRATION DATE [b] N/A

4. IDENTIFICATION OF SYSTEM SYSTEM 73-HPCI

5(A). APPLICATION CONSTRUCTION CODE USAS B31.1.0 19 67
EDITION THRU ADDENDA N/A CODE CASE N/A

5(B). APPLICATION EDITION OF SECTION XI UTILIZED FOR REPAIRS OR REPLACEMENTS: 1980

6(A). NAME OF COMPONENT(S) AND DESCRIPTION (INCLUDE SIZE, CAPACITY, MATERIAL, AND LOCATION AS NEEDED TO AID IN IDENTIFICATION)
UNIT-2, EL-563, AZ-25, HPCI, R-6

6(B). NAME OF MANUFACTURER BERGEN PATERSON
ADDRESS OF MANUFACTURER (IF KNOWN) N/A

6(c). MANUFACTURER'S SERIAL NUMBER G15198-2B

6(D). NATIONAL BOARD NUMBER (IF APPLICABLE) N/A

6(E). OTHER IDENTIFICATION (SUBASSEMBLY NUMBER, HEAT NUMBER, ETC.) N/A

6(F). YEAR BUILT N/A CODE CLASS ☒ 1 ☐ 2

6(G). REPAIRED ☒ REPLACED ☒ [c] REPLACEMENT ☐ [d]

6(H). ASME CODE STAMPED YES ☐ NO ☒

7. BRIEF DESCRIPTION OF REPAIR OR REPLACEMENT WORK PERFORMED.
REMOVED SNUBBER S/N M0185 MFG. S/N G15198-2B
INSTALLED SNUBBER S/N M0041

8. TESTS CONDUCTED: HYDROSTATIC ☐ PNEUMATIC ☐
NOMINAL OPERATING PRESSURE ☐ OTHER ☐
PRESSURE _____ PSI TEST TEMPERATURE _____ F[e]

9. REMARKS:

( ) APPLICABLE MANUFACTURERS DATA REPORT[e] TO BE ATTACHED.

RESPONSIBLE ENGR. R.W. AYCOCK / SYSTEMS DATE 06-01-90
ORGANIZATION

ANII _____ DATE _____

* REF CAQR# CHA 890003713

[a] SHEET NOS. FILLED IN BY TESTING AND DIAGNOSTIC PROGRAMS BRANCH.
[b] FOR WORK PERFORMED BY CERTIFICATE HOLDER
[c] REPLACED (LIKE OR EQUIVALENT).
[d] REPLACEMENT (MODIFICATION).
[e] WHEN REQUIRED BY CONSTRUCTION CODE.

RETENTION PERIOD: LIFETIME RESPONSIBLE ORGANIZATION: NM-PROCESSES/SPECIAL PROGRAMS

TENNESSEE VALLEY AUTHORITY
BROWNS FERRY NUCLEAR PLANT
SITE DIRECTOR STANDARD PRACTICE

SEP 22 1989

FORM SDSP-403
FORM NIS-2 ATTACHMENT

SHEET 32 of 259

REFERENCE CAQR# CHA890003713

1. (OWNER) TENNESSEE VALLEY AUTHORITY
NUCLEAR POWER

DATE 05/04/90

2. (PLANT) BROWNS FERRY NUCLEAR PLANT
P.O. BOX 2000
DECATUR, ALABAMA

SHEET [a] 1 OF 1

MR# 877045

3. WORK PERFORMED BY: TVA
COMPANY

TYPE CODE SYMBOL STAMP [b] N/A

PO BOX 2000
ADDRESS

AUTHORIZATION NO. [b] N/A

DECATUR ALABAMA
CITY AND STATE

EXPIRATION DATE [b] N/A

4. IDENTIFICATION OF SYSTEM: SYSTEM 1 MAINSTEAM

5(A). APPLICATION CONSTRUCTION CODE USAS B31.1.0 19 67
EDITION THRU ADDENDA N/A CODE CASE N/A

5(B). APPLICATION EDITION OF SECTION XI UTILIZED FOR REPAIRS OR REPLACEMENTS: 1980

6(A). NAME OF COMPONENT(S) AND DESCRIPTION (INCLUDE SIZE, CAPACITY, MATERIAL, AND LOCATION AS NEEDED TO AID IN IDENTIFICATION)
UNIT-2, MSRV-TP, DRYWELL, EL-585, AZ 145°

6(B). NAME OF MANUFACTURER PACIFIC SCIENTIFIC
ADDRESS OF MANUFACTURER (IF KNOWN) UNKNOWN

6(c). MANUFACTURER'S SERIAL NUMBER 416

6(D). NATIONAL BOARD NUMBER (IF APPLICABLE) N/A

6(E). OTHER IDENTIFICATION (SUBASSEMBLY NUMBER, HEAT NUMBER, ETC.) N/A
RWA 05/14/90

6(F). YEAR BUILT N/A 81 CODE CLASS ☒ 1 ☐ 2

6(G). REPAIRED ☒ REPLACED ☒ [c] REPLACEMENT ☐ [d]

6(H). ASME CODE STAMPED YES ☐ NO ☒

7. BRIEF DESCRIPTION OF REPAIR OR REPLACEMENT WORK PERFORMED.
SNUBBER WAS DUE FOR FUNCTIONAL TEST AND FAILED. SNUBBER WAS REPLACED WITH A NEW SNUBBER

8. TESTS CONDUCTED: HYDROSTATIC ☐ PNEUMATIC ☐
NOMINAL OPERATING PRESSURE ☐ OTHER ☐
PRESSURE N/A PSI TEST TEMPERATURE N/A F°

9. REMARKS:

( ) APPLICABLE MANUFACTURERS DATA REPORT [e] TO BE ATTACHED.

RESPONSIBLE ENGR. RW AYCOCK / SYSTEMS DATE 05/04/90
ORGANIZATION

ANII * DATE

* REF CAQR# CHA 890003713

[a] SHEET NOS. FILLED IN BY TESTING AND DIAGNOSTIC PROGRAMS BRANCH.
[b] FOR WORK PERFORMED BY CERTIFICATE HOLDER
[c] REPLACED (LIKE OR EQUIVALENT).
[d] REPLACEMENT (MODIFICATION).
[e] WHEN REQUIRED BY CONSTRUCTION CODE.

RETENTION PERIOD: LIFETIME RESPONSIBLE ORGANIZATION: NM-PROCESSES/SPECIAL PROGRAMS

TENNESSEE VALLEY AUTHORITY
BROWNS FERRY NUCLEAR PLANT
SITE DIRECTOR STANDARD PRACTICE

SEP 22 1989

FORM PAGE 1 OF 1
FORM SDSP-403
SDSP 13.3

FORM SDSP-403
FORM NIS-2 ATTACHMENT

SHEET 33 of 259

REFERENCE CAQR#CHA890003713

1. (OWNER) TENNESSEE VALLEY AUTHORITY
NUCLEAR POWER

DATE 05/17/90

2. (PLANT) BROWNS FERRY NUCLEAR PLANT
P.O. BOX 2000
DECATUR, ALABAMA

SHEET [a] 1 OF 1

MRH 879071

3. WORK PERFORMED BY: TVA
COMPANY

TYPE CODE SYMBOL STAMP [b] N/A

P.O. BOX 2000
ADDRESS

AUTHORIZATION NO. [b] N/A

DECATUR, ALABAMA
CITY AND STATE

EXPIRATION DATE [b] N/A

4. IDENTIFICATION OF SYSTEM MAIN STEAM, SYSTEM-1, MSS-9

5(A). APPLICATION CONSTRUCTION CODE USAS B31.1.0 19 67
EDITION THRU. ADDENDA N/A CODE CASE N/A

5(B). APPLICATION EDITION OF SECTION XI UTILIZED FOR REPAIRS OR REPLACEMENTS: 1980

6(A). NAME OF COMPONENT(S) AND DESCRIPTION (INCLUDE SIZE, CAPACITY, MATERIAL, AND LOCATION AS NEEDED TO AID IN IDENTIFICATION)
UNIT-2, MAINSTEAM, EL-563'-2", MSSRV LINE, RV-71M

6(B). NAME OF MANUFACTURER TVA
ADDRESS OF MANUFACTURER (IF KNOWN) PO BOX 2000, DECATUR, ALABAMA

6(c). MANUFACTURER'S SERIAL NUMBER N/A

6(D). NATIONAL BOARD NUMBER (IF APPLICABLE) N/A

6(E). OTHER IDENTIFICATION (SUBASSEMBLY NUMBER, HEAT NUMBER, ETC.) N/A

6(F). YEAR BUILT N/A CODE CLASS ☐ 1 ☒ 2

6(G). REPAIRED ☐ REPLACED ☒ [c] REPLACEMENT ☐ [d]

6(H). ASME CODE STAMPED YES ☐ NO ☒

7. BRIEF DESCRIPTION OF REPAIR OR REPLACEMENT WORK PERFORMED.
REPLACE BOLTS, FLAT WASHER, + INSTALL COTTER PIN.

8. TESTS CONDUCTED: HYDROSTATIC ☐ PNEUMATIC ☐
NOMINAL OPERATING PRESSURE ☐ OTHER ☐
PRESSURE N/A PSI TEST TEMPERATURE N/A F°

9. REMARKS:

( ) APPLICABLE MANUFACTURERS DATA REPORT [e] TO BE ATTACHED.

RESPONSIBLE ENGR. PW AYCOCK / SYSTEM DATE 05/17/90
ORGANIZATION

ANII DATE

* REF CAQR# CHA 890003713

[a] SHEET NOS. FILLED IN BY TESTING AND DIAGNOSTIC PROGRAMS BRANCH.
[b] FOR WORK PERFORMED BY CERTIFICATE HOLDER
[c] REPLACED (LIKE OR EQUIVALENT).
[d] REPLACEMENT (MODIFICATION).
[e] WHEN REQUIRED BY CONSTRUCTION CODE.

RETENTION PERIOD: LIFETIME RESPONSIBLE ORGANIZATION: NM-PROCESSES/SPECIAL PROGRAMS

4090 0206

TENNESSEE VALLEY AUTHORITY
BROWNS FERRY NUCLEAR PLANT
SITE DIRECTOR STANDARD PRACTICE

SEP 22 1989

(1)

FORM PAGE 1 OF 1
FORM SDSP-403
SDSP 13.3

FORM SDSP-403
FORM NIS-2 ATTACHMENT

SHEET 34 of 259

1. (OWNER) TENNESSEE VALLEY AUTHORITY
NUCLEAR POWER — DATE 12-2-89

2. (PLANT) BROWNS FERRY NUCLEAR PLANT
P.O. BOX 2000
DECATUR, ALABAMA — SHEET [a] 1 OF 1

3. WORK PERFORMED BY: TVA/BFN (COMPANY) — TYPE CODE SYMBOL STAMP [b] NA
PO Box 2000 (ADDRESS) — AUTHORIZATION NO. [b] NA
DECATUR AL (CITY AND STATE) — EXPIRATION DATE [b] NA

4. IDENTIFICATION OF SYSTEM 74-RHR

5(A). APPLICATION CONSTRUCTION CODE ANSI B31.1 19 67
EDITION 1967 ADDENDA WINTER CODE CASE NA

5(B). APPLICATION EDITION OF SECTION XI UTILIZED FOR REPAIRS OR REPLACEMENTS: 1980

6(A). NAME OF COMPONENT(S) AND DESCRIPTION (INCLUDE SIZE, CAPACITY, MATERIAL, AND LOCATION AS NEEDED TO AID IN IDENTIFICATION)
PIPE SADDLE ON 18" RHR PIPE HANGER H-30, UNIT 2
TOP OF TORUS BAY 14 AS SHOWN ON DRWG 47B452-185

6(B). NAME OF MANUFACTURER TVA, BFN
ADDRESS OF MANUFACTURER (IF KNOWN) NA MRM 6-18-91

6(C). MANUFACTURER'S SERIAL NUMBER

6(D). NATIONAL BOARD NUMBER (IF APPLICABLE)

6(E). OTHER IDENTIFICATION (SUBASSEMBLY NUMBER, HEAT NUMBER, ETC.)
PIPE SADDLE, GRINNELL FIG 162 TVA MK# 47B1452-573

6(F). YEAR BUILT NA CODE CLASS ☐ 1 ☒ 2

6(G). REPAIRED ☒ REPLACED ☐ [c] REPLACEMENT ☐ [d]

6(H). ASME CODE STAMPED YES ☐ NO ☒

7. BRIEF DESCRIPTION OF REPAIR OR REPLACEMENT WORK PERFORMED.
REPAIR (BY GRINDING) THE LINEAR INDICATIONS ON WELDS THAT ATTACH SADDLE TO PIPE

8. TESTS CONDUCTED: HYDROSTATIC ☐ PNEUMATIC ☐
NOMINAL OPERATING PRESSURE ☐ OTHER ☐
PRESSURE NA PSI TEST TEMPERATURE NA F°

9. REMARKS: NO TESTS REQ'D, MR 891035

( ) APPLICABLE MANUFACTURERS DATA REPORT [e] TO BE ATTACHED.

RESPONSIBLE ENGR. [signature] / MM DATE 12/2/89
ORGANIZATION

ANII [signature] DATE 12-2-89

Michael R. Martin 6-18-91

[a] SHEET NOS. FILLED IN BY TESTING AND DIAGNOSTIC PROGRAMS BRANCH.
[b] FOR WORK PERFORMED BY CERTIFICATE HOLDER
[c] REPLACED (LIKE OR EQUIVALENT).
[d] REPLACEMENT (MODIFICATION).
[e] WHEN REQUIRED BY CONSTRUCTION CODE.

RETENTION PERIOD: LIFETIME RESPONSIBLE ORGANIZATION: NM-PROCESSES/SPECIAL PROGRAMS

ASME SECTION XI SUMMARY REPORT

Tennessee Valley Authority
Office of Nuclear Power, 1750 CST2-C
Browns Farry Nuclear Plant Unit 2
P.O. Box 2000
Decatur, Alabama

Comm. Service Date 1974
System 085
TVA Class II
Workplan/MR No. 891855

Furnish the following for the repair or replacement for the as-left condition of the component (after field work is complete). Mark all blanks (indicate NA for items which do not apply).

National Board Number of repaired or replaced component. N/A

Name of the components and description (include size, capacity, material, and location)--Theses requirements may be satisfied by attaching an applicable drawing.
HYDRAULIC CONTROL UNIT WATER ACCUMULATOR - 2-ACUM-085-54-23, 2000 PSIG
G.E. PART NO. 105D6138G001 MODEL C11-D001 ITEM 16 ON G.E. ASSEMBLY DRAWING 767E800

Name of Manufacturer GENERAL ELECTRIC

Address of Manufacturer (if known) N/A

Manufacturer's component identification numbers (i.e., serial number, subassembly number, heat number). If more than one component is replaced, attach weld map and identify items by item number.
PISTON ACCUMULATOR: MODEL C11-D001 G.E. PART NO. 105D6138G001
ITEM 16 ON G.E. ASSEMBLY DRAWING 767E800

Repair / / Replacement/Modification /X/

Brief description of repair or replacement work performed, including conditions observed and corrective measures taken, as applicable (reference DCR, CAR, etc.; drawing may be attached with attached affected area circled).
REPLACED WATER ACCUMULATOR ON HCU 54-23 DUE TO WATER LEAKAGE INTO INSTRUMENT BLOCK.

Brief description of post repair or replacement tests and examinations (if required) by instruction or procedure number. MECHANICAL MAINTENANCE INSTRUCTION No. 28 STEPS 10.1, 10.2, 10.3.2.1 - LEAK CHECK AT SYSTEM PRESSURE

ANII/ANI name, employer, and business address ROOSEVELT RUSSELL JR. THE HARTFORD STEAM BOILER INSPECTION AND INSURANCE CO. 1117 PERIMETER CENTER WEST, SUITE E-301, ATLANTA, GA 30338

Date work completed 8-13-89

Randall Webb 8-14-89
Responsible Engineer Date

Retention: Period - Lifetime; Responsibility - DCRM

TENNESSEE VALLEY AUTHORITY
BROWNS FERRY NUCLEAR PLANT
SITE DIRECTOR STANDARD PRACTICE

SEP 22 1989

FORM PAGE 1 OF 1
FORM SDSP-403
SDSP 13.3

FORM SDSP-403
FORM NIS-2 ATTACHMENT

SHEET 36 of 259

REFERENCE CAQR# CHA890003713

1. (OWNER) TENNESSEE VALLEY AUTHORITY
NUCLEAR POWER

DATE 05/26/90

2. (PLANT) BROWNS FERRY NUCLEAR PLANT
P.O. BOX 2000
DECATUR, ALABAMA

SHEET [a] 1 OF 1

MR# 895727

3. WORK PERFORMED BY: TVA
COMPANY

TYPE CODE SYMBOL STAMP [b] N/A

PO. BOX 2000
ADDRESS

AUTHORIZATION NO. [b] N/A

DECATUR ALABAMA
CITY AND STATE

EXPIRATION DATE [b] N/A

4. IDENTIFICATION OF SYSTEM SYSTEM-71, ECIC

5(A). APPLICATION CONSTRUCTION CODE USAS B31.1.0 19 67
EDITION THRU ADDENDA N/A CODE CASE N/A

5(B). APPLICATION EDITION OF SECTION XI UTILIZED FOR REPAIRS OR REPLACEMENTS: 1980

6(A). NAME OF COMPONENT(S) AND DESCRIPTION (INCLUDE SIZE, CAPACITY, MATERIAL, AND LOCATION AS NEEDED TO AID IN IDENTIFICATION)
UNIT-2, EL-528, RXBLDG, NW QUAD.

6(B). NAME OF MANUFACTURER BERGEN PATERSON
ADDRESS OF MANUFACTURER (IF KNOWN) UNKNOWN

6(c). MANUFACTURER'S SERIAL NUMBER 3976-36

6(D). NATIONAL BOARD NUMBER (IF APPLICABLE) N/A

6(E). OTHER IDENTIFICATION (SUBASSEMBLY NUMBER, HEAT NUMBER, ETC.) N/A

6(F). YEAR BUILT UNKNOWN CODE CLASS ☐ 1 ☒ 2

6(G). REPAIRED ☒ REPLACED ☒ [c] REPLACEMENT ☐ [d]

6(H). ASME CODE STAMPED YES ☐ NO ☐

7. BRIEF DESCRIPTION OF REPAIR OR REPLACEMENT WORK PERFORMED
SNUBBER WAS DUE FOR REBUILT AND ANOTHER SNUBBER WAS INSTALLED IN ITS PLACE. THE ONE REMOVED WAS REBUILT.

8. TESTS CONDUCTED: HYDROSTATIC ☐ PNEUMATIC ☐
NOMINAL OPERATING PRESSURE ☐ OTHER ☐
PRESSURE N/A PSI TEST TEMPERATURE N/A F°

9. REMARKS: THE SERIAL NUMBER ON THE SNUBBER IS NOT CORRECT THE CORRECT SERIAL NUMBER IS M057, AS STATED IN MC PACKAGE PAGE 38 OF MMI-45 FORM ATTACHED

( ) APPLICABLE MANUFACTURERS DATA REPORT [e] TO BE ATTACHED.
RESPONSIBLE ENGR. R.W. AYLOCK / SYSTEMS DATE 05/26/90
*
ORGANIZATION

ANII _____ DATE _____

*REF CAQR# CHA 890003713

[a] SHEET NOS. FILLED IN BY TESTING AND DIAGNOSTIC PROGRAMS BRANCH.
[b] FOR WORK PERFORMED BY CERTIFICATE HOLDER
[c] REPLACED (LIKE OR EQUIVALENT).
[d] REPLACEMENT (MODIFICATION).
[e] WHEN REQUIRED BY CONSTRUCTION CODE.

RETENTION PERIOD: LIFETIME RESPONSIBLE ORGANIZATION: NM-PROCESSES/SPECIAL PROGRAMS

TENNESSEE VALLEY AUTHORITY
BROWNS FERRY NUCLEAR PLANT
SITE DIRECTOR STANDARD PRACTICE

SEP 22 1989

FORM SDSP-403
FORM NIS-2 ATTACHMENT

SHEET 37 of 259

REFERENCE CAQR# CHA890003713

1. (OWNER) TENNESSEE VALLEY AUTHORITY
NUCLEAR POWER

DATE 05/31/90

2. (PLANT) BROWNS FERRY NUCLEAR PLANT
P.O. BOX 2000
DECATUR, ALABAMA

SHEET [a] 1 OF 1

MR# 895728

3. WORK PERFORMED BY: TVA
COMPANY

TYPE CODE SYMBOL STAMP [b] N/A

P.O. BOX 2000
ADDRESS

AUTHORIZATION NO. [b] N/A

DECATUR ALABAMA
CITY AND STATE

EXPIRATION DATE [b] N/A

4. IDENTIFICATION OF SYSTEM SYSTEM-71, RCIC, R-9 SOUTH

5(A). APPLICATION CONSTRUCTION CODE USAS B31.1.0 19 67
EDITION THRU ADDENDA N/A CODE CASE N/A

5(B). APPLICATION EDITION OF SECTION XI UTILIZED FOR REPAIRS OR REPLACEMENTS: 1980

6(A). NAME OF COMPONENT(S) AND DESCRIPTION (INCLUDE SIZE, CAPACITY, MATERIAL, AND LOCATION AS NEEDED TO AID IN IDENTIFICATION)
UNIT-2, EL-564, RXBLDG, STEAM TUNNEL, R-9 SOUTH

6(B). NAME OF MANUFACTURER BERGEN PATERSON
ADDRESS OF MANUFACTURER (IF KNOWN) N/A

6(c). MANUFACTURER'S SERIAL NUMBER UNKNOWN

6(D). NATIONAL BOARD NUMBER (IF APPLICABLE) N/A

6(E). OTHER IDENTIFICATION (SUBASSEMBLY NUMBER, HEAT NUMBER, ETC.) N/A

6(F). YEAR BUILT N/A CODE CLASS ☐ 1 ☒ 2

6(G). REPAIRED ☒ REPLACED ☒ [c] REPLACEMENT ☐ [d]

6(H). ASME CODE STAMPED YES ☐ NO ☒

7. BRIEF DESCRIPTION OF REPAIR OR REPLACEMENT WORK PERFORMED.
SNUBBER WAS DUE FOR FUNCTIONALTEST PER MMI-39/SI 46.H-2
SNUBBER WAS REPLACED

8. TESTS CONDUCTED: HYDROSTATIC ☐ PNEUMATIC ☐
NOMINAL OPERATING PRESSURE ☐ OTHER ☐
PRESSURE N/A PSI TEST TEMPERATURE N/A F°

9. REMARKS:

( ) APPLICABLE MANUFACTURERS DATA REPORT [e] TO BE ATTACHED.
RESPONSIBLE ENGR. R.W. AYCOCK / SYSTEMS DATE 05/31/90
ORGANIZATION

ANII _____ DATE _____

* REF CAQR# CHA 890003713

[a] SHEET NOS. FILLED IN BY TESTING AND DIAGNOSTIC PROGRAMS BRANCH.
[b] FOR WORK PERFORMED BY CERTIFICATE HOLDER
[c] REPLACED (LIKE OR EQUIVALENT).
[d] REPLACEMENT (MODIFICATION).
[e] WHEN REQUIRED BY CONSTRUCTION CODE.

RETENTION PERIOD: LIFETIME RESPONSIBLE ORGANIZATION: NM-PROCESSES/SPECIAL PROGRAMS

TENNESSEE VALLEY AUTHORITY
BROWNS FERRY NUCLEAR PLANT
SITE DIRECTOR STANDARD PRACTICE

SEP 22 1989

FORM PAGE 1 OF 1
FORM SDSP-403
SDSP 13.3

FORM SDSP-403
FORM NIS-2 ATTACHMENT

SHEET 38 of 259

REFERENCE CAQR# CHA890003713

1. (OWNER) TENNESSEE VALLEY AUTHORITY
NUCLEAR POWER

DATE 05/07/90

2. (PLANT) BROWNS FERRY NUCLEAR PLANT
P.O. BOX 2000
DECATUR, ALABAMA

SHEET [a] 1 OF 1

MR# 89574229 MRM 6-1-90

3. WORK PERFORMED BY: TVA
COMPANY

TYPE CODE SYMBOL STAMP [b] N/A

PO BOX 2000
ADDRESS

AUTHORIZATION NO. [b] N/A

DECATUR ALABAMA
CITY AND STATE

EXPIRATION DATE [b] N/A

4. IDENTIFICATION OF SYSTEM SYSTEM 74-RHR

5(A). APPLICATION CONSTRUCTION CODE USAS B31.1.0 19 67
EDITION THIRD ADDENDA N/A CODE CASE N/A

5(B). APPLICATION EDITION OF SECTION XI UTILIZED FOR REPAIRS OR REPLACEMENTS: 1980

6(A). NAME OF COMPONENT(S) AND DESCRIPTION (INCLUDE SIZE, CAPACITY, MATERIAL, AND LOCATION AS NEEDED TO AID IN IDENTIFICATION)
UNIT 2, RHR, EL.836, PUMP ROOM A/C, R-51 SOUTH.

6(B). NAME OF MANUFACTURER BERGEN PATERSON
ADDRESS OF MANUFACTURER (IF KNOWN) UNKNOWN

6(c). MANUFACTURER'S SERIAL NUMBER ~~F-84806-2~~ F-84806-2

6(D). NATIONAL BOARD NUMBER (IF APPLICABLE) N/A

6(E). OTHER IDENTIFICATION (SUBASSEMBLY NUMBER, HEAT NUMBER, ETC.) N/A

6(F). YEAR BUILT UNKNOWN CODE CLASS ☐ 1 ☒ 2

6(G). REPAIRED ☒ REPLACED ☒ [c] REPLACEMENT ☐ [d]

6(H). ASME CODE STAMPED YES ☐ NO ☒

7. BRIEF DESCRIPTION OF REPAIR OR REPLACEMENT WORK PERFORMED.
SNUBBER WAS DUE FOR REBUILD. SNUBBER WAS REMOVED AND ANOTHER SNUBBER WAS INSTALLED & THE SNUBBER REMOVED WAS REBUILD.

8. TESTS CONDUCTED: HYDROSTATIC ☐ PNEUMATIC ☐
NOMINAL OPERATING PRESSURE ☐ OTHER ☐
PRESSURE N/A PSI TEST TEMPERATURE N/A F°

9. REMARKS:

( ) APPLICABLE MANUFACTURERS DATA REPORT [e] TO BE ATTACHED.

RESPONSIBLE ENGR. RW AYCOCK / SYSTEMS DATE 05/07/90
ORGANIZATION

ANII _____ DATE _____

* REF CAQR# CHA890003713

[a] SHEET NOS. FILLED IN BY TESTING AND DIAGNOSTIC PROGRAMS BRANCH.
[b] FOR WORK PERFORMED BY CERTIFICATE HOLDER
[c] REPLACED (LIKE OR EQUIVALENT).
[d] REPLACEMENT (MODIFICATION).
[e] WHEN REQUIRED BY CONSTRUCTION CODE.

RETENTION PERIOD: LIFETIME RESPONSIBLE ORGANIZATION: NM-PROCESSES/SPECIAL PROGRAMS

TENNESSEE VALLEY AUTHORITY
BROWNS FERRY NUCLEAR PLANT
SITE DIRECTOR STANDARD PRACTICE

SEP 22 1989

FORM PAGE 1 OF 1
FORM SDSP-403
SDSP 13.3

FORM SDSP-403
FORM NIS-2 ATTACHMENT

SHEET 39 of 259

1. (OWNER) TENNESSEE VALLEY AUTHORITY
NUCLEAR POWER

DATE 05/02/90

2. (PLANT) BROWNS FERRY NUCLEAR PLANT
P.O. BOX 2000
DECATUR, ALABAMA

SHEET [a] 1 OF 1

MR# 895731

3. WORK PERFORMED BY: TVA
COMPANY

TYPE CODE SYMBOL STAMP [b] N/A

PO BOX 2000
ADDRESS

AUTHORIZATION NO. [b] N/A

DECATUR ALABAMA
CITY AND STATE

EXPIRATION DATE [b] N/A

4. IDENTIFICATION OF SYSTEM SYSTEM 74- RHR PUMP ROOM B&D

5(A). APPLICATION CONSTRUCTION CODE USAS B31.1.0 19 67
EDITION THRU ADDENDA N/A CODE CASE N/A

5(B). APPLICATION EDITION OF SECTION XI UTILIZED FOR REPAIRS OR REPLACEMENTS: 1980

6(A). NAME OF COMPONENT(S) AND DESCRIPTION (INCLUDE SIZE, CAPACITY, MATERIAL, AND LOCATION AS NEEDED TO AID IN IDENTIFICATION)
UNIT-2, EC-573, RHR-PUMP RM B&D, R-65

6(B). NAME OF MANUFACTURER BERGEN PATERSON
ADDRESS OF MANUFACTURER (IF KNOWN) UNKNOWN

6(c). MANUFACTURER'S SERIAL NUMBER F91517-2

6(D). NATIONAL BOARD NUMBER (IF APPLICABLE) N/A

6(E). OTHER IDENTIFICATION (SUBASSEMBLY NUMBER, HEAT NUMBER, ETC.) N/A

6(F). YEAR BUILT UNKNOWN CODE CLASS ☐ 1 ☒ 2

6(G). REPAIRED ☒ REPLACED ☒ [c] REPLACEMENT ☐ [d]

6(H). ASME CODE STAMPED YES ☐ NO ☒

7. BRIEF DESCRIPTION OF REPAIR OR REPLACEMENT WORK PERFORMED
SNUBBER WAS DUE FOR REBUILT, & INSTALLED WITH ANOTHER SNUBBER OF SAME KIND. THE SNUBBER THAT WAS REMOVED WAS NOT REBUILT (PARTS MISSING)

8. TESTS CONDUCTED: HYDROSTATIC ☐ PNEUMATIC ☐
NOMINAL OPERATING PRESSURE ☐ OTHER ☐
PRESSURE N/A PSI TEST TEMPERATURE N/A F°

9. REMARKS:

( ) APPLICABLE MANUFACTURERS DATA REPORT [e] TO BE ATTACHED.
RESPONSIBLE ENGR. RW AYCOCK (SYSTEMS) DATE 05/03/90
ORGANIZATION

ANII DATE

* REF CAQR # CHA 890003713

[a] SHEET NOS. FILLED IN BY TESTING AND DIAGNOSTIC PROGRAMS BRANCH.
[b] FOR WORK PERFORMED BY CERTIFICATE HOLDER
[c] REPLACED (LIKE OR EQUIVALENT).
[d] REPLACEMENT (MODIFICATION).
[e] WHEN REQUIRED BY CONSTRUCTION CODE.

RETENTION PERIOD: LIFETIME RESPONSIBLE ORGANIZATION: NM-PROCESSES/SPECIAL PROGRAMS

TENNESSEE VALLEY AUTHORITY
BROWNS FERRY NUCLEAR PLANT
SITE DIRECTOR STANDARD PRACTICE

SEP 22 1989

FORM SDSP-403
FORM NIS-2 ATTACHMENT

SHEET 40 of 259

REF CAQR# CHA890003713

1. (OWNER) TENNESSEE VALLEY AUTHORITY
NUCLEAR POWER

DATE 05/04/90

2. (PLANT) BROWNS FERRY NUCLEAR PLANT
P.O. BOX 2000
DECATUR, ALABAMA

SHEET [a] 1 OF 1

MR# 895732

3. WORK PERFORMED BY: TVA
COMPANY

TYPE CODE SYMBOL STAMP [b] N/A

PO BOX 2000
ADDRESS

AUTHORIZATION NO. [b] N/A

DECATUR ALABAMA
CITY AND STATE

EXPIRATION DATE [b] N/A

4. IDENTIFICATION OF SYSTEM SYSTEM 63-SLC

5(A). APPLICATION CONSTRUCTION CODE USAS B31.1.0 19 67
EDITION THRU ADDENDA N/A CODE CASE N/A

5(B). APPLICATION EDITION OF SECTION XI UTILIZED FOR REPAIRS OR REPLACEMENTS: 1980

6(A). NAME OF COMPONENT(S) AND DESCRIPTION (INCLUDE SIZE, CAPACITY, MATERIAL, AND LOCATION AS NEEDED TO AID IN IDENTIFICATION)
UNIT-2, RX BLDG, EL-624, AZ-210° R-21

6(B). NAME OF MANUFACTURER BERGEN PATERSON
ADDRESS OF MANUFACTURER (IF KNOWN) UNKNOWN

6(c). MANUFACTURER'S SERIAL NUMBER F-848062

6(D). NATIONAL BOARD NUMBER (IF APPLICABLE) N/A

6(E). OTHER IDENTIFICATION (SUBASSEMBLY NUMBER, HEAT NUMBER, ETC.) N/A

6(F). YEAR BUILT UNKNOWN CODE CLASS ☒ 1 ☐ 2

6(G). REPAIRED ☒ REPLACED ☒ [c] REPLACEMENT ☐ [d]

6(H). ASME CODE STAMPED YES ☐ NO ☒

7. BRIEF DESCRIPTION OF REPAIR OR REPLACEMENT WORK PERFORMED.
SNUBBER WAS REMOVED BECAUSE IT WAS DUE FOR REBUILD ANOTHER SNUBBER WAS REINSTALLED AND THE ONE REMOVED WAS REBUILT

8. TESTS CONDUCTED: HYDROSTATIC ☐ PNEUMATIC ☐
NOMINAL OPERATING PRESSURE ☐ OTHER ☐
PRESSURE N/A PSI TEST TEMPERATURE N/A F°

9. REMARKS:

( ) APPLICABLE MANUFACTURERS DATA REPORT [e] TO BE ATTACHED.

RESPONSIBLE ENGR. RW AYCOCK SYSTEMS DATE 05/04/90
ORGANIZATION

ANII * DATE

* REF CAQR# CHA 890003713

[a] SHEET NOS. FILLED IN BY TESTING AND DIAGNOSTIC PROGRAMS BRANCH.
[b] FOR WORK PERFORMED BY CERTIFICATE HOLDER
[c] REPLACED (LIKE OR EQUIVALENT).
[d] REPLACEMENT (MODIFICATION).
[e] WHEN REQUIRED BY CONSTRUCTION CODE.

RETENTION PERIOD: LIFETIME RESPONSIBLE ORGANIZATION: NM-PROCESSES/SPECIAL PROGRAMS

TENNESSEE VALLEY AUTHORITY
BROWNS FERRY NUCLEAR PLANT
SITE DIRECTOR STANDARD PRACTICE

SEP 22 1989

FORM PAGE 1 OF 1
FORM SDSP-403
SDSP 13.3

FORM SDSP-403
FORM NIS-2 ATTACHMENT

SHEET 41 of 259

REFERENCE CAQR# CHA8900037/3

1. (OWNER) TENNESSEE VALLEY AUTHORITY
NUCLEAR POWER

DATE 05/30/90

2. (PLANT) BROWNS FERRY NUCLEAR PLANT
P.O. BOX 2000
DECATUR, ALABAMA

SHEET [a] 1 OF 1

MR# 895741

3. WORK PERFORMED BY: TVA
COMPANY

TYPE CODE SYMBOL STAMP [b] N/A

PO BOX 2000
ADDRESS

AUTHORIZATION NO. [b] N/A

DECATUR, ALABAMA
CITY AND STATE

EXPIRATION DATE [b] N/A

4. IDENTIFICATION OF SYSTEM MAIN STEAM, SYSTEM-1

5(A). APPLICATION CONSTRUCTION CODE USAS B 31.1.0 19 67
EDITION N/A ADDENDA N/A CODE CASE N/A

5(B). APPLICATION EDITION OF SECTION XI UTILIZED FOR REPAIRS OR REPLACEMENTS: 1980

6(A). NAME OF COMPONENT(S) AND DESCRIPTION (INCLUDE SIZE, CAPACITY, MATERIAL, AND LOCATION AS NEEDED TO AID IN IDENTIFICATION)
UNIT-2, EL-585, DRYWELL, AZ/15, SSR/

6(B). NAME OF MANUFACTURER BERGEN PATERSON
ADDRESS OF MANUFACTURER (IF KNOWN) UNKNOWN

6(c). MANUFACTURER'S SERIAL NUMBER UNKNOWN

6(D). NATIONAL BOARD NUMBER (IF APPLICABLE) N/A

6(E). OTHER IDENTIFICATION (SUBASSEMBLY NUMBER, HEAT NUMBER, ETC.) N/A

6(F). YEAR BUILT UNKNOWN CODE CLASS ☒ 1 ☐ 2

6(G). REPAIRED ☒ REPLACED ☒ [c] REPLACEMENT ☐ [d]

6(H). ASME CODE STAMPED YES ☐ NO ☒

7. BRIEF DESCRIPTION OF REPAIR OR REPLACEMENT WORK PERFORMED.
SNUBBER WAS DUE FOR TESTING. SNUBBER WAS REMOVED AND ANOTHER UNIT WAS INSTALLED IN ITS PLACE

8. TESTS CONDUCTED: HYDROSTATIC ☐ PNEUMATIC ☐
NOMINAL OPERATING PRESSURE ☐ OTHER ☐
PRESSURE N/A PSI TEST TEMPERATURE N/A F°

9. REMARKS:

( ) APPLICABLE MANUFACTURERS DATA REPORT [e] TO BE ATTACHED.

RESPONSIBLE ENGR. R.W. AYCOCK * /SYSTEMS DATE 05/30/90
ORGANIZATION

ANII DATE

* REF CAQR# CHA 8900037/3

[a] SHEET NOS. FILLED IN BY TESTING AND DIAGNOSTIC PROGRAMS BRANCH.
[b] FOR WORK PERFORMED BY CERTIFICATE HOLDER
[c] REPLACED (LIKE OR EQUIVALENT).
[d] REPLACEMENT (MODIFICATION).
[e] WHEN REQUIRED BY CONSTRUCTION CODE.

RETENTION PERIOD: LIFETIME RESPONSIBLE ORGANIZATION: NM-PROCESSES/SPECIAL PROGRAMS

ASME SECTION XI SUMMARY REPORT

SHEET 42 of 259

Tennessee Valley Authority
Office of Nuclear Power, 1750 CST2-C
Browns Ferry Nuclear Plant Unit -2
P.O. Box 2000
Decatur, Alabama

Comm. Service Date 3-1-75
System 1
TVA Class "A" ASME CLASS-1
Workplan/MR No. A-895742

Furnish the following for the repair or replacement for the as-left condition of the component (after field work is complete). Mark all blanks (indicate NA for items which do not apply).

National Board Number of repaired or replaced component. NA

Name of the components and description (include size, capacity, material, and location)--Theses requirements may be satisfied by attaching an applicable drawing.
BERGEN PATERSON HYDRAULIC SHOCK + SWAY ARRESTOR — HSSA-30.

Name of Manufacturer BERGEN PATERSON

Address of Manufacturer (if known) NA

Manufacturer's component identification numbers (i.e., serial number, subassembly number, heat number). If more than one component is replaced, attach weld map and identify items by item number.

Repair / ___ / Replacement/Modification / X /

Brief description of repair or replacement work performed, including conditions observed and corrective measures taken, as applicable (reference DCR, CAR, etc.; drawing may be attached with attached affected area circled).
REPLACED MAINSTEAM SNUBBER SSC1 HSSA-30 (SN M0147) WITH SNUBBER NUMBER (SN M0296).

Brief description of post repair or replacement tests and examinations (if required) by instruction or procedure number. TEST PER MMI-45 AND SI-4.6.H-2

ANII/ANI name, employer, and business address ROOSEVELT RUSSELL / BILL RICE
HARTFORD STEAM BOILER INSURANCE CO.
1117 PERIMETER CENTER WEST SUITE E-301, ATLANTA, GA 30338

Date work completed 9-26-88

* Jimmy E. Kiker / 10-16-89
Responsible Engineer Date

Retention: Period - Lifetime; Responsibility - DCRM

ASME SECTION XI SUMMARY REPORT

Tennessee Valley Authority
Office of Nuclear Power, 1750 CST2-C
Browns Farry Nuclear Plant Unit 2
P.O. Box 2000
Decatur, Alabama

Comm. Service Date 3-1-75
System RHR #74
TVA Class A
Workplan (MR) No. A-895742

Furnish the following for the repair or replacement for the as-left condition of the component (after field work is complete). Mark all blanks (indicate NA for items which do not apply).

National Board Number of repaired or replaced component. N/A

Name of the components and description (include size, capacity, material, and location)—Theses requirements may be satisfied by attaching an applicable drawing.
PISTON ROD AND PISTON ASSEMBLY (BP PN 78PA3-152530) AND PISTON ROD NUT (BP PN 23555-8) FOR SNUBBER S/N M0111, BERGEN PATERSON HSSA SIZE 10 KIP

Name of Manufacturer BERGEN PATERSON

Address of Manufacturer (if known) WOBURN, MA.

Manufacturer's component identification numbers (i.e., serial number, subassembly number, heat number). If more than one component is replaced, attach weld map and identify items by item number.
PART NUMBERS 78PA3-152530 & 23555-8

Repair [ ] Replacement/Modification [X]

Brief description of repair or replacement work performed, including conditions observed and corrective measures taken, as applicable (reference DCR, CAR, etc.; drawing may be attached with attached affected area circled).
DURING THE REBUILDING OF SNUBBER S/N M0111 IT WAS DETERMINED THAT THE PISTON ROD ASSEMBLY AND NUT NEEDED TO BE REPLACED DUE TO WEAR. THIS REBUILD/REPLACEMENT WAS DONE ON MR A-895725. SNUBBER WAS REBUILT FOR A SPARE, AND WAS INSTALLED AT THE 2-RHR-RG8 LOCATION BY MR A-895745.

Brief description of post repair or replacement tests and examinations (if required) by instruction or procedure number.
SNUBBER WAS FUNCTIONALLY TESTED AFTER REBUILD/REPLACEMENT ACTIVITIES PER MMI-59 ON MR A-895745.

ANII/ANI name, employer, and business address HARTFORD STEAMBOILER INSP. & INS. ATLANTA, GA.

Date work completed 9/20/88

[signature] 9/20/88
Responsible Engineer Date

Retention: Period - Lifetime; Responsibility - ERCU Supervisor

TENNESSEE VALLEY AUTHORITY
BROWNS FERRY NUCLEAR PLANT
SITE DIRECTOR STANDARD PRACTICE

SEP 22 1989

FORM PAGE 1 OF 1
FORM SDSP-403
SDSP 13.3

FORM SDSP-403
FORM NIS-2 ATTACHMENT

1. (OWNER) TENNESSEE VALLEY AUTHORITY
NUCLEAR POWER

DATE 6-25-91

2. (PLANT) BROWNS FERRY NUCLEAR PLANT
P.O. BOX 2000
DECATUR, ALABAMA

SHEET [a] 44 OF 259

MR# A-895743

3. WORK PERFORMED BY: TVA (COMPANY)
P.O. BOX 2000 (ADDRESS)
DECATUR, AL (CITY AND STATE)

TYPE CODE SYMBOL STAMP [b] NA
AUTHORIZATION NO. [b] NA
EXPIRATION DATE [b] NA

4. IDENTIFICATION OF SYSTEM MAIN STEAM 001.

5(A). APPLICATION CONSTRUCTION CODE ANS B31.1 19 67
EDITION 1967 ADDENDA WINTER CODE CASE NA

5(B). APPLICATION EDITION OF SECTION XI UTILIZED FOR REPAIRS OR REPLACEMENTS: 1980

6(A). NAME OF COMPONENT(S) AND DESCRIPTION (INCLUDE SIZE, CAPACITY, MATERIAL, AND LOCATION AS NEEDED TO AID IN IDENTIFICATION)
SNUBBER 2-47 B460501045 HSSA-30
DRYWELL ELEV. 585, AZ-240°, NEXT TO SHIELD WALL

6(B). NAME OF MANUFACTURER BERGEN PATTERSON
ADDRESS OF MANUFACTURER (IF KNOWN) UNKNOWN

6(c). MANUFACTURER'S SERIAL NUMBER NA

6(D). NATIONAL BOARD NUMBER (IF APPLICABLE) NA

6(E). OTHER IDENTIFICATION (SUBASSEMBLY NUMBER, HEAT NUMBER, ETC.) NA

6(F). YEAR BUILT NA CODE CLASS ☒ 1 ☐ 2

6(G). REPAIRED ☐ REPLACED ☒ [c] REPLACEMENT ☐ [d]

6(H). ASME CODE STAMPED YES ☐ NO ☒

7. BRIEF DESCRIPTION OF REPAIR OR REPLACEMENT WORK PERFORMED.
REMOVED SNUBBER S/N M6074 AND REPLACED WITH SNUBBER S/N M0168

8. TESTS CONDUCTED: HYDROSTATIC ☐ PNEUMATIC ☐
NOMINAL OPERATING PRESSURE ☐ OTHER ☐
PRESSURE NA PSI TEST TEMPERATURE NA F°

9. REMARKS: MR# A-895743

( ) APPLICABLE MANUFACTURERS DATA REPORT[e] TO BE ATTACHED.

RESPONSIBLE ENGR. Jimmy E. Keber TECH. SUPPORT DATE 6-26-91
ORGANIZATION

ANII * R. Russell Jr. DATE 6-26-91

* REF. CAQR# CHA890003713

[a] SHEET NOS. FILLED IN BY TESTING AND DIAGNOSTIC PROGRAMS BRANCH.
[b] FOR WORK PERFORMED BY CERTIFICATE HOLDER
[c] REPLACED (LIKE OR EQUIVALENT).
[d] REPLACEMENT (MODIFICATION).
[e] WHEN REQUIRED BY CONSTRUCTION CODE.

RETENTION PERIOD: LIFETIME RESPONSIBLE ORGANIZATION: NM-PROCESSES/SPECIAL PROGRAMS

TENNESSEE VALLEY AUTHORITY
BROWNS FERRY NUCLEAR PLANT
SITE DIRECTOR STANDARD PRACTICE

SEP 22 1989

FORM PAGE 1 OF 1
FORM SDSP-403
SDSP 13.3

FORM SDSP-403
FORM NIS-2 ATTACHMENT

SHEET 45 of 259

REFERENCE CAQR CHA890003713

1. (OWNER) TENNESSEE VALLEY AUTHORITY
NUCLEAR POWER
DATE 05/30/90

2. (PLANT) BROWNS FERRY NUCLEAR PLANT
P.O. BOX 2000
DECATUR, ALABAMA
SHEET [a] 1 OF 1

MR# 895744

3. WORK PERFORMED BY: TVA (COMPANY)
TYPE CODE SYMBOL STAMP [b] N/A
PO BOX 2000 (ADDRESS)
AUTHORIZATION NO. [b] N/A
DECATUR ALABAMA (CITY AND STATE)
EXPIRATION DATE [b] N/A

4. IDENTIFICATION OF SYSTEM SYSTEM-74, RHR, R-67

5(A). APPLICATION CONSTRUCTION CODE USAS B31.1.0 19 67
EDITION THRU ADDENDA N/A CODE CASE N/A

5(B). APPLICATION EDITION OF SECTION XI UTILIZED FOR REPAIRS OR REPLACEMENTS: 1980

6(A). NAME OF COMPONENT(S) AND DESCRIPTION (INCLUDE SIZE, CAPACITY, MATERIAL, AND LOCATION AS NEEDED TO AID IN IDENTIFICATION)
UNIT-2, EL-563/577, AZ 25, DRYWELL, R-67

6(B). NAME OF MANUFACTURER DERGEN PATTERSON
ADDRESS OF MANUFACTURER (IF KNOWN) UNKNOWN

6(c). MANUFACTURER'S SERIAL NUMBER F-15172

6(D). NATIONAL BOARD NUMBER (IF APPLICABLE) N/A

6(E). OTHER IDENTIFICATION (SUBASSEMBLY NUMBER, HEAT NUMBER, ETC.) N/A

6(F). YEAR BUILT N/A CODE CLASS ☒ 1 ☐ 2

6(G). REPAIRED ☒ REPLACED ☒ [c] REPLACEMENT ☐ [d]

6(H). ASME CODE STAMPED YES ☐ NO ☒

7. BRIEF DESCRIPTION OF REPAIR OR REPLACEMENT WORK PERFORMED.
REMOVE SNUBBER FOR TESTING & REPLACED WITH ANOTHER UNIT

8. TESTS CONDUCTED: HYDROSTATIC ☐ PNEUMATIC ☐
NOMINAL OPERATING PRESSURE ☐ OTHER ☐
PRESSURE N/A PSI TEST TEMPERATURE N/A F°

9. REMARKS:

( ) APPLICABLE MANUFACTURERS DATA REPORT [e] TO BE ATTACHED.
RESPONSIBLE ENGR. RW HAYCOCK (SYSTEMS) DATE 05/30/90
ORGANIZATION
ANII DATE

* REF CAQR# CHA 890003713

[a] SHEET NOS. FILLED IN BY TESTING AND DIAGNOSTIC PROGRAMS BRANCH.
[b] FOR WORK PERFORMED BY CERTIFICATE HOLDER
[c] REPLACED (LIKE OR EQUIVALENT).
[d] REPLACEMENT (MODIFICATION).
[e] WHEN REQUIRED BY CONSTRUCTION CODE.

RETENTION PERIOD: LIFETIME RESPONSIBLE ORGANIZATION: NM-PROCESSES/SPECIAL PROGRAMS

TENNESSEE VALLEY AUTHORITY
BROWNS FERRY NUCLEAR PLANT
SITE DIRECTOR STANDARD PRACTICE

SEP 22 1989

FORM PAGE 1 OF 1
FORM SDSP-403
SDSP 13.3

FORM SDSP-403
FORM NIS-2 ATTACHMENT

SHEET 46 of 259

REFERENCE CAQRACHA890003713

1. (OWNER) TENNESSEE VALLEY AUTHORITY
NUCLEAR POWER

DATE 05/27/90

2. (PLANT) BROWNS FERRY NUCLEAR PLANT
P.O. BOX 2000
DECATUR, ALABAMA

SHEET [a] 1 OF 1

MR# 895745

3. WORK PERFORMED BY: TVA
COMPANY

TYPE CODE SYMBOL STAMP [b] N/A

PO BOX 2000
ADDRESS

AUTHORIZATION NO. [b] N/A

DECATUR ALABAMA
CITY AND STATE

EXPIRATION DATE [b] N/A

4. IDENTIFICATION OF SYSTEM SYSTEM 74-RHR

5(A). APPLICATION CONSTRUCTION CODE USAS B31.1.0 1967
EDITION THRU ADDENDA N/A CODE CASE N/A

5(B). APPLICATION EDITION OF SECTION XI UTILIZED FOR REPAIRS OR REPLACEMENTS: 1980

6(A). NAME OF COMPONENT(S) AND DESCRIPTION (INCLUDE SIZE, CAPACITY, MATERIAL, AND LOCATION AS NEEDED TO AID IN IDENTIFICATION)
UNIT-2, EL-579, AZ05, DRYWELL, R-68

6(B). NAME OF MANUFACTURER BERGEN PATERSON
ADDRESS OF MANUFACTURER (IF KNOWN) UNKNOWN

6(c). MANUFACTURER'S SERIAL NUMBER G-39777-29

6(D). NATIONAL BOARD NUMBER (IF APPLICABLE) N/A

6(E). OTHER IDENTIFICATION (SUBASSEMBLY NUMBER, HEAT NUMBER, ETC.) N/A

6(F). YEAR BUILT N/A CODE CLASS ☒ 1 ☐ 2

6(G). REPAIRED ☒ REPLACED ☒ [c] REPLACEMENT ☐ [d]

6(H). ASME CODE STAMPED YES ☐ NO ☒

7. BRIEF DESCRIPTION OF REPAIR OR REPLACEMENT WORK PERFORMED.
SNUBBER WAS REPLACE WITH ANOTHER UNIT. THE SNUBBER THAT WAS REMOVED WAS REBUILT.

8. TESTS CONDUCTED: HYDROSTATIC ☐ PNEUMATIC ☐
NOMINAL OPERATING PRESSURE ☐ OTHER ☐
PRESSURE N/A PSI TEST TEMPERATURE N/A F°

9. REMARKS:

( ) APPLICABLE MANUFACTURERS DATA REPORT [e] TO BE ATTACHED.

RESPONSIBLE ENGR. R.W. AVCOCK / SYSTEMS DATE 05/27/90
ORGANIZATION

ANII DATE

* REF CAQR # CHA890003713

[a] SHEET NOS. FILLED IN BY TESTING AND DIAGNOSTIC PROGRAMS BRANCH.
[b] FOR WORK PERFORMED BY CERTIFICATE HOLDER
[c] REPLACED (LIKE OR EQUIVALENT).
[d] REPLACEMENT (MODIFICATION).
[e] WHEN REQUIRED BY CONSTRUCTION CODE.

RETENTION PERIOD: LIFETIME RESPONSIBLE ORGANIZATION: NM-PROCESSES/SPECIAL PROGRAMS

3485 1001

TENNESSEE VALLEY AUTHORITY
BROWNS FERRY NUCLEAR PLANT
SITE DIRECTOR STANDARD PRACTICE

SEP 22 1989

FORM PAGE 1 OF 1
FORM SDSP-403
SDSP 13.3

FORM SDSP—403
FORM NIS—2 ATTACHMENT

1. (OWNER) TENNESSEE VALLEY AUTHORITY
NUCLEAR POWER

DATE 6-18-90

2. (PLANT) BROWNS FERRY NUCLEAR PLANT
P.O. BOX 2000
DECATUR, ALABAMA

SHEET [a] 47 OF 259

MR# 897076

3. WORK PERFORMED BY: TVA
COMPANY

TYPE CODE SYMBOL STAMP [b] NA

P.O. Box 2000
ADDRESS

AUTHORIZATION NO. [b] NA

Decatur AL
CITY AND STATE

EXPIRATION DATE [b] NA

4. IDENTIFICATION OF SYSTEM SYS 85 Control Rod Drive

5(A). APPLICATION CONSTRUCTION CODE ~~ASME Sec. XIII Div 1 19 74~~ MM 7-3-91 ANSI B31.1, 1967
EDITION 7-3-91 ~~1974~~ 1967 ADDENDA 7-3-91 ~~Winter~~ WINTER CODE CASE NA

5(B). APPLICATION EDITION OF SECTION XI UTILIZED FOR REPAIRS OR REPLACEMENTS: 1980

6(A). NAME OF COMPONENT(S) AND DESCRIPTION (INCLUDE SIZE, CAPACITY, MATERIAL, AND LOCATION AS NEEDED TO AID IN IDENTIFICATION)
new H2O Accumulator, piston, O-ring, 2-HCU-85-22-31

6(B). NAME OF MANUFACTURER GE
ADDRESS OF MANUFACTURER (IF KNOWN) UNKNOWN

6(C). MANUFACTURER'S SERIAL NUMBER 43636

6(D). NATIONAL BOARD NUMBER (IF APPLICABLE) NA

6(E). OTHER IDENTIFICATION (SUBASSEMBLY NUMBER, HEAT NUMBER, ETC.)
2-HCU-85-22-31

6(F). YEAR BUILT UNKNOWN CODE CLASS ☐ 1 ☒ 2

6(G). REPAIRED ☐ REPLACED ☒ [c] REPLACEMENT ☐ [d]

6(H). ASME CODE STAMPED YES ☐ NO ☐

7. BRIEF DESCRIPTION OF REPAIR OR REPLACEMENT WORK PERFORMED.
Replaced H2O Accumulator with new unit

8. TESTS CONDUCTED: HYDROSTATIC ☒ PNEUMATIC ☐
NOMINAL OPERATING PRESSURE ☐ OTHER ☐
PRESSURE 1525 PSI TEST TEMPERATURE ≥ 40°F

9. REMARKS: ~~Hydro Static Test performed Nov. 86 per Test 1573-85~~ MM 6-20-90 REF. W.O. 90-08938-00

( ) APPLICABLE MANUFACTURERS DATA REPORT [e] TO BE ATTACHED. M. Martin 7-3-91
RESPONSIBLE ENGR. [illegible] / Tech Spt DATE 6/12/90
ORGANIZATION

ANII _____ DATE _____

* REF. CADR # CHA-890003713

[a] SHEET NOS. FILLED IN BY TESTING AND DIAGNOSTIC PROGRAMS BRANCH.
[b] FOR WORK PERFORMED BY CERTIFICATE HOLDER
[c] REPLACED (LIKE OR EQUIVALENT).
[d] REPLACEMENT (MODIFICATION).
[e] WHEN REQUIRED BY CONSTRUCTION CODE.

RETENTION PERIOD: LIFETIME RESPONSIBLE ORGANIZATION: NS—PROCESSES/SPECIAL PROGRAMS

TENNESSEE VALLEY AUTHORITY
BROWNS FERRY NUCLEAR PLANT
SITE DIRECTOR STANDARD PRACTICE

SEP 22 1989

FORM SDSP-403
FORM NIS-2 ATTACHMENT

1. (OWNER) TENNESSEE VALLEY AUTHORITY
NUCLEAR POWER

DATE 6-18-90

2. (PLANT) BROWNS FERRY NUCLEAR PLANT
P.O. BOX 2000
DECATUR, ALABAMA

SHEET [a] 48 OF 259

MR# 897077

3. WORK PERFORMED BY: TVA
COMPANY

TYPE CODE SYMBOL STAMP [b] NA

P.O. Box 2000
ADDRESS

AUTHORIZATION NO. [b] NA

Decatur AL
CITY AND STATE

EXPIRATION DATE [b] NA

4. IDENTIFICATION OF SYSTEM SYS 85 Control Rod Drive

5(A). APPLICATION CONSTRUCTION CODE ~~ASME Sec III Div 1 19~~ ANSI B31.1, 1967
EDITION ~~with 7-3-91~~ 1967 ADDENDA ~~7-3-91 1925~~ WINTER CODE CASE NA

5(B). APPLICATION EDITION OF SECTION XI UTILIZED FOR REPAIRS OR REPLACEMENTS: 1980

6(A). NAME OF COMPONENT(S) AND DESCRIPTION (INCLUDE SIZE, CAPACITY, MATERIAL, AND LOCATION AS NEEDED TO AID IN IDENTIFICATION)
HCU Accumulator, Piston, 2-inch, 2-HCU-85-26-27

6(B). NAME OF MANUFACTURER GE
ADDRESS OF MANUFACTURER (IF KNOWN) UNKNOWN

6(c). MANUFACTURER'S SERIAL NUMBER H3634

6(D). NATIONAL BOARD NUMBER (IF APPLICABLE) NA

6(E). OTHER IDENTIFICATION (SUBASSEMBLY NUMBER, HEAT NUMBER, ETC.)
2-HCU-85-26-27

6(F). YEAR BUILT UNKNOWN CODE CLASS ☐ 1 ☒ 2

6(G). REPAIRED ☐ REPLACED ☒ [c] REPLACEMENT ☐ [d]

6(H). ASME CODE STAMPED YES ☐ NO ☒

7. BRIEF DESCRIPTION OF REPAIR OR REPLACEMENT WORK PERFORMED.
Replaced HCU Accumulator with HCU Accu

8. TESTS CONDUCTED: HYDROSTATIC ☒ PNEUMATIC ☐
NOMINAL OPERATING PRESSURE ☐ OTHER ☐
PRESSURE 1225 PSI TEST TEMPERATURE > 40F°

9. REMARKS: ~~Hydro static Test performed Per GE Instructions 2-HCU-85-27~~ MRM 62646 REF. W.O. 90-08938-00

( ) APPLICABLE MANUFACTURERS DATA REPORT [e] TO BE ATTACHED. M. Manty 7-3-91
RESPONSIBLE ENGR. Ernest F. Wellmire Tech Spt DATE 6/12/90
ORGANIZATION
*
ANII DATE

* REF. CAQR# CHA 890003713

[a] SHEET NOS. FILLED IN BY TESTING AND DIAGNOSTIC PROGRAMS BRANCH.
[b] FOR WORK PERFORMED BY CERTIFICATE HOLDER
[c] REPLACED (LIKE OR EQUIVALENT).
[d] REPLACEMENT (MODIFICATION).
[e] WHEN REQUIRED BY CONSTRUCTION CODE.

RETENTION PERIOD: LIFETIME RESPONSIBLE ORGANIZATION: NM-PROCESSES/SPECIAL PROGRAMS

TENNESSEE VALLEY AUTHORITY
BROWNS FERRY NUCLEAR PLANT
SITE DIRECTOR STANDARD PRACTICE

SEP 22 1989

FORM SDSP-403
FORM NIS-2 ATTACHMENT

1. (OWNER) TENNESSEE VALLEY AUTHORITY
NUCLEAR POWER — DATE 6-18-90

2. (PLANT) BROWNS FERRY NUCLEAR PLANT
P.O. BOX 2000
DECATUR, ALABAMA — SHEET [a] 49 OF 259

MR# 897078

3. WORK PERFORMED BY: TVA (COMPANY) — TYPE CODE SYMBOL STAMP [b] NA
P.O. Box 2000 (ADDRESS) — AUTHORIZATION NO. [b] NA
Decatur AL (CITY AND STATE) — EXPIRATION DATE [b] NA

4. IDENTIFICATION OF SYSTEM SYS 85 Control Rod Drive

5(A). APPLICATION CONSTRUCTION CODE ~~ASME Sec. III Div. 1 '74~~ ANSI B31.1, 1967
EDITION ~~WINTER~~ 1967 ADDENDA ~~WINTER~~ WINTER CODE CASE NA

5(B). APPLICATION EDITION OF SECTION XI UTILIZED FOR REPAIRS OR REPLACEMENTS: 1980

6(A). NAME OF COMPONENT(S) AND DESCRIPTION (INCLUDE SIZE, CAPACITY, MATERIAL, AND LOCATION AS NEEDED TO AID IN IDENTIFICATION)
new H2O Accumulator, piston, O-rings, 2-HCU-85-14-23

6(B). NAME OF MANUFACTURER GE
ADDRESS OF MANUFACTURER (IF KNOWN) UNKNOWN

6(c). MANUFACTURER'S SERIAL NUMBER H31636

6(D). NATIONAL BOARD NUMBER (IF APPLICABLE) NA

6(E). OTHER IDENTIFICATION (SUBASSEMBLY NUMBER, HEAT NUMBER, ETC.)
2-HCU-85-14-23

6(F). YEAR BUILT UNKNOWN CODE CLASS ☐ 1 ☒ 2

6(G). REPAIRED ☐ REPLACED ☒ [c] REPLACEMENT ☐ [d]

6(H). ASME CODE STAMPED YES ☐ NO ☒

7. BRIEF DESCRIPTION OF REPAIR OR REPLACEMENT WORK PERFORMED.
Replaced H2O Accumulator with new one.

8. TESTS CONDUCTED: HYDROSTATIC ☒ PNEUMATIC ☐
NOMINAL OPERATING PRESSURE ☐ OTHER ☐
PRESSURE 1000 PSI TEST TEMPERATURE > 40°F

9. REMARKS: ~~HYDRO STATIC TEST performed per~~ ~~MMM 62640~~ REF. W.O. 90-08938-00

( ) APPLICABLE MANUFACTURERS DATA REPORT [e] TO BE ATTACHED. M. Manton 7-3-91
RESPONSIBLE ENGR. Ernest F. Williams Tech. Spl. DATE 6/18/90
ORGANIZATION *
ANII _____ DATE _____

*REF. CAQR# CHA890003713

[a] SHEET NOS. FILLED IN BY TESTING AND DIAGNOSTIC PROGRAMS BRANCH.
[b] FOR WORK PERFORMED BY CERTIFICATE HOLDER
[c] REPLACED (LIKE OR EQUIVALENT).
[d] REPLACEMENT (MODIFICATION).
[e] WHEN REQUIRED BY CONSTRUCTION CODE.

RETENTION PERIOD: LIFETIME RESPONSIBLE ORGANIZATION: NM-PROCESSES/SPECIAL PROGRAMS

yellow

TENNESSEE VALLEY AUTHORITY
BROWNS FERRY NUCLEAR PLANT
SITE DIRECTOR STANDARD PRACTICE

SEP 22 1989

FORM SDSP-403
FORM NIS-2 ATTACHMENT

1. (OWNER) TENNESSEE VALLEY AUTHORITY
NUCLEAR POWER

DATE 6-18-90

2. (PLANT) BROWNS FERRY NUCLEAR PLANT
P.O. BOX 2000
DECATUR, ALABAMA

SHEET [a] 50 OF 259

MR# 897364

3. WORK PERFORMED BY: TVA (COMPANY)
P.O. Box 2000 (ADDRESS)
Decatur AL (CITY AND STATE)

TYPE CODE SYMBOL STAMP [b] NA
AUTHORIZATION NO. [b] NA
EXPIRATION DATE [b] NA

4. IDENTIFICATION OF SYSTEM SYS 85 Control Rod Drive

5(A). APPLICATION CONSTRUCTION CODE ~~ASME Sect VIII Div 1 19 74~~ ANSI B31.1, 1967
EDITION ~~1974~~ 1967 ADDENDA ~~S74 W75~~ WINTER CODE CASE NA

5(B). APPLICATION EDITION OF SECTION XI UTILIZED FOR REPAIRS OR REPLACEMENTS: 1980

6(A). NAME OF COMPONENT(S) AND DESCRIPTION (INCLUDE SIZE, CAPACITY, MATERIAL, AND LOCATION AS NEEDED TO AID IN IDENTIFICATION)
Hydr Acc Accumulators, pistons and o-rings, 2-HCU-85-34-55

6(B). NAME OF MANUFACTURER GE
ADDRESS OF MANUFACTURER (IF KNOWN) UNKNOWN

6(C). MANUFACTURER'S SERIAL NUMBER ~~H3630~~ H3670 ETD 6-18-90

6(D). NATIONAL BOARD NUMBER (IF APPLICABLE) NA

6(E). OTHER IDENTIFICATION (SUBASSEMBLY NUMBER, HEAT NUMBER, ETC.)
2-HCU-85-34-55

6(F). YEAR BUILT UNKNOWN CODE CLASS ☐ 1 ☒ 2

6(G). REPAIRED ☐ REPLACED ☒ [c] REPLACEMENT ☐ [d]

6(H). ASME CODE STAMPED YES ☐ NO ☒

7. BRIEF DESCRIPTION OF REPAIR OR REPLACEMENT WORK PERFORMED.
Replaced Hyd Accumulator with new one
location 2-HCU-85-34-55

8. TESTS CONDUCTED: HYDROSTATIC ☒ PNEUMATIC ☐
NOMINAL OPERATING PRESSURE ☐ OTHER ☐
PRESSURE 1910 PSI TEST TEMPERATURE 240 F°

9. REMARKS: ~~Hydro static Test per SI 3.3-7 performed~~
~~New Acc installed 5-23-87~~ MM 6-26-90 REF. WO 90-08938-00

( ) APPLICABLE MANUFACTURERS DATA REPORT [e] TO BE ATTACHED. M.R. Marston 7-3-91
RESPONSIBLE ENGR. Ernest L. Williams Tech Spec DATE 6/28/90
ORGANIZATION

ANII _____ DATE _____

* REF. CAQR# CHA 890003713

[a] SHEET NOS. FILLED IN BY TESTING AND DIAGNOSTIC PROGRAMS BRANCH.
[b] FOR WORK PERFORMED BY CERTIFICATE HOLDER
[c] REPLACED (LIKE OR EQUIVALENT).
[d] REPLACEMENT (MODIFICATION).
[e] WHEN REQUIRED BY CONSTRUCTION CODE.

RETENTION PERIOD: LIFETIME RESPONSIBLE ORGANIZATION: NM—PROCESSES/SPECIAL PROGRAMS

TENNESSEE VALLEY AUTHORITY
BROWNS FERRY NUCLEAR PLANT
SITE DIRECTOR STANDARD PRACTICE

SEP 22 1989

FORM PAGE 1 OF 1
FORM SDSP-403
SDSP 13.3

FORM SDSP—403
FORM NIS—2 ATTACHMENT

1. (OWNER) TENNESSEE VALLEY AUTHORITY
NUCLEAR POWER

DATE 6-18-90

2. (PLANT) BROWNS FERRY NUCLEAR PLANT
P.O. BOX 2000
DECATUR, ALABAMA

SHEET [a] 51 OF 259

MR# 897365

3. WORK PERFORMED BY: TVA
COMPANY

TYPE CODE SYMBOL STAMP [b] NA

P.O. Box 2000
ADDRESS

AUTHORIZATION NO. [b] NA

Decatur, AL
CITY AND STATE

EXPIRATION DATE [b] NA

4. IDENTIFICATION OF SYSTEM SYS 85 Control Rod Drive

5(A). APPLICATION CONSTRUCTION CODE ~~ASME SEC. VIII DIV. 1 19 74~~ ANSI B31.1, 1967
EDITION ~~with~~ 1967 ADDENDA ~~1967~~ WINTER CODE CASE NA

5(B). APPLICATION EDITION OF SECTION XI UTILIZED FOR REPAIRS OR REPLACEMENTS: 1980

6(A). NAME OF COMPONENT(S) AND DESCRIPTION (INCLUDE SIZE, CAPACITY, MATERIAL, AND LOCATION AS NEEDED TO AID IN IDENTIFICATION)
New Accumulator, filter and O-rings, 2-HCU-85-34-35

6(B). NAME OF MANUFACTURER GE
ADDRESS OF MANUFACTURER (IF KNOWN) UNKNOWN

6(C). MANUFACTURER'S SERIAL NUMBER H1061

6(D). NATIONAL BOARD NUMBER (IF APPLICABLE) NA

6(E). OTHER IDENTIFICATION (SUBASSEMBLY NUMBER, HEAT NUMBER, ETC.)
2-HCU-85-34-35

6(F). YEAR BUILT UNKNOWN CODE CLASS ☐ 1 ☒ 2

6(G). REPAIRED ☐ REPLACED ☒ [c] REPLACEMENT ☐ [d]

6(H). ASME CODE STAMPED YES ☐ NO ☒

7. BRIEF DESCRIPTION OF REPAIR OR REPLACEMENT WORK PERFORMED.
Replaced the Accumulator with new one

8. TESTS CONDUCTED: HYDROSTATIC ☒ PNEUMATIC ☐
NOMINAL OPERATING PRESSURE ☐ OTHER ☐
PRESSURE 1225 PSI TEST TEMPERATURE 240 F°

9. REMARKS: ~~Hydro Static Test per SI 347 performed~~
~~Air Sig performed per 7 MM 6-26-90~~ REF. W.O. 90-08938-00

( ) APPLICABLE MANUFACTURERS DATA REPORTS TO BE ATTACHED. M. Marston 7-3-91
RESPONSIBLE ENGR. Ernest L. Williams Tech Spt DATE 6/12/90
ORGANIZATION
*
ANII DATE

* REF CAQR# CHA 890003713

[a] SHEET NOS. FILLED IN BY TESTING AND DIAGNOSTIC PROGRAMS BRANCH.
[b] FOR WORK PERFORMED BY CERTIFICATE HOLDER
[c] REPLACED (LIKE OR EQUIVALENT).
[d] REPLACEMENT (MODIFICATION).
[e] WHEN REQUIRED BY CONSTRUCTION CODE.

RETENTION PERIOD: LIFETIME RESPONSIBLE ORGANIZATION: NM—PROCESSES/SPECIAL PROGRAMS

3485 1015

TENNESSEE VALLEY AUTHORITY
BROWNS FERRY NUCLEAR PLANT
SITE DIRECTOR STANDARD PRACTICE

SEP 22 1989

FORM PAGE 1 OF 1
FORM SDSP-403
SDSP 13.3

FORM SDSP-403
FORM NIS-2 ATTACHMENT

1. (OWNER) TENNESSEE VALLEY AUTHORITY
NUCLEAR POWER

DATE 6-18-90

2. (PLANT) BROWNS FERRY NUCLEAR PLANT
P.O. BOX 2000
DECATUR, ALABAMA

SHEET [a] 52 OF 259

MR# 897369

3. WORK PERFORMED BY: TVA
COMPANY

TYPE CODE SYMBOL STAMP [b] NA

P.O. Box 2000
ADDRESS

AUTHORIZATION NO. [b] NA

Decatur Al
CITY AND STATE

EXPIRATION DATE [b] NA

4. IDENTIFICATION OF SYSTEM SYS 85 Control Rod Drive

5(A). APPLICATION CONSTRUCTION CODE ~~ASME Sec. VIII Div. 1~~ 19 ~~74~~ 7-3-91 ANSI B31.1, 1967
EDITION 7-3-91 ~~with the~~ 1967 ADDENDA 7-4-75 WINTER CODE CASE NA

5(B). APPLICATION EDITION OF SECTION XI UTILIZED FOR REPAIRS OR REPLACEMENTS: 1980

6(A). NAME OF COMPONENT(S) AND DESCRIPTION (INCLUDE SIZE, CAPACITY, MATERIAL, AND LOCATION AS NEEDED TO AID IN IDENTIFICATION)
New H2O Accumulator, Piston & O-rings, 2-HCU-85-5447

6(B). NAME OF MANUFACTURER GE.
ADDRESS OF MANUFACTURER (IF KNOWN) UNKNOWN

6(C). MANUFACTURER'S SERIAL NUMBER H36638

6(D). NATIONAL BOARD NUMBER (IF APPLICABLE) NA

6(E). OTHER IDENTIFICATION (SUBASSEMBLY NUMBER, HEAT NUMBER, ETC.)
2-HCU-85-5447

6(F). YEAR BUILT UNKNOWN CODE CLASS ☐ 1 ☒ 2

6(G). REPAIRED ☐ REPLACED ☒ [c] REPLACEMENT ☐ [d]

6(H). ASME CODE STAMPED YES ☐ NO ☒

7. BRIEF DESCRIPTION OF REPAIR OR REPLACEMENT WORK PERFORMED.
Replaced H2O Accumulator with new one

8. TESTS CONDUCTED: HYDROSTATIC ☒ PNEUMATIC ☐
NOMINAL OPERATING PRESSURE ☐ OTHER ☐
PRESSURE 1525 PSI TEST TEMPERATURE 240 F°

9. REMARKS: ~~Hydro Static Test Per SI 3.2.7 was Performed the H2O accumulator 3.2.7~~ MRM 6-6-90 REF. W.O. 90-05938-00

( ) APPLICABLE MANUFACTURERS DATA REPORT [e] TO BE ATTACHED. M. Martin 7-3-91

RESPONSIBLE ENGR. Ernest J. Williams/Tech Spl. DATE 6/18/90
ORGANIZATION

ANII DATE

* REF CAQR# CHA 890003713

[a] SHEET NOS. FILLED IN BY TESTING AND DIAGNOSTIC PROGRAMS BRANCH.
[b] FOR WORK PERFORMED BY CERTIFICATE HOLDER
[c] REPLACED (LIKE OR EQUIVALENT).
[d] REPLACEMENT (MODIFICATION).
[e] WHEN REQUIRED BY CONSTRUCTION CODE.

RETENTION PERIOD: LIFETIME RESPONSIBLE ORGANIZATION: NM-PROCESSES/SPECIAL PROGRAMS

TENNESSEE VALLEY AUTHORITY
BROWNS FERRY NUCLEAR PLANT
SITE DIRECTOR STANDARD PRACTICE

SEP 22 1989

FORM SDSP-403
FORM NIS-2 ATTACHMENT

1. (OWNER) TENNESSEE VALLEY AUTHORITY
NUCLEAR POWER

DATE 6-18-90

2. (PLANT) BROWNS FERRY NUCLEAR PLANT
P.O. BOX 2000
DECATUR, ALABAMA

SHEET [a] 53 OF 259

MR# 897383

3. WORK PERFORMED BY: TVA
COMPANY

P.O. Box 2000
ADDRESS

Decatur AL
CITY AND STATE

TYPE CODE SYMBOL STAMP [b] NA

AUTHORIZATION NO. [b] NA

EXPIRATION DATE [b] NA

4. IDENTIFICATION OF SYSTEM SYS 85 Control Rod Drive

5(A). APPLICATION CONSTRUCTION CODE ~~ASME Sec III Div 1~~ TO ~~1974~~ MM 7-3-91 ANSI B31.1, 1967
EDITION MM 7-3-91 ~~with~~ 1967 ADDENDA MM 7-3-91 ~~1975 WINTER~~ CODE CASE NA

5(B). APPLICATION EDITION OF SECTION XI UTILIZED FOR REPAIRS OR REPLACEMENTS: 1980

6(A). NAME OF COMPONENT(S) AND DESCRIPTION (INCLUDE SIZE, CAPACITY, MATERIAL, AND LOCATION AS NEEDED TO AID IN IDENTIFICATION)
HPU Accumulator, Piston, 2-range, 2-HCU-85-34-15

6(B). NAME OF MANUFACTURER GE
ADDRESS OF MANUFACTURER (IF KNOWN) UNKNOWN

6(C). MANUFACTURER'S SERIAL NUMBER H4053

6(D). NATIONAL BOARD NUMBER (IF APPLICABLE) NA

6(E). OTHER IDENTIFICATION (SUBASSEMBLY NUMBER, HEAT NUMBER, ETC.)
2-HCU-85-34-15

6(F). YEAR BUILT UNKNOWN CODE CLASS ☐ 1 ☒ 2

6(G). REPAIRED ☐ REPLACED ☒ [c] REPLACEMENT ☐ [d]

6(H). ASME CODE STAMPED YES ☐ NO ☒

7. BRIEF DESCRIPTION OF REPAIR OR REPLACEMENT WORK PERFORMED.
Replaced HPU Accumulator with new one

8. TESTS CONDUCTED: HYDROSTATIC ☒ PNEUMATIC ☐
NOMINAL OPERATING PRESSURE ☐ OTHER ☐
PRESSURE 1525 PSI TEST TEMPERATURE > 40°F

9. REMARKS: ~~Hydro static Test performed HPU 80 Accumulator~~ MM 6-26-90 REF. W.O. 90-08938-00

( ) APPLICABLE MANUFACTURERS DATA REPORTS TO BE ATTACHED. M. Martin 7-3-91
RESPONSIBLE ENGR. Ernest F. Williams Tech Spec. DATE 6/12/90
ORGANIZATION
*
ANII DATE

* REF. CA QR# CHA 890003713

[a] SHEET NOS. FILLED IN BY TESTING AND DIAGNOSTIC PROGRAMS BRANCH.
[b] FOR WORK PERFORMED BY CERTIFICATE HOLDER
[c] REPLACED (LIKE OR EQUIVALENT).
[d] REPLACEMENT (MODIFICATION).
[e] WHEN REQUIRED BY CONSTRUCTION CODE.

RETENTION PERIOD: LIFETIME RESPONSIBLE ORGANIZATION: NM-PROCESSES/SPECIAL PROGRAMS

TENNESSEE VALLEY AUTHORITY
BROWNS FERRY NUCLEAR PLANT
SITE DIRECTOR STANDARD PRACTICE

SEP 22 1989

FORM PAGE 1 OF 1
FORM SDSP-403
SDSP 13.3

FORM SDSP-403
FORM NIS-2 ATTACHMENT

1. (OWNER) TENNESSEE VALLEY AUTHORITY
NUCLEAR POWER

DATE 6-18-90

2. (PLANT) BROWNS FERRY NUCLEAR PLANT
P.O. BOX 2000
DECATUR, ALABAMA

SHEET [a] 54 OF 259

MR# 897424

3. WORK PERFORMED BY: TVA
COMPANY

TYPE CODE SYMBOL STAMP [b] NA

P.O. Box 2000
ADDRESS

AUTHORIZATION NO. [b] NA

Decatur Al.
CITY AND STATE

EXPIRATION DATE [b] NA

4. IDENTIFICATION OF SYSTEM SYS 85 Control Rod Drive

5(A). APPLICATION-CONSTRUCTION CODE ~~ASME Section III Div 1 19 74~~ ~~MM~~ 7-3-91 ANSI B31.1; 1967
EDITION ~~MM~~ 7-3-91 1967 ADDENDA ~~7-5-91~~ ~~MM~~ WINTER CODE CASE NA

5(B). APPLICATION EDITION OF SECTION XI UTILIZED FOR REPAIRS OR REPLACEMENTS: 1980

6(A). NAME OF COMPONENT(S) AND DESCRIPTION (INCLUDE SIZE, CAPACITY, MATERIAL, AND LOCATION AS NEEDED TO AID IN IDENTIFICATION)
H.C.U. 54-43, 2-HCU-85-54-43

6(B). NAME OF MANUFACTURER GE
ADDRESS OF MANUFACTURER (IF KNOWN) UNKNOWN

6(C). MANUFACTURER'S SERIAL NUMBER A5089

6(D). NATIONAL BOARD NUMBER (IF APPLICABLE) NA

6(E). OTHER IDENTIFICATION (SUBASSEMBLY NUMBER, HEAT NUMBER, ETC.)
2-HCU-85-54-43

6(F). YEAR BUILT 1970 CODE CLASS ☐ 1 ☒ 2

6(G). REPAIRED ☐ REPLACED ☒ [c] REPLACEMENT ☐ [d]

6(H). ASME CODE STAMPED YES ☐ NO ☐

7. BRIEF DESCRIPTION OF REPAIR OR REPLACEMENT WORK PERFORMED.
Water accumulator replaced with one removed from U-2 in MR 91-5225

8. TESTS CONDUCTED: HYDROSTATIC ☒ PNEUMATIC ☐
NOMINAL OPERATING PRESSURE ☐ OTHER ☐
PRESSURE 1925 PSI TEST TEMPERATURE 740 F°

9. REMARKS: ~~SE-3.3.7 performed Hot 86 and instantaneous~~ ~~MRM 6-26-90~~ REF. W.O. 90-08938-00

( ) APPLICABLE MANUFACTURERS DATA REPORTS TO BE ATTACHED. M. Martin 7-3-91
RESPONSIBLE ENGR. Ernest L. Williams Jr. DATE 6/12/90
ORGANIZATION

ANII _____ DATE _____

* REF CAQR# CHA 890003713

[a] SHEET NOS. FILLED IN BY TESTING AND DIAGNOSTIC PROGRAMS BRANCH.
[b] FOR WORK PERFORMED BY CERTIFICATE HOLDER
[c] REPLACED (LIKE OR EQUIVALENT).
[d] REPLACEMENT (MODIFICATION).
[e] WHEN REQUIRED BY CONSTRUCTION CODE.

RETENTION PERIOD: LIFETIME RESPONSIBLE ORGANIZATION: NM-PROCESSES/SPECIAL PROGRAMS

TENNESSEE VALLEY AUTHORITY
BROWNS FERRY NUCLEAR PLANT
SITE DIRECTOR STANDARD PRACTICE

SEP 22 1989

FORM PAGE 1 OF 1
FORM SDSP-403
SDSP 13.3

FORM SDSP-403
FORM NIS-2 ATTACHMENT

1. (OWNER) TENNESSEE VALLEY AUTHORITY
NUCLEAR POWER

DATE 6-18-90

2. (PLANT) BROWNS FERRY NUCLEAR PLANT
P.O. BOX 2000
DECATUR, ALABAMA

SHEET [a] 55 OF 259

MR# 897431

3. WORK PERFORMED BY: TVA
COMPANY

TYPE CODE SYMBOL STAMP [b] NA

P.O. Box 2000
ADDRESS

AUTHORIZATION NO. [b] NA

Decatur AL.
CITY AND STATE

EXPIRATION DATE [b] NA

4. IDENTIFICATION OF SYSTEM SYS 85 Control Rod Drive

5(A). APPLICATION CONSTRUCTION CODE ~~ASME SECTION VIII DIV 1 19 74 7-3-91~~ ANSI B31.1, 1967
EDITION ~~1974 7-3-91~~ 1967 ADDENDA ~~7-3-91~~ WINTER CODE CASE NA

5(B). APPLICATION EDITION OF SECTION XI UTILIZED FOR REPAIRS OR REPLACEMENTS: 1980

6(A). NAME OF COMPONENT(S) AND DESCRIPTION (INCLUDE SIZE, CAPACITY, MATERIAL, AND LOCATION AS NEEDED TO AID IN IDENTIFICATION).
H.C.U. 58 23 unit 2, 2-HCU-85-58-23

6(B). NAME OF MANUFACTURER GE
ADDRESS OF MANUFACTURER (IF KNOWN) UNKNOWN

6(C). MANUFACTURER'S SERIAL NUMBER A5116

6(D). NATIONAL BOARD NUMBER (IF APPLICABLE) NA

6(E). OTHER IDENTIFICATION (SUBASSEMBLY NUMBER, HEAT NUMBER, ETC.)
2-HCU-85-58 23

6(F). YEAR BUILT 1970 CODE CLASS ☐ 1 ☒ 2

6(G). REPAIRED ☐ REPLACED ☒ [c] REPLACEMENT ☐ [d]

6(H). ASME CODE STAMPED YES ☐ NO ☒

7. BRIEF DESCRIPTION OF REPAIR OR REPLACEMENT WORK PERFORMED.
Replaced water accumulator with one removed from U2 on MR 915222

8. TESTS CONDUCTED: HYDROSTATIC ☒ PNEUMATIC ☐
NOMINAL OPERATING PRESSURE ☐ OTHER ☐
PRESSURE 1225 PSI TEST TEMPERATURE 240 F°

9. REMARKS: ~~SE-3-3.7 MRN 6-26-90 Worked on Unit 2 retested 5/23/87~~
REF. W.O. 90-08938-00

( ) APPLICABLE MANUFACTURERS DATA REPORT [e] TO BE ATTACHED. M. Martin 7-3-91
RESPONSIBLE ENGR. [illegible] DATE 6/18/90
ORGANIZATION

ANII _____ DATE _____

* REF. CAQR # CHA 890003713

[a] SHEET NOS. FILLED IN BY TESTING AND DIAGNOSTIC PROGRAMS BRANCH.
[b] FOR WORK PERFORMED BY CERTIFICATE HOLDER
[c] REPLACED (LIKE OR EQUIVALENT).
[d] REPLACEMENT (MODIFICATION).
[e] WHEN REQUIRED BY CONSTRUCTION CODE.

RETENTION PERIOD: LIFETIME RESPONSIBLE ORGANIZATION: NM-PROCESSES/SPECIAL PROGRAMS

TENNESSEE VALLEY AUTHORITY
BROWNS FERRY NUCLEAR PLANT
SITE DIRECTOR STANDARD PRACTICE

SEP 22 1989

FORM SDSP—403
FORM NIS—2 ATTACHMENT

1. (OWNER) TENNESSEE VALLEY AUTHORITY
NUCLEAR POWER — DATE 6-20-90

2. (PLANT) BROWNS FERRY NUCLEAR PLANT
P.O. BOX 2000
DECATUR, ALABAMA — SHEET[a] 56 OF 259

MR# 897432

3. WORK PERFORMED BY: TVA (COMPANY) — TYPE CODE SYMBOL STAMP[b] NA
P.O. Box 2000 (ADDRESS) — AUTHORIZATION NO.[b] NA
Decatur Al. (CITY AND STATE) — EXPIRATION DATE[b] NA

4. IDENTIFICATION OF SYSTEM SYS 85 Control Rod Drive

5(A). APPLICATION CONSTRUCTION CODE ~~ASME Sec VIII Div 1 to 7-3-91~~ ANSI B31.1; 1967
EDITION ~~1968 7-3-91~~ 1967 ADDENDA ~~7-3-91 WINTER~~ CODE CASE NA

5(B). APPLICATION EDITION OF SECTION XI UTILIZED FOR REPAIRS OR REPLACEMENTS: 1980

6(A). NAME OF COMPONENT(S) AND DESCRIPTION (INCLUDE SIZE, CAPACITY, MATERIAL, AND LOCATION AS NEEDED TO AID IN IDENTIFICATION)
H2O Accumulator Piston O-rings, 2-HCU-85-58-31

6(B). NAME OF MANUFACTURER GE
ADDRESS OF MANUFACTURER (IF KNOWN) NA, UNKNOWN

6(C). MANUFACTURER'S SERIAL NUMBER A5203

6(D). NATIONAL BOARD NUMBER (IF APPLICABLE) NA

6(E). OTHER IDENTIFICATION (SUBASSEMBLY NUMBER, HEAT NUMBER, ETC.)
2-HCU-85-5831

6(F). YEAR BUILT 1970 — CODE CLASS ☐ 1 ☒ 2

6(G). REPAIRED ☐ — REPLACED ☒[c] — REPLACEMENT ☐[d]

6(H). ASME CODE STAMPED — YES ☐ — NO ☒

7. BRIEF DESCRIPTION OF REPAIR OR REPLACEMENT WORK PERFORMED.
Replaced H2O Accumulator with one from U-3
remarked on MR 911-223

8. TESTS CONDUCTED: HYDROSTATIC ☒ — PNEUMATIC ☐
NOMINAL OPERATING PRESSURE ☐ — OTHER ☐
PRESSURE 1525 PSI — TEST TEMPERATURE > 40°F[e]

9. REMARKS: ~~Hydro Static Test performed Per~~
~~report of 22 07 MM 6-26-90~~ REF. W.O. 90-08938-00

( ) APPLICABLE MANUFACTURERS DATA REPORTS[e] TO BE ATTACHED. M Mayfield 7-3-91
RESPONSIBLE ENGR. Ernest Williams Tech Spt DATE 6/22/90
ORGANIZATION
ANII _____ DATE _____

* REF. CAQR # CHA 890003713

[a] SHEET NOS. FILLED IN BY TESTING AND DIAGNOSTIC PROGRAMS BRANCH.
[b] FOR WORK PERFORMED BY CERTIFICATE HOLDER
[c] REPLACED (LIKE OR EQUIVALENT).
[d] REPLACEMENT (MODIFICATION).
[e] WHEN REQUIRED BY CONSTRUCTION CODE.

RETENTION PERIOD: LIFETIME — RESPONSIBLE ORGANIZATION: NM—PROCESSES/SPECIAL PROGRAMS

TENNESSEE VALLEY AUTHORITY
BROWNS FERRY NUCLEAR PLANT
SITE DIRECTOR STANDARD PRACTICE

SEP 22 1989

FORM SDSP-403
FORM NIS-2 ATTACHMENT

1. (OWNER) TENNESSEE VALLEY AUTHORITY
NUCLEAR POWER
DATE 6-20-90

2. (PLANT) BROWNS FERRY NUCLEAR PLANT
P.O. BOX 2000
DECATUR, ALABAMA
SHEET [a] 57 OF 259
MR# 897433

3. WORK PERFORMED BY: TVA (COMPANY)
TYPE CODE SYMBOL STAMP [b] NA
P.O. Box 2000 (ADDRESS)
AUTHORIZATION NO. [b] NA
Decatur Al. (CITY AND STATE)
EXPIRATION DATE [b] NA

4. IDENTIFICATION OF SYSTEM SYS 85 Control Rod Drive

5(A). APPLICATION CONSTRUCTION CODE ~~ASME SEC VIII DIV 1 19 74~~ MM 7-3-91 ANSI B31.1, 1967
EDITION ~~MM 7-3-91~~ 1967 ADDENDA ~~MM 7-3-91 SUMMER WINTER~~ CODE CASE NA

5(B). APPLICATION EDITION OF SECTION XI UTILIZED FOR REPAIRS OR REPLACEMENTS: 1980

6(A). NAME OF COMPONENT(S) AND DESCRIPTION (INCLUDE SIZE, CAPACITY, MATERIAL, AND LOCATION AS NEEDED TO AID IN IDENTIFICATION)
H2O Accumulator Piping 8-Pipe, 2-HCU-85-18-51

6(B). NAME OF MANUFACTURER GE
ADDRESS OF MANUFACTURER (IF KNOWN) UNKNOWN

6(c). MANUFACTURER'S SERIAL NUMBER C0407

6(D). NATIONAL BOARD NUMBER (IF APPLICABLE) NA

6(E). OTHER IDENTIFICATION (SUBASSEMBLY NUMBER, HEAT NUMBER, ETC.)
2-HCU-85-18-51

6(F). YEAR BUILT 1979 CODE CLASS ☐ 1 ☒ 2

6(G). REPAIRED ☐ REPLACED ☒ [c] REPLACEMENT ☐ [d]

6(H). ASME CODE STAMPED YES ☐ NO ☒

7. BRIEF DESCRIPTION OF REPAIR OR REPLACEMENT WORK PERFORMED.
Replaced H2O Accumulator with 1-HCU-85-3437
reported on MR 915226.

8. TESTS CONDUCTED: HYDROSTATIC ☒ PNEUMATIC ☐
NOMINAL OPERATING PRESSURE ☐ OTHER ☐
PRESSURE 1525 PSI TEST TEMPERATURE > 40F [e]

9. REMARKS: ~~Hydro Static Test performed per 86 mod 0-25 MM 62690~~ REF W.O. 90-08938-00

( ) APPLICABLE MANUFACTURERS DATA REPORTS TO BE ATTACHED.
RESPONSIBLE ENGR. Ernest L. Wellmann Tech Spec DATE 6/30/90 M. Moulton 7-3-91
ORGANIZATION
ANII DATE

* REF CAQR # CHA 890003713

[a] SHEET NOS. FILLED IN BY TESTING AND DIAGNOSTIC PROGRAMS BRANCH.
[b] FOR WORK PERFORMED BY CERTIFICATE HOLDER
[c] REPLACED (LIKE OR EQUIVALENT).
[d] REPLACEMENT (MODIFICATION).
[e] WHEN REQUIRED BY CONSTRUCTION CODE.

RETENTION PERIOD: LIFETIME RESPONSIBLE ORGANIZATION: NM-PROCESSES/SPECIAL PROGRAMS

ASME SECTION XI SUMMARY REPORT

SHEET 58 of 259

Tennessee Valley Authority
Office of Nuclear Power, 1750 CST2-C
Browns Ferry Nuclear Plant Unit 2
P.O. Box 2000
Decatur, Alabama

Comm. Service Date 1974
System Reactor Water Recirculation
TVA Class B
Workplan (MR) No. 900554

Furnish the following for the repair or replacement for the as-left condition of the component (after field work is complete). Mark all blanks (indicate NA for items which do not apply).

National Board Number of repaired or replaced component. N/A AEC 2/22/89

Name of the components and description (include size, capacity, material, and location)—Theses requirements may be satisfied by attaching an applicable drawing.
28" Anchor Darling Gate Valve Drawing No. 94-12086 ASTM A-351 Grade CF8.

Name of Manufacturer Anchor Darling

Address of Manufacturer (if known) N/A AEC 2/22/89

Manufacturer's component identification numbers (i.e., serial number, subassembly number, heat number). If more than one component is replaced, attach weld map and identify items by item number. TVA Valve Number 2-FCV-68-001, Anchor Darling Drawing 94-12086

Repair [X] Replacement/Modification [ ]

Brief description of repair or replacement work performed, including conditions observed and corrective measures taken, as applicable (reference DCR, CAR, etc.; drawing may be attached with attached affected area circled).
CAQR # BFP-880970 - Repair Linear indication in weld on support to Valve Body. Refer Dwg. 47B407-16 R0. Weld was removed by Grinding and Reweld the support to the Valve Body.

Brief description of post repair or replacement tests and examinations (if required) by instruction or procedure number. Excavation N-VT-3 and N-PT-9. Surface N-VT-3 and N-PT-9.

ANII/ANI name, employer, and business address Roosevelt Russell Jr., The Hartford Steam Boiler Inspection and Insurance Co., 1117 Perimeter Center West, Suite E-301, Atlanta, GA. 30338

Date work completed 2-22-89

Albert E. Cooke 2-22-89
Responsible Engineer Date

Retention: Period - Lifetime; Responsibility - ERCU Supervisor

2184 0685

Tennessee Valley Authority
Browns Ferry Nuclear Plant
Site Director Standard Practice

JUL 1 1 1988

Form SDSP-26
SDSP-13.3
Page 4 of 5

ASME SECTION XI SUMMARY REPORT

SHEET 59 of 259

Tennessee Valley Authority
Office of Nuclear Power, 1750 CST2-C
Browns Ferry Nuclear Plant Unit 2
P.O. Box 2000
Decatur, Alabama

Comm. Service Date 3-1-75
System 71/RCIC
TVA Class D
Workplan/MR No. 902254

Furnish the following for the repair or replacement for the as-left condition of the component (after field work is complete). Mark all blanks (indicate NA for items which do not apply).

National Board Number of repaired or replaced component. N/A

Name of the components and description (include size, capacity, material, and location)—Theses requirements may be satisfied by attaching an applicable drawing.
Replace studs on flange at strainer, suction side of RCIC pump. Stud 7/8x3¾" SA193 B7 stud.

Name of Manufacturer N/A

Address of Manufacturer (if known) N/A

Manufacturer's component identification numbers (i.e., serial number, subassembly number, heat number). If more than one component is replaced, attach weld map and identify items by item number. N/A

Repair [ ] Replacement/Modification [X]

Brief description of repair or replacement work performed, including conditions observed and corrective measures taken, as applicable (reference DCR, CAR, etc.; drawing may be attached with attached affected area circled).
Replace existing bolting, which is lacking full thread engagement, with studs having proper thread engagement

Brief description of post repair or replacement tests and examinations (if required) by instruction or procedure number. N/A

ANII/ANI name, employer, and business address The Hartford Steam Boiler Inspection and Insurance Company, Roosevelt Russell Jr. Atlanta Ga.

Date work completed 11/11/88

Michael Thomason 11/11/88
Responsible Engineer Date

Retention: Period - Lifetime; Responsibility - ERCU Supervisor

1

ASME SECTION XI SUMMARY REPORT

SHEET 60 of 259

Tennessee Valley Authority
Office of Nuclear Power, 1750 CST2-C
Browns Farry Nuclear Plant Unit 2
P.O. Box 2000
Decatur, Alabama

Comm. Service Date 1974
System (75) Core Spray
TVA Class 2
Workplan/MR No. 9065886

Furnish the following for the repair or replacement for the as-left condition of the component (after field work is complete). Mark all blanks (indicate NA for items which do not apply).

National Board Number of repaired or replaced component. NA 9/7/89

Name of the components and description (include size, capacity, material, and location)--Theses requirements may be satisfied by attaching an applicable drawing.
5/8" DIA ASME SA 193 B7 STUD W/ ASME A194 2H NUT FOR BODY TO BONNET STUD.

Name of Manufacturer NA

Address of Manufacturer (if known) NA

Manufacturer's component identification numbers (i.e., serial number, subassembly number, heat number). If more than one component is replaced, attach weld map and identify items by item number. HEAT # A1 CONTRACT 82747 A (STUDS)

Repair / / Replacement/Modification ☒

Brief description of repair or replacement work performed, including conditions observed and corrective measures taken, as applicable (reference DCR, CAR, etc.; drawing may be attached with attached affected area circled).
REPLACE ONE BONNET BOLT WITH NEW STUD.

Brief description of post repair or replacement tests and examinations (if required) by instruction or procedure number. TORQUE PER MMI-51

ANII/ANI name, employer, and business address ROOSEVELT RUSSELL/BILL RICE
PERIMETER CIR, ATLANTA, GA
HARTFORD STEAM BOILER INSURANCE

Date work completed 9/6/89

Responsible Engineer 9/7/89
Date

Retention: Period - Lifetime; Responsibility - DCRM

TENNESSEE VALLEY AUTHORITY
BROWNS FERRY NUCLEAR PLANT
SITE DIRECTOR STANDARD PRACTICE

SEP 22 1989

FORM PAGE 1 OF 1
FORM SDSP-403
SDSP 13.3

FORM SDSP-403
FORM NIS-2 ATTACHMENT

SHEET 61 of 259

1. (OWNER) TENNESSEE VALLEY AUTHORITY
NUCLEAR POWER

DATE 1-14-91

2. (PLANT) BROWNS FERRY NUCLEAR PLANT
P.O. BOX 2000
DECATUR, ALABAMA

SHEET [a] 1 OF 1

3. WORK PERFORMED BY: TVA (COMPANY)
P.O. Box 2000 (ADDRESS)
Decatur, Alabama (CITY AND STATE)

TYPE CODE SYMBOL STAMP [b] N/A
AUTHORIZATION NO. [b] N/A
EXPIRATION DATE [b] N/A

4. IDENTIFICATION OF SYSTEM System 003/ Feedwater

5(A). APPLICATION CONSTRUCTION CODE USAS B31.1.0 19 67
EDITION Thru No ADDENDA N/A CODE CASE N/A

5(B). APPLICATION EDITION OF SECTION XI UTILIZED FOR REPAIRS OR REPLACEMENTS: 1980

6(A). NAME OF COMPONENT(S) AND DESCRIPTION (INCLUDE SIZE, CAPACITY, MATERIAL, AND LOCATION AS NEEDED TO AID IN IDENTIFICATION)
Pipe Support 2-47B2650-350 for System 003 RPV Sensing Line (1/2")
in U-2 Reactor Bldg. Support Elev. 602'7" at S and R/10 Line

6(B). NAME OF MANUFACTURER Tennessee Valley Authority
ADDRESS OF MANUFACTURER (IF KNOWN) P.O. Box 2000 Decatur, Alabama

6(c). MANUFACTURER'S SERIAL NUMBER N/A

6(D). NATIONAL BOARD NUMBER (IF APPLICABLE) N/A

6(E). OTHER IDENTIFICATION (SUBASSEMBLY NUMBER, HEAT NUMBER, ETC.) Old Support # R-254

6(F). YEAR BUILT N/A CODE CLASS ☒ 1 ☐ 2

6(G). REPAIRED ☒ REPLACED ☐ [c] REPLACEMENT ☐ [d]

6(H). ASME CODE STAMPED YES ☐ NO ☒

7. BRIEF DESCRIPTION OF REPAIR OR REPLACEMENT WORK PERFORMED.
Repaired Welds Between Unistrut and Angle Iron on support R-254 (2-47B2650-350)

8. TESTS CONDUCTED: HYDROSTATIC ☐ PNEUMATIC ☐
NOMINAL OPERATING PRESSURE ☐ OTHER ☐
PRESSURE N/A PSI TEST TEMPERATURE N/A F°

9. REMARKS: Welds Repaired in accordance with Work Order # 908218

( ) APPLICABLE MANUFACTURERS DATA REPORT [e] TO BE ATTACHED.

RESPONSIBLE ENGR. Jeffery W. Jones / MANE DATE 1-14-91
ORGANIZATION

ANII R. Russell Gr. DATE 1-14-91

[a] SHEET NOS. FILLED IN BY TESTING AND DIAGNOSTIC PROGRAMS BRANCH.
[b] FOR WORK PERFORMED BY CERTIFICATE HOLDER
[c] REPLACED (LIKE OR EQUIVALENT).
[d] REPLACEMENT (MODIFICATION).
[e] WHEN REQUIRED BY CONSTRUCTION CODE.

RETENTION PERIOD: LIFETIME RESPONSIBLE ORGANIZATION: NM-PROCESSES/SPECIAL PROGRAMS

TENNESSEE VALLEY AUTHORITY
BROWNS FERRY NUCLEAR PLANT
SITE DIRECTOR STANDARD PRACTICE

SEP 22 1989

FORM PAGE 1 OF 1
FORM SDSP-403
SDSP 13.3

FORM SDSP—403
FORM NIS—2 ATTACHMENT

1. (OWNER) TENNESSEE VALLEY AUTHORITY
NUCLEAR POWER

DATE 6-18-90

2. (PLANT) BROWNS FERRY NUCLEAR PLANT
P.O. BOX 2000
DECATUR, ALABAMA

SHEET [a] 62 OF 259

MR# 913239

3. WORK PERFORMED BY: TVA
COMPANY

TYPE CODE SYMBOL STAMP [b] NA

P.O. Box 2000
ADDRESS

AUTHORIZATION NO. [b] NA

Decatur AL
CITY AND STATE

EXPIRATION DATE [b] NA

4. IDENTIFICATION OF SYSTEM SYS 85 Control Rod Drive

5(A). APPLICATION CONSTRUCTION CODE ~~ASME Sec III Div 1~~ ~~19~~ ~~74~~ ~~MM 7-91~~ ANSI B31.1, 1967
EDITION ~~with MM 7-91~~ 1967 ADDENDA ~~MM 7-91~~ ~~1975~~ WINTER CODE CASE NA

5(B). APPLICATION EDITION OF SECTION XI UTILIZED FOR REPAIRS OR REPLACEMENTS: 1980

6(A). NAME OF COMPONENT(S) AND DESCRIPTION (INCLUDE SIZE, CAPACITY, MATERIAL, AND LOCATION AS NEEDED TO AID IN IDENTIFICATION)
Hyd Accumulator, Piston, O-ring, 2-HCU-85-54-39

6(B). NAME OF MANUFACTURER GE
ADDRESS OF MANUFACTURER (IF KNOWN) UNKNOWN

6(C). MANUFACTURER'S SERIAL NUMBER C0060

6(D). NATIONAL BOARD NUMBER (IF APPLICABLE) NA

6(E). OTHER IDENTIFICATION (SUBASSEMBLY NUMBER, HEAT NUMBER, ETC.)
2-HCU-85-5439

6(F). YEAR BUILT UNKNOWN CODE CLASS ☐ 1 ☒ 2

6(G). REPAIRED ☐ REPLACED ☒ [c] REPLACEMENT ☐ [d]

6(H). ASME CODE STAMPED YES ☐ NO ☒

7. BRIEF DESCRIPTION OF REPAIR OR REPLACEMENT WORK PERFORMED.
Replaced Hyd Accumulator with new one from Huntsville

8. TESTS CONDUCTED: HYDROSTATIC ☒ PNEUMATIC ☐
NOMINAL OPERATING PRESSURE ☐ OTHER ☐
PRESSURE 1125 PSI TEST TEMPERATURE > 40F°

9. REMARKS: ~~Hydro static Test performed Hose file~~
~~attached. CAQR MM 6-26-90~~ REF. W.O. 90-08938-00

( ) APPLICABLE MANUFACTURERS DATA REPORT [e] TO BE ATTACHED. M. Maynter 7-3-91
RESPONSIBLE ENGR. Ernest F. Williams Tech Spt. DATE 6/18/90
ORGANIZATION
*
ANII DATE

* REF. CAQR# CHA 890003713

[a] SHEET NOS. FILLED IN BY TESTING AND DIAGNOSTIC PROGRAMS BRANCH.
[b] FOR WORK PERFORMED BY CERTIFICATE HOLDER
[c] REPLACED (LIKE OR EQUIVALENT).
[d] REPLACEMENT (MODIFICATION).
[e] WHEN REQUIRED BY CONSTRUCTION CODE.

RETENTION PERIOD: LIFETIME RESPONSIBLE ORGANIZATION: NA—PROCESSES/SPECIAL PROGRAMS

FORM SDSP-403
FORM NIS-2 ATTACHMENT

1. (OWNER) TENNESSEE VALLEY AUTHORITY
NUCLEAR POWER

DATE 2-11-91

2. (PLANT) BROWNS FERRY NUCLEAR PLANT
P.O. BOX 2000
DECATUR, ALABAMA

SHEET [a] 63 OF 259

MR# 917831

3. WORK PERFORMED BY: TVA
COMPANY

TYPE CODE SYMBOL STAMP [b] NA

P.O. Box 2000
ADDRESS

AUTHORIZATION NO. [b] NA

DECATUR AL 35609-2000
CITY AND STATE

EXPIRATION DATE [b] NA

4. IDENTIFICATION OF SYSTEM 71 RCIC

5(A). APPLICATION CONSTRUCTION CODE ANSI B 31.1 19 67
EDITION 1967 ADDENDA WINTER CODE CASE NA

5(B). APPLICATION EDITION OF SECTION XI UTILIZED FOR REPAIRS OR REPLACEMENTS: 1980

6(A). NAME OF COMPONENT(S) AND DESCRIPTION (INCLUDE SIZE, CAPACITY, MATERIAL, AND LOCATION AS NEEDED TO AID IN IDENTIFICATION)
2-FCV-71-038, RCIC PMP TEST RETURN FLOW CONTROL VLV

6(B). NAME OF MANUFACTURER WALWORTH MFG. CO.
ADDRESS OF MANUFACTURER (IF KNOWN) NA

6(c). MANUFACTURER'S SERIAL NUMBER NA

6(D). NATIONAL BOARD NUMBER (IF APPLICABLE) NA

6(E). OTHER IDENTIFICATION (SUBASSEMBLY NUMBER, HEAT NUMBER, ETC.) NA

6(F). YEAR BUILT NA CODE CLASS ☐ 1 ☒ 2

6(G). REPAIRED ☒ REPLACED ☐ [c] REPLACEMENT ☐ [d]

6(H). ASME CODE STAMPED YES ☐ NO ☐

7. BRIEF DESCRIPTION OF REPAIR OR REPLACEMENT WORK PERFORMED.
TACK WELDED DISC NUT TO DISC ON 2-FCV-71-038

8. TESTS CONDUCTED: HYDROSTATIC ☐ NA PNEUMATIC ☐ NA
NOMINAL OPERATING PRESSURE ☐ OTHER ☐
PRESSURE _____ PSI TEST TEMPERATURE _____ F°

9. REMARKS: None

( ) APPLICABLE MANUFACTURERS DATA REPORT [e] TO BE ATTACHED.

RESPONSIBLE ENGR. Allen E Collier Mech. Maint DATE 2-11-91
ORGANIZATION

ANII B. F. Rees DATE 2-28-91

[a] SHEET NOS. FILLED IN BY TESTING AND DIAGNOSTIC PROGRAMS BRANCH.
[b] FOR WORK PERFORMED BY CERTIFICATE HOLDER
[c] REPLACED (LIKE OR EQUIVALENT).
[d] REPLACEMENT (MODIFICATION).
[e] WHEN REQUIRED BY CONSTRUCTION CODE.

RETENTION PERIOD: LIFETIME RESPONSIBLE ORGANIZATION: NM-PROCESSES/SPECIAL PROGRAMS

Tennessee Valley Authority
Browns Ferry Nuclear Plant
Site Director Standard Practice

JUL 1 1 1988

Form SDSP-26
SDSP-13.3
Page 4 of 5

ASME SECTION XI SUMMARY REPORT

SHEET 64 of 259

Tennessee Valley Authority
Office of Nuclear Power, 1750 CST2-C
Browns Ferry Nuclear Plant Unit 2
P.O. Box 2000
Decatur, Alabama

Comm. Service Date 3-1-75
System 75
TVA Class B
Workplan/MR No. 1009016

Furnish the following for the repair or replacement for the as-left condition of the component (after field work is complete). Mark all blanks (indicate NA for items which do not apply).

National Board Number of repaired or replaced component. NA

Name of the components and description (include size, capacity, material, and location)—Theses requirements may be satisfied by attaching an applicable drawing.
VALVE SEAT REPLACEMENT AND WELD BUILDUP OF WEDGE. 3" VELAN VALVE

Name of Manufacturer VELAN ENG. CO.

Address of Manufacturer (if known) PLATTSBURG, NY

Manufacturer's component identification numbers (i.e., serial number, subassembly number, heat number). If more than one component is replaced, attach weld map and identify items by item number. 3" CAST STEEL GATE VALVE, VENDOR DRAWING # P-34538. TVA CT# 66C60-90744, FIG.# B10-164B-2TS

Repair /X/ Replacement/Modification / /

Brief description of repair or replacement work performed, including conditions observed and corrective measures taken, as applicable (reference DCR, CAR, etc.; drawing may be attached with attached affected area circled).
WELD BUILDUP OF WEDGE AND SEAT REPLACEMENT

Brief description of post repair or replacement tests and examinations (if required) by instruction or procedure number. PER SDSP 13.1

ANII/ANI name, employer, and business address HARTFORD STEAM BOILER INSPECTION AND INSURANCE CO., ATLANTA, GA.

Date work completed 7/10/89

Rudy Didlake 7/13/89
Responsible Engineer Date

Retention: Period - Lifetime; Responsibility - ERCU Supervisor

TENNESSEE VALLEY AUTHORITY
BROWNS FERRY NUCLEAR PLANT
SITE DIRECTOR STANDARD PRACTICE

SEP 22 1989

FORM SDSP-403
SDSP 13.3

FORM SDSP-403
FORM NIS-2 ATTACHMENT

MRA 8009020

1. (OWNER) TENNESSEE VALLEY AUTHORITY
NUCLEAR POWER
DATE 1-23-91

2. (PLANT) BROWNS FERRY NUCLEAR PLANT
P.O. BOX 2000
DECATUR, ALABAMA
SHEET [a] 65 OF 259
W.O. # 891009020

3. WORK PERFORMED BY: TVA (COMPANY)
P.O. Box 2000 (ADDRESS)
Decatur, AL. (CITY AND STATE)
TYPE CODE SYMBOL STAMP [b]
AUTHORIZATION NO. [b]
EXPIRATION DATE [b]

4. IDENTIFICATION OF SYSTEM Main Steam (01)

5(A). APPLICATION CONSTRUCTION CODE ANSI B31.1 19 67
EDITION 1967 ADDENDA Winter CODE CASE N/A

5(B). APPLICATION EDITION OF SECTION XI UTILIZED FOR REPAIRS OR REPLACEMENTS: 1980

6(A). NAME OF COMPONENT(S) AND DESCRIPTION (INCLUDE SIZE, CAPACITY, MATERIAL, AND LOCATION AS NEEDED TO AID IN IDENTIFICATION)
4" Crane Gate Valve, Rating 900 psig, Pressure Seal, Vendor DWG. PB 140116.

6(B). NAME OF MANUFACTURER Crane Co.
ADDRESS OF MANUFACTURER (IF KNOWN) 203 Hampshire ST., Indian Orchard, MA

6(C). MANUFACTURER'S SERIAL NUMBER N/A

6(D). NATIONAL BOARD NUMBER (IF APPLICABLE) N/A

6(E). OTHER IDENTIFICATION (SUBASSEMBLY NUMBER, HEAT NUMBER, ETC.) 4" Crane Gate Valve, TVA UNID 2-FCU-01-146

6(F). YEAR BUILT 1968 CODE CLASS ☐ 1 ☑ 2

6(G). REPAIRED ☑ REPLACED ☐ [c] REPLACEMENT ☐ [d]

6(H). ASME CODE STAMPED YES ☐ NO ☑

7. BRIEF DESCRIPTION OF REPAIR OR REPLACEMENT WORK PERFORMED.
Tack Weld the Back Seat To Bonnet And Machine off Stellite hard facing. RE Weld Hard facing (Stellite 21) on DWX.

8. TESTS CONDUCTED: HYDROSTATIC ☐ PNEUMATIC ☐
NOMINAL OPERATING PRESSURE ☐ OTHER ☐
PRESSURE _____ PSI TEST TEMPERATURE _____ F°

9. REMARKS: None

( ) APPLICABLE MANUFACTURERS DATA REPORT [e] TO BE ATTACHED.
RESPONSIBLE ENGR. Robert E. Cole / Mech. Maint ORGANIZATION DATE 1-23-91
ANII Rossmont Russell Jr. DATE 1-25-91

[a] SHEET NOS. FILLED IN BY TESTING AND DIAGNOSTIC PROGRAMS BRANCH.
[b] FOR WORK PERFORMED BY CERTIFICATE HOLDER
[c] REPLACED (LIKE OR EQUIVALENT).
[d] REPLACEMENT (MODIFICATION).
[e] WHEN REQUIRED BY CONSTRUCTION CODE.

RETENTION PERIOD: LIFETIME RESPONSIBLE ORGANIZATION: NM-PROCESSES/SPECIAL PROGRAMS

TENNESSEE VALLEY AUTHORITY
BROWNS FERRY NUCLEAR PLANT
SITE DIRECTOR STANDARD PRACTICE

SEP 22 1999

FORM PAGE 1 OF 1
FORM SDSP-403
SDSP 13.3

FORM SDSP-403
FORM NIS-2 ATTACHMENT

1. (OWNER) TENNESSEE VALLEY AUTHORITY
NUCLEAR POWER

DATE 6-20-90

2. (PLANT) BROWNS FERRY NUCLEAR PLANT
P.O. BOX 2000
DECATUR, ALABAMA

SHEET [a] 66 OF 259

MR# 1009914

3. WORK PERFORMED BY: TVA
COMPANY

TYPE CODE SYMBOL STAMP [b] NA

P.O. Box 2000
ADDRESS

AUTHORIZATION NO. [b] NA

Decatur Al.
CITY AND STATE

EXPIRATION DATE [b] NA

4. IDENTIFICATION OF SYSTEM SYS 85 Control Rod Drive

5(A). APPLICATION CONSTRUCTION CODE ~~ASME SECTION III DIV 1 19 74 S-3-91~~ ANSI B31.1, 1967
EDITION ~~WITH 7-3-91~~ 1967 ADDENDA ~~S-MMOS~~ WINTER CODE CASE NA

5(B). APPLICATION EDITION OF SECTION XI UTILIZED FOR REPAIRS OR REPLACEMENTS: 1980

6(A). NAME OF COMPONENT(S) AND DESCRIPTION (INCLUDE SIZE, CAPACITY, MATERIAL, AND LOCATION AS NEEDED TO AID IN IDENTIFICATION)
H20 Accumulator Piston O-rings, 2-HCU-85-50-23

6(B). NAME OF MANUFACTURER GE
ADDRESS OF MANUFACTURER (IF KNOWN) UNKNOWN

6(C). MANUFACTURER'S SERIAL NUMBER 50158

6(D). NATIONAL BOARD NUMBER (IF APPLICABLE) NA

6(E). OTHER IDENTIFICATION (SUBASSEMBLY NUMBER, HEAT NUMBER, ETC.)
2-HCU-85-5023

6(F). YEAR BUILT 1978 CODE CLASS ☐ 1 ☒ 2

6(G). REPAIRED ☐ REPLACED ☒ [c] REPLACEMENT ☐ [d]

6(H). ASME CODE STAMPED YES ☐ NO ☒

7. BRIEF DESCRIPTION OF REPAIR OR REPLACEMENT WORK PERFORMED.
Replaced H20 Accumulator

8. TESTS CONDUCTED: HYDROSTATIC ☒ PNEUMATIC ☐
NOMINAL OPERATING PRESSURE ☐ OTHER ☐
PRESSURE 1525 PSI TEST TEMPERATURE > 40F°

9. REMARKS: ~~Hydro Static Test performed Nov. 88~~
~~MRM 6-26-90~~ REF. W.O. 90-08938-00

( ) APPLICABLE MANUFACTURERS DATA REPORTS [e] TO BE ATTACHED

RESPONSIBLE ENGR. M. Martin 7-3-91 DATE 6/20/90
ORGANIZATION

ANII DATE

* REF CAQR# CHA890003713

[a] SHEET NOS. FILLED IN BY TESTING AND DIAGNOSTIC PROGRAMS BRANCH.
[b] FOR WORK PERFORMED BY CERTIFICATE HOLDER
[c] REPLACED (LIKE OR EQUIVALENT).
[d] REPLACEMENT (MODIFICATION).
[e] WHEN REQUIRED BY CONSTRUCTION CODE.

RETENTION PERIOD: LIFETIME RESPONSIBLE ORGANIZATION: NM-PROCESSES/SPECIAL PROGRAMS

ASME SECTION XI SUMMARY REPORT

SHEET 67 of 259

Tennessee Valley Authority
Office of Nuclear Power, 1750 CST2-C
Browns Ferry Nuclear Plant Unit 2
P.O. Box 2000
Decatur, Alabama

Comm. Service Date 3/1/75
System 85-CRD
TVA Class
Workplan/MR No. A-101136

Furnish the following for the repair or replacement for the as-left condition of the component (after field work is complete). Mark all blanks (indicate NA for items which do not apply).

National Board Number of repaired or replaced component. NA

Name of the components and description (include size, capacity, material, and location)—Theses requirements may be satisfied by attaching an applicable drawing.
WATER ACCUMULATOR FOR GE HCU

Name of Manufacturer General Electric

Address of Manufacturer (if known) unknown

Manufacturer's component identification numbers (i.e., serial number, subassembly number, heat number). If more than one component is replaced, attach weld map and identify items by item number.
S/N-C0192

Repair / / Replacement/Modification /X/

Brief description of repair or replacement work performed, including conditions observed and corrective measures taken, as applicable (reference DCR, CAR, etc.; drawing may be attached with attached affected area circled).
REPLACED WATER ACCUMULATOR OF CRD HCU MODULE.

Brief description of post repair or replacement tests and examinations (if required) by instruction or procedure number. PER MMT-28

ANII/ANI name, employer, and business address ROOSEVELT RUSSELL / BILL RICE
HARTFORD STEAM BOILER INSURANCE CO.
1117 PERIMETER CENTER WEST SUITE E-301, ATLANTA, GA 30338

Date work completed 9-3-89

Randall Webb 9-7-89
Responsible Engineer Date

Retention: Period - Lifetime; Responsibility - ERCU Supervisor

TENNESSEE VALLEY AUTHORITY
BROWNS FERRY NUCLEAR PLANT
SITE DIRECTOR STANDARD PRACTICE

SEP 22 1989

FORM PAGE 1 OF 1
FORM SDSP-403
SDSP 13.3

FORM SDSP-403
FORM NIS-2 ATTACHMENT

W.O. 89-07201-41

1. (OWNER) TENNESSEE VALLEY AUTHORITY
NUCLEAR POWER

DATE 9-23-90

2. (PLANT) BROWNS FERRY NUCLEAR PLANT
P.O. BOX 2000
DECATUR, ALABAMA

SHEET [a] 68 OF 259

3. WORK PERFORMED BY: TVA (COMPANY)
P.O. BOX 2000 (ADDRESS)
DECATUR, ALABAMA (CITY AND STATE)

TYPE CODE SYMBOL STAMP [b] N/A
AUTHORIZATION NO: [b] N/A
EXPIRATION DATE [b] N/A

4. IDENTIFICATION OF SYSTEM SYSTEM 068 - RECIRC.

5(A). APPLICATION CONSTRUCTION CODE USAS B31.1.0 19 67
EDITION THRU ADDENDA N/A CODE CASE N/A

5(B). APPLICATION EDITION OF SECTION XI UTILIZED FOR REPAIRS OR REPLACEMENTS: 1980

6(A). NAME OF COMPONENT(S) AND DESCRIPTION (INCLUDE SIZE, CAPACITY, MATERIAL, AND LOCATION AS NEEDED TO AID IN IDENTIFICATION)
P/S 4782408-41 ~~PIS 2-478408-50079~~ FOR 22" RECIRC. LINE REACTOR BLDG. UNIT 2
EL. 580'-9" R11 & (R) LINE

6(B). NAME OF MANUFACTURER TENNESSEE VALLEY AUTHORITY
ADDRESS OF MANUFACTURER (IF KNOWN) P.O. BOX 2000, DECATUR, ALABAMA

6(C). MANUFACTURER'S SERIAL NUMBER N/A

6(D). NATIONAL BOARD NUMBER (IF APPLICABLE) N/A

6(E). OTHER IDENTIFICATION (SUBASSEMBLY NUMBER, HEAT NUMBER, ETC.) N/A

6(F). YEAR BUILT N/A CODE CLASS ☒ 1 ☐ 2

6(G). REPAIRED ☐ REPLACED ☐ [c] REPLACEMENT ☒ [d]

6(H). ASME CODE STAMPED YES ☐ NO ☒

7. BRIEF DESCRIPTION OF REPAIR OR REPLACEMENT WORK PERFORMED. 9-23-90
REPLACED SPRING CAN FOR SUPPORT # ~~2-478408-50079~~ 4782408-41

8. TESTS CONDUCTED: HYDROSTATIC ☐ PNEUMATIC ☐
NOMINAL OPERATING PRESSURE ☐ OTHER ☐
PRESSURE N/A PSI TEST TEMPERATURE N/A °F

9. REMARKS: PIPE SUPPORT PIS MODIFIED IN ACCORDANCE WITH W.O.# 89-07201-41

RESPONSIBLE ENGR. Jeffrey C. Jones / Mech. Mods. DATE 9-23-90
ORGANIZATION

ANII C.R. Ema DATE 9/23/90

[a] SHEET NOS. FILLED IN BY TESTING AND DIAGNOSTIC PROGRAMS BRANCH.
[b] FOR WORK PERFORMED BY [illegible] HOLDER
[c] REPLACED (LIKE OF EQUIVALENT).
[d] REPLACEMENT (MODIFICATION).
[e] WHEN REQUIRED BY CONSTRUCTION CODE.

RETENTION PERIOD: LIFETIME RESPONSIBLE ORGANIZATION: NU-PROCESSES/SPECIAL PROGRAMS

FORM SDSP-403
FORM NIS-2 ATTACHMENT

1. (OWNER) TENNESSEE VALLEY AUTHORITY
NUCLEAR POWER

DATE 9-19-90

2. (PLANT) BROWNS FERRY NUCLEAR PLANT
P.O. BOX 2000
DECATUR, ALABAMA

SHEET [a] 69 OF 259

W.O. 8908852-16

3. WORK PERFORMED BY: TVA (COMPANY)
P.O. Box 2000 (ADDRESS)
Decatur, Ala. (CITY AND STATE)

TYPE CODE SYMBOL STAMP [b] N/A
AUTHORIZATION NO. [b] N/A
EXPIRATION DATE [b] N/A

4. IDENTIFICATION OF SYSTEM 74/RHR

5(A). APPLICATION CONSTRUCTION CODE ANSI B31.1 19 67
EDITION 1967 ADDENDA N/A CODE CASE N/A

5(B). APPLICATION EDITION OF SECTION XI UTILIZED FOR REPAIRS OR REPLACEMENTS: 1980

6(A). NAME OF COMPONENT(S) AND DESCRIPTION (INCLUDE SIZE, CAPACITY, MATERIAL, AND LOCATION AS NEEDED TO AID IN IDENTIFICATION)
UNIT 1, R51, EL. 535, R8&T, SW CORNER Room, 2-HGR-074-R51-IA

6(B). NAME OF MANUFACTURER UNKNOWN
ADDRESS OF MANUFACTURER (IF KNOWN) UNKNOWN

6(C). MANUFACTURER'S SERIAL NUMBER UNKNOWN

6(D). NATIONAL BOARD NUMBER (IF APPLICABLE) UNKNOWN

6(E). OTHER IDENTIFICATION (SUBASSEMBLY NUMBER, HEAT NUMBER, ETC.) N/A

6(F). YEAR BUILT N/A CODE CLASS ☐ 1 ☒ 2

6(G). REPAIRED ☒ REPLACED ☐ [c] REPLACEMENT ☐ [d]

6(H). ASME CODE STAMPED YES ☐ NO ☒

7. BRIEF DESCRIPTION OF REPAIR OR REPLACEMENT WORK PERFORMED.
REMOVED LINEAR INDICATION ON SNUBBER INTEGRAL ATTACHMENT BY GRINDING

8. TESTS CONDUCTED: HYDROSTATIC ☐ PNEUMATIC ☐
NOMINAL OPERATING PRESSURE ☐ OTHER ☐
PRESSURE N/A PSI TEST TEMPERATURE N/A F[e]

9. REMARKS:

( ) APPLICABLE MANUFACTURERS DATA REPORT [e] TO BE ATTACHED.

RESPONSIBLE ENGR. Jimmy E. Riker / Tech. Support DATE 9-19-90
ORGANIZATION

ANII R. Russell Jr. DATE 9-20-90

[a] SHEET NOS. FILLED IN BY TESTING AND DIAGNOSTIC PROGRAMS BRANCH.
[b] FOR WORK PERFORMED BY CERTIFICATE HOLDER
[c] REPLACED (LIKE OR EQUIVALENT).
[d] REPLACEMENT (MODIFICATION).
[e] WHEN REQUIRED BY CONSTRUCTION CODE.

RETENTION PERIOD: LIFETIME RESPONSIBLE ORGANIZATION: NM-PROCESSES/SPECIAL PROGRAMS

TENNESSEE VALLEY AUTHORITY
BROWNS FERRY NUCLEAR PLANT
SITE DIRECTOR STANDARD PRACTICE

SEP 22 1989

FORM SDSP-403
SDSP 13.3

FORM SDSP-403
FORM NIS-2 ATTACHMENT

1. (OWNER) TENNESSEE VALLEY AUTHORITY
NUCLEAR POWER

DATE 1-23-91

2. (PLANT) BROWNS FERRY NUCLEAR PLANT
P.O. BOX 2000
DECATUR, ALABAMA

SHEET [a] 70 OF 259

W.O. # 891009020

3. WORK PERFORMED BY: TVA
COMPANY

TYPE CODE SYMBOL STAMP [b]

P.O. Box 2000
ADDRESS

AUTHORIZATION NO. [b]

Decatur, AL.
CITY AND STATE

EXPIRATION DATE [b]

4. IDENTIFICATION OF SYSTEM Main Steam (01)

5(A). APPLICATION CONSTRUCTION CODE ANSI B31.1 19 67
EDITION 1967 ADDENDA Winter CODE CASE N/A

5(B). APPLICATION EDITION OF SECTION XI UTILIZED FOR REPAIRS OR REPLACEMENTS: 1980

6(A). NAME OF COMPONENT(S) AND DESCRIPTION (INCLUDE SIZE, CAPACITY, MATERIAL, AND LOCATION AS NEEDED TO AID IN IDENTIFICATION)
4" Crane Gate Valve, Rating 900 psig, Pressure Seal, Vendor DWG. PB 140116.

6(B). NAME OF MANUFACTURER Crane Co.
ADDRESS OF MANUFACTURER (IF KNOWN) 203 Hampshire ST., Indian Orchard, MA

6(c). MANUFACTURER'S SERIAL NUMBER N/A

6(D). NATIONAL BOARD NUMBER (IF APPLICABLE) N/A

6(E). OTHER IDENTIFICATION (SUBASSEMBLY NUMBER, HEAT NUMBER, ETC.) 4" Crane Gate Valve, TVA UNID 2-FCV-01-146

6(F). YEAR BUILT 1968 CODE CLASS ☐ 1 ☑ 2

6(G). REPAIRED ☑ REPLACED ☐ [c] REPLACEMENT ☐ [d]

6(H). ASME CODE STAMPED YES ☐ NO ☑

7. BRIEF DESCRIPTION OF REPAIR OR REPLACEMENT WORK PERFORMED.
Tack Weld the Back Seat To Bonnet And Machine off Stellite hard facing. RE Weld Hard facing (Stellite 21) on Disk.

8. TESTS CONDUCTED: HYDROSTATIC ☐ PNEUMATIC ☐
NOMINAL OPERATING PRESSURE ☐ OTHER ☐
PRESSURE _____ PSI TEST TEMPERATURE _____ F°

9. REMARKS: None

( ) APPLICABLE MANUFACTURERS DATA REPORT [e] TO BE ATTACHED.

RESPONSIBLE ENGR. Robert E Coke / Mech. Maint DATE 1-23-91
ORGANIZATION

ANII Rossmont Russell Jr. DATE 1-25-91

[a] SHEET NOS. FILLED IN BY TESTING AND DIAGNOSTIC PROGRAMS BRANCH.
[b] FOR WORK PERFORMED BY CERTIFICATE HOLDER
[c] REPLACED (LIKE OR EQUIVALENT).
[d] REPLACEMENT (MODIFICATION).
[e] WHEN REQUIRED BY CONSTRUCTION CODE.

RETENTION PERIOD: LIFETIME RESPONSIBLE ORGANIZATION: NM-PROCESSES/SPECIAL PROGRAMS

TENNESSEE VALLEY AUTHORITY
BROWNS FERRY NUCLEAR PLANT
SITE DIRECTOR STANDARD PRACTICE

SEP 22 1989

11 of 25

FORM SDSP-403
FORM NIS-2 ATTACHMENT

SHEET 71 OF 259

1. (OWNER) TENNESSEE VALLEY AUTHORITY
NUCLEAR POWER — DATE 6-15-90

2. (PLANT) BROWNS FERRY NUCLEAR PLANT
P.O. BOX 2000
DECATUR, ALABAMA — SHEET [a] 1 OF 1
W.O. 89-10165-05

3. WORK PERFORMED BY: TVA (COMPANY) — TYPE CODE SYMBOL STAMP [b] N/A
P.O. BOX 2000 (ADDRESS) — AUTHORIZATION NO. [b] N/A
DECATUR, ALABAMA (CITY AND STATE) — EXPIRATION DATE [b] N/A

4. IDENTIFICATION OF SYSTEM SYSTEM 071- RCIC

5(A). APPLICATION CONSTRUCTION CODE USAS B31.1 19 67
EDITION _____ ADDENDA _____ CODE CASE N/A

5(B). APPLICATION EDITION OF SECTION XI UTILIZED FOR REPAIRS OR REPLACEMENTS: 1980

6(A). NAME OF COMPONENT(S) AND DESCRIPTION (INCLUDE SIZE, CAPACITY, MATERIAL, AND LOCATION AS NEEDED TO AID IN IDENTIFICATION)
PIPE HANGER 2-RCIC-2-H-05 SUPPORT ROD, 5/8" ASTM A36. ON 6" RCIC CODE CLASS 2 PIPE

6(B). NAME OF MANUFACTURER TENNESSEE VALLEY AUTH.
ADDRESS OF MANUFACTURER (IF KNOWN) P.O. BOX 2000, DECATUR, ALABAMA

6(c). MANUFACTURER'S SERIAL NUMBER N/A

6(D). NATIONAL BOARD NUMBER (IF APPLICABLE) N/A

6(E). OTHER IDENTIFICATION (SUBASSEMBLY NUMBER, HEAT NUMBER, ETC.) _____

6(F). YEAR BUILT N/A — CODE CLASS ☐ 1 ☒ 2

6(G). REPAIRED ☐ — REPLACED ☐ [c] — REPLACEMENT ☒ [d]

6(H). ASME CODE STAMPED — YES ☐ — NO ☒

7. BRIEF DESCRIPTION OF REPAIR OR REPLACEMENT WORK PERFORMED.
REPLACE BENT HGR ROD ON HGR 2-RCIC-2-H-05. WORK PERFORMED ON WO 89-10165-05

8. TESTS CONDUCTED: HYDROSTATIC ☐ — PNEUMATIC ☐
NOMINAL OPERATING PRESSURE ☐ — OTHER ☐
PRESSURE N/A PSI — TEST TEMPERATURE N/A F°

9. REMARKS: Replaced HANGER SUPPORT ROD, CLASS 2 6" pipe.

( ) APPLICABLE MANUFACTURERS DATA REPORT [e] TO BE ATTACHED.

RESPONSIBLE ENGR. Jimmy E. Kilgore — DATE 7-12-90
ORGANIZATION
ANII B.F. Rein — DATE 7-12-90

[a] SHEET NOS. FILLED IN BY TESTING AND DIAGNOSTIC PROGRAMS BRANCH.
[b] FOR WORK PERFORMED BY CERTIFICATE HOLDER
[c] REPLACED (LIKE OR EQUIVALENT).
[d] REPLACEMENT (MODIFICATION).
[e] WHEN REQUIRED BY CONSTRUCTION CODE.

RETENTION PERIOD: LIFETIME — RESPONSIBLE ORGANIZATION: NM-PROCESSES/SPECIAL PROGRAMS

SEP 22 1989

FORM SDSP-403
FORM NIS-2 ATTACHMENT

1. (OWNER) TENNESSEE VALLEY AUTHORITY
NUCLEAR POWER

DATE 1-8-91

2. (PLANT) BROWNS FERRY NUCLEAR PLANT
P.O. BOX 2000
DECATUR, ALABAMA

SHEET [a] 72 OF 259

3. WORK PERFORMED BY: T.V.A. (COMPANY)
P.O. Box 2000 (ADDRESS)
Decatur, Al. (CITY AND STATE)

TYPE CODE SYMBOL STAMP [b] N/A
AUTHORIZATION NO. [b] N/A
EXPIRATION DATE [b] N/A

4. IDENTIFICATION OF SYSTEM System 003 - Feedwater

5(A). APPLICATION CONSTRUCTION CODE USAS B31.1.0 19 67
EDITION with no ADDENDA N/A CODE CASE N/A

5(B). APPLICATION EDITION OF SECTION XI UTILIZED FOR REPAIRS OR REPLACEMENTS: 1980

6(A). NAME OF COMPONENT(S) AND DESCRIPTION (INCLUDE SIZE, CAPACITY, MATERIAL, AND LOCATION AS NEEDED TO AID IN IDENTIFICATION)
P/S 2-47B2650-349 (IST Support R-253) for 1/2" RPV Line in U-2 Reactor Bldg. Elev. 604

6(B). NAME OF MANUFACTURER TVA
ADDRESS OF MANUFACTURER (IF KNOWN) P.O. Box 2000 Decatur, Al.

6(c). MANUFACTURER'S SERIAL NUMBER N/A

6(D). NATIONAL BOARD NUMBER (IF APPLICABLE) N/A

6(E). OTHER IDENTIFICATION (SUBASSEMBLY NUMBER, HEAT NUMBER, ETC.)
IST Support # R-253

6(F). YEAR BUILT N/A CODE CLASS ☒ 1 ☐ 2

6(G). REPAIRED ☒ REPLACED ☐ [c] REPLACEMENT ☐ [d]

6(H). ASME CODE STAMPED YES ☐ NO ☒

7. BRIEF DESCRIPTION OF REPAIR OR REPLACEMENT WORK PERFORMED.
Added 1/8" Fillet Weld - 4" Long to Support 2-47B2650-349 to compensate for insufficient weld size

8. TESTS CONDUCTED: HYDROSTATIC ☐ PNEUMATIC ☐
NOMINAL OPERATING PRESSURE ☐ OTHER ☐
PRESSURE N/A PSI TEST TEMPERATURE N/A F°

9. REMARKS: Pipe Support Weld Repaired in Accordance with
RJ 1-8-91 ~~Edorder~~ Work Order 908246. Ref. DCA P2048-021-000

( ) APPLICABLE MANUFACTURERS DATA REPORT [e] TO BE ATTACHED.

RESPONSIBLE ENGR. Jeffery W. Jones / MODS. DATE 1-8-91
ORGANIZATION

ANII [signature] DATE 1-8-91

[a] SHEET NOS. FILLED IN BY TESTING AND DIAGNOSTIC PROGRAMS BRANCH.
[b] FOR WORK PERFORMED BY CERTIFICATE HOLDER
[c] REPLACED (LIKE OR EQUIVALENT).
[d] REPLACEMENT (MODIFICATION).
[e] WHEN REQUIRED BY CONSTRUCTION CODE.

RETENTION PERIOD: LIFETIME RESPONSIBLE ORGANIZATION: NM-PROCESSES/SPECIAL PROGRAMS

Pg. 32 of 42

TENNESSEE VALLEY AUTHORITY
BROWNS FERRY NUCLEAR PLANT
SITE DIRECTOR STANDARD PRACTICE

SEP 22 1989

FORM PAGE 1 OF 1
FORM SDSP-403
SDSP 13.3

FORM SDSP-403
FORM NIS-2 ATTACHMENT

1. (OWNER) TENNESSEE VALLEY AUTHORITY
NUCLEAR POWER

DATE 9/13/90

2. (PLANT) BROWNS FERRY NUCLEAR PLANT
P.O. BOX 2000
DECATUR, ALABAMA

SHEET [a] 73 OF 259

WO # 900060400

3. WORK PERFORMED BY: TVA
COMPANY

TYPE CODE SYMBOL STAMP [b] N/A

P.O. BOX 2000
ADDRESS

AUTHORIZATION NO. [b] N/A

DECATUR AL
CITY AND STATE

EXPIRATION DATE [b] N/A

4. IDENTIFICATION OF SYSTEM SYSTEM 063 - SLC

5(A). APPLICATION CONSTRUCTION CODE USAS B31.1 19 67
EDITION _____ ADDENDA _____ CODE CASE N/A

5(B). APPLICATION EDITION OF SECTION XI UTILIZED FOR REPAIRS OR REPLACEMENTS: 1980

6(A). NAME OF COMPONENT(S) AND DESCRIPTION (INCLUDE SIZE, CAPACITY, MATERIAL, AND LOCATION AS NEEDED TO AID IN IDENTIFICATION)
2-FCV-63-0028A (SLC SQUIB VLV)

6(B). NAME OF MANUFACTURER CONAX CORP
ADDRESS OF MANUFACTURER (IF KNOWN) BUFFALO NY

6(c). MANUFACTURER'S SERIAL NUMBER N/A

6(D). NATIONAL BOARD NUMBER (IF APPLICABLE) N/A

6(E). OTHER IDENTIFICATION (SUBASSEMBLY NUMBER, HEAT NUMBER, ETC.) VALVE BODY HEAT # 63206

6(F). YEAR BUILT _____ CODE CLASS ☐ 1 ☒ 2

6(G). REPAIRED ☐ REPLACED ☒ [c] REPLACEMENT ☐ [d]

6(H). ASME CODE STAMPED YES ☐ NO ☒

7. BRIEF DESCRIPTION OF REPAIR OR REPLACEMENT WORK PERFORMED.
CHANGE OUT TRIGGER ASSM. ON 2-FCV-63-0028A (SLC SQUIB VALVES) PER WO # 90-00604-00 (PER ECN-2-063-VLV001) AFTER CHARGE HAS BEEN FIRED.

8. TESTS CONDUCTED: HYDROSTATIC ☐ PNEUMATIC ☐
NOMINAL OPERATING PRESSURE ☐ OTHER ☐
PRESSURE N/A PSI TEST TEMPERATURE N/A F°

9. REMARKS: 2-SI-4.4.A.3 REQUIRES FUNCTIONAL TESTING OF SQUIB VALVES W/OC. TRIGGER ASSM S/N 520 (NEW)

( ) APPLICABLE MANUFACTURERS DATA REPORT [e] TO BE ATTACHED.

RESPONSIBLE ENGR. RANDY WINICK / pm/VLV DATE 9/13/90
ORGANIZATION

ANII C. K. Russell DATE 9-15-90

[a] SHEET NOS. FILLED IN BY TESTING AND DIAGNOSTIC PROGRAMS BRANCH.
[b] FOR WORK PERFORMED BY CERTIFICATE HOLDER
[c] REPLACED (LIKE OR EQUIVALENT).
[d] REPLACEMENT (MODIFICATION).
[e] WHEN REQUIRED BY CONSTRUCTION CODE.

RETENTION PERIOD: LIFETIME RESPONSIBLE ORGANIZATION: NM-PROCESSES/SPECIAL PROGRAMS

TENNESSEE VALLEY AUTHORITY
BROWNS FERRY NUCLEAR PLANT
SITE DIRECTOR STANDARD PRACTICE

SEP 22 1989

FORM SDSP-403
SDSP 13.3

FORM SDSP-403
FORM NIS-2 ATTACHMENT

1. (OWNER) TENNESSEE VALLEY AUTHORITY
NUCLEAR POWER

DATE 11-6-90

2. (PLANT) BROWNS FERRY NUCLEAR PLANT
P.O. BOX 2000
DECATUR, ALABAMA

SHEET [a] 74 OF 259
W.O. # 90-06546-00

3. WORK PERFORMED BY: TVA - BFNP (COMPANY)
P.O. BOX 2000 (ADDRESS)
DECATUR, AL 35609-2000 (CITY AND STATE)

TYPE CODE SYMBOL STAMP [b]
AUTHORIZATION NO. [b]
EXPIRATION DATE [b]

4. IDENTIFICATION OF SYSTEM #74 - RESIDUAL HEAT REMOVAL (RHR)

5(A). APPLICATION CONSTRUCTION CODE USAS B31.1.0 19 67
EDITION 1967 ADDENDA Winter 1968 CODE CASE N/A

5(B). APPLICATION EDITION OF SECTION XI UTILIZED FOR REPAIRS OR REPLACEMENTS: 1980

6(A). NAME OF COMPONENT(S) AND DESCRIPTION (INCLUDE SIZE, CAPACITY, MATERIAL, AND LOCATION AS NEEDED TO AID IN IDENTIFICATION)
BFN-2-FCV-074-0066

6(B). NAME OF MANUFACTURER WALWORTH MFG. CO.
ADDRESS OF MANUFACTURER (IF KNOWN) NA

6(c). MANUFACTURER'S SERIAL NUMBER NA

6(D). NATIONAL BOARD NUMBER (IF APPLICABLE) NA

6(E). OTHER IDENTIFICATION (SUBASSEMBLY NUMBER, HEAT NUMBER, ETC.) 24" GLOBE, MODEL 5297-PS, DWG # A-12337-M-1-E

6(F). YEAR BUILT 1968 CODE CLASS ☐ 1 ☒ 2

6(G). REPAIRED ☒ REPLACED ☐ [c] REPLACEMENT ☐ [d]

6(H). ASME CODE STAMPED YES ☐ NO ☒

7. BRIEF DESCRIPTION OF REPAIR OR REPLACEMENT WORK PERFORMED.
MADE WELD REPAIRS TO INSIDE OF VALVE Body NEAR SEATS, WELD Build-up OF ERODED AREAS OF Body.

8. TESTS CONDUCTED: HYDROSTATIC ☒ PNEUMATIC ☐
NOMINAL OPERATING PRESSURE ☐ OTHER ☐
PRESSURE 1660 PSI TEST TEMPERATURE 77 F°

9. REMARKS: 2-SI-3.3.8.C.4

( ) APPLICABLE MANUFACTURERS DATA REPORT [e] TO BE ATTACHED.

RESPONSIBLE ENGR. [signature] ORGANIZATION Fs/Mech. Maint DATE 11-6-90

ANII [signature] DATE 11-7-90

[a] SHEET NOS. FILLED IN BY TESTING AND DIAGNOSTIC PROGRAMS BRANCH.
[b] FOR WORK PERFORMED BY CERTIFICATE HOLDER
[c] REPLACED (LIKE OR EQUIVALENT).
[d] REPLACEMENT (MODIFICATION).
[e] WHEN REQUIRED BY CONSTRUCTION CODE.

RETENTION PERIOD: LIFETIME RESPONSIBLE ORGANIZATION: NM-PROCESS/SPECIAL PROGRAMS

TENNESSEE VALLEY AUTHORITY
BROWNS FERRY NUCLEAR PLANT
SITE DIRECTOR STANDARD PRACTICE

SEP 22 1989

FORM PAGE 1 OF 1
FORM SDSP-403
SDSP 13.3

FORM SDSP-403
FORM NIS-2 ATTACHMENT

1. (OWNER) TENNESSEE VALLEY AUTHORITY
NUCLEAR POWER

DATE 11-13-90

2. (PLANT) BROWNS FERRY NUCLEAR PLANT
P.O. BOX 2000
DECATUR, ALABAMA

SHEET [a] 75 OF 259

W.O.# 90-07046-01

3. WORK PERFORMED BY: TVA
COMPANY

TYPE CODE SYMBOL STAMP [b] N/A

P.O. BOX 2000
ADDRESS

AUTHORIZATION NO. [b] N/A

DECATUR, ALABAMA
CITY AND STATE

EXPIRATION DATE [b] N/A

4. IDENTIFICATION OF SYSTEM SYSTEM 74 - RHR

5(A). APPLICATION CONSTRUCTION CODE USAS B31.1.0 19 67
EDITION THRU ADDENDA N/A CODE CASE N/A

5(B). APPLICATION EDITION OF SECTION XI UTILIZED FOR REPAIRS OR REPLACEMENTS: 1980

6(A). NAME OF COMPONENT(S) AND DESCRIPTION (INCLUDE SIZE, CAPACITY, MATERIAL, AND LOCATION AS NEEDED TO AID IN IDENTIFICATION)
2-FCV-74-52 - 24" WALWORTH VALVE, A216-GRWCB,
U-2 - REACTOR BLDG, EL. 575 CLEAN ROOM

6(B). NAME OF MANUFACTURER WALWORTH
ADDRESS OF MANUFACTURER (IF KNOWN) VALLEY FORGE, PA.

6(c). MANUFACTURER'S SERIAL NUMBER MODEL # 5297PS

6(D). NATIONAL BOARD NUMBER (IF APPLICABLE) N/A

6(E). OTHER IDENTIFICATION (SUBASSEMBLY NUMBER, HEAT NUMBER, ETC.)
MODEL# 5297PS 2-FCV-74-52

6(F). YEAR BUILT 1964 CODE CLASS ☐ 1 ☒ 2

6(G). REPAIRED ☒ REPLACED ☐ [c] REPLACEMENT ☐ [d]

6(H). ASME CODE STAMPED YES ☐ NO ☒

7. BRIEF DESCRIPTION OF REPAIR OR REPLACEMENT WORK PERFORMED.
MAKE WELD REPAIRS OF THE INTERNAL VALVE BODY.

8. TESTS CONDUCTED: HYDROSTATIC ☒ PNEUMATIC ☐
NOMINAL OPERATING PRESSURE ☐ OTHER ☐
PRESSURE 1657.5 PSI TEST TEMPERATURE 70 F°

9. REMARKS: None

( ) APPLICABLE MANUFACTURERS DATA REPORT [e] TO BE ATTACHED.

RESPONSIBLE ENGR. Robert E. Coulter / Mech. Mgmt DATE 11-13-90
ORGANIZATION

ANII R. Russell Jr. DATE 11-14-90

[a] SHEET NOS. FILLED IN BY TESTING AND DIAGNOSTIC PROGRAMS BRANCH.
[b] FOR WORK PERFORMED BY CERTIFICATE HOLDER
[c] REPLACED (LIKE OR EQUIVALENT).
[d] REPLACEMENT (MODIFICATION).
[e] WHEN REQUIRED BY CONSTRUCTION CODE.

RETENTION PERIOD: LIFETIME RESPONSIBLE ORGANIZATION: NM-PROCESSES/SPECIAL PROGRAMS

TENNESSEE VALLEY AUTHORITY
BROWNS FERRY NUCLEAR PLANT
SITE DIRECTOR STANDARD PRACTICE

SEP 22 1989

FORM SDSP-403
SDSP 13.3

FORM SDSP-403
FORM NIS-2 ATTACHMENT

1. (OWNER) TENNESSEE VALLEY AUTHORITY
NUCLEAR POWER

DATE 6/29/90

2. (PLANT) BROWNS FERRY NUCLEAR PLANT (UNIT 2)
P.O. BOX 2000
DECATUR, ALABAMA

SHEET [a] 76 OF 259

3. WORK PERFORMED BY: TVA
COMPANY

TYPE CODE SYMBOL STAMP [b]

P.O. BOX 2000
ADDRESS

AUTHORIZATION NO. [b]

DECATUR, ALABAMA
CITY AND STATE

EXPIRATION DATE [b]

4. IDENTIFICATION OF SYSTEM SYSTEM 073 HIGH PRESSURE COOLANT INJECTION

5(A). APPLICATION CONSTRUCTION CODE USAS B.31.1 19 67
EDITION THRU ADDENDA N/A CODE CASE N/A

5(B). APPLICATION EDITION OF SECTION XI UTILIZED FOR REPAIRS OR REPLACEMENTS: 1980

6(A). NAME OF COMPONENT(S) AND DESCRIPTION (INCLUDE SIZE, CAPACITY, MATERIAL, AND LOCATION AS NEEDED TO AID IN IDENTIFICATION)
STUD, CONTINUOUS THD. 1-3/8"-6 X 10" LG, ALLOY STEEL, ASME SA 193, GR B7 - LOCATED IN VALVE 2-FCV-73-18

6(B). NAME OF MANUFACTURER CARDINAL IND.
ADDRESS OF MANUFACTURER (IF KNOWN) 3873 W DAUENDO ST. LAS VEGAS, NEVEDA

6(c). MANUFACTURER'S SERIAL NUMBER N/A

6(D). NATIONAL BOARD NUMBER (IF APPLICABLE) N/A

6(E). OTHER IDENTIFICATION (SUBASSEMBLY NUMBER, HEAT NUMBER, ETC.)
ASME SA 193 - GR B7

6(F). YEAR BUILT N/A CODE CLASS ☐ 1 ☒ 2

6(G). REPAIRED ☐ REPLACED ☒ [c] REPLACEMENT ☐ [d]

6(H). ASME CODE STAMPED YES ☐ NO ☒

7. BRIEF DESCRIPTION OF REPAIR OR REPLACEMENT WORK PERFORMED.
REPLACED ~~REPLACING~~ THE EXISTING VALVE FLANGE STUD BOLTING MATERIAL WITH LONGER STUDS PER SDCN#S-12715A
DC 6/29/90

8. TESTS CONDUCTED: HYDROSTATIC ☐ PNEUMATIC ☐
NOMINAL OPERATING PRESSURE ☐ OTHER ☐
PRESSURE _____ PSI TEST TEMPERATURE _____ F°

9. REMARKS: WO 90-09028-00

( ) APPLICABLE MANUFACTURERS DATA REPORT [e] TO BE ATTACHED.

RESPONSIBLE ENGR. [illegible] / MTS DATE 6/29/90
ORGANIZATION

ANII R. Russell [illegible] DATE 6-29-90

[a] SHEET NOS. FILLED IN BY TESTING AND DIAGNOSTIC PROGRAMS BRANCH.
[b] FOR WORK PERFORMED BY CERTIFICATE HOLDER
[c] REPLACED (LIKE OR EQUIVALENT).
[d] REPLACEMENT (MODIFICATION).
[e] WHEN REQUIRED BY CONSTRUCTION CODE.

RETENTION PERIOD: LIFETIME RESPONSIBLE ORGANIZATION: NM-PROCESSES/SPECIAL PROGRAMS

TENNESSEE VALLEY AUTHORITY
BROWNS FERRY NUCLEAR PLANT
SITE DIRECTOR STANDARD PRACTICE

SEP 22 1989

FORM SDSP-403
FORM NIS-2 ATTACHMENT

1. (OWNER) TENNESSEE VALLEY AUTHORITY
NUCLEAR POWER — DATE 6-14-91

2. (PLANT) BROWNS FERRY NUCLEAR PLANT
P.O. BOX 2000
DECATUR, ALABAMA — SHEET [a] 77 OF 259

3. WORK PERFORMED BY: TVA (COMPANY) — TYPE CODE SYMBOL STAMP [b] NA
P.O. BOX 2000 (ADDRESS) — AUTHORIZATION NO. [b] NA
DECATUR, AL 35609-2000 (CITY AND STATE) — EXPIRATION DATE [b] NA

4. IDENTIFICATION OF SYSTEM SLC - SYSTEM 63

5(A). APPLICATION CONSTRUCTION CODE ANSI B31.1 19 67
EDITION WINTER ADDENDA 1967 CODE CASE NA

5(B). APPLICATION EDITION OF SECTION XI UTILIZED FOR REPAIRS OR REPLACEMENTS: 1980

6(A). NAME OF COMPONENT(S) AND DESCRIPTION (INCLUDE SIZE, CAPACITY, MATERIAL, AND LOCATION AS NEEDED TO AID IN IDENTIFICATION)
2-FCV-063-0008A (SLC SQUIB VALVE)

6(B). NAME OF MANUFACTURER CONAX CORP.
ADDRESS OF MANUFACTURER (IF KNOWN) BUFFALO, NY

6(c). MANUFACTURER'S SERIAL NUMBER NA

6(D). NATIONAL BOARD NUMBER (IF APPLICABLE) NA

6(E). OTHER IDENTIFICATION (SUBASSEMBLY NUMBER, HEAT NUMBER, ETC.) NA

6(F). YEAR BUILT NA — CODE CLASS ☐ 1 ☒ 2

6(G). REPAIRED ☐ — REPLACED ☒ [c] — REPLACEMENT ☐ [d]

6(H). ASME CODE STAMPED YES ☐ NO ☒

7. BRIEF DESCRIPTION OF REPAIR OR REPLACEMENT WORK PERFORMED.
CHANGED OUT TRIGGER ASSEMBLY ON 2-FCV-063-0008A (SLC SQUIB VALVE) PER WO# 90-11435-00 AND ECI-0-063-VLV001

8. TESTS CONDUCTED: HYDROSTATIC ☐ — PNEUMATIC ☐
NOMINAL OPERATING PRESSURE ☐ — OTHER ☐
PRESSURE NA PSI — TEST TEMPERATURE NA F[e]

9. REMARKS: W.O. # 90-11435-00

( ) APPLICABLE MANUFACTURERS DATA REPORT [e] TO BE ATTACHED.
*RESPONSIBLE ENGR. Robert E Cooke / 6-17-91 (6-17-91 mech. engr.) DATE 6-17-91
ORGANIZATION
ANII * Rosamund Russell Jr. DATE 6-17-91

*REF PRD # BFP 910132-P

[a] SHEET NOS. FILLED IN BY TESTING AND DIAGNOSTIC PROGRAMS BRANCH.
[b] FOR WORK PERFORMED BY CERTIFICATE HOLDER
[c] REPLACED (LIKE OR EQUIVALENT).
[d] REPLACEMENT (MODIFICATION).
[e] WHEN REQUIRED BY CONSTRUCTION CODE.

RETENTION PERIOD: LIFETIME — RESPONSIBLE ORGANIZATION: NM-PROCESSES/SPECIAL PROGRAMS

TENNESSEE VALLEY AUTHORITY
BROWNS FERRY NUCLEAR PLANT
SITE DIRECTOR STANDARD PRACTICE

SEP 22 1989

FORM SDSP-403
FORM NIS-2 ATTACHMENT

1. (OWNER) TENNESSEE VALLEY AUTHORITY
NUCLEAR POWER

DATE 9-28-90

2. (PLANT) BROWNS FERRY NUCLEAR PLANT
P.O. BOX 2000
DECATUR, ALABAMA

SHEET [a] 78 OF 259

W.O. # 90-15075-02

3. WORK PERFORMED BY: TVA
COMPANY

BFNP PO Box 2000
ADDRESS

Decatur, Alabama
CITY AND STATE

TYPE CODE SYMBOL STAMP [b] N/A

AUTHORIZATION NO. [b] N/A

EXPIRATION DATE [b] N/A

4. IDENTIFICATION OF SYSTEM Reactor Building Closed Cooling Water (70)

5(A). APPLICATION CONSTRUCTION CODE ANSI B31.1 19 67
EDITION 1967 ADDENDA Winter 1968 CODE CASE N/A

5(B). APPLICATION EDITION OF SECTION XI UTILIZED FOR REPAIRS OR REPLACEMENTS: 1980

6(A). NAME OF COMPONENT(S) AND DESCRIPTION (INCLUDE SIZE, CAPACITY, MATERIAL, AND LOCATION AS NEEDED TO AID IN IDENTIFICATION)
Velan 8", 150psi Gate Valve, Carbon Steel Disc, ASTM A216 WCB With Stellite 6 Hardfacing, Top of Torus Bay 6, 541 Elev.

6(B). NAME OF MANUFACTURER Velan
ADDRESS OF MANUFACTURER (IF KNOWN) N/A

6(c). MANUFACTURER'S SERIAL NUMBER N/A

6(D). NATIONAL BOARD NUMBER (IF APPLICABLE) N/A

6(E). OTHER IDENTIFICATION (SUBASSEMBLY NUMBER, HEAT NUMBER, ETC.) Velan Model Number B15054B2TS, Drawing P-35177-2

6(F). YEAR BUILT 1966 CODE CLASS ☐ 1 ☒ 2

6(G). REPAIRED ☒ REPLACED ☐ [c] REPLACEMENT ☐ [d]

6(H). ASME CODE STAMPED YES ☐ NO ☒

7. BRIEF DESCRIPTION OF REPAIR OR REPLACEMENT WORK PERFORMED.
Removed Existing Stellite 6 Hard Facing, Weld Built up Base Metal on Disc and Re-welded the Stellite 6 Hard facing Back on.

8. TESTS CONDUCTED: HYDROSTATIC ☐ PNEUMATIC ☐
NOMINAL OPERATING PRESSURE ☐ OTHER ☐
PRESSURE _____ PSI TEST TEMPERATURE _____ F°

9. REMARKS: NONE This Work Documented in W.O. 90-15075-02

( ) APPLICABLE MANUFACTURERS DATA REPORT [e] TO BE ATTACHED.

RESPONSIBLE ENGR. Robert E. Cooke / Mech. Maint DATE 9-28-90
ORGANIZATION

ANII R. Russell DATE 10-17-90

[a] SHEET NOS. FILLED IN BY TESTING AND DIAGNOSTIC PROGRAMS BRANCH.
[b] FOR WORK PERFORMED BY CERTIFICATE HOLDER
[c] REPLACED (LIKE OR EQUIVALENT).
[d] REPLACEMENT (MODIFICATION).
[e] WHEN REQUIRED BY CONSTRUCTION CODE.

RETENTION PERIOD: LIFETIME RESPONSIBLE ORGANIZATION: NM-PROCESSES/SPECIAL PROGRAMS

FORM SDSP-403
FORM NIS-2 ATTACHMENT

1. (OWNER) TENNESSEE VALLEY AUTHORITY
NUCLEAR POWER

DATE 11-8-90

2. (PLANT) BROWNS FERRY NUCLEAR PLANT
P.O. BOX 2000
DECATUR, ALABAMA

SHEET [a] 79 OF 259

3. WORK PERFORMED BY: TVA (COMPANY)
P.O. Box 2000 (ADDRESS)
Decatur, Alabama (CITY AND STATE)

TYPE CODE SYMBOL STAMP [b] N/A
AUTHORIZATION NO. [b] N/A
EXPIRATION DATE [b] N/A

4. IDENTIFICATION OF SYSTEM 070/RBCCW

5(A). APPLICATION CONSTRUCTION CODE USAS B31.1.0 19 67
EDITION thru ADDENDA N/A CODE CASE N/A

5(B). APPLICATION EDITION OF SECTION XI UTILIZED FOR REPAIRS OR REPLACEMENTS: 1980

6(A). NAME OF COMPONENT(S) AND DESCRIPTION (INCLUDE SIZE, CAPACITY, MATERIAL, AND LOCATION AS NEEDED TO AID IN IDENTIFICATION)
REMOVE POROSITY AND REPAIR WELDS AS NECESSARY ON RBCCW PIPE AT VALVES 2-FCV-70-313 & 2FCV-70-314 WELDS #2RBCCW-004 & 008

6(B). NAME OF MANUFACTURER TENNESSEE VALLEY AUTHORITY
ADDRESS OF MANUFACTURER (IF KNOWN) P.O. Box 2000, DECATUR, ALABAMA.

6(c). MANUFACTURER'S SERIAL NUMBER N/A

6(D). NATIONAL BOARD NUMBER (IF APPLICABLE) N/A

6(E). OTHER IDENTIFICATION (SUBASSEMBLY NUMBER, HEAT NUMBER, ETC.) N/A

6(F). YEAR BUILT N/A CODE CLASS ☐ 1 ☒ 2

6(G). REPAIRED ☐ REPLACED ☐ [c] REPLACEMENT ☒ [d]

6(H). ASME CODE STAMPED YES ☐ NO ☐

7. BRIEF DESCRIPTION OF REPAIR OR REPLACEMENT WORK PERFORMED.
REMOVE POROSITY AND REPAIR WELDS AS NECESSARY
PERFORMED RT CONST. AND PSE

8. TESTS CONDUCTED: HYDROSTATIC ☐ PNEUMATIC ☐
NOMINAL OPERATING PRESSURE ☐ OTHER ☐
PRESSURE N/A PSI TEST TEMPERATURE N/A F°

9. REMARKS: PIPE WELD REMOVED AND REPAIRED PER WORK ORDER: 90-16250-00
KEECAAR # BFP900512 P.

( ) APPLICABLE MANUFACTURERS DATA REPORT [e] TO BE ATTACHED.

RESPONSIBLE ENGR. Thomas W. Barrier / MECH-PROS DATE 11-8-90
ORGANIZATION

ANII [signature] HSAI+I Co. DATE 11-10-90

[a] SHEET NOS. FILLED IN BY TESTING AND DIAGNOSTIC PROGRAMS BRANCH.
[b] FOR WORK PERFORMED BY CERTIFICATE HOLDER
[c] REPLACED (LIKE OR EQUIVALENT).
[d] REPLACEMENT (MODIFICATION).
[e] WHEN REQUIRED BY CONSTRUCTION CODE.

RETENTION PERIOD: LIFETIME RESPONSIBLE ORGANIZATION: NM-PROCESSES/SPECIAL PROGRAMS

Pg. 14823

TENNESSEE VALLEY AUTHORITY
BROWNS FERRY NUCLEAR PLANT
SITE DIRECTOR STANDARD PRACTICE

SEP 22 1989

FORM PAGE 1 OF 1
FORM SDSP-403
SDSP 13.3

FORM SDSP-403
FORM NIS-2 ATTACHMENT

1. (OWNER) TENNESSEE VALLEY AUTHORITY
NUCLEAR POWER

DATE 10-16-90

2. (PLANT) BROWNS FERRY NUCLEAR PLANT
P.O. BOX 2000
DECATUR, ALABAMA

SHEET [a] 80 OF 259

W.O. # 90-19013-00

3. WORK PERFORMED BY: T. V. A. (COMPANY)
P.O. BOX 2000 (ADDRESS)
DECATUR ALA. (CITY AND STATE)

TYPE CODE SYMBOL STAMP [b] NA
AUTHORIZATION NO. [b] NA
EXPIRATION DATE [b] NA

4. IDENTIFICATION OF SYSTEM SYSTEM - 085 CONTROL ROD DRIVE HYDRAULIC CONTROL UNIT

5(A). APPLICATION CONSTRUCTION CODE ANSI-B31.1 19 67
EDITION 1967 ADDENDA WINTER CODE CASE NA

5(B). APPLICATION EDITION OF SECTION XI UTILIZED FOR REPAIRS OR REPLACEMENTS: 1980

6(A). NAME OF COMPONENT(S) AND DESCRIPTION (INCLUDE SIZE, CAPACITY, MATERIAL, AND LOCATION AS NEEDED TO AID IN IDENTIFICATION)
HYDRAULIC WATER ACCUMULATOR FOR CONTROL ROD UNIT 2-HCU-095-SR-23.

6(B). NAME OF MANUFACTURER G.E.
ADDRESS OF MANUFACTURER (IF KNOWN) UNKNOWN

6(C). MANUFACTURER'S SERIAL NUMBER H-1-449

6(D). NATIONAL BOARD NUMBER (IF APPLICABLE) NA

6(E). OTHER IDENTIFICATION (SUBASSEMBLY NUMBER, HEAT NUMBER, ETC.) NA

6(F). YEAR BUILT 1978 CODE CLASS ☐ 1 ☒ 2

6(G). REPAIRED ☐ REPLACED ☐ [c] REPLACEMENT ☒ [d]

6(H). ASME CODE STAMPED YES ☐ NO ☒

7. BRIEF DESCRIPTION OF REPAIR OR REPLACEMENT WORK PERFORMED.
REPLACED H2O ACCUMULATOR WITH A NEW ONE FROM POWER STORES ON TMC # ARF-490H

8. TESTS CONDUCTED: HYDROSTATIC ☒ PNEUMATIC ☐
NOMINAL OPERATING PRESSURE ☒ OTHER ☐
PRESSURE 1125 PSI TEST TEMPERATURE 740 F°

9. REMARKS:

( ) APPLICABLE MANUFACTURERS DATA REPORT [e] TO BE ATTACHED. M. Martin 7-3-91

RESPONSIBLE ENGR. Robert C. Kel / MECHANICAL DATE 10-16-90
ORGANIZATION

ANII R. Russell Jr. DATE 10-17-90

[a] SHEET NOS. FILLED IN BY TESTING AND DIAGNOSTIC PROGRAMS BRANCH.
[b] FOR WORK PERFORMED BY CERTIFICATE HOLDER
[c] REPLACED (LIKE OR EQUIVALENT).
[d] REPLACEMENT (MODIFICATION).
[e] WHEN REQUIRED BY CONSTRUCTION CODE.

RETENTION PERIOD: LIFETIME RESPONSIBLE ORGANIZATION: NM-PROCESSES/SPECIAL PROGRAMS

TENNESSEE VALLEY AUTHORITY
BROWNS FERRY NUCLEAR PLANT
SITE DIRECTOR STANDARD PRACTICE

SEP 22 1989

FORM PAGE 1 OF 1
FORM SDSP-403
SDSP 13.3

FORM SDSP-403
FORM NIS-2 ATTACHMENT

SHEET 81 of 259

W.O.# 90-20213-00

1. (OWNER) TENNESSEE VALLEY AUTHORITY
NUCLEAR POWER

DATE 10/30/90

2. (PLANT) BROWNS FERRY NUCLEAR PLANT
P.O. BOX 2000
DECATUR, ALABAMA

SHEET [a] 1 OF 1

W.O.# 90-20213-00

3. WORK PERFORMED BY: T.V.A.
COMPANY

TYPE CODE SYMBOL STAMP [b] N/A

P.O. BOX 2000 DECATUR
ADDRESS

AUTHORIZATION NO. [b] N/A

DECATUR AL
CITY AND STATE

EXPIRATION DATE [b] N/A

N/A 10/30/90

4. IDENTIFICATION OF SYSTEM SYSTEM ~~68~~ 74

5(A). APPLICATION CONSTRUCTION CODE USAS B31.0 19 67
EDITION N/A ADDENDA N/A CODE CASE N/A

5(B). APPLICATION EDITION OF SECTION XI UTILIZED FOR REPAIRS OR REPLACEMENTS: 1980

6(A). NAME OF COMPONENT(S) AND DESCRIPTION (INCLUDE SIZE, CAPACITY, MATERIAL, AND LOCATION AS NEEDED TO AID IN IDENTIFICATION)
UNIT-2 RXBLDG EL-537', RHR-2-R-053

6(B). NAME OF MANUFACTURER BERGEN PATERSON
ADDRESS OF MANUFACTURER (IF KNOWN) UNKNOWN

6(c). MANUFACTURER'S SERIAL NUMBER F91517-2

6(D). NATIONAL BOARD NUMBER (IF APPLICABLE) N/A

6(E). OTHER IDENTIFICATION (SUBASSEMBLY NUMBER, HEAT NUMBER, ETC.) TVA SERIAL NUMBER M0289

6(F). YEAR BUILT N/A CODE CLASS ☐ 1 ☒ 2

6(G). REPAIRED ☐ REPLACED ☒ [c] REPLACEMENT ☐ [d]

6(H). ASME CODE STAMPED YES ☐ NO ☒

7. BRIEF DESCRIPTION OF REPAIR OR REPLACEMENT WORK PERFORMED.
REMOVE BERGEN PATERSON SNUBBER AND REPLACE WITH ANOTHER SNUBBER. SNUBBER IS HSSA-10

8. TESTS CONDUCTED: HYDROSTATIC ☐ PNEUMATIC ☐
NOMINAL OPERATING PRESSURE ☐ OTHER ☐
PRESSURE N/A PSI TEST TEMPERATURE N/A F°

9. REMARKS: THIS WORK WAS DONE PER W.O. 90-20213-00

( ) APPLICABLE MANUFACTURERS DATA REPORT [•] TO BE ATTACHED.

RESPONSIBLE ENGR. R.W. NYCOCK TECH. SUPPORT DATE 10/31/90
ORGANIZATION

ANII R. Russell R. DATE 2-7-91

[a] SHEET NOS. FILLED IN BY TESTING AND DIAGNOSTIC PROGRAMS BRANCH.
[b] FOR WORK PERFORMED BY CERTIFICATE HOLDER
[c] REPLACED (LIKE OR EQUIVALENT).
[d] REPLACEMENT (MODIFICATION).
[•] WHEN REQUIRED BY CONSTRUCTION CODE.

RETENTION PERIOD: LIFETIME RESPONSIBLE ORGANIZATION: NM-PROCESSES/SPECIAL PROGRAMS

pg. 14 of 45

TENNESSEE VALLEY AUTHORITY
BROWNS FERRY NUCLEAR PLANT
SITE DIRECTOR STANDARD PRACTICE

SEP 22 1989

FORM PAGE 1 OF 1
FORM SDSP-403
SDSP 13.3

FORM SDSP-403
FORM NIS-2 ATTACHMENT

1. (OWNER) TENNESSEE VALLEY AUTHORITY
NUCLEAR POWER
DATE 11-6-90

2. (PLANT) BROWNS FERRY NUCLEAR PLANT
P.O. BOX 2000
DECATUR, ALABAMA
SHEET [a] 82 OF 259
W.O. # 90-26270-00

3. WORK PERFORMED BY: T.V.A. (COMPANY) TYPE CODE SYMBOL STAMP [b] NA
P.O. BOX 2000 (ADDRESS) AUTHORIZATION NO. [b] NA
DECATUR AL 35609-2000 (CITY AND STATE) EXPIRATION DATE [b] NA

4. IDENTIFICATION OF SYSTEM 85 - CONTROL ROD DRIVE

5(A). APPLICATION CONSTRUCTION CODE ANSI B31.1 19 67
EDITION NA 1967 ADDENDA WINTER CODE CASE NA

5(B). APPLICATION EDITION OF SECTION XI UTILIZED FOR REPAIRS OR REPLACEMENTS: 1980

6(A). NAME OF COMPONENT(S) AND DESCRIPTION (INCLUDE SIZE, CAPACITY, MATERIAL, AND LOCATION AS NEEDED TO AID IN IDENTIFICATION)
HYDRAULIC WATER ACCUMULATOR FOR CONTROL
SCHEDULE # BFN-2-HCU-085-02-39

6(B). NAME OF MANUFACTURER G.E.
ADDRESS OF MANUFACTURER (IF KNOWN) UNKNOWN

6(c). MANUFACTURER'S SERIAL NUMBER A1677

6(D). NATIONAL BOARD NUMBER (IF APPLICABLE) N/A

6(E). OTHER IDENTIFICATION (SUBASSEMBLY NUMBER, HEAT NUMBER, ETC.) N/A

6(F). YEAR BUILT 1978 CODE CLASS ☐ 1 ☒ 2

6(G). REPAIRED ☐ REPLACED ☒ [c] REPLACEMENT ☐ [d]

6(H). ASME CODE STAMPED YES ☐ NO ☒

7. BRIEF DESCRIPTION OF REPAIR OR REPLACEMENT WORK PERFORMED.
REPLACED WATER ACCUMULATOR WITH A NEW ONE FROM POWER STORES. WORK INSTRUCTION # MCI-0-085-HCU001

8. TESTS CONDUCTED: HYDROSTATIC ☒ PNEUMATIC ☐
NOMINAL OPERATING PRESSURE ☒ OTHER ☐
PRESSURE 1125 PSI TEST TEMPERATURE >40 F

9. REMARKS:

( ) APPLICABLE MANUFACTURERS DATA REPORT [e] TO BE ATTACHED. M. Martin 7-3-91
RESPONSIBLE ENGR. [signature] DATE 11/6/90
ORGANIZATION
ANII [signature] DATE 11-7-90

[a] SHEET NOS. FILLED IN BY TESTING AND DIAGNOSTIC PROGRAMS BRANCH.
[b] FOR WORK PERFORMED BY CERTIFICATE HOLDER
[c] REPLACED (LIKE OR EQUIVALENT).
[d] REPLACEMENT (MODIFICATION).
[e] WHEN REQUIRED BY CONSTRUCTION CODE.

RETENTION PERIOD: LIFETIME RESPONSIBLE ORGANIZATION: NM-PROCESSES/SPECIAL PROGRAMS

TENNESSEE VALLEY AUTHORITY
BROWNS FERRY NUCLEAR PLANT
SITE DIRECTOR STANDARD PRACTICE

SEP 22 1989

FORM PAGE 1 OF 1
FORM SDSP-403
SDSP 13.3

FORM SDSP-403
FORM NIS-2 ATTACHMENT

WO. NO. 90-204466-00

SHEET 83 OF 259

1. (OWNER) TENNESSEE VALLEY AUTHORITY
NUCLEAR POWER — DATE 11-11-90

2. (PLANT) BROWNS FERRY NUCLEAR PLANT
P.O. BOX 2000
DECATUR, ALABAMA — SHEET [a] 1 OF 1

3. WORK PERFORMED BY: TVA (COMPANY) — TYPE CODE SYMBOL STAMP [b] N/A
BFNP, P.O. Box 2000 (ADDRESS) — AUTHORIZATION NO. [b] N/A
Decatur, AL 35609-2000 (CITY AND STATE) — EXPIRATION DATE [b] N/A

4. IDENTIFICATION OF SYSTEM Residual Heat Removal - SYS 74

5(A). APPLICATION CONSTRUCTION CODE USAS B31.1 19 67
EDITION ~~Winter 1967~~ WINTER ADDENDA 68 CODE CASE N/A

5(B). APPLICATION EDITION OF SECTION XI UTILIZED FOR REPAIRS OR REPLACEMENTS: 1980

6(A). NAME OF COMPONENT(S) AND DESCRIPTION (INCLUDE SIZE, CAPACITY, MATERIAL, AND LOCATION AS NEEDED TO AID IN IDENTIFICATION)
Replaced valve disk in 2-FCV-74-73 and tack welded disk locknut to disk

6(B). NAME OF MANUFACTURER Walworth Mfg. Co
ADDRESS OF MANUFACTURER (IF KNOWN)

6(c). MANUFACTURER'S SERIAL NUMBER 90744(1.3.1-1.D.4(F)

6(D). NATIONAL BOARD NUMBER (IF APPLICABLE) N/A

6(E). OTHER IDENTIFICATION (SUBASSEMBLY NUMBER, HEAT NUMBER, ETC.) ITEM #4 on vendor dwg - A-12335-M16

6(F). YEAR BUILT 1969 — CODE CLASS ☐ 1 ☒ 2

6(G). REPAIRED ☒ — REPLACED ☒ [c] — REPLACEMENT ☒ [d] RKW 11/19/90

6(H). ASME CODE STAMPED YES ☐ NO ☒

7. BRIEF DESCRIPTION OF REPAIR OR REPLACEMENT WORK PERFORMED.
Replaced valve disk and replaced tack weld on disk to disk locknut. Removed 8/11/90

8. TESTS CONDUCTED: HYDROSTATIC ☐ — PNEUMATIC ☐
NOMINAL OPERATING PRESSURE ☐ RKW 11/19/90 — OTHER ☐
PRESSURE _____ PSI — TEST TEMPERATURE _____ F°

9. REMARKS:

( ) APPLICABLE MANUFACTURERS DATA REPORTS TO BE ATTACHED.

RESPONSIBLE ENGR. [signature] / NDPIGT — DATE 11/19/90
ORGANIZATION

ANII [signature] — DATE 11-20-90

[a] SHEET NOS. FILLED IN BY TESTING AND DIAGNOSTIC PROGRAMS BRANCH.
[b] FOR WORK PERFORMED BY CERTIFICATE HOLDER
[c] REPLACED (LIKE OR EQUIVALENT).
[d] REPLACEMENT (MODIFICATION).
[e] WHEN REQUIRED BY CONSTRUCTION CODE.

RETENTION PERIOD: LIFETIME — RESPONSIBLE ORGANIZATION: NM-PROCESSES/SPECIAL PROGRAMS

TENNESSEE VALLEY AUTHORITY
BROWNS FERRY NUCLEAR PLANT
SITE DIRECTOR STANDARD PRACTICE

SEP 22 1989

FORM PAGE 1 OF 1
FORM SDSP-403
SDSP 13.3

FORM SDSP-403
FORM NIS-2 ATTACHMENT

1. (OWNER) TENNESSEE VALLEY AUTHORITY
NUCLEAR POWER

DATE 11-10-90

2. (PLANT) BROWNS FERRY NUCLEAR PLANT
P.O. BOX 2000
DECATUR, ALABAMA

SHEET [a] 84 OF 259

W.O. 90-20874-00

3. WORK PERFORMED BY: TVA
COMPANY

TYPE CODE SYMBOL STAMP [b]

P.O. Box 2000
ADDRESS

AUTHORIZATION NO. [b]

DECATUR AL.
CITY AND STATE

EXPIRATION DATE [b]

4. IDENTIFICATION OF SYSTEM 74 RESIDUAL HEAT REMOVAL

5(A). APPLICATION CONSTRUCTION CODE ANSI B31.1 19 67
EDITION 1967 ADDENDA WINTER CODE CASE NA

5(B). APPLICATION EDITION OF SECTION XI UTILIZED FOR REPAIRS OR REPLACEMENTS: 1980

6(A). NAME OF COMPONENT(S) AND DESCRIPTION (INCLUDE SIZE, CAPACITY, MATERIAL, AND LOCATION AS NEEDED TO AID IN IDENTIFICATION)
REPLACED BOLT & NUT ON RHR HANGER # H-147

6(B). NAME OF MANUFACTURER UNKNOWN
ADDRESS OF MANUFACTURER (IF KNOWN) UNKNOWN

6(c). MANUFACTURER'S SERIAL NUMBER UNKNOWN

6(D). NATIONAL BOARD NUMBER (IF APPLICABLE) NA

6(E). OTHER IDENTIFICATION (SUBASSEMBLY NUMBER, HEAT NUMBER, ETC.) NA

6(F). YEAR BUILT NA CODE CLASS ☐ 1 ☒ 2

6(G). REPAIRED ☐ REPLACED ☒ [c] REPLACEMENT ☐ [d]

6(H). ASME CODE STAMPED YES ☐ NO ☒

7. BRIEF DESCRIPTION OF REPAIR OR REPLACEMENT WORK PERFORMED.
REPLACED BOLT AND NUT ON UNIT-1 RHR HANGER # H-147.

8. TESTS CONDUCTED: HYDROSTATIC ☐ PNEUMATIC ☐
NOMINAL OPERATING PRESSURE ☐ OTHER ☐
PRESSURE _____ PSI TEST TEMPERATURE _____ F°

9. REMARKS: NO TESTING REQUIRED

( ) APPLICABLE MANUFACTURERS DATA REPORT [e] TO BE ATTACHED.

RESPONSIBLE ENGR. Albert E Cooks /Mech. MAINT DATE 11-10-90
ORGANIZATION

ANII R. Russell DATE 12-13-90

[a] SHEET NOS. FILLED IN BY TESTING AND DIAGNOSTIC PROGRAMS BRANCH.
[b] FOR WORK PERFORMED BY CERTIFICATE HOLDER
[c] REPLACED (LIKE OR EQUIVALENT).
[d] REPLACEMENT (MODIFICATION).
[e] WHEN REQUIRED BY CONSTRUCTION CODE.

RETENTION PERIOD: LIFETIME RESPONSIBLE ORGANIZATION: NM-PROCESSES/SPECIAL PROGRAMS

TENNESSEE VALLEY AUTHORITY
BROWNS FERRY NUCLEAR PLANT
SITE DIRECTOR STANDARD PRACTICE

SEP 22 1989

FORM PAGE 1 OF 1
FORM SDSP-403
SDSP 13.3

FORM SDSP-403
FORM NIS-2 ATTACHMENT

1. (OWNER) TENNESSEE VALLEY AUTHORITY
NUCLEAR POWER

DATE 12-4-90

2. (PLANT) BROWNS FERRY NUCLEAR PLANT
P.O. BOX 2000
DECATUR, ALABAMA

SHEET [a] 85 OF 259

W.O.# 90-21090-00

3. WORK PERFORMED BY: TVA
COMPANY

TYPE CODE SYMBOL STAMP [b] NA

P.O. Box 2000
ADDRESS

AUTHORIZATION NO. [b] NA

DECATUR, AL
CITY AND STATE

EXPIRATION DATE [b] NA

4. IDENTIFICATION OF SYSTEM SYS.063, STANDBY LIQUID CONTROL

5(A). APPLICATION CONSTRUCTION CODE USAS-B31.1 19 67
EDITION _____ ADDENDA _____ CODE CASE _____

5(B). APPLICATION EDITION OF SECTION XI UTILIZED FOR REPAIRS OR REPLACEMENTS: 1980

6(A). NAME OF COMPONENT(S) AND DESCRIPTION (INCLUDE SIZE, CAPACITY, MATERIAL, AND LOCATION AS NEEDED TO AID IN IDENTIFICATION)
2-FCV-063-0008A (SLC SQUIB VALVE)

6(B). NAME OF MANUFACTURER CONAX CORP
ADDRESS OF MANUFACTURER (IF KNOWN) BUFFALO, NY

6(c). MANUFACTURER'S SERIAL NUMBER 075 (PART SERIAL #)

6(D). NATIONAL BOARD NUMBER (IF APPLICABLE) NA

6(E). OTHER IDENTIFICATION (SUBASSEMBLY NUMBER, HEAT NUMBER, ETC.)
MFG. ASS. # A4Q86

6(F). YEAR BUILT _____ CODE CLASS ☐ 1 ☒ 2

6(G). REPAIRED ☐ REPLACED ☒ [c] REPLACEMENT ☐ [d]

6(H). ASME CODE STAMPED YES ☐ NO ☒

7. BRIEF DESCRIPTION OF REPAIR OR REPLACEMENT WORK PERFORMED.
CHANGED OUT TRIGGER ASSEMBLY ON 2-FCV-063-0008A (SLC SQUIB VLV)
PER WO# 90-21090-00 & ECI-0-063-VLV001

8. TESTS CONDUCTED: HYDROSTATIC ☐ PNEUMATIC ☐
NOMINAL OPERATING PRESSURE ☐ OTHER ☐
PRESSURE NA PSI TEST TEMPERATURE NA F°

9. REMARKS: 2-SI-4.4.A.2 REQUIRED FUNCTIONAL TESTING OF SQUIB VALVE ONCE PER OPERATING CYCLE.

( ) APPLICABLE MANUFACTURERS DATA REPORT [e] TO BE ATTACHED

RESPONSIBLE ENGR. [signature] 12/4/90 DATE 12/4/90
MAINT. ORGANIZATION

ANII [signature] DATE 12-5-90

[a] SHEET NOS. FILLED IN BY TESTING AND DIAGNOSTIC PROGRAMS BRANCH.
[b] FOR WORK PERFORMED BY CERTIFICATE HOLDER
[c] REPLACED (LIKE OR EQUIVALENT).
[d] REPLACEMENT (MODIFICATION).
[e] WHEN REQUIRED BY CONSTRUCTION CODE.

RETENTION PERIOD: LIFETIME RESPONSIBLE ORGANIZATION: NM-PROCESSES/SPECIAL PROGRAMS

TENNESSEE VALLEY AUTHORITY
BROWNS FERRY NUCLEAR PLANT
SITE DIRECTOR STANDARD PRACTICE

SEP 22 1989

FORM SDSP-403
FORM NIS-2 ATTACHMENT

1. (OWNER) TENNESSEE VALLEY AUTHORITY
NUCLEAR POWER

DATE 1/3/91

2. (PLANT) BROWNS FERRY NUCLEAR PLANT
P.O. BOX 2000
DECATUR, ALABAMA

SHEET [a] 86 OF 259

W.O.-90-22973-00

3. WORK PERFORMED BY: T.V.A.
COMPANY

TYPE CODE SYMBOL STAMP [b]

P.O. BOX 2000
ADDRESS

AUTHORIZATION NO. [b]

DECATUR 2000 ALA.
CITY AND STATE

EXPIRATION DATE [b]

4. IDENTIFICATION OF SYSTEM SYSTEM 085, CONTROL ROD DRIVE, H.C.U. UNIT

5(A). APPLICATION CONSTRUCTION CODE ANSI B31.1 19 67
EDITION 1967 ADDENDA WINTER 1967 CODE CASE N/A

5(B). APPLICATION EDITION OF SECTION XI UTILIZED FOR REPAIRS OR REPLACEMENTS: 1980

6(A). NAME OF COMPONENT(S) AND DESCRIPTION (INCLUDE SIZE, CAPACITY, MATERIAL, AND LOCATION AS NEEDED TO AID IN IDENTIFICATION)
HYDRAULIC WATER ACCUMULATOR FOR CONTROL MODULE UNIT 2-HCU-085-38-47

6(B). NAME OF MANUFACTURER G.E.
ADDRESS OF MANUFACTURER (IF KNOWN) N/A AFC 1/3/91

6(c). MANUFACTURER'S SERIAL NUMBER N/A AFC 1/3/91

6(D). NATIONAL BOARD NUMBER (IF APPLICABLE) N/A AFC 1/3/91

6(E). OTHER IDENTIFICATION (SUBASSEMBLY NUMBER, HEAT NUMBER, ETC.)
BFN-2-HCU-085-38-47 Water accumulator P/N WSD6138G001

6(F). YEAR BUILT _____ CODE CLASS ☐ 1 ☒ 2

6(G). REPAIRED ☐ REPLACED ☒ [c] REPLACEMENT ☐ [d]

6(H). ASME CODE STAMPED YES ☒ NO ☐

7. BRIEF DESCRIPTION OF REPAIR OR REPLACEMENT WORK PERFORMED.
Replace the Water Accumulator on HCU 2-HCU-085-38-47 with a New Accumulator.

8. TESTS CONDUCTED: HYDROSTATIC ☐ PNEUMATIC ☐
NOMINAL OPERATING PRESSURE ☐ OTHER ☐
N/A AFC 1/3/91
PRESSURE _____ PSI TEST TEMPERATURE _____ F°

9. REMARKS: None

( ) APPLICABLE MANUFACTURERS DATA REPORT [e] TO BE ATTACHED.

RESPONSIBLE ENGR. Robert E. Cline / Mech. Maint DATE 1/4/91
ORGANIZATION

ANII B. F. Reid DATE 1-4-91

[a] SHEET NOS. FILLED IN BY TESTING AND DIAGNOSTIC PROGRAMS BRANCH.
[b] FOR WORK PERFORMED BY CERTIFICATE HOLDER
[c] REPLACED (LIKE OR EQUIVALENT).
[d] REPLACEMENT (MODIFICATION).
[e] WHEN REQUIRED BY CONSTRUCTION CODE.

RETENTION PERIOD: LIFETIME RESPONSIBLE ORGANIZATION: NM-PROCESSES/SPECIAL PROGRAMS

TENNESSEE VALLEY AUTHORITY
BROWNS FERRY NUCLEAR PLANT
SITE DIRECTOR STANDARD PRACTICE

SEP 22 1989

FORM SDSP-403
FORM NIS-2 ATTACHMENT

1. (OWNER) TENNESSEE VALLEY AUTHORITY
NUCLEAR POWER

DATE 12-27-90

2. (PLANT) BROWNS FERRY NUCLEAR PLANT,
P.O. BOX 2000
DECATUR, ALABAMA

SHEET [a] 87 OF 259

WO# 90-24109-00

3. WORK PERFORMED BY: TVA
COMPANY

P.O. Box 2000
ADDRESS

DECATUR, AL
CITY AND STATE

TYPE CODE SYMBOL STAMP [b]

AUTHORIZATION NO. [b]

EXPIRATION DATE [b]

4. IDENTIFICATION OF SYSTEM HIGH Pressure Coolant Injection (73)

5(A). APPLICATION CONSTRUCTION CODE ANSI B-31.1 19 67
EDITION 1967 ADDENDA Winter CODE CASE N/A

5(B). APPLICATION EDITION OF SECTION XI UTILIZED FOR REPAIRS OR REPLACEMENTS: 1980

6(A). NAME OF COMPONENT(S) AND DESCRIPTION (INCLUDE SIZE, CAPACITY, MATERIAL, AND LOCATION AS NEEDED TO AID IN IDENTIFICATION)
CRANE 10", GATE VALVE, 900 psig RATING, model L-900-C
CONTRACT NO. 90744 - Vendor DWG. # PB-139989

6(B). NAME OF MANUFACTURER CRANE
ADDRESS OF MANUFACTURER (IF KNOWN) N/A

6(c). MANUFACTURER'S SERIAL NUMBER N/A

6(D). NATIONAL BOARD NUMBER (IF APPLICABLE) N/A

6(E). OTHER IDENTIFICATION (SUBASSEMBLY NUMBER, HEAT NUMBER, ETC.) CRANE 10" GATE MODEL # L-900-C DISK

6(F). YEAR BUILT 1968 CODE CLASS ☑ 1 ☐ 2

6(G). REPAIRED ☑ REPLACED ☐ [c] REPLACEMENT ☐ [d]

6(H). ASME CODE STAMPED YES ☐ NO ☑

7. BRIEF DESCRIPTION OF REPAIR OR REPLACEMENT WORK PERFORMED.
MACHINE Hard FACING (STellite 21) OFF AND RE WELD Hard FACING (STellite 21) BACK onto DISK.

8. TESTS CONDUCTED: HYDROSTATIC ☐ PNEUMATIC ☐
NOMINAL OPERATING PRESSURE ☐ OTHER ☐
PRESSURE _____ PSI TEST TEMPERATURE _____ F[e]

9. REMARKS: NONE

( ) APPLICABLE MANUFACTURERS DATA REPORTS TO BE ATTACHED.

RESPONSIBLE ENGR. Albert E. Cooke / Mech. Maint DATE 1-23-91
ORGANIZATION

ANII R. Russell DATE 1-23-91

[a] SHEET NOS. FILLED IN BY TESTING AND DIAGNOSTIC PROGRAMS BRANCH.
[b] FOR WORK PERFORMED BY CERTIFICATE HOLDER
[c] REPLACED (LIKE OR EQUIVALENT).
[d] REPLACEMENT (MODIFICATION).
[e] WHEN REQUIRED BY CONSTRUCTION CODE.

RETENTION PERIOD: LIFETIME RESPONSIBLE ORGANIZATION: NM-PROCESSES/SPECIAL PROGRAMS

TENNESSEE VALLEY AUTHORITY
BROWNS FERRY NUCLEAR PLANT
SITE DIRECTOR STANDARD PRACTICE

SEP 22 1989

FORM PAGE 1 OF
FORM SDSP-403
SDSP 13.3

FORM SDSP-403
FORM NIS-2 ATTACHMENT

* REF CAQR #CHA890003713

1. (OWNER) TENNESSEE VALLEY AUTHORITY
NUCLEAR POWER

DATE 6-22-90

2. (PLANT) BROWNS FERRY NUCLEAR PLANT
P.O. BOX 2000
DECATUR, ALABAMA

SHEET [a] 88 OF 259

WO-91-24287-00
MR A-163499

3. WORK PERFORMED BY: TVA
COMPANY

TYPE CODE SYMBOL STAMP [b] N/A

P.O. Box 2000
ADDRESS

AUTHORIZATION NO. [b] N/A

DECATUR, ALA.
CITY AND STATE

EXPIRATION DATE [b] N/A

4. IDENTIFICATION OF SYSTEM 68 RECIRC PIPE ATTACHMENT & SNUBBER 47B2408-4 47B2408-4 IA

5(A). APPLICATION CONSTRUCTION CODE ASAS B31.1.0 19 67
EDITION THRU ADDENDA N/A CODE CASE N/A

5(B). APPLICATION EDITION OF SECTION XI UTILIZED FOR REPAIRS OR REPLACEMENTS: 1980

6(A). NAME OF COMPONENT(S) AND DESCRIPTION (INCLUDE SIZE, CAPACITY, MATERIAL, AND LOCATION AS NEEDED TO AID IN IDENTIFICATION)
UNIT 2 EL 556' INSIDE DRYWELL RECIRC. PIPE SUPPORT R-SS-01 (RECIRC-2-SS-01 & 47B2408-4 & RECIRC-2-SS-01 IA & 47B2408-4 IA.

6(B). NAME OF MANUFACTURER UNKNOWN
ADDRESS OF MANUFACTURER (IF KNOWN) UNKNOWN

6(c). MANUFACTURER'S SERIAL NUMBER N/A

6(D). NATIONAL BOARD NUMBER (IF APPLICABLE) N/A

6(E). OTHER IDENTIFICATION (SUBASSEMBLY NUMBER, HEAT NUMBER, ETC.) N/A

6(F). YEAR BUILT N/A CODE CLASS ☒ 1 ☐ 2

6(G). REPAIRED ☒ REPLACED ☐ [c] REPLACEMENT ☐ [d]

6(H). ASME CODE STAMPED YES ☐ NO ☒

7. BRIEF DESCRIPTION OF REPAIR OR REPLACEMENT WORK PERFORMED.
REMOVED SNUBBER AND LUG (INTEGRAL ATTACHMENT) AND REINSTALLED SNUBBER AND LUG (INTEGRAL ATTACHMENT).

8. TESTS CONDUCTED: HYDROSTATIC ☐ PNEUMATIC ☐
NOMINAL OPERATING PRESSURE ☐ OTHER ☐
PRESSURE N/A PSI TEST TEMPERATURE N/A F°

9. REMARKS:

( ) APPLICABLE MANUFACTURERS DATA REPORT [e] TO BE ATTACHED.

RESPONSIBLE ENGR. R.W. Aycock / SYSTEMS DATE 6-22-90
ORGANIZATION

ANII * DATE

* REF CAQR# CHA 890003713

[a] SHEET NOS. FILLED IN BY TESTING AND DIAGNOSTIC PROGRAMS BRANCH.
[b] FOR WORK PERFORMED BY CERTIFICATE HOLDER
[c] REPLACED (LIKE OR EQUIVALENT).
[d] REPLACEMENT (MODIFICATION).
[e] WHEN REQUIRED BY CONSTRUCTION CODE.

RETENTION PERIOD: LIFETIME RESPONSIBLE ORGANIZATION: NM-PROCESSES/SPECIAL PROGRAMS

TENNESSEE VALLEY AUTHORITY
BROWNS FERRY NUCLEAR PLANT
SITE DIRECTOR STANDARD PRACTICE

SEP 22 1989

FORM PAGE 1 OF 1
FORM SDSP-403
SDSP 13.3

FORM SDSP-403
FORM NIS-2 ATTACHMENT

SHEET 89 of 259

1. (OWNER) TENNESSEE VALLEY AUTHORITY
NUCLEAR POWER — DATE 1-16-91

2. (PLANT) BROWNS FERRY NUCLEAR PLANT
P.O. BOX 2000
DECATUR, ALABAMA — SHEET [a] 1 OF 1

3. WORK PERFORMED BY: TVA, BFNP (COMPANY) — TYPE CODE SYMBOL STAMP [b] NA
P.O. Box 2000 (ADDRESS) — AUTHORIZATION NO. [b] NA
Decatur, AL 35602-2000 (CITY AND STATE) — EXPIRATION DATE [b] NA

4. IDENTIFICATION OF SYSTEM 001 MAIN STEAM

5(A). APPLICATION CONSTRUCTION CODE B31.1 19 67
EDITION 1967 ADDENDA Winter CODE CASE N/A

5(B). APPLICATION EDITION OF SECTION XI UTILIZED FOR REPAIRS OR REPLACEMENTS: 1980

6(A). NAME OF COMPONENT(S) AND DESCRIPTION (INCLUDE SIZE, CAPACITY, MATERIAL, AND LOCATION AS NEEDED TO AID IN IDENTIFICATION)
2" VALVE STEM IN 26" ATWOOD-MORRELL MAIN STEAM ISOL. VLV.
ITEM #15 VEN. dwg 20851-H, TVA dwg 47W407-02, item N. SS, A564GR630, A-276TY304

6(B). NAME OF MANUFACTURER Atwood-Morrill
ADDRESS OF MANUFACTURER (IF KNOWN) 285 CANAL ST., SALEM MASS

6(c). MANUFACTURER'S SERIAL NUMBER N/A

6(D). NATIONAL BOARD NUMBER (IF APPLICABLE) N/A

6(E). OTHER IDENTIFICATION (SUBASSEMBLY NUMBER, HEAT NUMBER, ETC.) vendor dwg. 20851-H item #15, TVA dwg 47W407-02 item N

6(F). YEAR BUILT 67 CODE CLASS [X] 1 [ ] 2

6(G). REPAIRED [ ] REPLACED [ ][c] REPLACEMENT [X][d]

6(H). ASME CODE STAMPED YES [ ] NO [X]

7. BRIEF DESCRIPTION OF REPAIR OR REPLACEMENT WORK PERFORMED.
Replacing STEM IN 26" ATWOOD-MORRELL MSIV. STEM FAILED RUN-OUT CHECK AS SET FORTH IN PROC. MCI-0-001-VLV001

8. TESTS CONDUCTED: HYDROSTATIC [X] PNEUMATIC [ ]
NOMINAL OPERATING PRESSURE [ ] OTHER [ ]
PRESSURE 1104 PSI TEST TEMPERATURE 182 F°

9. REMARKS: W.O. # 91-24586-02

( ) APPLICABLE MANUFACTURERS DATA REPORT[e] TO BE ATTACHED.

RESPONSIBLE ENGR. Gilbert E. Cole / Mech. Maint ORGANIZATION DATE 4-20-91

ANII R. Russell DATE 5-9-91

Michael R. Martin 6-18-91

[a] SHEET NOS. FILLED IN BY TESTING AND DIAGNOSTIC PROGRAMS BRANCH.
[b] FOR WORK PERFORMED BY CERTIFICATE HOLDER
[c] REPLACED (LIKE OR EQUIVALENT).
[d] REPLACEMENT (MODIFICATION).
[e] WHEN REQUIRED BY CONSTRUCTION CODE.

RETENTION PERIOD: LIFETIME RESPONSIBLE ORGANIZATION: NM-PROCESSES/SPECIAL PROGRAMS

TENNESSEE VALLEY AUTHORITY
BROWNS FERRY NUCLEAR PLANT
SITE DIRECTOR STANDARD PRACTICE

SEP 22 1989

FORM PAGE 1 OF 1
FORM SDSP-403
SDSP 13.3

FORM SDSP-403
FORM NIS-2 ATTACHMENT

SHEET 90 of 259

1. (OWNER) TENNESSEE VALLEY AUTHORITY
NUCLEAR POWER

DATE 1-15-91

2. (PLANT) BROWNS FERRY NUCLEAR PLANT
P.O. BOX 2000
DECATUR, ALABAMA

SHEET [a] 1 OF 1

3. WORK PERFORMED BY: TVA, BFNP
COMPANY

TYPE CODE SYMBOL STAMP [b]

P.O. Box 2000
ADDRESS

AUTHORIZATION NO. [b]

Decatur, AL. 35602-2000
CITY AND STATE

EXPIRATION DATE [b]

4. IDENTIFICATION OF SYSTEM 001 MAIN STEAM

5(A). APPLICATION CONSTRUCTION CODE ANSI B31.1 19 67
EDITION 1967 ADDENDA Winter CODE CASE N/A

5(B). APPLICATION EDITION OF SECTION XI UTILIZED FOR REPAIRS OR REPLACEMENTS: 1980

6(A). NAME OF COMPONENT(S) AND DESCRIPTION (INCLUDE SIZE, CAPACITY, MATERIAL, AND LOCATION AS NEEDED TO AID IN IDENTIFICATION)
2" VALVE STEM IN 26" ATWOOD-MORRILL MAIN STEAM ISOLATION VALVE.
SS, A564 GR630, A-276 TYPE304. VEN. dwg. 20851-H item #15 TVA dwg. 47W407-02, item N.

6(B). NAME OF MANUFACTURER ATWOOD-MORRILL
ADDRESS OF MANUFACTURER (IF KNOWN) 285 CANAL ST., SALEM, MASS.

6(c). MANUFACTURER'S SERIAL NUMBER N/A

6(D). NATIONAL BOARD NUMBER (IF APPLICABLE) N/A

6(E). OTHER IDENTIFICATION (SUBASSEMBLY NUMBER, HEAT NUMBER, ETC.) vendor dwg 20851-H item #15 TVA dwg 47W407-02 item N

6(F). YEAR BUILT 67 CODE CLASS ☒ 1 ☐ 2

6(G). REPAIRED ☐ REPLACED ☐ [c] REPLACEMENT ☒ [d]

6(H). ASME CODE STAMPED YES ☐ NO ☒

7. BRIEF DESCRIPTION OF REPAIR OR REPLACEMENT WORK PERFORMED.
Replacing STEM IN 26" ATWOOD-MORRILL MAIN STEAM ISOL. VLV. STEM FAILED RUN-OUT CHECK AS SET FORTH IN PROC. MCI-0-001-VLVX01

8. TESTS CONDUCTED: HYDROSTATIC ☒ PNEUMATIC ☐
NOMINAL OPERATING PRESSURE ☐ OTHER ☐
PRESSURE 1104 PSI TEST TEMPERATURE 182 F°

9. REMARKS: W.O.# 91-24661-02

( ) APPLICABLE MANUFACTURERS DATA REPORT [e] TO BE ATTACHED.

RESPONSIBLE ENGR. [signature] Mech. Maint DATE 4-20-91
ORGANIZATION

ANII [signature] DATE 5-9-91

[a] SHEET NOS. FILLED IN BY TESTING AND DIAGNOSTIC PROGRAMS BRANCH.
[b] FOR WORK PERFORMED BY CERTIFICATE HOLDER
[c] REPLACED (LIKE OR EQUIVALENT).
[d] REPLACEMENT (MODIFICATION).
[e] WHEN REQUIRED BY CONSTRUCTION CODE.

ORGANIZATION NM-PROCESSES/SPECIAL PROGRAMS DATE

RETENTION PERIOD: LIFETIME RESPONSIBLE ORGANIZATION: NM-PROCESSES/SPECIAL PROGRAMS

TENNESSEE VALLEY AUTHORITY
BROWNS FERRY NUCLEAR PLANT
SITE DIRECTOR STANDARD PRACTICE

SEP 22 1989

FORM SDSP-403
SDSP 13.3

FORM SDSP-403
FORM NIS-2 ATTACHMENT

1. (OWNER) TENNESSEE VALLEY AUTHORITY
NUCLEAR POWER

DATE 7-10-91

2. (PLANT) BROWNS FERRY NUCLEAR PLANT
P.O. BOX 2000
DECATUR, ALABAMA

SHEET [a] 91 OF 259

W.O. # 91-25964-00

3. WORK PERFORMED BY: TVA
COMPANY

P.O. BOX 2000
ADDRESS

DECATUR, AL
CITY AND STATE

TYPE CODE SYMBOL STAMP [b] NA

AUTHORIZATION NO. [b] NA

EXPIRATION DATE [b] NA

4. IDENTIFICATION OF SYSTEM RCIC - 071

5(A). APPLICATION CONSTRUCTION CODE ANSI B31.1 19 67
EDITION 1967 ADDENDA WINTER CODE CASE NA

5(B). APPLICATION EDITION OF SECTION XI UTILIZED FOR REPAIRS OR REPLACEMENTS: 1980

6(A). NAME OF COMPONENT(S) AND DESCRIPTION (INCLUDE SIZE, CAPACITY, MATERIAL, AND LOCATION AS NEEDED TO AID IN IDENTIFICATION)
2-FCV-071-0010

6(B). NAME OF MANUFACTURER TERRY STEAM TURBINE CO.
ADDRESS OF MANUFACTURER (IF KNOWN) UNKNOWN

6(c). MANUFACTURER'S SERIAL NUMBER NA

6(D). NATIONAL BOARD NUMBER (IF APPLICABLE) NA

6(E). OTHER IDENTIFICATION (SUBASSEMBLY NUMBER, HEAT NUMBER, ETC.) NA

6(F). YEAR BUILT UNKNOWN CODE CLASS ☐ 1 ☒ 2

6(G). REPAIRED ☐ REPLACED ☒ [c] REPLACEMENT ☐ [d]

6(H). ASME CODE STAMPED YES ☐ NO ☐

7. BRIEF DESCRIPTION OF REPAIR OR REPLACEMENT WORK PERFORMED.
REPLACED VALVE PLUG IN 2-FCV-071-0010

8. TESTS CONDUCTED: HYDROSTATIC ☐ PNEUMATIC ☐
NOMINAL OPERATING PRESSURE ☐ OTHER ☐
PRESSURE _____ PSI TEST TEMPERATURE _____ F°

9. REMARKS: W.O. # 91-25964-00

( ) APPLICABLE MANUFACTURERS DATA REPORT [e] TO BE ATTACHED.

RESPONSIBLE ENGR. [illegible] Mech. Maint DATE 7-10-91
ORGANIZATION

ANII * _____ DATE _____

* SEE FORM SDSP-401

[a] SHEET NOS. FILLED IN BY TESTING AND DIAGNOSTIC PROGRAMS BRANCH.
[b] FOR WORK PERFORMED BY CERTIFICATE HOLDER
[c] REPLACED (LIKE OR EQUIVALENT).
[d] REPLACEMENT (MODIFICATION).
[e] WHEN REQUIRED BY CONSTRUCTION CODE.

RETENTION PERIOD: LIFETIME RESPONSIBLE ORGANIZATION: NM-PROCESSES/SPECIAL PROGRAMS

TENNESSEE VALLEY AUTHORITY
BROWNS FERRY NUCLEAR PLANT
SITE DIRECTOR STANDARD PRACTICE

SEP 22 1989

FORM PAGE 1 OF 1
FORM SDSP-403
SDSP 13.3

FORM SDSP-403
FORM NIS-2 ATTACHMENT

SHEET 92 of 259

1. (OWNER) TENNESSEE VALLEY AUTHORITY
NUCLEAR POWER

DATE 2-14-91

2. (PLANT) BROWNS FERRY NUCLEAR PLANT
P.O. BOX 2000
DECATUR, ALABAMA

SHEET [a] 1 OF 1

W.O.# 91-26540-00

3. WORK PERFORMED BY: TVA, BFNP
COMPANY

TYPE CODE SYMBOL STAMP [b] N/A

P.O. BOX 2000
ADDRESS

AUTHORIZATION NO. [b] N/A

DECATUR, AL 35602-2000
CITY AND STATE

EXPIRATION DATE [b] N/A

4. IDENTIFICATION OF SYSTEM SYS 63, STANDBY Liquid Control Sys

5(A). APPLICATION CONSTRUCTION CODE ANSI USAS B3.1 19 67
EDITION _____ ADDENDA _____ CODE CASE _____

5(B). APPLICATION EDITION OF SECTION XI UTILIZED FOR REPAIRS OR REPLACEMENTS: 1980

6(A). NAME OF COMPONENT(S) AND DESCRIPTION (INCLUDE SIZE, CAPACITY, MATERIAL, AND LOCATION AS NEEDED TO AID IN IDENTIFICATION)
Pump Discharge VALVES(4), PART#321 ON vendor dwg. PC-2747234. MAT'L-SS.304

6(B). NAME OF MANUFACTURER UNION PUMP CO.
ADDRESS OF MANUFACTURER (IF KNOWN) _____

6(c). MANUFACTURER'S SERIAL NUMBER C08197-01

6(D). NATIONAL BOARD NUMBER (IF APPLICABLE) N/A

6(E). OTHER IDENTIFICATION (SUBASSEMBLY NUMBER, HEAT NUMBER, ETC.) N/A

6(F). YEAR BUILT 1966 CODE CLASS ☐ 1 ☒ 2

6(G). REPAIRED ☐ REPLACED ☐ [c] REPLACEMENT ☒ [d]

6(H). ASME CODE STAMPED YES ☐ NO ☒

7. BRIEF DESCRIPTION OF REPAIR OR REPLACEMENT WORK PERFORMED.
Replace PMP INTERNAL discharge VALVES (4) during Pump Repair

8. TESTS CONDUCTED: HYDROSTATIC ☐ PNEUMATIC ☐
NOMINAL OPERATING PRESSURE ☐ OTHER ☒
PRESSURE _____ PSI TEST TEMPERATURE _____ F°

9. REMARKS: 2-SI-4.4.A.1 (SLC Pmp FUNCTIONAL test)
Work was performed on WO 91-26540-00

( ) APPLICABLE MANUFACTURERS DATA REPORT [e] TO BE ATTACHED.

RESPONSIBLE ENGR. [signature] 2/18/91 ORGANIZATION PMP/VALVE GROUP DATE 2/18/91

ANII [signature] DATE 2-20-91

[a] SHEET NOS. FILLED IN BY TESTING AND DIAGNOSTIC PROGRAMS BRANCH.
[b] FOR WORK PERFORMED BY CERTIFICATE HOLDER
[c] REPLACED (LIKE OR EQUIVALENT).
[d] REPLACEMENT (MODIFICATION).
[e] WHEN REQUIRED BY CONSTRUCTION CODE.

RETENTION PERIOD: LIFETIME RESPONSIBLE ORGANIZATION: NM-PROCESSES/SPECIAL PROGRAMS

TENNESSEE VALLEY AUTHORITY
BROWNS FERRY NUCLEAR PLANT
SITE DIRECTOR STANDARD PRACTICE

SEP 22 1989

FORM PAGE 1 OF 1
FORM SDSP-403
SDSP 13.3

FORM SDSP-403
FORM NIS-2 ATTACHMENT

SHEET 93 of 259

1. (OWNER) TENNESSEE VALLEY AUTHORITY
NUCLEAR POWER — DATE 4/4/91

2. (PLANT) BROWNS FERRY NUCLEAR PLANT
P.O. BOX 2000
DECATUR, ALABAMA — SHEET [a] 1 OF 1

3. WORK PERFORMED BY: TVA (COMPANY) — TYPE CODE SYMBOL STAMP [b] N/A
PO BOX 2000 (ADDRESS) — AUTHORIZATION NO.[b] N/A
DECATUR AL 35602 (CITY AND STATE) — EXPIRATION DATE [b] N/A

4. IDENTIFICATION OF SYSTEM 1 - MAIN STEAM

5(A). APPLICATION CONSTRUCTION CODE ~~ASA~~ USAS B31.1 19 67
EDITION _____ ADDENDA _____ CODE CASE _____

5(B). APPLICATION EDITION OF SECTION XI UTILIZED FOR REPAIRS OR REPLACEMENTS: 1980

6(A). NAME OF COMPONENT(S) AND DESCRIPTION (INCLUDE SIZE, CAPACITY, MATERIAL, AND LOCATION AS NEEDED TO AID IN IDENTIFICATION)
1 1/8" DIAMETER STUDS AND NUTS (8 STUDS, 16 NUTS) FOR THE 4-INCH REACTOR VESSEL HEAD VENT PIPING FLANGE ON TOP OF HEAD.

6(B). NAME OF MANUFACTURER UNKNOWN
ADDRESS OF MANUFACTURER (IF KNOWN) UNKNOWN

6(C). MANUFACTURER'S SERIAL NUMBER NA

6(D). NATIONAL BOARD NUMBER (IF APPLICABLE) NA

6(E). OTHER IDENTIFICATION (SUBASSEMBLY NUMBER, HEAT NUMBER, ETC.) STUD HEAT NUMBER AH

6(F). YEAR BUILT UNKNOWN — CODE CLASS [X] 1 [ ] 2

6(G). REPAIRED [ ] — REPLACED [X][c] — REPLACEMENT [ ][d]

6(H). ASME CODE STAMPED YES [ ] NO [X]

7. BRIEF DESCRIPTION OF REPAIR OR REPLACEMENT WORK PERFORMED.
REPLACED STUDS AND NUTS ON 4 INCH DIAMETER RPV HEAD VENT PIPING FLANGE WITH LIKE-FOR-LIKE.

8. TESTS CONDUCTED: HYDROSTATIC [X] — PNEUMATIC [ ]
NOMINAL OPERATING PRESSURE [ ] — OTHER [ ]
PRESSURE 1105 PSI — TEST TEMPERATURE 170 F°

9. REMARKS: This was performed on WO-91-28288-00

( ) APPLICABLE MANUFACTURERS DATA REPORTS TO BE ATTACHED.
RESPONSIBLE ENGR. [signature] 4/16/91 — ORGANIZATION NUC MAINT — DATE 4/16/91
ANII R. Russell [signature] — DATE 5-9-91

[a] SHEET NOS. FILLED IN BY TESTING AND DIAGNOSTIC PROGRAMS BRANCH.
[b] FOR WORK PERFORMED BY CERTIFICATE HOLDER
[c] REPLACED (LIKE OR EQUIVALENT).
[d] REPLACEMENT (MODIFICATION).
[e] WHEN REQUIRED BY CONSTRUCTION CODE.

RETENTION PERIOD: LIFETIME — RESPONSIBLE ORGANIZATION: NM-PROCESSES/SPECIAL PROGRAMS

FORM SDSP-403
FORM NIS-2 ATTACHMENT

1. (OWNER) TENNESSEE VALLEY AUTHORITY
NUCLEAR POWER

DATE 05/14/91

2. (PLANT) BROWNS FERRY NUCLEAR PLANT
P.O. BOX 2000
DECATUR, ALABAMA

SHEET [a] 94 OF 259

3. WORK PERFORMED BY: TVA
COMPANY

TYPE CODE SYMBOL STAMP [b] N/A

PO BOX 2000
ADDRESS

AUTHORIZATION NO. [b] N/A

DECATUR ALABAMA
CITY AND STATE

EXPIRATION DATE [b] N/A

4. IDENTIFICATION OF SYSTEM SYSTEM 75, CS-2-R-1, 2-47B458S0004

5(A). APPLICATION CONSTRUCTION CODE ANSI B31.1 19 67
EDITION THRU ADDENDA WINTER CODE CASE N/A

5(B). APPLICATION EDITION OF SECTION XI UTILIZED FOR REPAIRS OR REPLACEMENTS: 1980

6(A). NAME OF COMPONENT(S) AND DESCRIPTION (INCLUDE SIZE, CAPACITY, MATERIAL, AND LOCATION AS NEEDED TO AID IN IDENTIFICATION)
HSSA-10 SNUBBER CS-2-R-1, 2-47B458S0004

6(B). NAME OF MANUFACTURER BERGEN-PATERSON
ADDRESS OF MANUFACTURER (IF KNOWN) N/A

6(c). MANUFACTURER'S SERIAL NUMBER N/A

6(D). NATIONAL BOARD NUMBER (IF APPLICABLE) N/A

6(E). OTHER IDENTIFICATION (SUBASSEMBLY NUMBER, HEAT NUMBER, ETC.) TVA SERIAL # M0044

6(F). YEAR BUILT N/A CODE CLASS ☒ 1 ☐ 2

6(G). REPAIRED ☐ REPLACED ☒ [c] REPLACEMENT ☐ [d]

6(H). ASME CODE STAMPED YES ☐ NO ☒

7. BRIEF DESCRIPTION OF REPAIR OR REPLACEMENT WORK PERFORMED.
REMOVE EXIST SNUBBER S/N M0160 &
REPLACE WITH NEW SNUBBER S/N M0044

8. TESTS CONDUCTED: HYDROSTATIC ☐ PNEUMATIC ☐
NOMINAL OPERATING PRESSURE ☐ OTHER ☐
PRESSURE N/A PSI TEST TEMPERATURE N/A F[e]

9. REMARKS: REPLACE SNUBBER WITH NEW REBUILT SNUBBER

WORK ORDER: 91-32012-00

( ) APPLICABLE MANUFACTURERS DATA REPORT[e] TO BE ATTACHED

RESPONSIBLE ENGR. R.W. AYCOCK / TECH SUPPORT DATE 05/14/91
ORGANIZATION

ANII R. Russell Jr. DATE 5-15-91

[a] SHEET NOS. FILLED IN BY TESTING AND DIAGNOSTIC PROGRAMS BRANCH.
[b] FOR WORK PERFORMED BY CERTIFICATE HOLDER
[c] REPLACED (LIKE OR EQUIVALENT).
[d] REPLACEMENT (MODIFICATION).
[e] WHEN REQUIRED BY CONSTRUCTION CODE.

TENNESSEE VALLEY AUTHORITY
BROWNS FERRY NUCLEAR PLANT
SITE DIRECTOR STANDARD PRACTICE

SEP 22 1989

FORM PAGE 1 OF 1
FORM SDSP-403
SDSP 13.3

FORM SDSP-403
FORM NIS-2 ATTACHMENT

SHEET 95 of 259

91-32236-00

1. (OWNER) TENNESSEE VALLEY AUTHORITY
NUCLEAR POWER

DATE 05/18/91

2. (PLANT) BROWNS FERRY NUCLEAR PLANT
P.O. BOX 2000
DECATUR, ALABAMA

SHEET [a] 1 OF 1

3. WORK PERFORMED BY: TVA
COMPANY

TYPE CODE SYMBOL STAMP [b] N/A

BFNP PO BOX 2000
ADDRESS

AUTHORIZATION NO. [b] N/A

Decatur ALA
CITY AND STATE

EXPIRATION DATE [b] N/A

4. IDENTIFICATION OF SYSTEM S/S 3 Feedwater

5(A). APPLICATION CONSTRUCTION CODE USAS B 31.1.0 19 67
EDITION THRU ADDENDA Winter CODE CASE N/A

5(B). APPLICATION EDITION OF SECTION XI UTILIZED FOR REPAIRS OR REPLACEMENTS: 1980

6(A). NAME OF COMPONENT(S) AND DESCRIPTION (INCLUDE SIZE, CAPACITY, MATERIAL, AND LOCATION AS NEEDED TO AID IN IDENTIFICATION)
SNUBBER HSSA-10, SERIAL NUMBER M0279

6(B). NAME OF MANUFACTURER BERGEN PATERSON
ADDRESS OF MANUFACTURER (IF KNOWN) N/A

6(c). MANUFACTURER'S SERIAL NUMBER N/A

6(D). NATIONAL BOARD NUMBER (IF APPLICABLE) N/A

6(E). OTHER IDENTIFICATION (SUBASSEMBLY NUMBER, HEAT NUMBER, ETC.)
TVA SERIAL # M0279

6(F). YEAR BUILT N/A CODE CLASS ☒ 1 ☐ 2

6(G). REPAIRED ☐ REPLACED ☒ [c] REPLACEMENT ☐ [d]

6(H). ASME CODE STAMPED YES ☐ NO ☒

7. BRIEF DESCRIPTION OF REPAIR OR REPLACEMENT WORK PERFORMED.
REMOVE & REPLACED SNUBBER 2-47B415S002.

8. TESTS CONDUCTED: HYDROSTATIC ☐ PNEUMATIC ☐
NOMINAL OPERATING PRESSURE ☐ OTHER ☐
PRESSURE N/A PSI TEST TEMPERATURE N/A F°

9. REMARKS: 91-32236-00

( ) APPLICABLE MANUFACTURERS DATA REPORT TO BE ATTACHED.
RESPONSIBLE ENGR. ROGER W. AYCOCK /TSNS DATE 05/20/91
ORGANIZATION

ANII B. Earnest DATE 5/20/91

[a] SHEET NOS. FILLED IN BY TESTING AND DIAGNOSTIC PROGRAMS BRANCH.
[b] FOR WORK PERFORMED BY CERTIFICATE HOLDER
[c] REPLACED (LIKE OR EQUIVALENT).
[d] REPLACEMENT (MODIFICATION).
[e] WHEN REQUIRED BY CONSTRUCTION CODE.

RETENTION PERIOD: LIFETIME RESPONSIBLE ORGANIZATION: NM-PROCESSES/SPECIAL PROGRAMS

TENNESSEE VALLEY AUTHORITY
BROWNS FERRY NUCLEAR PLANT
SITE DIRECTOR STANDARD PRACTICE

SEP 22 1989

FORM PAGE 1 OF 1
FORM SDSP-403
SDSP 13.3

FORM SDSP-403
FORM NIS-2 ATTACHMENT

SHEET 96 of 259

91-32238-00

1. (OWNER) TENNESSEE VALLEY AUTHORITY
NUCLEAR POWER

DATE 5/20/91

2. (PLANT) BROWNS FERRY NUCLEAR PLANT
P.O. BOX 2000
DECATUR, ALABAMA

SHEET [a] 1 OF 1

3. WORK PERFORMED BY: TVA (COMPANY)
BFNP PO Box 2000 (ADDRESS)
DECATUR, ALABAMA (CITY AND STATE)

TYPE CODE SYMBOL STAMP [b] N/A
AUTHORIZATION NO. [b] N/A
EXPIRATION DATE [b] N/A

4. IDENTIFICATION OF SYSTEM SLC (Standby Liquid Control) 063

5(A). APPLICATION CONSTRUCTION CODE USAS B31.1.0 19 67
EDITION THRU ADDENDA WINTER CODE CASE N/A

5(B). APPLICATION EDITION OF SECTION XI UTILIZED FOR REPAIRS OR REPLACEMENTS: 1980

6(A). NAME OF COMPONENT(S) AND DESCRIPTION (INCLUDE SIZE, CAPACITY, MATERIAL, AND LOCATION AS NEEDED TO AID IN IDENTIFICATION)
SNUBBER (2-47B462S0013) HSSA-30 ELEV. 624 AT AZ 210

6(B). NAME OF MANUFACTURER BERGEN PATERSON
ADDRESS OF MANUFACTURER (IF KNOWN) UNKNOWN

6(c). MANUFACTURER'S SERIAL NUMBER N/A

6(D). NATIONAL BOARD NUMBER (IF APPLICABLE) N/A

6(E). OTHER IDENTIFICATION (SUBASSEMBLY NUMBER, HEAT NUMBER, ETC.) N/A

6(F). YEAR BUILT N/A CODE CLASS ☒ 1 ☐ 2

6(G). REPAIRED ☐ REPLACED ☒ [c] REPLACEMENT ☐ [d]

6(H). ASME CODE STAMPED YES ☐ NO ☒

7. BRIEF DESCRIPTION OF REPAIR OR REPLACEMENT WORK PERFORMED.
REPLACED SNUBBER AT LOCATION 2-47B462S0013

8. TESTS CONDUCTED: HYDROSTATIC ☐ PNEUMATIC ☐
NOMINAL OPERATING PRESSURE ☐ OTHER ☐
PRESSURE N/A PSI TEST TEMPERATURE N/A F°

9. REMARKS: 91-32238-00

( ) APPLICABLE MANUFACTURERS DATA REPORT [e] TO BE ATTACHED.

RESPONSIBLE ENGR. Jimmy E Kibler / Tech Support DATE 5/20/91
ORGANIZATION

ANII B. Earnhart DATE 5/20/91

[a] SHEET NOS. FILLED IN BY TESTING AND DIAGNOSTIC PROGRAMS BRANCH.
[b] FOR WORK PERFORMED BY CERTIFICATE HOLDER
[c] REPLACED (LIKE OR EQUIVALENT).
[d] REPLACEMENT (MODIFICATION).
[e] WHEN REQUIRED BY CONSTRUCTION CODE.

RETENTION PERIOD: LIFETIME RESPONSIBLE ORGANIZATION: NM-PROCESSES/SPECIAL PROGRAMS

TENNESSEE VALLEY AUTHORITY
BROWNS FERRY NUCLEAR PLANT
SITE DIRECTOR STANDARD PRACTICE

SEP 22 1989

FORM PAGE 1 OF 1
FORM SDSP-403
SDSP 13.3

FORM SDSP-403
FORM NIS-2 ATTACHMENT

SHEET 97 of 259

91-32241-00

1. (OWNER) TENNESSEE VALLEY AUTHORITY
NUCLEAR POWER

DATE 05/20/~~90~~ 91

2. (PLANT) BROWNS FERRY NUCLEAR PLANT
P.O. BOX 2000
DECATUR, ALABAMA

SHEET [a] 1 OF 1

3. WORK PERFORMED BY: TVA
COMPANY

BFNP PO BOX 2000
ADDRESS

DECATUR ALABAMA
CITY AND STATE

TYPE CODE SYMBOL STAMP [b] N/A

AUTHORIZATION NO. [b] N/A

EXPIRATION DATE [b] N/A

4. IDENTIFICATION OF SYSTEM MAIN STEAM 001

5(A). APPLICATION CONSTRUCTION CODE ASAS B31.0 19 67
EDITION THRU ADDENDA WINTER CODE CASE N/A

5(B). APPLICATION EDITION OF SECTION XI UTILIZED FOR REPAIRS OR REPLACEMENTS: 1980

6(A). NAME OF COMPONENT(S) AND DESCRIPTION (INCLUDE SIZE, CAPACITY, MATERIAL, AND LOCATION AS NEEDED TO AID IN IDENTIFICATION)
SNUBBER 2-47B400S0014 HSSA-30 ELEV. 585
AZ-240 NEXT TO SHIELD WALL

6(B). NAME OF MANUFACTURER BERGEN PATERSON
ADDRESS OF MANUFACTURER (IF KNOWN) UNKNOWN

6(c). MANUFACTURER'S SERIAL NUMBER N/A

6(D). NATIONAL BOARD NUMBER (IF APPLICABLE) N/A

6(E). OTHER IDENTIFICATION (SUBASSEMBLY NUMBER, HEAT NUMBER, ETC.) N/A

6(F). YEAR BUILT N/A CODE CLASS ☒ 1 ☐ 2

6(G). REPAIRED ☐ REPLACED ☒ [c] REPLACEMENT ☐ [d]

6(H). ASME CODE STAMPED YES ☐ NO ☒

7. BRIEF DESCRIPTION OF REPAIR OR REPLACEMENT WORK PERFORMED.
REMOVE & REPLACE SNUBBER S/N M0168
& INSTALL REBUILT SNUBBER S/N M0747

8. TESTS CONDUCTED: HYDROSTATIC ☐ PNEUMATIC ☐
NOMINAL OPERATING PRESSURE ☐ OTHER ☐
PRESSURE N/A PSI TEST TEMPERATURE N/A F°

9. REMARKS: W.O.# 91-32241-00

( ) APPLICABLE MANUFACTURERS DATA REPORT [e] TO BE ATTACHED.

RESPONSIBLE ENGR. ROGER W. AYCOCK / TSNS DATE 05/20/91
ORGANIZATION

AHI B. Earnest DATE 5/20/91

[a] SHEET NOS. FILLED IN BY TESTING AND DIAGNOSTIC PROGRAMS BRANCH.
[b] FOR WORK PERFORMED BY CERTIFICATE HOLDER
[c] REPLACED (LIKE OR EQUIVALENT).
[d] REPLACEMENT (MODIFICATION).
[e] WHEN REQUIRED BY CONSTRUCTION CODE.

RETENTION PERIOD: LIFETIME | RESPONSIBLE ORGANIZATION: NM-PROCESSES/SPECIAL PROGRAMS

TENNESSEE VALLEY AUTHORITY
BROWNS FERRY NUCLEAR PLANT
SITE DIRECTOR STANDARD PRACTICE

SEP 22 1989

FORM PAGE 1 OF 1
FORM SDSP-403
SDSP 13.3

FORM SDSP-403
FORM NIS-2 ATTACHMENT

SHEET 98 of 259

91-32242-00

1. (OWNER) TENNESSEE VALLEY AUTHORITY
NUCLEAR POWER

DATE 05/20/91

2. (PLANT) BROWNS FERRY NUCLEAR PLANT
P.O. BOX 2000
DECATUR, ALABAMA

SHEET [a] 1 OF 1

3. WORK PERFORMED BY: TVA
COMPANY
BFNP P.O. BOX 2000
ADDRESS
DECATUR ALABAMA
CITY AND STATE

TYPE CODE SYMBOL STAMP [b] N/A
AUTHORIZATION NO. [b] N/A
EXPIRATION DATE [b] N/A

4. IDENTIFICATION OF SYSTEM MAIN STEAM 001

5(A). APPLICATION CONSTRUCTION CODE USAS B31.1.0 19 67
EDITION THRU ADDENDA WINTER CODE CASE N/A

5(B). APPLICATION EDITION OF SECTION XI UTILIZED FOR REPAIRS OR REPLACEMENTS: 1980

6(A). NAME OF COMPONENT(S) AND DESCRIPTION (INCLUDE SIZE, CAPACITY, MATERIAL, AND LOCATION AS NEEDED TO AID IN IDENTIFICATION)
BERGEN PATERSON HAS RWA 05/20/91 HSSA-30
2-47B400 50105

6(B). NAME OF MANUFACTURER BERGEN PATERSON
ADDRESS OF MANUFACTURER (IF KNOWN) UNKNOWN

6(c). MANUFACTURER'S SERIAL NUMBER N/A

6(D). NATIONAL BOARD NUMBER (IF APPLICABLE) N/A

6(E). OTHER IDENTIFICATION (SUBASSEMBLY NUMBER, HEAT NUMBER, ETC.)
TVA SERIAL # M0074

6(F). YEAR BUILT N/A CODE CLASS [X] 1 [ ] 2

6(G). REPAIRED [ ] REPLACED [X] [c] REPLACEMENT [ ] [d]

6(H). ASME CODE STAMPED YES [ ] NO [X]

7. BRIEF DESCRIPTION OF REPAIR OR REPLACEMENT WORK PERFORMED.
REPLACED SNUBBER HANGER 2-47B400 50105 WITH NEW SNUBBER.

8. TESTS CONDUCTED: HYDROSTATIC [ ] PNEUMATIC [ ]
NOMINAL OPERATING PRESSURE [ ] OTHER [ ]
PRESSURE N/A PSI TEST TEMPERATURE N/A F°

9. REMARKS: W.O. # 91-32242-00

( ) APPLICABLE MANUFACTURERS' DATA REPORT [e] TO BE ATTACHED.

RESPONSIBLE ENGR. Jimmy E. Kilbert Tech. Support DATE 5/20/91
ORGANIZATION

AHII B. Easonly DATE 5/20/91

[a] SHEET NOS. FILLED IN BY TESTING AND DIAGNOSTIC PROGRAMS BRANCH.
[b] FOR WORK PERFORMED BY CERTIFICATE HOLDER
[c] REPLACED (LIKE OR EQUIVALENT).
[d] REPLACEMENT (MODIFICATION).
[e] WHEN REQUIRED BY CONSTRUCTION CODE.

RETENTION PERIOD: LIFETIME RESPONSIBLE ORGANIZATION: NH-PROCESSES/SPECIAL PROGRAMS

Tennessee Valley Authority
Browns Ferry Nuclear Plant

Form 164
BF 18.8
Page 4 of 4
MAY 8 1984

ASME SECTION XI SUMMARY REPORT

SHEET 99 of 259

Plant: BFNP
System: CRD
TVA Class: 2
Workplan/MR No. 2002-84

Furnish the following for the repair or replacement for the "as left" condition of the component (after field work is complete). Mark all blanks (indicate N/A for items which do not apply).

National Board Number of repaired or replaced component N/A

Name of the components and description (include size, capacity, material, and location)--These requirements may be satisfied by attaching an applicable drawing
EAST AND WEST CRD SDIV'S AND ASSOCIATED PIPING

Name of Manufacturer N/A

Address of Manufacturer (if known)

Manufacturer's component identification numbers (i.e., serial number, subassembly number, heat number, etc.) If more than one component is replaced, attach weld map and identify items by item number.
N/A

Brief description of repair or replacement work performed, including conditions observed and corrective measures taken, as applicable (Reference DCR, CAR, etc., drawing may be attached with affected area circled).
REPLACED EAST AND WEST SDIV'S AND ASSOCIATED PIPING

Brief description of post repair or replacement tests and examinations (if required) by instruction or procedure number
N/A - THIS PREFAB PACKAGE, HYDROTEST WILL BE PERFORMED BY INSTALLATION WORKPLAN

ANI/ANII name, employer, and business address
R. RUSSELL JR.

Date work completed 5-15-85

Lyman Jackson / 10-4-85
Cognizant Engineer Date

Retention: Period - Lifetime, Responsibility - OMMM Supervisor

051

Section I-a
Page 4 of 4

Tennessee Valley Authority
Browns Ferry Nuclear Plant

NOV 10 1986

Form SDSP-26
SDSP-13.3
Page 4 of 5

ASME SECTION XI SUMMARY REPORT

SHEET 100 of 259

Tennessee Valley Authority
Office of Nuclear Power, 1750 CST2-C
Browns Ferry Nuclear Plant Unit 2
P.O. Box 2000
Decatur, Alabama

Comm. Service Date MARCH 1975
System 64
TVA Class D
Workplan/MR No. 2003-84

Furnish the following for the repair or replacement for the as-left condition of the component (after field work is complete). Mark all blanks (indicate NA for items which do not apply).

National Board Number of repaired or replaced component. UNKNOWN

Name of the components and description (include size, capacity, material, and location)--Theses requirements may be satisfied by attaching an applicable drawing.
2- 2" ϕ GATE VALVES 600# C.S., SERVICE LEVEL 'A', LT-64-159A, LT-64-159B LEVEL DECTORS, REACTOR BLDG-TORUS EL. 519'-0" BAYS 1, 9

Name of Manufacturer HANCOCK

Address of Manufacturer (if known) UNKNOWN

Manufacturer's component identification numbers (i.e., serial number, subassembly number, heat number). If more than one component is replaced, attach weld map and identify items by item number. S/N's H472ABH & H473ABH. TVA MARK Nº 47W455-432, VALVE FIG. Nº 950W

Brief description of repair or replacement work performed, including conditions observed and corrective measures taken, as applicable (reference DCR, CAR, etc.; drawing may be attached with attached affected area circled).
INSTALLED TORUS WIDE RANGE LEVEL DECTORS LT-64-159A & LT-64-159B

Brief description of post repair or replacement tests and examinations (if required) by instruction or procedure number. NOT REQUIRED

ANII/ANI name, employer, and business address ROSEVELT RUSSELL, THE HARTFORD STEAM BOILER INSPECTION AND INSURANCE CO. 1117 PERIMETER CENTER WEST SUITE E301, ATLANTA, GA 30338

Date work completed 10/20/87

Gregory A. Robert, 11/19/87
Cognizant Engineer Date

Retention: Period - Lifetime; Responsibility - Modifications Supervisor

ASME SECTION XI SUMMARY REPORT

SHEET 101 of 259

Plant BFNP
System MAIN STEAM
TVA Class A
~~Workplan~~/MR No. A-177762

WP 2012-84

Furnish the following for the repair or replacement for the as-left condition of the component (after field work is complete). Mark all blanks (indicate NA for items which do not apply).

National Board Number of repaired or replaced component. N/A

Name of the components and description (include size, capacity, material, and location)--These requirements may be satisfied by attaching an applicable drawing. TARGET ROCK 2 STAGE MODEL 756FF MAIN STEAM RELIEF VALVE (6"X10") TVA CLASS A, DESIGN PRESSURE 1250 psi, REACTOR BLDG. UNIT 2

Name of Manufacturer TARGET ROCK CORPORATION

Address of Manufacturer (if known) EAST FARMINGDALE, NEW YORK

Manufacturer's component identification numbers (i.e., serial number, subassembly number, heat number). If more than one component is replaced, attach weld map and identify items by item number. MSRV'S S/N'S 1015, 1016, 1026, 1028, 1032, 1033, 1057, 1070, 184, 80, AND 68. MODEL 756FF

Brief description of repair or replacement work performed, including conditions observed and corrective measures taken, as applicable (reference DCR, CAR, etc.; drawing may be attached with affected area circled). RE-ESTABLISH VENT AND SENSING PORT GASKET AREAS DIMENSIONS TO WITHIN TOLERANCES SPECIFIED BY THE MANUFACTURER.

Brief description of post repair or replacement tests and examinations (if required) by instruction or procedure number. N-VT-3, N-VT-1, N-PT-1 AND CERTIFIED SET PRESSURE TEST AND LEAKAGE TEST PER MMI-13 AND MMI-107

ANII/ANI name, employer, and business address ROOSEVELT RUSSELL JR
THE HARTFORD STEAM BOILER INSPECTION AND INSURANCE CO.
1117 PERIMETER CENTER WEST, SUITE E-301, ATLANTA, GA. 30338

Date work completed March 26, 1987

Robert E. Cook 3-28-87
Cognizant Engineer Date

Retention: Period - Lifetime, Responsibility - Modifications Supervisor

 CALR BFP 870725 RC

Tennessee Valley Authority
Browns Ferry Nuclear Plant

NOV 10 1986

PAGE 118A

Form SDSP-26
SDSP-13.3
Page 4 of 5

ASME SECTION XI SUMMARY REPORT PAGE 5 of 10

Tennessee Valley Authority
Office of Nuclear Power, 1750 CST2-C
Browns Ferry Nuclear Plant Unit 2
P.O. Box 2000
Decatur, Alabama

Comm. Service Date
System Reactor Drain
TVA Class 1
Workplan/MR No. 2051-84

Furnish the following for the repair or replacement for the as-left condition of the component (after field work is complete). Mark all blanks (indicate NA for items which do not apply).

National Board Number of repaired or replaced component. N/A

Name of the components and description (include size, capacity, material, and location)--These requirements may be satisfied by attaching an applicable drawing.
See Attached Summary Report

Name of Manufacturer See Attached Summary Report

Address of Manufacturer (if known) 2051-84 1

Manufacturer's component identification numbers (i.e., serial number, subassembly number, heat number). If more than one component is replaced, attach weld map and identify items by item number.
See Attached Summary Report

Brief description of repair or replacement work performed, including conditions observed and corrective measures taken, as applicable (reference DCR, CAR, etc.; drawing may be attached with attached affected area circled).
See Attached Summary Report

Brief description of post repair or replacement tests and examinations (if required) by instruction or procedure number. See Attached Summary Report

ANII/ANI name, employer, and business address See Attached Summary Report

Date work completed Before 9-10-87

S. S. [signature] 12-3-87
Cognizant Engineer Date

Retention: Period - Lifetime; Responsibility - Modifications Supervisor

TVA
BROWNS FERRY NUCLEAR PLANT
P.O. BOX 2000
DECATUR, AL 35602

ASME SECTION XI SUMMARY REPORT

SYSTEM: RPV HEAD VENT VALVES
WORKPLAN: 2051-84
ECN NOS: P0569, P2086, P2087
DCR NOS: 2553, 1910, 1853

I. REPAIR OR REPLACEMENT WORK PERFORMED.

A. PIPING AND VALVES

1. REPLACED VALVES 2-FCV-3-98 AND 2-FCV-3-99
   1", 900 lb. GATE CONTROL VALVE (2-FCV-3-98, S/N E1589-1-2)
   (2-FCV-3-99, S/N 1589-1-5)
   WITH ATTACHMENT OF SOLENOID VALVE ASCO # NP 831664 E.

2. REPLACED PORTION OF PIPE BETWEEN EL. 632'6" AND EL. 631'6".
   PER DRAWING NO. 47W465-3, R22.
   1", SCH. 160 PIPE ASTM A-106, GR. B HT # 273642
   2", SCH. 80 PIPE ASTM A-106, GR. B HT # 163634

B. SUPPORTS

2051-84 1

1. MODIFIED SUPPORT H27 PER DRAWING NO. 47B465-24, R0
   3/8" PLATE ASTM A36 HT # 242735
   2"x2"x3/8" ANGLE ASTM A36 HT # 64314
   2"x2"x1/4" TUBE STEEL ASTM A500 HT # 23393

2. MODIFIED SUPPORT H21 PER DRAWING NO. 47A465-124, R1
   FIELD FABRICATED A PIPE CLAMP TO REPLACE GRINNELL FIG. 295 CLAMP.
   5/8" PLATE ASTM A36 HT # 7533061

ASME SECTION XI SUMMARY REPORT ~~PAGE 2 of 3~~

II. POST REPAIR OR REPLACEMENT TESTS AND EXAMINATIONS

A. PIPING AND STRUCTURAL WELDS WERE INSPECTED PER MAI-22 WITH VISUAL EXAMINATIONS AND LIQUID PENETRANT EXAMINATIONS AS REQUIRED.

B. WELDER QUALIFICATION WAS VERIFIED PER MAI-22.

C. ANI HOLDPOINT FOR VISUAL INSPECTIONS WAS NEGLECTED.

III. MANUFACTURE COMPONENT IDENTIFICATION NUMBERS.

A. 1", 900 lb DOUBLE DISC GATE VALVE WITH AIR ACTUATOR BY ANCHOR DARLING VALVE COMPANY PER DRAWING NO. W9221721, REV. C, S/N E1589-1-2 AND S/N 1589-1-5.

B. ACTUATOR WAS MADE BY CHICAGO FLUIDPOWER CO. PER DRAWING NO. C-1293-B WITH FAIL CLOSE MODEL A-24.

C. SOLENOID VALVE IS ASCO VALVE NP 831664E.

2051-84

IV MANUFACTURER

A. ANCHOR DARLING VALVE CO.
P.O. BOX 3428, WILLIAMSPORT, PA 17701

B. CHICAGO FLUID POWER CO.
411 N. AVENUE, STREAMWOOD, IL 60103

C. ASCO VALVE CO.
HANOVER ROAD, FLORHAM PARK, NJ 07932

ASME SECTION XI SUMMARY REPORT

V. ANI / ANII / AIA

ANI : ROOSEVELT RUSSELL
ANII : BILL RICE
AIA : THE HARTFORD STEAM BOILER INSP. AND INS. CO.
4330 GEORGETOWN SQUARE
ATLANTA, GA 30338

VI THIS SUMMARIZES THE WORK DONE IN THIS WORKPLAN 2051-84 BEFORE (9-10-87) THE CAQR BFP 870725 WAS WRITTEN.

ABOVE INFORMATION GATHERED BY

12-4-87 / 12-3-87

RESPONSIBLE ENGINEER DATE

SUBMITTED BY 2051-84

/

* R.E. SUPERVISOR DATE

* SIGNATURE IS NOT REQUIRED AT THIS MOMENT. WILL BE SIGNED WHEN THE WHOLE WORK IS COMPLETED.

Tennessee Valley Authority
Bronws Ferry Nuclear Plant

Form 164
BF 17.8
Page 4 Of 5
AUG 0 7 1985 SHEET 106 of 259

ASME SECTION XI SUMMARY REPORT

*Tennessee Valley Authority
*Office of Nuclear Power, 1750 CST2-C
*Browns Ferry Nuclear Plant Unit 2
*P.O. Box 2000
*Decatur, Alabama

Comm. Service Date March 1, 1975
System 73/HPCI
TVA Class B
Workplan/MR No. 2053-84

Furnish the following for the repair or replacement for the as-left condition of the component (after field work is complete). Mark all blanks (indicate NA for items which do not apply).

National Board Number of repaired or replaced component. 2-FCV-73-45

Name of the components and description (include size, capacity, material, and location)--These requirements may be satisfied by attaching an applicable drawing.
VLV 2-FCV-73-45 ~ FOR SIZE, MATERIAL AND LOCATION SEE DRAWING 15184-01 SHEET 1 OF 1 ATWOOD AND MORRILL. SEE ATTACHED DATA SHEET.

Name of Manufacturer ATWOOD AND MORRILL

Address of Manufacturer (if known) SALEM MASS.

Manufacturer's component identification numbers (i.e., serial number, subassembly number, heat number). If more than one component is replaced, attach weld map and identify items by item number.
Serial Number: 2-15184-01 SEE ATTACHED DATA SHEET

Brief description of repair or replacement work performed, including conditions observed and corrective measures taken, as applicable (reference DCR, CAR, etc.; drawing may be attached with attached affected area circled). CUT AND REMOVE VALVE 2-FCV-73-45 AND REPLACE WITH ATWOOD MORRILL VLV (14"Ø) CUT OUT TEST CONNECTIONS AND REWELD ON NEW VALVE.

Brief description of post repair or replacement tests and examintaions (if required) by instruction or procedure number. HYDRO PROCEDURE ATTACHMENT 2 IR TO WORKPLAN 2053-84, BF 3.10 BF 14.25 MAI 14 MAI-22 MAI 25 BF-VT-17 SI 4.7.A.2.G BF 14.62 N-VT-3 N-PT-1 N 80 E3 BF-MAI-30 MAI-102, N-RT-1 BF 5.12 + MMI-51.

ANII/ANI name, employer, and business address R. RUSSELL JR / B.J. RICE
HARTFORD STEAM BOILER INSPECTION AND INS. COMPANY
4330 GEORGETOWN SQUARE, ATLANTA, GA. 30338

Date work completed 9/11/86

Timothy Hailey Jr. / 9/11/86
Cognizant Engineer Date

Retention: Period - Lifetime, Responsibility - Modifications Supervisor

*Revision

ATTACHMENT 9-9, SHT-4

0510K

TVA 10746 (EN DES-7-80) 313578 SHEET 07 of 259 WP 2053-84 10-9-85

*REQN/CONTR NO. 15-834665 SUGGESTED EQUAL: ATWOOD & MORRILL TVA MARK NO. ____

*ITEM NO. 1 MANUFACTURER ANCHOR DARLING UNID NO. FCV-73-45

*REF NO. — VALVE FIGURE NO. ____ QUANTITY 3

A) FUNCTION: CONTAINMENT ISOLATION HPCI SYSTEM

B) DESIGN REQUIREMENTS:

R1 | 1. Type TESTABLE CV, SWING TYPE, PRESS. SEAL
2. Size (in.) 14
3. Primary Pressure Rating (lb) 900
4. Design Pressure (lb/in²) 1375
5. Design Temp (°F) 376
6. Fluid DEMINERALIZED WATER
7. Flow Rate (gal/min) 5000
8. Cv or L/D Max ** Min ____
9. Opening & Closing △ P (lb/in²) 0
10. End Prep BUTTWELD
11. Machined "C" Dia (in.) 12.317
12. Attached Pipe or Nozzle: Sched 100 Size 14" Matl CS
13. Seat Leakage (cc/hr/in.) 2 #
14. Set Pressure/Tol (lb/in²) NA
15. Over Pressure /Blowdown NA

OPERATOR REQUIREMENTS:

R2 | 16. Type PNEUMATIC (SPEC. PARA. 7.7.11)
17. Voltage SPEC. PARA. 7.10.1 & 7.10.2
18. Phase/Cycles (Hz) SPEC. PARA. 7.10.1 & 7.10.2
19. Opening/Closing Time (seconds) MS
20. Failure Mode Open ____ Close X As Is ____
21. Normal Position Open ____ Close X Throt ____
22. Manual Operation NONE
23. Space Heater for Motor Yes ____ No X
24. ____

SPECIAL REQUIREMENTS:

R1 | 25. Stem Leakoff NA
26. Bypass NA
27. Body/Bonnet Drains NA
28. Bellows NA
29. Lifting Lever NA
30. Locking Device NA
31. Gearing NA
32. TEST 3/4" SCH160 (UPSTREAM & DOWNSTREAM)

C) *BOUNDARIES: SPEC. PARA. 7.3.4

* To be filled in by requisitioning engineer

** VLV TO BE FULLY OPEN @ 5000 GPM.

D) ENVIRONMENTAL CONDITIONS:

33. Location: Bldg REACTOR El 565.0
34. Pressure SEE SS-E18.10.01R0 | RZ
35. Temp " " " " " "
36. Rh " " " " " "
37. Radiation " " " " " "

E) CODE CLASSIFICATION: ASME SECT. III

38. Class 1 (TVA CLASS B)
*39. Issue 1980 EDITION
*40. Addenda SUMMER, 1981

F) SEISMIC CATEGORY:

41. I Active X I (L) ____ None ____
I Nonactive (Dynamic) ____ I Nonactive (Static) ____
42. Anchored NO If Yes, El ____
Ref: Seismic Criteria Doc No. WB-DC-40-31.12
or Seismic Response Spectra ____

G) MATERIAL REQUIREMENTS:

43. Body & Bonnet ASME SA 216 GR WCB
44. HINGE SHAFT-SS (410 OR 17-4ph) | RZ
45. Disc STELLITE FACE
46. Seats STELLITE FACE NO. 21 (PRIMARY) OR NO. 6 | RZ
47. Packing GRAPHOIL
48. Impact Test Yes X No ____
Test Temp (°F) 40
Acceptance Criteria PER ASME CODE
*49. Wall Thickness Verification SPEC. PARA. 8.2.2.8
50. Erosion/Corrosion Allowance 0.080 IN
51. CMTR/COC CMTR REQUIRED
52. RT/MT of Non-ASME Code Vlv NA

H) OPERATION MODES:

Service Level	A	B	C	D
Pressure (lb/in²g)	1375	→	→	→
Temp (°F)	376	→	→	→
Flow (gal/min)	5000	→	→	→

53. Operation Cycles/Yr: Min 2 Max 12
54. Transients NA | RZ

J) ACTUAL VALVE SUPPLIED:

55. Manufacturer ____
56. Dwg No. ____

COMMENT: *AIR TEST REQD. MAX LKG - 1/10 SCFH/IN @ 80 PSIG
SEE ATTACHMENT 1 FOR ADDITIONAL REQUIREMENTS | RZ
A SECONDARY SEALING SURFACE USING AN ELASTOMERIC SEAT. | RZ

REV	ECN NO.	DATE	M	CHKD	SUPV	ENGR	INSP	SUPM	APPR
3									
2	P0651	10/20/83	DJK		KJB				
1	P0651		DJK	DRP	DJK				
Rev B-1 & B-25 & Attachment 2									
0	P0651		DJK	DRP					

VALVE DATA SHEET

TENNESSEE VALLEY AUTHORITY
BROWNS FERRY NUCLEAR PLT
HPCI TESTABLE CHECK VLV

~~DWG NO.~~ 2W03-094 5B

KNOXVILLE, TN DATE:

SH | 47D5600-1067 RZ

(WP 2053-84)

FOLD

PARTS LIST

	1		BODY	1		SA216	WCB
	1		PIPE	2		SA106	C
	1		SEAT RING	1		A240	316
	2		STUFFING BOX	1		C.STL	SA216 WCB
F	3		DISC W/LDT	1		STL	
	3		LVDT	1		STL	SA216 WCB
	3		RETAINING RING	1		SST	A564 630
	4		BEARING COVER	1		C.STL	SA216 WCB
	5		LOCKING PLATE	1		STL	A515 70
	6		SEAL RING	1		[illegible]	A197 F304
	7		[illegible] RING	1		FRG SST	A182 F304
	8		HEAD KEY	1		FRG SST	A182 F304
	9		SHAFT	1		SST	A564 630 HTC 1100
	10		BUSHING	1		SST	A564 630 HTC 900
	11		GLAND	1		C SST	A217 CA15 410
E	12		COVER	1		STL	SA516 70
	13		THROTTLING SHAFT	1		SST	A564 630
	14		BUSHING SLEEVE	1		SST	A564 630 HTC 900
	15		BUSHING PLATE	1		SST	A564 630 HTC 900
	16		DOWEL PIN	4		SST	410
	17		GASKET	2		SST SPIRAL WOUND	
	18		STUD	10		ALY STL	SA193 B7
	19		HVY HEX NUT	12		STL	SA194 2H
	20		STUD	2		ALY STL	A193 B7
	21		HVY HEX NUT	2		STL	A194 2H
	22		STUD	4		ALY STL	A193 B7
	23		HVY HEX NUT	4		STL	A194 2H
	24		KEY	1		SST	A564 630 HTC1100
D	25		DISC ARM	1		C.STL	A216 WCB
	27		BUSHING	1		SST	A564 630 HTC 900
	28		STUD	2		ALY STL	A193 B7
	29		GLAND	1		CST	A564 630 HTC 900
	45		DELTA RING	1		KALREZ	4048 DURO
	52		HVY HEX NUT	1		STL	A194 2H
	53		WASHER	1		SST	
	31		SWITCH ACTUATOR	1		STL PL	1016/1020
	32		STUD	2		ALY STL	A193 B7
	33		INDICATOR PLATE	1		SST	18-8
	34		PACKING RING	10		GRAFOIL	[illegible]
	35		SPACER	1		CHEM FIL	GR/FR/S 2
G	36		SET SCREW HEX SOC	2		ALY STL	
	37		NAMEPLATE COOR	1		SST	18-8
	38		DRIVE SCREW	4		SST	18-8
	39		SET SCREW HEX SOC	1		ALY STL	
	40		INSTRUMENT TAG	2		SST	18-8
	41		WIPER RING	2		GRAPH-T	GRAPH 1630 GF
	42		HVY HEX NUT	2		STL	A194 2H
	43		KEY	1		ALY STL	4140
	301		AIR CYL AP	1		C.STL	A216 WCB
	302		PISTON	1		FRG SST	A182 F304
	303		PISTON ROD	1		STL	1018 ENDURON COAT
	304		HOLD DOWN BOLT	1		ALY STL	A193 B7
	305	001	CYLINDER W/LDT	1		STL	A519 MT1020
	306	002	SOLENOID MTG BRKT	1		STL	1020
	307		SOC HD CAP SCR	1		ALY STL	
	308		SPHERICAL FLANGE NUT	1		LEDLOY	
	309		HEX JAM NUT	1		STL	A563 A
	309		SPRING PIN SLOTTED	1		SPG STL	
	310		SEAL RING	1		VITON	470 90 DURO
	311		SEAL RING	1		VITON	470 90 DURO
	312		SEAL RING	2		VITON	470 90 DURO
	313		SPRING	1		SPG STL	1035
	314		MALE CONNECTOR	1		SST	316

PARTS LIST

	341		[illegible]	1		CHEM FIL	GR/FR/S 2
	342		STUD	4		ALY STL	A193 B7
	343		HEX NUT	4			A194 2H
	54		PIN	1		SST	A580 410
	50		BUSHING	1		SST	A564 630 HTC 900
	51		WITCH ROD	1		SST	A479 410 CL 2
	55		PACKING RING	3		GRAFOIL	GRAPH 241

PARTS LIST

	361		[illegible] HER FLG NUT	1		LEDLOY	
	362		EX JAM NUT	1		STL	A563 A
	401		[illegible] ITCH BRKT	1		STL	1020
	403		[illegible] LEVER	1		STL	STYLER SPLINED NAMCO

PARTS LIST

	431		SWITCH BRKT	1		STL	
	434		SWITCH LEVER	1		STL	STYLER SPLINED
	435		HEX CAP SCR	4		ALY STL	A193 B7
	436		HVY HEX NUT	4		STL	A194 2H
	437		LIMIT SWITCH	1		NAMCO	EA180-2130

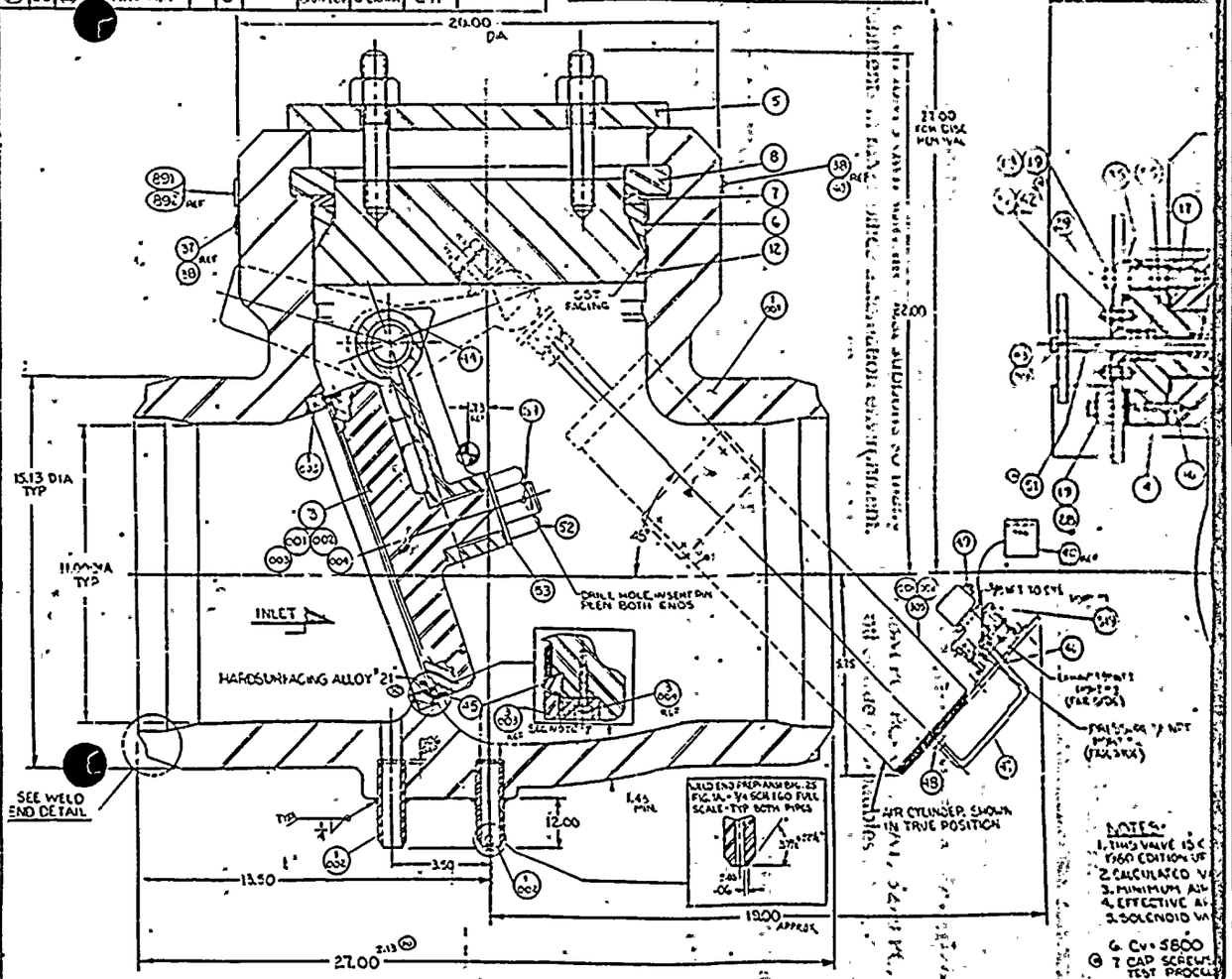

REV A		112
REV B		
REV C		

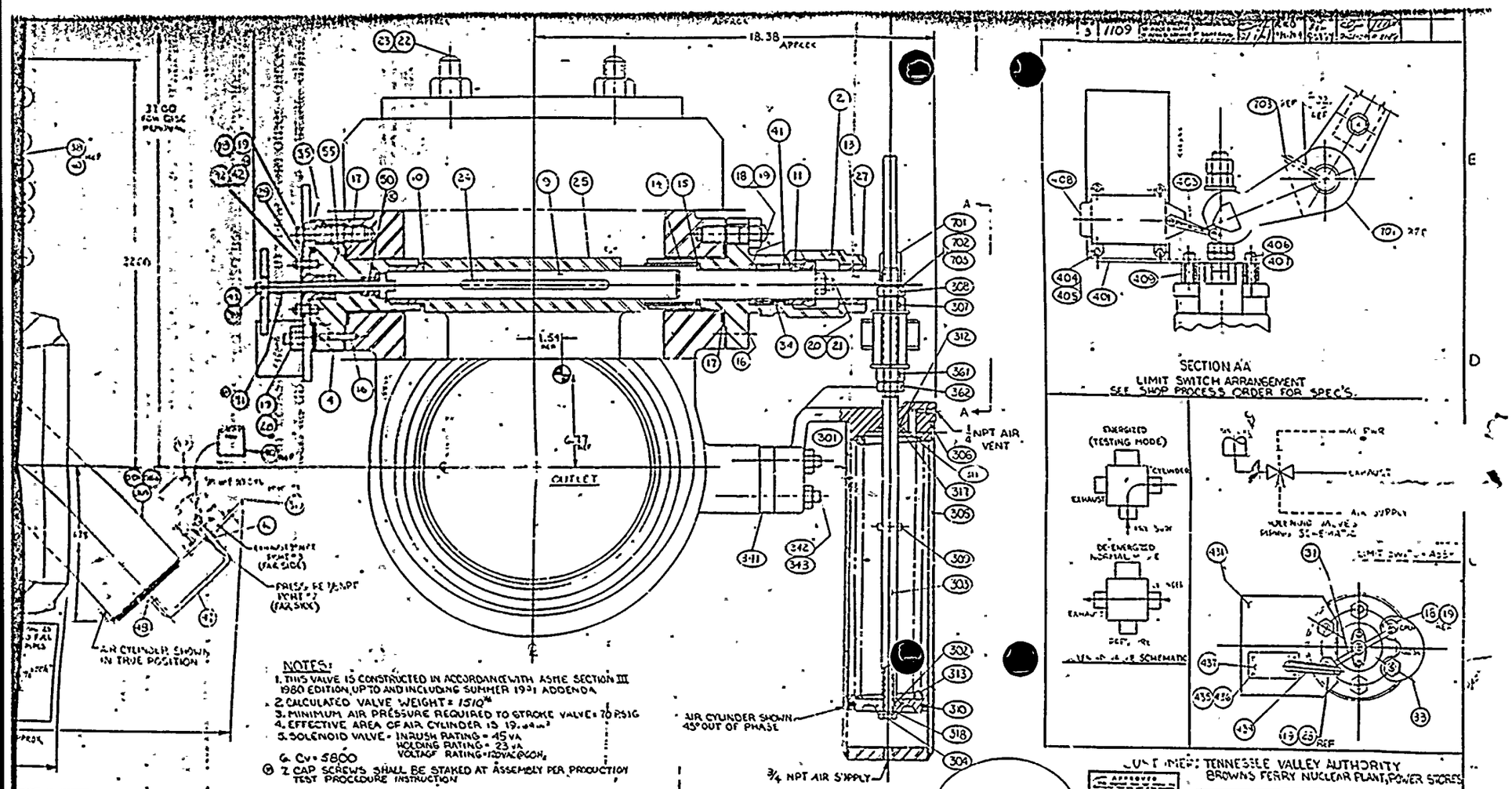

NOTES:

1. THIS VALVE IS CONSTRUCTED IN ACCORDANCE WITH ASME SECTION III 1980 EDITION, UP TO AND INCLUDING SUMMER 1981 ADDENDA
2. CALCULATED VALVE WEIGHT = 1510 LB
3. MINIMUM AIR PRESSURE REQUIRED TO STROKE VALVE = 70 PSIG
4. EFFECTIVE AREA OF AIR CYLINDER IS 19.64 IN²
5. SOLENOID VALVE - INRUSH RATING = 45 VA
   HOLDING RATING = 23 VA
   VOLTAGE RATING = 120VAC@60~
6. Cv = 5800
7. CAP SCREWS SHALL BE STAKED AT ASSEMBLY PER PRODUCTION TEST PROCEDURE INSTRUCTION

PARTS LIST				
	S7L			
	STL	STYLER SPLINED		
	ALY STL	A193	B7	
	STL	A194	2H	
	NAMCO			EA180-213
	C STL	A216	WCB	
	ALY STL		4140	
	ALY STL			
	SST		18-8	
	ALY STL			

	ZONE	ECN NO	REVISION DESCRIPTION	DRAWN	CHKD	CH DR	ENG	PC	SEQUENCE
REV A		1129	MATCH FOR SST AIR CYL & ADDED DRAWING BOARD						N/A
REV B									
REV C									

INTERNAL BALANCE SHAFT OPERATION

SECTION A IS INTEGRAL WITH SHAFT DOG
SECTION B IS INTEGRAL WITH DISC WITH NO PRESSURE UNDER THE PISTON, THE DISC B IS FREE TO OPERATE AS A SWING CHECK VALVE. WHEN PRESSURE IS APPLIED TO THE PISTON, THE SHAFT DOG A CONTACTS THE DISC B AND OPENS THE VALVE

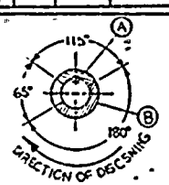

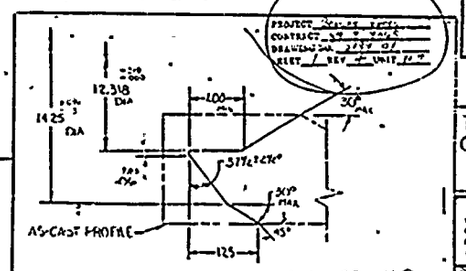

▶ ✓ ALL MACHINED SURFACES
▶ REF - FOR FIT UP WITH 14" SCH 100 PIPE WELD END DETAIL, TYP BOTH ENDS, FULL SCALE.

CUST INFO: TENNESSEE VALLEY AUTHORITY
BROWNS FERRY NUCLEAR PLANT, POWER STORES

APPROVED

AIR CYLINDER LOCATED ON LEFT HAND SIDE WHEN FACING INLET (LH SHOWN)

THIS PRINT CERT. ED CORRECT FOR YOUR U ER: 84PJ5-834065

WHEN WRITING IN REGARD TO THIS EQUIPMENT, REFER TO: 15184-01

THIS PRINT IS THE PROPERTY OF & CONTAINS PROPRIETARY INFORMATION OF ATWOOD & MORRILL CO INC AND IS TO BE KEPT CONFIDENTIAL. REPRODUCTION OF ANY PART THEREOF OR USE FOR PURPOSES OTHER THAN THOSE EXPRESSLY DESIGNATED BY ATWOOD & MORRILL CO INC IS NOT PERMITTED

10/29	
150#	
217	
148 900# WE. TESTABLE GA VALVE W/SIDE AIR CYLINDER & LIMIT SWITCHES	1-1-1-1-1-1
ATWOOD & MORRILL CO. INC SALEM, MASS	15184-01

2053-84

Tennessee Valley Authority
Bronws Ferry Nuclear Plant

Form 164
BF 17.8
Page 4 Of 5
AUG 0 7 1985

SHEET 110 of 259

ASME SECTION XI SUMMARY REPORT

*Tennessee Valley Authority
*Office of Nuclear Power, 1750 CST2-C
*Browns Ferry Nuclear Plant Unit 2
*P.O. Box 2000
*Decatur, Alabama

Comm. Service Date March 1, 1975
System 71 (RCIC)
TVA Class B
Workplan/MR No. 70524-84

Furnish the following for the repair or replacement for the as-left condition of the component (after field work is complete). Mark all blanks (indicate NA for items which do not apply).

National Board Number of repaired or replaced component. 2-FCV-71-40.

Name of the components and description (include size, capacity, material, and location)--These requirements may be satisfied by attaching an applicable drawing.
See Attached Value data sheet

Name of Manufacturer Atwood & Morrill, Inc.

Address of Manufacturer (if known) Salem, Mass.

Manufacturer's component identification numbers (i.e., serial number, subassembly number, heat number). If more than one component is replaced, attach weld map and identify items by item number.
Serial number 36-45042, Also see Attached Value Data Sheet.

Brief description of repair or replacement work performed, including conditions observed and corrective measures taken, as applicable (reference DCR, CAR, etc.; drawing may be attached with attached affected area circled). Cut out old Valve FCV-71-40; Replace with Atwood Morrill valve. Cut/remove test conn. piping and valves from old valve and weld to new. DR 86-0146 was issued for welder not being certified prior to welding.

Brief description of post repair or replacement tests and examintaions (if required) by instruction or procedure number. BF 3.10, BF 14, MAI-22, MAI-25, BF-UT-17, N-VT-3, N-PT-1, N-RT-1, MMT 103, MAI 30, N-MT-1, N-VT-4

ANII/ANI name, employer, and business address Roosevelt Russell, Jr / B. J. RICE The Hartford Steam Boiler Inspection And Insurance Co., 1117 Perimeter Center West, Suite E301 Atlanta, Ga. 30338

Date work completed 9/10/86

Kelvin Green, 9/11/86
Cognizant Engineer Date

Retention: Period - Lifetime, Responsibility - Modifications Supervisor

*Revision

0510K

ATTACHMENT 9-7 SHT 4

313579 MICROFILMED

TVA 10746 (EN DES-7-80)

*REQN/CONTR NO. J5-834065 SUGGESTED EQUAL: ATWOOD & MORRILL TVA MARK NO. ____

*ITEM NO. 2 MANUFACTURER ANCHOR DARLING UNID NO. FCV-71-40

*REF NO. — VALVE FIGURE NO. ____ QUANTITY 3

A) FUNCTION: CONTAINMENT ISOLATION RCIC SYSTEM

B) DESIGN REQUIREMENTS:

R1 | 1. Type TESTABLE CV, SWING TYPE, PRESS. SEAL
2. Size (in.) 6
3. Primary Pressure Rating (lb) 900
4. Design Pressure (lb/in²) 1375
5. Design Temp (°F) 376
6. Fluid DEMINERALIZED WATER
7. Flow Rate (gal/min) 600
8. ~~Cv~~ or L/D Max ** Min ____
9. Opening & Closing △ P (lb/in²) 0
10. End Prep BUTT WELD
11. Machined "C" Dia (in.) 5.601
12. Attached Pipe or Nozzle: Sched 120 Size 6" Matl CS
13. Seat Leakage (cc/hr/in.) 2 ≠
14. Set Pressure/Tol (lb/in²) NA
15. Over Pressure/Blowdown NA

OPERATOR REQUIREMENTS:

RZ | 16. Type PNEUMATIC (SPEC. PARA. 7.7.11)
17. Voltage SPEC. PARA. 7.10.1 & 7.10.2
18. Phase/Cycles (Hz) SPEC. PARA. 7.10.1 & 7.10.2
19. Opening/Closing Time (seconds) MS
20. Failure Mode Open ____ Close X As Is ____
21. Normal Position Open ____ Close X Throt ____
22. Manual Operation NONE
23. Space Heater for Motor Yes ____ No X
24. ____

SPECIAL REQUIREMENTS:

R1 | 25. Stem Leakoff NA
26. Bypass NA
27. Body/Bonnet Drains NA
28. Bellows NA
29. Lifting Lever NA
30. Locking Device NA
31. Gearing NA
32. TEST 3/4" SCH 160 (UPSTREAM & DOWNSTREAM)

C) *BOUNDARIES: SPEC. PARA. 7.3.4

* To be filled in by requisitioning engineer

** VLV TO BE FULLY OPEN @ 600 GPM

D) ENVIRONMENTAL CONDITIONS:

33. Location: Bldg RX El 565.0'
34. Pressure SEE SS-EIB.10.01RQ | RZ
35. Temp " " "
36. Rh " " "
37. Radiation " " "

E) CODE CLASSIFICATION: ASME SECT. III

38. Class 1 (TVA CLASS B)
*39. Issue 1980 EDITION
*40. Addenda SUMMER, 1981

F) SEISMIC CATEGORY:

41. I Active X I (L) ____ None ____
I Nonactive (Dynamic) ____ I Nonactive (Static) ____
42. Anchored NO If Yes, El ____
Ref: Seismic Criteria Doc No. WB-DC-40-31.12
or Seismic Response Spectra ____

G) MATERIAL REQUIREMENTS:

43. Body & Bonnet ASME SA 216 GR. WCB
44. HINGE SHAFT - SS (410 OR 17-4 ph) | RZ
45. Disc STELLITE FACE
46. Seats STELLITE FACE NO. 21 (PRIMARY) OR NO. 6 | RZ
47. Packing GRAPHOIL
48. Impact Test Yes ____ No X
Test Temp (°F) ____
Acceptance Criteria ____
*49. Wall Thickness Verification SPEC. PARA. 8.2.2B
50. Erosion/Corrosion Allowance 0.080 IN
51. CMTR/COC CMTR REQUIRED
52. RT/MT of Non-ASME Code Vlv NA

H) OPERATION MODES:

Service Level	A	B	C	D
Pressure (lb/in²g)	1375			
Temp (°F)	376			
Flow (gal/min)	600			

53. Operation Cycles/Yr: ____
Min 2 Max 12
54. Transients NA | RZ

J) ACTUAL VALVE SUPPLIED:

55. Manufacturer ____
56. Dwg No. ____

COMMENT: ≠ AIR TEST REQD. MAX LKG - 1/10 SCFH/IN @ 80 PSIG
SEE ATTACHMENT 1 FOR ADDITIONAL REQUIREMENTS | RZ
Δ SECONDARY SEALING SURFACE USING AN ELASTOMERIC SEAT. | RZ

REV	ECN NO.	DATE	MADE	CHKD	SUPV	ENGR	INSP	SUBM	RECM	APPR
3										
2	P0652	10/20/83	DJMc		JWD					
1	P0652	—	DJK	JRP						
ECN B-1 & B-25 & ATTACHMENT 2.										
0	P0652		DJK							

VALVE DATA SHEET

TENNESSEE VALLEY AUTHORITY
BROWNS FERRY NUCLEAR PLT
RCIC TESTABLE CHECK VLV
CWP-2054-84
NO. 8WP3-095

KNOXVILLE, TN DATE:

SH | 47DS600-1018-R2

59

TENNESSEE VALLEY AUTHORITY
BROWNS FERRY NUCLEAR PLANT
P. O. BOX 2000
DECATUR, ALABAMA 35602

DAW 10-27-86

ASME SECION ~~IX~~ XI
SUMMARY REPORT

SYSTEM: CORE SPRAY
ASME CODE CLASS: 2
WORKPLAN NUMBER: 2055-84
ECN/DCR NUMBER: P0361/2161

I Repair or replacement work performed.

A. H-24 - Remove existing support 47A458-171 R3, replace with rod hanger 47B458-496 R2. Mk.3, weld beam attachment part no. 1047, type 2, with pin, Mk 8 - hanger rod, Mk-18 weldless eye nut, Mk. 23 hex nuts, Mk. 725 pipe clamp 14".

B. H-58A - Remove existing support.

C. R-52 - Remove existing support H-57A 47A458-199 R2 and replace with R-52 47B458-179 R2. Install Mk. 119 field weld adjustable rigid strut part no. 2251 and mk. 123 pipe clamp 3".

D. R-77 - Installed TS 3X3, U-bolts and baseplate.

E. H-65 Installed plate 3/8" X 4" lg. as req'd, plate 3/8"x 4"x 1'x0". 7/8" bolt with lock nut, plate 1/4" x 2 1/4" X 0'-5", plate 1/4" X 2 1/2" X 0'- 5".

II. Post repair or replacement test or examinations.

A. Welds inspected per N-VT-2.
B. Support installation verified per MAI-23 and SHMI-14.4.1.3-L.
C. ANI holdpoint - PT/MT 2-CS-R77-10-11-12-13.

III. Manufacturers component identification numbers.

Mk 3 - weld beam attachment, part no. 1047 1", type 2, with pin.
Mk 8 - 1" ASTM A-36 hanger rod.
MK 18 - weldless eye nuts, 1".
MK 23 - heavy hex nuts, part no. 5400, 1"
MK 725 - pipe clamp, 14".
MK 123 - pipe clamp, part no. 6200, 3"
MK 119 - Rigid strut with structural and attachment part no. 2251.

IV. Manufacture
BP Bergen - Paterson
74 Commerce Way
Wobuer, MA 01888

Grinnel Company, Inc.
Providence, R. I.

V. ANI/ANII/AIA
ANI: Roosevelt Russell
ANII: Bill Rice
AIA: The Hartford Steam Bioler Inspection and Insurance Co.
1117 Perimeter Center West, suite E301
Atlanta, GA 30338

VI Date work completed 9-19-86

Above information verified
Tommy Taylor, 9-19-86
Cognizant Engineer/date

0172d

WP-2055-84

TENNESSEE VALLEY AUTHORITY
BROWNS FERRY NUCLEAR PLANT
P. O. BOX 2000
DECATUR, ALABAMA 35602

ASME SECTION XI
SUMMARY REPORT

UNIT 2, CYCLE 5

System: Core Spray and RCIC
ASME Code Class: 2
Workplan Number: 2056-84
ECN/DCR NUMBER : PO361/2161

I. Repair or replacement work performed.

A. H-1 (47B458-411 RO, FCR 85-114 RO, FCR 85-124RO) - Installed new baseplate, welded beam attachment (Mk. 1), weldless eye nut (Mk16) and rod (Mk 6).

B. R-7 (Bergen-Paterson 1959-2 R1) - Removed existing support.

C. H-51 (47B458-416 R3) - Installed new clamp (Mk 123) and rigid strut (Mk 119).

D. H-53(47A458-190 R2) - Removed existing welded beam attachment, rod, weldless eye nut, and pipe clamp. Installed new rigid strut (Mk. 120) and clamp (Mk 52).

E. H-57 (47B458-426RO) - Removed existing welding lug, clevis, rod, weldless eye nut, and clamp. Installed new baseplate and tube steel.

F. H-61 (47A458-206 R4) - Removed existing bar and U-bolt. Installed new baseplate, tubesteel, and rod.

G. H-66(47A458-386 R1) - Removed existing welded beam attachment, rod, weldless eye nut, and clamp. Installed new tube steel and rod.

H. R-82 (47B458-459 R2) - Installed new baseplates, rigid struts (Mk 45) and clamps (Mk 281).

I RCIC Turbine Exhaust Restraint (48N1249-1 R5, FCR 85-533 R1) - Built-up welds.

II Post repair or replacement tests and examinations. PAGE 123

A. Welds inspected per N-VT-2.

B. Support installations verified per MAI-23 and SMMI-14.4.1.3.-L.

C. Baseline inspection of support H-1 per N-VT-1.

D. ANI holdpoint - Visual inspection of weld 2-CS-H1-3.

III. Manufactures component indentification numbers.

MK 1 - Welded beam attachment, B-P 1047, 1-1/2" type 2 with pin.
MK 6 - 1-1/2" ASTM A-36 hanger rod, Bergen-Paterson
MK 16 - Weldless eye nut, B-P 5130, 1-1/2".
MK 45 - Rigid strut with structural end attachment, B-P 2251, size 12.
MK 52 - 3" pipe clamp, B-P 6200, size 0.65.
MK 119 - Rigid strut with structural end attachment, B-P 2251, size 1.5.
MK 120 - Rigid strut with structural end attachment, B-P 2251, size 0.7.
MK 123 - 3" pipe clamp, B-P 6200, size 1.5.
MK 281 - 14" pipe clamp, B-P-6200, size 12

IV. Manufacturer

B-P Bergen - Paterson
74 Commerce Way
Woburn, MA 01888

V. ANI/ANII/AIA

ANI: Roosevelt Russell
ANII: Bill Rice
AIA: The Hartford Steam Boiler Insp. and Ins. Co.
4330 Georgetown Square
Atlanta, GA 30338

VI. Date work completed: 9-5-86

Above Information Verified

Tommy Taylor 9/5/86
Cognizant Engineer/Date

WP-2056-84

TENNESSEE VALLEY AUTHORITY
BROWNS FERRY NUCLEAR PLANT
P.O. BOX 2000
DECATUR, AL. 35602

ASME SECTION XI
SUMMARY REPORT
UNIT 2. CYCLE 5

SYSTEM: CORE SPRAY
ASME CODE CLASS: 2
WORKPLAN #: 2057-84
ECN/DCR: P0361/ 2161

I. REPAIR OR REPLACEMENT WORK PERFORMED.

A. H-30 (47A458-177 R2, 47B458-195 R0, R1), REMOVED EXISTING PLATE + CLAMP. INSTALLED NEW ATTACHMENT PLATE, STIFFENER PLATES AND NEW CLAMP (MK 127).

B. H-35 (47A458-182 R2, 47B458-447 R0, R1, R2, R3, R4), REMOVED EXISTING WELD LUG (MK550). INSTALLED SITE FABRICATED WELDING LUG + 2 COTTER PINS.

C. H-51A (47A458-187 R2, 47B458-187 R0, R1, R2) REMOVED EXISTING ROD, CLAMP, ANGLE. INSTALLED NEW 4X4 TUBE STEEL, ADJUSTABLE RIGID STRUT (MK46) AND NEW CLAMP (MK295).

D. H-53A (47A458-191 R1, R2, R3, R4, R5, R6, R7, R8) REMOVED EXISTING 3X2 ANGLE + HEX NUT. INSTALLED NEW 3X3 TUBE STEEL, NEW WELDLESS EYENUT (MK20), STIFFENER PLATE, + 5/8 BAR.

E. H-73 (47B458-400 R0, R1, R2, R3), INSTALLED NEW 4X4 TUBE STEEL, 3/4 PLATE, ADJUSTABLE RIGID STRUT (MK45) + PIPE CLAMP (MK130)

F. H-77 (47B458-199 R0, R1, R2), INSTALLED NEW 3/4 BASEPLATE, ADJUSTABLE RIGID STRUT (MK45) + PIPE CLAMP (MK130)

G. R-39 (47A458-374 R0, R1), REMOVED EXISTING, ROD, BEAM ATTACHMENT, AND CLAMP. INSTALLED NEW 4X4 ANGLE, 1/4 STIFFENER PLATES, + NEW U-BOLT (MK420)

H. R-42 (47B458-191 R0, R1, R2) INSTALLED NEW 4X4 TUBE STEEL, 3/4 BASEPLATES, ADJUSTABLE RIGID STRUT (MK46) + CLAMP (MK464)

I. ~~R-51 (47A458-197 R2, 47B458-178 R0, R1, R2) REMOVED EXISTING WELDED BEAM ATTACHMENT, HEX NUT, ROD, WELDLESS EYENUT, + PIPE CLAMP. INSTALLED NEW 3X3 TUBESTEEL, 1/2 PLATE, ADJUSTABLE RIGID STRUT (MK119), PIPE CLAMP (MK123).~~ KG 7/25/91 KG 7/25/91 KG 7/25/91 KG 7/25/91 NOT ASME SECTION III. REFERENCE RIMS NO. R05 910722 897 KG 7/25/91

J. R-73 (47A458-181 R2 [SUPPORT H-34], 47B458-439 R0, R1, R2, R3). REMOVED EXISTING (H-34) SPRING CAN, + PARTIAL PIPE STANCHION. INSTALLED NEW 4X4 AND 6X6 TUBESTEEL, 3/8 BAR, 7/8 BAR, BEAM ATTACHMENT (MK162), + PIPE CLAMP (MK292).

WP-2057-84

V. MANUFACTURERS.

B-P:

BERGEN-PATERSON
74 COMMERCE WAY
P.O. BOX 4011
WOBURN, MA. 01888

GRINNELL:

ITT GRINNELL CORPORATION
EXECUTIVE OFFICES
260 WEST EXCHANGE ST.
PROVIDENCE, R.I. 02901

VI. ANI / ANII / AIA..

ANI: ROOSEVELT RUSSELL

ANII: B.J. RICE

AIA: THE HARTFORD STEAM BOILER INSP. AND INS. CO.
1117 PERIMETER CENTER WEST
SUITE E301
ATLANTA, GA. 30338

VII. DATE WORK COMPLETED: 12.27.85

ABOVE INFORMATION VERIFIED

R.L. Richardson — 10.22.86
RESPONSIBLE PERSON — DATE

WP 2057-84

II. SUPPORTS REMOVED

A. H-34: REPLACED BY R-73

B. H-56A: REPLACED BY R-51

C. R-13

III. POST REPAIR OR REPLACEMENT TESTS AND EXAMINATIONS

A. STRUCTURAL WELDS INSPECTED PER N-VT-Z.

B. SUPPORT INSTALLATIONS VERIFIED PER SMMI-14.4.1.3-L.

C. BASELINE INSPECTIONS PERFORMED PER N-VT-1 ON SUPPORTS R-73, R-42, H-30.

D. ANI HOLDPOINTS ON: R-73; VT ON N-VT-Z.

IV. MANUFACTURERS COMPONENTS IDENTIFICATION NUMBERS.

MK127- 12" PIPE CLAMP, B-P 6200, SIZE 3.

MK550- 1 1/8" WELDING LUG, GRINNELL # STD-55.

MK46- FIELD WELDED ADJUSTABLE RIGID STRUT, B-P 2251, SIZE 4.

MK295- 3" PIPE CLAMP, B-P 6200, SIZE 3.

MK20- 1/2" WELDLESS EYENUT, B-P 5130.

MK-45- FIELD WELDED ADJUSTABLE RIGID STRUT, B-P 2251, SIZE 12.

MK-130- 10" PIPE CLAMP, B-P 6200

MK-420- 2" STANDARD U-BOLT, B-P 6510

MK-464- 14" PIPE CLAMP, B-P 6200, SIZE 3.

MK-119- FIELD WELDED ADJUSTABLE RIGID STRUT, B-P 2251

MK-123- 3" PIPE CLAMP, B-P 6200, SIZE 1.5

MK-162- STRUCTURAL ATTACHMENT, B-P 1000, SIZE 12.

MK-292- 16" PIPE CLAMP, B-P 6200, SIZE 12.

WP 2057-84

TENNESSEE VALLEY AUTHORITY

BROWNS FERRY NUCLEAR PLANT

P.O. BOX 2000

DECATUR, AL. 35602

SUPPLEMENTAL SUMMARY REPORT FOR SUPPORT H-53A

ASME SECTION XI

SUMMARY REPORT

UNIT 2, CYCLE 5

SYSTEM: CORE SPRAY

ASME CODE CLASS: 2

WORKPLAN #: 2057-84

ECN/DCR: P0361/2161

REPAIR OR REPLACEMENT WORK PERFORMED.

H-53A (47A458-191 R1, R2, R3, R4, R5, R6, R7, R8, R9+R10) REMOVED EXISTING 3X2 ANGLE + HEX NUT. INSTALLED NEW 3X3 TUBE STEEL, NEW WELDLESS EYENUT (MK20), STIFFENER PLATE, + 5/8 BAR. ADD 1" X 1½" PL. AS SHOWN IN DETAIL C191 REV'S 9+10

POST REPAIR OR REPLACEMENT TESTS AND EXAMINATIONS

A. STRUCTURAL WELDS INSPECTED PER N-VT-2 + N-VT-6

B. SUPPORT INSTALLATIONS VERIFIED PER SMMI-14.4.1.3-L.

ANI/ANII/AIA.

ANI: ROOSEVELT RUSSELL

ANII: B.J. RICE

AIA: THE HARTFORD STEAM BOILER INSP. AND INS. CO.

1117 PERIMETER CENTER WEST

SUITE E301

ATLANTA, GA. 30338

DATE WORK COMPLETED: 7-30-87

ABOVE INFORMATION VERIFIED

David Winchester 9-8-87

RESPONSIBLE PERSON DATE

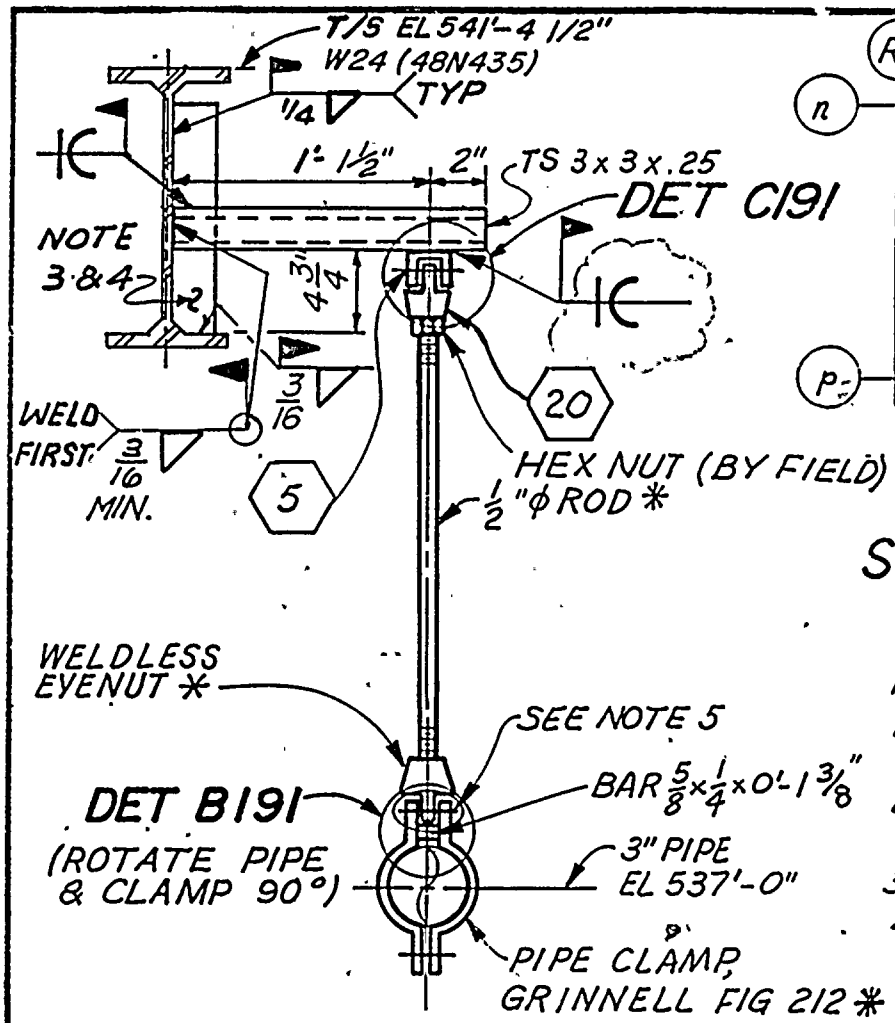

A191-A191

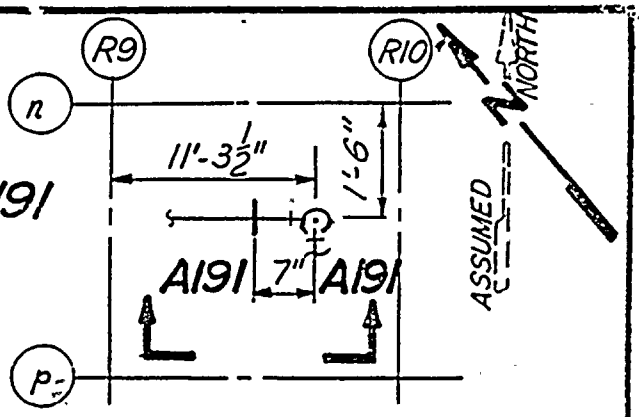

LOCATION PLAN
FLOOR EL. 519'-0"

SUPPORT NO. H-53 A
(JOINT H53A)

NOTES:
1. FOR GENERAL NOTES SEE 47B435-1
2. * DENOTES EXISTING MATERIAL
3. STIFFENER PL 3/8 x 4 x 1'-6"
4. FIELD TO COPE STIFFENER PL IN AREA OF EXISTING WELD AS REQD FOR FIT UP.
5. FIELD SHALL PROVIDE JAM NUTS OR STAKE THREADS.

REFERENCE DRAWINGS:
47W458-220 (ISOMETRIC)
47W2458-2 (PIPING)

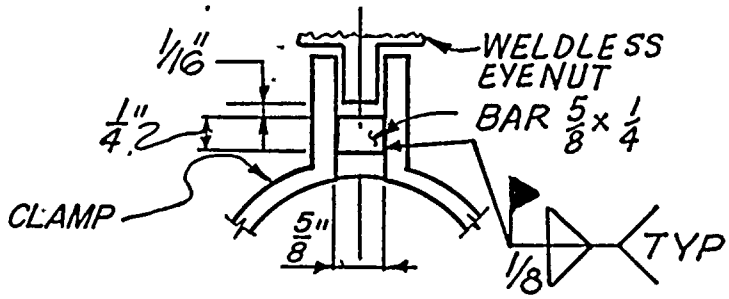

DET B191

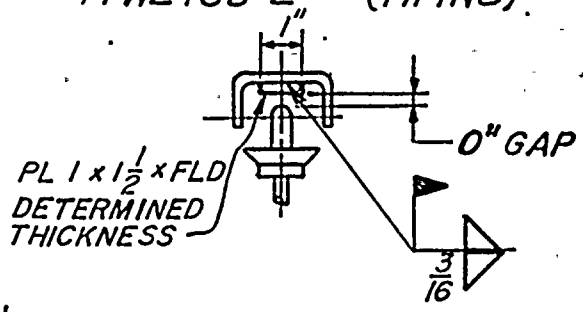

DET C191

CALCULATION BRANCH/PROJECT IDENTIFIERS: BWPC30267H53A

WP 2057-84

NON INTENT R24

REV NO	ECN NO	DATE	DRWN	DSGN	CHKD	SUPV	RVWD	APPD	ISSD
10	P0361 INC FCR 87-688	9-4-87	JM				RVB		
9	P0361 REV A191-A191, DET B191, ADDED DET C191 & MINOR REV.	5-22-87	JM				RVB		

DSGN D.T. GARTON
DRWN R.W. ADWELL
CHKD R. GRAY
SUPV B. NEEDHAM
INSP
ENGINEER R.G. CREASY

POWERHOUSE
REACTOR BUILDING - UNIT 2

MECHANICAL
CORE SPRAY SYSTEM
PIPE SUPPORTS

BROWNS FERRY NUCLEAR PLANT
TENNESSEE VALLEY AUTHORITY
DIVISION OF ENGINEERING DESIGN

SUBMITTED	RECOMMENDED	APPROVED
	R.G. CREASY	H.C. RUSSELL

KNOXVILLE 1-1-74 67M 47A458-191 R10

RECORD DRAWING AS CONSTRUCTED

ASME SECTION XI SUMMARY REPORT SHEET 122 of 259

Tennessee Valley Authority
Office of Nuclear Power, 1750CST2-C
Browns Ferry Nuclear Plant Unit 2
P.O. Box 2000
Decatur, Al.

Comm. Service Date 3/1/75
System CORE SPRAY
TVA Class D
Workplan/MR No. 2058-84

Furnish the following for the repair or replacement for the as-left condition of the component (after field work is complete). Mark all blanks (indicate NA for items which do not apply).

National Board Number of repaired or replaced component. N/A

Name of the components and description (include size, capacity, material, and location)--These requirements may be satisfied by attaching an applicable drawing.

SEE ATTACHED DRAWING FOR CORE SPRAY UNIT 2 SUPPORTS H-6,H-8,H-10 ,H-13,H-58,H-60,H-69,R-61,R-62,R-68 AND R-70

Name of Manufacturer N/A

Address of Manufacturer(if known) N/A

Manufacturer's component identification numbers (i.e., serial number, subassembly number, heat number). If more than one component is replaced, attach weld map and identify items by item number.
N/A

Brief description of repair or replacement work performed, including conditions observed and corrective measures taken, as applicable (reference DCR, CAQR, etc.; drawing may be attached with affected area circled). SEE ATTACHED LISTING OF WORK PERFORMED ON EACH SUPPORT

Brief description of post repair or replacement tests and examinations (if required) by instruction or procedure number. ALL NEW OR STRUCTURAL WELDS INSPECTED PER N-VT-2;PIPING WELDS PER N-VT-3 SUPPORTS H-6,H-8,H-10 AND H-70 WERE PRESERVICE INSPECTED N-VT-1

ANII/ANI name, address, employer, and business address ROOSEVELT Russell, ANI/ B.J. Rice, ANII; The Hartford Steam Boiler Inspection Co.; 1117 Perimeter Center West , Suite E301, Atlanta, Ga.

Date work completed 2-22-88

Gregg McNeil / 3-10-88
Cognizant Engineer Date

Retention: Period -Lifetime; Responsibility -Modification Supv.

BROWNS FERRY NUCLEAR PLANT
P.O. BOX 2000
DECATUR AL. 35602

WP# 2058-84
CN P0361 DCR: 2161

SYSTEM: CORE SPRAY
ASME CODE CLASS 2
UNIT # 2

ASME SECTION XI SUMMARY REPORT

I. REPAIR OR REPLACEMENT WORK REQUIRED:

* (H-6) VERIFIED SIZE OF WELDS. PERFORMED WELD REPAIR ON GOUGED AREA OF EXISTING EMBED W6 . VERIFIED/ADJUSTED SPRING CAN LOAD SETTING.
* (H-8) PERFORMED REMOVAL OF WELDS ON PIPE LUG ENDS(4 PLACES). WELDED SHIM TO PIPE CLAMP . VERIFIED/ADJUSTED LOAD SETTINGS ON SPRINGCAN
* (H-10) INSTALLED NEW SUPPORT. REMOVED EXISTING SUPPORT. PERFORMED BASE METAL REPAIR OF STRUCTURAL STEEL (W6)
* (H-13) REMOVED EXISTING SUPPORT.(A SHORT PORTION OF THE 6" PIPE STANCHION REMAINS WELDED TO ELBOW).
* (H-58) INSTALLED NEW SUPPORT. REMOVED EXISTING SUPPORT.
* (H-60) INSTALL NEW SUPPORT
* (H-69) INSTALLED NEW SUPPORT,REMOVED EXISTING SUPPORT. HANGER PACKAGE H-69 WAS LOST ,A NEW PACKAGE WAS ASSEMBLED INCLUDING ALL WELD DOCUMENTATION AND INSPECTIONS
* (R-61) INSTALLED NEW SUPPORT
* (R-62) REPLACE U-BOLT WITH BAR. WELDED BAR TO ANGLE AND ANGLE TO W10
* (R-68) INSTALLED NEW SUPPORT
* (R-70) INSTALLED NEW SUPPORT (REPLACE H-13)

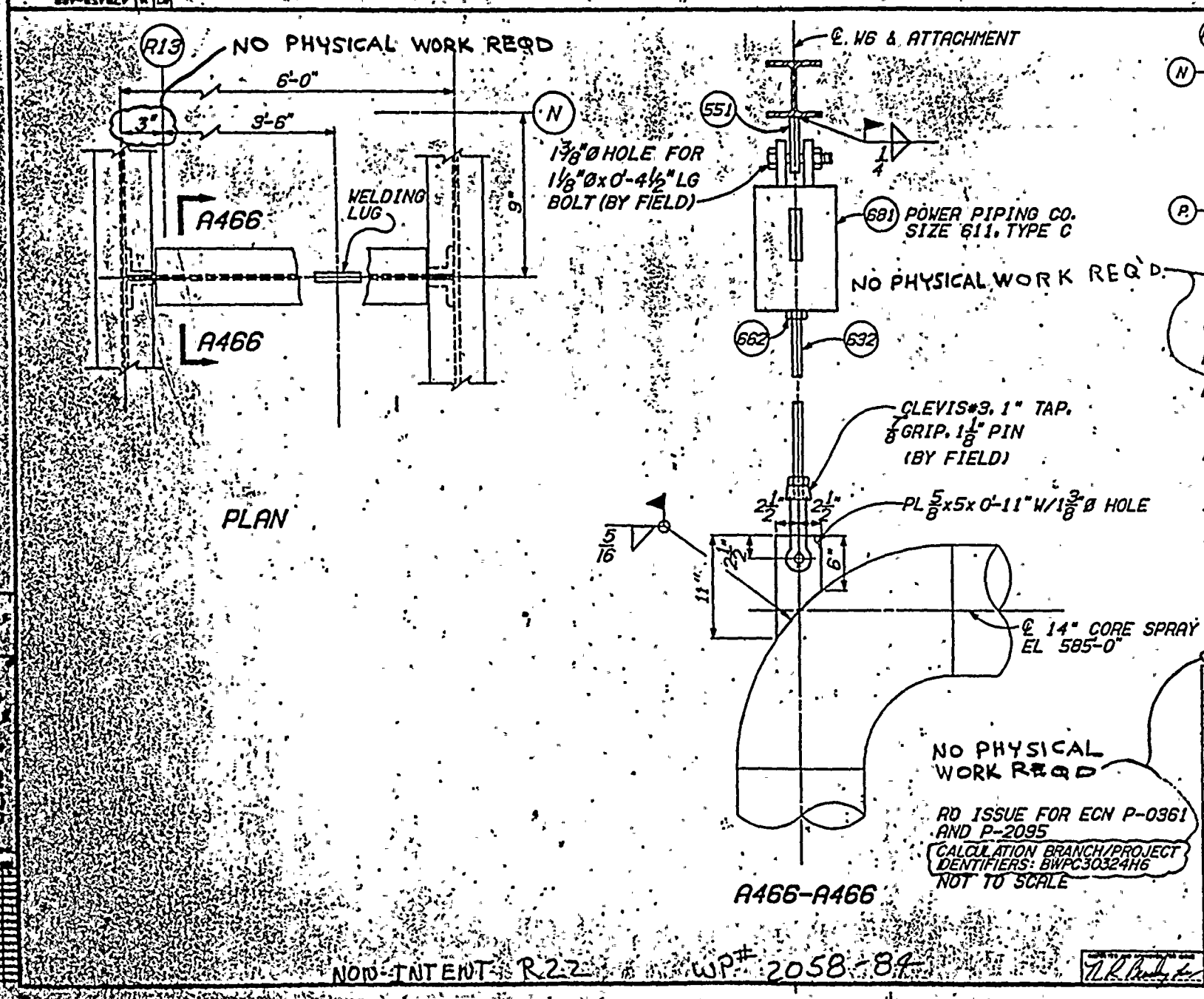
R13
NO PHYSICAL WORK REQD
6'-0"
3"
3'-6"
N
WELDING LUG
A466
A466
9"
PLAN
1 3/8"Ø HOLE FOR 1 1/8"Ø x 0'-4 1/2" LG BOLT (BY FIELD)
℄ W6 & ATTACHMENT
551
1/4
681 POWER PIPING CO. SIZE 611, TYPE C
NO PHYSICAL WORK REQ'D.
662
632
CLEVIS #3, 1" TAP, 7/8 GRIP, 1 1/8" PIN (BY FIELD)
PL 5/8 x 5 x 0'-11" W/ 1 3/8" Ø HOLE
2 1/2"
2 1/2"
5/16
2 1/2"
6"
11"
℄ 14" CORE SPRAY EL 585'-0"
A466-A466
R13
R14
N
3'-6"
9"
H-6
P.
ASSUMED NORTH
LOCATION PLAN FLOOR EL 565'-0"
SUPPORT NO. H-6
(JOINT H6)
LOAD SETTING RANGE
(2308) LB TO (3782) LB
MAX THERMAL MOVEMENT
±0.44"
NOTES:
1. FOR GENERAL NOTES SEE 47B435-1.
2. FOR SPRING GENERAL NOTES SEE 47B435-3.
3. THIS DRAWING SUPERSEDES 47A458-157.
4. ALL MATERIAL IS EXISTING.
REFERENCE DRAWINGS:
47W2458-1 (PIPING)
47W458-203 (ISOMETRIC)
47W1022 (MISC STEEL)
NO PHYSICAL WORK REQD
R0 ISSUE FOR ECN P-0361 AND P-2095
CALCULATION BRANCH/PROJECT IDENTIFIERS: BWPC30324H6
NOT TO SCALE
3 P0361 MINOR REVISIONS
2 P0361 REV A466-A466
1 P0361 REDRAWN/RESTORED TO ORIG. CFGN
POWERHOUSE
REACTOR BUILDING - UNIT 2
MECHANICAL
CORE SPRAY SYSTEM
PIPE SUPPORTS
BROWNS FERRY NUCLEAR PLANT
TENNESSEE VALLEY AUTHORITY
47B458-488
NON-INTENT R22
WP# 2058-84
SHEET 124 of 259

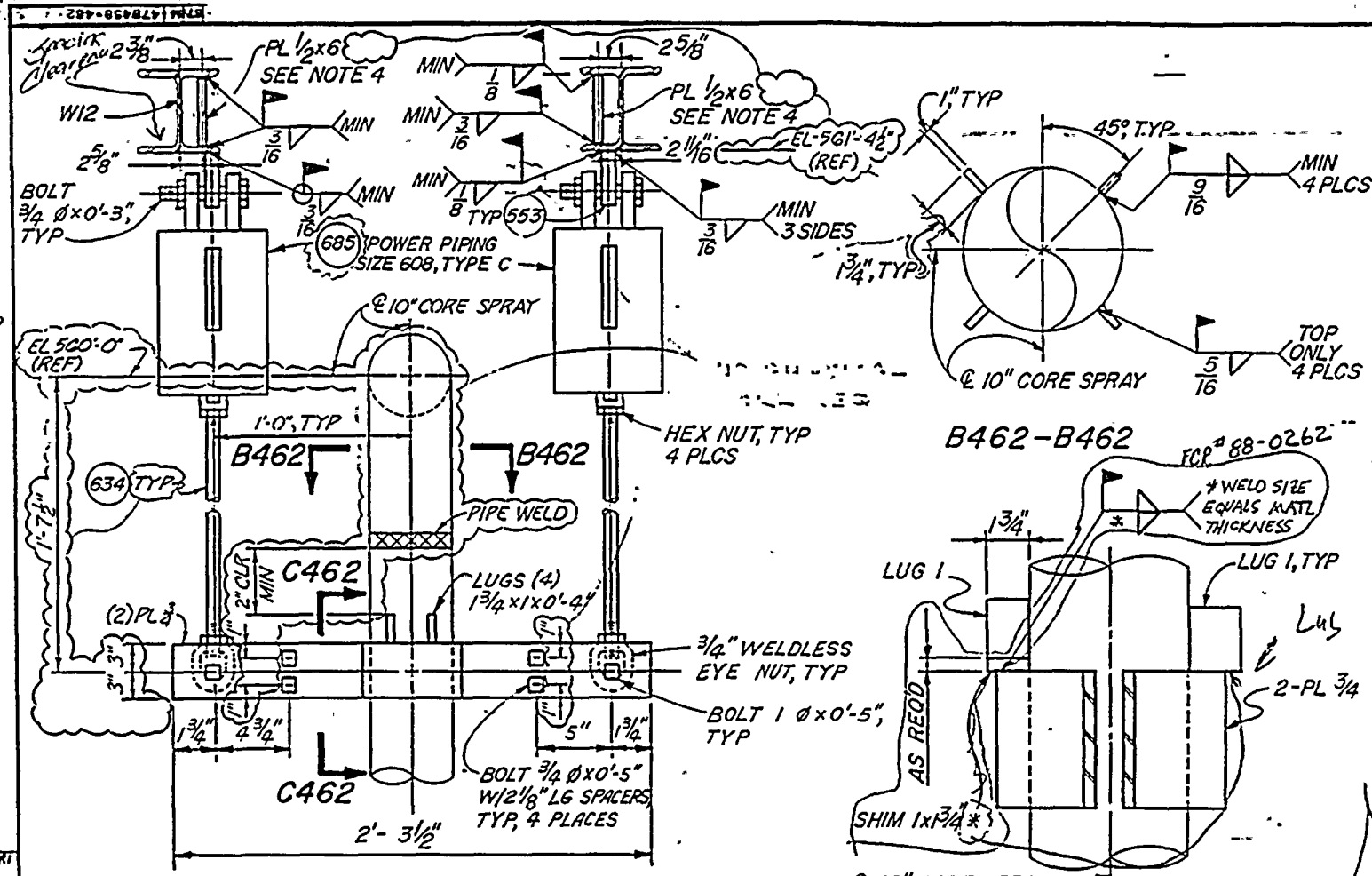

SUPPORT NO. H-8
(JOINT H8)

LOAD SETTING RANGE
768# TO 1333#

MAX THRM MOVEMENT ±0.32"
(TYP EA SPRING)

NOTES:
1. FOR GENERAL NOTES SEE DWG 47B435-1.
2. FOR SPRING GENERAL NOTES SEE DWG 47B435-3.
3. THIS DWG SUPERSEDES DWG 47A458-159.
4. PL 1/2 x 6 SYM ABT WELDING LUG.
5. NEW MATERIAL DENOTED BY AN ASTERISK *.

REFERENCE DWGS:
47W2458-4 (PIPING)
47W458-203 (ISOMETRIC)
48N1004-1 (MISC STEEL)

WP 2058-84

CALCULATION BRANCH/PROJECT IDENTIFIER: CD-Q2075-871730

RO ISSUE FOR ECN P-0361 & P-2095

NOT TO SCALE

WP 2058-84

NON-INTENT R24

MINOR REVISIONS

POWERHOUSE REACTOR BUILDING - UNIT 2

MECHANICAL CORE SPRAY SYSTEM PIPE SUPPORTS

BROWNS FERRY NUCLEAR PLANT
TENNESSEE VALLEY AUTHORITY

47A458-462

SHEET 75 of 85

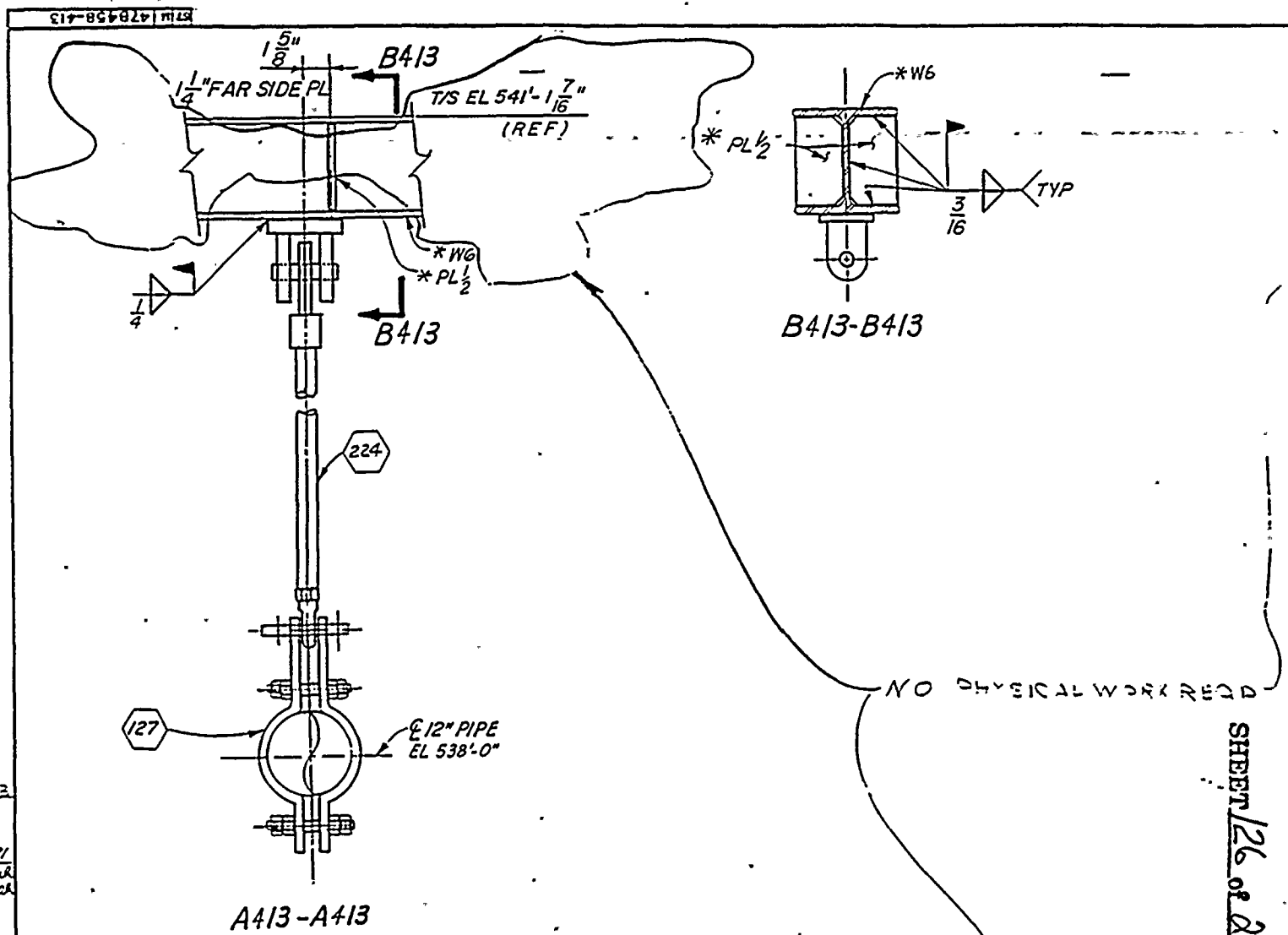

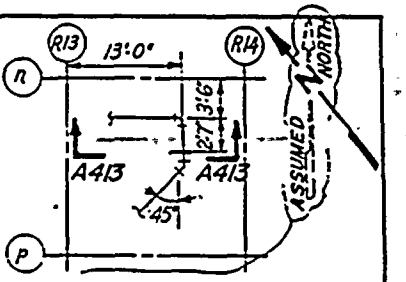

LOCATION PLAN
FLOOR EL 519'-0"

SUPPORT NO. H-10
(JOINT H10)

NOTES:

1. FOR GENERAL NOTES SEE 47B435-1
2. * DENOTES EXISTING MATERIAL.
3. THIS DWG SUPERSEDES 47A458-161.
4. REMOVE EXISTING ROD, CLAMP, AND BEAM ATTACHMENT.

REFERENCE DRAWINGS:

47W2458-3	(PIPING)
47W458-203	(ISOMETRIC)
48N1019-1&3	(STRUCT STL)

SHEET 126 of 259

FIRST ISSUE FOR ECN P-0361
CALCULATION BRANCH/PROJECT IDENTIFIERS: CD-02075-871682

NOT TO SCALE

WP 2058-84
NON-INTENT R24

WP 2058-84

3	12-2-91	MINOR REVISION	

POWERHOUSE
REACTOR BUILDING – UNIT 2

MECHANICAL
CORE SPRAY SYSTEM
PIPE SUPPORTS

BROWNS FERRY NUCLEAR PLANT
TENNESSEE VALLEY AUTHORITY

KNOXVILLE 17-10-84 671M 478458-413 R3

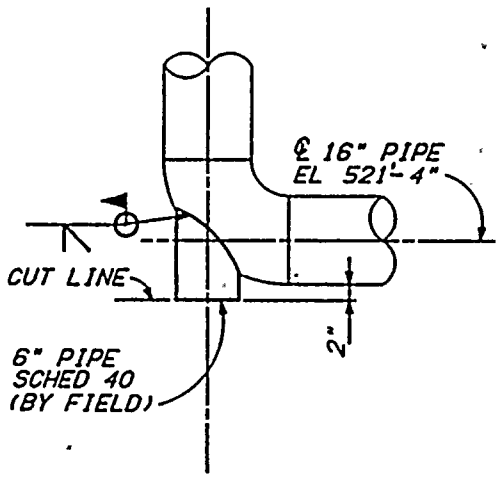

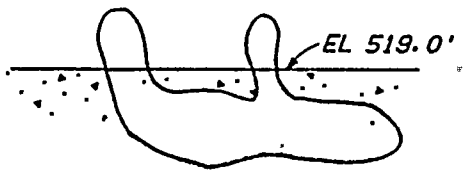

A441-A441

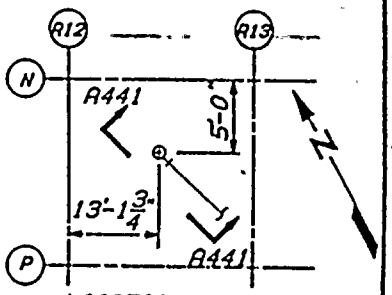

LOCATION PLAN
FLOOR EL 519'-0"

SUPPORT NO. H-13
(JOINT NO. 205)

NOTES:
1. FOR GENERAL NOTES SEE 47B435-1.
2. THIS DRAWING SUPERSEDES 47A458-164.
3. ALL MATERIAL IS EXISTING.

REFERENCE DRAWINGS:
47W458-3 (PIPING)
47W403-205 (ISOMETRIC)

SHEET 127 of 259

NON-INTENT R13

1	P0361						
2	REV A441-A441, REMOVE ANCHORS						
3							

POWERHOUSE
REACTOR BUILDING - UNIT 2

MECHANICAL
CORE SPRAY SYSTEM
PIPE SUPPORTS

BROWNS FERRY NUCLEAR PLANT
TENNESSEE VALLEY AUTHORITY
DIVISION OF CONSTRUCTION DESIGN

SUBMITTED C. F. Simmons
RECOMMENDED
APPROVED
KNOXVILLE 9-21-81 87 M 47B458-441 81

FIRST ISSUE FOR ECN P0361 & P-2095

NOT TO SCALE

WP 2058-84

RELEASED AND APPROVED FOR USE R. R. Beasley 10-2

87 M 47B458-441

B2A568

SHEET 128 of 259

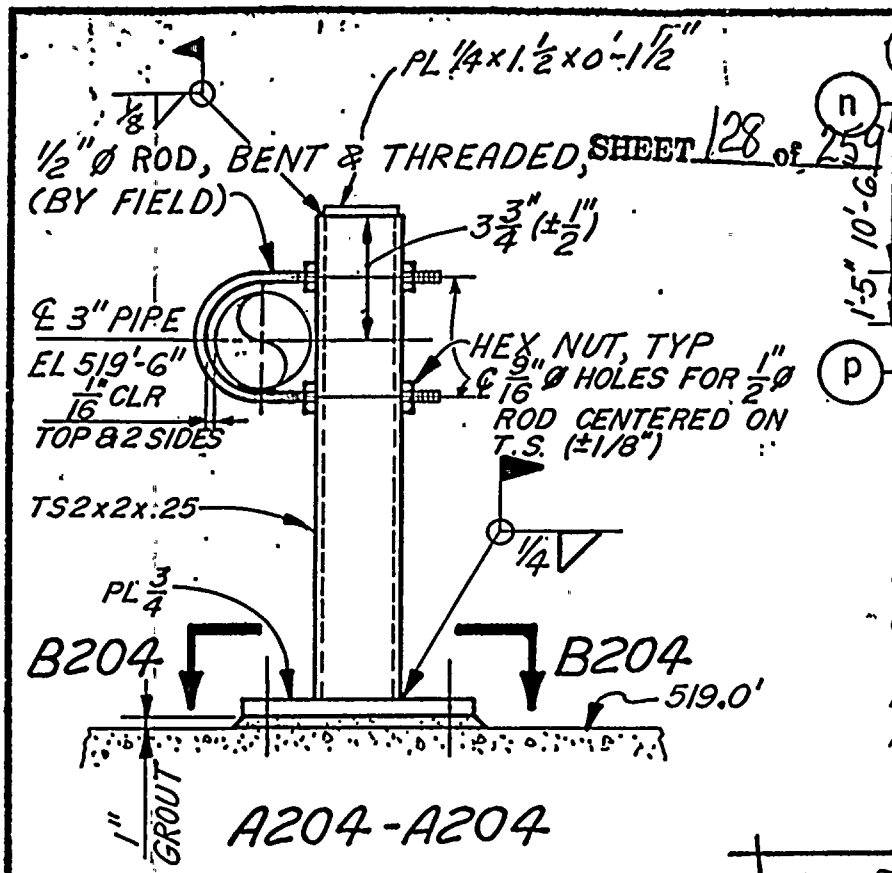

A204-A204

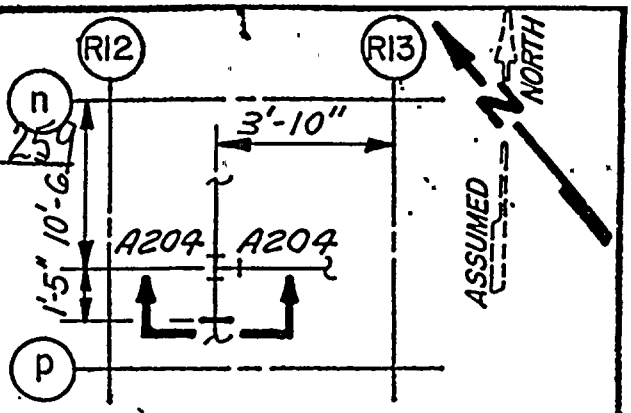

LOCATION PLAN
FLOOR EL 519'-0"

SUPPORT NO. H-60
(JOINT H 60)

NOTES:
1. FOR GENERAL NOTES SEE 47B435-1.

NO PHYSICAL WORK REQD

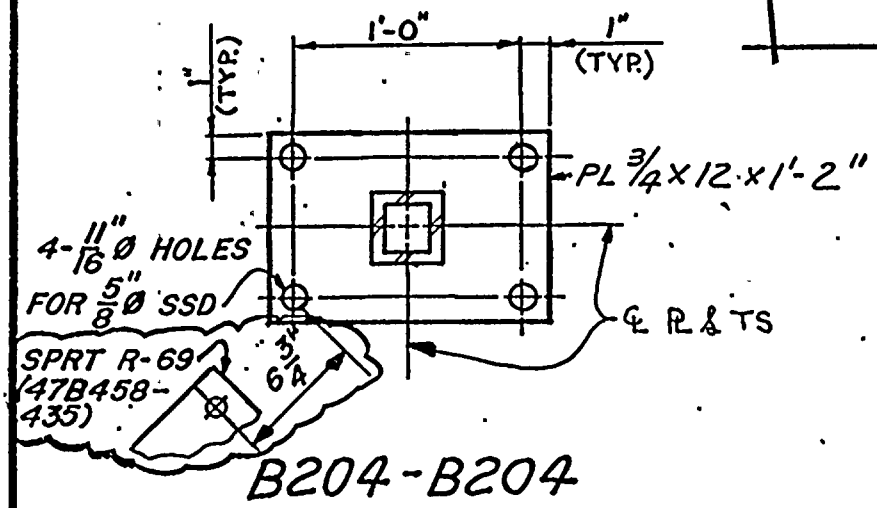

B204-B204

REFERENCE DWGS:
47W2458-2 (PIPING)
47W458-204 (ISOMETRIC)

CALCULATION BRANCH/PROJECT IDENTIFIERS: BWPC30310H60

Non Intent. R21
WP2058-84

NOT. TO SCALE

REV NO.	ECN NO.	DATE	DSGN	DRWN	CHKD	SUPV	ENGR	INSP	SUBM	RECM	APPD				ISSD
5	P0361	7-30-87	ASP	JEM	LAR	RVB	TGT	/	TGT	/	CTS				PSB
	INC CAQR BFP870313														
4	P0361	5-6-87	MG	JEM	ASP	RVB	ASP	/	ASP	/	CTS				PSB
	REV A204-A204 & MISC REVISIONS														
3	P-0361	5-7-85	RTD	RTD	JV	TGT	CTS	/	CTS	JAN	RB				NPB
	REV. B204-B204 ; REF DWG , A204-A204														
2	P-0361	7-10-84	SAL	JG	TFK	TGT	EC	/	EC						PCB
	REDESIGNED & REDRAWN.														
1	L1000	11-74	BD		MS	BN		-	RC	GM	HR				
	REV, PER FC929 ECN L1000.														

DSGN D.T. GARTON
DRWN D.T. GARTON
CHKD R. GRAY
SUPV
INSP B. NEEDHAM
ENGINEER R.H. Creasy

POWERHOUSE
REACTOR BUILDING - UNIT 2

MECHANICAL
CORE SPRAY SYSTEM
PIPE SUPPORTS

BROWNS FERRY NUCLEAR PLANT
TENNESSEE VALLEY AUTHORITY
DIVISION OF ENGINEERING DESIGN

SUBMITTED	RECOMMENDED	APPROVED
	R.H. Creasy	H.C. Russell
KNOXVILLE	12-18-73	67 M 47A458-204 R5

RECORD DRAWING AS CONSTRUCTED

R3

R2

R1

R4

DUFFEL & ESSER CO.
L7-618848

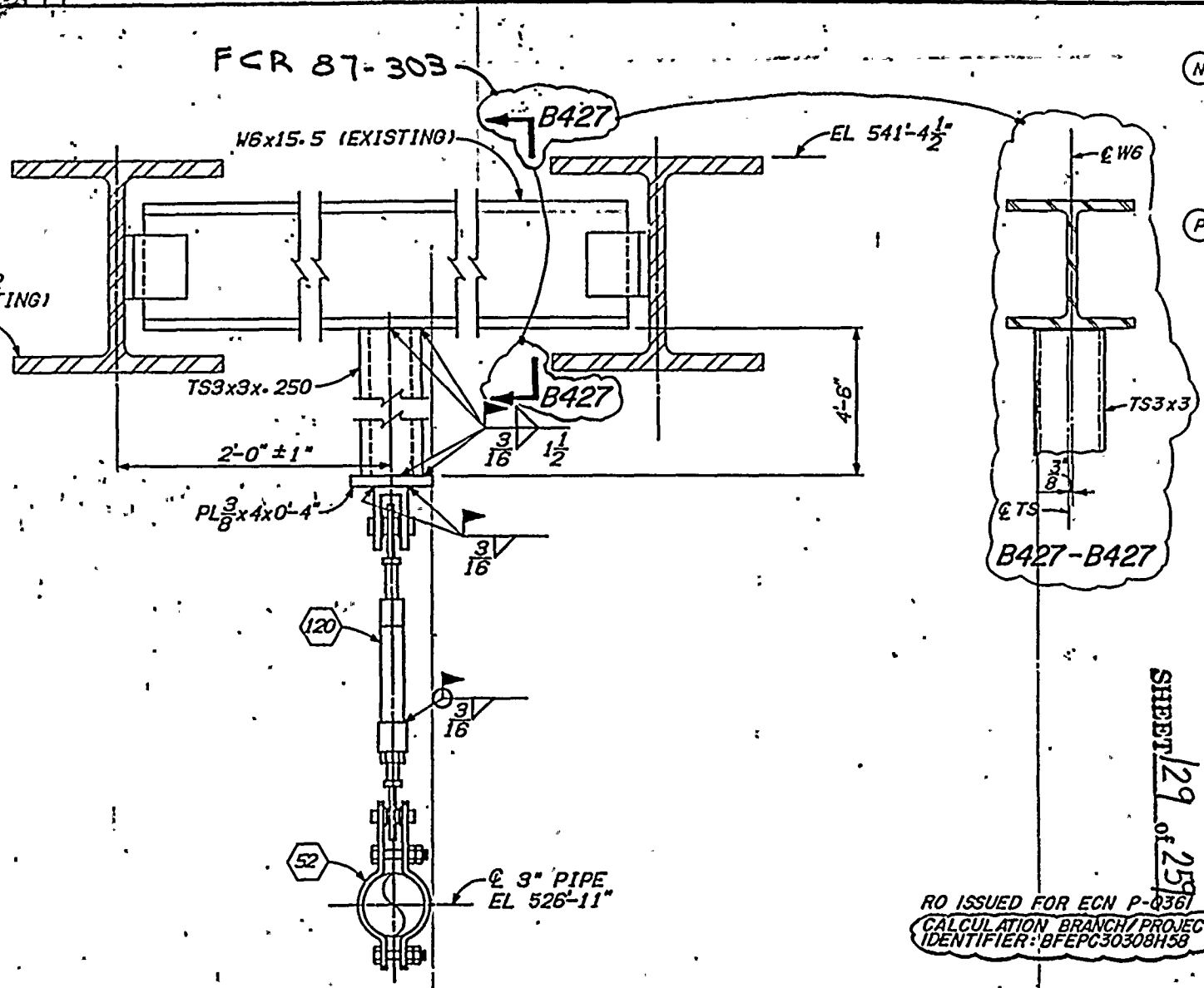
FCR 87-303
B427
W6x15.5 (EXISTING)
EL 541'-4½"
W10x22 (EXISTING) TYP
TS3x3x.250
B427
3/16
1½
2'-0" ± 1"
4'-6"
PL 3/8 x 4 x 0'-4"
3/16
120
3/16
52
℄ 3" PIPE
EL 526'-11"
A427-A427
℄ W6
TS3x3
3/8"
℄ TS
B427-B427
A12
A13
N
P
A427
A427
5'-9"
1'-6"
3'-10"
ASSUMED NORTH
LOCATION PLAN
FLOOR EL 519'-0"
SUPPORT NO. H-58
(JOINT H58)
NOTES:
1. FOR GENERAL NOTES SEE 47B435-1.
2. REMOVE EXISTING ROD HANGER SUPPORT AND REPLACE AS SHOWN IN A427-A427.
3. THIS DRAWING SUPERSEDES DRAWING 47A458-200
WP2058-84
REFERENCE DRAWINGS:
47W2458-2 (PIPING)
47W458-204 (ISOMETRIC)
SHEET 129 of 259
REV. ELEV. IN SECTION A427-A427
INC FCR 87-303, ADDED ID & MINOR REV
RO ISSUED FOR ECN P-0361
CALCULATION BRANCH/PROJECT IDENTIFIER: BFEPC30308H58
NOT TO SCALE
POWERHOUSE
REACTOR BUILDING - UNIT 2
MECHANICAL
CORE SPRAY SYSTEM
PIPE SUPPORTS
BROWNS FERRY NUCLEAR PLANT
TENNESSEE VALLEY AUTHORITY
47B458-427
R3
B2A990
Non Intent R2

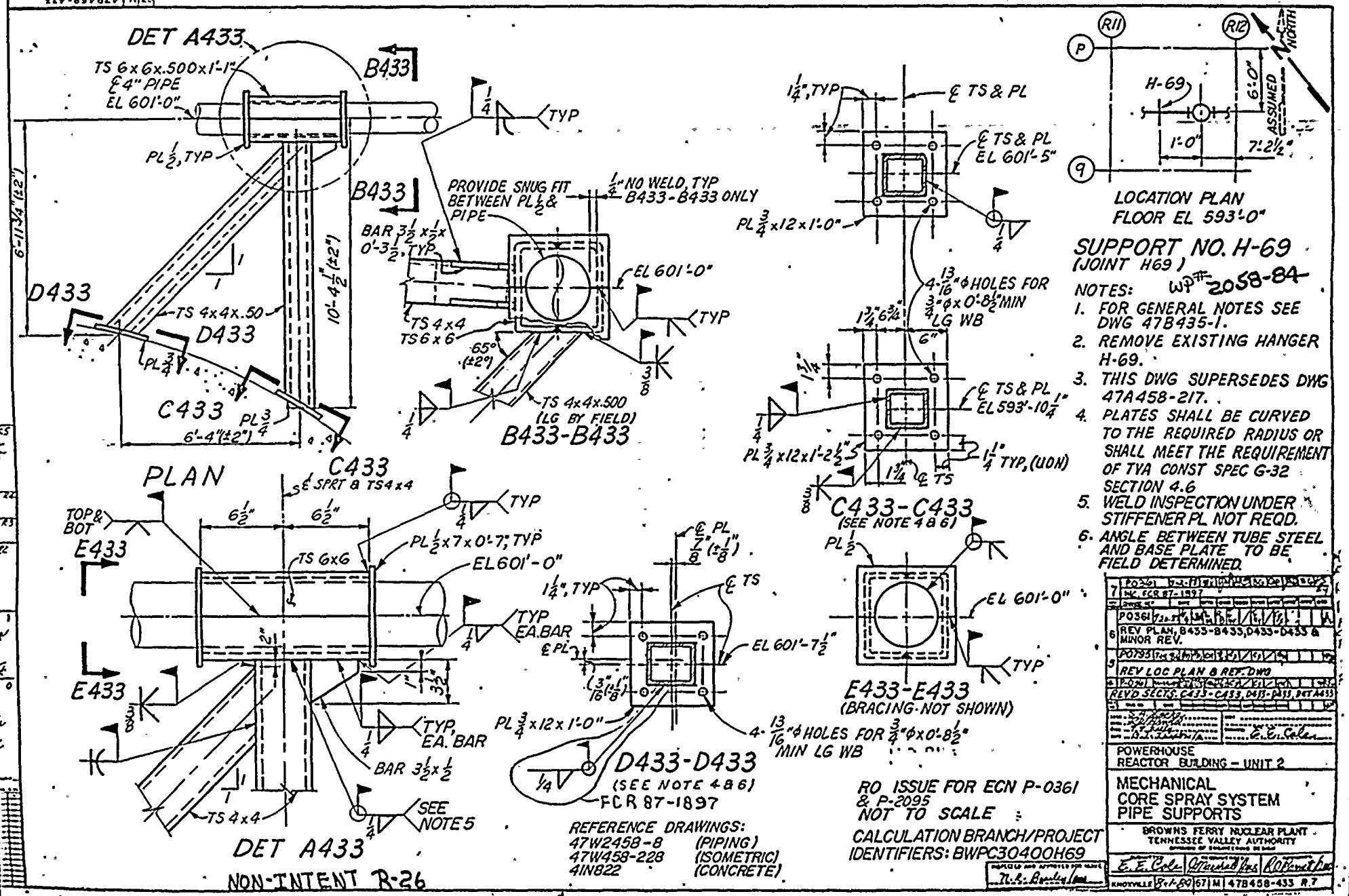

SHEET 130 of 259

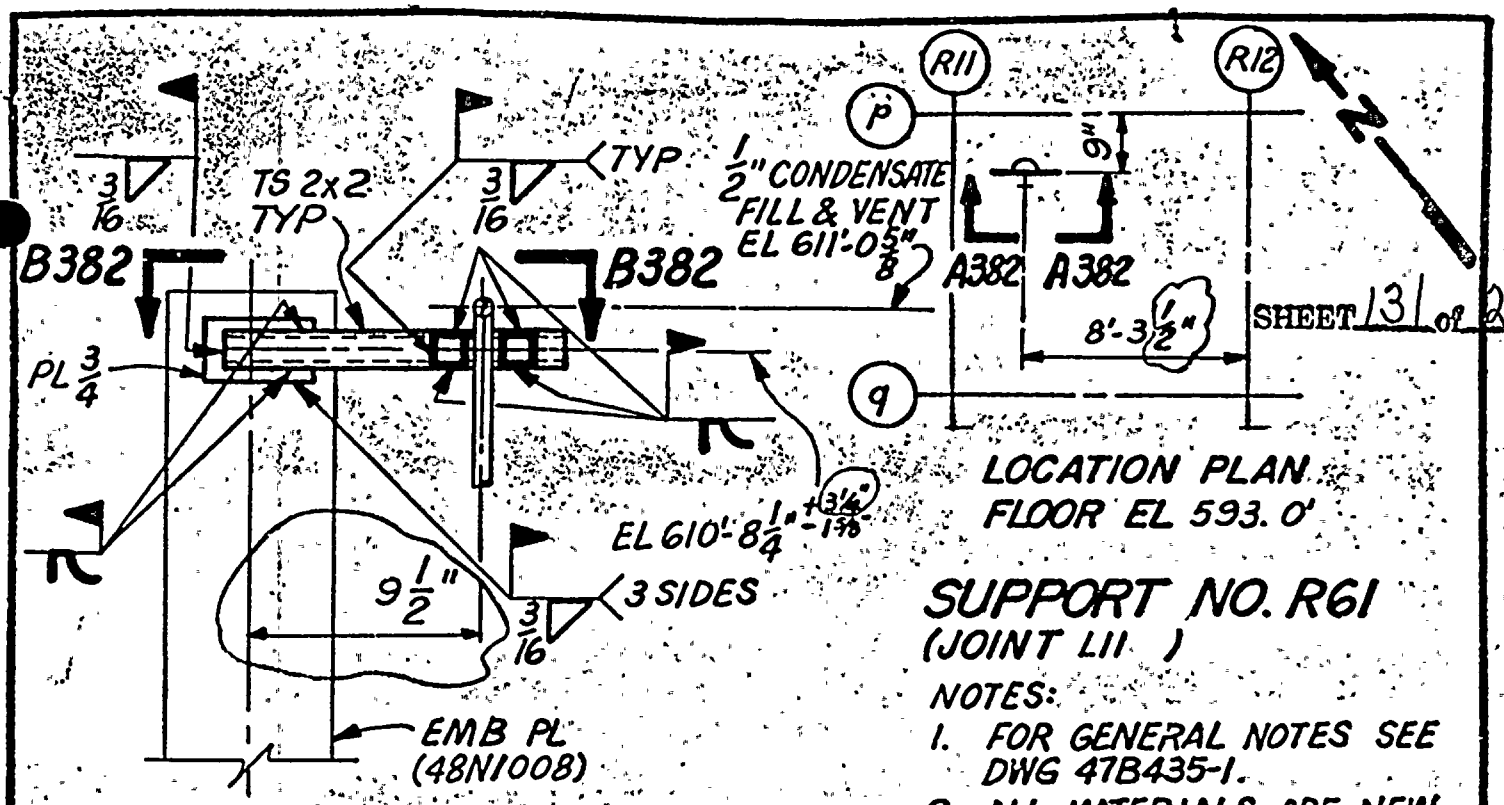

SUPPORT NO. R61
(JOINT L11)

NOTES:

1. FOR GENERAL NOTES SEE DWG 47B435-1.
2. ALL MATERIALS ARE NEW.
3. PROVIDE GAP PER GENERAL CONSTRUCTION SPEC G-43 APPX A OPTION 1.

P0361; NO PHYS WORK REQD PER SMM1-14.4.1.3-L

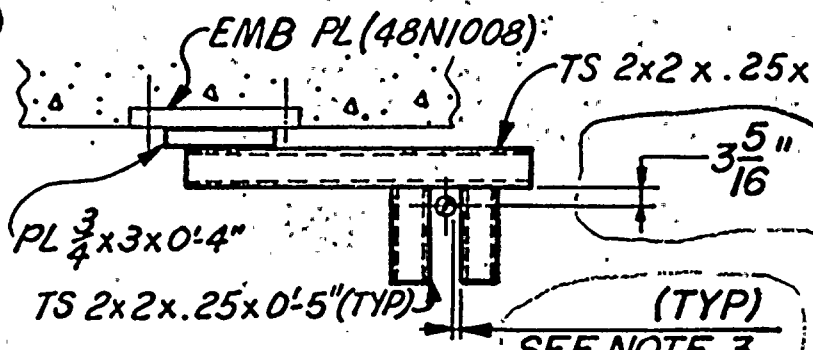

REFERENCE DRAWINGS:

47W2458-8 PIPING
47W458-228 ISOMETRIC

P0361
NO PHYS WORK REQD
PER SMM1-14.4.1.3-L

CALCULATION BRANCH/PROJ IDENTIFIERS: BWPC30314R61

FIRST ISSUE FOR ECN P0361
NOT TO SCALE

W. P. 2058-84

REV NO.	ECN NO.	DATE	DSGN	DRWN	CHKD	SUPV	ENGR	INSP	SUBM	RECM	APPD
	P-0361 P-0795	7-15-86	JHM	TC	CH	TG	CYS	/	CYS		

REV A382-A382, B382-B382, LOC PLAN & REF DWG, ADDED NOTE 3

DSGN C.K. Hawkins
DRWN R.W. ABNOLD
CHKD S.D. Gage
SUPV T.G. Thompson Jr.
INSP
ENGINEER E.E. Cole

POWERHOUSE
REACTOR BUILDING - UNIT 2

MECHANICAL
CORE SPRAY SYSTEM
PIPE SUPPORTS

BROWNS FERRY NUCLEAR PLANT
TENNESSEE VALLEY AUTHORITY
DIVISION OF ENGINEERING DESIGN

SUBMITTED E.E. Cole
RECOMMENDED
APPROVED R.H. Smith

KNOXVILLE 7-10-84 STM 47A458-382 R1

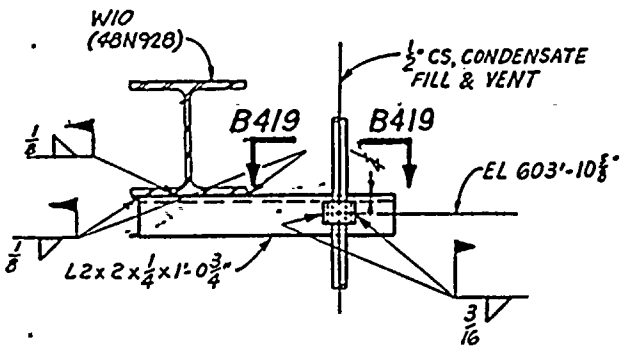

A419-A419

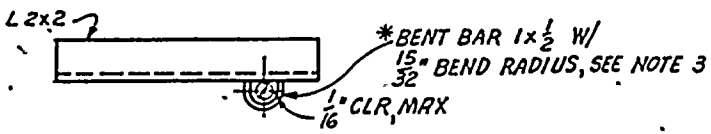

B419-B419

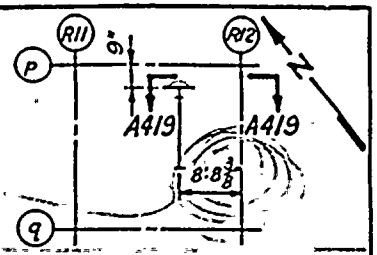

LOCATION PLAN
FLOOR EL 593.0'

SUPPORT NO. R-62
(JOINT SH-11)

NOTES:

1. FOR GENERAL NOTES SEE 47B435-1.
2. ALL MATERIAL EXISTING EXCEPT WHEN NOTED BY AN ASTERISK *.
3. REMOVE EXISTING U-BOLT AND REPLACE WITH BENT BAR.

P0361

REFERENCE DRAWINGS:

47W458-1	(PIPING)
47W458-216	(ISOMETRIC)

P0361

SHEET 132 of 259

FIRST ISSUE FOR ECN P-0361 & P-2095.
NOT TO SCALE

WP 2058-84

POWERHOUSE
REACTOR BUILDING – UNIT 2

MECHANICAL
CORE SPRAY SYSTEM
PIPE SUPPORTS

BROWNS FERRY NUCLEAR PLANT
TENNESSEE VALLEY AUTHORITY

		47B458-49	R0

u-bolt is still there.

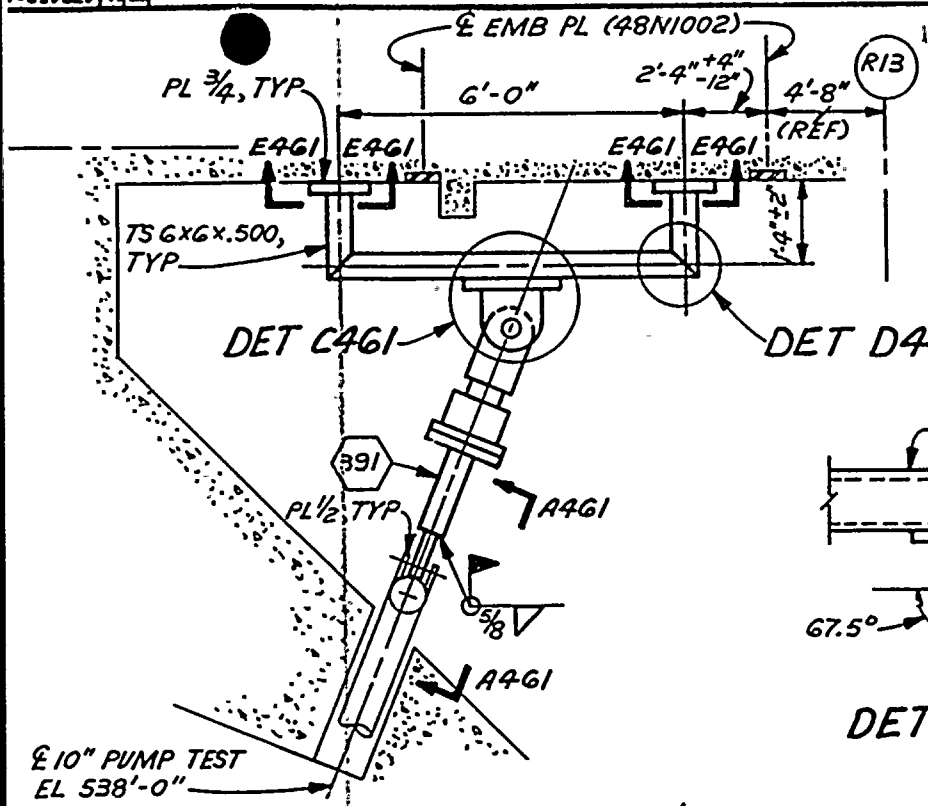

PLAN ELEVATION 539.5'

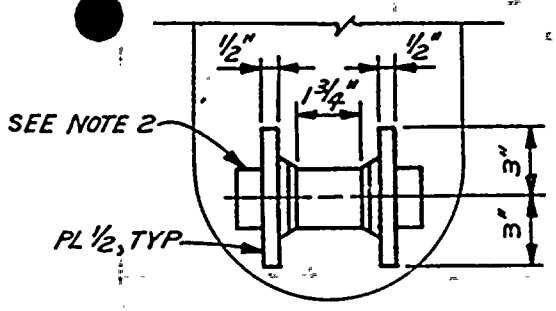

B461-B461

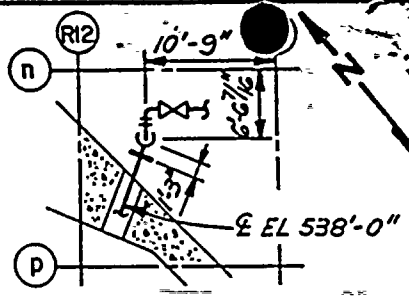

LOCATION PLAN
FLOOR EL. 519.0'

SUPPORT NO. R-68
(JOINT B39)

INSTL SET POSITION = 3"
DESIGN TRAVEL T = 0.11"
C = 0.69"

NOTES:
1. FOR GENERAL NOTES SEE DWG 47B435-1.
2. REMOVE CARBON STL PIN W/RETAINING DEVICE & WASHERS FROM BILL OF MATL MARK NO. 32 AND INSTALL IN LUG.

REFERENCE DWGS:
47W458-2 (PIPING)
47W458-203 (ISOMETRIC)
47B458-243 (LOAD TABLE)

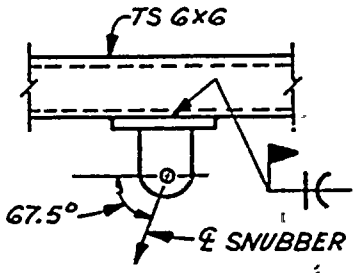

DET C461

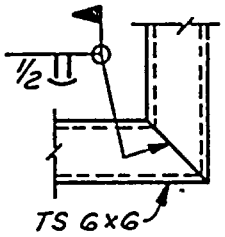

DET D461
(TYPICAL)

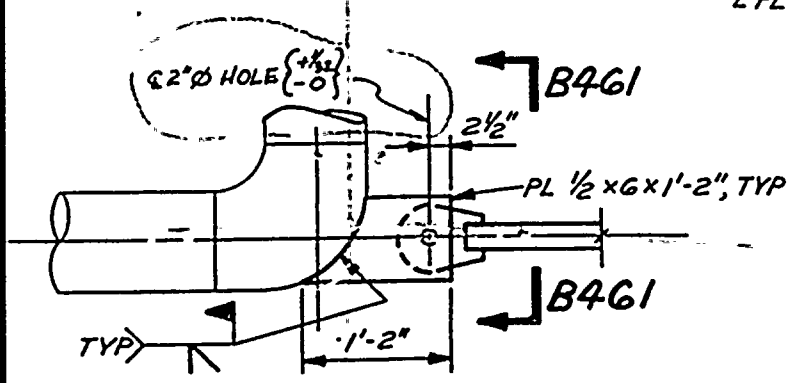

A461-A461

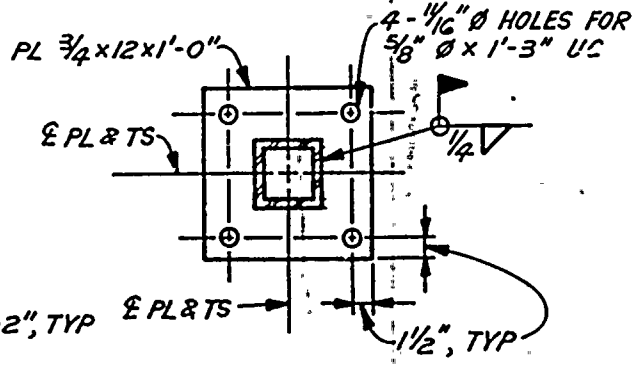

E461-E461

SHEET 133 of 259

FIRST ISSUE FOR ECN P-0361

NOT TO SCALE

2	POSG1	ADDED HOLE SIZE
1	POSG1	REDESIGNED & REDRAWN.

POWERHOUSE
REACTOR BUILDING - UNIT 2

MECHANICAL
CORE SPRAY SYSTEM
PIPE SUPPORT

BROWNS FERRY NUCLEAR PLANT
TENNESSEE VALLEY AUTHORITY

E. E. Cole

KNOXVILLE 9-14-84 67 M 47B458-461 R1

Tennessee Valley Authority
Browns Ferry Nuclear Plant

Form 164
BF 18.8
Page 4 of 4
MAY 8 1984

ASME SECTION XI SUMMARY REPORT

SHEET 134 of 259

Plant BFNP
System Core Spray Unit 2
TVA Class SEC III CLASS 2
Workplan/MR No. 2059-84

Furnish the following for the repair or replacement for the "as left" condition of the component (after field work is complete). Mark all blanks (indicate N/A for items which do not apply).

National Board Number of repaired or replaced component _____

Name of the components and description (include size, capacity, material, and location)--These requirements may be satisfied by attaching an applicable drawing
SEE ATTACHED DRAWINGS FOR CORE SPRAY UNIT 2 SUPPORTS H-12, H-15, H-29, H-59, H-67, R-5, R-55.

Name of Manufacturer N/A

Address of Manufacturer (if known) N/A

Manufacturer's component identification numbers (i.e., serial number, subassembly number, heat number, etc.) If more than one component is replaced, attach weld map and identify items by item number.
NO STANDARD COMPONENTS REPLACED

Brief description of repair or replacement work performed, including conditions observed and corrective measures taken, as applicable (Reference DCR, CAR, etc., drawing may be attached with affected area circled). H-12 REPLACED BEAM ATTACHMENT, H-15 REPAIRED BEAM ATTACH WELD, H-29 NO WORK, H-59 REPLACED U-BOLT, ~~H-67 MODIFIED~~, R-5-REMOVED OLD R5 INSTALLED NEW R-5, R-55 REMOVED OLD R-55 INSTALLED NEW R-55 SEE ATTACHED DRAWINGS FOR DETAILS

Brief description of post repair or replacement tests and examinations (if required) by instruction or procedure number ALL NEW OR REPAIRED WELDS INSPECTED PER N-VT-2. SUPPORT R-5 RECEIVED PRESERVICE INSPECTION PER N-VT-1

ANI/ANII name, employer, and business address ANI - ROOSEVELT RUSSELL
ANII - BILL RICE HARTFORD STEAM BOILER INSPECTION AND INS CO.
1117 PERIMETER CENTER WEST, SUITE E301
ATLANTA, GA 30338

Date work completed 10-27-86

David Winchester / 10-27-86
Cognizant Engineer Date

Retention: Period - Lifetime, Responsibility - OMMM Supervisor

ASME SEC XI SUMMARY REPORT
WP 2059-84

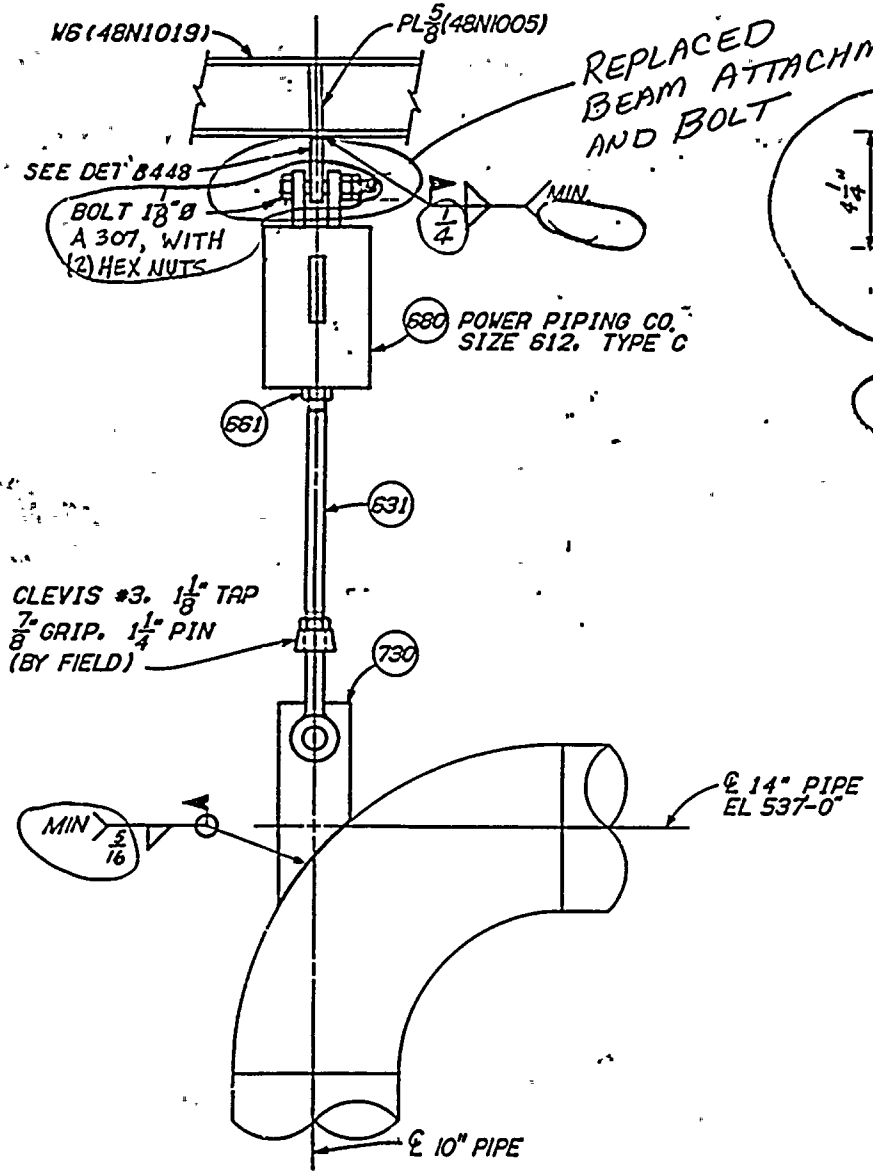

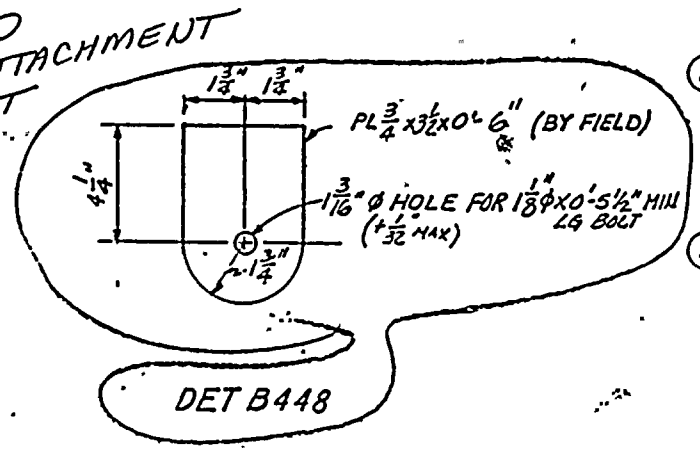

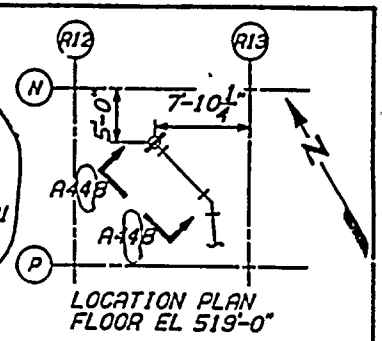

SUPPORT NO. H-12
(JOINT NO. 515)

LOAD SETTING RANGE
2429 LB TO 4607 LB
MAX THERMAL MOVEMENTS
±0.04"

NOTES:
1. FOR GENERAL NOTES SEE 47B435-1.
2. FOR SPRING GENERAL NOTES SEE 47B435-3.
3. THIS DRAWING SUPERSEDES 47A458-163.

REFERENCE DRAWINGS:
47W2458-3 (PIPING)
47W403-205 (ISOMETRIC)

FIRST ISSUE FOR ECN P-0361 & P-2095

NOT TO SCALE

2	[illegible]	[illegible]	
	REV A448-A448, [illegible], LOC PLAN		
1	P-0361 [illegible]	[illegible]	
	ADDED THREADED ROD NOTE TO A448-A448		
0	[illegible]	[illegible]	

POWERHOUSE
REACTOR BUILDING - UNIT 2

MECHANICAL
CORE SPRAY SYSTEM
PIPE SUPPORTS

BROWNS FERRY NUCLEAR PLANT
TENNESSEE VALLEY AUTHORITY

DRAWN LB 9-21-84 47B458-448

B2A699

SHEET 135 of 259

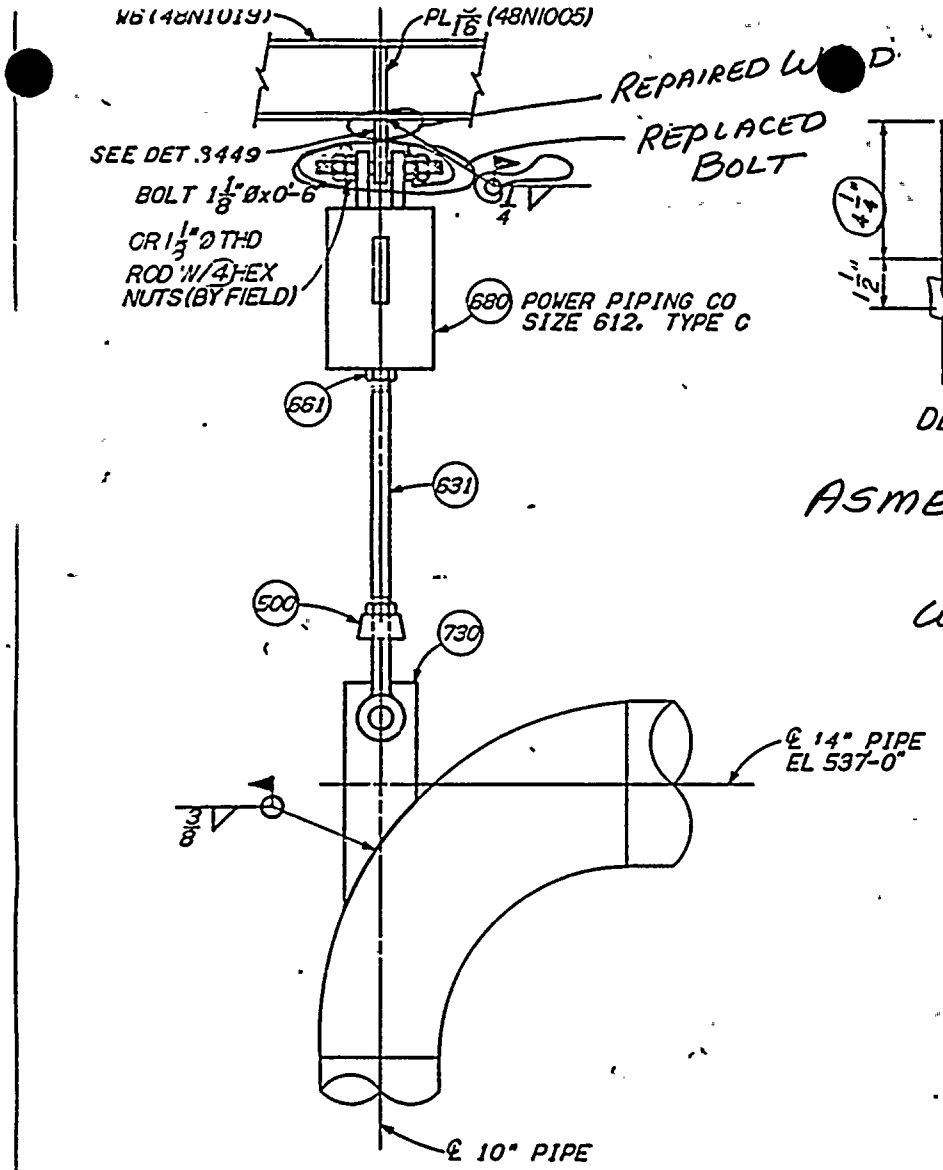

A449-A449

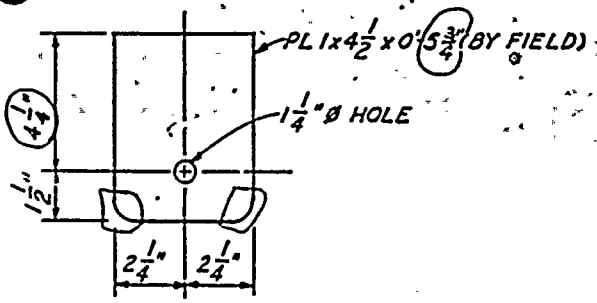

DET B449

ASME SEC XI SUMMARY REPORT

WP 2059-84

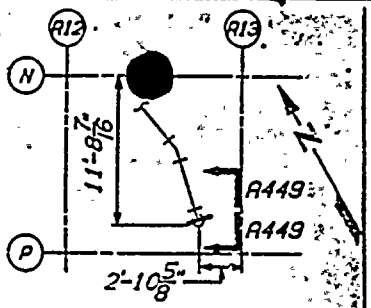

LOCATION PLAN
FLOOR EL 519'-0"

SUPPORT NO. H-15
(JOINT NO. 550)

LOAD SETTING RANGE
2429 LB TO 4607 LB
MAX THERMAL MOVEMENTS
±0.06"

NOTES:
1. FOR GENERAL NOTES SEE 47B435-1.
2. FOR SPRING GENERAL NOTES SEE 47B435-3.
3. THIS DRAWING SUPERSEDES 47A458-166.

REFERENCE DRAWINGS:
47W2458-3 (PIPING)
47W403-205 (ISOMETRIC)

SHEET 136 of 259

FIRST ISSUE FOR ECN P-0361 & P-2095

NOT TO SCALE

2	P-0361
	REV A449-A449, DET B449
1	P-0361
	ADDED THREADED ROD NOTE TO A449-A449

POWERHOUSE
REACTOR BUILDING - UNIT 2

MECHANICAL
CORE SPRAY SYSTEM
PIPE SUPPORTS

BROWNS FERRY NUCLEAR PLANT
TENNESSEE VALLEY AUTHORITY

KNOXVILLE 8-21-69 87 H 47B458-449 R2

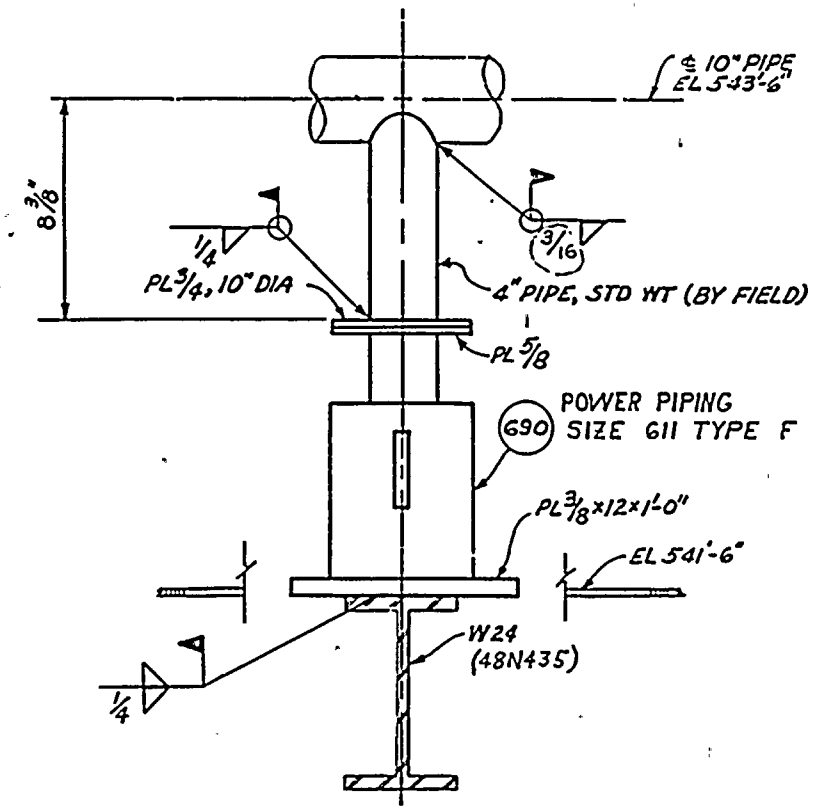

A194 - A194

No Work Performed

ASME Section XI Summary Report WP 2059-84

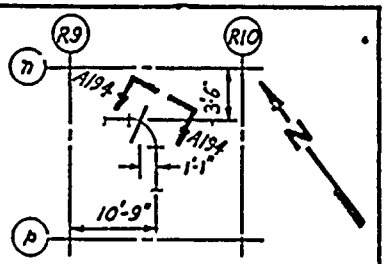

LOCATION PLAN
FLOOR EL. 541'-6"

SUPPORT NO. H29

(JOINT H29)

LOAD SETTING RANGE
2284# TO 3806#
MAX THERMAL MOVEMENT
± 0.03"

NOTES:
1. FOR GENERAL NOTES SEE 47B435-1.
2. THIS DRAWING SUPERSEDES 47A458-176.
3. ALL MATERIAL EXISTING.
4. FOR SPRING GENERAL NOTES SEE 47B435-3.

REFERENCE DRAWINGS:
47W2458-3 (PIPING)
47W458-218 (ISOMETRIC)

FIRST ISSUE FOR ECN P-0361 & P2095

NOT TO SCALE

1	P-0361					

REV. WELDN A194 - A194, REF DWG

POWERHOUSE
REACTOR BUILDING - UNIT 2

MECHANICAL
CORE SPRAY SYSTEM
PIPE SUPPORTS

BROWNS FERRY NUCLEAR PLANT
TENNESSEE VALLEY AUTHORITY
DIVISION OF ENGINEERING DESIGN

SUBMITTED E. E. Cole
APPROVED
APPROVED FOR ISSUE

APPROVED 11-23-84 67 M 47B458-194 R1

SHEET 137 of 259

ASME SEC XI SUMMARY REPORT WP2059-84

4R2

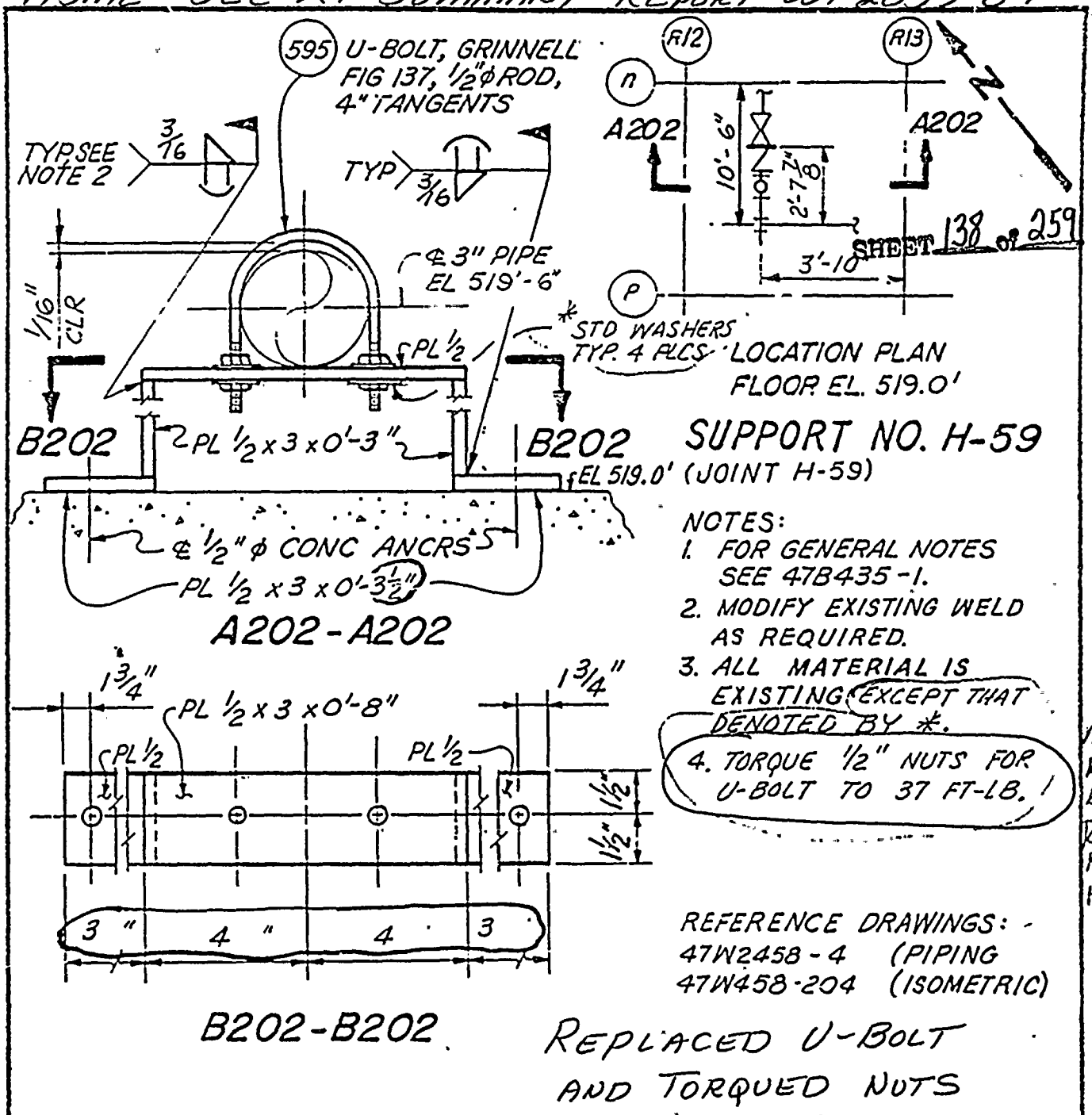

SHEET 138 of 259

NOTES:

1. FOR GENERAL NOTES SEE 47B435-1.
2. MODIFY EXISTING WELD AS REQUIRED.
3. ALL MATERIAL IS EXISTING EXCEPT THAT DENOTED BY *.
4. TORQUE 1/2" NUTS FOR U-BOLT TO 37 FT-LB. !

REFERENCE DRAWINGS: -
47W2458-4 (PIPING
47W458-204 (ISOMETRIC)

REPLACED U-BOLT AND TORQUED NUTS

X2235

REV NO	ECN NO	DATE	DSGN	DRWN	CHKD	SUPV	ENGR	MSP	SUBMITTED	APPD	RGA
4	P-0361	10-9-85	RTD	RTD	DW	TGT	CS		CS		NRB
REV A202-A202, B202-B202, NOTE 3, ADD NOTE 4.											
3	P0361	4-26-85	CW	CW	RTD	GTT	CS		CS		NRB
REVISE PLATE SIZE & MINOR REVISIONS											
2	P-0361 P-2095	7-23-84	RAR	FB			C		C		NRB
SUPPORT REDRAWN, ADD LOCATION PLAN, REF DWG, MINOR REVISIONS.											
1	L1000	11-74	BD		MS	BW	RC		RC	GM	HR
REV PER FCR 929											

NCR NRB

NOT TO SCALE

DSGN D.T. GARTON
DRWN D.T. GARTON
CHKD R. GRAY
SUPV B. NEEDHAM
MSP
ENGINEER R.G. CREASY

POWERHOUSE.
REACTOR BUILDING - UNIT 2

MECHANICAL
CORE SPRAY SYSTEM
PIPE SUPPORTS

BROWNS FERRY NUCLEAR PLANT
TENNESSEE VALLEY AUTHORITY
DIVISION OF ENGINEERING DESIGN

SUBMITTED	RECOMMENDED	APPROVED
	R.G. Creasy	H.C. Russell

KNOXVILLE 2-18-73 67M 47A458-202 R4

RECORD DRAWING AS CONSTRUCTED

ASME SECTION XI SUMMARY REPORT WP 2059-84

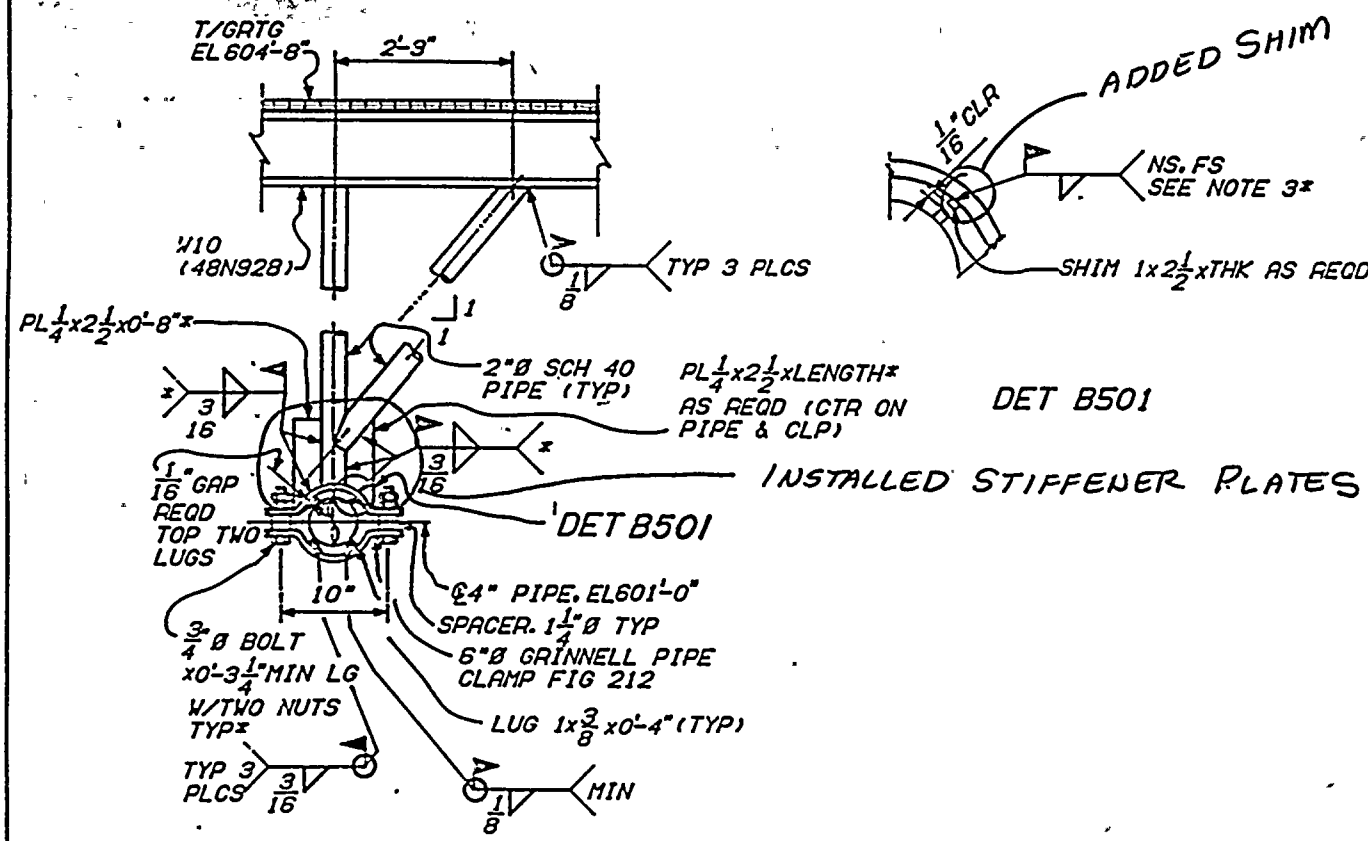

A501-A501

DET B501

INSTALLED STIFFENER PLATES

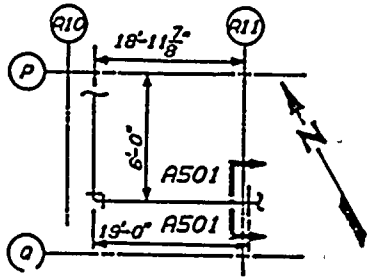

LOCATION PLAN
FLOOR EL 593'-0"

SUPPORT NO. H-67
(JOINT H-67)

NOTES:
1. FOR GENERAL NOTES SEE DWG 47B435-1.
2. ALL MATERIAL IS EXISTING EXCEPT AS NOTED BY *.
3. FILLET SIZE TO BE THICKNESS OF SHIM MATERIAL.
4. THIS DRAWING SUPERSEDES DWG 47A458-215.

REFERENCE DWGS:
47W2458-8 (PIPING)
47W458-220 (ISO)
47B458-209 (LD TABLE)

SHEET 139 of 259

RO ISSUED FOR ECN P-0361

POWERHOUSE
REACTOR BLDG UNIT 2
MECHANICAL
CORE SPRAY SYSTEM
PIPE SUPPORTS
BROWNS FERRY NUCLEAR PLANT
TENNESSEE VALLEY AUTHORITY

47B458-501

BFC035

ASME SEC XI SUMMARY REPORT WP 2059-84

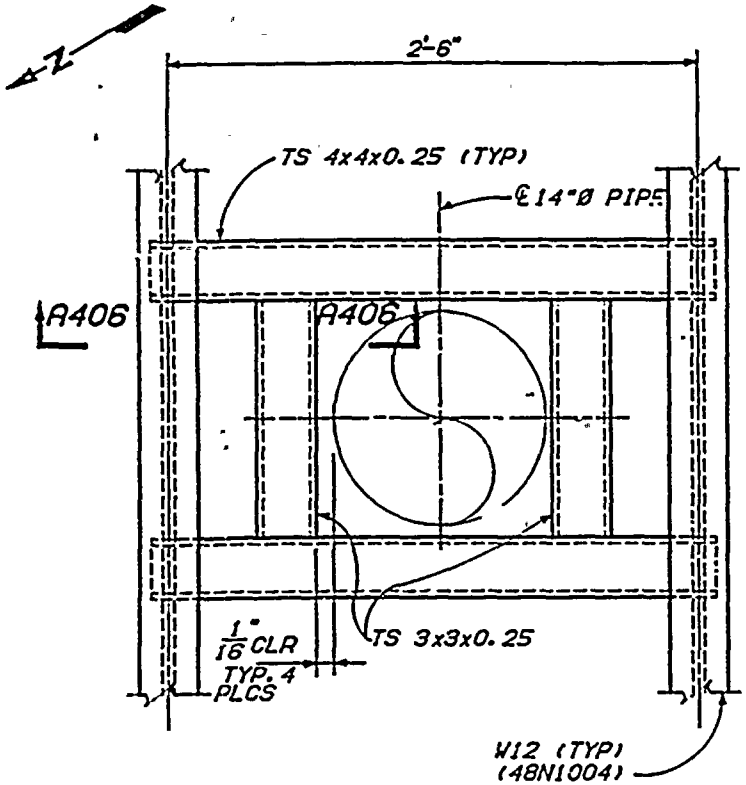

PLAN

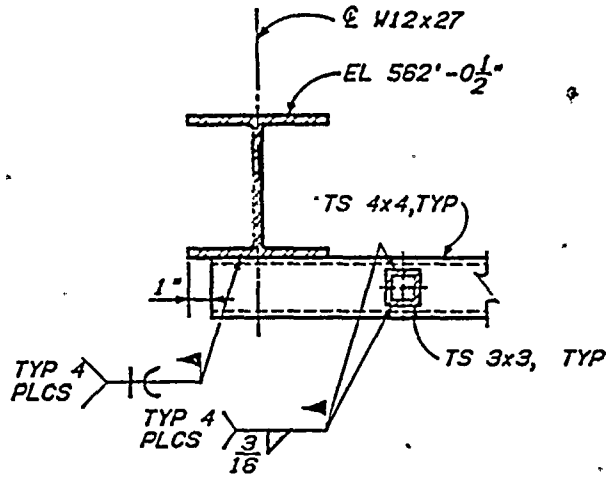

A406-A406

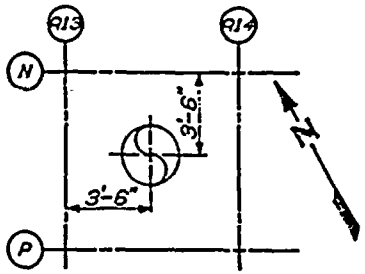

LOCATION PLAN
FLOOR EL 541'-6"

SUPPORT NO. R-5
(JOINT R5)

NOTES:
1. FOR GENERAL NOTES SEE 47B435-1.
2. REMOVE EXISTING HANGER SPRT R-5.
3. THIS DWG SUPERSEDES B-P 1957-2 (CONTRACT # 68C37-91062).

REFERENCE DRAWINGS:
47W2458-4 (PIPING)
47W458-203 (ISOMETRIC)
48N1004 (STEEL)

SHEET 140 of 259

NEW SUPPORT - REPLACED EXISTING
BERGEN-PATTERSON CSR-5

FIRST ISSUE FOR ECN P-0361 & P-2095

NOT TO SCALE

POWERHOUSE
REACTOR BUILDING - UNIT 2

MECHANICAL
CORE SPRAY SYSTEM
PIPE SUPPORTS

BROWNS FERRY NUCLEAR PLANT
TENNESSEE VALLEY AUTHORITY

47B458-406 R1

BFC018

ASME SEC XI SUMMARY REPORT WP 2059-84

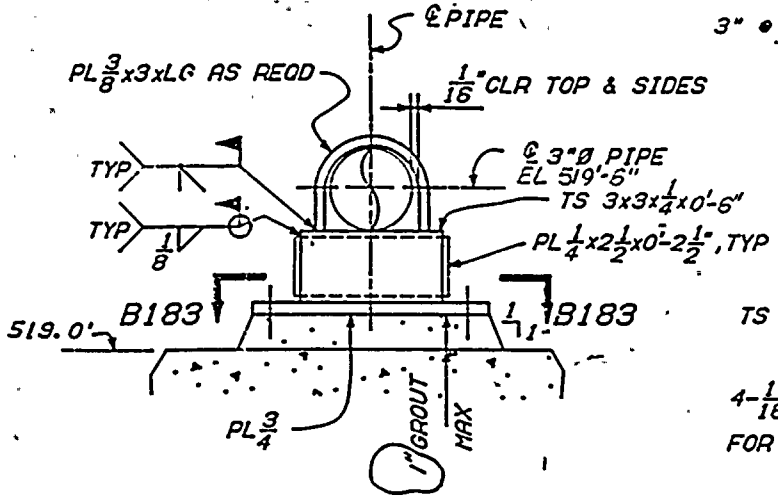

A183-A183

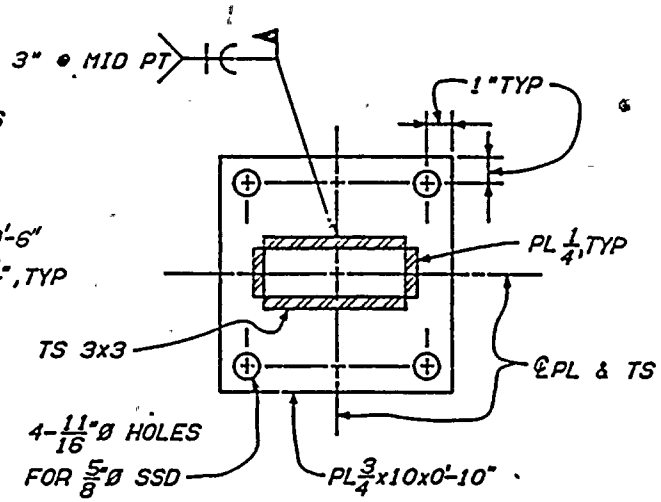

B183-B183

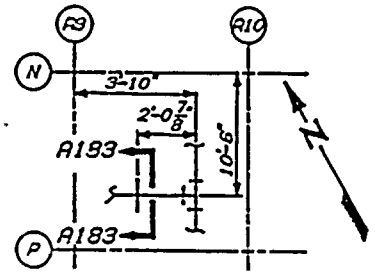

LOCATION PLAN
FLOOR EL519'-0"

SUPPORT NO. R-55
(JOINT NO. H62A)

NOTES:
1. FOR GENERAL NOTES SEE 47B435-1.
2. REMOVE EXISTING SUPPORT R55.
3. THIS DWG SUPERSEDES 47A458-209.

REFERENCE DWGS:
47W458-219 (ANAL ISO)
47W2458-2 (PIPING)
47W458-209 (LD TBL)

NEW SUPPORT R-5

REPLACED EXISTING H-62A

SHEET 141 of 259

FIRST ISSUED FOR ECN P-0361 & ECN P-2095

NOT TO SCALE

CALCULATION BRANCH/PROJECT IDENTIFIERS: BWPC30260R55

3	PO361
	REV A183-A183 & ADD LD. NUMBER
2	PC361
	SUPPORT REDESIGNED AND REDRAWN
1	PC361
	REV A183-A133, ADD WASHER DET. REM NOTE 2, ADD NOTE 4, MISC CHANGES.

POWERHOUSE
REACTOR BUILDING - UNIT 2

MECHANICAL
CORE SPRAY SYSTEM
PIPE SUPPORTS

BROWNS FERRY NUCLEAR PLANT
TENNESSEE VALLEY AUTHORITY

47B458-183 A3

BFC038

JUL 1 1 1988

ASME SECTION XI SUMMARY REPORT

SHEET 142 of 259

Tennessee Valley Authority
Office of Nuclear Power, 1750 CST2-C
Browns Ferry Nuclear Plant Unit II
P.O. Box 2000
Decatur, Alabama

Comm. Service Date 3-1-75
System RESIDUAL HEAT REMOVAL
TVA Class II
Workplan/MR No. 2060-84

Furnish the following for the repair or replacement for the as-left condition of the component (after field work is complete). Mark all blanks (indicate NA for items which do not apply).

National Board Number of repaired or replaced component. N/A

Name of the components and description (include size, capacity, material, and location)—Theses requirements may be satisfied by attaching an applicable drawing.
SEE ATTACHED DWGS

Name of Manufacturer BERGEN PATTERSON

Address of Manufacturer (if known) 74 COMMERCE WAY, WOBURN, MA 01888

Manufacturer's component identification numbers (i.e., serial number, subassembly number, heat number). If more than one component is replaced, attach weld map and identify items by item number. SEE ATTACHED DWGS.

Repair [ ] Replacement/Modification [X]

Brief description of repair or replacement work performed, including conditions observed and corrective measures taken, as applicable (reference DCR, CAR, etc.; drawing may be attached with attached affected area circled).
FABRICATE & INSTALL NEW SUPPORTS

Brief description of post repair or replacement tests and examinations (if required) by instruction or procedure number. WELDING SDSP 13.1
NVT-2 N-VT-6 N-PT-1 OR N-MT-1

ANII/ANI name, employer, and business address ROOSEVELT RUSSELL ANI/
B.J. RICE ANII HARTFORD STEAM BOILER & INS. CO.
4330 GEORGETOWN SQUARE, ALANTA GA, 30338

Date work completed 1-17-89

Jimmy W Steele 1-19-89
Responsible Engineer Date

Retention: Period - Lifetime; Responsibility - ERCU Supervisor

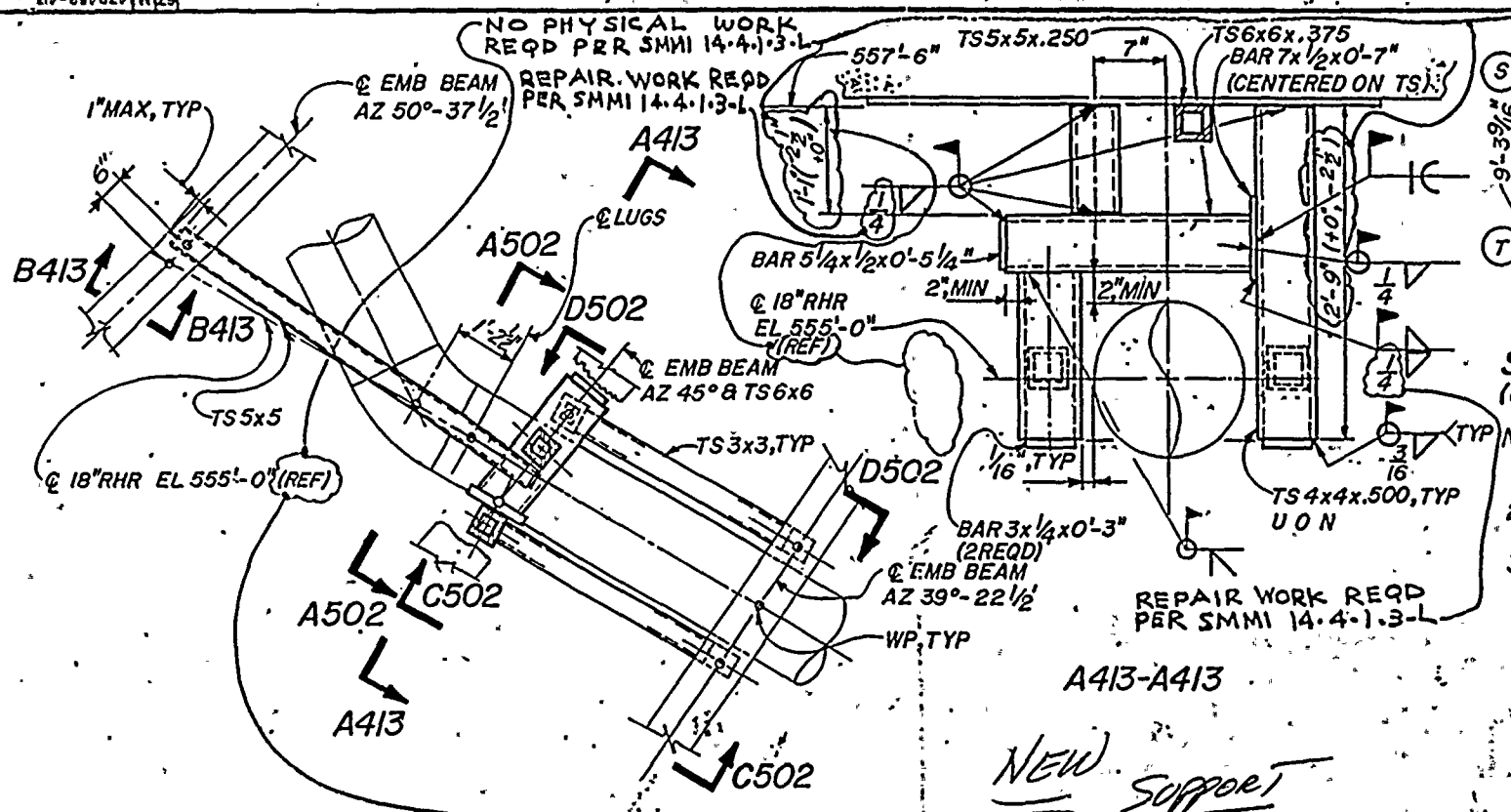
NO PHYSICAL WORK REQD PER SMMI 14.4.1.3-L
REPAIR WORK REQD PER SMMI 14.4.1.3-L
℄ EMB BEAM AZ 50°-37 1/2'
1"MAX, TYP
6"
B413
B413
A413
A502
℄ LUGS
D502
℄ EMB BEAM AZ 45° & TS6x6
TS 5x5
℄ 18"RHR EL 555'-0" (REF)
TS 3x3, TYP
D502
A502
C502
A413
C502
℄ EMB BEAM AZ 39°-22 1/2'
WP, TYP
PLAN
557'-6"
TS5x5x.250
7"
TS6x6x.375
BAR 7x 1/2x0'-7" (CENTERED ON TS)
BAR 5 1/4x 1/2x0'-5 1/4"
2"MIN
2"MIN
℄ 18"RHR EL 555'-0" (REF)
1/16" TYP
BAR 3x 1/4x0'-3" (2REQD)
℄ EMB BEAM AZ 39°-22 1/2'
TS 4x4x.500, TYP U O N
TYP
3/16
REPAIR WORK REQD PER SMMI 14.4.1.3-L
A413-A413
NEW SUPPORT
R9
R10
S
T
6'-7 5/8"
9'-3 9/16"
℄ LUGS
NORTH ASSUMED
LOCATION PLAN
FLOOR EL 519'-0"
SUPPORT NO. H-7
(JOINT H-7)
NOTES:
1. FOR GENERAL NOTES SEE DWG 47B435-1.
2. THIS DRAWING SUPERSEDES 47A452-282.
3. ROTATE ATTACHMENT AS REQ'D.
REFERENCE DRAWINGS:
47W2452-2 (PIPING)
47W452-221 (ISOMETRIC)
48N441 (ROOF STEEL)..
2060-84
FIRST ISSUE FOR ECN P-0361
CALCULATION BRANCH/PROJECT IDENTIFIERS: BWPC20894H7
COMPANION DWG: 47B452-502
NOT TO SCALE
EMB BEAM
557'-6"
BAR 4 1/2x 1/4x0'-4 1/2" TYP, EA END
TS5x5
TYP
3/16
TYP, EA END
B413-B413
POWERHOUSE
REACTOR BUILDING - UNIT 2
MECHANICAL
RHR SYSTEM
PIPE SUPPORTS
BROWNS FERRY NUCLEAR PLANT
TENNESSEE VALLEY AUTHORITY
7-17-85
67 M 47B452-413 R4
R18
R17

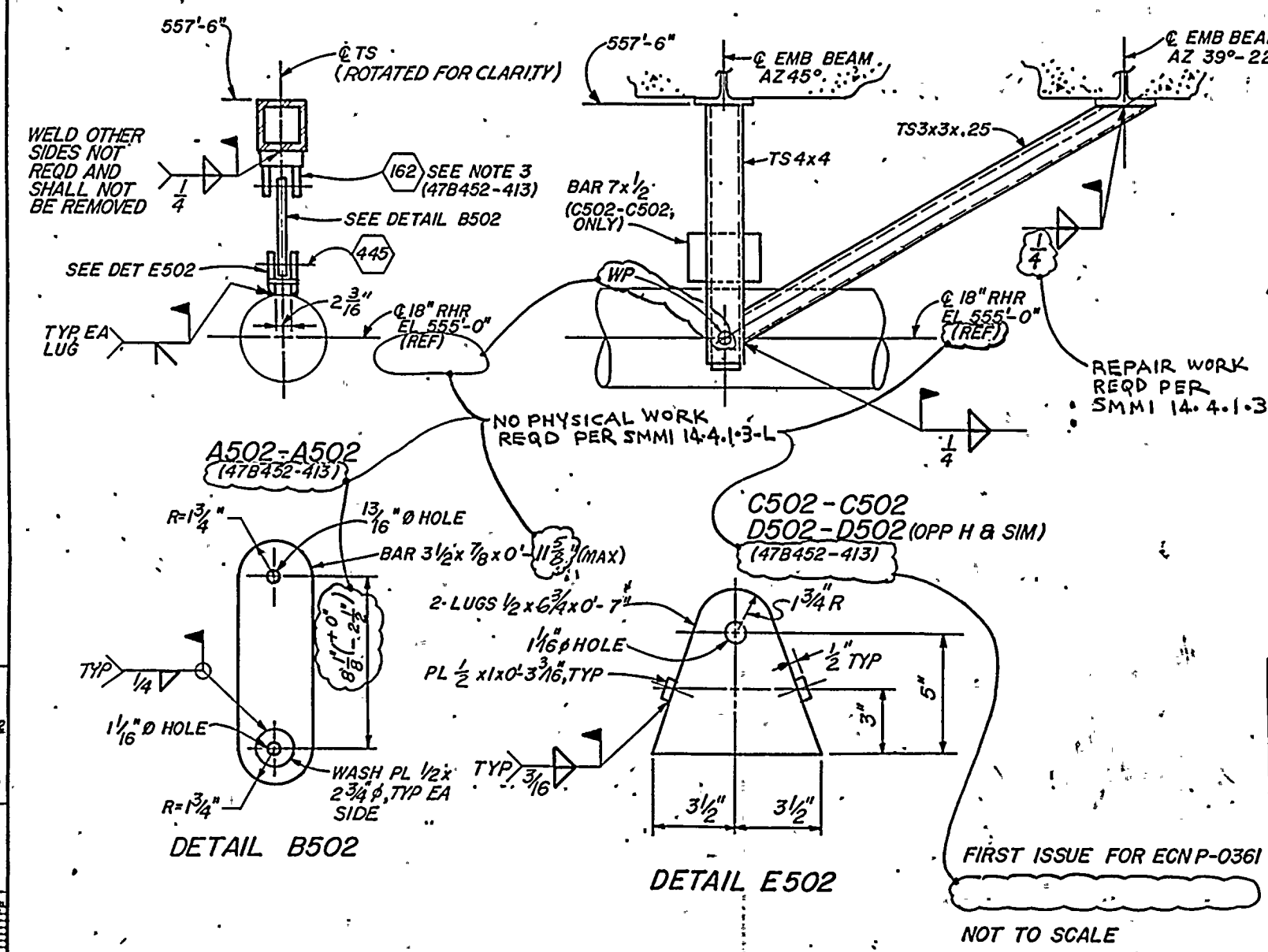
557'-6"
℄ TS (ROTATED FOR CLARITY)
WELD OTHER SIDES NOT REQD AND SHALL NOT BE REMOVED
1/4
162 SEE NOTE 3 (47B452-413)
SEE DETAIL B502
445
SEE DET E502
2 3/16"
℄ 18" RHR EL 555'-0" (REF)
TYP EA LUG
557'-6"
℄ EMB BEAM AZ 45°
TS 4x4
BAR 7x1/2 (C502-C502, ONLY)
WP
℄ 18" RHR EL 555'-0" (REF)
℄ EMB BEAM AZ 39°-22 1/2'
TS3x3x.25
1/4
REPAIR WORK REQD PER SMMI 14.4.1.3-L
NO PHYSICAL WORK REQD PER SMMI 14.4.1.3-L
1/4
NOTES:
1. FOR GENERAL NOTES AND REFERENCE DRAWINGS SEE 47B452-413.
A502-A502 (47B452-413)
R=1 3/4"
13/16" Ø HOLE
BAR 3 1/2 x 7/8 x 0'-11 5/8" (MAX)
8 1/8" (+0" -2 1/2")
TYP 1/4
1 1/16" Ø HOLE
R=1 3/4"
WASH PL 1/2 x 2 3/4" ø, TYP EA SIDE
DETAIL B502
C502-C502
D502-D502 (OPP H & SIM)
(47B452-413)
2-LUGS 1/2 x 6 3/4 x 0'-7"
1 3/4" R
1 1/16" ø HOLE
PL 1/2 x 1 x 0'-3 3/16", TYP
1/2" TYP
3"
5"
TYP 3/16
3 1/2"
3 1/2"
DETAIL E502
FIRST ISSUE FOR ECN P-0361
NOT TO SCALE
WP 2060-84
P0361
REV A502-A502, C502-C502, D502-D502 & DETAIL B502
MINOR REVISIONS
P-0361
REV A502-A502, DET B502 & ADD E502
SPAT REDRAWN & REDESIGNED
POWERHOUSE
REACTOR BLDG – UNIT 2
MECHANICAL
RHR SYSTEM
PIPE SUPPORTS
PAGE
BROWNS FERRY NUCLEAR PLANT
TENNESSEE VALLEY AUTHORITY
47B452-502
R4
SHEET 144 of 259
37221

SHEET 145 of 259

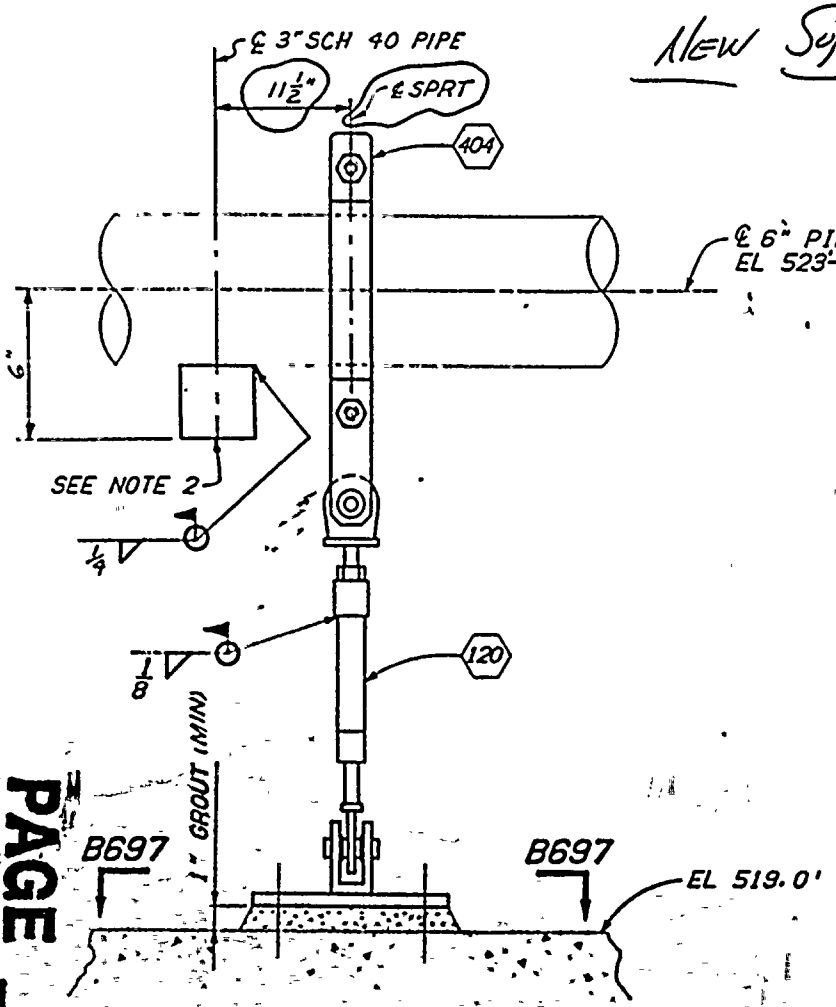

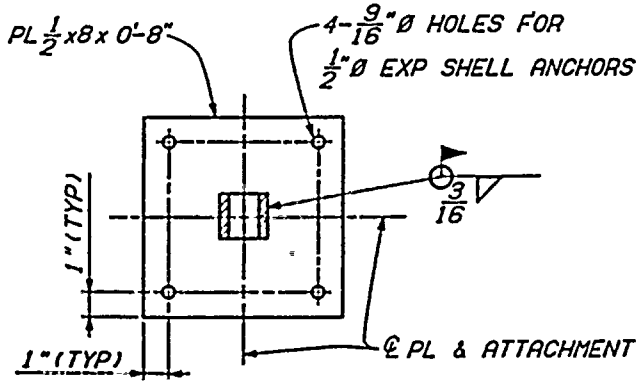

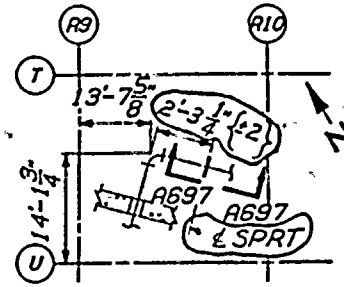

LOCATION PLAN
FLOOR EL 519'-0"

SUPPORT NO. R-86
(JOINT NO. R651)

NOTES:
1. FOR GENERAL NOTES SEE 47B435-1.
2. PORTION OF REMOVED SUPPORT H-218. 47A452-394

REFERENCE DRAWINGS:
47W403-214 (ISOMETRIC)
47W2452-13 (PIPING)

FIRST ISSUE FOR ECN P-0361 & P-2111

NOT TO SCALE

WP 2060-84

1 P0361	REV LOCATION PLAN AND A697-A697.
POWERHOUSE REACTOR BUILDING - UNIT 2	
MECHANICAL RHR SYSTEM PIPE SUPPORTS	
BROWNS FERRY NUCLEAR PLANT TENNESSEE VALLEY AUTHORITY	
67 M 478452-697	R

PAGE

B2A553

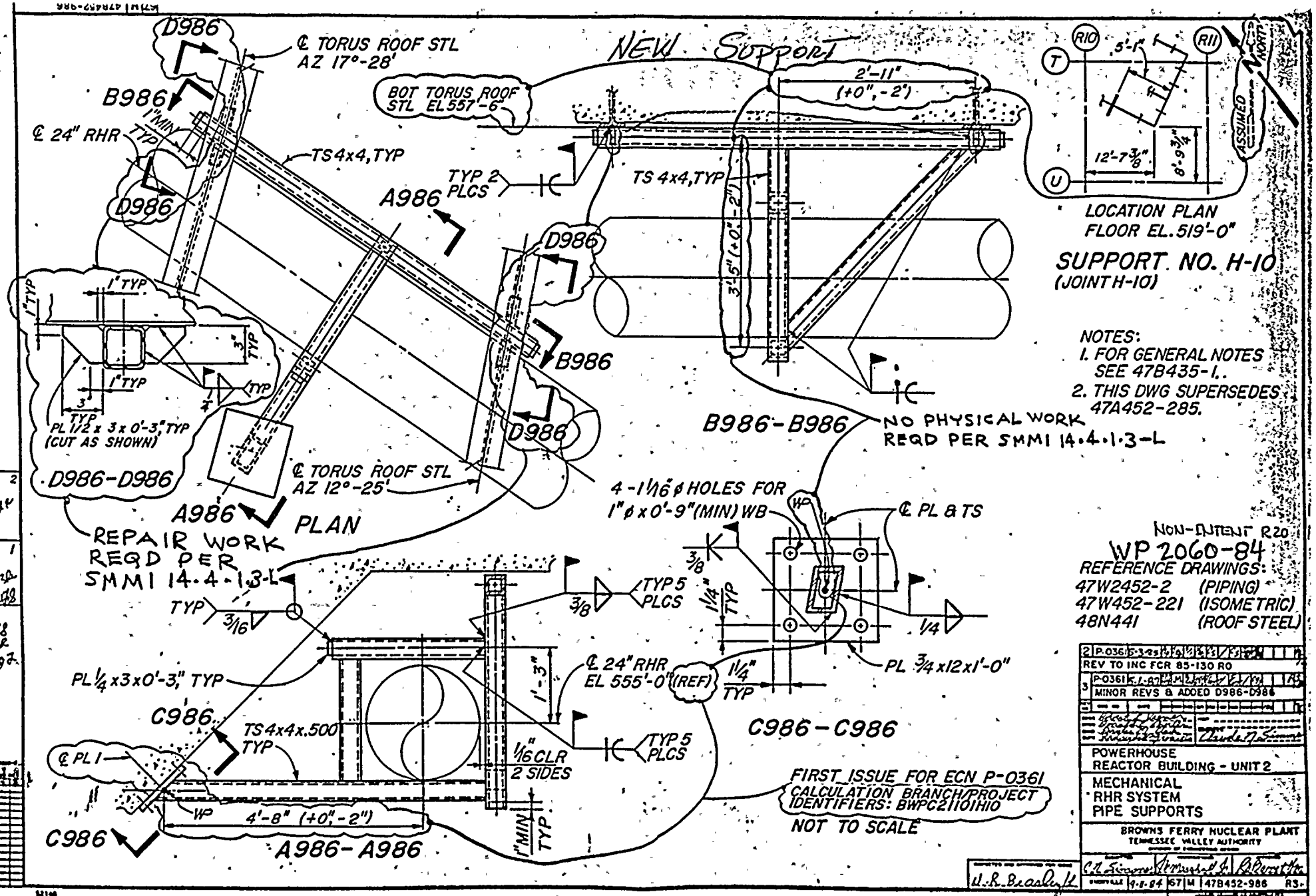

SHEET 146 of 259

PAGE

SHEET 147 of 259

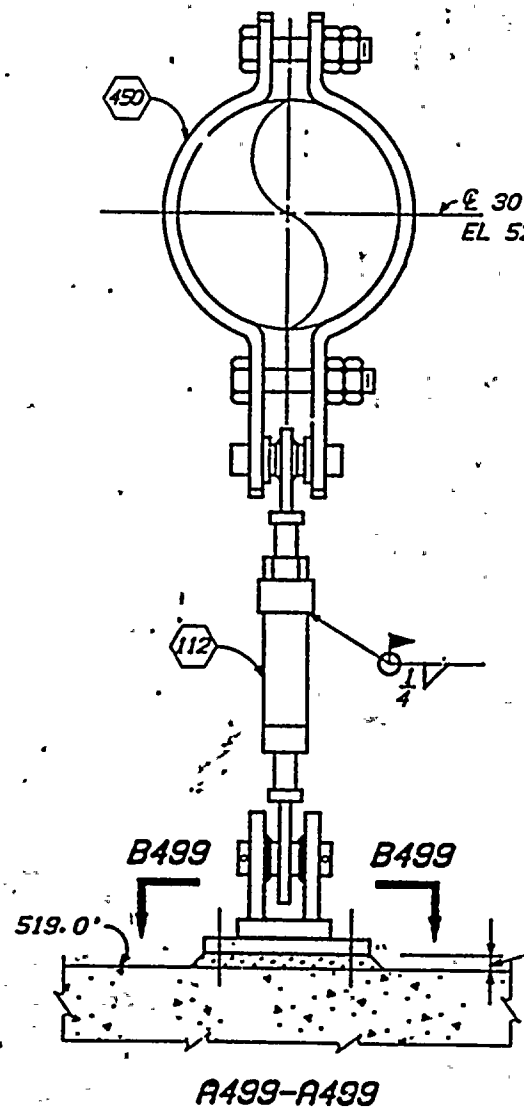

NEW SUPPORT

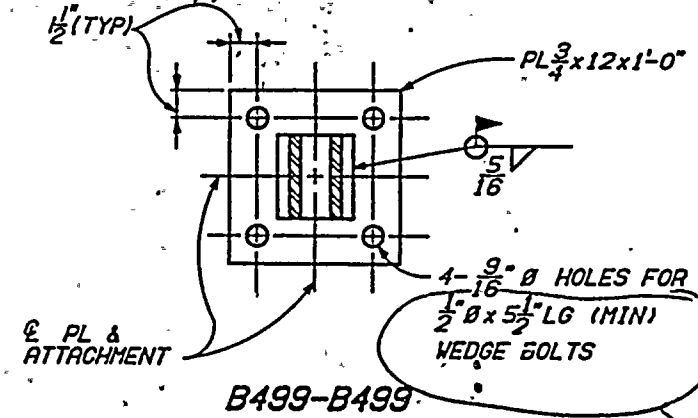

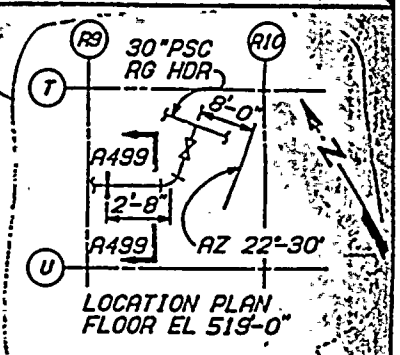

SUPPORT NO. H-153
(JOINT NO. R644)

NOTES:
1. FOR GENERAL NOTES SEE 47B435-1.
2. THIS DRAWING SUPERSEDES CONFIGURATION SHOWN ON 47A452-367.

REFERENCE DRAWINGS:
47W2452-1 (PIPING)
47W403-205 (ISOMETRIC)

SEE FDCN F01213A

FIRST ISSUE FOR ECN P-0361 & P-2111

NOT TO SCALE

WP 2060-84

POWERHOUSE
REACTOR BUILDING - UNIT 2

MECHANICAL
RHR SYSTEM
PIPE SUPPORTS

BROWNS FERRY NUCLEAR PLANT
TENNESSEE VALLEY AUTHORITY

KNOXVILLE 4-21-77 87 M 478452-499 R0

37221

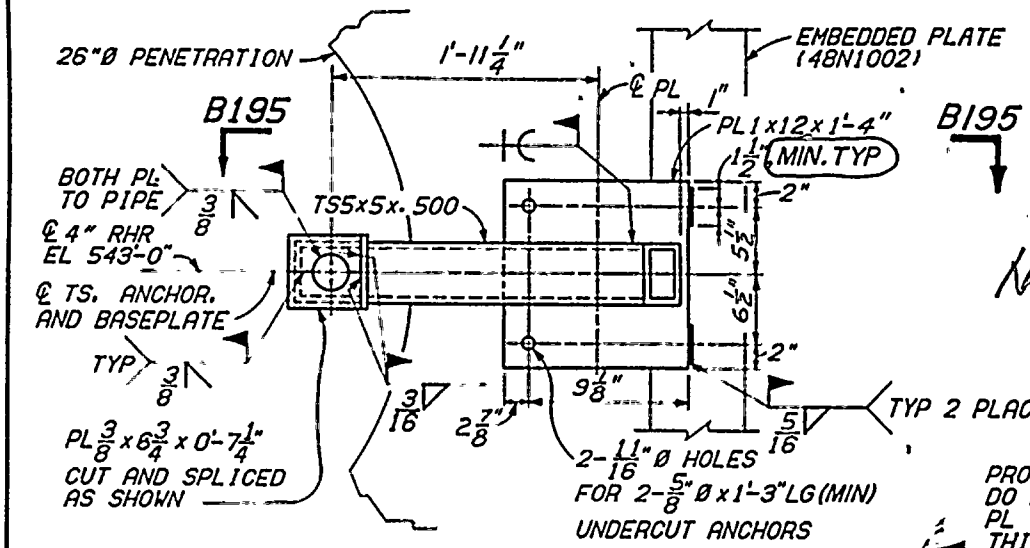

A195-A195

NEW SUPPORT

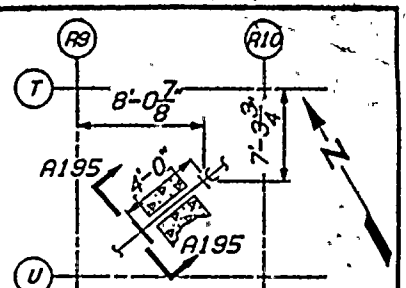

LOCATION PLAN
FLOOR EL 519'-0"

SUPPORT NO. R-195
(JOINT R-195)

NOTES:
1. FOR GENERAL NOTES SEE 47B435-1.
2. THIS DRAWING SUPERSEDES HANGER H-303 ON DRAWING 47A452-469.

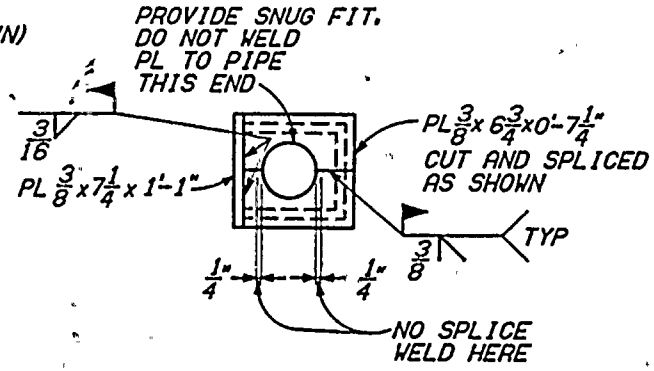

C195-C195

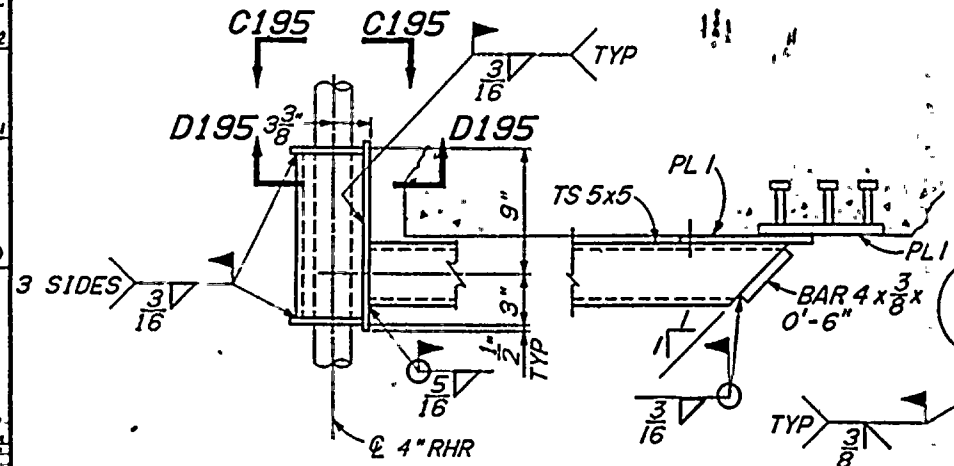

B195-B195

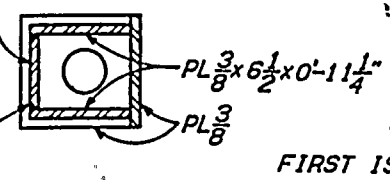

D195-D195

WP 2060-84

FIRST ISSUE FOR ECN P-0361

NOT TO SCALE

REFERENCE DRAWINGS:
47W2452-9 (PIPING)
47W452-237 (ISOMETRIC)
47W473-1 (MECH PEN.)

REV		
3	P0361	REV SECT A195-A195.
2	P0361	SPRT REDESIGNED, REDRAWN & ELIMINATE COMP DWG 47B452-810
1	P0361	SPRT REDESIGNED & REDRAWN

POWERHOUSE
REACTOR BUILDING UNIT 2

MECHANICAL
RHR SYSTEM
PIPE SUPPORTS

BROWNS FERRY NUCLEAR PLANT
TENNESSEE VALLEY AUTHORITY

KNOXVILLE 7-17-84 67 M 47B452-185 R3

PAGE

SHEET 148 of 259

B2A423

52146

NEW SUPPORT

SHEET 149 of 259

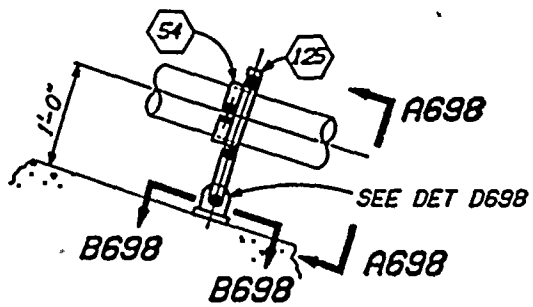

PLAN

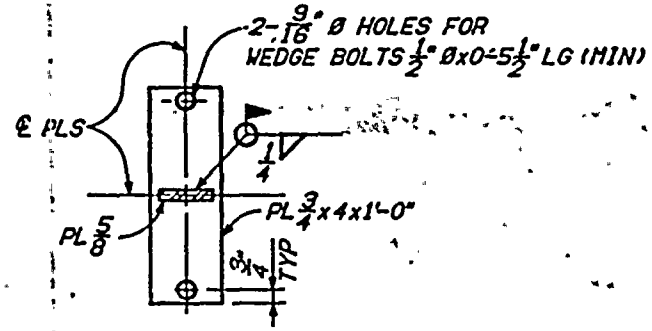

B698-B698

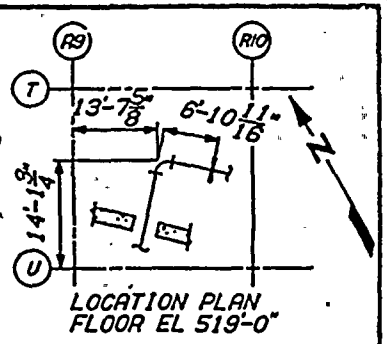

LOCATION PLAN
FLOOR EL 519'-0"

SUPPORT NO. R-87
(JOINT NO. R656)

NOTES:
1. FOR GENERAL NOTES SEE 47B435-1.

6201
Bag 3

REFERENCE DRAWINGS:
47W2452-14 (PIPING)
47W403-214 (ISOMETRIC)

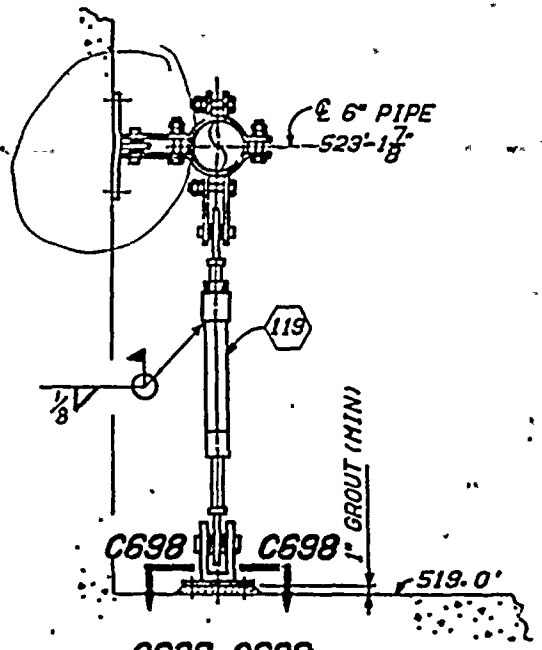

A698-A698

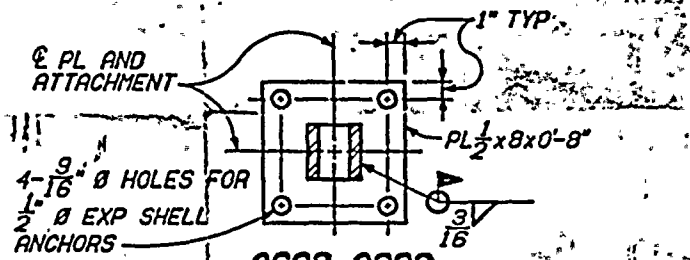

C698-C698

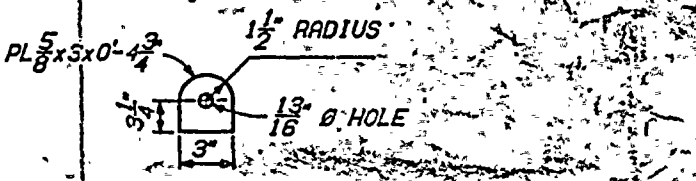

DET D698
(ROTATED)

FIRST ISSUE FOR ECN P-0361

NOT TO SCALE

WP 2060-84

POWERHOUSE
REACTOR BUILDING - UNIT 2

MECHANICAL
RHR SYSTEM
PIPE SUPPORTS

BROWNS FERRY NUCLEAR PLANT
TENNESSEE VALLEY AUTHORITY

8/21/81 | 47B452-698 | R0

B2A667

PAGE

NEW SUPPORT

SHEET 150 of 259

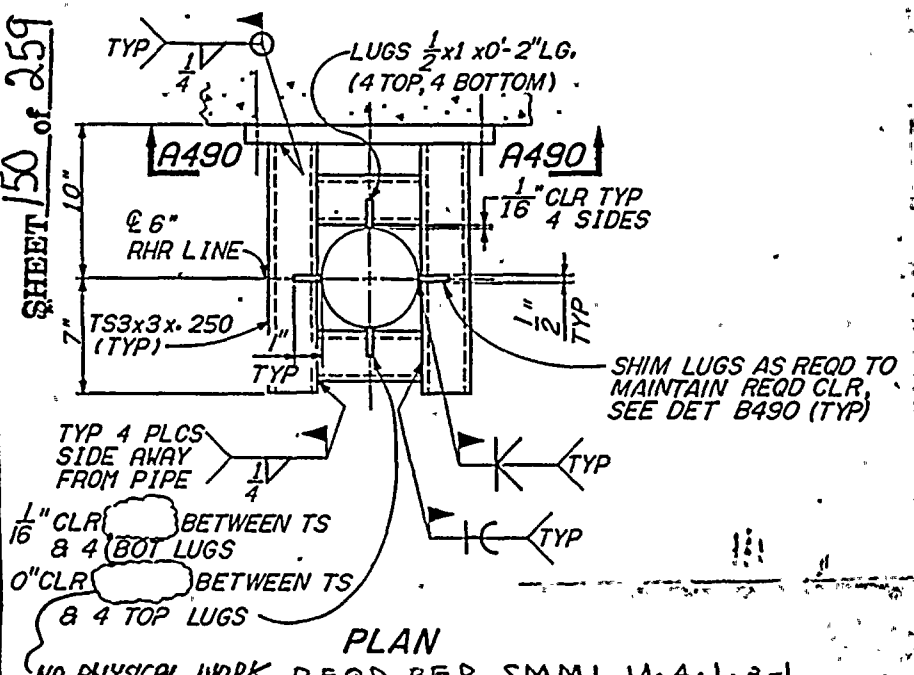

PLAN

NO PHYSICAL WORK REQD PER SMMI 14.4.1.3-L

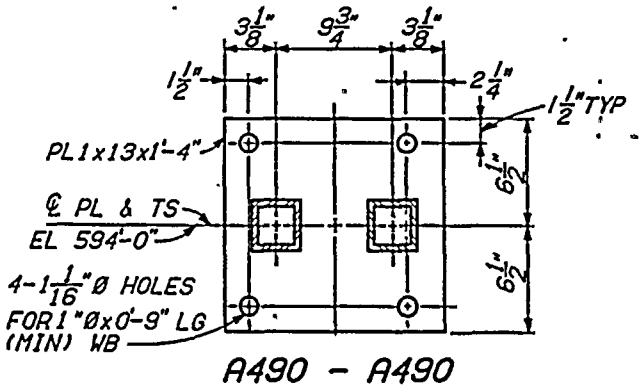

A490 - A490

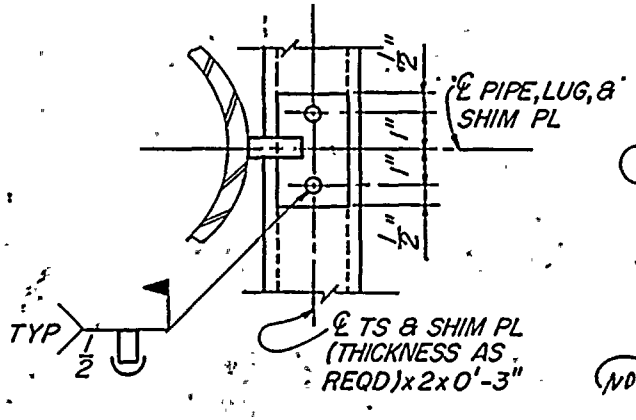

DET B490

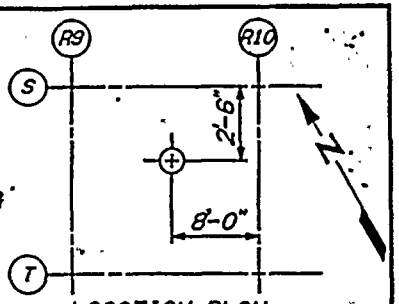

LOCATION PLAN
FLOOR EL 593'-0"

SUPPORT NO. R-70A
(JOINT R-70)

NO PHYSICAL WORK REQD PER SMMI 14.4.1.3-L

NOTES:
1. FOR GENERAL NOTES SEE DWG 47B435-1.

NON INTENT R16
WP 2060-84

REFERENCE DRAWINGS:
47W2452-11 (PIPING)
47W452-223 (ISOMETRIC)

4	P0361	7-30-85	MINOR REVISIONS
3	P0792	5-12-85	REVISED PLAN VIEW
2	P0361	5-13-85	ADDED DET B490 & REV PLAN
1	P-0361	5-3-85	REV TO INC FCR 85-102 R0

FIRST ISSUE FOR ECN P-0361

CALCULATION BRANCH/PROJ IDENTIFIERS: BWPC20895R70A

NOT TO SCALE

POWERHOUSE
REACTOR BUILDING - UNIT 2

MECHANICAL PAGE
RHR SYSTEM
PIPE SUPPORTS

BROWNS FERRY NUCLEAR PLANT
TENNESSEE VALLEY AUTHORITY

B2A172

Tennessee Valley Authority
Browns Ferry Nuclear Plant

NOV 10 1986

Form SDSP-26
SDSP-13.3
Page 4 of 5

REVISED 3/18/88

ASME SECTION XI SUMMARY REPORT

Tennessee Valley Authority
Office of Nuclear Power, 1750 CST2-C
Browns Ferry Nuclear Plant Unit 2
P.O. Box 2000
Decatur, Alabama

Comm. Service Date 3-1-75
System RHR
TVA Class ASME CL 2 EQUIVALENT
Workplan/MR No. 2061-84

Furnish the following for the repair or replacement for the as-left condition of the component (after field work is complete). Mark all blanks (indicate NA for items which do not apply).

National Board Number of repaired or replaced component. N/A

Name of the components and description (include size, capacity, material, and location)--Theses requirements may be satisfied by attaching an applicable drawing.
SEE ATTACHED TWO SHEETS

Name of Manufacturer SEE ATTACHED

Address of Manufacturer (if known) SEE ATTACHED

Manufacturer's component identification numbers (i.e., serial number, subassembly number, heat number). If more than one component is replaced, attach weld map and identify items by item number.
SEE ATTACHED

Brief description of repair or replacement work performed, including conditions observed and corrective measures taken, as applicable (reference DCR, CAR, etc.; drawing may be attached with attached affected area circled).
SEE ATTACHED -

Brief description of post repair or replacement tests and examinations (if required) by instruction or procedure number.
SEE ATTACHED

ANII/ANI name, employer, and business address
SEE ATTACHED

Date work completed 7-9-87

Jimmy W Steele 3/18/88
Cognizant Engineer Date

Retention: Period - Lifetime; Responsibility - Modifications Supervisor

TENNESSEE VALLEY AUTHORITY
BROWNS FERRY NUCLEAR PLANT
P. O. BOX 2000
DECATUR, ALABAMA 35602

ASME SECTION XI
SUMMARY REPORT

UNIT 2, CYCLE 5

System: RHR
ASME Code Class: 2
Workplan Number: 2061-84
ECN/DCR Number: P0361/2161

I. Repair or replacement work performed.

A. R-63 (47B452-449 ~~R1~~ R3, BP 1903 R1) - Removed existing struts, integrally welded lugs, and wide flange. Installed new strut (MK 223), 2 clamps (MK 833) and tube steel to baseplates.

NON INTENT R 15

B. R-82 (47B452-694 R1) - Installed new strut (MK 119) to baseplate, and 2 clamps (MK 54 and MK 125).

C. R-90 (47B452-462 R1, 47A452-300 R1) - Installed new tube steel to baseplates, strut (MK 223), and 2 clamps (MK 284).

D. R-193 (47B452-492 R0, FCR 85-077 R0) - Installed integrally welded lugs (Item 1), 2 snubbers (MK 314), and end attachments (MK 32) to baseplates.

E. R-198 (47B452-464 R0, 47A452-362 R2) - Removed existing spring cams and pipe saddle support. Installed new tube steel and stiffener plates.

F. H-339 (47B452-513 R0, 47A452-496 R1) - Removed existing spring cam, pipe clamp, and baseplate. Installed new angle iron and tube steel to baseplate.

II. Post repair or replacement tests and examinations.

A. Integrally welded joints inspected per N-VT-3 and N-PT-1 or N-MT-1, structural welds inspected per N-VT-2.

B. Support installations verified per MAI-23.

C. Baseline inspections performed on supports R-63, ~~R-82~~ JR 1/15/89, R-90, ~~R-193~~ JR 1/15/87, and R-198. N-VT-1

D. ANI Holdpoint - R-193 final PT/MT.

III. Manufacturers component identification numbers.

Item 1 - 1" C.S. ASME SA516 GR 70 plate, PS Ht. 803N60080
MK 223 - Rigid strut, BP 2010, Size 10.
MK 833 - 18" pipe clamp, BP 6200, Size 12.
MK 162 - End attachment, BP 1000, Size 12.
MK 284 - 24" pipe clamp, BP 6200, Size 12.

SUMMARY REPORT - WORKPLAN 2061-84

III. Manufacturers component identification numbers, continued.

MK 125 - 6" pipe clamp, BP 6200, Size 3.
MK 54 - 6" pipe clamp, BP 6200, Size 1.5.
MK 314 - Mechanical shock arrestor, BP 2540, Size 50.0.
MK 32 - End attachment, BP 1002, Size 50.
MK 119 - Adjustable rigid strut, BP 2251, Size 1.5.

IV. Manufacturers

BP Bergen-Paterson
74 Commerce Way
Woburn, MA 01888

PS Paragon Steel Corp.
20101 Hoover Road
Detroit, MI 48205

V. ANI/ANII/AIA

ANI: Roosevelt Russell
ANII: Bill Rice
AIA: The Hartford Steam Boiler Insp. and Ins. Co.
4330 Georgetown Square
Atlanta, GA 30338

VI. Date work completed: 5-2-85

Above Information Verified:

J Rosenblum 5-2-85
Cognizant Engineer / Date

REVISED 3/18/88 Jimmy W Dhule 3/18/88

TENNESSEE VALLEY AUTHORITY
BROWNS FERRY NUCLEAR PLANT
P. O. BOX 2000
DECATUR, ALABAMA 35602

ASME SECTION XI
SUMMARY REPORT
UNIT 2, CYCLE 5

System: RHR
ASME Code Class: 2
Workplan Number: 2062-84
ECN/DCR Number: P0361/2161

I. Repair or replacement work performed.

A. R-18 (47B452-453 R0, RCR 85-112 R0 R1, R2, 47B452-438 R0) - Removed existing strut and wide flange. Installed new tube steel, 2 struts (MK 223) with end attachments (MK 35) and integrally welded lugs (item 1).

B. R-19 (47B452-454 R0, R1) - Installed stiffener plates on existing wide flange.

C. R-92 (45B452-892 R0, R1, R2) - Installed new tube steel, snubber (MK 390), and clamp (MK 366).

D. R-96 (45B452-970 R0, R1, and 971 R0) - Installed new snubber (MK 391) and wide flange to base plate. Installed integralled welded lugs (item 2).

E. H-156 (45B452-405 R0) - Removed existing pipe, plate, and baseplate.

II. Post repair or replacement tests and examinations.

A. Integrally welded lugs inspected per N-VT-3 and N-PT-1 or N-MT-1, structural welds inspected per N-VT-2.

B. Baseline inspections on supports R-18, R-19, R-92, R-96, and R-161 per N-VT-1.

C. Support installations verified per MAI-23.

D. ANI holdpoint - R-96 final PT/MT.

III. Manufacturers component identifications numbers.

Item 1 - 5/8" ASTM A-36 plate, SS - Ht. 7533061
Item 2 - 3/4" ASTM A-36 plate, PS - Ht. 813048
MK 223 - Rigid Rod strut, B-P 2010, size 10
Mk 35 - End attachment, B-P 2003, size 10
MK 390 - Mechanical shock arrestor, B-P 2540, size 15
MK 366 - 18" pipe clamp, B-P 2650, size 15
MK 391 - Mechanical shock arrestor, B-P 2540, size 50

SUMMARY REPORT - WORKPLAN NUMBER 2062-84

IX. Manufacturers

B-P Bergen-Paterson
74 Commerce Way
Woburn, MA 01888

SS Siskin Steel
P. O. Box 1191
Chattanooga, TN 37401

PS Paragon Steel
Detroit, MI 48205

V. ANI/ANII/AIA

ANI: Roosevelt Russell
ANII: Bill Rice
AIA: The Hartford Steam Boiler Insp. and Ins. Co.
4330 Georgetown Square
Atlanta, Georgia 30338

VI. Date work completed: 4-9-85

Above Information Verified:

J. Rosenblum 4-9-85
Cognizant Engineer/Date

Tennessee Valley Authority
Browns Ferry Nuclear Plant

NOV 10 1986

Form SDSP-26
SDSP-13.3
Page 4 of 5

ASME SECTION XI SUMMARY REPORT

Tennessee Valley Authority
Office of Nuclear Power, 1750 CST2-C
Browns Ferry Nuclear Plant Unit 2
P.O. Box 2000
Decatur, Alabama

Comm. Service Date 3/1/75
System RHR
TVA Class ASME CLASS 2
Workplan/MR No. 2063-84

Furnish the following for the repair or replacement for the as-left condition of the component (after field work is complete). Mark all blanks (indicate NA for items which do not apply).

National Board Number of repaired or replaced component. N/A

Name of the components and description (include size, capacity, material, and location)--Theses requirements may be satisfied by attaching an applicable drawing.
SEE ATTACHED

Name of Manufacturer SEE ATTACHED

Address of Manufacturer (if known) SEE ATTACHED

Manufacturer's component identification numbers (i.e., serial number, subassembly number, heat number). If more than one component is replaced, attach weld map and identify items by item number. SEE ATTACHED

Brief description of repair or replacement work performed, including conditions observed and corrective measures taken, as applicable (reference DCR, CAR, etc.; drawing may be attached with attached affected area circled).
SEE ATTACHED

Brief description of post repair or replacement tests and examinations (if required) by instruction or procedure number. SEE ATTACHED

ANII/ANI name, employer, and business address ANI: ROOSEVELT RUSSELL, ANII: BILL RICE, AIA: HARTFORM STEAM BOILER INSP. & INS. CO., 4330 GEORGETOWN SQUARE, ATLANTA GEORGIA 30338

Date work completed 6-10-87

Richard Y Lemmond 3-15-88
Cognizant Engineer Date

Retention: Period - Lifetime; Responsibility - Modifications Supervisor

0031p

TENNESSEE VALLEY AUTHORITY
BROWNS FERRY NUCLEAR PLANT
P. O. BOX 2000
DECATUR, ALABAMA 35602

ASME SECTION XI
SUMMARY REPORT

UNIT 2 CYCLE 5

System: RHR
ASME Code Class: 2
Workplan Number: 2063-84
ECN/DCR: P0361/2161

I. Repair or replacement work performed.

A. H-23 (47A452-298 R2, 47B452-455 R0, R1, R2) - Remove existing spring cams, saddle, u-bolt, and channel. Installed 2 new clamps (MK 284), end attachments (MK 162), and struts (Mk 45).

B. R-102 (47B452-468 R0, R1, R2, FCR 85-072 R0) - Installed new tube steel to baseplates, 2 new snubbers (MK 306), clamp (MK 439).

C. R-105 (47B452-461 R0, R1, R2) - Installed new tube steel, baseplate, snubber (MK 389), and clamp (MK 348).

D. H-154 (47B452-497 R0, 47A452-368 R2) - Removed existing rod and clamp. Installed new baseplate, strut (MK 112), and clamp (MK 450).

E. H-344 (47B52-983 R0, R1, R2, 47B452-501 R2, FCR 85-058 R0, R1) - Removed existing angle and u-bolt. Installed new tube steel, u-bolt, 2 snubbers (MK 304), and end attachments (MK 37). Reinstall 2 existing spring cams.

F. H-313 (47A452-475 R2, 47B452-507 R0, R1) - Removed existing angle iron and clamp. Installed 2 struts (MK 46) and 2 clamps (MK 124).

G. H-314 (47A452-476 R2, 47B452-486 R0, R1) - Removed existing rod and clamp. Installed new strut (MK 120) and clamp (MK 121).

H. H-315 (47A452-477 R2, 47B452-487 R0) - Removed existing rod ~~and~~ JR 12/18/86 baseplate, & clamp. Installed new strut (MK 119) ~~and~~ JR 12/13/86 clamp (MK 55), & baseplate.

I. H-316 (47A452-478 R1, 47B452-511 R0, R1, R2) - Removed existing angle iron, base plate and wide flange. Installed new baseplate, 2 struts (MK 46) and 2 clamps (MK 124).

II. Post Repair or replacement tests and examinations.

A. Integrally welded joints inspected per N-VT-3 and N-PT-1 or N-MT-1, structual welds inspected per N-VT-2.

B. Support installations verified per MAI-23.

C. Baseline inspections performed per N-VT-1 on supports H-23, R-102, R-105, and H-154.

D. ANI holdpoints on H-23 PT/MT
H-344 VT per N-VT-2

III. Manufacturers components identification numbers.

MK 284 - 24" pipe clamp, B-P 6200, size 12
MK 162 - Structural attachment, B-P 1000, size 12.0
MK 45 - Adjustable rigid strut, B-P 2251, size 12.0
MK 306 - Mechanical shock arrestor, B-P 2410, size 15.0
MK 439 - 24" pipe clamp B-P 2640, Size 15
MK 389 - Mechanical shock arrestor, B-P 2540, size 6.0
MK 348 - 6" pipe clamp, B-P 2640, size 6.0
MK 112 - Adjustable rigid strut, B-P 2251, size 25
MK 450 - 30" pipe clamp, B-P 6200, size 28
MK 304 - Mechanical shock arrestor, B-P 2410, size 1.5
MK 37 - Structural attachment, B-P 1002, size 1.5
MK 46 - Rigid strut, B-P 2251, size 4
MK 124 - 4" pipe clamp, B-P 6200, size 3
MK 120 - Rigid strut, B-P 2251, size 0.7
MK 121 - 4" pipe clamp, B-P 6200, size 0.65
MK 119 - Rigid strut, B-P 2251, size 1.5
MK 55 - 4" pipe clamp, B-P 6200, size 1.5

IV. Manufacturers

B-P Bergen-Paterson
74 Commerce Way
Woburn, MA 01888

V. ANI/ANII/AIA

ANI: Roosevelt Russell
ANII: Bill Rice
AIA: The Hartform Steam Boiler Insp. and Ins. Co.
4330 Georgetown Square
Atlanta, Georgia 30338

VI. Date work completed: ~~4-15-85~~ JR 12-26-85
6-10-87 RHL

Above information verified:

~~J. Rosenblum 4-15-85~~ JR 12-26-85
Cognizant Engineer/Date
Richard H Leonard 3-15-88

Tennessee Valley Authority
Browns Ferry Nuclear Plant

Form 164
BF 18.8
Page 4 of 4
MAY 8 1984
SHEET 160 of 259

ASME SECTION XI SUMMARY REPORT

Plant BFNP
System RHR
TVA Class II
Workplan/~~NR No.~~ 2064-84

Furnish the following for the repair or replacement for the "as left" condition of the component (after field work is complete). Mark all blanks (indicate N/A for items which do not apply).

National Board Number of repaired or replaced component NA

Name of the components and description (include size, capacity, material, and location)--These requirements may be satisfied by attaching an applicable drawing RHR supports R-70 & R-71, 1½"x½"x6 C.S. lugs welded to pipe Dwg BP 1910 sh1 R901 & BP 1911 sh1 R901

Name of Manufacturer NA

Address of Manufacturer (if known) NA

Manufacturer's component identification numbers (i.e., serial number, subassembly number, heat number, etc.) If more than one component is replaced, attach weld map and identify items by item number. NA

Brief description of repair or replacement work performed, including conditions observed and corrective measures taken, as applicable (Reference DCR, CAR, etc., drawing may be attached with affected area circled). Trimed lugs to get ½" min. clearance between lugs & sleeve

Brief description of post repair or replacement tests and examinations (if required) by instruction or procedure number NA

ANI/ANII name, employer, and business address Roosevelt Russell
Hartford Steam & Boiler Insp. Co
~~Hartford CT~~ Atlanta, Georgia 30338
RR 2-26-85

Date work completed 2-26-85

J. Rosenblum / 2-26-85
Cognizant Engineer Date

Retention: Period - Lifetime, Responsibility - OMMM Supervisor

X-9.1

REVISED ASME SECTION XI SUMMARY REPORT

for Workplan 2067-84, ECN P0361

Attached is a revised ASME Section XI Summary Report for Workplan 2067-84 on ECN P0361. This report was revised because non-intent R20 to the workplan deleted the Pre-Service inspection requirement for RHR support H-3, because the support is located outside the Section XI boundary. All other information on previously submitted report remains the same.

R. L. Richardson
11-17-88

ASME SECTION XI SUMMARY REPORT

Plant BROWNS FERRY
System RESIDUAL HEAT REMOVAL
TVA Class D
Workplan/MR No. 2067-84

Furnish the following for the repair or replacement for the "as left" condition of the component (after field work is complete). Mark all blanks (indicate N/A for items which do not apply).

National Board Number of repaired or replaced component NA

Name of the components and description (include size, capacity, material, and location)--These requirements may be satisfied by attaching an applicable drawing
SEE PART I OF ATTACHED ASME SECT. XI SUMMARY REPORT.

Name of Manufacturer BURGEN PATERSON

Address of Manufacturer (if known) 74 COMMERCE WAY WOBURN, MA. 01888

Manufacturer's component identification numbers (i.e., serial number, subassembly number, heat number, etc.) If more than one component is replaced, attach weld map and identify items by item number.
SEE PART III OF ATTACHED ASME SECT. XI SUMMARY REPORT.

Brief description of repair or replacement work performed, including conditions observed and corrective measures taken, as applicable (Reference DCR, CAR, etc., drawing may be attached with affected area circled).
SEE PART I OF ATTACHED ASME SECT. XI SUMMARY REPORT.

Brief description of post repair or replacement tests and examinations (if required) by instruction or procedure number
SEE PART II OF ATTACHED ASME SECT. XI SUMMARY REPORT.

ANI/ANII name, employer, and business address
SEE PART V OF ATTACHED ASME SECT. XI SUMMARY REPORT.

Date work completed SEE PART VI OF ATTACHED ASME SECT. XI SUMMARY REPORT

Jerry Miller 8/27/86
Cognizant Engineer Date

Retention: Period - Lifetime, Responsibility - OMMM Supervisor

BROWNS FERRY NUCLEAR PLANT
P. O. BOX 2000
DECATUR, AL 35602

PG. 2

SHEET 163 of 259

SYSTEM: RHR
ASME CODE CLASS: 2
WORK PLAN #: 2067-84
ECN/DCR: P0361/2161

ASME SECTION XI SUMMARY REPORT

I. REPAIR OR REPLACEMENT WORK REQUIRED.

A. H-3 (47B452-459 R0, R1) - REMOVED EXISTING SUPPORT AND RE INSTALLED NEW SUPPORT USING 3X3 TUBE STEEL STRUCTURAL MEMBERS.

B. H-11 (47B452-463 R3) - ADDED LATERAL STRUT (MK-45) AND PIPE CLAMP (MK-284) AND ADDED FILLER METAL TO EXISTING WELDS.

C. H-212 (47B452-700 R2) - ADDED LATERAL STRUT (MK-120) AND PIPE CLAMP (MK-404). ADDED FILLER METAL TO EXISTING WELD.

D. H-304 (47B452-485 R0) - REMOVE EXISTING SUPPORT AND INSTALL NEW SUPPORT USING VERTICAL STRUT (MK-120), PIPE CLAMP (MK-121) AND BEAM ATTACHMENT.

E. H-305 (47B452-493 R1) REMOVE EXISTING SUPPORT AND INSTALL NEW SUPPORT USING (2) STRUTS (MK-119), (2) PIPE CLAMPS (MK-55) AND (2) BEAM ATTACHMENTS.

H-307 (47B452-495 R1) - REMOVE EXISTING SUPPORT AND INSTALL NEW SUPPORT USING (2) STRUTS (MK-46), (2) PIPE CLAMPS (MK-124) AND (2) BEAM ATTACHMENTS.

G. H-308 (47B452-496 R2) - MODIFY EXISTING SUPPORT BY REPLACING PIPE LUGS AND PIPE TO SUPPORT CONNECTIONS. PG. 3

H. H-370 (47B452-484R1) - REMOVE EXISTING SUPPORT AND INSTALL NEW SUPPORT USING STRUT (MK-120), PIPE CLAMP (MK-53) AND BEAM ATTACHMENT.

I. R-94 (47B452-484 R2) - REMOVE EXISTING SUPPORT (R-198) AND INSTALL NEW SUPPORT USING (2) SNUBBERS (MK-306), (2) PIPE CLAMPS (MK-439), (2) END ATTACHMENTS AND TS 8x8x½".

II. POST REPAIR OR REPLACEMENT TEST AND EXAMINATIONS.

A. STRUCTURAL WELDS EXAMINED PER N-VT-2

B. SUPPORT INSTALLATIONS VERIFIED PER MAI-23 AND MAI-4

C. ANI HOLD POINT - H-3 PT. AND MT
PRESERVICE VISUAL ON ~~H-3 AND~~ H-11

PAGE 395 OF _____ DELETED PER NON INTENT R20. RR 11-17-88

III. MANUFACTURERS COMPONENT IDENTIFICATION NUMBERS.

MK-45 - FIELD WELDED ADJUSTABLE RIGID STRUT, SIZE 12 B&P PART NO. 2251

MK-46 - FIELD WELDED ADJUSTABLE RIGID STRUT, SIZE 4 B&P PART Nº 2251.

MK-55 - RESTRAINT PIPE CLAMP FOR 4" PIPE, B&P PART Nº 6200

FIG. 4

MK-119 - FIELD-WELDED ADJUSTABLE-RIGID STRUT, SIZE 1.2 B&P PART № 2251.

MK-120 - FIELD WELDED ADJUSTABLE RIGID STRUT, SIZE 0.7 B&P PART № 2251.

MK-124 - RESTRAINT PIPE CLAMP, B&P PART № 6200

MK-284 - RESTRAINT PIPE CLAMP, B&P PART № 6200

MK-306 - MECHANICAL SHOCK ARRESTOR (SNUBBER) B&P PART № 2410 SIZE 15.

MK-404 - RESTRAINT PIPE CLAMP, B&P PART № 6200

MK-439 - RESTRAINT PIPE CLAMP, B&P PART № 6200

IV. MANUFACTURER:

B&P BURGEN PATERSON
74 COMMERCE WAY
WOBURN, MA. 01888

PAGE 376 OF _____

V. ANI/ANII/AIA:

ANI - ROOSEVELT RUSSELL
ANII - BILL RICE
AIA - THE HARTFORD STEAM BOILER INSP. & INS. CO.
1117 PERIMETER CENTER WEST, SUITE E301
ATLANTA, GEORGIA 30338

VI. DATE WORK COMPLETED: 8/20/86

ABOVE INFORMATION VERIFIED:
Jerry Miller / 8/20/86
COGNIZANT ENG. / DATE

SUBMITTED BY: David Winchester / 8-20-86
COG. SECT. SUPV. / DATE

Tennessee Valley Authority
Browns Ferry Nuclear Plant

REV 0002

ASME SECTION XI SUMMARY REPORT

Tennessee Valley Authority
Office of Nuclear Power, 1750 CST2-C
Browns Ferry Nuclear Plant Unit 2
P.O. Box 2000
Decatur, Alabama

Comm. Service Date _____
System RHR
TVA Class D
Workplan/MR No. 20GR-84

Furnish the following for the repair or replacement for the as-left condition of the component (after field work is complete). Mark all blanks (indicate NA for items which do not apply).

National Board Number of repaired or replaced component. N/A

Name of the components and description (include size, capacity, material, and location)--Theses requirements may be satisfied by attaching an applicable drawing.
SEE ATTACHED DRAWINGS FOR RESIDUAL HEAT REMOVAL UNIT 2 SUPPORTS H-157, H-162, H-343, R-58, R-88, R-91, R-93, R-226

Name of Manufacturer N/A

Address of Manufacturer (if known) N/A

Manufacturer's component identification numbers (i.e., serial number, subassembly number, heat number). If more than one component is replaced, attach weld map and identify items by item number. H-343, TWO SPRING CANS GRINNELL AC. B-268 SIZE 2 TYPE B. R-93, ONE ADJUSTABLE STRUT BERGEN-PATTERSON #2251 SIZE 12. R-91 AND R-226, ONE SNUBBER EACH BERGEN-PATTERSON #2540 SIZE 6 AND SIZE 15, RESPECTIVELY.

Brief description of repair or replacement work performed, including conditions observed and corrective measures taken, as applicable (reference DCR, CAR, etc.; drawing may be attached with attached affected area circled).
H-157 ADDED GUSSET PLATES, H-162 WELDED NEW LUG TO PIPE, H-343 NEW SUPPORT REPLACED EXISTING, R-58 REMOVED ONE SNUBBER, R-88 NEW SUPPORT REPLACED EXISTING H-213, R-91 NEW SUPPORT, R-93 NEW SUPPORT REPLACED EXISTING H-12, R-226 NEW SNUBBER REPLACING SNUBBER REMOVED BY R-58 MODIFICATION.

Brief description of post repair or replacement tests and examinations (if required) by instruction or procedure number. ALL STRUCTURAL WELDS INSPECTED PER N-VT-2. ALL WELDS TO PIPING INSPECTED PER N-VT-3 AND N-PT-1 (H-157 AND H-162).

ANII/ANI name, employer, and business address ANI- ROOSEVELT RUSSELL
ANII- BILL RICE HARTFORD STEAM BOILER INSPECTION AND INSURANCE CO.
1117 PERIMETER CENTER WEST, SUITE E301
ATLANTA, GA 30338

Date work completed _____

Cognizant Engineer 9-18-88
Date

Retention: Period --Lifetime; Responsibility - Modifications Supervisor

0031p

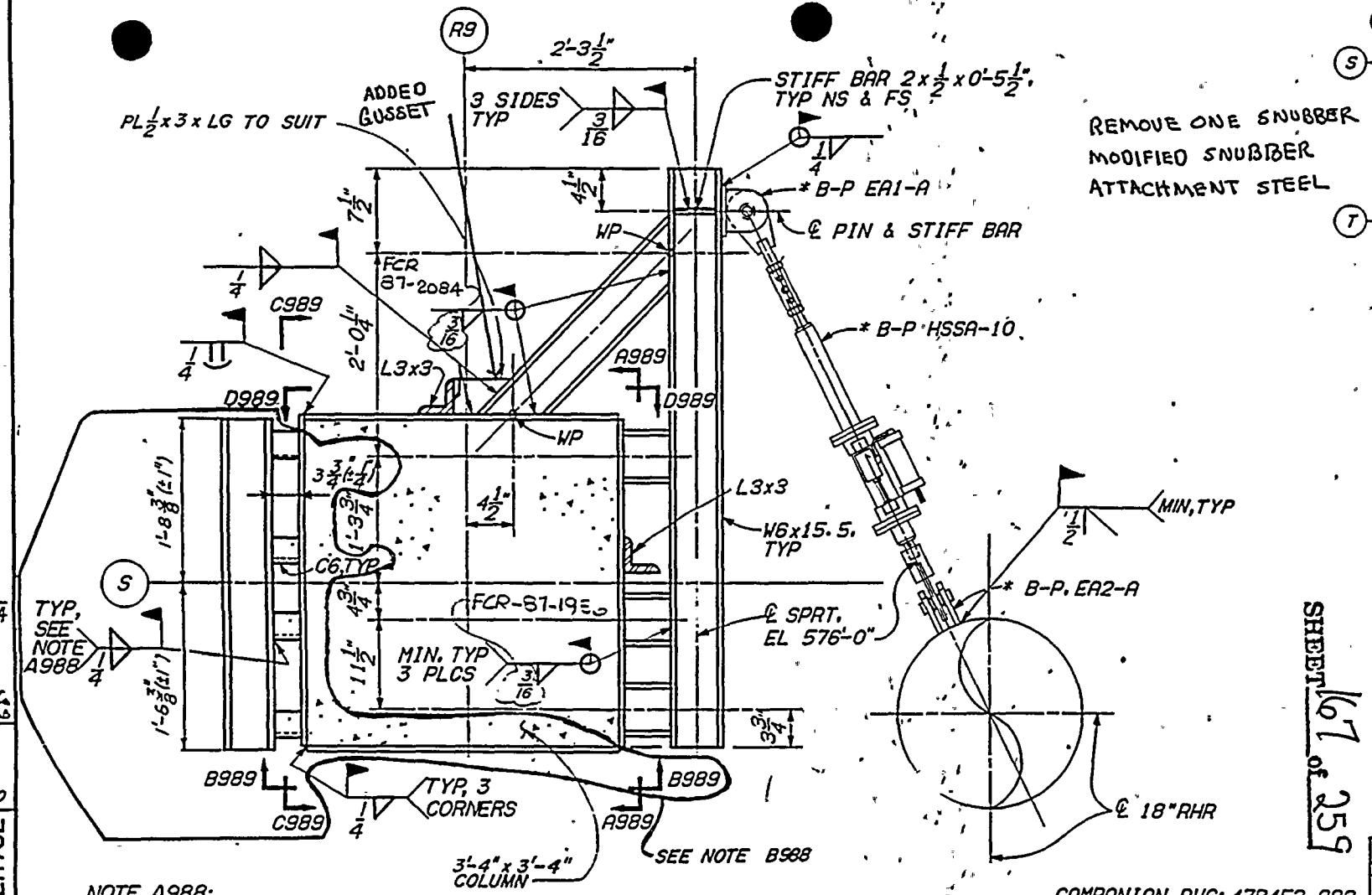

PLAN

REMOVE ONE SNUBBER
MODIFIED SNUBBER
ATTACHMENT STEEL

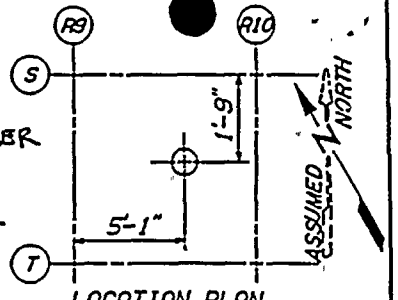

LOCATION PLAN
FLOOR EL 565'-0"

SUPPORT NO. R-58
(JOINT R-58)

INSTALLATION SET POSN: 3"
DESIGN TRAVEL T= .174"
C= .174"

NOTES:
1. FOR GENERAL NOTES SEE DWG 47B435-1.
2. THIS DWG SUPERSEDES BERGEN-PATERSON DWG NO. 1898 SHTS 1 AND 2. TVA CONTR. NO. 68C37-91062. EXCEPT FOR VENDOR MATL DENOTED BY *.

REFERENCE DRAWINGS:
47W2452-6 (PIPING)
47W452-223 (ISOMETRIC)
41N716 (CONCRETE)

SHEET 167 of 259

NOTE A988:
ADDITIONAL WELD C6 TO W6 NOT REQUIRED. FIELD NOT TO REMOVE.
NOTE B988:
IN AREA INDICATED, WELDS AND/OR MATERIAL SHALL BE CHECKED FOR PRESENCE ONLY.

COMPANION DWG: 47B452-989

FIRST ISSUE FOR ECN P-0361, & ECN P-2111
CALCULATION BRANCH/PROJECT IDENTIFIERS CD-Q2074-883831
NOT TO SCALE (MINOR REV

5	P0361	
	INC ECN A7-1986 & 87-2084	

POWERHOUSE
REACTOR BUILDING - UNIT 2

MECHANICAL
RHR SYSTEM
PIPE SUPPORTS

BROWNS FERRY NUCLEAR PLANT
TENNESSEE VALLEY AUTHORITY

KNOXVILLE 331-64 87 M 47B452-989 R5

B2A762

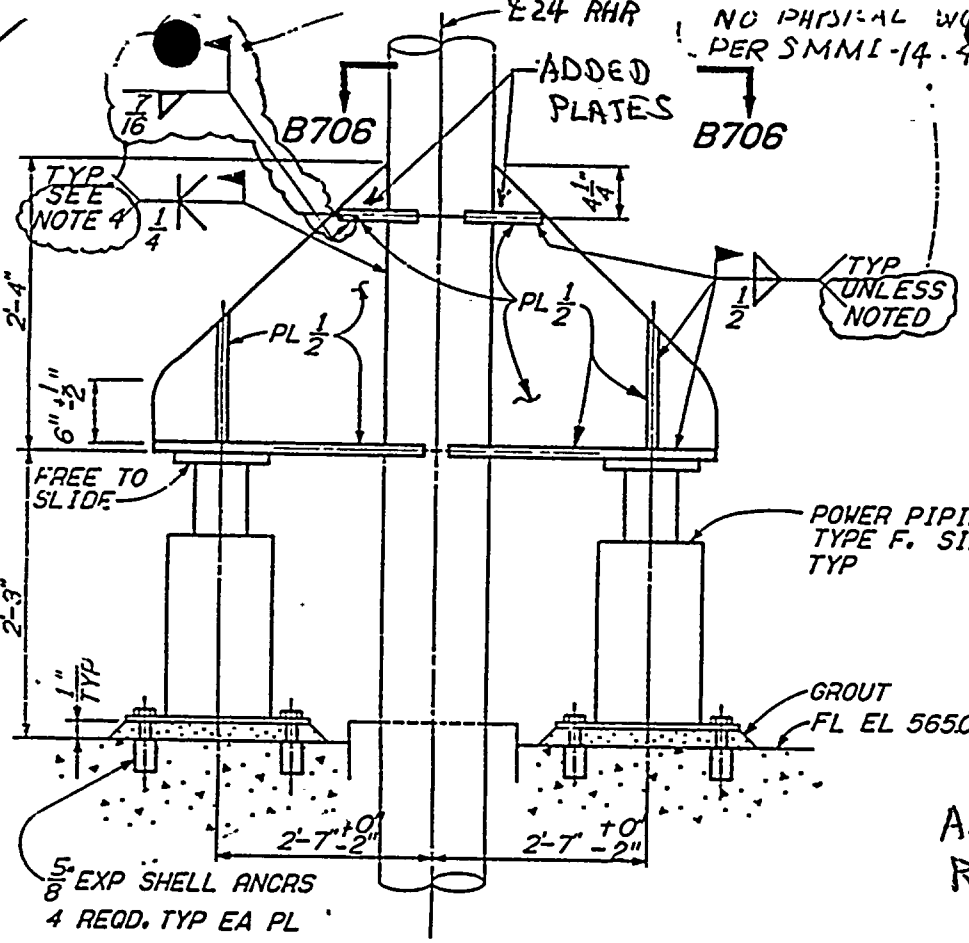

A706-A706

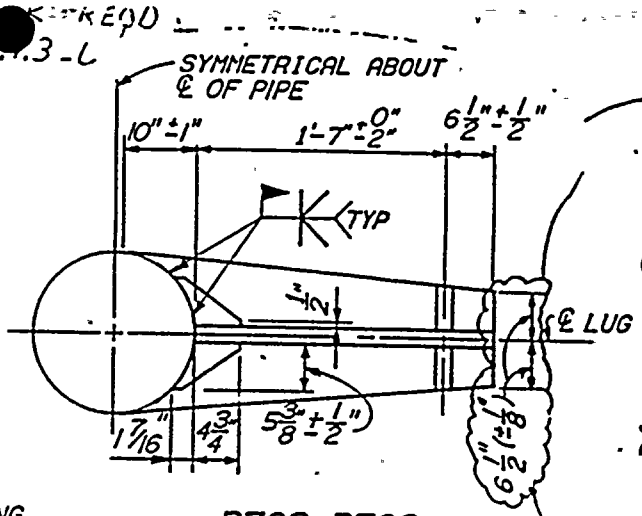

B706-B706

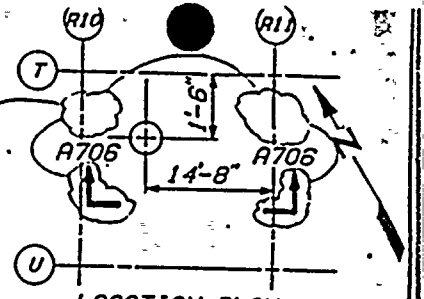

LOCATION PLAN
FLOOR EL 565'-0"

SUPPORT NO. H-157
(JOINT H-157)

LOAD SETTING RANGE
7220# TO 11000#
MAX THERMAL MOVEMENT
± 0.09"
(TYP EACH SPRING)

NOTES:
1. FOR GENERAL NOTES SEE 47B435-1.
2. FOR SPRING GENERAL NOTES SEE 47B435-3.
3. THIS DWG SUPERSEDES DWG NO. 47B452-371.
4. ANY ADDITIONAL WELD ON LUG TO PIPE IS ACCEPTABLE AND SHALL NOT BE REMOVED.

REFERENCE DRAWINGS:
47W2452-7 (PIPING)
47W452-221 (ISOMETRIC)

ASME SECT XI SUMMARY REPORT

WP#2068-84

FIRST ISSUE FOR ECN P-0361 & P-2111

CALCULATION BRANCH/PROJECT IDENTIFIERS: BWPC21012H157

NOT TO SCALE

SHEET 169 of 259

2	P0361 6-11-86 REV A706-A706, B706-B706, ACD NOTE 4	
1	P0361 REV SECT A706-A706 & B706-B706	

POWERHOUSE
REACTOR BUILDING - UNIT 2

MECHANICAL
RHR SYSTEM
PIPE SUPPORTS

BROWNS FERRY NUCLEAR PLANT
TENNESSEE VALLEY AUTHORITY

KNOXVILLE 11-19-84 M 47B452-708 R3

NON INTENT R19

52146

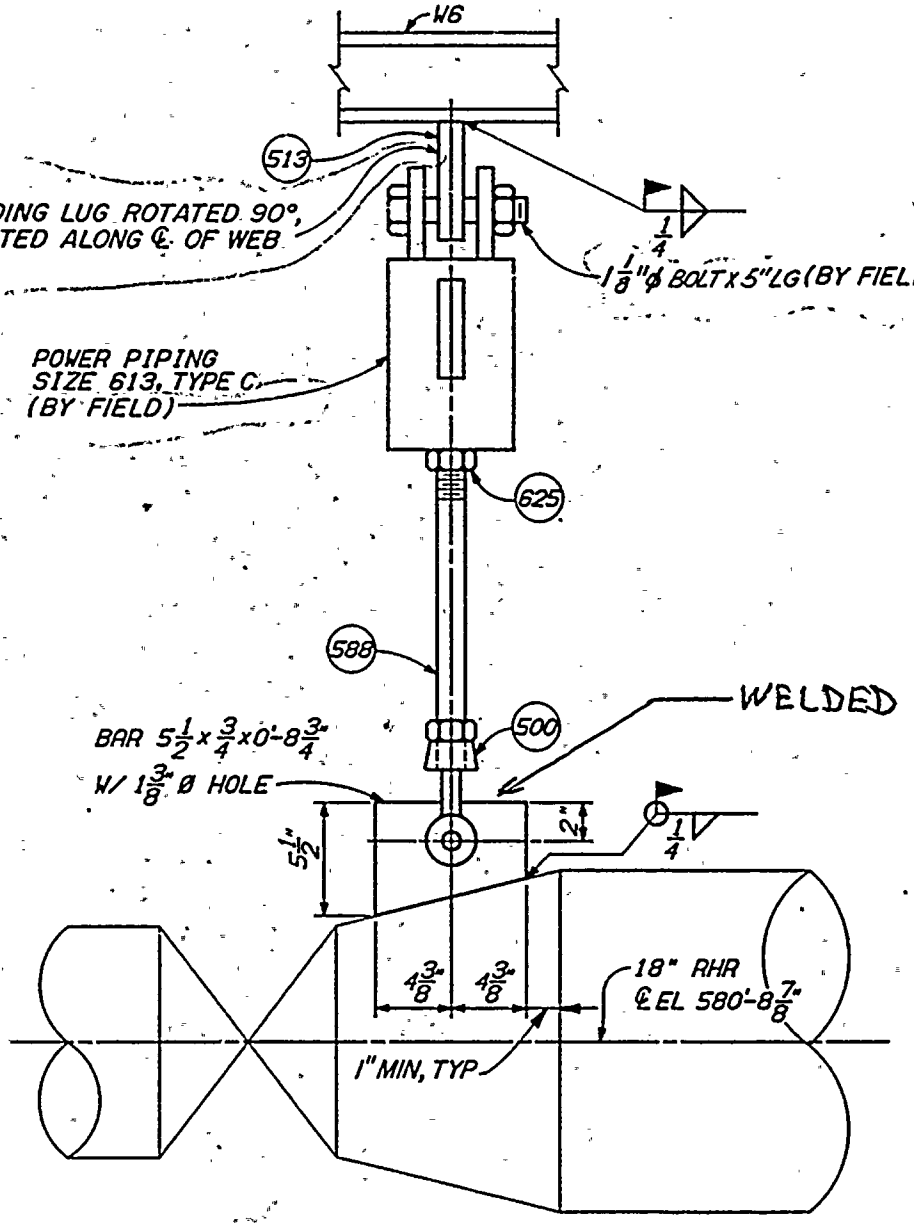

A709-A709

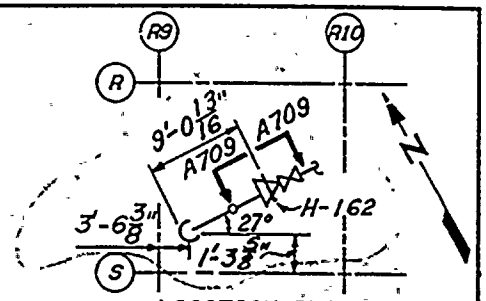

LOCATION PLAN
FLOOR EL 565'-0"

SUPPORT NO. H-162
(JOINT H-162)

LOAD SETTING RANGE
3345 LB TO 4500 LB
MAX THERMAL MOVEMENT
±0.49"
(TYPICAL EACH SPRING)

NOTES:
1. FOR GENERAL NOTES SEE 47B435-1.
2. FOR SPRING GENERAL NOTES SEE 47B435-3.
3. THIS DRAWING SUPERSEDES 47A452-374.

REFERENCE DRAWINGS:
47W2452-10 (PIPING)
47W452-223 (ISOMETRIC)
48N1022 (MISC STEEL)

ASME SECT XI
SUMMARY REPORT

SHEET 169 of 259

FIRST ISSUE FOR ECN P-0361 AND P-2111

CALCULATION BRANCH / PROJECT IDENTIFIERS: BWPC210151H162

NOT TO SCALE

1	P0361	REV A709-A709 & LOC PLAN

POWERHOUSE
REACTOR BUILDING - UNIT 2

MECHANICAL
RHR SYSTEM
PIPE SUPPORTS

BROWNS FERRY NUCLEAR PLANT
TENNESSEE VALLEY AUTHORITY
DIVISION OF ENGINEERING DESIGN

KNOXVILLE 11-1-83 67 H 47B452-709 R1

67 H 47B452-709

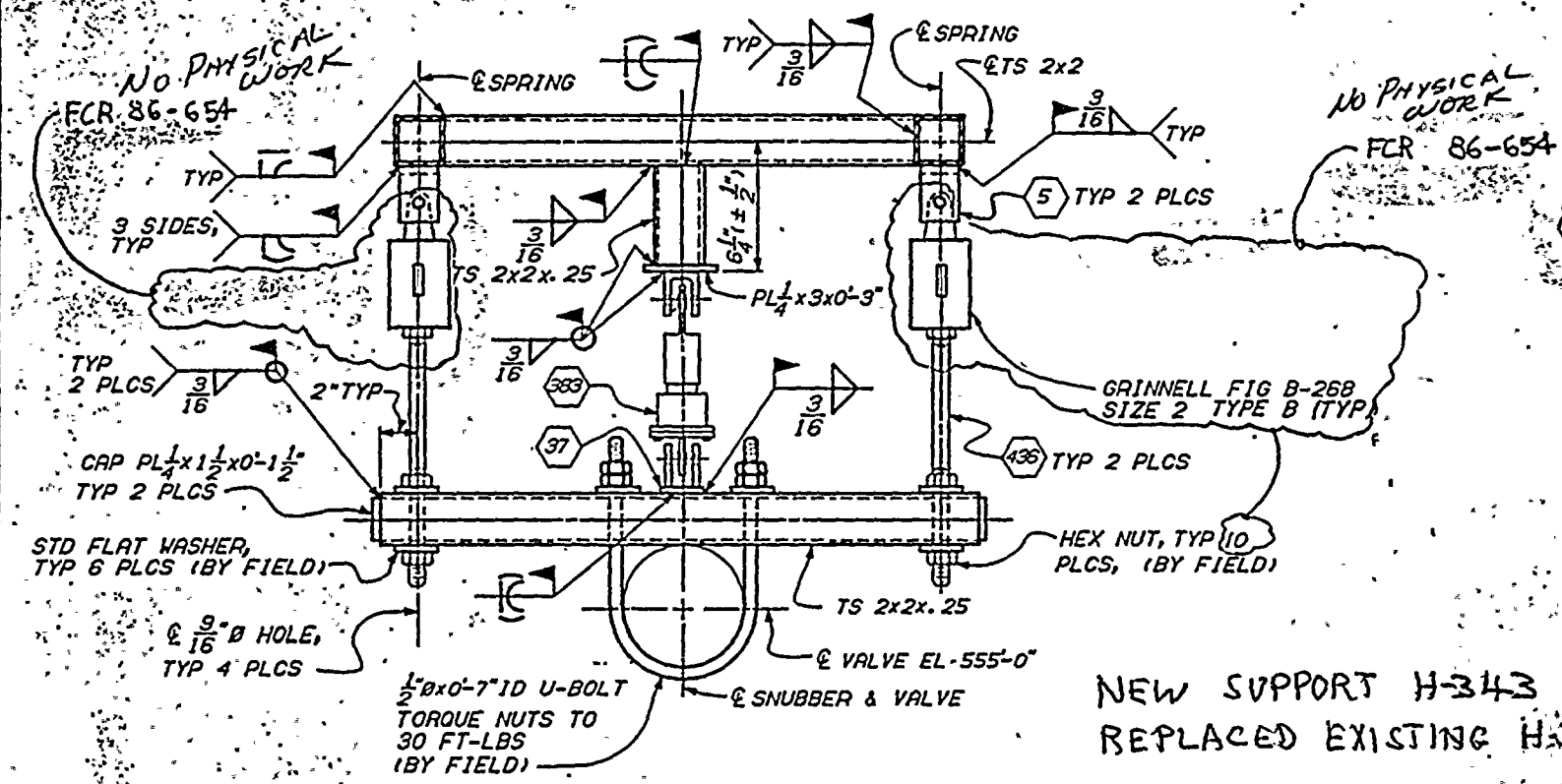

NO PHYSICAL WORK REQD.

SUPPORT NO. H-343
(JOINT H-343)

NOTES:
1. FOR NOTES AND REFERENCE DRAWINGS SEE DRAWING 47B452-981.

SHEET 1 OF 2

NEW SUPPORT H-343
REPLACED EXISTING H-343

A1202-A1202
(47B452-981)

ASME SECT XI SUMMARY REPORT

AS CONSTRUCT ENTIRE DRG

RO ISSUED FOR ECN P-0361

CALCULATION BRANCH/PROJECT IDENTIFIERS: BWPC2109, H343

WP 2068-84

1	P0361	2-18-92	JM				
	REV A1202-A1202 TO INC FCR 86-654						

POWERHOUSE
REACTOR BLDG UNIT 2
MECHANICAL
RHR SYSTEM
PIPE SUPPORTS
BROWNS FERRY NUCLEAR PLANT
TENNESSEE VALLEY AUTHORITY
Q

DRAWN | DESIGN | SIGNATURE INSPECTOR | SUPERVISOR
DESIGN REVIEWED | DESIGN REVIEWED | NA | NA
DESIGN APPROVED | DESIGN APPROVED | NA | NA

CONTROL | 47B452-1202 | R1

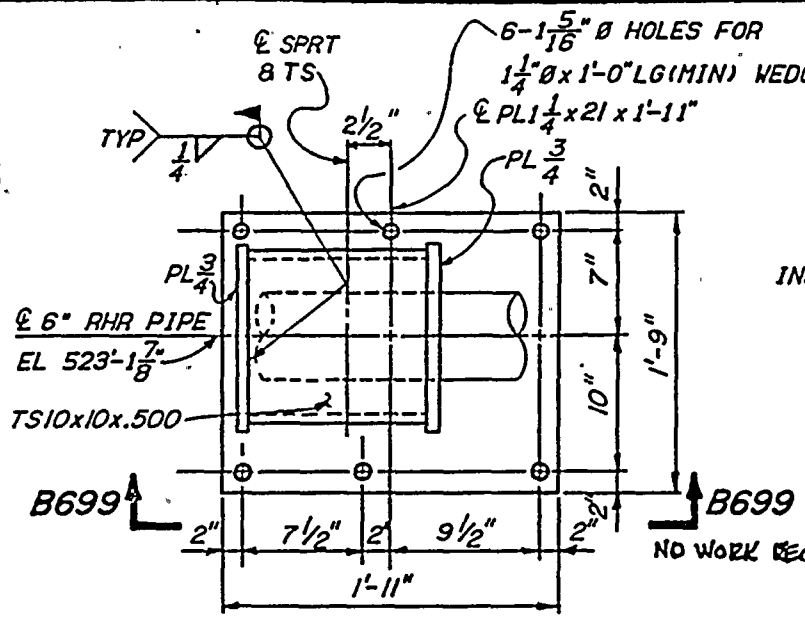

A699-A699

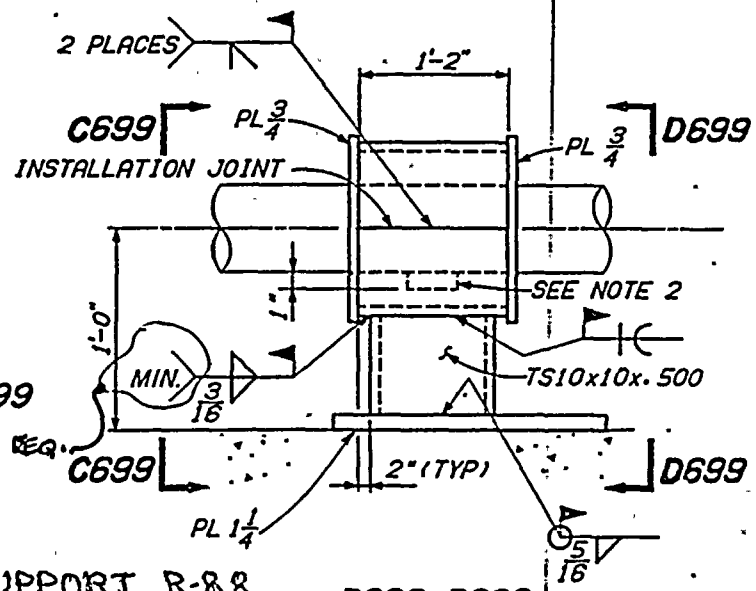

B699-B699

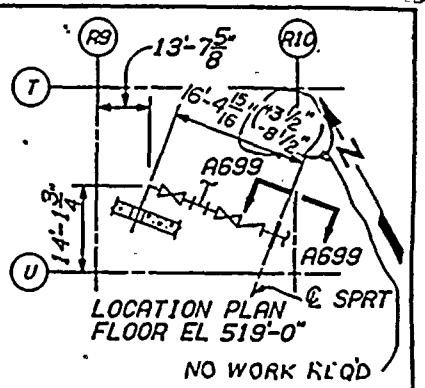

SUPPORT NO. R-88
(JOINT R663)

NEW SUPPORT R-88
REPLACED EXISTING H-213

NOTES:
1. FOR GENERAL NOTES SEE DWG 47B435-1.
2. 3" PIPE STANCHION FROM SUPPORT H-213, DRAWING 47A452-392. REMOVE SUPPORT H-213 AS SHOWN.

REFERENCE DWGS:
47W403-214 (ISOMETRIC)
47W2452-13 (PIPING)

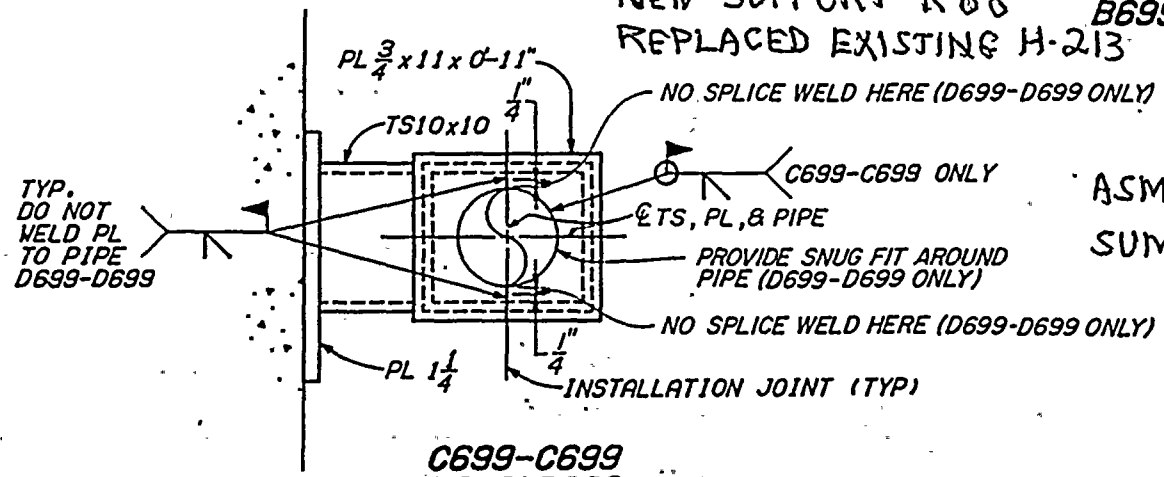

C699-C699
D699-D699 OPP H

ASME SECT XI
SUMMARY REPORT

WP# 2068-84

SHEET 171 of 259

FIRST ISSUE FOR ECN P-0361
CALCULATION BRANCH/PROJECT IDENTIFIERS: BWPC21057R88H213
NOT TO SCALE

REPAIR WORK REQUIRED PER SMMI
14.4.1.3-L
NON INTENT R11

NON-INTENT R15

3	P0361	MINOR REVISIONS
2	P-0361	REV C699-C699 & D699-D699
1	P0361	REVISED SECTIONS

POWERHOUSE
REACTOR BUILDING - UNIT 2

MECHANICAL
RHR SYSTEM
PIPE SUPPORTS

BROWNS FERRY NUCLEAR PLANT
TENNESSEE VALLEY AUTHORITY

47B452-699 R3

B2A728

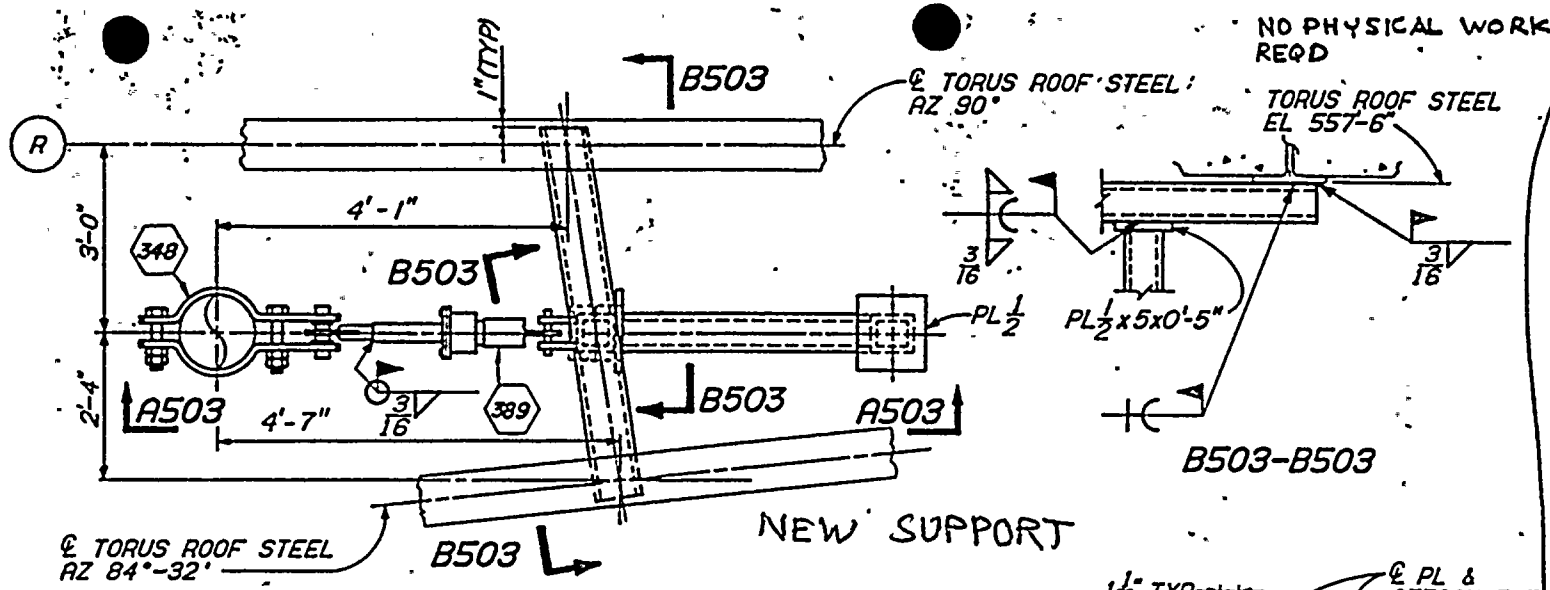

NO PHYSICAL WORK REQD

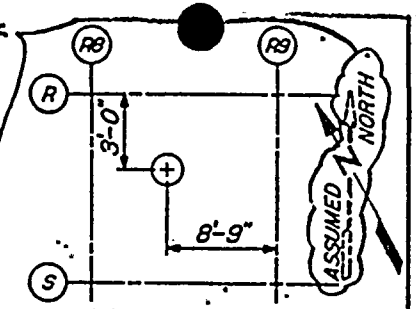

LOCATION PLAN
FLOOR EL 519'-0"

SUPPORT NO. R-91
(JOINT C)

INSTALLATION SET POSITION = $2\frac{1}{2}$"
DESIGN TRAVEL T = 0.51"
C = 0.0"

NOTES:
1. FOR GENERAL NOTES SEE DWG 478435-1.
2. WELDS SHOWN ARE MIN AND ANY ADDITIONAL WELD SIZE AND/OR LG IS ACCEPTABLE AND SHALL NOT BE REMOVED

ASME SECT XI
SUMMARY REPORT

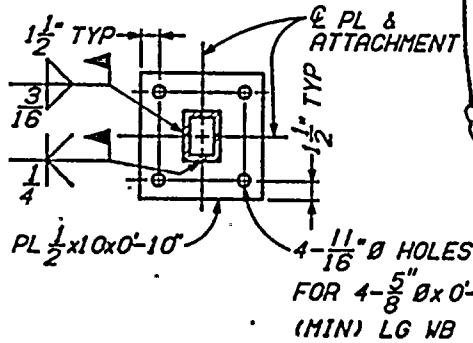

REFERENCE DRAWINGS:
47W2452-6 (PIPING)
47W452-221 (ISOMETRIC)
48N441 (ROOF STEEL)

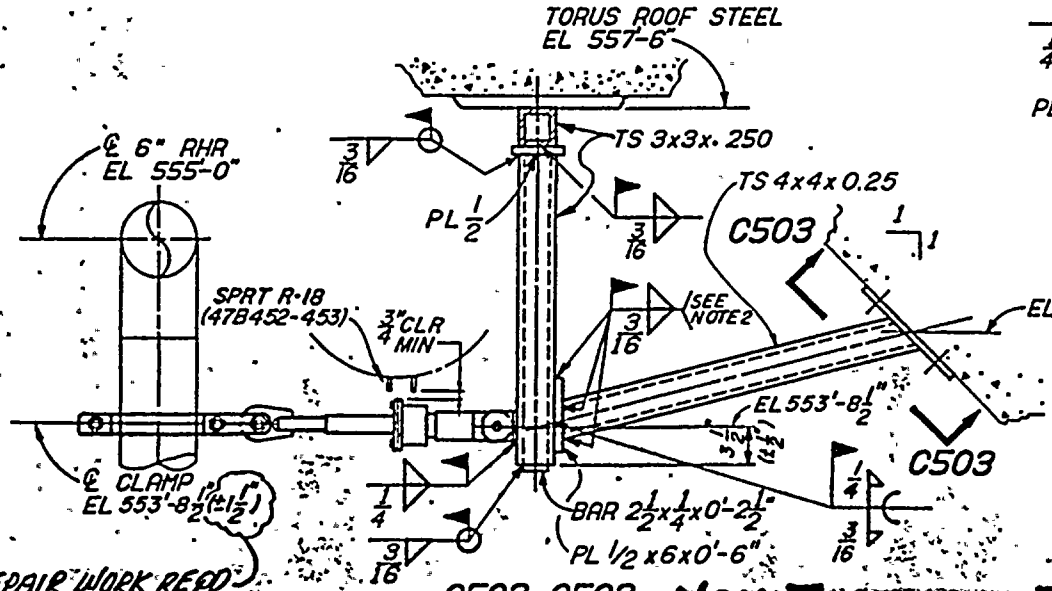

NOT TO SCALE

2068-84

FIRST ISSUE FOR ECN P20361
CALCULATION BRANCH/PROJECT IDENTIFIERS: BWPC2099OR91

3	P0361 11/08/86 REV A503-A503	
2	P0361 7/17/86 REV A503-A503 & ADDED NOTE 2	
1	P0361 3/7/86 REV TO CLEAR INTERFERENCE DUE JUNCTION BOX & CONDUIT	

POWERHOUSE
REACTOR BUILDING - UNIT 2

MECHANICAL
RHR SYSTEM
PIPE SUPPORTS

BROWNS FERRY NUCLEAR PLANT
TENNESSEE VALLEY AUTHORITY

478452-503 R3

SHEET 172 of 259

B2A427

CJF 2

52144

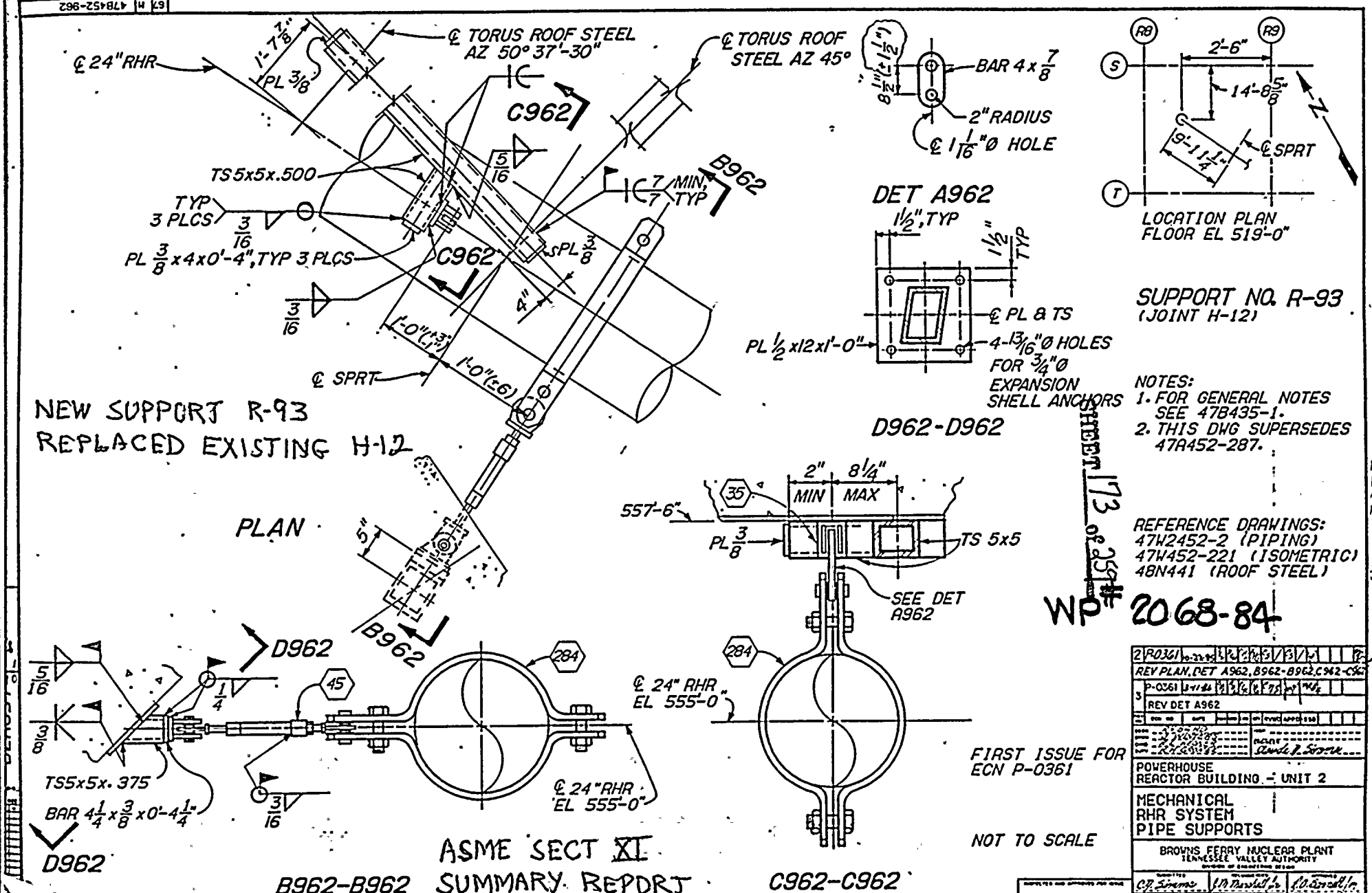
℄ 24" RHR
1'-7 7/8"
PL 3/8
℄ TORUS ROOF STEEL AZ 50° 37'-30"
℄ TORUS ROOF STEEL AZ 45°
C962
5/16
TS 5x5x.500
TYP 3 PLCS
3/16
PL 3/8 x 4 x 0'-4", TYP 3 PLCS
C962
3/16
7/7 MIN, TYP
B962
PL 3/8
4"
1'-0" (±3")
1'-0" (±6)
℄ SPRT
NEW SUPPORT R-93
REPLACED EXISTING H-12
PLAN
5"
B962
D962
5/16
3/8
1/4
45
TS5x5x.375
BAR 4 1/4 x 3/8 x 0'-4 1/4"
3/16
D962
284
℄ 24" RHR EL 555'-0"
ASME SECT XI
SUMMARY REPORT
B962-B962
BAR 4 x 7/8
2" RADIUS
℄ 1 1/16" Ø HOLE
DET A962
1 1/2", TYP
1 1/2" TYP
℄ PL & TS
PL 1/2 x 12 x 1'-0"
4-13/16" Ø HOLES FOR 3/4" Ø EXPANSION SHELL ANCHORS
D962-D962
35
2"
8 1/4"
MIN
MAX
557'-6"
PL 3/8
TS 5x5
SEE DET A962
284
℄ 24" RHR EL 555'-0"
C962-C962
R8
R9
S
T
2'-6"
14'-8 5/8"
9'-11 1/4"
℄ SPRT
N
LOCATION PLAN FLOOR EL 519'-0"
SUPPORT NO. R-93
(JOINT H-12)
NOTES:
1. FOR GENERAL NOTES SEE 47B435-1.
2. THIS DWG SUPERSEDES 47A452-287.
REFERENCE DRAWINGS:
47W2452-2 (PIPING)
47W452-221 (ISOMETRIC)
48N441 (ROOF STEEL)
SHEET 173 of 257
WP 2068-84
FIRST ISSUE FOR ECN P-0361
NOT TO SCALE
2 P0361
REV PLAN, DET A962, B962-B962, C962-C962
3 P-0361
REV DET A962
POWERHOUSE
REACTOR BUILDING - UNIT 2
MECHANICAL
RHR SYSTEM
PIPE SUPPORTS
BROWNS FERRY NUCLEAR PLANT
TENNESSEE VALLEY AUTHORITY
8-3-84
67 M 47B452-962 P3
N-INTENT R18

ASME SECT XI SUMMARY REPORT

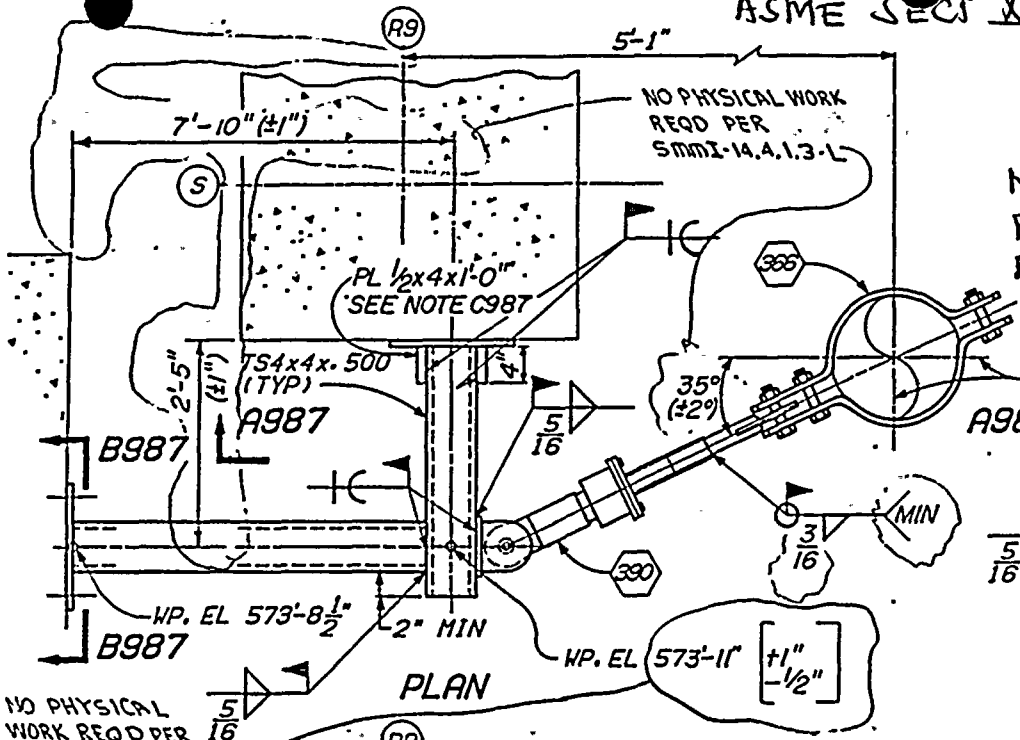

NOTE C987
BEVEL PL 1/2 AS REQD TO CLEAR FILLET WELD BETWEEN TUBE & BASEPLATE.

NEW SUPPORT REPLACES SNUBBER REMOVED BY R-58 MODIFICATION

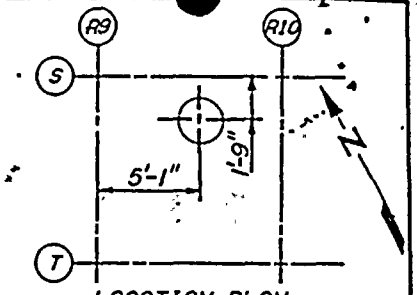

LOCATION PLAN
FLOOR EL 565'-0"

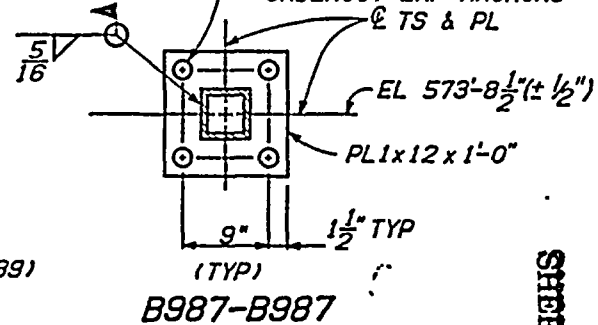

SUPPORT NO. R-226
(JOINT R-58)

INSTALLATION SET
POSN= 3"
DESIGN TRAVEL T=0"
C=0.68"

NOTES:
1. FOR GENERAL NOTES SEE DRAWING 47B435-1.
2. THIS DRAWING SUPERSEDES BERGEN-PATTERSON DRAWING NO. 1898 SHTS 1 AND 2. TVA CONTRACT NO. 68C37-91062.

REFERENCE DRAWINGS:
47W2452-6 (PIPING)
47W452-223 (ISOMETRIC)
41N716 (CONCRETE)
41N845 (CONCRETE)

2068-84

SHEET 174 of 259

2	P0361 REV WELD SYMBOLS	
3	P0361 REV PLAN & SECT A987-A9	
1	FIRST ISSUE FOR ECN P-0361	

NOT TO SCALE
CALCULATION BRANCH/PROJECT IDENTIFIERS: BWPC21104R226

POWERHOUSE
REACTOR BUILDING - UNIT 2

MECHANICAL
RHR SYSTEM
PIPE SUPPORTS

BROWNS FERRY NUCLEAR PLANT
TENNESSEE VALLEY AUTHORITY

PROJECT R31-A4 57 M: 47B452-987 R3

B2A759

NON-INTENT R17

Tennessee Valley Authority
Browns Ferry Nuclear Plant

Form 164
BF 18.8
Page 4 of 4
MAY 8 1984
SHEET 175 of 259

ASME SECTION XI SUMMARY REPORT

Plant BFNP
System RHR
TVA Class D, F, M
Workplan/MR No. 2069-84

Furnish the following for the repair or replacement for the "as left" condition of the component (after field work is complete). Mark all blanks (indicate N/A for items which do not apply).

National Board Number of repaired or replaced component _____

Name of the components and description (include size, capacity, material, and location)--These requirements may be satisfied by attaching an applicable drawing
See Part I of attached ASME Section XI Summary Report

Name of Manufacturer Bergen-Paterson

Address of Manufacturer (if known) 74 Commerce Way Woburn, MA 01888

Manufacturer's component identification numbers (i.e., serial number, subassembly number, heat number, etc.) If more than one component is replaced, attach weld map and identify items by item number. See Attached weld maps and Part III of attached ASME Section XI Summary Report.

Brief description of repair or replacement work performed, including conditions observed and corrective measures taken, as applicable (Reference DCR, CAR, etc., drawing may be attached with affected area circled).
See Part I of attached ASME Section XI Summary Report.

Brief description of post repair or replacement tests and examinations (if required) by instruction or procedure number
See Part II of attached ASME Section XI Summary Report.

ANI/ANII name, employer, and business address
See Part V of attached ASME Section XI Summary Report.

Date work completed 6-20-87

James L Fraley / 8/19/87
Cognizant Engineer Date

Retention: Period - Lifetime, Responsibility - OMNM Supervisor

Sheet ___ of ___

BROWNS FERRY NUCLEAR PLANT
P. O. BOX 2000
Decatur, AL 35602

ASME SECTION XI
SUMMARY REPORT

PART I: Repair or replacement work required.

A. H-24 (47B452-961 R3) - Modified existing support by using 5/8 x 4 3/4 x 0'-6" Carbon steel ASTM A-36 plate. (Ht # 7533061)

H-24 (47B452-960 R4) - Added to existing support by using 5 x 5 x .375 A-500 Tube steel (Ht # 035418), 1/2 x 12 x 1'-0" Carbon steel ASTM A-36 Carbon steel plate (Ht # 7461130), Bergen-Paterson Restraint Pipe clamp for 24" pipe (MK 284), Bergen-Paterson Field Welded Adjustable Rigid Strut with end attachments (MK 45), and 1/2 x 4 3/8 x 0'-4 3/8" Carbon steel ASTM A-36 plate (Ht# 7461130).

B. H-28 (47B452-414 RO, -417 RO) - Removed existing support and installed new support using 5 x 5 .500 Carbon steel A-500 Tube steel (Ht # 812A32170) and 2 x 2 .250 Carbon steel ASTM A-500 Tube steel (Ht # 40648).

C. H-332 (47B452-692 R2) - Removed existing support and installed new support using 2 x 2 x .250 Carbon steel ASTM A-500 Tube steel (Ht # 40648), 1/2 x 14 x 1'-3" Carbon steel ASTM A-36 plate (Ht # 7461130), 1/2 x 1/2 x 0'-2" Carbon steel ASTM A-36 lug (Ht # 7461130), 1 1/2 x 1/4 x 0"-1 1/2" Carbon steel ASTM A-36 bar (Ht # 395337), and 2 x 1/4 x 0'-2" Carbon steel ASTM A-36 bar (Ht # 395337).

D. H-371 (47B452-722 R3) - Modify existing support with 1/2" triangular Carbon steel ASTM A-36 plates (Ht # 7461130).

E. R-79 (47B452-498 R3) - Installed new support using 1 1/4 x 18 x 1'-6" Carbon steel ASTM A-36 plate (Ht # 380377), 1 1/4 x 18 x 1'-9" Carbon steel ASTM A-36 plate (Ht # 380377), 3/8 x 4 1/2 x 0'-4 1/2" Carbon steel ASTM A-36 (Ht # 242735), and 5 x 5 x .500 Carbon steel ASTM A-500 Tube steel (Ht # 801A00040).

F. R-83 (47B452-695 R2) - Removed existing support and installed new support using 1 1/4 x 18 x 1'-11" Carbon steel ASTM A-36 plate (Ht # 380377), 10 x 10 x .500 Carbon steel ASTM A-500 Tube steel (Ht # 55114), 3/4 x 10 3/4 x 0'-11" Hot rolled carbon steel ASTM A-36 plate (Ht # 7436997), and 3/4 x 11 x 0'-11" Hot rolled carbon steel ASTM A-36 plate (Ht # 7436997).

G. R-99 (47B452-460 R2) - Installed new support using 5 x 5 x .250 Carbon steel ASTM A-500 Tube steel (Ht # 38447), 3 x 3 x .250 Carbon steel ASTM A-500 Tube steel (Ht # 48899), 4 1/2 x 1/4 x 0'-4 1/2" Carbon steel ASTM A-36 bar (Ht # 395337), 5 x 1/2 x 0'-5" Carbon steel ASTM A-36 bar (Ht # 7461130), Bergen-Paterson Restraint Pipe Clamp for 18" pipe (MK 354), and Bergen-Paterson Mechanical Shock Arrestor Assembly (MK 389).

H. R-192 (47B452-466 R5) - Installed new support using 1 x 16 x 1'-4" Carbon steel ASTM A-36 plate (Ht # R7414919), 6 x 6 x 0.500" Carbon steel ASTM A-500 tube steel (Ht # W31429), 4 x 4 x 0.500" Carbon steel ASTM A-500 tube steel (Ht # C35150), and 1/2 x 6 1/2 x 0"-6 1/2" Carbon steel ASTM A-36 plate (Ht # 7461130).

I. R-196 (47B452-196 R3) - Installed new support using 3/8 x 7 x 0'-7 1/2" Carbon steel ASTM A-36 plate (Ht # 242735), 3/8 x 7 x 1'-1" Carbon steel ASTM A-36 plate (Ht # 242735), 3/8 x 4 x 0'-11 1/4" Carbon steel ASTM A-36 plate (Ht # 242735), Piece 6"Ø schedule 80 pipe x0'-11 1/4" Lg ASME SA-106 (Ht # 140960), 3/8 x 4 1/2 x 0'-4 1/2" Carbon steel ASTM A-36 plate (Ht # 242735), 5 x 5 x .500" Carbon steel A-500 tube steel (Ht # 812A32170), and 1 x 16 x 1'-4" Carbon steel ASTM A-36 plate (Ht # R7414919).

PART II: Post repair or replacement test and examinations.

A. Structural welds examined per N-VT-2.

B. Pressure Boundary welds inspected and verified per N-MT-1 or N-PT-1 and N-VT-3.

C. Support Installations verified per MAI-22, MAI-23, MAI-4, MAI-34, MMI 59-A and SMMI 14.4.1.3-L.

D. ANI hold points - PT/MT on H-332 -RHR -2,3,4,1
PT/MR on H-332 -RHR -RA1 thru RA4

PART III: Manufacturers component identification numbers.

MK-45 = Field welded adjustable rigid strut, size 12 with end attachment, B and P Part No. 2251.

MK-284 = Restraint pipe clamp, B and P Part No. 6200, size 12.

MK-354 = Restraint pipe clamp for 24" pipe size, B and P Part No. 2640.

MK-389 = Mechanical shock arrestor assemblies, with PSC strut, B and P Part No. 2540.

PART IV: Manufacturer:

Bergen-Paterson
74 Commerce Way
Woburn, MA 01888

PART V: ANI/ANII/AIA

ANI - Roosevelt Russell

ANII - Bill Rice

AIA - The Hartford Steam Boiler Insp. and Ins. Co.
1117 Perimeter Center West, Suite E-301
Atlanta, Georgia 30338

PART VI: DATE WORK COMPLETED: 6-20-87

ABOVE INFORMATION VERIFIED:

James L Fowler / 8/19/87
COGNIZANT ENGINEER DATE

SUBMITTED BY: [illegible] / 8/20/87
COGNIZANT SECTION SUPV. DATE

0131B

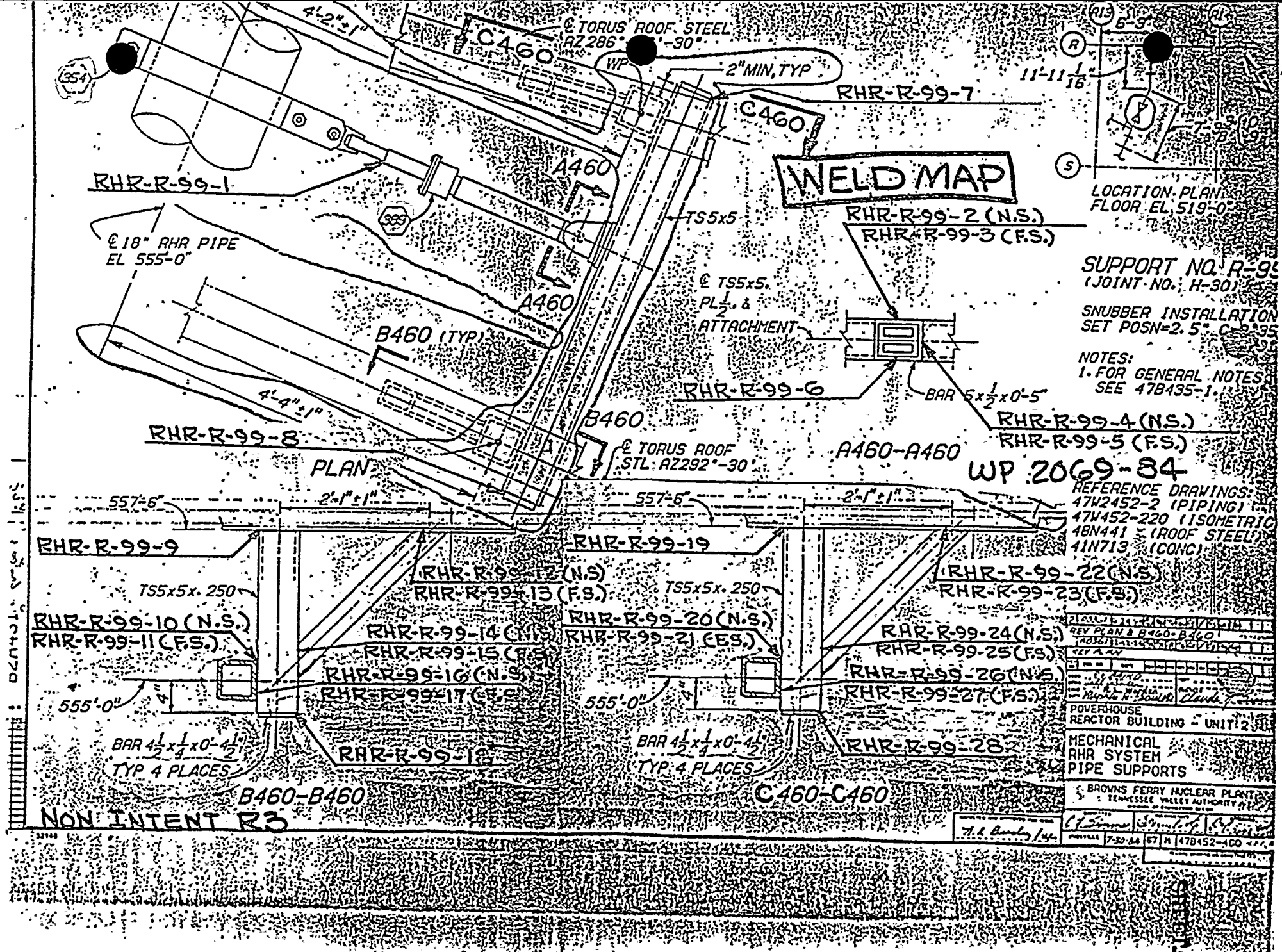

Sheet ___ of ___

179 of 259

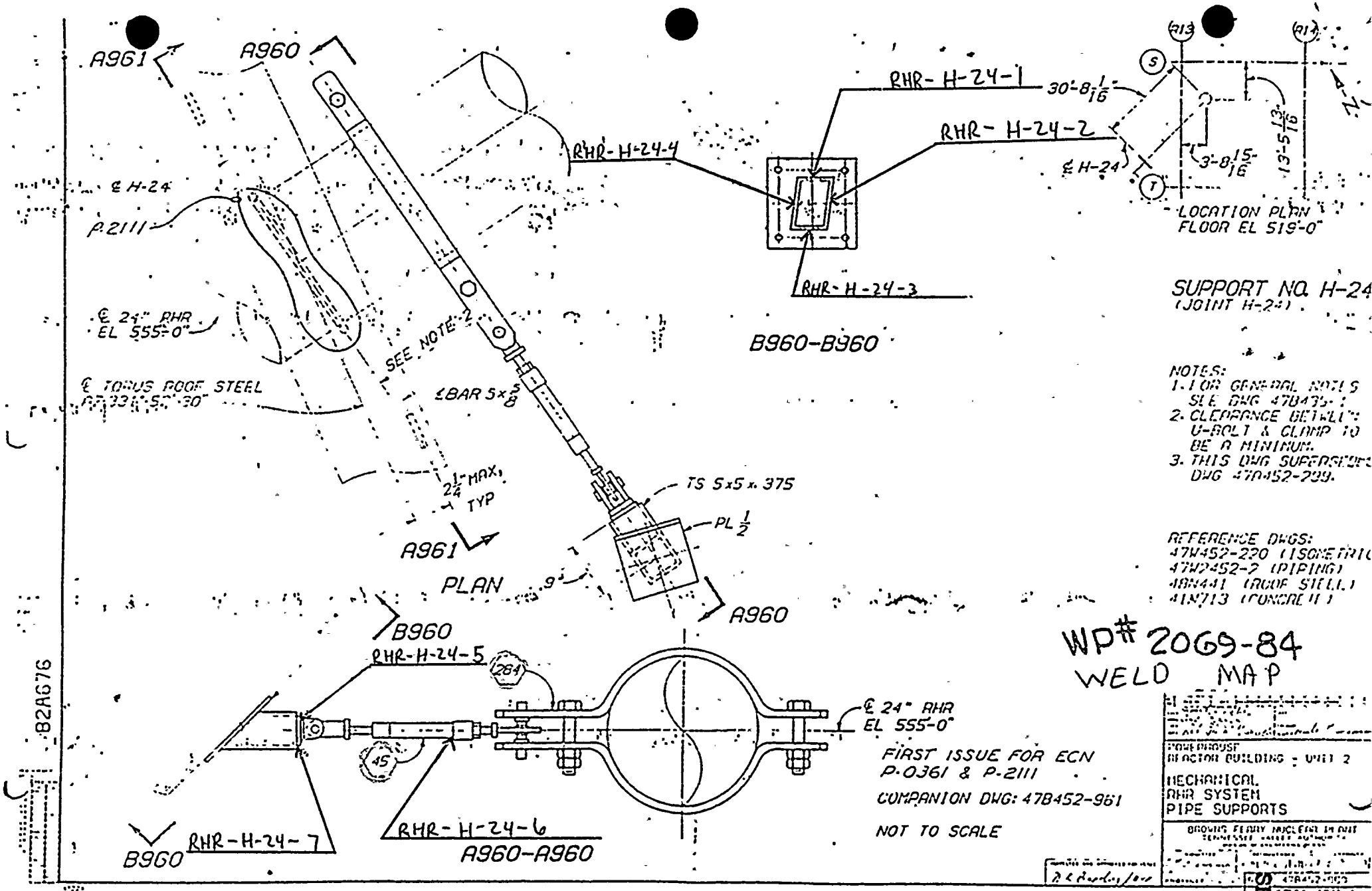
A961
A960
RHR-H-24-1
30'-8 1/16"
RHR-H-24-2
RHR-H-24-4
℄ H-24
P-2111
℄ 24" RHR
EL 555'-0"
SEE NOTE 2
℄ TORUS ROOF STEEL
℄ BAR 5x5/8
2 1/4" MAX, TYP
TS 5x5x.375
PL 1/2
A961
PLAN
A960
RHR-H-24-3
B960-B960
LOCATION PLAN
FLOOR EL 519'-0"
SUPPORT NO. H-24
(JOINT H-24)
NOTES:
1. FOR GENERAL NOTES SEE DWG 47B452-1
2. CLEARANCE BETWEEN U-BOLT & CLAMP TO BE 0 MINIMUM.
3. THIS DWG SUPERSEDES DWG 47B452-209.
REFERENCE DWGS:
47W452-220 (ISOMETRIC)
47W2452-2 (PIPING)
48N441 (ROOF STEEL)
41N713 (CONCRETE)
WP# 2069-84
WELD MAP
B960
RHR-H-24-5
284
45
℄ 24" RHR
EL 555'-0"
FIRST ISSUE FOR ECN
P-0361 & P-2111
COMPANION DWG: 47B452-961
NOT TO SCALE
B960
RHR-H-24-7
RHR-H-24-6
A960-A960
POWERHOUSE
REACTOR BUILDING - UNIT 2
MECHANICAL
RHR SYSTEM
PIPE SUPPORTS
BROWNS FERRY NUCLEAR PLANT
TENNESSEE VALLEY AUTHORITY
B2A676
SHEET 180 of 259

Tennessee Valley Authority
Browns Ferry Nuclear Plant

Form 164
BF 18.8
Page 4 of 4
MAY - 8 1984
SHEET 181 of 259

ASME SECTION XI SUMMARY REPORT

Plant BFNP
System RHR
TVA Class C
Workplan/MR No. 2070-84

Furnish the following for the repair or replacement for the "as left" condition of the component (after field work is complete). Mark all blanks (indicate N/A for items which do not apply).

National Board Number of repaired or replaced component N/A

Name of the components and description (include size, capacity, material, and location)--These requirements may be satisfied by attaching an applicable drawing SEE ATTACHED DWGS.

Name of Manufacturer PACIFIC SCIENTIFIC, BERGEN PATTERSON SEE ATT. DWGS.

Address of Manufacturer (if known)

Manufacturer's component identification numbers (i.e., serial number, subassembly number, heat number, etc.) If more than one component is replaced, attach weld map and identify items by item number. SEE ATTACHED DWGS.

Brief description of repair or replacement work performed, including conditions observed and corrective measures taken, as applicable (Reference DCR, CAR, etc., drawing may be attached with affected area circled). SEE ATTACHED DWGS.

Brief description of post repair or replacement tests and examinations (if required) by instruction or procedure number N-VT-2, N-VT-3, N-PT-1, N-MT-1: PRESERVICE PERFORMED ON ~~RHB~~, ~~H32~~, R95, ~~RH~~ PER N-VT-1 & N-MT-1.
RR 1-30-88

ANI/ANII name, employer, and business address ROOSEVELT RUSSELL, ANI / B.J. PRICE, ANII: THE HARTFORD STEAM BOILER INSPECTION CO.; 1117 PERIMETER CENTER WEST, SUITE E301, ATLANTA, GA. 30338

Date work completed 11-20-86

R. L. Rudolph / 1-30-88
Cognizant Engineer Date

Retention: Period - Lifetime, Responsibility - OMMM Supervisor

ASME SECTION XI SUMMARY REPORT

WORKPLAN 2070-84

Support # R-95;

Material Added; Mechanical Shock Arrestor, Mark#391; 1/2" Plate, Ht.#295262; W8 Wide Flange, Ht.#67916; Shock Pin, Mark #300; 3/4" Plate, Ht.#813048.

Support # R-158;

All Material Existing

Support # H-32;

Removed existing support. New material added; 5X5 Tube Steel, Ht. # 801a00040; 1/2 Plate, Ht.#295762

Support #H-318;

Removed existing support partially. New material added; Strut Assembly, Mark # 2251; Restraint clamp, B-P Part # 6200.

Support #R-11;

Material Added; B-P End Attachment, Mark # 35; 4X4 Tube Steel, Ht. # W31686; Strut Assembly, Mark #223;

ASME SECTION XI SUMMMARY REPORT(cont.)

Support #R-11 cont.:

Material added; 6X4 Tube Steel, Ht. #39606, 1/4" Plate, Ht. #395337; 5/8" Plate, Ht. #7533061.

Support #H-155:

Bottom Portion of Support Removed.

Support #R-10:

Material added; 1/2" Plate, Ht. #295762.

Support #H-189:

Material added; 3/4" Plate, Ht. #813048, Strut Assembly, Mark #120; Restraint Clamp, Mark #404.

Support #R-62:

Material added; 1/2" Plate, Ht. #295762.

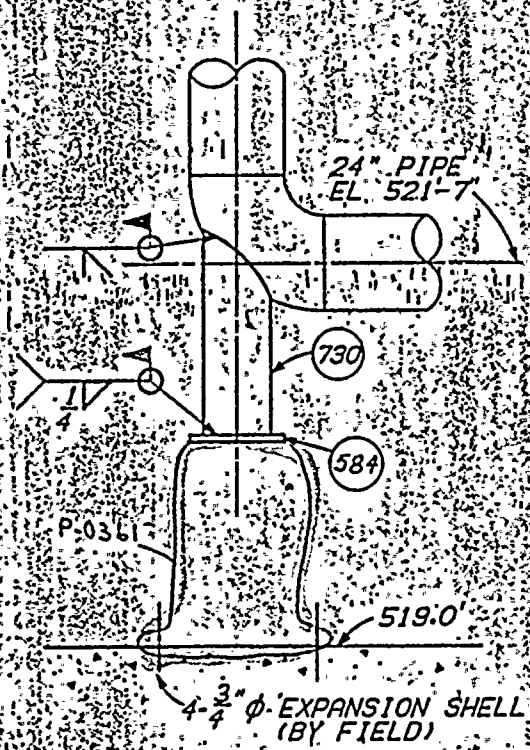

A504-A504

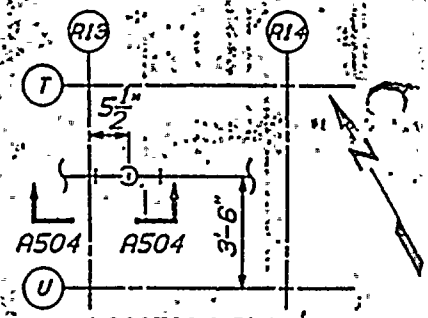

LOCATION PLAN
FLOOR EL 519'-0"

SUPPORT NO. H-155
(JOINT NO. 850)

NOTES:
1. FOR GENERAL NOTES SEE 47B485-1.
2. THIS DRAWING SUPERSEDES 47A452-369.

P-0361

REFERENCE DRAWINGS:
47W2452-1 (PIPING)
47W403-203 (ISOMETRIC)

WP 2070-84

FIRST ISSUE FOR ECN P-0361 & P-2111

NOT TO SCALE

SHEET 184 of 259

POWERHOUSE
REACTOR BUILDING - UNIT 2

MECHANICAL
RHR SYSTEM
PIPE SUPPORTS

BROWNS FERRY NUCLEAR PLANT
TENNESSEE VALLEY AUTHORITY
DIVISION OF CONSTRUCTION

KNOXVILLE 8-21-81 67-H 47B452-504 A F3

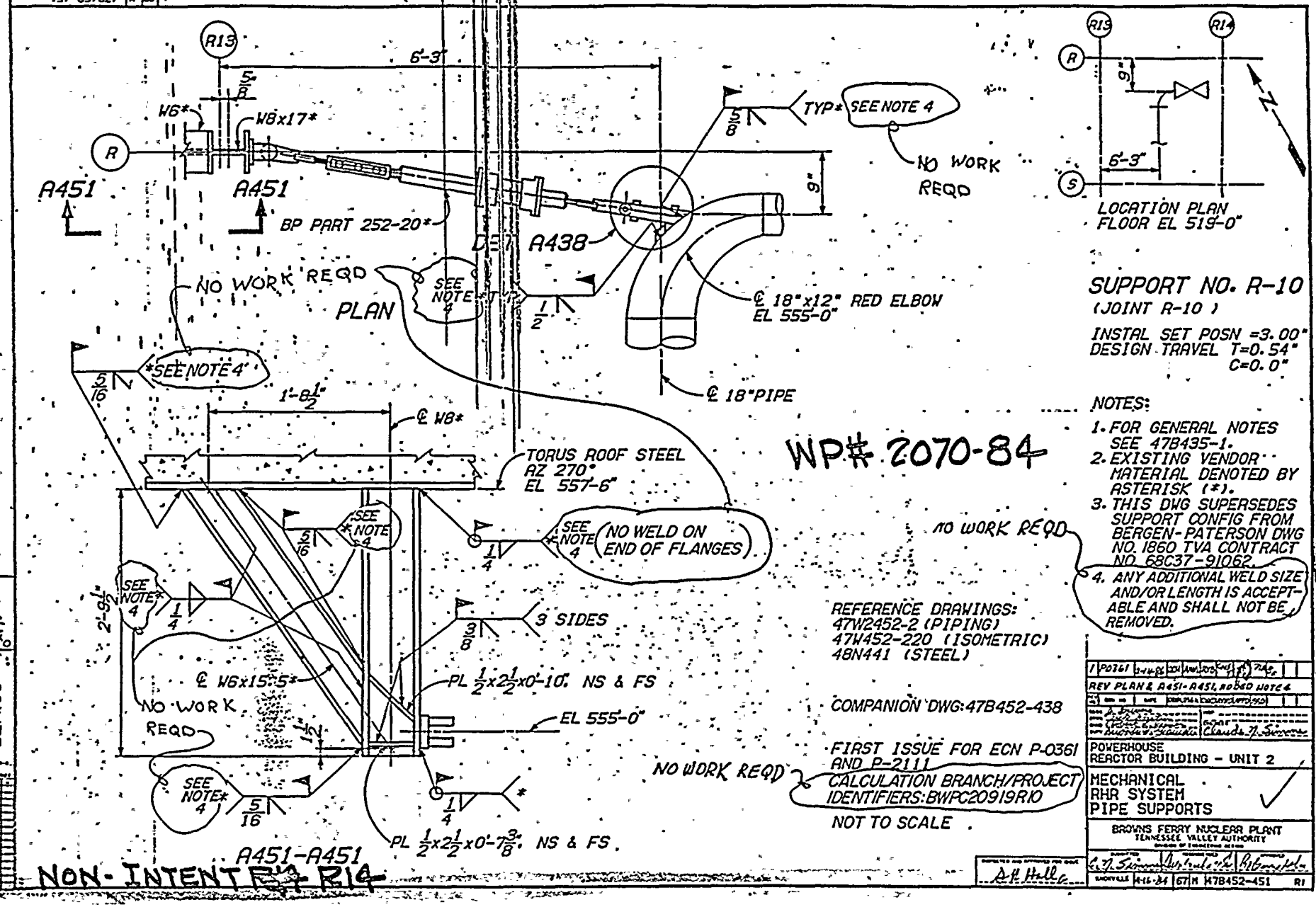

SHEET 185 of 259

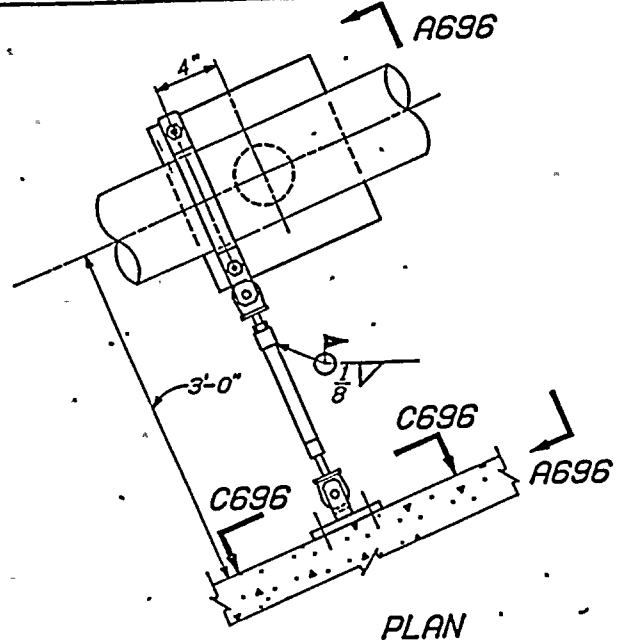

PLAN

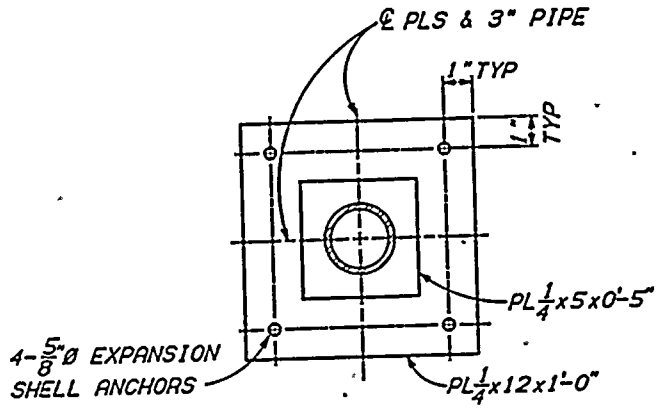

B696-B696

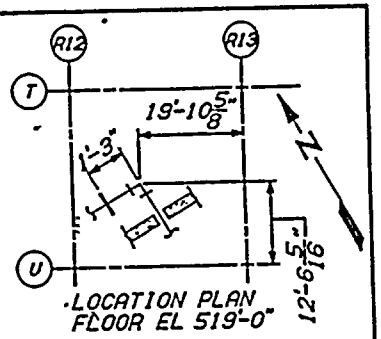

LOCATION PLAN
FLOOR EL 519'-0"

SUPPORT NO. H-189
(JOINT NO. R871)

NOTES:
1. FOR GENERAL NOTES SEE DRAWING 47B435-1.
2. THIS DRAWING SUPERSEDES 47A452-384.
3. ALL MATERIAL IS EXISTING EXCEPT MATERIAL DENOTED BY*.

REFERENCE DRAWINGS:
47W2452-14 (PIPING)
47W403-214 (ISOMETRIC)

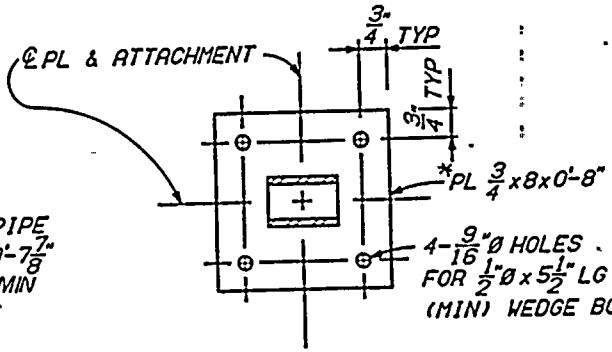

C696-C696

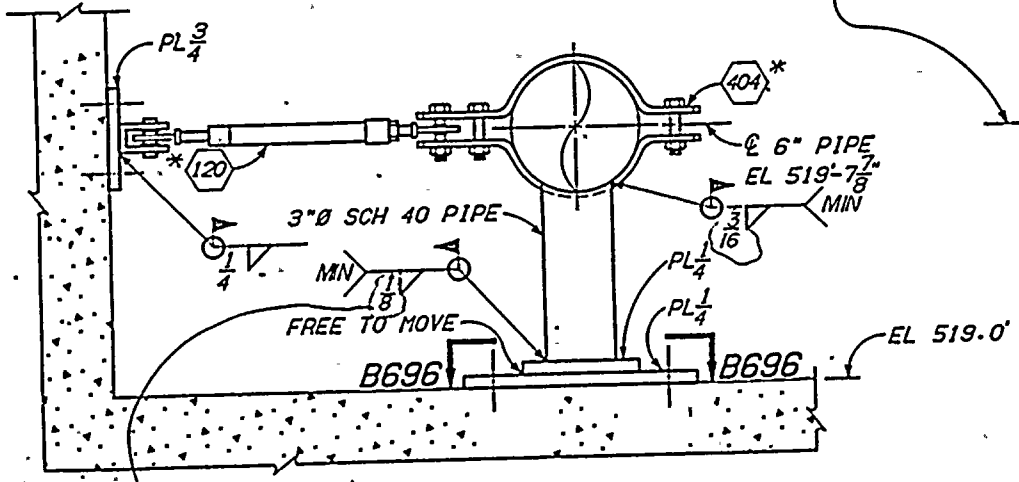

NO PHYSICAL WORK REQD PER SMMI 14.9.1.3-L

A696-A696

NON-INTENT RIG

FIRST ISSUE FOR ECN P-2111 AND P-0361

NOT TO SCALE

CALCULATION BRANCH/PROJECT IDENTIFIERS: BWPC21045H189

WP# 2070-84

P-0361	
REV SECT A696-A696	
POWERHOUSE REACTOR BUILDING - UNIT 2	
MECHANICAL RHR SYSTEM PIPE SUPPORTS	
BROWNS FERRY NUCLEAR PLANT TENNESSEE VALLEY AUTHORITY	
KNOXVILLE 8-21-86	67 M 478452-696 R1

B2A696

SHEET 186 of 259

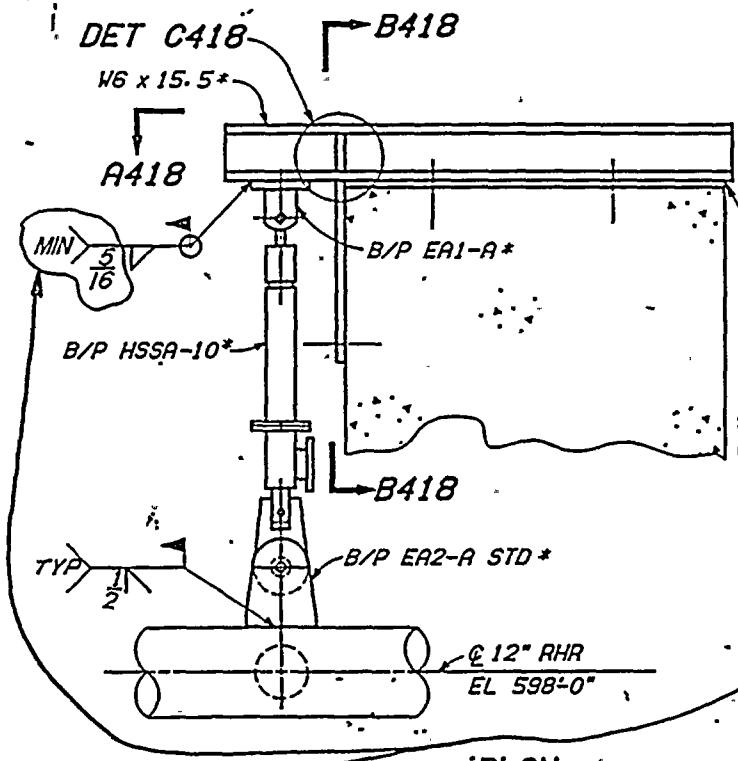

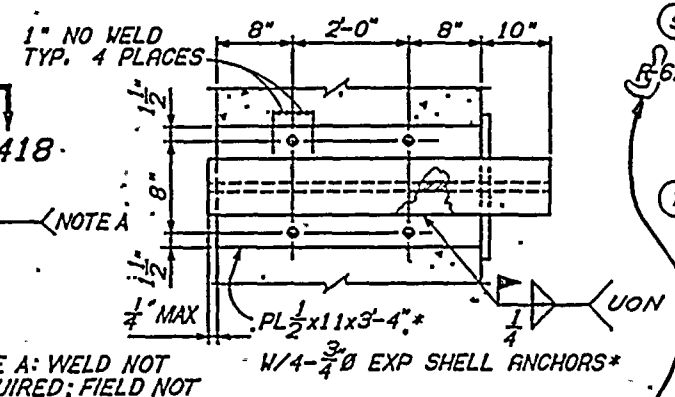

NOTE A: WELD NOT REQUIRED; FIELD NOT TO REMOVE EXISTING WELD.

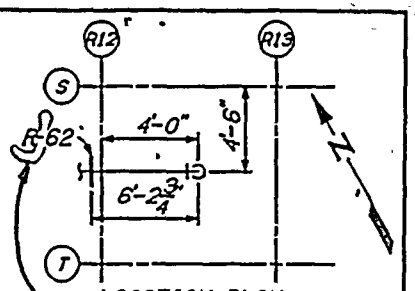

SUPPORT NO. R-62

(JOINT R-62)
INSTALLATION SET
POSN=3"
DSGN TRAVEL
T=0.49", C=0.0"

NOTES:

1. FOR GENERAL NOTES SEE DWG 47B435-1.
2. THIS DWG SUPERSEDES B-P DWG NO 1902 SH 1 OF 2 TVA CONTRACT NO 68C37-91062.
3. EXISTING VENDOR MATERIAL DENOTED BY AN ASTERISK (*).

NO PHYS WORK REQ'D.
PER SMMI 14.4.1.3.-L

REFERENCE DRAWINGS:
47W2452-10 (PIPING)
47W452-220 (ISOMETRIC)

WP#2070-84

W/P 2(1)1(1) - 84

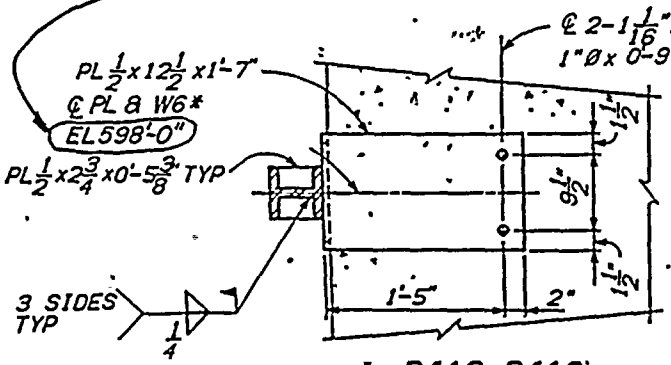

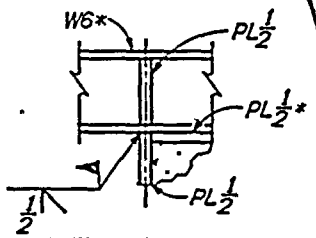

FIRST ISSUE FOR ECN P-0361, ECN P-2111.

CALCULATION BRANCH/PROJECT IDENTIFIERS: BWPC20898R62

NOT TO SCALE

SHEET 187 of 259

3	P-0361							
	REV PLAN							

POWERHOUSE
REACTOR BUILDING - UNIT 2

MECHANICAL
RHR SYSTEM
PIPE SUPPORTS

BROWNS FERRY NUCLEAR PLANT
TENNESSEE VALLEY AUTHORITY

KNOXVILLE 8-21-84 67 H 47B452-418 R3

NON INTENT R18

B2A735

NO PHYS WORK REQD PER SMMI14.4.1.3-L

AZ 264°-22'-30"

5'-8 7/8"

9"

1"

EXISTING TORUS ROOF STEEL

EL 557'-6"

1/4

5/16

C452

B452

DET C438

5/16

5/16

1/2

3/8

TS 4x4x.500

SLOPE TO SUIT 0'-10 1/2"

223

95

11"

11"

C452

EL 555'-0"

10 1/2"

5/16

5/16

6"

223

35

D452

D452

A452-A452

TS 6x4x.375

2 1/2"

TS 4x4

3/16

PL 1/4x4x0'-6"

℄ ATTACHMENT (NOT SHOWN FOR CLARITY)

4"

3/16

C452-C452
TYP 2 PLACES

MIN

5/16

PL 1/4

MIN

℄ 18" RHR

TS 6x4

1 1/2" TYP

2 1/2"

PL 5/8

MIN, 3 SIDES

5/16

℄ TS 4x4

B452-B452
D452-D452, SIMILAR

R13

R14

R

9"

A452

A452

6'-3"

S

N

LOCATION PLAN
FLOOR EL 519'-0"

SUPPORT NO. R-11
(JOINT R-11)

NOTES:
1. FOR GENERAL NOTES SEE 47B435-1.
2. THIS DRAWING SUPERSEDES SUPPORT CONFIG FROM BERGEN-PATERSON DWG NO. 1860 TVA CONTRACT NO. 68C37-91062.

REFERENCE DRAWINGS:
47W2452-2 (PIPING)
47W452-220 (ISOMETRIC)
48N441 (STEEL)

WP#2070-84

COMPANION DRAWING 47B452-438

FIRST ISSUE FOR ECN P-0361

NOT TO SCALE

SHEET 188 of 259

WP 2070-84

2	P-0361		
	REV A452-A452		

POWERHOUSE
REACTOR BUILDING - UNIT 2

MECHANICAL
RHR SYSTEM
PIPE SUPPORTS

BROWNS FERRY NUCLEAR PLANT
TENNESSEE VALLEY AUTHORITY

KNOXVILLE 4-12-84 37 H 47B452-452 R2

NON INTENT R17

B2A161

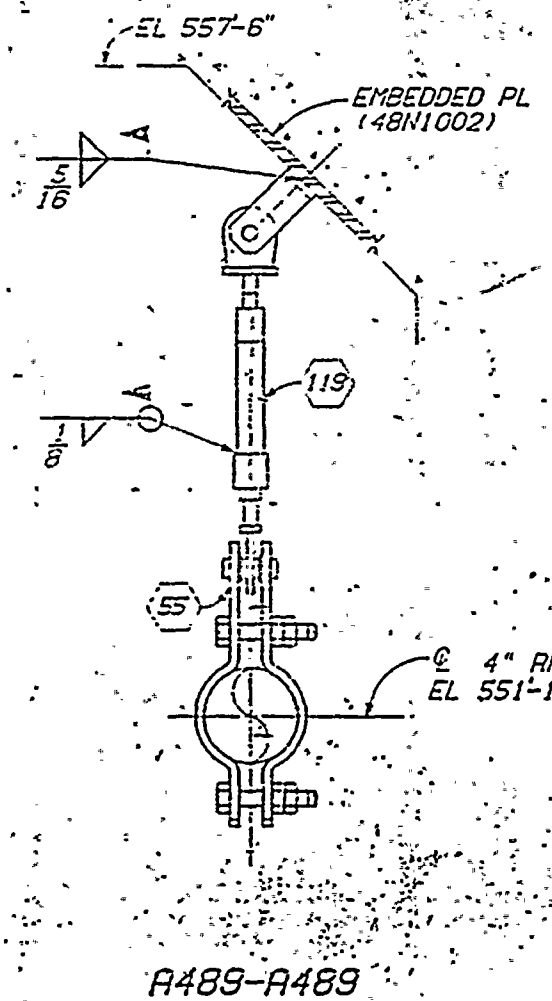

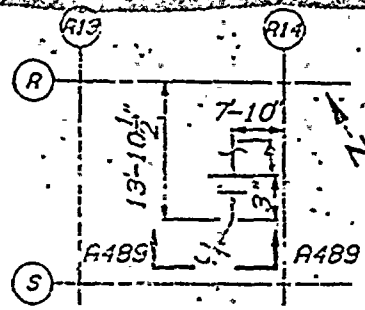

LOCATION PLAN
FLOOR EL 519'-0"

SUPPORT NO. H-318
(JOINT H-318)

NOTES:
1. FOR GENERAL NOTES SEE 47B-35-1.
2. THIS DRAWING SUPERSEDES 47B452-400.

REFERENCE DRAWINGS:
47W2452-9 (PIPING)
47W452-237 (ISOMETRIC)
48N1002 (MISC STEEL)

WP 2070-84

SHEET 189 of 259

FIRST ISSUE FOR ECN P-0361

NOT TO SCALE

POWERHOUSE
REACTOR BUILDING - UNIT 2

MECHANICAL
RHR SYSTEM
PIPE SUPPORTS

BROWNS FERRY NUCLEAR PLANT
TENNESSEE VALLEY AUTHORITY

47B452-499

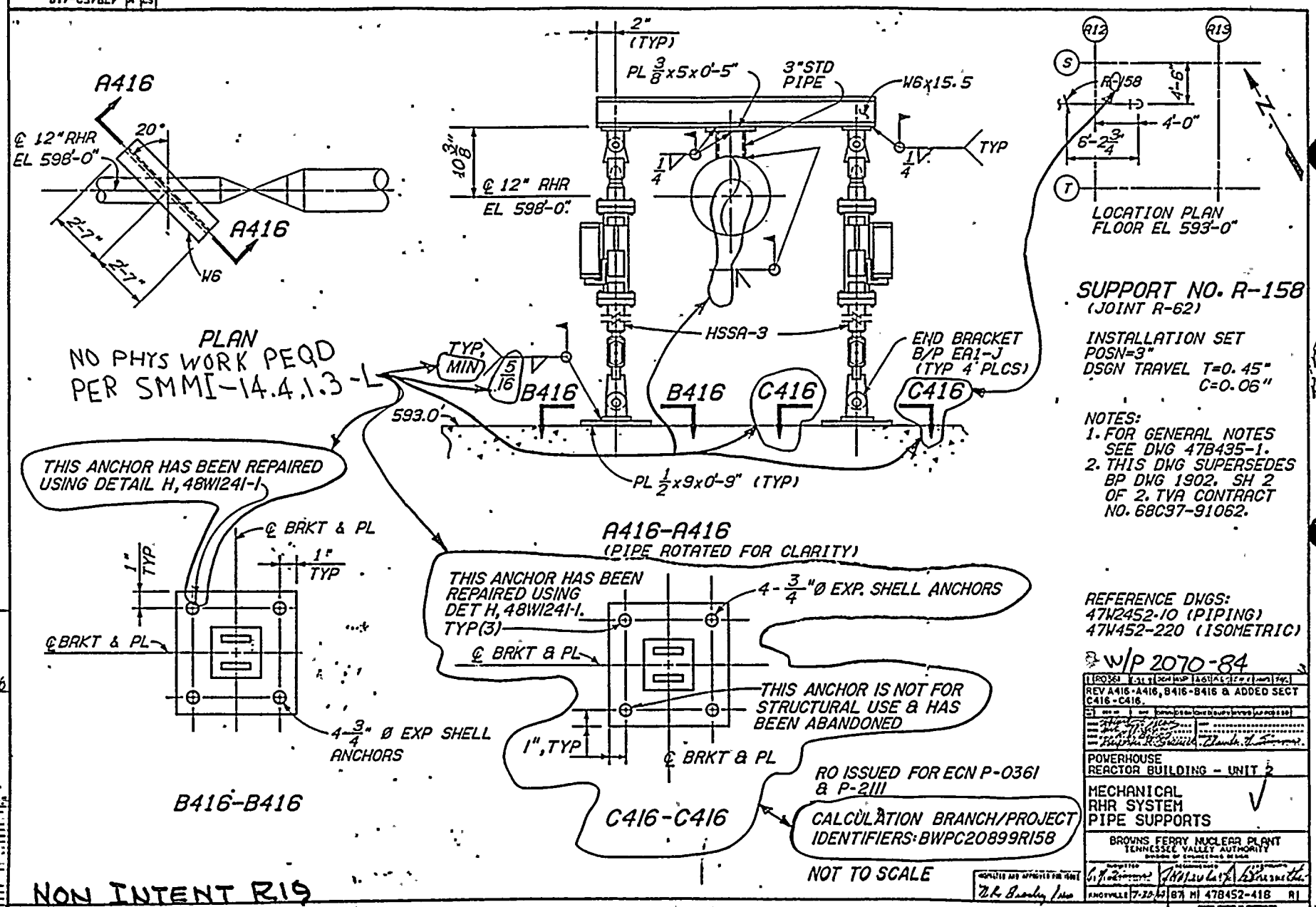
A416
℄ 12" RHR
EL 598'-0"
20°
2'-7"
2'-7"
W6
A416
PLAN
NO PHYS WORK REQD
PER SMMI-14.4.1.3-L
2" (TYP)
PL 3/8 x 5 x 0'-5"
3" STD PIPE
W6x15.5
10 3/8"
℄ 12" RHR
EL 598'-0"
1/4
1/4
TYP
HSSA-3
END BRACKET
B/P EA1-J
(TYP 4 PLCS)
TYP, MIN
5/16
B416
B416
C416
C416
593.0'
PL 1/2 x 9 x 0'-9" (TYP)
THIS ANCHOR HAS BEEN REPAIRED USING DETAIL H, 48W1241-1
℄ BRKT & PL
1" TYP
1" TYP
℄ BRKT & PL
4-3/4" Ø EXP SHELL ANCHORS
B416-B416
A416-A416
(PIPE ROTATED FOR CLARITY)
THIS ANCHOR HAS BEEN REPAIRED USING DET H, 48W1241-1. TYP(3)
4-3/4" Ø EXP. SHELL ANCHORS
℄ BRKT & PL
THIS ANCHOR IS NOT FOR STRUCTURAL USE & HAS BEEN ABANDONED
1", TYP
℄ BRKT & PL
C416-C416
RO ISSUED FOR ECN P-0361 & P-2111
CALCULATION BRANCH/PROJECT IDENTIFIERS: BWPC20899R158
NOT TO SCALE
R12
R13
S
T
R-158
4'-6"
4'-0"
6'-2 3/4"
LOCATION PLAN
FLOOR EL 593'-0"
SUPPORT NO. R-158
(JOINT R-62)
INSTALLATION SET
POSN=3"
DSGN TRAVEL T=0.45"
C=0.06"
NOTES:
1. FOR GENERAL NOTES SEE DWG 47B435-1.
2. THIS DWG SUPERSEDES BP DWG 1902. SH 2 OF 2. TVA CONTRACT NO. 68C97-91062.
REFERENCE DWGS:
47W2452-10 (PIPING)
47W452-220 (ISOMETRIC)
W/P 2070-84
REV A416-A416, B416-B416 & ADDED SECT C416-C416.
POWERHOUSE
REACTOR BUILDING - UNIT 2
MECHANICAL
RHR SYSTEM
PIPE SUPPORTS
BROWNS FERRY NUCLEAR PLANT
TENNESSEE VALLEY AUTHORITY
KNOXVILLE 7-22-87
87 M 478452-418 R1
NON INTENT R19
SHEET 190 of 259

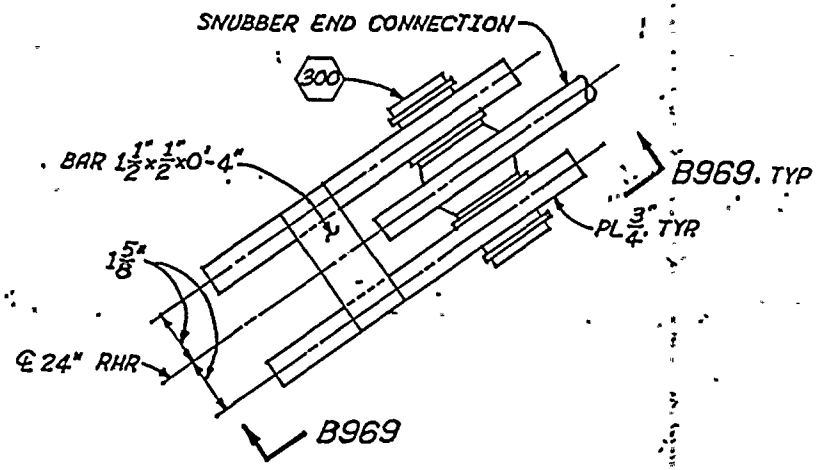

DET A969
(47B452-968)

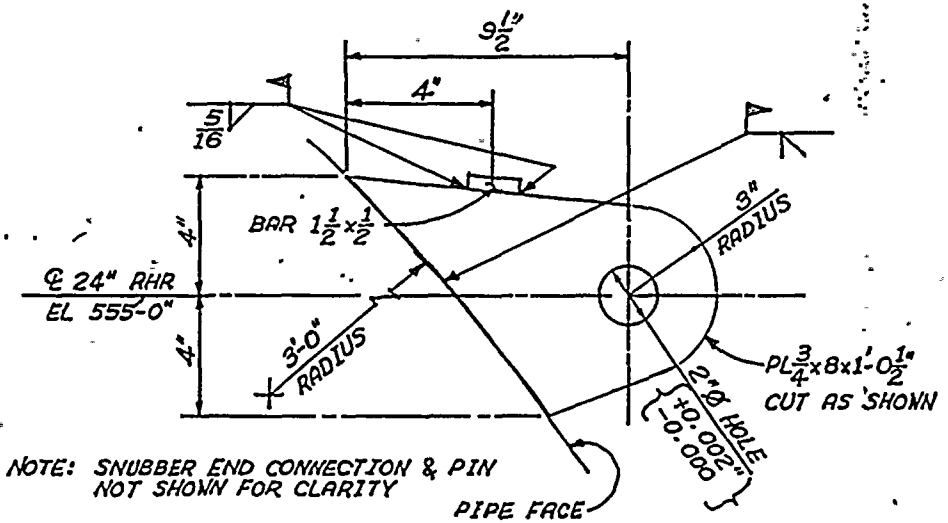

NOTE: SNUBBER END CONNECTION & PIN NOT SHOWN FOR CLARITY

B969-B969

NOTES:
1. FOR GENERAL NOTES AND REFERENCE DWGS SEE 47B452-968.

WP#2070-84

FIRST ISSUE FOR ECN P-0361

NOT TO SCALE

COMPANION DWG: 47B452-968

POWERHOUSE
REACTOR BUILDING - UNIT 2

MECHANICAL
RHR SYSTEM
PIPE SUPPORTS

BROWNS FERRY NUCLEAR PLANT
TENNESSEE VALLEY AUTHORITY

67 M 47B452-969 R0

B2A601 0

SHEET 19 of 259

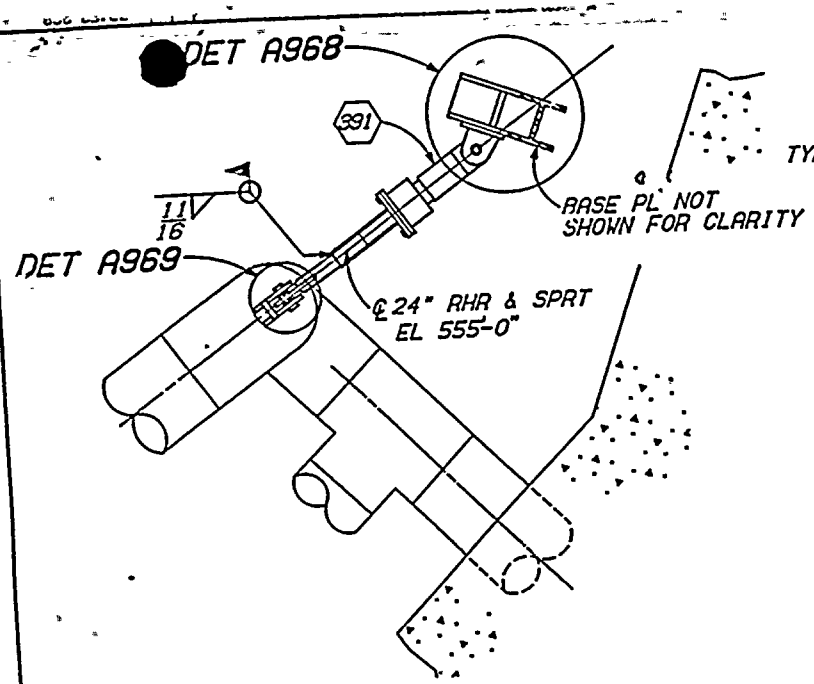

PLAN

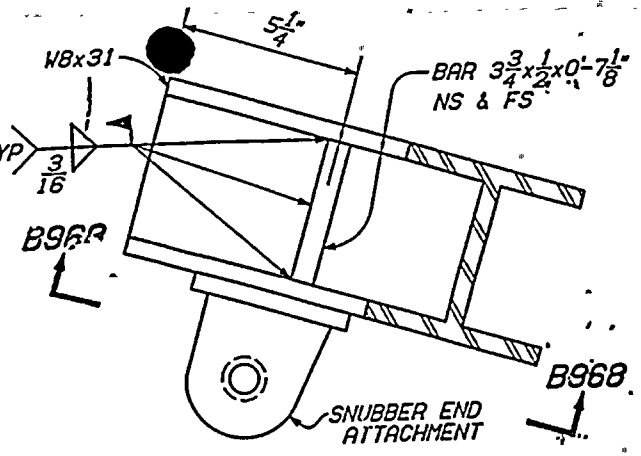

DET A968

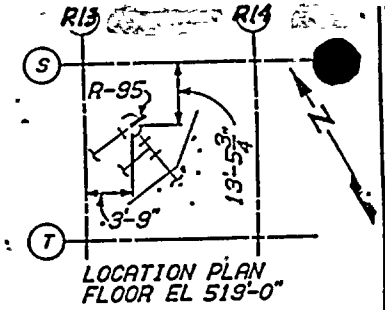

LOCATION PLAN
FLOOR EL 519'-0"

SUPPORT NO. R-95
(JOINT H-23)

INSTL SET POSN=3"
DESIGN TRAVEL: T=0.16"
C=0.39"

NOTES:
1. FOR GENERAL NOTES SEE 47B435-1.

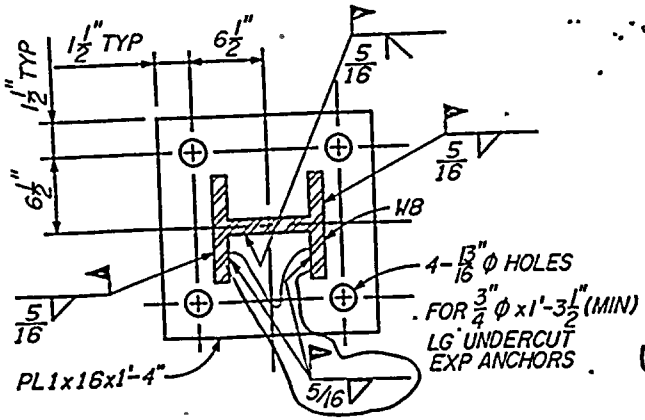

C968-C968

REFERENCE DWGS:
47W2452-2 (PIPING)
47W452-220 (ISOMETRIC)
41N713 (CONCRETE)

WP#2070-84

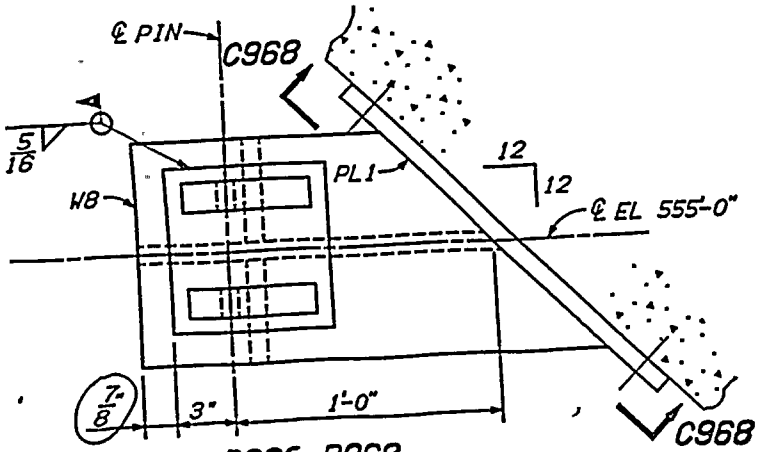

B968-B968

NON-INTENT R12

FIRST ISSUE FOR ECN P-0361
NOT TO SCALE

COMPANION DWG: 47B452-969
CALCULATION BRANCH/PROJECT IDENTIFIERS: BWPC21074R95

1	P-0361	REV DIM AND ADD WELD					
	ECN/FCR						

POWERHOUSE
REACTOR BUILDING - UNIT 2

MECHANICAL
RHR SYSTEM
PIPE SUPPORTS

BROWNS FERRY NUCLEAR PLANT
TENNESSEE VALLEY AUTHORITY

KNOXVILLE 3-5-84 671 N1 47B452-969 R1

B2A597

SHEET 192 of 259

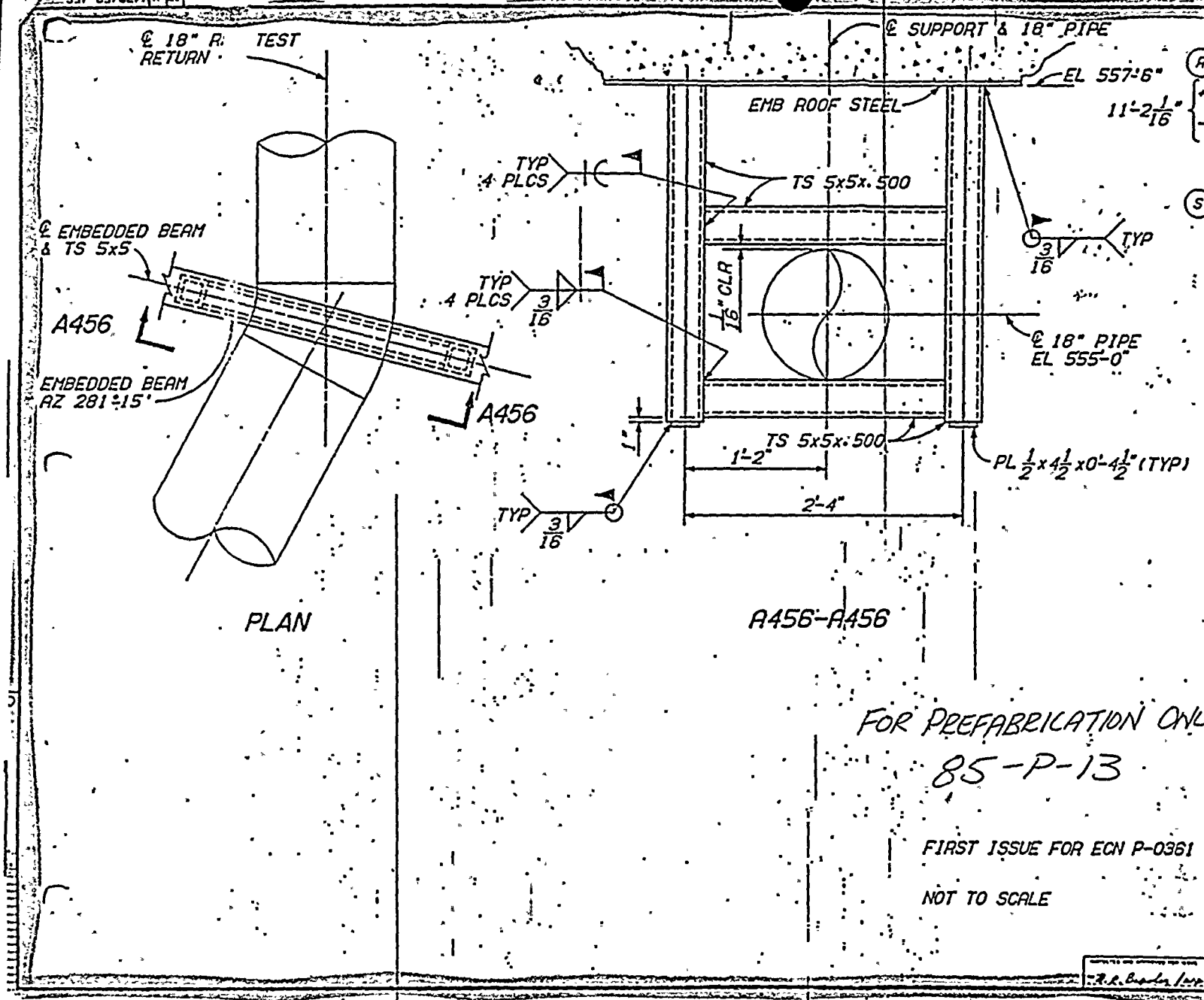

SUPPORT NO. H-32

(JOINT H-32)

NOTES:
1. FOR GENERAL NOTES SEE 47B435-1.
2. THIS SPRT TO REPLACE EXISTING HANGER H-32 SEE DWG 47A452-307.

REFERENCE DRAWINGS:
47W2452-2 (PIPING)
47W452-220 (ISOMETRIC)
48N441 (STEEL)

FOR PREFABRICATION ONLY

85-P-13

FIRST ISSUE FOR ECN P-0361

NOT TO SCALE

POWERHOUSE
REACTOR BUILDING - UNIT 2

MECHANICAL
RHR SYSTEM
PIPE SUPPORTS

BROWNS FERRY NUCLEAR PLANT
TENNESSEE VALLEY AUTHORITY

2-MAY 87 | 47B452-458 | R0

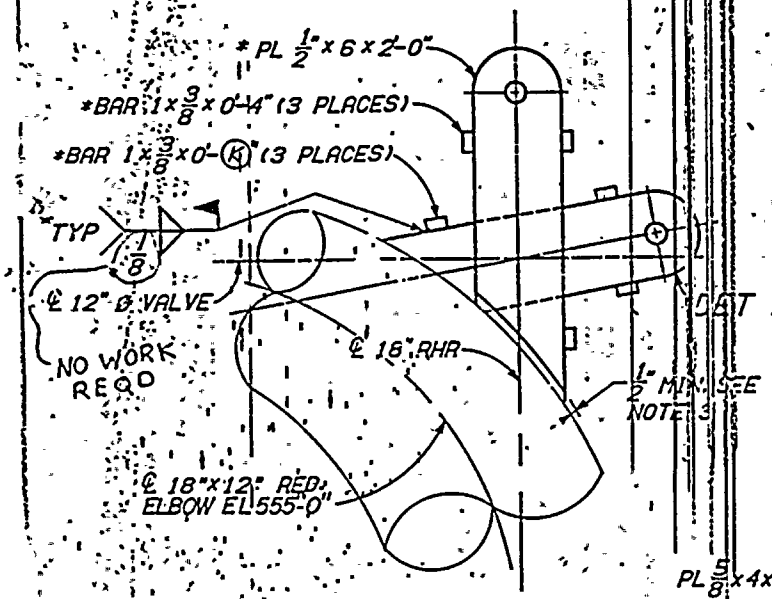

DET A438
R-19 (47B452-454) AS SHOWN
R-10 (47B452-451) OPP HAND

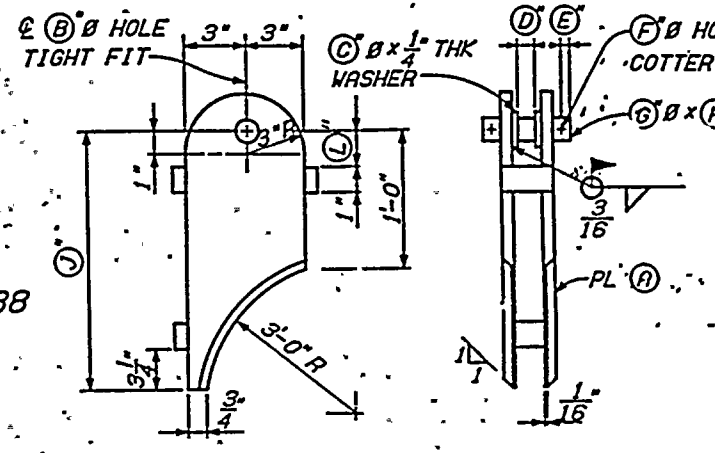

DET B438

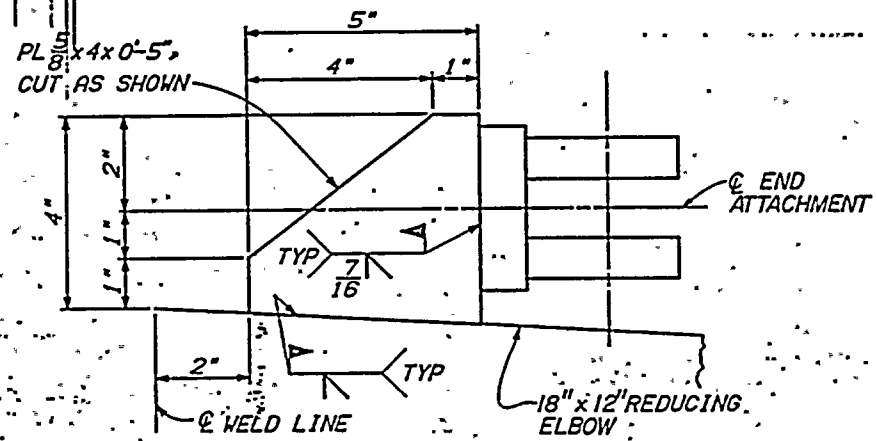

DET C438
R-11 (47B452-452) AS SHOWN
R-18 (47B452-453) OPP HAND

NOTES:
1. FOR GENERAL NOTES SEE 47B435-1.
2. * DENOTES EXISTING LUG MATERIAL.
3. FIELD TO REMOVE EXISTING LUGS AS SHOWN.

REFERENCE DRAWINGS:
47W2452-2 (PIPING)
47W452-220 (ISOMETRIC)
47W452-221 (ISOMETRIC)

DETAIL B438		
	R-10	R-19
	47B452-451	47B452-454
A	5/8 x 6 x 1'-9 1/4	1/2 x 6 x 1'-8"
B	1 1/2	1
C	1 3/4	1 1/8
D	1 3/8	7/8
E	1/2	3/8
F	5/16	7/32
G	1 1/2	1
H	4 5/8	3 5/8
J	1'-7 1/4	1'-6"
K	3 1/8	2 1/2
L	(3 1/8)	3
M	1/4	3/16
N	2 1/2	1 1/2

NO WORK REQ'D

CALCULATION BRANCH/PROJ IDENTIFIERS: BWPC20919R10
BWPC20920R11
BWPC20921R18
BWPC20902R19

COMPANION DWGS. 47B452-451, 452, 453, 454

FIRST ISSUE FOR ECN P-0361 AND P-2111

NOT TO SCALE

1	P0361	3-14-88	DOF	AWA	JRD		
MISC REV							

POWERHOUSE
REACTOR BUILDING - UNIT 2

MECHANICAL
RHR SYSTEM
PIPE SUPPORTS

BROWNS FERRY NUCLEAR PLANT
TENNESSEE VALLEY AUTHORITY

KNOXVILLE 4-12-84 67 M 47B452-438 R1

SHEET 194 of 259

BROWNS FERRY NUCLEAR PLANT
P.O. BOX 2000
DECATUR, ALABAMA 35602

WP# 2071-84

SYSTEM: C.S.
ASME CODE CLASS: 2
WORK PLAN # 2071-84
ECN: P0361, P2095
DCR 2161, 1853, 1910

ASME SECTION XI
SUMMARY REPORT

I. REPAIR OR REPLACEMENT WORK REQUIRED.

A. R-18 (B-P 1973-2) - REMOVE EXISTING SUPPORT. REMOVED BY ANALYSIS.

B. H-28 (47B458-193 R1) INSTALL TWO NEW HEX NUTS ON SPRING CAN RODS.

C. R-33 (47B458-198 R6) INSTALL NEW SUPPORT WITH SNUBBER (MK-391).

D. H-33 (47B458-444 R1) REMOVE SUPPORT. CUT AND REMOVE 6"φ STANCHION AND BASE PL. GROUT ABANDON ANCHOR BOLT HOLES.

E. R-43 (47A458-380 R1) INSTALL NEW SUPPORT, STRUT, (MK-120), PIPE CLAMP (MK-53) AND BASE PL.

F. R-44 (47B458-405 R2) INSTALL NEW SUPPORT. WELD T.S. TO EMB. PLATE.

G. R-45 (47A458-379 R2) INSTALL NEW SUPPORT, WELD T.S. TO EMB. PLATE

H. H-50A (47B458-186R1). REMOVE EXISTING ROD AND CLAMP. LEAVE LUG ON W24. INSTALL PIPE CLAMP (MK-295) STRUT (MK-46) & BASE PLATE

I. H-54A (47A458-193R2) REMOVE EXISTING ROD AND CLAMP, LEAVE LUG. NO RE-PLACEMENT.

J. R-64 (47B458-445R2) INSTALL NEW SUPPORT. WELD T.S. TO BASE PL. WELD PLATE TO T.S. SECURE TO PIPE WITH U-BOLT

K. R-67 (47A458-387R3) INSTALL NEW T.S. TO BASE PL. NEW ANCHOR BOLTS. U-BOLT TO PIPE

L. R-74 (47B458-440R1). INSTALL NEW SUPPORT. NEW T.S. TO BASE PLATES. ATTACH LUG (MK-162) TO T.S. BAR TO PIPE CLAMP (MK-292) & MK-162 W/PINS

II POST REPAIR OR REPLACEMENT TEST AND EXAMINATIONS.

A. STRUCTURAL WELDS INSPECTED PER N-VT-2.

B. PRESSURE BOUNDARY WELDS INSPECTED PER N-VT-3, N-PT-1 OR N-MT-1.

C. SUPPORT INSTALLATIONS VERIFIED PER MAI-23 & MAI-4.

D. ANI HOLD POINT. R-33 PT/MT. FINAL

E. PRESERVICE NDE REQUIRMENTS. (ISI) H-28 & R-74.

III. MANUFACTURER COMPONENT IDENTIFICATION NUMBERS.

MK-391 – MECHANICAL SHOCK ARRESTOR
B-P 2540. SIZE 50.0, CONTRACT
Nº RD-837107. 47W435-391.

MK-120 – ADJUSTABLE RIGID STRUT B-P 2251
SIZE 0.7 CONTACT NO. RD 837107
MK47W435-120.

MK-53 2" – RESTRAINT PIPE CLAMP B-P 6200
SIZE 0.65 CONTRACT Nº. RD-837099
MK47W435-53.

MK-46 FIELD WELDED ADJUSTABLE RIGID
STRUT. B-P 2251 SIZE 4
CONTRACT Nº. RD 837107
MK 47W435-46

MK-295 RESTRANT PIPE CLAMP B-P 6200
SIZE 3. CONTRACT Nº. RD 837107
MK47W435-295.

MK-162 STRUCTURAL ATTACHMENT B-P 1000
SIZE 12, CONTRACT NO. RD-837107
MK47W435-162.

MK-292 RESTRANT PIPE CLAMP B-P 6200
SIZE 12. 16" PIPE SIZE. CONTRACT
Nº. RD-837107, MK47W435-292.

IV. MANUFACTURER

B-P. BURGEN PATERSON
74 COMMERCE WAY
WOBURN, MA. 01888

V. ANI/ANII/AIA

ANI: ROOSEVELT RUSSELL
ANII: BILL RICE
AIA: THE HARTFORD STEAM BOILER INSP. & INS. Co.
1117 PERIMETER CENTER WEST, SUITE E 301
ATLANTA, GA. 30338

VI. DATE WORK COMPLETED 11-12-86

ABOVE INFORMATION VERIFIED:

Reginald J. Reed / 11-12-86
COGNIZANT ENGR. / DATE

SUBMITTED BY:

Michael Hamer 11/13/86
COGNIZANT SECT. SUPV. DATE

BROWNS FERRY NUCLEAR PLANT
P.O. BOX 2000
DECATUR, ALABAMA 35602

WP# 2072-84

SYSTEM: CORE SPRAY
ASME CODE CLASS: 2
WORKPLAN # 2072-84
ECN: P0361, P2095
DCR: 2161, 1853, 1910

ASME SECTION XI
SUMMARY REPORT

I REPAIR OR REPLACEMENT WORK REQUIRED.

A. H-21 (47B458-495 R2) REPLACE 7/8" ϕ SSD WITH 1" ϕ W.B x 0'-9" LG. (2). ADD SPACERS TO PIPE CLAMP. AND WELD BEAM ATTACH. TO BASE PL.

B. H-32 (47B458-446 R2) REMOVE OLD LUG AND 1 1/8" ϕ BOLT REPLACE WITH NEW LUG AND 1" ϕ x 4 1/2" BOLT. ADD WELD TO LUG ON ELBOW OF PIPE.

C. H-52A (47A458-189 R2) REMOVE EXISTING ROD, CLAMP AND LUG, REPLACE WITH NEW STRUT MK-119. NEW CLAMP MK-123 AND NEW LUG.

D. H-55A (47A458-195) REMOVE EXISTING SUPPORT AND REPLACE WITH NEW SUPPORT (R-50).

E. H-61A (47B458-454 R1) REMOVE EXISTING SUPPORT AND REPLACE WITH NEW SUPPORT. NEW BASE, PL, U-BOLT, & T.S.

F. R-11 (47B458-190 R2) MODIFY EXISTING SUPPORT BY ADDING TUBE STL. STIFFNER PL.S AND ADDITIONAL WELDS. VERIFY EXISTING WELDS.

G. R-14 (B-P-1966) REMOVE EXISTING SUPPORT AND REPLACE WITH NEW SUPPORT (R-76).

H. R-21 (47B458-197 R0) INSTALL NEW SUPPORT. PIPE CLAMP MK-127, LIGHT DUTY RIGID ROD STRUT MK-224, LUG ATTACH. AND BASE PL.

I. R-50 (47B458-177 R1) REMOVE EXISTING SUPPORT H-55A AND INSTALL NEW SUPPORT. TUBE STL. BASE PL. 4 LUGS WELD TO 3" ϕ PIPE.

J. R-76 (47B458-452 R2) INSTALL NEW SUPPORT TO REPLACE R-14. TUBE STL. WELD TO EMB. PL. TWO PIPE CLAMPS, MK-281. TWO MK-45 STRUTS. BASE PL. ANCHOR TO CONC.

K. R-81 (47B458-457 R2) INSTALL NEW SUPPORT. BASE PL. TUBE STL. AND U-BOLT.

II POST REPAIR OR REPLACEMENT TEST AND EXAMINATIONS.

A. STRUCTURAL WELDS INSPECTED PER N-VT-2.

B. PRESSURE BOUNDRY WELDS INSPECTED PER N-VT-3, N-PT-1 OR N-MT-1.

C. SUPPORT INSTALLATIONS VERIFIED PER MAI-23 & MAI-4.

D. ANI HOLD POINT R-50 PT/MT FINAL

E. PRESERVICE NDE REQUIRMENTS. (ISI). H-21, R-11, R-21.

III. MANUFACTURER COMPONENT IDENTIFICATION NUMBER.

MK-119 FIELD WELDED ADJUSTABLE RIGID STRUT
B-P PART NO. 2251 SIZE 1.5 MK.47W435-119
CONTRACT NO. RD 950413.

MK-123 RESTRANT PIPE CLAMP B-P PART NO. 6200
SIZE 3. 3" PIPE SIZE. MK.47W435-123.
CONTRACT NO. RD 950413

MK-127 RESTRANT PIPE CLAMP B-P PART NO. 6200
SIZE 3, 12" PIPE SIZE. MK.47W435-127
CONTRACT NO. RD. 950413

MK-224 LIGHT DUTY RIGID ROD STRUT B-P PART NO.
2010 SIZE 3. MK 47W435-224
CONTRACT NO. 950413.

MK-281 RESTRAINT PIPE CLAMP B-P PART NO. 6200
SIZE 12. 14" PIPE SIZE. MK.47W435-281
CONTRACT NO. RD 950413.

MK-45 FIELD WELDED ADJUSTABLE RIGID STRUT
B-P PART NO. 2251 SIZE 12. MK47W435-45
CONTRACT NO. 950413.

IV. MANUFACTURER.

B-P- BERGEN PATERSON
74 COMMERCE WAY
WOBURN, MA. 01888

V. ANI/ANII/AIA.

ANI: ROOSEVELT RUSSELL
ANII: BILL RICE
AIA: THE HARTFORD STEAM BOILER INSP. & INS. CO.
1117 PERIMETER CENTER WEST SUITE E301.
ATLANTA, GA. 30338.

IV. DATE WORK COMPLETED.

11-3-86
DATE

ABOVE INFORMATION VERIFIED

Reginald J. Reed | 11-3-86
COGNIZANT ENGR. | DATE

SUBMITTED BY

Michael Harris 11/3/86
COGNIZANT SECT. SUPV. DATE

ASME SECTION XI SUMMARY REPORT

Tennessee Valley Authority
Office of Nuclear Power, 1750 CST2-C
Browns Ferry Nuclear Plant Unit 2
P.O. Box 2000
Decatur, Alabama

Comm. Service Date March 1, 1975
System Core Spray
TVA Class D
Workplan/MR No. 2073-84

Furnish the following for the repair or replacement for the as-left condition of the component (after field work is complete). Mark all blanks (indicate NA for items which do not apply).

National Board Number of repaired or replaced component. N/A RLR 2-4-87

Name of the components and description (include size, capacity, material, and location)--Theses requirements may be satisfied by attaching an applicable drawing.
See Part I of attached ASME Section XI Summary Report.

Name of Manufacturer Bergen-Paterson

Address of Manufacturer (if known) 74 Commerce Way Woburn, MA 01888

Manufacturer's component identification numbers (i.e., serial number, subassembly number, heat number). If more than one component is replaced, attach weld map and identify items by item number.
See Part III of attached ASME Section XI Summary Report.

Brief description of repair or replacement work performed, including conditions observed and corrective measures taken, as applicable (reference DCR, CAR, etc.; drawing may be attached with attached affected area circled).
See Part I of attached ASME Section XI Summary Report.

Brief description of post repair or replacement tests and examinations (if required) by instruction or procedure number.
See Part II of attached ASME Section XI Summary Report

ANII/ANI name, employer, and business address
See Part V of attached ASME Section XI Summary Report.

Date work completed 12-5-86

R. L. Richardson — Cognizant Engineer
12/8/87 — Date

Retention: Period - Lifetime; Responsibility - Modifications Supervisor

0031p

BROWNS FERRY NUCLEAR PLANT
P. O. BOX 2000
Decatur, AL. 35602

SYSTEM: Core Spray
ASME CODE CLASS:
WORKPLAN NO.: 2073-84
ECN/DCR: P0361/2161

ASME SECTION XI
SUMMARY REPORT

PART I: Repair or replacement work required.

A. Support H-4 (47B458-409R3) - Removed existing support and installed new support using 14" pipe clamp, Grinnell Fig. 216, weldless eye nuts (MK-17), 1 1/4" A-36 ROD (MK-7) and welded beam attachment (MK-2) and HVY. HEX nuts (MK-22)

B. Support H-24 (47B464-418R2) - Installed new support using 10" pipe clamp (MK-139), weldless eye nuts (MK-16), 1 1/2" A-36 ROD (MK-6), welded beam attachment (MK-1) and heavy HEX nuts (MK-21) also A-36 plate (HT#380377)

C. Support H-25 (47B464-419R#) - Installed New Support using 10" pipe clamp (MK-130), 1 1/2" A-36 ROD (MK-6) with heavy HEX nuts (MK-21), weldless eye nuts (MK016), welded beam attachment (MK-1) and A-36 plate (HT#380377)

D. Support H-55 (47B458-464R3) - Removed existing support and installed new support using 3x3x1/4 tube steel (HT#48899), 1/2"x2x0'-3 1/2" plate (HT#7461130), 3/4"x12x1'-2" A-36 plate (HT#7436997).

E. Support R-6 (B&P1958-4 sh.1 R900) - Removed support in it's entirety. Only the lugs were left welded to the pipe.

F. Support R-18A (B&P1974-2 R901) - Removed support in it's entirety.

G. Support R-56 (47B458-407R4) - Installed new support using field welded adjustable rigid STRUT (MK-46), 14" pipe clamp (MK-464), 4"x4"x1/4" tube steel. (HT#0128721), 1/2"x12"x1'-0" A-36 plate (HT#7436997).

H. Support R-57 (47A458-384 RO) - Installed new support using light duty rigid ROD STRUT (MK0224), size 3, 12" pipe clamp (MK-127), 1/2"x6"x0'-8" A-36 plate (HT#295762).

I. Support R-58 (47B458-414R#) - Installed new support using size 12 field welded adjustable rigid STRUT (MK-45), 10" pipe clamp (MK-130), 5"x5"x1/4" A-500 tube steel (HT#41313), 3/4"x12"x1'-0" A-36 plate (HT# 7436997), 1/4"x4 1/2"x0'-4 1/2" A-36 plate (HT#395337)

21. [illegible]

J. Support R-59 (47B458-415R2) - Installed new support using size 12 field welded adjustable rigid STRUT (MK-45), 10" pipe clamp (MK-130), 3/4"x12"x1'-0" A-36 plate (HT#7436997).

PART II: Post repair or replacement test and examinations.

A. Structural welds examined per N-VT-2

B. Support installations verified per MAI-4, MAI-23 and SMMI-14.4.4.1.3.-L.

C. ANI Hold Points - PT on H-55 and final visual on R-59
Preservice visual on H-4, R-46, and R-57.

PART III. Manufacturers component identification numbers.

MK-1 = Welded Beam Attachment, B and P Part No. 1047, type 2 with Pin, size 1 1/2".

MK-2 = Same as MK-1, size 1 1/4"

MK-6 = Hanger rod, carbon steal random lengths, A-36 for size 1 1/2".

MK-7 = Same as MK-6 for size 1 1/4".

MK-16 = Weldless eye nut, B and P part No. 5130, size 1 1/2".

MK-17 = Same as MK-16 for size 1 1/4".

MK-21 = Heavy HEX nuts, B and P Part No. 5400, size 1 1/2".

MK-22 = Same as MK-21 for size 1 1/4".

MK-45 = Field welded adjustable rigid strut, size 12 with end attachment, B and P Part No. 2251.

MK-46 = Same as Mk-45 size 4.

MK-127 = Light duty rigid rod strut, size 3 with end attachment, B and P Part No. 2010.

MK-464 = Same as MK-130 for 14"pipe size.

PART IV: Manufacturer:

Bergen-Paterson
74 Commerce Way
Woburn, MA. 01888

PART V: ANI/ANII/AIA

ANI - Roosevelt Russell

ANII - Bill Rice
AIA - The Hartford Steam Boiler Insp. and Ins. CO.
1117 Perimeter Center West, Suite E301
Atlanta, Georgia 30338

PART VI: DATE WORK COMPLETED: 12-5-86

ABOVE INFORMATION VERIFIED:

R.L. Richardson / 2-8-87
COGNIZANT ENGINEER / DATE

SUBMITTED BY: Richard K. Burt / 2-10-87
COGNIZANT SECTION SUPV. / DATE

ASME SECTION XI SUMMARY REPORT

Tennessee Valley Authority
Office of Nuclear Power, 1750CST2-C
Browns Ferry Nuclear Plant Unit 2
P.O. Box 2000
Decatur, Al.

Comm. Service Date 3/1/75
System CORE SPRAY
TVA Class D
Workplan/MR No. 2074-84

Furnish the following for the repair or replacement for the as-left condition of the component (after field work is complete). Mark all blanks (indicate NA for items which do not apply).

National Board Number of repaired or replaced component. N/A

Name of the components and description (include size, capacity, material, and location)--These requirements may be satisfied by attaching an applicable drawing.

SEE PART I OF ATTACHED ASME SECT. XI SUMMARY REPORT

Name of Manufacturer BERGEN PATERSON

Address of Manufacturer(if known) 74 COMMERCE WAY,WOBURN,MA.01888

Manufacturer's component identification numbers (i.e., serial number, subassembly number, heat number). If more than one component is replaced, attach weld map and identify items by item number.
SEE PART III OF ATTACHED ASME SECT. XI SUMMARY REPORT

Brief description of repair or replacement work performed, including conditions observed and corrective measures taken, as applicable (reference DCR, CAQR, etc.; drawing may be attached with affected area circled). SEE PART I OF ATTACHED ASME SECT. XI SUMMARY REPORT

Brief description of post repair or replacement tests and examinations (if required) by instruction or procedure number. SEE PART II OF ATTACHED ASME SECT. XI SUMMARY REPORT.

ANII/ANI name, address, employer, and business address ROOSEVELT Russell, ANI/ B.J. Rice, ANII; The Hartford Steam Boiler Inspection Co.; 1117 Perimeter Center West , Suite E301, Atlanta, Ga.

Date work completed 2-18-88

Doug McNeil 12-18-88
Cognizant Engineer Date

Retention: Period -Lifetime; Responsibility -Modification Supv.

BROWNS FERRY NUCLEAR PLANT
P.O. BOX 2000
DECATUR AL. 35602

WP# 2074-84
CN P0361,P2095 DCR: 2161,1910,1853

SYSTEM: CORE SPRAY
ASME CODE CLASS 2
UNIT # 2

ASME SECTION XI SUMMARY REPORT

I. REPAIR OR REPLACEMENT WORK REQUIRED:

* (H-50) REMOVE EXISTING LUG , ROD AND CLAMP WITH MK-52 PIPE CLAMP, MK-120 RIGID STRUT, PLATE AND TUBE STEEL
* (H-52) MODIFY EXISTING HANGER BY ADDING 1 1/16"x1/4"x7/8" BAR ON GRINNEL PIPE CLAMP (FIG.295). ADD HEX NUT AND PLATE WASHER ON 5/8" ROD.
* (H-54) REMOVAL BY ANALYSIS.
* (H-56) REMOVE EXISTING LUGS, ROD AND CLAMP. REPLACE WITH BASEPLATE TUBE STEEL AND 5/8" DIA. SSD.
* (R-40) REMOVE EXISTING LUG, ROD,AND,PIPE CLAMP.REPLACE WITH MK-420 U-BOLT AND 3X3X1/4" ANGLE.
* (R-60) REMOVE EXISTING LUG,ROD, AND PIPE CLAMP. REPLACE WITH MK-120, RIGID STRUT AND MK-52 RESTRAINT PIPE CLAMP,TUBE STEEL AND PLATE.
* (R-69) REMOVE SUPPORT H-14 SPRING CAN,AND PIPE STANCHION. REPLACE WITH MK-45, RIGID STRUT, MK-292 RESTRAINT PIPE CLAMP,AND BASE PLATE.
* (R-83) REMOVE EXISTING SUPPORT H-63 REPLACE WITH R-83. TUBE STEEL, BASE PLATE, U-BOLT AND 2 LUGS ON PIPE.

BROWNS FERRY NUCLEAR PLANT
P.O. BOX 2000
DECATUR AL. 35602

WP# 2074-84
CN P0361,P2095 DCR: 2161,1910,1853

SYSTEM: CORE SPRAY
ASME CODE CLASS 2
UNIT # 2

ASME SECTION XI SUMMARY REPORT

II. POST REPAIR OR REPLACEMENT TEST AND EXAMINATIONS.

(i) STRUCTURAL WELDS INSPECTED PER N-VT-2.

(ii) PRESSURE BOUNDARY WELDS INSPECTED PER N-VT-3,N-PT-1 OR N-MT-1.

(iii) SUPPORT INSTALLATIONS VERIFIED PER MAI-23 AND MAI-4.

(iiii) ANI HOLD POINT R-83 PT/MT FINAL

(iiiii) PRESERVICE NDE REQUIREMENTS (ISI) R-69

BROWNS FERRY NUCLEAR PLANT
P.O. BOX 2000
DECATUR AL. 35602

WP# 2074-84
CN P0361,P2095 DCR: 2161,1910,1853

SYSTEM: CORE SPRAY
ASME CODE CLASS 2
UNIT # 2

ASME SECTION XI SUMMARY REPORT

III. MANUFACTURER COMPONENT IDENTIFICATION NUMBER.

(MK-420) STANDARD U-BOLT, B-P PART NO. 6510 2" W/4 HEX NUTS.

(MK-120) FIELD WELDED ADJUSTABLE RIGID STRUT W/STRUCTURAL END ATT.
B-P PART NO. 2251 SIZE 0.7

(MK-52) RESTRAINT PIPE CLAMP, B-P PART NO. 6200 SIZE 0.65 3" PIPE SIZE

(MK-45) FIELD WELDED ADJUSTABLE RIGID STRUT W/STRUCTURAL END ATTACHMENT
B-P PART NO. 2251, SIZE 12.0

(MK-292) RESTRAINT PIPE CLAMP,B-P PART NO. 6200 SIZE 12 16" PIPE SIZE

ASME SECTION XI SUMMARY REPORT

Tennessee Valley Authority
Office of Nuclear Power, 1750CST2-C
Browns Ferry Nuclear Plant Unit 2
P.O. Box 2000
Decatur, Al.

Comm. Service Date 3/1/75
System CORE SPRAY
TVA Class D
Workplan/MR No. 2075-84

Furnish the following for the repair or replacement for the as-left condition of the component (after field work is complete). Mark all blanks (indicate NA for items which do not apply).

National Board Number of repaired or replaced component. N/A

Name of the components and description (include size, capacity, material, and location)--These requirements may be satisfied by attaching an applicable drawing.

SEE ATTACHED DRAWING FOR CORE SPRAY UNIT 2 SUPPORTS H-2,H-5, H-11,H-16,H-23,H-26,H-27,H-36,H-64,H-70,H-71,H-72,R-41,R-53,R-65

Name of Manufacturer N/A

Address of Manufacturer(if known) N/A

Manufacturer's component identification numbers (i.e., serial number, subassembly number, heat number). If more than one component is replaced, attach weld map and identify items by item number. N/A-NO STANDARD COMPONENTS REPLACED

Brief description of repair or replacement work performed,including conditions observed and corrective measures taken, as applicable (reference DCR, CAQR, etc.; drawing may be attached with affected area circled). SEE ATTACHED LISTING OF WORK PERFORMED ON EACH SUPPORT

Brief description of post repair or replacement tests and examinations (if required) by instruction or procedure number. ALL NEW OR REPAIRED WELDS INSPECTED PER N-VT-2 SUPPORTS H-2,H-5,H-11, H-23 AND H-27 WERE PRESERVICED INSP. PER N-VT-1

ANII/ANI name, address, employer, and business address ROOSEVELT Russell, ANI/ B.J. Rice, ANII; The Hartford Steam Boiler Inspection Co.; 1117 Perimeter Center West , Suite E301, Atlanta, Ga.

Date work completed 3-31-88

Greg McNeil 1-11-88
Cognizant Engineer Date

Retention: Period -Lifetime; Responsibility -Modification Supv.

BROWNS FERRY NUCLEAR PLANT
P.O. BOX 2000
DECATUR AL. 35602

WP# 2075-84
CN P0361 DCR: 2161

SYSTEM: CORE SPRAY
ASME CODE CLASS 2
UNIT # 2

ASME SECTION XI SUMMARY REPORT

CHANGED LOAD SETTING RANGE ON SPRING CANS AND VERIFIED EXISTING WELDS ON SUPPORTS H-2,H-5,H-11,H-16,H-23,H-26,H-27 AND H-36. PERFORMED WELD REPAIRS ON REPLACEMENT MATERIAL AS INDICATED BELOW.

(H-2) REPLACED C3x4.1 CHANNEL AND WELDED NEW WASHERS TO CHANNEL.

(H-5) REPLACED BOLT ON TOP OF SPRING CAN.

(H-11) VERIFY LOAD SETTING, REWORK EXISTING HANGER, REMOVE AND REPOSITION EAST BEAM ATTACHMENT WITHOUT ANI REVIEW.

(H-16) REPLACED SPRING CAN STUDS WITH BOLTS (2 PLACES).

(H-23) REPLACED SPRING CAN LOAD PINS WITH BOLTS. REPAIR (WELDING LUG TO W6 & WASHER PLATE TO C3x4.1) WELDS.

(H-26) VERIFIED SIZE OF WELDS AND SPRING CAN SETTING.

(H-27) REPLACED WELDING LUGS AT W16 CONNECTIONS.WELDED SHIMS TO END OF PIPE LUGS TO PROVIDE ZERO CLEARANCE AT RISER CLAMP. REPLACED BOLTING AT TOP OF SPRING CANS.

(H-36) REPAIRED WELD (LUG TO W12)

(H-64) WELDED NEW 2x2x1/4 ANGLE TO W10x33

(H-70) VERIFIED SIZE OF WELDS. PLACED ROD IN TENSION, TIGHTENED LOCK NUT ON WELDED BEAM ATTACHMENT, AND STAKED THREADS ON PIPE CLAMP.

(H-71) REMOVED AND RE-WELDED BEAM ATTACHMENT TO W6x15 (ADDED TO WORKPLAN BY NON-INTENT AND WORKED WITHOUT ANI REVIEW REF. CAR 87-0022 AND CAQR 87-0457)

BROWNS FERRY NUCLEAR PLANT
P.O. BOX 2000
DECATUR AL. 35602

WP# 2075-84
CN P0361 DCR: 2161

SYSTEM: CORE SPRAY
ASME CODE CLASS 2
UNIT # 2

ASME SECTION XI SUMMARY REPORT

(H-72) REPLACED ANGLE WITH 2X2X1/4 TUBE STEEL AND WELDED TO W10.REPLACED ALL OTHER PARTS OF SUPPORT INCLUDING U-BOLT.

(R-41) REPLACED 2X2X1/4 ANGLE AND WELDED TO W10.

(R-53) REDESIGNED AND REPLACED ENTIRE SUPPORT INCLUDING CONCRETE ANCHOR BOLTS

(R-65) INSTALLED SEPARATE SUPPORT FOR ONE OF THE TWO (2") PIPES. THE NEW SUPPORT CONSISTS OF TUBE STEEL(2x2x1/4) , ANGLE (3x3x1/4) AND U-BOLT WELD REPAIR PERFORMED ON WELD CONNECTING EXISTING 2x2 ANGLE TO W6.

ASME SECTION XI SUMMARY REPORT

214 of 259

Tennessee Valley Authority
Office of Nuclear Power, 1750 CST2-C
Browns Ferry Nuclear Plant Unit 2
P.O. Box 2000
Decatur, Alabama

Comm. Service Date MAR 1, 1975
System RCIC
TVA Class D
Workplan/MR No. 2076-84

Furnish the following for the repair or replacement for the as-left condition of the component (after field work is complete). Mark all blanks (indicate NA for items which do not apply).

National Board Number of repaired or replaced component. N/A

Name of the components and description (include size, capacity, material, and location)—Theses requirements may be satisfied by attaching an applicable drawing.
SEE ATTACHED DESCRIPTION ~~AND~~ OF WORK PERFORMED AND ATTACHED DRAWINGS

Name of Manufacturer BERGEN PATERSON, 74 COMMERCE WAY, WOBURN, MA 01888

Address of Manufacturer (if known) 74 COMERCE WAY; WOBURN; MA 01888

Manufacturer's component identification numbers (i.e., serial number, subassembly number, heat number). If more than one component is replaced, attach weld map and identify items by item number.
SEE ATTACHED DESCRIPTION OF WORK PERFORMED AND ATTACHED DRAWINGS

Repair [✓] Replacement/Modification [✓]

Brief description of repair or replacement work performed, including conditions observed and corrective measures taken, as applicable (reference DCR, CAR, etc.; drawing may be attached with attached affected area circled).
SEE ATTACHED DESCRIPTION OF WORK PERFORMED AND ATTACHED DRAWINGS

Brief description of post repair or replacement tests and examinations (if required) by instruction or procedure number. STRUCTURAL WELDS - N-VT-2, PRESSURE BOUNDARY ATTACHMENT WELDS N-VT-3, PRESERVICE - N-VT-1 ON SUPPORTS H-33 AND R-56

ANII/ANI name, employer, and business address ANI - ROOSEVELT RUSSELL
ANII: BILL RICE, THE HARTFORD STEAM BOILER INSPECTION + INS. CO.
1117 PERIMETER CENTER WEST, SUITE E301, ATLANTA, GA. 30338

Date work completed 8-23-88

David Winchester 8-23-88
Responsible Engineer Date

Retention: Period - Lifetime; Responsibility - ERCU Supervisor

ASME SECTION XI SUMMARY REPORT - WP 2076-84

I Description of Repair or Replacement Work Performed in Workplan 2076-84

H-31	47B456-121	- No Physical Work
H-33	47A456-178 R2	- Removed Existing Support
	47B456-113 R0	- Install New Support
		MK 46 Strut B-P Part 2251 Size 4 MK 125 Clamp B-P Part 6200
H-39	47B456-53 R1	- No Physical Work
H-60	47A456-202 R5	- Added Gussett Plates, Repaired Undersized Weld Between Baseplate & Embedded Plate
H-61	47A456-203 R7	- Repaired Lug to Pipe Welds and Clamp to Plate Weld (ANI Review Obtained)
H-62	47A456-204 R3	- Removed Existing H-62 Installed New H-62 MK 120 B-P Strut Part No. 2251 Size 0.7 MK 53 B-P Clamp "Part No." 6200 Size 0.65
R-29A	47B456-70 R4	- Removed Existing Support (ANI Review Obtained) Installed New Support MK 388 Snubber B-P Part No. 2540 Size 1.5 MK 123 Clamp B-P Part No. 6200 Size 1.5
R29B	47B456-71 R1	- Removed Support
R30	47B456-72 R2	- Removed Existing R30 Installed New R30 MK 463 Spring Can B-P Part 3100 Type B Size 4 MK 436 1/2" HGR Rod MK 446 HH Nut B-P Part 5400 MK 20 Weldless Eye Nut B-P Part 5130 Size 1/2"
R47	47A456-324 R1	- Repaired Lug to Torus Roof Steel Weld
R-48	47A456-325 R1	- Repaired Lug to Torus Roof Steel Weld
R-49	47A456-326-R6	- Removed Existing Support - ROD HGR SHOWN ON 47A456-326 RO REMOVED NEW R-49 AS SHOWN ON 47A456-326 R2
R-50	47B456-79-R4	- Relocated Support - Removed Existing Pipe Lugs and Installed New Lugs. Reused Clamp.

(CONTINUED)

R-51	47B456-80 R5	- Repaired Structural Welds
R-56	47B456-114 R0	- Installed New Support Mk 119 Strut B-P Part No. 2251 Size 1.5 Mk 37 End Attachment B-P Part No. 2003 Size 1.5
R-61	47B456-120 R1	- Installed New Support Mk 119 Strut B-P Part No. 2251 Size 1.5 Mk 54 Clamp B-P Part No. 6200 Size 1.5
R66	47B456-133 R3	- Installed New Support
R-67	47B456-134 R1	- Installed New Support
R-68	47B456-502 R0	- Installed New Support Mk 388 Snubber B-P Part No. 2540 Size 1.5 Mk 123 Clamp B-P Part No. 6200 Size 1.5

NOTE: Workplan was worked without ANI review except for supports H-31, H-61 and R-29A. This is documented by DR 85-8149.

0320d

No PHYSICAL WORK

SHEET 217 of 259

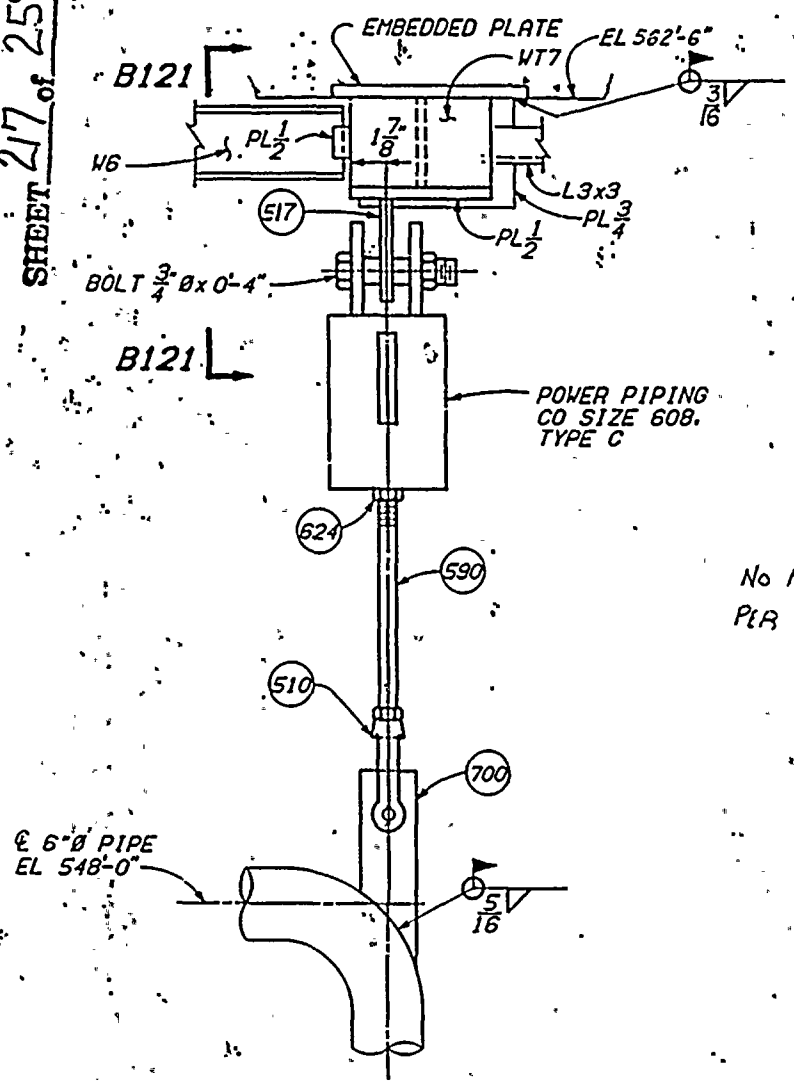

A121-A121

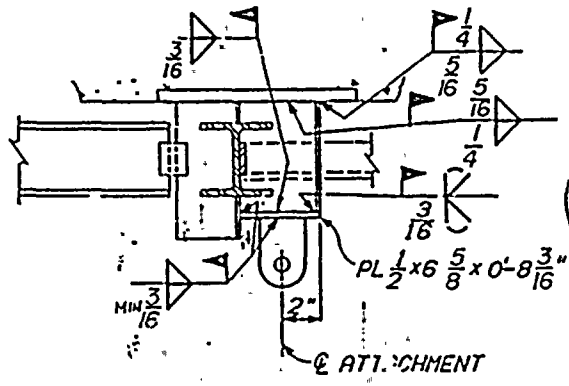

B121-B121

SPRING NOT SHOWN FOR CLARITY

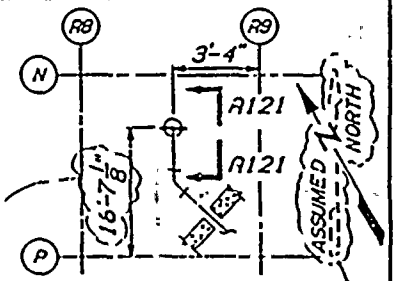

LOCATION PLAN
FLOOR EL 519'-0"

SUPPORT NO. H-31
(JOINT RC31)

LOAD SETTING RANGE
725 LB TO 1375 LB
MAX THERMAL MOVEMENT
± 0.06

NOTES:
1. FOR GENERAL NOTES SEE 47B435-1.
2. FOR SPRING GENERAL NOTES SEE 47B435-3.
3. ALL MATERIAL IS EXISTING.
4. THIS DRAWING SUPERSEDES 47A456-177.

REFERENCE DRAWINGS:
47W2456-4 (PIPING)
47W403-204 (ISOMETRIC)
48N1004 (MISC. STEEL)

No PHYS WORK REQD
PER SMM 144.1.3-L

CALCULATION BRANCH/PROJECT IDENTIFIERS: BWPC21086H31

FIRST ISSUE FOR ECN P-0361 & P-2:03

NOT TO SCALE

3	PO361							
2								
1								
0								

REVISED LOCATION PLAN

POWERHOUSE
REACTOR BUILDING - UNIT 2

MECHANICAL
RCIC SYSTEM
PIPE SUPPORTS

BROWNS FERRY NUCLEAR PLANT
TENNESSEE VALLEY AUTHORITY

KNOXVILLE 9-21-83 67 M 478456-121 R3

67 M 478456-121

SHEET 218 of 259

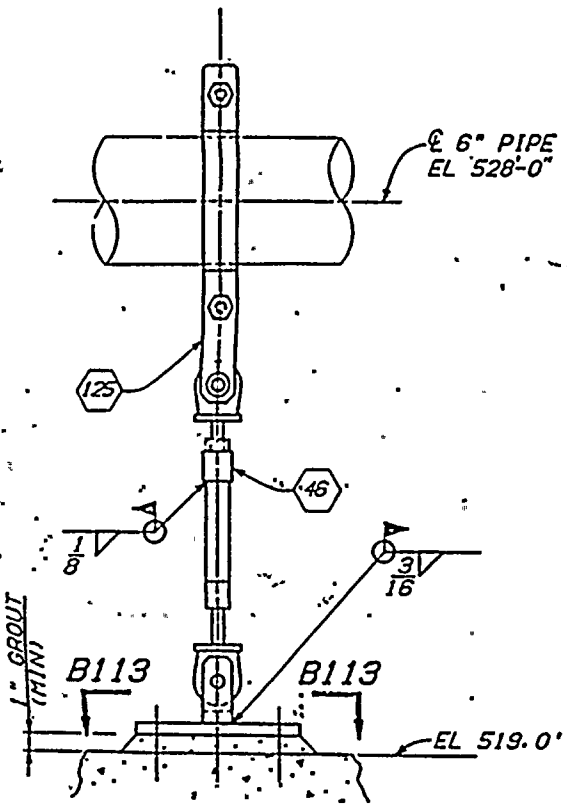

A113-A113

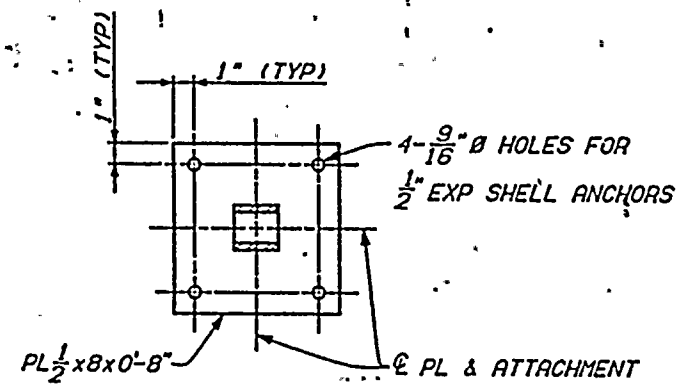

B113-B113

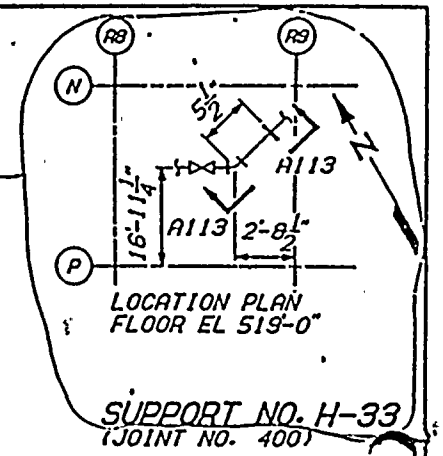

NOTES:
1. FOR GENERAL NOTES SEE 47B435-1.
2. THIS DRAWING SUPERSEDES 47A456-178.

REFERENCE DRAWINGS:
47W2456-3 (PIPING)
47W403-204 (ISOMETRIC)

FIRST ISSUE FOR ECN P-0361 & 2103

NOT TO SCALE

UP-2016-84

POWERHOUSE
REACTOR BUILDING - UNIT 2

MECHANICAL
RCIC SYSTEM
PIPE SUPPORTS

BROWNS FERRY NUCLEAR PLANT
TENNESSEE VALLEY AUTHORITY

47B456-113 R0

B2A946

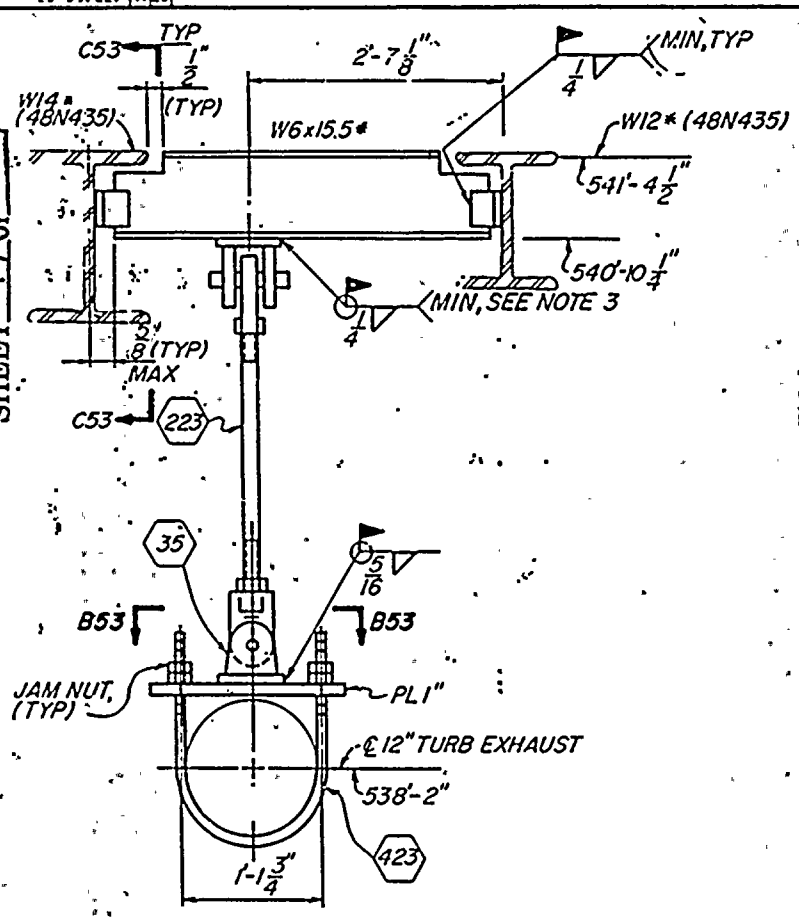

A53 - A53

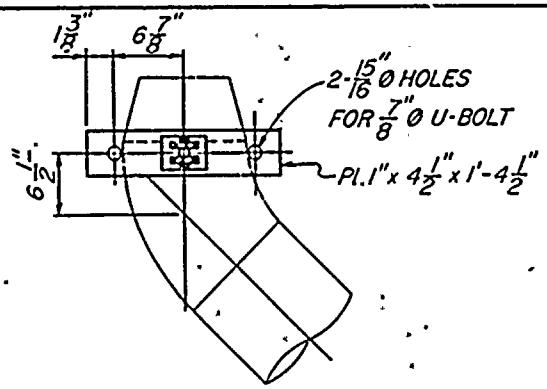

B53 - B53

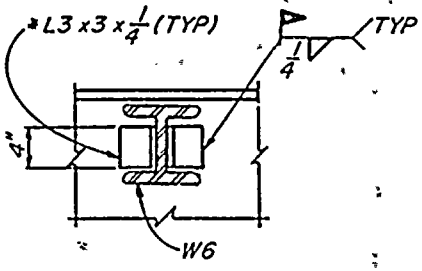

C53 - C53

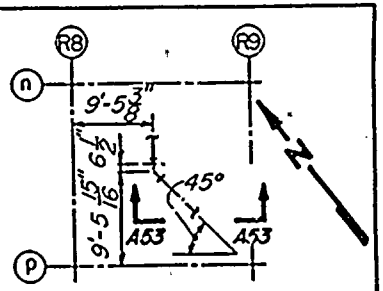

LOCATION PLAN
FLOOR El 519'-0"

SUPPORT NO. H-39
(JOINT 60)

NOTES:

1. FOR GENERAL NOTES SEE DWG. 478435-1.
2. * DENOTES EXISTING STRUCTURAL STEEL.
3. STRUCTURAL ATTACHMENT TO BE WELDED ON ℄ BEAM.
4. THIS DRAWING SUPERSEDES DWG. 47A456-184. REPLACE EXISTING SPRING SUPPORT TO RESTRAINT AS SHOWN.

REFERENCE DRAWINGS:

47W2456-3 (PIPING)
47W456-206 (ISOMETRIC)

FIRST ISSUE FOR ECN P-0361

CALCULATION BRANCH/PROJECT IDENTIFIERS: TDPC20506H39

NOT TO SCALE

P 0361	
REV A53-A53, C53-C53	
POWERHOUSE	
REACTOR BUILDING - UNIT 2	
MECHANICAL	
RCIC SYSTEM	
PIPE SUPPORTS	
BROWNS FERRY NUCLEAR PLANT	
TENNESSEE VALLEY AUTHORITY	
KNOXVILLE 2-5-82	67 M 478456-53 R1

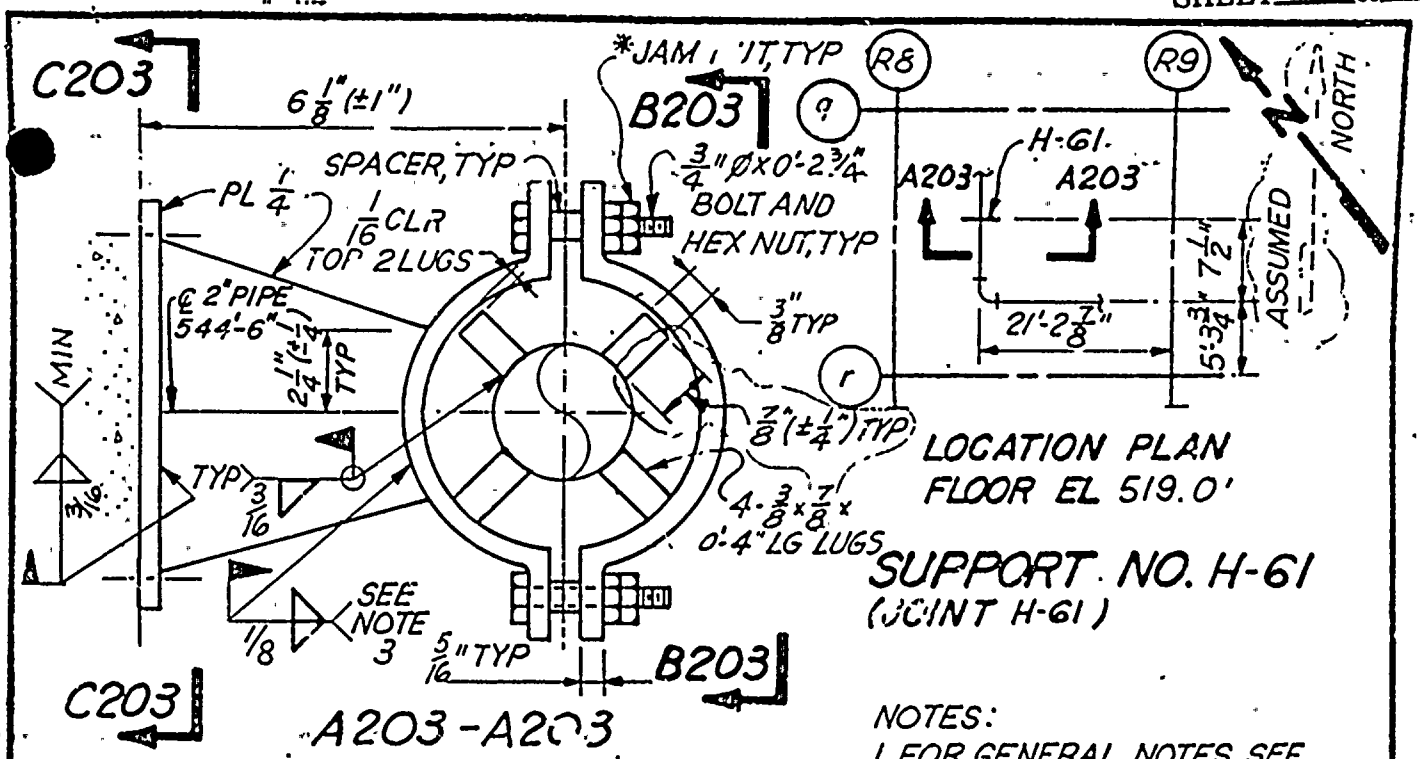

NOTES:

1. FOR GENERAL NOTES SEE 47B435-1.
2. * DENOTES NEW MATERIAL.
3. MODIFY EXISTING WELD AS REQUIRED.

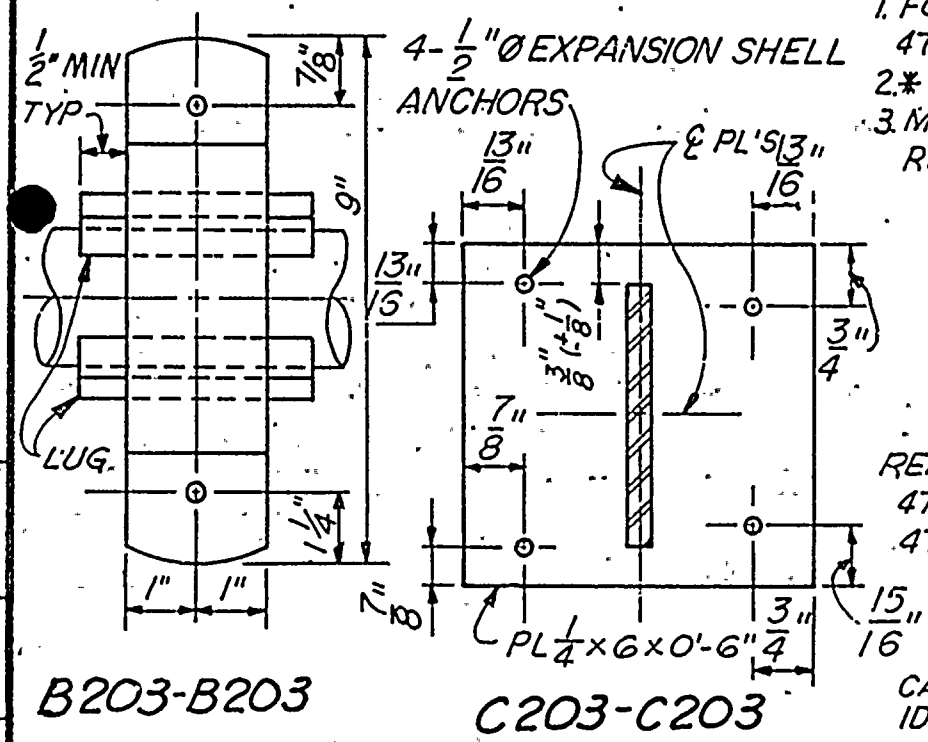

REFERENCE DRAWINGS:
47W452-236 (ISOMETRIC).
47W2456-1 (PIPING)

R6
R7

CALCULATION BRANCH/PROJ IDENTIFIERS: BWPC30459H61

NOT TO SCALE

REV NO.	ECN/FCR	DATE	DRWN	DSGN	CHKD	SUPV	RVWD	APPD	ISSD
6	P-0361	9-8-86	JM	LAR	HRP	RVB	CYS	JMB	JPC
	REMOVED NOTE 4 AND MINOR REVISIONS								
7	P-0361	10-19-86	RCN	RCN	MG	RVB	CYS	JMB	GPS
	REVISED LUGS								

DSGN: D.T. GRAYSON
DRWN: D.T. GRAYSON
CHKD: R.GRAY
SUPV:
INSP: R. NEEDHAM
ENGINEER: R.G. CARSON

POWERHOUSE
REACTOR BUILDING - UNIT 2
MECHANICAL
RCIC SYSTEM
PIPE SUPPORTS

BROWNS FERRY NUCLEAR PLANT
TENNESSEE VALLEY AUTHORITY
DIVISION OF ENGINEERING DESIGN

SUBMITTED	RECOMMENDED	APPROVED
	R.G. Carson	H.C. Russell

KNOXVILLE | 1-3-74 | 67 | M | 47A456-203 R7

RECORD DRAWING AS CONSTRUCTED

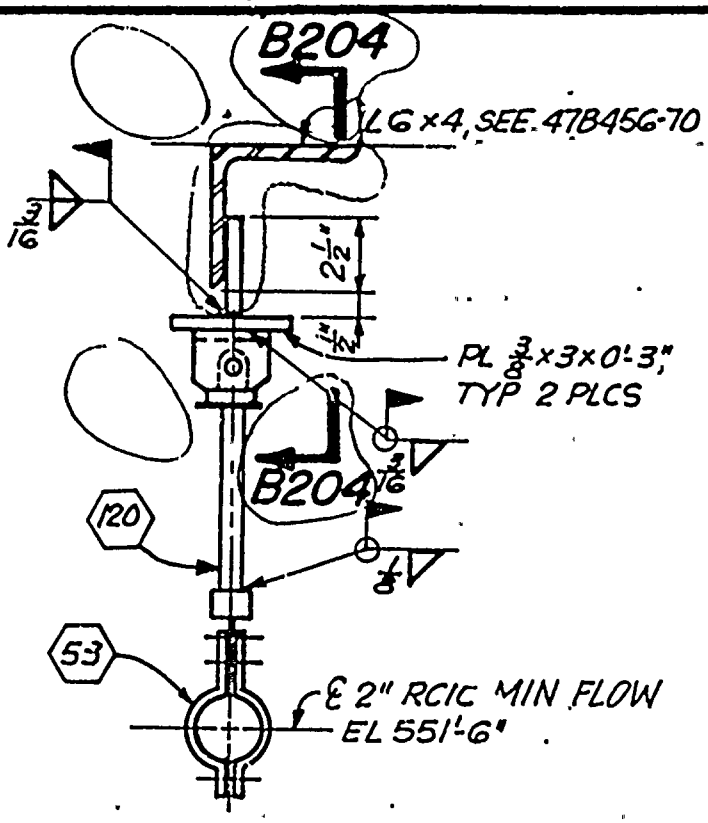

A204-A204

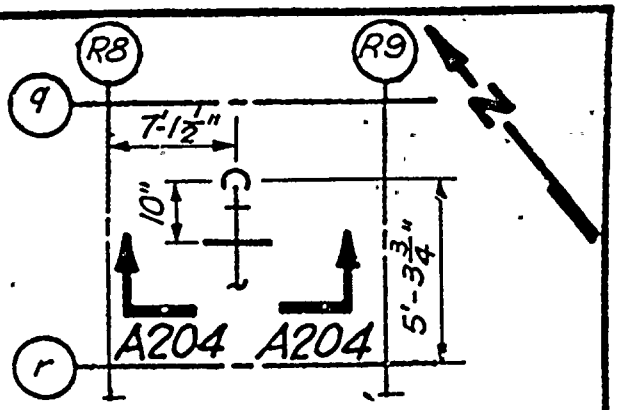

LOCATION PLAN
FLOOR EL 519'-0"

SUPPORT NO. H-62
(JOINT H62)

NOTES:
1. FOR GENERAL NOTES SEE 47B435-1
2. ALL MATERIAL IS EXISTING.

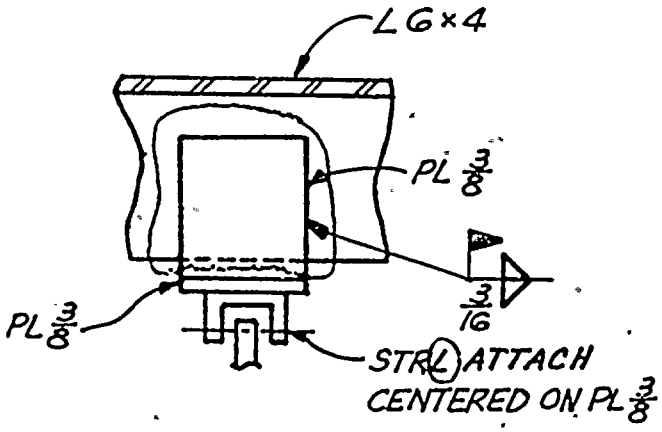

B204-B204

REFERENCE DWGS:
47W456-1 (PIPING)
47W452-236 (ISOMETRIC)
47B452-238 (LOAD TABLE)

REV NO.	ECN NO.	DATE	DRAWN	DESIGNED	CHKD	SUPV	ENGR	MGR	SUBDIVISION	APPD	ISSUED
3	P-0361	11-20-85	RM	FB	CH	TGT	CS	/	CS	/	
	REL ATTACH LUG TO OPP SIDE OF L6x4, ADD NOTE 2 & REF DWG										
2	P-0361	9-13-84	TFK	EP	ARL			/	CS		
	SUPPORT REDESIGNED & REDRAWN										
1	L-1000	11-74	-	GM	DRG	BH	-	-	RC	GM	HRH
	FC 682 - L1000										

DRAWN R.T. GARTON
DESIGN R.T. GARTON
CHKD R. GRAY
SUPV B. NEEDHAM
MGR
ENGINEER R.G. CRESSY

NOT TO SCALE

POWERHOUSE
REACTOR BUILDING - UNIT 2

MECHANICAL
RCIC SYSTEM
PIPE SUPPORTS

BROWNS FERRY NUCLEAR PLANT
TENNESSEE VALLEY AUTHORITY
DIVISION OF ENGINEERING DESIGN

SUBMITTED	RECOMMENDED	APPROVED
—	R.B. Clasby	H.C. Russell

KNOXVILLE	1-3-74	67M	47A456-204 R3

AS CONSTRUCTED

L7-618848

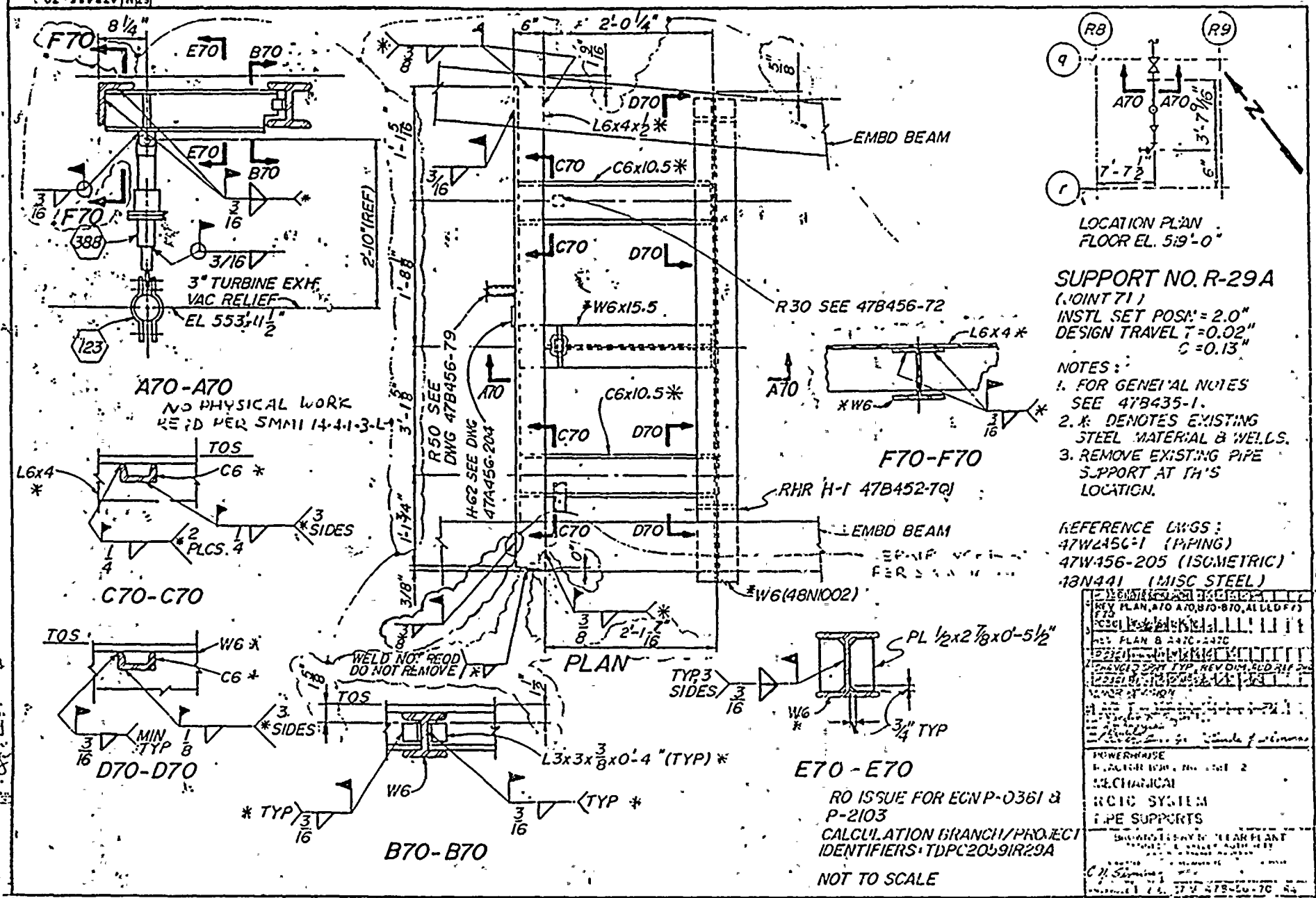
F70
E70
B70
8 1/4"
3" TURBINE EXH. VAC RELIEF
EL 553'-11 1/2"
388
123
2'-10"(REF)
A70-A70
NO PHYSICAL WORK REQ'D PER SMNI 14.4.1.3.L
TOS
L6x4
C6
3 SIDES
2 PLCS. 4
C70-C70
W6
MIN TYP 1/8
D70-D70
WELD NOT REQ'D DO NOT REMOVE
L3x3x3/8x0'-4" (TYP)
TYP
B70-B70
6"
2'-0 1/4"
D70
L6x4x1/2
EMBD BEAM
C70
C6x10.5
W6x15.5
R30 SEE 47B456-72
R50 SEE DWG 47B456-79
H-62 SEE DWG 47A456-204
RHR H-1 47B452-70
W6(48N1002)
PLAN
L6x4
F70-F70
PL 1/2x2 7/8x0'-5 1/2"
TYP 3 SIDES
3/4" TYP
E70-E70
R8
R9
A70
LOCATION PLAN
FLOOR EL. 519'-0"
SUPPORT NO. R-29A
(JOINT 71)
INSTL SET POSN = 2.0"
DESIGN TRAVEL T = 0.02"
C = 0.13"
NOTES:
1. FOR GENERAL NOTES SEE 47B435-1.
2. * DENOTES EXISTING STEEL MATERIAL & WELDS.
3. REMOVE EXISTING PIPE SUPPORT AT THIS LOCATION.
REFERENCE DWGS:
47W2456-1 (PIPING)
47W456-205 (ISOMETRIC)
48N441 (MISC STEEL)
RO ISSUE FOR ECN P-0361 & P-2103
CALCULATION BRANCH/PROJECT IDENTIFIERS: TDPC2059IR29A
NOT TO SCALE
POWERHOUSE
MECHANICAL
RCIC SYSTEM
PIPE SUPPORTS

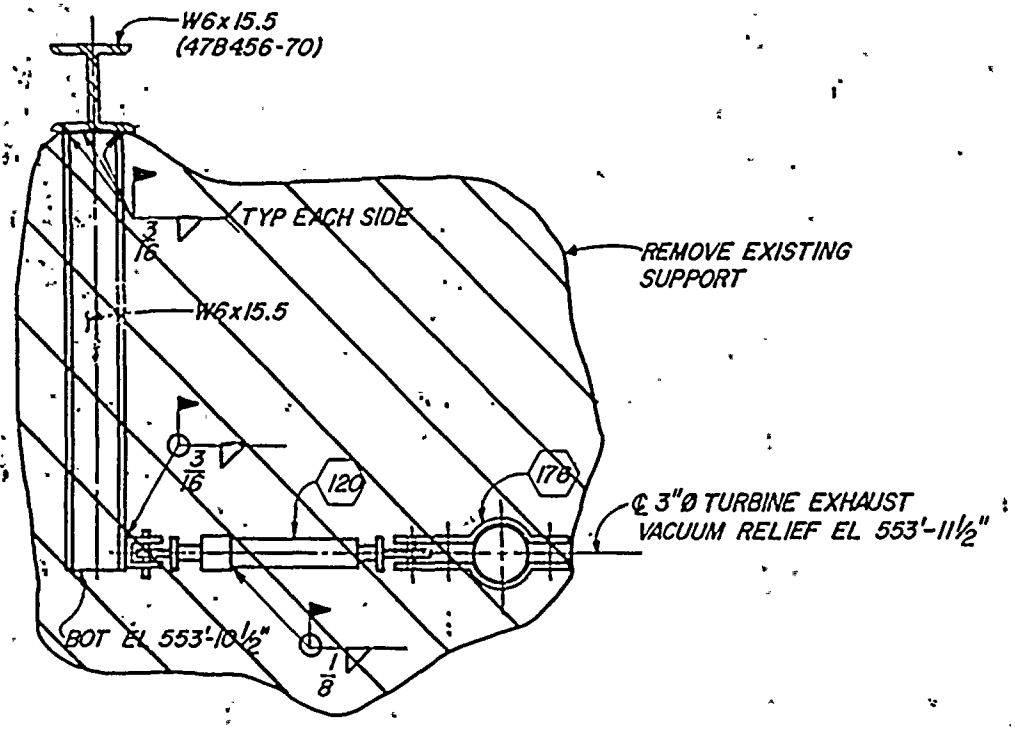

A71-A71

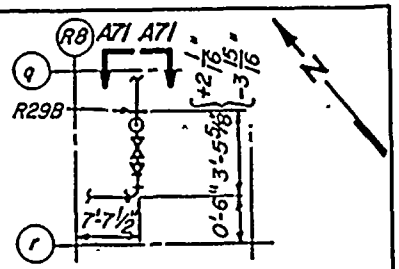

LOCATION PLAN
FLOOR EL 519'-0"

SUPPORT NO.R-29B
(JOINT 72)

NOTES:
1. FOR GENERAL NOTES SEE DRAWING 47B435-1.

REFERENCE DRAWINGS:
47W2456-1 (PIPING)
47W456-205 (ISOMETRIC)

RO ISSUE FOR ECN P-0361
CALCULATION BRANCH/PROJECT IDENTIFIERS: TDPC20592R29B

NOT TO SCALE

REVISED AND REDRAWN TO SHOW SUPPORT AS INSTALLED AND REMOVE.	
POWERHOUSE REACTOR BUILDING – UNIT 2	
MECHANICAL RCIC SYSTEM PIPE SUPPORTS	
BROWNS FERRY NUCLEAR PLANT TENNESSEE VALLEY AUTHORITY	
KNOXVILLE 1-18-12 67 M 47B456-71 R1	

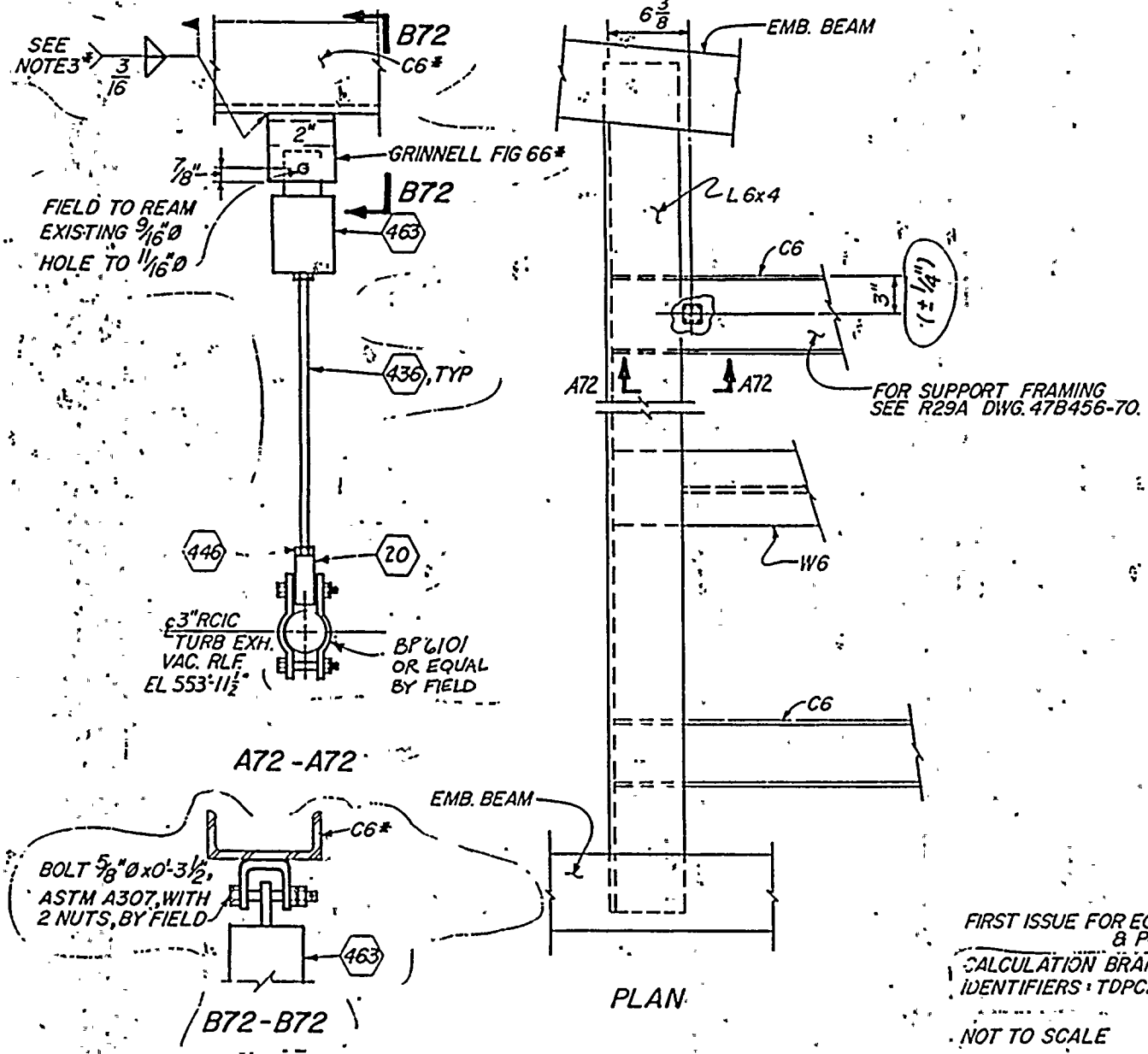

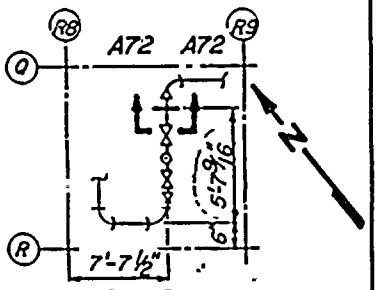

LOCATION PLAN
FLOOR EL. 519'-0"

SUPPORT NO. R-30
(JOINT 55)

LOAD SETTING RANGE
160 LBS TO 210 LBS
MAX THERMAL MVT
± 0.22"

NOTES:
1. FOR GENERAL NOTES SEE DWG 47B435-1.
2. * DENOTES EXISTING MAT'L.
3. ADDITIONAL WELD METAL DEPOSITED MAY REMAIN IN PLACE.

REFERENCE DRAWINGS:
47W2456-1 (PIPING)
47W456-205 (ISOMETRIC)
48N441 (MISC STEEL)

FIRST ISSUE FOR ECN P-2103 & P-0361.

CALCULATION BRANCH/PROJECT IDENTIFIERS: TDPC20603R30.

NOT TO SCALE

2	P0361		ADDED SUPPORT, REVISED LOCATION CHANGE JOINT NO, NOTES 2 & 3.
1	P0361		REVISED LOCATION, REMOVE SUPPORT, CHANGE JOINT NO

POWERHOUSE
REACTOR BUILDING - UNIT 2
MECHANICAL
RCIC SYSTEM
PIPE SUPPORTS

BROWNS FERRY NUCLEAR PLANT
TENNESSEE VALLEY AUTHORITY

DRAWN	REGISTERED	APPROVED
G. M. Simmons	[illegible]	[illegible]

KNOXVILLE 1-7-82 | 67M 478456-72 | R2

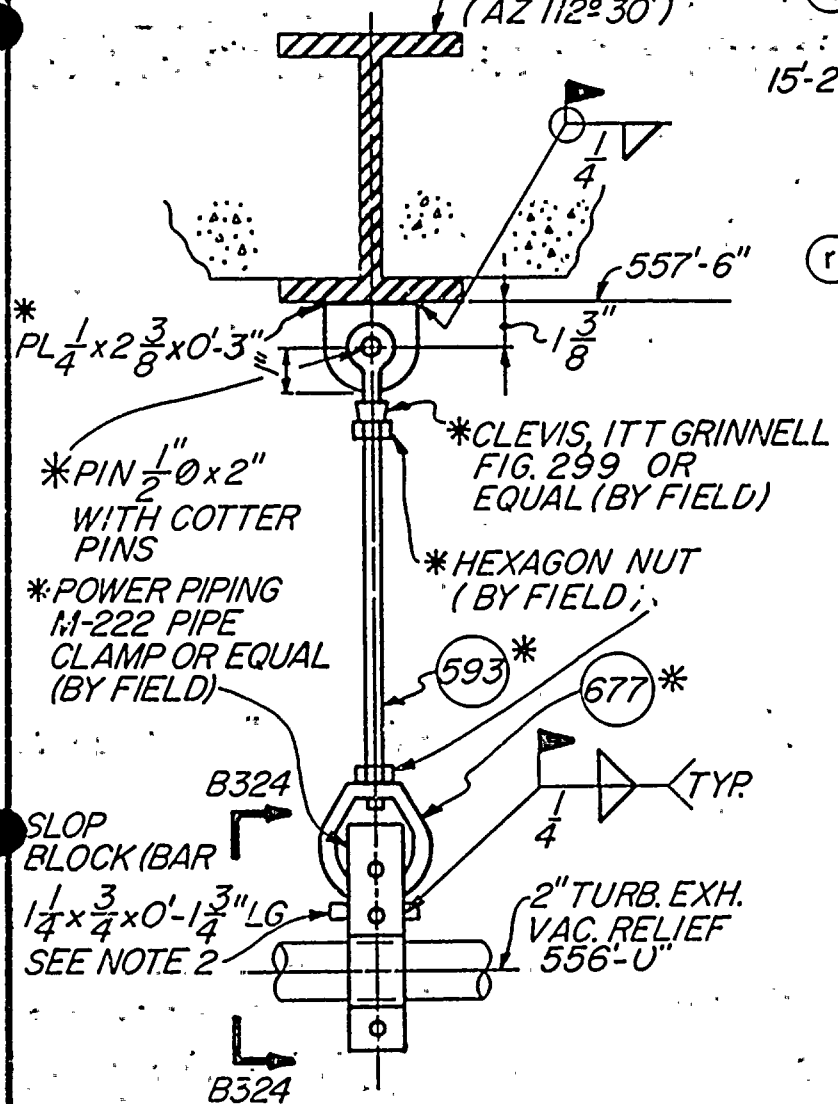

A324-A324

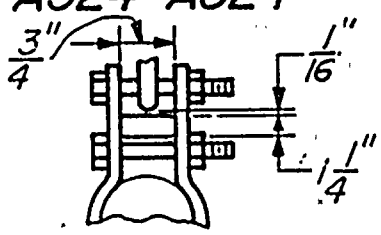

B324-B324

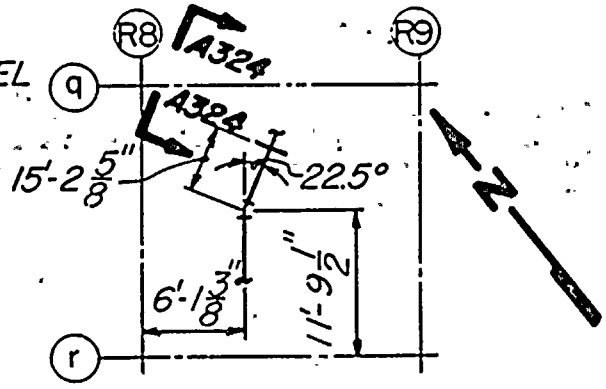

LOCATION PLAN
FLOOR EL. 519'-0"

SUPPORT NO. R-47
(JOINT RAH 6)

NOTES:

1. FOR GENERAL NOTES SEE DWG. 47B435-1.
2. GRIND SLOP BLOCK AS REQ'D FOR FIT-UP WITH CLAMP. POSITION BLOCK FOR DOUBLE FILLETS ON BOTH ENDS.
3. * DENOTES EXISTING MATERIAL.

REFERENCE DRAWINGS:
47W456-SERIES (PIPING)
48N441 (TORUS ROOF STEEL)
47W456-207 (ISOMETRIC)

CALCULATION BRANCH/PROJECT IDENTIFIER: TDPC20598R47

FIRST ISSUE FOR ECN P-2103 & P-0361

NOT TO SCALE

REV NO	ECN NO.	DATE	DSGN	DRWN	CHKD	SUPV	ENGR	INSP	SUBM	RECM	APPD
1	P0361	12-23-85	RP	TC	JV	TG	CNS		CNS		

REVISED A324-A324 & B324-B324; MINOR REV

DSGN D.M. Hoover
DRWN P. Puckett
CHKD
SUPV
INSP
ENGINEER Claude N. Simms

POWERHOUSE
REACTOR BUILDING - UNIT 2

MECHANICAL
RCIC SYSTEM
PIPE SUPPORTS

BROWNS FERRY NUCLEAR PLANT
TENNESSEE VALLEY AUTHORITY
DIVISION OF ENGINEERING DESIGN

SUBMITTED | RECOMMENDED | APPROVED

KNOXVILLE | 2-5-82 | 67 | M | 47A456-324R1

RECORD DRAWING AS CONSTRUCTED

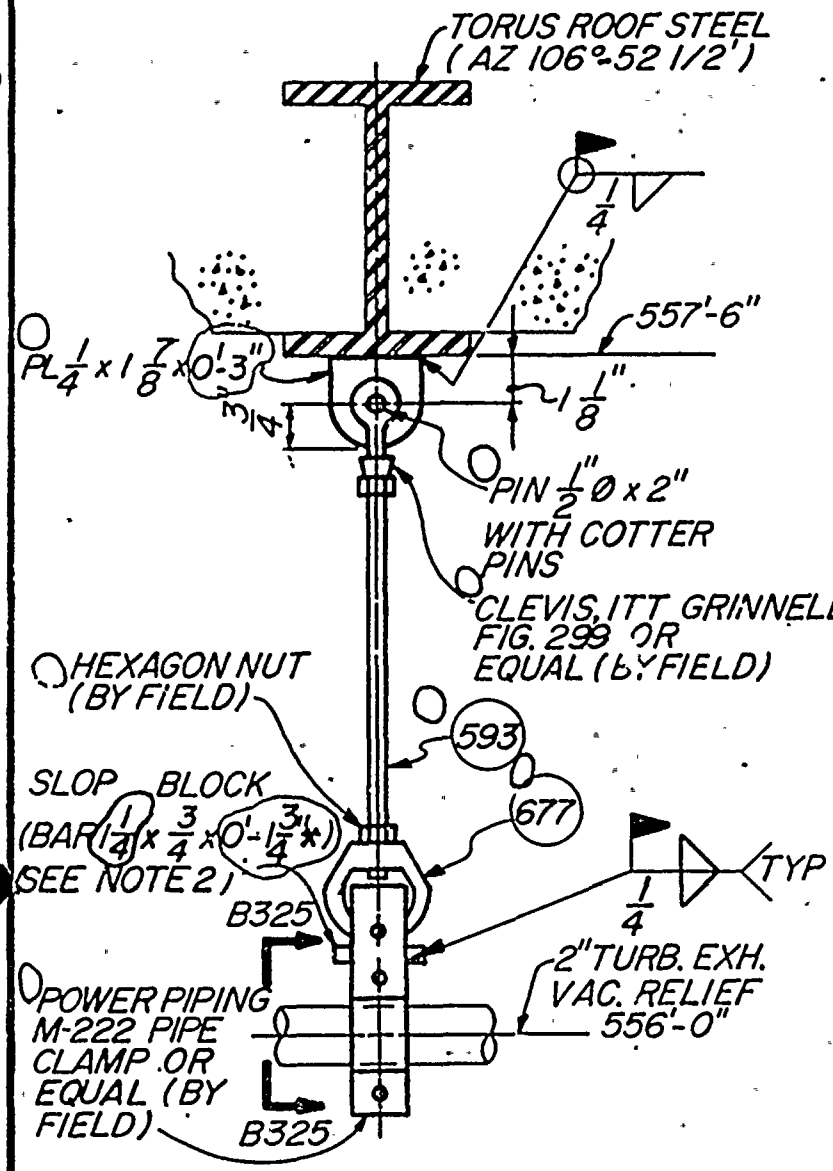

A325-A325

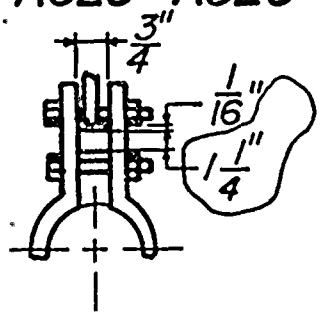

B325-B325

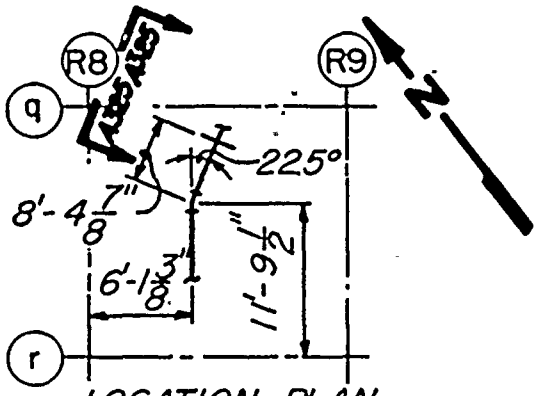

LOCATION PLAN
FLOOR EL.519'-0"

SUPPORT NO. R-48
(JOINT RAH 5)

NOTES:

1. FOR GENERAL NOTES SEE DWG. 47B435-1.
2. GRIND SLOP BLOCK AS REQ'D FOR FIT-UP WITH CLAMP. POSITION BLOCK FOR DOUBLE FILLETS ON BOTH ENDS.
3. * DENOTES NEW MATERIAL: ALL OTHER MATERIAL IS EXISTING.

REFERENCE DRAWINGS:
47W456-SERIES (PIPING)
48N441 (TORUS ROOF STEEL)
47W456-207 (ISOMETRIC)

FIRST ISSUE PER ECN P-2103 & P-0361.

NOT TO SCALE

REV NO.	ECN NO.	DATE	DSGN	DRWN	CHKD	SUPV	ENGR	INSP	SUBM	RECM	APPD				ESKD
1	P0361	11-29-81	CH	JT											NRB
REV A325-A325, B325-B325 & NOTES															

DSGN D. M. Hamer
DRWN P. Eckert
CHKD J. Bentley
SUPV W. Sullivan
INSP
ENGINEER Claude N. Simms

POWERHOUSE
REACTOR BUILDING - UNIT 2

MECHANICAL
RCIC SYSTEM
PIPE SUPPORTS

BROWNS FERRY NUCLEAR PLANT
TENNESSEE VALLEY AUTHORITY
DIVISION OF ENGINEERING DESIGN

SUBMITTED	RECOMMENDED	APPROVED
C. N. Simms	J. B. Lewis Jr.	W. R. Wolfe

KNOXVILLE	2-5-82	67	M	47A456-325 R1

RECORD DRAWING AS CONSTRUCTED

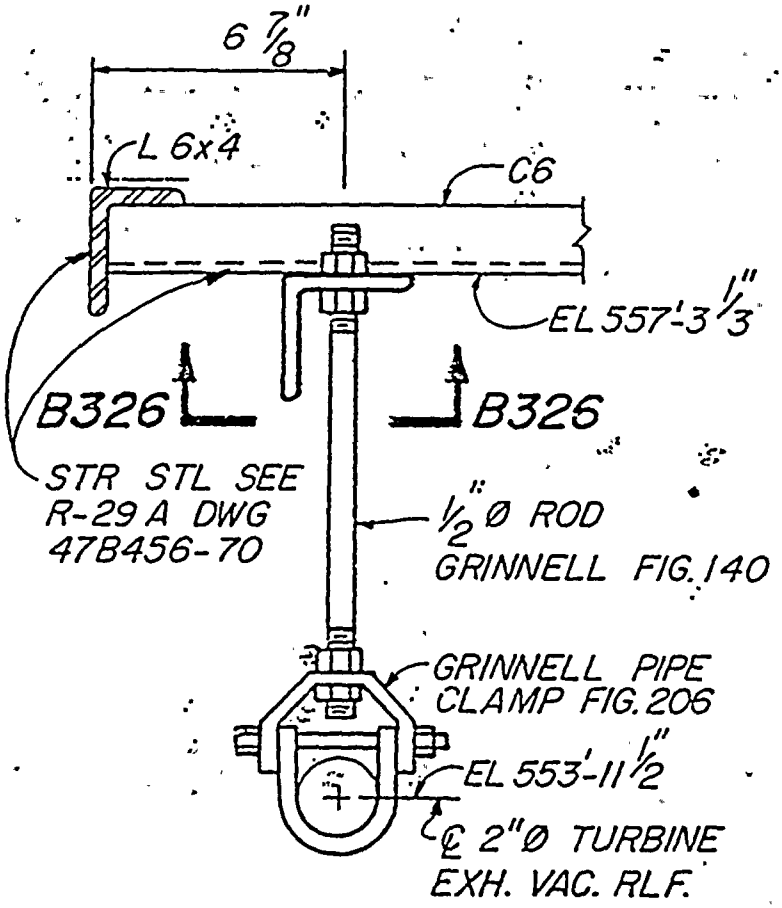

A326 - A326

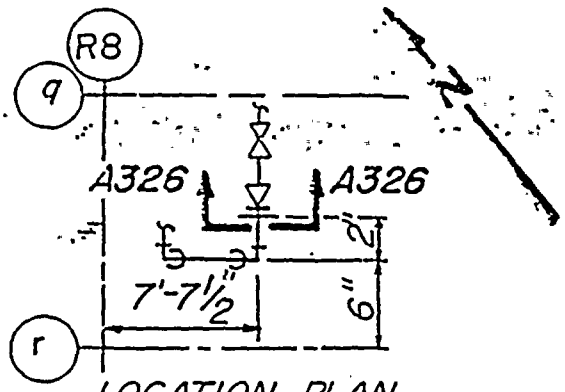

LOCATION PLAN
FLOOR EL. 519'-0"

SUPPORT NO. R49
(JOINT 165)

P0361

NOTES:

1. FOR GENERAL NOTES SEE DWG 47B435-1.

REFERENCE DRAWINGS:

P0361 47W456-1 PIPING
47W456-205 ISOMETRIC

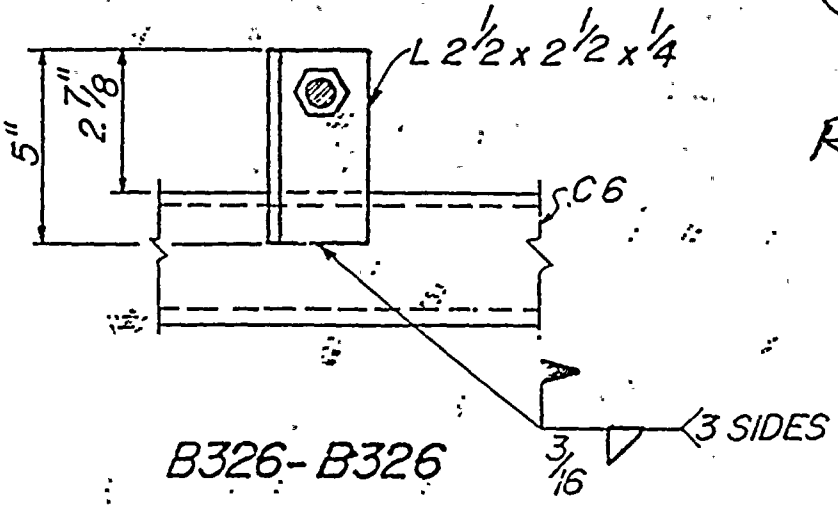

B326 - B326

REMOVED

FIRST ISSUE PER ECN P-2103 & P-0361

NOT TO SCALE

REV NO	ECN NO.	DATE	DSGN	DRWN	CHKD	SUPV	ENGR	INSP	SUBM	RECM	APPD

DSGN Landon R. Taylor
DRWN Catherine A. Fiddler
CHKD
SUPV
INSP
ENGINEER Claude N. Simmons

POWERHOUSE
REACTOR BUILDING - UNIT 2

MECHANICAL
RCIC SYSTEM
PIPE SUPPORTS

BROWNS FERRY NUCLEAR PLANT
TENNESSEE VALLEY AUTHORITY
DIVISION OF ENGINEERING DESIGN

SUBMITTED	RECOMMENDED	APPROVED
C. N. Simmons		

KNOXVILLE	1-7-82	67	M	47A456-326 R0

RECORD DRAWING AS CONSTRUCTED

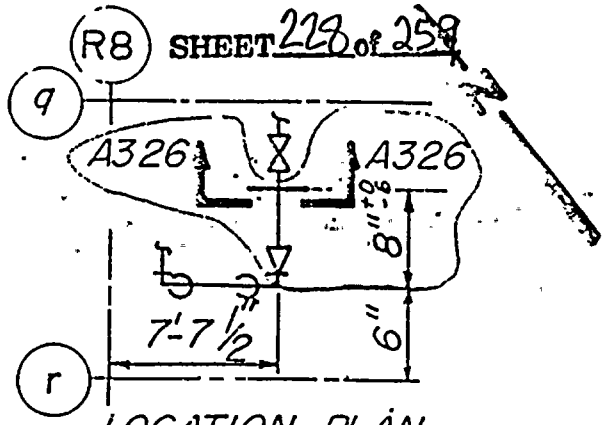

LOCATION PLAN
FLOOR EL. 519'-0"

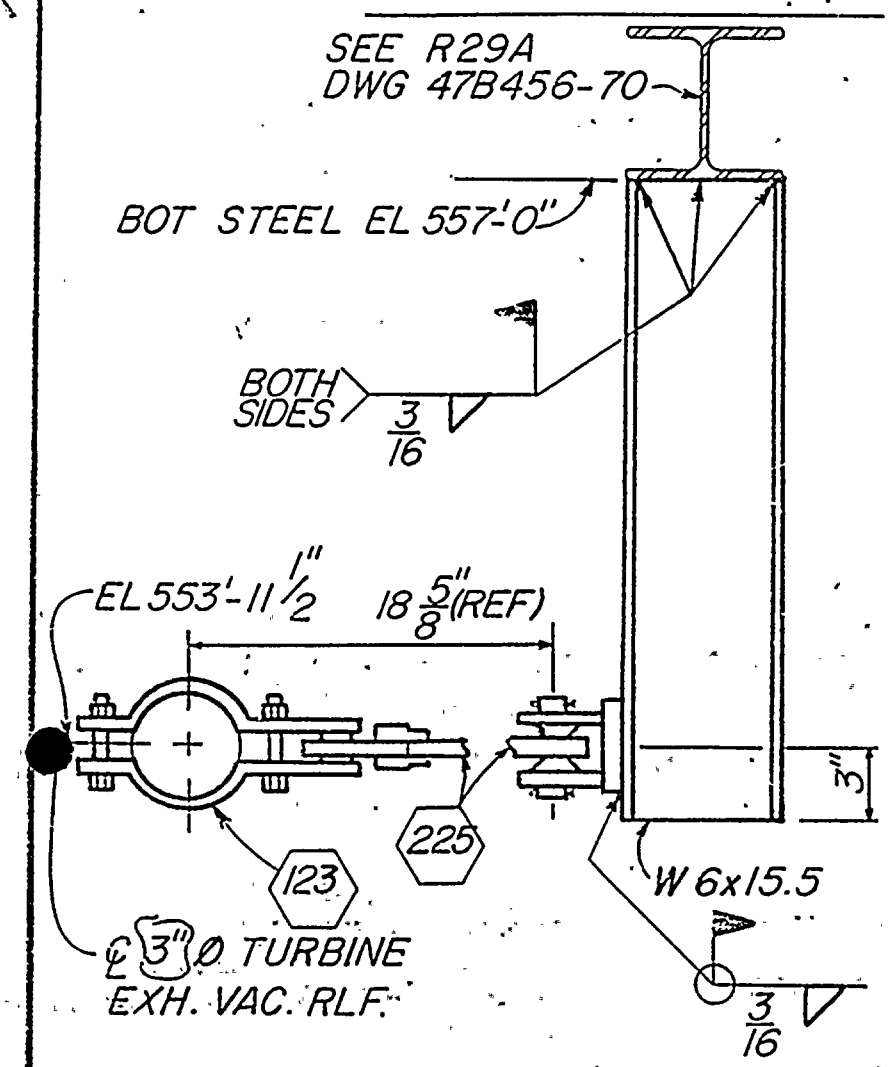

A326 - A326

SUPPORT NO. R49
(JOINT 165)

NOTES:

1. FOR GENERAL NOTES SEE DRAWING 47B435-1.
2. REMOVE EXISTING VERT ROD HANGER SUPPORT R49, AND LEAVE STRL ANGLE ATTACHMENT.

REFERENCE DRAWINGS:
47W456-1 PIPING
47W456-205 ISOMETRIC

REMOVED

FIRST ISSUE PER ECN P-2103 & P-0361

NOT TO SCALE

REV NO.	ECN NO.	DATE	DSGN	DRWN	CHKD	SUPV	ENGR	INSP	SUBM	RECM	APPD
2.	P-0361	2-22-82	LRT	REC	JB		CS		CS		
REVISED LOCATION PLAN & SECTION A326-A326											
	P0361	1-18-82	LRT	Ca			CNS		CJS		
REDESIGN & REDRAWN FOR DELETION OF EXISTING HANGER											

DSGN Landon R. Taylor
DRWN Catherine G. Eddis
CHKD
INSP
ENGINEER

POWERHOUSE
REACTOR BUILDING - UNIT 2

MECHANICAL
RHR SYSTEM
PIPE SUPPORTS

BROWNS FERRY NUCLEAR PLANT
TENNESSEE VALLEY AUTHORITY
DIVISION OF ENGINEERING DESIGN

SUBMITTED C. D. Simmons | RECOMMENDED | APPROVED

X-218

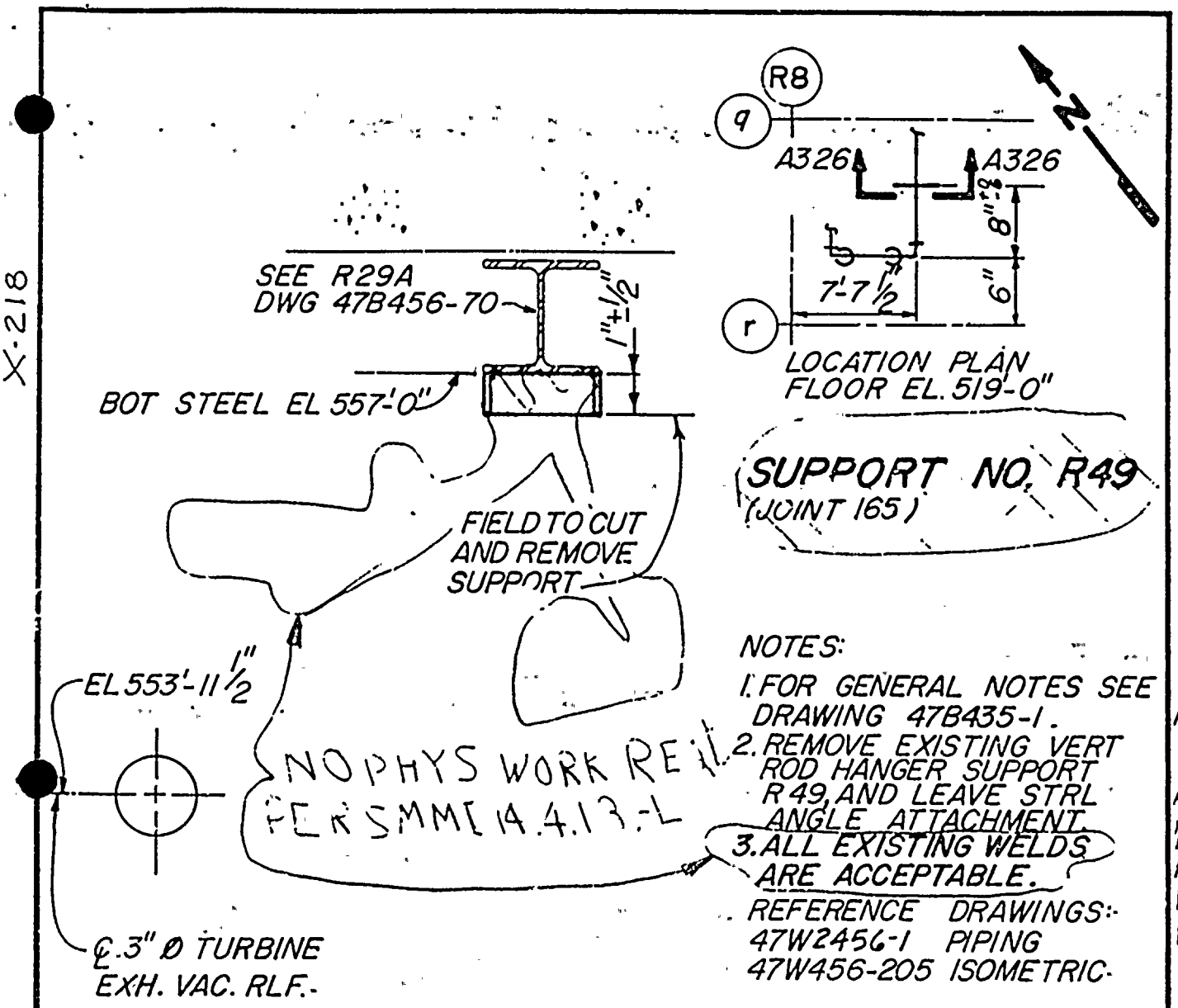

SUPPORT NO. R49
(JOINT 165)

NOTES:

1. FOR GENERAL NOTES SEE DRAWING 47B435-1.
2. REMOVE EXISTING VERT ROD HANGER SUPPORT R49, AND LEAVE STRL ANGLE ATTACHMENT.
3. ALL EXISTING WELDS ARE ACCEPTABLE.

REFERENCE DRAWINGS:-
47W2456-1 PIPING
47W456-205 ISOMETRIC

A326 - A326

FIRST ISSUE PER ECN P-2103 & P-0361
CALCULATION BRANCH/PROJECT IDENTIFIERS: TDPC20596R49
NOT TO SCALE

REV NO.	ECN NO.	DATE	DRWN	DSGN	CHKD	SUPV	RVWD	APPD	ISSD
6	P-0361	4-21-86							
REV A326-A326, ADDED NOTE 3									

DSGN Landon R. Jayes
DRWN Catherine A. Roddis
CHKD
SUPV
INSP
ENGINEER Claude N. Simms

POWERHOUSE
REACTOR BUILDING - UNIT 2

MECHANICAL
RCIC SYSTEM
PIPE SUPPORTS

BROWNS FERRY NUCLEAR PLANT
TENNESSEE VALLEY AUTHORITY
DIVISION OF ENGINEERING DESIGN

SUBMITTED	RECOMMENDED	APPROVED
C. N. Simms	J. Marshall	G. B. Dallman

KNOXVILLE | 1-7-82 | 67 | M | 47A456-326 R6

RECORD DRAWING AS CONSTRUCTED

MF
R0
R1
P2
R-1
R5
P6

SHEET 230 of 259

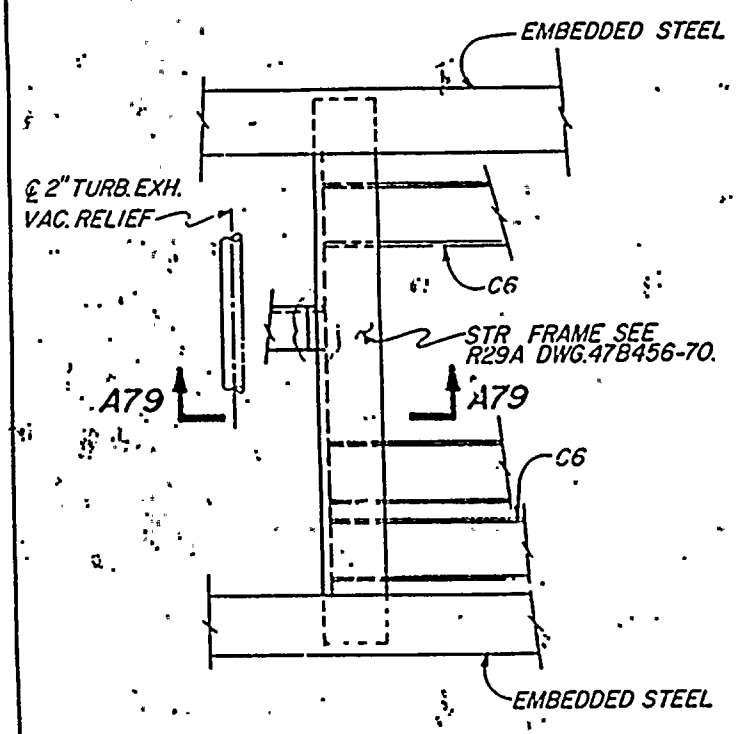

PLAN

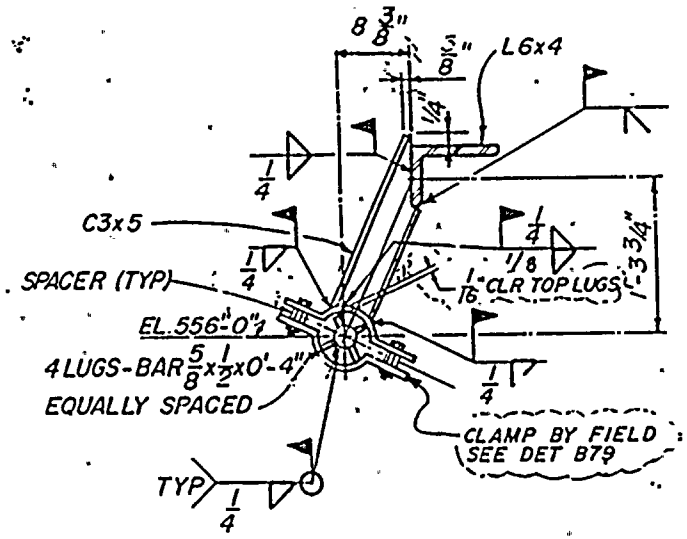

A79-A79

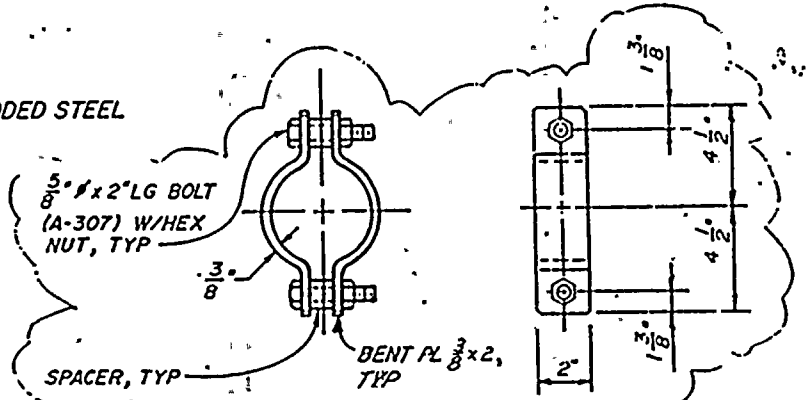

DET B79

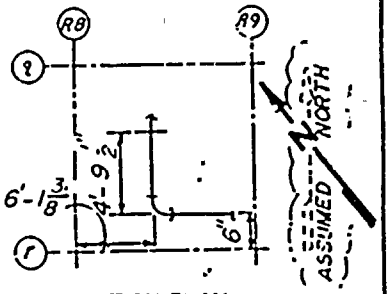

LOCATION PLAN
FLOOR EL 519'-0"

SUPPORT NO. R-50
(JOINT 210)

NOTES:
1. FOR GENERAL NOTES SEE DWG 47B435-1.
2. WELDS SHOWN ARE THE MINIMUM WELD REQUIREMENT.

REFERENCE DRAWINGS:
47W456-205 (ISOMETRIC)
47W2456-1 (PIPING)

FIRST ISSUE FOR ECN P-0361 & P-2103

CALCULATION BRANCH/PROJECT IDENTIFIERS: TDPC20597R50

NOT TO SCALE

4	P-0361		
3	P-0361		
2	P-0361		
1	P-0361		
0			

ADDED DET B79 & MISC REVS
REV A79-A79

POWERHOUSE
REACTOR BUILDING - UNIT 2
MECHANICAL
RCIC SYSTEM
PIPE SUPPORTS

BROWNS FERRY NUCLEAR PLANT
TENNESSEE VALLEY AUTHORITY

67M 478456-79 R4

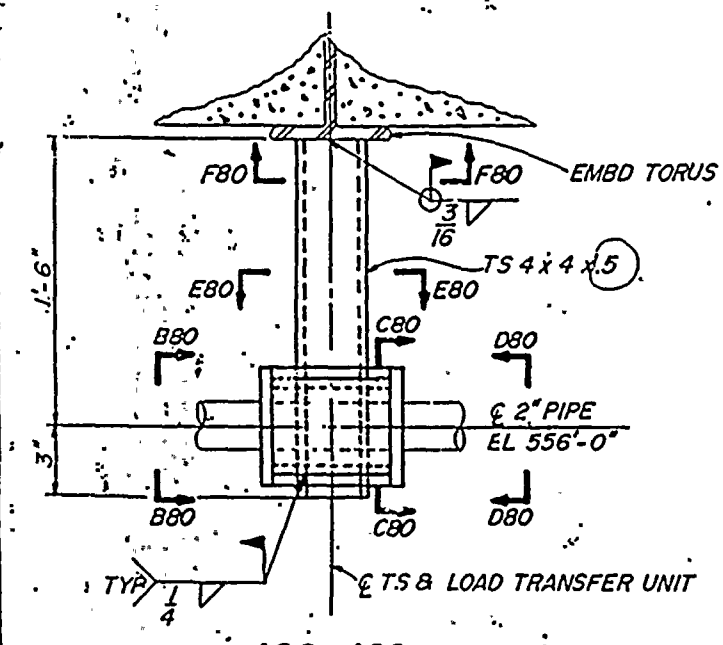

A80-A80

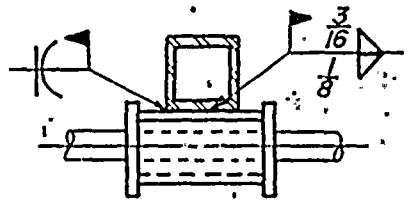

E80-E80

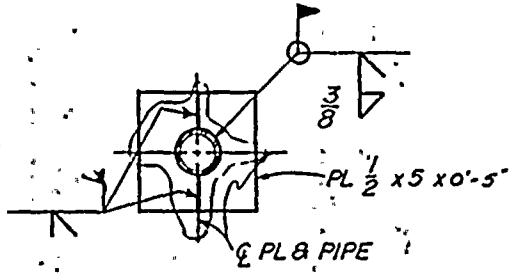

D80-D80

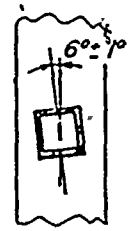

F80-F80

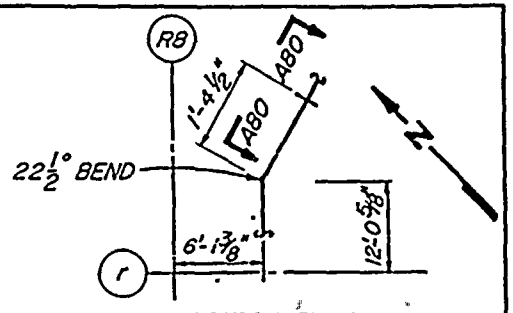

LOCATION PLAN
FLOOR E.L. 519'-0"

SUPPORT NO. R-51

(JOINT 240)

NOTES:
1. FOR GENERAL NOTES SEE 47B435-1.
2. REMOVE EXISTING PIPE SUPPORT AT THIS LOCATION, INCLUDING LUG WELDED TO TORUS ROOF STEEL, AND REPLACE WITH SUPPORT SHOWN.

REFERENCE DWGS:
47W456-205 (ISOMETRIC)
47W2456-1 (PIPING)

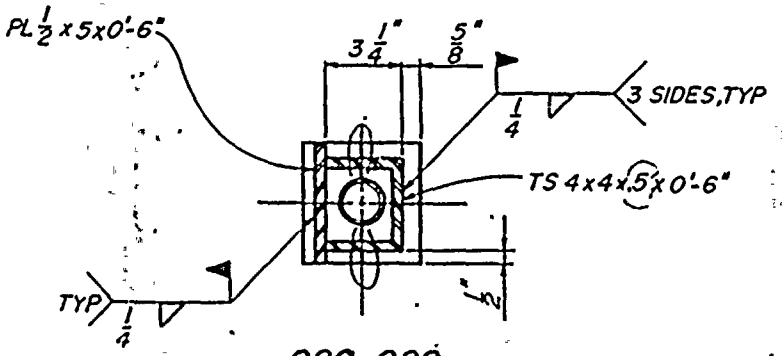

C80-C80

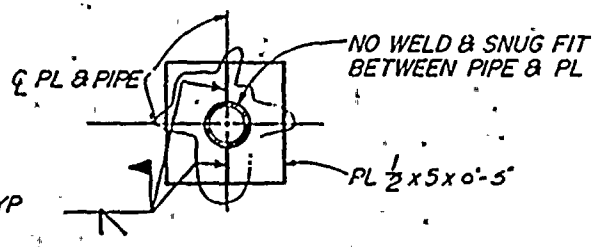

B80-B80

FIRST ISSUE FOR ECN P-2103

CALCULATION BRANCH/PROJECT IDENTIFIERS: TDPC20600R51

NOT TO SCALE

5	P 0361				
4	REV B80-B80, C80-C80 & D80-D80.				
3					
2					
1					

POWERHOUSE
REACTOR BUILDING-UNIT 2

MECHANICAL
RCIC SYSTEM
PIPE SUPPORTS

BROWNS FERRY NUCLEAR PLANT
TENNESSEE VALLEY AUTHORITY

KNOXVILLE | 1-15 | 87 | M | 47D456-80 | R5

SHEET 231 of 259

THIS PAGE IS INTENTIONALLY LEFT BLANK
(Used for page numbering purposes only)

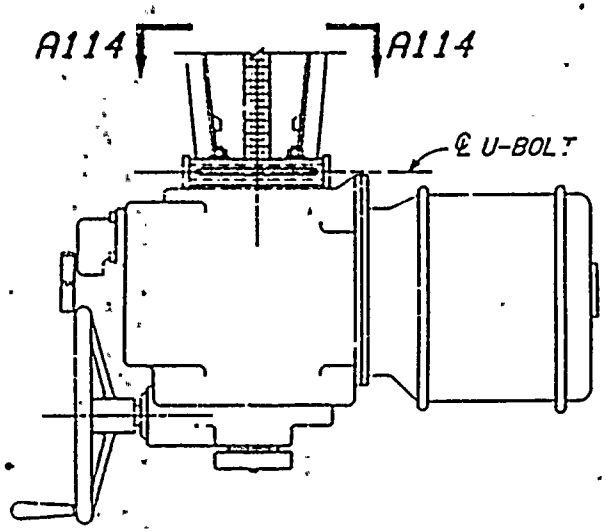

PLAN

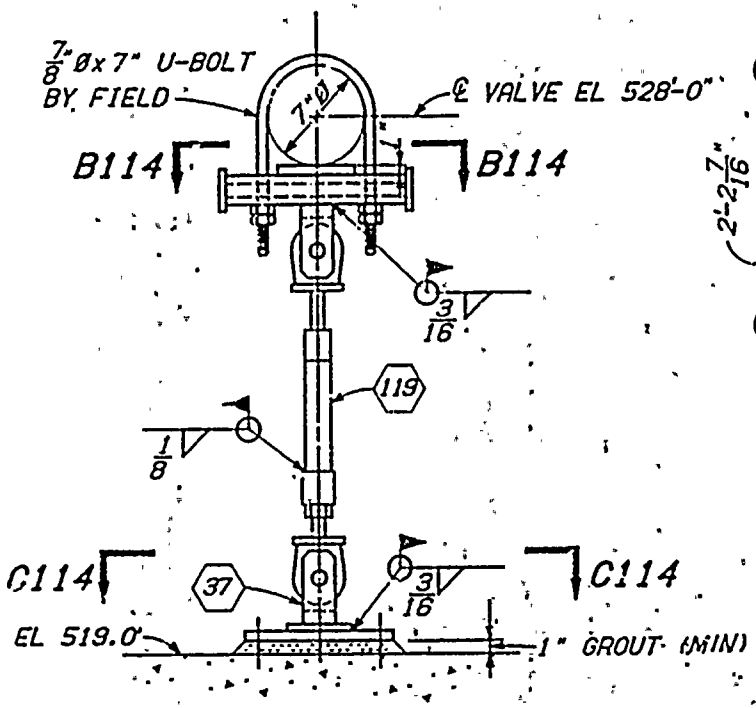

A114-A114

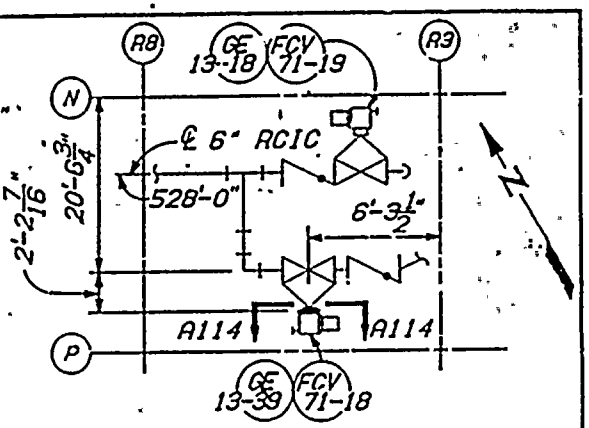

LOCATION PLAN
FLOOR EL 519'-0"

SUPPORT NO. R-56
(JOINT RC6)

NOTES:
1. FOR GENERAL NOTES SEE DRAWING 47B435-1.

REFERENCE DRAWINGS:
47W2456-3 (PIPING)
47W403-204 (ISOMETRIC)

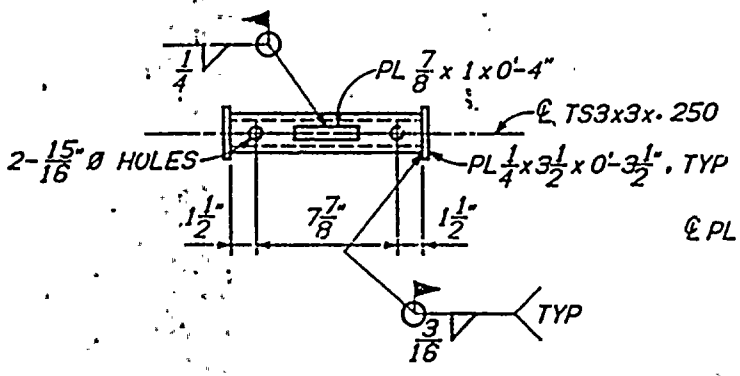

B114-B114

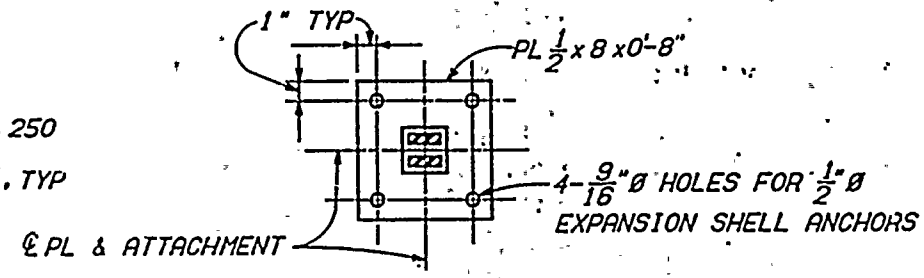

C114-C114

FIRST ISSUE FOR ECN P-0361

NOT TO SCALE

POWERHOUSE
REACTOR BUILDING - UNIT 2

MECHANICAL
RCIC SYSTEM
PIPE SUPPORTS

BROWNS FERRY NUCLEAR PLANT
TENNESSEE VALLEY AUTHORITY

9-21-89 | 87 | 47B456-114 | R0

SHEET 234 of 259

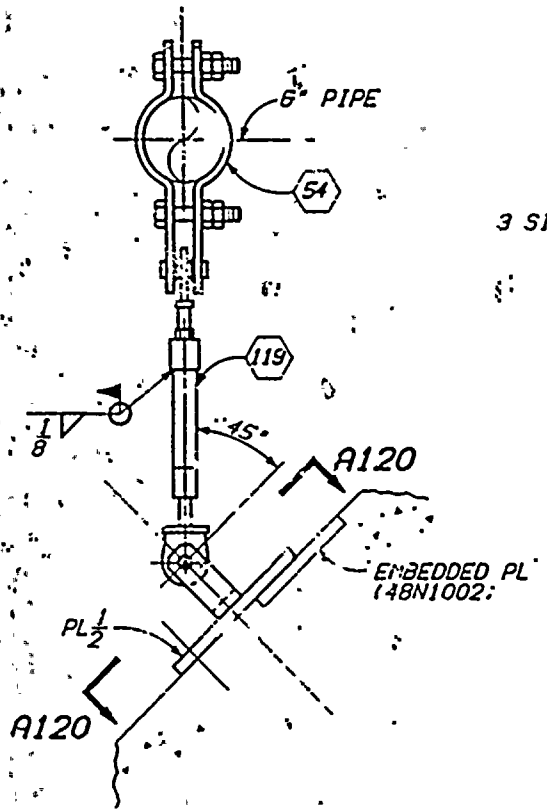

PLAN

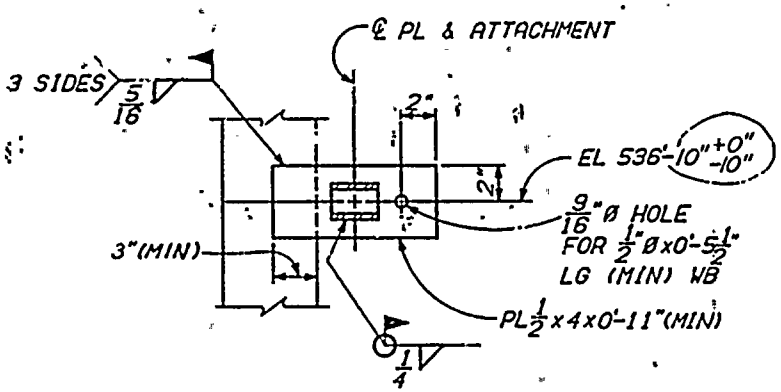

A120-A120

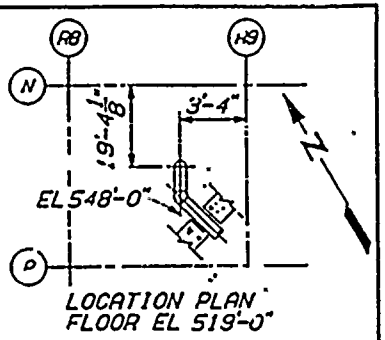

LOCATION PLAN
FLOOR EL 519'-0"

SUPPORT NO. R-61
(JOINT RC28)

NOTES:
1. FOR GENERAL NOTES SEE 47B435-1.

REFERENCE DRAWINGS:
47W2456-4 (PIPING)
47W403-204 (GEOMETRIC)
47B403-211 (LOADS)

REV A120-A120

ISSUE FOR ECN P-0361

CALCULATION BRANCH/PROJECT IDENTIFIERS: BWPC210711261

NOT TO SCALE

POWERHOUSE
REACTOR BUILDING

MECHANICAL
RCIC SYSTEM
PIPE SUPPORTS

BROWNS FERRY NUCLEAR PLANT
TENNESSEE VALLEY AUTHORITY

47W456-120

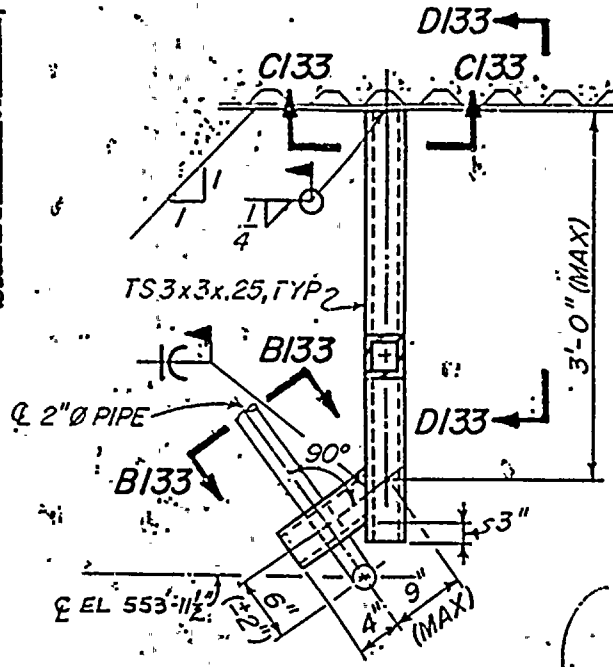

A133-A133

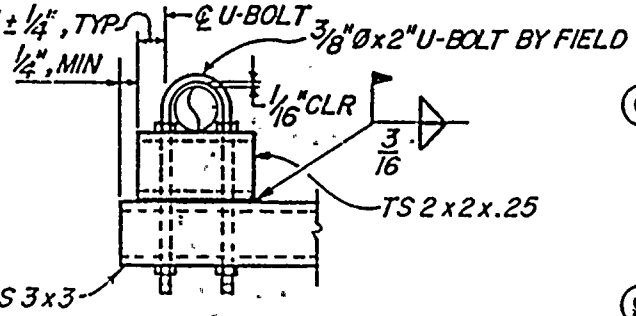

B133-B133
(ROTATED)

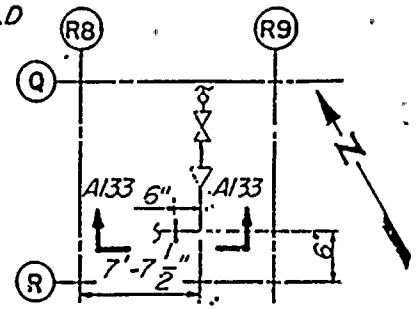

LOCATION PLAN
FLOOR EL 519'-0"

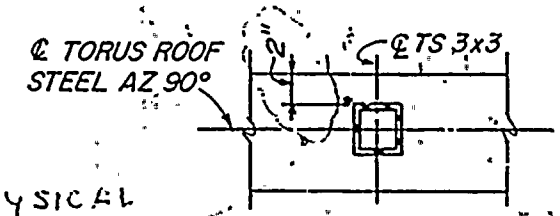

C133-C133

NO PHYSICAL
WORK REQD

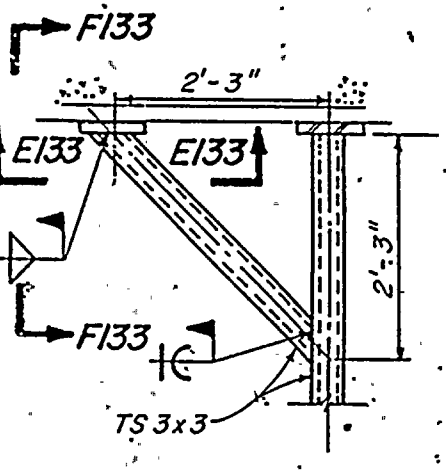

D133-D133

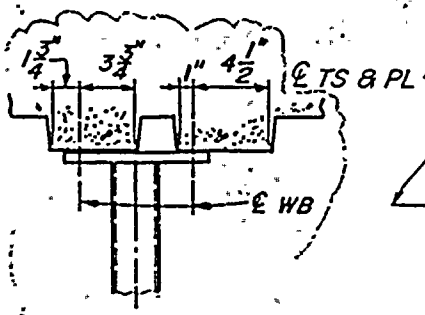

F133-F133

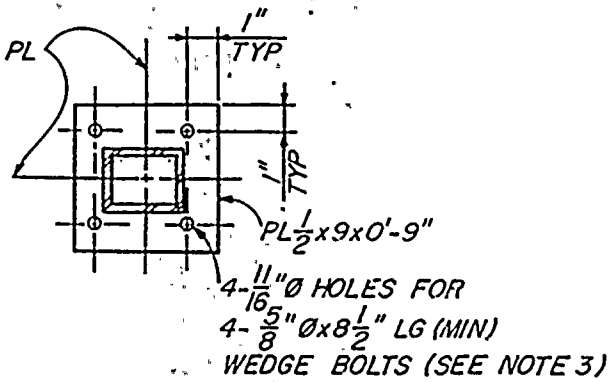

E133-E133

SUPPORT NO. R-66
(JOINT 177)

NOTES:

1. FOR GENERAL NOTES SEE 47B435-1.

3. NO SUBSTITUTION FOR 5/8"Øx 8½" LG (MIN) WB IS ALLOWED.

REFERENCE DWGS:
47W2456-1 (PIPING)
47W456-205 (ISOMETRIC)

RO ISSUED FOR ECN P-0361
CALCULATION BRANCH / PROJECT IDENTIFIERS:
BFEPC20247R66

3	P-0361 HEV A133-A133, C133-C133, F133-F133 REMOVE NOTE 2	
2	REVISED A133-A133 & C133-C133	
1	REVISED B133-B133	
0		

POWERHOUSE
REACTOR BLDG UNIT 2
MECHANICAL
RCIC SYSTEMS
PIPE SUPPORTS
BROWNS FERRY NUCLEAR PLANT
TENNESSEE VALLEY AUTHORITY
Q
T. COX
DOCK NO. 13-10-75 67 H 47B456-133 R3

SHEET 236 of 259

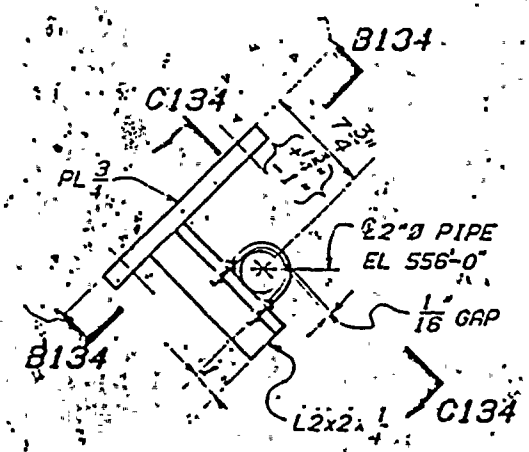

A134-A134

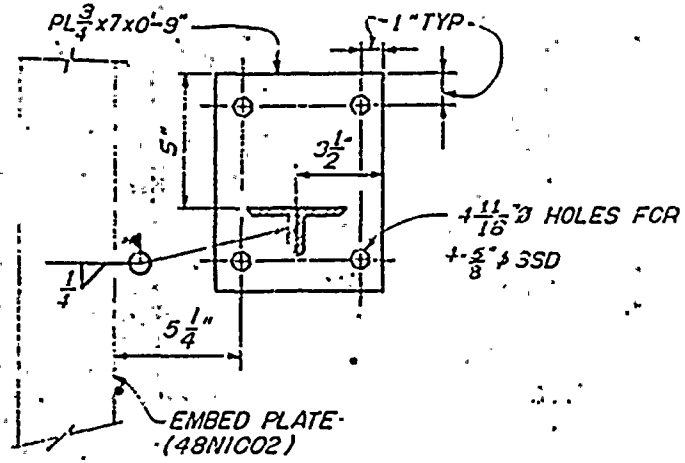

B134 - B134

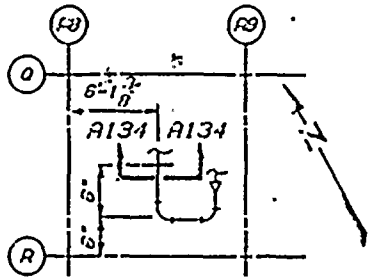

LOCATION PLAN
FLOOR EL 519'-0"

SUPPORT NO. R67
(JOINT 117)

NOTES:
1. FOR GENERAL NOTES SEE 47B435-1.

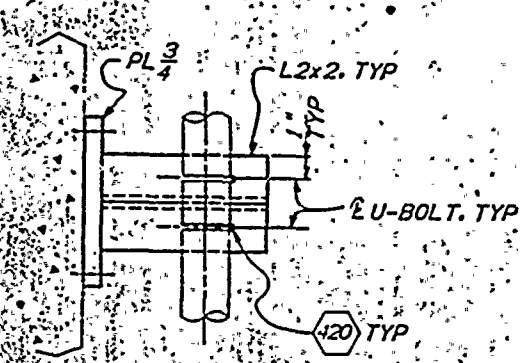

C134-C134

REFERENCE DRAWINGS:
17W2456-1 (PIPING)
17W456-205 (ISO)
17B456-222 (LOADS)

RO ISSUED FOR ECN P-0361

CALCULATION BRANCH / PROJECT IDENTIFIERS: BFEPC20244 R67

0	REV TITLE BLK TO ADD "Q" CES REF SCRBFNCEB8626	
	WAREHOUSE REACTOR BLDG UNIT 2	
	MECHANICAL BASIC SYSTEM PIPE SUPPORTS	
	BROWNS FERRY NUCLEAR PLANT TENNESSEE VALLEY AUTHORITY	0
	47B458-134	R2

BFCOSS

SHEET 237 of 259

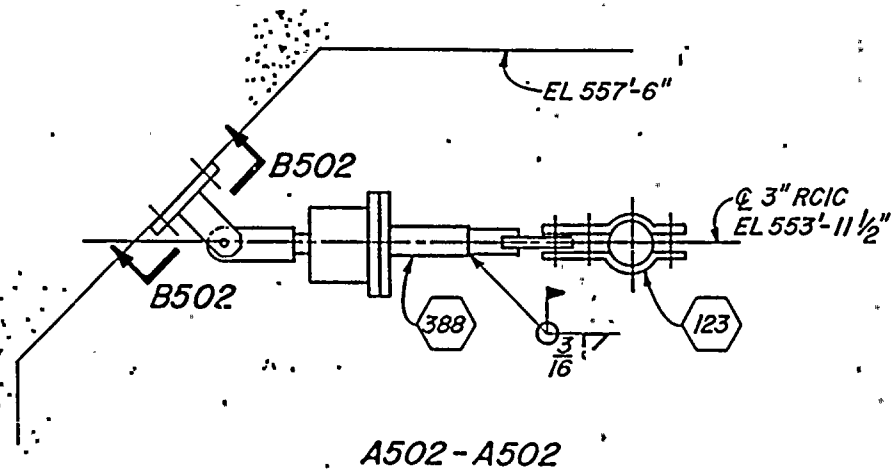

A502 - A502

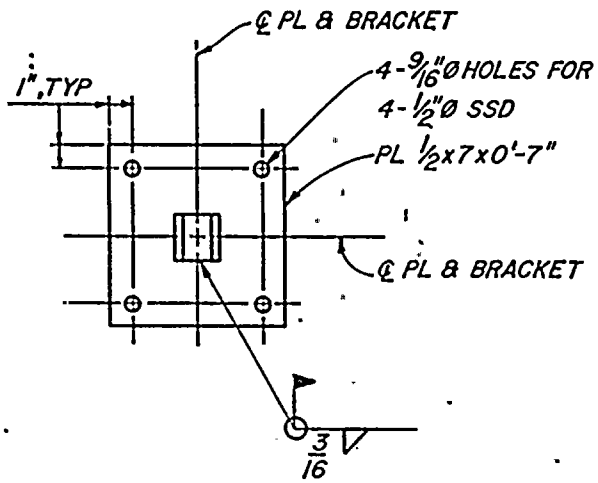

B502 - B502

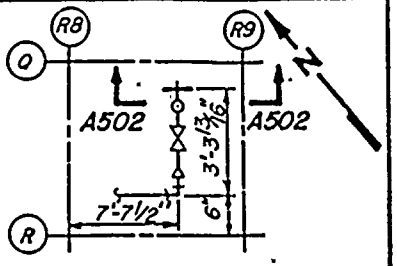

LOCATION PLAN
FLOOR EL. 519'-0"

SUPPORT NO. R-68
(JOINT 72)

INSTL SET POSN = 2.0"
DESIGN TRAVEL T = 0.04
C = 0.28

NOTES:
1. FOR GENERAL NOTES SEE DRAWING 47B435-1.

REFERENCE DRAWINGS
47W2456-1 (PIPING)
47W456-205 (ISOMETRIC)

FIRST ISSUE FOR ECN P-0361

CALCULATION BRANCH/PROJECT IDENTIFIERS: BFEPC20245R68

NOT TO SCALE

POWERHOUSE
REACTOR BUILDING - UNIT 2

MECHANICAL
RCIC SYSTEM
PIPE SUPPORTS

BROWNS FERRY NUCLEAR PLANT
TENNESSEE VALLEY AUTHORITY

12-10-73 | 67 | M | 47B456-502 | R0

ASME SECTION XI SUMMARY REPORT

Tennessee Valley Authority
Office of Nuclear Power, 1750CST2-C
Browns Ferry Nuclear Plant Unit 2
P.O. Box 2000
Decatur, Al.

Comm. Service Date 3/1/75
System RCIC
TVA Class D
Workplan/MR No. 2077-84

Furnish the following for the repair or replacement for the as-left condition of the component (after field work is complete). Mark all blanks (indicate NA for items which do not apply).

National Board Number of repaired or replaced component. N/A

Name of the components and description (include size, capacity, material, and location)--These requirements may be satisfied by attaching an applicable drawing.

SEE ATTACHED DRAWING FOR RCIC UNIT 2 SUPPORTS H-29,H-30,H-34, H-63,H-64,H-65,R-4,R-27,R-28,R-31,R-33,R-46,R-52,R-54,R-57,R-59, R-62,R-63,R-65,R-44,R-45

Name of Manufacturer N/A

Address of Manufacturer(if known) N/A

Manufacturer's component identification numbers (i.e., serial number, subassembly number, heat number). If more than one component is replaced, attach weld map and identify items by item number. N/A-NO STANDARD COMPONENTS REPLACED

Brief description of repair or replacement work performed,including conditions observed and corrective measures taken, as applicable (reference DCR, CAQR, etc.; drawing may be attached with affected area circled). SEE ATTACHED LISTING OF WORK PERFORMED ON EACH SUPPORT

Brief description of post repair or replacement tests and examinations (if required) by instruction or procedure number. WELD REPAIRS (LUG TO PIPE) ON R-45 INSPECTED PER N-VT-3 & N-VT-1. ALL OTHER NEW OR REPAIRED WELDS INSPECTED PER N-VT-2.SUPPORTS H-29, H-30,R-4,R-27,R-28,R-54,R-59 WERE PRESERVICE INSP. PER N-VT-1

ANII/ANI name, address, employer, and business address ROOSEVELT Russell, ANI/ B.J. Rice, ANII; The Hartford Steam Boiler Inspection Co.; 1117 Perimeter Center West , Suite E301, Atlanta, Ga.

Date work completed 6-9-88

Hugg McNeil 6-20-88
Cognizant Engineer Date

Retention: Period -Lifetime; Responsibility -Modification Supv.

BROWNS FERRY NUCLEAR PLANT
P.O. BOX 2000
DECATUR AL. 35602

WP# 2077-84 PAGE 1
CN P0361 DCR: 2161

SYSTEM: RCIC
ASME CODE CLASS 2
UNIT # 2

ASME SECTION XI SUMMARY REPORT

(H-29) PERFORM WELD REPAIR AT WELDING LUG TO EMBED PLATE. WELDED WASHER PLATES TO LUGS ON TOP OF SPRING CAN.

(H-30) REMOVE EXISTING SUPPORT & INSTALL NEW SUPPORT.

(H-34) REMOVE SUPPORT (SPRING CAN,ROD,AND CLEVIS)

(H-64) TORQUE FOUR UNISTRUT CLAMPS. ADDED TO WORKPLAN BY NON-INTENT WITHOUT ANI REVIEW. (REF. CAR 87-022 & CAQR 87-0457)

(H-65) REMOVED EXISTING SUPPORT AND REPLACED WITH REDESIGNED SUPPORT USING 3x3x.25 TUBE STEEL, 3x3x1/4" ANGLE, B-P 6500 LONG TANGENT U-BOLT

(R-4) VERIFIED SIZE OF WELDS. ADJUSTED SNUBBERS. &

(R-27) WELDED SHIMS TO PIPE LUGS TO ESTABLISH ACCEPTABLE GAP CRITERIA. CORRECTED BALL SLEEVE ON SNUBBER 2. REMOVED AND REINSTALLED BEVEL WASHERS ON SNUBBER 1. REPLACED BASEPLATES AND ANCHOR BOLTS. ADDED SHIMS UNDER BASEPLATES.(ADDED TO WORKPLAN BY NON-INTENT AND WORKED WITHOUT ANI REVIEW REF. CAR 87-022 & CAQR 87-0457)

(R-28) REPLACED SOUTHWEST WEDGE BOLT DUE TO LACK OF FULL THREAD ENGAGEMENT ON EXISTING WB. TORQUED WB AND SNUBBER. (ADDED TO WORKPLAN BY NON-INTENT AND WORKED WITHOUT ANI REVIEW REF. CAR 87-022 & CAQR 87-0457)

(R-31) CHECK EXISTING WELDS FOR SIZE.WELDED 1/4" BAR TO TOP OF SUPPORT

(R-33) INSTALLED NEW SUPPORT.

(R-44) STAKED THREADS ON PIPE CLAMP BOLTS.(ADDED TO WORKPLAN BY NON-INTENT WITHOUT ANI REVIEW REF. CAR 87-022 & CAQR 87-0457

BROWNS FERRY NUCLEAR PLANT
P.O. BOX 2000
DECATUR AL. 35602

WP# 2077-84
CN P0361 DCR: 2161

SYSTEM: RCIC
ASME CODE CLASS 2
UNIT # 2

ASME SECTION XI SUMMARY REPORT

(R-45) REPAIRED EXISTING WELDS ,ADDED NEW C3x4.1 ,TIGHTENED CLAMP BOLTS AND STAKED THREADS , ADDED TO WORKPLAN BY NON-INTENT WITHOUT ANI REVIEW REF. CAR 87-022 & CAQR 87-0457

R-46) STAKED THREADS ON PIPE CLAMP BOLTS. REPLACED C3X4.1 (ADDED TO WORKPLAN BY NON-INTENT WITHOUT ANI REVIEW REF. CAR 87-022 CAQR 87-0457)

(R-52) INSPECT EXISTING WELDS , REPLACE U-BOLT & STAKE THREADS

(R-54) REMOVE EXISTING SUPPORT , INSTALL NEW SUPPORT

(R-57) REMOVE EXISTING SUPPORT

(R-59) REMOVE EXISTING SUPPORT , INSTALL NEW SUPPORT

(R-62) MODIFY EXISTING SUPPORT (ADDED TO WORKPLAN BY NON-INTENT WITHOUT ANI REVIEW REF. CAR 87-022 & CAQR 87-0457)

(R-63) REMOVE EXISTING SUPPORT , INSTALL NEW SUPPORT

(R-64) TORQUE FOUR UNISTRUT CLAMPS. (ADDED TO WORKPLAN BY NON-INTENT WITHOUT ANI REVIEW REF. CAR 87-022 & CAQR 87-0457)

(R-65) MODIFIED EXISTING SUPPORT . ADDED TO WORKPLAN BY NON-INTENT WITHOUT ANI REVIEW REF. CAR 87-022 & CAQR 87-0457

Tennessee Valley Authority
Browns Ferry Nuclear Plant

Form 164
BF 17.8
Page 4 of 5
MAR 1 9 1985

ASME SECTION XI SUMMARY REPORT

SHEET 24 of 259

Plant BFNP
System HPCI
TVA Class D / CLASS 2
Workplan/MR No. 2078-84.

Furnish the following for the repair or replacement for the as-left condition of the component (after field work is complete). Mark all blanks (indicate NA for items which do not apply).

National Board Number of repaired or replaced component. N/A

Name of the components and description (include size, capacity, material, and location)--These requirements may be satisfied by attaching an applicable drawing. SYSTEM 073 (HPCI) PIPE SUPPORTS H-177, R-51, R-50, R-49, R-48 H-176, R-50, H-98, H-99; REACTOR BUILDING, VARIOUS ELEVATIONS

Name of Manufacturer TENNESSEE VALLEY AUTHORITY (TVA) KG 7/16/91

Address of Manufacturer (if known) P.O. BOX 2000, DECATUR, AL. 35609

Manufacturer's component identification numbers (i.e., serial number, subassembly number, heat number). If more than one component is replaced, attach weld map and identify items by item number.

Brief description of repair or replacement work performed, including conditions observed and corrective measures taken, as applicable (reference DCR, CAR, etc.; drawing may be attached with affected area circled). NEW HANGER INSTALLATION H-177, R-51, R-50, R-49, R-48; REMOVAL (OLD INSTALLATION H-176 AND R-50; H-98, H-99.

Brief description of post repair or replacement tests and examinations (if required) by instruction or procedure number. N-VT-2; N-PT-1, N-MT-1; N-VT-3.

ANII/ANI name, employer, and business address ROOSEVELT RUSSELL/BILL RICE THE HARTFORD STEAM BOILER INSPECTION & INSURANCE COMPANY 4330 GEORGETOWN SQUARE, ATLANTA, GA. 30338

Date work completed

Earl J. Schiffbauer Jr. / APRIL 26, 85.
Cognizant Engineer Date

Retention: Period - Lifetime, Responsibility - Modifications Supervisor

D-1

Tennessee Valley Authority
Browns Ferry Nuclear Plant

Form 164
BF 18.8
Page 4 of 4
MAY 8 1984 -
REPORT PG. 1 OF 7

SHEET 242 of 259

ASME SECTION XI SUMMARY REPORT

Plant. BFNP
System HPCI
TVA Class D/CLASS 2 EQUIVALENT
Workplan/MR No. 2079-84

Furnish the following for the repair or replacement for the "as left" condition of the component (after field work is complete). Mark all blanks (indicate N/A for items which do not apply).

National Board Number of repaired or replaced component N/A

Name of the components and description (include size, capacity, material, and location)--These requirements may be satisfied by attaching an applicable drawing

Name of Manufacturer See Attached

Address of Manufacturer (if known)

Manufacturer's component identification numbers (i.e., serial number, subassembly number, heat number, etc.) If more than one component is replaced, attach weld map and identify items by item number.

Brief description of repair or replacement work performed, including conditions observed and corrective measures taken, as applicable (Reference DCR, CAR, etc., drawing may be attached with affected area circled). NEW HANGER INSTALLATION R-64 AND R-55; REMOVAL AND INSTALLATION FOR HANGERS R-27 AND H-91. CAR#87-022 *

Brief description of post repair or replacement tests and examinations (if required) by instruction or procedure number N-VT-2, N-VT-3, N-PT-1, N-VT-1

ANI/ANII name, employer, and business address ROOSEVELT RUSSELL/BILL RICE THE HARTFORD STEAM BOILER INSPECTION & INSURANCE CO., 4330 GEORGETOWN SQUARE, ATLANTA, GA. 30338

Date work completed 9/14/86 ; 3-4-88

J Rosenblum / 9/14/86
Cognizant Engineer Date

William F. Clow / 3-4-88

Retention: Period - Lifetime, Responsibility - OMNM Supervisor

* SUPPORTS R-27, R-55 + H-92 MODIFIED WITHOUT PROPER ANI INVOLVEMENT. WFC 3-4-88

~~IX-12~~ JR 10/6/86

~~40~~ WFC 3-4-88

IX-48

ASME SECTION XI SUMMARY REPORT

UNIT 2, CYCLE 5

PLANT	BFNP
SYSTEM	HPCI
TVA/CLASS	D/Class II
WP/MR#	2079-84

I. Repair or replacement work performed.

a) R-27 (BF 2034-1 R1, 47B455-118RO-R5) removed existing R-27 support and installed new tube steel, base plates and shims.

b) R-55 (47B455-116RO, R1) relocated existing strut and clamp to a downward position and installed new baseplate.

c) H-93 (47A455-194 R3) removed existing support.

d) R-64 (47B455-121-RO, R1) installed new support R-64 in place of H-93 support. Installed clamp (MK 292), strut (MK45) and baseplate.

e) H-91 (47A455-192 R2, 47B455-117 RO-R4) removed existing H-91 and installed new strut (MK 45) end attachment (MK 35) 1/2" plate, and baseplate.

f) H-92 (47A455-193 R3, 47B455-119 RO-R2) removed existing H-92 support.

II. Manufacturers component identification numbers.

a) MK 45 - Rigid strut; BP 2251, size 12.

b) MK 292 - 16" ~~block~~ plate clamp; BP 6200. JR 6/17/86

c) MK 35 - End attachment, BP 2003 10.

III. Manufacturers

BP Bergen - Paterson
74 Commerce Way
Woburn, MA 01888

0171d

4/ 3-4-88

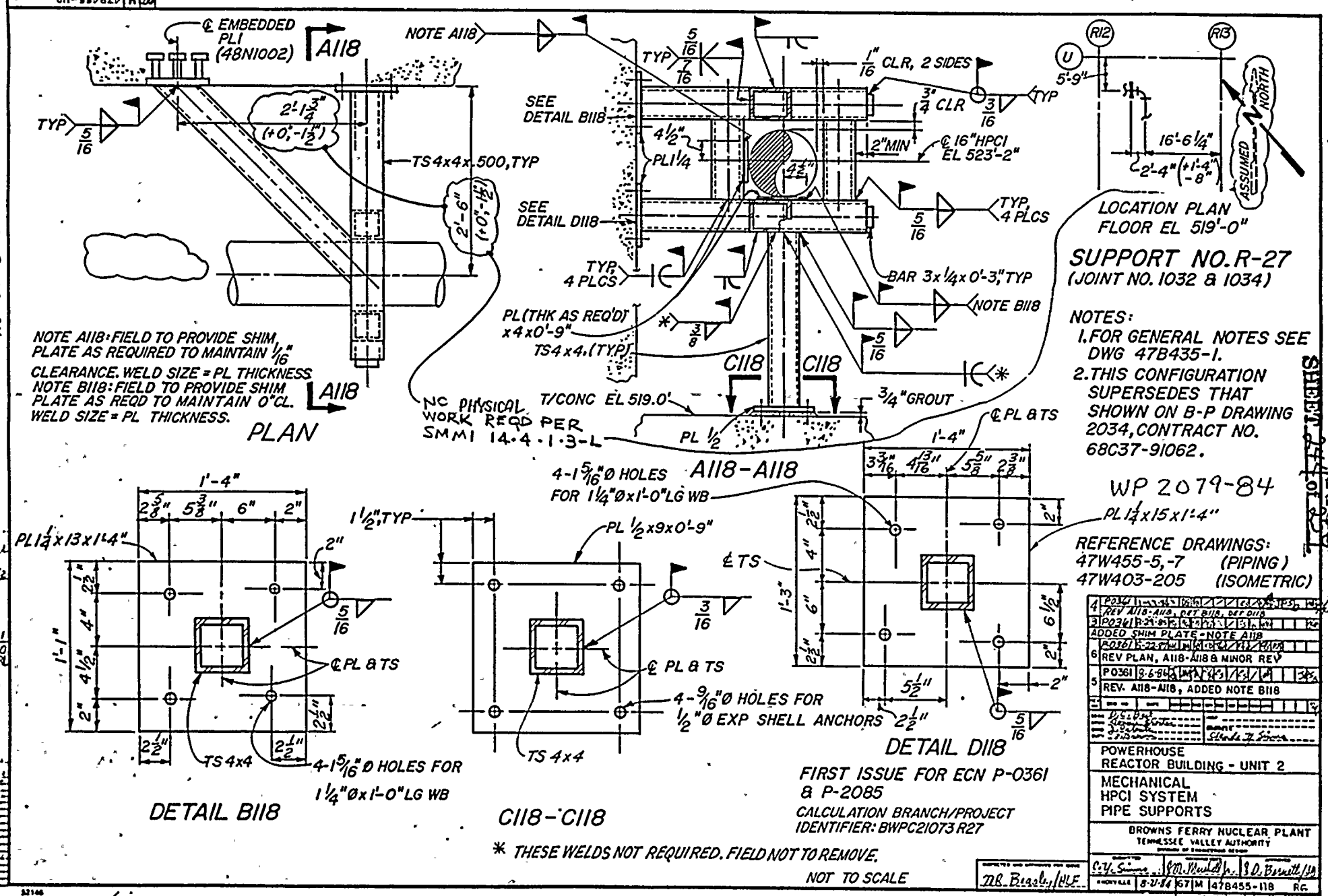

WP 2079-84

ASME SECT. XI SUMMARY REPORT PG. 3 of 7

IX-

SHEET 2 of 2

R25

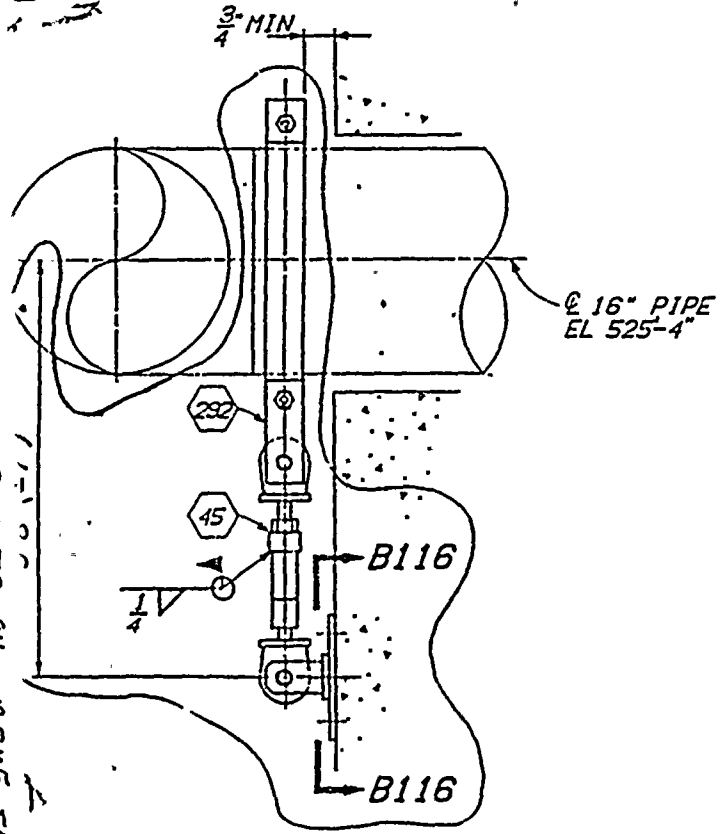

A116-A116

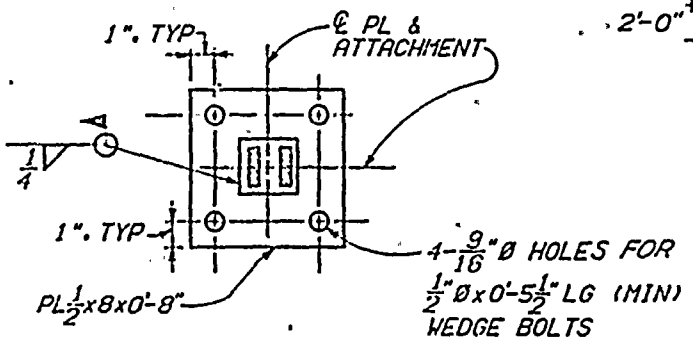

B116-B116

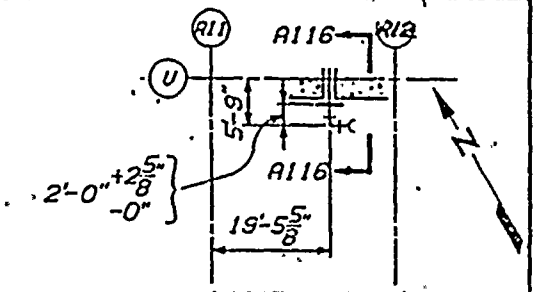

LOCATION PLAN
FLOOR EL 519'-0"

SUPPORT NO. R-55
(JOINT NO. 1008)

NOTES:
1. FOR GENERAL NOTES SEE 47B435-1.

REFERENCE DRAWINGS:
47W455-5 (PIPING)
47W403-205 (ISOMETRIC)

W.P. # 2079-84

FIRST ISSUE FOR ECN P-0361

NOT TO SCALE

P-0361			
ROTATED PIPE SUPPORT 180°. REM NOTE 2.			
POWERHOUSE REACTOR BUILDING - UNIT 2			
MECHANICAL HPCI SYSTEM PIPE SUPPORTS			
BROWNS FERRY NUCLEAR PLANT TENNESSEE VALLEY AUTHORITY			
KNOXVILLE 8-21-81	67 M	47B455-118	R1

WP 2079-84 ASME SECT. XI SUMMARY REPORT PG. 4 of 7

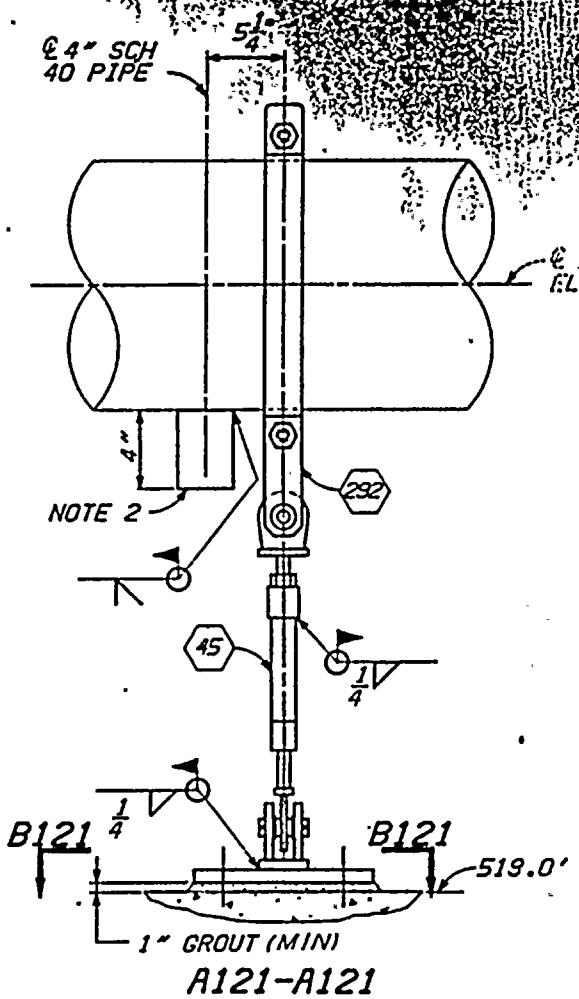

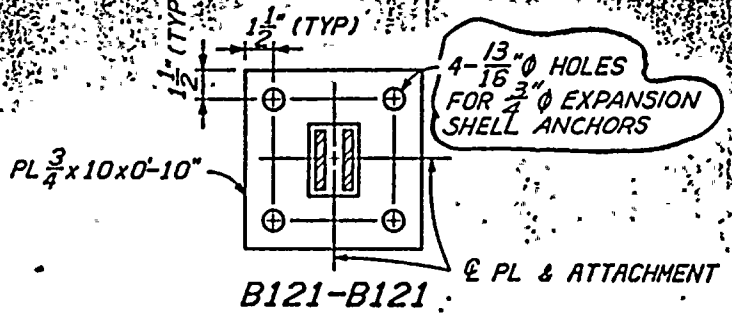

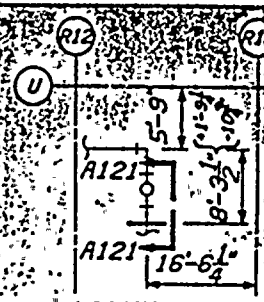

SUPPORT NO. R-64
(JOINT 1052)

NOTES:
1. FOR GENERAL NOTES SEE DRAWING 47B435-1.
2. 4" PIPE STANCHION FROM SUPPORT H-93 DWG. 47B455-194. REMOVE SUPPORT AS SHOWN.

REFERENCE DRAWINGS:
47W455-5 (PIPING)
47W403-205 (ISOMETRIC)

SHEET 246 of 259

W.P. # 2079-84

FIRST ISSUE FOR ECN P-0361 & P-2085
NOT TO SCALE

POWERHOUSE
REACTOR BUILDING - UNIT 2

MECHANICAL
HPCI SYSTEM
PIPE SUPPORTS

BROWNS FERRY NUCLEAR PLANT
TENNESSEE VALLEY AUTHORITY

KNOXVILLE 8-21-80 67 M 47B455-121 R1

WP 2079-84 ASME SECT. XI
SUMMARY REPORT PG. 5 of 7

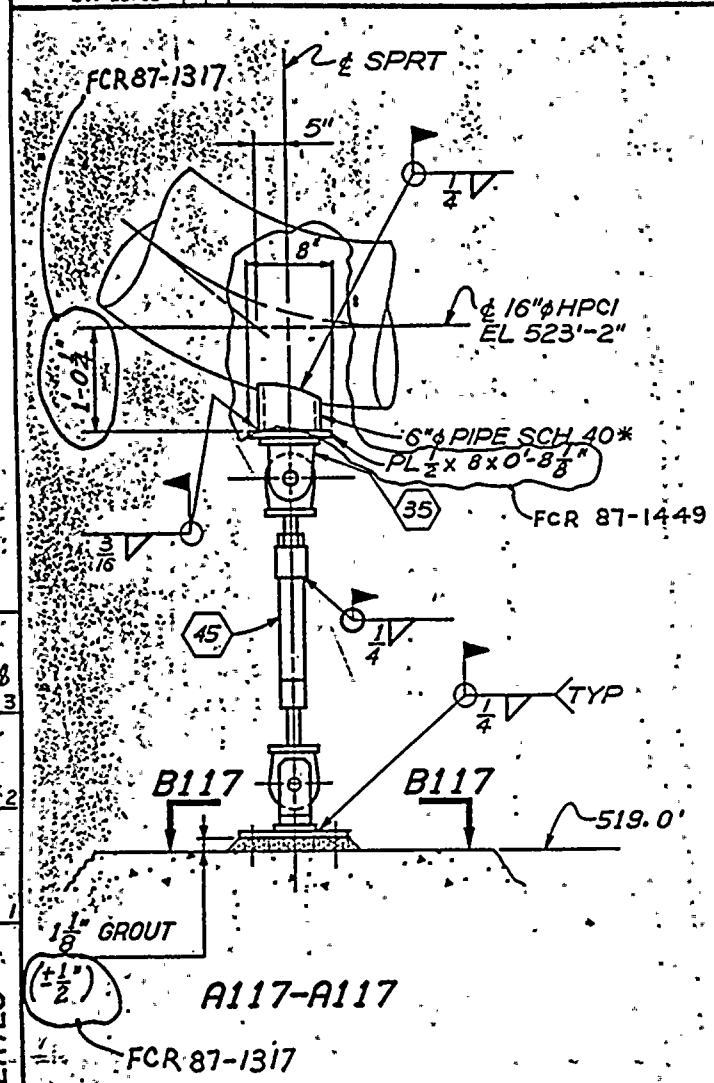

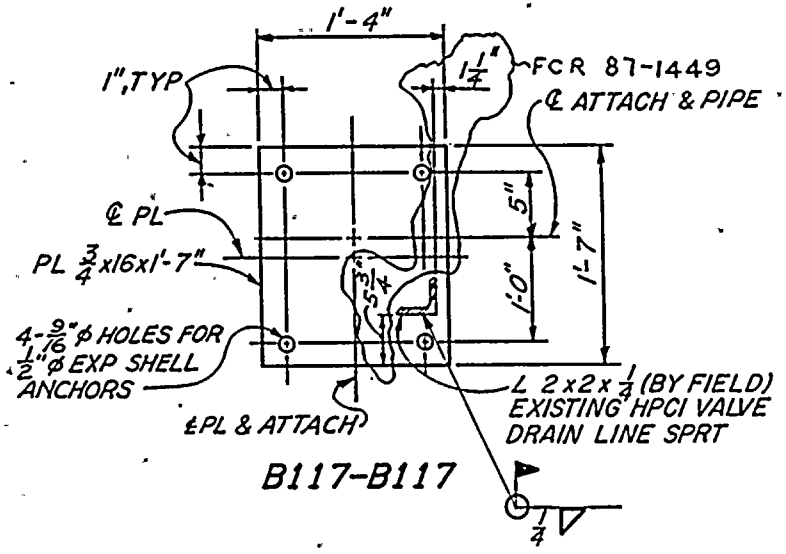

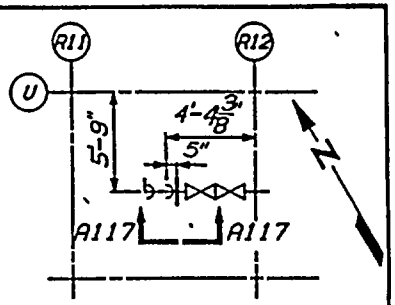

LOCATION PLAN
FLOOR EL 519'-0"

SUPPORT NO. H-91
(JOINT 1014)

NOTES:
1. FOR GENERAL NOTES SEE 47B435-1.
2. THIS DRAWING SUPERSEDES 47A455-192.
3. EXISTING MATERIAL DENOTED BY AN ASTERISK *.

REFERENCE DRAWINGS:
47W455-5, -7 (PIPING)
47W403-205 (ISOMETRIC)

SHEET 247 of 259

FIRST ISSUE FOR ECN P-2085

NOT TO SCALE

4	P0361	REV SECT B117-B117
3	P-0361	REV B117-B117
2	P-0361	REDESIGNED & REDRAWN
1	P-0361	SUPPORT REDESIGNED & REDRAWN

POWERHOUSE
REACTOR BUILDING - UNIT 2

MECHANICAL
HPCI SYSTEM
PIPE SUPPORTS

BROWNS FERRY NUCLEAR PLANT
TENNESSEE VALLEY AUTHORITY
DIVISION OF ENGINEERING DESIGN

KNOXVILLE 5-21-85 67 M 478455-117 R5

5	P0361	INCORP. FCR'S 87-1317 & 87-1449

NONINTENT R30 WP# 2079-84

WP 2079-84 ASME SECT. XI
SUMMARY REPORT PG. 6 of 7

67 M 478455-117

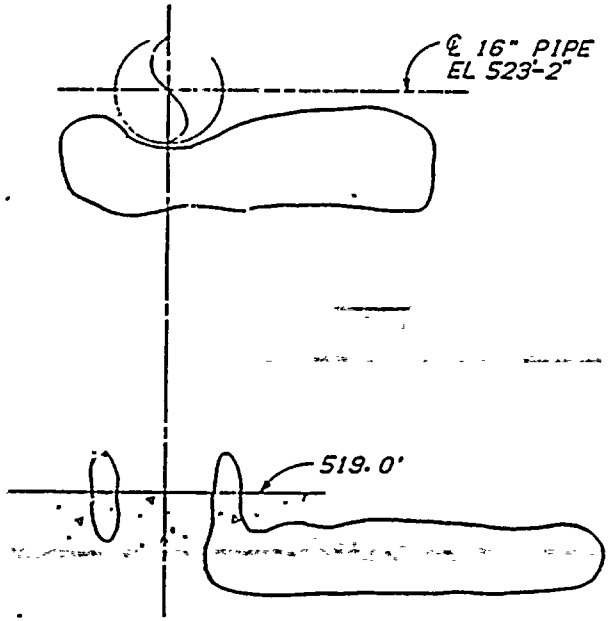

A119-A119

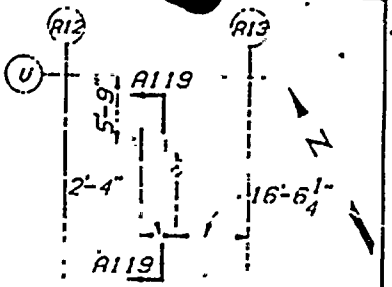

LOCATION PLAN
FLOOR EL 519'-0"

SUPPORT NO. H-92
(JOINT 1034)

NOTES:
1. FOR GENERAL NOTES SEE 47B435-1.
2. THIS DRAWING SUPERSEDES DWG 47A455-193.

W.P.# 2079-84

REFERENCE DRAWINGS:
47W455-7 (PIPING)
47W403-205 (ISOMETRIC)

2	P-0361	REV. ADD A119 & REVISE NOTE 3
1	P-0361	REV A119-A119 & ADD NOTE 3.

FIRST ISSUE FOR ECN P-0361 & P-2085.

NOT TO SCALE

POWERHOUSE
REACTOR BUILDING - UNIT 2

MECHANICAL
HPCI SYSTEM
PIPE SUPPORTS

BROWNS FERRY NUCLEAR PLANT
TENNESSEE VALLEY AUTHORITY

67 M 478455-119 R2

NONINTENT R5

WP 2079-84 ASME SECT. XI SUMMARY REPORT PG. 7 of 7

B2A645

SHEET 248 of 259

ASME SECTION XI SUMMARY REPORT

Tennessee Valley Authority
Office of Nuclear Power, 1750CST2-C
Browns Ferry Nuclear Plant Unit 2
P.O. Box 2000
Decatur, Al.

Comm. Service Date 3/1/75
System HPCI
TVA Class D
Workplan/MR No. 2080-84

Furnish the following for the repair or replacement for the as-left condition of the component (after field work is complete). Mark all blanks (indicate NA for items which do not apply).

National Board Number of repaired or replaced component. N/A

Name of the components and description (include size, capacity, material, and location)--These requirements may be satisfied by attaching an applicable drawing.

SEE ATTACHED DRAWING FOR HPCI UNIT 2 SUPPORTS R-65,R-66,R-70 ,R-71,H-185,H-189,H-190,H-192,H-193

Name of Manufacturer N/A

Address of Manufacturer(if known) N/A

Manufacturer's component identification numbers (i.e., serial number, subassembly number, heat number). If more than one component is replaced, attach weld map and identify items by item number. N/A

ief description of repair or replacement work performed, including conditions observed and corrective measures taken, as applicable (reference DCR, CAQR, etc.; drawing may be attached with affected area circled). SEE ATTACHED LISTING OF WORK PERFORMED ON EACH SUPPORT

Brief description of post repair or replacement tests and examinations (if required) by instruction or procedure number. ALL NEW OR STRUCTURAL WELDS INSPECTED PER N-VT-2;PIPING WELDS PER N-VT-3

ANII/ANI name, address, employer, and business address ROOSEVELT Russell, ANI/ B.J. Rice, ANII; The Hartford Steam Boiler Inspection Co.; 1117 Perimeter Center West , Suite E301, Atlanta, Ga.

Date work completed 3-4-88

James H. McNiel 3-4-88
Cognizant Engineer Date

Retention: Period -Lifetime; Responsibility -Modification Supv.

BROWNS FERRY NUCLEAR PLANT
P.O. BOX 2000
DECATUR AL. 35602

WP# 2080-84
SCN P0361 DCR: 2161
SYSTEM: HPCI SYSTEM
ASME CODE CLASS 2
UNIT # 2

ASME SECTION XI SUMMARY REPORT

R-65 REMOVE EXISTING SUPPORT

R-66 REMOVED EXISTING HANGER ROD AND REPLACED WITH REDESIGNED HANGER, TUBE STEEL 3X3X.25,ANGLE 2X2X.25",AND 2" LONG TANGENT U-BOLT PART NO. 6500 WITH FOUR HEX NUTS

R-70 REMOVE EXISTING HANGER NO. TEH-1, INSTALL NEW SUPPORT R-70 WHICH CONSIST OF TUBE STEEL 4X4X.25",5/8"DIA. SSD, 1/2" PLATE,AND 2" LONG TANGENT U-BOLT PART NO. 6500 WITH FOUR HEX NUTS

R-71 MODIFY EXISTING SUPPORT (ALL MATERIAL EXISTING)

H-185 MODIFY EXISTING SUPPORT ,ADD STIFFENER PLATE .25X 2 3/4" X 5 1/2" TO W5 X15.5 WIDE FLANGE , WELD .25 X 4 X 10" PLATE TO C3 X 4.1 AND W6 X 15.5 , INSTALL SPACERS AS REQ'D

H-189 REMOVE EXISTING SUPPORT , REPLACE WITH REDESINED SUPPORT. INSTALL NEW BASEPLATE 3/4" X 12 X 1', TUBE STEEL 4 X 4 X .25" , AND 2" U-BOLT WITH ASTM A194 2H HEX NUTS

H-190 MODIFY EXISTING SUPPORT , TUBE STEEL 3 X 3 X .25", ANGLE 2 X 2 X .25"

H-192 FABRICATE NEW SUPPORT , TUBE STEEL 4 X 4 X .375" BP 2540 SIZE 1.5 MARK NO. 388, 2" PIPE CLAMP MARK NO. 336

H-193 FABRICATE NEW SUPPORT , TUBE STEEL 6 X 6 X .50" , BASEPLATE 3/4" PL.

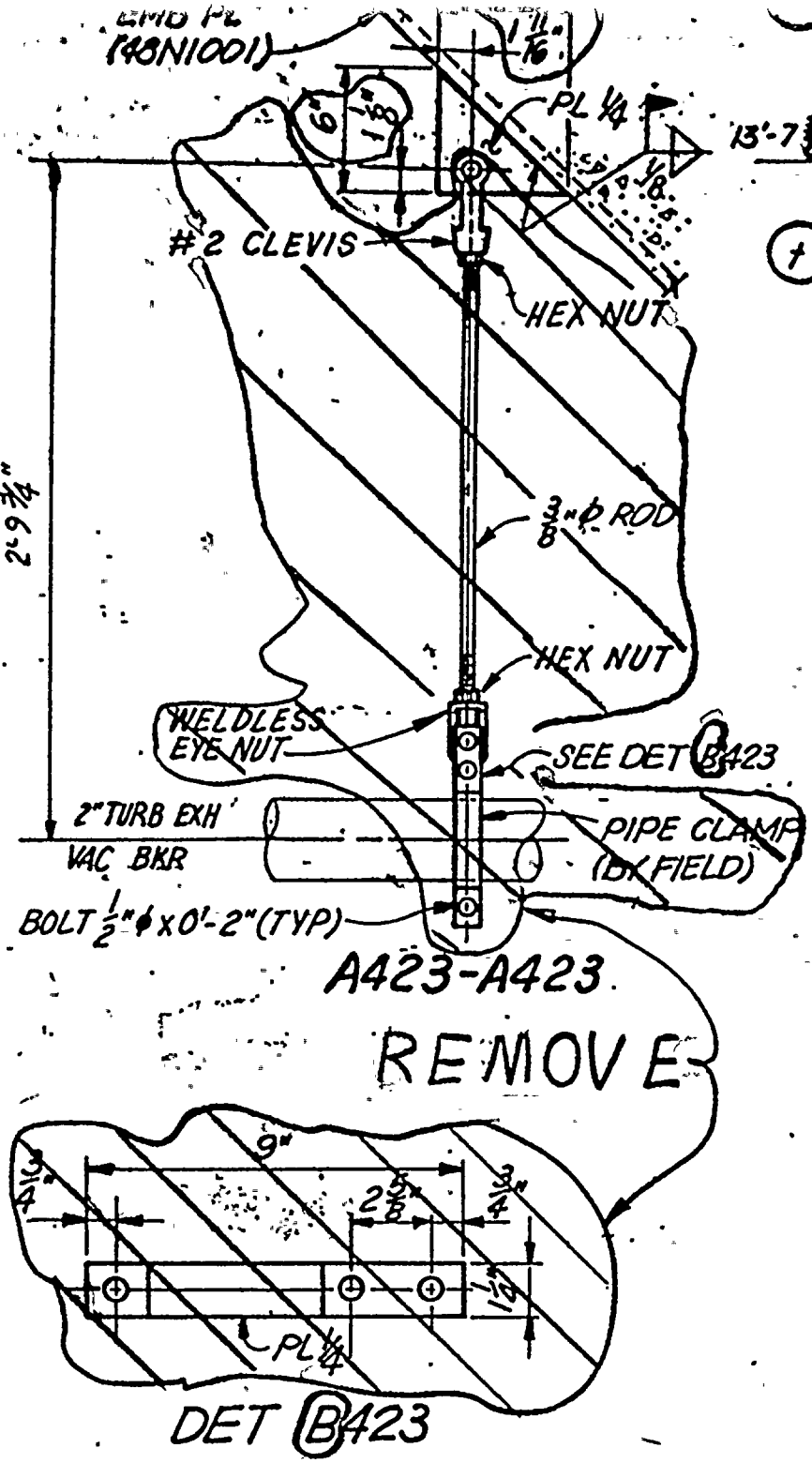

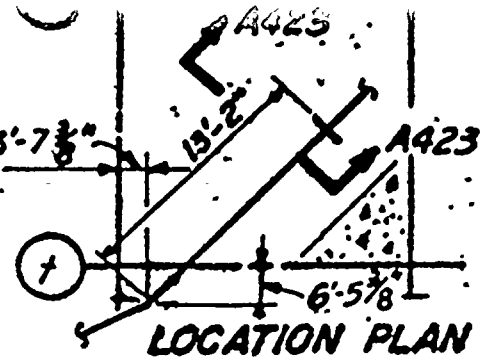

LOCATION PLAN
FLOOR EL 519.0'

SUPPORT NO. R65

NOTES:
1. FOR GENERAL NOTES SEE 47B435-1.

W.P. # 20BD-84

REFERENCE DWGS:
47W455-203 (ISO. NODE 79)
47W455-SERIES (PIPING)

RO ISSUE FOR ECN P-0361 & P-2085

NOT TO SCALE

INSPECTED AND APPROVED FOR ISSUE

POWERHOUSE
REACTOR BUILDING-UNIT 2

MECHANICAL
HPCI SYSTEM
PIPE SUPPORTS

BROWNS FERRY NUCLEAR PLANT
TENNESSEE VALLEY AUTHORITY
DIVISION OF ENGINEERING DESIGN

REV NO.	ECN NO.	DATE	DSGN	DRWN	CHKD	SUPV	ENGR	MSP	SUBM	MECH	APPD
1	P-0361	2-27-85	J.R.	RA	DMC	KHG	CS		CS		

CHG LUG DIMENSIONS; MINOR REV

DSGN R.O. Fisher
DRWN R.W. ARNOLD
CHKD E.J. Snyder
SUPV
MSP
ENGINEER E. E. Cole

SUBMITTED E. E. Cole
RECOMMENDED
APPROVED R.C. Barnett

KNOXVILLE 9-6-84 67M 47A455-423 R1

RECORD DRAWING AS CONSTRUCTED

KEUFFEL & ESSER CO. 17-61BB48

10685R0
784R0

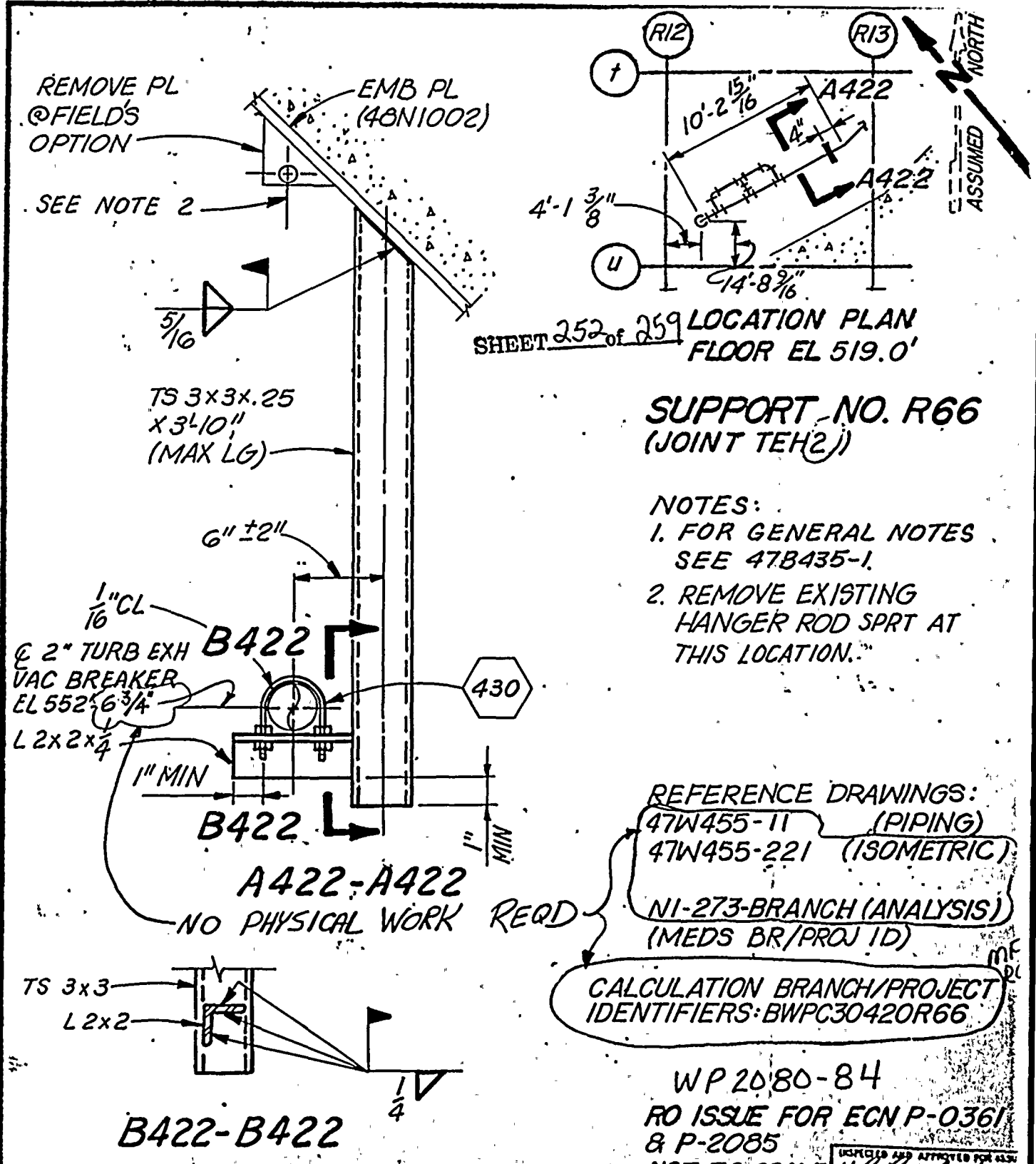

SUPPORT NO. R66
(JOINT TEH2)

NOTES:
1. FOR GENERAL NOTES SEE 47B435-1.
2. REMOVE EXISTING HANGER ROD SPRT AT THIS LOCATION.

REFERENCE DRAWINGS:
47W455-11 (PIPING)
47W455-221 (ISOMETRIC)
N1-273-BRANCH (ANALYSIS)
(MEDS BR/PROJ ID)

CALCULATION BRANCH/PROJECT IDENTIFIERS: BWPC30420R66

WP 2080-84
RO ISSUE FOR ECN P-0361 & P-2085
NOT TO SCALE

NON-INTENT R29

REV NO.	ECN NO.	DATE	DSGN	DRWN	CHKD	SUPV	ENGR	INSP	SUBM	RECD	APPD
1	P0361	8-7-87	JRJ								

REV REF DWGS, ADDED CALC IDENTIFIER, MINOR REV.

DESIGN D.C. Fisher
DRWN F. BROOKS / R. ARNOLD
CHKD R.L. Worden
SUPV
INSP
ENGINEER E.E. Cole

POWERHOUSE
REACTOR BUILDING - UNIT 2
MECHANICAL
HPCI SYSTEM
PIPE SUPPORTS

BROWNS FERRY NUCLEAR PLANT
TENNESSEE VALLEY AUTHORITY
DIVISION OF ENGINEERING DESIGN

SUBMITTED E.E. Cole
RECOMMENDED
APPROVED
KNOXVILLE 96-84 1073455-422 5

KEUFFEL & ESSER CO. L7-618848

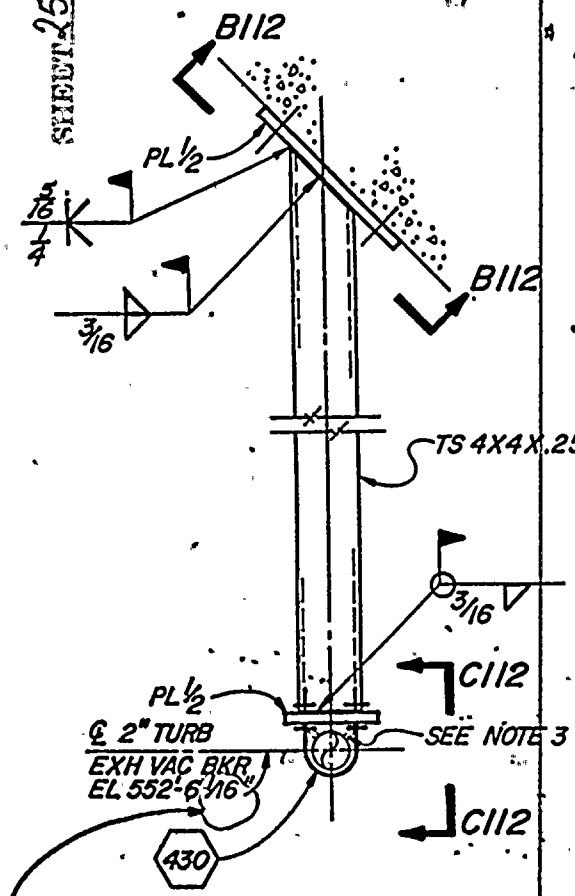

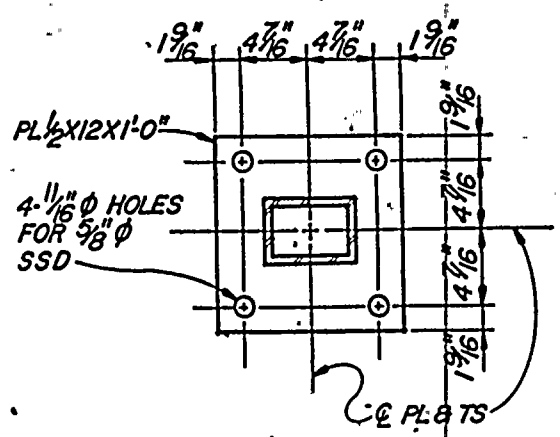

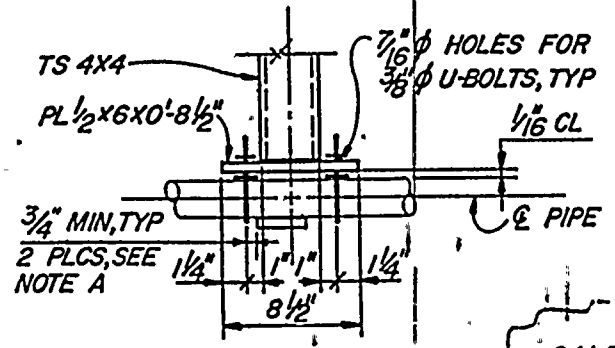

NOTE A:
REMOVAL OF BOT LUGS OPT.
PROVIDE CL IF LUGS ARE NOT REMOVED.

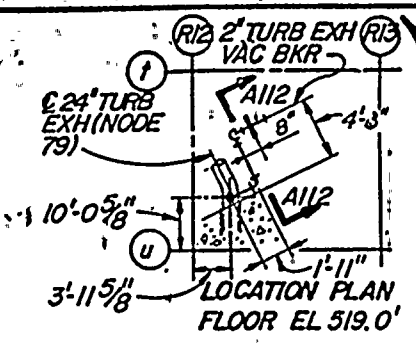

SUPPORT NO. R70

(JOINT TEH1)

NO PHYSICAL WORK REQD

NOTES:
1. FOR GENERAL NOTES SEE 47B435-1.
2. FIELD MAY USE EXIST. 5/8" ϕ SSD, SEE NOTE 5.
3. REMOVE LUGS AND GRIND PIPE SMOOTH, AS REQ'D.
4. REMOVE EXIST. SPRT IN THIS LOCATION.
5. EXIST. ANCRS MUST MEET REQUIREMENTS OF G-32, SECTION 4.3.

REFERENCE DWGS:
47W455-5221 (ISOMETRIC)
47W455-11 (PIPING)

CALCULATION BRANCH/PROJECT IDENTIFIERS: BWPC30455R70

RO ISSUE FOR ECN P-0361 & P-2085
NOT TO SCALE

3	P0361 97-11 REV REF DWG, ADD CALC ID & JOINT NO
2	P0361 REVISED SECT C112 C1
1	P0361 REV SECT A112-A112, LOC PLAN & REF DWG, PEN JT NO.

POWERHOUSE
REACTOR BUILDING – UNIT 2

MECHANICAL
HPCI SYSTEM
PIPE SUPPORTS

BROWNS FERRY NUCLEAR PLANT
TENNESSEE VALLEY AUTHORITY

E. E. Cole | J. W. Mullins | R. O. Barnett
9-6-82 | 67 | M | 478455-112 | R3

NON-INTENT R32

WP2080-84

531

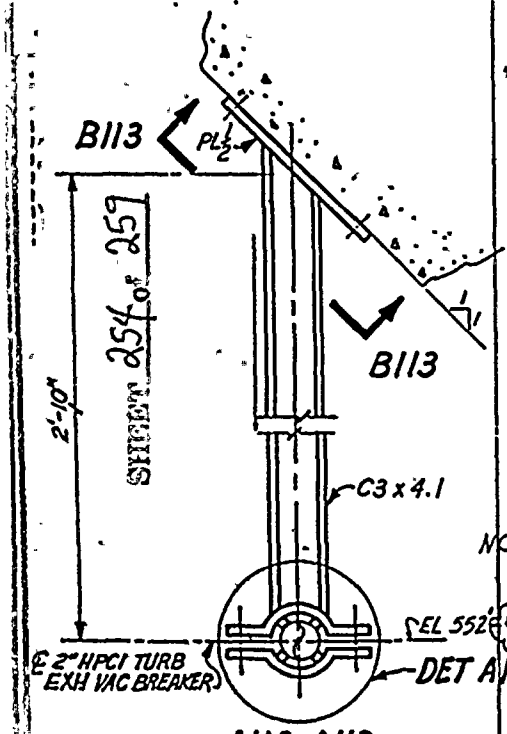

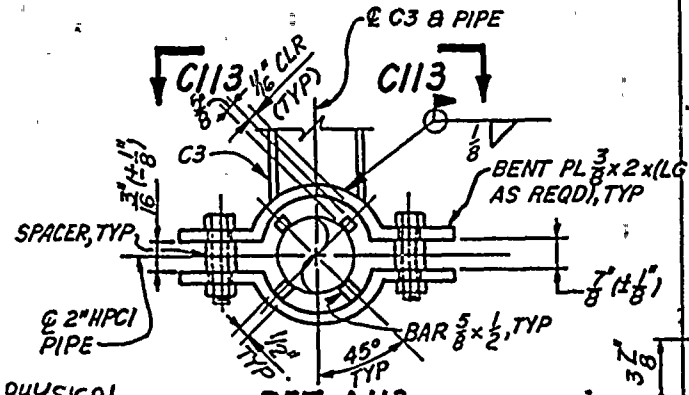

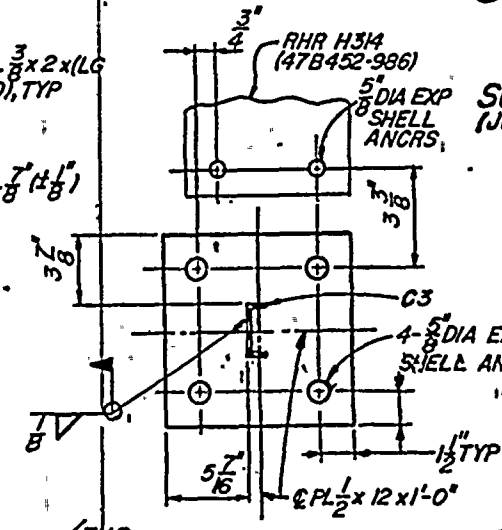

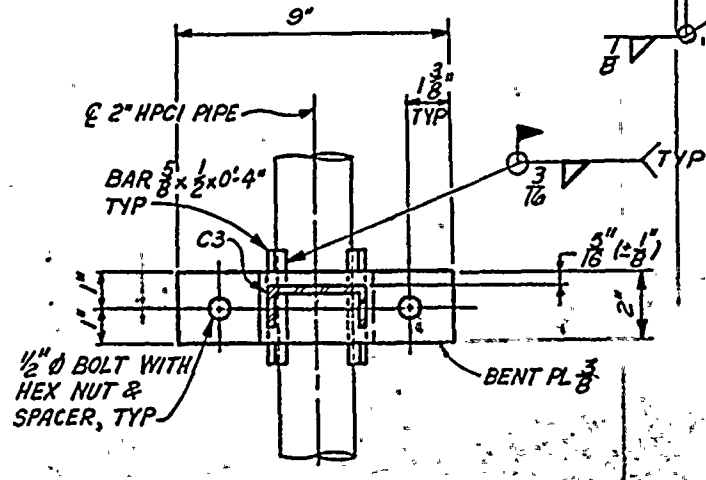

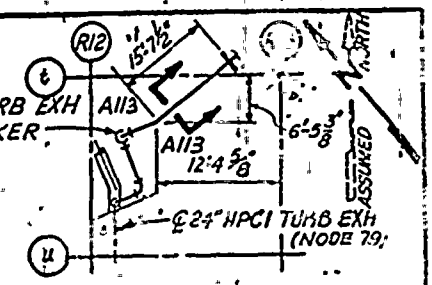

LOCATION PLAN
FLOOR EL 519'-0"

SUPPORT NO. R-71
(JOINT NO TEH 4)

NOTES:
1. FOR GENERAL NOTES SEE 47B435-1.
2. ALL MATERIAL EXISTING.

WP# 2080-89

REFERENCE DWGS:
47W455-11 (PIPING)
47W455-221 (ISOMETRIC)

4	P0361	ADDED REF DWG., MINOR REV.
3	P0361	REV A113-A113, B113-B113 & DET A113
2	P0361	REV A113-A113, B113-B113 & MINOR REVS.
1	P0361	REV SECT. A113-A113, B113-B113, CD3-C113

E. E. Cole

POWERHOUSE
REACTOR BUILDING — UNIT 2

MECHANICAL
HPCI SYSTEM
PIPE SUPPORTS

BROWNS FERRY NUCLEAR PLANT
TENNESSEE VALLEY AUTHORITY

E. E. Cole

47A455-113 K4

CALCULATION BRANCH/PROJECT IDENTIFIERS: BWPC30456R71

RO ISSUE FOR ECN P-0361 & P-2085

NOT TO SCALE

WP 2080-84

NON-INTENT R31

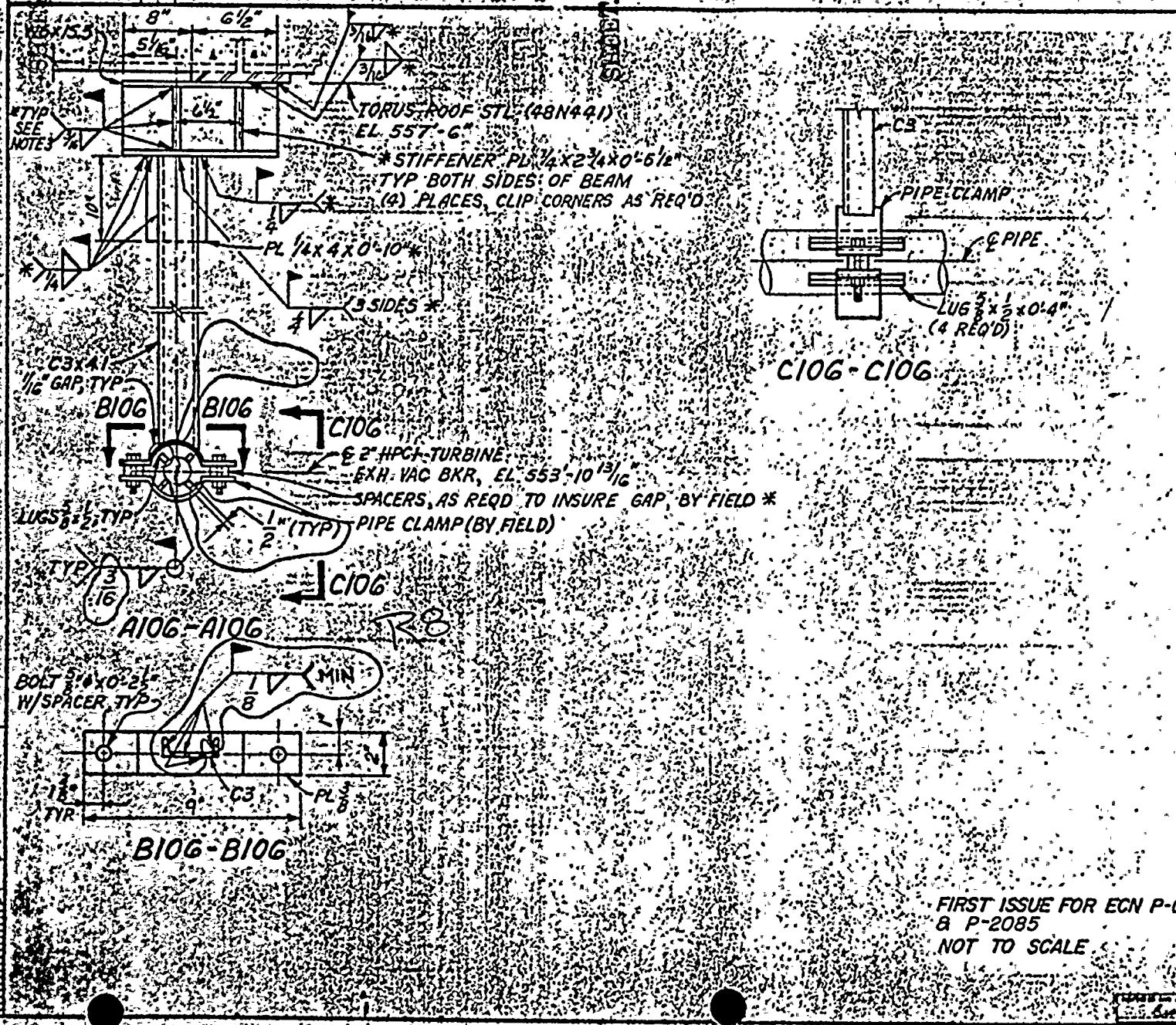
TORUS ROOF STL (48N441)
EL 557'-6"
*STIFFENER PL 1/4 X 2 3/4 X 0'-6 1/2"
TYP BOTH SIDES OF BEAM
(4) PLACES, CLIP CORNERS AS REQ'D
PL 1/4 X 4 X 0'-10" *
3 SIDES *
C3 X 4.1
1/16" GAP, TYP
B106
B106
C106
℄ 2" HPCI TURBINE
EXH VAC BKR, EL 553'-10 13/16"
SPACERS, AS REQD TO INSURE GAP BY FIELD *
PIPE CLAMP (BY FIELD)
LUGS 5/8 X 1/2 TYP
1/2" (TYP)
C106
A106-A106
R8
BOLT 5/8 X 0'-2 1/2"
W/SPACER, TYP
MIN
1/8
C3
PL 3/8
B106-B106
C3
PIPE CLAMP
℄ PIPE
LUG 5/8 X 1/2 X 0'-4"
(4 REQ'D)
C106-C106
R13
R14
A106
A106
5'-9 1/4"
6'-11
14'-5 7/16"
LOCATION PLAN
FLOOR EL 519'-0"
SUPPORT NO. H-185
(JOINT 50)
NOTES:
1. FOR GENERAL NOTES SEE DRAWING 47B435-1.
2. * DENOTES NEW MATL.
3. WELD EITHER SIDE OF STIFFENER.
REFERENCE DRAWINGS:
47W455-206 (ISOMETRIC)
47W455-11 (PIPING)
WP# 2080-84
WP 2080-84
FIRST ISSUE FOR ECN P-0361 & P-2085
NOT TO SCALE
REV SECT A106-A106, B106-B106
REVISED WELD, ADDED NOTE 3
POWERHOUSE
REACTOR BUILDING - UNIT 2
MECHANICAL
HPCI SYSTEM
PIPE SUPPORT
BROWNS FERRY NUCLEAR PLANT
TENNESSEE VALLEY AUTHORITY
KNOXVILLE 7-19-84 M 478455-106 R2

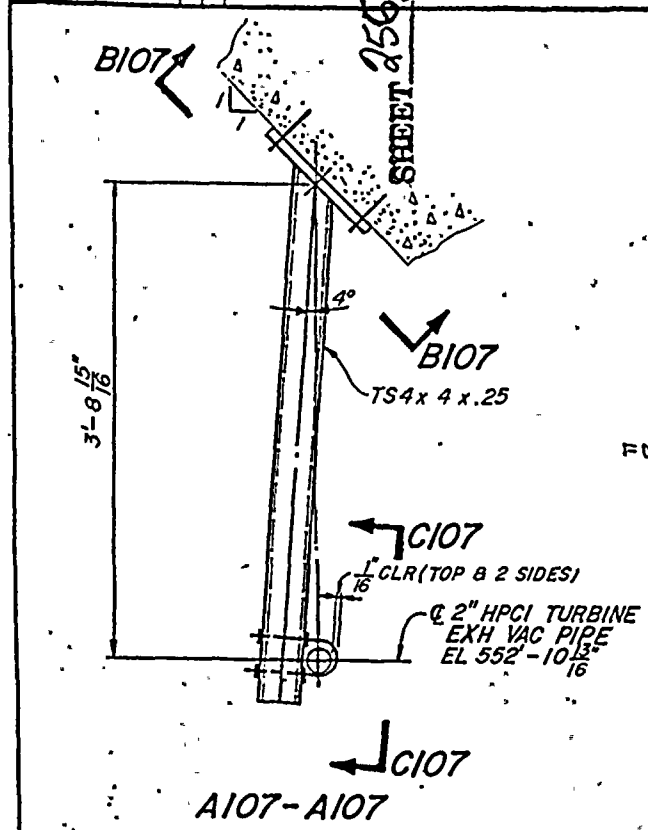

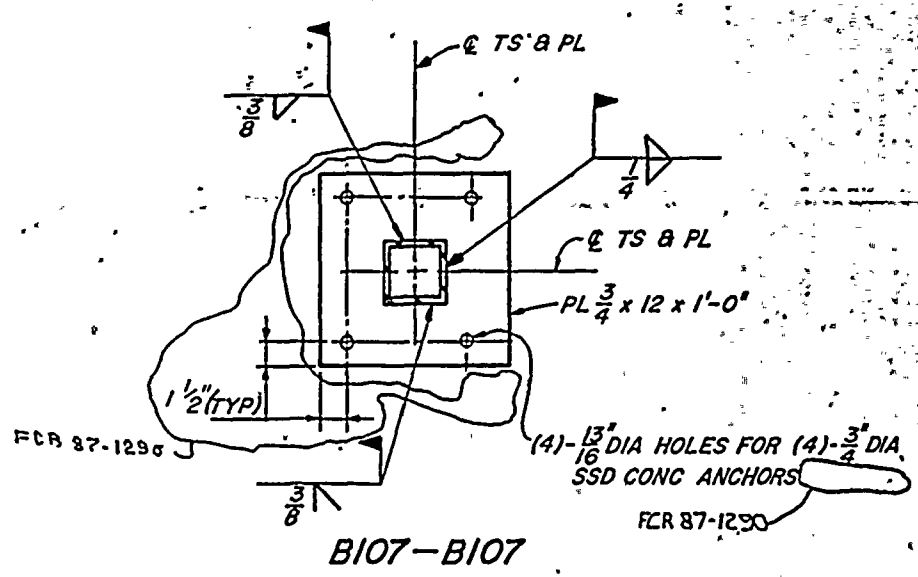

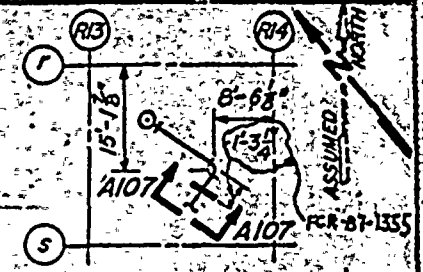

LOCATION PLAN
FLOOR EL 519.0'

SUPPORT NO. H-189
(JOINT 235)

NOTES:
1. FOR GENERAL NOTES SEE DRAWING 47B435-1
2. REMOVE EXISTING SUPPORT EXCEPT FOR MATERIAL DENOTED BY AN ASTERISK *

FCR 87-1290

REFERENCE DRAWINGS:
47W455-11 (PIPING)
47W455-206 (ISOMETRIC)
41N712 & 713 (CONCRETE)

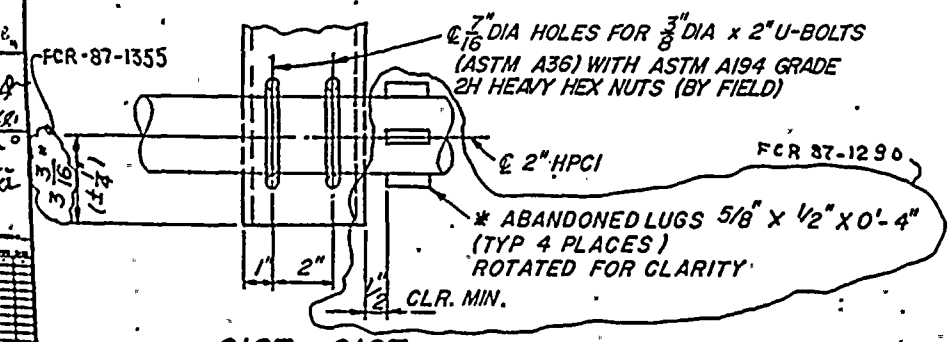

RO ISSUE FOR ECN P-0361 & P-2085
CALCULATION BRANCH/PROJECT IDENTIFIERS: BWPC30358H189
NOT TO SCALE

WP# 2080-84

POWERHOUSE
REACTOR BUILDING - UNIT 2

MECHANICAL
HPCI SYSTEM
PIPE SUPPORTS

BROWNS FERRY NUCLEAR PLANT
TENNESSEE VALLEY AUTHORITY

KNOXVILLE 7/9/87 M 47B455-107

NON-INTENT R-37

SHEET 256 of 259

TEH-7

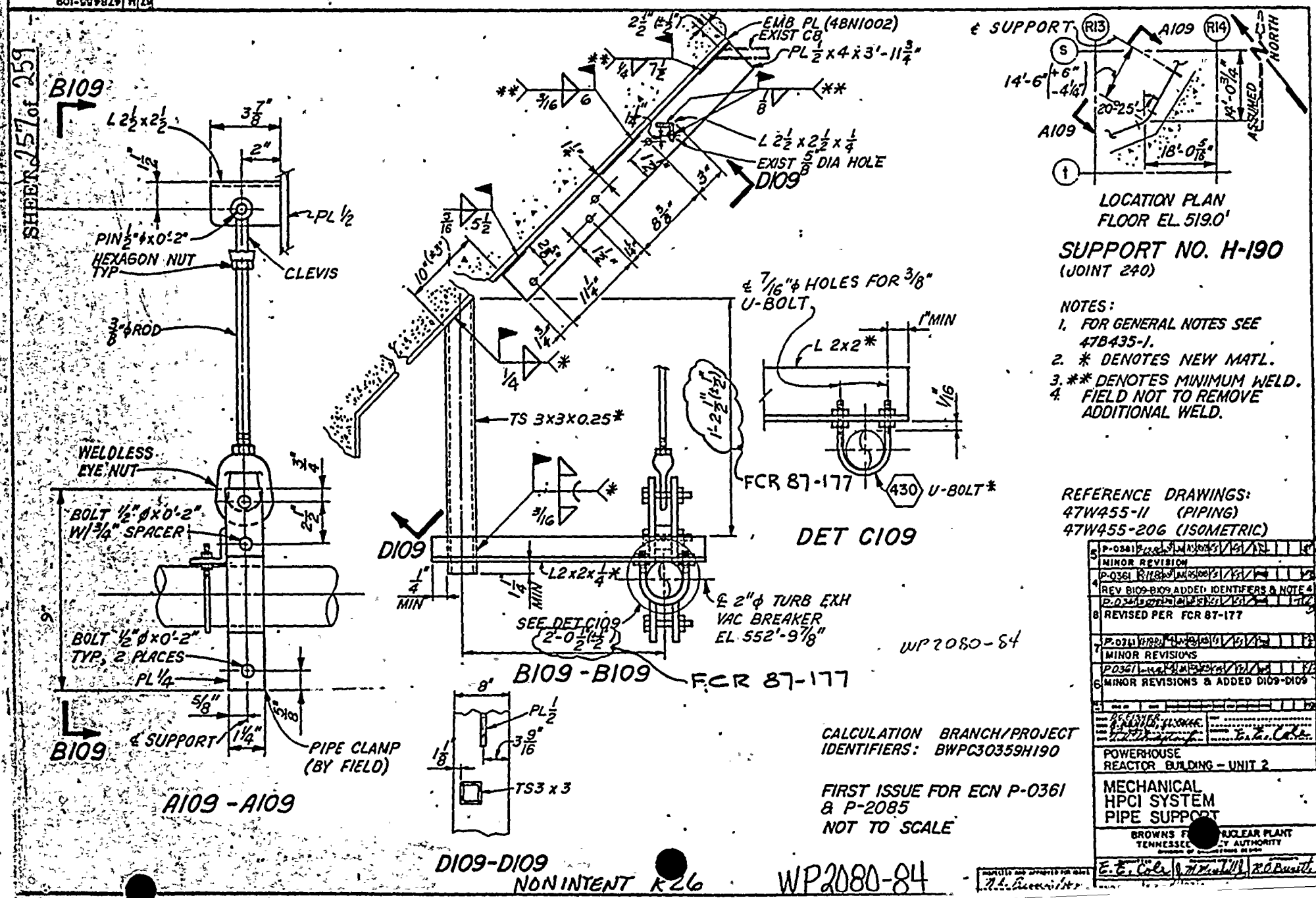
SHEET 257 of 259
B109
L 2½x2½
3 7/8"
2"
PL ½
PIN ½"φx0'-2"
HEXAGON NUT TYP
CLEVIS
3/8"φ ROD
WELDLESS EYE NUT
BOLT ½"φx0'-2" W/ ¾" SPACER
BOLT ½"φx0'-2" TYP, 2 PLACES
PL ¼
℄ SUPPORT
PIPE CLAMP (BY FIELD)
A109 - A109
EMB PL (4BN1002)
EXIST CB
PL ½x4x3'-11¾"
L 2½x2½x¼
EXIST ⅝ DIA HOLE
D109
TS 3x3x0.25*
℄ 7/16"φ HOLES FOR ⅜" U-BOLT
L 2x2*
1" MIN
FCR 87-177
430 U-BOLT*
DET C109
L2x2x¼*
℄ 2"φ TURB EXH VAC BREAKER EL 552'-9⅞"
SEE DET C109
B109 - B109
FCR 87-177
PL ½
TS3 x 3
D109-D109
NON INTENT
WP2080-84
℄ SUPPORT
R13
R14
A109
NORTH
ASSUMED
14'-6" +6" -4½"
20°-25'
18'-0 5/16"
LOCATION PLAN
FLOOR EL. 519.0'
SUPPORT NO. H-190
(JOINT 240)
NOTES:
1. FOR GENERAL NOTES SEE 47B435-1.
2. * DENOTES NEW MATL.
3. ** DENOTES MINIMUM WELD.
4. FIELD NOT TO REMOVE ADDITIONAL WELD.
REFERENCE DRAWINGS:
47W455-11 (PIPING)
47W455-206 (ISOMETRIC)
MINOR REVISION
REV B109-B109 ADDED IDENTIFIERS & NOTE 4
REVISED PER FCR 87-177
MINOR REVISIONS
MINOR REVISIONS & ADDED D109-D109
CALCULATION IDENTIFIERS: BRANCH/PROJECT BWPC30359H190
FIRST ISSUE FOR ECN P-0361 & P-2085
NOT TO SCALE
POWERHOUSE
REACTOR BUILDING - UNIT 2
MECHANICAL
HPCI SYSTEM
PIPE SUPPORT
BROWNS FERRY NUCLEAR PLANT
TENNESSEE VALLEY AUTHORITY
WP2080-84

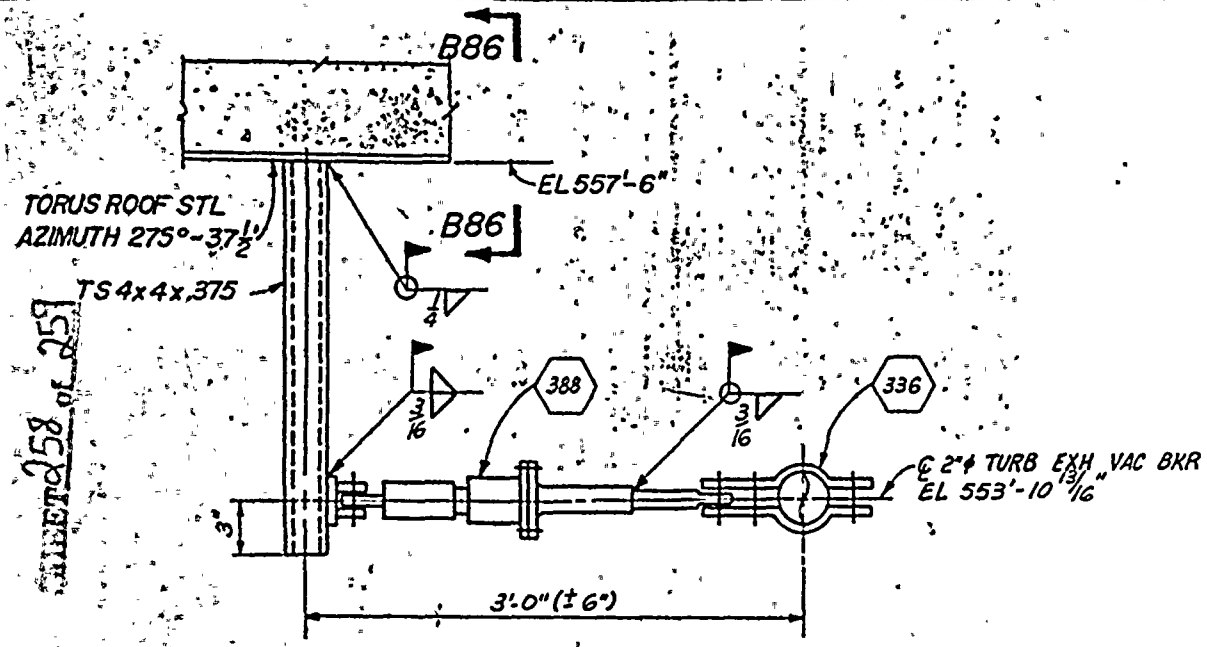

A86-A86

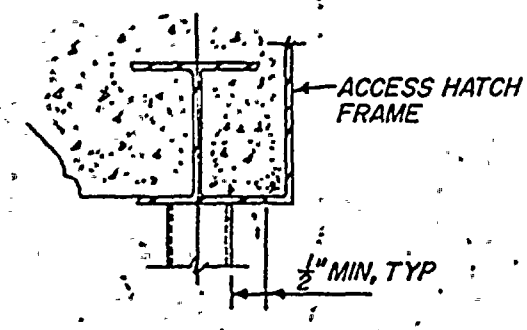

B86-B86

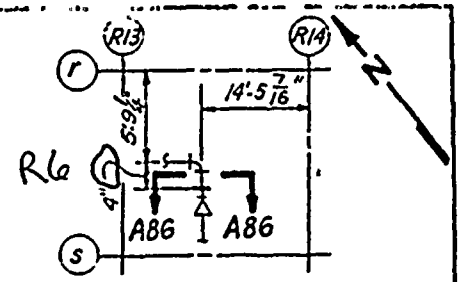

LOCATION PLAN
FLOOR EL 519.0'

SUPPORT NO. H-192
(JOINT 66)

DESIGN TRAVEL .5" (C), -1/16" (T)
INSTALLATION SET POSITION: 2"

NOTES:
1. FOR GENERAL NOTES SEE DWG 47B435-1.

REFERENCE DRAWINGS:
47W455-206 (ISOMETRIC)
47W455-11 (PIPING)
48N441 (STEEL)
WP 2080-84

WP 2080-84

2	P0361 REV LOCATION PLAN
1	P-0361 ADDED SECTION B86-B86 REV REF DWGS & SECT A86-A86

DES. SUPV. R.W. ARNOLD — E. E. Cole

POWERHOUSE
REACTOR BUILDING - UNIT 2

MECHANICAL
HPCI SYSTEM
PIPE SUPPORTS

BROWNS FERRY NUCLEAR PLANT
TENNESSEE VALLEY AUTHORITY

KNOXVILLE 7-11-84 ST M 4 5-86 R2

RO ISSUE FOR ECN P0361
NOT TO SCALE

531

Sheet 258 of 259

SHEET 259 of 259

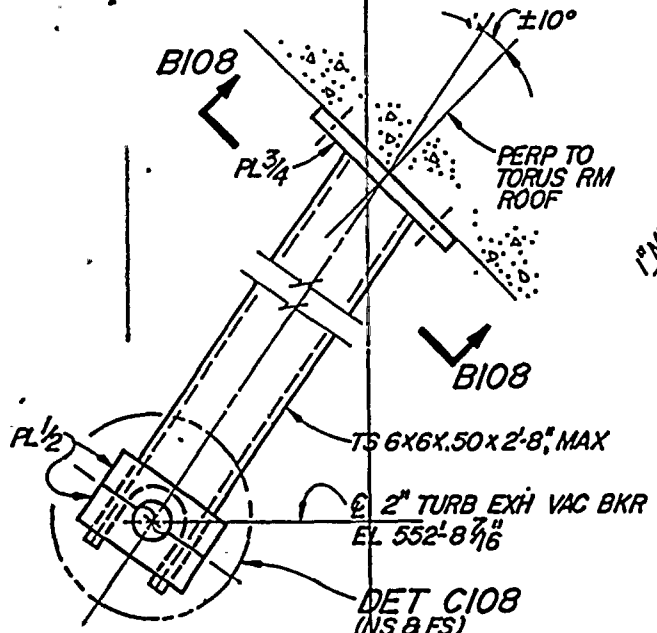

A108 – A108

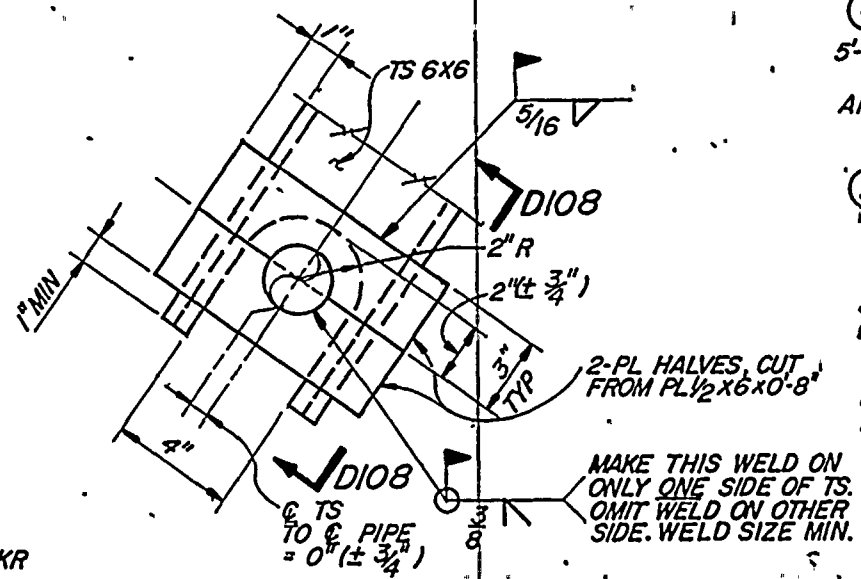

DET C108
TYP 2 PLCS

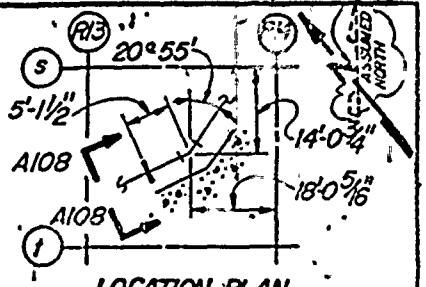

LOCATION PLAN
FLOOR EL 519.0'

SUPPORT NO. H-193
(JOINT 260 & ANC)

NOTES:
1. FOR GENERAL NOTES SEE 47B435-1.

WP2080-84

REFERENCE DRAWINGS:
47W455-11 (PIPING)
47W455-206 (ISOMETRIC)
47W455-221 (ISOMETRIC)

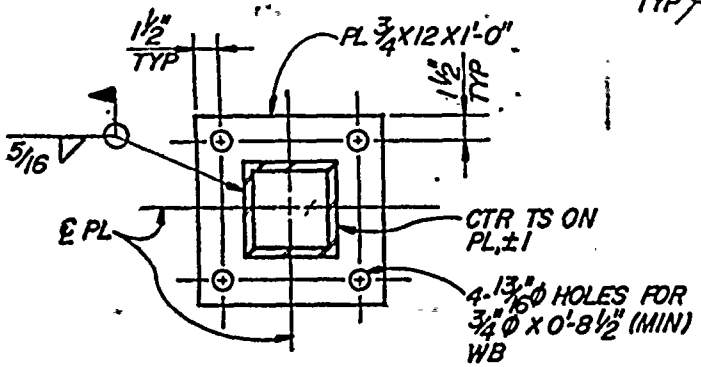

B108-B108

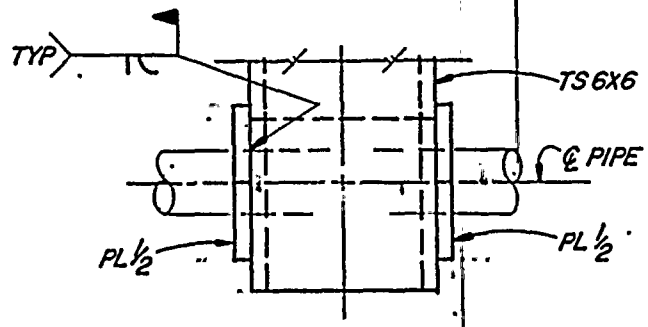

D108-D108

RO ISSUE FOR ECN P-0361
NOT TO SCALE

3	P0361	ADDED REF DWG & ASSUMED N ARROW
2	P0361	REVISED DET C108 WELD SYMBOL
1	P0361	SPRT REDRAWN

POWERHOUSE
REACTOR BUILDING – UNIT 2

MECHANICAL
HPCI SYSTEM
PIPE SUPPORTS

BROWNS FERRY NUCLEAR PLANT
TENNESSEE VALLEY AUTHORITY

T. T. Cole

571M 47B455-108 R3

NON-INTENT R-30