WPPSS
NUCLEAR PROJECT
NO. 2

PRESERVICE INSPECTION PROGRAM PLAN

VOLUME 1

PROGRAM PLAN

COPY NO. 13

WASHINGTON PUBLIC POWER SUPPLY SYSTEM

7905070456

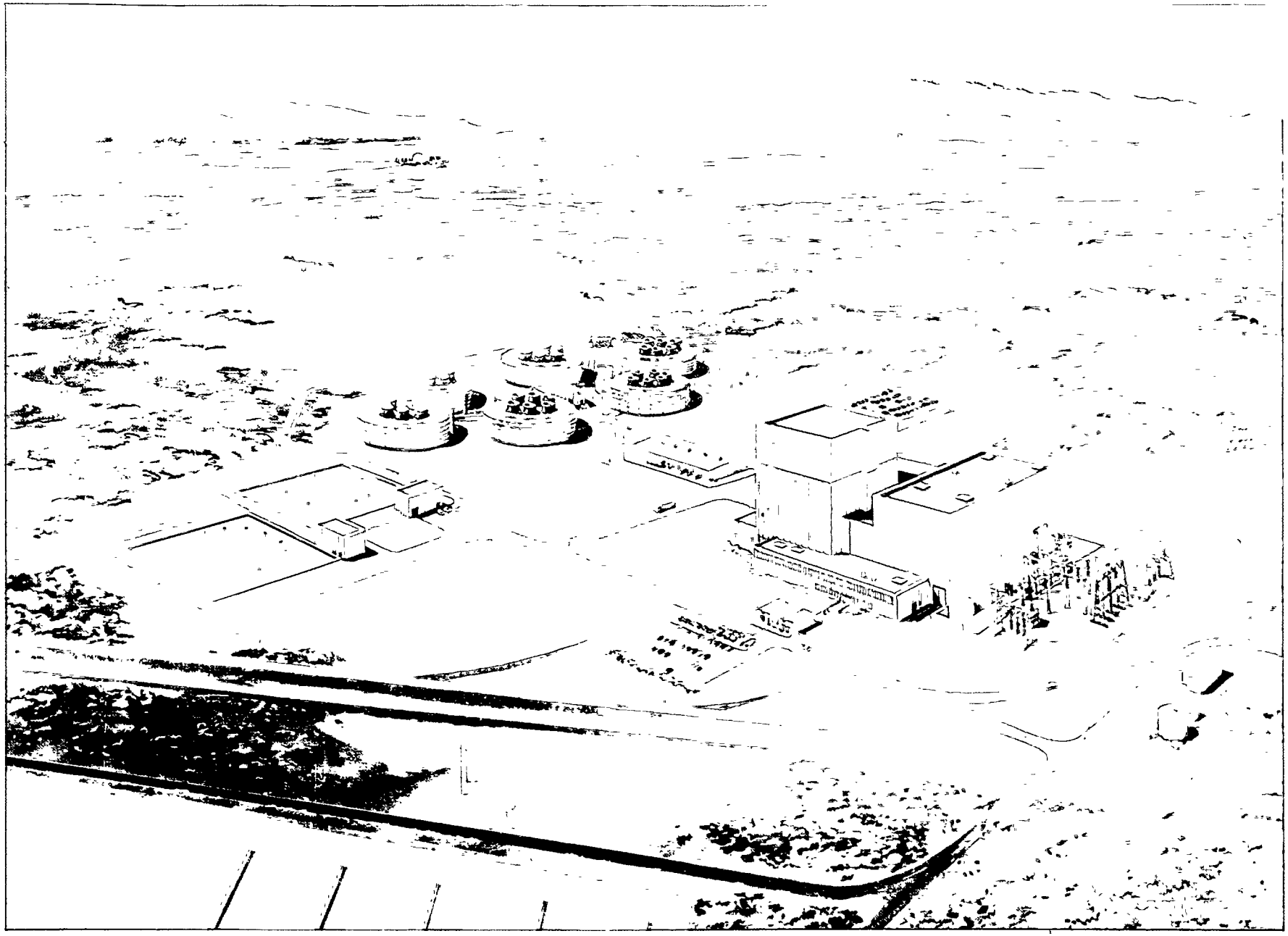

WASHINGTON PUBLIC POWER SUPPLY SYSTEM NUCLEAR PROJECT NO. 2

Date 1/8/79
Revision 0

PRESERVICE INSPECTION PROGRAM PLAN
FOR THE
WPPSS NUCLEAR PROJECT NO. 2

OWNER: Washington Public Power Supply System
3000 George Washington Way
Richland, Washington 99352

PLANT: WNP-2, located 11 miles north of Richland, Washington, on the U.S. Department of Energy Hanford Reservation

COMMERCIAL SERVICE DATE: June 1981 (projected)

CAPACITY: 1,094 MWe; 3,440 MWt

REACTOR PRESSURE VESSEL: Manufacturer: CBIN Serial No.: T-45
State No.: N/A Nat'l. Bd. No.: CBIN-8

PREPARED BY: Thomas J. Hyde Daniel W. Porter — 2/13/79 2/13/79
ISI Engineering — Date

PLAN APPROVALS:

Leonard F. Blomberg — 2-14-79
Supervisor, ISI & Operations Support Engineering — Date

DCJ KDC 2/21/79 A D Kohlenberg Jr. — 2-23-79
2/14/79 WNP-2 Project Manager — Date

2/16/79 LTH x R G Cockrell — 2-16-79
2/14/79 Engineering Division Manager — Date

ASSISTANT DIRECTORS:

D L Reuberger — 2/27/79
Assistant Director, Technology — Date

K. T. Perkins — 2/26/79
Assistant Director, Generation — Date

CONCURRENCE: 2/20/79 W. E. Witherspoon — 2/26/79
Manager, Quality Assurance Division — Date

S. M. Fritz — 2/28/79
Authorized Nuclear Inspector — Date

Date 7/27/79

Revision 1

Date 7/27/79
Revision 1

PRESERVICE INSPECTION PROGRAM PLAN

FOR THE

WPPSS NUCLEAR PROJECT NO. 2

Amendment No. 1

Prepared by: T.F. Hale R.W. Porter — 9'24'79
ISI Engineering — Date

Plan Approvals:

L.F. Blankenship — 10-1-79
Supervisor, ISI & Operations Support Engineering — Date

L T Harrold — 10-3-79
Chief, Mechanical/Nuclear Engineering — Date

Concurrance Ken J. Hannah — 10-3-79
Supervisor, Quality Control Services and Inspection — Date

WSC 10/10/79 K D Cowan — 10/10/79
WNP-2 Project Engineering Manager — Date

David L. Whitcomb — 10-4-79
WNP-2 Plant Technical Supervisor — Date

RPK 10/11/79 W. E. Weatherspoon — 10-11-79
Manager, Quality Assurance Division — Date

D. M. Fritts — 10/23/79
Authorized Nuclear Inspector — Date

Date 11/14/80
Revision 2

PRESERVICE INSPECTION PROGRAM PLAN

FOR THE

WPPSS NUCLEAR PROJECT NO. 2

Amendment No. 2

Prepared by: Thomas F. Hyde — 12-4-80
ISI Engineering — Date

Plans Approvals:

D. W. Porter — 12-4-80
Supervisor, ISI & Operations Support Engineering — Date

L. L. Gelhaus for L T H — 12-4-80
Chief, Mechanical/Nuclear Engineering — Date

Concurrence: Ken J. Hamrick — 12-4-80
Supervisor, Nondestructive Examination & Inspection — Date

W H Conn 12/8/80
WNP-2 Project Engineering Manager — Date

D. L. Whitcomb — 12/5/80
WNP-2 Plant Technical Supervisor — Date

R. Conn 12/4/80 — 12-4-80
Manager, Quality Assurance ~~Division~~ DEPARTMENT — Date

J. M. Fitzo — 12-16-80
Authorized Nuclear Inspector — Date

Date 12/14/81

Revision 3

Date 12/14/81

Revision 3

PRESERVICE INSPECTION PROGRAM PLAN

FOR THE

SUPPLY SYSTEM NUCLEAR PROJECT NO. 2

Amendment No. 3

Prepared by:	DP Ramey ISI Engineer	12/14/81 Date
Plan Approvals:	Thomas F. Hoyle Lead, Plant Engineering & Surveillance	12/17/81 Date
	D.W. Potter Manager, Plant Engineering & Construction	12/17/81 Date
Concurrence:	Ken J. Hammond Supervisor, NDE&I	12/18/81 Date
	Douglas C. Jennings for WNP-2 Project Engineering Manager	12/18/81 Date

PSI PROGRAM PLAN

Amendment No. 3

Date 12/14/81

Revision 3

D. L. Whitcomb for XDC — 12/18/81

WNP-2 Plant Technical Manager — Date

[illegible] — 12/18/81

Manager, Operational Quality Assurance — Date

[illegible] — 12-21-81

Authorized Nuclear Inspector — Date

Date 1/18/85
Revision 4

PRESERVICE INSPECTION PROGRAM PLAN

FOR THE

SUPPLY SYSTEM NUCLEAR PLANT NO. 2

Amendment No. 4

Prepared by:	Douglas P. Ramey ISI Engineer	1/18/85 Date
Reviewed by:	Thomas D. Hoyt ISI Lead Engineer	1/18/85 Date
	Ken J. Wanich Manager, ISI/NDE	1/22/85 Date
	D. W. Porter Manager, Engineering Systems Support	1/22/85 Date
	A D Cowan Manager, Plant Technical	2/13/85 Date
	D Bell Manager, Plant QA	2-13-85 Date
Approved by:	CM Powers WNP-2 Plant Manager	2/13/85 Date
	A. M. Fitts Authorized Nuclear Inspector	2/14/85 Date

1.0--INTRODUCTION

This Preservice Inspection Program Plan is applicable to the WPPSS Nuclear Project No. 2, hereinafter referred to as WNP-2, a single unit Boiling Water Reactor (BWR) power plant located 11 miles north of Richland, Washington, on the Hanford Reservation. The plant employs a General Electric (GE) supplied nuclear steam supply system designated as BWR/5. The reactor is contained within an over-under drywell/wetwell containment vessel designated Mark II. The plant net rated electrical output is 1,145 MWe. The reactor vessel is surrounded by metallic reflective insulation which is attached to a sacrifical shield wall. The annulus between the insulation and reactor vessel is nominally 10 inches. The reactor bottom head area is insulated using metallic reflective insulation on the skirt inside surfaces.

The owner, Washington Public Power Supply System, hereinafter referred to as the Supply System, has installed permanent pole tracks for remote examination equipment mounted on the reflective insultion as an optional aid in achieving remote external examination of the vessel barrel and bottom head areas. Details of those devices are given in Section 14.0, "EXAMINATION EQUIPMENT".

This Program Plan has been prepared as the controlling document governing the preservice exmaination activities at WNP-2. The requirements for preservice examinations are outlined in the ASME Boiler and Pressure Vessel Code, Section XI, entitled "Rules for Inservice Inspection of Nuclear Power Plant Components". The scope of this plan is limited to nondestructive examinations of the reactor pressure vessel and appurtenances, and Nuclear Class 1, 2 and 3 piping systems and components. Preservice Testing of Pumps and Valves, also required by subsections IWP and IWV of ASME Section XI, are not included in this plan, and are the subject of a separate document.

This Program Plan is prepared in accordance with the 1974 Edition of ASME Section XI with addenda through Summer 1975. Also included are certain nonmandatory augmented exmainations which are identified as such and performed voluntarily by, and at the discretion of, the Supply System.

Inservice Inspection of Nuclear Power Plant Components is required by federal law as stated in the Code of Federal Regulations, Title 10, Part 50 (10CFR50), Paragraph 50.55a. According to that document, the applicable edition of ASME Section XI for the WNP-2 RPV Preservice Examinations (manufactured to ASME Section III, 1968 Edition with addenda through Summer 1970) is the 1971 Edition with addenda through Winter 1971. Similarly, the WNP-2 piping systems (manufactured to ASME Section III, 1971 Edition with addenda through Summer 1973) are subject to the 1971 Edition with addenda through Winter 1971.

The Supply System has, on a voluntary basis, upgraded the WNP-2 Preservice Inspection Program to the extent practical to comply with 1974 Edition, Summer 1975 addenda, to ensure a maximum practical degree of compliance with future code addenda. Where strict compliance with that code edition and addenda is not practical, the degree of compliance is stated and the exception justified. Exceptions to code requirements which affect examination areas are listed in Section 7.0, "BOUNDARY DIAGRAMS". Exception to code requirements which affect examination and evaluation techniques (procedures) are listed in Section 10.0, "PROCEDURES".

A more complete description of the contents of the Program Plan is given on a section-by-section basis in Section 6.0, "PROGRAM DESCRIPTION". Also included in Subsection 6.6 is a definition of terms and abbreviations used herein.

The Supply System has contracted with the firm of Lambert, McGill, Thomas, Incorporated, located in Santa Clara, California, for the performance of the manual volumetric and surface NDE examinations, and the mechanical RPV examinations. A limited scope external examination of the RPV was done using remote examination devices. These devices operated from permanently installed pole tracks which are mounted on the RPV reflective insulation. The remote equipment was supplied by Southwest Research Institute.

Visual examinations will be performed by WPPSS personnel as described in Section 9.0, "VISUAL PROGRAM".

2.0--TABLE OF CONTENTS

2.0--TABLE OF CONTENTS (Continued)

RECORD OF PROGRAM PLAN REVISIONS

DANIEL W. PORTER
STATE of WASHINGTON
17284
REGISTERED
PROFESSIONAL ENGINEER

Daniel W. Porter
2/13/79

NO.	DATE	REVISIONS	BY	CHK'D	APP'D
4	1/18/85	Issued Amendment 4	DPR	T-H	TF Hoyt
3	12/14/81	Issued Amendment 3	DPRamey	TH	TF Hoyt
2	11/14/80	Issued Amendment 2	TF Hoyt	D.W. Porter	11-18-80
1	9/14/79	Issued Amendment 1	TFH	D.W. Porter	10-1-79
0	1/29/79	Issued for Use	TFH		KT Harrel 2/14/79

Date 1/18/85
Revision 4

TITLE	SHEET	DATE/REV	TITLE	SHEET	DATE/REV
Title Sheet	1	N/A		3-13	4
Sign. Orig.	1	0		3-14	4
Sign. Amd. 1	1	1		3-15	4
Sign. Amd. 2	1	2		3-16	4
Sign. Amd. 3	1	3		3-17	4
Sign. Amd. 4	1	4		3-18	4
1.0 Intro	1-1	1			
	1-2	1			
2.0 Table of	2-1	4			
Contents	2-2	4	4.0 Code	4-1	0
			Commitments		
			Table 4-1	1	0
3.0 Record of	3-1	4		2	1
Revisions	3-2	4		3	0
	3-3	4		4	0
	3-4	4		5	0
	3-5	4		6	0
	3-6	4		7	0
	3-7	4		8	0
	3-8	4			
	3-9	4			
	3-10	4			
	3-11	4			
	3-12	4			

Date 1/18/85
Revision 4

TITLE	SHEET	DATE/REV	TITLE	SHEET	DATE/REV
5.0 FSAR	5-1	1		5-24	1
Commitments	5-2	1		5-25	1
	5-2a	1		5-25a	0
	5-2b	1		5-26	1
	5-3	1		5-26a	1
	5-4	1		5-26b	1
	5-5	2		5-27	2
	5-6	2		5-28	2
	5-7	1		5-29	2
	5-7a	1		5-30	1
	5-7b	1		5-31	1
	5-8	2		5-32	1
	5-8a	0		5-33	1
	5-9	1		5-34	1
	5-10	1		5-35	1
	5-11	1		5-36	1
	5-12	1		5-37	1
	5-13	1		5-38	1
	5-14	1		5-39	1
	5-15	1		5-40	1
	5-16	1		5-40a	0
	5-17	1		5-41	0
	5-18	1		5-42	1
	5-19	1		5-43	1
	5-20	1		5-44	0
	5-21	1		5-45	0
	5-22	1		5-46	0
	5-23	1		5-47	0

Date 1/18/85
Revision 4

TITLE	SHEET	DATE/REV	TITLE	SHEET	DATE/REV
5.0 FSAR	5-48	0		6-7	0
Continued	5-49	0		6-8	0
	5-50	2		6-9	0
	5-51	0		6-10	0
	5-52	0		6-11	4
	5-53	0			
	5-54	0			
	5-55	2			
	5-56	1	7.0 Boundary	7-1	0
	5-57	1	Diagrams	7-2	0
	5-58	0		7-3	2
	5-59	0		7-4	0
	5-60	deleted		7-5	0
				7-6	2
				7-6a	1
				7-6b	0
6.0 Program	6-1	1		7-7	1
Description	6-2	1		7-8	1
	6-2a	1		7-9	2
	6-2aa	0		7-10	0
	6-2ab	0		7-11	0
	6-2b	0		7-12	1
	6-2c	0		7-12a	0
	6-2d	0		7-12b	0
	6-3	1		7-12c	1
	6-4	0		7-13	3
	6-5	0		7-13a	1
	6-6	1		7-13b	1

Date 1/18/85
Revision 4

TITLE	SHEET	DATE/REV	TITLE	SHEET	DATE/REV
7.0 Boundary	7-14	1		2	1
Continued	7-15	0		7-25	1
	7-16	0			
ISI-200	1	1	ISI-224	1	2
				1A	2
ISI-217	1	2		2	2
	7-19	2		2A	2
				3	2
ISI-219	1	1		3A	2
	2	1		4	2
	7-20	1		4A	2
				5	2
ISI-220	1	1		6	2
	2	1		7	0
	7-21	1		7A	0
				7-26	0
ISI-221	1	2	ISI-275	1	0
	1A	2			
	2	1	ISI-225	1	1
	2A	1		2	1
	3	2		3	1
	7-22	3		4	0
	7-23	1		7-27	0
ISI-222	1	1	ISI-226	1	2
	7-24	0		1A	2
				2	3
ISI-223	1	1		7-28	1

Date 1/18/85
Revision 4

TITLE	SHEET	DATE/REV	TITLE	SHEET	DATE/REV
7.0 Boundary			Tables	1-2	12/14/84
Continued					
ISI-228	1	1	RPV-105	1	0
	7-29	1			
	7-30	1	RPV-106	1	0
ISI-229	1	2	RPV-107	1	0
	1A	2			
	2	2	RPV-108	1	0
	2A	2			
	3	0	RPV-109	1	0
	4	0			
	7-31	1	RPV-110	1	0
ISI-230	1	2	RPV-111	1	0
	2	2			
	3	2	RPV-112	1	0
	7-32	1			
			RPV-113	1	0
8.0 Weld ID	8-1	2	RPV-114	1	0
Diagrams	8-2	1			
	8-2a	1	RPV-115	1	0
RPV-101	1	3	RCIC-101	1	4
Tables	1-53	12/14/84		2	3
				3	2
RPV-102	1	2	Tables	1-11	12/14/84

Date 1/18/85
Revision 4

TITLE	SHEET	DATE/REV	TITLE	SHEET	DATE/REV
8.0 Continued			RCIC-205	1	1
RCIC-102	1	3		2	1
	2	3		3	1
	3	4		4	1
Tables	1-11	12/14/84		5	1
				6	1
RCIC-201	1	2		7	0
	2	0	Tables	1-3	12/14/84
Tables	1-2	12/14/84			
			HPCS-101	1	2
RCIC-202	1	1		2	4
	2	1	Tables	1-7	12/14/84
	3	1			
	4	1	HPCS-201	1	1
	5	1		2	1
Tables	1-4	12/14/84	Tables	1	12/14/84
			HPCS-202	1	1
RCIC-203	1	1		2	1
	2	1		3	1
	3	0		4	1
Tables	1-2	12/14/84		5	1
				6	1
RCIC-204	1	1	Tables	1-3	12/14/84
	2	1			
	3	1	LPCS-101	1	2
	4	2		2	3
Tables	1	12/14/84	Tables	1-6	12/14/84

Date 1/18/85
Revision 4

TITLE	SHEET	DATE/REV	TITLE	SHEET	DATE/REV
8.0 Continued			Tables	1-5	12/14/84
LPCS-201	1	1			
	2	1	RHR-201	1	2
Tables	1	12/14/84		2	2
				3	2
LPCS-202	1	1		4	1
	2	1		5	3
	3	1		6	1
	4	1		7	2
	5	1		8	2
	1-2	12/14/84		9	2
				10	2
RHR-101	1	5		11	3
Tables	1-6	12/14/84	Tables	1-17	12/14/84
RHR-102	1	5	RHR-202	1	1
Tables	1-6	12/14/84		2	2
			Tables	1-2	12/14/84
RHR-103	1	5			
Tables	1-6	12/14/84	RHR-203	1	2
				2	2
RHR-104	1	3		3	2
Tables	1-5	12/14/84	Tables	1-6	12/14/84
RHR-105	1	3	RHR-204	1	1
Tables	1-6	12/14/84		2	2
				3	1
RHR-106	1	3		4	1

Date 1/18/85
Revision 4

TITLE	SHEET	DATE/REV	TITLE	SHEET	DATE/REV
8.0 Continued				15	3
Tables	1-3	12/14/84		16	2
				17	1
RHR-205	1	2	Tables	1-24	12/14/84
	2	2			
	3	2	RHR-208	1	1
	4	2		2	2
Tables	1-7	12/14/84		3	1
				4	1
RHR-206	1	2		5	1
	2	2	Tables	1-4	12/14/84
	3	3			
Tables	1-3	12/14/84	RHR-209	1	3
				2	2
RHR-207	1	2	Tables	1-3	12/14/84
	2	1			
	3	2	RHR-210	1	1
	4	2		2	1
	5	2		3	1
	6	2		4	2
	7	2		5	1
	8	2	Tables	1-3	12/14/84
	9	2			
	10	2	RHR-211	1	1
	11	2		2	1
	12	2	Tables	1-2	12/14/84
	13	3			
	14	2	RHR-212	1	1

Date 1/18/85
Revision 4

TITLE	SHEET	DATE/REV	TITLE	SHEET	DATE/REV
8.0 Continued			Tables	1-2	12/14/84
Tables	1	12/14/84			
			MS-106	1	2
RHR-213	1	2		2	1
Tables	1-2	12/14/84		3	1
				4	1
RHR-214	1	1	Tables	1-4	12/14/84
Tables	1	12/14/84			
			MS-201	1	3
MS-101	1	4		2	3
	2	3		3	4
Tables	1-10	12/14/84		4	3
				5	0
MS-102	1	4	Tables	1-19	12/14/84
	2	2			
Tables	1-10	12/14/84	MS-202	1	4
				2	3
MS-103	1	4		3	4
	2	2		4	2
Tables	1-10	12/14/84		5	0
			Tables	1-19	12/14/84
MS-104	1	3			
	2	3	MS-203	1	3
	1-9	12/14/84		2	3
				3	4
MS-105	1	2		4	2
	2	2		5	1
	3	2	Tables	1-18	12/14/84

Date 1/18/85
Revision 4

TITLE	SHEET	DATE/REV	TITLE	SHEET	DATE/REV
3800 Continued			RFW-103	1	3
MS-204	1	3	Tables	1-4	12/14/84
	2	3			
	3	4	RRC-101	1	3
	4	2		2	2
	5	0		3	2
Tables	1-18	12/14/84		4	2
				5	2
MS-205	1	2		6	2
Tables	1	12/14/84		7	2
				8	2
MS-206	1	1	Tables	1-25	12/14/84
Tables	1	12/14/84			
			RRC-102	1	2
RFW-101	1	3		2	3
	2	2		3	2
	3	4		4	2
	4	4		5	2
	5	4		6	2
Tables	1-12	12/14/84		7	2
				8	2
RFW-102	1	3	Tables	1-24	12/14/84
	2	2			
	3	4	RRC-103	1	1
	4	4	Tables	1-4	12/14/84
	5	4			
Tables	1-12	12/14/84	RRC-104	1	2
			Tables	1-3	12/14/84

Date 1/18/85
Revision 4

TITLE	SHEET	DATE/REV	TITLE	SHEET	DATE/REV
8.0 Continued					
RRC-105	1	2	RWCU-301	1	1
Tables	1-5	12/14/84	Tables	1-2	12/14/84
RRC-106	1	1	RWCU-302	1	1
Tables	1-3	12/14/84		1	12/14/84
RRC-107	1	1	RWCU-303	1	1
Tables	1-3	12/14/84		2	1
				3	1
RRC-108	1	1		1-2	12/14/84
Tables	1-3	12/14/84			
			RWCU-304	1	1
RRC-109	1	1		2	1
Tables	1-3	12/14/84		3	1
				1	12/14/84
RRC-110	1	2			
Tables	1	12/14/84	RWCU-305	1	1
				1	12/14/84
RRC-111	1	1			
Tables	1	12/14/84	CRD-201	1	0
				2	0
RWCU-101	1	3		3	0
	2	3		1	12/14/84
	3	3			
	4	4	CRD-202	1	0
	5	3		2	0
Tables	1-2	12/14/84		3	0

Date 1/18/85
Revision 4

TITLE	SHEET	DATE/REV	TITLE	SHEET	DATE/REV
8.0 Continued	1	12/14/84	Tables	1-3	12/14/84
SLC-101	1	0	SW-304	1	1
	2	0	Tables	1	12/14/84
	3	0			
	4	0	SW-305	1	1
	5	0		2	1
	6	0		3	1
				4	1
SW-301	1	0	Tables	1-2	12/14/84
	2	1			
	3	1	SW-306	1	1
	4	1	Tables	1	12/14/84
	5	1			
	6	1	SW-307	1	1
Tables	1-3	12/14/84		2	1
				3	1
SW-302	1	1		4	1
Tables	1	12/14/84		5	0
			Tables	1-2	12/14/84
SW-303	1	0			
	2	1	SW-308	1	1
	3	1	Tables	1	12/14/84
	4	1			
	5	1	SW-309	1	1
	6	1	Tables	1	12/14/84
	7	1			
	8	1	SW-310	1	1

Date 1/18/85
Revision 4

TITLE	SHEET	DATE/REV	TITLE	SHEET	DATE/REV
8.0 Continued				4	1
Tables	1	12/14/84		5	1
				6	1
SW-311	1	1		7	1
Tables	1	12/14/84		8	1
			Tables	1-3	12/14/84
SW-312	1	0			
	2	0	FPC-302	1	1
Tables	1	12/14/84		2	0
				3	1
SW-313	1	0		4	0
Tables	1	12/14/84	Tables	1	12/14/84
SW-314	1	0	FPC-303	1	1
	2	0		2	1
Tables	1	12/14/84		3	0
				4	0
SW-315	1	0	Tables	1	12/14/84
Tables	1	12/14/84			
			FPC-304	1	1
FPC-201	1	1		2	1
Tables	1	12/14/84		3	1
				4	0
FPC-202	1	0		5	0
			Tables	1	12/14/84
FPC-301	1	1			
	2	1	FPC-305	1	1
	3	1		2	1

Date 1/18/85
Revision 4

TITLE	SHEET	DATE/REV	TITLE	SHEET	DATE/REV
8.0 Continued	3	1	RCC-301	1	1
	4	1		2	1
	5	1		3	1
	6	1	Tables	1-3	12/14/84
	7	1			
	8	1	RCC-302	1	1
	9	1		2	1
	10	1	Tables	1-2	12/14/84
	11	0			
Tables	1-4	12/14/84	RCC-303	1	0
				2	0
FPC-306	1	1	Tables	1	12/14/84
Tables	1	12/14/84			
			RCC-304	1	0
FPC-307	1	1		2	0
Tables	1	12/14/84	Tables	1	12/14/84
FPC-308	1	1	DW	1	1
	2	1			
	3	1	EDR-201	1	1
	4	1			
Tables	1-2	12/14/84	FDR-201	1	0
RCC-201	1	0	MSLC	1	1
Tables	1	12/14/84			
			MISC	1	0
RCC-202	1	1	Tables	1-26	12/14/84
Tables	1	12/14/84			

Date 1/18/85
Revision 4

TITLE	SHEET	DATE/REV	TITLE	SHEET	DATE/REV
9.0 Visual	9-1	2	UTCB-106	1	1
Exam. Progs	9-2	2	UTCB-107	1	1
	9-3	2	UTCB-108	1	1
	9-4	3	UTCB-109	1	1
	9-5	3	UTCB-110	1	1
	9-6	0	UTCB-111	1	1
Table 9-1	1-20	0	UTCB-112	1	0
Comp. Support	9-7	0	UTCB-203	1	1
Prog. Plan			UTCB-204	1	1
			UTCB-205	1	1
10.0 Procedures	10-1	3	UTCB-206	1	1
	10-2	1	UTCB-207	1	1
	10-3	2	UTCB-208	1	1
	10-4	3	UTCB-209	1	1
	10-5	3	UTCB-210	1	3
	10-6	0	UTCB-211	1	3
	10-7	0	UTCB-212	1	0
	10-8	0		11-5	0
	10-9	0		11-6	1
				11-7	2
11.0 UT	11-1	3		11-8	1
Cal. Std.	11-2	0		11-9	2
	11-3	1		11-10	0
	11-4	3			
UTCB-101	1	1	UTCB-220	1	5
UTCB-102	1	1	UTCB-221	1	5
UTCB-104	1	1	UTCB-222	1	1
UTCB-105	1	1	UTCB-223	1	2

Date 1/18/85
Revision 4

TITLE	SHEET	DATE/REV	TITLE	SHEET	DATE/REV
11.0 Continued			LMT Mgmt	Cover Sht	1
UTCB-224	1	2	Plan	1	1
UTCB-225	1	1		2	1
UTCB-226	1	1		3	1
UTCB-227	1	0		4	1
UTCB-228	1	0		5	1
UTCB-250	1	0		6	1
UTCB-251	1	1		7	1
UTCB-229	1	0		8	1
UTCB-230	1	0		9	1
UTCB-231	1	0		10	1
				11	1
12.0 Management	12-1	1		F	1
Plan	12-2	2			
	12-3	2	LMT Company	1	0
	12-4	2	Policy	2	0
	12-5	3		3	0
	12-6	1		4	0
	12-7	2		5	0
	12-8	2		6	0
	12-9	3		7	0
	12-10	2		8	0
	12-11	2			
	12-12	2	13.0 QA	13-1	1
	12-13	2			
	12-14	1	14.0 Exam	14-1	1
	12-15	1	Equipment	14-2	1
				14A-1	0

Date 1/18/85
Revision 4

TITLE	SHEET	DATE/REV	TITLE	SHEET	DATE/REV
14.0 Continued	14A-2	A			
	14A-3	0			
RPV-103	1	1			
RPV-104	1	A			
Appendix B	14B-1				
	thru				
	14B-43	0			
15.0 PSI	15-1	1			
Report	15-2	0			
Submittal	15-3	1			
	15-3a	0			
	15-3b	0			
	15-4	1			
	15-4a	0			
	15-4b	0			
	15-4c	0			
	15-4d	0			

4.0--CODE COMMITMENTS

This program is prepared in accordance with the requirements of ASME Section XI, 1974 edition with addenda through Summer 1975. That code and addenda are hereinafter referred to as the reference code. There are some exceptions to the reference code, as well as certain nonmandatory augmented examinations, which are to be distinguished from NRC augmented ISI requirements, and which are performed voluntarily by the Supply System, and are implemented by this program. Table 4.1 summarizes the code applicability for the various plant components and WPPSS augmented requirements in tabular form for ease of reference. Details regarding exceptions to the reference code affecting the definition of ISI examination boundaries can be found in Section 7.0 of this Program Plan entitled "BOUNDARY DIAGRAMS" and those exceptions which affect the conduct of examinations can be found in Section 10.0 entitled "PROCEDURES". A summary of the examinations to be performed on each category of component is included in the FSAR section found in Section 5.0, "FSAR/NRC COMMITMENTS".

Table 4.1

Itemized Code Applicability and WPPSS Augmented Requirements

Sect XI Exam Item	Sect XI Exam Categ	Description	Applicable Code Sect. III	Applicable Code Sect. XI	WPPSS Augmented Requirements	Program Plan Reference	Remarks
		VESSELS					
B1.1	B-A	Longitudinal and circumferential shell welds in core region	1968,S'70	1974,S'75	1) Record UT data at 20% reference level, mechanized examinations only.	10.0	1) Partial baseline data taken manually prior to vessel installation.
B1.2	B-B	Longitudinal and circumferential welds in shell (other than those of Category B-A and B-C) and meridional and circumferential seam selds in bottom head and closure head (other than those of Category B-C)	1968,S'70	1974,S'75	2) Contractor to notify Owner of all indications >80% Code Acceptance Standards	12.0	2) See section 8.0 for detailed examination requirements.
B1.3	B-C	Vessel-to-flange and head-to-flange circumferential welds	1968,S'70	1974,S'75	3) Preservice mechanized to preservice manual data comparison, mechanized examinations only. (See Remark 1, this page)	10.0	
B1.4	B-D	Primary nozzle-to-vessel welds and nozzle inside radiused section	1968,S'70	1974,S'75			
B1.5	B-E	Vessel penetrations, including CRD and instrument penetrations	1968,S'70	1974,S'75	I&E ITEM		
B1.6	B-F	Nozzle-to-safe end Welds	1968,S'70	1974,S'75			
B1.7	B-G-1	Closure studs, in place	1968,S'70	1974,S'75			
B1.8	B-G-1	Closure studs and nuts, when removed	1968,S'70	1974,S'75			
B1.9	B-G-1	Ligaments between threaded stud holes	1968,S'70	1974,S'75			
B1.10	B-G-1	Closure washers, bushings	1968,S'70	1974,S'75			
B1.11	B-G-2	Pressure-retaining bolting	1968,S'70	1974,S'75			
B1.12	B-H	Integrally-welded vessel supports	1968,S'70	1974,S'75			
B1.14	B-I-1	Vessel Cladding	1968,S'70	1974,S'75			
B1.15	B-N-1	Vessel Interior	1968,S'70	1974,S'75			
B1.16	B-N-2	Interior attachments and core support structures	1968,S'70	1974,S'75			
B1.17	B-N-3	Core support structures	1968,S'70	1974,S'75			
B1.18	B-O	Control rod drive housings	1968,S'70	1974,S'75			
B1.19	B-P	Exempted components	1968,S'70	1974,S'75			

Table 4.1

Itemized Code Applicability and WPPSS Augmented Requirements

Sect XI Exam Item	Sect XI Exam Categ	Description	Applicable Code Sect. III	Applicable Code Sect. XI	WPPSS Augmented Requirements	Program Plan Reference	Remarks
		PIPING					why 4" N.P.S.
B4.1	B-F	Safe-end to piping welds and safe-end in branch piping welds	1971,S'73	1974,S'75	1) ASME Section XI, Appendix III 1974, W'75	10.0	1) No UT on welds in piping <4" nominal pipe size
B4.2	B-G-1	Pressure-retaining bolting, removed	1971,S'73	1974,S'75	2) Record UT data at 20% of reference level, mechanized examinations only.	10.0	2) Visual examinations by Owner
B4.3	B-G-1	Pressure-retaining bolting, in place	1971,S'73	1974,S'75			3) Scope and details of examinations requirements given in Section 8.0.
B4.4	B-G-1	Pressure-retaining bolting	1971,S'73	1974,S'75			
B4.5	B-J	Circumferential and longitudinal pipe welds	1971,S'73	1974,S'75	3) Owner notification of all indications >80% Code Acceptance Standards.	9.0	
B4.6	B-J	Branch pipe connections welds exceeding six in. diameter	1971,S'73	1974,S'75			
B4.7	B-J	Branch pipe connection welds six in. diameter and smaller	1971,S'73	1974,S'75	4) 0° UT exam of plate (welded) pipe.	10.0	
B4.8	B-J	Socket welds	1971,S'73	1974,S'75	5) 100% in lieu of 1 foot of longitudinal welds in pipe and fittings shall be examined during PSI.	10.0	
B4.9	B-K-1	Integrally welded supports	1971,S'73	1974,S'75			
B4.10	B-K-2	Support components	1971,S'73	1974,S'75	6) Record UT data at 50% of reference level, manual examinations.	10.0	
B4.11	B-P	Exempted Components	1971,S'73	1974,S'75			
B4.12	B-G-2	Pressure-retaining bolting	1971,S'73	1974,S'75	7) Perform surface examinations in addition to volumetric on Class I pipe welds.	8.0	

Table 4.1

Itemized Code Applicability and WPPSS Augmented Requirements

Sect XI Item	Exam Categ	Description	Applicable Code Sect. III	Applicable Code Sect. XI	WPPSS Augmented Requirements	Program Plan Reference	Remarks
		PUMP PRESSURE BOUNDARY					
B5.1	B-G-1	Pressure-retaining bolts and studs, in place	1968,S'70	1974,S'75	1) Owner notification if indications on bolts >80% Code Acceptance Standards.	9.0	1) Reactor Recirculation Pumps cast stainless, no pressure boundary welds. Bolting exceeds 2" OD.
B5.2	B-G-1	Pressure-retaining bolts and studs, when removed	1968,S'70	1974,S'75			2) Visual examinations, other than those associated with pump bolting to be performed by Owner.
B5.3	B-G-1	Pressure-retaining bolting	1968,S'70	1974,S'75			3) The reactor recirculation pump casings have integrally cast support lugs. There are no "integrally welded" supports.
B5.4	B-K-1	Integrally welded supports (See remark 3)	1968,S'70	1974,S'75			
B5.5	B-K-2	Support components	1968,S'70	1974,S'75			
B5.6	B-L-1	Pump Casing Welds (See remark 1)	1968,S'70	1974,S'75			
B5.7	B-L-2	Pump casings					
B5.8	B-P	Exempted components	1968,S'70	1974,S'75			
B5.9	B-G-2	Pressure-retaining bolting	1968,S'70	1974,S'75			

Table 4.1

Itemized Code Applicability and WPPSS Augmented Requirements

Sect XI Exam Item	Sect XI Exam Categ	Description	Applicable Code Sect. III	Applicable Code Sect. XI	WPPSS Augmented Requirements	Program Plan Reference	Remarks
		VALVES					
B6.1	B-G-1	Pressure-retaining bolts and studs, inplace	1971,S'73	1974,S'75	1) Owner notification of all indications >80% Code Acceptance Standards.	9.0	1) There are no valve bodies containing pressure boundary welds. 2) There are no integrally welded valve supports.
B6.2	B-G-1	Pressure-retaining bolts and studs, removed	1971,S'73	1974,S'75			
B6.3	B-G-1	Pressure-retaining bolting	1971,S'73	1974,S'75			
B6.4	B-K-1	Integrally welded supports (See remark 2)	1971,S'73	1974,S'75			
B6.5	B-K-2	Support components	1971,S'73	1974,S'75			
B6.6	B-M-1	Valve body welds (See remark 1)	1971,S'73	1974,S'75			
B6.7	B-M-2	Valve bodies	1971,S'73	1974,S'75			
B6.8	B-P	Exempted components	1971,S'73	1974,S'75			
B6.9	B-G-2	Pressure retaining bolting	1971,S'73	1974,S'75			

Table 4.1

Itemized Code Applicability and WPPSS Augmented Requirements

Sect XI Exam Item	Sect XI Exam Categ	Description	Applicable Code Sect. III	Applicable Code Sect. XI	WPPSS Augmented Requirements	Program Plan Reference	Remarks
		PRESSURE VESSELS					
C1.1	C-A	Circumferential butt welds	1968,S'70	1974,S'75	1) ASME Section XI, Appendix III, 1974,W'75	10.0	1) The RHR Heat Exchanger is the only class 2 pressure vessel subject to inservice inspection.
C1.2	C-B	Nozzle to vessel welds	1968,S'70	1974,S'75	2) Record UT data at 50% of reference level	10.0	
C1.3	C-C	Integrally welded supports	1968,S'70	1974,S'75	3) Owner notification of all indications >80% Code Acceptance Standards	9.0	
C1.4	C-D	Pressure-retaining bolting	1968,S'70	1974,S'75	4) 0° UT exam for plate (welded) Pipe.	10.0	

Table 4.1

Itemized Code Applicability and WPPSS Augmented Requirements

Sect XI Item	Exam Categ	Description	Applicable Code Sect. III	Applicable Code Sect. XI	WPPSS Augmented Requirements	Program Plan Reference	Remarks
		PIPING					
C2.1	C-F,C-G	Circumferential butt welds	1971,S'73	1974,S'75	1) ASME Section XI, Appendix III, 1974,W'75	10.0	1) No UT where pipe wall thickness ½ inch or less.
C2.2	C-F,C-G	Longitudinal weld joints in fittings	1971,S'73	1974,S'75			
C2.3	C-F,C-G	Branch pipe-to-pipe weld joints	1971,S'73	1974,S'75	2) Record UT data at 50% of reference level	10.0	
C2.4	C-D	Pressure-retaining bolting	1971,S'73	1974,S'75			
C2.5	C-E-1	Integrally-welded supports	1971,S'73	1974,S'75	3) Owner notification of all indications >80% Code Acceptance Standards	9.0	
					4) 0° UT exam for plate (welded) Pipe.	10.0	

Table 4.1

Itemized Code Applicability and WPPSS Augmented Requirements

Sect XI Exam Item	Sect XI Exam Categ	Description	Applicable Code Sect. III	Applicable Code Sect. XI	WPPSS Augmented Requirements	Program Plan Reference	Remarks
		PUMPS					
C3.1	C-F,C-G	Pump casing welds (See remark 1)	1968,S'70	1974,S'75			1) The RHR pump welds are inaccessible. See section 7.0 for justification.
C3.2	C-D	Pressure-retaining bolting	1968,S'70	1974,S'75			
C3.3	C-E-1	Integrally welded supports (See remark 2)	1968,S'70	1974,S'75			2) There are no integrally welded pump supports or support components for class 2 pumps.
C3.4	C-E-2	Support components (See remark 2)	1968,S'70	1974,S'75			

Table 4.1

Itemized Code Applicability and WPPSS Augmented Requirements

Date 1/8/79
Revision 0

Sect XI Exam Item	Sect XI Exam Categ	Description	Applicable Code Sect. III	Applicable Code Sect. XI	WPPSS Augmented Requirements	Program Plan Reference	Remarks
		VALVES					
C4.1	C-F,C-G	Valve body welds (See remark 1)	1971,S'73	1974,S'75			1) There are no class 2 valves with welded valve bodies.
C4.2	C-D	Pressure-retaining bolting	1971,S'73	1974,S'75			
C4.3	C-E-1	Integrally welded supports (See remark 2)	1971,S'73	1974,S'75			2) There are no integrally welded valve supports or support components.
C4.4	C-E-2	Support components (See remark 2)	1971,S'73	1974,S'75			

5.0--FSAR/NRC COMMITMENTS

5.1 FSAR COMMITMENTS

The Supply System has committed in the WNP-2 FSAR to comply with the rules of the ASME Section XI, 1974 Edition with addenda through Summer 1975 for piping pumps and valves. This Code Edition and addenda has been approved for use by 10CFR50.55a(b). This section includes pages from the FSAR reflecting the Preservice Inspection Program commitment. The Inservice Inspection Programs will be updated in accordance with the requirements of 10CFR50.55a.

Note: The above represents a voluntary upgrade of the RPV and piping examinations from the 1971 Edition of ASME Section XI with addenda through Winter 1971 to the 1974 Edition with addenda through Summer 1975.

Below is a copy of the FSAR pages which apply to the WNP-2 Preservice Inspection Program Plan.

5.2.4 INSERVICE INSPECTION AND TESTING OF THE REACTOR COOLANT PRESSURE BOUNDARY

5.2.4.1 System Boundary Subject to Inspection

The system boundary subject to inspection includes all piping and components in quality Group A (ASME Boiler and Pressure Vessel Code, Section III, Class I). The WNP-2 reactor pressure vessel (RPV) will be examined prior to service in accordance with the requirements of the 1974 Edition of the ASME Boiler and Pressure Vessel Code, Section XI, including the Summer 1975 Addenda. All Class 1 piping, pumps and valves will be examined prior to service in accordance with the requirements of the 1974 Edition of the ASME Boiler and Pressure Vessel Code, Section XI, with Addenda through Summer 1975, including Appendix III from the Winter 1975 Addenda. Subsequent inservice inspections will be performed in accordance with the requirements of 10 CFR 50.55a subparagraph (g) to the extent practical.

The design of the RPV shield wall and external inservice inspection system was completed prior to the promulgation of amendments to 10 CFR 50.55a which require the upgrading of the utility's inservice inspection code commitment for examinations subsequent to the baseline examination. The design has allowed some additional access for inspections and coverages anticipated to be required by later codes, where possible. The result of this effort has increased the areas on the RPV available to inservice inspection (approximately 35% of shell circumferential and 90% of vessel longitudinal welds are accessible) and has allowed the piping examination to be upgraded to conform to the requirements of the Summer 1975 Addenda to Section XI as far as practical. The owner has developed an inservice inspection program coordinated with plant design, which complies with the intent of 10 CFR 50.55a to the maximum extent possible.

The preservice examination to be performed on Class 1 components and piping pursuant to the requirements of the 1974 Edition of the ASME Boiler and Pressure Vessel Code, Section XI, including the Summer 1975 Addenda for both the RPV and associated piping, pumps, and valves are detailed in the WNP-2 Preservice Inspection Program Plan (Ref. 5.2-6).

BLANK

The inservice inspections to be performed on Class 1 components and piping pursuant to the requirements of 10 CFR 50.55a (g) will be included in the WNP-2 Inservice Inspection Program Plan which will be submitted in accordance with that regulation.

5.2.4.2 Arrangement of Systems and Components to Provide Accessibility

Access for the purpose of inservice inspection is defined as the design of the plant with the proper clearances for examination personnel and/or equipment to perform inservice examinations during nuclear unit shut down. The reactor coolant pressure boundary for the WNP-2 RPV is designed to provide compliance with the provisions for access as required by Subarticle IWA-1500 of the 1974 Edition of the ASME Boiler and Pressure Vessel Code, Section XI, including the Summer 1975 Addenda. The reactor coolant pressure boundary for WNP-2 piping, pumps, and valves is designed to provide compliance with the provisions for access as required by Subarticle IWA-1500 of the 1974 Edition of the ASME Boiler and Pressure Vessel Code, Section XI, with Addenda through Summer 1975.

Access is provided for volumetric examination of the pressure containing welds from the external surfaces of components and piping by means of removable insulation, removable shielding, and permanent tracks for remote inspection devices in areas where personnel access is restricted. The provisions for suitable access for inservice inspection examinations will minimize the time required for these inspections to be performed and, hence, will reduce the amount of radiation exposure to both plant and examination personnel. Working platforms have been provided at most strategic locations in the plant which permit ready access to those areas of the reactor coolant pressure boundary which are designated as inspection points in the inservice inspection program. Temporary scaffolding will be used as required to gain access for examination.

WPPSS has retained Sourthwest Research Institute to provide an independent assessment as to the suitability of plant access provisions for inservice inspection. This overview provided for indentification of design modification or inspection technique development needs to ensure maximum practical compliance with code requirements.

5.2.4.2.1 Reactor Pressure Vessel

Access for inspection of the reactor pressure vessel will be as follows:

a. Access to the exterior surface of the reactor pressure vessel for inservice inspection is provided by removable insulation and shield plugs. Hinged shield wall plugs around nozzles are used to gain access for remote nozzle inspection devices. A minimum annular space of 8 1/4 inches is provided between the vessel exterior surface and the insulation interior surface to permit the insertion of remotely operated inspection devices between the insulation and the reactor vessel. The reactor pressure vessel nozzle insulation is removable. This design allows sufficient clearances for the mounting of a nozzle-to-shell examination device from tracks located either at the nozzle safe-end or at the pipe area. Examinations that can be performed from these tracks include the required coverage of the nozzle-to-shell welds and depending on technique, could provide examination coverage of the nozzle inner radius section and nozzle-to-safe-end weld. Access, geometry and radiation level considerations will determine those nozzles scheduled for manual examination.

b. The vessel flange area and vessel closure head can be examined during refueling outages using manual ultrasonic techniques. With the closure head removed, access is afforded to the upper interior clad surface of the vessel by removal of a steam dryer and steam separator assembly. Removal of these components also enables the examination of remaining internal components by remote visual techniques. The volumetric examination of the vessel-to-flange weld and closure head-to-flange weld can be performed by applying the search units directly to the seal surface areas. The vessel-to-flange weld will also be examined from vessel shell surface.

c. The closure head is dry stored during refueling which will facilitate direct manual examination. Removable insulation will allow examination of the head welds from the outside surface. Reactor vessel nuts and washers are removed to dry storage for examination during refueling.

selected studs will be examined during refueling so that all the studs will be examined during the inspection interval.

b. Openings in the RPV support skirt are provided to permit access to the RPV bottom head for purposes of inservice examination. The examinations to be performed will include volumetric examinations of circumferential welds, portions of the meridional welds, portions of the dollar plate longitudinal welds, and visual examination of accessible penetration welds.

5.2.4.2.2 Piping, Pumps, and Valves

The physical arrangment of piping, pumps, and valves has been designed to allow personnel access to welds requiring inservice inspection. Modifications to the initial plant design have been incorporated where practicable to provide inspection access on Class 1 piping systems. Removable insulation has been provided on those piping systems requiring inspection. In addition, the placement of pipe hangers and supports with respect to those welds requiring inspection have been reviewed and modified where necessary to reduce the amount of plant support required in these areas during inspection. Working platforms have been provided to facilitate servicing of pumps and valves. Temporary platforms, scaffolding, and ladders will be provided to gain additional access for piping and some pump and valve examinations. An effort has been made to minimize the number of fitting-to-fitting welds within the inspection boundary. Welds requiring inspection have been located to permit ultrasonic examinations from at least one side, but where component geometries permit, access from both sides of the weld is provided. The surface of welds within the inspection boundary have been prepared to permit effective ultrasonic examination.

5.2.4.3 Examination Techniques and Procedures

Examination techniques and procedures for the preservice examination, including any special technique and procedure, have met the requirements of Table IWB-2600 of the 1974 Edition of the ASME Boiler and Pressure Vessel Code, Section XI, including the Summer 1975 Addenda for both the reactor pressure vessel and the associated piping, pump, and valve examinations. Examination techniques and procedures for inservice inspecitons will be upgraded to meet the requirements of the Edition and Addenda of the Code in effect to the extent practical. During plant design, an effort has been made to upgrade the requirement for calibration standards.

Where upgrading was not feasible, material of the same P series with similar acoustic characteristics will be used.

5.2.4.3.1 Equipment for Inservice Inspection

The equipment for inservice inspection of the reactor pressure vessel seam welds consists of remotely operated devices which travel over the vessel shell on permanently installed tracks between the vessel surface and the insulation. An electronic system with a receiver or data channel for each ultrasonic transducer will be used for acquiring and storing data when using remote automated examination equipment.

Tracks are located such that the devices are capable of moving ultrasonic transducers over the lengths of shell welds that are required to be examined inservice in the 1974 Edition of ASME B&PV Code, Section XI. This design does not preclude the use of remote examination devices that do not require tracks. Remote ultrasonic scanning equipment for examination of the nozzle-to-vessel welds will be supported and guided from tracks temporarily mounted on the pipe connected to the nozzle. The examination equipment will provide radial and circumferential motion to the ultrasonic transducer while rotating about the nozzle. Installation of the equipment will be accomplished through the access openings in the sacrificial shield which are provided at each nozzle location.

Mechanized surface examination techniques, if utilized, will provide results which are at least equivalent to those obtainable by manual surface techniques.

Remote visual examination techniques will provide a resolution capability which is at least equivalent to that required for direct visual observation.

Procedures governing such examinations were qualified prior to examinations in the WNP-2 plant.

5.2.4.3.2 Coordination of Inspection Equipment With Access Provisions

Access to areas of the plant requiring inservice inspection is provided to allow use of standard equipment wherever practicable. Design in general provides for free space envelopes both radially and axially from welds to be examined so standard manual examination equipment may be utilized. Any special equipment or techniques used will achieve the sensitivities required by the Codes.

Access is provided for the installation of remote examination

devices on the vessel tracks by means of hinged nozzle shield doors, removable hatches and panels, or personnel access hatches in the sacrifical shield.

5.2.4.3.3 Manual Examination

In areas where manual ultrasonic examination is performed, all reportable indications will be recorded on a strip chart or other type recorder or will be mapped and records made of maximum signal amplitude, depth below the scanning surface, and length of reflector. The data compilation format will be such as to provide for comparison of data from subsequent examinations. Radiographic techniques may be used where ultrasonic techniques are not practical. In areas where manual surface or direct visual examinatons are performed, all recordable indications will either be removed by grinding or mapped with respect to size and location in a manner to allow comparison of data from subsequent examinations.

5.2.4.4 Inspection Intervals

Inspection Program B, which contains ten year inspection intervals, as defined in Section XI, will be used. These inspection intervals represent calendar years after the reactor facility has been placed into commercial service. The interval may be extended by as much as one year to permit inspections to be concurrent with plant outages. The frequency of examinations within each inspection interval will be contained in the WNP-2 Inservice Inspection Program Plan for each category. All examinations will be conducted prior to plant start-up except that examinations will be extended to include essentially 100% of the pressure containing welds.

5.2.4.5 Examination Categories and Requirements

Examination categories and requirements for the Preservice Inspection are defined in the WNP-2 Preservice Inspection Program Plan and closely follow the categories and requirements specified in Tables IWB-2500 and IWB-2600 of the 1974 Edition with Addenda through Summer 1975 of the ASME Boiler and Pressure Vessel Code, Section XI for the reactor pressure vessel and the associated piping, pumps and valves.

Examination categories and requirements for inservice inspections will be in accordance with the requirements of Section XI and will be contained in the WNP-2 Inservice Inspection Program Plan.

5.2.4.6 Evaluation of Examination Results

Evaluation of examination results for the reactor pressure vessel, pump, and valve baseline examinations will be conducted in accordance with Article IWB-3000 of the 1974 Edition of the ASME Boiler and Pressure Vessel Code, Section XI, including the Summer 1975 Addenda. Evaluation of examination results for piping examinations will be conducted in accordance with

BLANK

Article IWB-3000 of the 1974 Edition of the ASME Boiler and Pressure Vessel Code, Section IX, with Addenda through Winter 1975. The Owner recognizes that Section XI has been promulgated as an effective code by 10CFR50.55a only through the Summer 1975 Addenda. However, the Owner also recognizes that even though the Code through Summer 1975 Addenda included evaluation criteria which could be interpreted to apply to piping (Category B-J) welds, the evaluation criteria found in the Winter 1975 Addenda clearly provides evaluation criteria which are applicable to these welds. The Owner is unaware that the NRC staff is opposed to these evaluation criteria and anticipates that the criteria which will appear in the future codes will be consistent therewith.

5.2.4.7 System Leakage and Hydrostatic Pressure Tests

The requirement for baseline hydrostatic test for the reactor pressure vessel will be satisfied by the hydrostatic test performed in accordance with the requirements of ASME Section III. Similarly, the requirements for the baseline piping system leakage and hydrostatic tests will be satisfied by reference to the Section III hydrostatic test report as permitted by ASME Section XI, IWA-5210(b). Subsequent system leak tests will be conducted prior to startup following each reactor refueling outage. A system hydrostatic test will be conducted at or near the end of each inspection interval. Examinations performed during these tests may be conducted without the removal of insulation as permitted by Code.

5.2.4.8 Inservice Inspection Commitment

All quality Group A components will be examined once prior to start-up in accordance with the above requirements. This preoperational examination will serve to satisfy the requirements of IWB-2100 of the 1974 Edition of the ASME Boiler and Pressure Vessel Code, Section XI, including the Summer 1975 Addenda for the reactor pressure vessel and associated piping, pumps, and valves. (See 3.9.6 for program for pumps and valves.) Subsequent inservice inspection of the WNP-2 plant will be performed in accordance with the requirements of 10CFR50.55a, subparagraph (g) to the extent practical.

5.2.4.9 Augmented Inservice Inspection to Protect Against Postulated Piping Failures

An augmented Inservice Inspection Program will be implemented for WNP-2, on high energy* Class 1 piping systems which penetrate containment for which the effects of postulated pipe breaks would be unacceptable. This program will entail a volumetric examination of all circumferential butt welds (surface examination for socket welds) between the first pipe whip restraint beyond the inside containment isolation valve, and first pipe whip restraint beyond the outside containment isolation valve on high-energy Class 1 lines greater than one (1) inch which penetrate the containment.

In those cases where the piping beyond the containment isolation valve is not pressurized (i.e., low energy), the augmented inservice inspection boundary will stop at the containment isolation valve.

This program will include branch lines which fall within the augmented inservice inspection boundary to the first pipe whip restraint beyond the branch line isolation valve or the first normally closed valve, whichever comes first.

*High-energy lines include those systems that, during normal plant conditions, are either in operation or maintained pressurized and where either the maximum operating pressure exceeds 275 psig or maximum operating temperature exceeds 200°F. If, for a particular line, the above pressure and temperature limits are not exceeded more than 2% of the time that the system is in operation, then that line is considered moderate energy and is exempt from the requirement for augmented inservice inspection.

WNP-2 PRESERVICE

INSPECTION PROGRAM PLAN

This page purposely left blank

TABLE 5.2-12
DELETED

NOTE: The itemized examinations to be conducted in accordance with the commitments herein are delineated in the WNP-2 Preservice Inspection Program Plan (Ref. 5.2-6) for all preservice inspection commitments, and will subsequently be delineated in the WNP-2 Inservice Inspection Program Plan applicable to each inspection interval.

(DELETED)

(DELETED)

(DELETED)

(DELETED)

(DELETED)

(DELETED)

(DELETED)

(DELETED)

(DELETED)

(DELETED)

(DELETED)

(DELETED)

(DELETED)

(DELETED)

(DELETED)

(DELETED)

WNP-2 PSI PROGRAM PLAN

N.O T U S E D

(Purposely left blank)

6.6 INSERVICE INSPECTION OF ASME CODE CLASS 2 AND CLASS 3 COMPONENTS

This section addresses the preservice and inservice inspections of quality Group B and C (ASME Boiler and Pressure Vessel Code, Section III, Class 2 and 3) components as required by Section XI of the ASME Boiler and Pressure Vessel Code.

6.6.1 COMPONENTS SUBJECT TO EXAMINATION

The preservice inspection of Class 2 components will be performed in accordance with the requirements of the 1974 Edition of the ASME Boiler and Pressure Vessel Code, Section XI, with Addenda through Summer 1975 including Appendix III from the Winter 1975 Addenda. The components subject to examination are listed in the WNP-2 PSI Program Plan. These components are essentially those defined in Subarticle IWC-1200 and will be examined in accordance with that plan. Subsequent inservice inspections of Class 2 components will be performed in accordance with the requirements of 10 CFR 50.55a Subparagraph (g) to the extent practical.

All Class 3 components will be tested preservice in accordance with the requirements of Subarticle IWD-1200 of the 1974 Edition of the ASME Boiler and Pressure Vessel Code, Section XI, with Addenda through Summer 1975. Subsequent inservice inspection and testing of Class 3 components will be performed in accordance with the requirements of 10 CFR 50.55a, subparagraph (g) to the extent practical.

Components voluntarily upgraded to higher Code classes than required by their performance function will be subject to the requirements of Section XI applicable to the function related Code Class identified within the context of Regulatory Guide 1.26 (Rev. 1). The radwaste systems and off-gas system, excluding piping and valves forming part of the containment boundary, are not subject to preservice or inservice inspections.

6.6.2 ACCESSIBILITY

Access for inspection incorporated into the WNP-2 design of Class 2 and 3 piping, pumps and valves, exceeds the access requirements of ASME B&PV Code, Section XI mandatory by date of issuance of the Construction Permit. To the extent practical, access is provided in design for compliance with Subarticle IWA-1500 of the 1974 Edition of the ASME B&PV Code, Section XI, with Addenda through Summer 1975. The status of design and manufacture of individual components such

as RHR pumps and RHR heat exchangers precluded compliance with all subsequent Section XI Editions and Addenda issued. WPPSS has retained Southwest Research Institute to provide an independent assessment as to the suitability of plant

BLANK

access provisions for inservice inspection. This overview provided for identification of design modifications or inspection technique development and ensures maximum practical compliance with Code requirements. Access is provided for volumetric and surface examination of the pressure-containing welds, when required, from the external surfaces of Class 2 components and piping. Consideration has been given to the inspectability of the Class 2 and 3 systems in the design of components in the equipment layout, and in the support structures to permit access for the purpose of inservice inspection.

Access for the purpose of inservice inspection is defined as plant design with the proper clearances for examination personnel and/or equipment to perform inservice examinations during plant shutdown. Access requirements have been considered in the design of components, weld joint configuration, and system arrangements to facilitate inspection. Access to welds requiring volumetric or surface examination has been provided by means of removable insulation and/or removable structures. The provisions for suitable access for inservice inspection examinations will minimize the time required for these inspections to be performed and, hence, will reduce the amount of radiation exposure to both plant and examination personnel. Working platforms have been provided to facilitate servicing of some pumps and valves. Temporary platforms, scaffolding, and ladders will be provided to gain additional access to piping, pumps, and valves. A conscientious effort has been made to minimize the number of fitting-to-fitting welds within the inspection boundary. Welds requiring volumetric inspection have been located to permit ultrasonic examinations from at least one side, but where component geometries permit, access from both sides of the weld is provided. The surface of welds within the inspection boundary have been prepared to permit effective ultrasonic examination.

6.6.3 EXAMINATION TECHNIQUES AND PROCEDURES

Inspection categories, inspection techniques, and inspection frequencies for Class 2 components are in accordance with the ASME Boiler and Pressure Vessel Code, Section XI. Manual ultrasonic examination techniques were used for all volumetric examinations of Class 2 components. All recordable indications were recorded on a strip chart and were mapped. Records were made of the maximum signal amplitude.

depth below the scanning surface, and length of reflector. The data compilation format is such as to provide for comparison of data from subsequent examinations. Radiographic techniques may be used where ultrasonic techniques are not applicable. For areas where manual surface examinations or direct visual examinations are to be performed, all reportable indications were either removed by grinding or mapped with respect to size and location in a manner to allow comparison of data to subsequent examinations.

Class 3 components may be examined during hydrostatic testing or during operations without removing insulation as permitted by Code.

During plant design, a conscientious effort has been made to upgrade the requirements for calibration standards. Where upgrading was not permitted, materials of the same P series with similar acoustic characterisitc were used.

6.6.4 INSPECTION INTERVALS

The inservice inspection schedule for Class 2 and 3 system components will be developed in accordance with the requirements of the ASME Boiler and Pressure Vessel Code, Section XI, Article IWC-2400 and IWD-2400, respectively, as required by 10CFR50.55(a), Subparagraph (g) to the extent practical. Inspection Program B which contains four 10-year intervals as described in Article IWA-2420 of Section XI will be used.

6.6.5 EXAMINATION CATEGORIES AND REQUIREMENTS

Inservice inspection categories and requirements for Class 2 components and piping are in agreement with Table IWC-2600 of the 1974 Edition of the ASME Boiler and Pressure Vessel Code, Section XI, with Addenda through Summer 1975.

6.6.6 EVALUATION OF EXAMINATION RESULTS

Evaluation of preservice examination results of Class 2 and 3 components will be in accordance with the evaluation criteria specified in 5.2.4.6 for Class I components.

6.6.7 SYSTEM PRESSURE TEST

Class 2 systems subject to hydrostatic tests will be tested in accordance with Article IWC-5000 of the ASME Boiler and Pressure Vessel Code, Section XI.

Class 3 systems subject to hydrostatic tests will be tested in accordance with the requirements of Article IWD-5000 of the ASME Boiler and Pressure Vessel Code, Section XI.

6.6.8 AUGMENTED INSERVICE INSPECTION TO PROTECT AGAINST POSTULATED PIPING FAILURES

An augmented inservice inspection program is not applicable to WNP-2 as there is no Class 2 or 3 piping greater than 1-inch penetrating the containment, classified as high energy during normal operation. Criteria used to classify high and moderate energy piping are found in Chapter 6.

TABLE 6.6-1 DELETED

NOTE: The itemized examinations to be conducted in accordance with the commitments herein are delineated in the WNP-2 Preservice Inspection Program Plan (Reference 5.2-6) for all preservice inspection commitments, and will subsequently be delineated in the WNP-2 Inservice Inspection Program Plan applicable to each inspection interval.

(DELETED)

(DELETED)

(DELETED)

(DELETED)

(DELETED)

(DELETED)

(DELETED)

(DELETED)

(DELETED)

(DELETED)

WNP-2 PSI PROGRAM PLAN

N O T U S E D

(Purposely left blank)

5.2 NRC REGULATORY GUIDES

The Supply System has reviewed the augmented inservice inspection requirements found in the NRC Regulatory Guides listed below. Following careful review and consideration of those augmented requirements, the WNP-2 Preservice Inspection Program Plan has been found to not be subject to the augmented (i.e., above and beyond the ISI requirements of ASME Section XI) inspection requirements of those Regulatory Guides (with the possible exception of Turbine Disk Integrity Verification, Reg. Guide 1.70). This is generally due to the implementation criteria of the Guides, or the nature of the plant design which does not incorporate the design configuration addressed in the Guide. A brief statement of the reasons for nonapplicability is given for each Guide.

Date 12/14/81
Revision 1

NRC REGULATORY GUIDE REVIEW FOR APPLICABILITY TO WNP-2 PSI PROGRAM PLAN

Reg. Guide No.	Title	Applicability to WNP-2 PSI Program Plan
1.14, Rev. 1	Reactor Coolant Pump	Not applicable; WNP-2 is a BWR plant which does not utilize reactor coolant pumps.
1.26, Rev. 3	Quality Group Classifications and Standard for Water, Steam, and Radioactive Waste Containing Components in Nuclear Power Plants	Applicable; used to establish WNP-2 ISI boundaries.
1.33 (Safety Guide 33)	Quality Assurance Program Requirements (Operation)	Applicable; Supply System Operational QA Program addresses compliance
1.35, Rev. 2	Inservice Inspection of Ungrouted Tendons in Prestressed Concrete Containment Structures	Not applicable; WNP-2 does not have a prestressed concrete containment structure.
1.58	Qualification of Nuclear Power Plant Inspection, Examination, and Testing Personnel	Applicable; Supply System Operational QA Program addresses compliance.
1.65	Materials and Inspections for Reactor Pressure Vessel Closure Studs	Applicable; WNP-2 PSI Program complies through incorporation of ASME Section XI examination requirements.
1.66	NDE of Tubular Products	Not applicable; withdrawn 9/28/77.
1.70, Rev. 2	Standard Format and Content for SAR's	The Supply System voluntarily used the subject format. 6.6.8--Augmented Inservice Inspection to Protect Against Postulated Piping Failures This is not applicable to WNP-2 as there are no Class 2 or 3 piping greater than 1" penetrating containment and classified as high energy during normal operation.

Reg. Guide No.	Title	Applicability to WNP-2 PSI Program Plan
		10.2.3--Turbine Disk Integrity Inspections will be performed in accordance with the following Westinghouse documents: "Report Covering the Effects of a High Pressure Turbine Rotor Fracture and Low Pressure Disk Fracture at Design Overspeed" (296/281 A, April 1975). "Report Covering the Effects of a Turbine Accelerating to Destructive Overspeed" (296/281 B, April 1975).
1.83, Rev. 1	ISI of PWR Steam Generator Tubes	Not applicable; WNP-2 is a BWR without steam generators.
1.90	ISI of Prestressed Concrete Containment Vessels With Ungrouted Tendons	Not applicable; WNP-2 does not have a prestressed concrete containment.
1.96	Design of Main Steam Isolation Valve Leakage Control Systems	Applicable; does not include augmented ISI requirements beyond that required by ASME Section XI.
1.137	Fuel Oil Systems for Standby Diesel Generators	Not applicable; Regulatory Position C.1 will not be used as a basis for evaluation of WNP-2 since the construction permit preceeds the 9/1/78 cutoff date. (See copy of Reg. Guide 1.137 transmittal on following pages for clarification).
1.150	Ultrasonic Testing of Reactor Vessel Welds During Preservice and Inservice Examinations	Not applicable; most of the WNP-2 reactor vessel baseline examinations were done before the January 15, 1982 implementation date. The WNP-2 baseline examinations of the reactor vessel are expected to be completed in early 1982. These examinations will be done to the same requirements applied to the rest of the LMT performed reactor vessel examinations.

Date 1/8/79
Revision 0

UNITED STATES
NUCLEAR REGULATORY COMMISSION
WASHINGTON, D. C. 20555

RECEIVED
JAN 27 1978

January 13, 1978

REGULATORY GUIDE DISTRIBUTION LIST (DIVISION 1)

Regulatory Guide 1.137, "Fuel-Oil Systems for Standby Diesel Generators," transmitted herewith, describes a method acceptable to the NRC staff for complying with the Commission's regulations regarding fuel-oil systems for standby diesel generators and assurance of adequate fuel-oil quality.

In addition to the provisions of Section D, "Implementation," of the guide, the NRC intends to implement portions of this guide for all nuclear power plants in the following manner:

1. Regulatory Position C.1 will be evaluated, on a case-by-case basis, for application to all construction permit cases under review whose Safety Evaluation Report has not been issued as of the implementation date shown in the published guide.

2. Regulatory Position C.2 will be evaluated, on a case-by-case basis, for application to all operating reactors, operating license reviews, and construction permit cases under review whose Safety Evaluation Reports are completed as of the implementation date shown in the published guide (including Preliminary Design Authorizations).

3. Regulatory Position C.2 will be applied to all construction permit cases under review whose Safety Evaluation Report has not been issued as of the implementation date shown in the published guide.

Robert B. Minogue

Robert B. Minogue, Director
Office of Standards Development

U.S. NUCLEAR REGULATORY COMMISSION January 1978

REGULATORY GUIDE

OFFICE OF STANDARDS DEVELOPMENT

Date 1/8/79

Revision 0

REGULATORY GUIDE 1.137
FUEL-OIL SYSTEMS FOR STANDBY DIESEL GENERATORS

A. INTRODUCTION

General Design Criterion 17, "Electric Power Systems," of Appendix A, "General Design Criteria for Nuclear Power Plants," to 10 CFR Part 50, "Licensing of Production and Utilization Facilities," requires that an onsite electric power system and an offsite electric power system be provided to permit functioning of structures, systems, and components important to safety. In addition, Criterion 17 contains requirements concerning system capacity, capability, independence, redundancy, availability, testability, and reliability. Appendix B, "Quality Assurance Criteria for Nuclear Power Plants," to 10 CFR Part 50 establishes overall quality assurance requirements for the design, construction, and operation of structures, systems, and components important to safety. This regulatory guide describes a method acceptable to the NRC staff for complying with the Commission's regulations regarding fuel-oil systems for standby diesel generators and assurance of adequate fuel-oil quality.

B. DISCUSSION

Working Group ANS 59.51 of Subcommittee ANS-50, Nuclear Power Plant Systems Engineering, of the American National Standards Committee N18, Nuclear Design Criteria, has prepared a standard that provides design requirements for the fuel-oil systems for standby diesel generators. This standard was approved by the American National Standards Committee N18 and its Secretariat, and it was subsequently approved and designated ANSI N195-1976 by the American National Standards Institute on April 12, 1976.

For proper operation of the standby diesel generators, it is necessary to ensure the proper quality of the fuel oil. Appendix B to ANSI N195-1976 addresses the recommended fuel-oil practices. Although not a mandatory part of the standard, the staff believes Appendix B can serve as an acceptable basis for a program to maintain the quality of fuel oil, as supplemented by Regulatory Position C.2 of this guide.

C. REGULATORY POSITION

1. The requirements for the design of fuel-oil systems for diesel generators that provide standby electrical power for a nuclear power plant that are included in ANSI N195-1976, "Fuel Oil Systems for Standby Diesel Generators,"[1] provide a method acceptable to the NRC staff for complying with the pertinent requirements of General Design Criterion 17 of Appendix A to 10 CFR Part 50, subject to the following:

a. Throughout ANSI N195-1976, other documents required to be included as part of the standard are either identified at the point of reference or described in Section 7.4, "Applicable Codes, Standards, and Regulations," or Section 11, "References," of the standard. The specific acceptability of these listed documents has been or will be addressed separately in other regulatory guides or in Commission regulations, where appropriate.

b. Section 1, "Scope," of ANSI N195-1976 states that the standard provides the design requirements for the fuel-oil system for standby diesel generators and that it sets forth other specific design requirements such as safety class, materials, physical arrangement, and applicable codes and regulations. The standard does not specifically address quality assurance, and

[1] Copies may be obtained from the American Nuclear Society, 555 North Kensington Avenue, La Grange Park, Illinois 60525.

in this regard ANSI N195-1976 should be used in conjunction with Regulatory Guide 1.28, "Quality Assurance Program Requirements (Design and Construction)," which endorses ANSI N45.2-1971, "Quality Assurance Program Requirements for Nuclear Power Plants," for the design, construction, and maintenance of the fuel-oil system.

c. Section 5.4, "Calculation of Fuel Oil Storage Requirements," of the standard sets forth two methods for the calculation of fuel-oil storage requirements. These two methods are (1) calculations based on assuming the diesel generator operates continuously for 7 days at its rate capacity, and (2) calculations based on the time-dependent loads of the diesel generator. For the time-dependent load method, the minimum required capacity should include the capacity to power the engineered safety features. Applications that use the time-dependent load method to calculate fuel-oil storage requirements will be reviewed on a case-by-case basis along with the calculations.

d. Section 7.3, "Physical Arrangement," of ANSI N195-1976 states that "the location of the day tanks of standby diesel generators shall be as required by the diesel-engine manufacturer." In addition to this requirement, the day tanks should be located at an elevation to ensure adequate net positive suction head at the engine fuel pumps at all times.

e. Section 7.3 of ANSI N195-1976 states that the arrangement of the fuel-oil system "shall provide for inservice inspection and testing in accordance with ASME Boiler and Pressure Vessel Code, Section XI, 'Rules for In-Service Inspection of Nuclear Power Plant Components.'"[2] Although Section XI of the ASME Boiler and Pressure Vessel Code does not specify whether its provisions apply to fuel-oil systems, they should be applied for the inservice inspection and testing program for those portions of the fuel-oil systems for standby diesel generators that are designed to Section III, Subsection ND of the Code.

f. Section 7.3 of ANSI N195-1976 states that adequate heating shall be provided for the fuel-oil system. Assurance should be provided that fuel oil can be supplied and ignited at all times under the most severe environmental conditions expected at the facility. This may be accomplished by use of an oil with a "Cloud Point" lower than the 3-hour minimum soak temperature (Ref. 1) expected at the site during the seasonal periods in which the oil is to be used, and/or by maintenance of the onsite fuel oil above the "Cloud Point" temperature.

g. Section 7.5, "Other Requirements," of the standard states that "protection against external and internal corrosion shall be provided" for the fuel-oil system. To amplify this requirement for buried supply tanks not located within a vault and other buried portions of the system, a waterproof protective coating and an impressed current-type cathodic protection system should be provided in accordance with NACE Standard RP-01-69 (1972 Revision), "Recommended Practice—Control of External Corrosion on Underground or Submerged Metallic Piping Systems."[3] In addition, the impressed current-type cathodic protection system should be designed to prevent the ignition of combustible vapors or fuel oil present in the fuel-oil systems for standby diesel generators.

h. Section 7.5 of the standard includes requirements for fire protection for the diesel-generator fuel-oil system. The requirements of Section 7.5 are not considered a part of this regulatory guide since this subject is addressed separately in more detail in other NRC documents. Thus a commitment to follow this regulatory guide does not imply a commitment to follow the requirements of Section 7.5 concerning fire protection.

2. Appendix B to ANSI N195-1976 should be used as a basis for a program to ensure the initial and continuing quality of fuel oil as supplemented by the following:

a. The oil stored in the fuel-oil supply tank, and the oil to be used for filling and refilling the supply tank, should meet the requirements of ASTM D975-74, "Standard Specification for Diesel Fuel Oils,"[4] or the requirements of the diesel-generator manufacturer, if they are more restrictive, as well as the fuel-oil total insolubles level specified in Appendix B of the standard and the "Cloud Point" requirements given in Regulatory Position C.2.b. Fuel oil contained in the supply tank not meeting these requirements should be replaced in a short period of time (about a week).

b. Prior to adding new fuel oil to the supply tanks, tests for the following properties should be conducted:

(1) Specific or API gravity
(2) Cloud Point
(3) Water and Sediment
(4) 90% Distillation Temperature

The fuel oil should meet the requirements of ASTM D975-74 for the latter two analyses. The "Cloud Point" should be less than or equal to the 3-hour minimum soak temperature, or the minimum temperature at which the fuel oil will be maintained during the period of time that it will be in storage. Analysis of the other properties of the fuel oil listed in ASTM D975-74 should be completed within 2 weeks of the transfer.

c. The periodic sampling procedure for the fuel oil

[2] Copies may be obtained from the American Society of Mechanical Engineers, United Engineering Center, 345 East 47th Street, New York, N.Y. 10017.

[3] Copies may be obtained from the National Association of Corrosion Engineers, 2400 West Loop South, Houston, Texas 77027.

[4] Also designated ANSI Z11.205-1975. Copies may be obtained from the American National Standards Institute, 1430 Broadway, New York, N.Y. 10018.

should be in accordance with ASTM D270-1975, "Standard Method of Sampling Petroleum and Petroleum Products."[5]

d. Accumulated condensate should be removed from storage tanks on:

(1) a quarterly basis;

(2) a monthly basis when it is suspected or known that the ground-water table is equal to or higher than the bottom of buried storage tanks; and

(3) one day after the addition of new fuel.

e. Day tanks and integral tanks should be checked for water monthly, as a minimum, and after each operation of the diesel where the period of operation was 1 hour or longer. Any accumulated water should be removed immediately. If it is suspected that water has entered the suction piping from the day or integral tank, the entire fuel-oil system between the day or integral tank and the injectors should be flushed.

f. As a minimum, the fuel oil stored in the supply tanks should be removed, the accumulated sediment removed, and the tanks cleaned in order to perform the ASME Section XI, Article IWD-2000, "Examination Requirements," at the required 10-year intervals. To preclude the introduction of surfactants in the fuel system, this cleaning should be accomplished using sodium hypochlorite solutions or its equivalent rather than soap or detergents.

g. Assuming an unlikely event should occur that would require replenishment of fuel oil without the interruption of operation of the diesel generators, the method of adding additional fuel oil should be such as to minimize the creation of turbulence of the accumulated residual sediment in the bottom of the supply tank since stirring up this sediment during the addition of acceptable new incoming fuel has the potential of causing the overall quality of the fuel oil in the storage tank to become unacceptable.

h. Cathodic protection surveillance should be conducted according to the following procedures:

(1) At intervals not exceeding 12 months, tests should be conducted on each underground cathodic protection system to determine whether the protection is adequate.

(2) The test leads required for cathodic protection should be maintained in such a condition that electrical measurements can be obtained to ensure the system is adequately protected.

(3) At intervals not exceeding 2 months, each of the cathodic protection rectifiers should be inspected.

(4) Records of each inspection and test should be maintained over the life of the facility, to assist in evaluating the extent of degradation of the corrosion protection systems.

D. IMPLEMENTATION

The purpose of this section is to provide information to applicants regarding the NRC staff's plans for using this regulatory guide.

Except in those cases in which the applicant proposes an acceptable alternative method for complying with specified portions of the Commission's regulations, the method described herein will be used in the evaluation of submittals for construction permit applications docketed after September 15, 1978, unless this guide is revised as a result of suggestions from the public or additional staff review.

If an applicant wishes to use this regulatory guide in developing submittals for applications docketed on or before September 15, 1978, the pertinent portions of the application will be evaluated on the basis of this guide.

REFERENCE

1. J.P. Doner, "A Predictive Study for Defining Limiting Temperatures and their Application in Petroleum Product Specifications," U.S. Army, Mobility Equipment Research and Development Center, Coating and Chemical Laboratory, Aberdeen Proving Ground, Maryland, CCL Report No. 316.

[5] Also designated ANSI Z11.33-1976. Copies may be obtained from the American National Standards Institute, 1430 Broadway, New York, N.Y. 10018.

Q. 121.8

(In response to this item, refer to the responses to Items 121.15 and 121.18 on the Hatch-2 docket.) Additional information is required to demonstrate that: (1) the thermal sleeve/sparger design of the feedwater inlet nozzle has been evaluated with respect to potential nozzle cracking resulting from thermal cycling; and (2) a program of scheduled augmented inservice inspection has been developed.

These inservice inspections should be conducted with a method sufficiently sensitive to provide assurance that small cracks can be detected. Accordingly, we require you to supply the following information:

a. That technical basis to assure the structural integrity of both the feedwater inlet nozzle and the sparger.

b. An evaluation of the feasibility of installing automated ultrasonic testing (UT) fixtures on all feedwater inlet nozzles with particular attention focused on the examination of the nozzle bore region.

c. An evaluation of the feasibility of performing the internal surface examination by magnetic particle methods.

Your response should contain: (1) a description of the nozzle and sparger design including the significant dimensions, the materials of construction and the weld locations; (2) a description of the analyses and test data, referencing appropriate data previously submitted to the NRC staff if it is applicable for the WNP-2 facility; (3) the detailed projected crack growth rates, stress levels and usage factors for both the nozzle and the sparger; (4) any plant modifications that are planned to reduce the temperature differential between the feedwater and the water in the reactor pressure vessel during low power operation; and (5) a description of any instrumentation that will be installed in the reactor pressure vessel to verify the conclusions of your design analysis.

Several ultrasonic testing concepts and procedures have been used to examine the feedwater inlet nozzle regions in operating plants. Identify which of these ultrasonic testing procedures will be used in the WNP-2 facility. Discuss the influence on crack detection, using your ultrasonic testing method in the WNP-2 facility, of local grindouts.

In addition, provide a description of the augmented inservice inspection (ISI) program to be implemented including scheduled surface examination, ultrasonic testing and verification of the leak tight integrity of the joint between the thermal sleeve and the safe end on all nozzles. The essential elements of an acceptable program are given in the Appendix attached to this set of questions.

Response:

A description of the WNP-2 feedwater nozzle and sparger is presented on Figures 121.8-1 and 121.8-2.

The mechanisms which have caused a cracking in operating BWRs are understood. A summary discussion of problems and the solutions incorporated in the WNP-2 design is presented in the following.

A detailed evaluation of the problems of the feedwater nozzle and sparger is presented in NEDE-21821 "BWR Feedwater Nozzle/ Sparter Final Report" March 1978. The solution of the feedwater nozzle and sparger cracking problems involves several elements, including material selection and processing, nozzle clad elimination, and thermal sleeve and sparger redesign. The following summarizes the problems and solutions that have been implemented in the WNP-2 design.

PROBLEM	CAUSE	FIX
Sparger Arm Cracks	Vibration	Eliminate clearance between thermal sleeve and safe end.
RPV Feedwater Nozzle	Thermal Fatigue	Eliminate clad, eliminate leakage with a welded joint between the sparger and safe end.

The sparger vibration has been attributed to a self-excitation caused by instability of leakage flow through the annular clearance between the thermal sleeve and safe end. Tests have shown that the vibration is eliminated if the clearance is reduced sufficiently or sealed. The solution which has been selected for WNP-2 uses a welded joint to assure no leakage. This feature is also an essential part of the solution of the nozzle cracking problem. Freedom from vibration over a range of conditions has been demonstrated by the tests reported in NEDE-23604.

The cracking of the feedwater nozzles is a two-part process. The crack initiation mechanism as discussed above is the result of self-initiated thermal cycling. If this were the only mechanism present, the cracks would initiate, grow to a depth of approximately 0.25 inch, and arrest. This degree of cracking could be tolerated, but unfortunately there is another mechanism which supports crack growth. This mechanism is the system induced transients, primarily the startup/shutdown transients. The welded thermal sleeve arrangement also assists in this area because without leakage, the heat transfer coefficient between the feedwater and the nozzle are reduced to the point where the thermal stresses in the nozzle are not high enough to cause a significant crack growth. Analyses presented in NEDE-21821, Section 4.7, demonstrates the benefits of the welded thermal sleeve and of using unclad nozzles. With these demonstrated benefits, WNP-2 does not believe it necessary to install instrumentation for design verification.

WNP-2 has installed an automatic feedwater low flow control vlave, RFW-FCV-10. This valve has the capability to control flow down to 362 gpm, or about 1.25% of total flow. This valve will substantially reduce the temperature in the RPV during low power operation.

The following paragraphs address RPV feedwater nozzle examination questions other than Appendix A to Section 121.

Feasibility of Installing Mechanized Ultrasonic Scanners

All feedwater nozzle inner radii, safe-end, and bore regions are capable of automated ultrasonic examination. Preservice inspection of the safe-end welds will be performed manually. The mechanized equipment will be demonstrated capable of examining the safe-end welds in service. The nozzle inner radii weld examinations will be performed manually. The mechanized equipment will be demonstrated capable of examining the inner radii weld. Tooling has been contracted from the baseline examination agency that will allow nozzle inner radius scanning by contacting an angle beam transducer to the vessel plate surface adjacent to the nozzle to vessel weld. The scanner mechanism is removable and would be compatible with any of the six (6) feedwater nozzles. Based on the experience of performing the baseline examination of nozzle to vessel welds, the Supply System has concluded that the radiation exposure examining the bore region manually would be less than if the examination was done with mechanized equipment. The technique providing the best balance of those two factors will be chosen. Adequate access exists for either technique.

Scanning of the nozzle bore region can be accomplished from the cylindrical section of the nozzle forging. A manual examination of this region is possible to accomplish in less than ten minutes of scanning time per nozzle by one operator supported inside the biological shield cut-out. Data recording, should it be necessary, can be accomplished by a second examiner positioned outside the shield using redundant electronic instrumentation and analog recorders. Assuming ten minutes examination time per nozzle and a radiation field of 150 mr/hr, the examiner would receive 25 mr per nozzle.

The automated examination devices would be mounted on temporary tracks, would be installed just prior to the examination and removed following the examination. It is not considered feasible to leave the equipment installed during plant operation as installation and removal time is minimal and would be quickly offset by equipment recalibration and maintenance costs considering the adverse environment such equipment would be subjected to during plant operation.

Feasibility of Magnetic Particle Examination

Handheld magnetic yokes will not readily fit in the envelope between the sparger body and the nozzle radius, and yet make good contact with the low alloy steel surface. Poor contact could result in arc-strikes below the electrodes, these surface defects are localized heat affected zones of higher hardness than the surrounding metal. If the arc-strike was accompanied by localized cracking, then surface grinding would be necessary to restore the nozzle to its original surface condition. Considering the above, magnetic particle examination methods are not considered feasible inside the reactor vessel with the present sparger configuration.

Ultrasonic Examination Methods

The nozzle inner radius examination will be made by pulse-echo ultrasonic techniques from the exterior of the reactor pressure vessel by contacting the vessel plate surface. This technique is similar to that used by the General Electric Company and the firm of Lambert MacGill and Thomas. Procedures for the examination will be in a format consistent with others used by the Supply System, but the technical content will be comparable to procedures previously qualified by the above referenced testing organizations.

Examination of the nozzle bore region will be performed by pulse-echo ultrasonic techniques from the cyclindrical section of the nozzle forging using sound beam geometry similar to that used by the General Electric Company. The Supply System plans to extend the coverage of this technique toward the inner radius by added sound beam refraction. Prior to use on the WNP-2 feedwater nozzles, a qualification check is intended to be made on a mock-up to demonstrate the techniques validity.

Should local grind outs be made in the examination surface creating a depression with definable sides, depth, and length, the ultrasonic techniques being used would obtain reflections from these cavities. Such reflections can be minimized by blending the grind cavity into the surrounding base metal. This would result in improved detection sensitivity to postulated thermal fatigue cracks propagating from the grind cavity.

The Supply System will implement the reactor feedwater (RFW) RPV nozzle inspection program described below, which addresses Appendix A to this question on an item-by-item basis. Justification for any deviations from the Appendix A requirements is presented following the response.

I. AUGMENTED INSERVICE INSPECTION PROGRAM

A. Preservice Examination

The Supply System will perform a PSI ultrasonic examination of RFW nozzle inner radii, bore and safe end regions as described in the WNP-2 PSI Program Plan. The personnel and UT procedures used will be qualified as described in II.C below.

In addition, a preservice liquid penetrant examination will be performed on the accessible areas of all RFW nozzle inner radius surfaces.

B. Inservice Examination

B.1 The Supply System will perform an ultrasonic examination of 1 of 6 reactor feedwater nozzle inner radii, bore and safe end regions each refueling outage using procedures and personnel subject to the same qualifications used during the PSI examinations. A different nozzle will be examined each outage. No surface examinations will be performed on the nozzle inner radii unless such a test is required to verify

the nature of an indication discovered using the ultrasonic technique when the indication is suspected to result from service induced cracks on the nozzle inner surfaces. In the event an indication is discovered and found to result from service induced cracks propagating from the nozzle inner surfaces, the following actions will be taken:

a. All remaining feedwater nozzles will be examined using both ultrasonic (from the OD) and penetrant techiques during the refueling outage in which the cracking is verified.

b. All surface indications determined to be service induced cracks will be removed by local grinding.

c. An inspection method, such as a leak test, will be used to determine the integrity of each of the RFW thermal sleeve to safe end joints.

d. Appropriate corrective action will be taken as required and as practical to prevent recurrence of crack initiation. A program and schedule for implementing such corrective action will be prepared and submitted to the Commission prior to its implementation.

e. A RFW nozzle examination program for subsequent refueling outages will be modified to include an external ultrasonic examination of all feedwater nozzle inner radii, bore and safe end regions for each scheduled refueling outage for 3 consecutive outages. If no new indications are discovered, or if new indications are determined to not result from service induced cracks at the nozzle inner surfaces, the original Supply System program will be resumed. If after 3 additional outages no new indications resulting from surface induced cracks are detected, subsequent examinations will be performed in accordance with normal ASME Section XI requirements.

f. The conduct of surface examinations of accessible nozzle inner radius surfaces will continue to be used throughout plant life only to confirm or characterize new ultrasonic indications which are suspected to result from service induced cracks at the nozzle inner surfaces.

B.2 As stated in B.1 above, the Supply System will perform a surface (penetrant) examination of accessible inner surfaces on all RFW nozzles during the preservice examination program. Subsequent surface examinations of those surfaces will be performed only to verify the nature of an indication discovered using the ultrasonic technique when the ultrasonic indication provides evidence of previously unidentified service induced cracks.

B.3 See response to B.2 above.

If after the sixth planned refueling outage following commercial operation no indications resulting from service induced cracks are found, the subsequent inservice examinations will be performed in accordance with the normal ASME Section XI requirements. Any indications resulting from service induce cracks which are subsequently found will result in the corrective action described above.

C. Thermal Sleeve to Safe End Joint

As stated in B.1 above, the Supply System will perform an inspection of the thermal-sleeve-to-safe-end weld joint, such as a leak test, only if service induced cracks or some other anomoly is discovered which would bring the integrity of the joint into question. In that case, the feedwater piping will be filled with water and the area of the thermal-sleeve-to-safe-end joint will be inspected for indications of leakage.

II. ACCEPTANCE CRITERIA

A. The Supply System will comply with this criteria as stated in B.1 above.

B. The Supply System will comply with this criteria as stated in B.1 above.

C. The Supply System will comply with option (b), in that both the examination personnel and the procedures to be used on the nozzles will be qualified on a full size nozzle mock-up. Supply System examiners will be trained by individual NDE specialists having previous experience with the General Electric Company procedures and their nozzle test program. These examiners will undergo further training, practice, and qualifications on a full size

nozzle mockup. The Supply System has secured a feedwater nozzle from the scrapped Douglas Point Unit I reactor. The Supply System will use this nozzle to qualify the procedures and personnel for feedwater nozzle inner radii examinations. Following the qualification process, the examinations will be conducted under the direct supervision of the experienced NDE specialists responsible for ultrasonic technique and procedure development for the Supply System.

III. RECORDING AND REPORTING STANDARDS

The Supply System will record crack indications and report inspection results in compliance with the requirements stated in NUREG-0312.

121.8 JUSTIFICATION OF DEVIATION FROM APPENDIX A

I.B.1 Ultrasonic Examinations Frequency

The Supply System will examine only one RFW nozzle per refueling outage rather than all nozzles using an ultrasonic technique from the outside of the vessel. This is justified for the following reasons, which reflects a significant advance in the WNP-2 design and operating procedures towards the long-term solution of the BWR nozzle cracking problems per NUREG-0312, Section 8.0, Part 1.

a. Improved Design: The WNP-2 RFW welded thermal-sleeve-to-safe-end joint provides a "zero leakage" design. This design essentially eliminates the primary historical initiating source of nozzle cracking in BWRs.

b. No Nozzle Cladding: The WNP-2 RFW nozzle surfaces are not clad. The likelihood of crack initiation in unclad nozzles is more than a factor of 5, less than for clad nozzles. All cracks in BWR feedwater nozzles have initiated in the clad metal.

c. Proven Examination Technique: The ultrasonic examination equipment and personnel to be used in performing both baseline and inservice ultrasonic examinations will be qualified on a full scale mockup of the nozzle, simulating the nozzle geometry and anticipated fatigue crack defects. Since the WNP-2 reactor feedwater nozzles are

unclad as stated in (b) above, a more sensitive examination is possible due to lack of clad/basemetal interface.

d. Augmented Examination Frequency: The above stated program provides RFW nozzle examination coverage at nearly twice the frequency of the ASME Section XI requirements, i.e., all RFW nozzles will be examined within six years (approximately) rather than within ten years.

e. Feedwater Temperature Controls: As previously stated, WNP-2 has incorporated a feedwater, low flow control valve. The advantages gained from low flow control are identified in Section 4.7 of NEDE-21821.

f. Projected Crack Growth Rates: As presented in Section 4.7 of NEDE-21821, the WNP-2 design should have greater than 35 years of operation, considering our low flow control, prior to an initiated crack reaching one inch in depth. This provides for a minimum of four examinations per nozzle before reaching a point requiring repair. Even if the extremely conservative (factor of 5) upper bound crack growth curve is applied, each RFW nozzle would be examined by the Supply System program prior to a crack becoming one inch in depth. It is clear that ample conservatism exists in the Supply System examination frequency of the RFW nozzles.

The above factors, when combined, provide a great deal of assurance that the factors which have led historically to BWR RFW nozzle cracking have been virtually eliminated. Furthermore, any cracking which might occur from unanticipated sources will be discovered before propogating to a significant depth due to low flow controls and an augmented examination schedule with state-of-the-art qualified ultrasonic examination techniques.

I.B.2&3 Surface Examinations

The Supply System will perform surface (penetrant) examinations of the accessible internal surfaces of RFW nozzles during the preservice inspection program. Inservice surface examinations will be performed only when indications of service induced cracking are found using the ultrasonic examination technique. This is justified as follows:

a. Reduced probability of crack initiation and growth as stated in the justification under I.B.1.a through f above.

b. Access: In order to obtain access to perform a penetrant surface examination of the RFW nozzle surfaces during a refueling outage, the vessel water level would have to be lowered below the level of the spargers and hydrolaser decontamination performed. A special shielded work platform would have to be devised to minimize radiation exposure. This technique was performed at Vermont Yankee resulting in about 15 mrem.

I.C Leak Test

Thermal-Sleeve-to-Safe-End Joint: The Supply System will perform inservice inspection to determine the integrity of the thermal-sleeve-to-safe-end joint only when indications of service induced cracking are detected using the ultrasonic examination technique. The justification for this exception is similar to the justification for not performing inservice surface examinations cited above, with the following additional justification:

a. Test Effectiveness: The maximum pressure which could practically be placed on the subject weld joint would be that available from the static head of a filled sparger, or approximately 6" of water. The effectiveness of this test to reveal throughwall cracks in the weld joint is questionable, since the weld experiences significantly higher differential pressure and temperature during operation. Furthermore, this test would not provide evidence of other than gross throughwall cracks which, if and when detected via such a test, will in all likelihood have been resulting in some degree of leaking for a significant period of time. As was previously demonstrated, any cracks developing as a result of such leakage will be detected prior to the crack propagating to a depth which would jeopardize the nozzle integrity. There is, therefore, no appreciable benefit from performing the leakage test of the spargers other than to determine the status of their integrity in the event service induced cracks are confirmed. Since there is no appreciable benefit, and the cost in dollars and mrem exposure for such a test is quite high, the performance of this test on a routine basis is not justified.

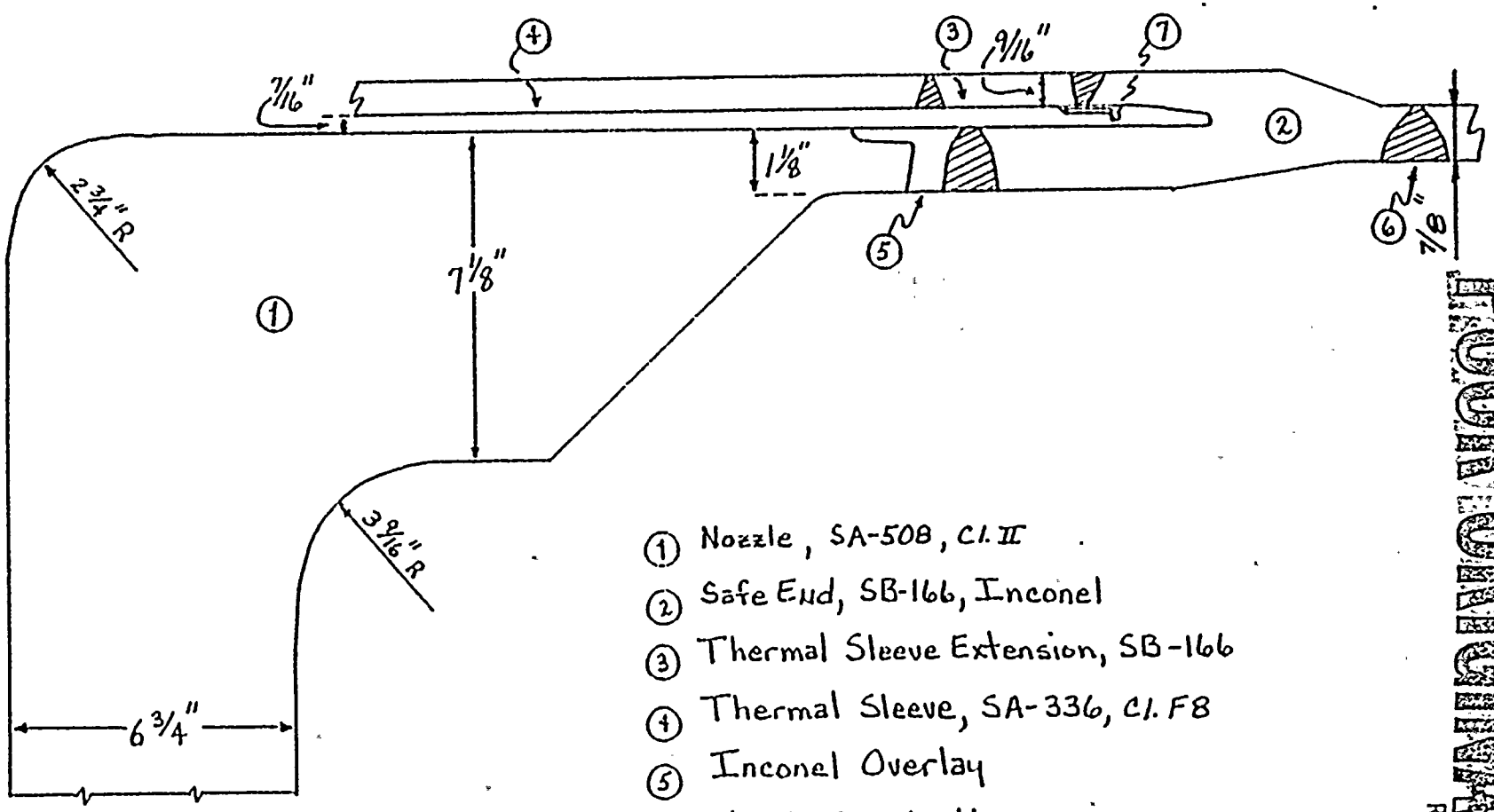

1. Nozzle, SA-508, Cl. II
2. Safe End, SB-166, Inconel
3. Thermal Sleeve Extension, SB-166
4. Thermal Sleeve, SA-336, Cl. F8
5. Inconel Overlay
6. Weld Illustration
7. Back-up Ring, SB-168

~~Amendment No. 5~~
~~August 1979~~
Date 11/14/80
Revision 0

WASHINGTON PUBLIC POWER SUPPLY SYSTEM
NUCLEAR PROJECT NO. 2

FEEDWATER NOZZLE

FIGURE 121.8-1

~~Amendment No. 5~~
~~August 1979~~
Date 11/14/80
Revision 0

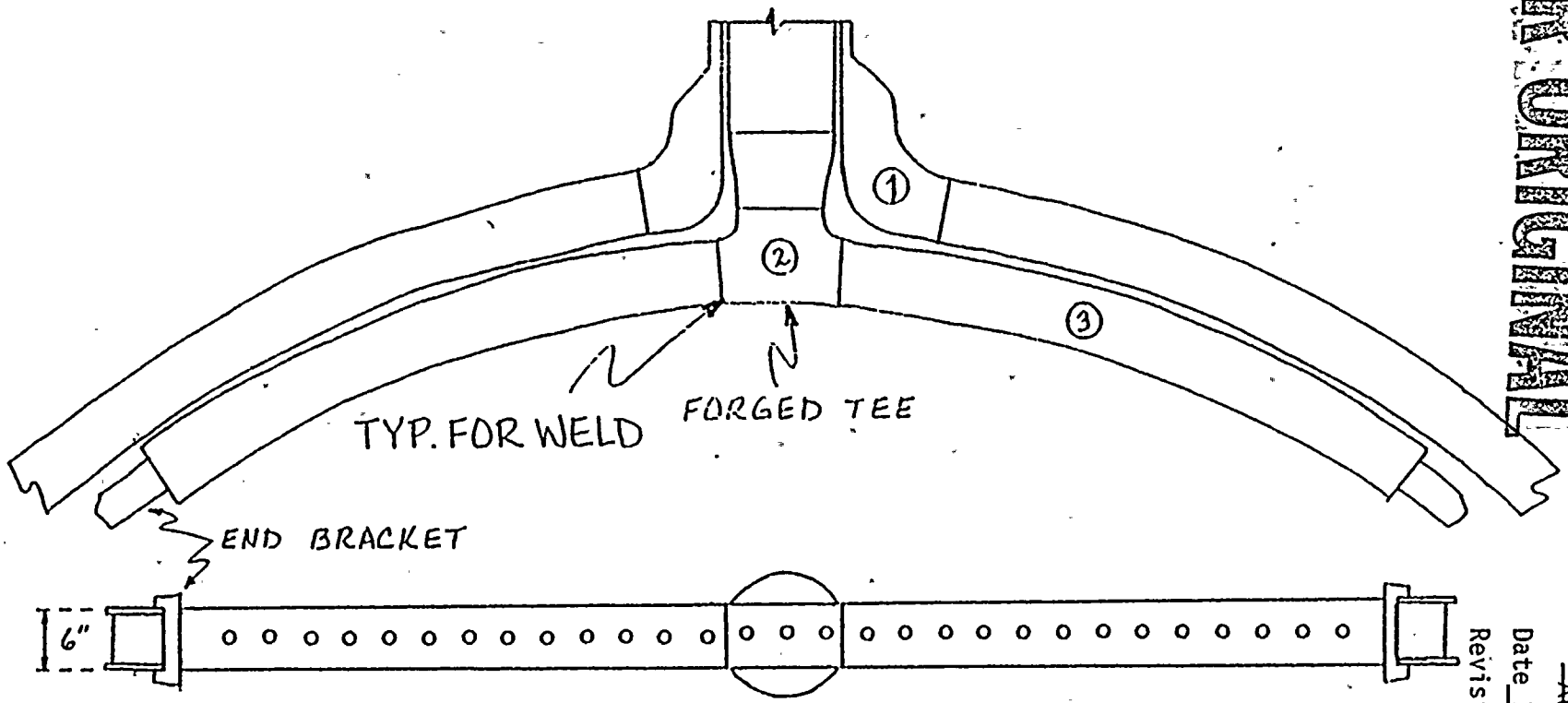

WASHINGTON PUBLIC POWER SUPPLY SYSTEM
NUCLEAR PROJECT NO. 2

FEEDWATER SPARGER

FIGURE 121.8-2

Date 12/14/81

Revision 0

NOTES

1. Preservice inspection of the safe end welds will be done manually. The mechanized equipment will be demonstrated capable of examining the safe end welds inservice. The inner radii weld examinations will be done using mechanized equipment.

2. Based on the experience of performing the baseline exam of nozzle to vessel welds, the Supply System has concluded that the radiation exposure examining the bore region manually would be less than if the exam was done mechanized.

3. The Supply System has secured a feedwater nozzle from the scrapped Douglas Point Unit I reactor. The Supply System will use this nozzle to qualify the procedures and personnel for feedwater inner radii examinations.

6.0 WNP-2 PRESERVICE INSPECTION PROGRAM DESCRIPTION

6.1 INTRODUCTION

The Preservice Inspection (PSI) Program Plan was prepared in accordance with ASME Section XI 1974 Edition Summer 1975 Addenda. This represents a voluntary upgrade from the applicable 1971 Edition, Winter 1971 Addenda. It should be noted that at the time this Plan was prepared, the 1977 Edition Summer 1978 Addenda had not been approved and therefore could not be used as a referenced code. The overall intent of the Supply System in preparing the Plan was to develop a program which reflects a good balance of the following objectives and constraints:

a. To the maximum extent practical, comply with the latest approved codes and regulations governing inservice inspection of nuclear power plant components.

b. Provide a smooth transition of the PSI Program into the Inservice Inspection (ISI) phase of plant life. In this regard, the Supply System considered the latest "unapproved" (1977 Code) ASME Section XI code editions and addenda in order to assess the changes in examination coverage and examination techniques; and then incorporated, wherever practical, these code changes into the PSI Program Plan provided the overall program effectiveness was not compromised. For any change of examination coverage or technique not allowed by the referenced code, detailed justification is provided. Such changes are held to a minimum and are applied only when there is significant benefit; such as eliminating the taking of baseline data which will never be used inservice, or substituting an examination technique which is superior in effectiveness relative to the code required technique for the particular application and, in many cases, is the same change made in later code addenda. In some cases, a voluntary increase in examination is incorporated to ensure baseline data will be available when the program is updated inservice to a later code which will require increased examination coverage.

By applying the above philosophy, the Supply System has baseline data which will be useful inservice. For example, if the letter of the law were strictly followed, Appendix III of ASME Section XI would not have been used. This would mean that the Supply System could not (1) have data comparable to that taken during the ISI or (2) use the latter approved and required code technique for piping examinations. Appendix III has subsequently been approved.

The Supply System believes that the WNP-2 Preservice Inspection Program Plan reflects the above philosophy and, as such, will result in a program of inspections which is in the best interests of the health and safety of the general public. The intent of 10CFR50.55a(g) and ASME Section XI have been met. All deviations from the specified requirements are contained herein. Again, these deviations are necessary because of conflicting requirements of a changing code.

This Program Plan governs all manual and automated non-destructive examinations, visual examinations, evaluations, and reporting activities required by ASME Section XI as invoked by 10CFR50.55a(g), and applicable augmented examination requirements from NRC regulatory guides. Pump and valve testing required by Sub-articles IWP and IWV of ASME Section XI are the subject of a separate document and are not included herein.

6.2 REFERENCED CODE

At the time when the program was developed, the latest approved ASME Section XI Code was the 1974 Edition, Summer 1975 Addenda. This is the referenced Code. However, in keeping with our program philosophy, as outlined in the preceeding section, several exceptions have been taken to this Code.

The exceptions to the referenced Code are listed below. Detailed descriptions and justifications can be found in Chapter 7.0 of the Program Plan.

1. Control rod drive housings will be subjected to a visual examination for evidence of leakage in lieu of a volumetric examination. A break in the CRD housing weld will be within the makeup requirements of the normal reactor makeup systems (IWB-1220(b)(1), even though they exceed 3" nominal pipe size.

2. Pressure retaining bolting exceeding 2" diameter will be examined using a volumetric method when examined in place, and using volumetric, surface, and visual methods when examined after removal. Pressure retaining bolting less than or equal to 2" nominal diameter will be examined using a visual method.

   The bolting will be examined to ASME Section XI, 1977 Edition, Summer 1978 Addenda. See Note 1 and Note 3.

3. RPV closure studs and nuts will be examined to the 1977 Edition, Summer 1978 Addenda. See Note 1, Note 3, and Note 4.

4. Class 2 piping branch connection welds will be examined to 1977 Edition, Summer 1978 Addenda. See Note 1 and Note 2.

5. Class 2 piping with wall thickness $\leq$ ½" will be examined to 1977 Edition, Summer 1978 Addenda. See Note 1 and Note 2.

6. WNP-2 is applying the pressure/temperature exemption of 275 psi and 200°F, respectively, to RHR and ECCS lines where the actual design temperature is 212°F. The design pressure is less than 275 psi in all cases. The Supply System feels this meets the intent of the Code, that is in exempting low energy lines. Later Code rules allow the use of operating temperature which, in the case of WNP-2, is much lower than 200°F for the lines exempted.

7. RHR pump casing welds will be examined with a surface examination from the I.D. in lieu of a volumetric examination. This is allowed by 1977 Edition, Summer 1978 Addenda. See Note 1 and Note 2.

8. Class 1 piping less than 4" nominal pipe size will be examined by a surface in lieu of a volumetric method. This is allowed by 1977 Edition, Summer 1978 Addenda. See Note 1 and Note 2.

9. The ultrasonic examination procedure governing the examination of piping welds, UTP-10, reflects the guidelines of ASME Section XI, Appendix III, entitled "Ultrasonic Examination Method for Class 1 and 2 Piping Systems Made From Ferritic Steels", which was introduced with the Winter 1975 Addenda to 1974 Edition. This Appendix is acceptable to the NRC based on the acceptance of the Summer 1978 Addenda to the 1977 Edition. The Winter 1975 Addenda and the Summer 1978 Addenda of Appendix III are essentially the same. The Supply System has met all of the requirements of the 1978 Addenda. The use of this Appendix has also been approved at a number of other nuclear power plants.

   The use of Appendix III for piping welds is considered by the Supply System to be more appropriate than the use of Article 5 of Section V, which is applicable per the 1974 Edition of Section XI through the Summer 1975 Addenda. Appendix III is written to be specifically applicable to piping welds, whereas Article 5 of Section V is intended for all types of welds, including thick-walled components such as pressure vessels, and was not intended for use with piping welds. Furthermore, Appendix III will be applicable for subsequent inservice examinations, so its use during the preservice examinations will provide for a better data comparison in the future.

10. Class 1 and 2 integral attachments will be examined to 1977 Edition, Summer 1978 Addenda. See Note 1 and Note 2.

The following examinations which are in addition to the reference code requirements will also be done:

1. Augmented ISI - An augmented Inservice Inspection Program will be implemented for WNP-2 on high-energy Class 1 piping systems which penetrate containment for which the effects of postulated pipe breaks would be unacceptable.

2. Class 1 piping will be examined by a surface method along with the volumetric examination required by the reference code.

3. Class 2 piping greater than 1/2" will be examined by a surface method in addition to the referenced code volumetric method.

4. Ten percent of the ASME Class 2 ECCS welds will receive either a volumetric (HPCS) or surface (RHR Loop C and LPCS) exam.

5. All angle beam examination results are recorded on a strip chart recorder for future comparisons with ISI results.

6. Reactor Feed Water Nozzle Augmented PSI - An examination of the RFW nozzle inner radius will be done by special UT technique qualified by the Supply System on a full size RFW nozzle mock-up. A PT examination of accessible areas of the RFW nozzle inner radius surfaces will also be performed.

WNP-2 PSI PROGRAM PLAN

N O T U S E D

(Purposely left blank)

6.3 SUMMARY RPV EXAMINATIONS

Manual preservice ultrasonic examinations were completed on essentially 100% of the WNP-2 Reactor Pressure Vessel (RPV) circumferential, longitudinal, nozzle-to-vessel, vessel support welds, and nozzle inner radii, in February 1977. Those examinations were performed prior to the installation of the vessel while it was resting in its shipping cradle (horizontal) in storage at the plant site. Examinations were performed by Nuclear Energy Services (NES) to a program plan prepared by NES and approved by the Supply System. The program was prepared in accordance with the 1971 Edition of ASME Section XI with Addenda through Winter 1971, with additional evaluations performed per the requirements of the 1974 Edition of ASME Section XI with Addenda through Summer 1975. The top and bottom heads and the nozzle safe end welds were examined manually by LMT in 1981. No examinations are done on those portions of the bottom head welds which are inaccessible due to the CRD penetrations. The manual exam of the RPV revealed a very "clean" vessel. There were no angle beam reflectors greater than 50% DAC. The only reflectors found were mid-plate segregates by 0° beam in seven locations. With this information, the Supply System decided it would serve no purpose to perform another complete baseline using mechanized techniques. Instead, the Supply System decided to perform a limited examination to demonstrate that the equipment was usable and that the mechanized technique produced results equivalent in sensitivity and repeatability to the manual technique. As of October 1981, this has essentially been completed.

Before examinations were begun, a fit and function was done of all mechanized equipment that would be used inservice.

The following mechanized exams were conducted:

a) all nozzle-to-vessel welds.

b) all areas (except the top portion of weld BD) where NES found indications during the manual examination.

c) major repair area in the beltline region.

d) portion of one longitudinal weld including the vessel diameter transition.

e) portion of one circumferential weld.

The results of these mechanized exams compared favorably with the manual examination results in that they did not reveal any angle beam reflectors greater than 50% DAC. The exams found the mid-plate segregates (by 0°) in the same general areas as NES found them.

NOTE 1: The scope and method of examinations are defined in the 1977 Edition, 1978 Addenda of Section XI. The acceptance criteria and procedure requirements applied are from the 1974 Edition, Winter 1975 Addenda.

NOTE 2: The acceptance criteria for surface examinations used (Winter 1975 Addenda) is more strict than the Summer 1978 Addenda (Table IWB-3514-2).

NOTE 3: The acceptance criteria used for surface and volumetric examination (Winter 1975 Addenda) is identical to the acceptance criteria of the Summer 1978 Addenda.

NOTE 4: The RPV closure nuts will receive a Supply System augmented ultrasonic examination. The examination will be an L-wave from the end and shear wave from four directions (two parallel to axis and two perpendicular to axis).

WNP-2 PSI PROGRAM PLAN

N O T U S E D

(Purposely left blank)

6.4 PROGRAM SUMMARY

Following is a listing of the Program Plan Sections with brief summaries of the purpose and content of certain sections. This summary is intended to orient the reader with the organization of the program plan. Details regarding the use of a given section are found in the introduction to that section.

1.0 INTRODUCTION

2.0 TABLE OF CONTENTS

3.0 RECORD OF REVISIONS

Identifies latest revision of each page of the program.

4.0 CODE COMMITMENTS

Identifies applicable code commitments and owner augmented requirements.

5.0 FSAR/NRC COMMITMENTS

Identifies FSAR commitments and applicable augmented NRC inspection requirements.

6.0 PROGRAM DESCRIPTION

7.0 BOUNDARY DIAGRAMS

Illustrates on system P&ID type drawings the boundaries of in-service inspection and the types of examinations performed on each portion of each system. Also found in this section is a detailed account of each exemption (based on code allowed exemption criteria) and exception (alternative to a code requirement) reflected by each system boundary diagram.

8.0 WELD ID DIAGRAMS

Illustrate on piping isometric type drawings each pipe spool and associated welds and components which require examination per the ISI Boundary Diagrams in Section 7.0. Each weld and component requiring volumetric or surface examination is assigned a unique ISI identification number which is used exclusively in referring to that weld on all examination drawings, tables, data records, and reports.

Following each weld ID drawing involving surface and volumetric examinations are a series of tables which list each examination area on the drawing, the examination requirements for examination area, and the procedure that will be used to perform the examination.

9.0 VISUAL PROGRAM

Describes the visual examination program, how it is managed, and how it will be documented. Visual examination procedures are included in Section 10.0.

10.0 PROCEDURES

Lists the procedures which govern the preservice inspection program examination and evaluation activities, as well as any exceptions to the reference code that are reflected in the procedures. The actual procedures are located in Volume 2.

11.0 UT CALIBRATION STANDARDS

Tabulates the various ultrasonic calibration standards, their material, their applicability, and their identification numbers. Also included are design drawings for each standard.

12.0 MANAGEMENT PLAN

Describes the responsibilities and interfaces between all participants in the preservice inspection program activities.

13.0 QUALITY ASSURANCE

A brief statement of conformance to Supply System Quality Assurance commitments.

14.0 EXAMINATION EQUIPMENT

Identifies the examination equipment to be used during the PSI, including diagrams, performance parameters, and functional descriptions.

15.0 PSI SUMMARY REPORT

Contains the PSI Summary Report and its supplement.

6.5 SCHEDULE

The examination schedule at the end of this section will be adhered to to the extent practical.

6.6 DEFINITION OF TERMS AND ABBREVIATIONS

The following terms and abbreviations are defined below as they are used in this document.

Access - The ability to perform non-destructive examinations (NDE) on a weld or component in accordance with applicable codes, standards, and regulatory requirements. Access may include ability to physically reach the point of examination; proper weld contouring and surface finish; proper weld geometry; adequate clearances from a weld to adjacent structures, fittings, restraints; removability of insulation; adequate radiation protection; and lighting.

Accuracy - With regard to mechanized examination "positioning" devices; the extent that the remote position readout mechanism reflects the true position of the examination device with respect to the item being examined at each point throughout the device's range of travel.

Alternative Examination - Examination performed in lieu of the minimum code requirements which are the closest practical approach to code compliance.

Analysis - Process of determining the pertinent characteristics of an indication, such as its origin (crack, porosity, laminations, etc.), location, orientation, and may include sizing.

Calibration Block (Standard) - An NDE calibration device used to simulate defects in a weld or component, the purpose of which is to calibrate ultrasonic or other NDE equipment.

Code Acceptance Standards - Acceptance standards for flaw indications as defined in ASME Section XI, IWB-3000 and IWC-3000.

Defect - A flaw in a weld or component material which exceeds code acceptance standards. Only by direct observation of the flaw, usually following excavation of covering material, is the presence of a defect confirmed. Prior to such confirmation, the term "Reportable Indication" shall be used.

Evaluation - As used pertaining to indications, the process of applying code acceptance criteria to determine the acceptability or rejectability of an indication.

Examination - A performance of a non-destructive examination (NDE) method, such as visual observation, radiography, ultrasonic, liquid penetrant, and magnetic particle.

Examination Equipment - Instruments, mechanical devices, data acquisition systems, tracks, film, sources, etc., used to accomplish a non-destructive examination.

Examiner - Person performing any non-destructive examination.

Fail-Safe Provisions - With regard to mechanical examination devices; design features which prevent damage to the equipment or loss of position accuracy, or prevent the examination equipment from becoming irretrievable from a remote location, upon loss of power or equipment failure, slippage, or other abnormal occurence.

Fit and Function - Shop or field functional testing of examination equipment under conditions anticipated during actual examinations to verify access, equipment accuracy, position repeatability, and other operating parameters.

Flaw - An indication which is determined to be other than geometric, which may be a crack, slag, inclusion or segregates, aligned or clustered rounded indications, lack of weld penetration, lack of weld fusion, lamination, or combinations thereof.

Inaccessable - An examination area which is within the scope of this document which cannot be fully examined in compliance with the applicable codes, standards, and regulations due to insufficient access.

Indication - Evidence or signal obtained by application of an examination technique, that may reveal the presence of a flaw or surface degradation, or may be caused by geometry or material properties.

Inspection - Performance of examinations verified by an Inspector representing a state or municipality of the United States, Authorized Inspection Agency, or other enforcement authorities having jurisdiction over the nuclear power components at the WNP-2 site.

Inspector - "Authorized Nuclear Inspector" as defined in ASME Section XI, 1974 Edition, Subarticle IWA-2130, as applicable.

Inservice Inspection (ISI) - Inspection activities performed in accordance with ASME Section XI, which include preservice inspection (PSI) activities.

Positioning Repeatability - With regard to mechanized examination equipment; the precision in which the equipment can move to and duplicate a known and verifiable position on subsequent and independent calibrations, i.e., the device is installed, calibrated, positioned, removed, reinstalled, recalibrated, and repositioned.

Preservice Examination - Examinations performed by the Owner or Contractor in accordance with the requirements of the Codes, Standards, and Regulations specified in Paragraph 2.4 of this specification before the plant enters service.

Preservice Inspection (PSI) - Inspection activities performed before the plant enters service.

RPV - Reactor Pressure Vessel.

Readout Sensitivity - With regard to mechanized examination equipment; the ability of the equipment's position encoders or similar instrumentation to register subtle movements of the examination device, i.e., the minimum detectible movement of the device.

Recordable Indication - An indication which equals or exceeds Owner recording criteria. The Owner recording criteria may be more restrictive than the code requirements.

Reportable Indication - Any indication which equals or exceeds code reporting criteria.

Sizing of Indications - Application of the sizing criteria given in ASME Section XI, IWB-3000 and IWC-3000, to determine the size of a flaw indication - part of the evaluation process.

Surface Examination - Liquid penetrant or magnetic particle examinations performed in accordance with the applicable codes, standards, and regulations.

Visual Examinations - Examinations using visual techniques, either using the eye through direct observation or by the use of remote equipment such as mirrors, boroscopes, television, etc.

Volumetric Examinations - Radiographic or ultrasonic examinations performated in accordance with applicable codes, standards, and regulations.

Date 1/18/85
Revision 4

WNP-2 PRESERVICE INSPECTION SCHEDULE

Commercial Operation	12/84
Fuel Load	12/83
RPV Hydro	9/82
Begin Manual Exams	3/79
Begin Mechanized Exams	1/81
Complete Preservice Inspection	11/84
File Summary Report	3/83
File Summary Report Supplement	2/85

7.0--BOUNDARY DIAGRAMS

7.1 ISI BOUNDARY DIAGRAMS

The ISI Boundary Diagrams on the following pages provide a schematic view of the examination requirements for each system which contains welds which are subject to examination within the scope of the applicable codes, standards, and regulations listed in Section 4.0, "CODE COMMITMENTS", and Section 5.0, "FSAR/NRC COMMITMENTS". The key to the symbolism used on these drawings is found on ISI-200, the first in the series of drawings.

These drawings illustrate the overall piping system examination requirements, distinguishing between systems requiring volumetric and surface examinations (dashed lines), those requiring surface examinations but not volumetric (dash-dot-lines), and those requiring only a visual examination during hydro (solid lines). Examination items such as hangers, instruments, thermal wells and leak-off connections are not typically shown on the ISI Boundary Diagrams in order to maintain drawing clarity. Detailed item-by-item examination requirements for all examination items in each of these piping systems is given in the Weld Identification Drawings and Program Plan and Schedule Tables found in Section 8.0, "WELD IDENTIFICATION DIAGRAMS".

7.2 ISI BOUNDARY EXEMPTIONS AND EXCEPTIONS

The Supply System will, on a continuing basis, make every effort to assure, to the extent practical, full compliance with the code and regulatory commitments applicable to preservice and inservice examinations of the WNP-2 power plant. However, recognizing that our reference code commitment (1974 Edition of ASME Section XI with addenda through Summer 1975) represents a voluntary upgrade as discussed in the introduction, and with full knowledge of the progress of that code in subsequent addenda, there are several exceptions to those code requirements which have been implemented in this program. It should be noted that the Supply System is aware at the time of this program's

preparation of the NRC posture on the contents of the Section XI Edition and addenda subsequent to Summer 1975, and has factored those considerations into this program.

It is the Supply System's intent to implement a preservice inspection program which incorporates, to the extent practical, the requirements of the reference code commitment, with further consideration given to NRC concerns with later code addenda, while attempting to provide for a smooth transition into the future inservice inspection program requirements, and at no time compromising the safety of operation of the plant.

In addition to the exceptions to code requirements discussed above, ASME Section XI allows certain exemptions from volumetric and surface examinations, with only visual examinations for leakage during system hydro test being required for exempted components. (Reference subarticles IWB-1220 and IWC-1220 for Class 1 and Class 2 exemptions, respectively).

Both code exceptions and exemptions for each system are summarized following each ISI Boundary Diagram. In addition, the exceptions and exemptions listed below are general in nature and are applied, as applicable, to each system.

Some are ISI Requirements

7.2.1. Exceptions

Q-5 REVIEW

a. ASME Section III, Class 1 Systems

1) Subarticle IWB-2600, Table IWB-2600, examination item B4.5, Circumferential and Longitudinal Piping Welds:

Code Requirement - Examine all nonexempt circumferential and longitudinal piping welds using a volumetric method.

Exception/Alternate Examination - Circumferential and longitudinal welds in nonexempt piping less than 4-inch nominal pipe size will be examined using a surface in lieu of volumetric method.

Justification - This exception applies primarily to the following welds in the stated piping systems:

Carbon Steel Piping

3" CRD Nozzle N-10, safe-end-to-cap weld

3" RRC (51)-4, vessel drain, 5 welds (RRC-104)

2" RRC (51)-4, vessel drain, 11 welds (RRC-104)

Stainless Steel Piping

2" RRC (6)-4S, loop A and B drains, 15 welds (RRC-110 and 111)

This exception is consistent with the 1977 edition of ASME Section XI with addenda through Summer 1978 and later addenda to which WNP-2 Inservice Inspection Programs will be subject to. There are no apparent objections to this criteria expressed by the NRC in their revision to 10CFR50, dated October 1979, which accepts editions and addenda of ASME Section XI through the Summer 1978 addenda with specific augmented examination requirements stated in the regulation.

Note that there are other Class 1, 2- and 3-inch pipes (e.g., mainstream drains, head vent) in the

WNP-2 primary system. However, they are exempt based on makeup capability of the normal reactor makeup systems as explained later in this section. Note also that WPPSS, on a voluntary basis, will perform surface examinations on all circumferential and longitudinal welds in nonexempt Class 1 piping 4 inches in diameter and greater in anticipation of the later code editions and addenda which will govern the WNP-2 Inservice Programs.

Review During ISI
PSI / ISI
Surface Exam during construction

2) Subarticle IWB-2600, Table IWB-2600, examination item B1.18, Control Rod Drive Housing to Stub Welds:

S78 (Method either surface or volumetric)
ISI Issue

Code Requirement - Examine 100% of the welds in 10% of the peripheral control rod drive housings using a volumetric examination method. Note that subarticle IWB-1220, paragraph (b)(1), a component may be exempted from volumetric examination if, under postulated conditions of loss of coolant from the component during normal reactor operation, the reactor can be shutdown and cooled down by the reactor coolant makeup systems only. This exemption is limited to 3" nominal pipe size components only.

Exception/Alternative Examination - Control rod drive housings will be subjected to a visual examination for evidence of leakage in lieu of a volumetric examination, even though they exceed 3" nominal pipe size.

Justification - The difference between the 6.000" outside diameter CRD housing and the 6.020" inside diameter stub tube provides an annulus between the two parts of 0.010" with CRD housing supports in

place (these meet NRC rod ejection criteria) and assuming that the stub tube to CRD housing weld experiences a 360° break, there would result an effective leak area of 0.189 sq. in. The CRD housing supports would prevent ejection of the housing.

Assuming saturated conditions at 1,000 psi in the RPV at the time of the break, and assuming no friction losses, the maximum flow rate of reactor water out of the break described above would be 8,000 lbm/sec ft^{2}(1).

Leakage = 8,000 lbm/sec ft^2 X 0.189 in^2 X

$$\frac{ft^2}{144\ in^2} \times 0.021\ \frac{ft^3}{lbm} \times 7.48\ \frac{gal}{ft^3} \times 60\ min/sec = 99\ gpm$$

This is clearly within the makeup requirements of the normal reactor makeup systems (see 7.2.2.a.1).

3) Subarticle IWB-2600, Table IWB-2600, examination category B-G-1, Pressure Retaining Bolting 2" and Larger in Diameter:

<u>Code Requirement</u> - Examine pressure retaining bolting 2" and larger in diameter using visual and surface and/or volumetric methods.

<u>Exception/Alternative Examination</u> - Pressure retaining bolting <u>exceeding</u> 2" diameter will be examined using a volumetric method when examined in place, and using volumetric, surface and visual methods when examined after removal. Pressure retaining bolting less than or equal to 2" nominal diameter will be examined using a visual method.

Justification - This exception is consistent with the 1977 edition of ASME Section XI with addenda through Summer 1978. There are no apparent objections to this criteria expressed by the NRC in their October 1979 revision to 10CFR50 which accepts editions and addenda of ASME Section XI through the Summer 1978 addenda with specific augmented examination requirements stated in the regulation.

4) Subarticle IWV-1220(c), Visual Examination of Exempted Components:

Clarification - Components exempted from examination in accordance with IWB-1220(a) and (b) will be examined subject to the requirements of category B-P of Table IWB-2500 with the following clarification. Instrument lines which penetrate primary containment will be examined for evidence of leakage through the containment penetrations, though the excess flow check valves up to the point at which there is a transition to instrument tubing. Instrument tubing is not subject to ASME Section XI.

5) Subarticle IWB-2600, Table IWB-2600, examination item B 1.8, Closure Studs and Nuts, When Removed:

Code Requirement - Examine 100% of the RPV closure nuts by a volumetric and surface method.

Exception/Alternative Examination - RPV closure nuts will be examined using a surface method except for the thread area. The thread area will be examined by a volumetric method.

Justification - As stated in the Program Philosophy (Section 6.1), the Supply System is developing a program which takes into consideration examination requirements found in the latest codes and which will provide a smooth transition from the preservice inspection phase to the inservice inspection phase. The latest NRC approved Section XI Code (Summer 1978) requires only a surface examination for the RPV closure nuts. The Supply System will be using the latest approved code for the inservice inspection program. (This will be a Summer 1978 or later code.) A volumetric (ultrasonic) examination of the nut will be performed to augment the surface exam. A meaningful surface exam of the thread area cannot be achieved with the protective phosphate coating. The ultrasonic examination will consist of a L-wave from the end and shear wave in four directions (two parallel to axis and two perpendicular to axis). A spare RPV nut will be used for the calibration standard.

These nuts have received all of the Section III required nondestructive examinations and are acceptable for service.

b. ASME Section III, Class 2 Systems

1) Subarticle IWC-2600, Table IWC-2600, examination item C2.3, Piping Branch Connection Welds:

Code Requirement - Examine branch pipe connection welds in nonexempt systems using a volumetric method.

WNP-2 PSI PROGRAM PLAN

N O T U S E D

(Purposely left blank)

Exception/Alternative Examination - Pipe branch connection welds in nonexempt systems will be examined using a surface method.

Justification - This exception is consistent with ASME Section XI, 1977 edition Summer 1978 addenda. The Supply System is performing surface examinations of pipe branch connection welds because it is impractical to perform meaningful ultrasonic examinations of those welds due to their geometry. This difficulty was recognized by the ASME in the Summer 1976 and later addenda to Section XI, in which surface in lieu of volumetric methods for those items was adopted.

2) Subarticle IWC-2600, Table IWC-2600, examination items C2.1 and C2.2, Circumferential and Longitudinal Piping Welds:

Code Requirement - Examine circumferential and longitudinal welds in nonexempt piping systems using a volumetric method.

Exeption/Alternative Examination - Circumferential and longitudinal welds in nonexempt piping systems with piping wall thickness exceeding 1/2" nominal will be examined using a volumetric method in accordance with the reference code. In addition, all nonexempt piping welds will be examined using a surface method regardless of wall thickness. Welds in nonexempt piping systems with wall thicknesses of 1/2" nominal or less will not be examined using a volumetric method.

Date 12/14/81
Revision 1

Justification - Examining welds in nonexempt piping systems with piping wall thickness less than or equal to 1/2" by surface methods is consistent with the later (1977 edition Summer 1978 addenda) NRC approved ASME Section XI Code.

3) Subarticle IWC-2600, Table IWC-2600, examination category C-D, Pressure Retaining Bolting Exceeding 1" Nominal Diameter:

Code Requirement - Examine all pressure retaining bolting exceeding 1" diameter using visual and either surface or volumetric methods.

Exception/Alternative Examination - Pressure retaining bolting exceeding 2" nominal diameter will be examined using a volumetric method when examined in place, and using volumetric and surface methods when examined after removal. All bolted connections will receive a visual examination for evidence of leakage during hydrostatic/pressure test (VT-2) regardless of bolting size.

Justification - This is consistent with the ASME Section XI examination requirements for Class 2 pressure retaining bolting of the 1977 edition Summer 1978 addenda which the NRC has approved in the October 1979 revision to 10CFR50.

7.2.2 Exemptions

a. ASME Section III, Class 1 Systems

1) Subarticle IWB-1220

The exemptions of this subarticle were applied to each system as explained following each ISI

Boundary Diagram. The following calculation is provided to support the exemption allowed by IWB-1220(b)(1), exemption based on leakage from the component not exceeding the normal reactor makeup system capacity.

Assumptions:

1) The normal reactor makeup systems have the ability to maintain reactor coolant inventory during startup, hot standby, operation or cooldown using on-site power. For WNP-2, the following normal reactor makeup systems are available for reactor water makeup with their respective nominal capacities:

SYSTEM	CAPACITY (GPM)
RCIC Pump	600
CRD Pump	170
TOTAL	770

2) The break is assumed to result in a high dry well pressure condition within a few seconds with a resulting scram. The CRD system capacity is based on 0.92 gpm bypass flow per each of 185 drives.(3)

3) The reactor is operating at 1,000 psi under saturated conditions at the time of the postulated break.

Date 1/8/79
Revision 0

4) The leak rates at 1,000 psi, assuming no friction losses, are:

8,000 lbm/sec ft^2	water(1)
2,000 lbm/sec ft^2	steam(1)

5) Makeup water is injected @ 100°F, 0.0162 ft^3/lbm

Calculation:

$$\text{Makeup capacity} = 770 \text{ gal/min} \times \frac{1 \text{ ft}^3}{7.48 \text{ gal}} \times$$

$$\frac{1 \text{ lbm}}{0.0162 \text{ ft}^3} \times \frac{1 \text{ min}}{60 \text{ sec}} = 106 \text{ lbm/sec}$$

$$\text{o°o Max. break area} = \frac{106 \text{ lbm/sec}}{8{,}000 \text{ lbm/sec ft}^2} = 0.0132 \text{ ft}^2 \text{ (water)}$$

$$= \frac{106}{2{,}000} = 0.053 \text{ ft}^2 \text{ (steam)}$$

This corresponds to 1.56" ID pipe (water)
3.12" ID pipe (steam)

Didn't affect many welds - RPV drains

Less than 10 welds

The above is applied to the WNP-2 ISI boundaries as follows. Class 1 piping penetrating the RPV below the normal water level and 1.5" nominal pipe size or less, and piping penetrating above the normal water level and 3" nominal pipe size or less, may be exempted from volumetric and surface

Some of these lines went back in under augmented requirements.

examination and are subject only to a visual examination for evidence of leakage in accordance with IWB-1220(c).

GENERIC RESOLUTION AS DEFER ISSUE

b. ASME Section III, Class 2 Systems

1) Subarticle IWC-1210, footnote 2:

The provisions of this footnote allow the inspection rules of IWD to be applied to a component or chamber of a component which has been optionally upgraded from Class 3 to Class 2.

(a) Main Steam Relief Valve (MSRV) Discharge Piping

The portion of the subject piping within the wetwell, as illustrated on the following figure, was optionally upgraded from ASME Code Class 3 to Class 2 rules. Therefore, the inspection rules of Subsection IWD are applied.

The MSRV discharge lines connect the MSRV discharge to the wetwell quencher submerged in the suppression pool. Their purpose is to ensure that steam passed by the MSRV's is channelled to the suppression pool to prevent overpressurization of the containment.

DATE 11/14/80
REVISION 0

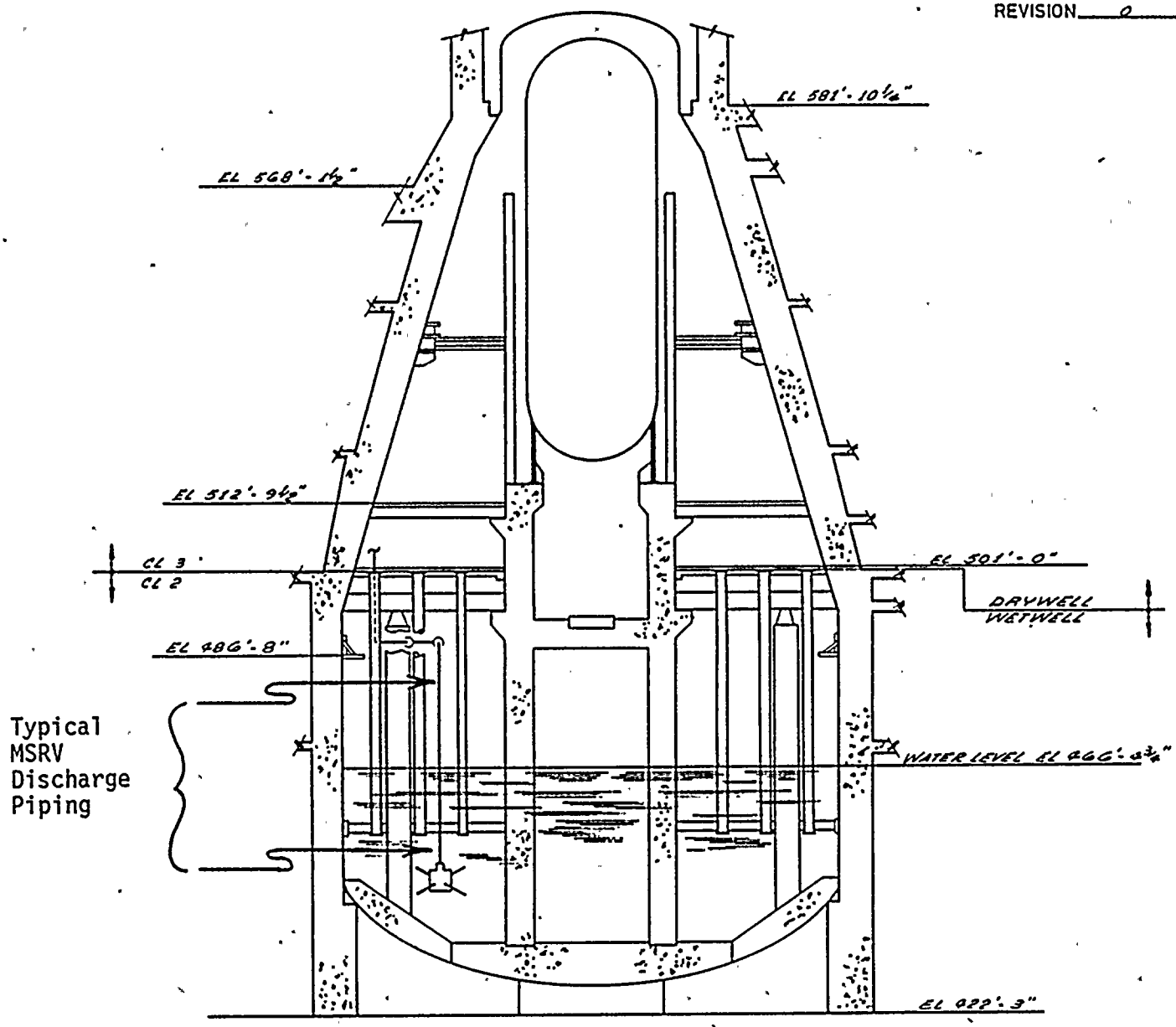

WNP-2 DRYWELL/WETWELL

During the WNP-2 design process, the subject lines were optionally upgraded from ASME Code Class 3 to Class 2, and the schedule was increased from Schedule 40 to Schedule 80. These changes were made by the Supply System on an optional upgrade basis for the following reasons:

- The dynamic operational loads which these lines may be subject to were becoming better understood, but not yet finally determined.
- The importance of the integrity of these lines to ensure the maintenance of containment integrity was recognized.
- The inability to hydrostatically test these lines due to restricted access to the wetwell and open ended design of the discharge piping was recognized.

The quality group classification of these lines exceeds the minimum classification requirements of Regulatory Guide 1.26. This is evidenced by the precedent in the industry on other plants with similar (Mark II) design. These plants classify the MSRV discharge lines as quality group "C" (Code Class "3").

In summary, the Supply System has provided upgraded design for the subject piping in recognition of its importance and because of the restricted access for inspection or testing. Therefore, the provisions of the Code which allow the application of the inspection rules of Subsection IWD have been applied.

2. Subarticle IWC-1220

The exemptions of this subarticle were applied to each system as explained following each ISI Boundary Diagram. The following clarification is provided as a basis for applying the exemption criteria of IWC-1220(b) and IWC-1220(c).

IWC-1220(b) - Allows the exemption from volumetric and surface examinations for those components in systems or portions of systems, other than ECCS, which do not function during normal reactor operation.

Clarification - The steam condensing mode of the RHR system has been de-energized and will not be used.

The piping systems and components used solely for abnormal steam condensing, which involve portions of the RHR system and the portion of the RCIC system which supplies steam to the RHR heat exchangers, are shown as exempt on their respective Boundary Diagrams based on the exemption allowed by IWC-1220(b) as interpreted above.

IWC-1220(c) - Since the NRC will not allow components of the ECCS system to be exempted based on this exemption criteria, WNP-2 will perform the following examinations:

HPCS	-	A representative sample of ten percent of the HPCS welds exempted by IWC-1220(c) will be examined by a volumetric method.
LPCS	-	A representative sample of ten percent of the LPCS welds exempted by IWC-1220(c) will be examined by a surface method.
RHR Loop C	-	A representative sample of ten percent of the RHR Loop C welds exempted by IWC-1220(c) will be examined by a surface method.

c. ASME Section III, Class 3 Systems

1) Subarticle IWD:

The exemptions of this subarticle were applied to each system as explained following each ISI Boundary Diagram. In addition, the following generic exemptions are applied.

a) Deleted.

This Page Purposely
Left Blank

This Page Purposely
Left Blank

b) Systems other Than Water, Steam, or Radioactive Waste Systems - These systems, such as the containment air systems and the diesel oil transfer system, are exempt from the requirements of Article IWD since the ASME Code is applicable only to water, steam and radioactive waste systems.

Following is a letter of clarification from the ASME which substantiates this exclusion.

Footnotes:

1) Maximum Flow Rate of a Single Component, Two Phase Mixture, F. J. Moody, ASME 64-HT-35.

2) WNP-2 FSAR, Section 6.2, Figure 6.2-14.

3) General Electric Process Flow Diagram, GE Drawing No. 112 D1448, Mode D, Point 23.

The American Society of Mechanical Engineers
United Engineering Center / 345 E. 47th St., New York, N.Y. 10017 / 212 644-7815

Date 1/8/79
Revision 0

February 16, 1978

L.T. Harrold, Supervisor, ISI Programs
Washington Public Power Supply System
PO Box 968
3000 George Washington Way
Richland, WA 99352

Subject: Section XI, Division 1, IWD-1200
Optionally Upgrading of Classification

Reference: Your letter of September 19, 1977 (APO 77-58)
ASME File #: BC 77-665
NI 77-372

Dear Mr. Harrold:

Your inquiry and our response are as stated below:

QUESTION:

Is it the intent of Subarticle IWD-1200 that when a component or a chamber of a component has been optionally upgraded by reclassification from non-nuclear to nuclear Class 3, that the rules and requirements of Subsection IWD need not be applied to that component or chamber of a component?

REPLY:

Non-nuclear safety class components are not within the scope of Section XI; therefore, there are no requirements in Section XI which addresses these components regardless of whether or not they have been optionally upgraded to Class 3. Article IWA-1000 on Scope and Responsibility, specifically Paragraph IWA-1400, requires the Owner of the nuclear plant to determine the appropriate Code, Class or Classes for each component of the nuclear power plant to be examined according to Section XI rules.

Very truly yours,

Kenneth I. Baron

Kenneth I. Baron,
Assistant Secretary

/fs

The American Society of Mechanical Engineers
United Engineering Center / 345 E. 47th St., New York, N.Y. 10017 / 212 644-7815

February 16, 1978

Date 1/8/79
Revision 0

L. T. Harrold, Supervisor, ISI Programs
Washington Public Power Supply System
PO Box 968
3000 George Washington Way
Richland, WA 99352

Subject: Section XI, Division 1, IWA-1100
Scope of Section XI, Division 1

Reference: Your letter of September 19, 1977 (APO 77-59)
ASME File #: BC 77-666
NI 77-371

Dear Mr. Harrold:

Your inquiry and our response are as stated below:

QUESTION:

Is it the intent of Subarticle IWA-1100 that the rules and requirements of Section XI, Division 1 for inservice inspection of Class 1, 2 & 3 pressure retaining components (and their supports) be applied only to water and steam systems in light water cooled nuclear power plants?

REPLY:

Systems containing other than steam or water were not originally considered by the Committee in formulating the rules in Section XI; they may, however, be included for further consideration and for revisions to future editions of Section XI. The requirements shown in Section XI, Article IWA-1000 on Scope and Responsibility, specifically Paragraph IWA-1400, requires the Owner of the nuclear plant to determine the appropriate Code, Class or Classes for each component of the nuclear power plant to be examined according to Section XI rules.

Very truly yours,

Kenneth I. Baron

Kenneth I. Baron,
Assistant Secretary

/fs

ISI BOUNDARY DIAGRAM SYMBOLS

- PIPING SYSTEMS REQUIRING VISUAL, SURFACE AND VOLUMETRIC EXAMINATIONS.
- PIPING SYSTEMS REQUIRING VISUAL AND SURFACE EXAMINATIONS.
- PIPING SYSTEMS REQUIRING ONLY A VISUAL (VT-1, 2, 3 OR 4) EXAMINATION.
- PIPING SYSTEMS FOR WHICH NO EXAMINATION IS REQUIRED PER ASME SECTION XI.
- AUGMENTED ISI BOUNDARY
- X-75 — CONTAINMENT PENETRATION, TYPICAL
- BULKHEAD PENETRATION, TYPICAL
- FLOW ARROW
- REDUCER (INDICATES LINE SIZE CHANGE ONLY)
- CONNECTION TO COMPONENT
- TRAP
- PIPE CAP, WELDED
- PIPE CAP, THREADED
- "Y" TYPE STRAINER
- CONICAL STRAINER, IN-LINE
- FLANGE
- FLOW ELEMENT
- EXPANSION JOINT
- RUPTURE DISK
- SPECTACLE FLANGE
- ORIFICE, SINGLE
- ORIFICE, MULTIPLE
- FLEX HOSE
- FLOW NOZZLE
- CROSS
- EXCESS FLOW CHECK VALVE
- EXPLOSIVELY ACTUATED SHEAR PLUG VALVE
- SOLENOID VALVE WITH BUILT IN FLOW CONTROL

GENERAL SYMBOLS

- GATE VALVE, NORMALLY OPEN/NORMALLY CLOSED, RESPECTIVELY
- GLOBE VALVE, NORMALLY OPEN/NORMALLY CLOSED, RESPECTIVELY
- GLOBE, STOP CHECK VALVE
- CHECK VALVE
- BUTTERFLY VALVE
- PLUG OR BALL VALVE
- DIAPHRAGM VALVE
- UNION CONNECTION
- RELIEF VALVE

WELD & CONPONENT IDENTIFICATION DIAGRAM SYMBOLS

- SHOP WELD
- FIELD WELD
- WELDOLET, SOCKOLET, SHEEPOLET BRANCH CONNECTION
- SPRING HANGER, NON-WELDED AND WELDED ATTACHMENTS, RESPECTIVELY
- SNUBBER OR SHOCK ABSORBER, NON-WELDED AND WELDED ATTACHMENTS, RESPECTIVELY
- RIGID HANGER, NON-WELDED AND WELDED ATTACHMENTS, RESPECTIVELY
- PIPE WHIP RESTRAINT (PWS), GUIDE
- X-3 — CONTAINMENT PENETRATION
- NS — VESSEL NOZZLE, TYPICAL

SYSTEM NAME & NUMBER AS SHOWN

12 LPCS (1)-4

- SYSTEM PRESSURE RATINGS.
  - 1 = 150 PSI
  - 2 = 300 PSI
  - 3 = 600 PSI
  - 4 = 900 PSI
  - 5 = 1500 PSI
  - 6 = 2500 PSI
- SYSTEM NUMBER
- SYSTEM NAME
- PIPE SIZE (NOMINAL INCHES)

WELD NUMBERING SYSTEM SAMPLES

26 HS(1) A-4 LD
- LD — LONGITUDINAL WELD, DOWNSTREAM OF WELD #4
- A-4 — WELD SEQUENCE NUMBER
- (1) — LOOP OF MULTIPLE STREAM SYSTEM
- HS — SYSTEM NAME AND NUMBER
- 26 — PIPE SIZE (NOMINAL INCHES)

26 HS(1) A-4 LU
- LU — LONGITUDINAL WELD, UPSTREAM OF WELD #4

26 HS(1) A-4 BD
- BD — BOLTING, DOWNSTREAM OF WELD #4

26 HS(1) A-4 BU
- BU — BOLTING, UPSTREAM OF WELD #4

12 LPCS(1)-2/3/4 V-14
- 2/3/4 — (FOR BRANCH LINES REQUIRING ONLY A VISUAL EXAMINATION)
- V-14 — VALVE WHICH ESTABLISHES LIMIT OF VISUAL EXAMINATION
- 12 — BRANCH CONNECTION SIZE

12 LPCS(1)-17/4 LPCS(1)-4
- 17/4 — (WELDOLET TO MAIN LINE WELD, BRANCH LINE REQUIRES SURFACE OR VOLUMETRIC EXAMINATION)
- LPCS(1)-4 — BRANCH LINE SYSTEM NAME AND NUMBER AS SHOWN ON BOUNDARY DIAGRAM
- 12 — BRANCH CONNECTION (WELDOLET) SIZE

INDEX TO BOUNDARY DIAGRAMS

ISI-200	LEGEND
ISI-217	DEMINERALIZED WATER (DW), EQUIPMENT DRAIN, RADIOACTIVE (EDR), FLOOR DRAIN, RADIOACTIVE (FDR), MISCELLEANOUS WASTE, RADIOACTIVE (MWR)
ISI-219	REACTOR CORE ISOLATION COOLING (RCIC)
ISI-220	HIGH PRESSURE CORE SPRAY (HPCS), LOW PRESSURE CORE SPRAY (LPCS)
ISI-221	RESIDUAL HEAT REMOVAL (RHR)
ISI-222	STANDBY LIQUID CONTROL (SLC)
ISI-223	REACTOR WATER CLEANUP (RWCU)
ISI-224	STANDBY SERVICE WATER (SW)
ISI-225	REACTOR CLOSED COOLING (RCC)
ISI-226	FUEL POOL COOLING (FPC)
ISI-228	CONTROL ROD DRIVE (CDR)
ISI-229	MAIN STEAM (MS), REACTOR FEED WATER (RFW)
ISI-230	REACTOR RECIRCULATION COOLING (RRC)

NO	DATE	REVISION	BY	CHKD	APVD
1	11-28-78	GENERAL UPDATE REDRAWN	K-McA	ITH	DMP
0	1-9-79	ISSUED FOR USE	K-McA	DMP	DMP
A	5-10-78	ISSUED FOR INFORMATION ONLY	K-McA	DMP	DMP

THIS DRAWING IS INTENDED FOR USE IN PRESERVICE AND INSERVICE INSPECTION PROGRAMS ONLY

ENGINEER K-McANDREW

DRAWN K-McANDREW

DATE 5-10-78

WASHINGTON PUBLIC POWER SUPPLY SYSTEM
RICHLAND, WASHINGTON 99352

WNP-2

INSERVICE INSPECTION BOUNDARY DIAGRAM LEGEND

DWG NO ISI-200 REV 1

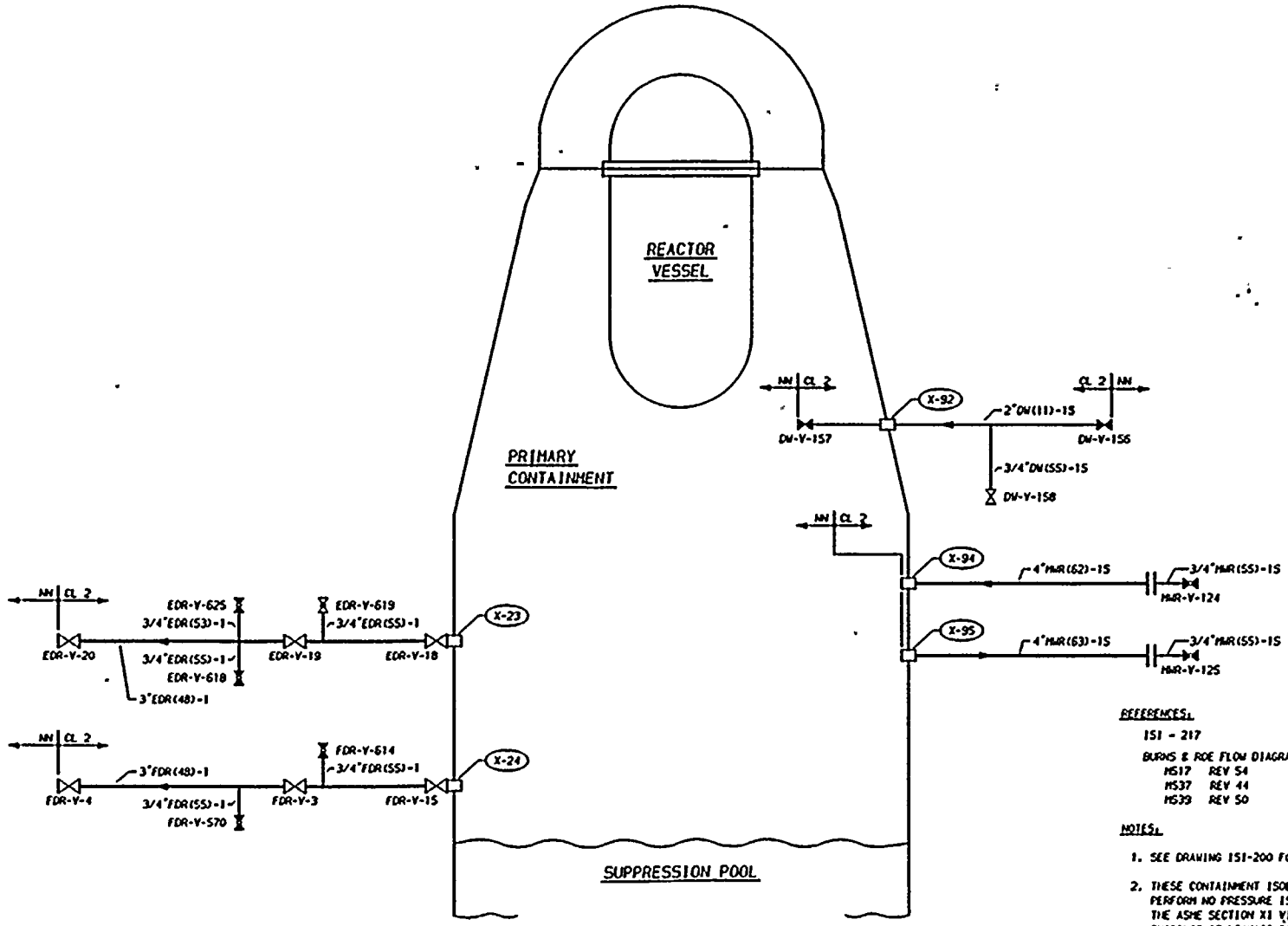

REFERENCES:

ISI - 217

BURNS & ROE FLOW DIAGRAMS
M517 REV 54
M537 REV 44
M539 REV 50

NOTES:

1. SEE DRAWING ISI-200 FOR LEGEND.
2. THESE CONTAINMENT ISOLATION SYSTEMS PERFORM NO PRESSURE ISOLATION FUNCTION. THE ASME SECTION XI VISUAL EXAM FOR EVIDENCE OF LEAKAGE REQUIREMENTS WILL BE SATISFIED BY THE 10CRF 50 APPENDIX J TESTS.

THIS DRAWING IS INTENDED FOR USE IN PRESERVICE AND INSERVICE INSPECTION PROGRAMS ONLY

WASHINGTON PUBLIC POWER SUPPLY SYSTEM
RICHLAND, WASHINGTON 99352

WNP-2
INSERVICE INSPECTION BOUNDARY DIAGRAM
MISCELLANEOUS CONTAINMENT PENETRATIONS

ENGINEER D PORTER
DRAWN K-McANDREW
DATE 10-12-78
DWG NO 151-217
REV 2

NO	DATE	REVISION	BY	CHKD	APVD
2	11-27-84	GENERAL UP-DATE REDRAWN	[illegible]	[illegible]	[illegible]

NO	DATE	REVISION	BY	CHKD	APVD
1	2-2-79	DELETED PIPE AND CAPS IN E-8	K-McA	DMP	LFB
0	12-22-78	ISSUED FOR USE	K-McA	TTH / DMP	LFB
A	10-18-78	ISSUED FOR INFORMATION ONLY	K-McA	NCH	DMP

Date 11/14/80
Revision 2

WNP-2 ISI BOUNDARY DIAGRAM

EXCEPTIONS AND EXEMPTIONS

ISI - 217

SYSTEM Miscellaneous Containment Penetrations

EXCEPTIONS:

Class 1 Piping and Components

- Not applicable; all penetrations on this drawing are Class 2, associated with Class 3 piping systems.

Class 2 Piping and Components

- No exceptions.

EXEMPTIONS APPLIED:

IWB-1220(a)(1)	No
(2)	No
(3)	No
(4)	No
*(b)(1)	No
(2)	No
(3)	No
IWC-1220(a)	No
*(b)	No
(c)	No
(d)	Yes, all piping
IWC-5220(d)	No
IWD-5200(c)	Yes, open ended drains inside dry well.

*See general exemption discussion for details.

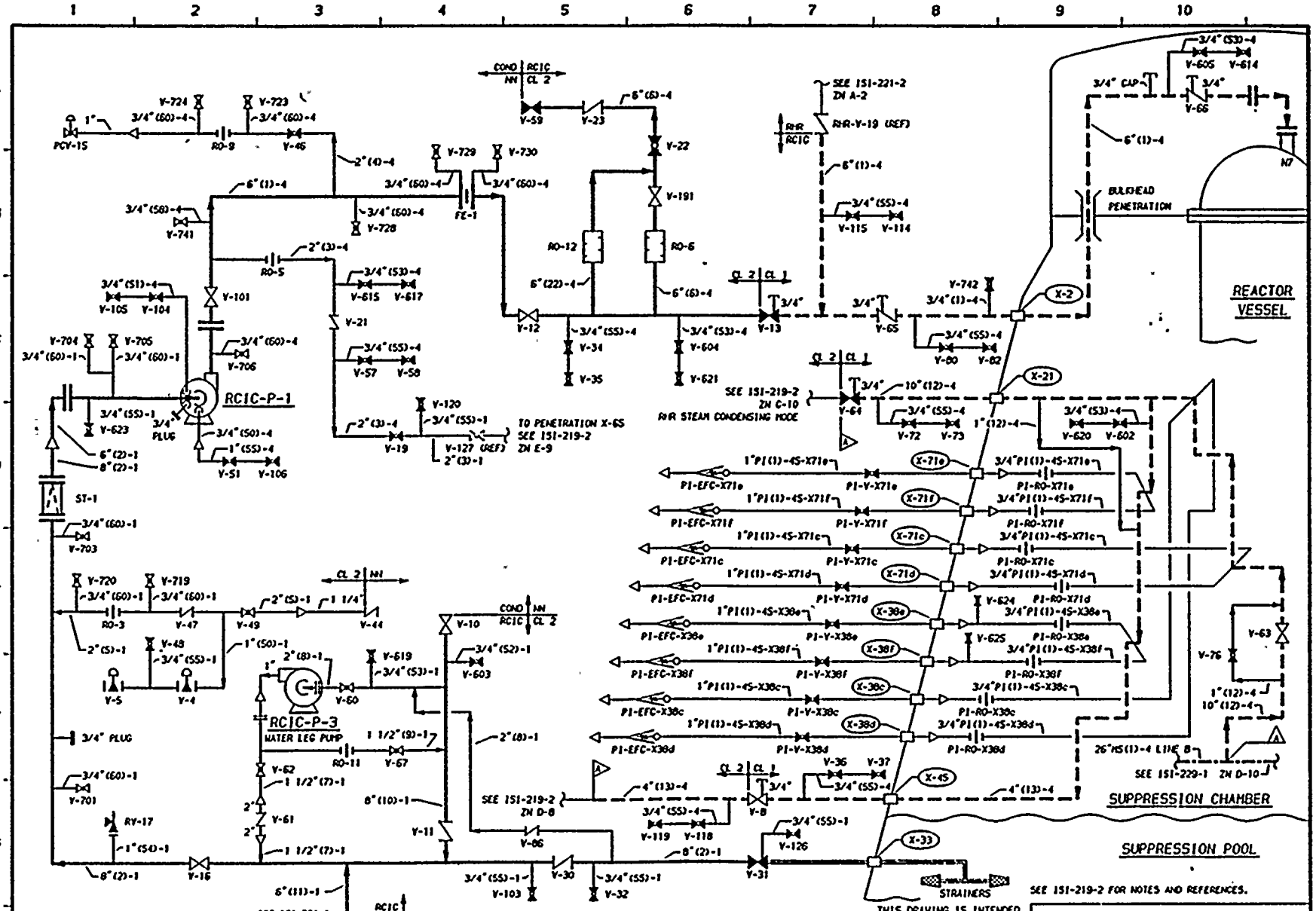
RCIC-P-1
RCIC-P-3
WATER LEG PUMP
REACTOR VESSEL
SUPPRESSION CHAMBER
SUPPRESSION POOL
BULKHEAD PENETRATION
STRAINERS
TO PENETRATION X-65 SEE 151-219-2 ZN E-9
SEE 151-219-2 ZN C-10
RHR STEAM CONDENSING MODE
SEE 151-221-2 ZN A-2
SEE 151-219-2 ZN D-8
SEE 151-221-1 ZN G-1
SEE 151-229-1 ZN D-10
SEE 151-219-2 FOR NOTES AND REFERENCES.
THIS DRAWING IS INTENDED FOR USE IN PRESERVICE AND INSERVICE INSPECTION PROGRAMS ONLY
WASHINGTON PUBLIC POWER SUPPLY SYSTEM
RICHLAND, WASHINGTON 99352
WNP-2
INSERVICE INSPECTION BOUNDARY DIAGRAM
REACTOR CORE ISOLATION COOLING (RCIC)
ENGINEER D PORTER
DRAWN K-McANDREW
DATE 11-30-77
DWG NO 151-219-1
REV 1
1 GENERAL UPDATE, AUGMENTED ISI ADDED, REDRAWN
0 1-9-79 ISSUED FOR USE
A 12-6-77 ISSUED FOR INFORMATION ONLY
NO DATE REVISION BY CHKD APVD

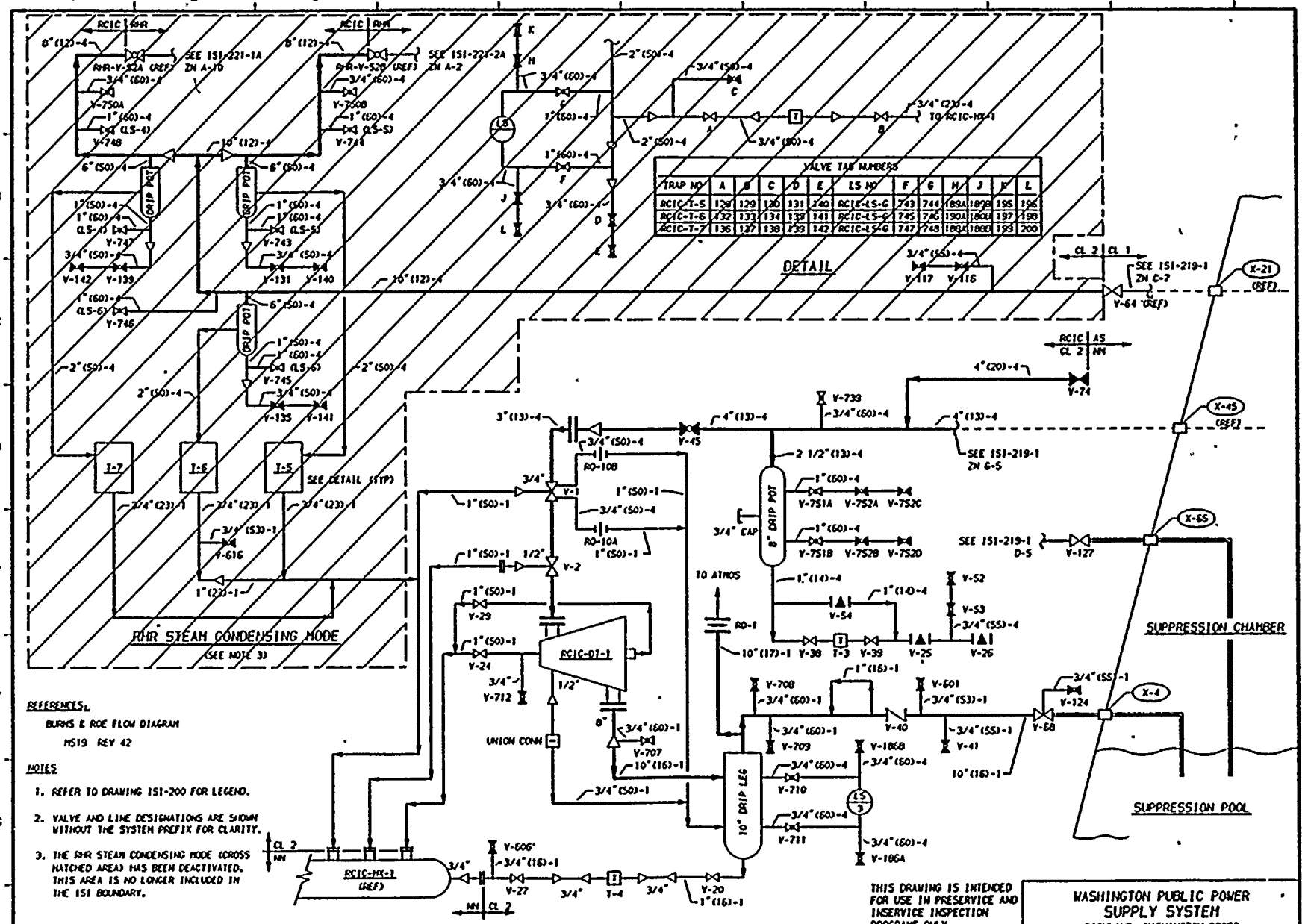

VALVE TAG NUMBERS												
TRAP NO	A	B	C	D	E	LS NO	F	G	H	J	K	L
RCIC-T-5	128	129	130	131	140	RCIC-LS-G	743	744	189A	189B	195	196
RCIC-T-6	132	133	134	139	141	RCIC-LS-G	745	746	190A	190B	197	198
RCIC-T-7	136	137	138	139	142	RCIC-LS-G	747	748	189C	189D	199	200

REFERENCES:

BURNS & ROE FLOW DIAGRAM

M519 REV 42

NOTES

1. REFER TO DRAWING 151-200 FOR LEGEND.
2. VALVE AND LINE DESIGNATIONS ARE SHOWN WITHOUT THE SYSTEM PREFIX FOR CLARITY.
3. THE RHR STEAM CONDENSING MODE (CROSS HATCHED AREA) HAS BEEN DEACTIVATED. THIS AREA IS NO LONGER INCLUDED IN THE 151 BOUNDARY.

THIS DRAWING IS INTENDED FOR USE IN PRESERVICE AND INSERVICE INSPECTION PROGRAMS ONLY

NO	DATE	REVISION	BY	CHKD	APVD	NO	DATE	REVISION	BY	CHKD	APVD
						1	11-30-79	GENERAL UPDATE, AUGMENTED 151 ADDED, REDRAWN	K-McA	TPP	TPH
						0	1-9-79	ISSUED FOR USE	K-McA	DMP	NCH
						A	12-6-77	ISSUED FOR INFORMATION ONLY	K-McA	DMP	NCH

ENGINEER D PORTER

DRAWN K-McANDREW

DATE 11-30-77

WASHINGTON PUBLIC POWER SUPPLY SYSTEM
RICHLAND, WASHINGTON 99352
WNP-2

INSERVICE INSPECTION BOUNDARY DIAGRAM
REACTOR CORE ISOLATION COOLING (RCIC)

DWG NO 151-219-2 REV 1

WNP-2 ISI BOUNDARY DIAGRAM

Date 11/14/80
Revision 1

EXCEPTIONS AND EXEMPTIONS

ISI - 219

SYSTEM Reactor Core Isolation Cooling (RCIC) System

EXCEPTIONS:

Class 1 Piping and Components

- See general exceptions
- No additional exceptions

Class 2 Piping and Components

- See general exceptions.
- No additional exceptions.

EXEMPTIONS APPLIED:

IWB-1220(a)(1)	Yes, per code class boundary
(2)	No
(3)	No
(4)	No
*(b)(1)	No
(2)	No
(3)	Yes, all piping ≤1" NPS.
IWC-1220(a)	Yes, pump suction lines.
*(b)	Yes, all piping >4". RCIC system is non ECCS and not "normal use" system.
(c)	No
(d)	Yes, all piping ≤4" NPS.
IWC-5220(d)	Yes, all lines open ended to suppression pool.
IWD-5200(c)	No

* See general exemption discussion for details.

Date 12/14/81
Revision 1

WNP-2 ISI BOUNDARY DIAGRAM

EXCEPTIONS AND EXEMPTIONS

ISI - 220

SYSTEM High Pressure Core Spray (HPCS)/Low Pressure Core Spray (LPCS) Systems

EXCEPTIONS:

Class 1 Piping and Components

- See general exceptions.
- No additional exceptions.

Class 2 Piping and Components

- See general exceptions.
- No additional exceptions.

EXEMPTIONS APPLIED:

IWB-1220(a)(1)	Yes, per code class boundary.
(2)	No
(3)	No
(4)	No
*(b)(1)	No
(2)	No
(3)	Yes, all piping ≤ 1" NPS.
IWC-1220(a)	Yes, pump suction lines.
*(b)	No
(c)	10% of all piping >4" NPS not exempted by (a), (b), or (d) will be examined by a volumetric method for HPCS and a surface method for LPCS.
(d)	Yes, all piping ≤ 4" NPS.
IWC-5220(d)	Yes, all open ended piping to suppression pool.
IWC-5200(c)	No

*See general exemption discussion for details.

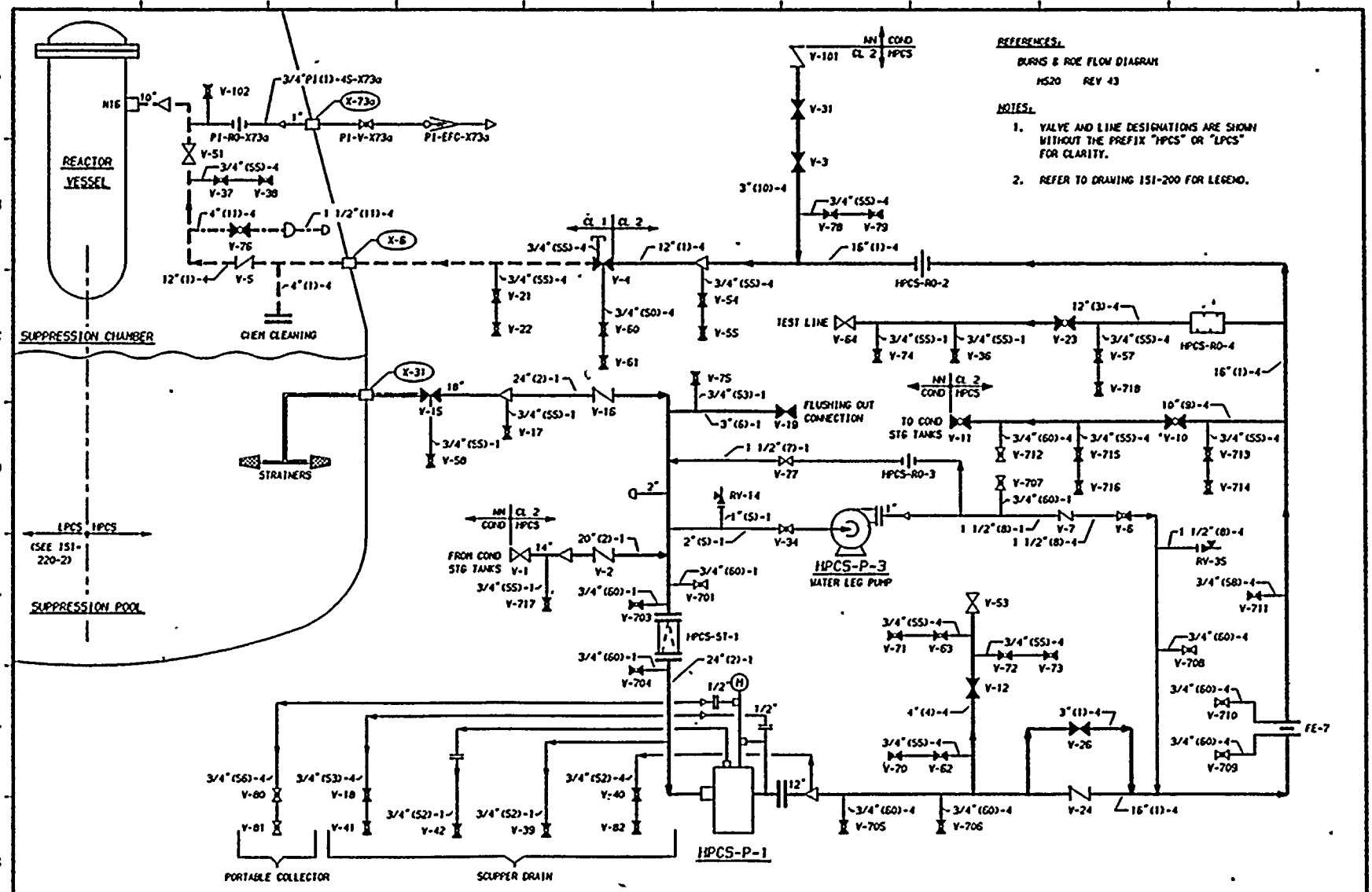

REFERENCES:

BURNS & ROE FLOW DIAGRAM

HS20 REV 43

NOTES:

1. VALVE AND LINE DESIGNATIONS ARE SHOWN WITHOUT THE PREFIX "HPCS" OR "LPCS" FOR CLARITY.
2. REFER TO DRAWING 151-200 FOR LEGEND.

THIS DRAWING IS INTENDED FOR USE IN PRESERVICE AND INSERVICE INSPECTION PROGRAMS ONLY

NO	DATE	REVISION	BY	CHKD	APVD
1	7-15-80	GENERAL UPDATE, SPLIT, (REDRAWN)	K-McA	DRP	LFB
0	11-22-78	ISSUED FOR USE (REDRAWN)	K-McA	DRP	LFB
A	12-6-77	ISSUED FOR INFORMATION ONLY	K-McA	DRP	DMP

NO	DATE	REVISION	BY	CHKD	APVD

ENGINEER D PORTER

DRAWN K-McANDREW

DATE 11-16-77

WASHINGTON PUBLIC POWER SUPPLY SYSTEM
RICHLAND, WASHINGTON 99352

WNP-2

INSERVICE INSPECTION BOUNDARY DIAGRAM
HIGH PRESSURE CORE SPRAY (HPCS)
LOW PRESSURE CORE SPRAY (LPCS)

DWG NO 151-220-1 REV 1

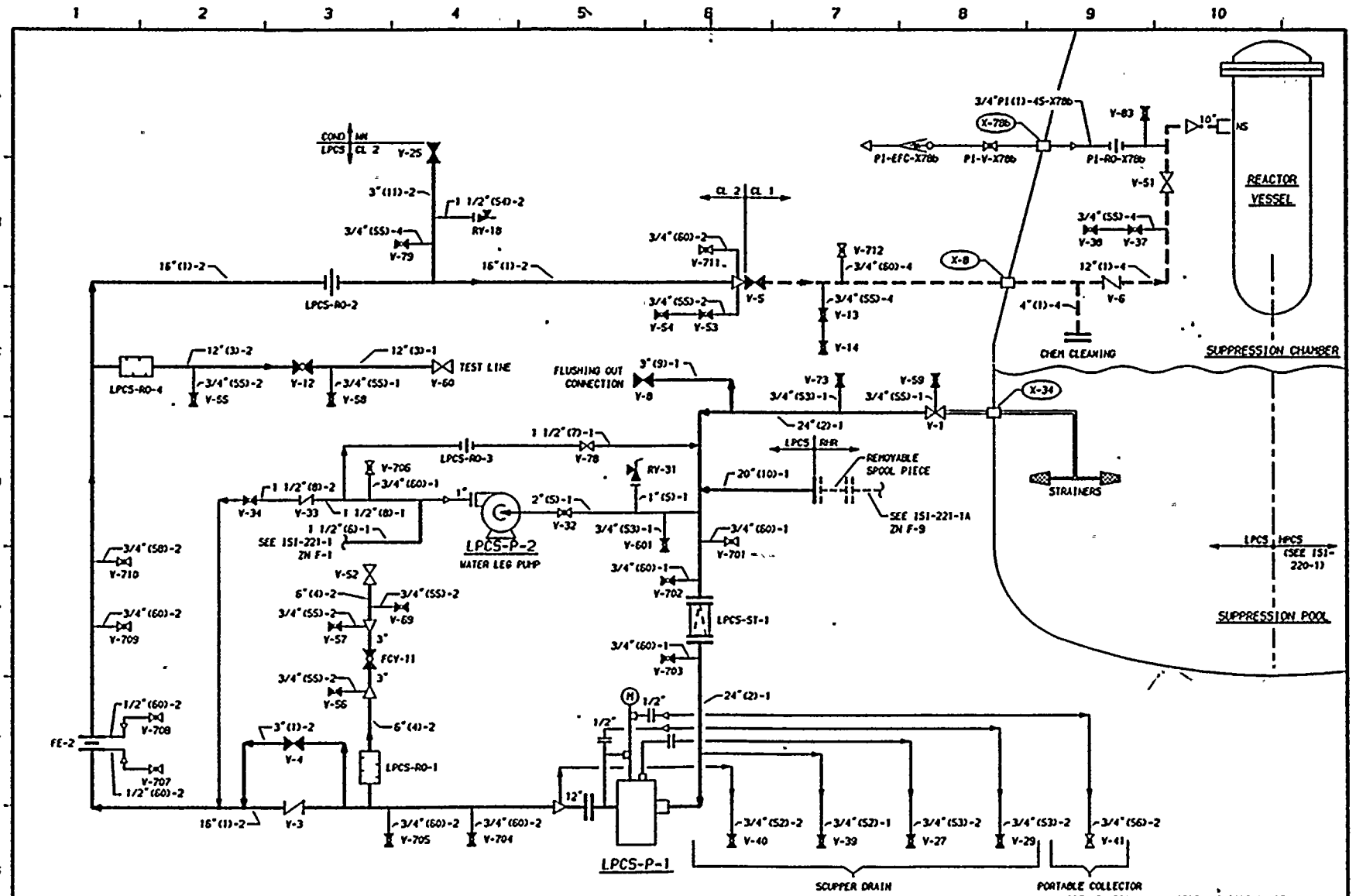
REACTOR VESSEL
SUPPRESSION CHAMBER
SUPPRESSION POOL
LPCS-P-2
WATER LEG PUMP
LPCS-P-1
LPCS-RO-2
LPCS-RO-4
LPCS-RO-3
LPCS-RO-1
LPCS-ST-1
FE-2
FCV-11
RY-18
RY-31
TEST LINE
FLUSHING OUT CONNECTION
REMOVABLE SPOOL PIECE
SEE 151-221-1A ZN F-9
SEE 151-221-1 ZN F-1
STRAINERS
CHEM CLEANING
SCUPPER DRAIN
PORTABLE COLLECTOR
SEE 151-220-1 FOR NOTES AND REFERENCES.
THIS DRAWING IS INTENDED FOR USE IN PRESERVICE AND INSERVICE INSPECTION PROGRAMS ONLY
WASHINGTON PUBLIC POWER SUPPLY SYSTEM
RICHLAND, WASHINGTON 99352
WNP-2
INSERVICE INSPECTION BOUNDARY DIAGRAM
HIGH PRESSURE CORE SPRAY (HPCS)
LOW PRESSURE CORE SPRAY (LPCS)
ENGINEER D PORTER
DRAWN K-McANDREW
DATE 11-16-77
DWG NO 151-220-2
REV 1
1 GENERAL UPDATE, SPLIT, (REDRAWN)
0 11-22-76 ISSUED FOR USE (REDRAWN)
A 12-6-77 ISSUED FOR INFORMATION ONLY

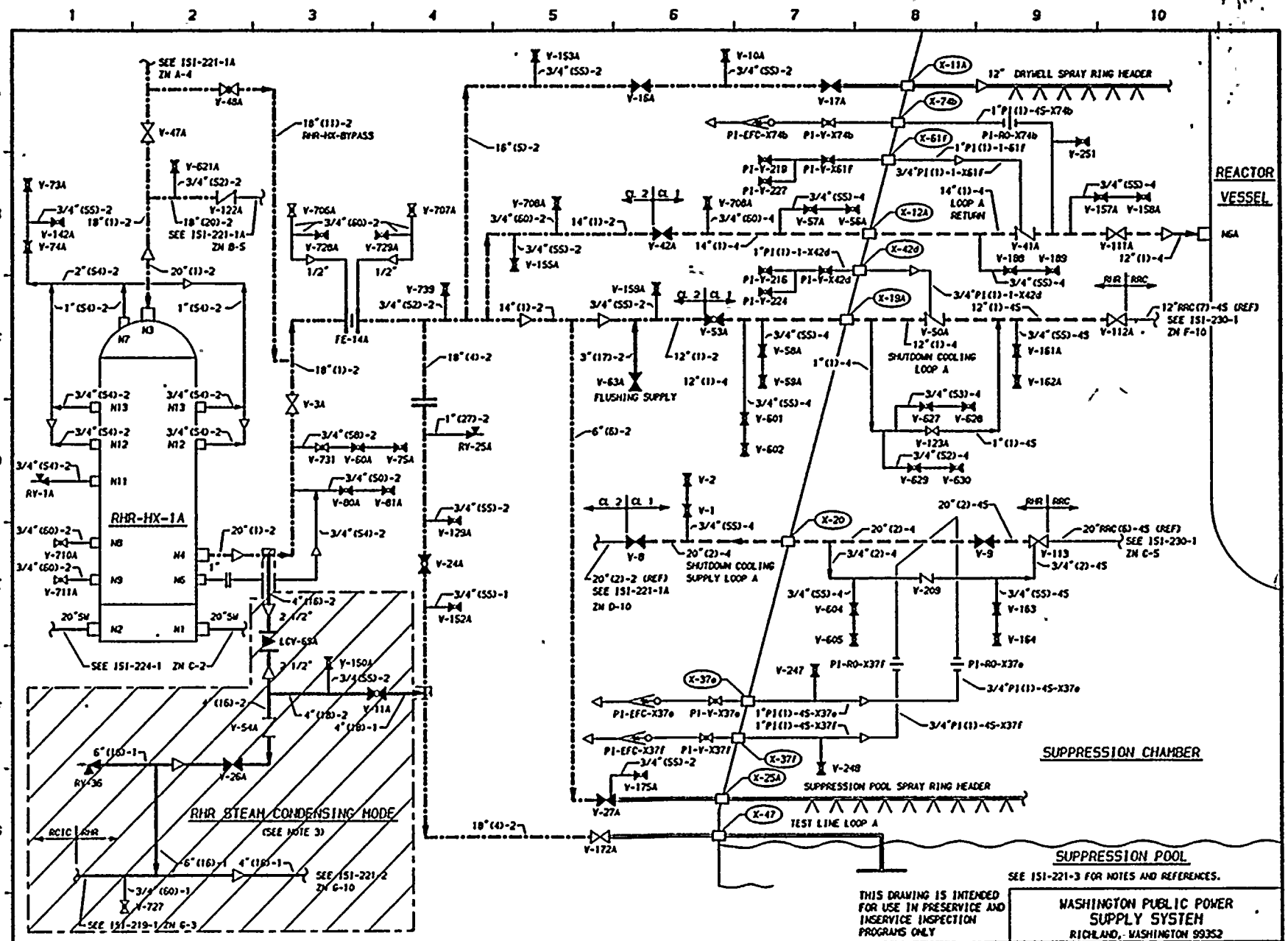

THIS DRAWING IS INTENDED FOR USE IN PRESERVICE AND INSERVICE INSPECTION PROGRAMS ONLY

WASHINGTON PUBLIC POWER SUPPLY SYSTEM
RICHLAND, WASHINGTON 99352
WNP-2

ENGINEER D PORTER
DRAWN K-McANDREW
DATE 4-18-78

INSERVICE INSPECTION BOUNDARY DIAGRAM
RESIDUAL HEAT REMOVAL (RHR)

DWG NO ISI-221-1 REV 2

NO	DATE	REVISION	BY	CHKD	APVD
2	[illegible]	GENERAL UPDATE REDRAWN	[illegible]	DMP	TEM
1	7-17-79	CHG REMOVABLE SPOOL PIECE FROM SURFACE TO VISUAL ZN E-6	K-McA	TTH DMP	LFB
0	12-22-78	ISSUED FOR USE	K-McA	TTH DMP	LFB
A	5-9-78	ISSUED FOR INFORMATION ONLY	K-McA	MCH	DMP

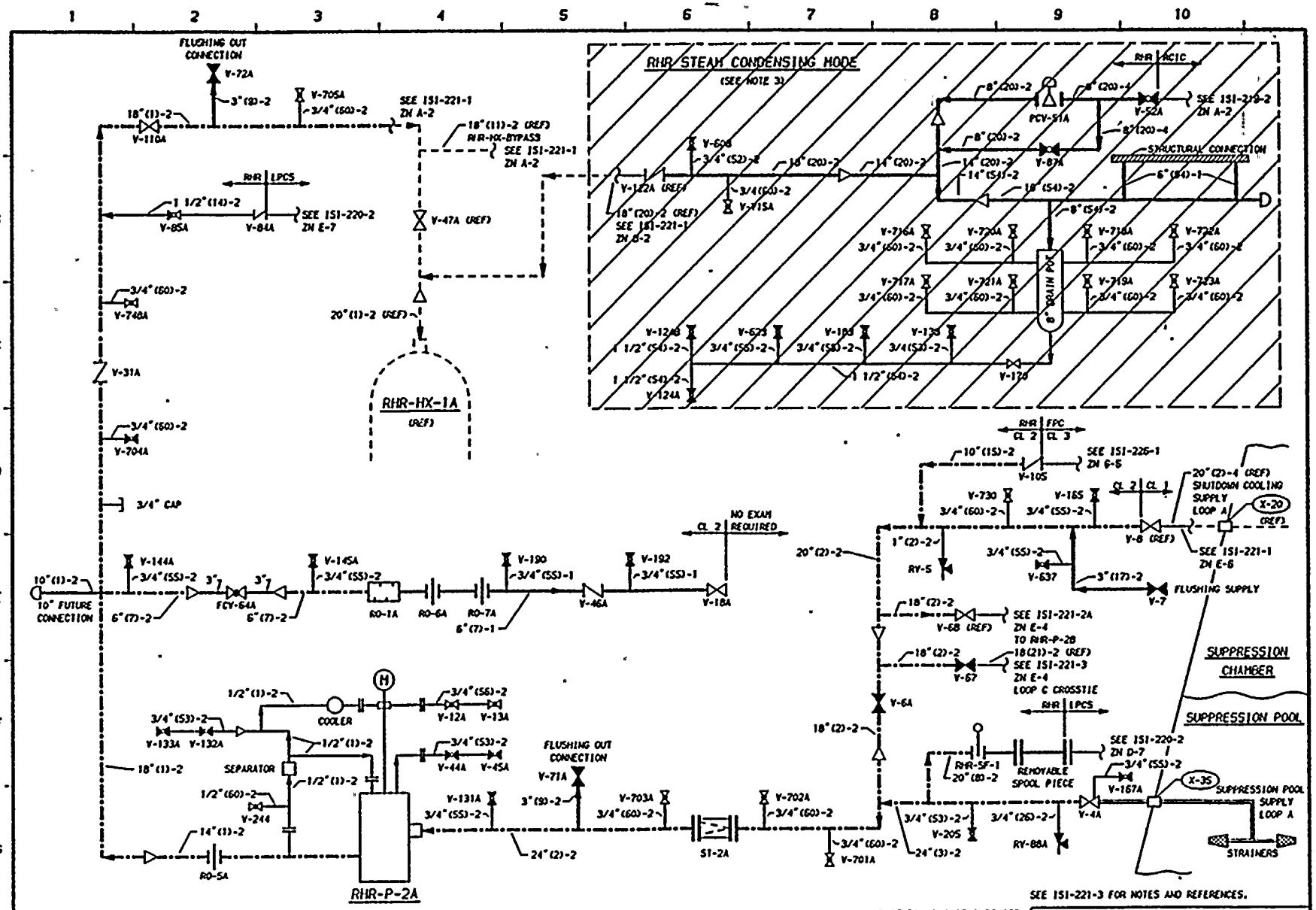

THIS DRAWING IS INTENDED FOR USE IN PRESERVICE AND INSERVICE INSPECTION PROGRAMS ONLY

NO	DATE	REVISION	BY	CHKD	APVD
2		GENERAL UPDATE REDRAWN			

NO	DATE	REVISION	BY	CHKD	APVD
1	7-17-79	CHG REMOVABLE SPOOL PIECE FROM BARFACE TO VISUAL ZN E-6	K-McA	TFH	LFB
0	12-22-78	ISSUED FOR USE	K-McA	TFH	LFB
A	5-9-78	ISSUED FOR INFORMATION ONLY	K-McA	NCH	DMP

ENGINEER D PORTER
DRAWN K-McANDREW
DATE 4-18-78

WASHINGTON PUBLIC POWER SUPPLY SYSTEM
RICHLAND, WASHINGTON 99352
WNP-2
INSERVICE INSPECTION BOUNDARY DIAGRAM
RESIDUAL HEAT REMOVAL (RHR)

DWG NO 151-221-1A REV 2

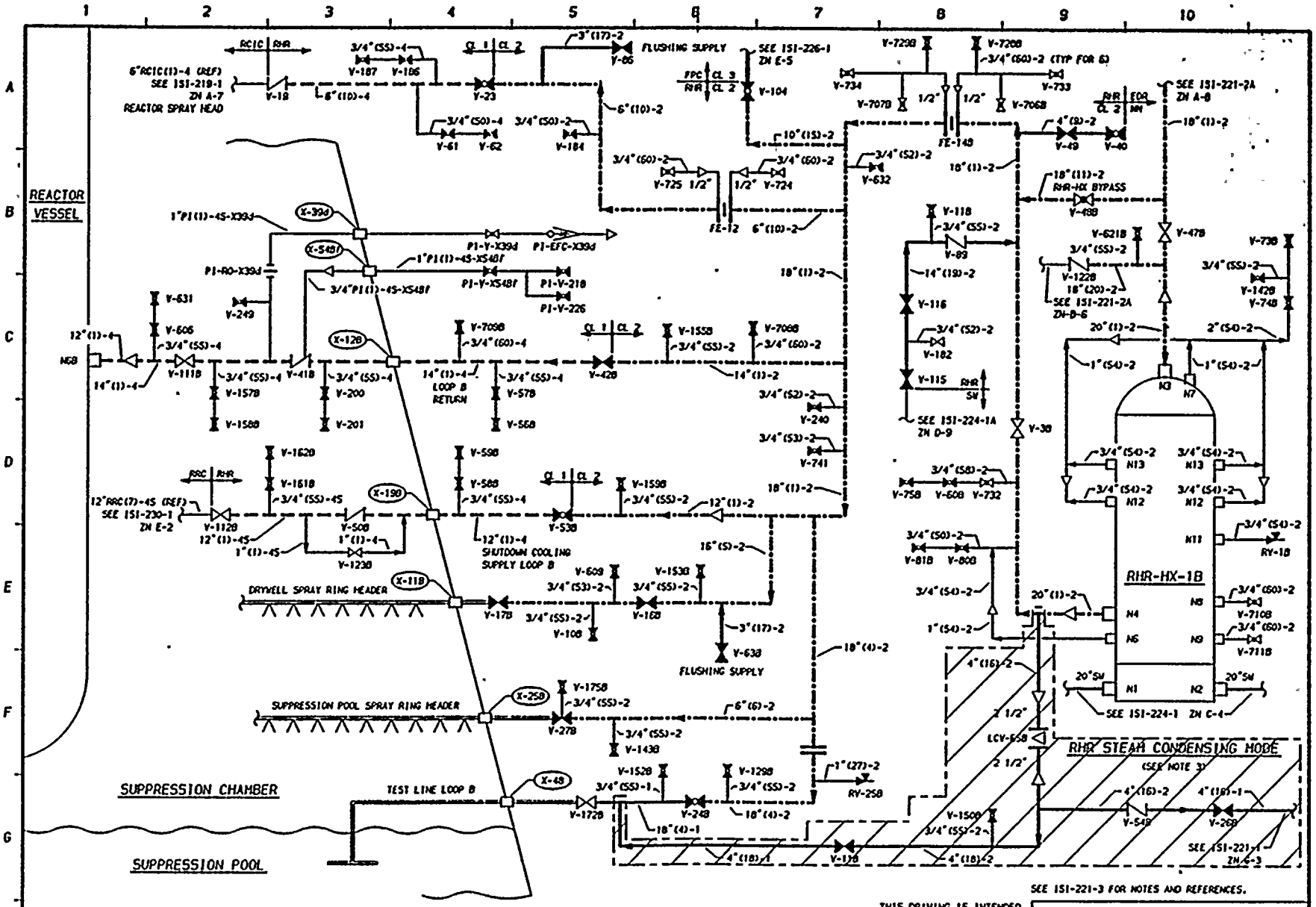

THIS DRAWING IS INTENDED FOR USE IN PRESERVICE AND INSERVICE INSPECTION PROGRAMS ONLY

NO	DATE	REVISION	BY	CHKD	APVD
1	[illegible]	GENERAL UPDATE REDRAWN	[illegible]	[illegible]	[illegible]
0	12-22-78	ISSUED FOR USE	K-McA	[illegible]	LFB
A	5-9-78	ISSUED FOR INFORMATION ONLY	K-McA	NCH	DMP

ENGINEER D PORTER
DRAWN K-McANDREW
DATE 4-19-78

WASHINGTON PUBLIC POWER SUPPLY SYSTEM
RICHLAND, WASHINGTON 99352
WNP-2
INSERVICE INSPECTION BOUNDARY DIAGRAM
RESIDUAL HEAT REMOVAL (RHR)

DWG NO 151-221-2 REV 1

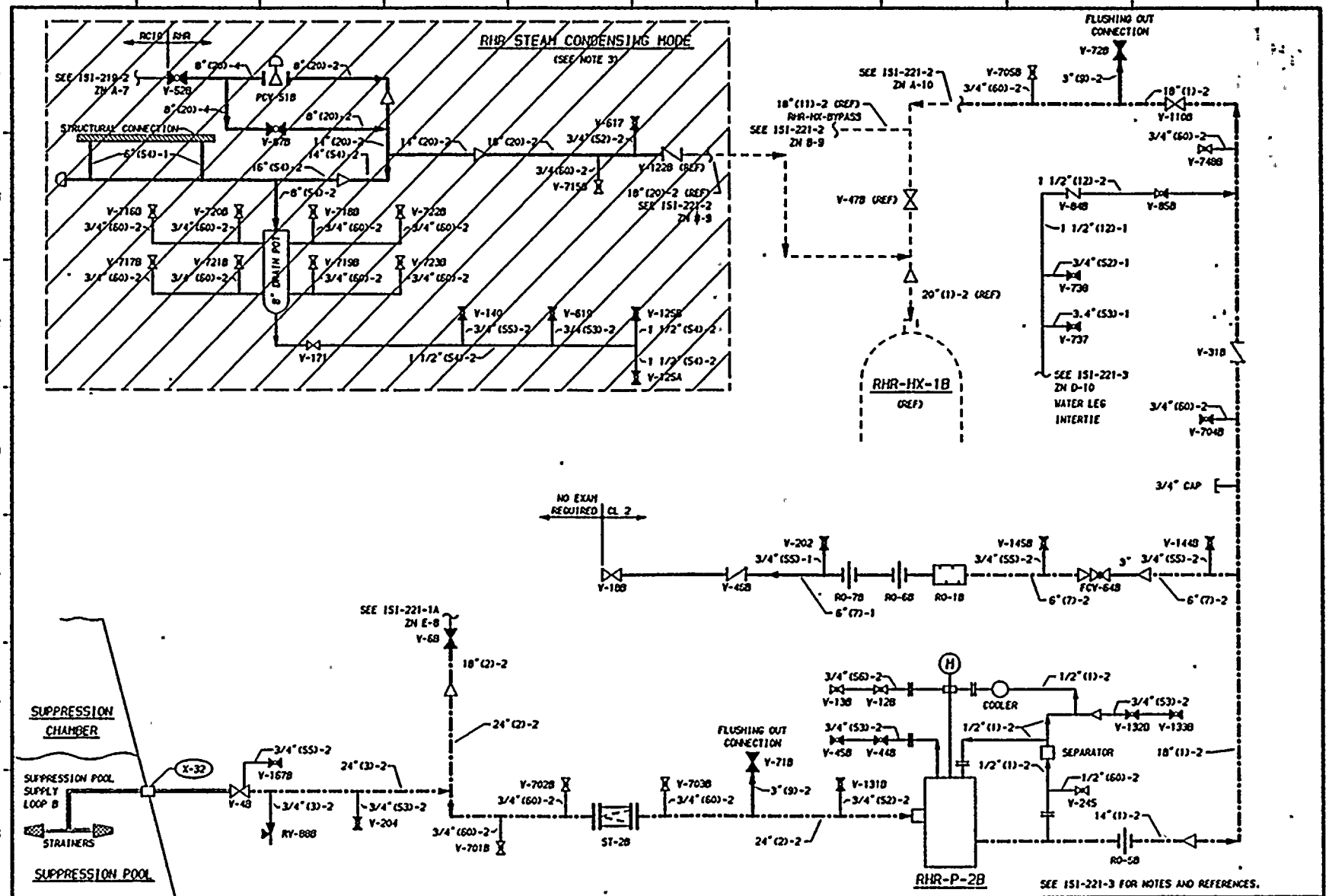
RHR STEAM CONDENSING MODE
(SEE NOTE 3)
RC19 RHR
SEE 151-219-2 ZN A-7
V-52B
PCV-51B
STRUCTURAL CONNECTION
8" DRAIN POT
V-171
V-140
V-619
V-125B
V-125A
V-122B (REF)
V-617
V-715B
V-716B
V-720B
V-718B
V-722B
V-717B
V-721B
V-719B
V-723B
SEE 151-221-2 ZN A-10
SEE 151-221-2 ZN B-9
18"(11)-2 (REF) RHR-HX-BYPASS
V-47B (REF)
20"(1)-2 (REF)
RHR-HX-1B (REF)
FLUSHING OUT CONNECTION
V-72B
V-705B
V-110B
V-748B
V-84B
V-85B
V-73B
V-737
V-31B
SEE 151-221-3 ZN D-10
WATER LEG INTERTIE
V-704B
3/4" CAP
NO EXAM REQUIRED CL 2
V-10B
V-45B
V-202
RO-7B
RO-6B
RO-1B
V-145B
FCV-64B
V-144B
SEE 151-221-1A ZN E-8
V-6B
SUPPRESSION CHAMBER
SUPPRESSION POOL SUPPLY LOOP B
X-32
V-167B
V-4B
RV-88B
V-204
V-702B
V-701B
ST-2B
V-703B
V-713B
V-131B
V-13B
V-12B
V-45B
V-44B
COOLER
V-132B
V-133B
SEPARATOR
V-24B
RO-5B
STRAINERS
SUPPRESSION POOL
RHR-P-2B
SEE 151-221-3 FOR NOTES AND REFERENCES.
THIS DRAWING IS INTENDED FOR USE IN PRESERVICE AND INSERVICE INSPECTION PROGRAMS ONLY
WASHINGTON PUBLIC POWER SUPPLY SYSTEM
RICHLAND, WASHINGTON 99352
WNP-2
INSERVICE INSPECTION BOUNDARY DIAGRAM
RESIDUAL HEAT REMOVAL (RHR)
ENGINEER D PORTER
DRAWN K-McANDREW
DATE 4-19-78
DWG NO 151-221-2A
REV 1
1 11-28-84 GENERAL UPDATE REDRAWN
0 12-22-78 ISSUED FOR USE
A 5-9-78 ISSUED FOR INFORMATION ONLY
NO DATE REVISION BY CHKD APVD

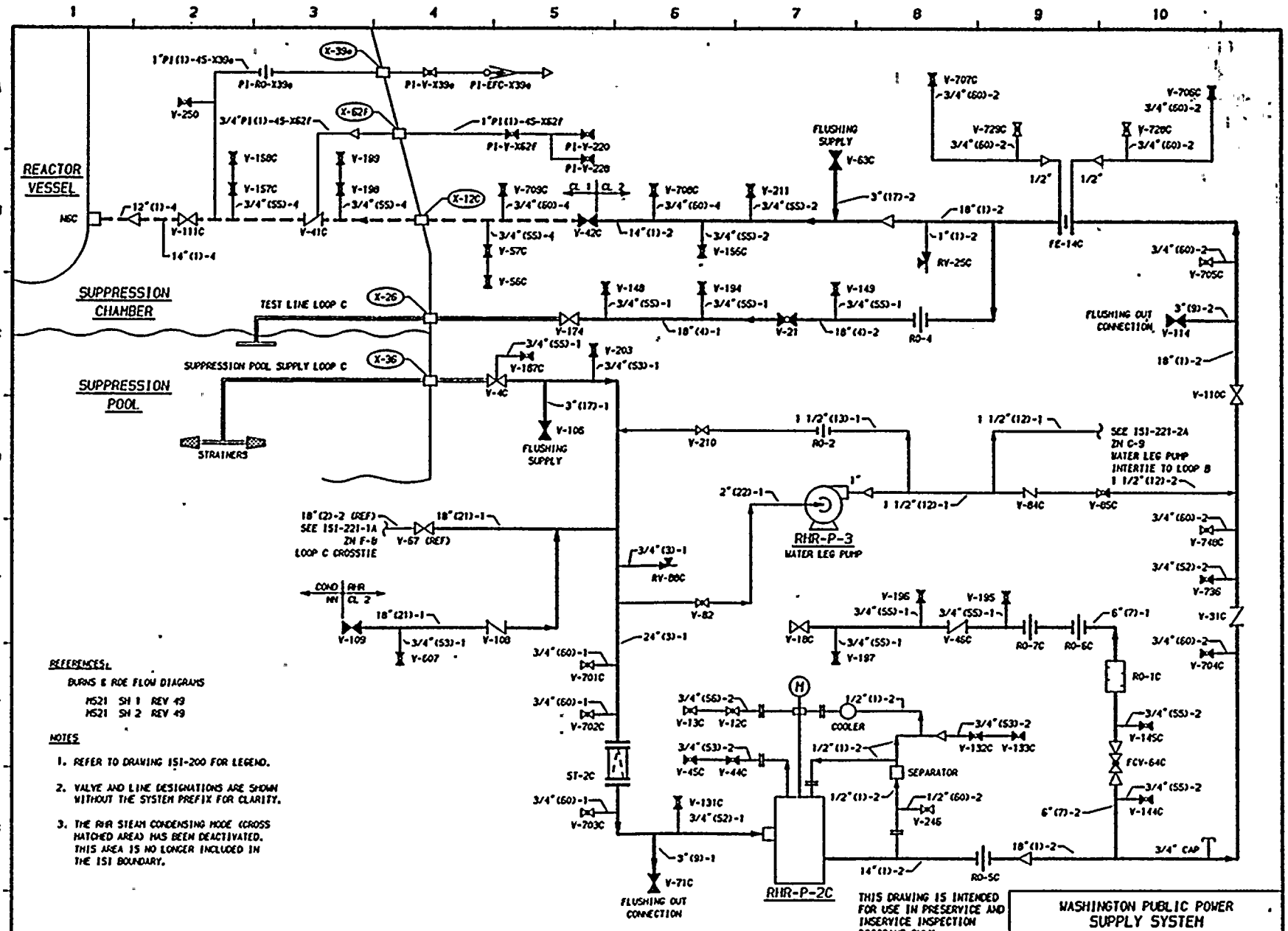
REACTOR VESSEL
SUPPRESSION CHAMBER
SUPPRESSION POOL
TEST LINE LOOP C
SUPPRESSION POOL SUPPLY LOOP C
STRAINERS
FLUSHING SUPPLY
FLUSHING OUT CONNECTION
SEE 151-221-2A ZN C-9 WATER LEG PUMP INTERTIE TO LOOP B
SEE 151-221-1A ZN F-6 LOOP C CROSSTIE
RHR-P-3
WATER LEG PUMP
RHR-P-2C
COOLER
SEPARATOR
ST-2C
FE-14C
RV-25C
RV-86C
FCV-64C
3/4" CAP
REFERENCES:
BURNS & ROE FLOW DIAGRAMS
M521 SH 1 REV 49
M521 SH 2 REV 49
NOTES
1. REFER TO DRAWING 151-200 FOR LEGEND.
2. VALVE AND LINE DESIGNATIONS ARE SHOWN WITHOUT THE SYSTEM PREFIX FOR CLARITY.
3. THE RHR STEAM CONDENSING MODE (CROSS HATCHED AREA) HAS BEEN DEACTIVATED. THIS AREA IS NO LONGER INCLUDED IN THE ISI BOUNDARY.
THIS DRAWING IS INTENDED FOR USE IN PRESERVICE AND INSERVICE INSPECTION PROGRAMS ONLY
WASHINGTON PUBLIC POWER SUPPLY SYSTEM
RICHLAND, WASHINGTON 99352
WNP-2
INSERVICE INSPECTION BOUNDARY DIAGRAM
RESIDUAL HEAT REMOVAL (RHR)
ENGINEER D PORTER
DRAWN K-McANDREW
DWG NO 151-221-3
REV 2
1 7-17-79 DIG REMOVABLE SPOOL PIECE FROM SURFACE TO VISUAL ZN E-6 K-McA
0 12-22-78 ISSUED FOR USE K-McA
A 5-9-78 ISSUED FOR INFORMATION ONLY K-McA NCH DMP
2 GENERAL UPDATE REDRAWN
NO DATE REVISION BY CHKD APVD
DATE 4-18-78

Date 1/18/85
Revision 3

WNP-2 ISI BOUNDARY DIAGRAM
EXCEPTIONS AND EXEMPTIONS

ISI - 221

SYSTEM Residual Heat Removal (RHR) System

EXCEPTIONS:

Class 1 Piping and Components

- o See general exceptions.
- o No additional exceptions.

Class 2 Piping and Components

- o See general exceptions.
- o Additional exception as follows: the RHR pump P-2A and P-2B will not be examined using a volumetric method due to inaccessibility. See justification on following page. A surface examination on the pump casing welds from the I.D. when the pumps as disassembled will be performed in lieu of a volumetric examination. Accessible portions of the discharge nozzle longitudinal weld and the shell weld will be examined using a surface method.

EXEMPTIONS APPLIED:

IWB-1220(a)(1)	Yes, per code class boundary.
(2)	No
(3)	No
(4)	No
*(b)(1)	Yes, 3" RHR (17)-2 (Sheet 2, Zone A-5/6)
(2)	No
(3)	Yes, all piping ≤1" NPS.
IWC-1220(a)	Yes, pump suction lines.
*(b)	Yes
(c)	10% of all piping >4" NPS not exempted by (a), (b), or (d) will be examined by a volumetric method.
(d)	Yes, all piping ≤4" NPS.
IWC-5220(d)	Yes, all open ended piping to suppression pool.
IWC-5200(c)	No

*See general exemption discussion for details.

Date 1/18/85
Revision 1

JUSTIFICATION FOR SURFACE EXAMINATION OF THE RHR PUMPS P-2A AND P-2B

The RHR pumps were designed prior to the requirement to perform Class 2 component examinations for preservice and inservice inspections. The pump casings are embedded in a pump pit which allows no access from the outside surface. The upper flange is at floor level. The welds are accessible when the pump impeller is removed. The pump casing welds will be examined with a surface method from the I.D. This meets the requirements of the 1977 Edition of ASME Section XI with Addenda through Summer 1978. Drawing RHR-213 in Section 8.0, "Weld Identification Diagrams", illustrates the pump installation details.

The 1974 Edition of ASME Section XI with Addenda through Summer 1975 requires a volumetric examination.

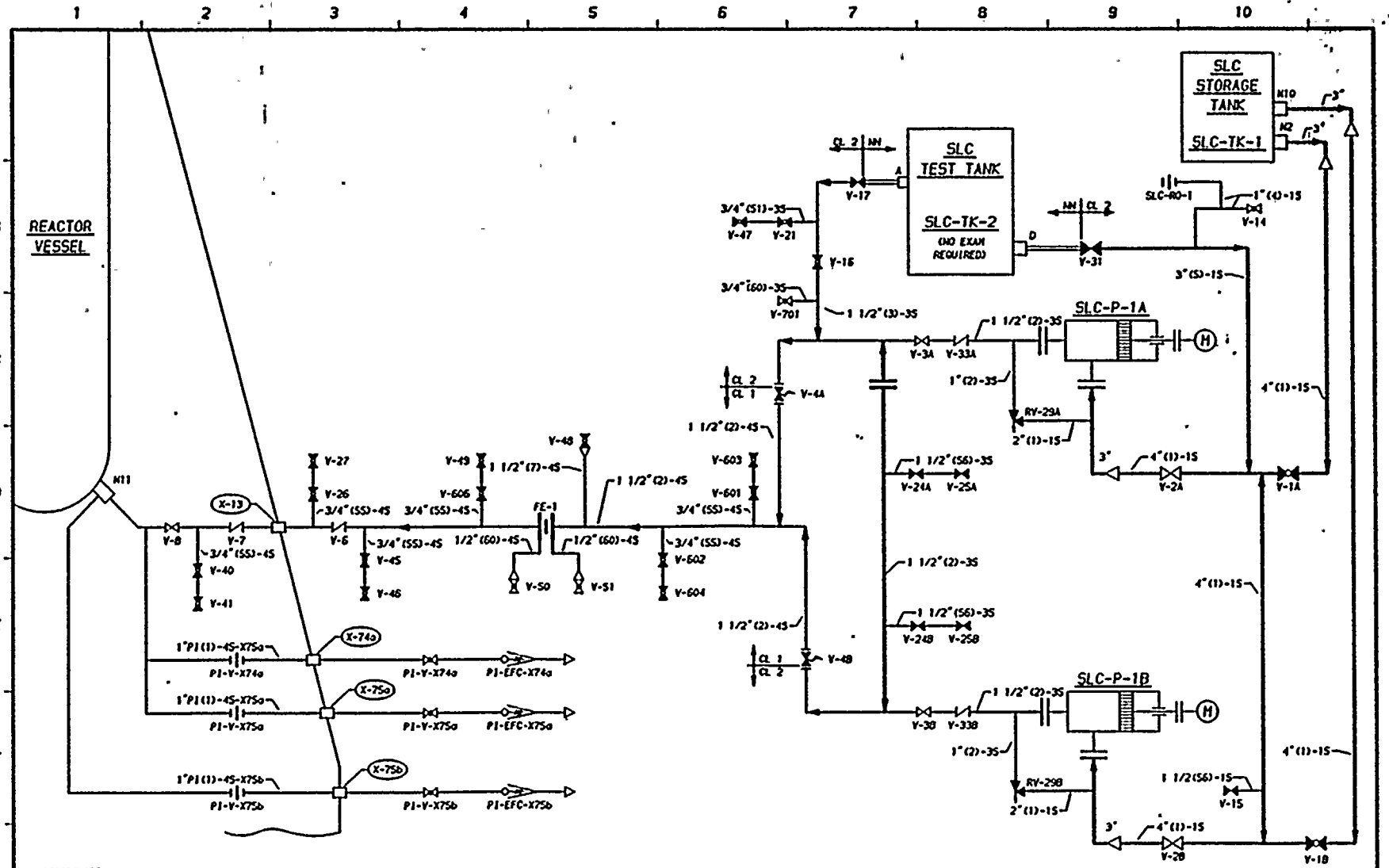

REFERENCES:

BURNS & ROE FLOW DIAGRAM

M522 REV 20

NOTES

1. REFER TO DRAWING 151-200 FOR LEGEND.
2. VALVE AND LINE DESIGNATIONS ARE SHOWN WITHOUT THE SYSTEM PREFIX FOR CLARITY.

THIS DRAWING IS INTENDED FOR USE IN PRESERVICE AND INSERVICE INSPECTION PROGRAMS ONLY

NO	DATE	REVISION	BY	CHKD	APVD
1	11/28/84	GENERAL UPDATE REDRAWN	K-McA	DMP	LFB
0	12-22-76	ISSUED FOR USE	K-McA	NCH	DMP
A	10-18-76	ISSUED FOR INFORMATION ONLY	K-McA	NCH	DMP

ENGINEER D PORTER

DRAWN K-McA

DATE 8-23-76

WASHINGTON PUBLIC POWER SUPPLY SYSTEM
RICHLAND, WASHINGTON 99352

WNP-2

INSERVICE INSPECTION BOUNDARY DIAGRAM
STANDBY LIQUID CONTROL (SLC)

DWG NO 151-222 REV 1

Date 1/8/79
Revision 0

WNP-2 ISI BOUNDARY DIAGRAM

EXCEPTIONS AND EXEMPTIONS

ISI - 222

SYSTEM Standby Liquid Control (SLC) System

EXCEPTIONS:

Class 1 Piping and Components

- See general exceptions
- No additional exceptions

Class 2 Piping and Components

- See general exceptions
- No additional exceptions

EXEMPTIONS APPLIED:

IWB-1220(a)(1) Yes, per code class boundary

(2) No

(3) No

(4) No

*(b)(1) Yes, 1 1/2" SLC(2)-4S (zone C/D-2-4)

(2) No

(3) Yes, all piping ≤ 1" NPS

IWC-1220(a) No

*(b) No

(c) No

(d) Yes, entire Class 2 system

IWC-5220(d) No

IWD-5200(c) No

*See general exemption discussion for details.

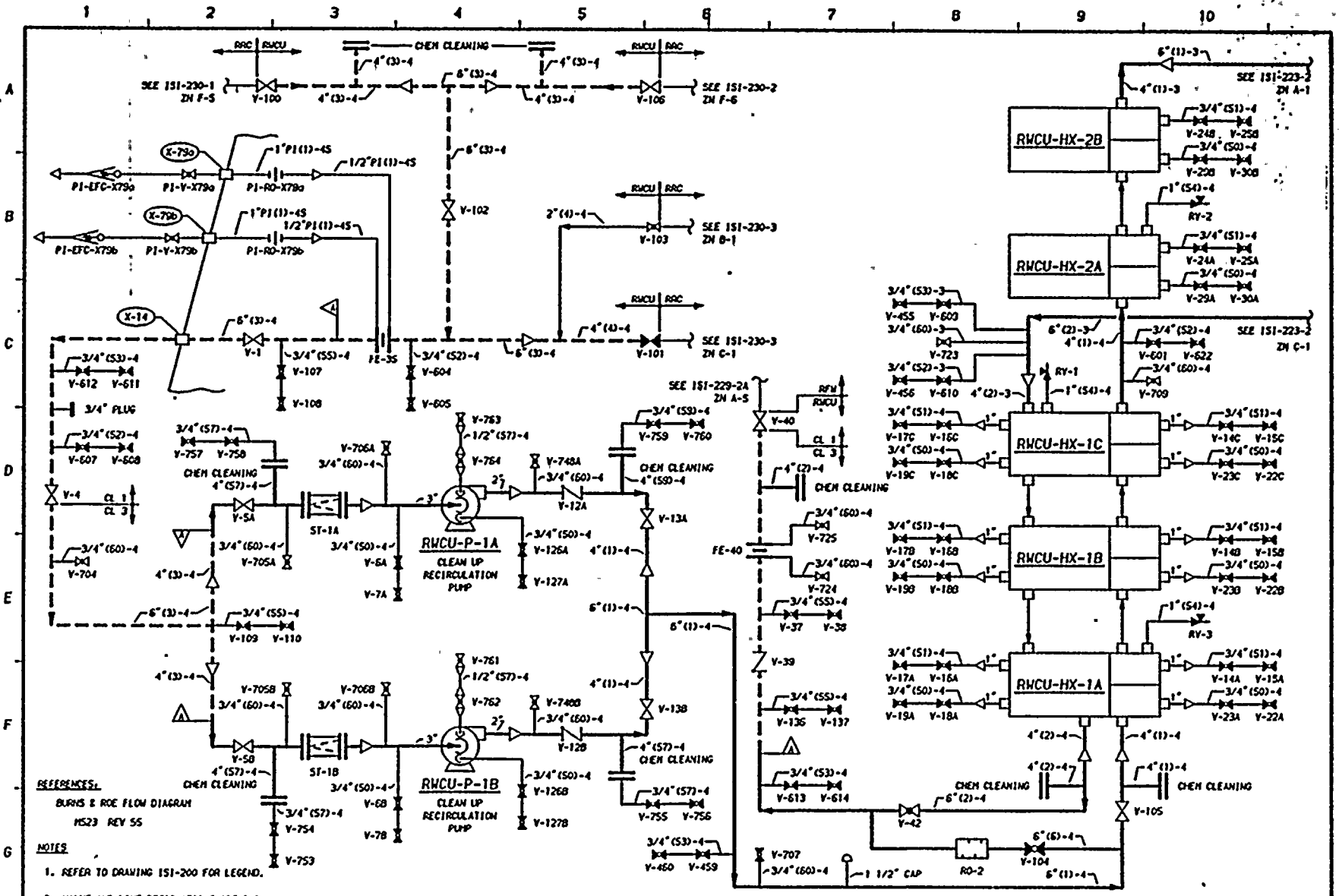

THIS DRAWING IS INTENDED FOR USE IN PRESERVICE AND INSERVICE INSPECTION PROGRAMS ONLY

NO	DATE	REVISION	BY	CHKD	APVD
1	11-16-78	AUGMENTED ISI ADDED, GENERAL UPDATE, REDRAWN	K-McA	DPR	TFH
0	1-9-79	ISSUED FOR USE	K-McA	DPR	TFH
A	10-18-78	ISSUED FOR INFORMATION ONLY	K-McA	DMP	

ENGINEER D PORTER
DRAWN K-McANDREW
DATE 9-6-78

WASHINGTON PUBLIC POWER SUPPLY SYSTEM
RICHLAND, WASHINGTON 99352
WNP-2
INSERVICE INSPECTION BOUNDARY DIAGRAM
REACTOR WATER CLEAN UP (RWCU)

DWG NO ISI-223-1 REV 1

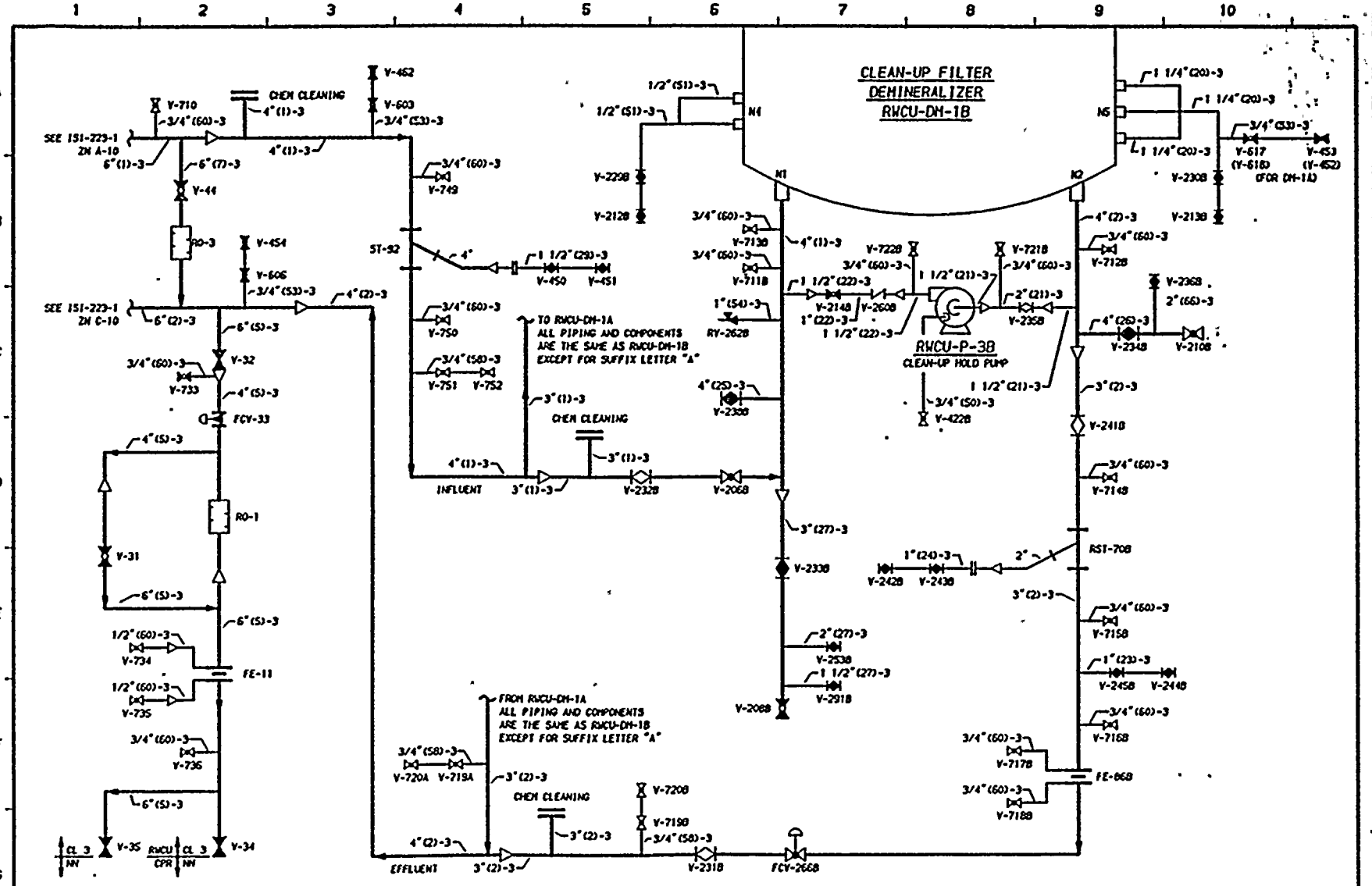

SEE 151-223-1 FOR NOTES AND REFERENCES.

THIS DRAWING IS INTENDED FOR USE IN PRESERVICE AND INSERVICE INSPECTION PROGRAMS ONLY

NO	DATE	REVISION	BY	CHKD	APVD
1	11-28-79	AUGMENTED 151 ADDED, GENERAL UPDATE, REDRAWN			
0	1-9-79	ISSUED FOR USE	K-McA		
A	10-18-78	ISSUED FOR INFORMATION ONLY	K-McA		

ENGINEER D PORTER
DRAWN K-McANDREW
DATE 9-8-78

WASHINGTON PUBLIC POWER SUPPLY SYSTEM
RICHLAND, WASHINGTON 99352
WNP-2
INSERVICE INSPECTION BOUNDARY DIAGRAM
REACTOR WATER CLEAN UP (RWCU)

DWG NO 151-223-2 REV 1

Date 11/14/80

Revision 1

WNP-2 ISI BOUNDARY DIAGRAM

EXCEPTIONS AND EXEMPTIONS

ISI - 223

SYSTEM Reactor Water Cleanup (RWCU)

EXCEPTIONS:

Class 1 Piping and Components

- See general exceptions
- No additional exceptions

Class 2 Piping and Components

- Not applicable; entire system is Class 1 or Class 3

EXEMPTIONS APPLIED:

IWB-1220(a)(1)	Yes, per code class boundary
(2)	No
(3)	No
(4)	No
*(b)(1)	No
(2)	No
(3)	Yes, all piping ≤ 1" NPS
IWC-1220(a)	No
*(b)	No
(c)	No
(d)	No
IWC-5220(d)	No
IWD-5200(c)	No

*See general exemption discussion for details.

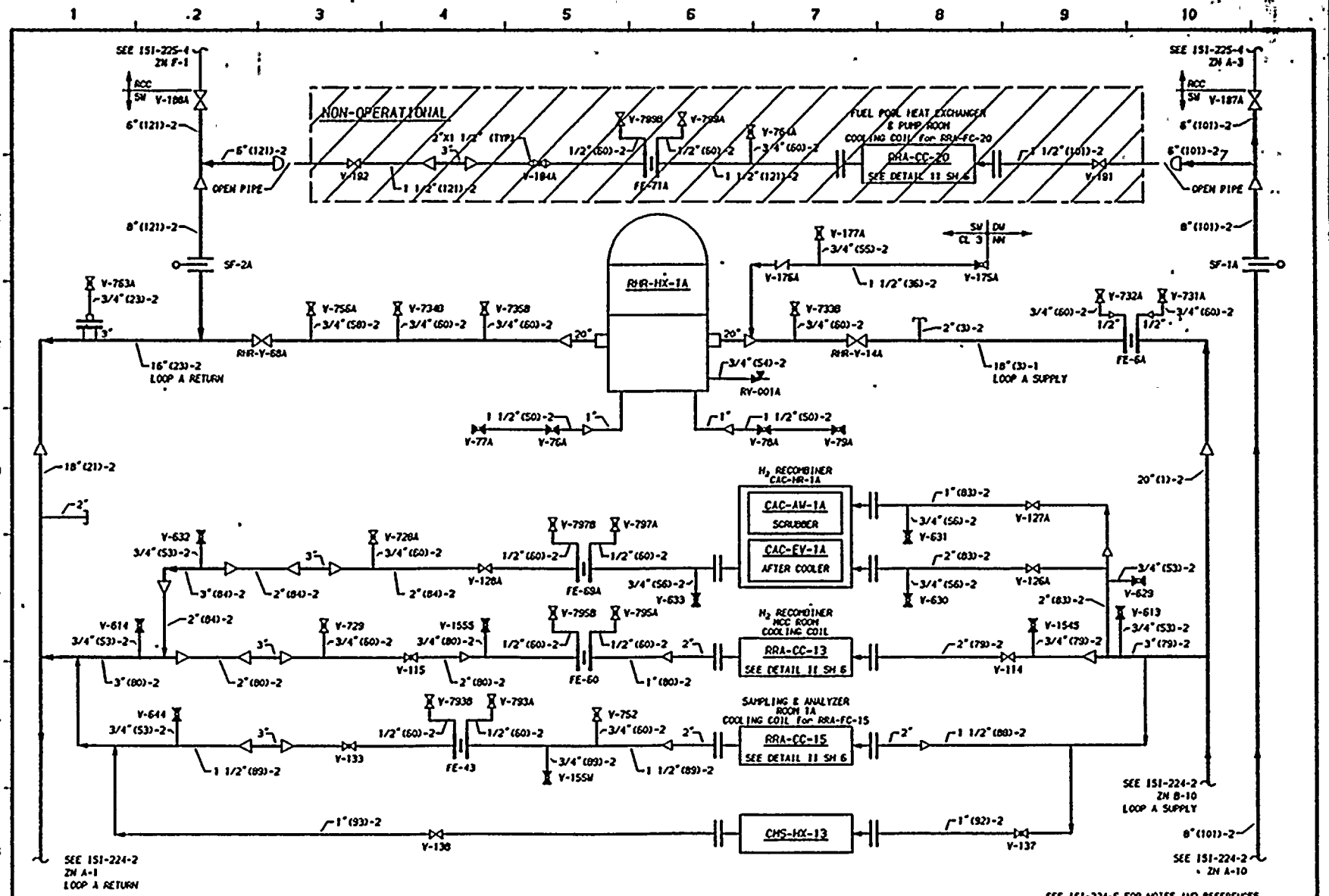

THIS DRAWING IS INTENDED FOR USE IN PRESERVICE AND INSERVICE INSPECTION PROGRAMS ONLY

WASHINGTON PUBLIC POWER SUPPLY SYSTEM
RICHLAND, WASHINGTON 99352

WNP-2
INSERVICE INSPECTION BOUNDARY DIAGRAM
STANDBY SERVICE WATER (SW)

NO	DATE	REVISION	BY	CHKD	APVD
2	11/30/81	GENERAL UPDATE REDRAWN	KMA	DPR	TFH
1	11-5-80	GENERAL UPDATE (SEQUENCE OF CONN TO MAIN LINE)	K-McA	TFH	DMP
0	1-9-79	ISSUED FOR USE	K-McA	TFH	DMP
A	10-18-78	ISSUED FOR INFORMATION ONLY	K-McA	NCH	DMP

ENGINEER D PORTER
DRAWN K-McANDREW
DATE 10-4-78

DWG NO 151-224-1 REV 2

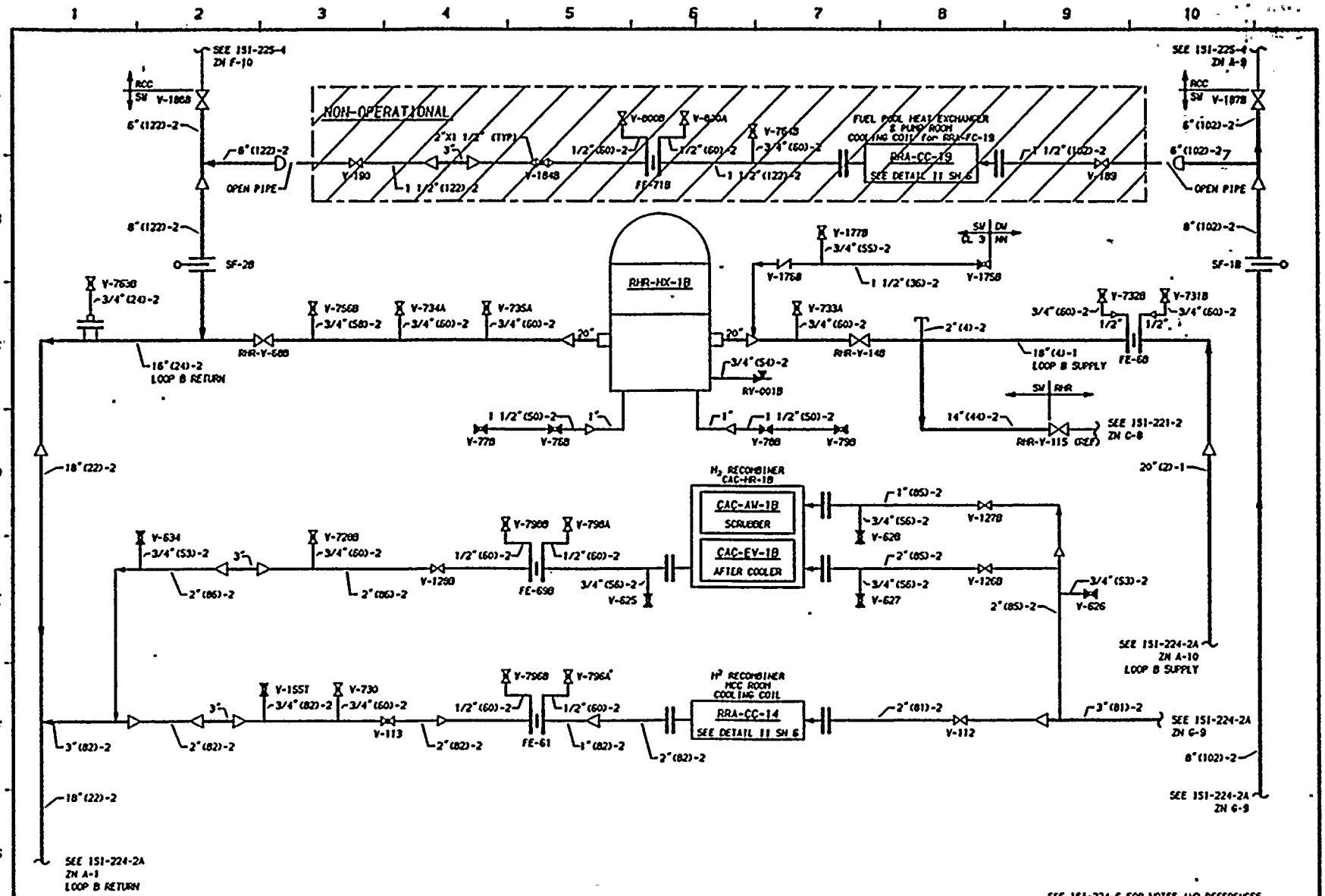

THIS DRAWING IS INTENDED FOR USE IN PRESERVICE AND INSERVICE INSPECTION PROGRAMS ONLY

WASHINGTON PUBLIC POWER SUPPLY SYSTEM
RICHLAND, WASHINGTON 99352
WNP-2
INSERVICE INSPECTION BOUNDARY DIAGRAM
STANDBY SERVICE WATER (SW)

NO	DATE	REVISION	BY	CHKD	APVD
2	11-15-84	GENERAL UPDATE REDRAWN	KCH	[illegible]	TFH

NO	DATE	REVISION	BY	CHKD	APVD
1	11-5-80	GENERAL UPDATE (SEQUENCE OF CONN TO MAIN LINE)	K-McA	TFH	DMP
0	1-9-79	ISSUED FOR USE	K-McA	TFH / DMP	DMP / LEB
A	10-18-78	ISSUED FOR INFORMATION ONLY	K-McA	NCH	DMP

ENGINEER D PORTER
DRAWN K-McANDREW
DATE 10-4-78
DWG NO 151-224-1A
REV 2

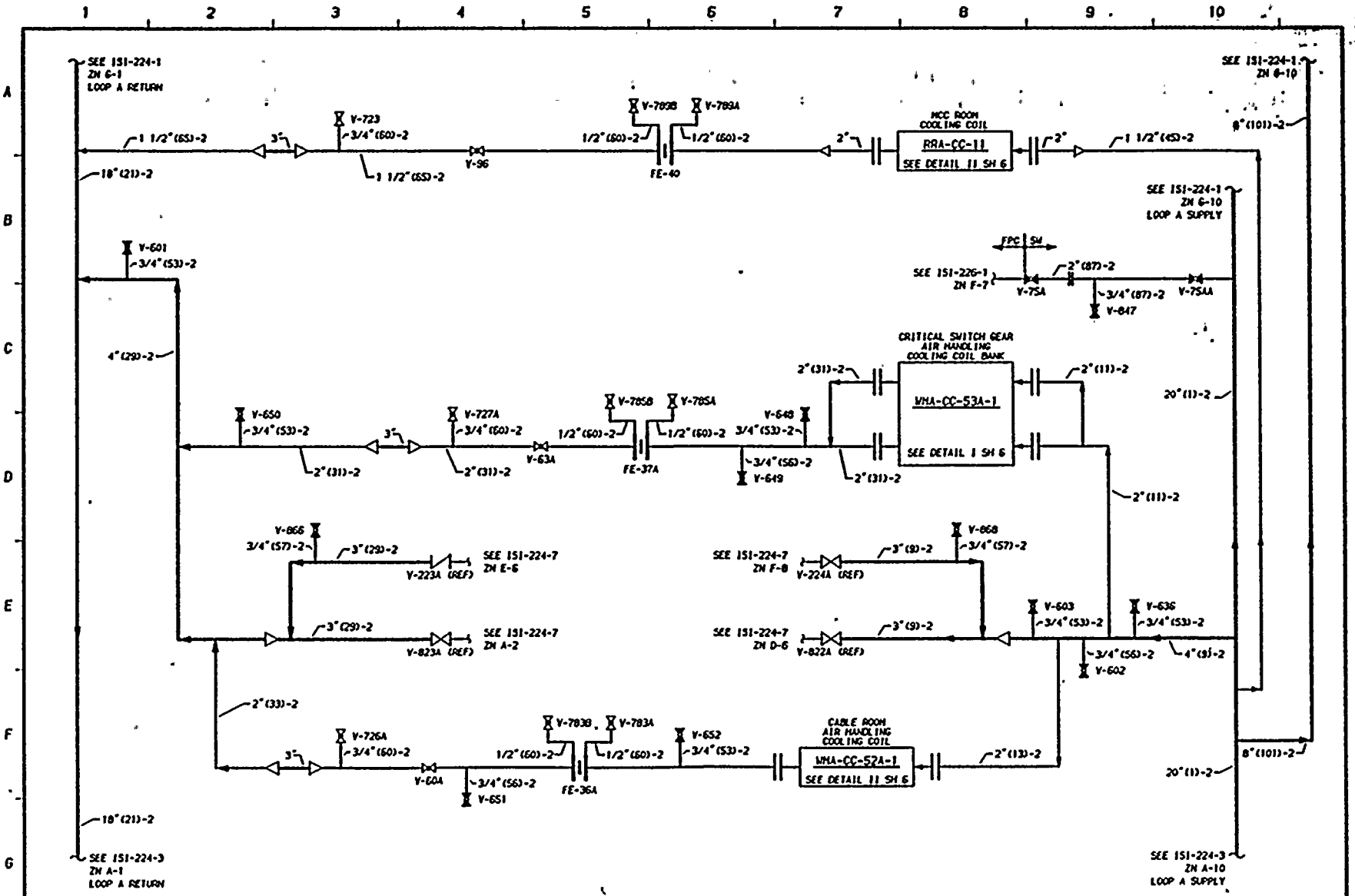

SEE 151-224-6 FOR NOTES AND REFERENCES.

THIS DRAWING IS INTENDED FOR USE IN PRESERVICE AND INSERVICE INSPECTION PROGRAMS ONLY

WASHINGTON PUBLIC POWER SUPPLY SYSTEM
RICHLAND, WASHINGTON 99352

WNP-2
INSERVICE INSPECTION BOUNDARY DIAGRAM
STANDBY SERVICE WATER (SW)

NO	DATE	REVISION	BY	CHKD	APVD
2	11-15-84	GENERAL UPDATE REDRAWN	[illegible]	[illegible]	[illegible]

NO	DATE	REVISION	BY	CHKD	APVD
1	11-5-80	GENERAL UPDATE (SEQUENCE OF CONN TO MAIN LINE)	K-McA	TFH	DMP
0	1-9-79	ISSUED FOR USE	K-McA	TFH	DMP
A	10-18-78	ISSUED FOR INFORMATION ONLY	K-McA	NCH	DMP

ENGINEER D PORTER
DRAWN K-McANDREW
DATE 10-4-78

DWG NO 151-224-2 REV 2

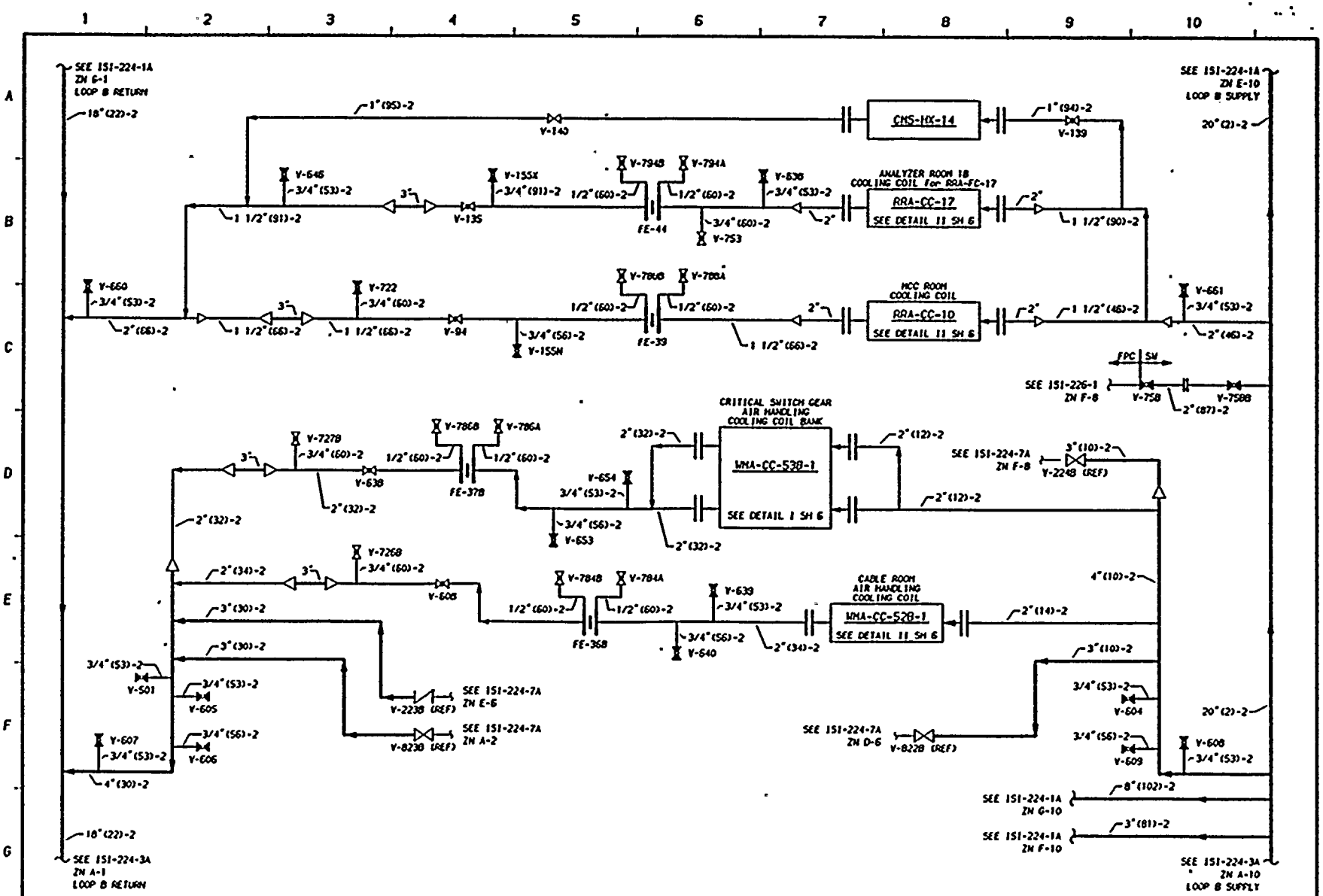

SEE 151-224-6 FOR NOTES AND REFERENCES.

THIS DRAWING IS INTENDED FOR USE IN PRESERVICE AND INSERVICE INSPECTION PROGRAMS ONLY

NO	DATE	REVISION	BY	CHKD	APYD
2	[illegible]	GENERAL UPDATE REDRAWN	[illegible]	TSR	[illegible]

NO	DATE	REVISION	BY	CHKD	APYD
1	11-5-80	GENERAL UPDATE (SEQUENCE OF CONN TO MAIN LINE)	K-McA	TFH	DMP
0	1-9-79	ISSUED FOR USE	K-McA	TFH	DMP / LEB
A	10-18-78	ISSUED FOR INFORMATION ONLY	K-McA	MCH	DMP

ENGINEER D PORTER

DRAWN K-McANDREW

DATE 10-4-78

WASHINGTON PUBLIC POWER SUPPLY SYSTEM
RICHLAND, WASHINGTON 99352

WNP-2

INSERVICE INSPECTION BOUNDARY DIAGRAM
STANDBY SERVICE WATER (SW)

DWG NO 151-224-2A

REV 2

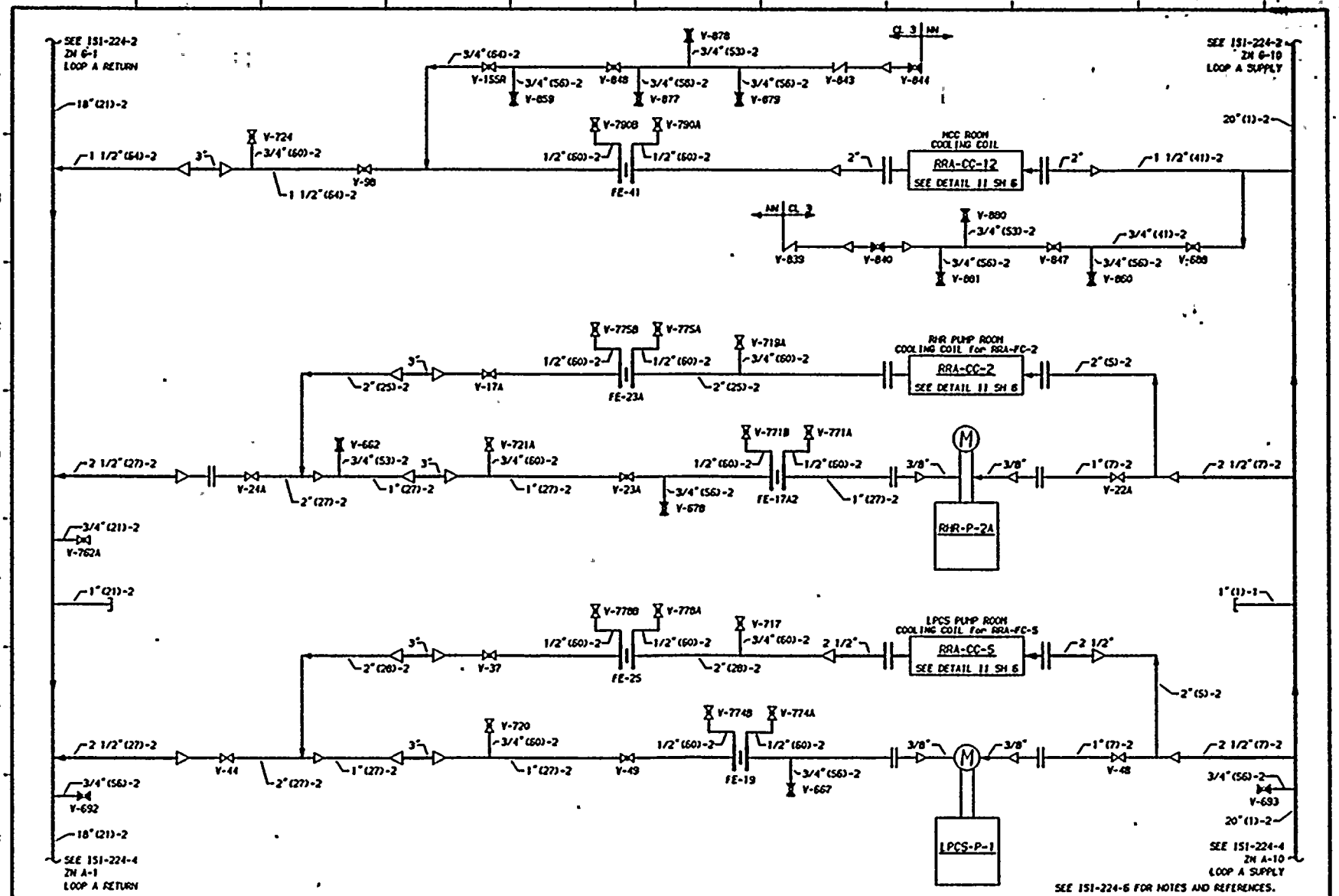

THIS DRAWING IS INTENDED FOR USE IN PRESERVICE AND INSERVICE INSPECTION PROGRAMS ONLY

WASHINGTON PUBLIC POWER SUPPLY SYSTEM
RICHLAND, WASHINGTON 99352

WNP-2
INSERVICE INSPECTION BOUNDARY DIAGRAM
STANDBY SERVICE WATER (SW)

NO	DATE	REVISION	BY	CHKD	APYD
2	11/28/84	GENERAL UPDATE REDRAWN	KAK	DPA	TFH
1	11-5-80	GENERAL UPDATE (SEQUENCE OF CONN TO MAIN LINE)	K-McA	TFH	DMP
0	1-9-79	ISSUED FOR USE	K-McA	TFH	DMP
A	10-18-78	ISSUED FOR INFORMATION ONLY	K-McA	NCH	DMP

ENGINEER D PORTER
DRAWN K-McANDREW
DATE 10-4-78

DWG NO 151-224-3 REV 2

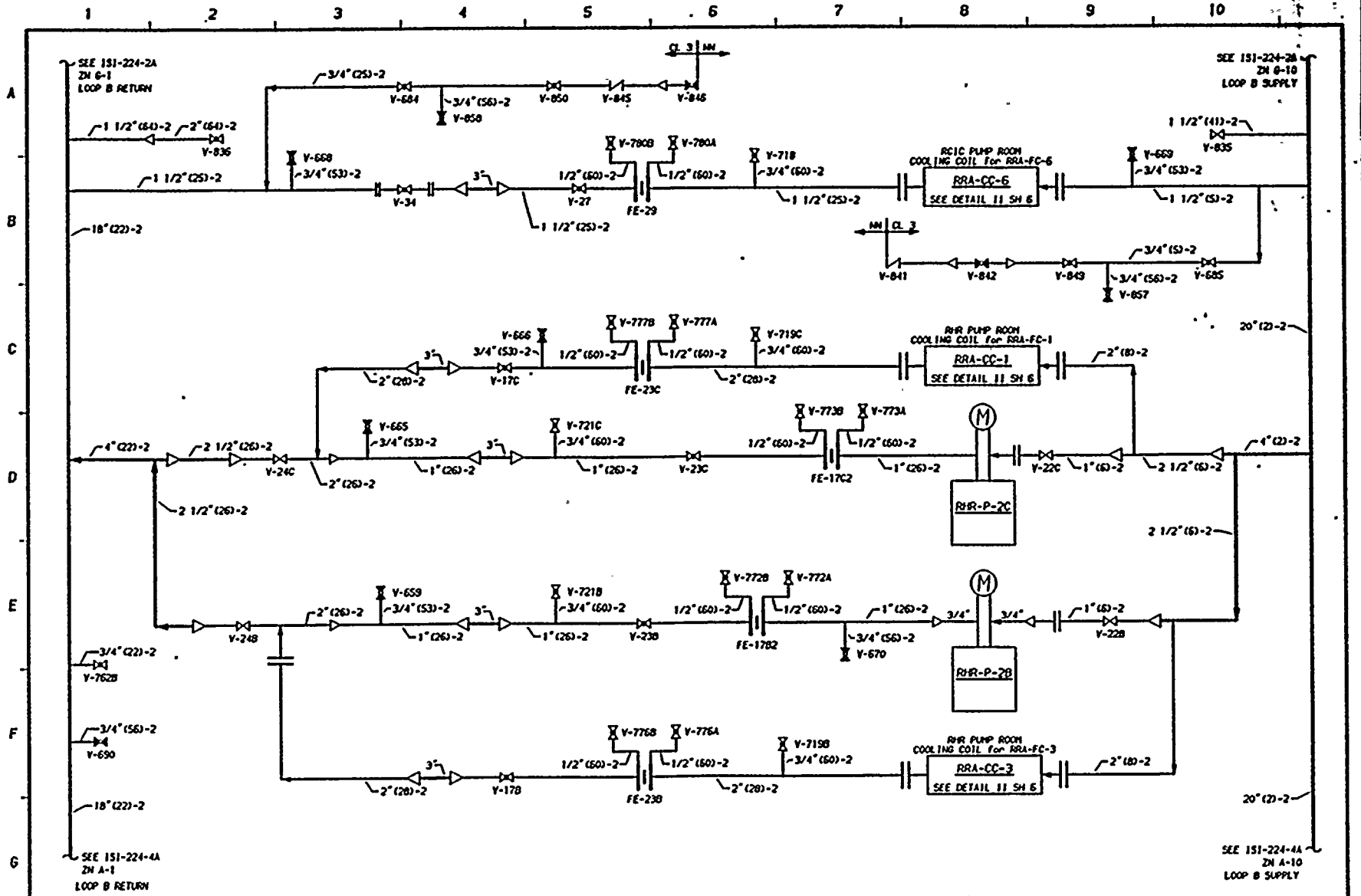

THIS DRAWING IS INTENDED FOR USE IN PRESERVICE AND INSERVICE INSPECTION PROGRAMS ONLY

WASHINGTON PUBLIC POWER SUPPLY SYSTEM
RICHLAND, WASHINGTON 99352

WNP-2
INSERVICE INSPECTION BOUNDARY DIAGRAM
STANDBY SERVICE WATER (SW)

NO	DATE	REVISION	BY	CHKD	APVD
2	11/22/81	GENERAL UPDATE REDRAWN	KAK	TPR	
1	11-5-80	GENERAL UPDATE (SEQUENCE OF CONN TO MAIN LINE)	K-McA	TFH	DMP
0	1-9-79	ISSUED FOR USE	K-McA	TFH	DMP
A	10-18-78	ISSUED FOR INFORMATION ONLY	K-McA	NCH	DMP

ENGINEER D PORTER
DRAWN K-McANDREW
DATE 10-4-78

DWG NO 151-224-3A REV 2

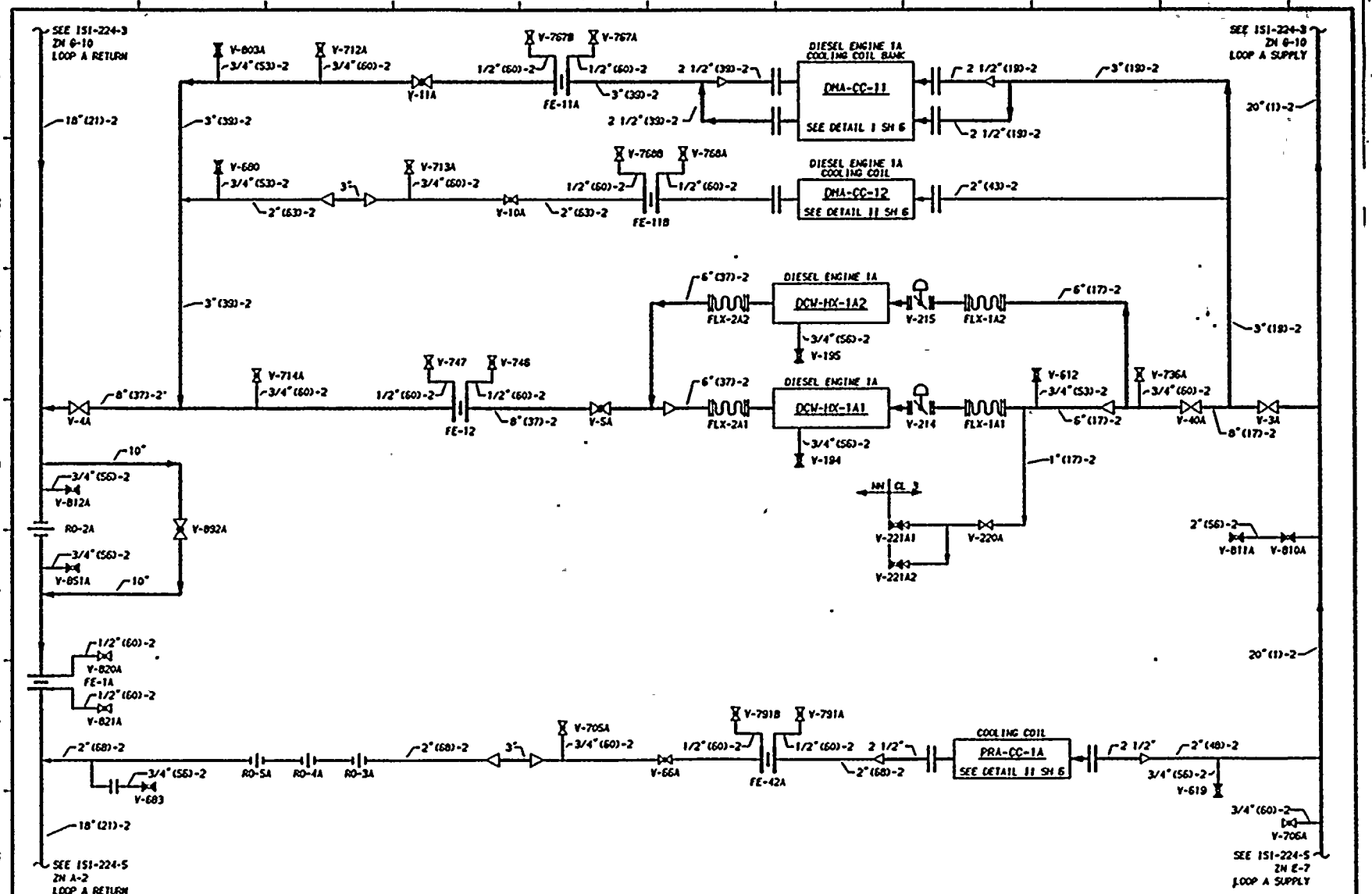

THIS DRAWING IS INTENDED FOR USE IN PRESERVICE AND INSERVICE INSPECTION PROGRAMS ONLY

WASHINGTON PUBLIC POWER SUPPLY SYSTEM
RICHLAND, WASHINGTON 99352

WNP-2
INSERVICE INSPECTION BOUNDARY DIAGRAM
STANDBY SERVICE WATER (SW)

ENGINEER D PORTER
DRAWN K-McANDREW
DATE 10-4-78
DWG NO 151-224-4
REV 2

NO	DATE	REVISION	BY	CHKD	APVD
2	11/5/80	GENERAL UPDATE REDRAWN	KMA	DPC	TFH
1	11-5-80	GENERAL UPDATE (SEQUENCE OF CONN TO MAIN LINE)	K-McA	TFH	DMP
0	1-9-79	ISSUED FOR USE	K-McA	TFH	DMP
A	10-18-78	ISSUED FOR INFORMATION ONLY	K-McA	NCH	DMP

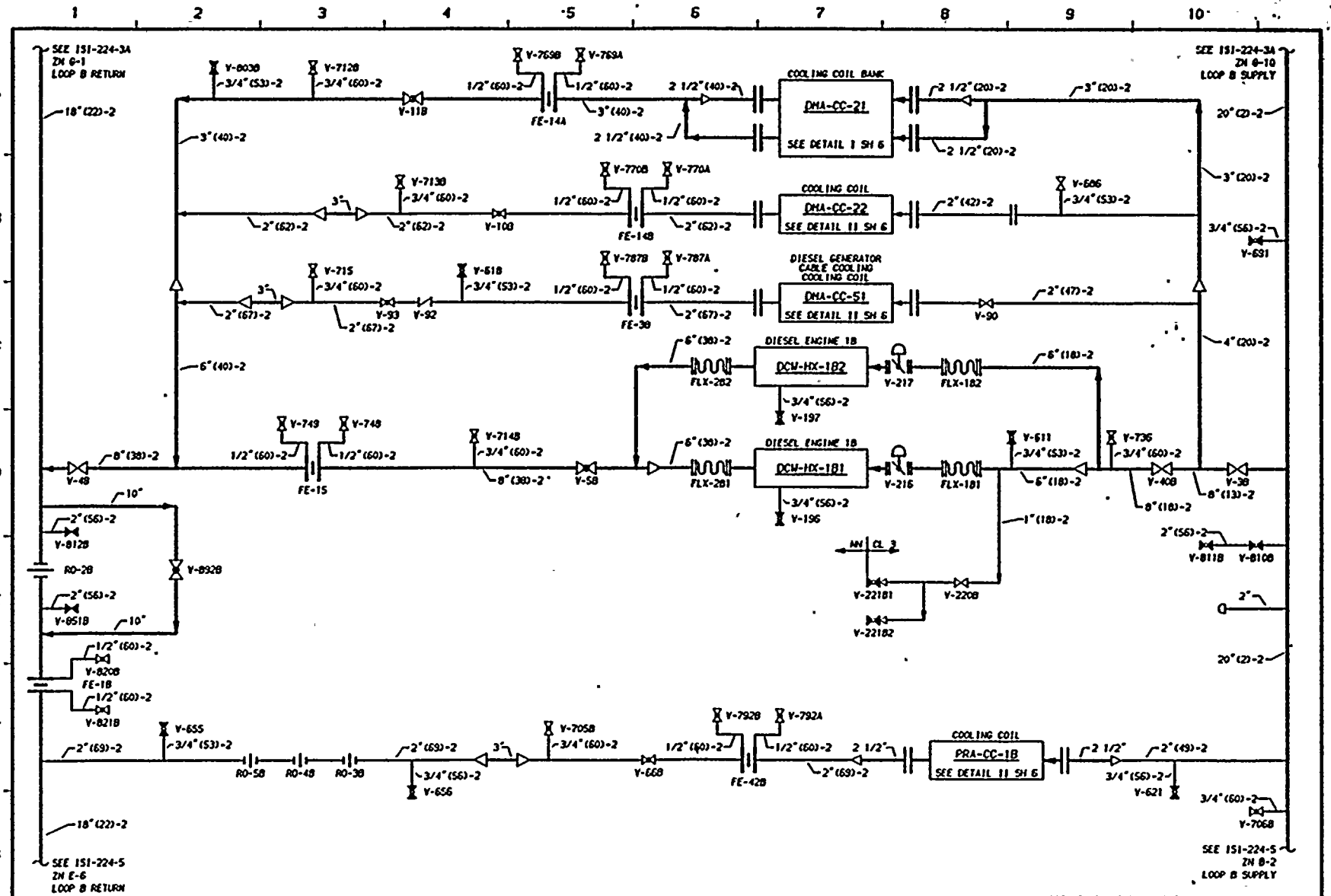

THIS DRAWING IS INTENDED FOR USE IN PRESERVICE AND INSERVICE INSPECTION PROGRAMS ONLY

NO	DATE	REVISION	BY	CHKD	APVD
2	11-15-89	GENERAL UPDATE REDRAWN	KMA	DPP	TFH

NO	DATE	REVISION	BY	CHKD	APVD
1	11-5-80	GENERAL UPDATE (SEQUENCE OF CONN TO MAIN LINE)	K-McA	TFH	DMP
0	1-9-79	ISSUED FOR USE	K-McA	TFH	DMP
A	10-18-78	ISSUED FOR INFORMATION ONLY	K-McA	NCH	DMP

ENGINEER D PORTER

DRAWN K-McANDREW

DATE 10-4-78

WASHINGTON PUBLIC POWER SUPPLY SYSTEM
RICHLAND, WASHINGTON 99352

WNP-2

INSERVICE INSPECTION BOUNDARY DIAGRAM
STANDBY SERVICE WATER (SW)

DWG NO 151-224-4A REV 2

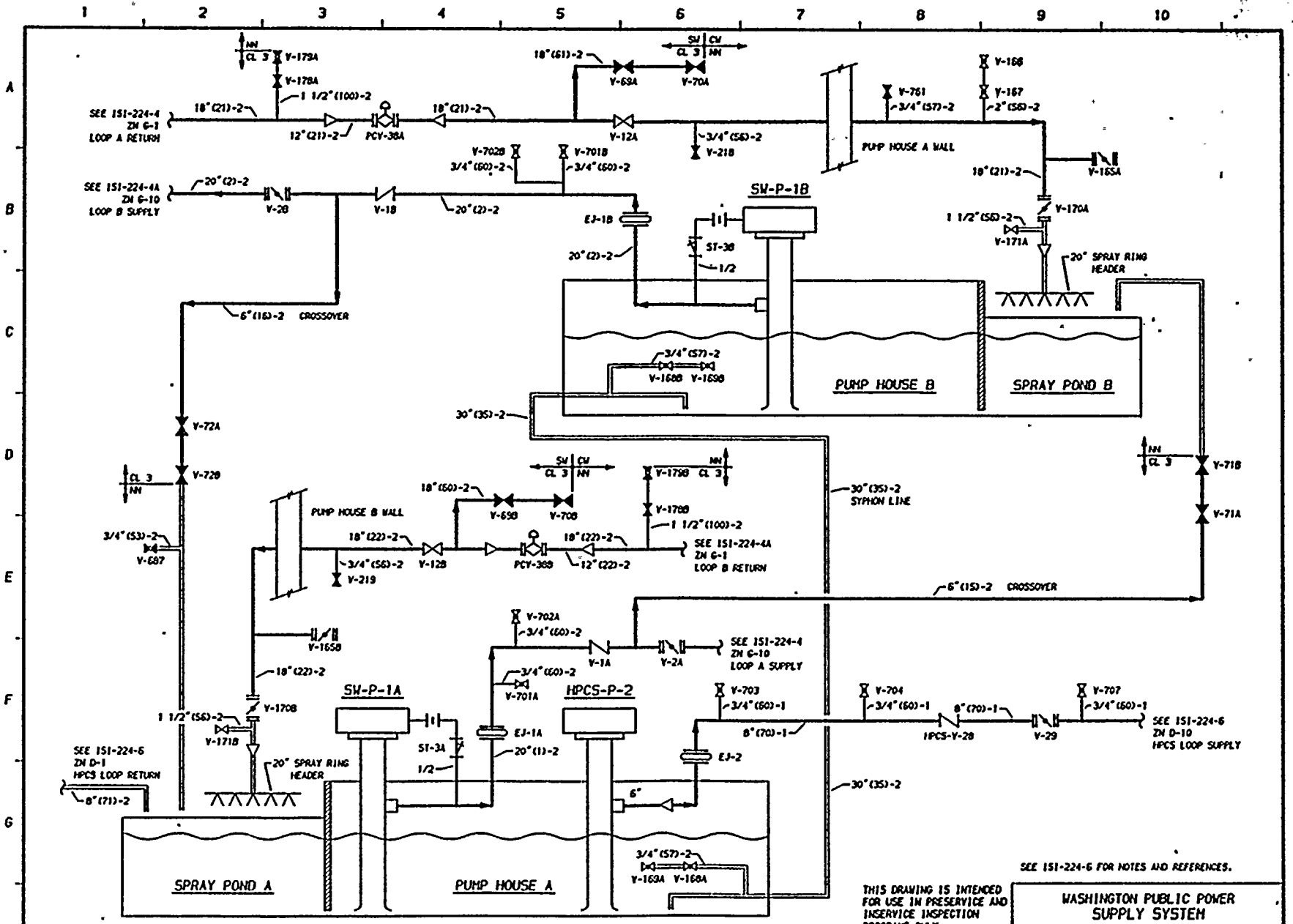
SEE 151-224-4 ZN G-1 LOOP A RETURN
SEE 151-224-4A ZN G-10 LOOP B SUPPLY
SEE 151-224-4A ZN G-1 LOOP B RETURN
SEE 151-224-4 ZN G-10 LOOP A SUPPLY
SEE 151-224-6 ZN D-1 HPCS LOOP RETURN
SEE 151-224-6 ZN D-10 HPCS LOOP SUPPLY
PUMP HOUSE A WALL
PUMP HOUSE B WALL
SW-P-1B
SW-P-1A
HPCS-P-2
PUMP HOUSE B
SPRAY POND B
SPRAY POND A
PUMP HOUSE A
20" SPRAY RING HEADER
6"(16)-2 CROSSOVER
6"(15)-2 CROSSOVER
30"(35)-2 SYPHON LINE
V-179A
V-178A
V-69A
V-70A
V-12A
V-21B
V-702B
V-701B
V-20
V-18
EJ-1B
ST-3B
V-168
V-167
V-761
V-165A
V-170A
V-171A
V-72A
V-72B
V-71B
V-71A
V-687
V-219
V-12B
V-69B
V-70B
V-179B
V-178B
V-702A
V-701A
V-1A
V-2A
V-165B
V-170B
V-171B
EJ-1A
ST-3A
HPCS-P-2
V-703
V-704
V-707
HPCS-V-28
V-29
EJ-2
THIS DRAWING IS INTENDED FOR USE IN PRESERVICE AND INSERVICE INSPECTION PROGRAMS ONLY
SEE 151-224-6 FOR NOTES AND REFERENCES.
WASHINGTON PUBLIC POWER SUPPLY SYSTEM
RICHLAND, WASHINGTON 99352
WNP-2
INSERVICE INSPECTION BOUNDARY DIAGRAM
STANDBY SERVICE WATER (SW)
ENGINEER D PORTER
DRAWN K-McANDREW
DATE 10-4-78
DWG NO 151-224-5
REV 2
1 11-5-80 GENERAL UPDATE (SEQUENCE OF CONN TO MAIN LINE) K-McA TFH DMP
0 1-9-79 ISSUED FOR USE K-McA TFH DMP
A 10-12-78 ISSUED FOR INFORMATION ONLY K-McA NCH DMP
2 GENERAL UPDATE REDRAWN
NO DATE REVISION BY CHKD APVD

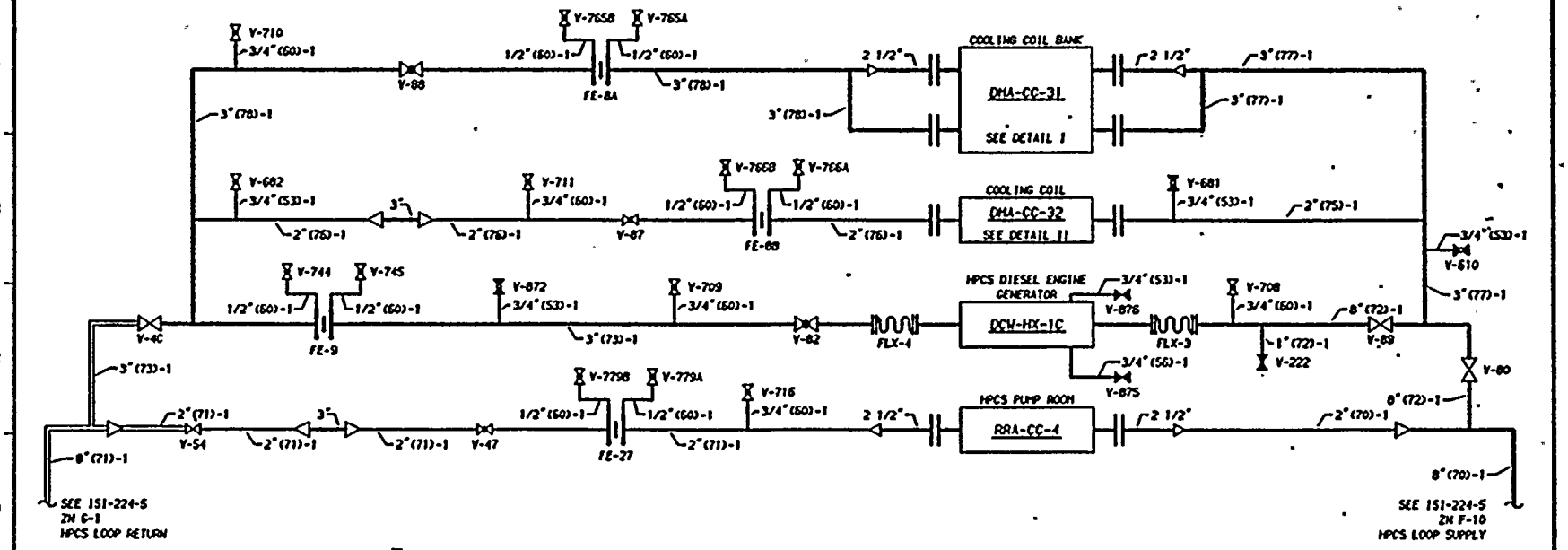

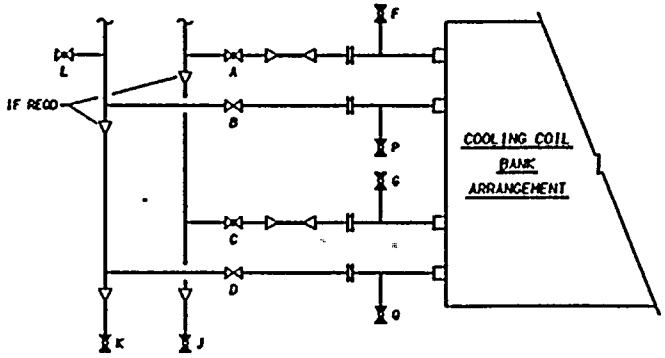

VALVE LIST												
COOLING COIL BANK NUMBER	A	B	C	D	SIZE	F 3/8"	G 3/8"	K 3/4"	J 3/4"	L 3/4"	P 3/8"	Q 3/8"
DMA-CC-31	100	101	102	103	2 1/2"	141	142	143	144	737A	157	158
DMA-CC-11	104A	105A	106A	107A	2 1/2"	145A	146A	147A	148A	737B	159A	160A
DMA-CC-21	104B	105B	106B	107B	2 1/2"	145B	146B	147B	148B	737C	159B	160B
VHA-CC-53B-1	108B	109B	110B	111B	2"	149B	150B	151B	152B	737D	161B	162B
VHA-CC-53A-1	108A	109A	110A	111A	2"	149A	150A	151A	152A	737E	161A	162A

DETAIL I

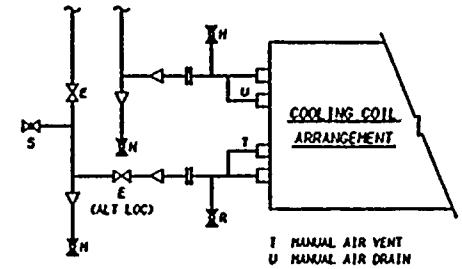

VALVE LIST										
COOLING COIL NUMBER	E	SIZE	H 3/8"	H 3/4"	H 3/4"	R 3/8"	S 3/4"	T	U
DMA-CC-12	8A	2"	153A	154A	155A	—	679		
DMA-CC-22	8B	2"	153B	154B	155B	156B	—		
DMA-CC-32	8C	2"	153C	154C	155C	156C	—		
DMA-CC-51	9D	2"	—	154D	155D		—		
RRA-CC-1	16C	2"	—	154E	155E		664		
RRA-CC-1A	65A	2"	153F	154F	155F	—	620		
RRA-CC-1B	65B	2"	153G	154G	155G	—	622		
RRA-CC-2	16A	2"	153H	154H	155H	—	663		
RRA-CC-3	16B	2"	—	154J	155J	156J	658		
RRA-CC-4	46	2"	153K	154K	155K	156K	873		
RRA-CC-5	36	2"	153L	154L	155L	—	—		
RRA-CC-6	26	1 1/2"	153M	154M	155M	—	—		
RRA-CC-10	91	1 1/2"	153N	154N	155N	156N	—		
RRA-CC-11	95	1 1/2"	153P	154P	155P	156P	819		
RRA-CC-12	97	1 1/2"	153R	154R	—	156R	—	3/4"	3/4"
RRA-CC-13	114	2"	153S	1 15/16"	1 15/16"	156S	—	3/4"	3/4"
RRA-CC-14	112	2"	153T	154T	1 15/16"	156T	—	3/4"	3/4"
VHA-CC-52A-1	59A	2"	153U	154U	155U	156U	—	—	—
VHA-CC-52B-1	59B	2"	153V	154V	155V	156V	—	—	—
RRA-CC-15	132	1 1/2"	153W	154W	1 15/16"	156W	642	3/4"	3/4"
RRA-CC-17	134	1 1/2"	153X	154X	155X	156X	645	3/4"	3/4"
RRA-CC-19	185	1 1/2"	153Y	154Y	155Y	156Y	—	3/8"	3/8"
RRA-CC-20	193	1 1/2"	153Z	154Z	155Z	156Z	—	3/8"	3/8"

DETAIL II

T MANUAL AIR VENT
U MANUAL AIR DRAIN

REFERENCES:

BURNS & ROE FLOW DIAGRAMS

M524	SH 1	REV 50
M524	SH 2	REV 49
M775		REV 4

NOTES

1. REFER TO DRAWING 151-200 FOR LEGEND.
2. VALVE AND LINE DESIGNATIONS ARE SHOWN WITHOUT THE SYSTEM PREFIX FOR CLARITY.

THIS DRAWING IS INTENDED FOR USE IN PRESERVICE AND INSERVICE INSPECTION PROGRAMS ONLY

NO	DATE	REVISION	BY	CHKD	APYD
2	11-8-80	GENERAL UPDATE REDRAWN	K-McA	TSPR	
1	11-5-80	GENERAL UPDATE (SEQUENCE OF CONN TO MAIN LINE)	K-McA	TFH	DMP
0	1-9-79	ISSUED FOR USE	K-McA	TFH	DMP
A	10-18-78	ISSUED FOR INFORMATION ONLY	K-McA	NCH	DMP

ENGINEER D PORTER
DRAWN K-McANDREW
DATE 10-4-78

WASHINGTON PUBLIC POWER SUPPLY SYSTEM
RICHLAND, WASHINGTON 99352
WNP-2
INSERVICE INSPECTION BOUNDARY DIAGRAM
STANDBY SERVICE WATER (SW)
DWG NO 151-224-6 REV 2

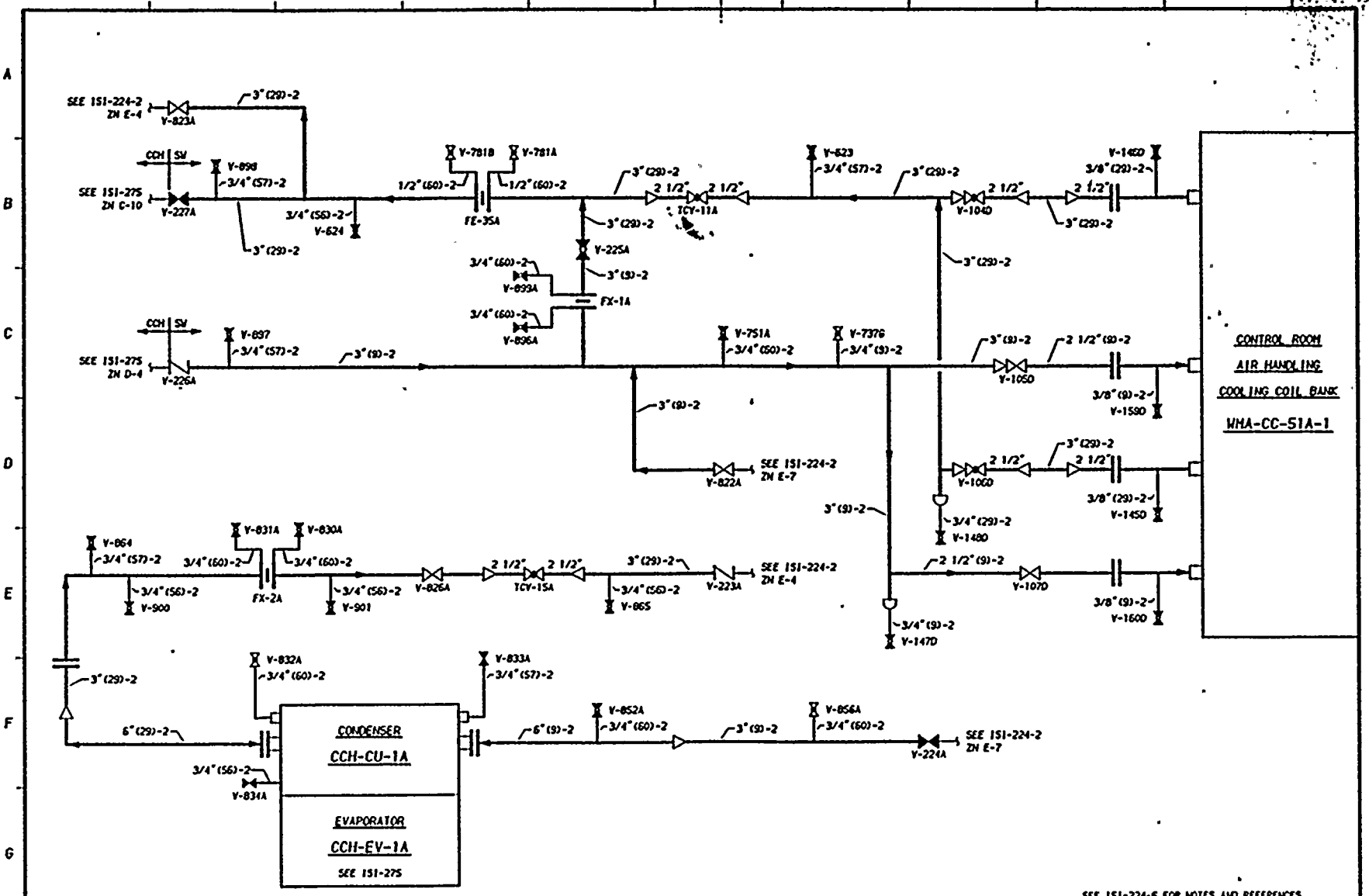

SEE 151-224-6 FOR NOTES AND REFERENCES

THIS DRAWING IS INTENDED FOR USE IN PRESERVICE AND INSERVICE INSPECTION PROGRAMS ONLY

NO	DATE	REVISION	BY	CHKD	APVD
0	11-28-84	ISSUED FOR USE			

NO	DATE	REVISION	BY	CHKD	APVD

ENGINEER K-McANDREW
DRAWN K-McANDREW
DATE 7-23-84

WASHINGTON PUBLIC POWER SUPPLY SYSTEM
RICHLAND, WASHINGTON 99352

WNP-2
INSERVICE INSPECTION BOUNDARY DIAGRAM
STANDBY SERVICE WATER (SW)

DWG NO 151-224-7 REV 0

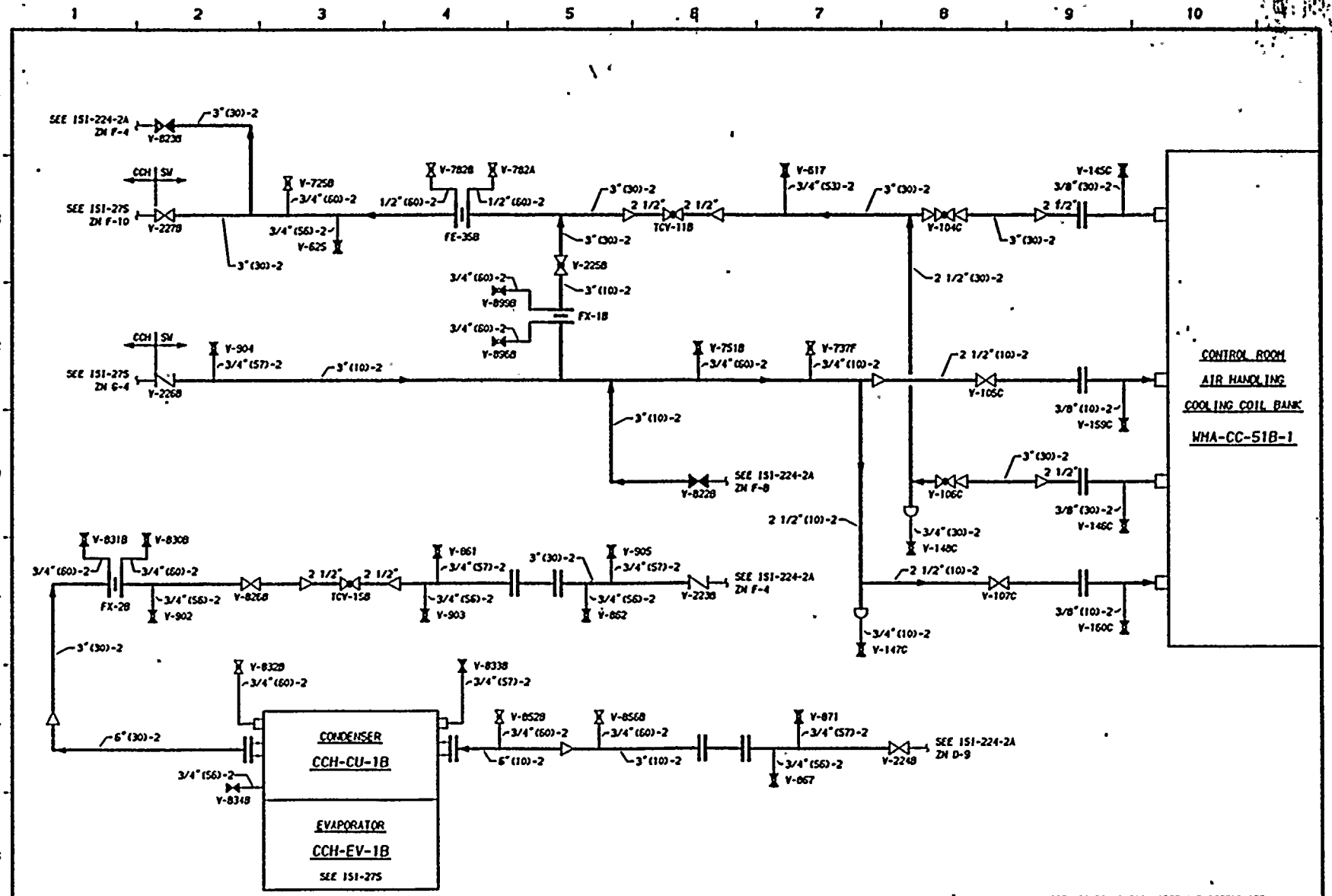
SEE 151-224-2A ZN F-4
V-823B
3"(30)-2
CCH SW
SEE 151-275 ZN F-10
V-227B
V-725B
3/4"(60)-2
3/4"(56)-2
V-625
1/2"(60)-2
V-782B
V-782A
FE-35B
1/2"(60)-2
3"(30)-2
2 1/2"
TCV-11B
V-617
3/4"(53)-2
V-104C
V-145C
3/8"(30)-2
V-225B
3"(10)-2
V-895B
FX-1B
V-896B
2 1/2"(30)-2
CCH SW
SEE 151-275 ZN G-4
V-904
3/4"(57)-2
V-226B
3"(10)-2
V-751B
3/4"(60)-2
V-737F
3/4"(10)-2
2 1/2"(10)-2
V-105C
3/8"(10)-2
V-159C
CONTROL ROOM
AIR HANDLING
COOLING COIL BANK
WHA-CC-51B-1
SEE 151-224-2A ZN F-8
V-822B
V-106C
V-146C
3/4"(30)-2
V-148C
2 1/2"(10)-2
V-831B
V-830B
3/4"(60)-2
FX-2B
3/4"(56)-2
V-902
V-826B
TCV-15B
V-861
3/4"(57)-2
V-903
V-905
V-862
V-223B
SEE 151-224-2A ZN F-4
V-107C
V-160C
3/4"(10)-2
V-147C
V-832B
V-833B
3/4"(57)-2
6"(30)-2
CONDENSER
CCH-CU-1B
3/4"(56)-2
V-834B
EVAPORATOR
CCH-EV-1B
SEE 151-275
V-852B
V-856B
6"(10)-2
V-871
V-867
V-224B
SEE 151-224-2A ZN D-9
SEE 151-224-6 FOR NOTES AND REFERENCES
THIS DRAWING IS INTENDED FOR USE IN PRESERVICE AND INSERVICE INSPECTION PROGRAMS ONLY
WASHINGTON PUBLIC POWER SUPPLY SYSTEM
RICHLAND, WASHINGTON 99352
WNP-2
INSERVICE INSPECTION BOUNDARY DIAGRAM
STANDBY SERVICE WATER (SW)
ENGINEER K-McANDREW
DRAWN K-McANDREW
DATE 7-23-84
DWG NO 151-224-7A
REV 0
NO DATE REVISION BY CHKD APVD
0 11-20-84 ISSUED FOR USE

Date 1/8/79
Revision 0

WNP-2 ISI BOUNDARY DIAGRAM

EXCEPTIONS AND EXEMPTIONS

ISI - 224

SYSTEM Standby Service Water System

EXCEPTIONS:

Class 1 Piping and Components

° Not applicable; entire system Class 3 or nonnuclear only.

Class 2 Piping and Components

° Not applicable; entire system Class 3 or nonnuclear only.

EXEMPTIONS APPLIED:

IWB-1220(a)(1) No
(2) No
(3) No
(4) No
*(b)(1) No
(2) No
(3) No
IWC-1220(a) No
*(b) No
(c) No
(d) No
IWC-5220(d) No
IWD-5200(c) Yes, spray pond headers

*See general exemption discussion for details.

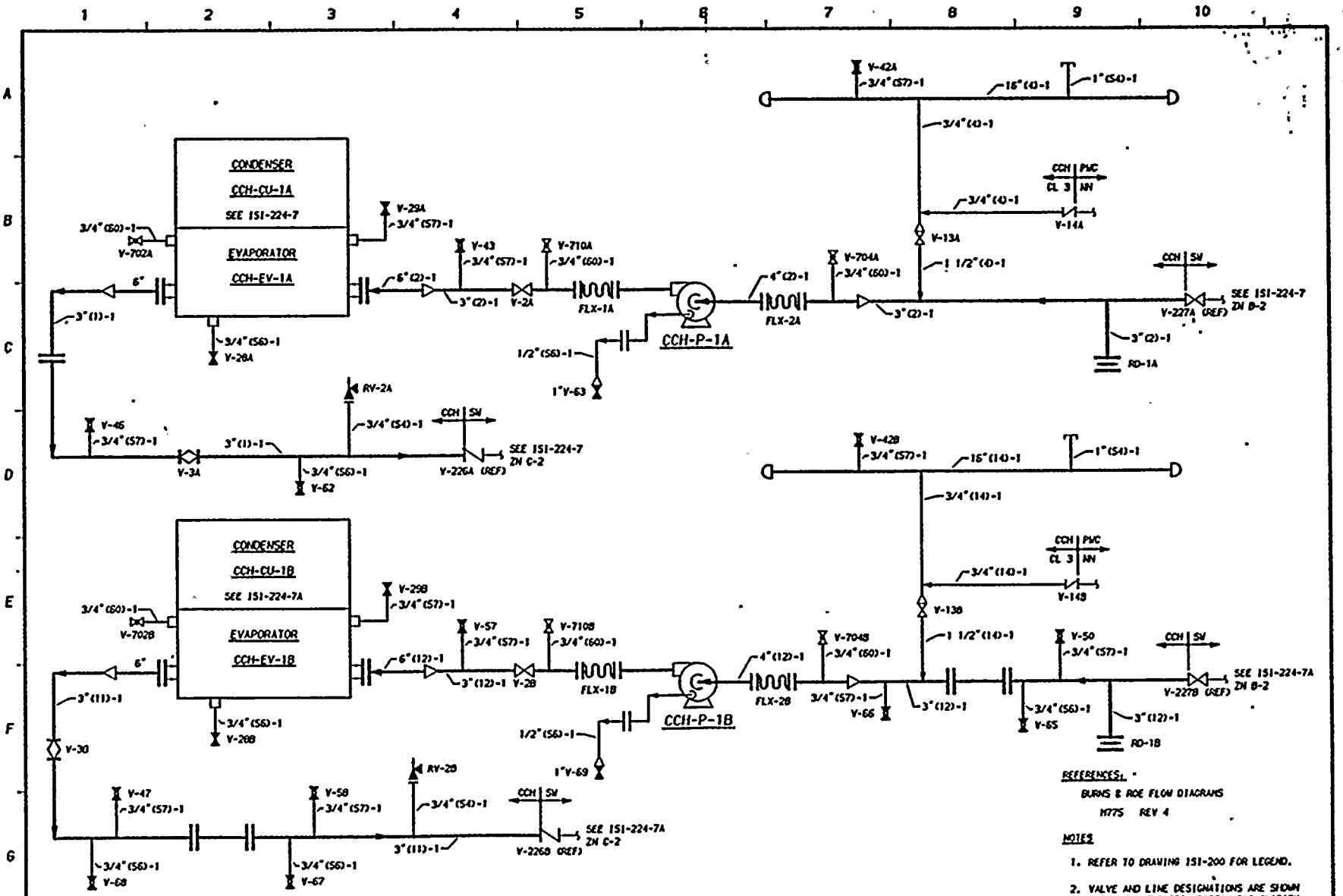

REFERENCES:

BURNS & ROE FLOW DIAGRAMS
M77S REV 4

NOTES

1. REFER TO DRAWING 151-200 FOR LEGEND.
2. VALVE AND LINE DESIGNATIONS ARE SHOWN WITHOUT THE SYSTEM PREFIX FOR CLARITY.

THIS DRAWING IS INTENDED FOR USE IN PRESERVICE AND INSERVICE INSPECTION PROGRAMS ONLY

WASHINGTON PUBLIC POWER SUPPLY SYSTEM
RICHLAND, WASHINGTON 99352
WNP-2

INSERVICE INSPECTION BOUNDARY DIAGRAM
EMERGENCE CHILLED WATER (CCH)

ENGINEER K-McANDREW
DRAWN K-McANDREW
DATE 7-27-84
DWG NO 151-275
REV 0

NO	DATE	REVISION	BY	CHKD	APVD
0		ISSUED FOR USE			

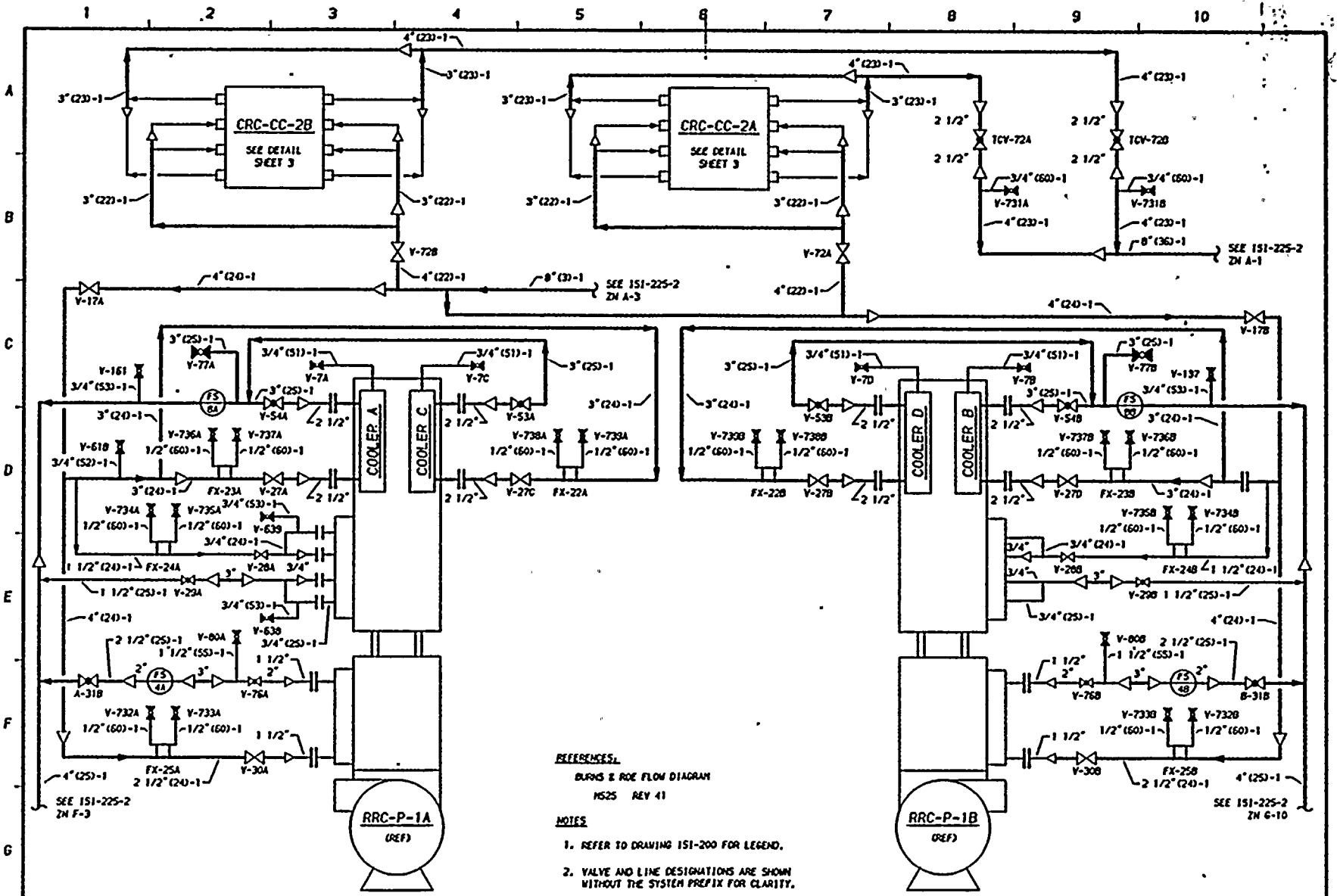

REFERENCES:

BURNS & ROE FLOW DIAGRAM

H525 REV 41

NOTES

1. REFER TO DRAWING 151-200 FOR LEGEND.
2. VALVE AND LINE DESIGNATIONS ARE SHOWN WITHOUT THE SYSTEM PREFIX FOR CLARITY.
3. ALL PIPING THIS SYSTEM, EXCEPT AS NOTED ON 151-225-2, IS CLASS 3.

THIS DRAWING IS INTENTDED FOR USE IN PRESERVICE AND INSERVICE INSPECTION PROGRAMS ONLY

NO	DATE	REVISION	BY	CHKD	APVD
1	11-20-79	GENERAL UPDATE REDRAWN	KMA	DPR	TPH
0	1-9-79	ISSUED FOR USE	K-McA	TPH	DMP
A	10-18-78	ISSUED FOR INFORMATION ONLY	K-McA	NCH	DMP

ENGINEER D PORTER

DRAWN K-McANDREW

DATE 9-26-78

WASHINGTON PUBLIC POWER SUPPLY SYSTEM
RICHLAND, WASHINGTON 99352

WNP-2

INSERVICE INSPECTION BOUNDARY DIAGRAM
REACTOR CLOSED COOLING (RCC)

DWG NO 151-225-1 REV 1

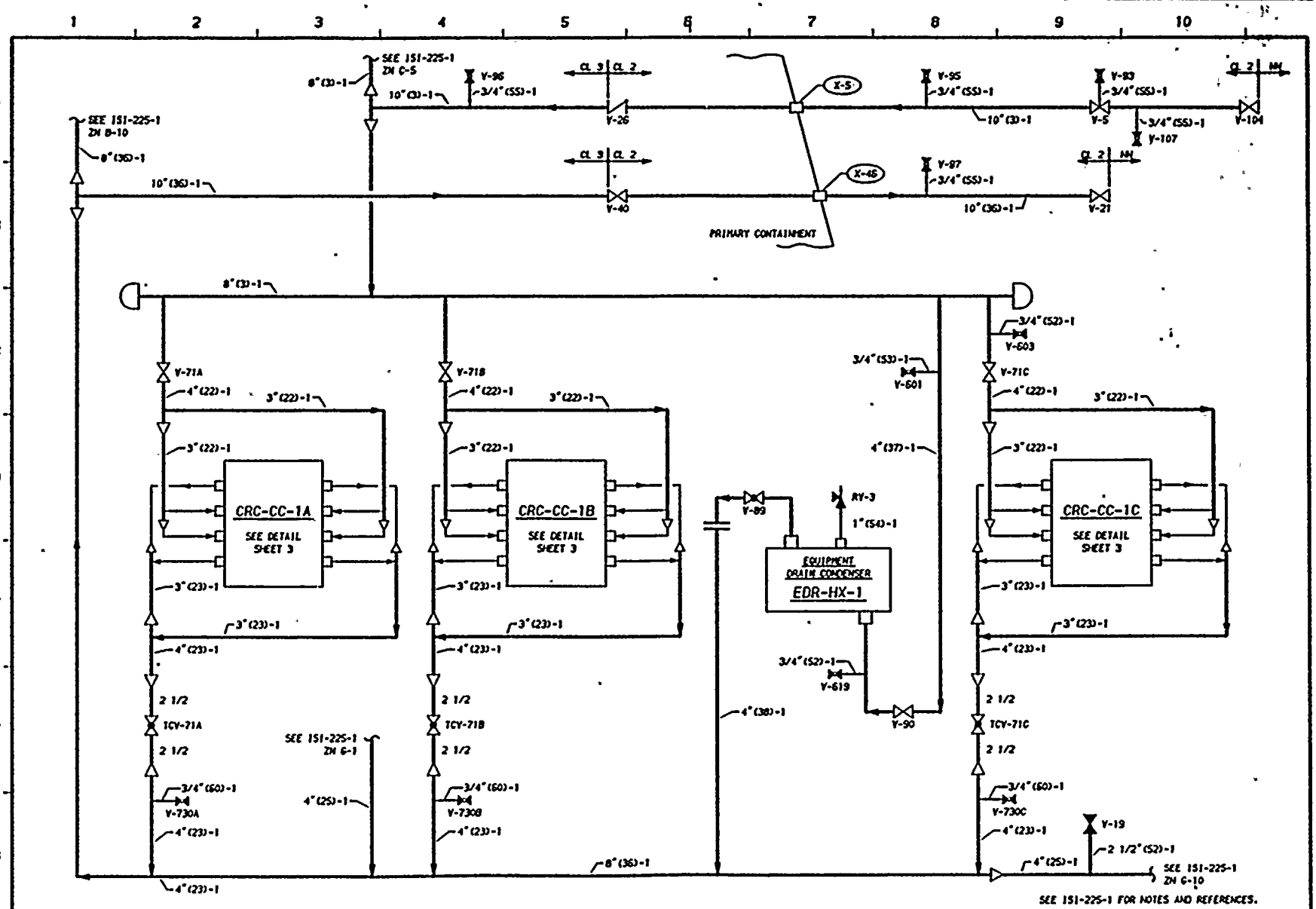

THIS DRAWING IS INTENDED FOR USE IN PRESERVICE AND INSERVICE INSPECTION PROGRAMS ONLY

NO	DATE	REVISION	BY	CHKD	APVD
1	11-15-84	GENERAL UPDATE REDRAWN	K-McA	TFH	DMP
0	1-9-79	ISSUED FOR USE	K-McA	TFH	DMP
A	10-18-78	ISSUED FOR INFORMATION ONLY	K-McA	NCH	DMP

ENGINEER D PORTER
DRAWN K-McANDREW
DATE 9-26-78

WASHINGTON PUBLIC POWER SUPPLY SYSTEM
RICHLAND, WASHINGTON 99352
WNP-2
INSERVICE INSPECTION BOUNDARY DIAGRAM
REACTOR CLOSED COOLING (RCC)

DWG NO 151-225-2 REV 1

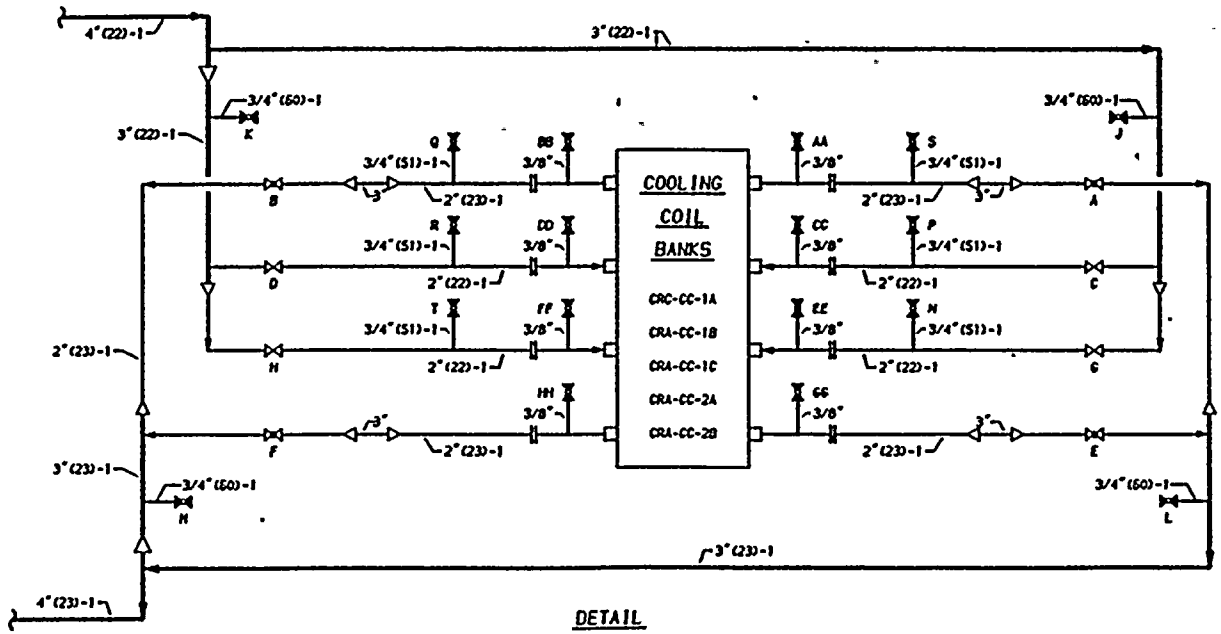

DETAIL

TYPICAL DETAIL FOR COOLING COIL BANKS
(SEE TABLE FOR TAG NUMBERS)

COOLING COIL BANK NUMBER	VALVE TAG NUMBERS																									
	A	B	C	D	E	F	G	H	J	K	L	M	N	P	Q	R	S	T	AA	BB	CC	DD	EE	FF	GG	HH
CRA-CC-1A	81A	82A	83A	84A	85A	86A	87A	88A	769A	770A	771A	772A	—	628	630	631	629	—	120A	121A	122A	123A	124A	125A	126A	127A
CRA-CC-1B	81B	82B	83B	84B	85B	86B	87B	88B	769B	770B	771B	772B	—	624	626	623	627	—	120B	121B	122B	123B	124B	125B	126B	127B
CRA-CC-1C	81C	82C	83C	84C	85C	86C	87C	88C	769C	770C	771C	772C	—	622	621	620	625	—	120C	121C	122C	123C	124C	125C	126C	127C
CRA-CC-2A	85D	82D	87D	86D	81D	86D	83D	84D	769D	770D	771D	772D	—	636	—	637	—	—	120D	121D	122D	123D	124D	125D	126D	127D
CRA-CC-2B	86E	85E	84E	83E	82E	81E	88E	87E	769E	770E	771E	—	—	—	—	—	—	—	120E	121E	122E	123E	124E	125E	126E	127E

TABLE

SEE 151-225-1 FOR NOTES AND REFERENCES.

THIS DRAWING IS INTENDED FOR USE IN PRESERVICE AND INSERVICE INSPECTION PROGRAMS ONLY

WASHINGTON PUBLIC POWER SUPPLY SYSTEM
RICHLAND, WASHINGTON 99352
WNP-2
INSERVICE INSPECTION BOUNDARY DIAGRAM
REACTOR CLOSED COOLING (RCC)

NO	DATE	REVISION	BY	CHKD	APVD
1	11-26-79	GENERAL UPDATE REDRAWN	K-McA	IPH	TEH
0	1-9-79	ISSUED FOR USE	K-McA	DMP	LEB
A	10-18-78	ISSUED FOR INFORMATION ONLY	K-McA	MCH	DMP

ENGINEER D PORTER
DRAWN K-McANDREW
DATE 9-26-78
DWG NO 151-225-3
REV 1

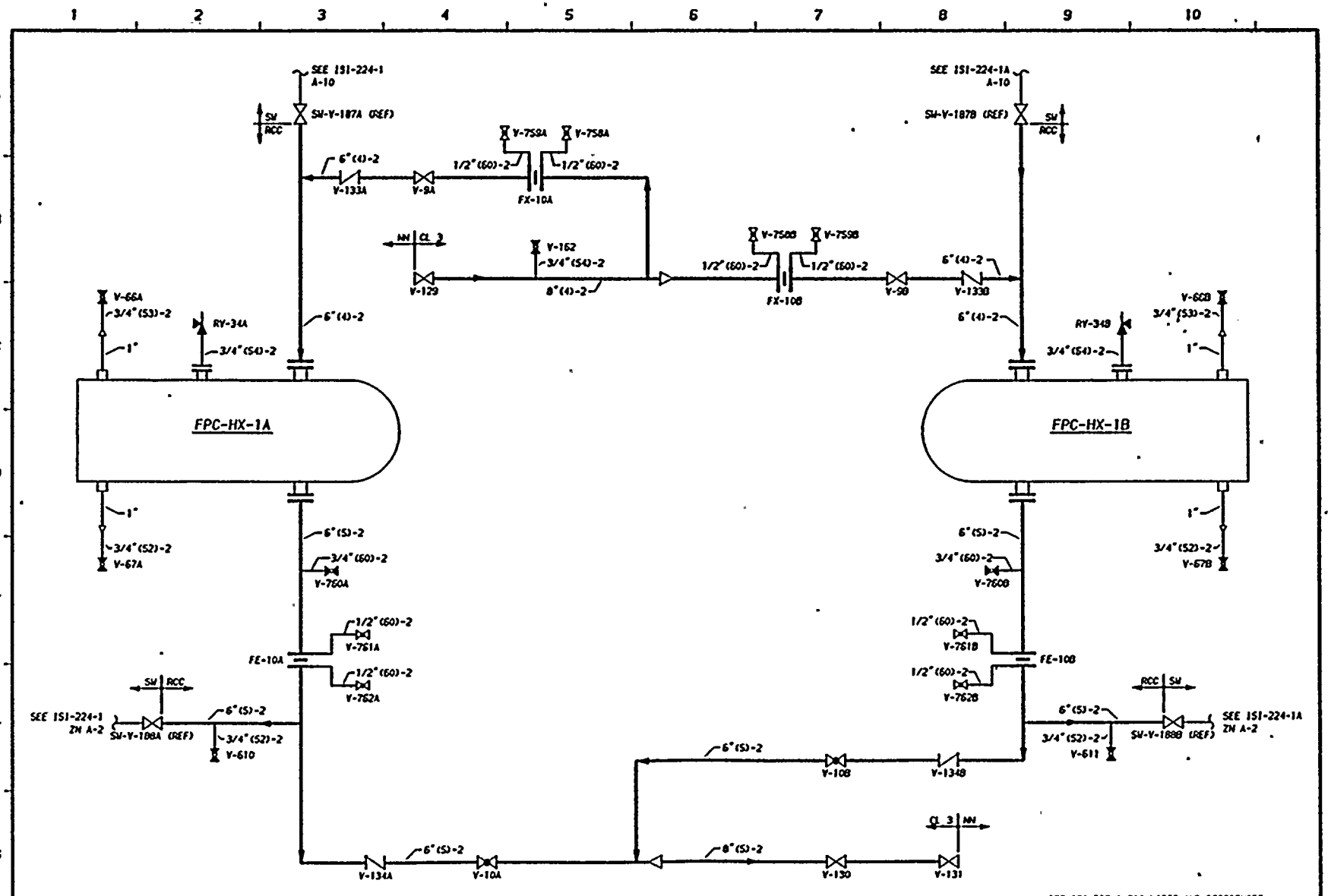

THIS DRAWING IS INTENDED FOR USE IN PRESERVICE AND INSERVICE INSPECTION PROGRAMS ONLY

WASHINGTON PUBLIC POWER SUPPLY SYSTEM
RICHLAND, WASHINGTON 99352

WNP-2

INSERVICE INSPECTION BOUNDARY DIAGRAM
REACTOR CLOSED COOLING (RCC)

ENGINEER K-McANDREW
DRAWN K-McANDREW
DATE 5-2-84
DWG NO 151-225-4
REV 0

NO	DATE	REVISION	BY	CHKD	APVD
0	11/22/84	ISSUED FOR USE			

Date 1/8/79
Revision 0

WNP-2 ISI BOUNDARY DIAGRAM

EXCEPTIONS AND EXEMPTIONS

ISI - 225

SYSTEM Reactor Closed Cooling (RCC)

EXCEPTIONS:

Class 1 Piping and Components

° Not applicable; entire system Class 3 or nonnuclear only.

Class 2 Piping and Components

° Not applicable; entire system Class 3 or nonnuclear only.

EXEMPTIONS APPLIED:

IWB-1220(a)(1)	No
(2)	No
(3)	No
(4)	No
*(b)(1)	No
(2)	No
(3)	No
IWC-1220(a)	No
*(b)	No
(c)	No
(d)	No
IWC-5220(d)	No
IWD-5200(c)	No

*See general exemption discussion for details.

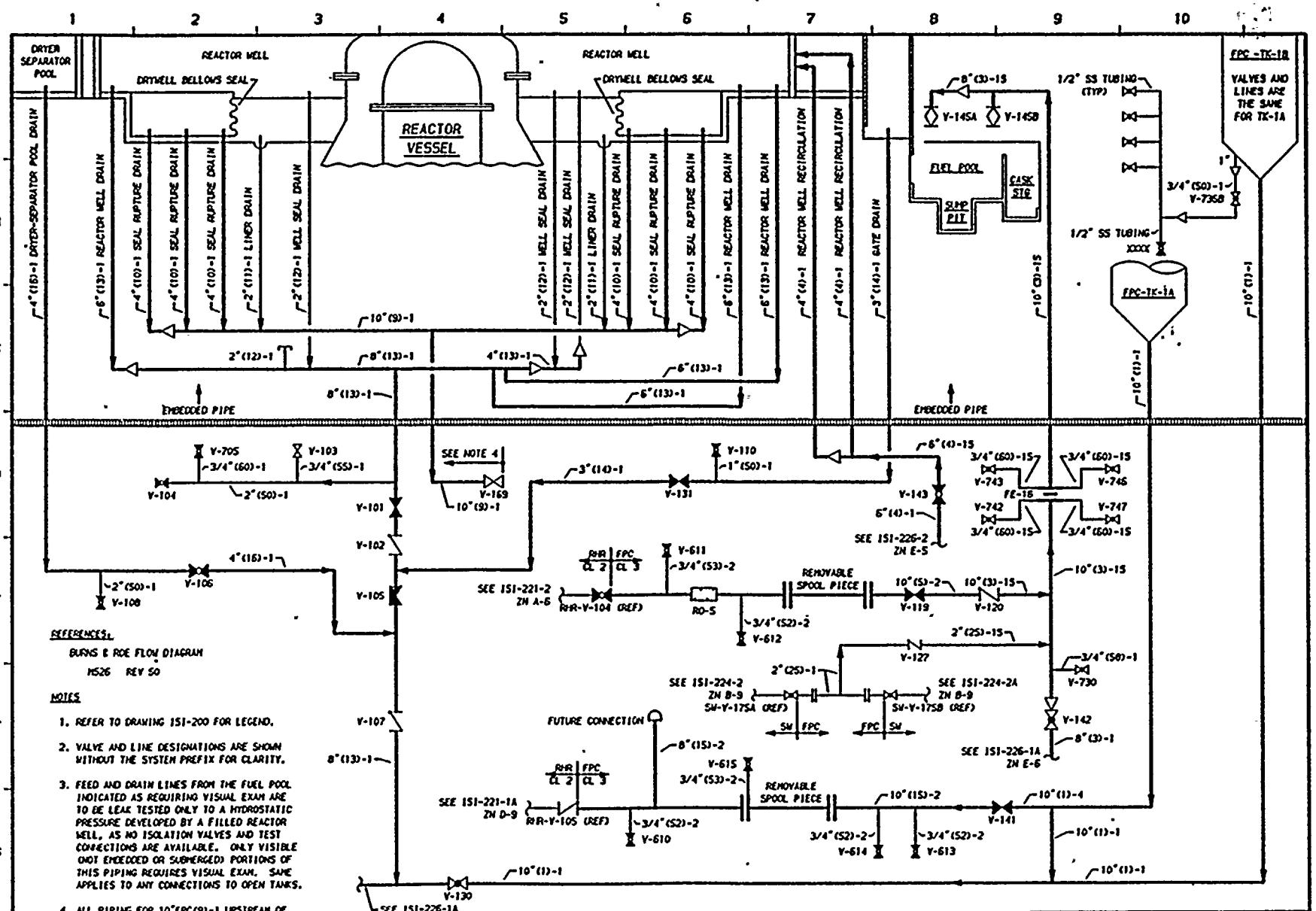
DRYER SEPARATOR POOL
REACTOR WELL
DRYWELL BELLOWS SEAL
REACTOR VESSEL
REACTOR WELL
DRYWELL BELLOWS SEAL
FPC-TK-1B
VALVES AND LINES ARE THE SAME FOR TK-1A
FUEL POOL
CASK STG
SUMP PIT
FPC-TK-1A
EMBEDDED PIPE
EMBEDDED PIPE
SEE NOTE 4
REFERENCES:
BURNS & ROE FLOW DIAGRAM
M526 REV 50
NOTES
1. REFER TO DRAWING 151-200 FOR LEGEND.
2. VALVE AND LINE DESIGNATIONS ARE SHOWN WITHOUT THE SYSTEM PREFIX FOR CLARITY.
3. FEED AND DRAIN LINES FROM THE FUEL POOL INDICATED AS REQUIRING VISUAL EXAM ARE TO BE LEAK TESTED ONLY TO A HYDROSTATIC PRESSURE DEVELOPED BY A FILLED REACTOR WELL, AS NO ISOLATION VALVES AND TEST CONNECTIONS ARE AVAILABLE. ONLY VISIBLE (NOT EMBEDDED OR SUBMERGED) PORTIONS OF THIS PIPING REQUIRES VISUAL EXAM. SAME APPLIES TO ANY CONNECTIONS TO OPEN TANKS.
4. ALL PIPING FOR 10"FPC(9)-1 UPSTREAM OF FPC-V-169 IS FABRICATED TO ASME SEC III, CODE CLASS 3 BUT NOT STAMPED.
FUTURE CONNECTION
REMOVABLE SPOOL PIECE
REMOVABLE SPOOL PIECE
THIS DRAWING IS INTENDED FOR USE IN PRESERVICE AND INSERVICE INSPECTION PROGRAMS ONLY
WASHINGTON PUBLIC POWER SUPPLY SYSTEM
RICHLAND, WASHINGTON 99352
WNP-2
INSERVICE INSPECTION BOUNDARY DIAGRAM
FUEL POOL COOLING (FPC)
ENGINEER D PORTER
DRAWN K-McANDREW
DWG NO 151-226-1
REV 2
1 7-17-79 ADDED CL BRKS, CHGS 2NS B-4, D-5, E-5, 7, & 8 K-McA ITH DMP LFB
0 1-9-79 ISSUED FOR USE K-McA ITH DMP DMP LFB
A 10-18-78 ISSUED FOR INFORMATION ONLY K-McA NCH DMP
2 11-7-80 GENERAL UPDATE REDRAWN KLB JPP TJH
NO DATE REVISION BY CHKD APVD
DATE 9-20-78

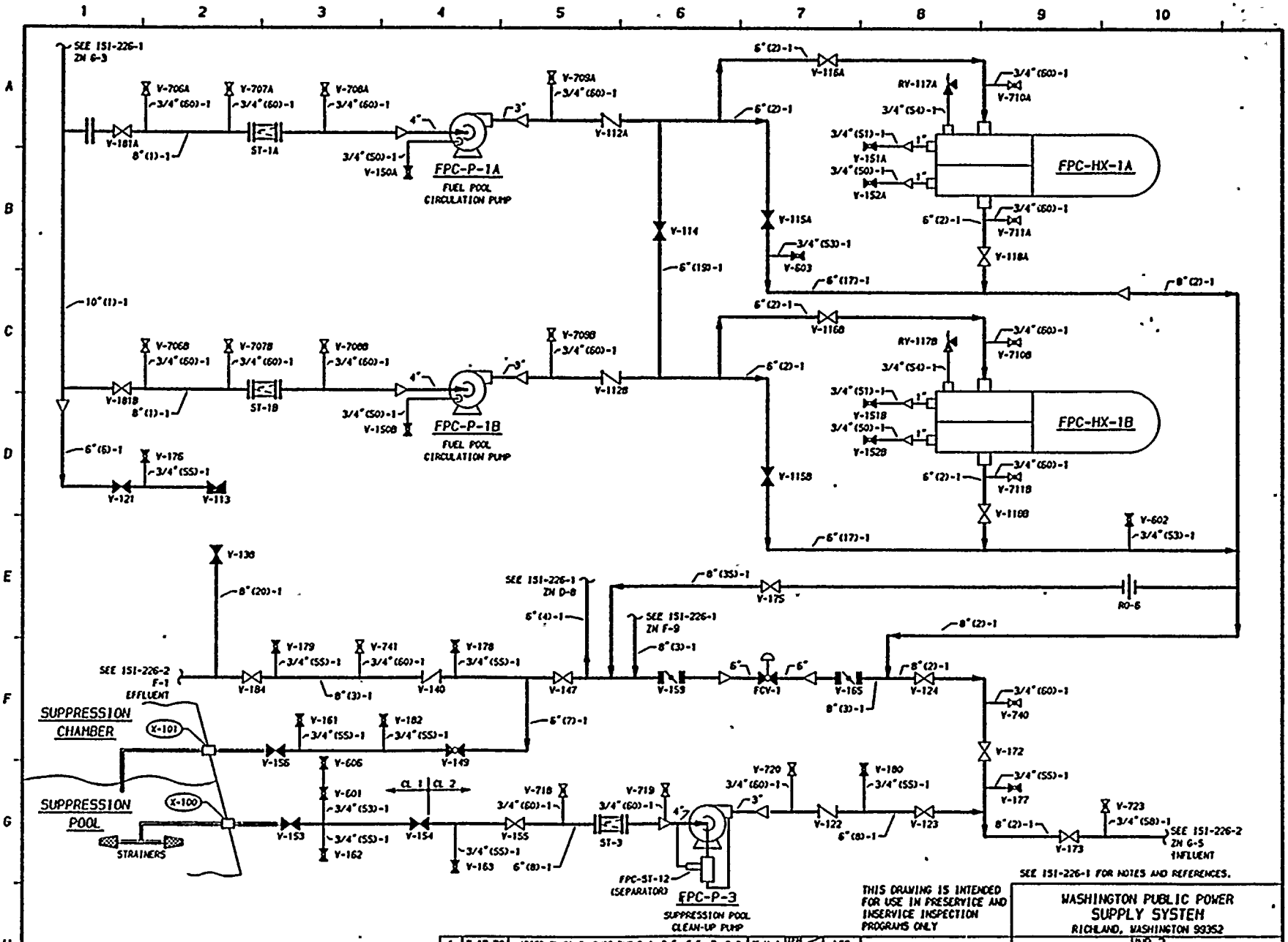

THIS DRAWING IS INTENDED FOR USE IN PRESERVICE AND INSERVICE INSPECTION PROGRAMS ONLY

NO	DATE	REVISION	BY	CHKD	APVD
2	7/13/79	GENERAL UPDATE REDRAWN			

NO	DATE	REVISION	BY	CHKD	APVD
1	7-17-79	ADDED CL BRKS, CHGS ZNS B-4, D-5, E-5, 7, & 8	K-McA	TFH	LFB
0	1-9-79	ISSUED FOR USE	K-McA	TFH	LFB
A	10-18-78	ISSUED FOR INFORMATION ONLY	K-McA	NCH	DMP

ENGINEER D PORTER
DRAWN K-McANDREW
DATE 9-20-78

WASHINGTON PUBLIC POWER SUPPLY SYSTEM
RICHLAND, WASHINGTON 99352
WNP-2
INSERVICE INSPECTION BOUNDARY DIAGRAM
FUEL POOL COOLING (FPC).

DWG NO 151-226-1A REV 2

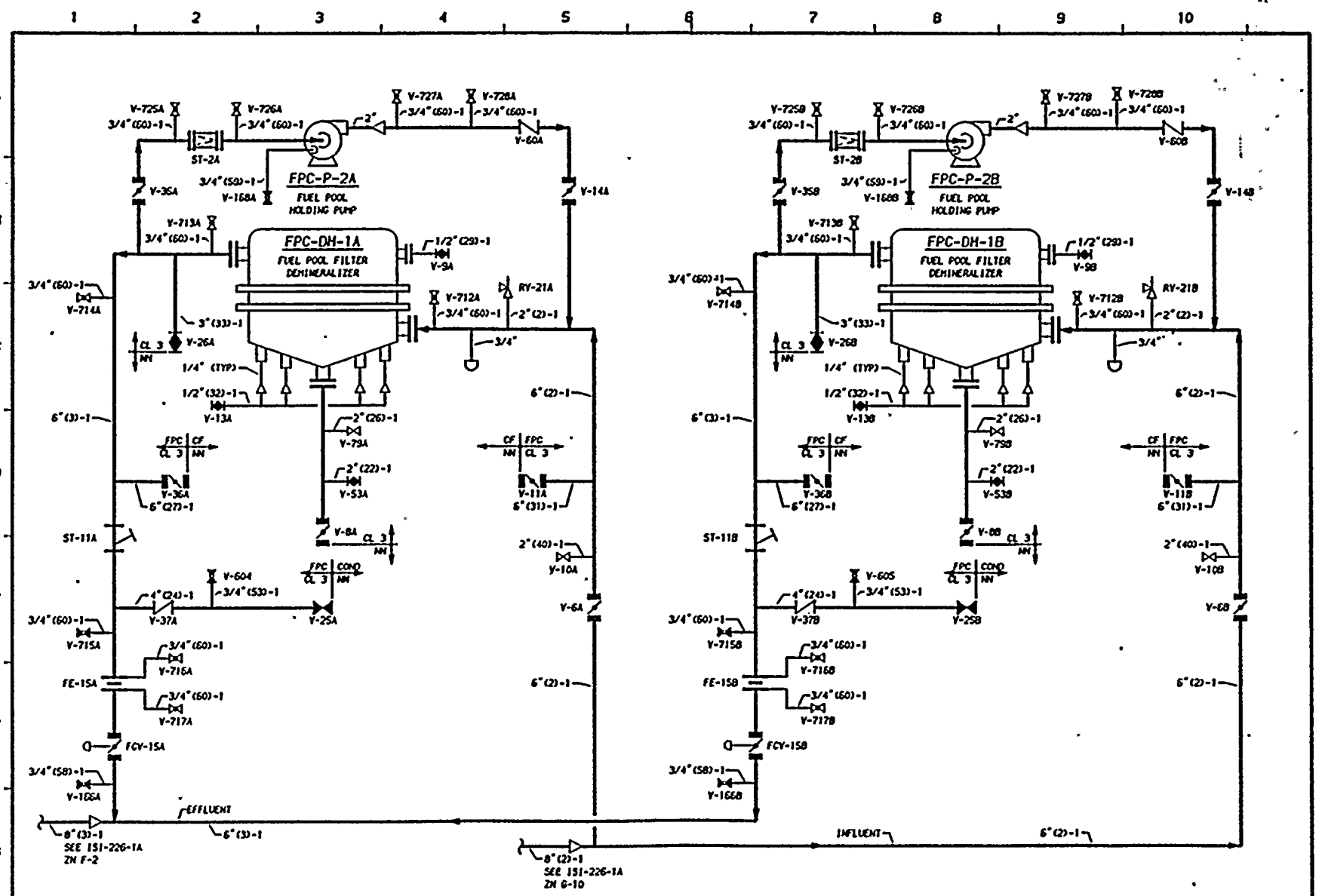

SEE 151-226-1 FOR NOTES AND REFERENCES.

THIS DRAWING IS INTENDED FOR USE IN PRESERVICE AND INSERVICE INSPECTION PROGRAMS ONLY

NO	DATE	REVISION	BY	CHKD	APVD
3	11-15-80	GENERAL UPDATE REDRAWN	[illegible]	DPP	TFH
2	11-5-80	DELETED NON-NUCLEAR LINES REDRAWN	K-McA	TFH	LFB

NO	DATE	REVISION	BY	CHKD	APVD
1	7-17-79	ADDED CL BRKS, CHGS ZNS B-4, D-5, E-5, 7, & 8	K-McA	TFH	DMP / LFB
0	1-9-79	ISSUED FOR USE	K-McA	TFH	DMP / LFB
A	10-18-78	ISSUED FOR INFORMATION ONLY	K-McA	NCH	DMP

ENGINEER D PORTER

DRAWN K-McANDREW

DATE 9-20-78

WASHINGTON PUBLIC POWER SUPPLY SYSTEM
RICHLAND, WASHINGTON 99352

WNP-2

INSERVICE INSPECTION BOUNDARY DIAGRAM
FUEL POOL COOLING (FPC)

DWG NO 151-226-2 REV 3

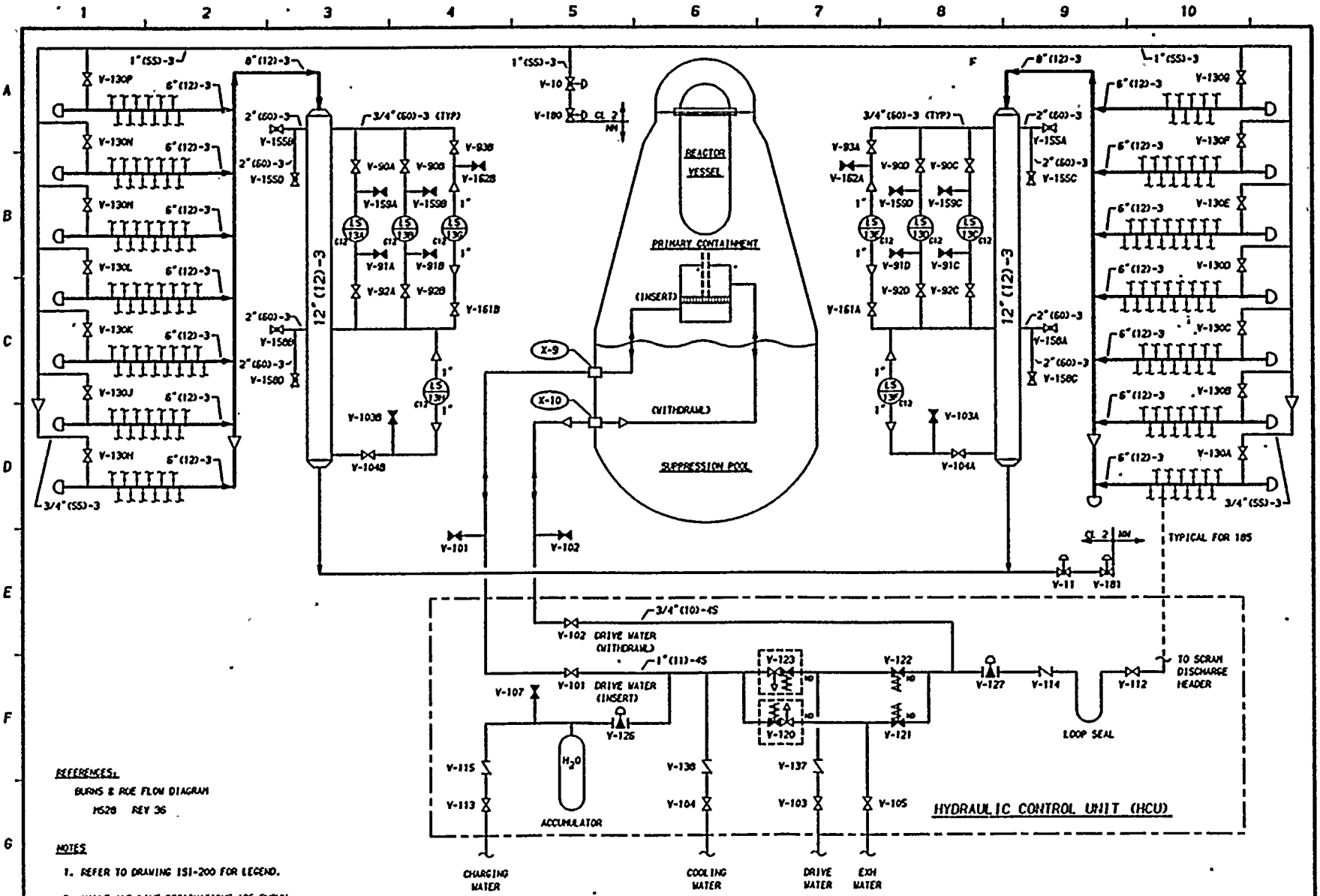

REFERENCES:

BURNS & ROE FLOW DIAGRAM
M528 REV 36

NOTES

1. REFER TO DRAWING 151-200 FOR LEGEND.
2. VALVE AND LINE DESIGNATIONS ARE SHOWN WITHOUT THE SYSTEM PREFIX FOR CLARITY.

THIS DRAWING IS INTENDED FOR USE IN PRESERVICE AND INSERVICE INSPECTION PROGRAMS ONLY

NO	DATE	REVISION	BY	CHKD	APVD
1	8-30-78	GENERAL UPDATE REDRAWN	K-McA	ITH	DMP
0	1-9-79	ISSUED FOR USE	K-McA	ITH	DMP
A	10-18-78	ISSUED FOR INFORMATION ONLY	K-McA	MCH	DMP

ENGINEER D PORTER
DRAWN K-McANDREW
DATE 8-30-78

WASHINGTON PUBLIC POWER SUPPLY SYSTEM
RICHLAND, WASHINGTON 99352
WNP-2
INSERVICE INSPECTION BOUNDARY DIAGRAM
CONTROL ROD DRIVE (CRD)

DWG NO 151-228 REV 1

WNP-2 ISI BOUNDARY DIAGRAM

Date 7/27/79

Revision 1

EXCEPTIONS AND EXEMPTIONS

ISI - 226

SYSTEM Fuel Pool Cooling (FPC)

EXCEPTIONS:

Class I Piping and Components

- o Not applicable; entire system Class 2 or nonnuclear only.

Class 2 Piping and Components

- o No exceptions

EXEMPTIONS APPLIED:

IWB-1220	(a) (1)	No
	(2)	No
	(3)	No
	(4)	No
	*(b) (1)	No
	(2)	No
	(3)	No
IWC-1220	(a)	Yes
	*(b)	No
	(c)	No
	(d)	No
IWC-5220	(d)	Yes, open ended piping to suppression pool.
IWD-5200	(c)	No

*See general exemption discussion for details.

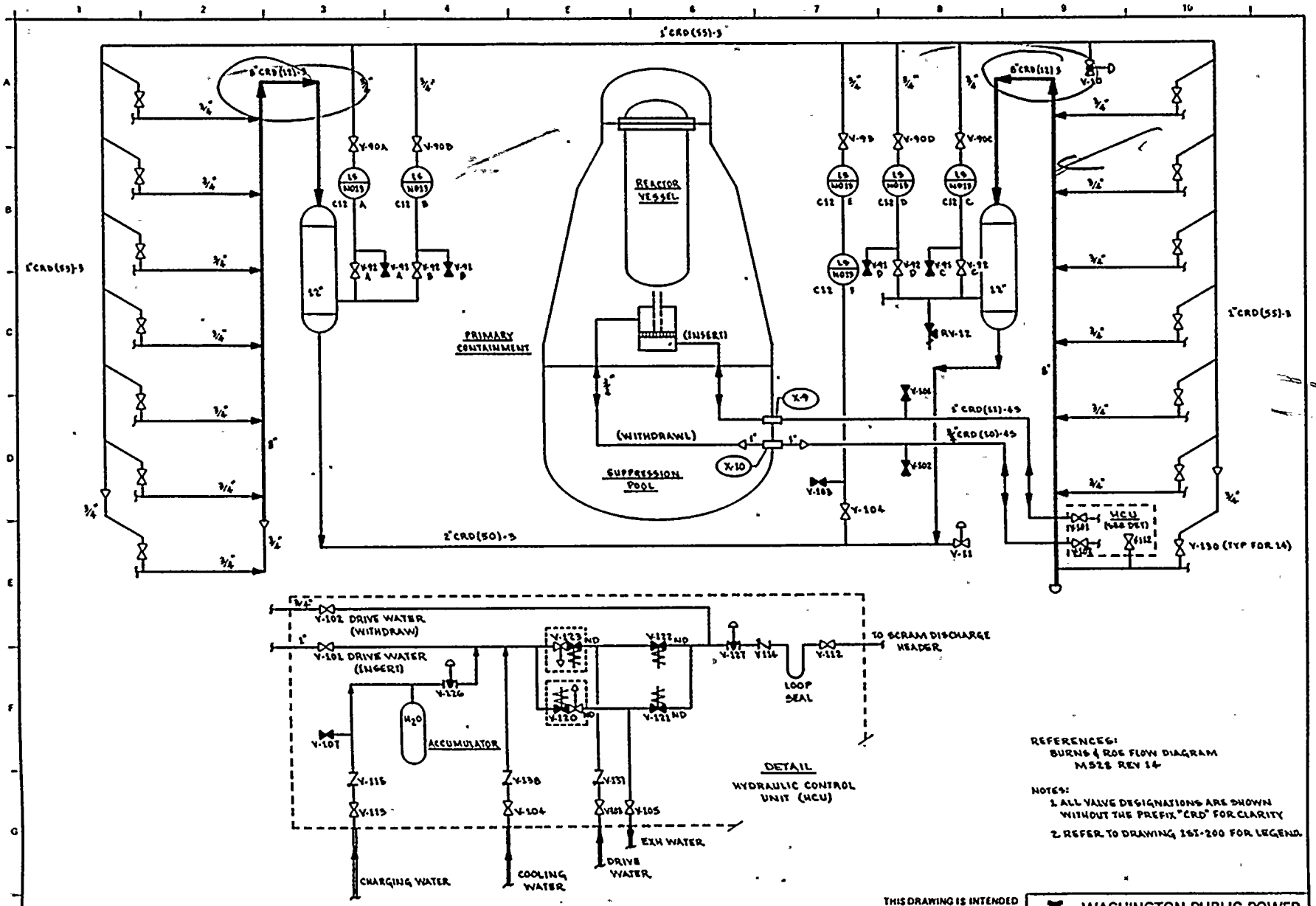

REFERENCES:
BURNS & ROE FLOW DIAGRAM
M528 REV 14

NOTES:
1. ALL VALVE DESIGNATIONS ARE SHOWN WITHOUT THE PREFIX "CRD" FOR CLARITY
2. REFER TO DRAWING 161-200 FOR LEGEND.

THIS DRAWING IS INTENDED
FOR USE IN PRESERVICE AND
INSERVICE INSPECTION
PROGRAMS ONLY

WASHINGTON PUBLIC POWER
SUPPLY SYSTEM
RICHLAND WASHINGTON 99352

NO	DATE	REVISION	BY	CHKD	APPVD	NO	DATE	REVISION	BY	CHKD	APPVD
						0	[illegible]	ISSUED FOR USE	K.McA	[illegible]	[illegible]
						A	[illegible]	ISSUED FOR INFORMATION ONLY	K.McA	[illegible]	[illegible]

ENGINEER D PORTER
DRAWN K. McANDREW
DATE 8-30-78

WNP-2
INSERVICE INSPECTION BOUNDRY DIAGRAM
CONTROL ROD DRIVE (CRD)

DWG NO 151-228
REV 0

Date 1/18/85
Revision 1

WNP-2 ISI BOUNDARY DIAGRAM

EXCEPTIONS AND EXEMPTIONS

ISI - 228

SYSTEM Control Rod Drive (CRD) System

EXCEPTIONS:

Class 1 Piping and Components

- See general exceptions.
- No additional exceptions.

Class 2 Piping and Components

- See general exceptions.
- Additional exception as follows: 6" CRD(12)-3 and 8" CRD(12)-3, scram discharge headers will be examined visually for evidence of leakage. In addition 10% of the circumferential welds will be examined volumetrically. See next page for justification.

EXEMPTIONS APPLIED:

IWB-1220(a)(1)	No
(2)	No
(3)	No
(4)	No
*(b)(1)	No
(2)	No
(3)	No
IWC-1220(a)	No
*(b)	No
(c)	No
(d)	No
IWC-5220(d)	No
IWC-5200(c)	No

*See general exemption discussion for details.

Date 1/18/85
Revision 1

JUSTIFICATION FOR EXCEPTION FROM

SURFACE EXAMINATION OF CRD SCRAM DISCHARGE HEADERS

All piping connecting to the scram discharge headers is less than 4" nominal pipe size and subject only to a visual examination for evidence of leakage. Furthermore, the headers are on the discharge side of the scram discharge system and their failure would not prevent a scram. The only connections with the RPV are via the 3/4" CRD tubing. A minimal amount of leakage due to water bypassing the drives during scram will occur, but following scram the leakage will essentially cease upon closure of the scram valves. In any event, the sum of the bypass leakages from all drives is anticipated to be much less than the reactor makeup system capacity. Therefore, a failure of a header or any connecting piping would not impair the ability to makeup the resulting loss of reactor water using normal makeup systems. A visual examination for evidence of leakage is, therefore, adequate and commensurate with the low operability and safety implications of a loss of integrity of that pipe. In addition to the visual examination 10% of the circumferential welds on the scram discharge headers greater than 4" NPS will be examined volumetrically.

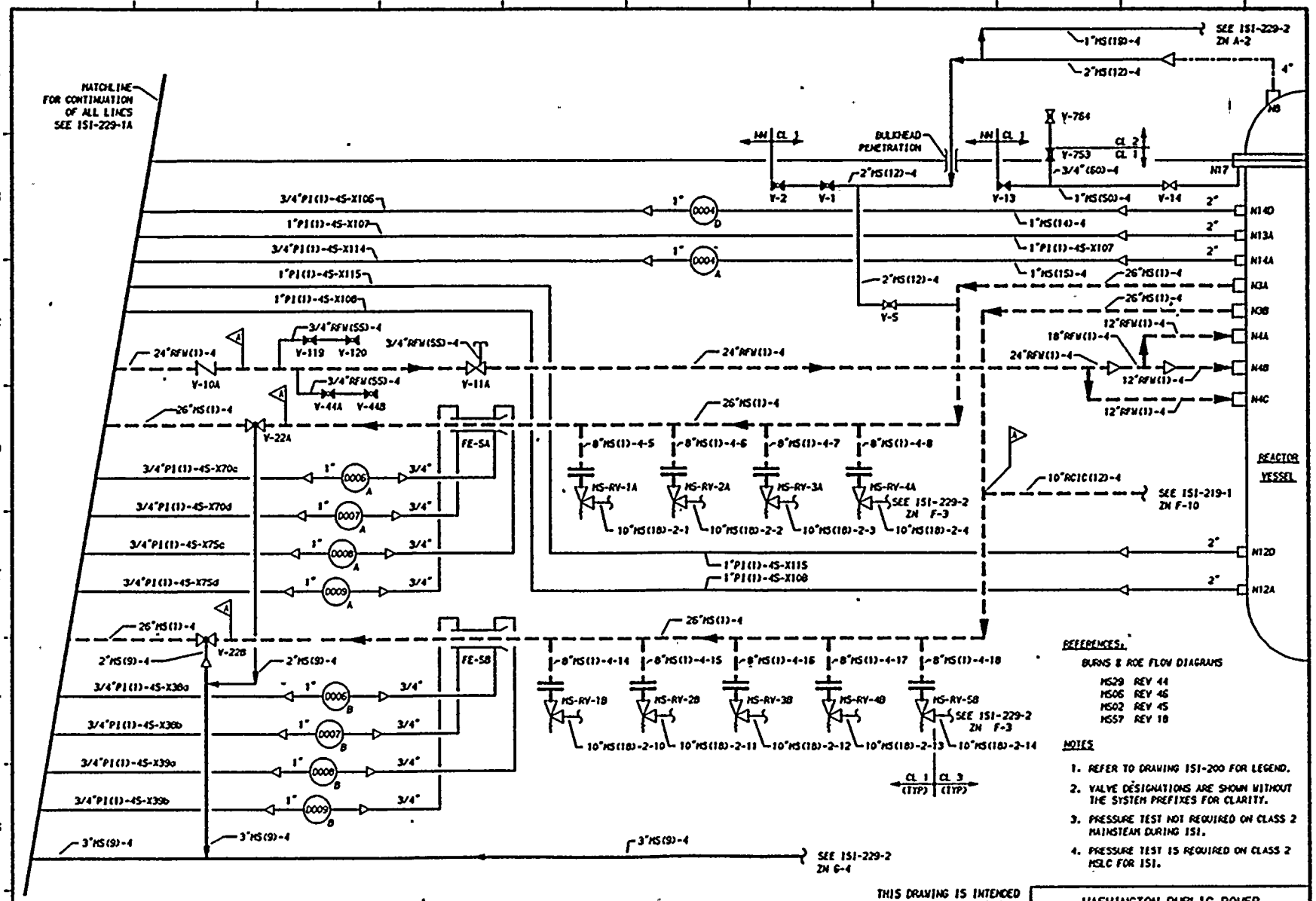

REFERENCES:

BURNS & ROE FLOW DIAGRAMS

HS29 REV 44
HS06 REV 46
HS02 REV 45
HS57 REV 18

NOTES

1. REFER TO DRAWING 151-200 FOR LEGEND.
2. VALVE DESIGNATIONS ARE SHOWN WITHOUT THE SYSTEM PREFIXES FOR CLARITY.
3. PRESSURE TEST NOT REQUIRED ON CLASS 2 MAINSTEAM DURING 151.
4. PRESSURE TEST IS REQUIRED ON CLASS 2 HSLC FOR 151.

THIS DRAWING IS INTENDED FOR USE IN PRESERVICE AND INSERVICE INSPECTION PROGRAMS ONLY

WASHINGTON PUBLIC POWER SUPPLY SYSTEM
RICHLAND, WASHINGTON 99352
WNP-2
INSERVICE INSPECTION BOUNDARY DIAGRAM
MAIN STEAM (MS) & REACTOR FEEDWATER (RFW)

ENGINEER D PORTER
DRAWN K-McA
DWG NO 151-229-1
DATE 2-13-78
REV 2

NO	DATE	REVISION	BY	CHKD	APVD
2	11-15-86	AUGMENTED ISI ADDED. UP-DATE, SPLIT, REDRAWN	[illegible]	[illegible]	[illegible]
1	4-21-79	GENERAL UP-DATE	K-McA	TFH	DMP
0	10-18-78	REVISED 1 1/2" & 3" HS(10)-4 FROM SURFACE TO VISUAL. ADDED HSLC SYSTEM & ISSUED FOR IST.	K-McA	DMP	LTH
A	4-21-78	ISSUED FOR INFORMATION ONLY	K-McA	DCT NCH	DMP

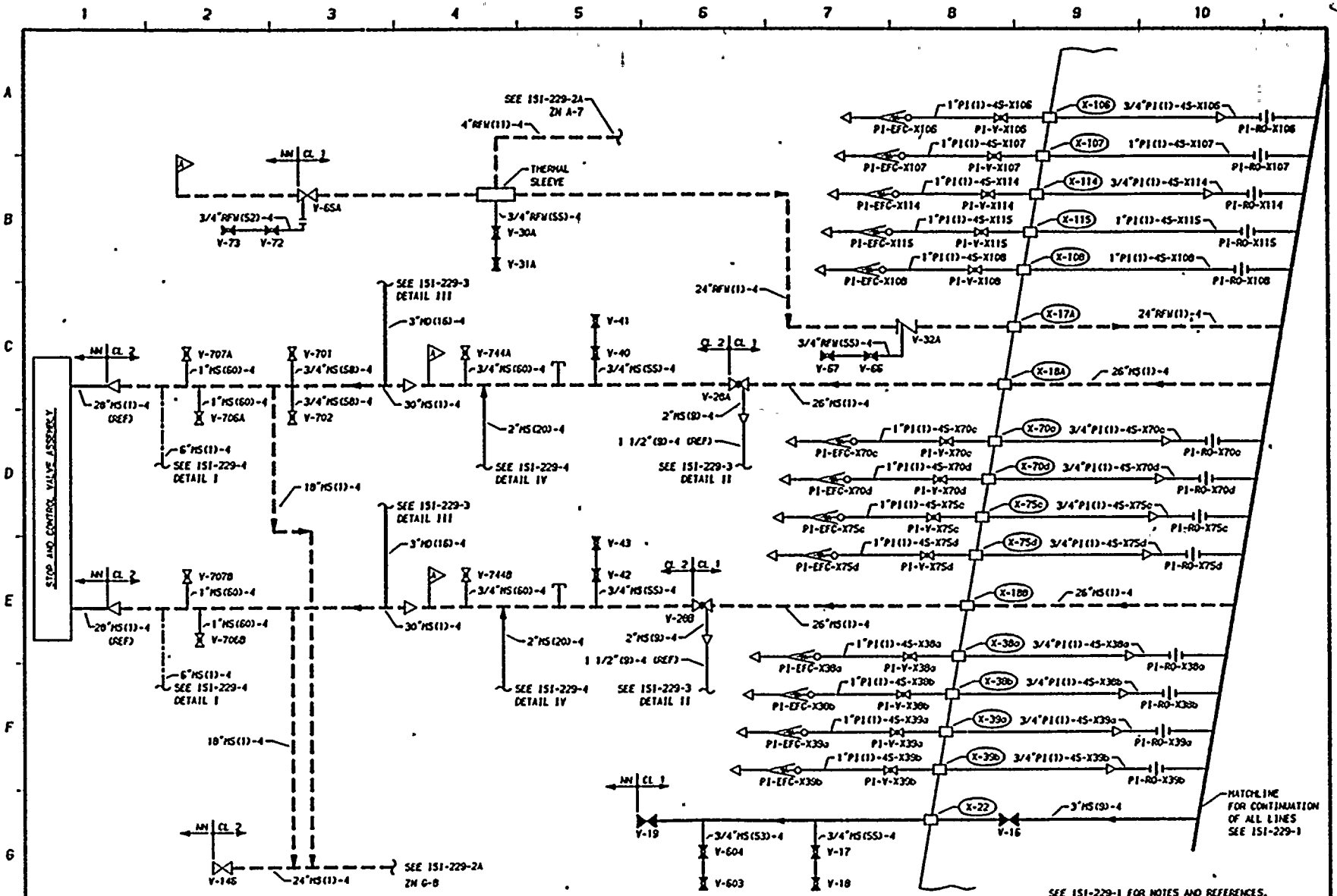

SEE 151-229-1 FOR NOTES AND REFERENCES.

THIS DRAWING IS INTENDED FOR USE IN PRESERVICE AND INSERVICE INSPECTION PROGRAMS ONLY

NO	DATE	REVISION	BY	CHKD	APVD
2	1/25/84	AUGMENTED ISI ADDED. UP-DATE, SPLIT, REDRAWN			

NO	DATE	REVISION	BY	CHKD	APVD
1	4-21-79	GENERAL UP-DATE	K-McA	TFH	DMP
0	10-18-78	REVISED 1 1/2", 2" & 3"HS(9)-4 FROM SURFACE TO VISUAL. ADDED HSLC SYSTEM & ISSUED FOR USE	K-McA	DMP	LTH
A	4-21-78	ISSUED FOR INFORMATION ONLY	K-McA	DMP	DMP

ENGINEER D PORTER
DRAWN K-McA
DATE 2-13-78

WASHINGTON PUBLIC POWER SUPPLY SYSTEM
RICHLAND, WASHINGTON 99352
WNP-2
INSERVICE INSPECTION BOUNDARY DIAGRAM
MAIN STEAM (MS) & REACTOR FEEDWATER (RFW)
DWG NO 151-229-1A REV 2

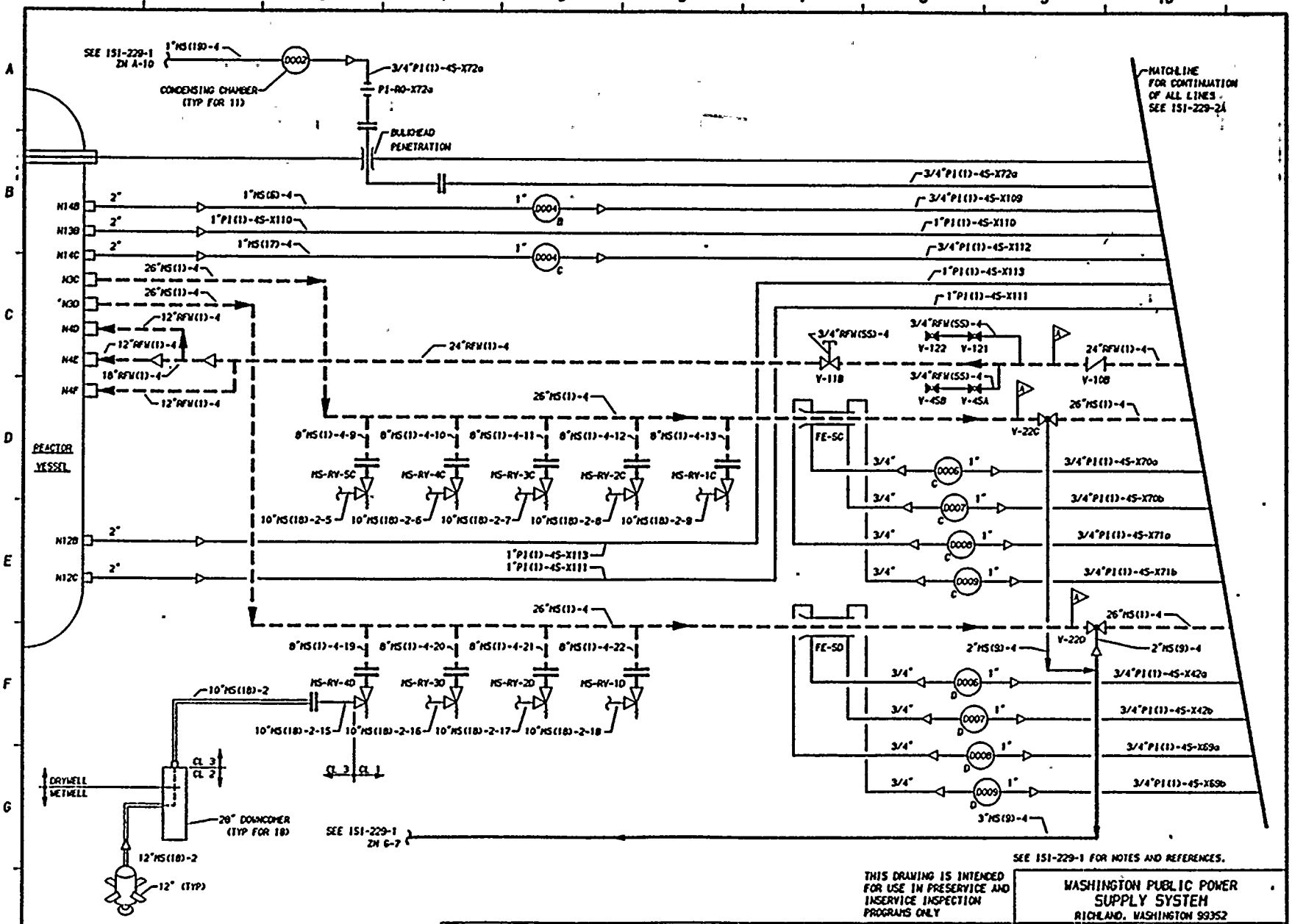

SEE 151-229-1 FOR NOTES AND REFERENCES.

THIS DRAWING IS INTENDED FOR USE IN PRESERVICE AND INSERVICE INSPECTION PROGRAMS ONLY

NO	DATE	REVISION	BY	CHKD	APVD
2	11-18-86	AUGMENTED ISI ADDED. UP-DATE, SPLIT, REDRAWN			
1	11-5-80	ADDED 10"HS(18)-2, 12"HS(18)-2 & GENERAL UP-DATE	K-McA	TFH	DMP
0	10-18-78	REVISED 1 1/2", 2" & 3"HS(9)-4 FROM SURGE TO VISUAL ADDED HPCI SYSTEM (SET 11) & ISSUED FOR USE	K-McA	DMP	LTH
A	4-21-78	ISSUED FOR INFORMATION ONLY	K-McA	DCT / MCK	DMP

ENGINEER D PORTER
DRAWN K-McA
DATE 2-16-78

WASHINGTON PUBLIC POWER SUPPLY SYSTEM
RICHLAND, WASHINGTON 99352
WNP-2
INSERVICE INSPECTION BOUNDARY DIAGRAM
MAIN STEAM (MS) & REACTOR FEED WATER (RFW)

DWG NO 151-229-2 REV 2

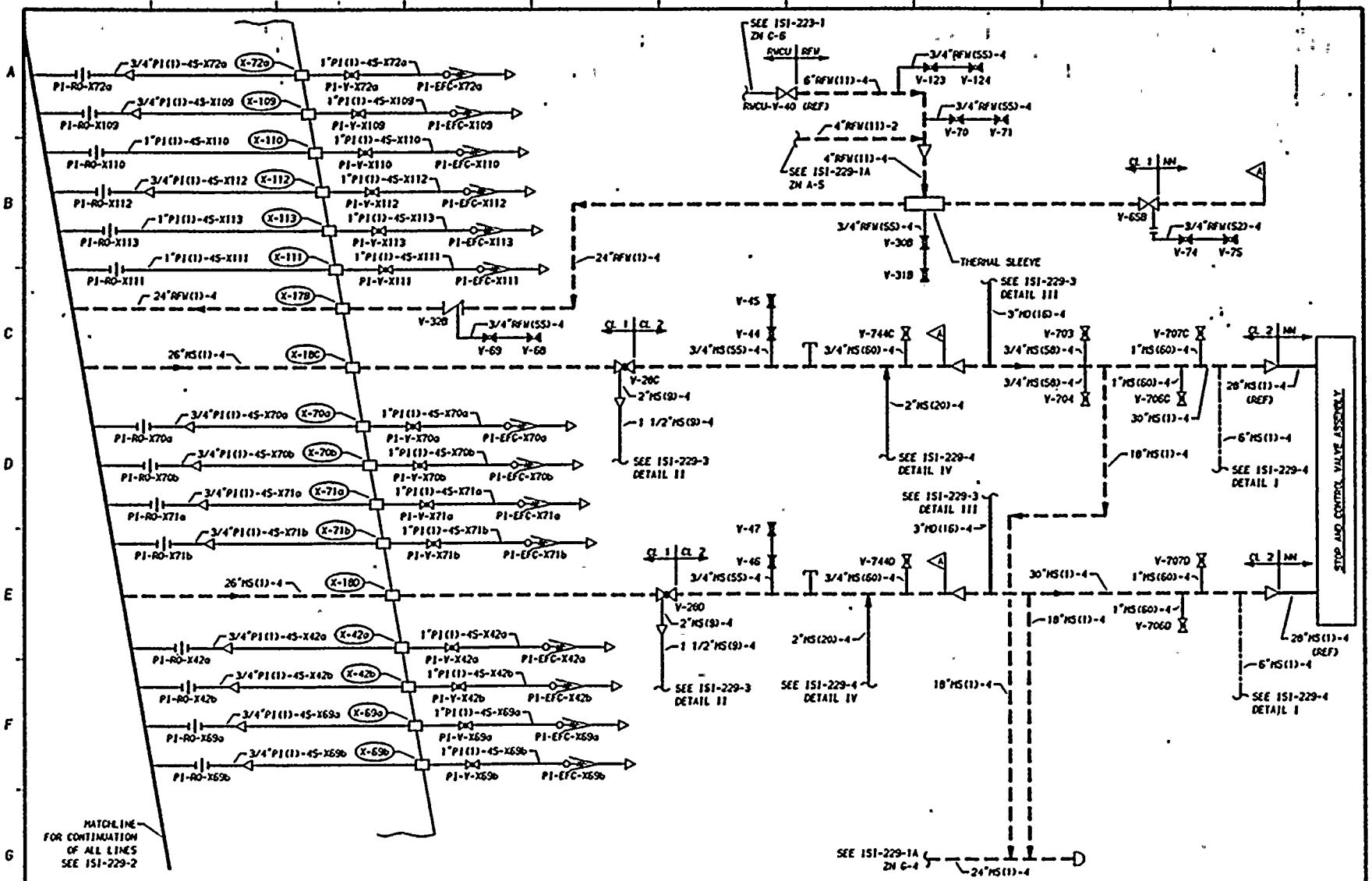

SEE 1S1-229-1 FOR NOTES AND REFERENCES.

THIS DRAWING IS INTENDED FOR USE IN PRESERVICE AND INSERVICE INSPECTION PROGRAMS ONLY

NO	DATE	REVISION	BY	CHKD	APVD
2	11-16-79	AUGMENTED ISI ADDED. UP-DATE, SPLIT, REDRAWN	[illegible]	[illegible]	[illegible]
1	4-21-79	GENERAL UP-DATE	K-McA	TFH	DMP
0	10-18-78	REVISED 1 1/2", 2", & 3"HS(9)-4 FROM SURFACE TO VISUAL. ADDED HS & C SYSTEM & ISSUED FOR USE.	K-McA	DMP	LTH
A	4-21-78	ISSUED FOR INFORMATION ONLY	K-McA	OCT NOV	DMP

WASHINGTON PUBLIC POWER SUPPLY SYSTEM
RICHLAND, WASHINGTON 99352

ENGINEER D PORTER
DRAWN K-McA
DATE 2-16-78

WNP-2
INSERVICE INSPECTION BOUNDARY DIAGRAM
MAIN STEAM (MS) & REACTOR FEEDWATER (RFW)

DWG NO 1S1-229-2A REV 2

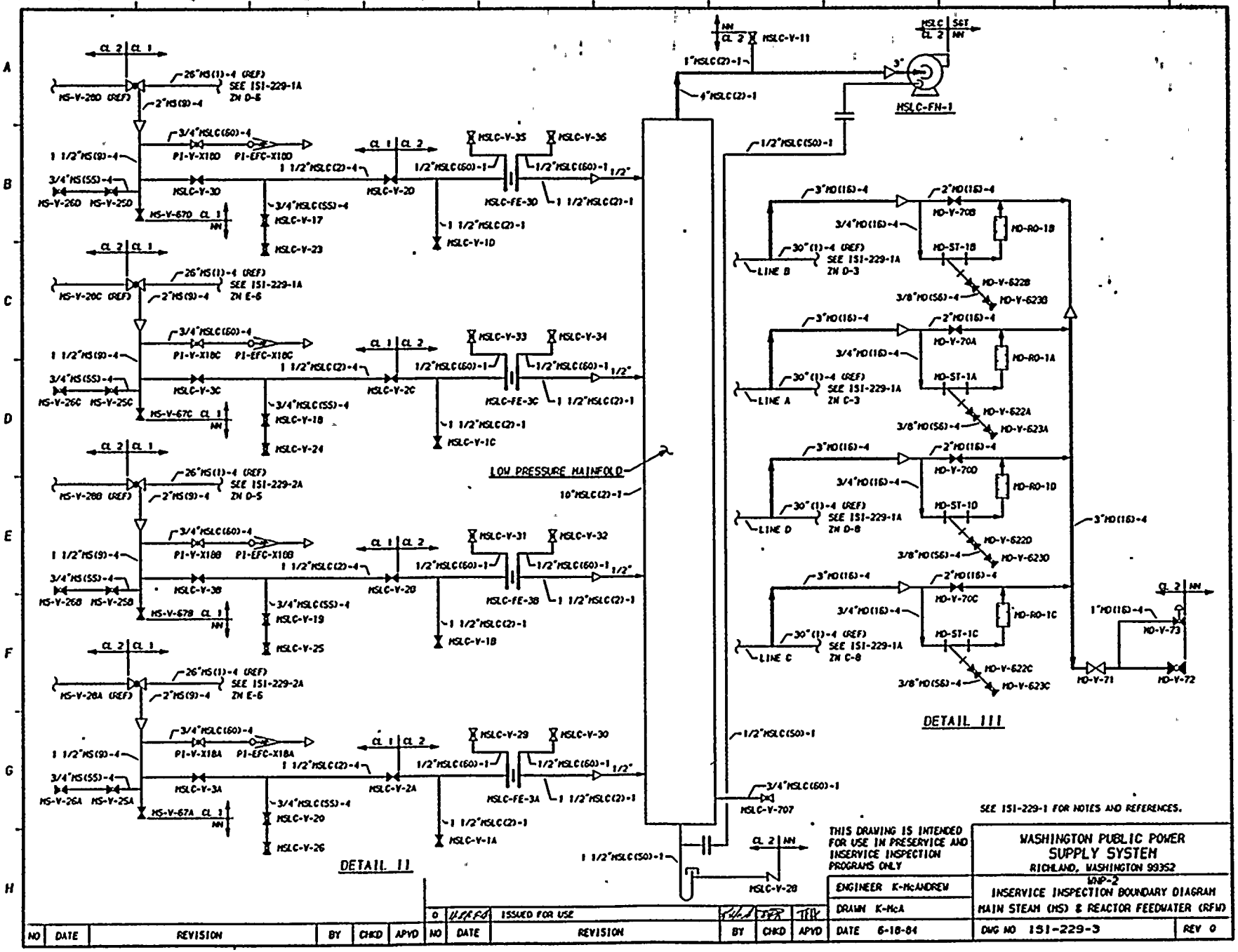
LOW PRESSURE MAINFOLD
10"HSLC(2)-1
HSLC-FN-1
DETAIL II
DETAIL III
SEE 151-229-1 FOR NOTES AND REFERENCES.
THIS DRAWING IS INTENDED FOR USE IN PRESERVICE AND INSERVICE INSPECTION PROGRAMS ONLY
WASHINGTON PUBLIC POWER SUPPLY SYSTEM
RICHLAND, WASHINGTON 99352
WNP-2
INSERVICE INSPECTION BOUNDARY DIAGRAM
MAIN STEAM (MS) & REACTOR FEEDWATER (RFW)
ENGINEER K-McANDREW
DRAWN K-McA
DATE 6-18-84
DWG NO 151-229-3
REV 0
0 ISSUED FOR USE
NO DATE REVISION BY CHKD APVD

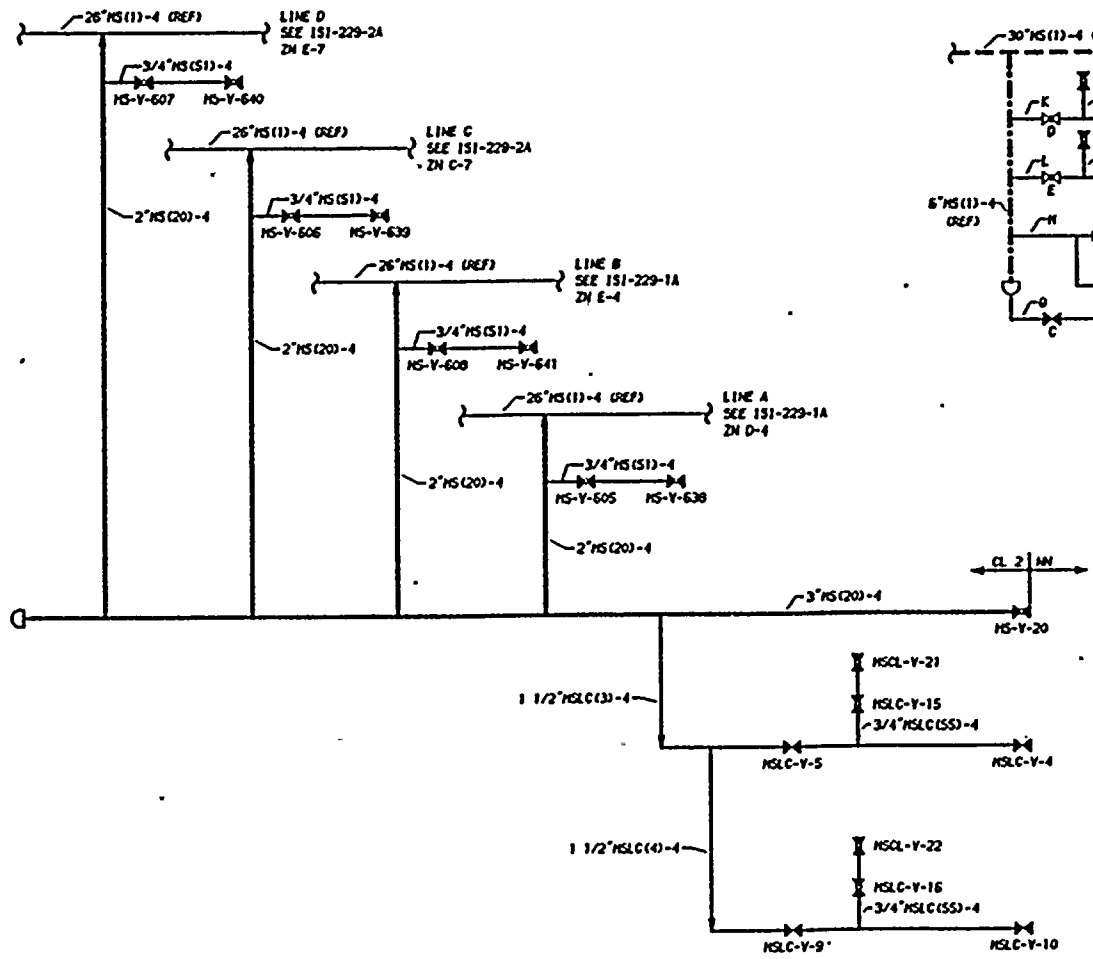

DETAIL IV

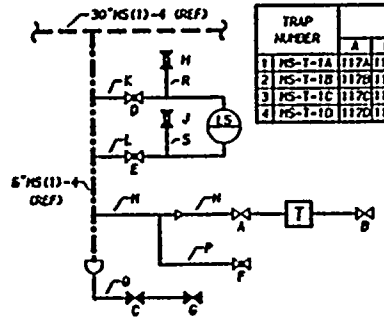

TRAP NUMBER		VALVE TAG NUMBERS									LEVEL SWITCH NUMBER
		A	B	C	D	E	F	G	H	J	
1	MS-T-1A	117A	118A	119A	730A	731A	120A	238A	174A	174B	LS-24A
2	MS-T-1B	117B	118B	239	730B	731B	120B	238B	175A	175B	LS-24B
3	MS-T-1C	117C	118C	119C	730C	731C	120C	238C	176A	176B	LS-24C
4	MS-T-1D	117D	118D	119D	730D	731D	120D	238D	177A	177B	LS-24D

LINE NUMBERS			
K	1"MS(60)-4	P	1"MS(50)-4
L	1"MS(60)-4	Q	3/4"MS(SS)-4
M	2"MS(50)-4	R	1/2"MS(50)-4
N	1"MS(50)-4	S	1/2"MS(50)-4

DETAIL I

SEE 151-229-1 FOR NOTES AND REFERENCES.

THIS DRAWING IS INTENDED FOR USE IN PRESERVICE AND INSERVICE INSPECTION PROGRAMS ONLY

WASHINGTON PUBLIC POWER SUPPLY SYSTEM
RICHLAND, WASHINGTON 99352

WNP-2
INSERVICE INSPECTION BOUNDARY DIAGRAM
MAIN STEAM (MS) & REACTOR FEEDWATER (RFW)

ENGINEER K-McANDREW
DRAWN K-McA
DATE 6-18-84
DWG NO 151-229-4
REV 0

NO	DATE	REVISION	BY	CHKD	APVD	NO	DATE	REVISION	BY	CHKD	APVD
						0	11/5/84	ISSUED FOR USE			

Date 11/14/80
Revision 1

WNP-2 ISI BOUNDARY DIAGRAM

EXCEPTIONS AND EXEMPTIONS

ISI - 229

SYSTEM Main Steam (MS) and Reactor Feedwater (RFW) System

EXCEPTIONS:

Class 1 Piping and Components

- See general exceptions.
- No additional exceptions.

Class 2 Piping and Components

- See general exceptions.
- No additional exceptions.

EXEMPTIONS APPLIED:

IWB-1220(a)(1) Yes, per code class boundary.

(2) No

(3) Yes

(4) Yes

*(b)(1) Yes, 2"MS(12)-4, 2" & 3"MS(9)-4, 2" RPV instrument lines.

(2) No

(3) Yes, all piping ≤1" NPS.

IWC-1220(a) No

*(b) No

(c) No

(d) Yes, all piping ≤4" NPS.

IWC-5220(d) No

IWD-5200(c) Yes, MSRV discharge piping

*See general exemption discussion for details.

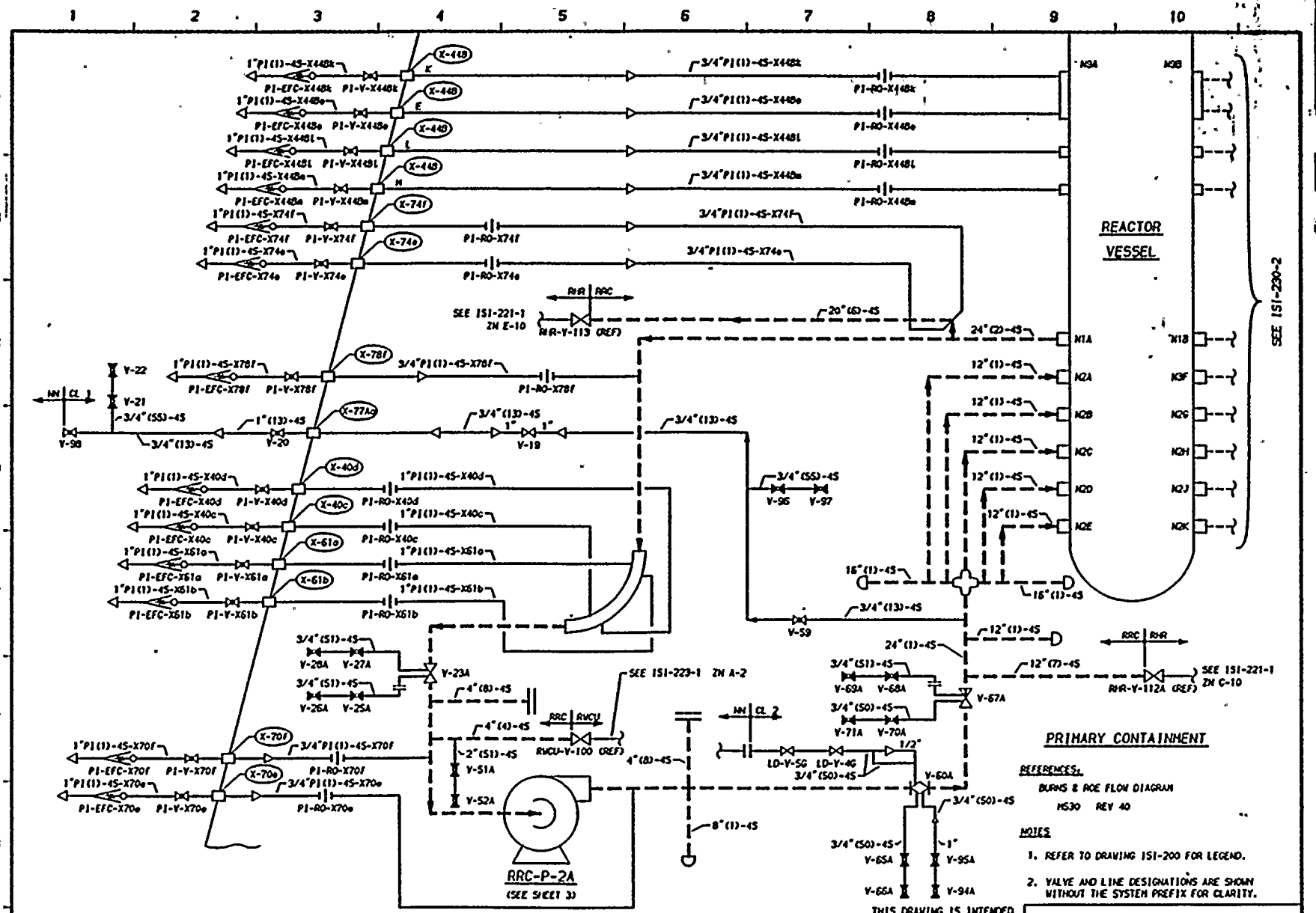
REACTOR VESSEL
SEE ISI-230-2
N3A
N3B
N1A
N1B
N2A
N2F
N2B
N2G
N2C
N2H
N2D
N2J
N2E
N2K
SEE ISI-221-1 ZN E-10
RHR-V-113 (REF)
RHR-V-112A (REF)
SEE ISI-221-1 ZN C-10
SEE ISI-223-1 ZN A-2
RRC-P-2A
(SEE SHEET 3)
RWCU-V-100 (REF)
PRIMARY CONTAINMENT
REFERENCES:
BURNS & ROE FLOW DIAGRAM
M530 REV 40
NOTES
1. REFER TO DRAWING ISI-200 FOR LEGEND.
2. VALVE AND LINE DESIGNATIONS ARE SHOWN WITHOUT THE SYSTEM PREFIX FOR CLARITY.
THIS DRAWING IS INTENDED FOR USE IN PRESERVICE AND INSERVICE INSPECTION PROGRAMS ONLY
WASHINGTON PUBLIC POWER SUPPLY SYSTEM
RICHLAND, WASHINGTON 99352
WNP-2
INSERVICE INSPECTION BOUNDARY DIAGRAM
REACTOR RECIRCULATION (RRC)
ENGINEER D PORTER
DRAWN K-McANDREW
DATE 3-21-78
DWG NO ISI-230-1
REV 2
1 8-30-79 CHANGED 2"RRC(6)-4S TO SURFACE EXAM K-McA
0 1-9-79 ISSUED FOR USE K-McA
A 5-26-78 ISSUED FOR INFORMATION ONLY K-McA
2 GENERAL UPDATE REDRAWN
NO DATE REVISION BY CHKD APVD

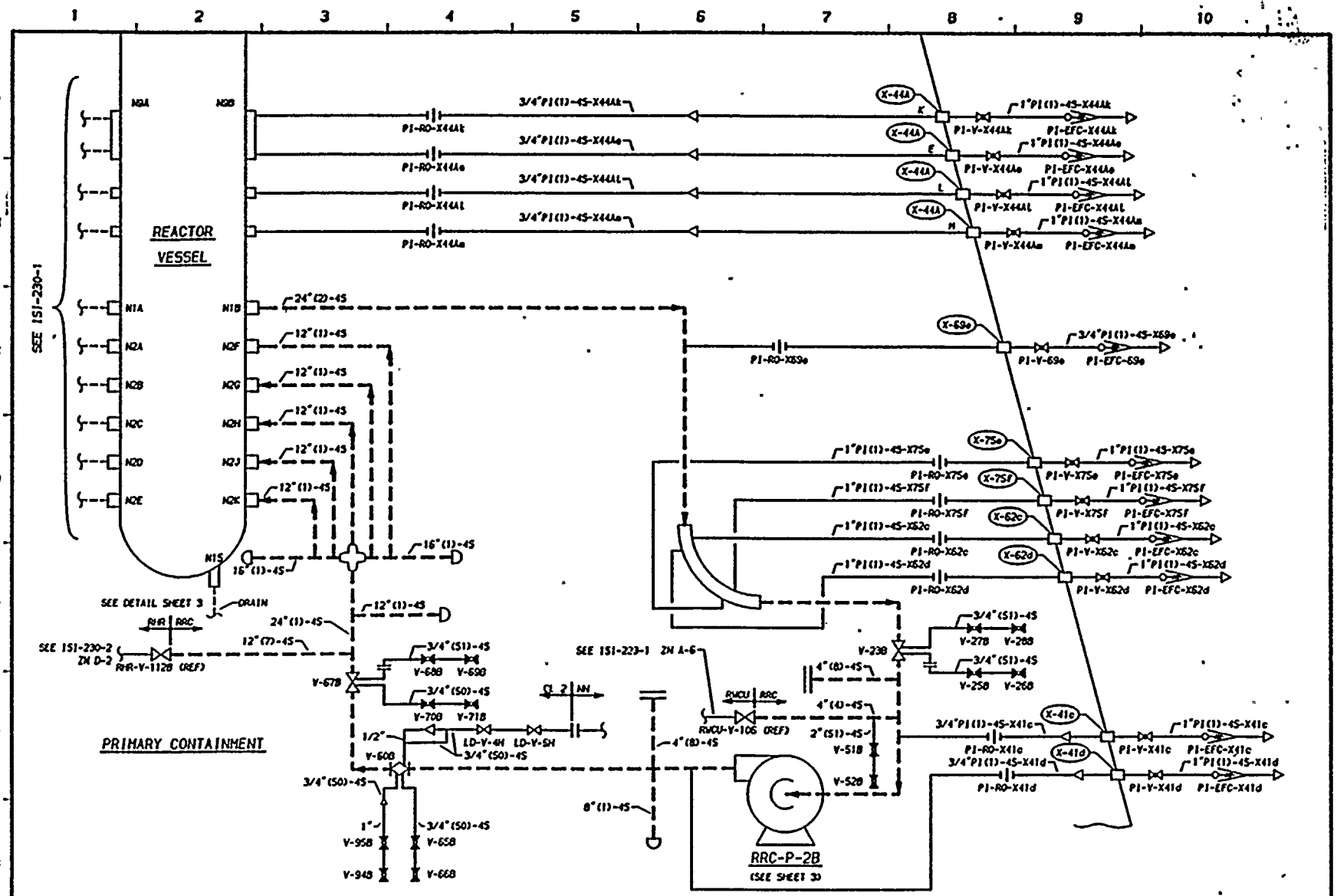

SEE 151-230-1 FOR NOTES AND REFERENCES.

THIS DRAWING IS INTENDED FOR USE IN PRESERVICE AND INSERVICE INSPECTION PROGRAMS ONLY

NO	DATE	REVISION	BY	CHKD	APVD
2	11-23-81	GENERAL UPDATE REDRAWN	[illegible]	[illegible]	[illegible]
1	8-30-79	CHANGED 2"RRC(6)-4S TO SURFACE EXAM	K-McA	TTH	LFB
0	1--9-79	ISSUED FOR USE	K-McA	TTH	LFB
A	5-26-78	ISSUED FOR INFORMATION ONLY	K-McA	NCH	DMP

ENGINEER D PORTER
DRAWN K-McANDREW
DATE 3-21-78

WASHINGTON PUBLIC POWER SUPPLY SYSTEM
RICHLAND, WASHINGTON 99352
WNP-2
INSERVICE INSPECTION BOUNDARY DIAGRAM
REACTOR RECIRCULATION (RRC)

DWG NO 151-230-2 REV 2

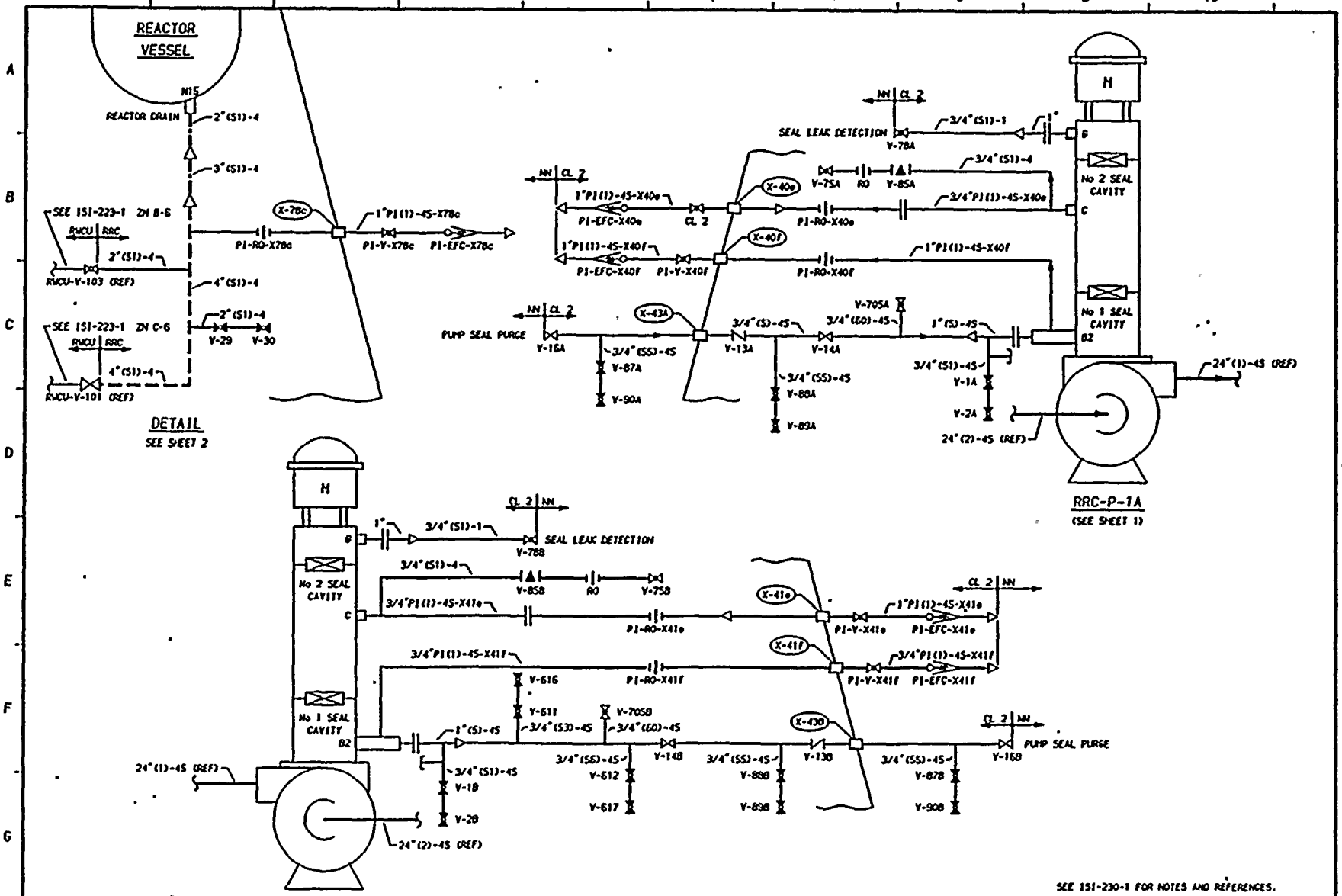

SEE 151-230-1 FOR NOTES AND REFERENCES.

THIS DRAWING IS INTENDED FOR USE IN PRESERVICE AND INSERVICE INSPECTION PROGRAMS ONLY

WASHINGTON PUBLIC POWER SUPPLY SYSTEM
RICHLAND, WASHINGTON 99352
WNP-2
INSERVICE INSPECTION BOUNDARY DIAGRAM
REACTOR RECIRCULATION (RRC)

NO	DATE	REVISION	BY	CHKD	APVD
2	1/23/84	GENERAL UPDATE REDRAWN	[illegible]	DOR	TEH
1	8-30-79	CHANGED 2"RRC(B)-4S TO SURFACE EXAM	K-McA	TTH	LFB
0	1-9-79	ISSUED FOR USE	K-McA	TTH	LFB
A	5-26-78	ISSUED FOR INFORMATION ONLY	K-McA	NCH	DMP

ENGINEER D PORTER
DRAWN K-McANDREW
DATE 3-21-78
DWG NO 151-230-3
REV 2

Date 11/14/80
Revision 0

WNP-2 ISI BOUNDARY DIAGRAM

EXCEPTIONS AND EXEMPTIONS

ISI - 230

SYSTEM Reactor Recirculation System

EXCEPTIONS:

Class 1 Piping and Components

- See general exceptions.
- No additional exceptions.

Class 2 Piping and Components

- No applicable; entire system is Class 1, Class 3 or non-nuclear

EXEMPTIONS APPLIED:

IWB-1220(a)	(1)	Yes, per code class boundaries.
	(2)	No
	(3)	No
	(4)	No
	*(b)(1)	1½ SLC(2)-45, standby liquid control injection
	(2)	No
	(3)	Yes, all piping ≤1" NPS.
IWC-1220(a)		No
	*(b)	No
	(c)	No
	(d)	No
IWC-5220(d)		No
IWD-5200(c)		No

*See general exemption discussion for details.

8.0--WELD IDENTIFICATION DIAGRAMS

This section of the WNP-2 PSI Program Plan contains Weld and Component Identification Diagrams for each system subject to preservice inspection. The Weld and Component Identification Diagrams identify each weld and component subject to inspection by illustrating the system in piping isometric format. For piping systems, or portions thereof, which require volumetric and/or surface examination, each weld and component is assigned an ISI identification number unique to that item, and which will be used exclusively for identification of welds and components on data sheets, reports, etc. For systems requiring only a visual examination for evidence of leakage, no ISI numbers are assigned.

Also shown on each Weld and Component Identification Diagram are such items as platforms, floors, walls, ladders, elevations and azimuths, compartment names, details, penetrations, and various notes, all of which are intended to aid the examination crew in locating and gaining access to the items to be examined, and to note potential access restrictions.

Following each set of Weld and Component Identification Diagrams applicable to a piping system which is subject to volumetric and/or surface examination, is a set of Program Plan and Schedule Tables. Those tables list and describe each weld and component shown on the diagram in order as they appear tracing the line in the direction of flow. They further define the Section XI Category, the examination method and procedures to be used, and the ultrasonic calibration block, if applicable, for each examination item. The Inservice column will not be used for the PSI Program, but will be filled in when planning the first 10-year ISI Program.

The following generic notes apply to each Program Plan and Schedule Table and is referenced from the "Remarks" column in the tables when applicable.

NOTE 1: Pipe whip restraints, abbreviated "PWS", are not designed or fabricated in accordance with ASME Section III, Article NF, and are, therefore, not subject to the rules of ASME Section XI. However, a visual examination is performed and documented on a voluntary basis by and at the discretion of the Supply System.

NOTE 2: This support has a saddle welded to the pressure boundary. The welds on the saddle are there for designer convenience and are not load bearing. Therefore, no surface and/or volumetric exam is required by Section XI.

NOTE 3: Deleted.

NOTE 4: The RHR pumps were designed prior to the requirement to perform Class 2 component examinations for preservice and inservice inspections. The pump casings are embedded in a pump pit which allows no access from the outside surface. The pump impeller was removed for pre-op maintenance. This allowed an MT examination of the inside surface of the pump's casing.

NOTE 5: Verify leakage collection system is operational.

NOTE 6: VT-2 is from later Section XI Codes. It is used in the PSI Program to provide continuity between PSI and ISI programs. All requirements for Section XI 1974 Edition, Summer 1975 Addenda for leakage examinations are being met.

NOTE 7: Satisfied by ASME Section III hydrostatic test.

NOTE 8: This weld is exempted from volumetric or surface examination by IWC-1220(c). The NRC requires that 10% of the welds exempted by IWC-1220(c) be examined by volumetric or surface methods. This weld is one of the 10%.

The following system abbreviations are used throughout this section:

COND	Main Condensate
CRD	Control Rod Drive
DW	Demineralized Water
EDR	Equipment Drains, Radioactive
FDR	Floor Drains, Radioactive
FPC	Fuel Pool Cooling
HPCS	High Pressure Core Spray
LPCI	Low Pressure Coolant Injection
LPCS	Low Pressure Core Spray
MS	Main Steam
MSLC	Main Steam Leakage Control
RCC	Reactor Closed Cooling
RFW	Reactor Feedwater
RHR	Residual Heat Removal
RCIC	Reactor Core Isolation Cooling System
RPV	Reactor Pressure Vessel
RRC	Reactor Recirculation
RWCU	Reactor Water Cleanup
SLC	Standby Liquid Control
SSW	Standby Service Water

WNP-02
INTERVAL: PSI
PERIOD: NA
OUTAGE:
DRAWING NO. RPV-101

WASHINGTON PUBLIC POWER SUPPLY SYSTEM
PROGRAM PLAN AND SCHEDULE
SYSTEM OR COMPONENT: RPV
DESCRIPTION: SHL CRS & SKRT KNKL

DATE 12/14/84

IDENT. NO.	DESCRIPTION	SECT. XI EXAM.	EXAM MTH.	PROCEDURE	CAL. BLOCK	INSERVICE REQ.	INSERVICE SCHEDULED OUTAGE	NOTES
AA	BTM HD-SC#1WD	B-A	VOL	UTP-40	UT-118			CAT. B-B PER S75
AB	#1-#2 SC CRC WD	B-A	VOL	UTP-40	UT-120			
AC	#2-#3 SC CRC WD	B-A	VOL	UTP-40	UT-120			CAT. B-B PER S75
AD	#3-#4 SC CRC WD	B-A	VOL	UTP-40	UT-120			CAT. B-B PER S75
AE	#4 SC-FL CRC WD	B-A	VOL	UTP-25	UT-123			CAT. B-C PER S75
CG	SKIRT KNUCKLE	B-H	VOL	UTP-27	UT-119			
BA	#1 SC VRT WD@45	B-A	VOL	UTP-40	UT-119			TOP 14" CAT. B-A; REST IS CAT. B-B PER S75
BB	#1 SC VRT W@135	B-A	VOL	UTP-40	UT-119			TOP 14" CAT. B-A; REST IS CAT. B-B PER S75
BC	#1 SC VRT W@225	B-A	VOL	UTP-40	UT-119			TOP 14" CAT. B-A; REST IS CAT B-B PER S75

WNP-02
INTERVAL: PSI
PERIOD: NA
OUTAGE:
DRAWING NO. RPV-101

WASHINGTON PUBLIC POWER SUPPLY SYSTEM
PROGRAM PLAN AND SCHEDULE
SYSTEM OR COMPONENT: RPV
DESCRIPTION: SHELL COURSES

DATE 12/14/84

IDENT. NO.	DESCRIPTION	SECT. XI EXAM.	EXAM MTH.	PROCEDURE	CAL. BLOCK	INSERVICE REQ.	INSERVICE SCHEDULED OUTAGE	NOTES
BD	#1 SC VRT W@315	B-A	VOL	UTP-40	UT-119			TOP 14" CAT. B-A; REST IS CAT. B-B PER S75
BE	#2 SC VRT W@ 10	B-A	VOL	UTP-40	UT-120			CAT. B-B PER S75
BF	#2 SC VRT W@100	B-A	VOL	UTP-40	UT-120			CAT. B-B PER S75
BG	#2 SC VRT W@190	B-A	VOL	UTP-40	UT-120			CAT. B-B PER S75
BH	#2 SC VRT W@280	B-A	VOL	UTP-40	UT-120			CAT. B-B PER S75
BJ	#3 SC VRT W@ 50	B-A	VOL	UTP-40	UT-120			CAT. B-B PER S75
BK	#3 SC VRT W@170	B-A	VOL	UTP-40	UT-120			CAT. B-B PER S75
BM	#3 SC VRT W@290	B-A	VOL	UTP-40	UT-120			CAT. B-B PER S75
BN	#4 SC VRT W@330	B-A	VOL	UTP-40	UT-121			CAT. B-B PER S75
BP	#4 SC VRT W@ 90	B-A	VOL	UTP-40	UT-121			CAT. B-B PER S75
BR	#4 SC VRT W@210	B-A	VOL	UTP-30	UT-121			CAT. B-B PER S75

WNP-02
INTERVAL: PSI
PERIOD: NA
OUTAGE:
DRAWING NO. RPV-101

WASHINGTON PUBLIC POWER SUPPLY SYSTEM
PROGRAM PLAN AND SCHEDULE
SYSTEM OR COMPONENT: RPV
DESCRIPTION: NOZZLES - SHELL

DATE 12/14/84

IDENT. NO.	DESCRIPTION	SECT. XI EXAM.	EXAM MTH.	PROCEDURE	CAL. BLOCK	INSERVICE REQ.	INSERVICE SCHEDULED OUTAGE	NOTES
N1-0	RRC SUC NZ-V @0	B-D	VOL	UTP-41	UT-119			
N1-0-IR	RRC NZ-IR @ 0	B-D	VOL	QCI 6-4				INNER RADIUS
N1-180	RRC NZ-V @ 180	B-D	VOL	UTP-41	UT-119			
N1-180-IR	RRC NZ-IR @ 180	B-D	VOL	QCI 6-4				INNER RADIUS
N2-30	RRC NZ-V @ 30	B-D	VOL	UTP-41	UT-119			
N2-30-IR	RRC NZ-IR @ 30	B-D	VOL	QCI 6-4				INNER RADIUS
N2-60	RRC NZ-V @ 60	B-D	VOL	UTP-41	UT-119			
N2-60-IR	RRC NZ-IR @ 60	B-D	VOL	QCI 6-4				INNER RADIUS
N2-90	RRC NZ-V @ 90	B-D	VOL	UTP-41	UT-119			
N2-90-IR	RRC NZ-IR @ 90	B-D	VOL	QCI 6-4				INNER RADIUS
N2-120	RRC NZ-V @ 120	B-D	VOL	UTP-41	UT-119			
N2-120-IR	RRC NZ-IR @ 120	B-D	VOL	QCI 6-4				INNER RADIUS
N2-150	RRC NZ-V @ 150	B-D	VOL	UTP-41	UT-119			
N2-150-IR	RRC NZ-IR @ 150	B-D	VOL	QCI 6-4				INNER RADIUS
N2-210	RRC NZ-V @ 210	B-D	VOL	UTP-41	UT-119			
N2-210-IR	RRC NZ-IR @ 210	B-D	VOL	QCI 6-4				INNER RADIUS
N2-240	RRC NZ-V @ 240	B-D	VOL	UTP-41	UT-119			

WNP-02
INTERVAL: PSI
PERIOD: NA
OUTAGE:
DRAWING NO. RPV-101

WASHINGTON PUBLIC POWER SUPPLY SYSTEM
PROGRAM PLAN AND SCHEDULE
SYSTEM OR COMPONENT: RPV
DESCRIPTION: NOZZLES - SHELL

DATE 12/14/84

IDENT. NO.	DESCRIPTION	SECT. XI EXAM.	EXAM MTH.	PROCEDURE	CAL. BLOCK	INSERVICE REQ.	SCHEDULED OUTAGE	NOTES
N2-240-IR	RRC NZ-IR @ 240	B-D	VOL	QCI 6-4				INNER RADIUS
N2-270	RRC NZ-V @ 270	B-D	VOL	UTP-41	UT-119			
N2-270-IR	RRC NZ-IR @ 270	B-D	VOL	QCI 6-4				INNER RADIUS
N2-300	RRC NZ-V @ 300	B-D	VOL	UTP-41	UT-119			
N2-300-IR	RRC NZ-IR @ 300	B-D	VOL	QCI 6-4				INNER RADIUS
N2-330	RRC NZ-V @ 330	B-D	VOL	UTP-41	UT-119			
N2-330-IR	RRC NZ-IR @ 330	B-D	VOL	QCI 6-4				INNER RADIUS
N3-72	MS NZ-V @ 72	B-D	VOL	UTP-41	UT-121			
N3-72-IR	MS NZ-IR @ 72	B-D	VOL	QCI 6-4				INNER RADIUS
N3-108	MS NZ-V @ 108	B-D	VOL	UTP-41	UT-121			
N3-108-IR	MS NZ-IR @ 108	B-D	VOL	QCI 6-4				INNER RADIUS
N3-252	MS NZ-V @ 252	B-D	VOL	UTP-41	UT-121			
N3-252-IR	MS NZ-IR @ 252	B-D	VOL	QCI 6-4				INNER RADIUS
N3-288	MS NZ-V @ 288	B-D	VOL	UTP-41	UT-121			
N3-288-IR	MS NZ-IR @ 288	B-D	VOL	QCI 6-4				INNER RADIUS
N4-30	FW NZ-V @ 30	B-D	VOL	UTP-41	UT-120			
N4-30-IR	FW NZ-IR @ 30	B-D	VOL	UTP-36	UT-120			INNER RADIUS

WNP-02
INTERVAL: PSI
PERIOD: NA
OUTAGE:
DRAWING NO. RPV-101

WASHINGTON PUBLIC POWER SUPPLY SYSTEM
PROGRAM PLAN AND SCHEDULE
SYSTEM OR COMPONENT: RPV
DESCRIPTION: NOZZLES - SHELL

DATE 12/14/84

IDENT. NO.	DESCRIPTION	SECT. XI EXAM.	EXAM MTH.	PROCEDURE	CAL. BLOCK	INSERVICE REQ.	INSERVICE SCHEDULED OUTAGE	NOTES
			SUR	PTP-1				NOZZLE INNER RADIUS
N4-30-NB	FW NZ BORE @ 30	B-D	VOL	QCI 6-4	UT-120			NOZZLE BORE
N4-90	FW NZ-V @ 90	B-D	VOL	UTP-41	UT-120			
N4-90-IR	FW NZ-IR @ 90	B-D	VOL	UTP-36	UT-120			INNER RADIUS
			SUR	PTP-1				NOZZLE INNER RADIUS
N4-90-NB	FW NZ BORE @ 90	B-D	VOL	QCI 6-4	UT-120			NOZZLE BORE
N4-150	FW NZ-V @ 150	B-D	VOL	UTP-41	UT-120			
N4-150-IR	FW NZ-IR @ 150	B-D	VOL	UTP-36	UT-120			INNER RADIUS
			SUR	PTP-1				INNER RADIUS
N4-150-NB	FW NZ BORE @150	B-D	VOL	QCI 6-4	UT-120			NOZZLE BORE
N4-210	FW NZ-V @ 210	B-D	VOL	UTP-41	UT-120			
N4-210-IR	FW NZ-IR @ 210	B-D	VOL	UTP-36	UT-120			INNER RADIUS
			SUR	PTP-1				NOZZLE INNER RADIUS
N4-210-NB	FW NZ BORE @210	B-D	VOL	QCI 6-4	UT-120			NOZZLE BORE
N4-270	FW NZ-V @ 270	B-D	VOL	UTP-41	UT-120			
N4-270-IR	FW NZ-IR @ 270	B-D	VOL	UTP-36	UT-120			INNER RADIUS
			SUR	PTP-1				INNER RADIUS

WNP-02
INTERVAL: PSI
PERIOD: NA
OUTAGE:
DRAWING NO. RPV-101

WASHINGTON PUBLIC POWER SUPPLY SYSTEM
PROGRAM PLAN AND SCHEDULE
SYSTEM OR COMPONENT: RPV
DESCRIPTION: NOZZLES - SHELL

DATE 12/14/84

IDENT. NO.	DESCRIPTION	SECT. XI EXAM.	EXAM MTH.	PROCEDURE	CAL. BLOCK	INSERVICE REQ.	INSERVICE SCHEDULED OUTAGE	NOTES
N4-270-NB	FW NZ BORE @270	B-D	VOL	QCI 6-4	UT-120			NOZZLE BORE
N4-330	FW NZ-V @ 330	B-D	VOL	UTP-41	UT-120			
N4-330-IR	FW NZ-IR @ 330	B-D	VOL	UTP-36	UT-120			INNER RADIUS
			SUR	PTP-1				INNER RADIUS
N4-330-NB	FW NZ BORE @330	B-D	VOL	QCI 6-4	UT-120			NOZZLE BORE
N5-120	LPCS NZ-V @ 120	B-D	VOL	UTP-41	UT-120			
N5-120-IR	LPCS NZ-IR @120	B-D	VOL	QCI 6-4				INNER RADIUS
N6-45	LPCS NZ-V @ 45	B-D	VOL	UTP-41	UT-120			
N6-45-IR	LPCS NZ-IR @ 45	B-D	VOL	QCI 6-4				INNER RADIUS
N6-135	LPCS NZ-V @ 135	B-D	VOL	UTP-41	UT-120			
N6-135-IR	LPCS NZ-IR @135	B-D	VOL	QCI 6-4				INNER RADIUS
N6-315	LPCS NZ-V @ 315	B-D	VOL	UTP-41	UT-120			
N6-315-IR	LPCS NZ-IR @315	B-D	VOL	QCI 6-4				INNER RADIUS
N9-105	JP IN-NZ-V @105	B-D	VOL	UTP-30	UT-119			
N9-105-IR	JP IN-NZ-IR@105	B-D	VOL	QCI 6-4				INNER RADIUS
N9-285	JP IN-NZ-V @285	B-D	VOL	UTP-30	UT-119			
N9-285-IR	JP IN-NZ-IR@285	B-D	VOL	QCI 6-4				INNER RADIUS

WNP-02
INTERVAL: PSI
PERIOD: NA
OUTAGE:
DRAWING NO. RPV-101

WASHINGTON PUBLIC POWER SUPPLY SYSTEM
PROGRAM PLAN AND SCHEDULE
SYSTEM OR COMPONENT: RPV
DESCRIPTION: NOZZLES - SHELL

IDENT. NO.	DESCRIPTION	SECT. XI EXAM.	EXAM MTH.	PROCEDURE	CAL. BLOCK	INSERVICE REQ.	INSERVICE SCHEDULED OUTAGE	NOTES
4JP(NZ)A-1								
	N-9 NZ-SE @ 105	B-J	VOL	UTP-10	UT-109			SHOWN ON RPV-115
			SUR	PTP-1				SHOWN ON RPV-115
4JP(NZ)A-2								
	N9 SE-PN SE@105	B-J	VOL	UTP-10	UT-29			SHOWN ON RPV-115
			SUR	PTP-1				SHOWN ON RPV-115
4JP(NZ)B-1								
	N9 NZ-SE @ 285	B-J	VOL	UTP-10	UT-109			SHOWN ON RPV-115
			SUR	PTP-1				SHOWN ON RPV-115
4JP(NZ)B-2								
	N9 SE-PN SE@285	B-J	VOL	UTP-10	UT-29			SHOWN ON RPV-115
			SUR	PTP-1				SHOWN ON RPV-115
N10-180								
	CRD NZ-V @180	B-D	VOL	UTP-30	UT-120			(CAPPED)
N10-180-IR								
	CRD NZ-IR@180	B-D	VOL	QCI 6-4				INNER RADIUS
5CRD(NZ)-1								
	CRD NZ-SE @180	B-J	VOL	UTP-10	UT-110			SHOWN ON RPV-113
			SUR	PTP-1				SHOWN ON RPV-113
3CRD(NZ)-1								
	CRD SE-CAP @180	B-J	SUR	PTP-1				SHOWN ON RPV-113
N16-240								
	HPCS NZ-V @ 240	B-D	VOL	UTP-41	UT-120			
N16-240-IR								
	HPCS NZ-IR @240	B-D	VOL	QCI 6-4				INNER RADIUS
N12								
	VESS INST PENT	B-E	VT-2	QCI 7-1				N12A @20, N12B @160 N12C @200, N12D @340
N13								
	VESS INST PENT	B-E	VT-2	QCI 7-1				N13A @10, N13B @190

WNP-02
INTERVAL: PSI
PERIOD: NA
OUTAGE:
DRAWING NO. RPV-101

WASHINGTON PUBLIC POWER SUPPLY SYSTEM
PROGRAM PLAN AND SCHEDULE
SYSTEM OR COMPONENT: RPV
DESCRIPTION: NOZZLES - SHELL

DATE 12/14/84

IDENT. NO.	DESCRIPTION	SECT. XI EXAM.	EXAM MTH.	PROCEDURE	CAL. BLOCK	INSERVICE REQ.	INSERVICE SCHEDULED OUTAGE	NOTES
N14	VESS INST PENT	B-E	VT-2	QCI 7-1				N14A @340, N14B @220 N14C @160, N14D @20
N17	FLG SEAL LK PEN	B-E	VT-2	QCI 7-1				

WNP-02
INTERVAL: PSI
PERIOD: NA
OUTAGE:
DRAWING NO. RPV-101

WASHINGTON PUBLIC POWER SUPPLY SYSTEM
PROGRAM PLAN AND SCHEDULE
SYSTEM OR COMPONENT: RPV
DESCRIPTION: MAJOR REPAIR AREAS

DATE 12/14/84

IDENT. NO.	DESCRIPTION	SECT. XI EXAM.	EXAM MTH.	PROCEDURE	CAL. BLOCK	INSERVICE REQ.	INSERVICE SCHEDULED OUTAGE	NOTES
MRP-1	REPAIR AREA	B-A	VOL	UTP-40	UT-120			MAJOR REPAIR AREA 15"X30" IN #2 SHELL @ APPROX 238 DEGREES ELEVATION 545'
MRP-2	REPAIR AREA	N/A	N/A	N/A				NO EXAM REQ'D. NOT IN BELTLINE REGION; BUT WILL BE EXAM'D DURING N3-108 SHELL WELD EXAM.
MRP-3	REPAIR AREA	N/A	N/A	N/A				NO EXAM REQ'D NOT IN BELTLINE REGION. N2-150 (RRC) REPAIR ADJACENT TO NZ-SE WELD 3X3/4X11/16 ID
MRP-4	REPAIR AREA	N/A	N/A	N/A				NO EXAM REQ'D NOT IN BELTLINE REGION; BUT WILL BE EXAM'D DURING N2-120 NZ TO SHELL WELD EXAM.

WNP-02
INTERVAL: PSI
PERIOD: NA
OUTAGE:
DRAWING NO. RPV-101

WASHINGTON PUBLIC POWER SUPPLY SYSTEM
PROGRAM PLAN AND SCHEDULE
SYSTEM OR COMPONENT: RPV
DESCRIPTION: RPV STUDS, NUTS, ETC

IDENT. NO.	DESCRIPTION	SECT. XI EXAM.	EXAM MTH.	PROCEDURE	CAL. BLOCK	INSERVICE REQ.	INSERVICE SCHEDULED OUTAGE	NOTES
RPV STUD 35-1-1A								
	RPV STUD	B-G-1	VOL	UTP-32	UT-130			STUD HOLE #1 IS THE 1ST CW FROM 0 DEG AZ NUMBERS CONTINUE CONSECUTIVELY IN CW DIRECTION.
			SUR	PTP-1				STUD HOLE #1 IS THE 1ST CW FROM 0 DEG AZ NUMBERS CONTINUE CONSECUTIVELY IN CW DIRECTION.
RPV STUD 35-1-2A								
	RPV STUD	B-G-1	VOL	UTP-32	UT-130			STUD HOLE #1 IS THE 1ST CW FROM 0 DEG AZ NUMBERS CONTINUE CONSECUTIVELY IN CW DIRECTION.
			SUR	PTP-1				STUD HOLE #1 IS THE 1ST CW FROM 0 DEG AZ NUMBERS CONTINUE CONSECUTIVELY IN CW DIRECTION.
RPV STUD 35-1-3A								
	RPV STUD	B-G-1	VOL	UTP-32	UT-130			STUD HOLE #1 IS THE 1ST CW FROM 0 DEG AZ NUMBERS CONTINUE CONSECUTIVELY IN CW DIRECTION.

WNP-02
INTERVAL: PSI
PERIOD: NA
OUTAGE:
DRAWING NO. RPV-101

WASHINGTON PUBLIC POWER SUPPLY SYSTEM
PROGRAM PLAN AND SCHEDULE
SYSTEM OR COMPONENT: RPV
DESCRIPTION: RPV STUDS, NUTS, ETC

IDENT. NO.	DESCRIPTION	SECT. XI EXAM.	EXAM MTH.	PROCEDURE	CAL. BLOCK	INSERVICE REQ.	INSERVICE SCHEDULED OUTAGE	NOTES
			SUR	PTP-1				STUD HOLE #1 IS THE 1ST CW FROM 0 DEG AZ NUMBERS CONTINUE CONSECUTIVELY IN CW DIRECTION.
RPV STUD 35-1-4A	RPV STUD	B-G-1	VOL	UTP-32	UT-130			STUD HOLE #1 IS THE 1ST CW FROM 0 DEG AZ NUMBERS CONTINUE CONSECUTIVELY IN CW DIRECTION.
			SUR	PTP-1				STUD HOLE #1 IS THE 1ST CW FROM 0 DEG AZ NUMBERS CONTINUE CONSECUTIVELY IN CW DIRECTION.
RPV STUD 35-1-5A	RPV STUD	B-G-1	VOL	UTP-32	UT-130			STUD HOLE #1 IS THE 1ST CW FROM 0 DEG AZ NUMBERS CONTINUE CONSECUTIVELY IN CW DIRECTION.
			SUR	PTP-1				STUD HOLE #1 IS THE 1ST CW FROM 0 DEG AZ NUMBERS CONTINUE CONSECUTIVELY IN CW DIRECTION.

WNP-02
INTERVAL: PSI
PERIOD: NA
OUTAGE:
DRAWING NO. RPV-101

WASHINGTON PUBLIC POWER SUPPLY SYSTEM
PROGRAM PLAN AND SCHEDULE
SYSTEM OR COMPONENT: RPV
DESCRIPTION: RPV STUDS, NUTS, ETC

DATE 12/14/84

IDENT. NO.	DESCRIPTION	SECT. XI EXAM.	EXAM MTH.	PROCEDURE	CAL. BLOCK	INSERVICE REQ.	INSERVICE SCHEDULED OUTAGE	NOTES
RPV STUD 35-1-6A								
	RPV STUD	B-G-1	VOL	UTP-32	UT-130			STUD HOLE #1 IS THE 1ST CW FROM 0 DEG AZ NUMBERS CONTINUE CONSECUTIVELY IN CW DIRECTION.
			SUR	PTP-1				STUD HOLE #1 IS THE 1ST CW FROM 0 DEG AZ NUMBERS CONTINUE CONSECUTIVELY IN CW DIRECTION.
RPV STUD 35-1-7A								
	RPV STUD	B-G-1	VOL	UTP-32	UT-130			STUD HOLE #1 IS THE 1ST CW FROM 0 DEG AZ NUMBERS CONTINUE CONSECUTIVELY IN CW DIRECTION.
			SUR	PTP-1				STUD HOLE #1 IS THE 1ST CW FROM 0 DEG AZ NUMBERS CONTINUE CONSECUTIVELY IN CW DIRECTION.
RPV STUD 35-1-8A								
	RPV STUD	B-G-1	VOL	UTP-32	UT-130			STUD HOLE #1 IS THE 1ST CW FROM 0 DEG AZ NUMBERS CONTINUE CONSECUTIVELY IN CW DIRECTION.

WNP-02
INTERVAL: PSI
PERIOD: NA
OUTAGE:
DRAWING NO. RPV-101

WASHINGTON PUBLIC POWER SUPPLY SYSTEM
PROGRAM PLAN AND SCHEDULE
SYSTEM OR COMPONENT: RPV
DESCRIPTION: RPV STUDS, NUTS, ETC

IDENT. NO.	DESCRIPTION	SECT. XI EXAM.	EXAM MTH.	PROCEDURE	CAL. BLOCK	INSERVICE REQ.	INSERVICE SCHEDULED OUTAGE	NOTES
			SUR	PTP-1				STUD HOLE #1 IS THE 1ST CW FROM 0 DEG AZ NUMBERS CONTINUE CONSECUTIVELY IN CW DIRECTION.
RPV STUD 35-1-9A	RPV STUD	B-G-1	VOL	UTP-32	UT-130			STUD HOLE #1 IS THE 1ST CW FROM 0 DEG AZ NUMBERS CONTINUE CONSECUTIVELY IN CW DIRECTION.
			SUR	PTP-1				STUD HOLE #1 IS THE 1ST CW FROM 0 DEG AZ NUMBERS CONTINUE CONSECUTIVELY IN CW DIRECTION.
RPV STUD 35-1-10A	RPV STUD	B-G-1	VOL	UTP-32	UT-130			STUD HOLE #1 IS THE 1ST CW FROM 0 DEG AZ NUMBERS CONTINUE CONSECUTIVELY IN CW DIRECTION.
			SUR	PTP-1				STUD HOLE #1 IS THE 1ST CW FROM 0 DEG AZ NUMBERS CONTINUE CONSECUTIVELY IN CW DIRECTION.

WNP-02
INTERVAL: PSI
PERIOD: NA
OUTAGE:
DRAWING NO. RPV-101

WASHINGTON PUBLIC POWER SUPPLY SYSTEM
PROGRAM PLAN AND SCHEDULE
SYSTEM OR COMPONENT: RPV
DESCRIPTION: RPV STUDS, NUTS, ETC

IDENT. NO.	DESCRIPTION	SECT. XI EXAM.	EXAM MTH.	PROCEDURE	CAL. BLOCK	INSERVICE REQ.	INSERVICE SCHEDULED OUTAGE	NOTES
RPV STUD 35-1-11A								
	RPV STUD	B-G-1	VOL	UTP-32	UT-130			STUD HOLE #1 IS THE 1ST CW FROM 0 DEG AZ NUMBERS CONTINUE CONSECUTIVELY IN CW DIRECTION.
			SUR	PTP-1				STUD HOLE #1 IS THE 1ST CW FROM 0 DEG AZ NUMBERS CONTINUE CONSECUTIVELY IN CW DIRECTION.
RPV STUD 35-1-12A								
	RPV STUD	B-G-1	VOL	UTP-32	UT-130			STUD HOLE #1 IS THE 1ST CW FROM 0 DEG AZ NUMBERS CONTINUE CONSECUTIVELY IN CW DIRECTION.
			SUR	PTP-1				STUD HOLE #1 IS THE 1ST CW FROM 0 DEG AZ NUMBERS CONTINUE CONSECUTIVELY IN CW DIRECTION.
RPV STUD 35-1-13A								
	RPV STUD	B-G-1	VOL	UTP-32	UT-130			STUD HOLE #1 IS THE 1ST CW FROM 0 DEG AZ NUMBERS CONTINUE CONSECUTIVELY IN CW DIRECTION.

WNP-02
INTERVAL: PSI
PERIOD: NA
OUTAGE:
DRAWING NO. RPV-101

WASHINGTON PUBLIC POWER SUPPLY SYSTEM
PROGRAM PLAN AND SCHEDULE
SYSTEM OR COMPONENT: RPV
DESCRIPTION: RPV STUDS, NUTS, ETC

IDENT. NO.	DESCRIPTION	SECT. XI EXAM.	EXAM MTH.	PROCEDURE	CAL. BLOCK	INSERVICE REQ.	INSERVICE SCHEDULED OUTAGE	NOTES
			SUR	PTP-1				STUD HOLE #1 IS THE 1ST CW FROM 0 DEG AZ NUMBERS CONTINUE CONSECUTIVELY IN CW DIRECTION.
RPV STUD 35-1-14A	RPV STUD	B-G-1	VOL	UTP-32	UT-130			STUD HOLE #1 IS THE 1ST CW FROM 0 DEG AZ NUMBERS CONTINUE CONSECUTIVELY IN CW DIRECTION.
			SUR	PTP-1				STUD HOLE #1 IS THE 1ST CW FROM 0 DEG AZ NUMBERS CONTINUE CONSECUTIVELY IN CW DIRECTION.
RPV STUD 35-1-15A	RPV STUD	B-G-1	VOL	UTP-32	UT-130			STUD HOLE #1 IS THE 1ST CW FROM 0 DEG AZ NUMBERS CONTINUE CONSECUTIVELY IN CW DIRECTION.
			SUR	PTP-1				STUD HOLE #1 IS THE 1ST CW FROM 0 DEG AZ NUMBERS CONTINUE CONSECUTIVELY IN CW DIRECTION.

WNP-02
INTERVAL: PSI
PERIOD: NA
OUTAGE:
DRAWING NO. RPV-101

WASHINGTON PUBLIC POWER SUPPLY SYSTEM
PROGRAM PLAN AND SCHEDULE
SYSTEM OR COMPONENT: RPV
DESCRIPTION: RPV STUDS, NUTS, ETC

IDENT. NO.	DESCRIPTION	SECT. XI EXAM.	EXAM MTH.	PROCEDURE	CAL. BLOCK	INSERVICE REQ.	INSERVICE SCHEDULED OUTAGE	NOTES
RPV STUD 35-1-16A								
	RPV STUD	B-G-1	VOL	UTP-32	UT-130			STUD HOLE #1 IS THE 1ST CW FROM 0 DEG AZ NUMBERS CONTINUE CONSECUTIVELY IN CW DIRECTION.
			SUR	PTP-1				STUD HOLE #1 IS THE 1ST CW FROM 0 DEG AZ NUMBERS CONTINUE CONSECUTIVELY IN CW DIRECTION.
RPV STUD 35-1-17A								
	RPV STUD	B-G-1	VOL	UTP-32	UT-130			STUD HOLE #1 IS THE 1ST CW FROM 0 DEG AZ NUMBERS CONTINUE CONSECUTIVELY IN CW DIRECTION.
			SUR	PTP-1				STUD HOLE #1 IS THE 1ST CW FROM 0 DEG AZ NUMBERS CONTINUE CONSECUTIVELY IN CW DIRECTION.
RPV STUD 35-1-18A								
	RPV STUD	B-G-1	VOL	UTP-32	UT-130			STUD HOLE #1 IS THE 1ST CW FROM 0 DEG AZ NUMBERS CONTINUE CONSECUTIVELY IN CW DIRECTION.

WNP-02
INTERVAL: PSI
PERIOD: NA
OUTAGE:
DRAWING NO. RPV-101

WASHINGTON PUBLIC POWER SUPPLY SYSTEM
PROGRAM PLAN AND SCHEDULE
SYSTEM OR COMPONENT: RPV
DESCRIPTION: RPV STUDS, NUTS, ETC

IDENT. NO.	DESCRIPTION	SECT. XI EXAM.	EXAM MTH.	PROCEDURE	CAL. BLOCK	INSERVICE REQ.	INSERVICE SCHEDULED OUTAGE	NOTES
			SUR	PTP-1				STUD HOLE #1 IS THE 1ST CW FROM 0 DEG AZ NUMBERS CONTINUE CONSECUTIVELY IN CW DIRECTION.
RPV STUD 35-1-19A	RPV STUD	B-G-1	VOL	UTP-32	UT-130			STUD HOLE #1 IS THE 1ST CW FROM 0 DEG AZ NUMBERS CONTINUE CONSECUTIVELY IN CW DIRECTION.
			SUR	PTP-1				STUD HOLE #1 IS THE 1ST CW FROM 0 DEG AZ NUMBERS CONTINUE CONSECUTIVELY IN CW DIRECTION.
RPV STUD 35-1-20A	RPV STUD	B-G-1	VOL	UTP-32	UT-130			STUD HOLE #1 IS THE 1ST CW FROM 0 DEG AZ NUMBERS CONTINUE CONSECUTIVELY IN CW DIRECTION.
			SUR	PTP-1				STUD HOLE #1 IS THE 1ST CW FROM 0 DEG AZ NUMBERS CONTINUE CONSECUTIVELY IN CW DIRECTION.

WNP-02
INTERVAL: PSI
PERIOD: NA
OUTAGE:
DRAWING NO. RPV-101

WASHINGTON PUBLIC POWER SUPPLY SYSTEM
PROGRAM PLAN AND SCHEDULE
SYSTEM OR COMPONENT: RPV
DESCRIPTION: RPV STUDS, NUTS, ETC

IDENT. NO.	DESCRIPTION	SECT. XI EXAM.	EXAM MTH.	PROCEDURE	CAL. BLOCK	INSERVICE REQ.	INSERVICE SCHEDULED OUTAGE	NOTES
RPV STUD 35-1-21A								
	RPV STUD	B-G-1	VOL	UTP-32	UT-130			STUD HOLE #1 IS THE 1ST CW FROM 0 DEG AZ NUMBERS CONTINUE CONSECUTIVELY IN CW DIRECTION.
			SUR	PTP-1				STUD HOLE #1 IS THE 1ST CW FROM 0 DEG AZ NUMBERS CONTINUE CONSECUTIVELY IN CW DIRECTION.
RPV STUD 35-1-22A								
	RPV STUD	B-G-1	VOL	UTP-32	UT-130			STUD HOLE #1 IS THE 1ST CW FROM 0 DEG AZ NUMBERS CONTINUE CONSECUTIVELY IN CW DIRECTION.
			SUR	PTP-1				STUD HOLE #1 IS THE 1ST CW FROM 0 DEG AZ NUMBERS CONTINUE CONSECUTIVELY IN CW DIRECTION.
RPV STUD 35-1-23A								
	RPV STUD	B-G-1	VOL	UTP-32	UT-130			STUD HOLE #1 IS THE 1ST CW FROM 0 DEG AZ NUMBERS CONTINUE CONSECUTIVELY IN CW DIRECTION.

WNP-02
INTERVAL: PSI
PERIOD: NA
OUTAGE:
DRAWING NO. RPV-101

WASHINGTON PUBLIC POWER SUPPLY SYSTEM
PROGRAM PLAN AND SCHEDULE
SYSTEM OR COMPONENT: RPV
DESCRIPTION: RPV STUDS, NUTS, ETC

DATE 12/14/84

IDENT. NO.	DESCRIPTION	SECT. XI EXAM.	EXAM MTH.	PROCEDURE	CAL. BLOCK	INSERVICE REQ.	INSERVICE SCHEDULED OUTAGE	NOTES
			SUR	PTP-1				STUD HOLE #1 IS THE 1ST CW FROM 0 DEG AZ NUMBERS CONTINUE CONSECUTIVELY IN CW DIRECTION.
RPV STUD 35-1-24A	RPV STUD	B-G-1	VOL	UTP-32	UT-130			STUD HOLE #1 IS THE 1ST CW FROM 0 DEG AZ NUMBERS CONTINUE CONSECUTIVELY IN CW DIRECTION.
			SUR	PTP-1				STUD HOLE #1 IS THE 1ST CW FROM 0 DEG AZ NUMBERS CONTINUE CONSECUTIVELY IN CW DIRECTION.
RPV STUD 35-1-25A	RPV STUD	B-G-1	VOL	UTP-32	UT-130			STUD HOLE #1 IS THE 1ST CW FROM 0 DEG AZ NUMBERS CONTINUE CONSECUTIVELY IN CW DIRECTION.
			SUR	PTP-1				STUD HOLE #1 IS THE 1ST CW FROM 0 DEG AZ NUMBERS CONTINUE CONSECUTIVELY IN CW DIRECTION.

WNP-02
INTERVAL: PSI
PERIOD: NA
OUTAGE:
DRAWING NO. RPV-101

WASHINGTON PUBLIC POWER SUPPLY SYSTEM
PROGRAM PLAN AND SCHEDULE
SYSTEM OR COMPONENT: RPV
DESCRIPTION: RPV STUDS, NUTS, ETC

IDENT. NO.	DESCRIPTION	SECT. XI EXAM.	EXAM MTH.	PROCEDURE	CAL. BLOCK	INSERVICE REQ.	SCHEDULED OUTAGE	NOTES
RPV STUD 35-1-26A								
	RPV STUD	B-G-1	VOL	UTP-32	UT-130			STUD HOLE #1 IS THE 1ST CW FROM 0 DEG AZ NUMBERS CONTINUE CONSECUTIVELY IN CW DIRECTION.
			SUR	PTP-1				STUD HOLE #1 IS THE 1ST CW FROM 0 DEG AZ NUMBERS CONTINUE CONSECUTIVELY IN CW DIRECTION.
RPV STUD 35-1-27A								
	RPV STUD	B-G-1	VOL	UTP-32	UT-130			STUD HOLE #1 IS THE 1ST CW FROM 0 DEG AZ NUMBERS CONTINUE CONSECUTIVELY IN CW DIRECTION.
			SUR	PTP-1				STUD HOLE #1 IS THE 1ST CW FROM 0 DEG AZ NUMBERS CONTINUE CONSECUTIVELY IN CW DIRECTION.
RPV STUD 35-1-28A								
	RPV STUD	B-G-1	VOL	UTP-32	UT-130			STUD HOLE #1 IS THE 1ST CW FROM 0 DEG AZ NUMBERS CONTINUE CONSECUTIVELY IN CW DIRECTION.

WNP-02
INTERVAL: PSI
PERIOD: NA
OUTAGE:
DRAWING NO. RPV-101

WASHINGTON PUBLIC POWER SUPPLY SYSTEM
PROGRAM PLAN AND SCHEDULE
SYSTEM OR COMPONENT: RPV
DESCRIPTION: RPV STUDS, NUTS, ETC

DATE 12/14/84

IDENT. NO.	DESCRIPTION	SECT. XI EXAM.	EXAM MTH.	PROCEDURE	CAL. BLOCK	INSERVICE REQ.	INSERVICE SCHEDULED OUTAGE	NOTES
			SUR	PTP-1				STUD HOLE #1 IS THE 1ST CW FROM 0 DEG AZ NUMBERS CONTINUE CONSECUTIVELY IN CW DIRECTION.
RPV STUD 35-1-29A	RPV STUD	B-G-1	VOL	UTP-32	UT-130			STUD HOLE #1 IS THE 1ST CW FROM 0 DEG AZ NUMBERS CONTINUE CONSECUTIVELY IN CW DIRECTION.
			SUR	PTP-1				STUD HOLE #1 IS THE 1ST CW FROM 0 DEG AZ NUMBERS CONTINUE CONSECUTIVELY IN CW DIRECTION.
RPV STUD 35-1-30A	RPV STUD	B-G-1	VOL	UTP-32	UT-130			STUD HOLE #1 IS THE 1ST CW FROM 0 DEG AZ NUMBERS CONTINUE CONSECUTIVELY IN CW DIRECTION.
			SUR	PTP-1				STUD HOLE #1 IS THE 1ST CW FROM 0 DEG AZ NUMBERS CONTINUE CONSECUTIVELY IN CW DIRECTION.

WNP-02
INTERVAL: PSI
PERIOD: NA
OUTAGE:
DRAWING NO. RPV-101

WASHINGTON PUBLIC POWER SUPPLY SYSTEM
PROGRAM PLAN AND SCHEDULE
SYSTEM OR COMPONENT: RPV
DESCRIPTION: RPV STUDS, NUTS, ETC

IDENT. NO.	DESCRIPTION	SECT. XI EXAM.	EXAM MTH.	PROCEDURE	CAL. BLOCK	INSERVICE REQ.	INSERVICE SCHEDULED OUTAGE	NOTES
RPV STUD 35-1-31A								
	RPV STUD	B-G-1	VOL	UTP-32	UT-130			STUD HOLE #1 IS THE 1ST CW FROM 0 DEG AZ NUMBERS CONTINUE CONSECUTIVELY IN CW DIRECTION.
			SUR	PTP-1				STUD HOLE #1 IS THE 1ST CW FROM 0 DEG AZ NUMBERS CONTINUE CONSECUTIVELY IN CW DIRECTION.
RPV STUD 35-1-32A								
	RPV STUD	B-G-1	VOL	UTP-32	UT-130			STUD HOLE #1 IS THE 1ST CW FROM 0 DEG AZ NUMBERS CONTINUE CONSECUTIVELY IN CW DIRECTION.
			SUR	PTP-1				STUD HOLE #1 IS THE 1ST CW FROM 0 DEG AZ NUMBERS CONTINUE CONSECUTIVELY IN CW DIRECTION.
RPV STUD 35-1-33A								
	RPV STUD	B-G-1	VOL	UTP-32	UT-130			STUD HOLE #1 IS THE 1ST CW FROM 0 DEG AZ NUMBERS CONTINUE CONSECUTIVELY IN CW DIRECTION.

WNP-02
INTERVAL: PSI
PERIOD: NA
OUTAGE:
DRAWING NO. RPV-101

WASHINGTON PUBLIC POWER SUPPLY SYSTEM
PROGRAM PLAN AND SCHEDULE
SYSTEM OR COMPONENT: RPV
DESCRIPTION: RPV STUDS, NUTS, ETC

DATE 12/14/84

IDENT. NO.	DESCRIPTION	SECT. XI EXAM.	EXAM MTH.	PROCEDURE	CAL. BLOCK	INSERVICE REQ.	INSERVICE SCHEDULED OUTAGE	NOTES
			SUR	PTP-1				STUD HOLE #1 IS THE 1ST CW FROM 0 DEG AZ NUMBERS CONTINUE CONSECUTIVELY IN CW DIRECTION.
RPV STUD 35-1-34A	RPV STUD	B-G-1	VOL	UTP-32	UT-130			STUD HOLE #1 IS THE 1ST CW FROM 0 DEG AZ NUMBERS CONTINUE CONSECUTIVELY IN CW DIRECTION.
			SUR	PTP-1				STUD HOLE #1 IS THE 1ST CW FROM 0 DEG AZ NUMBERS CONTINUE CONSECUTIVELY IN CW DIRECTION.
RPV STUD 35-1-35A	RPV STUD	B-G-1	VOL	UTP-32	UT-130			BUSHING INSTALLED
			SUR	PTP-1				STUD HOLE #1 IS THE 1ST CW FROM 0 DEG AZ NUMBERS CONTINUE CONSECUTIVELY IN CW DIRECTION.
RPV STUD 35-1-36A	RPV STUD	B-G-1	VOL	UTP-32	UT-130			STUD HOLE #1 IS THE 1ST CW FROM 0 DEG AZ NUMBERS CONTINUE CONSECUTIVELY IN CW DIRECTION.

WNP-02
INTERVAL: PSI
PERIOD: NA
OUTAGE:
DRAWING NO. RPV-101

WASHINGTON PUBLIC POWER SUPPLY SYSTEM
PROGRAM PLAN AND SCHEDULE
SYSTEM OR COMPONENT: RPV
DESCRIPTION: RPV STUDS, NUTS, ETC

IDENT. NO.	DESCRIPTION	SECT. XI EXAM.	EXAM MTH.	PROCEDURE	CAL. BLOCK	INSERVICE REQ.	INSERVICE SCHEDULED OUTAGE	NOTES
			SUR	PTP-1				STUD HOLE #1 IS THE 1ST CW FROM 0 DEG AZ NUMBERS CONTINUE CONSECUTIVELY IN CW DIRECTION.
RPV STUD 35-1-37A	RPV STUD	B-G-1	VOL	UTP-32	UT-130			STUD HOLE #1 IS THE 1ST CW FROM 0 DEG AZ NUMBERS CONTINUE CONSECUTIVELY IN CW DIRECTION.
			SUR	PTP-1				STUD HOLE #1 IS THE 1ST CW FROM 0 DEG AZ NUMBERS CONTINUE CONSECUTIVELY IN CW DIRECTION.
RPV STUD 35-1-38A	RPV STUD	B-G-1	VOL	UTP-32	UT-130			STUD HOLE #1 IS THE 1ST CW FROM 0 DEG AZ NUMBERS CONTINUE CONSECUTIVELY IN CW DIRECTION.
			SUR	PTP-1				STUD HOLE #1 IS THE 1ST CW FROM 0 DEG AZ NUMBERS CONTINUE CONSECUTIVELY IN CW DIRECTION.

WNP-02
INTERVAL: PSI
PERIOD: NA
OUTAGE:
DRAWING NO. RPV-101

WASHINGTON PUBLIC POWER SUPPLY SYSTEM
PROGRAM PLAN AND SCHEDULE
SYSTEM OR COMPONENT: RPV
DESCRIPTION: RPV STUDS, NUTS, ETC

IDENT. NO.	DESCRIPTION	SECT. XI EXAM.	EXAM MTH.	PROCEDURE	CAL. BLOCK	INSERVICE REQ.	INSERVICE SCHEDULED OUTAGE	NOTES
RPV STUD 35-1-39A								
	RPV STUD	B-G-1	VOL	UTP-32	UT-130			STUD HOLE #1 IS THE 1ST CW FROM 0 DEG AZ NUMBERS CONTINUE CONSECUTIVELY IN CW DIRECTION.
			SUR	PTP-1				STUD HOLE #1 IS THE 1ST CW FROM 0 DEG AZ NUMBERS CONTINUE CONSECUTIVELY IN CW DIRECTION.
RPV STUD 35-1-40A								
	RPV STUD	B-G-1	VOL	UTP-32	UT-130			STUD HOLE #1 IS THE 1ST CW FROM 0 DEG AZ NUMBERS CONTINUE CONSECUTIVELY IN CW DIRECTION.
			SUR	PTP-1				STUD HOLE #1 IS THE 1ST CW FROM 0 DEG AZ NUMBERS CONTINUE CONSECUTIVELY IN CW DIRECTION.
RPV STUD 35-1-41A								
	RPV STUD	B-G-1	VOL	UTP-32	UT-130			STUD HOLE #1 IS THE 1ST CW FROM 0 DEG AZ NUMBERS CONTINUE CONSECUTIVELY IN CW DIRECTION.

WNP-02
INTERVAL: PSI
PERIOD: NA
OUTAGE:
DRAWING NO. RPV-101

WASHINGTON PUBLIC POWER SUPPLY SYSTEM
PROGRAM PLAN AND SCHEDULE
SYSTEM OR COMPONENT: RPV
DESCRIPTION: RPV STUDS, NUTS, ETC

IDENT. NO.	DESCRIPTION	SECT. XI EXAM.	EXAM MTH.	PROCEDURE	CAL. BLOCK	INSERVICE REQ.	INSERVICE SCHEDULED OUTAGE	NOTES
			SUR	PTP-1				STUD HOLE #1 IS THE 1ST CW FROM 0 DEG AZ NUMBERS CONTINUE CONSECUTIVELY IN CW DIRECTION.
RPV STUD 35-1-42A	RPV STUD	B-G-1	VOL	UTP-32	UT-130			STUD HOLE #1 IS THE 1ST CW FROM 0 DEG AZ NUMBERS CONTINUE CONSECUTIVELY IN CW DIRECTION.
			SUR	PTP-1				STUD HOLE #1 IS THE 1ST CW FROM 0 DEG AZ NUMBERS CONTINUE CONSECUTIVELY IN CW DIRECTION.
RPV STUD 35-1-43A	RPV STUD	B-G-1	VOL	UTP-32	UT-130			STUD HOLE #1 IS THE 1ST CW FROM 0 DEG AZ NUMBERS CONTINUE CONSECUTIVELY IN CW DIRECTION.
			SUR	PTP-1				STUD HOLE #1 IS THE 1ST CW FROM 0 DEG AZ NUMBERS CONTINUE CONSECUTIVELY IN CW DIRECTION.

WNP-02
INTERVAL: PSI
PERIOD: NA
OUTAGE:
DRAWING NO. RPV-101

WASHINGTON PUBLIC POWER SUPPLY SYSTEM
PROGRAM PLAN AND SCHEDULE
SYSTEM OR COMPONENT: RPV
DESCRIPTION: RPV STUDS, NUTS, ETC

IDENT. NO.	DESCRIPTION	SECT. XI EXAM.	EXAM MTH.	PROCEDURE	CAL. BLOCK	INSERVICE REQ.	INSERVICE SCHEDULED OUTAGE	NOTES:
RPV STUD 35-1-44A								
	RPV STUD	B-G-1	VOL	UTP-32	UT-130			STUD HOLE #1 IS THE 1ST CW FROM 0 DEG AZ NUMBERS CONTINUE CONSECUTIVELY IN CW DIRECTION.
			SUR	PTP-1				STUD HOLE #1 IS THE 1ST CW FROM 0 DEG AZ NUMBERS CONTINUE CONSECUTIVELY IN CW DIRECTION.
RPV STUD 35-1-45A								
	RPV STUD	B-G-1	VOL	UTP-32	UT-130			STUD HOLE #1 IS THE 1ST CW FROM 0 DEG AZ NUMBERS CONTINUE CONSECUTIVELY IN CW DIRECTION.
			SUR	PTP-1				STUD HOLE #1 IS THE 1ST CW FROM 0 DEG AZ NUMBERS CONTINUE CONSECUTIVELY IN CW DIRECTION.
RPV STUD 35-1-46A								
	RPV STUD	B-G-1	VOL	UTP-32	UT-130			STUD HOLE #1 IS THE 1ST CW FROM 0 DEG AZ NUMBERS CONTINUE CONSECUTIVELY IN CW DIRECTION.

WNP-02
INTERVAL: PSI
PERIOD: NA
OUTAGE:
DRAWING NO. RPV-101

WASHINGTON PUBLIC POWER SUPPLY SYSTEM
PROGRAM PLAN AND SCHEDULE
SYSTEM OR COMPONENT: RPV
DESCRIPTION: RPV STUDS, NUTS, ETC

IDENT. NO.	DESCRIPTION	SECT. XI EXAM.	EXAM MTH.	PROCEDURE	CAL. BLOCK	INSERVICE REQ.	INSERVICE SCHEDULED OUTAGE	NOTES
			SUR	PTP-1				STUD HOLE #1 IS THE 1ST CW FROM 0 DEG AZ NUMBERS CONTINUE CONSECUTIVELY IN CW DIRECTION.
RPV STUD 35-1-47A	RPV STUD	B-G-1	VOL	UTP-32	UT-130			STUD HOLE #1 IS THE 1ST CW FROM 0 DEG AZ NUMBERS CONTINUE CONSECUTIVELY IN CW DIRECTION.
			SUR	PTP-1				STUD HOLE #1 IS THE 1ST CW FROM 0 DEG AZ NUMBERS CONTINUE CONSECUTIVELY IN CW DIRECTION.
RPV STUD 35-1-48A	RPV STUD	B-G-1	VOL	UTP-32	UT-130			STUD HOLE #1 IS THE 1ST CW FROM 0 DEG AZ NUMBERS CONTINUE CONSECUTIVELY IN CW DIRECTION.
			SUR	PTP-1				STUD HOLE #1 IS THE 1ST CW FROM 0 DEG AZ NUMBERS CONTINUE CONSECUTIVELY IN CW DIRECTION.

WNP-02
INTERVAL: PSI
PERIOD: NA
OUTAGE:
DRAWING NO. RPV-101

WASHINGTON PUBLIC POWER SUPPLY SYSTEM
PROGRAM PLAN AND SCHEDULE
SYSTEM OR COMPONENT: RPV
DESCRIPTION: RPV STUDS, NUTS, ETC

IDENT. NO.	DESCRIPTION	SECT. XI EXAM.	EXAM MTH.	PROCEDURE	CAL. BLOCK	INSERVICE REQ.	INSERVICE SCHEDULED OUTAGE	NOTES
RPV STUD 35-1-49A								
	RPV STUD	B-G-1	VOL	UTP-32	UT-130			STUD HOLE #1 IS THE 1ST CW FROM 0 DEG AZ NUMBERS CONTINUE CONSECUTIVELY IN CW DIRECTION.
			SUR	PTP-1				STUD HOLE #1 IS THE 1ST CW FROM 0 DEG AZ NUMBERS CONTINUE CONSECUTIVELY IN CW DIRECTION.
RPV STUD 35-1-50A								
	RPV STUD	B-G-1	VOL	UTP-32	UT-130			STUD HOLE #1 IS THE 1ST CW FROM 0 DEG AZ NUMBERS CONTINUE CONSECUTIVELY IN CW DIRECTION.
			SUR	PTP-1				STUD HOLE #1 IS THE 1ST CW FROM 0 DEG AZ NUMBERS CONTINUE CONSECUTIVELY IN CW DIRECTION.
RPV STUD 35-1-51A								
	RPV STUD	B-G-1	VOL	UTP-32	UT-130			STUD HOLE #1 IS THE 1ST CW FROM 0 DEG AZ NUMBERS CONTINUE CONSECUTIVELY IN CW DIRECTION.

WNP-02
INTERVAL: PSI
PERIOD: NA
OUTAGE:
DRAWING NO. RPV-101

WASHINGTON PUBLIC POWER SUPPLY SYSTEM
PROGRAM PLAN AND SCHEDULE
SYSTEM OR COMPONENT: RPV
DESCRIPTION: RPV STUDS, NUTS, ETC

IDENT. NO.	DESCRIPTION	SECT. XI EXAM.	EXAM MTH.	PROCEDURE	CAL. BLOCK	INSERVICE REQ.	SCHEDULED OUTAGE	NOTES
			SUR	PTP-1				STUD HOLE #1 IS THE 1ST CW FROM 0 DEG AZ NUMBERS CONTINUE CONSECUTIVELY IN CW DIRECTION.
RPV STUD 35-1-52A	RPV STUD	B-G-1	VOL	UTP-32	UT-130			STUD HOLE #1 IS THE 1ST CW FROM 0 DEG AZ NUMBERS CONTINUE CONSECUTIVELY IN CW DIRECTION.
			SUR	PTP-1				STUD HOLE #1 IS THE 1ST CW FROM 0 DEG AZ NUMBERS CONTINUE CONSECUTIVELY IN CW DIRECTION.
RPV STUD 35-1-53A	RPV STUD	B-G-1	VOL	UTP-32	UT-130			STUD HOLE #1 IS THE 1ST CW FROM 0 DEG AZ NUMBERS CONTINUE CONSECUTIVELY IN CW DIRECTION.
			SUR	PTP-1				STUD HOLE #1 IS THE 1ST CW FROM 0 DEG AZ NUMBERS CONTINUE CONSECUTIVELY IN CW DIRECTION.

WNP-02
INTERVAL: PSI
PERIOD: NA
OUTAGE:
DRAWING NO. RPV-101

WASHINGTON PUBLIC POWER SUPPLY SYSTEM
PROGRAM PLAN AND SCHEDULE
SYSTEM OR COMPONENT: RPV
DESCRIPTION: RPV STUDS, NUTS, ETC

IDENT. NO.	DESCRIPTION	SECT. XI EXAM.	EXAM MTH.	PROCEDURE	CAL. BLOCK	INSERVICE REQ.	INSERVICE SCHEDULED OUTAGE	NOTES
RPV STUD 35-1-54A								
	RPV STUD	B-G-1	VOL	UTP-32	UT-130			STUD HOLE #1 IS THE 1ST CW FROM 0 DEG AZ NUMBERS CONTINUE CONSECUTIVELY IN CW DIRECTION.
			SUR	PTP-1				STUD HOLE #1 IS THE 1ST CW FROM 0 DEG AZ NUMBERS CONTINUE CONSECUTIVELY IN CW DIRECTION.
RPV STUD 35-1-55A								
	RPV STUD	B-G-1	VOL	UTP-32	UT-130			STUD HOLE #1 IS THE 1ST CW FROM 0 DEG AZ NUMBERS CONTINUE CONSECUTIVELY IN CW DIRECTION.
			SUR	PTP-1				STUD HOLE #1 IS THE 1ST CW FROM 0 DEG AZ NUMBERS CONTINUE CONSECUTIVELY IN CW DIRECTION.
RPV STUD 35-1-56A								
	RPV STUD	B-G-1	VOL	UTP-32	UT-130			STUD HOLE #1 IS THE 1ST CW FROM 0 DEG AZ NUMBERS CONTINUE CONSECUTIVELY IN CW DIRECTION.

WNP-02
INTERVAL: PSI
PERIOD: NA
OUTAGE:
DRAWING NO. RPV-101

WASHINGTON PUBLIC POWER SUPPLY SYSTEM
PROGRAM PLAN AND SCHEDULE
SYSTEM OR COMPONENT: RPV
DESCRIPTION: RPV STUDS, NUTS, ETC

DATE 12/14/84

IDENT. NO.	DESCRIPTION	SECT. XI EXAM.	EXAM MTH.	PROCEDURE	CAL. BLOCK	INSERVICE REQ.	SCHEDULED OUTAGE	NOTES
			SUR	PTP-1				STUD HOLE #1 IS THE 1ST CW FROM 0 DEG AZ NUMBERS CONTINUE CONSECUTIVELY IN CW DIRECTION.
RPV STUD 35-1-57A	RPV STUD	B-G-1	VOL	UTP-32	UT-130			STUD HOLE #1 IS THE 1ST CW FROM 0 DEG AZ NUMBERS CONTINUE CONSECUTIVELY IN CW DIRECTION.
			SUR	PTP-1				STUD HOLE #1 IS THE 1ST CW FROM 0 DEG AZ NUMBERS CONTINUE CONSECUTIVELY IN CW DIRECTION.
RPV STUD 35-1-58A	RPV STUD	B-G-1	VOL	UTP-32	UT-130			STUD HOLE #1 IS THE 1ST CW FROM 0 DEG AZ NUMBERS CONTINUE CONSECUTIVELY IN CW DIRECTION.
			SUR	PTP-1				STUD HOLE #1 IS THE 1ST CW FROM 0 DEG AZ NUMBERS CONTINUE CONSECUTIVELY IN CW DIRECTION.

WNP-02
INTERVAL: PSI
PERIOD: NA
OUTAGE:
DRAWING NO. RPV-101

WASHINGTON PUBLIC POWER SUPPLY SYSTEM
PROGRAM PLAN AND SCHEDULE
SYSTEM OR COMPONENT: RPV
DESCRIPTION: RPV STUDS, NUTS, ETC

IDENT. NO.	DESCRIPTION	SECT. XI EXAM.	EXAM MTH.	PROCEDURE	CAL. BLOCK	INSERVICE REQ.	SCHEDULED OUTAGE	NOTES
RPV STUD 35-1-59A								
	RPV STUD	B-G-1	VOL	UTP-32	UT-130			STUD HOLE #1 IS THE 1ST CW FROM 0 DEG AZ NUMBERS CONTINUE CONSECUTIVELY IN CW DIRECTION.
			SUR	PTP-1				STUD HOLE #1 IS THE 1ST CW FROM 0 DEG AZ NUMBERS CONTINUE CONSECUTIVELY IN CW DIRECTION.
RPV STUD 35-1-60A								
	RPV STUD	B-G-1	VOL	UTP-32	UT-130			STUD HOLE #1 IS THE 1ST CW FROM 0 DEG AZ NUMBERS CONTINUE CONSECUTIVELY IN CW DIRECTION.
			SUR	PTP-1				STUD HOLE #1 IS THE 1ST CW FROM 0 DEG AZ NUMBERS CONTINUE CONSECUTIVELY IN CW DIRECTION.
RPV STUD 35-1-61A								
	RPV STUD	B-G-1	VOL	UTP-32	UT-130			STUD HOLE #1 IS THE 1ST CW FROM 0 DEG AZ NUMBERS CONTINUE CONSECUTIVELY IN CW DIRECTION.

WNP-02
INTERVAL: PSI
PERIOD: NA
OUTAGE:
DRAWING NO. RPV-101

WASHINGTON PUBLIC POWER SUPPLY SYSTEM
PROGRAM PLAN AND SCHEDULE
SYSTEM OR COMPONENT: RPV
DESCRIPTION: RPV STUDS, NUTS, ETC

IDENT. NO.	DESCRIPTION	SECT. XI EXAM.	EXAM MTH.	PROCEDURE	CAL. BLOCK	INSERVICE REQ.	INSERVICE SCHEDULED OUTAGE	NOTES
			SUR	PTP-1				STUD HOLE #1 IS THE 1ST CW FROM 0 DEG AZ NUMBERS CONTINUE CONSECUTIVELY IN CW DIRECTION.
RPV STUD 35-1-62A	RPV STUD	B-G-1	VOL	UTP-32	UT-130			STUD HOLE #1 IS THE 1ST CW FROM 0 DEG AZ NUMBERS CONTINUE CONSECUTIVELY IN CW DIRECTION.
			SUR	PTP-1				STUD HOLE #1 IS THE 1ST CW FROM 0 DEG AZ NUMBERS CONTINUE CONSECUTIVELY IN CW DIRECTION.
RPV STUD 35-1-63A	RPV STUD	B-G-1	VOL	UTP-32	UT-130			STUD HOLE #1 IS THE 1ST CW FROM 0 DEG AZ NUMBERS CONTINUE CONSECUTIVELY IN CW DIRECTION.
			SUR	PTP-1				STUD HOLE #1 IS THE 1ST CW FROM 0 DEG AZ NUMBERS CONTINUE CONSECUTIVELY IN CW DIRECTION.

WNP-02
INTERVAL: PSI
PERIOD: NA
OUTAGE:
DRAWING NO. RPV-101

WASHINGTON PUBLIC POWER SUPPLY SYSTEM
PROGRAM PLAN AND SCHEDULE
SYSTEM OR COMPONENT: RPV
DESCRIPTION: RPV STUDS, NUTS, ETC

IDENT. NO.	DESCRIPTION	SECT. XI EXAM.	EXAM MTH.	PROCEDURE	CAL. BLOCK	INSERVICE REQ.	INSERVICE SCHEDULED OUTAGE	NOTES
RPV STUD 35-1-64A								
	RPV STUD	B-G-1	VOL	UTP-32	UT-130			STUD HOLE #1 IS THE 1ST CW FROM 0 DEG AZ NUMBERS CONTINUE CONSECUTIVELY IN CW DIRECTION.
			SUR	PTP-1				STUD HOLE #1 IS THE 1ST CW FROM 0 DEG AZ NUMBERS CONTINUE CONSECUTIVELY IN CW DIRECTION.
RPV STUD 35-1-65A								
	RPV STUD	B-G-1	VOL	UTP-32	UT-130			STUD HOLE #1 IS THE 1ST CW FROM 0 DEG AZ NUMBERS CONTINUE CONSECUTIVELY IN CW DIRECTION.
			SUR	PTP-1				STUD HOLE #1 IS THE 1ST CW FROM 0 DEG AZ NUMBERS CONTINUE CONSECUTIVELY IN CW DIRECTION.
RPV STUD 35-1-66A								
	RPV STUD	B-G-1	VOL	UTP-32	UT-130			STUD HOLE #1 IS THE 1ST CW FROM 0 DEG AZ NUMBERS CONTINUE CONSECUTIVELY IN CW DIRECTION.

WNP-02
INTERVAL: PSI
PERIOD: NA
OUTAGE:
DRAWING NO. RPV-101

WASHINGTON PUBLIC POWER SUPPLY SYSTEM
PROGRAM PLAN AND SCHEDULE
SYSTEM OR COMPONENT: RPV
DESCRIPTION: RPV STUDS, NUTS, ETC

DATE 12/14/84

IDENT. NO.	DESCRIPTION	SECT. XI EXAM.	EXAM MTH.	PROCEDURE	CAL. BLOCK	INSERVICE REQ.	SCHEDULED OUTAGE	NOTES
			SUR	PTP-1				STUD HOLE #1 IS THE 1ST CW FROM 0 DEG AZ NUMBERS CONTINUE CONSECUTIVELY IN CW DIRECTION.
RPV STUD 35-1-67A	RPV STUD	B-G-1	VOL	UTP-32	UT-130			STUD HOLE #1 IS THE 1ST CW FROM 0 DEG AZ NUMBERS CONTINUE CONSECUTIVELY IN CW DIRECTION.
			SUR	PTP-1				STUD HOLE #1 IS THE 1ST CW FROM 0 DEG AZ NUMBERS CONTINUE CONSECUTIVELY IN CW DIRECTION.
RPV STUD 35-1-68A	RPV STUD	B-G-1	VOL	UTP-32	UT-130			STUD HOLE #1 IS THE 1ST CW FROM 0 DEG AZ NUMBERS CONTINUE CONSECUTIVELY IN CW DIRECTION.
			SUR	PTP-1				STUD HOLE #1 IS THE 1ST CW FROM 0 DEG AZ NUMBERS CONTINUE CONSECUTIVELY IN CW DIRECTION.

WNP-02
INTERVAL: PSI
PERIOD: NA
OUTAGE:
DRAWING NO. RPV-101

WASHINGTON PUBLIC POWER SUPPLY SYSTEM
PROGRAM PLAN AND SCHEDULE
SYSTEM OR COMPONENT: RPV
DESCRIPTION: RPV STUDS, NUTS, ETC

IDENT. NO.	DESCRIPTION	SECT. XI EXAM.	EXAM MTH.	PROCEDURE	CAL. BLOCK	INSERVICE REQ.	INSERVICE SCHEDULED OUTAGE	NOTES
RPV STUD 35-1-69A								
	RPV STUD	B-G-1	VOL	UTP-32	UT-130			STUD HOLE #1 IS THE 1ST CW FROM 0 DEG AZ NUMBERS CONTINUE CONSECUTIVELY IN CW DIRECTION.
			SUR	PTP-1				STUD HOLE #1 IS THE 1ST CW FROM 0 DEG AZ NUMBERS CONTINUE CONSECUTIVELY IN CW DIRECTION.
RPV STUD 35-1-70A								
	RPV STUD	B-G-1	VOL	UTP-32	UT-130			STUD HOLE #1 IS THE 1ST CW FROM 0 DEG AZ NUMBERS CONTINUE CONSECUTIVELY IN CW DIRECTION.
			SUR	PTP-1				STUD HOLE #1 IS THE 1ST CW FROM 0 DEG AZ NUMBERS CONTINUE CONSECUTIVELY IN CW DIRECTION.
RPV STUD 35-1-71A								
	RPV STUD	B-G-1	VOL	UTP-32	UT-130			STUD HOLE #1 IS THE 1ST CW FROM 0 DEG AZ NUMBERS CONTINUE CONSECUTIVELY IN CW DIRECTION.

WNP-02
INTERVAL: PSI
PERIOD: NA
OUTAGE:
DRAWING NO. RPV-101

WASHINGTON PUBLIC POWER SUPPLY SYSTEM
PROGRAM PLAN AND SCHEDULE
SYSTEM OR COMPONENT: RPV
DESCRIPTION: RPV STUDS, NUTS, ETC

IDENT. NO.	DESCRIPTION	SECT. XI EXAM.	EXAM MTH.	PROCEDURE	CAL. BLOCK	INSERVICE REQ.	INSERVICE SCHEDULED OUTAGE	NOTES
			SUR	PTP-1				STUD HOLE #1 IS THE 1ST CW FROM 0 DEG AZ NUMBERS CONTINUE CONSECUTIVELY IN CW DIRECTION.
RPV STUD 35-1-72A	RPV STUD	B-G-1	VOL	UTP-32	UT-130			STUD HOLE #1 IS THE 1ST CW FROM 0 DEG AZ NUMBERS CONTINUE CONSECUTIVELY IN CW DIRECTION.
			SUR	PTP-1				STUD HOLE #1 IS THE 1ST CW FROM 0 DEG AZ NUMBERS CONTINUE CONSECUTIVELY IN CW DIRECTION.
RPV STUD 35-1-73A	RPV STUD	B-G-1	VOL	UTP-32	UT-130			STUD HOLE #1 IS THE 1ST CW FROM 0 DEG AZ NUMBERS CONTINUE CONSECUTIVELY IN CW DIRECTION.
			SUR	PTP-1				STUD HOLE #1 IS THE 1ST CW FROM 0 DEG AZ NUMBERS CONTINUE CONSECUTIVELY IN CW DIRECTION.

WNP-02
INTERVAL: PSI
PERIOD: NA
OUTAGE:
DRAWING NO. RPV-101

WASHINGTON PUBLIC POWER SUPPLY SYSTEM
PROGRAM PLAN AND SCHEDULE
SYSTEM OR COMPONENT: RPV
DESCRIPTION: RPV STUDS, NUTS, ETC

IDENT. NO.	DESCRIPTION	SECT. XI EXAM.	EXAM MTH.	PROCEDURE	CAL. BLOCK	INSERVICE REQ.	INSERVICE SCHEDULED OUTAGE	NOTES
RPV STUD 35-1-74A								
	RPV STUD	B-G-1	VOL	UTP-32	UT-130			STUD HOLE #1 IS THE 1ST CW FROM 0 DEG AZ NUMBERS CONTINUE CONSECUTIVELY IN CW DIRECTION.
			0					
			SUR	PTP-1				STUD HOLE #1 IS THE 1ST CW FROM 0 DEG AZ NUMBERS CONTINUE CONSECUTIVELY IN CW DIRECTION.
RPV STUD 35-1-75A								
	RPV STUD	B-G-1	VOL	UTP-32	UT-130			STUD HOLE #1 IS THE 1ST CW FROM 0 DEG AZ NUMBERS CONTINUE CONSECUTIVELY IN CW DIRECTION.
			SUR	PTP-1				STUD HOLE #1 IS THE 1ST CW FROM 0 DEG AZ NUMBERS CONTINUE CONSECUTIVELY IN CW DIRECTION.
RPV STUD 35-1-76A								
	RPV STUD	B-G-1	VOL	UTP-32	UT-130			STUD HOLE #1 IS THE 1ST CW FROM 0 DEG AZ NUMBERS CONTINUE CONSECUTIVELY IN CW DIRECTION.

WNP-02
INTERVAL: PSI
PERIOD: NA
OUTAGE:
DRAWING NO. RPV-101

WASHINGTON PUBLIC POWER SUPPLY SYSTEM
PROGRAM PLAN AND SCHEDULE
SYSTEM OR COMPONENT: RPV
DESCRIPTION: RPV STUDS, NUTS, ETC

IDENT. NO.	DESCRIPTION	SECT. XI EXAM.	EXAM MTH.	PROCEDURE	CAL. BLOCK	INSERVICE REQ.	SCHEDULED OUTAGE	NOTES
			SUR	PTP-1				STUD HOLE #1 IS THE 1ST CW FROM 0 DEG AZ NUMBERS CONTINUE CONSECUTIVELY IN CW DIRECTION.
RPV NUT 36-1-1A	RPV NUT	B-G-1	VOL	UTP-35	UT-132			
			SUR	MTP-1				SURFACE EXAM REQ"D ONLY WHEN NUT IS REMOVED
RPV NUT 36-1-2A	RPV NUT	B-G-1	VOL	UTP-35	UT-132			
			SUR	MTP-1				SURFACE EXAM REQ"D ONLY WHEN NUT IS REMOVED
RPV NUT 36-1-3A	RPV NUT	B-G-1	VOL	UTP-35	UT-132			
			SUR	MTP-1				SURFACE EXAM REQ"D ONLY WHEN NUT IS REMOVED
RPV NUT 36-1-4A	RPV NUT	B-G-1	VOL	UTP-35	UT-132			
			SUR	MTP-1				SURFACE EXAM REQ"D ONLY WHEN NUT IS REMOVED
RPV NUT 36-1-5A	RPV NUT	B-G-1	VOL	UTP-35	UT-132			

WNP-02
INTERVAL: PSI
PERIOD: NA
OUTAGE:
DRAWING NO. RPV-101

WASHINGTON PUBLIC POWER SUPPLY SYSTEM
PROGRAM PLAN AND SCHEDULE
SYSTEM OR COMPONENT: RPV
DESCRIPTION: RPV STUDS, NUTS, ETC

IDENT. NO.	DESCRIPTION	SECT. XI EXAM.	EXAM MTH.	PROCEDURE	CAL. BLOCK	INSERVICE REQ.	INSERVICE SCHEDULED OUTAGE	NOTES
			SUR	MTP-1				SURFACE EXAM REQ"D ONLY WHEN NUT IS REMOVED
RPV NUT 36-1-6A	RPV NUT	B-G-1	VOL	UTP-35	UT-132			
			SUR	MTP-1				SURFACE EXAM REQ"D ONLY WHEN NUT IS REMOVED
RPV NUT 36-1-7A	RPV NUT	B-G-1	VOL	UTP-35	UT-132			
			SUR	MTP-1				SURFACE EXAM REQ"D ONLY WHEN NUT IS REMOVED
RPV NUT 36-1-8A	RPV NUT	B-G-1	VOL	UTP-35	UT-132			
			SUR	MTP-1				SURFACE EXAM REQ"D ONLY WHEN NUT IS REMOVED
RPV NUT 36-1-9A	RPV NUT	B-G-1	VOL	UTP-35	UT-132			
			SUR	MTP-1				SURFACE EXAM REQ"D ONLY WHEN NUT IS REMOVED
RPV NUT 36-1-10A	RPV NUT	B-G-1	VOL	UTP-35	UT-132			
			SUR	MTP-1				SURFACE EXAM REQ"D ONLY WHEN NUT IS REMOVED
RPV NUT 36-1-11A	RPV NUT	B-G-1	VOL	UTP-35	UT-132			

WNP-02
INTERVAL: PSI
PERIOD: NA
OUTAGE:
DRAWING NO. RPV-101

WASHINGTON PUBLIC POWER SUPPLY SYSTEM
PROGRAM PLAN AND SCHEDULE
SYSTEM OR COMPONENT: RPV
DESCRIPTION: RPV STUDS, NUTS, ETC

IDENT. NO.	DESCRIPTION	SECT. XI EXAM.	EXAM MTH.	PROCEDURE	CAL. BLOCK	INSERVICE REQ.	INSERVICE SCHEDULED OUTAGE	NOTES
			SUR	MTP-1				SURFACE EXAM REQ"D ONLY WHEN NUT IS REMOVED
RPV NUT 36-1-12A	RPV NUT	B-G-1	VOL	UTP-35	UT-132			
			SUR	MTP-1				SURFACE EXAM REQ"D ONLY WHEN NUT IS REMOVED
RPV NUT 36-1-13A	RPV NUT	B-G-1	VOL	UTP-35	UT-132			
			SUR	MTP-1				SURFACE EXAM REQ"D ONLY WHEN NUT IS REMOVED
RPV NUT 36-1-14A	RPV NUT	B-G-1	VOL	UTP-35	UT-132			
			SUR	MTP-1				SURFACE EXAM REQ"D ONLY WHEN NUT IS REMOVED
RPV NUT 36-1-15A	RPV NUT	B-G-1	VOL	UTP-35	UT-132			
			SUR	MTP-1				SURFACE EXAM REQ"D ONLY WHEN NUT IS REMOVED
RPV NUT 36-1-16A	RPV NUT	B-G-1	VOL	UTP-35	UT-132			
			SUR	MTP-1				SURFACE EXAM REQ"D ONLY WHEN NUT IS REMOVED
RPV NUT 36-1-17A	RPV NUT	B-G-1	VOL	UTP-35	UT-132			

WNP-02
INTERVAL: PSI
PERIOD: NA
OUTAGE:
DRAWING NO. RPV-101

WASHINGTON PUBLIC POWER SUPPLY SYSTEM
PROGRAM PLAN AND SCHEDULE
SYSTEM OR COMPONENT: RPV
DESCRIPTION: RPV STUDS, NUTS, ETC

DATE 12/14/84

IDENT. NO.	DESCRIPTION	SECT. XI EXAM.	EXAM MTH.	PROCEDURE	CAL. BLOCK	INSERVICE REQ.	INSERVICE SCHEDULED OUTAGE	NOTES
			SUR	MTP-1				SURFACE EXAM REQ"D ONLY WHEN NUT IS REMOVED
RPV NUT 36-1-18A	RPV NUT	B-G-1	VOL	UTP-35	UT-132			
			SUR	MTP-1				SURFACE EXAM REQ"D ONLY WHEN NUT IS REMOVED
RPV NUT 36-1-19A	RPV NUT	B-G-1	VOL	UTP-35	UT-132			
			SUR	MTP-1				SURFACE EXAM REQ"D ONLY WHEN NUT IS REMOVED
RPV NUT 36-1-20A	RPV NUT	B-G-1	VOL	UTP-35	UT-132			
			SUR	MTP-1				SURFACE EXAM REQ"D ONLY WHEN NUT IS REMOVED
RPV NUT 36-1-21A	RPV NUT	B-G-1	VOL	UTP-35	UT-132			
			SUR	MTP-1				SURFACE EXAM REQ"D ONLY WHEN NUT IS REMOVED
RPV NUT 36-1-22A	RPV NUT	B-G-1	VOL	UTP-35	UT-132			
			SUR	MTP-1				SURFACE EXAM REQ"D ONLY WHEN NUT IS REMOVED
RPV NUT 36-1-23A	RPV NUT	B-G-1	VOL	UTP-35	UT-132			

WNP-02
INTERVAL: PSI
PERIOD: NA
OUTAGE:
DRAWING NO. RPV-101

WASHINGTON PUBLIC POWER SUPPLY SYSTEM
PROGRAM PLAN AND SCHEDULE
SYSTEM OR COMPONENT: RPV
DESCRIPTION: RPV STUDS, NUTS, ETC

IDENT. NO.	DESCRIPTION	SECT. XI EXAM.	EXAM MTH.	PROCEDURE	CAL. BLOCK	INSERVICE REQ.	SCHEDULED OUTAGE	NOTES
			SUR	MTP-1				SURFACE EXAM REQ"D ONLY WHEN NUT IS REMOVED
RPV NUT 36-1-24A	RPV NUT	B-G-1	VOL	UTP-35	UT-132			
			SUR	MTP-1				SURFACE EXAM REQ"D ONLY WHEN NUT IS REMOVED
RPV NUT 36-1-25A	RPV NUT	B-G-1	VOL	UTP-35	UT-132			
			SUR	MTP-1				SURFACE EXAM REQ"D ONLY WHEN NUT IS REMOVED
RPV NUT 36-1-26A	RPV NUT	B-G-1	VOL	UTP-35	UT-132			
			SUR	MTP-1				SURFACE EXAM REQ"D ONLY WHEN NUT IS REMOVED
RPV NUT 36-1-27A	RPV NUT	B-G-1	VOL	UTP-35	UT-132			
			SUR	MTP-1				SURFACE EXAM REQ"D ONLY WHEN NUT IS REMOVED
RPV NUT 36-1-28A	RPV NUT	B-G-1	VOL	UTP-35	UT-132			
			SUR	MTP-1				SURFACE EXAM REQ"D ONLY WHEN NUT IS REMOVED
RPV NUT 36-1-29A	RPV NUT	B-G-1	VOL	UTP-35	UT-132			

WNP-02
INTERVAL: PSI
PERIOD: NA
OUTAGE:
DRAWING NO. RPV-101

WASHINGTON PUBLIC POWER SUPPLY SYSTEM
PROGRAM PLAN AND SCHEDULE
SYSTEM OR COMPONENT: RPV
DESCRIPTION: RPV STUDS, NUTS, ETC

DATE 12/14/84

IDENT. NO.	DESCRIPTION	SECT. XI EXAM.	EXAM MTH.	PROCEDURE	CAL. BLOCK	INSERVICE REQ.	INSERVICE SCHEDULED OUTAGE	NOTES
			SUR	MTP-1				SURFACE EXAM REQ"D ONLY WHEN NUT IS REMOVED
RPV NUT 36-1-30A	RPV NUT	B-G-1	VOL	UTP-35	UT-132			
			SUR	MTP-1				SURFACE EXAM REQ"D ONLY WHEN NUT IS REMOVED
RPV NUT 36-1-31A	RPV NUT	B-G-1	VOL	UTP-35	UT-132			
			SUR	MTP-1				SURFACE EXAM REQ"D ONLY WHEN NUT IS REMOVED
RPV NUT 36-1-32A	RPV NUT	B-G-1	VOL	UTP-35	UT-132			
			SUR	MTP-1				SURFACE EXAM REQ"D ONLY WHEN NUT IS REMOVED
RPV NUT 36-1-33A	RPV NUT	B-G-1	VOL	UTP-35	UT-132			
			SUR	MTP-1				SURFACE EXAM REQ"D ONLY WHEN NUT IS REMOVED
RPV NUT 36-1-34A	RPV NUT	B-G-1	VOL	UTP-35	UT-132			
			SUR	MTP-1				SURFACE EXAM REQ"D ONLY WHEN NUT IS REMOVED
RPV NUT 36-1-35A	RPV NUT	B-G-1	VOL	UTP-35	UT-132			

WNP-02
INTERVAL: PSI
PERIOD: NA
OUTAGE:
DRAWING NO. RPV-101

WASHINGTON PUBLIC POWER SUPPLY SYSTEM
PROGRAM PLAN AND SCHEDULE
SYSTEM OR COMPONENT: RPV
DESCRIPTION: RPV STUDS, NUTS, ETC

IDENT. NO.	DESCRIPTION	SECT. XI EXAM.	EXAM MTH.	PROCEDURE	CAL. BLOCK	INSERVICE REQ.	SCHEDULED OUTAGE	NOTES
			SUR	MTP-1				SURFACE EXAM REQ"D ONLY WHEN NUT IS REMOVED
RPV NUT 36-1-36A	RPV NUT	B-G-1	VOL	UTP-35	UT-132			
			SUR	MTP-1				SURFACE EXAM REQ"D ONLY WHEN NUT IS REMOVED
RPV NUT 36-1-37A	RPV NUT	B-G-1	VOL	UTP-35	UT-132			
			SUR	MTP-1				SURFACE EXAM REQ"D ONLY WHEN NUT IS REMOVED
RPV NUT 36-1-38A	RPV NUT	B-G-1	VOL	UTP-35	UT-132			
			SUR	MTP-1				SURFACE EXAM REQ"D ONLY WHEN NUT IS REMOVED
RPV NUT 36-1-39A	RPV NUT	B-G-1	VOL	UTP-35	UT-132			
			SUR	MTP-1				SURFACE EXAM REQ"D ONLY WHEN NUT IS REMOVED
RPV NUT 36-1-40A	RPV NUT	B-G-1	VOL	UTP-35	UT-132			
			SUR	MTP-1				SURFACE EXAM REQ"D ONLY WHEN NUT IS REMOVED
RPV NUT 36-1-41A	RPV NUT	B-G-1	VOL	UTP-35	UT-132			

WNP-02
INTERVAL: PSI
PERIOD: NA
OUTAGE:
DRAWING NO. RPV-101

WASHINGTON PUBLIC POWER SUPPLY SYSTEM
PROGRAM PLAN AND SCHEDULE
SYSTEM OR COMPONENT: RPV
DESCRIPTION: RPV STUDS, NUTS, ETC

IDENT. NO.	DESCRIPTION	SECT. XI EXAM.	EXAM MTH.	PROCEDURE	CAL. BLOCK	INSERVICE REQ.	INSERVICE SCHEDULED OUTAGE	NOTES
			SUR	MTP-1				SURFACE EXAM REQ"D ONLY WHEN NUT IS REMOVED
RPV NUT 36-1-42A	RPV NUT	B-G-1	VOL	UTP-35	UT-132			
			SUR	MTP-1				SURFACE EXAM REQ"D ONLY WHEN NUT IS REMOVED
RPV NUT 36-1-43A	RPV NUT	B-G-1	VOL	UTP-35	UT-132			
			SUR	MTP-1				SURFACE EXAM REQ"D ONLY WHEN NUT IS REMOVED
RPV NUT 36-1-44A	RPV NUT	B-G-1	VOL	UTP-35	UT-132			
			SUR	MTP-1				SURFACE EXAM REQ"D ONLY WHEN NUT IS REMOVED
RPV NUT 36-1-45A	RPV NUT	B-G-1	VOL	UTP-35	UT-132			
			SUR	MTP-1				SURFACE EXAM REQ"D ONLY WHEN NUT IS REMOVED
RPV NUT 36-1-46A	RPV NUT	B-G-1	VOL	UTP-35	UT-132			
			SUR	MTP-1				SURFACE EXAM REQ"D ONLY WHEN NUT IS REMOVED
RPV NUT 36-1-47A	RPV NUT	B-G-1	VOL	UTP-35	UT-132			

WNP-02
INTERVAL: PSI
PERIOD: NA
OUTAGE:
DRAWING NO. RPV-101

WASHINGTON PUBLIC POWER SUPPLY SYSTEM
PROGRAM PLAN AND SCHEDULE
SYSTEM OR COMPONENT: RPV
DESCRIPTION: RPV STUDS, NUTS, ETC

IDENT. NO.	DESCRIPTION	SECT. XI EXAM.	EXAM MTH.	PROCEDURE	CAL. BLOCK	INSERVICE REQ.	INSERVICE SCHEDULED OUTAGE	NOTES
			SUR	MTP-1				SURFACE EXAM REQ"D ONLY WHEN NUT IS REMOVED
RPV NUT 36-1-48A	RPV NUT	B-G-1	VOL	UTP-35	UT-132			
			SUR	MTP-1				SURFACE EXAM REQ"D ONLY WHEN NUT IS REMOVED
RPV NUT 36-1-49A	RPV NUT	B-G-1	VOL	UTP-35	UT-132			
			SUR	MTP-1				SURFACE EXAM REQ"D ONLY WHEN NUT IS REMOVED
RPV NUT 36-1-50A	RPV NUT	B-G-1	VOL	UTP-35	UT-132			
			SUR	MTP-1				SURFACE EXAM REQ"D ONLY WHEN NUT IS REMOVED
RPV NUT 36-1-51A	RPV NUT	B-G-1	VOL	UTP-35	UT-132			
			SUR	MTP-1				SURFACE EXAM REQ"D ONLY WHEN NUT IS REMOVED
RPV NUT 36-1-52A	RPV NUT	B-G-1	VOL	UTP-35	UT-132			
			SUR	MTP-1				SURFACE EXAM REQ"D ONLY WHEN NUT IS REMOVED
RPV NUT 36-1-53A	RPV NUT	B-G-1	VOL	UTP-35	UT-132			

WNP-02
INTERVAL: PSI
PERIOD: NA
OUTAGE:
DRAWING NO. RPV-101

WASHINGTON PUBLIC POWER SUPPLY SYSTEM
PROGRAM PLAN AND SCHEDULE
SYSTEM OR COMPONENT: RPV
DESCRIPTION: RPV STUDS, NUTS, ETC

IDENT. NO.	DESCRIPTION	SECT. XI EXAM.	EXAM MTH.	PROCEDURE	CAL. BLOCK	INSERVICE REQ.	INSERVICE SCHEDULED OUTAGE	NOTES
			SUR	MTP-1				SURFACE EXAM REQ"D ONLY WHEN NUT IS REMOVED
RPV NUT 36-1-54A	RPV NUT	B-G-1	VOL	UTP-35	UT-132			
			SUR	MTP-1				SURFACE EXAM REQ"D ONLY WHEN NUT IS REMOVED
RPV NUT 36-1-55A	RPV NUT	B-G-1	VOL	UTP-35	UT-132			
			SUR	MTP-1				SURFACE EXAM REQ"D ONLY WHEN NUT IS REMOVED
RPV NUT 36-1-56A	RPV NUT	B-G-1	VOL	UTP-35	UT-132			
			SUR	MTP-1				SURFACE EXAM REQ"D ONLY WHEN NUT IS REMOVED
RPV NUT 36-1-57A	RPV NUT	B-G-1	VOL	UTP-35	UT-132			
			SUR	MTP-1				SURFACE EXAM REQ"D ONLY WHEN NUT IS REMOVED
RPV NUT 36-1-58A	RPV NUT	B-G-1	VOL	UTP-35	UT-132			
			SUR	MTP-1				SURFACE EXAM REQ"D ONLY WHEN NUT IS REMOVED
RPV NUT 36-1-59A	RPV NUT	B-G-1	VOL	UTP-35	UT-132			

WNP-02
INTERVAL: PSI
PERIOD: NA
OUTAGE:
DRAWING NO. RPV-101

WASHINGTON PUBLIC POWER SUPPLY SYSTEM
PROGRAM PLAN AND SCHEDULE
SYSTEM OR COMPONENT: RPV
DESCRIPTION: RPV STUDS, NUTS, ETC

IDENT. NO.	DESCRIPTION	SECT. XI EXAM.	EXAM MTH.	PROCEDURE	CAL. BLOCK	INSERVICE REQ.	INSERVICE SCHEDULED OUTAGE	NOTES
			SUR	MTP-1				SURFACE EXAM REQ"D ONLY WHEN NUT IS REMOVED
RPV NUT 36-1-60A	RPV NUT	B-G-1	VOL	UTP-35	UT-132			
			SUR	MTP-1				SURFACE EXAM REQ"D ONLY WHEN NUT IS REMOVED
RPV NUT 36-1-61A	RPV NUT	B-G-1	VOL	UTP-35	UT-132			
			SUR	MTP-1				SURFACE EXAM REQ"D ONLY WHEN NUT IS REMOVED
RPV NUT 36-1-62A	RPV NUT	B-G-1	VOL	UTP-35	UT-132			
			SUR	MTP-1				SURFACE EXAM REQ"D ONLY WHEN NUT IS REMOVED
RPV NUT 36-1-63A	RPV NUT	B-G-1	VOL	UTP-35	UT-132			
			SUR	MTP-1				SURFACE EXAM REQ"D ONLY WHEN NUT IS REMOVED
RPV NUT 36-1-64A	RPV NUT	B-G-1	VOL	UTP-35	UT-132			
			SUR	MTP-1				SURFACE EXAM REQ"D ONLY WHEN NUT IS REMOVED
RPV NUT 36-1-65A	RPV NUT	B-G-1	VOL	UTP-35	UT-132			

WNP-02
INTERVAL: PSI
PERIOD: NA
OUTAGE:
DRAWING NO. RPV-101

WASHINGTON PUBLIC POWER SUPPLY SYSTEM
PROGRAM PLAN AND SCHEDULE
SYSTEM OR COMPONENT: RPV
DESCRIPTION: RPV STUDS, NUTS, ETC

IDENT. NO.	DESCRIPTION	SECT. XI EXAM.	EXAM MTH.	PROCEDURE	CAL. BLOCK	INSERVICE REQ.	INSERVICE SCHEDULED OUTAGE	NOTES
			SUR	MTP-1				SURFACE EXAM REQ"D ONLY WHEN NUT IS REMOVED
RPV NUT 36-1-66A	RPV NUT	B-G-1	VOL	UTP-35	UT-132			
			SUR	MTP-1				SURFACE EXAM REQ"D ONLY WHEN NUT IS REMOVED
RPV NUT 36-1-67A	RPV NUT	B-G-1	VOL	UTP-35	UT-132			
			SUR	MTP-1				SURFACE EXAM REQ"D ONLY WHEN NUT IS REMOVED
RPV NUT 36-1-68A	RPV NUT	B-G-1	VOL	UTP-35	UT-132			
			SUR	MTP-1				SURFACE EXAM REQ"D ONLY WHEN NUT IS REMOVED
RPV NUT 36-1-69A	RPV NUT	B-G-1	VOL	UTP-35	UT-132			
			SUR	MTP-1				SURFACE EXAM REQ"D ONLY WHEN NUT IS REMOVED
RPV NUT 36-1-70A	RPV NUT	B-G-1	VOL	UTP-35	UT-132			
			SUR	MTP-1				SURFACE EXAM REQ"D ONLY WHEN NUT IS REMOVED
RPV NUT 36-1-71A	RPV NUT	B-G-1	VOL	UTP-35	UT-132			

WASHINGTON PUBLIC POWER SUPPLY SYSTEM
PROGRAM PLAN AND SCHEDULE
SYSTEM OR COMPONENT: RPV
DESCRIPTION: RPV STUDS, NUTS, ETC

IDENT. NO.	DESCRIPTION	SECT. XI EXAM.	EXAM MTH.	PROCEDURE	CAL. BLOCK	INSERVICE REQ.	INSERVICE SCHEDULED OUTAGE	NOTES
			SUR	MTP-1				SURFACE EXAM REQ"D ONLY WHEN NUT IS REMOVED
RPV NUT 36-1-72A	RPV NUT	B-G-1	VOL	UTP-35	UT-132			
			SUR	MTP-1				SURFACE EXAM REQ"D ONLY WHEN NUT IS REMOVED
RPV NUT 36-1-73A	RPV NUT	B-G-1	VOL	UTP-35	UT-132			
			SUR	MTP-1				SURFACE EXAM REQ"D ONLY WHEN NUT IS REMOVED
RPV NUT 36-1-74A	RPV NUT	B-G-1	VOL	UTP-35	UT-132			
			SUR	MTP-1				SURFACE EXAM REQ"D ONLY WHEN NUT IS REMOVED
RPV NUT 36-1-75A	RPV NUT	B-G-1	VOL	UTP-35	UT-132			
			SUR	MTP-1				SURFACE EXAM REQ"D ONLY WHEN NUT IS REMOVED
RPV NUT 36-1-76A	RPV NUT	B-G-1	VOL	UTP-35	UT-132			
			SUR	MTP-1				SURFACE EXAM REQ"D ONLY WHEN NUT IS REMOVED
RPV WASHERS	RPV WASHER-76EA	B-G-1	VT-1	QCI 7-1				

WNP-02
INTERVAL: PSI
PERIOD: NA
OUTAGE:
DRAWING NO. RPV-101

WASHINGTON PUBLIC POWER SUPPLY SYSTEM
PROGRAM PLAN AND SCHEDULE
SYSTEM OR COMPONENT: RPV
DESCRIPTION: RPV STUDS, NUTS, ETC

DATE 12/14/84

IDENT. NO.	DESCRIPTION	SECT. XI EXAM.	EXAM MTH.	PROCEDURE	CAL. BLOCK	INSERVICE REQ.	INSERVICE SCHEDULED OUTAGE	NOTES
RPV BUSHING								
	RPV BUSHING	B-G-1	VT-1	QCI 7-1				RPV BUSHING IS LOCATED AT FLANGE HOLE #35
RPV THREADS								
	THREADS-RPV FLG	B-G-1	VOL	UTP-28	UT-123			
RPV LIGAMENTS								
	RPV FLG LIGMTS	B-G-1	VOL	UTP-15	UT-123			
RPV CLADDING								
	RPV CLAD PATCHS	B-I-1	VT-1	QCI 7-1				REFER TO RPV-101 FOR CLAD PATCH LOCATIONS
RPV INTERIOR								
	RPV INTERIOR	B-N-1	VT-3	QCI 7-1				
RPV CORE SUPPORTS								
	CORE SUPPORTS	B-N-2	VT-1	QCI 7-1				INTEGRALLY WELDED CORE SUPPORT STRUCTURES AND INTERIOR ATTACHMENTS TO RPV.
RPV-PB-101								
	RPV PRES BNDRY	B-P	VT-2	N/A				SEE NOTES #6 & #7.

WNP-02
INTERVAL: PSI
PERIOD: NA
OUTAGE:
DRAWING NO. RPV-102

WASHINGTON PUBLIC POWER SUPPLY SYSTEM
PROGRAM PLAN AND SCHEDULE
SYSTEM OR COMPONENT: RPV
DESCRIPTION: TOP & BOTTOM HEAD

DATE 12/14/84

IDENT. NO.	DESCRIPTION	SECT. XI EXAM.	EXAM MTH.	PROCEDURE	CAL. BLOCK	INSERVICE REQ.	INSERVICE SCHEDULED OUTAGE	NOTES
DA	BOT HD MRD @272	B-A	VOL	UTP-30	UT-118			
DB	BOT HD MRD @332	B-A	VOL	UTP-30	UT-118			
DC	BOT HD MRD @ 32	B-A	VOL	UTP-30	UT-118			
DD	BOT HD MRD @ 92	B-A	VOL	UTP-30	UT-118			
DE	BOT HD MRD @152	B-A	VOL	UTP-30	UT-118			
DF	BOT HD MRD @212	B-A	VOL	UTP-30	UT-118			
AJ	BOT HD DOL WELD	B-A	VOL	UTP-30	UT-117 UT-118			8"THK. TO 6 3/4 THK.
DG	BOT HD DOL /270	B-A	VOL	UTP-30	UT-117			
DR	BOT HD DOL / 90	B-A	VOL	UTP-30	UT-117			
AG	TOP HD-FLG WELD	B-A	VOL	UTP-30	UT-116			
AH	TOP HD DOL PLT	B-A	VOL	UTP-30	UT-115 UT-116			5 1/8" TO 3 5/8" THK
DH	TOP HD MRD @15	B-A	VOL	UTP-30	UT-116			
DJ	TOP HD MRD @75	B-A	VOL	UTP-30	UT-116			
DK	TOP HD MRD @135	B-A	VOL	UTP-30	UT-116			
DM	TOP HD MRD @195	B-A	VOL	UTP-30	UT-116			
DN	TOP HD MRD @255	B-A	VOL	UTP-30	UT-116			
DP	TOP HD MRD @315	B-A	VOL	UTP-30	UT-116			

WNP-02
INTERVAL: PSI
PERIOD: NA
OUTAGE:
DRAWING NO. RPV-102

WASHINGTON PUBLIC POWER SUPPLY SYSTEM
PROGRAM PLAN AND SCHEDULE
SYSTEM OR COMPONENT: RPV
DESCRIPTION: TOP & BTM HD NOZZLES

DATE 12/14/84

IDENT. NO.	DESCRIPTION	SECT. XI EXAM.	EXAM MTH.	PROCEDURE	CAL. BLOCK	INSERVICE REQ.	INSERVICE SCHEDULED OUTAGE	NOTES
N7	HD SP NZ-HD TOP	B-D	VOL	QCI 6-21	UT-115			
N7-IR	HD SP NZ-HD IR	B-D	VOL	QCI 6-21	UT-115			INNER RADIUS
N8	HD VN NZ-HD TOP	B-D	VOL	QCI 6-21	UT-115			
N8-IR	HD VN NZ-HD IR	B-D	VOL	QCI 6-21	UT-115			INNER RADIUS
N18-IR	SPARE NZ-TOP HD	B-D	VOL	QCI 6-21	UT-115			
N18	SPARE NZ-TOP IR	B-D	VOL	QCI 6-21	UT-115			INNER RADIUS
6SPARE-1	SPARE NZ-FLANGE	B-J	VOL	UTP-10	UT-107			SHOWN ON RPV-111
6SPARE-1BU			SUR	PTP-1				SHOWN ON RPV-111
N11	FLANGE BOLTING	B-G-2	VT-1	QCI 7-1				
N15	SLC BTM HD PEN	B-E	VT-2	QCI 7-1				
CRD	BTM HD DRAIN	B-E	VT-2	QCI 7-1				
INCORE	CRD PEN (185EA)	B-E	VT-2	QCI 7-1				
RPV-PB-102	INCOR PEN(55EA)	B-E	VT-2	QCI 7-1				
	RPV PRES BNDRY	B-P	VT-2	N/A				SEE NOTES #6 & #7.

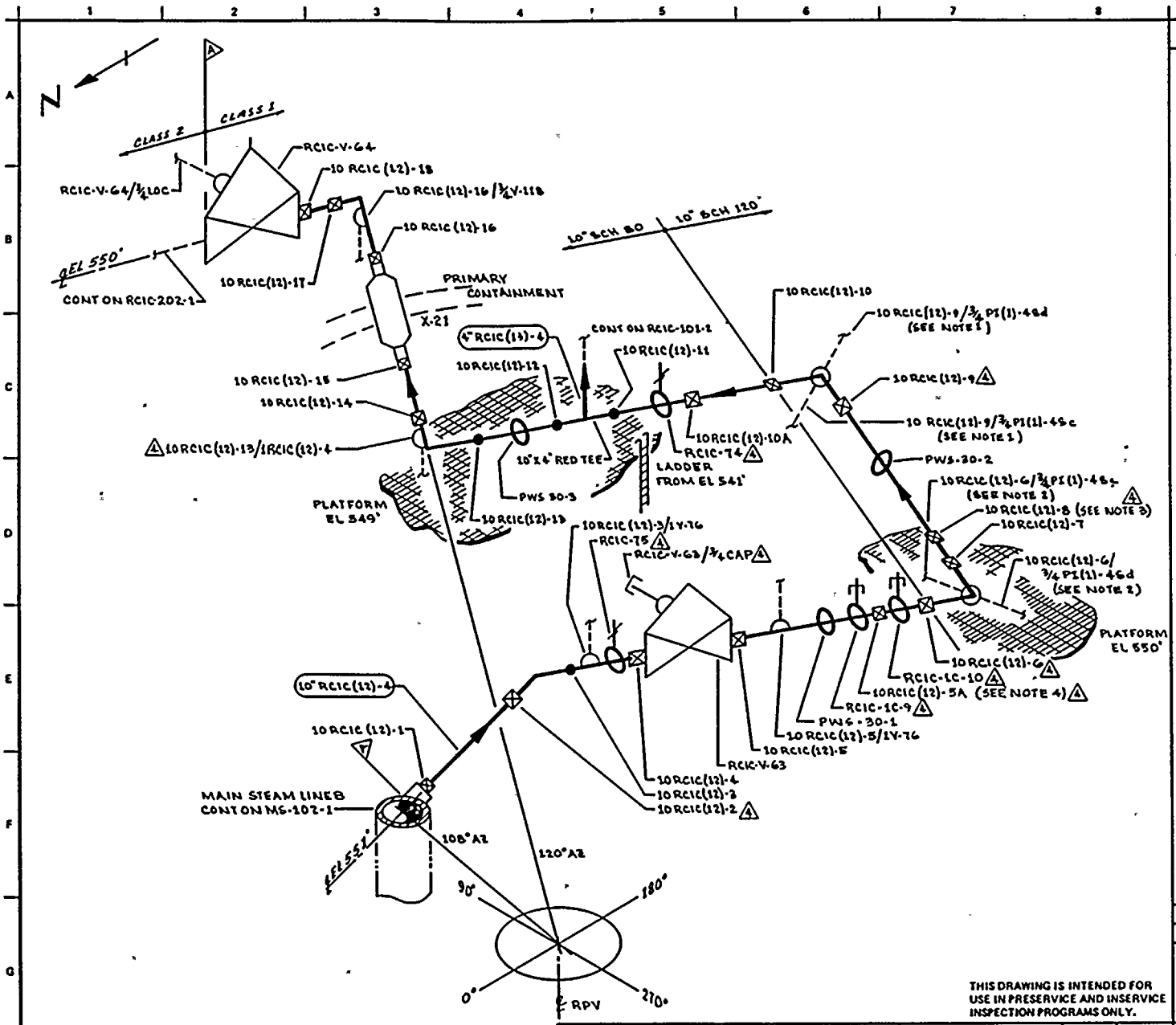

NOTES:

1. EXTEND LEAKAGE EXAM THROUGH CONTAINMENT (X-71 & 4 d) THROUGH EXCESS FLOW CHECK VALVE TO INSTRUMENT TUBING CONNECTION.
2. EXTEND LEAKAGE EXAM THROUGH CONTAINMENT (X-38 & 5 d) THROUGH EXCESS FLOW CHECK VALVE TO INSTRUMENT TUBING CONNECTION.
3. ACCESS TO WELD 10RCIC(12)-8 REQUIRES REMOVAL OF PWS-30-2.
4. ACCESS TO WELD 10RCIC(12)-5A REQUIRES REMOVAL OF RCIC-1C-9.

REFERENCES:

BOVEE & CRAIL ISOMETRICS

RCIC-663-1.2 REV 12
RCIC-663-3.3 REV 10

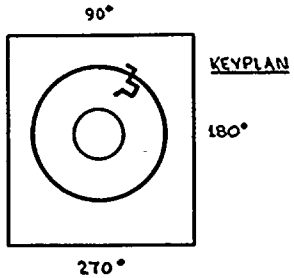

THIS DRAWING IS INTENDED FOR USE IN PRESERVICE AND INSERVICE INSPECTION PROGRAMS ONLY.

NO	DATE	REVISION	BY	CHKD	APPVD
4	9-26-83	REVISED AS NOTED ADDED KEYPLAN			
3	11-2-81	AUGMENTED ISI ADDED			
2	11-5-80	REVISED AS NOTED			
1	5-15-79	CHANGED 10 RCIC(12)-16 FROM SHOP TO FIELD WELD			
0	11-27-78	ISSUED FOR USE			
A	3-15-78	ISSUED FOR INFORMATION ONLY			

PIPING SYSTEM	NOM DIA (IN)	SCH	NOM WALL THK	MATERIAL SPECIFICATION	MATL TYPE	CAL BLOCK NO
10" RCIC (12)-4	10	80	0.594	SA 106 GR B	CS	UT-22
10" RCIC (12)-4	10	120	0.844	SA 106 GR B	CS	UT-23

QUALITY CLASS: 1 | ASME CODE CLASS: 1

ENGR: D PORTER | DRAWN: V. McA | DATE: 11-4-77

WASHINGTON PUBLIC POWER SUPPLY SYSTEM

RICHLAND, WASHINGTON 99352

WNP-2
WELD & COMPONENT IDENTIFICATION DIAGRAM

TITLE: RCIC STEAM SUPPLY

DWG NO: RCIC-101-1 | REV 4

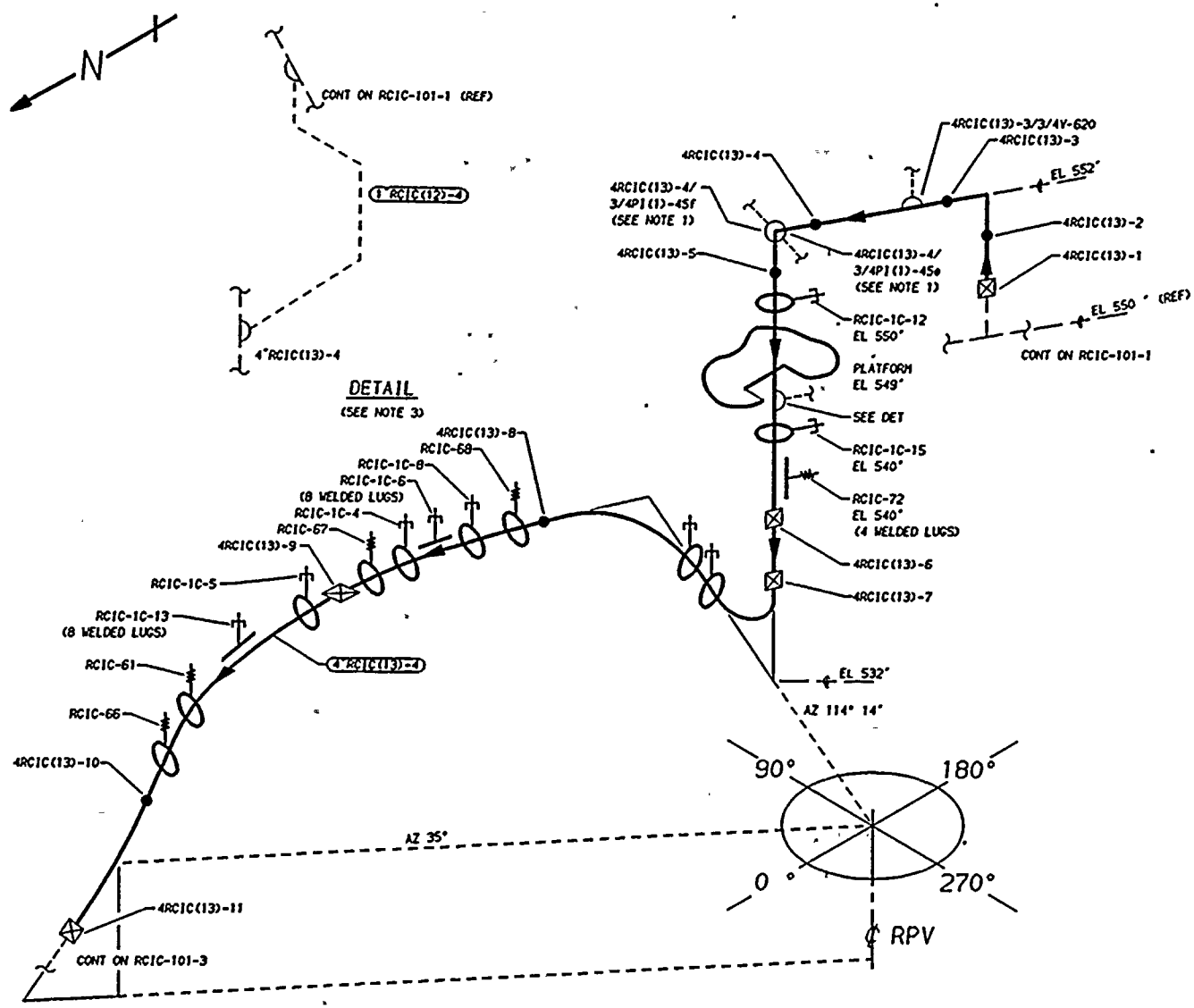

NOTES:

1. EXTEND LEAKAGE EXAM THROUGH COTAINMENT (X-71e, X-71f) THROUGH EXCESS FLOW CHECK VALVE TO INSTRUMENT TUBING CONNECTION.
2. ALL CIRCUMFERENTIAL BUTT WELDS GREATER THAN ONE INCH RECEIVE AUGMENTED ISI.
3. EXTEND V-2 EXAM THROUGH LINE 1"RCIC(12)-4.

REFERENCES:

ISI - 219

BOVEE CRAIL ISIMETRICS

RCIC-663-1.2	REV 12
RCIC-662-1	REV 12
RCIC-662-2.4	REV 11
RCIC-5429-1	REV 3

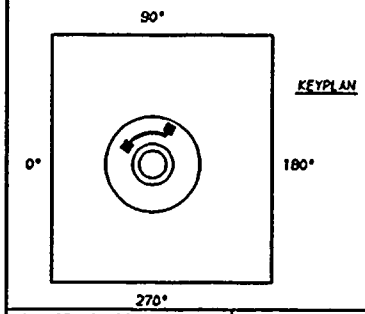

ZONES R-67 & R-57

THIS DRAWING IS INTENDED FOR USE IN PRESERVICE AND INSERVICE INSPECTIONS PROGRAMS ONLY.

QUALITY CLASS: 1	ASME CODE CLASS: 2	
ENGR: D PORTER	DRAWN: K-McA	DATE: 11-7-77

WASHINGTON PUBLIC POWER
SUPPLY SYSTEM
RICHLAND, WASHINGTON 99352

WNP-2
WELD & COMPONENT
IDENTIFICATION DIAGRAM

TITLE:

RCIC STEAM SUPPLY

DWG NO: RCIC-101-2 REV 3

NO	DATE	REVISION	BY	CHKD	APVD
3	1-26-84	GENERAL UPDATE REDRAWN	K-McA	DPR	TFH
2	12-2-81	AUGMENTED ISI ADDED	K-McA	DPR	TFH
1	11-5-80	REVISED AS NOTED	K-McA	TFH	DWP
0	11-27-78	ISSUED FOR USE	K-McA	TFH	LFB
A	3-15-78	ISSUED FOR INFORMATION ONLY	K-McA	NCH	DWP

PIPING SYSTEM	NOM DIA (IN)	SCH	NOM WALL THK	MATERIAL SPECIFICATION	MATL TYPE	CAL BLOCK NO
4"RCIC(13)-4	4	80	0.337	SA 106 GR B	CS	UT-30

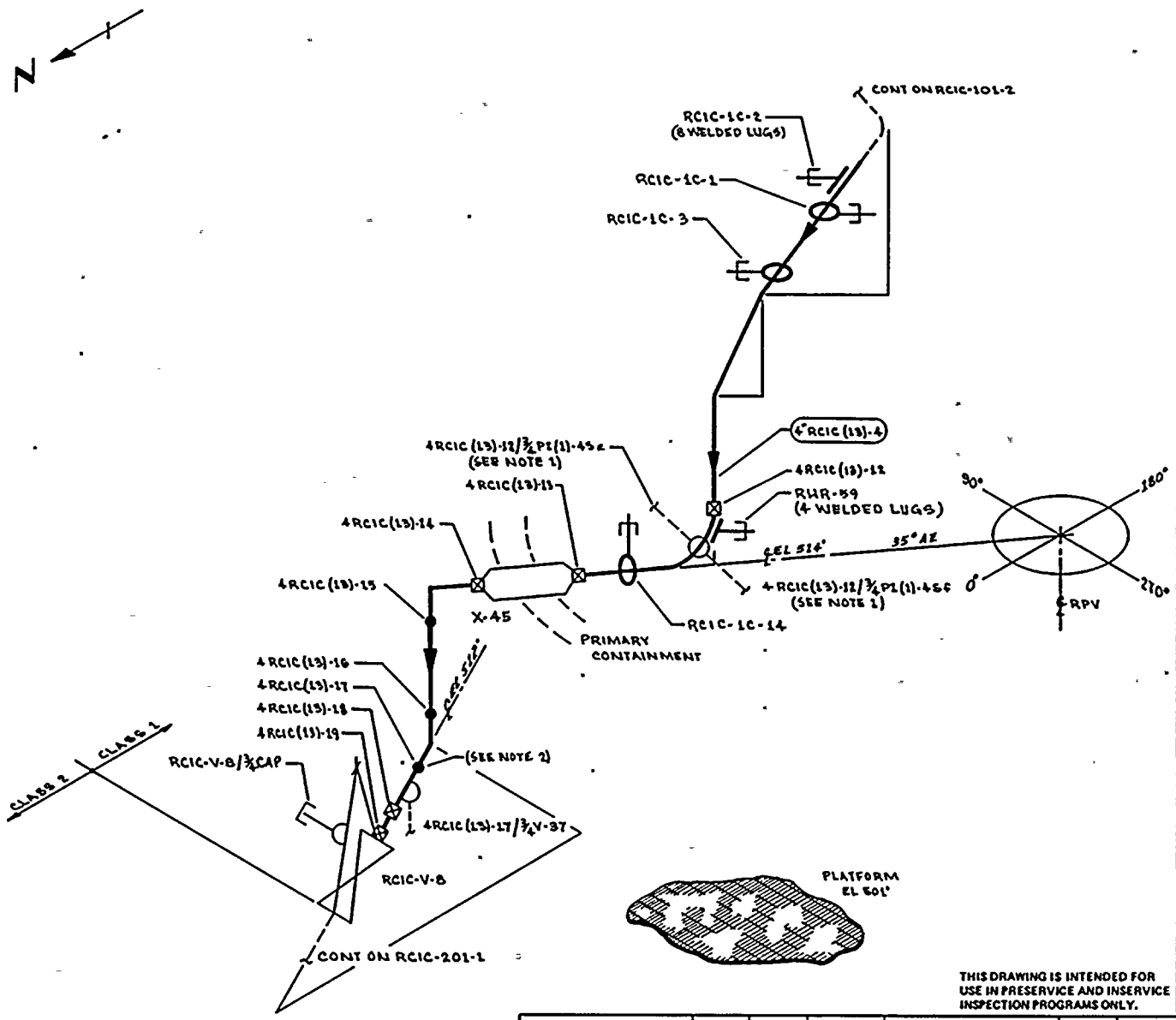

NOTES:

1. EXTEND LEAKAGE EXAM THROUGH CONTAINMENT (X-38 & ℄) THROUGH EXCESS FLOW CHECK VALVE TO INSTRUMENT TUBING CONNECTION.
2. ACCESS TO WELD 4RCIC(13)-17 IS RESTRICTED ON ONE SIDE BY 4RCIC(13)-17/¾V-37.
3. ALL CIRCUMFERENTIAL BUTT WELDS GREATER THAN 1 INCH RECEIVE AUGMENTED ISI.

REFERENCES:

BOVEE & CRAIL ISOMETRICS

RCIC-662-2.4 REV 11
RCIC-662-5 REV 8

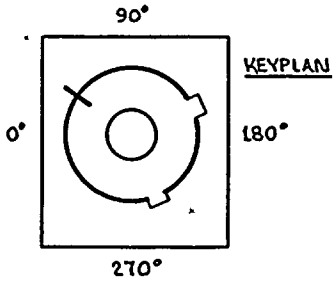

KEYPLAN

THIS DRAWING IS INTENDED FOR USE IN PRESERVICE AND INSERVICE INSPECTION PROGRAMS ONLY.

PIPING SYSTEM	NOM DIA (IN)	SCH	NOM WALL THK	MATERIAL SPECIFICATION	MATL TYPE	CAL BLOCK NO
4" RCIC (13)-4	4	80	0.337	SA 106 GR B	CS	UT-30
LUGS	NA	NA	NA	SA 516 GR 70	CS	UT-46

NO	DATE	REVISION	BY	CHKD	APPVD
2	10-13-83	ADDED HANGERS, ¾" CAP & KEYPLAN, LUGS			
1	12-2-81	AUGMENTED 1ST ADDED			
0	11-27-78	ISSUED FOR USE			
A	2-15-78	ISSUED FOR INFORMATION ONLY			

QUALITY CLASS: 1 | ASME CODE CLASS: 1

ENGR: D PORTER | DRAWN: | DATE: 11-7-77

WASHINGTON PUBLIC POWER SUPPLY SYSTEM

RICHLAND, WASHINGTON 99352

WNP-2
WELD & COMPONENT
IDENTIFICATION DIAGRAM

TITLE: RCIC STEAM SUPPLY

DWG NO: RCIC-101-3 | REV 2

WNP-02
INTERVAL: PSI
PERIOD: NA
OUTAGE:
DRAWING NO. RCIC-101

WASHINGTON PUBLIC POWER SUPPLY SYSTEM
PROGRAM PLAN AND SCHEDULE
SYSTEM OR COMPONENT: RCIC(12)-4
DESCRIPTION: RCIC STEAM SUPPLY

DATE 12/14/84

IDENT. NO.	DESCRIPTION	SECT. XI EXAM.	EXAM MTH.	PROCEDURE	CAL. BLOCK	INSERVICE REQ.	INSERVICE SCHEDULED OUTAGE	NOTES
10RCIC(12)-1								
	SWL TO PIPE	B-J	VOL	UTP-10	UT-22			AUGMT
			SUR	PTP-1				AUGMT
10RCIC(12)-2								
	PIPE TO EL	B-J	VOL	UTP-10	UT-22			AUGMT
			SUR	PTP-1				AUGMT
10RCIC(12)-3								
	EL TO PIPE	B-J	VOL	UTP-10	UT-22			AUGMT
			SUR	PTP-1				AUGMT
10RCIC(12)-3/1V-76								
	BI-PASS CONN	B-P	VT-2	N/A				SEE NOTES #6 & #7.
RCIC-75								
	SPRING	B-K-2	VT-3	303/8.2.17				
			VT-4	303/8.2.17				
10RCIC(12)-4								
	PIPE TO VLV	B-J	VOL	UTP-10	UT-22			AUGMT
			SUR	PTP-1				AUGMT
RCIC-V-63-BDY								
	VALVE BODY	B-M-2	VT-1	QCI 7-1				
RCIC-V-63-BLT								
	VALVE BOLTING	B-G-2	VT-1	QCI 7-1				
RCIC-968S								
	PSA-1 SNUBBER	B-K-2	VT-3	303/8.2.17				S/N 575, LOCATED ON RCIC-V-63, BYPASS.
			VT-4	303/8.2.17				S/N 575, LOCATED ON RCIC-V-63, BYPASS.
RCIC-969S								
	PSA-1/2 SNUBBER	B-K-2	VT-3	303/8.2.17				S/N 2113,LOCATED ON RCIC-V-63, BYPASS.

WNP-02
INTERVAL: PSI
PERIOD: NA
OUTAGE:
DRAWING NO. RCIC-101

WASHINGTON PUBLIC POWER SUPPLY SYSTEM
PROGRAM PLAN AND SCHEDULE
SYSTEM OR COMPONENT: RCIC(12)-4
DESCRIPTION: RCIC STEAM SUPPLY

DATE 12/14/84

IDENT. NO.	DESCRIPTION	SECT. XI EXAM.	EXAM MTH.	PROCEDURE	CAL. BLOCK	INSERVICE REQ.	INSERVICE SCHEDULED OUTAGE	NOTES
			VT-4	303/8.2.17				S/N 2113,LOCATED ON RCIC-V-63, BYPASS.
RCIC-970S								
	PSA-1/2 SNUBBER	B-K-2	VT-3	303/8.2.17				S/N 2528,LOCATED ON RCIC-V-63, BYPASS.
			VT-4	303/8.2.17				S/N 2528,LOCATED ON RCIC-V-63, BYPASS.
RCIC-974S								
	PSA-1 SNUBBER	B-K-2	VT-3	303/8.2.17				S/N 573
			VT-4	303/8.2.17				S/N 573
RCIC-975S								
	PSA-1/4 SNUBBER	B-K-2	VT-3	303/8.2.17				S/N 28459
			VT-4	303/8.2.17				S/N 28459
RCIC-976S								
	SPRING	B-K-2	VT-3	303/8.2.17				
			VT-4	303/8.2.17				
RCIC-V-63/3/4CAP								
	LEAKOFF CAPPED	B-P	VT-2	N/A				SEE NOTES #6 & #7.
10RCIC(12)-5								
	VALVE TO PIPE	B-J	VOL	UTP-10	UT-22			AUGMT
			SUR	PTP-1				AUGMT
10RCIC(12)-5/1V-76								
	BI-PASS CONN	B-P	VT-2	N/A				SEE NOTES #6 & #7.
FWS-30-1								
	PIPE WHIP	N/A	N/A	N/A				SEE NOTE #1
RCIC-1C-9								
	PSA-10 SNUBBER	B-K-2	VT-3	303/8.2.17				S/N 7786
			VT-4	303/8.2.17				S/N 7786

WNP-02
INTERVAL: PSI
PERIOD: NA
OUTAGE:
DRAWING NO. RCIC-101

WASHINGTON PUBLIC POWER SUPPLY SYSTEM
PROGRAM PLAN AND SCHEDULE
SYSTEM OR COMPONENT: RCIC(12)-4
DESCRIPTION: RCIC STEAM SUPPLY

DATE 12/14/84

IDENT. NO.	DESCRIPTION	SECT. XI EXAM.	EXAM MTH.	PROCEDURE	CAL. BLOCK	INSERVICE REQ.	INSERVICE SCHEDULED OUTAGE	NOTES
10RCIC(12)-5A								
	PIPE TO PIPE	B-J	VOL	UTP-10	UT-22			AUGMT
			SUR	PTP-1				AUGMT
RCIC-1C-10								
	PSA-3 SNUBBER	B-K-2	VT-3	303/8.2.17				S/N 4490
			VT-4	303/8.2.17				S/N 4490
10RCIC(12)-6								
	PIPE TO EL	B-J	VOL	UTP-10	UT-22			AUGMT
			SUR	PTP-1				AUGMT
10RCIC(12)-6/3/4PI(1)-4D								
	PRESSURE TAP	B-P	VT-2	N/A				SEE NOTES #6 & #7.
10RCIC(12)-6/3/4PI(1)-4C								
	PRESSURE TAP	B-P	VT-2	N/A				SEE NOTES #6 & #7.
10RCIC(12)-7								
	EL TO PIPE	B-J	VOL	UTP-10	UT-23			AUGMT
			SUR	PTP-1				AUGMT
10RCIC(12)-8								
	PIPE TO PIPE	B-J	VOL	UTP-10	UT-23			AUGMT
			SUR	PTP-1				AUGMT
PWS-30-2								
	PIPE WHIP	N/A	N/A	N/A				SEE NOTE #1
10RCIC(12)-9								
	PIPE TO EL	B-J	VOL	UTP-10	UT-23			AUGMT
			SUR	PTP-1				AUGMT
10RCIC(12)-9/3/4PI(1)-4C								
	PRESSURE TAP	B-P	VT-2	N/A				SEE NOTES #6 & #7.
10RCIC(12)-9/3/4PI(1)-4D								
	PRESSURE TAP	B-P	VT-2	N/A				SEE NOTES #6 & #7.

WNP-02
INTERVAL: PSI
PERIOD: NA
OUTAGE:
DRAWING NO. RCIC-101

WASHINGTON PUBLIC POWER SUPPLY SYSTEM
PROGRAM PLAN AND SCHEDULE
SYSTEM OR COMPONENT: RCIC(12)-4
DESCRIPTION: RCIC STEAM SUPPLY

IDENT. NO.	DESCRIPTION	SECT. XI EXAM.	EXAM MTH.	PROCEDURE	CAL. BLOCK	INSERVICE REQ.	INSERVICE SCHEDULED OUTAGE	NOTES
10RCIC(12)-10								
	EL TO PIPE	B-J	VOL	UTP-10	UT-22			AUGMT
			SUR	PTP-1				AUGMT
10RCIC(12)-10A								
	PIPE TO PIPE	B-J	VOL	UTP-10	UT-22			AUGMT
			SUR	PTP-1				AUGMT
RCIC-74								
	SPRING	B-K-2	VT-3	303/8.2.17				
			VT-4	303/8.2.17				
10RCIC(12)-11								
	PIPE TO TEE	B-J	VOL	UTP-10	UT-22			AUGMT
			SUR	PTP-1				AUGMT
10RCIC(12)-12								
	TEE TO PIPE	B-J	VOL	UTP-10	UT-22			AUGMT
			SUR	PTP-1				AUGMT
PWS-30-3								
	PIPE WHIP	N/A	N/A	N/A				SEE NOTE #1
10RCIC(12)-13								
	PIPE TO EL	B-J	VOL	UTP-10	UT-22			AUGMT
			SUR	PTP-1				AUGMT
10RCIC(12)-14								
	EL TO PIPE	B-J	VOL	UTP-10	UT-22			AUGMT
			SUR	PTP-1				AUGMT
10RCIC(12)-15								
	PIPE TO PEN	B-J	VOL	UTP-10	UT-22			AUGMT
			SUR	PTP-1				AUGMT

WNP-02
INTERVAL: PSI
PERIOD: NA
OUTAGE:
DRAWING NO. RCIC-101

WASHINGTON PUBLIC POWER SUPPLY SYSTEM
PROGRAM PLAN AND SCHEDULE
SYSTEM OR COMPONENT: RCIC(12)-4
DESCRIPTION: RCIC STEAM SUPPLY

IDENT. NO.	DESCRIPTION	SECT. XI EXAM.	EXAM MTH.	PROCEDURE	CAL. BLOCK	INSERVICE REQ.	INSERVICE SCHEDULED OUTAGE	NOTES
10RCIC(12)-16								
	PEN TO EL	B-J	VOL	UTP-10	UT-22			FITTING TO FITTING, AUGMT.
			SUR	PTP-1				FITTING TO FITTING, AUGMT.
10RCIC(12)-16/3/4V-118								
	TEST CONN	B-P	VT-2	N/A				SEE NOTES #6 & #7.
10RCIC(12)-17								
	EL TO PIPE	B-J	VOL	UTP-10	UT-22			AUGMT
			SUR	PTP-1				AUGMT
10RCIC(12)-18								
	EL TO VALVE	B-J	VOL	UTP-10	UT-22			FITTING TO FITTING, AUGMT.
			SUR	PTP-1				FITTING TO FITTING, AUGMT.
RCIC-V-64-BDY								
	VALVE BODY	B-M-2	VT-1	QCI, 7-1				
RCIC-V-64-BLT								
	VALVE BOLTING	B-G-2	VT-1	QCI 7-1				
RCIC-V-64/3/4CAP								
	LEAKOFF CAPPED	B-P	VT-2	N/A				SEE NOTES #6 & #7.
4RCIC(13)-1								
	TEE TO PIPE	B-J	VOL	UTP-10	UT-30			AUGMT
			SUR	PTP-1				AUGMT
4RCIC(13)-2								
	PIPE TO EL	B-J	VOL	UTP-10	UT-30			AUGMT
			SUR	PTP-1				AUGMT
4RCIC(13)-3								
	EL TO PIPE	B-J	VOL	UTP-10	UT-30			AUGMT

WNP-02
INTERVAL: PSI
PERIOD: NA
OUTAGE:
DRAWING NO. RCIC-101

WASHINGTON PUBLIC POWER SUPPLY SYSTEM
PROGRAM PLAN AND SCHEDULE
SYSTEM OR COMPONENT: RCIC(13)-4
DESCRIPTION: RCIC STEAM SUPPLY

DATE 12/14/84

IDENT. NO.	DESCRIPTION	SECT. XI EXAM.	EXAM MTH.	PROCEDURE	CAL. BLOCK	INSERVICE REQ.	INSERVICE SCHEDULED OUTAGE	NOTES
			SUR	PTP-1				AUGMT
4RCIC(13)-3/3/4V-620								
	TEST CONN	B-P	VT-2	N/A				SEE NOTES #6 & #7.
PWS-30-6								
	PIPE WHIP	N/A	N/A	N/A				SEE NOTE #1
PWS-30-5								
	PIPE WHIP	N/A	N/A	N/A				SEE NOTE #1
4RCIC(13)-4								
	PIPE TO EL	B-J	VOL	UTP-10	UT-30			AUGMT
			SUR	PTP-1				AUGMT
4RCIC(13)-4/3/4PI(1)-4SE								
	PRESSURE TAP	B-P	VT-2	N/A				SEE NOTE #6 & #7.
4RCIC(13)-4/3/4PI(1)-4SF								
	PRESSURE TAP	B-P	VT-2	N/A				SEE NOTES #6 & #7.
4RCIC(13)-5								
	EL TO PIPE	B-J	VOL	UTP-10	UT-30			AUGMT
			SUR	PTP-1				AUGMT
RCIC-1C-12								
	PSA-3 SNUBBER	B-K-2	VT-3	303/8.2.17				S/N 4405
			VT-4	303/8.2.17				S/N 4405
PWS-30-4								
	PIPE WHIP	N/A	N/A	N/A				SEE NOTE #1
RCIC-1C-15								
	PSA-3 SN(2)	B-K-2	VT-3	303/8.2.17				S/N 3953
			VT-4	303/8.2.17				S/N 3953
RCIC-72								
	SPRING	B-K-2	VT-3	303/8.2.17				
			VT-4	303/8.2.17				

WNP-02
INTERVAL: PSI
PERIOD: NA
OUTAGE:
DRAWING NO. RCIC-101

WASHINGTON PUBLIC POWER SUPPLY SYSTEM
PROGRAM PLAN AND SCHEDULE
SYSTEM OR COMPONENT: RCIC(13)-4
DESCRIPTION: RCIC STEAM SUPPLY

IDENT. NO.	DESCRIPTION	SECT. XI EXAM.	EXAM MTH.	PROCEDURE	CAL. BLOCK	INSERVICE REQ.	INSERVICE SCHEDULED OUTAGE	NOTES
4RCIC(13)-6								
	PIPE TO PIPE	B-J	VOL	UTP-10	UT-30			AUGMT
			SUR	PTP-1				AUGMT
4RCIC(13)-7								
	PIPE TO PIPE	B-J	VOL	UTP-10	UT-30			AUGMT
			SUR	PTP-1				AUGMT
RCIC-1C-16								
	PSA-3 SNUBBER	B-K-2	VT-3	303/8.2.17				S/N 231
			VT-4	303/8.2.17				S/N 231
RCIC-1C-7								
	PSA-3 SNUBBER	B-K-2	VT-3	303/8.2.17				S/N 3917
			VT-4	303/8.2.17				S/N 3917
4RCIC(13)-8								
	PIPE TO PIPE	B-J	VOL	UTP-10	UT-30			AUGMT
			SUR	PTP-1				AUGMT
RCIC-68								
	SPRING	B-K-2	VT-3	303/8.2.17				
			VT-4	303/8.2.17				
RCIC-1C-8								
	PSA-3 SNUBBER	B-K-2	VT-3	303/8.2.17				S/N 471
			VT-4	303/8.2.17				S/N 471
RCIC-1C-6(W)								
	8 WELDED LUGS	B-K-1	VOL	QCI 6-15	UT-30			3/4"Wx1"Hx3"L.
RCIC-1C-6								
	PSA-3 SN(2)	B-K-2	VT-3	303/8.2.17				S/N 4491/4424
			VT-4	303/8.2.17				S/N 4491/4424

WNP-02
INTERVAL: PSI
PERIOD: NA
OUTAGE:
DRAWING NO. RCIC-101

WASHINGTON PUBLIC POWER SUPPLY SYSTEM
PROGRAM PLAN AND SCHEDULE
SYSTEM OR COMPONENT: RCIC(13)-4
DESCRIPTION: RCIC STEAM SUPPLY

DATE 12/14/84

IDENT. NO.	DESCRIPTION	SECT. XI EXAM.	EXAM MTH.	PROCEDURE	CAL. BLOCK	INSERVICE REQ.	INSERVICE SCHEDULED OUTAGE	NOTES
RCIC-1C-4								
	PSA-1 SNUBBER	B-K-2	VT-3	303/8.2.17				S/N 618
			VT-4	303/8.2.17				S/N 618
RCIC-67								
	SPRING	B-K-2	VT-3	303/8.2.17				
			VT-4	303/8.2.17				
4RCIC(13)-9								
	PIPE TO PIPE	B-J	VOL	UTP-10	UT-30			AUGMT
			SUR	QCI 3-3				AUGMT
RCIC-1C-5								
	PSA-10 SNUBBER	B-K-2	VT-3	303/8.2.17				S/N 13029
			VT-4	303/8.2.17				S/N 13029
RCIC-1C-13(W)								
	8 WELDED LUGS	B-K-1	VOL	UTP-26	UT-30			3/4"Wx1-1/16"Hx4"L.
RCIC-1C-13								
	PSA-3 SN(2)	B-K-2	VT-3	303/8.2.17				S/N 4461/4450
			VT-4	303/8.2.17				S/N 4461/4450
RCIC-61								
	SPRING	B-K-2	VT-3	303/8.2.17				
			VT-4	303/8.2.17				
RCIC-66								
	SPRING	B-K-2	VT-3	303/8.2.17				
			VT-4	303/8.2.17				
4RCIC(13)-10								
	PIPE TO PIPE	B-J	VOL	UTP-10	UT-30			AUGMT
			SUR	PTP-1				AUGMT

WNP-02
INTERVAL: PSI
PERIOD: NA
OUTAGE:
DRAWING NO. RCIC-101

WASHINGTON PUBLIC POWER SUPPLY SYSTEM
PROGRAM PLAN AND SCHEDULE
SYSTEM OR COMPONENT: RCIC(13)-4
DESCRIPTION: RCIC STEAM SUPPLY

IDENT. NO.	DESCRIPTION	SECT. XI EXAM.	EXAM MTH.	PROCEDURE	CAL. BLOCK	INSERVICE REQ.	INSERVICE SCHEDULED OUTAGE	NOTES
4RCIC(13)-11								
	PIPE TO PIPE	B-J	VOL	UTP-10	UT-30			AUGMT
			SUR	QCI 3-3				AUGMT
RCIC-1C-2(W)								
	8 WELDED LUGS	B-K-1	VOL	QCI 6-15	UT-30			3/4"W x1"H x2"L.
RCIC-1C-2								
	PSA-3 SN(2)	B-K-2	VT-3	303/8.2.17				S/N 482/631
			VT-4	303/8.2.17				S/N 482/631
RCIC-1C-1								
	PSA-1 SNUBBER	B-K-2	VT-3	303/8.2.17				S/N 359
			VT-4	303/8.2.17				S/N 359
RCIC-1C-3								
	PSA-1 SNUBBER	B-K-2	VT-3	303/8.2.17				S/N 346
			VT-4	303/8.2.17				S/N 346
4RCIC(13)-12								
	PIPE TO PIPE	B-J	VOL	UTP-10	UT-30			AUGMT
			SUR	PTP-1				AUGMT
RCIC-59								
	SPRING (2)	B-K-2	VT-3	303/8.2.17				
			VT-4	303/8.2.17				
4RCIC(13)-12/3/4PI(1)-4E								
	PRESSURE TAP	B-P	VT-2	N/A				SEE NOTES #6 & #7.
4RCIC(13)-12/3/4PI(1)-4F								
	PRESSURE TAP	B-P	VT-2	N/A				SEE NOTES #6 & #7.
RCIC-1C-14								
	PSA-1 SNUBBER	B-K-2	VT-3	303/8.2.17				S/N 22371
			VT-4	303/8.2.17				S/N 22371

WNP-02
INTERVAL: PSI
PERIOD: NA
OUTAGE:
DRAWING NO. RCIC-101

WASHINGTON PUBLIC POWER SUPPLY SYSTEM
PROGRAM PLAN AND SCHEDULE
SYSTEM OR COMPONENT: RCIC(13)-4
DESCRIPTION: RCIC STEAM SUPPLY

IDENT. NO.	DESCRIPTION	SECT. XI EXAM.	EXAM MTH.	PROCEDURE	CAL. BLOCK	INSERVICE REQ.	INSERVICE SCHEDULED OUTAGE	NOTES
4RCIC(13)-13								
	PIPE TO PEN	B-J	VOL	UTP-10	UT-30			AUGMT
			SUR	PTP-1				AUGMT
4RCIC(13)-14								
	PEN TO EL	B-J	VOL	UTP-10	UT-30			FITTING TO FITTING, AUGMT.
			SUR	PTP-1				FITTING TO FITTING, AUGMT.
4RCIC(13)-15								
	EL TO PIPE	B-J	VOL	UTP-30	UT-30			AUGMT
			SUR	PTP-1				AUGMT
4RCIC(13)-16								
	PIPE TO EL	B-J	VOL	UTP-10	UT-30			AUGMT
			SUR	PTP-1				AUGMT
4RCIC(13)-17								
	EL TO PIPE	B-J	VOL	UTP-10	UT-30			AUGMT
			SUR	PTP-1				AUGMT
4RCIC(13)-17/3/4V-37								
	TEST CONN	B-P	VT-2	N/A				SEE NOTES #6 & #7.
4RCIC(13)-18								
	PIPE TO PIPE	B-J	VOL	QCI 6-13	UT-30			AUGMT
			SUR	QCI 3-3				AUGMT
4RCIC(13)-19								
	PIPE TO VLV	B-J	VOL	QCI 6-13	UT-30			AUGMT
			SUR	QCI 3-3				AUGMT
RCIC-V-8-BDY								
	VALVE BODY	B-M-2	VT-1	QCI 7-1				
RCIC-V-8-BLT								
	VALVE BOLTING	B-G-2	VT-1	QCI 7-1				

WNP-02
INTERVAL: PSI
PERIOD: NA
OUTAGE:
DRAWING NO. RCIC-101

WASHINGTON PUBLIC POWER SUPPLY SYSTEM
PROGRAM PLAN AND SCHEDULE
SYSTEM OR COMPONENT: RCIC(13)-4
DESCRIPTION: RCIC STEAM SUPPLY

DATE 12/14/84

IDENT. NO.	DESCRIPTION	SECT. XI EXAM.	EXAM MTH.	PROCEDURE	CAL. BLOCK	INSERVICE REQ.	INSERVICE SCHEDULED OUTAGE	NOTES
RCIC-V-8/3/4CAP	LEAKOFF CAPPED	B-P	VT-2	N/A				SEE NOTES #6 & #7.
RCIC-PB-101	RCIC PRES BNDRY	B-P	VT-2	N/A				SEE NOTES #6 & #7.

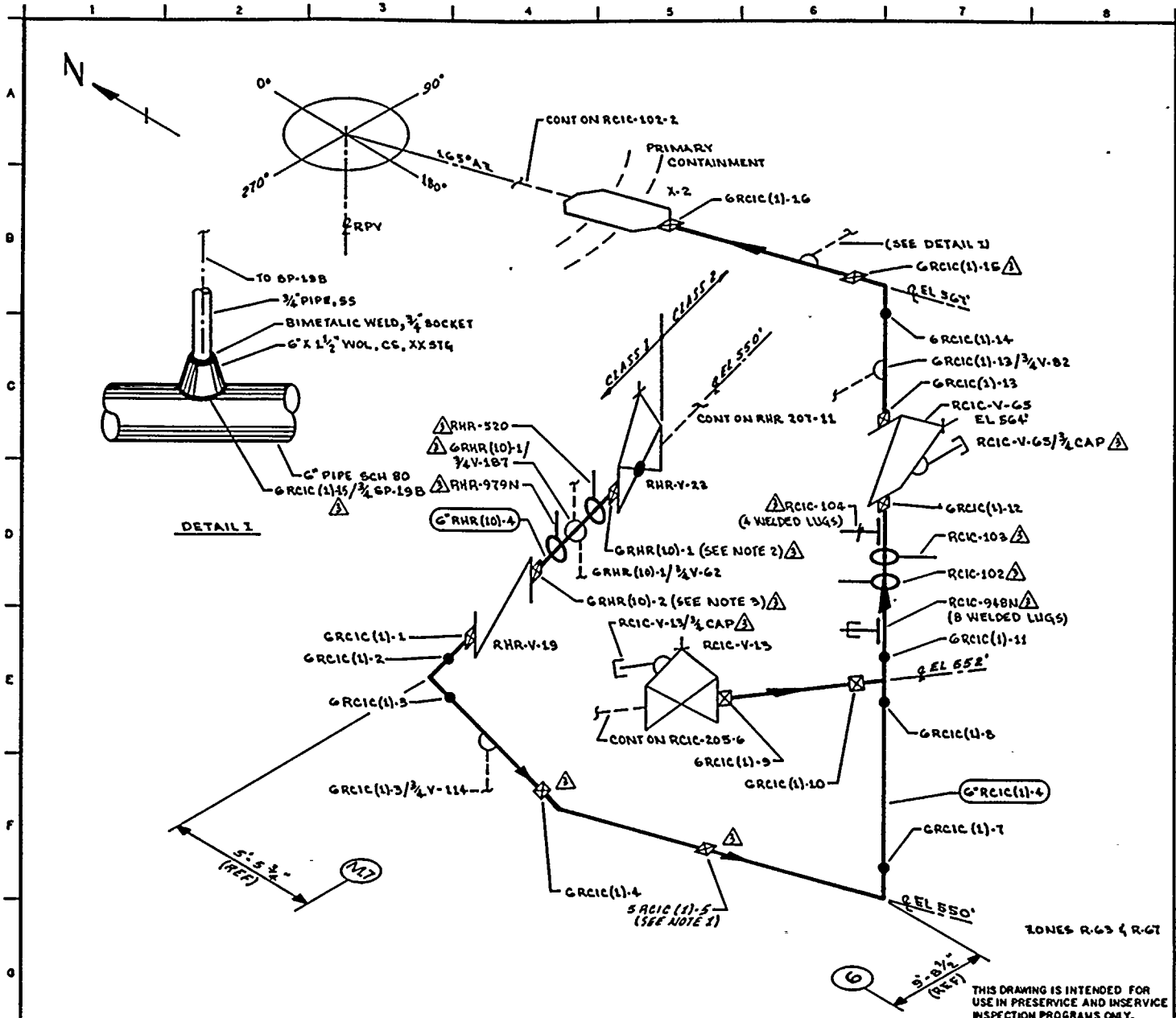

NOTES:

1. WELD GRCIC(1)-5 IS FITTING TO FITTING.
2. ACCESS TO WELD GRHR(10)-1 REQUIRES REMOVAL OF RHR-520.
3. ACCESS TO WELD GRHR(10)-2 REQUIRES REMOVAL OF RHR-979N.

REFERENCES:

BOVEE & CRAIL ISOMETRICS

RHR-748-1	REV 9
RCIC-659-22.23	REV 7
RCIC-659-24	REV 12
RCIC-659-25	REV 10

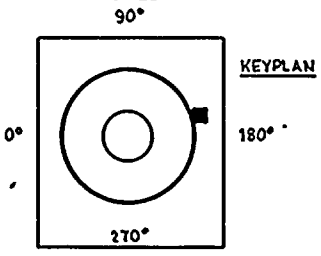

QUALITY CLASS: 1	ASME CODE CLASS: 1	
ENGR: D PORTER	DRAWN: K.M.A	DATE: 4-26-78

WASHINGTON PUBLIC POWER SUPPLY SYSTEM
RICHLAND, WASHINGTON 99352

THIS DRAWING IS INTENDED FOR USE IN PRESERVICE AND INSERVICE INSPECTION PROGRAMS ONLY.

NO	DATE	REVISION	BY	CHKD	APPVD
3	10-13-83	REVISED AS NOTED ADDED KEYPLAN, LUGS	K.M.A		
2	11-5-80	DELETED GRCIC(1)-6 ADDED NOTE 1	K.M.A		
1	1-10-79	CAL BLOCK REFERENCE CHANGED	K.M.A		
0	11-27-78	ISSUED FOR USE	K.M.A		
A	5-19-78	ISSUED FOR INFORMATION ONLY	K.M.A		

PIPING SYSTEM	NOM DIA (IN)	SCH	NOM WALL THK	MATERIAL SPECIFICATION	MATL TYPE	CAL BLOCK NO
6" RHR (10)-4	6	80	0.432	SA 106 GR B	CS	UT-28
6" RCIC (1)-4	6	80	0.432	SA 106 GR B	CS	UT-28
LUGS	NA	NA	NA	SA 516 GR 70	CS	UT-46

WNP-2
WELD & COMPONENT IDENTIFICATION DIAGRAM

TITLE: RESIDUAL HEAT REMOVAL/ REACTOR CORE ISOLATION COOLANT HEAD SPRAY

DWG NO: RCIC-102-1 REV 3

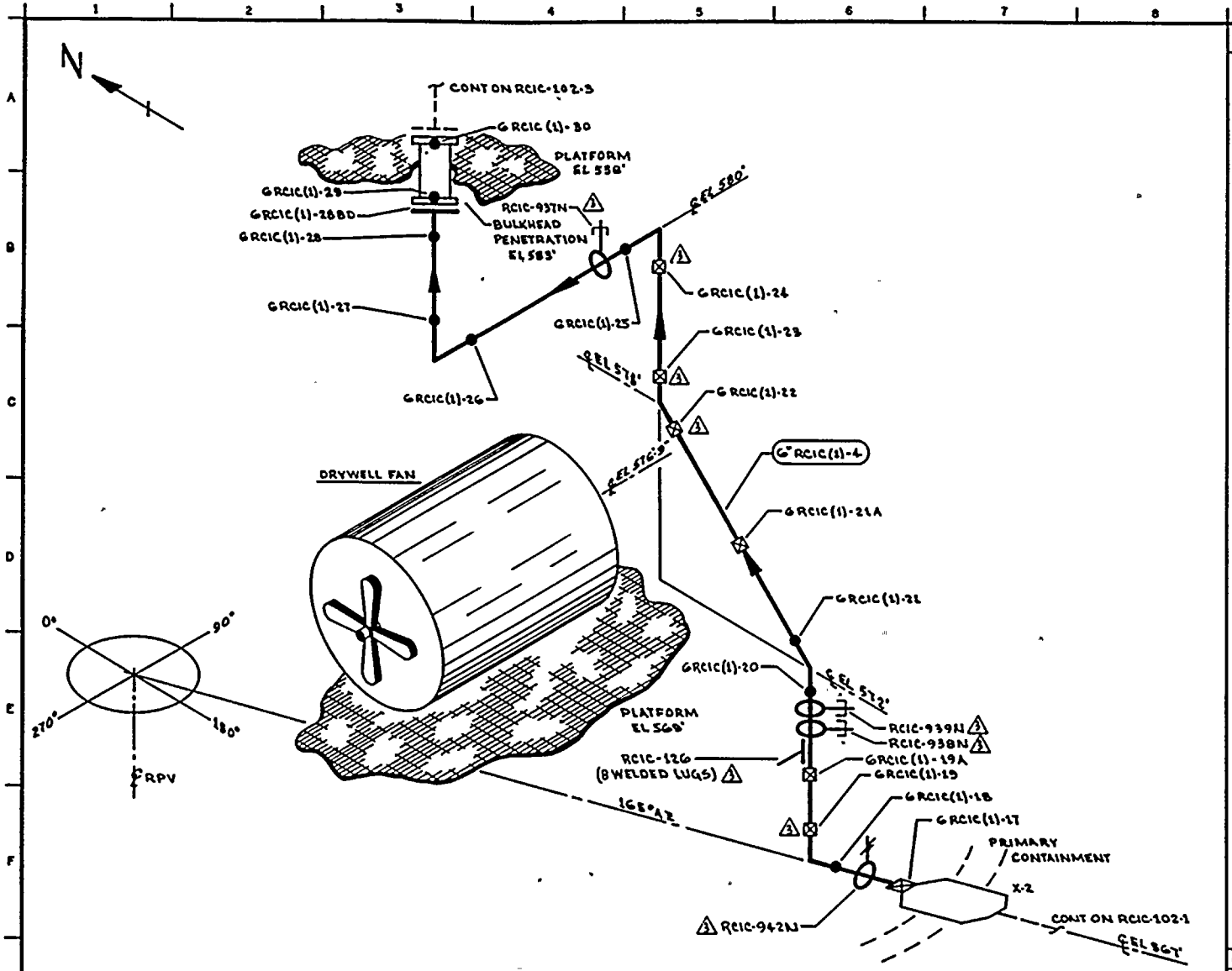

NOTES:

1. ACCESS TO WELDS GRCIC(1)-22 THRU GRCIC(1)-27 REQUIRES TEMPORARY SCAFFOLDING.

REFERENCES:

BOVEE & CRAIL ISOMETRIC RCIC-659-26 REV 7

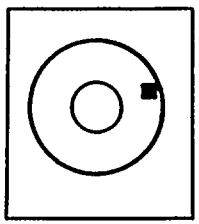

KEYPLAN

THIS DRAWING IS INTENDED FOR USE IN PRESERVICE AND INSERVICE INSPECTION PROGRAMS ONLY.

3	9-26-83	REVISED AS NOTED ADDED KEYPLAN	KMcA	[illegible]	[illegible]	6" RCIC (1)-4	6	80	0.432	SA 106 GR B	CS	UT-28
2	11-5-80	ADDED FW 19A & 21A, HNGR RCIC-12	KMcA	[illegible]	[illegible]	LUGS	NA	NA	NA	SA 516 GR 70	CS	UT-46
1	1-10-79	CAL BLOCK REFERENCE CHANGED	KMcA	[illegible]	[illegible]							
0	11-27-78	ISSUED FOR USE	KMcA	[illegible]	[illegible]							
A	5-19-78	ISSUED FOR INFORMATION ONLY	KMcA	[illegible]	[illegible]							
NO	DATE	REVISION	BY	CHKD	APPVD							

QUALITY CLASS: 1 | ASME CODE CLASS: 1

ENGR: D PORTER | DRAWN: K. McA | DATE: 4-25-78

WASHINGTON PUBLIC POWER SUPPLY SYSTEM

RICHLAND, WASHINGTON 99352

WNP-2
WELD & COMPONENT IDENTIFICATION DIAGRAM

TITLE: RESIDUAL HEAT REMOVAL / REACTOR CORE ISOLATION COOLANT HEAD SPRAY

DWG NO: RCIC-102-2 | REV 3

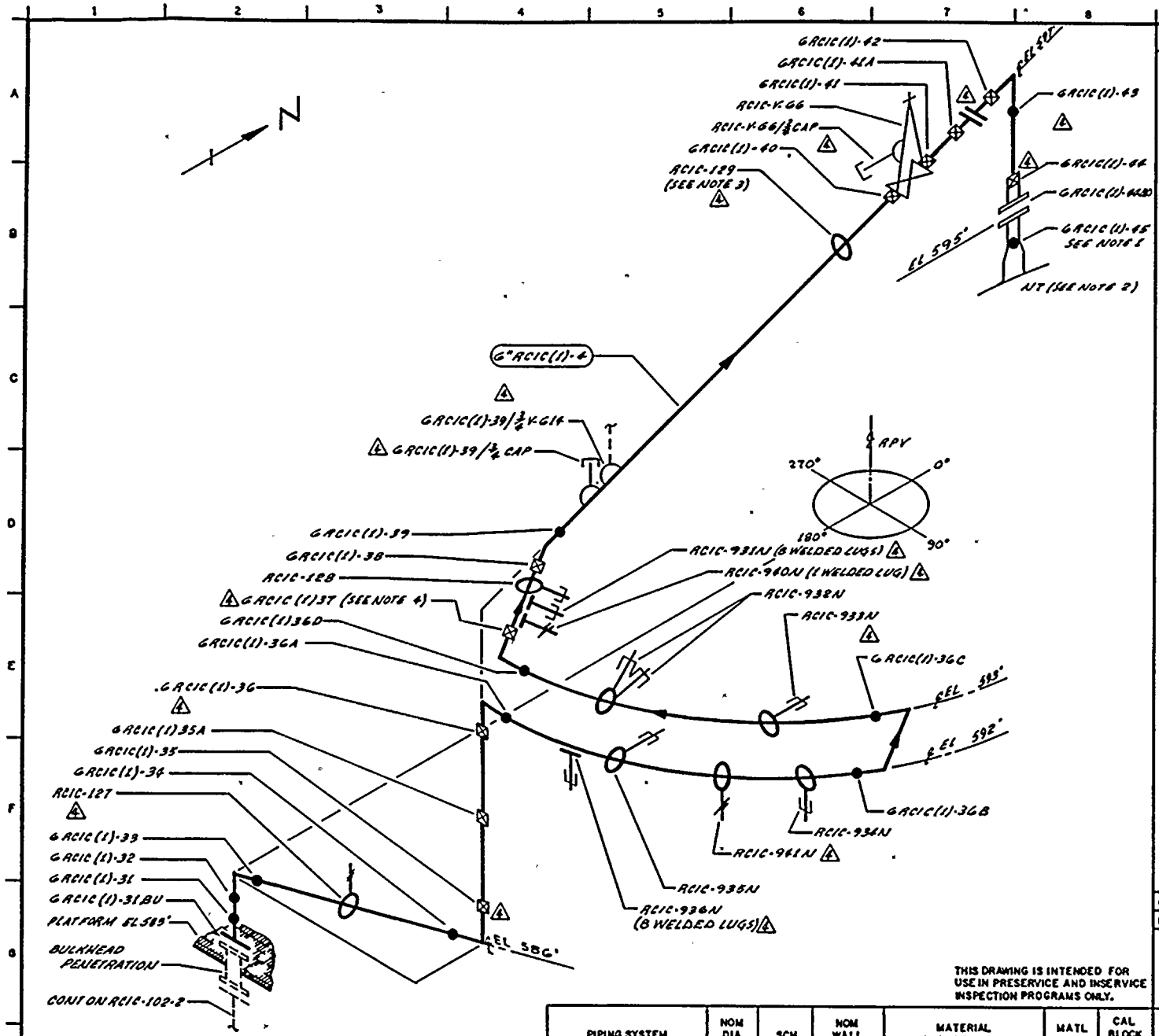

NOTES:

1. WELD GRCIC(1)-45 UTILIZES CAL BLOCK UT-107.
2. FOR DETAILS OF NOZZLE ASSEMBLY SEE RPV-111.
3. TEMPORARY SUPPORTS INSTALLED WHEN DISCONNECTED FROM RPV.
4. ACCESS TO WELD GRCIC(1)-37 REQUIRES REMOVAL OF RRC-920N

REFERENCES:

BOVEE & CRAIL ISOMETRIC RCIC-659-27.29 REV 12

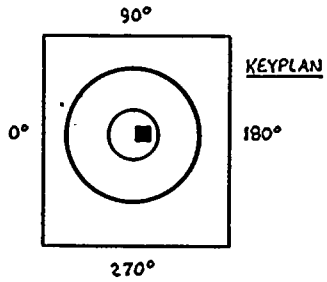

QUALITY CLASS: 1	ASME CODE CLASS: 1	
ENGR: D PORTER	DRAWN: [illegible]	DATE: 4-26-78

WASHINGTON PUBLIC POWER SUPPLY SYSTEM
RICHLAND, WASHINGTON 99352

THIS DRAWING IS INTENDED FOR USE IN PRESERVICE AND INSERVICE INSPECTION PROGRAMS ONLY.

NO	DATE	REVISION	BY	CHKD	APPVD
4	9-26-83	REVISED AS NOTED ADDED KEYPLAN & LUGS	[illegible]	[illegible]	[illegible]
3	11-5-80	REDRAWN - CONFIGURATION CHG - ADDED LUGS	[illegible]	[illegible]	[illegible]
2	8-30-79	ADDED NOTE 8	[illegible]	[illegible]	[illegible]
1	1-10-79	CAL BLOCK REFERENCE CHANGE	[illegible]	[illegible]	[illegible]
0	12-27-78	ISSUED FOR USE	[illegible]	[illegible]	[illegible]
A	5-19-78	ISSUED FOR INFORMATION ONLY	[illegible]	[illegible]	[illegible]

EXAMPLE OF REVISIONS

PIPING SYSTEM	NOM DIA (IN)	SCH	NOM WALL THK	MATERIAL SPECIFICATION	MATL TYPE	CAL BLOCK NO
6" RCIC(1)-4	6	80	0.432	SA 106 GR B	CS	UT-28
LUGS	NA	NA	NA	SA 516 GR 70	CS	UT-46

WNP-2
WELD & COMPONENT IDENTIFICATION DIAGRAM

TITLE: RESIDUAL HEAT REMOVAL/REACTOR CORE ISOLATION COOLANT HEAD SPRAY

DWG NO: RCIC-102-3 REV 4

WNP-02
INTERVAL: PSI
PERIOD: NA
OUTAGE:
DRAWING NO. RCIC-102

WASHINGTON PUBLIC POWER SUPPLY SYSTEM
PROGRAM PLAN AND SCHEDULE
SYSTEM OR COMPONENT: RHR(10)-4
DESCRIPTION: RPV HEAD SPRAY

DATE 12/14/84

IDENT. NO.	DESCRIPTION	SECT. XI EXAM.	EXAM MTH.	PROCEDURE	CAL. BLOCK	INSERVICE REQ.	INSERVICE SCHEDULED OUTAGE	NOTES
RHR-V-23-BDY								
	VALVE BODY	B-M-2	VT-1	QCI 7-1				
6RHR(10)-1								
	VLV TO PIPE	B-J	VOL	UTP-10	UT-28			
			SUR	PTP-1				
RHR-520								
	SPRING	B-K-2	VT-3	303/8.2.17				
			VT-4	303/8.2.17				
6RHR(10)-1/3/4V-187								
	TEST CONN	B-P	VT-2	N/A				SEE NOTES #6 & #7.
6RHR(10)-1/3/4V-62								
	TEST CONN	B-P	VT-2	N/A				SEE NOTES #6 & #7.
RHR-979N								
	RIGID HANGER	B-K-2	VT-3	303/8.2.17				
6RHR(10)-2								
	PIPE TO VLV	B-J	VOL	UTP-10	UT-28			FITTING TO FITTING < 6"
			SUR	PTP-1				FITTING TO FITTING < 6"
RHR-V-19-BDY								
	VALVE BODY	B-M-2	VT-1	QCI 7-1				
6RCIC(1)-1								
	VALVE TO PIPE	B-J	VOL	UTP-10	UT-28			
			SUR	PTP-1				
6RCIC(1)-2								
	PIPE TO EL	B-J	VOL	UTP-10	UT-28			
			SUR	PTP-1				
6RCIC(1)-3								
	EL TO PIPE	B-J	VOL	UTP-10	UT-28			
			SUR	PTP-1				

WNP-02
INTERVAL: PSI
PERIOD: NA
OUTAGE:
DRAWING NO. RCIC-102

WASHINGTON PUBLIC POWER SUPPLY SYSTEM
PROGRAM PLAN AND SCHEDULE
SYSTEM OR COMPONENT: RCIC(1)-4
DESCRIPTION: RPV HEAD SPRAY

DATE 12/14/84

IDENT. NO.	DESCRIPTION	SECT. XI EXAM.	EXAM MTH.	PROCEDURE	CAL. BLOCK	INSERVICE REQ.	INSERVICE SCHEDULED OUTAGE	NOTES
6RCIC(1)-3/3/4V-114	TEST CONN	B-P	VT-2	N/A				SEE NOTES #6 & #7.
6RCIC(1)-4	PIPE TO EL	B-J	VOL	UTP-10	UT-28			
			SUR	PTP-1				
6RCIC(1)-5	EL TO EL	B-J	VOL	UTP-1	UT-28			FITTING TO FITTING.
			SUR	PTP-1				FITTING TO FITTING.
6RCIC(1)-7	EL TO PIPE	B-J	VOL	UTP-10	UT-28			
			SUR	PTP-1				
6RCIC(1)-8	PIPE TO TEE	B-J	VOL	UTP-10	UT-28			
			SUR	PTP-1				
RCIC-V-13-BDY	VALVE BODY	B-M-2	VT-1	QCI 7-1				
RCIC-V-13-BLT	VALVE BOLTING	B-G-2	VT-1	QCI 7-1				
RCIC-V-13/3/4CAP	LEAKOFF CAPPED	B-P	VT-2	N/A				SEE NOTES #6 & #7.
6RCIC(1)-9	VLV TO PIPE	B-J	VOL	UTP-10	UT-28			
			SUR	PTP-1				
6RCIC(1)-10	PIPE TO TEE	B-J	VOL	UTP-10	UT-28			
			SUR	PTP-1				
6RCIC(1)-11	TEE TO PIPE	B-J	VOL	UTP-10	UT-28			
			SUR	PTP-1				

WNP-02
INTERVAL: PSI
PERIOD: NA
OUTAGE:
DRAWING NO. RCIC-102

WASHINGTON PUBLIC POWER SUPPLY SYSTEM
PROGRAM PLAN AND SCHEDULE
SYSTEM OR COMPONENT: RCIC(1)-4
DESCRIPTION: RPV HEAD SPRAY

IDENT. NO.	DESCRIPTION	SECT. XI EXAM.	EXAM MTH.	PROCEDURE	CAL. BLOCK	INSERVICE REQ.	INSERVICE SCHEDULED OUTAGE	NOTES
RCIC-948N								
	PSA-1 SN(2)	B-K-2	VT-3	303/8.2.17				S/N
			VT-4	303/8.2.17				S/N
RCIC-102								
	STRUT	B-K-2	VT-3	303/8.2.17				
RCIC-103								
	STRUT	B-K-2	VT-3	303/8.2.17				
RCIC-104								
	SPRING	B-K-2	VT-3	303/8.2.17				
			VT-4	303/8.2.17				
6RCIC(1)-12								
	PIPE TO VLV	B-J	VOL	QCI 6-13	UT-28			
			SUR	QCI 3-3				
RCIC-V-65-BDY								
	VALVE BODY	B-M-2	VT-1	QCI 7-1				
RCIC-V-65-BLT								
	VALVE BOLTING	B-G-2	VT-1	QCI 7-1				
RCIC-V-65/3/4CAP								
	LEAKOFF CAPPED	B-P	VT-2	N/A				SEE NOTES #6 & #7.
6RCIC(1)-13								
	VLV TO PIPE	B-J	VOL	QCI 6-13	UT-28			
			SUR	QCI 3-3				
6RCIC(1)-13/3/4V-82								
	TEST CONN	B-P	VT-2	N/A				SEE NOTES #6 & #7.
6RCIC(1)-14								
	PIPE TO EL	B-J	VOL	UTP-10	UT-28			
			SUR	QCI 3-3				
6RCIC(1)-15								
	EL TO PIPE	B-J	VOL	QCI 6-13	UT-28			
			SUR	QCI 3-3				

WNP-02
INTERVAL: PSI
PERIOD: NA
OUTAGE:
DRAWING NO. RCIC-102

WASHINGTON PUBLIC POWER SUPPLY SYSTEM
PROGRAM PLAN AND SCHEDULE
SYSTEM OR COMPONENT: RCIC(1)-4
DESCRIPTION: RPV HEAD SPRAY

DATE 12/14/84

IDENT. NO.	DESCRIPTION	SECT. XI EXAM.	EXAM MTH.	PROCEDURE	CAL. BLOCK	INSERVICE REQ.	INSERVICE SCHEDULED OUTAGE	NOTES
6RCIC(1)-15/3/4SP-19B								
	PIPE TO WOL	B-J	SUR	PTP-1				
6RCIC(1)-16								
	PIPE TO PEN	B-J	VOL	QCI 6-13	UT-28			PEN. X-2
			SUR	QCI 3-3				
6RCIC(1)-17								
	PEN TO PIPE	B-J	VOL	UTP-10	UT-28			
			SUR	PTP-1				
RCIC-942N								
	SPRING	B-K-2	VT-3	303/8.2.17				
			VT-4	303/8.2.17				
6RCIC(1)-18								
	PIPE TO EL	B-J	VOL	UTP-10	UT-28			
			SUR	PTP-1				
6RCIC(1)-19								
	EL TO PIPE	B-J	VOL	UTP-10	UT-28			
			SUR	PTP-1				
6RCIC(1)-19A								
	PIPE TO PIPE	B-J	VOL	UTP-10	UT-28			
			SUR	PTP-1				
RCIC-126								
	PSA-1 SN(2)	B-K-2	VT-3	303/8.2.17				S/N 585/586
			VT-4	303/8.2.17				S/N 585/586
RCIC-938N								
	PSA-3 SNUBBER	B-K-2	VT-3	303/8.2.17				S/N 2378
			VT-4	303/8.2.17				S/N 2378

WNP-02
INTERVAL: PSI
PERIOD: NA
OUTAGE:
DRAWING NO. RCIC-102

WASHINGTON PUBLIC POWER SUPPLY SYSTEM
PROGRAM PLAN AND SCHEDULE
SYSTEM OR COMPONENT: RCIC(1)-4
DESCRIPTION: RPV HEAD SPRAY

DATE 12/14/84

IDENT. NO.	DESCRIPTION	SECT. XI EXAM.	EXAM MTH.	PROCEDURE	CAL. BLOCK	INSERVICE REQ.	INSERVICE SCHEDULED OUTAGE	NOTES
RCIC-939N								
	PSA-3 SNUBBER	B-K-2	VT-3	303/8.2.17				S/N 4476
			VT-4	303/8.2.17				S/N 4476
6RCIC(1)-20								
	PIPE TO EL	B-J	VOL	UTP-10	UT-28			
			SUR	PTP-1				
6RCIC(1)-21								
	EL TO PIPE	B-J	VOL	UTP-10	UT-28			
			SUR	PTP-1				
6RCIC(1)-21A								
	PIPE TO PIPE	B-J	VOL	UTP-10	UT-28			
			SUR	PTP-1				
6RCIC(1)-22								
	PIPE TO EL	B-J	VOL	UTP-10	UT-28			
			SUR	PTP-1				
6RCIC(1)-23								
	EL TO PIPE	B-J	VOL	UTP-10	UT-28			
			SUR	PTP-1				
6RCIC(1)-24								
	PIPE TO EL	B-J	VOL	UTP-10	UT-28			
			SUR	PTP-1				
6RCIC(1)-25								
	EL TO PIPE	B-J	VOL	UTP-10	UT-28			
			SUR	PTP-1				
RCIC-937N								
	PSA-3 SNUBBER	B-K-2	VT-3	303/8.2.17				S/N 2571

WNP-02
INTERVAL: PSI
PERIOD: NA
OUTAGE:
DRAWING NO. RCIC-102

WASHINGTON PUBLIC POWER SUPPLY SYSTEM
PROGRAM PLAN AND SCHEDULE
SYSTEM OR COMPONENT: RCIC(1)-4
DESCRIPTION: RPV HEAD SPRAY

DATE 12/14/84

IDENT. NO.	DESCRIPTION	SECT. XI EXAM.	EXAM MTH.	PROCEDURE	CAL. BLOCK	INSERVICE REQ.	SCHEDULED OUTAGE	NOTES
			VT-4	303/8.2.17				S/N 2571
6RCIC(1)-26								
	PIPE TO EL	B-J	VOL	UTP-10	UT-28			
			SUR	PTP-1				
6RCIC(1)-27								
	EL TO PIPE	B-J	VOL	UTP-10	UT-28			
			SUR	PTP-1				
6RCIC(1)-28								
	PIPE TO FLANGE	B-J	VOL	UTP-10	UT-28			
			SUR	PTP-1				
6RCIC(1)-28BD								
	FLANGE BOLTING	B-G-2	VT-1	QCI 7-1				
6RCIC(1)-29								
	FLANGE TO PIPE	B-J	VOL	UTP-10	UT-28			
			SUR	PTP-1				
6RCIC(1)-30								
	PIPE TO FLANGE	B-J	VOL	UTP-10	UT-28			
			SUR	PTP-1				
6RCIC(1)-31BD								
	FLANGE BOLTING	B-G-2	VT-1	QCI 7-1				
6RCIC(1)-31								
	FLANGE TO PIPE	B-J	VOL	UTP-10	UT-28			
			SUR	PTP-1				
6RCIC(1)-32								
	PIPE TO EL	B-J	VOL	UTP-10	UT-28			
			SUR	PTP-1				
6RCIC(1)-33								
	EL TO PIPE	B-J	VOL	UTP-10	UT-28			

WNP-02
INTERVAL: PSI
PERIOD: NA
OUTAGE:
DRAWING NO. RCIC-102

WASHINGTON PUBLIC POWER SUPPLY SYSTEM
PROGRAM PLAN AND SCHEDULE
SYSTEM OR COMPONENT: RCIC(1)-4
DESCRIPTION: RPV HEAD SPRAY

DATE 12/14/84

IDENT. NO.	DESCRIPTION	SECT. XI EXAM.	EXAM MTH.	PROCEDURE	CAL. BLOCK	INSERVICE REQ.	SCHEDULED OUTAGE	NOTES
			SUR	PTP-1				
RCIC-127								
	SPRING	B-K-2	VT-3	303/8.2.17				
			VT-4	303/8.2.17				
6RCIC(1)-34								
	PIPE TO EL	B-J	VOL	UTP-10	UT-28			
			SUR	PTP-1				
6RCIC(1)-35								
	EL TO PIPE	B-J	VOL	UTP-10	UT-28			
			SUR	PTP-1				
6RCIC(1)-35A								
	PIPE TO PIPE	B-J	VOL	UTP-10	UT-28			
			SUR	PTP-1				
6RCIC(1)-36								
	PIPE TO EL	B-J	VOL	UTP-10	UT-28			
			SUR	PTP-1				
6RCIC(1)-36A								
	EL TO PIPE	B-J	VOL	UTP-10	UT-28			
			SUR	PTP-1				
RCIC-936N								
	PSA-1 SN(2)	B-K-2	VT-3	303/8.2.17				S/N 22373/223
			VT-4	303/8.2.17				S/N 22373/223
RCIC-935N								
	PSA-1 SNUBBER	B-K-2	VT-3	303/8.2.17				S/N 627
			VT-4	303/8.2.17				S/N 627
RCIC-941N								
	SPRING	B-K-2	VT-3	303/8.2.17				

WNP-02
INTERVAL: PSI
PERIOD: NA
OUTAGE:
DRAWING NO. RCIC-102

WASHINGTON PUBLIC POWER SUPPLY SYSTEM
PROGRAM PLAN AND SCHEDULE
SYSTEM OR COMPONENT: RCIC(1)-4
DESCRIPTION: RPV HEAD SPRAY

IDENT. NO.	DESCRIPTION	SECT. XI EXAM.	EXAM MTH.	PROCEDURE	CAL. BLOCK	INSERVICE REQ.	INSERVICE SCHEDULED OUTAGE	NOTES
			VT-4	303/8.2.17				
RCIC-941N(S)								
	WELDED SADDLE	B-K-1	VOL	UTP-26	UT-30			5/8" PLATE WELDED TO PIPE TUBE STEEL, WELDED TO PLATE.
RCIC-934N								
	PSA-1 SNUBBER	B-K-2	VT-3	303/8.2.17				S/N 3912
			VT-4	303/8.2.17				S/N 3912
6RCIC(1)-36B								
	PIPE TO U-TURN	B-J	VOL	UTP-10	UT-28			
			SUR	PTP-1				
6RCIC(1)-36C								
	U-TURN TO PIPE	B-J	VOL	UTP-10	UT-28			
			SUR	PTP-1				
RCIC-933N								
	PSA-1 SNUBBER	B-K-2	VT-3	303/8.2.17				S/N 3903
			VT-4	303/8.2.17				S/N 3903
RCIC-932N								
	PSA-1 SN(2)	B-K-2	VT-3	303/8.2.17				S/N 664/643
			VT-4	303/8.2.17				S/N 664/643
6RCIC(1)-36D								
	PIPE TO EL	B-J	VOL	UTP-10	UT-28			
			SUR	PTP-1				
6RCIC(1)-37								
	EL TO PIPE	B-J	VOL	UTP-10	UT-28			
			SUR	PTP-1				

WNP-02
INTERVAL: PSI
PERIOD: NA
OUTAGE:
DRAWING NO. RCIC-102

WASHINGTON PUBLIC POWER SUPPLY SYSTEM
PROGRAM PLAN AND SCHEDULE
SYSTEM OR COMPONENT: RCIC(1)-4
DESCRIPTION: RPV HEAD SPRAY

DATE 12/14/84

IDENT. NO.	DESCRIPTION	SECT. XI EXAM.	EXAM MTH.	PROCEDURE	CAL. BLOCK	INSERVICE REQ.	INSERVICE SCHEDULED OUTAGE	NOTES
RCIC-940N(W)								
	1 WELDED LUG	B-K-1	VOL	UTP-26	UT-28			3/4"Wx1 1/2"Hx3"L.
RCIC-940N								
	SPRING	B-K-2	VT-3	303/8.2.17				
			VT-4	303/8.2.17				
RCIC-931N(W)								
	8 WELDED LUGS	B-K-1	VOL	UTP-26	UT-28			3/4"Wx1 1/2"Hx3"L.
RCIC-931N								
	PSA-3 SNUBBER	B-K-2	VT-3	303/8.2.17				S/N 4422
			VT-4	303/8.2.17				S/N 4422
RCIC-128								
	PSA-3 SNUBBER	B-K-2	VT-3	303/8.2.17				S/N 4492
			VT-4	303/8.2.17				S/N 4492
6RCIC(1)-38								
	PIPE TO EL	B-J	VOL	UTP-10	UT-28			
			SUR	PTP-1				
6RCIC(1)-39								
	EL TO PIPE	B-J	VOL	UTP-10	UT-28			
			SUR	PTP-1				
6RCIC(1)-39/3/4CAP								
	VENT CAPPED	B-P	VT-2	N/A				SEE NOTES #6 & #7.
6RCIC(1)-39/3/4V-614								
	VENT CONN	B-P	VT-2	N/A				SEE NOTES #6 & #7.
RCIC-129								
	SPRING	B-K-2	VT-3	303/8.2.17				DOUBLE CONSTANT SPRING HANGER
			VT-4	303/8.2.17				DOUBLE CONSTANT SPRING HANGER
6RCIC(1)-40								
	PIPE TO VLV	B-J	VOL	UTP-10	UT-28			

WNP-02
INTERVAL: PSI
PERIOD: NA
OUTAGE:
DRAWING NO. RCIC-102

WASHINGTON PUBLIC POWER SUPPLY SYSTEM
PROGRAM PLAN AND SCHEDULE
SYSTEM OR COMPONENT: RCIC(1)-4
DESCRIPTION: RPV HEAD SPRAY

IDENT. NO.	DESCRIPTION	SECT. XI EXAM.	EXAM MTH.	PROCEDURE	CAL. BLOCK	INSERVICE REQ.	INSERVICE SCHEDULED OUTAGE	NOTES
			SUR	PTP-1				
RCIC-V-66-BDY	VALVE BODY	B-M-2	VT-1	QCI 7-1				
RCIC-V-66/3/4CAP	LEAKOFF CAPPED	B-P	VT-2	N/A				SEE NOTES #6 & #7.
6RCIC(1)-41	VLV TO PIPE	B-J	VOL	UTP-10	UT-28			
			SUR	PTP-1				
6RCIC(1)-41A	PIPE TO FLANGE	B-J	VOL	UTP-10	UT-28			
			SUR	PTP-1				
6RCIC(1)-41ABD	FLANGE BOLTING	B-G-2	VT-1	QCI 7-1				
6RCIC(1)-42	FLANGE TO EL	B-J	VOL	UTP-10	UT-28			
			SUR	PTP-1				
6RCIC(1)-43	EL TO PIPE	B-J	VOL	UTP-10	UT-28			
			SUR	PTP-1				
6RCIC(1)-44	PIPE TO FLANGE	B-J	VOL	UTP-10	UT-28			
			SUR	PTP-1				
6RCIC(1)-44BD	FLANGE BOLTING	B-G-2	VT-1	QCI 7-1				12 1-1/8" DIA. BOLTS
6RCIC(1)-45	FLG TO NOZZLE	B-J	VOL	UTP-10	UT-107			
			SUR	PTP-1				

WNP-02
INTERVAL: PSI
PERIOD: NA
OUTAGE:
DRAWING NO. RCIC-102

WASHINGTON PUBLIC POWER SUPPLY SYSTEM
PROGRAM PLAN AND SCHEDULE
SYSTEM OR COMPONENT: RCIC(1)-4
DESCRIPTION: RPV HEAD SPRAY

DATE 12/14/84

IDENT. NO.	DESCRIPTION	SECT. XI EXAM.	EXAM MTH.	PROCEDURE	CAL. BLOCK	INSERVICE REQ.	SCHEDULED OUTAGE	NOTES
RCIC-PB-102	RCIC PRES BNDRY	B-P	VT-2	N/A				SEE NOTES #6 & #7.

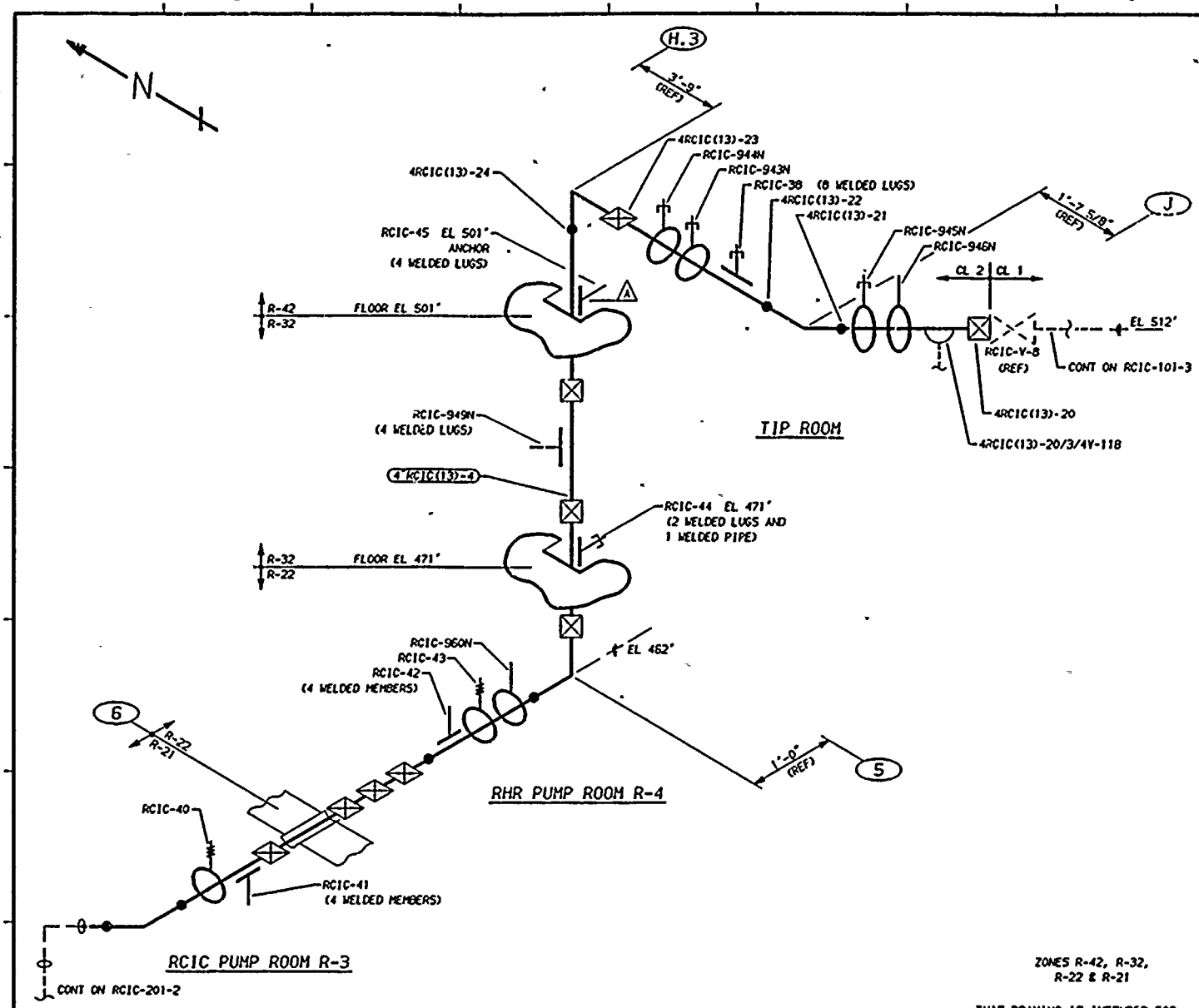

ZONES R-42, R-32, R-22 & R-21

THIS DRAWING IS INTENDED FOR USE IN PRESERVICE AND INSERVICE INSPECTIONS PROGRAMS ONLY.

NOTES:

1. THIS DRAWING IDENTIFIES PIPING AND COMPONENTS SUBJECT TO A VISUAL EXAM FOR EVIDENCE OF LEAKAGE DURING SYSTEM HYDRO OR OPERABILITY TESTS. TESTS ARE TO BE CONDUCTED PER THE REQUIREMENTS OF ASME SECTION XI, PARAGRAPH IWA-5000.
2. FOR BRANCH PIPING 4" NOM. OR LESS (CONNECTION SHOWN IN DASHED LINES) EXTEND VISUAL LEAKAGE EXAM THROUGH THE OUTERMOST NORMALLY CLOSED NUCLEAR CLASS VALVE, OR UNTIL TRANSITION TO INSTRUMENT TUBING, UNLESS OTHERWISE NOTED.

REFERENCES:

ISI - 219

BOYEE CRAIL ISIMETRICS
RCIC-662-6 REV 6
RCIC-662-7.10 REV 4

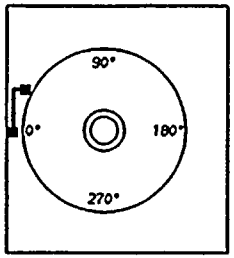

KEYPLAN

QUALITY CLASS: 1	ASME CODE CLASS: 2
ENGR: GA KUGLER	DRAWN: K-McA	DATE: 7-6-78

WASHINGTON PUBLIC POWER SUPPLY SYSTEM
RICHLAND, WASHINGTON 99352

WNP-2
WELD & COMPONENT
IDENTIFICATION DIAGRAM

TITLE:
RCIC STEAM SUPPLY TO RCIC-DT-1

DWG NO: RCIC-201-1 | REV 2

PIPING SYSTEM	NOM DIA (IN)	SCH	NOM WALL THK	MATERIAL SPECIFICATION	MATL TYPE	CAL BLOCK NO
4"RCIC(13)-4	4	80	0.337	SA 106 GR B	CS	UT-30

NO	DATE	REVISION	BY	CHKD	APVD
2	12-8-83	GENERAL UP-DATE REDRAWN	[illegible]	DPR	TFH
1	12-2-81	AUGMENTED ISI ADDED	K-McA	DPR	TFH
0	12-22-78	ISSUED FOR USE	K-McA	TFH / DWP	LFB
A	10-3-78	ISSUED FOR INFORMATION ONLY	K-McA	GAK	DWP

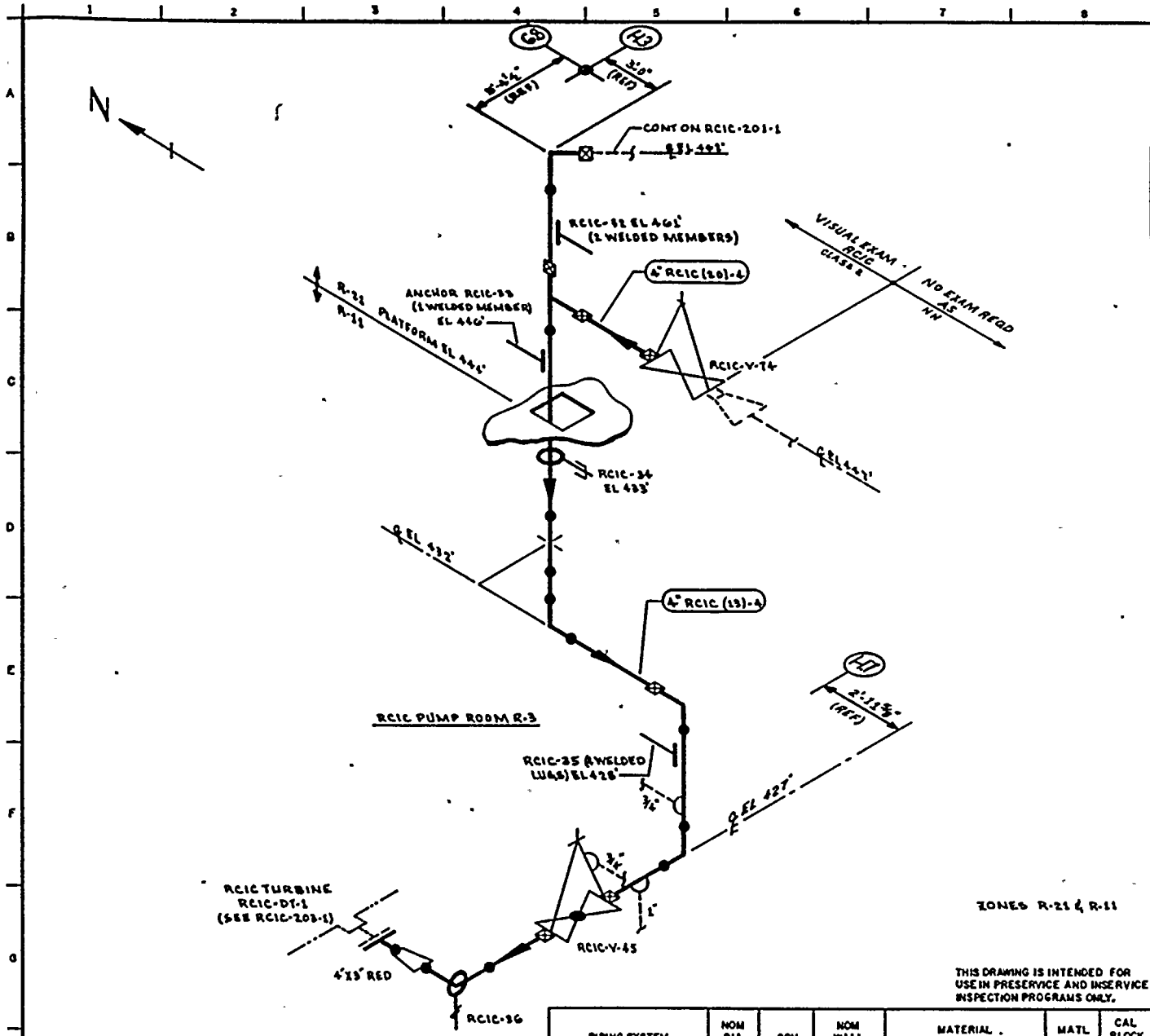

NOTES:

1. THIS DRAWING IDENTIFIES PIPING & COMPONENTS SUBJECT TO A VISUAL EXAM FOR EVIDENCE OF LEAKAGE DURING SYSTEM HYDRO OR OPERABILITY TESTS. TESTS ARE TO BE CONDUCTED PER THE REQUIREMENTS OF ASME SECTION XI, PARAGRAPH IWA-5000.
2. FOR BRANCH PIPING 4" DIA OR LESS (CONN SHOWN IN DASHED LINES) EXTEND VISUAL LEAKAGE EXAM THROUGH THE OUTERMOST NORMALLY CLOSED NUCLEAR CLASS VALVE OR UNTIL TRANSITION TO INSTRUMENT TUBING UNLESS OTHERWISE NOTED.
3. AT LOCATIONS WHERE LEAKAGE IS NORMALLY EXPECTED (EG, VALVE STEM & PUMP SEAL LEAKOFF CONN) VERIFY LEAKAGE COLLECTION SYSTEM OPERABILITY ONLY. NO HYDRO TEST OF COLLECTION SYSTEM IS REQUIRED.

REFERENCES:

BOVEE & CRAIL ISOMETRICS

RCIC-662-11.15 REV 2
RCIC-598-1 REV 0
RCIC-662-11.15H REV 1
RCIC-598-1H REV 0

THIS DRAWING IS INTENDED FOR USE IN PRESERVICE AND INSERVICE INSPECTION PROGRAMS ONLY.

PIPING SYSTEM	NOM DIA (IN)	SCH	NOM WALL THK	MATERIAL SPECIFICATION	MATL TYPE	CAL BLOCK NO
4" RCIC (13)-4	4"	80	0.337	SA 106 GRB	CS	NA
4" RCIC (10)-4	4"	80	0.337	SA 106 GRB	CS	NA

NO	DATE	REVISION	BY	CHKD	APPVD
0	12-22-78	ISSUED FOR USE	KMcA	[illegible]	[illegible]
A	10-3-78	ISSUED FOR INFORMATION ONLY	KMcA	[illegible]	[illegible]

QUALITY CLASS: 1 | ASME CODE CLASS: 2

ENGR: G.A. KUGLER | DRAWN: K.McA | DATE: 7-27-78

WASHINGTON PUBLIC POWER SUPPLY SYSTEM
RICHLAND, WASHINGTON 99352

WNP-2
WELD & COMPONENT IDENTIFICATION DIAGRAM

TITLE: RCIC STEAM SUPPLY TO RCIC-DT-1

DWG NO: RCIC-201-2 | REV 0

WNP-02
INTERVAL: PSI
PERIOD: NA
OUTAGE:
DRAWING NO. RCIC-201

WASHINGTON PUBLIC POWER SUPPLY SYSTEM
PROGRAM PLAN AND SCHEDULE
SYSTEM OR COMPONENT: RCIC(13)-4
DESCRIPTION: RCIC STEAM SUPPLY

DATE 12/14/84

IDENT. NO.	DESCRIPTION	SECT. XI EXAM.	EXAM MTH.	PROCEDURE	CAL. BLOCK	INSERVICE REQ.	INSERVICE SCHEDULED OUTAGE	NOTES
4RCIC(13)-20								
	VLV TO PIPE	AUGMT	VOL	QCI 6-13	UT-30			
4RCIC(13)-20/3/4V-118								
	TEST CONN	N/A	VT-2	N/A				SEE NOTES #6 & #7.
RCIC-945N								
	PSA-10 SNUBBER	C-E-2	VT-3	303/8.2.17				S/N 9924, +QC I SN.
			VT-4	303/8.2.17				S/N 9924, +QC I SN.
4RCIC(13)-21								
	PIPE TO EL	AUGMT	VOL	QCI 6-13	UT-30			
4RCIC(13)-22								
	EL TO PIPE	AUGMT	VOL	QCI 6-13	UT-30			
RCIC-38								
	PSA-1 SN(2)	C-E-2	VT-3	303/8.2.17				S/N E214/W599, +QC I SN.
			VT-4	303/8.2.17				S/N E214/W599, +QC I SN.
RCIC-943N								
	PSA-10 SNUBBER	C-E-2	VT-3	303/8.2.17				S/N 577, +QC I SN.
			VT-4	303/8.2.17				S/N 577, +QC I SN.
RCIC-944N								
	PSA-3 SN(2)	C-E-2	VT-3	303/8.2.17				S/N T4437/B390, +QC I SN.
			VT-4	303/8.2.17				S/N T4437/B390, +QC I SN.
4RCIC(13)-23								
	PIPE TO EL	AUGMT	VOL	QCI 6-13	UT-30			
4RCIC(13)-24								
	EL TO PIPE	AUGMT	VOL	QCI 6-13	UT-30			
RCIC-44								
	PSA-1/4 SNUBBER	N/A	VT-3	303/8.2.17				S/N 432, +QC I SN.

WNP-02
INTERVAL: PSI
PERIOD: NA
OUTAGE:
DRAWING NO. RCIC-201

WASHINGTON PUBLIC POWER SUPPLY SYSTEM
PROGRAM PLAN AND SCHEDULE
SYSTEM OR COMPONENT: RCIC(13)-4
DESCRIPTION: RCIC STEAM SUPPLY

DATE 12/14/84

IDENT. NO.	DESCRIPTION	SECT. XI EXAM.	EXAM MTH.	PROCEDURE	CAL. BLOCK	INSERVICE REQ.	INSERVICE SCHEDULED OUTAGE	NOTES
RCIC-34			VT-4	303/8.2.17				S/N 432, +QC I SN.
	PSA-1/2 SNUBBER	N/A	VT-3	303/8.2.17				S/N 4008, +QC I SN.
RCIC-962N			VT-4	303/8.2.17				S/N 4008, +QC I SN.
	PSA-1/2 SNUBBER	N/A	VT-3	303/8.2.17				S/N 2115, +QC I SN.
RCIC-961N			VT-4	303/8.2.17				S/N 2115, +QC I SN.
	PSA-1/4 SNUBBER	N/A	VT-3	303/8.2.17				S/N 6229, +QC I SN, THIS SN IS ON DRIP-LEG NEAR VALVE RCIC-V-45.
			VT-4	303/8.2.17				S/N 6229, +QC I SN, THIS SN IS ON DRIP-LEG NEAR VALVE RCIC-V-45.
RCIC-PB-201								
	RCIC PRES BNDRY	N/A	VT-2	N/A				SEE NOTES #6 & #7.

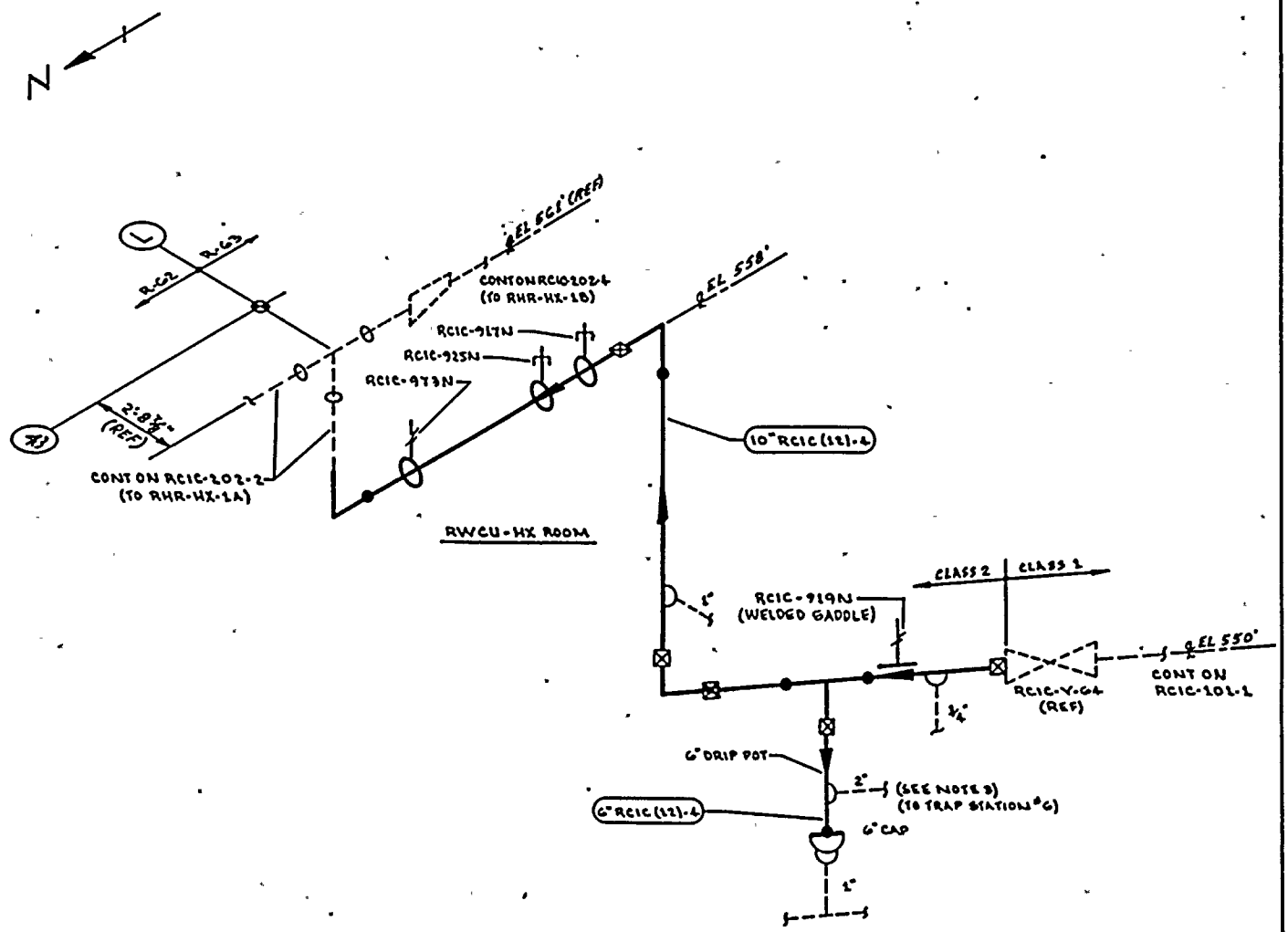

ZONES R-G2 & R-G3

THIS DRAWING IS INTENDED FOR USE IN PRESERVICE AND INSERVICE INSPECTION PROGRAMS ONLY.

NOTES:

1. THIS DRAWING IDENTIFIES PIPING & COMPONENTS SUBJECT TO A VISUAL EXAM FOR EVIDENCE OF LEAKAGE DURING SYSTEM HYDRO OR OPERABILITY TESTS. TESTS ARE TO BE CONDUCTED PER THE REQUIREMENTS OF ASME SECTION XI, PARAGRAPH IWA-5000.
2. FOR BRANCH PIPING 4" DIA OR LESS (CONN SHOWN IN DASHED LINES) EXTEND VISUAL LEAKAGE EXAM THROUGH THE OUTERMOST NORMALLY CLOSED NUCLEAR CLASS VALVE OR UNTIL TRANSITION TO INSTRUMENT TUBING UNLESS OTHERWISE NOTED.
3. EXTEND VISUAL LEAKAGE EXAM THROUGH TRAP STATION. FROM TRAP STATION TO BAROMETRIC CONDENSER, VERIFY THAT DRAINAGE SYSTEM IS OPERATIVE.

REFERENCES:

BOVEE & CRAIL ISOMETRICS

RCIC-663-3.5 REV 6
RCIC-663-6 REV 4

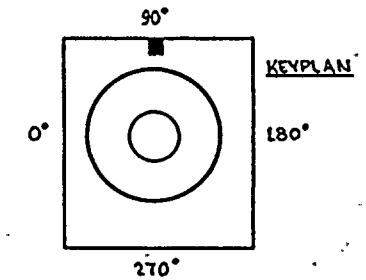

PIPING SYSTEM	NOM DIA (IN)	SCH	NOM WALL THK	MATERIAL SPECIFICATION	MATL TYPE	CAL BLOCK NO
10" RCIC (12)-4	10	100	0.718	SA 106 GR B	CS	NA
6" RCIC (12)-4	6	120	0.562	SA 106 GR B	CS	NA

NO	DATE	REVISION	BY	CHKD	APPVD
1	4-26-83	ADDED HANGERS RHR-917N, 919N, 920N & 925N	K.W.C.A	DAR	TTS
0	12-22-78	ISSUED FOR USE	K.W.C.A	[illegible]	[illegible]
A	10-3-78	ISSUED FOR INFORMATION ONLY	K.W.C.A	DAK	DWR

QUALITY CLASS: 1 | ASME CODE CLASS: 2

ENGR: G.A. KUGLER | DRAWN: K.M.C.A. | DATE: 7-17-78

WASHINGTON PUBLIC POWER SUPPLY SYSTEM
RICHLAND, WASHINGTON 99352

WNP-2
WELD & COMPONENT IDENTIFICATION DIAGRAM

TITLE: CONDENSING MODE STEAM SUPPLY TO RHR-HX-1A & 1B

DWG NO: RCIC-202-1 | REV 1

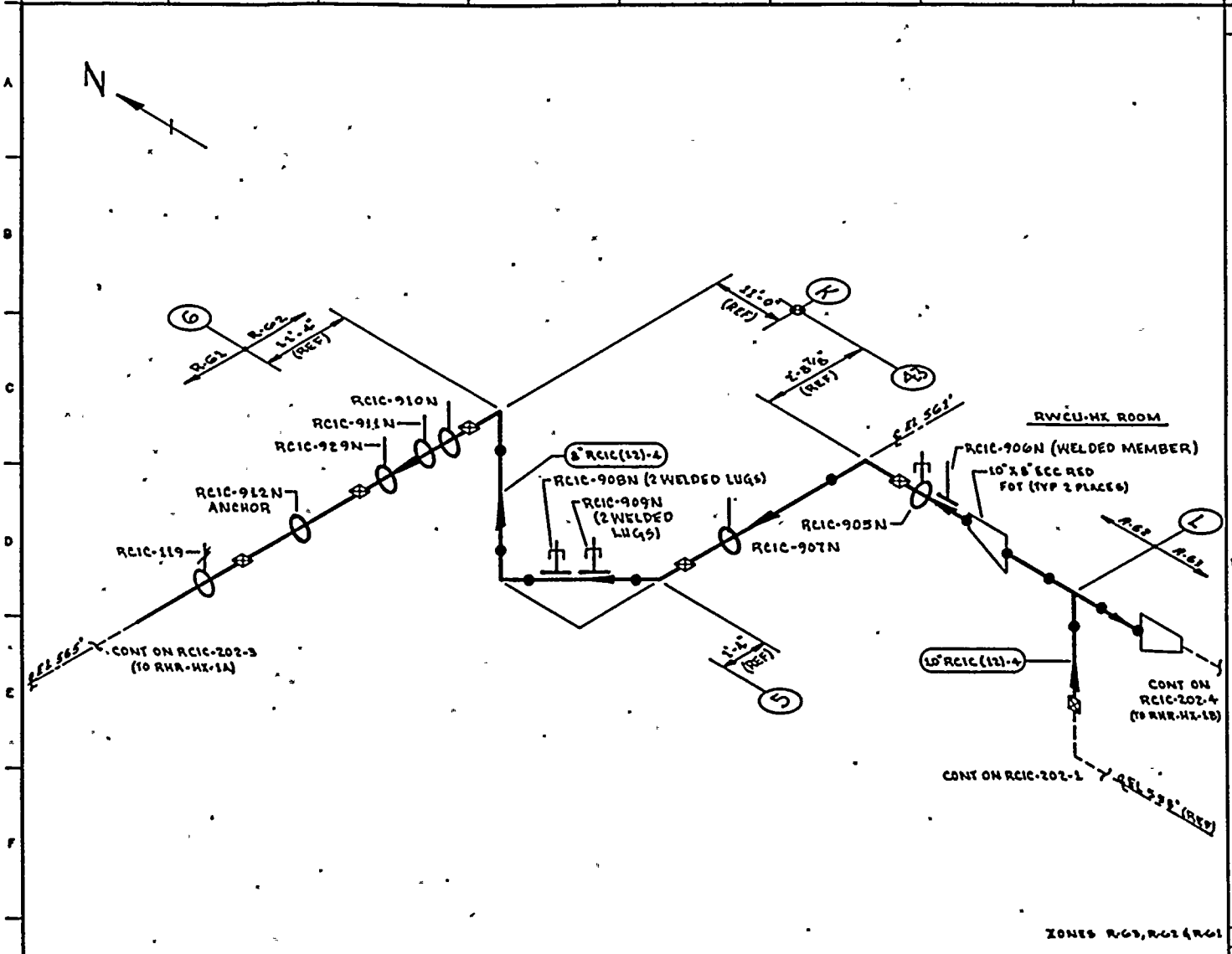

NOTES:

1. THIS DRAWING IDENTIFIES PIPING & COMPONENTS SUBJECT TO A VISUAL EXAM FOR EVIDENCE OF LEAKAGE DURING SYSTEM HYDRO OR OPERABILITY TESTS. TESTS ARE TO BE CONDUCTED PER THE REQUIREMENTS OF ASME SECTION XI, PARAGRAPH IWA-5000.

REFERENCES:

BOVEE & CRAIL ISOMETRICS

RCIC-GGE-1.3 REV B
RCIC-GGE-4.9 REV 9

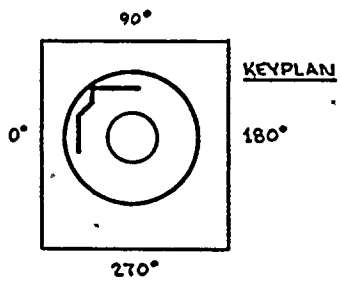

THIS DRAWING IS INTENDED FOR USE IN PRESERVICE AND INSERVICE INSPECTION PROGRAMS ONLY.

PIPING SYSTEM	NOM DIA (IN)	SCH	NOM WALL THK	MATERIAL SPECIFICATION	MATL TYPE	CAL BLOCK NO
10" RCIC(12)-4	10	100	0.718	SA 106 GR B	CS	NA
8" RCIC(12)-4	8	100	0.593	SA 106 GR B	CS	NA

NO	DATE	REVISION	BY	CHKD	APPVD
1	12-2-83	ADDED HANGERS & KEYPLAN	KMcL	[illegible]	[illegible]
0	12-19-78	ISSUED FOR USE	KMcL	[illegible]	[illegible]
A	10-3-78	ISSUED FOR INFORMATION ONLY	KMcL	[illegible]	[illegible]

QUALITY CLASS: 1 | ASME CODE CLASS: 2

ENGR: G.A. KUGLER | DRAWN: K. McL | DATE: 7-18-78

WASHINGTON PUBLIC POWER SUPPLY SYSTEM
RICHLAND, WASHINGTON 99352

WNP-2
WELD & COMPONENT
IDENTIFICATION DIAGRAM

TITLE:
CONDENSING MODE
STEAM SUPPLY TO RHR-HX-1A

DWG NO: RCIC-202-2 | REV 1

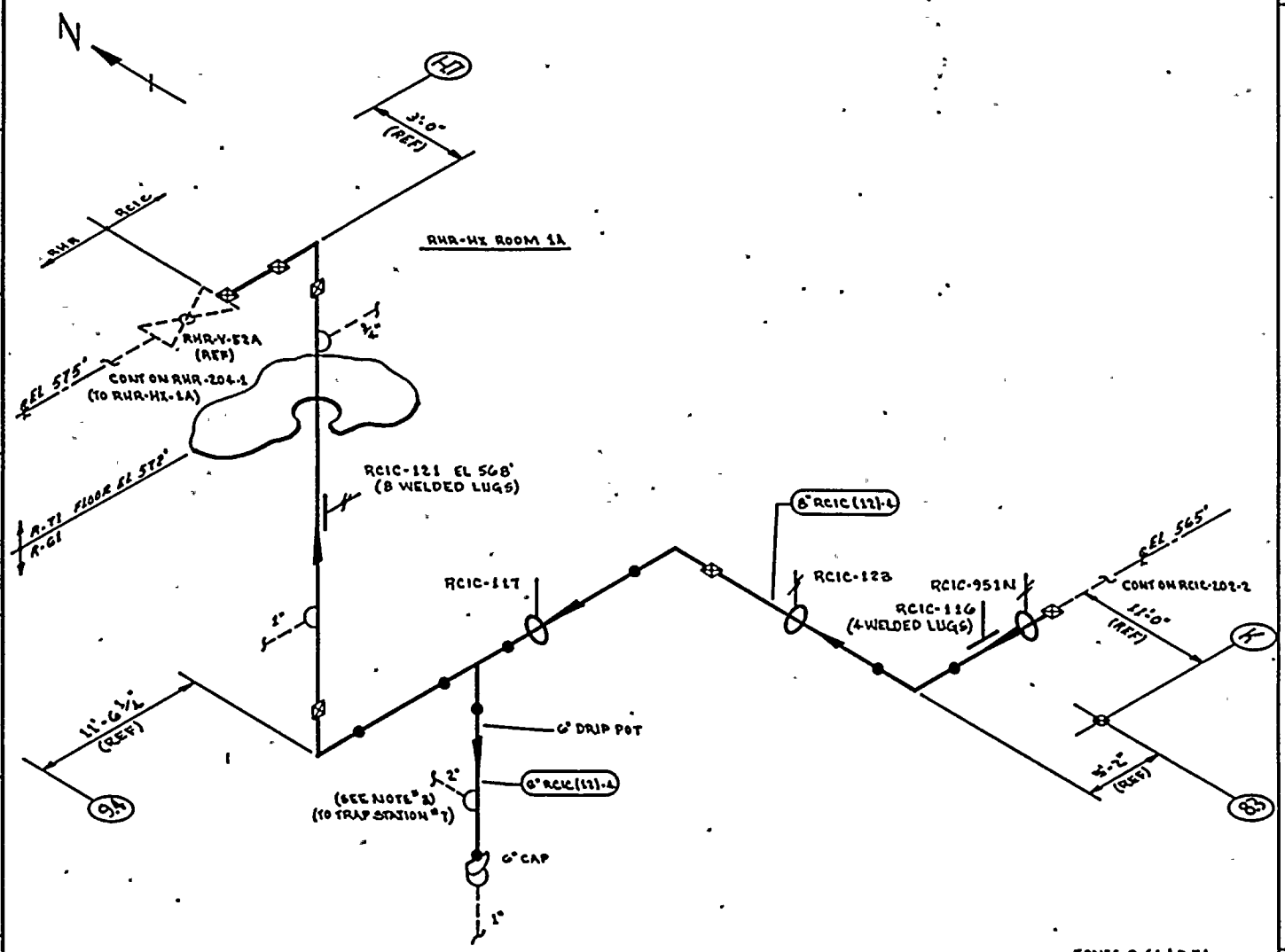

NOTES:

1. THIS DRAWING IDENTIFIES PIPING & COMPONENTS SUBJECT TO A VISUAL EXAM FOR EVIDENCE OF LEAKAGE DURING SYSTEM HYDRO OR OPERABILITY TESTS. TESTS ARE TO BE CONDUCTED PER THE REQUIREMENTS OF ASME SECTION XI, PARAGRAPH IWA-5000.
2. FOR BRANCH PIPING 4" DIA OR LESS (CONN SHOWN IN DASHED LINES) EXTEND VISUAL LEAKAGE EXAM THROUGH THE OUTERMOST NORMALLY CLOSED NUCLEAR CLASS VALVE OR UNTIL TRANSITION TO INSTRUMENT TUBING UNLESS OTHERWISE NOTED.
3. EXTEND VISUAL LEAKAGE EXAM THROUGH TRAP STATION. FROM TRAP STATION TO BAROMETRIC CONDENSER, VERIFY THAT DRAINAGE SYSTEM IS OPERATIVE.

REFERENCES:

BOVEE & CRAIL ISOMETRIC
RCIC-665-4.9 REV 9

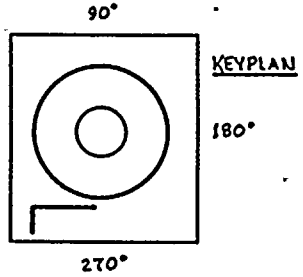

THIS DRAWING IS INTENDED FOR USE IN PRESERVICE AND INSERVICE INSPECTION PROGRAMS ONLY.

PIPING SYSTEM	NOM DIA (IN)	SCH	NOM WALL THK	MATERIAL SPECIFICATION	MATL TYPE	CAL BLOCK NO
8" RCIC (12)-4	8"	100	0.593	SA 106 GR B	CS	NA
6" RCIC (12)-4	6"	120	0.562	SA 106 GR B	CS	NA

NO	DATE	REVISION	BY	CHKD	APPVD
1	12-7-83	ADDED HANGERS & KEYPLAN	KMA	DPR	TFH
0	12-29-78	ISSUED FOR USE	KMA	[illegible]	[illegible]
1	11-1-78	ISSUED FOR INFORMATION ONLY	KMA	[illegible]	[illegible]

QUALITY CLASS: 1 | ASME CODE CLASS: 2

ENGR: G.A. KUGLER | DRAWN: K.M.A. | DATE: 7-18-78

WASHINGTON PUBLIC POWER SUPPLY SYSTEM
RICHLAND, WASHINGTON 99352

WNP-2
WELD & COMPONENT IDENTIFICATION DIAGRAM

TITLE:
CONDENSING MODE STEAM SUPPLY TO RHR-HX-1A

DWG NO: RCIC-202-3 | REV 1

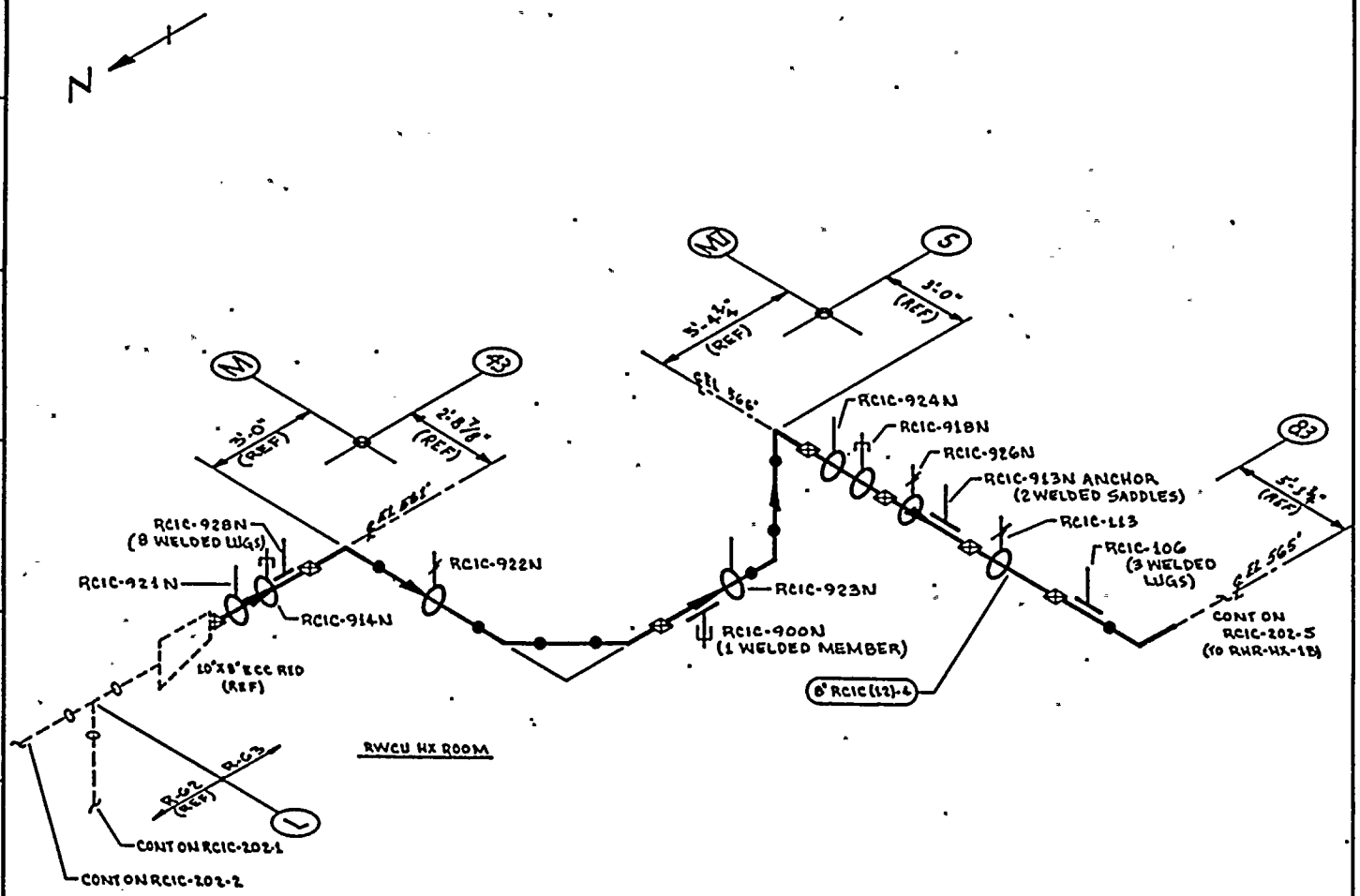

NOTES:

1. THIS DRAWING IDENTIFIES PIPING & COMPONENTS SUBJECT TO A VISUAL EXAM FOR EVIDENCE OF LEAKAGE DURING SYSTEM HYDRO OR OPERABILITY TESTS. TESTS ARE TO BE CONDUCTED PER THE REQUIREMENTS OF ASME SECTION XI, PARAGRAPH IWA-5000.

REFERENCES:

BOVEE & CRAIL ISOMETRIC RCIC-GG4-1.7 REV 8

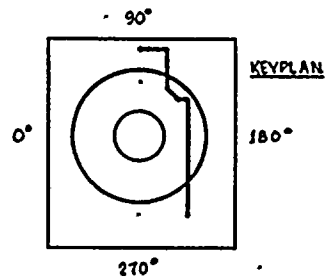

THIS DRAWING IS INTENDED FOR USE IN PRESERVICE AND INSERVICE INSPECTION PROGRAMS ONLY.

PIPING SYSTEM	NOM DIA (IN)	SCH	NOM WALL THK	MATERIAL SPECIFICATION	MATL TYPE	CAL BLOCK NO
8" RCIC (12)-4	8	100	0.593	SA 106 GR B	CS	NA

NO	DATE	REVISION	BY	CHKD	APPVD
1	12-2-83	ADDED HANGERS & KEYPLAN			
0	12-22-81	ISSUED FOR USE			
A	11-3-81	ISSUED FOR INFORMATION ONLY			

QUALITY CLASS: 1 | ASME CODE CLASS: 2

ENGR: G.A. KUGLER | DRAWN: K. McA. | DATE: 7-19-78

WASHINGTON PUBLIC POWER SUPPLY SYSTEM
RICHLAND, WASHINGTON 99352

WNP-2
WELD & COMPONENT IDENTIFICATION DIAGRAM

TITLE: CONDENSING MODE STEAM SUPPLY TO RHR-HX-1B

DWG NO: RCIC-202-4 | REV 1

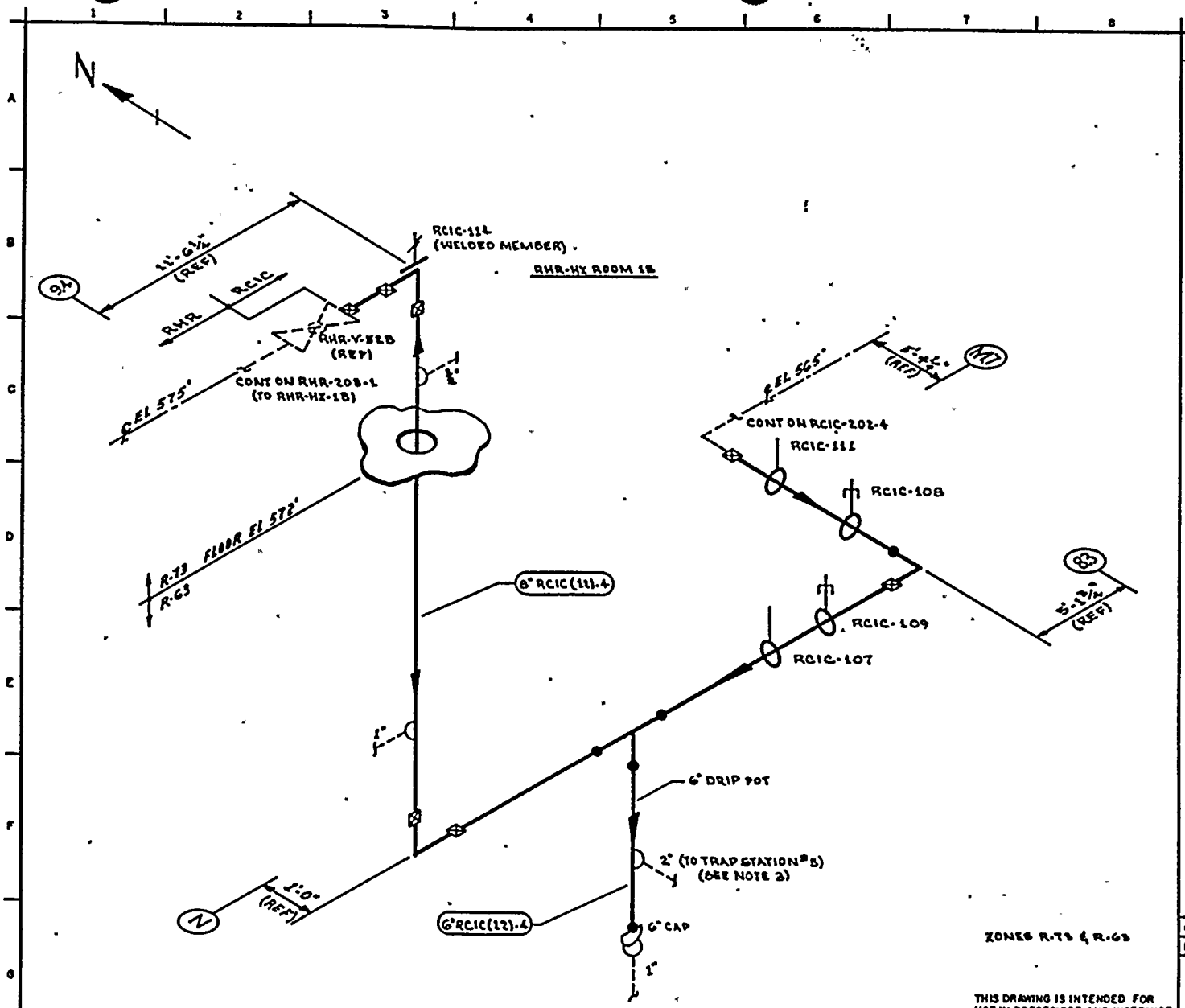

NOTES:

1. THIS DRAWING IDENTIFIES PIPING & COMPONENTS SUBJECT TO A VISUAL EXAM FOR EVIDENCE OF LEAKAGE DURING SYSTEM HYDRO OR OPERABILITY TESTS. TESTS ARE TO BE CONDUCTED PER THE REQUIREMENTS OF ASME SECTION XI, PARAGRAPH IWA-5000.
2. FOR BRANCH PIPING 4" DIA OR LESS (CONN SHOWN IN DASHED LINES) EXTEND VISUAL LEAKAGE EXAM THROUGH THE OUTERMOST NORMALLY CLOSED NUCLEAR CLASS VALVE OR UNTIL TRANSITION TO INSTRUMENT TUBING UNLESS OTHERWISE NOTED.
3. EXTEND VISUAL LEAKAGE EXAM THROUGH TRAP STATION TO BAROMETRIC CONDENSER. VERIFY THAT DRAINAGE SYSTEM IS OPERATIVE.

REFERENCES:

BOVEE & CRAIL ISOMETRIC
RCIC-G64-8.10 REV 10

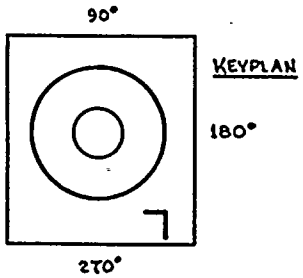

QUALITY CLASS: 1	ASME CODE CLASS: 2
ENGR: G.A. KUGLER, DRAWN: V.M.C.A	DATE: 7-21-78

THIS DRAWING IS INTENDED FOR USE IN PRESERVICE AND INSERVICE INSPECTION PROGRAMS ONLY.

WASHINGTON PUBLIC POWER SUPPLY SYSTEM
RICHLAND, WASHINGTON 99352

PIPING SYSTEM	NOM DIA (IN)	SCH	NOM WALL THK	MATERIAL SPECIFICATION	MATL TYPE	CAL BLOCK NO
8" RCIC(12)-4	8"	100	0.593	SA 106 GR B	CS	NA
6" RCIC(12)-4	6"	120	0.562	SA 106 GR B	CS	NA

NO	DATE	REVISION	BY	CHKD	APPVD
1	12-2-83	ADDED HANGERS & KEYPLAN	K.M.A	[illegible]	[illegible]
0	12-22-78	ISSUED FOR USE	K.M.A	[illegible]	[illegible]
A	11-3-78	ISSUED FOR INFORMATION ONLY	[illegible]	[illegible]	[illegible]

WNP-2
WELD & COMPONENT IDENTIFICATION DIAGRAM

TITLE:
CONDENSING MODE
STEAM SUPPLY TO RHR-HX 1B

DWG NO: RCIC-202-5 REV 1

WNP-02
INTERVAL: PSI
PERIOD: NA
OUTAGE:
DRAWING NO. RCIC-202

WASHINGTON PUBLIC POWER SUPPLY SYSTEM
PROGRAM PLAN AND SCHEDULE
SYSTEM OR COMPONENT: RCIC(12)-4
DESCRIPTION: COND MODE STM SUPPLY

IDENT. NO.	DESCRIPTION	SECT. XI EXAM.	EXAM MTH.	PROCEDURE	CAL. BLOCK	INSERVICE REQ.	INSERVICE SCHEDULED OUTAGE	NOTES
RCIC-919N								
	SPRING	C-E-2	VT-3	303/8.2.17				
			VT-4	303/8.2.17				
RCIC-917N								
	PSA-3 SNUBBER	C-E-2	VT-3	303/8.2.17				S/N
			VT-4	303/8.2.17				S/N
RCIC-925N								
	PSA-3 SNUBBER	C-E-2	VT-3	303/8.2.17				S/N
RCIC-920N								
	SPRING	C-E-2	VT-3	303/8.2.17				
			VT-4	303/8.2.17				
RCIC-906N								
	STRUT	C-E-2	VT-3	303/8.2.17				
RCIC-905N								
	PSA-10 SNUBBER	C-E-2	VT-3	303/8.2.17				S/N
			VT-4	303/8.2.17				S/N
RCIC-907N								
	STRUT	C-E-2	VT-3	303/8.2.17				
RCIC-909N								
	PSA-3 SNUBBER	C-E-2	VT-3	303/8.2.17				S/N
			VT-4	303/8.2.17				S/N
RCIC-908N								
	PSA-3 SNUBBER	C-E-2	VT-3	303/8.2.17				S/N
			VT-4	303/8.2.17				S/N
RCIC-910N								
	STRUT	C-E-2	VT-3	303/8.2.17				
RCIC-911N								
	STRUT	C-E-2	VT-3	303/8.2.17				
RCIC-929N								
	STRUT	C-E-2	VT-3	303/8.2.17				

WNP-02
INTERVAL: PSI
PERIOD: NA
OUTAGE:
DRAWING NO. RCIC-202

WASHINGTON PUBLIC POWER SUPPLY SYSTEM
PROGRAM PLAN AND SCHEDULE
SYSTEM OR COMPONENT: RCIC(12)-4
DESCRIPTION: COND MODE STM SUPPLY

IDENT. NO.	DESCRIPTION	SECT. XI EXAM.	EXAM MTH.	PROCEDURE	CAL. BLOCK	INSERVICE REQ.	INSERVICE SCHEDULED OUTAGE	NOTES
RCIC-912N								
	ANCHOR	C-E-2	VT-3	303/8.2.17				
RCIC-119								
	SPRING	C-E-2	VT-3	303/8.2.17				
			VT-4	303/8.2.17				
RCIC-951N								
	SPRING	C-E-2	VT-3	303/8.2.17				
			VT-4	303/8.2.17				
RCIC-116								
	STRUT	C-E-2	VT-3	303/8.2.17				
RCIC-123								
	SPRING	C-E-2	VT-3	303/8.2.17				
			VT-4	303/8.2.17				
RCIC-117								
	STRUT	C-E-2	VT-3	303/8.2.17				
RCIC-121								
	SPRING	C-E-2	VT-3	303/8.2.17				
			VT-4	303/8.2.17				
RCIC-921N								
	STRUT	C-E-2	VT-3	303/8.2.17				
RCIC-914N								
	PSA-3 SNUBBER	C-E-2	VT-3	303/8.2.17				S/N
			VT-4	303/8.2.17				S/N
RCIC-928N								
	STRUT	C-E-2	VT-3	303/8.2.17				
RCIC-922N								
	SPRING	C-E-2	VT-3	303/8.2.17				
			VT-4	303/8.2.17				

WNP-02
INTERVAL: PSI
PERIOD: NA
OUTAGE:
DRAWING NO. RCIC-202

WASHINGTON PUBLIC POWER SUPPLY SYSTEM
PROGRAM PLAN AND SCHEDULE
SYSTEM OR COMPONENT: RCIC(12)-4
DESCRIPTION: COND MODE STM SUPPLY

IDENT. NO.	DESCRIPTION	SECT. XI EXAM.	EXAM MTH.	PROCEDURE	CAL. BLOCK	INSERVICE REQ.	INSERVICE SCHEDULED OUTAGE	NOTES
RCIC-900N								
	PSA-3 SNUBBER	C-E-2	VT-3	303/8.2.17				S/N
			VT-4	303/8.2.17				S/N
RCIC-923N								
	STRUT	C-E-2	VT-3	303/8.2.17				
RCIC-924N								
	STRUT	C-E-2	VT-3	303/8.2.17				
RCIC-918N								
	PSA-3 SNUBBER	C-E-2	VT-3	303/8.2.17				S/N
			VT-4	303/8.2.17				S/N
RCIC-926N								
	SPRING	C-E-2	VT-3	303/8.2.17				
			VT-4	303/8.2.17				
RCIC-913N								
	ANCHOR	C-E-2	VT-3	303/8.2.17				
RCIC-113								
	SPRING	C-E-2	VT-3	303/8.2.17				
			VT-4	303/8.2.17				
RCIC-106								
	BOX	C-E-2	VT-3	303/8.2.17				
RCIC-111								
	BOX	C-E-2	VT-3	303/8.2.17				
RCIC-108								
	PSA-1/2 SNUBBER	C-E-2	VT-3	303/8.2.17				S/N
			VT-4	303/8.2.17				S/N
RCIC-109								
	PSA-3 SNUBBER	C-E-2	VT-3	303/8.2.17				S/N
			VT-4	303/8.2.17				S/N
RCIC-107								
	BOX	C-E-2	VT-3	303/8.2.17				

WNP-02
INTERVAL: PSI
PERIOD: NA
OUTAGE:
DRAWING NO. RCIC-202

WASHINGTON PUBLIC POWER SUPPLY SYSTEM
PROGRAM PLAN AND SCHEDULE
SYSTEM OR COMPONENT: RCIC(12)-4
DESCRIPTION: COND MODE STM SUPPLY

IDENT. NO.	DESCRIPTION	SECT. XI EXAM.	EXAM MTH.	PROCEDURE	CAL. BLOCK	INSERVICE REQ.	SCHEDULED OUTAGE	NOTES
RCIC-114								
	SPRING	C-E-2	VT-3	303/8.2.17				
			VT-4	303/8.2.17				
RCIC-PB-202								
	RCIC PRES BNDRY	N/A	VT-2	N/A				SEE NOTES #6 & #7.

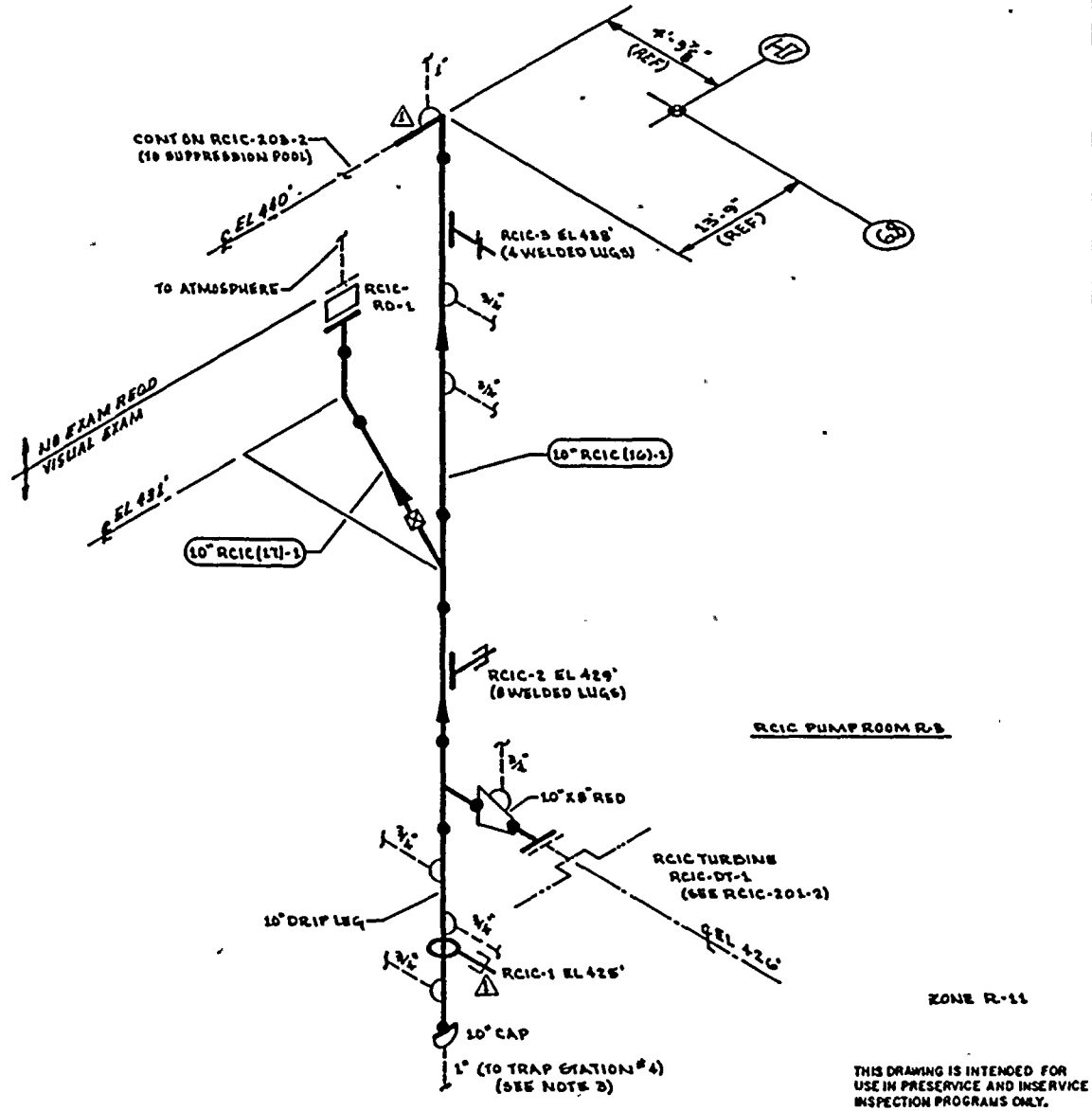

NOTES:

1. THIS DRAWING IDENTIFIES PIPING & COMPONENTS SUBJECT TO A VISUAL EXAM FOR EVIDENCE OF LEAKAGE DURING SYSTEM HYDRO OR OPERABILITY TESTS. TESTS ARE TO BE CONDUCTED PER THE REQUIREMENTS OF ASME SECTION XI, PARAGRAPH IWA-5000.
2. FOR BRANCH PIPING 4" DIA OR LESS (CONN SHOWN IN DASHED LINES) EXTEND VISUAL LEAKAGE EXAM THROUGH THE OUTERMOST NORMALLY CLOSED NUCLEAR VALVE OR UNTIL TRANSITION TO INSTRUMENT TUBING, UNLESS OTHERWISE NOTED.
3. EXTEND VISUAL LEAKAGE EXAM THROUGH TRAP STATION TO BAROMETRIC CONDENSER. VERIFY THAT DRAINAGE SYSTEM IS OPERATIVE.

REFERENCES:

BOVEE & CRAIL ISOMETRICS

RCIC-660-1 REV 8
RCIC-661-1.2 REV 6

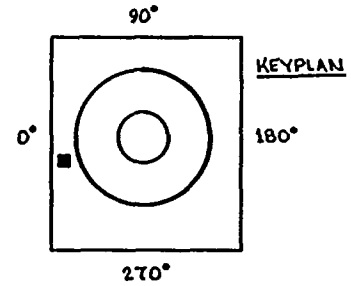

THIS DRAWING IS INTENDED FOR USE IN PRESERVICE AND INSERVICE INSPECTION PROGRAMS ONLY.

PIPING SYSTEM	NOM DIA (IN)	SCH	NOM WALL THK	MATERIAL SPECIFICATION	MATL TYPE	CAL BLOCK NO
10" RCIC(16)-1	10	STD	0.365	SA 106 GR B	CS	NA
10" RCIC(17)-1	10	STD	0.365	SA 106 GR B	CS	NA

NO	DATE	REVISION	BY	CHKD	APPVD
1	12-2-03	REVISED AS NOTED ADDED KEYPLAN	KMcA	GR	TFH
0	12-28-78	ISSUED FOR USE	KMcA	[illegible]	[illegible]
A	10-3-78	ISSUED FOR INFORMATION ONLY	KMcA	JAK	[illegible]

QUALITY CLASS: 1 | ASME CODE CLASS: 2

ENGR: G.A. KUGLER | DRAWN: K.McA. | DATE: 7-21-78

WASHINGTON PUBLIC POWER SUPPLY SYSTEM
RICHLAND, WASHINGTON 99352

WNP-2
WELD & COMPONENT IDENTIFICATION DIAGRAM

TITLE: RCIC TURBINE EXHAUST

DWG NO: RCIC-203-1 | REV 1

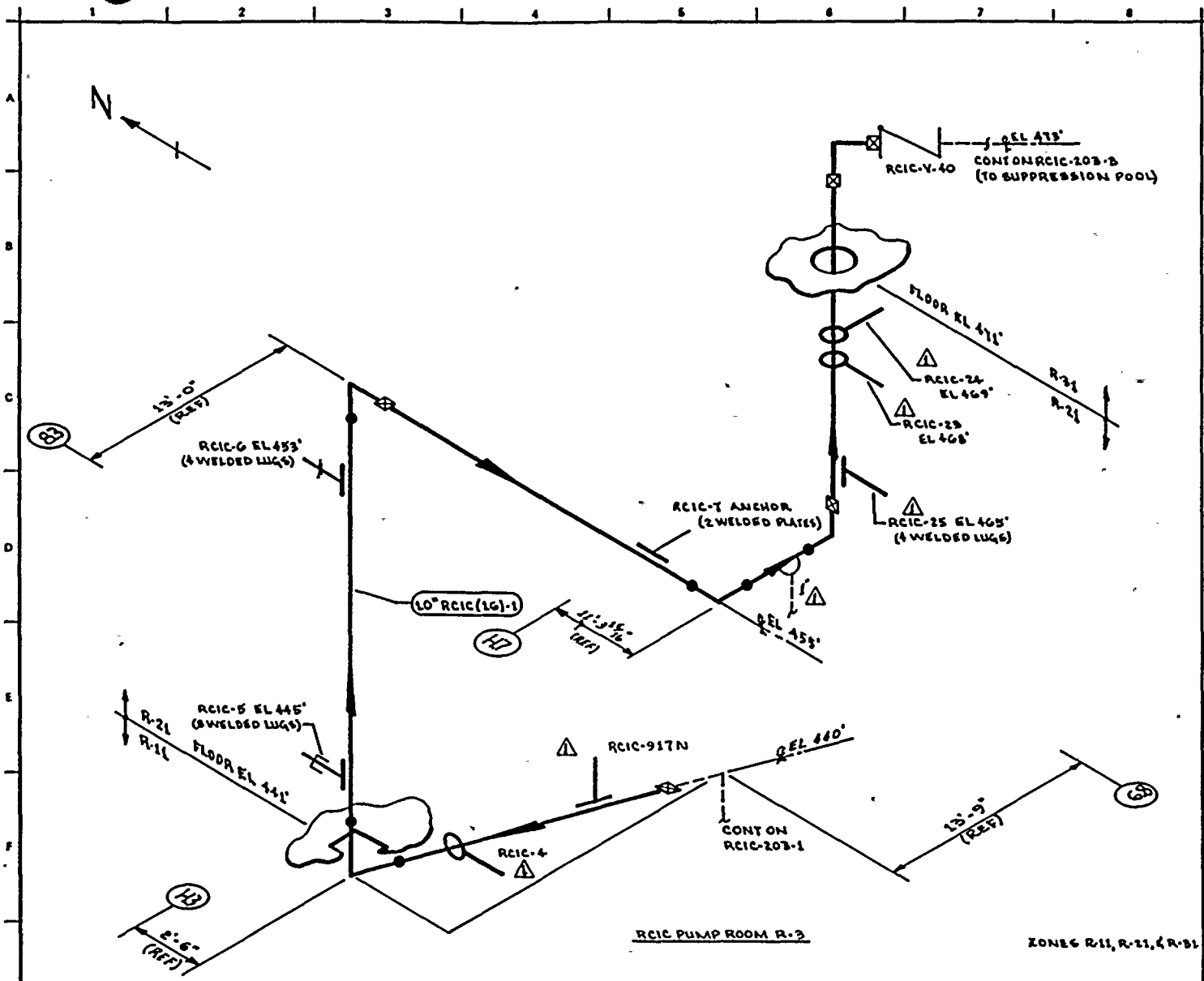

NOTES:

1. THIS DRAWING IDENTIFIES PIPING & COMPONENTS SUBJECT TO A VISUAL EXAM FOR EVIDENCE OF LEAKAGE DURING SYSTEM HYDRO OR OPERABILITY TESTS. TESTS ARE TO BE CONDUCTED PER THE REQUIREMENTS OF ASME SECTION XI, PARAGRAPH IWA-5000.
2. For branch piping, 4" or less (conn. shown in dashed lines), extend visual leakage exam through the outermost normally closed nuclear class valve, or until transition to instrument tubing, unless otherwise noted.

REFERENCES:

BOVES & CRAIL ISOMETRICS
RCIC-660-2.4 REV 11

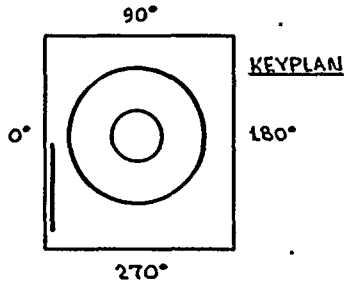

THIS DRAWING IS INTENDED FOR USE IN PRESERVICE AND INSERVICE INSPECTION PROGRAMS ONLY.

PIPING SYSTEM	NOM DIA (IN)	SCH	NOM WALL THK	MATERIAL SPECIFICATION	MATL TYPE	CAL BLOCK NO
10" RCIC (16)-1	10	STD	0.365	SA 106 GRB	CS	NA

NO	DATE	REVISION	BY	CHKD	APPVD
1	12-2-83	REVISED AS NOTED ADDED KEYPLAN			
0	12-22-78	ISSUED FOR USE			
A	12-5-78	ISSUED FOR INFORMATION ONLY			

QUALITY CLASS: 1 | ASME CODE CLASS: 2

ENGR: GA KUGLER | DRAWN: K.M.C.A. | DATE: 7-21-78

WASHINGTON PUBLIC POWER SUPPLY SYSTEM
RICHLAND, WASHINGTON 99352

WNP-2
WELD & COMPONENT IDENTIFICATION DIAGRAM

TITLE: RCIC TURBINE EXHAUST

DWG NO: RCIC-203-2 | REV 1

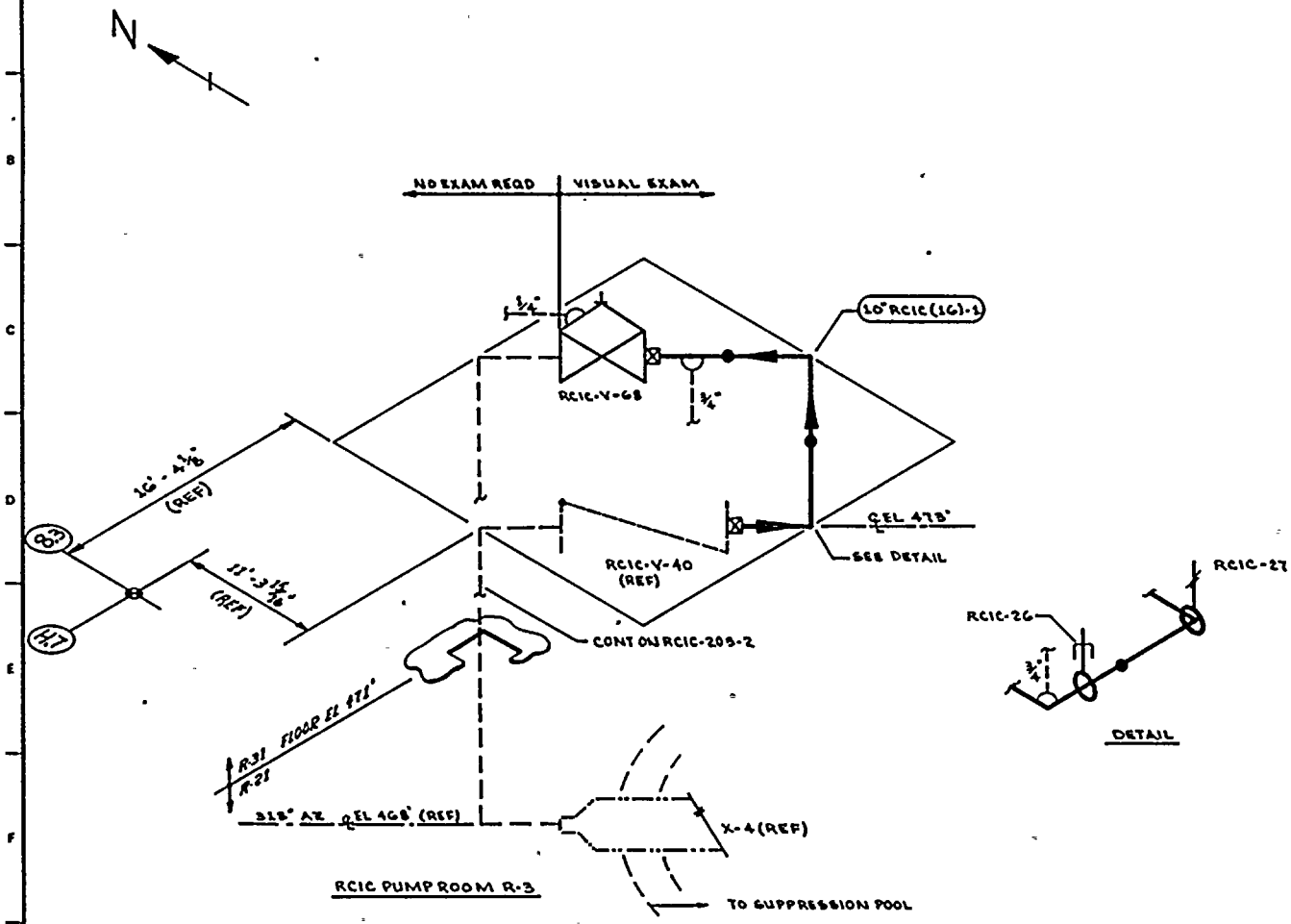

NOTES:

1. THIS DRAWING IDENTIFIES PIPING & COMPONENTS SUBJECT TO A VISUAL EXAM FOR EVIDENCE OF LEAKAGE DURING SYSTEM HYDRO OR OPERABILITY TESTS. TESTS ARE TO BE CONDUCTED PER THE REQUIREMENTS OF ASME SECTION XI, PARAGRAPH IWA-5000.
2. FOR BRANCH PIPING 4" DIA OR LESS (CONN SHOWN IN DASHED LINES) EXTEND VISUAL LEAKAGE EXAM THROUGH THE OUTERMOST NORMALLY CLOSED NUCLEAR CLASS VALVE OR UNTIL TRANSITION TO INSTRUMENT TUBING UNLESS OTHERWISE NOTED.
3. AT LOCATIONS WHERE LEAKAGE IS NORMALLY EXPECTED (EG. VALVE STEM & PUMP SEAL LEAKOFF CONN) VERIFY LEAKAGE COLLECTION SYSTEM OPERABILITY ONLY. NO HYDRO TEST OF COLLECTION SYSTEM IS REQUIRED.

REFERENCES:

BOVEE & CRAIL ISOMETRIC
RCIC-660-5 REV 7
RCIC-660-5H REV 0

THIS DRAWING IS INTENDED FOR USE IN PRESERVICE AND INSERVICE INSPECTION PROGRAMS ONLY.

PIPING SYSTEM	NOM DIA (IN)	SCH	NOM WALL THK	MATERIAL SPECIFICATION	MATL TYPE	CAL BLOCK NO
10" RCIC(16)-1	10	STD	0.365	SA 106 GR B -	CS	NA

NO	DATE	REVISION	BY	CHKD	APPVD
0	12-22-78	ISSUED FOR USE	[illegible]	[illegible]	[illegible]
A	10-5-78	ISSUED FOR INFORMATION ONLY	[illegible]	[illegible]	[illegible]

QUALITY CLASS: 1 | ASME CODE CLASS: 2
ENGR: G.A. KUGLER | DRAWN: K.M.&A. | DATE: 7-24-78

WASHINGTON PUBLIC POWER SUPPLY SYSTEM
RICHLAND, WASHINGTON 99352

WNP-2
WELD & COMPONENT IDENTIFICATION DIAGRAM

TITLE: RCIC TURBINE EXHAUST

DWG NO: RCIC-203-3 | REV 0

WNP-02
INTERVAL: PSI
PERIOD: NA
OUTAGE:
DRAWING NO. RCIC-203

WASHINGTON PUBLIC POWER SUPPLY SYSTEM
PROGRAM PLAN AND SCHEDULE
SYSTEM OR COMPONENT: RCIC(16)-1
DESCRIPTION: RCIC TURBINE EXHAUST

IDENT. NO.	DESCRIPTION	SECT. XI EXAM.	EXAM MTH.	PROCEDURE	CAL. BLOCK	INSERVICE REQ.	INSERVICE SCHEDULED OUTAGE	NOTES
RCIC-1								
	PSA-1 SNUBBER	C-E-2	VT-3	303/8.2.17				S/N 587
			VT-4	303/8.2.17				S/N 587
RCIC-2								
	PSA-1 SNUBBER	C-E-2	VT-3	303/8.2.17				S/N 572
			VT-4	303/8.2.17				S/N 572
RCIC-3								
	SPRING (2)	C-E-2	VT-3	303/8.2.17				
			VT-4	303/8.2.17				
RCIC-971N								
	PSA-1 SNUBBER	C-E-2	VT-3	303/8.2.17				S/N 603
			VT-4	303/8.2.17				S/N 603
RCIC-4								
	PSA-1 SNUBBER	C-E-2	VT-3	303/8.2.17				S/N
			VT-4	303/8.2.17				S/N
RCIC-5								
	PSA-1/2 SN(2)	C-E-2	VT-3	303/8.2.17				S/N E2139/W388
			VT-4	303/8.2.17				S/N E2139/W388
RCIC-6								
	SPRING	C-E-2	VT-3	303/8.2.17				
			VT-4	303/8.2.17				
RCIC-7								
	ANCHOR	C-E-2	VT-3	303/8.2.17				
RCIC-25								
	STRUT	C-E-2	VT-3	303/8.2.17				
RCIC-23								
	STRUT	C-E-2	VT-3	303/8.2.17				
RCIC-24								
	STRUT	C-E-2	VT-3	303/8.2.17				

WNP-02
INTERVAL: PSI
PERIOD: NA
OUTAGE:
DRAWING NO. RCIC-203

WASHINGTON PUBLIC POWER SUPPLY SYSTEM
PROGRAM PLAN AND SCHEDULE
SYSTEM OR COMPONENT: RCIC(16)-1
DESCRIPTION: RCIC TURBINE EXHAUST

DATE 12/14/84

IDENT. NO.	DESCRIPTION	SECT. XI EXAM.	EXAM MTH.	PROCEDURE	CAL. BLOCK	INSERVICE REQ.	INSERVICE SCHEDULED OUTAGE	NOTES
RCIC-26								
	PSA-3 SNUBBER	C-E-2	VT-3	303/8.2.17				S/N 4415
			VT-4	303/8.2.17				S/N 4415
RCIC-27								
	SPRING	C-E-2	VT-3	303/8.2.17				
			VT-4	303/8.2.17				
RCIC-PB-203								
	RCIC PRES BNDRY	N/A	VT-2	N/A				SEE NOTES #6 & #7.

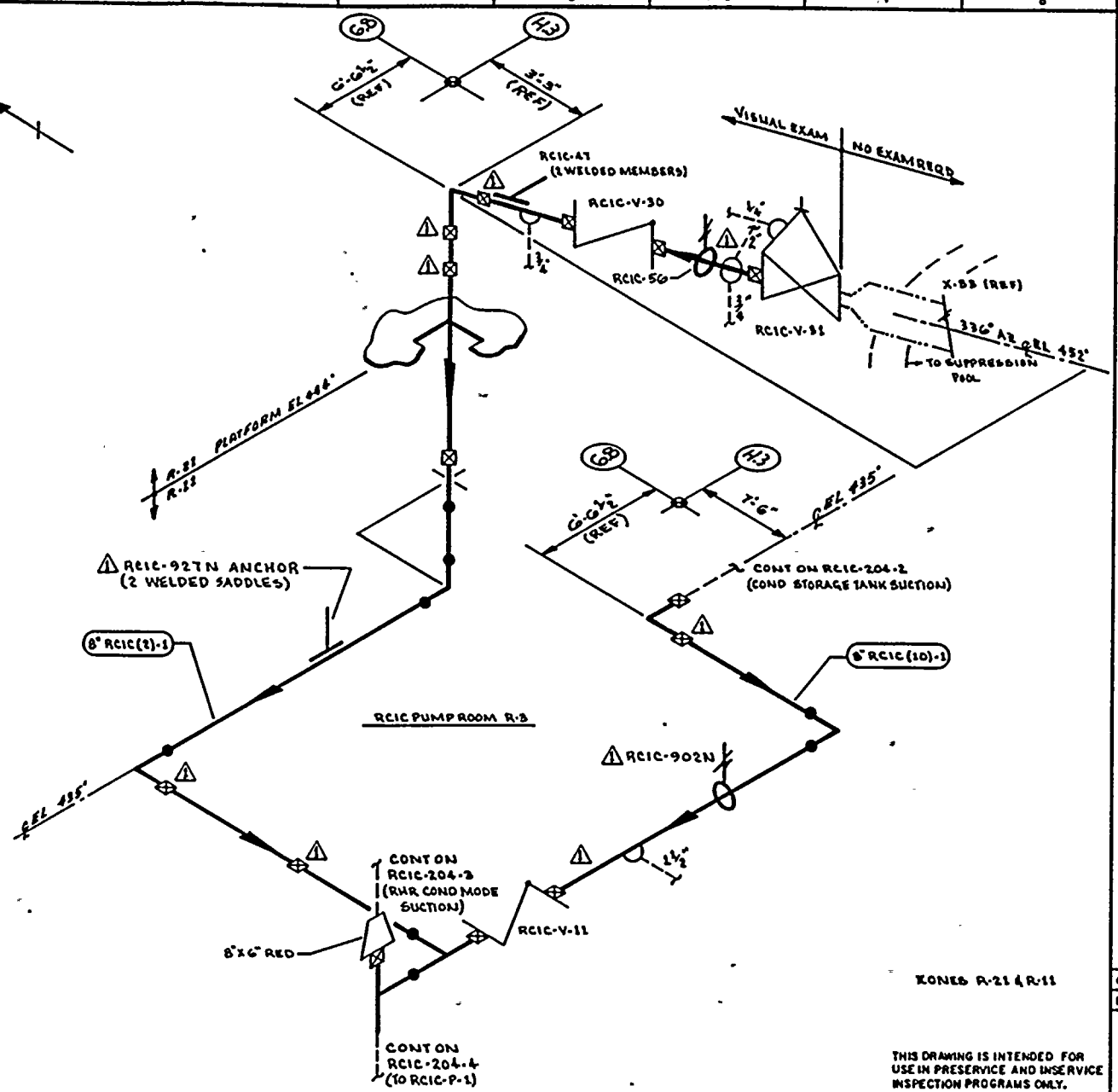

NOTES:

1. THIS DRAWING IDENTIFIES PIPING & COMPONENTS SUBJECT TO A VISUAL EXAM FOR EVIDENCE OF LEAKAGE DURING SYSTEM HYDRO OR OPERABILITY TESTS. TESTS ARE TO BE CONDUCTED PER THE REQUIREMENTS OF ASME SECTION XI, PARAGRAPH IWA-5000.
2. FOR PIPING 4" DIA OR LESS (CONN SHOWN IN DASHED LINES) EXTEND VISUAL LEAKAGE EXAM THROUGH THE OUTERMOST NORMALLY CLOSED NUCLEAR CLASS VALVE OR UNTIL TRANSITION TO INSTRUMENT TUBING UNLESS OTHERWISE NOTED.
3. AT LOCATIONS WHERE LEAKAGE IS NORMALLY EXPECTED (EG VALVE STEM & PUMP SEAL LEAKOFF CONN) VERIFY LEAKAGE COLLECTION SYSTEM OPERABILITY ONLY. NO HYDRO TEST OF COLLECTION SYSTEM IS REQUIRED.

REFERENCES:

BOVEE & CRAIL ISOMETRICS

RCIC-656-L.3 REV 6

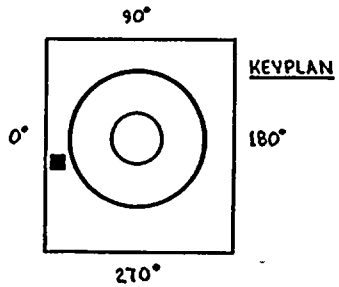

PIPING SYSTEM	NOM DIA (IN)	SCH	NOM WALL THK	MATERIAL SPECIFICATION	MATL TYPE	CAL BLOCK NO
8" RCIC (2)-1	8"	STD	0.322	SA 106 GR B	CS	NA
8" RCIC (10)-1	8"	STD	0.322	SA 106 GR B	CS	NA

NO	DATE	REVISION	BY	CHKD	APPVD
1	12-28-83	REVISED AS NOTED ADDED KEYPLAN	K.M.A	[illegible]	[illegible]
0	12-28-78	ISSUED FOR USE	K.M.A	[illegible]	[illegible]
A	10-3-78	ISSUED FOR INFORMATION ONLY	K.M.A	[illegible]	[illegible]

THIS DRAWING IS INTENDED FOR USE IN PRESERVICE AND INSERVICE INSPECTION PROGRAMS ONLY.

QUALITY CLASS: 1 | ASME CODE CLASS: 2

ENGR: G.A. KUGLER | DRAWN: K.M.A. | DATE: 7-24-78

WASHINGTON PUBLIC POWER SUPPLY SYSTEM

RICHLAND, WASHINGTON 99352

WNP-2

WELD & COMPONENT IDENTIFICATION DIAGRAM

TITLE: RCIC PUMP SUCTION LINES

DWG NO: RCIC-204-1 | REV 1

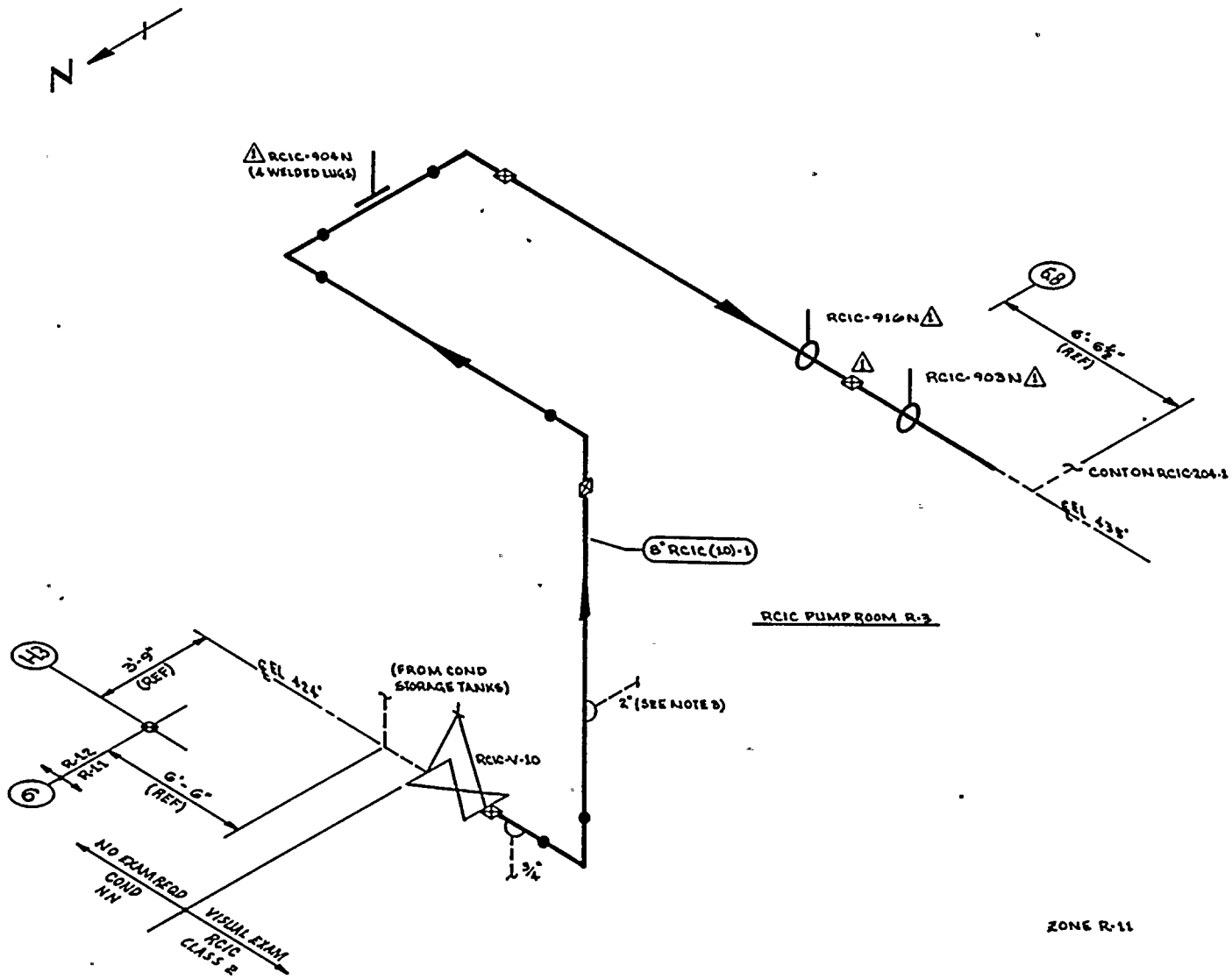

NOTES:

1. THIS DRAWING IDENTIFIES PIPING & COMPONENTS SUBJECT TO A VISUAL EXAM FOR EVIDENCE OF LEAKAGE DURING SYSTEM HYDRO OR OPERABILITY TESTS. TESTS ARE TO BE CONDUCTED PER THE REQUIREMENTS OF ASME SECTION XI, PARAGRAPH IWA-5000.
2. FOR BRANCH PIPING 4" DIA OR LESS (CONN SHOWN IN DASHED LINES) EXTEND VISUAL LEAKAGE EXAM THROUGH THE OUTERMOST NORMALLY CLOSED NUCLEAR CLASS VALVE OR UNTIL TRANSITION TO INSTRUMENT TUBING UNLESS OTHERWISE NOTED.
3. EXTEND VISUAL LEAKAGE EXAM THROUGH PUMP RCIC-P-3.

REFERENCES:

BOVEE & CRAIL ISOMETRICS

RCIC-657-1.2 REV B

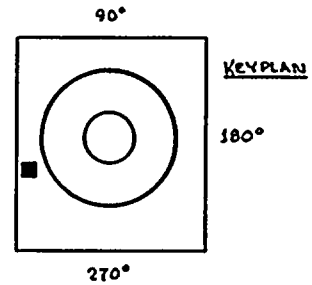

THIS DRAWING IS INTENDED FOR USE IN PRESERVICE AND INSERVICE INSPECTION PROGRAMS ONLY.

PIPING SYSTEM	NOM DIA (IN)	SCH	NOM WALL THK	MATERIAL SPECIFICATION	MATL TYPE	CAL BLOCK NO
8" RCIC (10)-1	8	STD	0.322	SA 106 GR B	CS	NA

NO	DATE	REVISION	BY	CHKD	APPVD
1	12-2-83	REVISED AS NOTED ADDED KEYPLAN	KMcA	EPR	TFB
0	12-27-78	ISSUED FOR USE	KMcA	[illegible]	[illegible]
A	10-3-78	ISSUED FOR INFORMATION ONLY	KMcA	[illegible]	[illegible]

QUALITY CLASS: 1 | ASME CODE CLASS: 2

ENGR GA KUGLER | DRAWN: K.McA | DATE: 7-25-78

WASHINGTON PUBLIC POWER SUPPLY SYSTEM

RICHLAND WASHINGTON 99352

WNP-2

WELD & COMPONENT IDENTIFICATION DIAGRAM

TITLE: RCIC COND STORAGE TANK SUCTION

DWG NO: RCIC-204-2 | REV 1

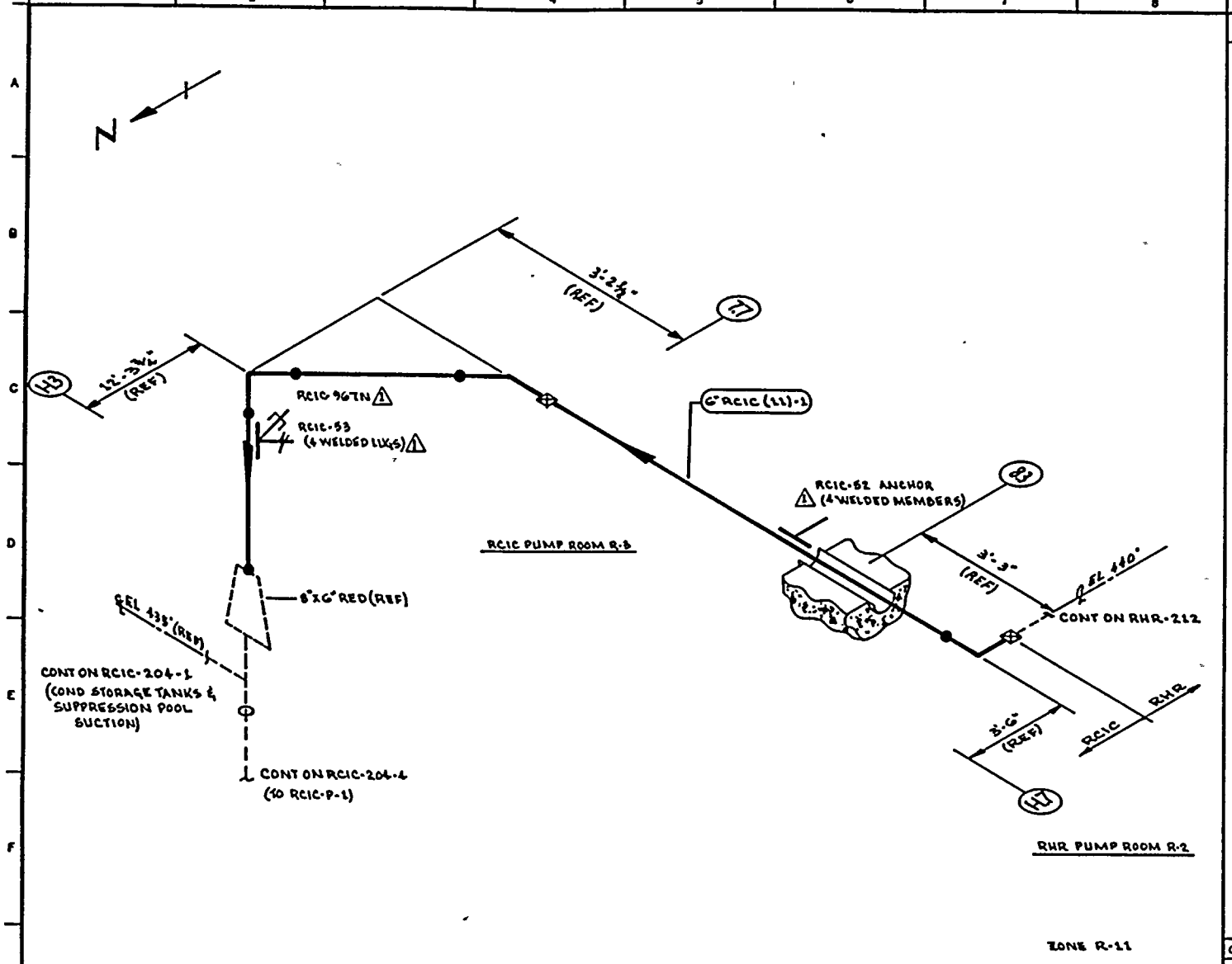

NOTES:

1. THIS DRAWING IDENTIFIES PIPING & COMPONENTS SUBJECT TO A VISUAL EXAM FOR EVIDENCE OF LEAKAGE DURING SYSTEM HYDRO OR OPERABILITY TESTS. TESTS ARE TO BE CONDUCTED PER THE REQUIREMENTS OF ASME SECTION XI, PARAGRAPH IWA-5000.

REFERENCED:

BOVEE & CRAIL ISOMETRIC
RCIC-668-1.2 REV 8

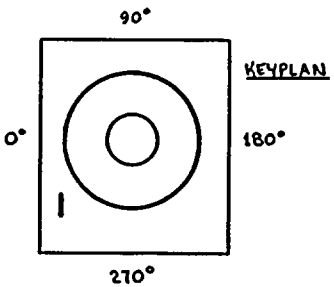

THIS DRAWING IS INTENDED FOR USE IN PRESERVICE AND INSERVICE INSPECTION PROGRAMS ONLY.

PIPING SYSTEM	NOM DIA (IN)	SCH	NOM WALL THK	MATERIAL SPECIFICATION	MATL TYPE	CAL BLOCK NO
6" RCIC (11)-1	6	40	0.280	SA 106 GR B	CS	NA

NO	DATE	REVISION	BY	CHKD	APPVD
1	12-2-83	REVISED AS NOTED ADDED KEYPLAN	KMcA	LHR	TEK
0	12-22-78	ISSUED FOR USE	KMcA	[illegible]	[illegible]
1	10-3-78	ISSUED FOR INFORMATION ONLY	KMcA	[illegible]	[illegible]

QUALITY CLASS: 1 | ASME CODE CLASS: 2

ENGR: G.A. KUGLER | DRAWN: KMcA | DATE: 7-25-78

WASHINGTON PUBLIC POWER SUPPLY SYSTEM
RICHLAND, WASHINGTON 99352

WNP-2
WELD & COMPONENT IDENTIFICATION DIAGRAM

TITLE:
RHR CONDENSING MODE SUPPLY TO RCIC-P-1

DWG NO: RCIC-204-3 | REV 1

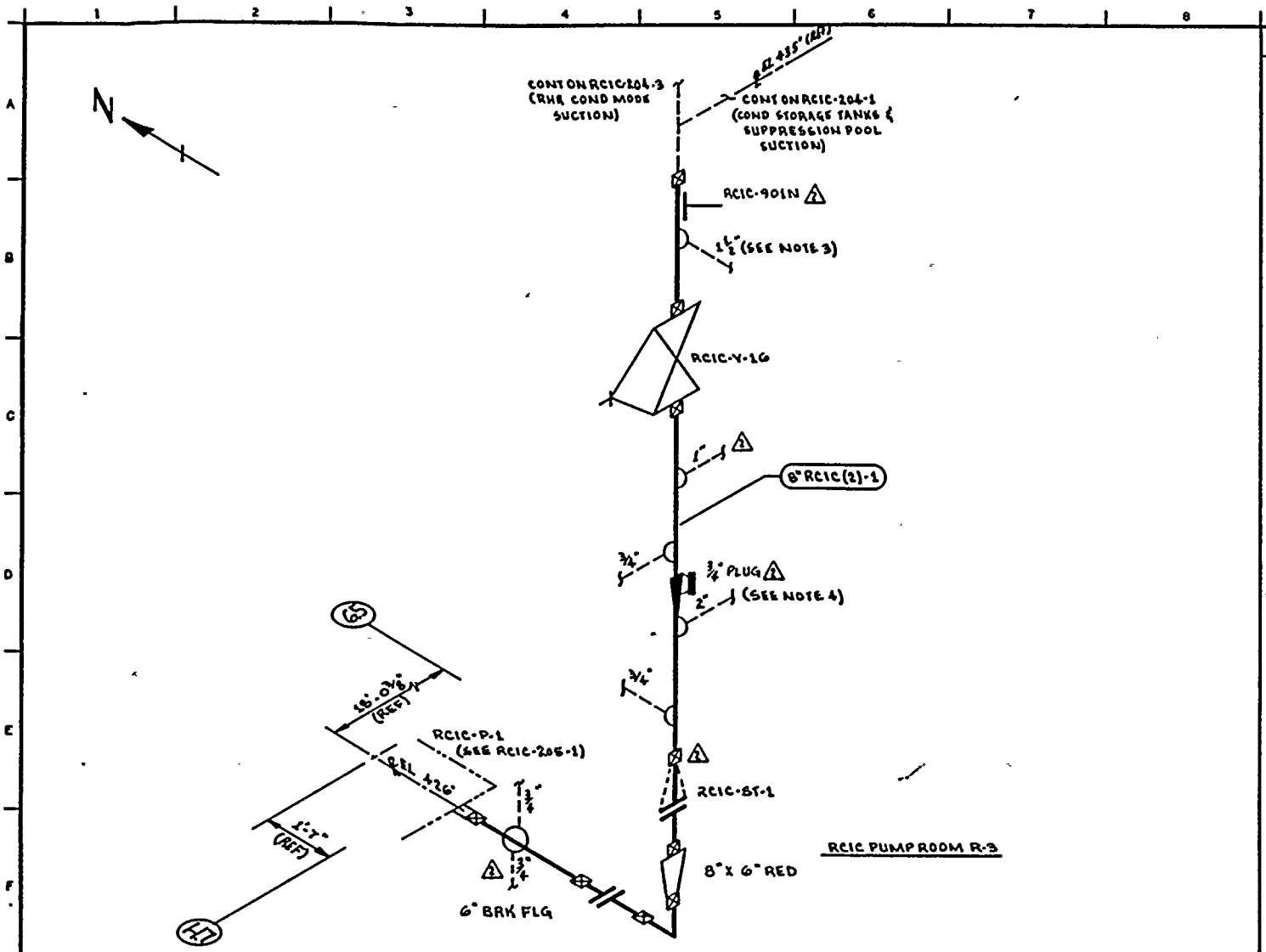

NOTES

1. THIS DRAWING IDENTIFIES PIPING & COMPONENTS SUBJECT TO A VISUAL EXAM FOR EVIDENCE OF LEAKAGE DURING SYSTEM HYDRO OR OPERABILITY TESTS. TESTS ARE TO BE CONDUCTED PER THE REQUIREMENTS OF ASME SECTION XI, PARAGRAPH IWA-5000.
2. FOR BRANCH PIPING 4" DIA OR LESS (CONN SHOWN IN DASHED LINES) EXTEND VISUAL LEAKAGE THROUGH THE OUTERMOST NORMALLY CLOSED NUCLEAR CLASS VALVE OR UNTIL TRANSITION TO INSTRUMENT TUBING UNLESS OTHERWISE NOTED.
3. EXTEND VISUAL LEAKAGE EXAM THROUGH VALVE RCIC-V-67 & PUMP RCIC-P-3.
4. EXTEND VISUAL LEAKAGE EXAM THROUGH VALVE RCIC-V-47, VACUUM TANK RCIC-TK-1, PUMP RCIC-P-4 & CONNECTING PIPE SHOULD BE EXAMINED FOR LEAKAGE WITH TANK WATER HEAD ONLY.

REFERENCED:

BOWEN & CRAIL ISOMETRICS
RCIC-656-6.8 REV 11

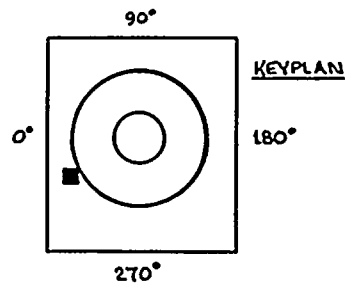

QUALITY CLASS: 1	ASME CODE CLASS: 2	
ENGR: G.A. KUGLER	DRAWN: K.M.C.	DATE: 7-28-78

THIS DRAWING IS INTENDED FOR USE IN PRESERVICE AND INSERVICE INSPECTION PROGRAMS ONLY.

WASHINGTON PUBLIC POWER SUPPLY SYSTEM
RICHLAND, WASHINGTON 99352

PIPING SYSTEM	NOM DIA (IN)	SCH	NOM WALL THK	MATERIAL SPECIFICATION	MATL TYPE	CAL BLOCK NO
8" RCIC(2)-1	8	STD	0.322	SA 106 GR B	CS	NA

NO	DATE	REVISION	BY	CHKD	APPVD
2	12-7-83	REVISED AS NOTED ADDED KEYPLAN	[illegible]	[illegible]	[illegible]
1	12-7-81	UPDATED DWG IN F-4 & 5	[illegible]	[illegible]	[illegible]
0	[illegible]	ISSUED FOR USE	[illegible]	[illegible]	[illegible]
A	10-3-78	ISSUED FOR INFORMATION ONLY	[illegible]	[illegible]	[illegible]

WNP-2
WELD & COMPONENT IDENTIFICATION DIAGRAM

TITLE: RCIC-P-1 SUCTION

DWG NO: RCIC-204-4 REV 2

WNP-02
INTERVAL: PSI
PERIOD: NA
OUTAGE:
DRAWING NO. RCIC-204

WASHINGTON PUBLIC POWER SUPPLY SYSTEM
PROGRAM PLAN AND SCHEDULE
SYSTEM OR COMPONENT: RCIC(10)-1
DESCRIPTION: PUMP SUCTION LINES

DATE 12/14/84

IDENT. NO.	DESCRIPTION	SECT. XI EXAM.	EXAM MTH.	PROCEDURE	CAL. BLOCK	INSERVICE REQ.	INSERVICE SCHEDULED OUTAGE	NOTES
RCIC-56								
	SPRING	C-E-2	VT-3	303/8.2.17				
			VT-4	303/8.2.17				
RCIC-47								
	BOX	C-E-2	VT-3	303/8.2.17				
RCIC-927N								
	ANCHOR	C-E-2	VT-3	303/8.2.17				
RCIC-902N								
	SPRING	C-E-2	VT-3	303/8.2.17				
			VT-4	303/8.2.17				
RCIC-903N								
	STRUT	C-E-2	VT-3	303/8.2.17				
RCIC-916N								
	STRUT	C-E-2	VT-3	303/8.2.17				
RCIC-904N								
	BOX	C-E-2	VT-3	303/8.2.17				
RCIC-52								
	ANCHOR	C-E-2	VT-3	303/8.2.17				
RCIC-967N								
	PSA-1/4 SN(2)	C-E-2	VT-3	303/8.2.17				S/N
			VT-4	303/8.2.17				S/N
RCIC-53								
	SPRING	C-E-2	VT-3	303/8.2.17				
			VT-4	303/8.2.17				
RCIC-901N								
	STRUT	C-E-2	VT-3	303/8.2.17				
RCIC-PB-204								
	RCIC PRES BNDRY	N/A	VT-2	N/A				SEE NOTES #6 & #7.

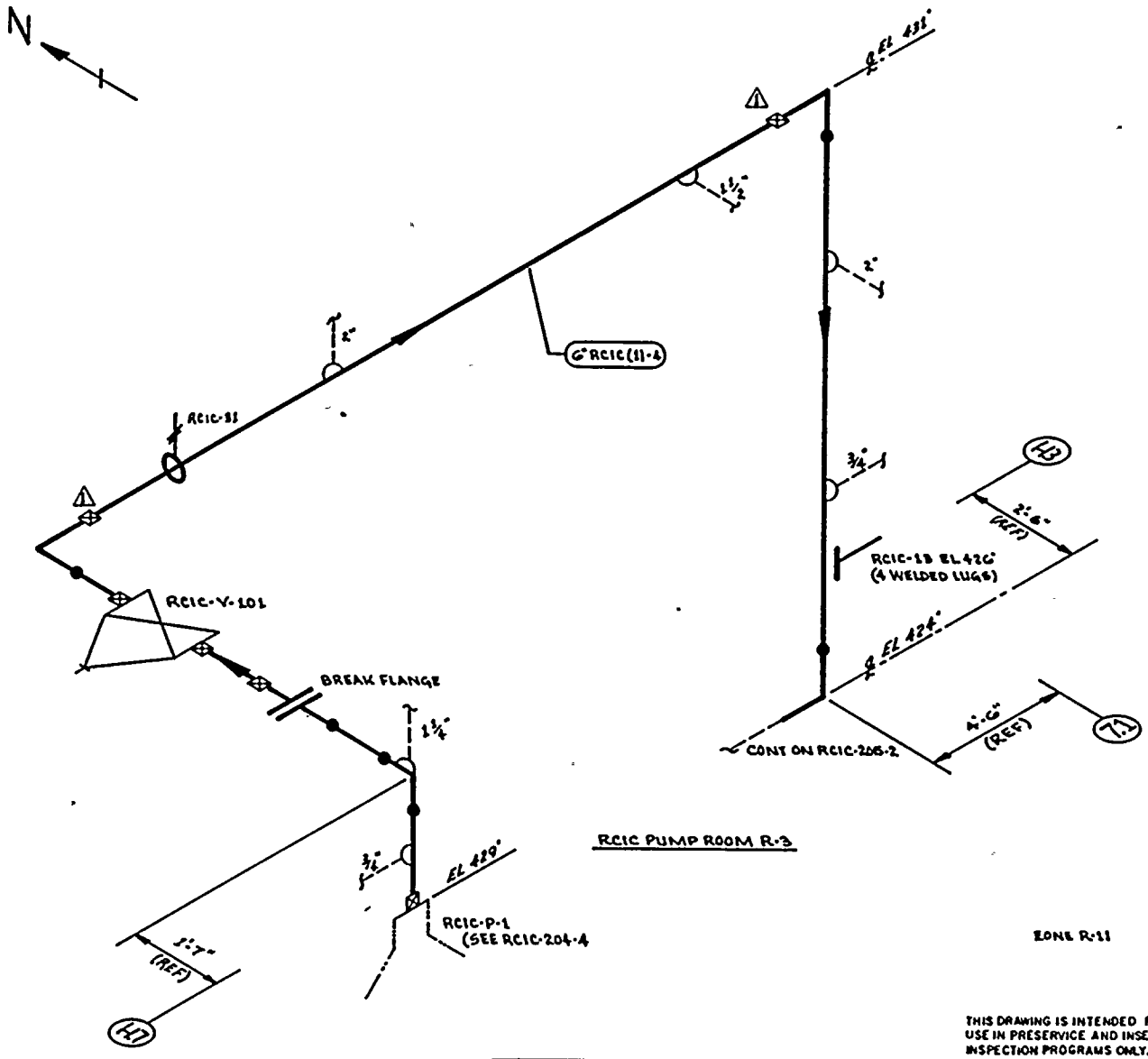

RCIC PUMP ROOM R-3

ZONE R-11

THIS DRAWING IS INTENDED FOR USE IN PRESERVICE AND INSERVICE INSPECTION PROGRAMS ONLY.

NOTES:

1. THIS DRAWING IDENTIFIES PIPING & COMPONENTS SUBJECT TO A VISUAL EXAM FOR EVIDENCE OF LEAKAGE DURING SYSTEM HYDRO OR OPERABILITY TESTS. TESTS ARE TO BE CONDUCTED PER THE REQUIREMENTS OF ASME SECTION XI, PARAGRAPH IWA-5000.
2. FOR BRANCH PIPING 4" DIA OR LESS (CONN SHOWN IN DASHED LINES) EXTEND VISUAL LEAKAGE EXAM THROUGH THE OUTERMOST NORMALLY CLOSED NUCLEAR CLASS VALVE OR UNTIL TRANSITION TO INSTRUMENT TUBING UNLESS OTHERWISE NOTED.

REFERENCES:

BOVEE & CRAIL ISOMETRICS
RCIC-669-1.2 REV 8

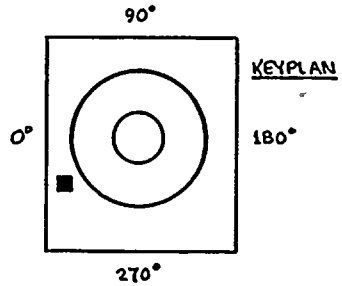

QUALITY CLASS: 1	ASME CODE CLASS: 2	
ENGR. GA KUGLER	DRAWN. K-M-A	DATE: 8-1-78

WASHINGTON PUBLIC POWER SUPPLY SYSTEM
RICHLAND WASHINGTON 99352

WNP-2
WELD & COMPONENT IDENTIFICATION DIAGRAM

TITLE:
RCIC-PUMP-1 DISCHARGE

DWG NO: RCIC-205-1 REV 1

PIPING SYSTEM	NOM DIA (IN)	SCH	NOM WALL THK	MATERIAL SPECIFICATION	MATL TYPE	CAL BLOCK NO
6" RCIC(1)-4	6	120	0.562	SA 106 GR B	CS	NA

NO	DATE	REVISION	BY	CHKD	APPVD
1	12-2-83	REVISED AS NOTED ADDED KEYPLAN	KMKA	RFP	TFH
0	11-22-78	ISSUED FOR USE	KMKA	[illegible]	[illegible]
A	10-3-78	ISSUED FOR INFORMATION ONLY	KMKA	GAK	[illegible]

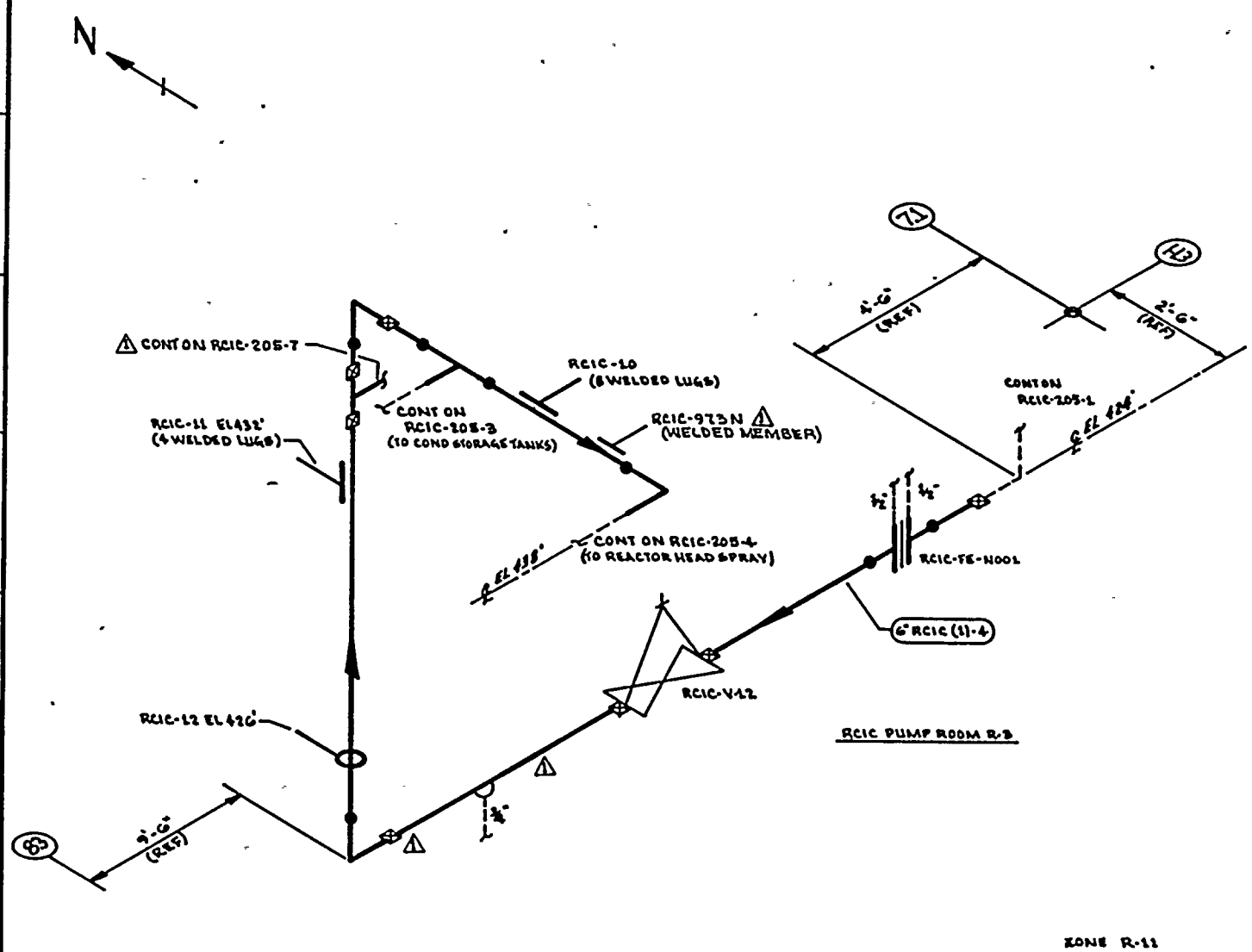

NOTES:

1. THIS DRAWING IDENTIFIES PIPING & COMPONENTS SUBJECT TO A VISUAL EXAM FOR EVIDENCE OF LEAKAGE DURING SYSTEM HYDRO OR OPERABILITY TESTS. TESTS ARE TO BE CONDUCTED PER THE REQUIREMENTS OF ASME SECTION XI, PARAGRAPH IWA-5000.
2. FOR BRANCH PIPING 4" DIA OR LESS (CONN SHOWN IN DASHED LINES) EXTEND VISUAL LEAKAGE EXAM THROUGH THE OUTERMOST NORMALLY CLOSED NUCLEAR CLASS VALVE OR UNTIL TRANSITION TO INSTRUMENT TUBING UNLESS OTHERWISE NOTED.

REFERENCES:
BOVEE & CRAIL ISOMETRICS
RCIC-659-3.6 REV 10

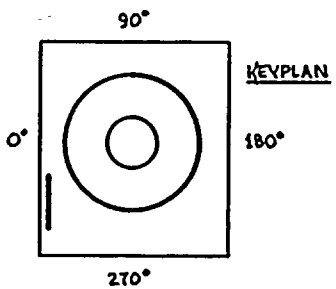

THIS DRAWING IS INTENDED FOR USE IN PRESERVICE AND INSERVICE INSPECTION PROGRAMS ONLY.

PIPING SYSTEM	NOM DIA (IN)	SCH	NOM WALL THK	MATERIAL SPECIFICATION	MATL TYPE	CAL BLOCK NO
6" RCIC (1)-4	6	120	0.562	SA 106 GR B	CS	NA

NO	DATE	REVISION	BY	CHKD	APPVD
1	12-22-83	REVISED AS NOTED ADDED KEYPLAN	KMcL	LPE	TFN
0	12-22-78	ISSUED FOR USE	KMcL	GAK	GAK
A	8-2-78	ISSUED FOR INFORMATION ONLY	KMcL	GAK	GAK

QUALITY CLASS: 1 | ASME CODE CLASS: 2
ENGR: GA KUGLER | DRAWN: K. McL | DATE: 8-2-78

WASHINGTON PUBLIC POWER SUPPLY SYSTEM
RICHLAND, WASHINGTON 99352

WNP-2
WELD & COMPONENT IDENTIFICATION DIAGRAM

TITLE:
RCIC-PUMP-1 DISCHARGE LINES

DWG NO: RCIC-205-2 | REV 1

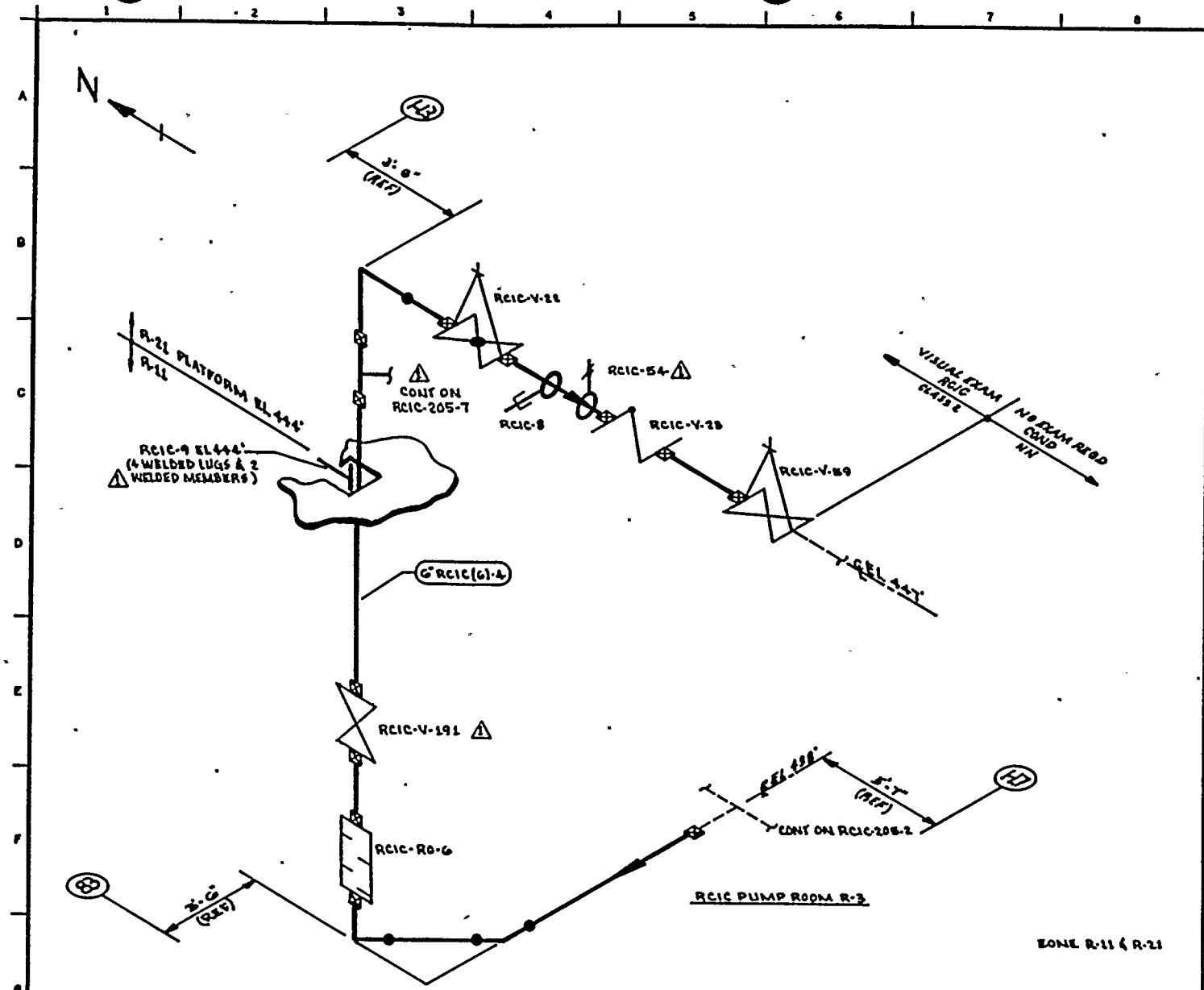

NOTES:

1. THIS DRAWING IDENTIFIES PIPING & COMPONENTS SUBJECT TO A VISUAL EXAM FOR EVIDENCE OF LEAKAGE DURING SYSTEM HYDRO OR OPERABILITY TESTS. TESTS ARE TO BE CONDUCTED PER THE REQUIREMENTS OF ASME SECTION XI, PARAGRAPH IWA-5000.

REFERENCED:

BOVEE & CRAIL ISOMETRICS

RCIC-642'-1.5 REV 11

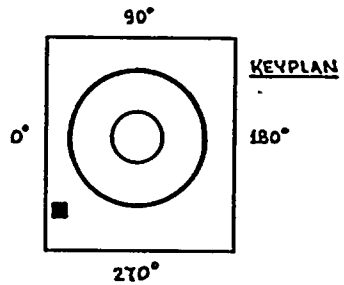

QUALITY CLASS: 1	ASME CODE CLASS: 2	
ENGR: G.A. KUGLER	DRAWN: K. McA.	DATE: 8-2-78

WASHINGTON PUBLIC POWER SUPPLY SYSTEM

RICHLAND, WASHINGTON 99352

THIS DRAWING IS INTENDED FOR USE IN PRESERVICE AND INSERVICE INSPECTION PROGRAMS ONLY.

PIPING SYSTEM	NOM DIA (IN)	SCH	NOM WALL THK	MATERIAL SPECIFICATION	MATL TYPE	CAL BLOCK NO
6" RCIC(6)-4	6	120	0.562	SA 106 GR B	CS	NA

WNP-2

WELD & COMPONENT IDENTIFICATION DIAGRAM

TITLE: RCIC SUPPLY TO COND STORAGE TANKS

DWG NO: RCIC-205-3 REV 1

NO	DATE	REVISION	BY	CHKD	APPVD
1	12 2 85	REVISED AS NOTED ADDED KEYPLAN	K.McA	DPR	TTH
0	12 22 78	ISSUED FOR USE	K.McA	[illegible]	[illegible]
A	10 5 78	ISSUED FOR INFORMATION ONLY	K.McA	[illegible]	[illegible]

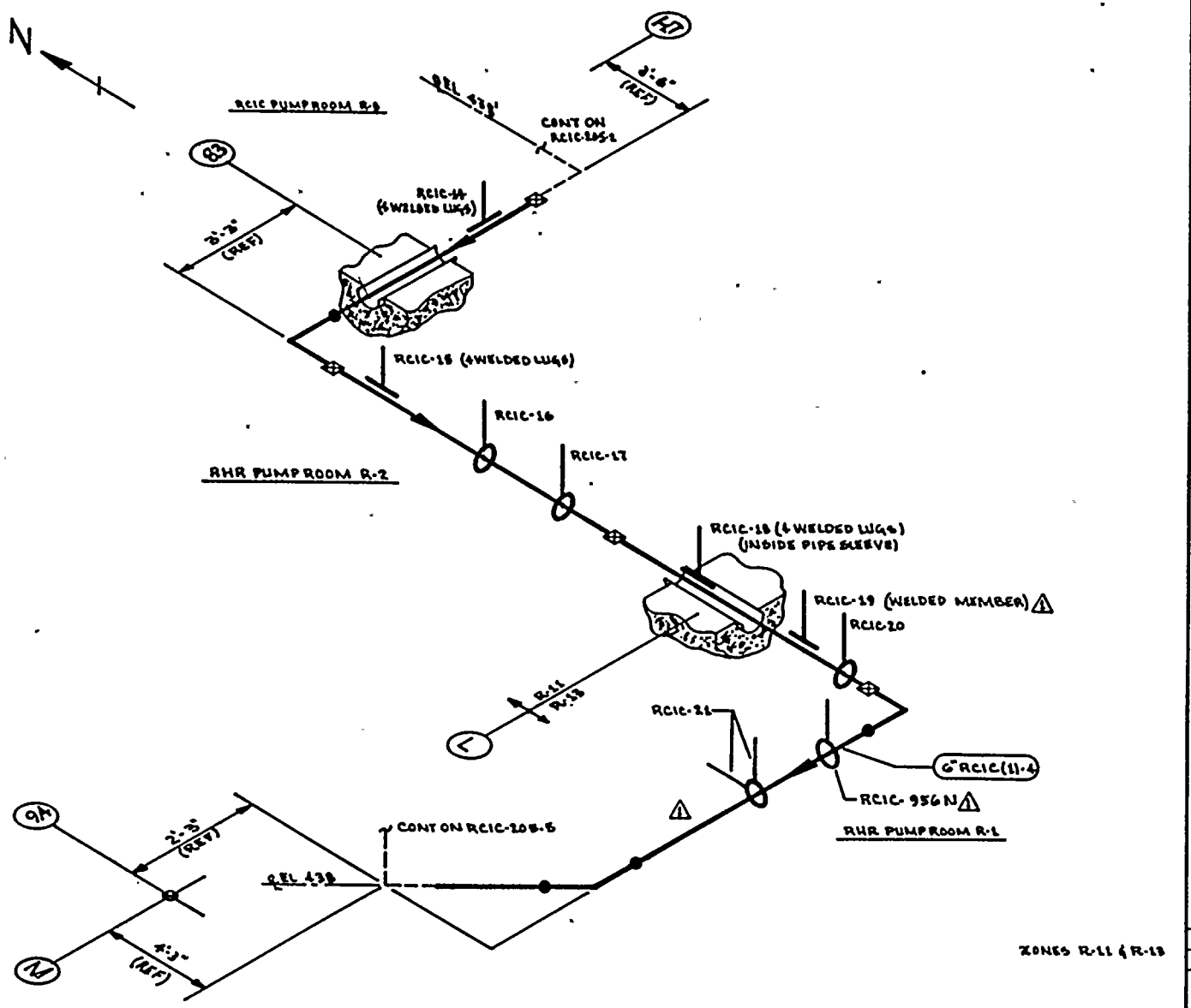

NOTES:

1. THIS DRAWING IDENTIFIES PIPING & COMPONENTS SUBJECT TO A VISUAL EXAM FOR EVIDENCE OF LEAKAGE DURING SYSTEM HYDRO OR OPERABILITY TESTS. TESTS ARE TO BE CONDUCTED PER THE REQUIREMENTS OF ASME SECTION XI, PARAGRAPH IWA-5000.

REFERENCES:

BOVEE & CRAIL ISOMETRICS
RCIC-669-7-10 REV 7

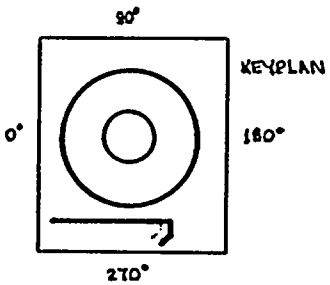

THIS DRAWING IS INTENDED FOR USE IN PRESERVICE AND INSERVICE INSPECTION PROGRAMS ONLY.

PIPING SYSTEM	NOM DIA (IN)	SCH	NOM WALL THK	MATERIAL SPECIFICATION	MATL TYPE	CAL BLOCK NO
6" RCIC(1)-4	6	120	0.562	SA 106 GR B	CS	NA

NO	DATE	REVISION	BY	CHKD	APPVD
2	12-2-83	REVISED AS NOTED ADDED KEYPLAN			
0	12-22-78	ISSUED FOR USE			
1	10-5-78	ISSUED FOR INFORMATION ONLY			

QUALITY CLASS: 1 | ASME CODE CLASS: 2
ENGR: G.A. VIGLIENE | DRAWN: K. McA. | DATE: 8-2-78

WASHINGTON PUBLIC POWER SUPPLY SYSTEM
RICHLAND, WASHINGTON 99352

WNP-2
WELD & COMPONENT IDENTIFICATION DIAGRAM

TITLE: RCIC SUPPLY TO REACTOR HEAD SPRAY

DWG NO: RCIC-205-4 | REV 2

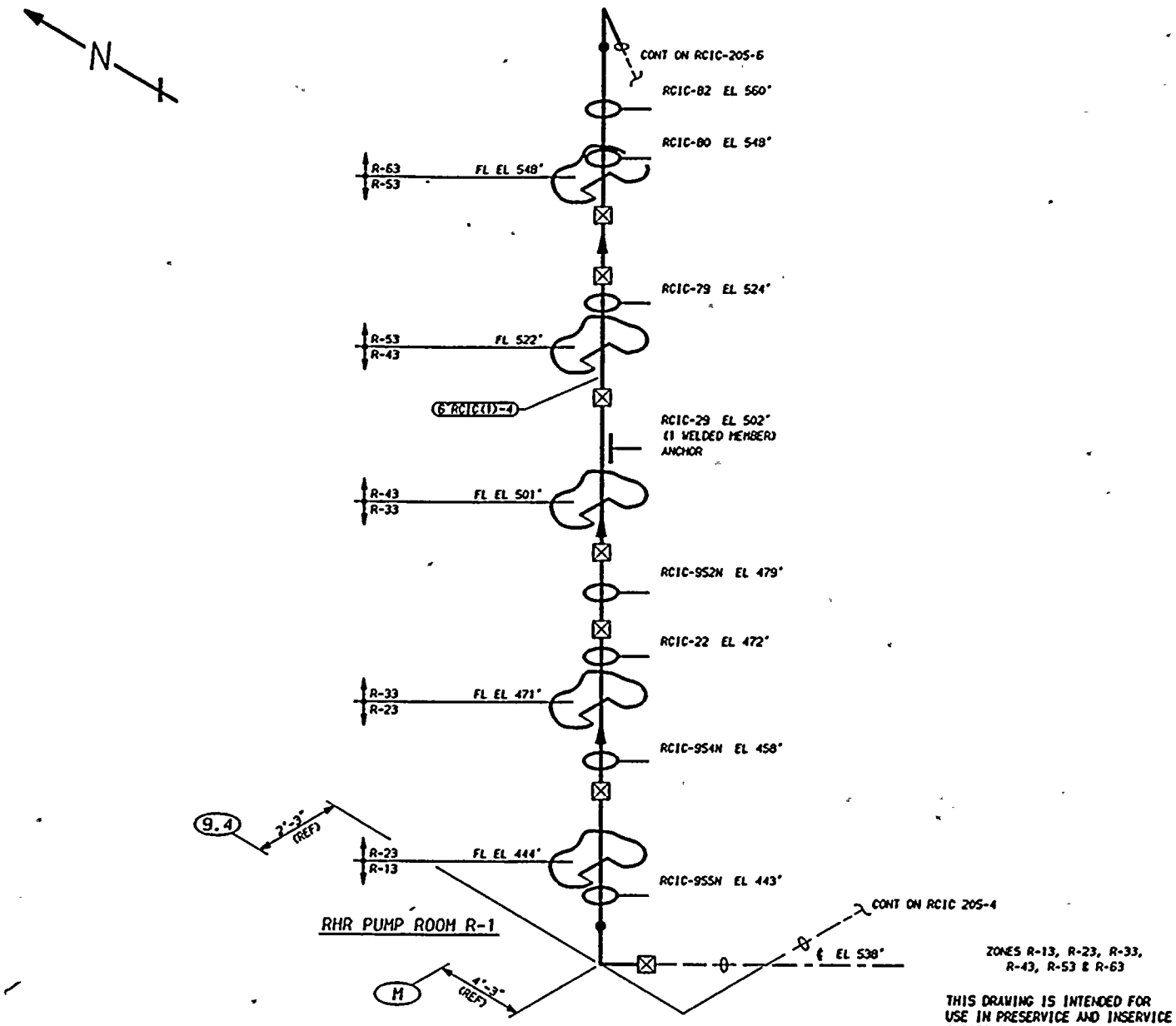

ZONES R-13, R-23, R-33, R-43, R-53 & R-63

THIS DRAWING IS INTENDED FOR USE IN PRESERVICE AND INSERVICE INSPECTIONS PROGRAMS ONLY.

NOTES:

1. THIS DRAWING IDENTIFIES PIPING AND COMPONENTS SUBJECT TO A VISUAL EXAM FOR EVIDENCE OF LEAKAGE DURING SYSTEM HYDRO OR OPERABILITY TESTS. TESTS ARE TO BE CONDUCTED PER THE REQUIREMENTS OF ASME SECTION XI, PARAGRAPH IWA-5000.

REFERENCES:

ISI - 219

BOYEE CRAIL ISIMETRICS
RCIC-659-11.17 REV 6

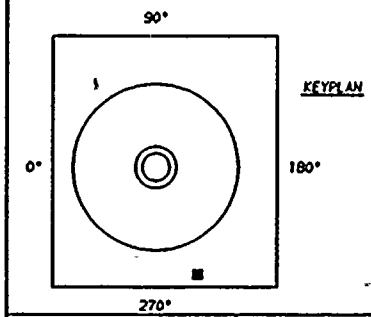

QUALITY CLASS: 1	ASME CODE CLASS: 2
ENGR: GA KUGLER	DRAWN: K-McA / DATE: 8-3-78

WASHINGTON PUBLIC POWER
SUPPLY SYSTEM
RICHLAND, WASHINGTON 99352

PIPING SYSTEM	NOM DIA (IN)	SCH	NOM WALL THK	MATERIAL SPECIFICATION	MATL TYPE	CAL BLOCK NO
6"RCIC(1)-4	6	120	0.562	SA 106 GR B	CS	NA

WNP-2
WELD & COMPONENT
IDENTIFICATION DIAGRAM

TITLE:
RCIC SUPPLY TO REACTOR HEAD SPRAY

DWG NO: RCIC-205-5 REV 1

NO	DATE	REVISION	BY	CHKD	APVD
1	12-9-83	GENERAL UP-DATE REDRAWN	K-McA	DMP	LFB
0	12-22-78	ISSUED FOR USE	K-McA	DMP	LFB
A	10-3-78	ISSUED FOR INFORMATION ONLY	K-McA	GAK	DMP

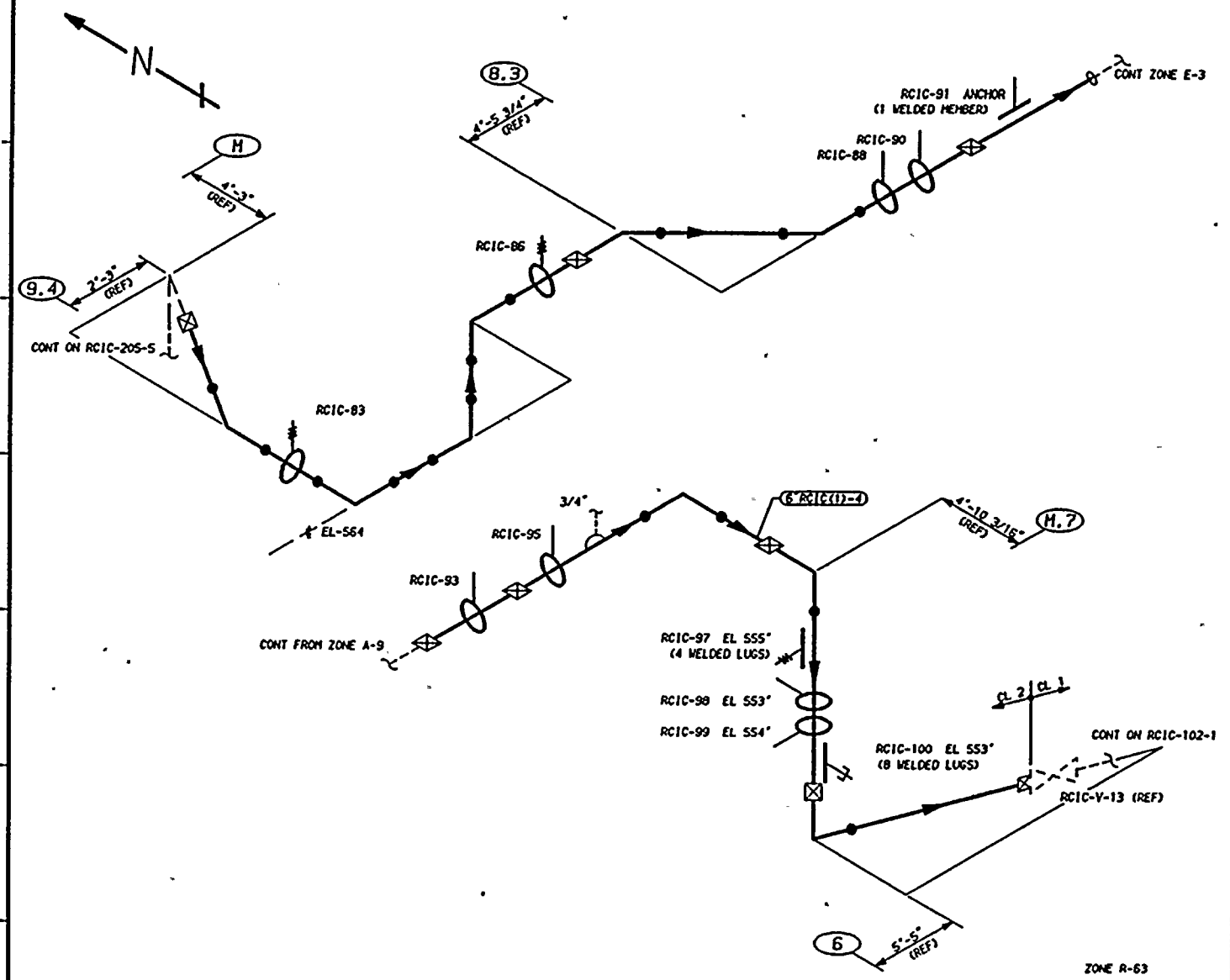

NOTES:

1. THIS DRAWING IDENTIFIES PIPING AND COMPONENTS SUBJECT TO A VISUAL EXAM FOR EVIDENCE OF LEAKAGE DURING SYSTEM HYDRO OR OPERABILITY TESTS. TESTS ARE TO BE CONDUCTED PER THE REQUIREMENTS OF ASME SECTION XI, PARAGRAPH IWA-5000.

2. FOR BRANCH PIPING 4" NOM. OR LESS (CONNECTION SHOWN IN DASHED LINES) EXTEND VISUAL LEAKAGE EXAM THROUGH THE OUTERMOST NORMALLY CLOSED NUCLEAR CLASS VALVE, OR UNTIL TRANSITION TO INSTRUMENT TUBING, UNLESS OTHERWISE NOTED.

REFERENCES:

ISI - 219

BOVEE CRAIL ISIMETRICS
RCIC-659-18.21 REV 10
RCIC-659-22.23 REV 7

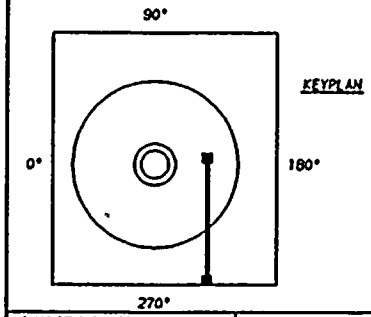

QUALITY CLASS: 1	ASME CODE CLASS: 2
ENGR: GA KUGLER	DRAWN: K-McA / DATE: 8-3-78

THIS DRAWING IS INTENDED FOR USE IN PRESERVICE AND INSERVICE INSPECTIONS PROGRAMS ONLY.

WASHINGTON PUBLIC POWER
SUPPLY SYSTEM
RICHLAND, WASHINGTON 99352

PIPING SYSTEM	NOM DIA (IN)	SCH	NOM WALL THK	MATERIAL SPECIFICATION	MATL TYPE	CAL BLOCK NO
6"RCIC(1)-4	6	80	0.562	SA 106 GR B	CS	NA

NO	DATE	REVISION	BY	CHKD	APVD
1	12-2-83	GENERAL UPDATE REDRAWN	K-McA	DPR / IFH	TFB
0	12-22-78	ISSUED FOR USE	K-McA	GAK / DWP	LFB
A	10-3-78	ISSUED FOR INFORMATION ONLY	K-McA	GAK	DWP

WNP-2
WELD & COMPONENT
IDENTIFICATION DIAGRAM

TITLE:
RCIC SUPPLY TO REACTOR HEAD SPRAY

DWG NO: RCIC-205-6 REV 1

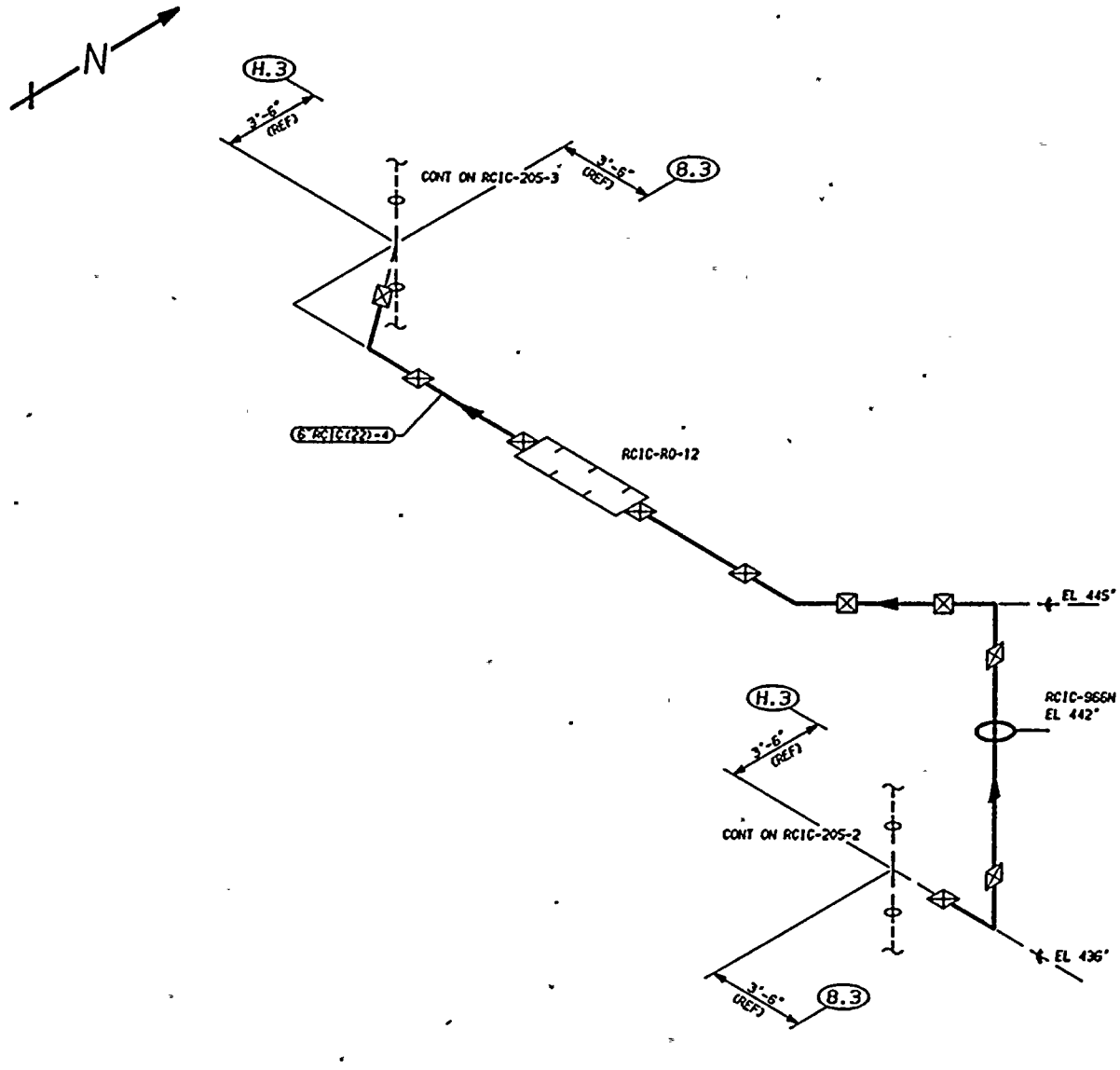

ZONE R-11

THIS DRAWING IS INTENDED FOR USE IN PRESERVICE AND INSERVICE INSPECTIONS PROGRAMS ONLY.

PIPING SYSTEM	NOM DIA (IN)	SCH	NOM WALL THK	MATERIAL SPECIFICATION	MATL TYPE	CAL BLOCK NO
6"RCIC(22)-4	6	120	0.562	SA 106 GR B	CS	NA

NO	DATE	REVISION	BY	CHKD	APVD
0	[illegible]	ISSUED FOR USE	[illegible]	[illegible]	[illegible]

NOTES:

1. THIS DRAWING IDENTIFIES PIPING AND COMPONENTS SUBJECT TO A VISUAL EXAM FOR EVIDENCE OF LEAKAGE DURING SYSTEM HYDRO OR OPERABILITY TESTS. TESTS ARE TO BE CONDUCTED PER THE REQUIREMENTS OF ASME SECTION XI, PARAGRAPH IWA-5000.

REFERENCES:

ISI - 219

BOYEE CRAIL ISIMETRICS
RCIC-659-3.6 REV 10
RCIC-642-1.5 REV 11

KEYPLAN

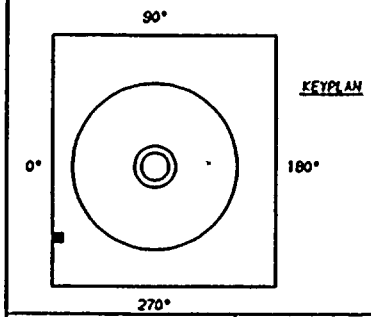

QUALITY CLASS: 1	ASME CODE CLASS: 2
ENGR: K-McANDREW	DRAWN: K-McA	DATE: 10-12-83

WASHINGTON PUBLIC POWER
SUPPLY SYSTEM
RICHLAND, WASHINGTON 99352

WNP-2
WELD & COMPONENT
IDENTIFICATION DIAGRAM

TITLE:
RCIC-RO-12 BY-PASS LINE

DWG NO: RCIC-205-7 REV 0

WNP-02
INTERVAL: PSI
PERIOD: NA
OUTAGE:
DRAWING NO. RCIC-205

WASHINGTON PUBLIC POWER SUPPLY SYSTEM
PROGRAM PLAN AND SCHEDULE
SYSTEM OR COMPONENT: RCIC(1)-4
DESCRIPTION: RCIC PUMP DISCHARGE

DATE 12/14/84

IDENT. NO.	DESCRIPTION	SECT. XI EXAM.	EXAM MTH.	PROCEDURE	CAL. BLOCK	INSERVICE REQ.	SCHEDULED OUTAGE	NOTES
RCIC-13								
	BOX	C-E-2	VT-3	303/8.2.17				
RCIC-31								
	SPRING	C-E-2	VT-3	303/8.2.17				
			VT-4	303/8.2.17				
RCIC-12								
	BOX	C-E-2	VT-3	303/8.2.17				
RCIC-11								
	BOX	C-E-2	VT-3	303/8.2.17				
RCIC-10								
	STRUT	C-E-2	VT-3	303/8.2.17				
RCIC-973N								
	STRUT	C-E-2	VT-3	303/8.2.17				
RCIC-9								
	BOX	C-E-2	VT-3	303/8.2.17				
RCIC-8								
	STRUT	C-E-2	VT-3	303/8.2.17				
RCIC-54								
	SPRING	C-E-2	VT-3	303/8.2.17				
			VT-4	303/8.2.17				
RCIC-14								
	BOX	C-E-2	VT-3	303/8.2.17				
RCIC-15								
	BOX	C-E-2	VT-3	303/8.2.17				
RCIC-16								
	BOX	C-E-2	VT-3	303/8.2.17				
RCIC-17								
	BOX	C-E-2	VT-3	303/8.2.17				
RCIC-18								
	OTHER	C-E-2	VT-3	303/8.2.17				
RCIC-19								
	BOX	C-E-2	VT-3	303/8.2.17				
RCIC-20								
	BOX	C-E-2	VT-3	303/8.2.17				

WNP-02
INTERVAL: PSI
PERIOD: NA
OUTAGE:
DRAWING NO. RCIC-205

WASHINGTON PUBLIC POWER SUPPLY SYSTEM
PROGRAM PLAN AND SCHEDULE
SYSTEM OR COMPONENT: RCIC(1)-4
DESCRIPTION: RCIC PUMP DISCHARGE

DATE 12/14/84

IDENT. NO.	DESCRIPTION	SECT. XI EXAM.	EXAM MTH.	PROCEDURE	CAL. BLOCK	INSERVICE REQ.	INSERVICE SCHEDULED OUTAGE	NOTES
RCIC-956N	STRUT	C-E-2	VT-3	303/8.2.17				
RCIC-21	STRUT	C-E-2	VT-3	303/8.2.17				
RCIC-955N	BOX	C-E-2	VT-3	303/8.2.17				
RCIC-954N	BOX	C-E-2	VT-3	303/8.2.17				
RCIC-22	BOX	C-E-2	VT-3	303/8.2.17				
RCIC-952N	BOX	C-E-2	VT-3	303/8.2.17				
RCIC-29	ANCHOR	C-E-2	VT-3	303/8.2.17				
RCIC-79	BOX	C-E-2	VT-3	303/8.2.17				
RCIC-80	STRUT	C-E-2	VT-3	303/8.2.17				
RCIC-82	BOX	C-E-2	VT-3	303/8.2.17				
RCIC-83	SPRING	C-E-2	VT-3	303/8.2.17				
			VT-4	303/8.2.17				
RCIC-86	SPRING	C-E-2	VT-3	303/8.2.17				
			VT-4	303/8.2.17				
RCIC-88	BOX	C-E-2	VT-3	303/8.2.17				
RCIC-90	STRUT	C-E-2	VT-3	303/8.2.17				
RCIC-91	ANCHOR	C-E-2	VT-3	303/8.2.17				
RCIC-93	BOX	C-E-2	VT-3	303/8.2.17				

WNP-02
INTERVAL: PSI
PERIOD: NA
OUTAGE:
DRAWING NO. RCIC-205

WASHINGTON PUBLIC POWER SUPPLY SYSTEM
PROGRAM PLAN AND SCHEDULE
SYSTEM OR COMPONENT: RCIC(1)-4
DESCRIPTION: RCIC PUMP DISCHARGE

DATE 12/14/84

IDENT. NO.	DESCRIPTION	SECT. XI EXAM.	EXAM MTH.	PROCEDURE	CAL. BLOCK	INSERVICE REQ.	INSERVICE SCHEDULED OUTAGE	NOTES
RCIC-95								
	BOX	C-E-2	VT-3	303/8.2.17				
RCIC-97								
	SPRING	C-E-2	VT-3	303/8.2.17				
			VT-4	303/8.2.17				
RCIC-98								
	STRUT	C-E-2	VT-3	303/8.2.17				
RCIC-99								
	STRUT	C-E-2	VT-3	303/8.2.17				
RCIC-100								
	PSA-1 SNUBBER	C-E-2	VT-3	303/8.2.17				S/N
			VT-4	303/8.2.17				S/N
RCIC-966N								
	STRUT	C-E-2	VT-3	303/8.2.17				
RCIC-PB-205								
	RCIC PRES BNDRY	N/A	VT-2	N/A				SEE NOTES #6 & #7.

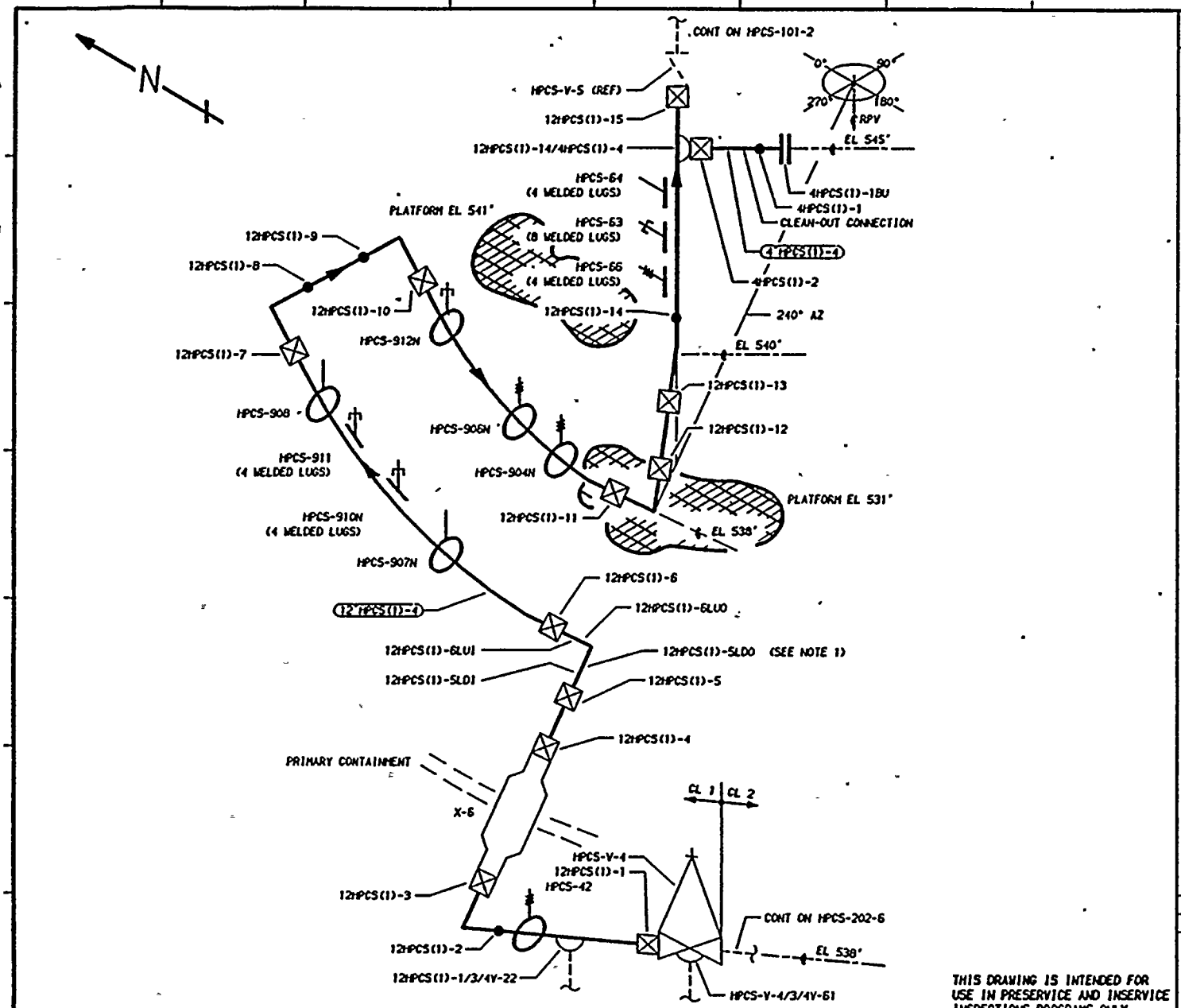

THIS DRAWING IS INTENDED FOR USE IN PRESERVICE AND INSERVICE INSPECTIONS PROGRAMS ONLY.

NOTES

1. PIPING SYSTEM 12"HPCS(1)-4 IS CONSTRUCTED OF SEAMLESS SCH 80 PIPE AND FITTINGS EXCEPT FOR THE SR ELL ASSOCIATED WITH WELDS 12HPCS(1)-5 & 6 WHICH IS WELDED SCH 100. USE THE CAL BLOCKS SHOWN BELOW ACCORDINGLY.

REFERENCES:

ISI - 220

BOVEE AND CRAIL ISOMETRICS
HPCS-630-26,28 REV 8
HPCS-630-29-30 REV 7

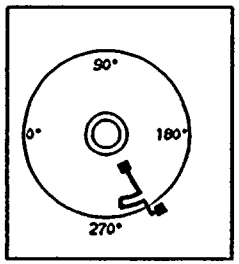

KEYPLAN

PIPING SYSTEM	NOM DIA (IN)	SCH	NOM WALL THK	MATERIAL SPECIFICATION	MATL TYPE	CAL BLOCK NO
12"HPCS(1)-4	12	80	0.688	SA 106 GR B	CS	UT-17
12"HPCS(1)-4	12	100	0.844	SA 106 GR B	CS	UT-16
4"HPCS(1)-4	4	80	0.337	SA 106 GR B	CS	UT-30
LUGS	N/A	N/A	N/A	SA 515 GR 70	CS	UT-46

NO	DATE	REVISION	BY	CHKD	APVD
2	5-26-83	ADDED SUPPORTS/RESTRAINTS, ADDED LUGS & UT-46 DELETED 3/4LOC. (REDRAWN)	[illegible]	DPR	TFH
1	12-2-81	CORRECTED VALVE TAG NO. IN A-4	K-McA	DPR	TFH
0	11-27-78	ISSUED FOR USE (REDRAWN)	K-McA	DWP	LFB
A	11-28-77	ISSUED FOR INFORMATION ONLY	K-McA	DWP GAK	DWP

QUALITY CLASS: 1 | ASME CODE CLASS: 1

ENGR: GA KUGLER | DRAWN: K-McA | DATE: 2-11-83

WASHINGTON PUBLIC POWER
SUPPLY SYSTEM
RICHLAND, WASHINGTON 99352

WNP-2
WELD & COMPONENT
IDENTIFICATION DRAWING

TITLE: HPCS DISCHARGE TO VESSEL

DWG NO: HPCS-101-1 | REV 2

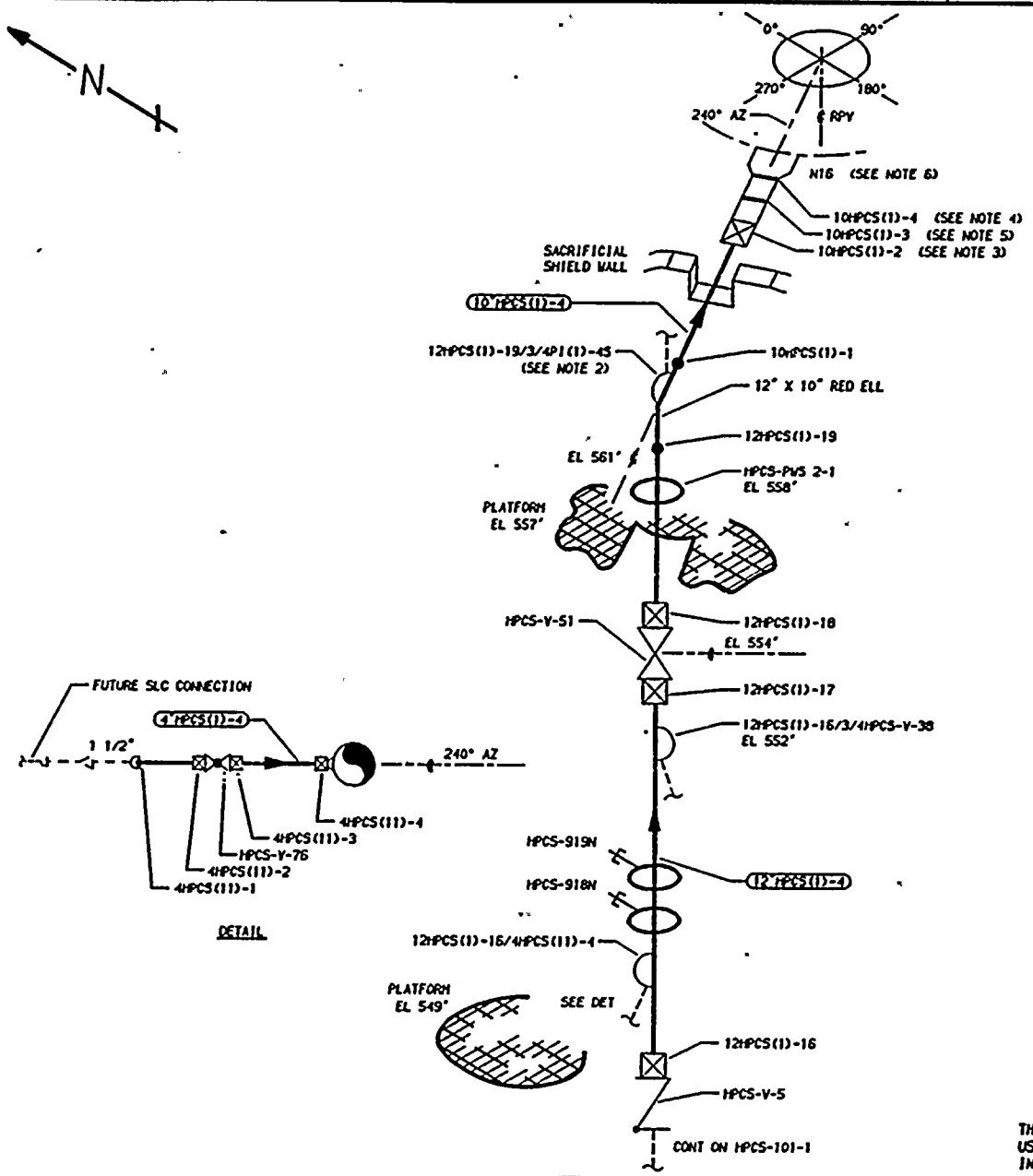

NOTES

1. DELETED
2. EXTEND VISUAL LEAKAGE EXAM THROUGH CONTAINMENT PENETRATION (X-73a) THROUGH EXCESS FLOW CHECK VALVE TO INSTRUMENT TUBING CONNECTION.
3. DISTANCE BETWEEN WELDS 10HPCS(1)-2 AND 10HPCS(1)-3 IS LESS THAN 6".
4. DISSIMILAR METAL WELD, CS TO INCO, USE CAL BLOCK UT-102.
5. DISSIMILAR METAL WELD, CS TO INCO, USE CAL BLOCK UT-106.
6. FOR NOZZLE ASSEMBLY DETAILS SEE RPV-109.

REFERENCES:

151 - 220

BOYEE AND CRAIL ISOMETRICS
HPCS-630-29-30 REV 7
HPCS-530-31.33 REV 9

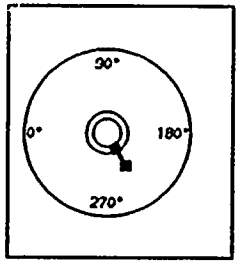

KEYPLAN

THIS DRAWING IS INTENDED FOR USE IN PRESERVICE AND INSERVICE INSPECTIONS PROGRAMS ONLY.

QUALITY CLASS: 1	ASME CODE CLASS: 1	
ENGR: GA KUGLER	DRAWN: K-McA	DATE: 11-2-77

WASHINGTON PUBLIC POWER
SUPPLY SYSTEM
RICHLAND, WASHINGTON 99352

WNP-2
WELD & COMPONENT
IDENTIFICATION DRAWING

TITLE:
HPCS DISCHARGE TO VESSEL

DWG NO: HPCS-101-2 REV 4

NO	DATE	REVISION	BY	CHKD	APVD
4	5-26-83	ADDED SHADERS 31BN & 31SN, REMOVED 3/4LOC, ADDED 4"HPCS(11)-4. ADDED UT-30. REDRAWN	K-McA	DPR	TFH
3	12-2-81	REVISED AS NOTED	K-McA	DPR	TFH
2	7-17-79	DELETED NOTE 1 AND REF TO WELDS IN REDUCING ELBOW. AS BUILT ELBOW IS SEAMLESS. 7N C-5	K-McA	TFH / DWP	LFB
1	1-10-79	REVISED REFERENCE TO NOTES 4 AND 5	K-McA	TFH / DWP	DWP / LFB
0	11-27-78	ISSUED FOR USE (REDRAWN	K-McA	DWP	LFB
A	11-28-77	ISSUED FOR INFORMATION ONLY	K-McA	DWP / GAK	DWP

PIPING SYSTEM	NOM DIA (IN)	SCH	NOM WALL THK	MATERIAL SPECIFICATION	MATL TYPE	CAL BLOCK NO
12"HPCS(1)-4	12	80	0.688	SA 106 GR B	CS	UT-17
10"HPCS(1)-4	10	80	0.594	SA 106 GR B	CS	UT-22
4"HPCS(1)-4	4	80	0.377	SA 106 GR B	CS	UT-30

WNP-02
INTERVAL: PSI
PERIOD: NA
OUTAGE:
DRAWING NO. HPCS-101

WASHINGTON PUBLIC POWER SUPPLY SYSTEM
PROGRAM PLAN AND SCHEDULE
SYSTEM OR COMPONENT: HPCS(1)-4
DESCRIPTION: HIGH PRES CORE SPRAY

DATE 12/14/84

IDENT. NO.	DESCRIPTION	SECT. XI EXAM.	EXAM MTH.	PROCEDURE	CAL. BLOCK	INSERVICE REQ.	INSERVICE SCHEDULED OUTAGE	NOTES
HPCS-V-4-BDY								
	VALVE BODY	B-M-2	VT-1	QCI 7-1				
HPCS-V-4-BLT								
	VALVE BOLTING	B-G-2	VT-1	QCI 7-1				
HPCS-V-4/3/4CAP								
	LEAKOFF CAPPED	B-P	VT-2	N/A				SEE NOTES #6 & #7.
HPCS-V-4/3/4V-61								
	DRAIN CONN	B-P	VT-2	N/A				SEE NOTES #6 & #7.
12HPCS(1)-1								
	VALVE TO PIPE	B-J	VOL	UTP-10	UT-17			
			SUR	PTP-1				
12HPCS(1)-1/3/4V-22								
	TEST CONN	B-P	VT-2	N/A				SEE NOTES #6 & #7.
HPCS-42								
	SPRING	B-K-2	VT-3	303/8.2.17				
			VT-4	303/8.2.17				
12HPCS(1)-2								
	PIPE TO EL	B-J	VOL	UTP-10	UT-17			
			SUR	PTP-1				
12HPCS(1)-3								
	EL TO PEN	B-J	VOL	QCI 6-13	UT-17			FITTING TO FITTING
			SUR	QCI 3-3				FITTING TO FITTING
12HPCS(1)-4								
	PEN TO PIPE	B-J	VOL	UTP-10	UT-17			
			SUR	PTP-1				
12HPCS(1)-5								
	PIPE TO EL	B-J	VOL	UTP-10	UT-17			
			SUR	PTP-1				
12HPCS(1)-5L00								
	EL SEAM	B-J	VOL	UTP-10	UT-16			

WNP-02
INTERVAL: PSI
PERIOD: NA
OUTAGE:
DRAWING NO. HPCS-101

WASHINGTON PUBLIC POWER SUPPLY SYSTEM
PROGRAM PLAN AND SCHEDULE
SYSTEM OR COMPONENT: HPCS(1)-4
DESCRIPTION: HIGH PRES CORE SPRAY

DATE 12/14/84

IDENT. NO.	DESCRIPTION	SECT. XI EXAM.	EXAM MTH.	PROCEDURE	CAL. BLOCK	INSERVICE REQ.	INSERVICE SCHEDULED OUTAGE	NOTES
			SUR	PTP-1				
12HPCS(1)-5LDI	EL SEAM	B-J	VOL	UTP-10	UT-16			
			SUR	PTP-1				
12HPCS(1)-6LUO	EL SEAM	B-J	VOL	UTP-10	UT-16			
			SUR	PTP-1				
12HPCS(1)-6LUI	EL SEAM	B-J	VOL	UTP-10	UT-16			
			SUR	PTP-1				
12HPCS(1)-6	EL TO PIPE	B-J	VOL	UTP-10	UT-17			
			SUR	PTP-1				
HPCS-907N	STRUT	B-K-2	VT-3	303/8.2.17				
HPCS-910N(W)	4 WELDED LUGS	B-K-1	VOL	UTP-26	UT-17			
HPCS-910N	PSA-3 SN(2)	B-K-2	VT-3	303/8.2.17				S/N 2579/2691
			VT-4	303/8.2.17				S/N 2579/2691
HPCS-911N	PSA-10 SNUBBER	B-K-2	VT-3	303/8.2.17				S/N
			VT-4	303/8.2.17				S/N
HPCS-908N	STRUT	B-K-2	VT-3	303/8.2.17				
12HPCS(1)-7	PIPE TO EL	B-J	VOL	UTP-10	UT-17			
			SUR	PTP-1				

WNP-02
INTERVAL: PSI
PERIOD: NA
OUTAGE:
DRAWING NO. HPCS-101

WASHINGTON PUBLIC POWER SUPPLY SYSTEM
PROGRAM PLAN AND SCHEDULE
SYSTEM OR COMPONENT: HPCS(1)-4
DESCRIPTION: HIGH PRES CORE SPRAY

DATE 12/14/84

IDENT. NO.	DESCRIPTION	SECT. XI EXAM.	EXAM MTH.	PROCEDURE	CAL. BLOCK	INSERVICE REQ.	INSERVICE SCHEDULED OUTAGE	NOTES
12HPCS(1)-8								
	EL TO PIPE	B-J	VOL	UTP-10	UT-17			
			SUR	PTP-1				
12HPCS(1)-9								
	PIPE TO EL	B-J	VOL	UTP-10	UT-17			
			SUR	PTP-1				
12HPCS(1)-10								
	EL TO PIPE	B-J	VOL	UTP-10	UT-17			
			SUR	PTP-1				
HPCS-912N								
	PSA-3 SNUBBER	B-K-2	VT-3	303/8.2.17				S/N 2790
			VT-4	303/8.2.17				S/N 2790
HPCS-906N								
	SPRING	B-K-2	VT-3	303/8.2.17				
			VT-4	303/8.2.17				
HPCS-904N								
	SPRING	B-K-2	VT-3	303/8.2.17				
			VT-4	303/8.2.17				
12HPCS(1)-11								
	PIPF TO EL	B-J	VOL	UTP-10	UT-17			
			SUR	PTP-1				
12HPCS(1)-12								
	EL TO PIPE	B-J	VOL	UTP-10	UT-17			
			SUR	PTP-1				
12HPCS(1)-13								
	PIPE TO EL	B-J	VOL	UTP-10	UT-17			
			SUR	PTP-1				

WNP-02
INTERVAL: PSI
PERIOD: NA
OUTAGE:
DRAWING NO. HPCS-101

WASHINGTON PUBLIC POWER SUPPLY SYSTEM
PROGRAM PLAN AND SCHEDULE
SYSTEM OR COMPONENT: HPCS(1)-4
DESCRIPTION: HIGH PRES CORE SPRAY

IDENT. NO.	DESCRIPTION	SECT. XI EXAM.	EXAM MTH.	PROCEDURE	CAL. BLOCK	INSERVICE REQ.	INSERVICE SCHEDULED OUTAGE	NOTES
12HPCS(1)-14								
	EL TO PIPE	B-J	VOL	UTP-10	UT-17			
			SUR	PTP-1				
HPCS-66(W)								
	4 WELDED LUGS	B-K-1	VOL	UTP-26	UT-17			3/4"Wx1 1/8"Hx3"L.
HPCS-66								
	SPRING	B-K-2	VT-3	303/8.2.17				
			VT-4	303/8.2.17				
HPCS-63(W)								
	8 WELDED LUGS	B-K-1	VOL	QCI 6-15	UT-17			
HPCS-63								
	PSA-10 SN(2)	B-K-2	VT-3	303/8.2.17				S/N 1470/1474
			VT-4	303/8.2.17				S/N 1470/1474
HPCS-64(W)								
	4 WELDED LUGS	B-K-1	VOL	UTP-26	UT-17			3/4"W x 2"H x 3"L.
HPCS-64								
	BOX HANGER	B-K-2	VT-3	303/8.2.17				
12HPCS(1)-14/4HPCS(1)-4								
	WOL TO PIPE	B-J	SUR	QCI 3-3				
4HPCS(1)-1BD								
	FLANGE BOLTING	B-G-2	VT-1	QCI 7-1				
4HPCS(1)-1								
	FLANGE TO PIPE	B-J	VOL	UTP-10	UT-30			
			SUR	PTP-1				
4HPCS(1)-2								
	PIPE TO WOL	B-J	VOL	UTP-10	UT-30			
			SUR	PTP-1				
12HPCS(1)-15								
	PIPE TO VLV	B-J	VOL	UTP-10	UT-17			
			SUR	PTP-1				

WNP-02
INTERVAL: PSI
PERIOD: NA
OUTAGE:
DRAWING NO. HPCS-101

WASHINGTON PUBLIC POWER SUPPLY SYSTEM
PROGRAM PLAN AND SCHEDULE
SYSTEM OR COMPONENT: HPCS(1)-4
DESCRIPTION: HIGH PRES CORE SPRAY

IDENT. NO.	DESCRIPTION	SECT. XI EXAM.	EXAM MTH.	PROCEDURE	CAL. BLOCK	INSERVICE REQ.	INSERVICE SCHEDULED OUTAGE	NOTES
HPCS-V-5-BDY								
	VALVE BODY	B-M-2	VT-1	QCI 7-1				
HPCS-V-5-BLT								
	VALVE BOLTING	B-G-2	VT-1	QCI 7-1				
HPCS-V-5/3/4CAP								
	LEAKOFF CAPPED	B-P	VT-2	N/A				SEE NOTES #6 & #7.
12HPCS(1)-16								
	VLV TO PIPE	B-J	VOL	UTP-10	UT-17			
			SUR	PTP-1				
4HPCS(11)-1								
	CAP TO PIPE	B-J	VOL	UTP-10	UT-30			
			SUR	PTP-1				
4HPCS(11)-2								
	PIPE TO VALVE	B-J	VOL	UTP-10	UT-30			
			SUR	PTP-1				
4HPCS(11)-3								
	VALVE TO PIPE	B-J	VOL	UTP-10	UT-30			
			SUR	PTP-1				
4HPCS(11)-4								
	PIPE TO WOL	B-J	VOL	UTP-10	UT-30			
			SUR	PTP-1				
12HPCS(1)-16/4HPCS(11)-4								
	PIPE TO WOL	B-J	SUR	PTP-1				
HPCS-918N								
	PSA-10 SNUBBER	B-K-2	VT-3	303/8.2.17				S/N 298
			VT-4	303/8.2.17				S/N 298
HPCS-919N								
	PSA-10 SNUBBER	B-K-2	VT-3	303/8.2.17				S/N 300

WNP-02
INTERVAL: PSI
PERIOD: NA
OUTAGE:
DRAWING NO. HPCS-101

WASHINGTON PUBLIC POWER SUPPLY SYSTEM
PROGRAM PLAN AND SCHEDULE
SYSTEM OR COMPONENT: HPCS(1)-4
DESCRIPTION: HIGH PRES CORE SPRAY

DATE 12/14/84

IDENT. NO.	DESCRIPTION	SECT. XI EXAM.	EXAM MTH.	PROCEDURE	CAL. BLOCK	INSERVICE REQ.	INSERVICE SCHEDULED OUTAGE	NOTES
			VT-4	303/8.2.17				S/N 300
12HPCS(1)-16/3/4V-38								
	TEST CONN	B-P	VT-2	N/A				SEE NOTES #6 & #7.
12HPCS(1)-17								
	PIPE TO VLV	B-J	VOL	UTP-10	UT-17			
			SUR	PTP-1				
HPCS-V-51-BDY								
	VALVE BODY	B-M-2	VT-1	QCI 7-1				
HPCS-V-51-BLT								
	VALVE BOLTING	B-G-2	VT-1	QCI 7-1				
12HPCS(1)-18								
	VLV TO PIPE	B-J	VOL	UTP-10	UT-17			
			SUR	PTP-1				
PWS-2-1								
	B&R WHIP SUP	N/A	N/A	N/A				SEE NOTE #1
12HPCS(1)-19								
	PIPE TO EL	B-J	VOL	UTP-10	UT-17			
			SUR	PTP-1				
12HPCS(1)-19/3/4PI(1)-4S								
	PRESSURE TAP	B-P	VT-2	N/A				SEE NOTES #6 & #7.
10HPCS(1)-1								
	EL TO PIPE	B-J	VOL	UTP-10	UT-22			
			SUR	PTP-1				
10HPCS(1)-2								
	PIPE TO SE EXT	B-J	VOL	UTP-10	UT-22			SEE RPV-109, NOZZLE N16
			SUR	PTP-1				SEE RPV-109, NOZZLE N16

WNP-02
INTERVAL: PSI
PERIOD: NA
OUTAGE:
DRAWING NO. HPCS-101

WASHINGTON PUBLIC POWER SUPPLY SYSTEM
PROGRAM PLAN AND SCHEDULE
SYSTEM OR COMPONENT: HPCS(1)-4
DESCRIPTION: HIGH PRES CORE SPRAY

DATE 12/14/84

IDENT. NO.	DESCRIPTION	SECT. XI EXAM.	EXAM MTH.	PROCEDURE	CAL. BLOCK	INSERVICE REQ.	INSERVICE SCHEDULED OUTAGE	NOTES
10HPCS(1)-3								
	SE EXT TO SE	B-F	VOL	UTP-10	UT-106			SEE RPV-105, NOZZLE N16
			SUR	PTP-1				SEE RPV-105, NOZZLE N16
10HPCS(1)-4								
	SE TO NOZZLE	B-F	VOL	UTP-10	UT-102			SEE RPV-105, NOZZLE N16
			SUR	PTP-1				SEE RPV-105, NOZZLE N16
HPCS-PB-101								
	HPCS PRES BNDRY	B-P	VT-2	N/A				SEE NOTES #6 & #7.

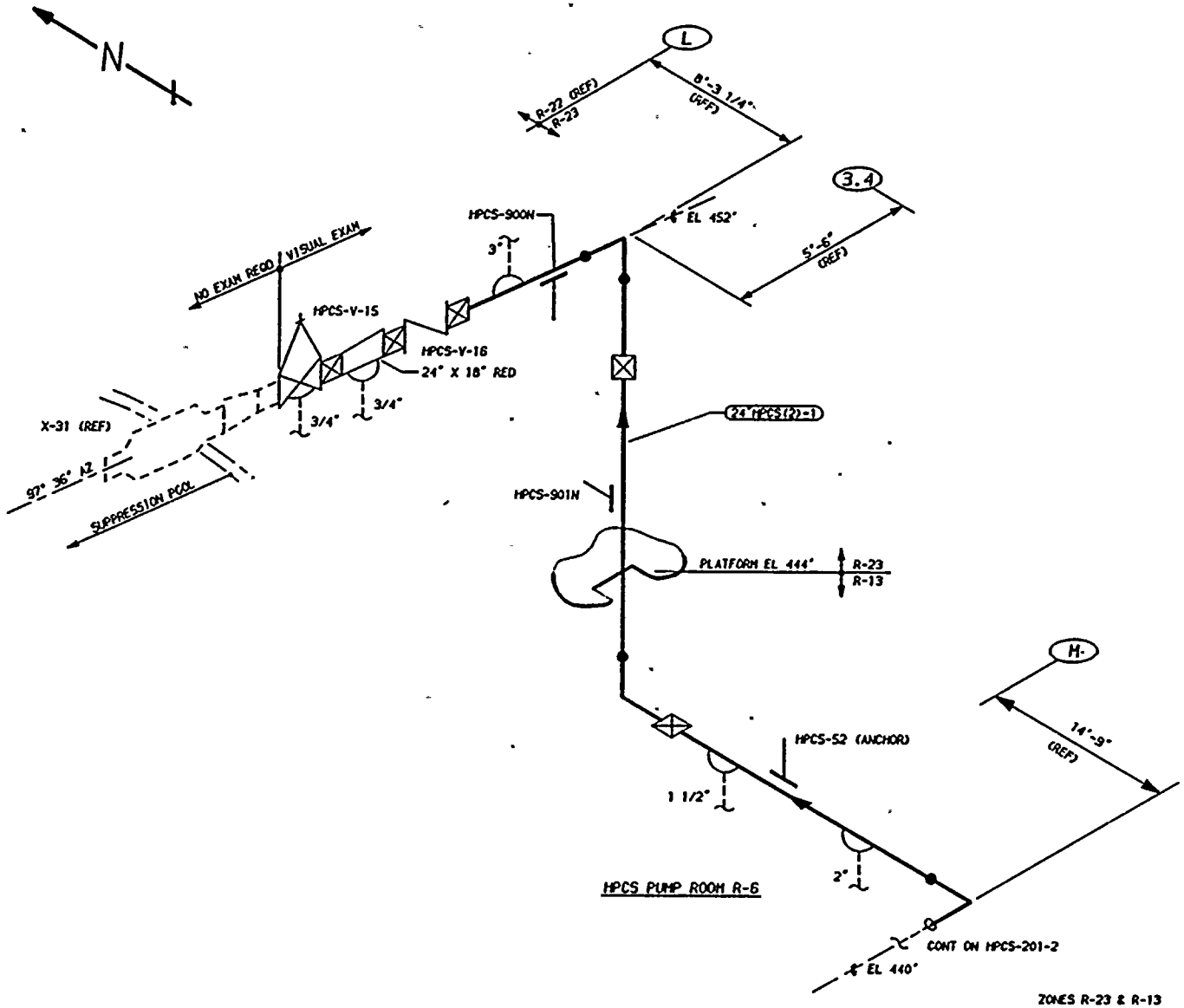

ZONES R-23 & R-13

THIS DRAWING IS INTENDED FOR USE IN PRESERVICE AND INSERVICE INSPECTIONS PROGRAMS ONLY.

NOTES:

1. THIS DRAWING IDENTIFIES PIPING AND COMPONENTS SUBJECT TO A VISUAL EXAM FOR EVIDENCE OF LEAKAGE DURING SYSTEM HYDRO OR OPERABILITY TESTS. TESTS ARE TO BE CONDUCTED PER THE REQUIREMENTS OF ASME SECTION XI, PARAGRAPH IWA-5000.
2. FOR BRANCH PIPING 4" NOM. OR LESS (CONNECTION SHOWN IN DASHED LINES) EXTEND VISUAL LEAKAGE EXAM THROUGH THE OUTERMOST NORMALLY CLOSED NUCLEAR CLASS VALVE, OR UNTIL TRANSITION TO INSTRUMENT TUBING, UNLESS OTHERWISE NOTED.

REFERENCES:

ISI - 220

BOVEE AND CRAIL ISOMETRICS
HPSC-629-1.4 REV 8

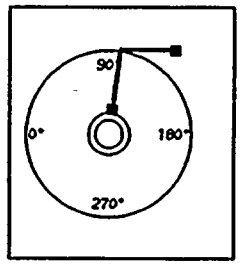

KEYPLAN

QUALITY CLASS: 1	ASME CODE CLASS: 2
ENGR: GA KUGLER	DRAWN: K-McA	DATE: 8-4-78

WASHINGTON PUBLIC POWER
SUPPLY SYSTEM
RICHLAND, WASHINGTON 99352

WNP-2
WELD & COMPONENT
IDENTIFICATION DRAWING

TITLE:
HPCS PUMP SUPPRESSION POOL SUCTION LINE

DWG NO: HPCS-201-1 | REV 1

PIPING SYSTEM	NOM DIA (IN)	SCH	NOM WALL THK	MATERIAL SPECIFICATION	MATL TYPE	CAL BLOCK NO
24"HPCS(2)-1	24	STD	0.375	SA 106 GR B	CS	NA

NO	DATE	REVISION	BY	CHKD	APVD
1	5-21-83	ADDED HPCS-ROOM ESOTA, DELETED HPCS-50, 51, 54, 55 & 56 ADDED FIELD WELD. ADDED 2" SOL (REQUIRED)	[illegible]	[illegible]	[illegible]
0	12-22-78	ISSUED FOR USE	K-McA	[illegible] DMP	LFB
A	10-3-78	ISSUED FOR INFORMATION ONLY	K-McA	GAK	DMP

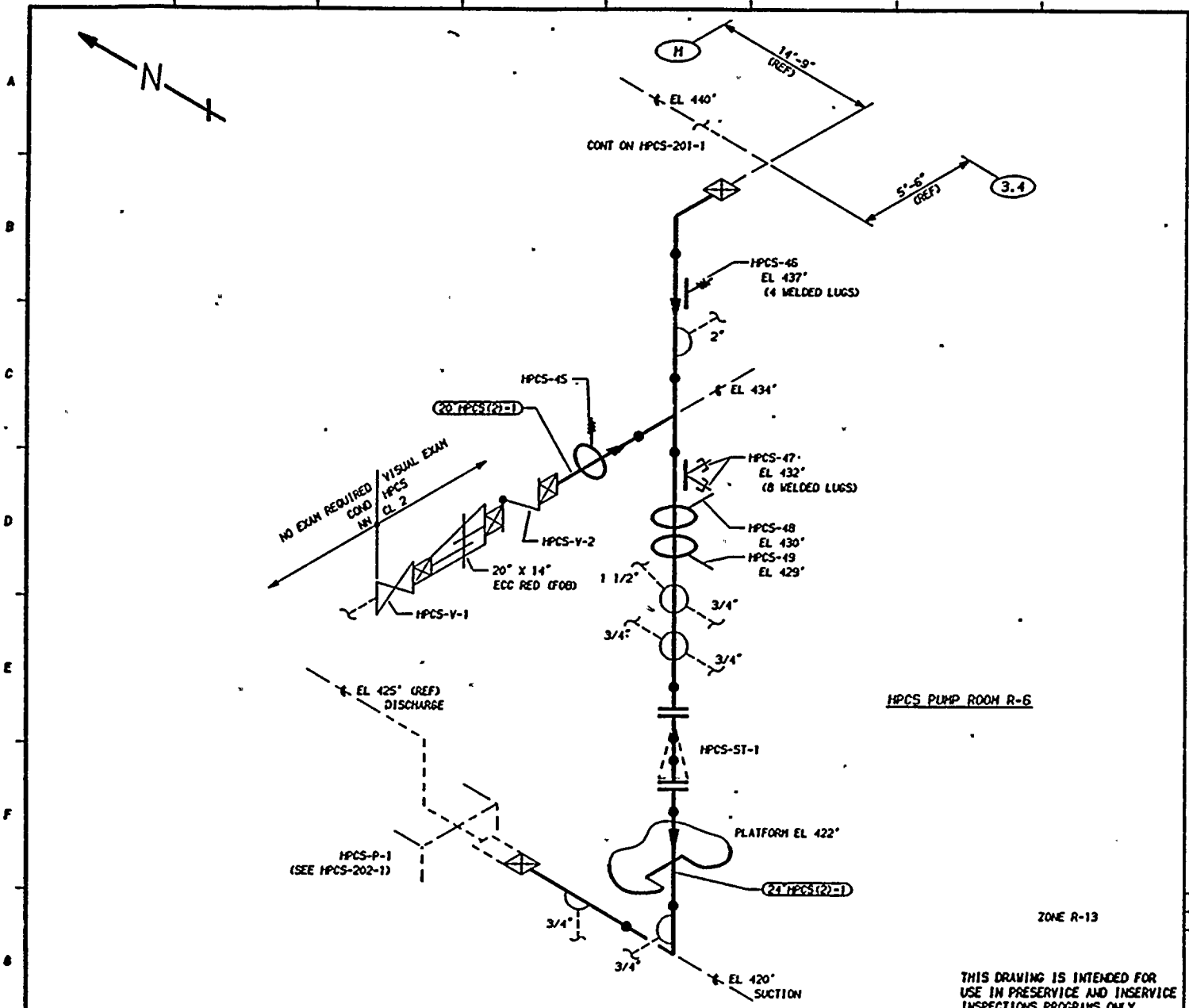

THIS DRAWING IS INTENDED FOR USE IN PRESERVICE AND INSERVICE INSPECTIONS PROGRAMS ONLY.

NOTES:

1. THIS DRAWING IDENTIFIES PIPING AND COMPONENTS SUBJECT TO A VISUAL EXAM FOR EVIDENCE OF LEAKAGE DURING SYSTEM HYDRO OR OPERABILITY TESTS. TESTS ARE TO BE CONDUCTED PER THE REQUIREMENTS OF ASME SECTION XI, PARAGRAPH IWA-5000.
2. FOR BRANCH PIPING 4" NOM. OR LESS (CONNECTION SHOWN IN DASHED LINES) EXTEND VISUAL LEAKAGE EXAM THROUGH THE OUTERMOST NORMALLY CLOSED NUCLEAR CLASS VALVE, OR UNTIL TRANSITION TO INSTRUMENT TUBING, UNLESS OTHERWISE NOTED.

REFERENCES:

ISI - 220

BOVEE AND CRAIL ISOMETRICS
HPCS-629-5.7 REV 7

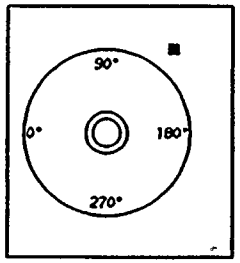

KEYPLAN

PIPING SYSTEM	NOM DIA (IN)	SCH	NOM WALL THK	MATERIAL SPECIFICATION	MATL TYPE	CAL BLOCK NO
24"HPCS(2)-1	24	STD	0.375	SA 106 GR B	CS	NA
20"HPCS(2)-1	20	STD	0.375	SA 106 GR B	CS	NA

NO	DATE	REVISION	BY	CHKD	APVD
1	5-2-83	ADDED 3/4" SOL, HPCS-48 NON RIGID, (REDRAWN	[illegible]	[illegible]	[illegible]
0	12-22-78	ISSUED FOR USE	K-McA	[illegible] DWP	LFB
A	10-3-78	ISSUED FOR INFORMATION ONLY	K-McA	GAK	DWP

QUALITY CLASS: 1 | ASME CODE CLASS: 2

ENGR: GA KUGLER | DRAWN: K-McA | DATE: 8-9-78

WASHINGTON PUBLIC POWER
SUPPLY SYSTEM
RICHLAND, WASHINGTON 99352

WNP-2
WELD & COMPONENT
IDENTIFICATION DRAWING

TITLE:
HPCS PUMP SUPPRESSION POOL SUCTION LINE

DWG NO: HPCS-201-2 | REV 1

WNP-02
INTERVAL: PSI
PERIOD: NA
OUTAGE:
DRAWING NO. HPCS-201

WASHINGTON PUBLIC POWER SUPPLY SYSTEM
PROGRAM PLAN AND SCHEDULE
SYSTEM OR COMPONENT: HPCS(2)-1
DESCRIPTION: HPCS-P-1 SUCTION

DATE 12/14/84

IDENT. NO.	DESCRIPTION	SECT. XI EXAM.	EXAM MTH.	PROCEDURE	CAL. BLOCK	INSERVICE REQ.	INSERVICE SCHEDULED OUTAGE	NOTES
HPCS-900N								
	STRUT	C-E-2	VT-3	303/8.2.17				
HPCS-901N								
	BOX	C-E-2	VT-3	303/8.2.17				
HPCS-52								
	ANCHOR	C-E-2	VT-3	303/8.2.17				
HPCS-46								
	SPRING	C-E-2	VT-3	303/8.2.17				
			VT-4	303/8.2.17				
HPCS-45								
	SPRING	C-E-2	VT-3	303/8.2.17				
			VT-4	303/8.2.17				
HPCS-47								
	PSA-3 SN(2)	C-E-2	VT-3	303/8.2.17				S/N 470/485
			VT-4	303/8.2.17				S/N 470/485
HPCS-48								
	STRUT	C-E-2	VT-3	303/8.2.17				
HPCS-49								
	STRUT	C-E-2	VT-3	303/8.2.17				
HPCS-PB-201								
	HPCS PRES BNDRY	N/A	VT-2	N/A				

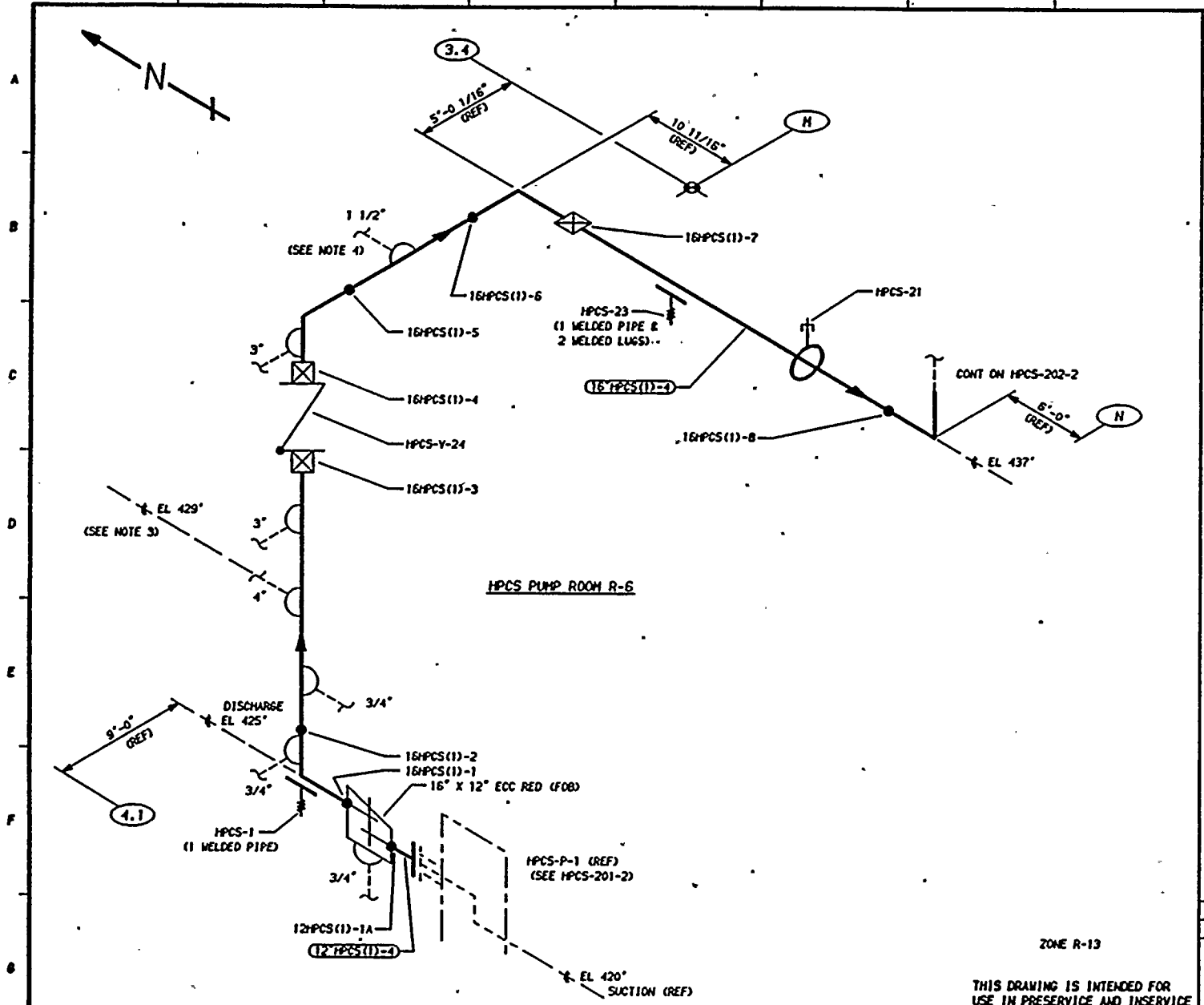

NOTES:

1. THIS DRAWING IDENTIFIES PIPING AND COMPONENTS SUBJECT TO A VISUAL EXAM FOR EVIDENCE OF LEAKAGE DURING SYSTEM HYDRO OR OPERABILITY TESTS. TESTS ARE TO BE CONDUCTED PER THE REQUIREMENTS OF ASME SECTION XI, PARAGRAPH IWA-5000.
2. FOR BRANCH PIPING 4" NOM. OR LESS (CONNECTION SHOWN IN DASHED LINES) EXTEND VISUAL LEAKAGE EXAM THROUGH THE OUTERMOST NORMALLY CLOSED NUCLEAR CLASS VALVE, OR UNTIL TRANSITION TO INSTRUMENT TUBING, UNLESS OTHERWISE NOTED.
3. EXTEND VISUAL LEAKAGE EXAM THROUGH VALVES HPCS-V-53, HPCS-V-62 AND HPCS-V-63.
4. EXTEND VISUAL LEAKAGE EXAM THROUGH PUMP HPCS-P-3.

REFERENCES:

ISI - 220

BOVEE & CRAIL ISOMETRICS
HPCS-630-1.4 REV 12
HPCS-630-7.10 REV 8

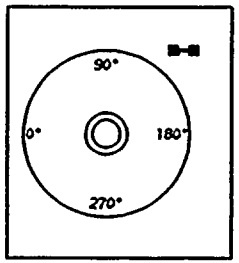

KEYPLAN

THIS DRAWING IS INTENDED FOR USE IN PRESERVICE AND INSERVICE INSPECTIONS PROGRAMS ONLY.

PIPING SYSTEM	NOM DIA (IN)	SCH	NOM WALL THK	MATERIAL SPECIFICATION	MATL TYPE	CAL BLOCK NO
16"HPCS(1)-4	16	100	1.031	SA 106 GR B	CS	UT-15
12"HPCS(1)-4	12	100	0.844	SA 106 GR B	CS	NA

NO	DATE	REVISION	BY	CHKD	APVD
1	5-24-83	NUMBERED 16" WELDS, DELETED HPCS-2 & 22 ADDED UT-15 (REDRAWN)	[illegible]	[illegible]	TFB
0	12-22-78	ISSUED FOR USE	K-McA	[illegible] DWP	LFB
A	10-3-78	ISSUED FOR INFORMATION ONLY	K-McA	GAK	DWP

QUALITY CLASS: 1 | ASME CODE CLASS: 2

ENGR: GA KUGLER | DRAWN: K-McA | DATE: 8-9-78

WASHINGTON PUBLIC POWER
SUPPLY SYSTEM
RICHLAND, WASHINGTON 99352

WNP-2
WELD & COMPONENT
IDENTIFICATION DRAWING

TITLE:
HPCS-PUMP-1 DISCHARGE

DWG NO: HPCS-202-1 | REV 1

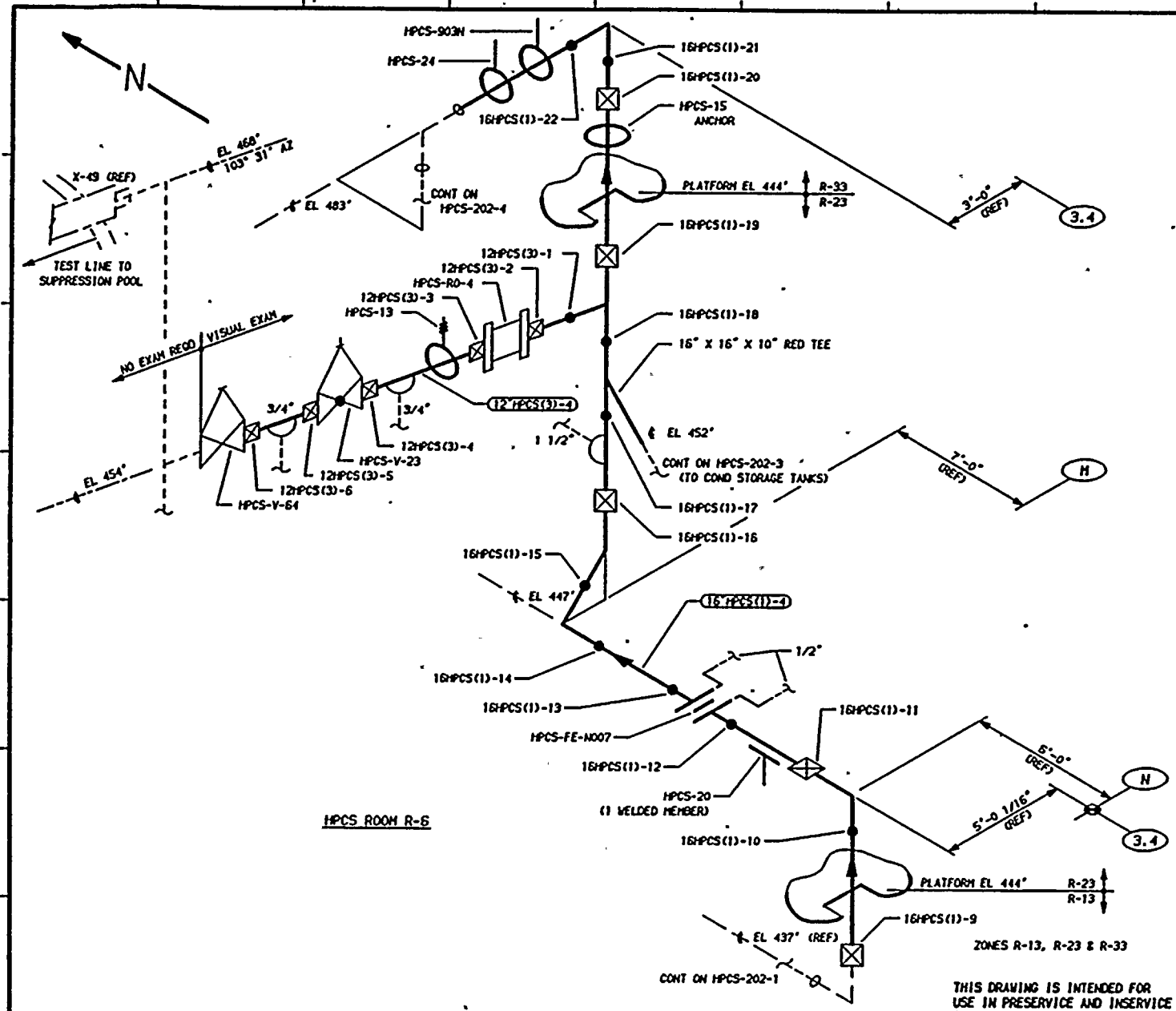

THIS DRAWING IS INTENDED FOR USE IN PRESERVICE AND INSERVICE INSPECTIONS PROGRAMS ONLY.

NOTES:

1. THIS DRAWING IDENTIFIES PIPING AND COMPONENTS SUBJECT TO A VISUAL EXAM FOR EVIDENCE OF LEAKAGE DURING SYSTEM HYDRO OR OPERABILITY TESTS. TESTS ARE TO BE CONDUCTED PER THE REQUIREMENTS OF ASME SECTION XI, PARAGRAPH IWA-5000.
2. FOR BRANCH PIPING 4" NOM. OR LESS (CONNECTION SHOWN IN DASHED LINES) EXTEND VISUAL LEAKAGE EXAM THROUGH THE OUTERMOST NORMALLY CLOSED NUCLEAR CLASS VALVE, OR UNTIL TRANSITION TO INSTRUMENT TUBING, UNLESS OTHERWISE NOTED.

REFERENCES:

ISI - 220

BOOYEE & CRAIL ISOMETRICS

HPCS-630-7.10	REV 8
HPCS-630-11.12	REV 8
HPCS-630-13.19	REV 6
HPCS-632-1.3	REV 10

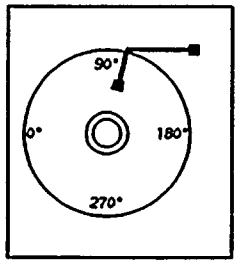

KEYPLAN

QUALITY CLASS: 1		ASME CODE CLASS: 2	
ENGR: GA KUGLER	DRAWN: K-McA	DATE: 8-10-78	

WASHINGTON PUBLIC POWER
SUPPLY SYSTEM
RICHLAND, WASHINGTON 99352

WNP-2
WELD & COMPONENT
IDENTIFICATION DRAWING

TITLE: HPCS-PUMP-1 DISCHARGE

DWG NO: HPCS-202-2 REV 1

PIPING SYSTEM	NOM DIA (IN)	SCH	NOM WALL THK	MATERIAL SPECIFICATION	MATL TYPE	CAL BLOCK NO
16"HPCS(1)-4	16	100	1.031	SA 106 GR B	CS	NA
12"HPCS(3)-4	12	100	0.844	SA 106 GR B	CS	NA

NO	DATE	REVISION	BY	CHKD	APVD
1	5-21-83	NUMBERED WELDS, ADDED RO-4, DELETED HPCS-19 & 14 ADED HPCS-903N, RELOCATED HPCS-15 (REDRAWN)	KEM	DAR	TFB
0	12-22-78	ISSUED FOR USE	K-McA	TFB DMP	LFB
A	10-3-78	ISSUED FOR INFORMATION ONLY	K-McA	GAK	DMP

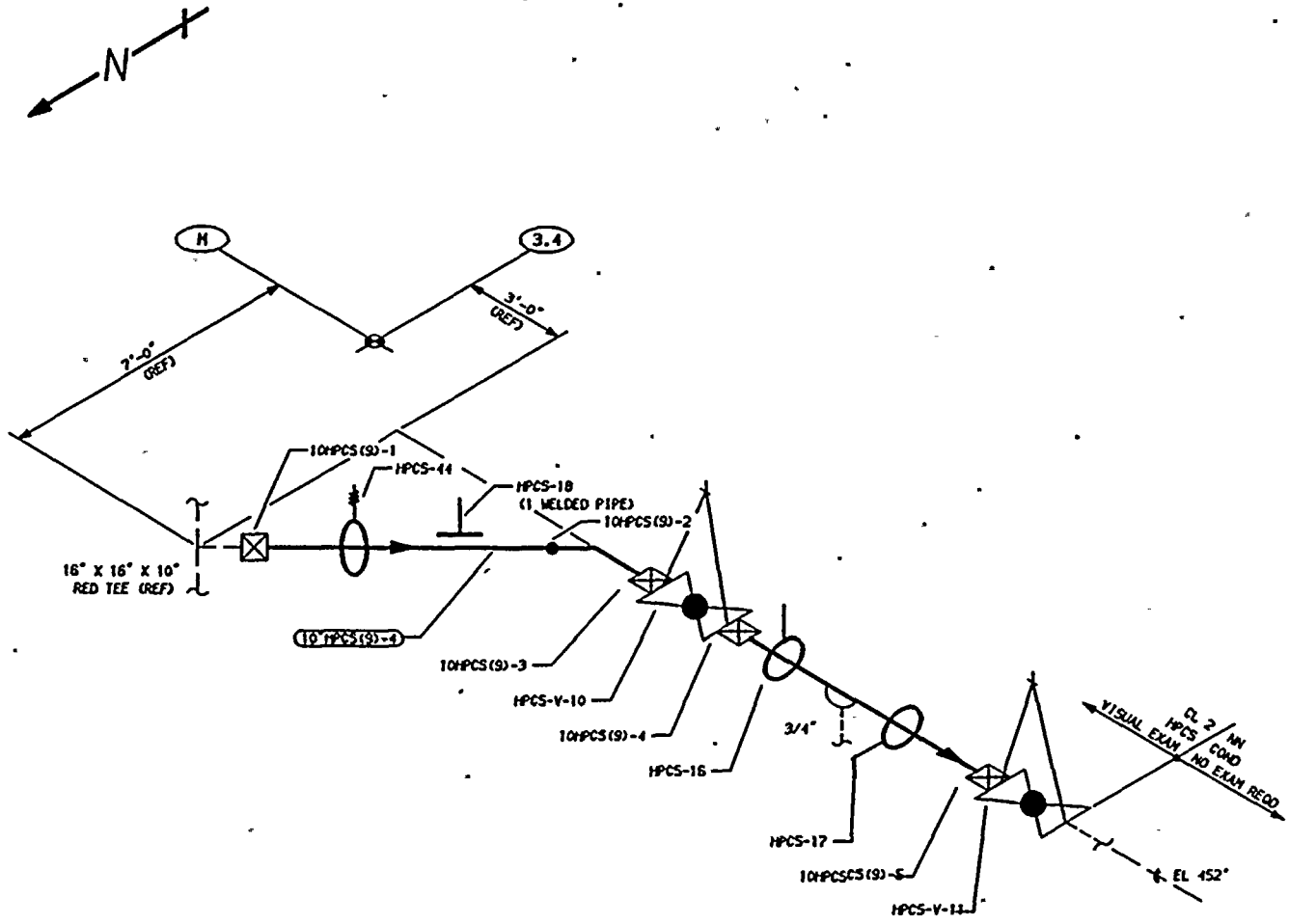

R-29

THIS DRAWING IS INTENDED FOR USE IN PRESERVICE AND INSERVICE INSPECTIONS PROGRAMS ONLY.

NOTES:

1. THIS DRAWING IDENTIFIES PIPING AND COMPONENTS SUBJECT TO A VISUAL EXAM FOR EVIDENCE OF LEAKAGE DURING SYSTEM HYDRO OR OPERABILITY TESTS. TESTS ARE TO BE CONDUCTED PER THE REQUIREMENTS OF ASME SECTION XI, PARAGRAPH IWA-5000.

2. FOR BRANCH PIPING 4" NOM. OR LESS (CONNECTION SHOWN IN DASHED LINES) EXTEND VISUAL LEAKAGE EXAM THROUGH THE OUTERMOST NORMALLY CLOSED NUCLEAR CLASS VALVE, OR UNTIL TRANSITION TO INSTRUMENT TUBING, UNLESS OTHERWISE NOTED.

REFERENCES:

151 - 220

BOYEE & CRAIL ISOMETRICS
HPCS-633-1.2 REV 8

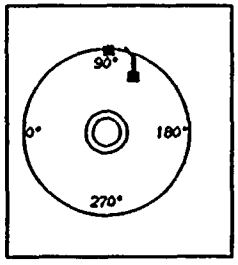

KEYPLAN

QUALITY CLASS: 1	ASME CODE CLASS: 2	
ENGR: GA KUGLER	DRAWN: K-McA	DATE: 8-11-78

WASHINGTON PUBLIC POWER
SUPPLY SYSTEM
RICHLAND, WASHINGTON 99352

WNP-2
WELD & COMPONENT
IDENTIFICATION DRAWING

TITLE:
HPCS SUPPLY TO COND STORAGE TANKS

DWG NO: HPCS-202-3 REV 1

PIPING SYSTEM	NOM DIA (IN)	SCH	NOM WALL THK	MATERIAL SPECIFICATION	MATL TYPE	CAL BLOCK NO
10"HPCS(9)-4	10	100	0.719	SA 106 GR B	CS	NA

NO	DATE	REVISION	BY	CHKD	APVD
1	6-24-83	NUMBERED WELDS, HPCS-17, 18 RIGID, (REDRAWN	[illegible]	[illegible]	[illegible]
0	12-22-78	ISSUED FOR USE	K-McA	[illegible]	LFB
A	10-3-78	ISSUED FOR INFORMATION ONLY	K-McA	GAK	DMP

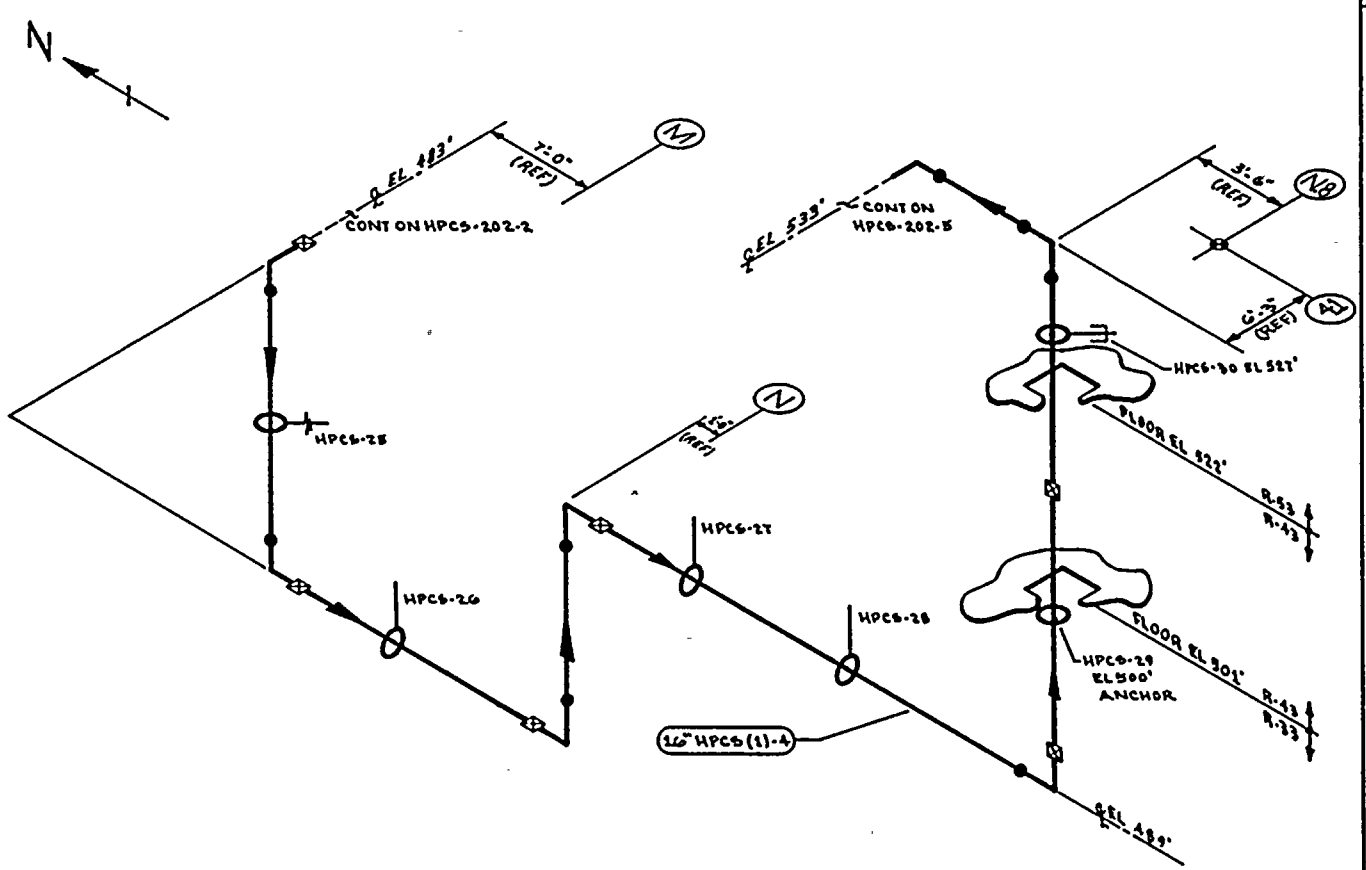

ZONES R-33, R-43 & R-53

THIS DRAWING IS INTENDED FOR USE IN PRESERVICE AND INSERVICE INSPECTION PROGRAMS ONLY.

NOTES:

1. THIS DRAWING IDENTIFIES PIPING & COMPONENTS SUBJECT TO A VISUAL EXAM FOR EVIDENCE OF LEAKAGE DURING SYSTEM HYDRO OR OPERABILITY TESTS. TESTS ARE TO BE CONDUCTED PER THE REQUIREMENTS OF ASME SECTION XI, PARAGRAPH SWA-5000.

REFERENCES:

BOVEE & CRAIL ISOMETRICS
HPCS-630-19.19 REV 2
HPCS-630-19.19H REV 0

PIPING SYSTEM	NOM DIA (IN)	SCH	NOM WALL THK	MATERIAL SPECIFICATION	MATL TYPE	CAL BLOCK NO
16" HPCS(1)-4	16	100	1.031	SA 106 GR B	CS	NA

NO	DATE	REVISION	BY	CHKD	APPVD
0	12-22-78	ISSUED FOR USE	KWL	[illegible]	[illegible]
A	10-3-78	ISSUED FOR INFORMATION ONLY	KWL	[illegible]	[illegible]

QUALITY CLASS: 1 | ASME CODE CLASS: 2

ENGR: G.A. KUGLER | DRAWN: K.M.L.A. | DATE: 8-11-78

WASHINGTON PUBLIC POWER SUPPLY SYSTEM
RICHLAND, WASHINGTON 99352

WNP-2
WELD & COMPONENT IDENTIFICATION DIAGRAM

TITLE: HPCS-PUMP-1 DISCHARGE

DWG NO: HPCS-202-4 | REV 0

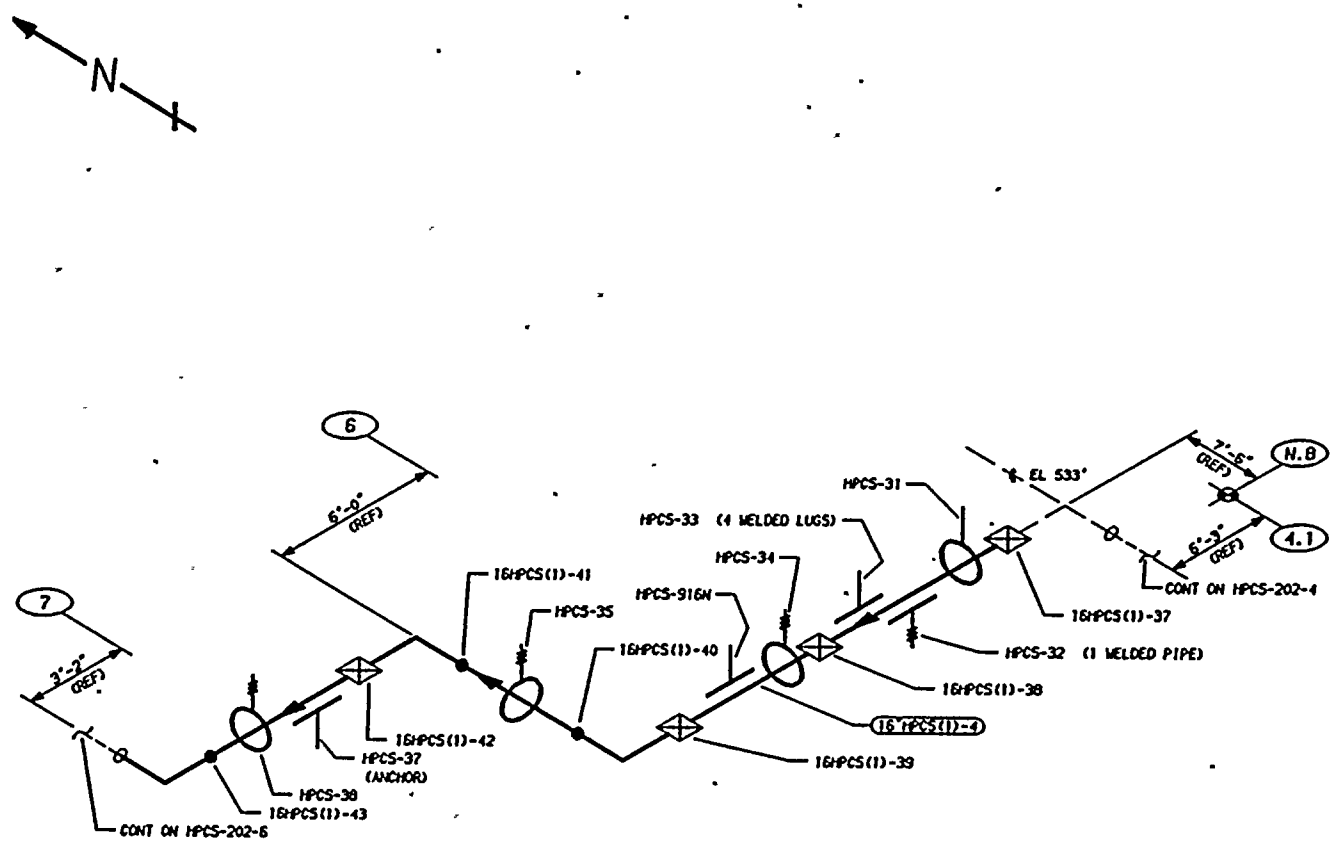

ZONE R-53

THIS DRAWING IS INTENDED FOR USE IN PRESERVICE AND INSERVICE INSPECTIONS PROGRAMS ONLY.

NOTES:

1. THIS DRAWING IDENTIFIES PIPING AND COMPONENTS SUBJECT TO A VISUAL EXAM FOR EVIDENCE OF LEAKAGE DURING SYSTEM HYDRO OR OPERABILITY TESTS. TESTS ARE TO BE CONDUCTED PER THE REQUIREMENTS OF ASME SECTION XI, PARAGRAPH IWA-5000.
2. THE FOLLOWING WELD RECEIVES A VOLUMETRIC EXAM. IT REPRESENT 10% OF THE WELDS EXEMPTED BY IWC-1220(C).

16HPCS(1)-37

REFERENCES:

ISI - 220

BOVEE & CRAIL ISOMETRIC HPCS-630-20.23 REV 4

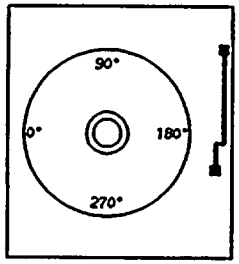

KEYPLAN

					PIPING SYSTEM	NOM DIA (IN)	SCH	NOM WALL THK	MATERIAL SPECIFICATION	MATL TYPE	CAL BLOCK NO
					16"HPCS(1)-4	16	100	1.031	SA 106 GR B	CS	UT-15
1	5-20-83	NUMBERED WELDS, HPCS-37, 33 MODIFIED, ADDED HPCS-916N, DELETED HPCS-36, ADDED UT-15, ADDED NOTE 2 (REDRAWN)	K-McA	TFH	LFB						
0	12-22-78	ISSUED FOR USE	K-McA	TFH	DWP	LFB					
A	10-3-78	ISSUED FOR INFORMATION ONLY	K-McA	GAK	DWP						
NO	DATE	REVISION	BY	CHKD	APVD						

QUALITY CLASS: 1 | ASME CODE CLASS: 2

ENGR: GA KUGLER | DRAWN: K-McA | DATE: 8-11-78

WASHINGTON PUBLIC POWER
SUPPLY SYSTEM
RICHLAND, WASHINGTON 99352

WNP-2
WELD & COMPONENT
IDENTIFICATION DRAWING

TITLE:
HPCS-PUMP-1 DISCHARGE

DWG NO: HPCS-202-5 | REV 1

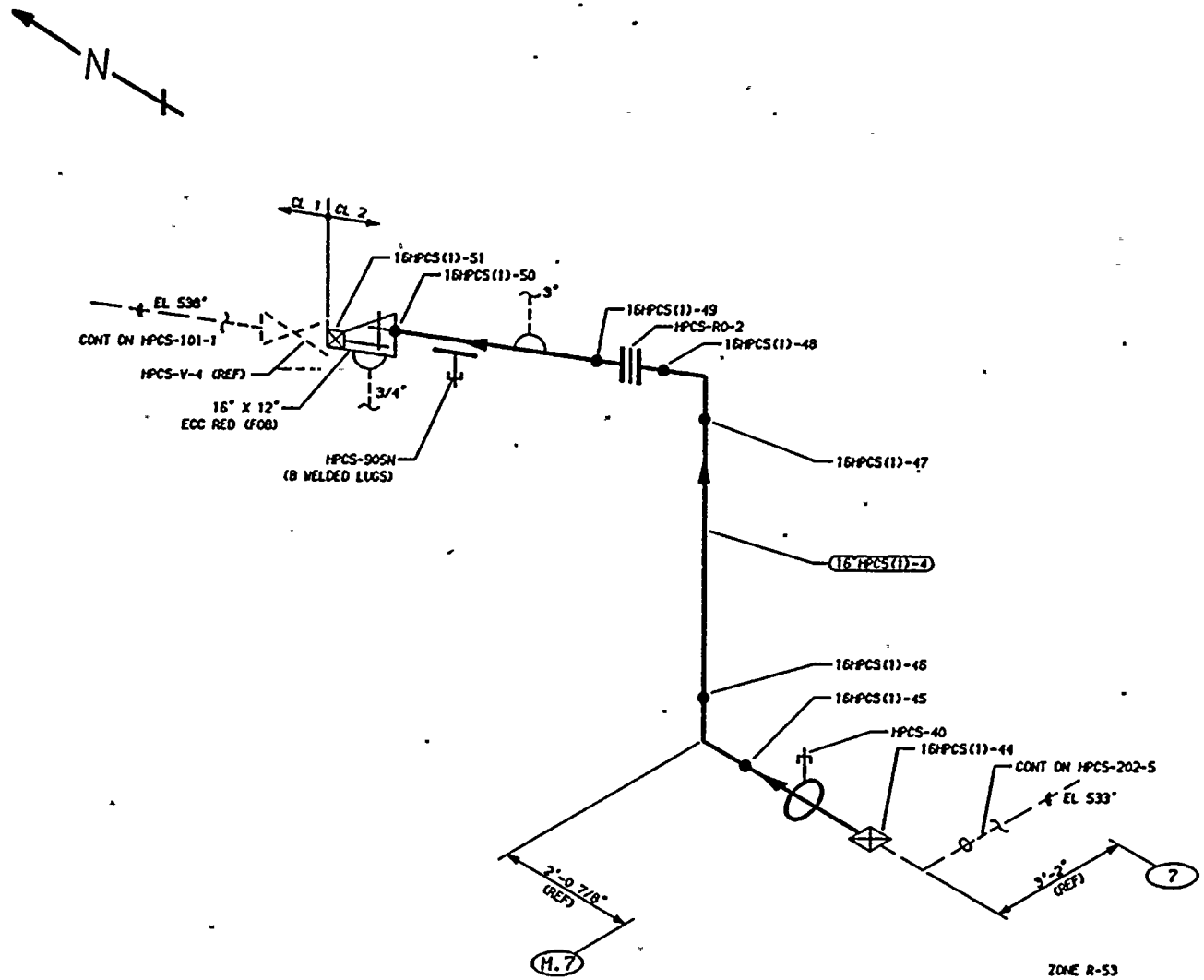

NOTES:

1. THIS DRAWING IDENTIFIES PIPING AND COMPONENTS SUBJECT TO A VISUAL EXAM FOR EVIDENCE OF LEAKAGE DURING SYSTEM HYDRO OR OPERABILITY TESTS. TESTS ARE TO BE CONDUCTED PER THE REQUIREMENTS OF ASME SECTION XI, PARAGRAPH IWA-5000.

2. FOR BRANCH PIPING 4" NOM. OR LESS (CONNECTION. SHOWN IN DASHED LINES) EXTEND VISUAL LEAKAGE EXAM THROUGH THE OUTERMOST NORMALLY CLOSED NUCLEAR CLASS VALVE, OR UNTIL TRANSITION TO INSTRUMENT TUBING, UNLESS OTHERWISE NOTED.

3. THE FOLLOWING WELD RECEIVES A VOLUMETRIC EXAM. IT REPRESENT 10% OF THE WELDS EXEMPTED BY IWC-1220(C).

16HPCS(1)-50

REFERENCES:

ISI - 220

BOVEE & CRAIL ISOMETRIC
HPCS-630-24.25 REV 4

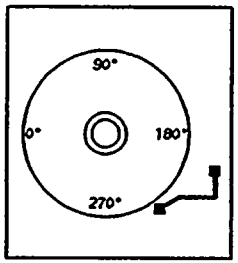

KEYPLAN

QUALITY CLASS: 1	ASME CODE CLASS: 2	
ENGR: GA KUGLER	DRAWN: K-McA	DATE: 8-11-78

WASHINGTON PUBLIC POWER
SUPPLY SYSTEM
RICHLAND, WASHINGTON 99352

THIS DRAWING IS INTENDED FOR USE IN PRESERVICE AND INSERVICE INSPECTIONS PROGRAMS ONLY.

PIPING SYSTEM	NOM DIA (IN)	SCH	NOM WALL THK	MATERIAL SPECIFICATION	MATL TYPE	CAL BLOCK NO
16"HPCS(1)-4	16	100	1.031	SA 106 GR B	CS	UT-15

NO	DATE	REVISION	BY	CHKD	APVD
1	5-24-83	NUMBERED WELDS, ADDED HPCS-905N, UT-15, NOTE 3, DELETED HPCS-41, HPCS-39 (REDELIVR)	KZ/LA	DWP	LFB
0	12-22-78	ISSUED FOR USE	K-McA	DWP	LFB
A	10-3-78	ISSUED FOR INFORMATION ONLY	K-McA	GAK	DWP

WNP-2
WELD & COMPONENT
IDENTIFICATION DRAWING

TITLE:
HPCS-PUMP-1 DISCHARGE

DWG NO: HPCS-202-6 REV 1

WNP-02
INTERVAL: PSI
PERIOD: NA
OUTAGE:
DRAWING NO. HPCS-202

WASHINGTON PUBLIC POWER SUPPLY SYSTEM
PROGRAM PLAN AND SCHEDULE
SYSTEM OR COMPONENT: HPCS(1)-4
DESCRIPTION: HPCS-P-1 DISCHARGE

DATE 12/14/84

IDENT. NO.	DESCRIPTION	SECT. XI EXAM.	EXAM MTH.	PROCEDURE	CAL. BLOCK	INSERVICE REQ.	INSERVICE SCHEDULED OUTAGE	NOTES
HPCS-1								
	SPRING	C-E-2	VT-3	303/8.2.17				
			VT-4	303/8.2.17				
HPCS-23								
	SPRING	C-E-2	VT-3	303/8.2.17				
			VT-4	303/8.2.17				
HPCS-21								
	RIGID	C-E-2	VT-3	303/8.2.17				
HPCS-20								
	RIGID	C-E-2	VT-3	303/8.2.17				
HPCS-17								
	STRUT	C-E-2	VT-3	303/8.2.17				
HPCS-16								
	STRUT	C-E-2	VT-3	303/8.2.17				
HPCS-18								
	STRUT	C-E-2	VT-3	303/8.2.17				
HPCS-44								
	SPRING	C-E-2	VT-3	303/8.2.17				
			VT-4	303/8.2.17				
HPCS-13								
	ANCHOR	C-E-2	VT-3	303/8.2.17				
HPCS-15								
	ANCHOR	C-E-2	VT-3	303/8.2.17				
HPCS-903N								
	STRUT	C-E-2	VT-3	303/8.2.17				
HPCS-24								
	STRUT	C-E-2	VT-3	303/8.2.17				
HPCS-25								
	SPRING	C-E-2	VT-3	303/8.2.17				
			VT-4	303/8.2.17				
HPCS-26								
	STRUT	C-E-2	VT-3	303/8.2.17				

WNP-02
INTERVAL: PSI
PERIOD: NA
OUTAGE:
DRAWING NO. HPCS-202

WASHINGTON PUBLIC POWER SUPPLY SYSTEM
PROGRAM PLAN AND SCHEDULE
SYSTEM OR COMPONENT: HPCS(1)-4
DESCRIPTION: HPCS-P-1 DISCHARGE

DATE 12/14/84

IDENT. NO.	DESCRIPTION	SECT. XI EXAM.	EXAM MTH.	PROCEDURE	CAL. BLOCK	INSERVICE REQ.	INSERVICE SCHEDULED OUTAGE	NOTES
16HPCS(1)-27	PIPE TO EL	N/A	VOL	QCI 6-13	UT-15			SEE NOTE #8.
HPCS-27	STRUT	C-E-2	VT-3	303/8.2.17				
HPCS-28	BOX	C-E-2	VT-3	303/8.2.17				
HPCS-917N	STRUT	C-E-2	VT-3	303/8.2.17				
HPCS-915N	STRUT	C-E-2	VT-3	303/8.2.17				
16HPCS(1)-31	PIPE TO EL	N/A	VOL	QCI 6-13	UT-15			SEE NOTE #8.
HPCS-909N	STRUT	C-E-2	VT-3	303/8.2.17				
16HPCS(1)-35	EL TO PIPE	N/A	VOL	QCI 6-13	UT-15			SEE NOTE #8.
16HPCS(1)-36	PIPE TO EL	N/A	VOL	QCI 6-13	UT-15			SEE NOTE #8.
16HPCS(1)-37	EL TO PIPE	N/A	VOL	QCI 6-13	UT-15			SEE NOTE #8.
HPCS-31	STRUT	C-E-2	VT-3	303/8.2.17				
HPCS-32	SPRING	C-E-2	VT-3	303/8.2.17				
			VT-4	303/8.2.17				
HPCS-33	BOX	C-E-2	VT-3	303/8.2.17				
HPCS-34	SPRING	C-E-2	VT-3	303/8.2.17				
			VT-4	303/8.2.17				
HPCS-916N	BOX	C-E-2	VT-3	303/8.2.17				
HPCS-35	SPRING	C-E-2	VT-3	303/8.2.17				

WNP-02
INTERVAL: PSI
PERIOD: NA
OUTAGE:
DRAWING NO. HPCS-202

WASHINGTON PUBLIC POWER SUPPLY SYSTEM
PROGRAM PLAN AND SCHEDULE
SYSTEM OR COMPONENT: HPCS(1)-4
DESCRIPTION: HPCS-P-1 DISCHARGE

DATE 12/14/84

IDENT. NO.	DESCRIPTION	SECT. XI EXAM.	EXAM MTH.	PROCEDURE	CAL. BLOCK	INSERVICE REQ.	SCHEDULED OUTAGE	NOTES
			VT-4	303/8.2.17				
HPCS-37								
	ANCHOR	C-E-2	VT-3	303/8.2.17				
HPCS-38								
	SPRING	C-E-2	VT-3	303/8.2.17				
			VT-4	303/8.2.17				
HPCS-40								
	STRUT	C-E-2	VT-3	303/8.2.17				
HPCS-925N								
	PSA-3 SNUBBER	C-E-2	VT-3	303/8.2.17				S/N 4421
			VT-4	303/8.2.17				S/N 4421
HPCS-905N								
	PSA-10 SNUBBER	C-E-2	VT-3	303/8.2.17				S/N
			VT-4	303/8.2.17				S/N
HPCS-924N								
	PSA-3 SN(2)	C-E-2	VT-3	303/8.2.17				S/N 3924/3883
			VT-4	303/8.2.17				S/N 3924/3883
16HPCS(1)-50								
	PIPE TO RED	N/A	VOL	OCI 6-13	UT-15			SEE NOTE #8.
HPCS-PB-202								
	HPCS PRES BNDRY	N/A	VT-2	N/A				SEE NOTES #6 & #7.

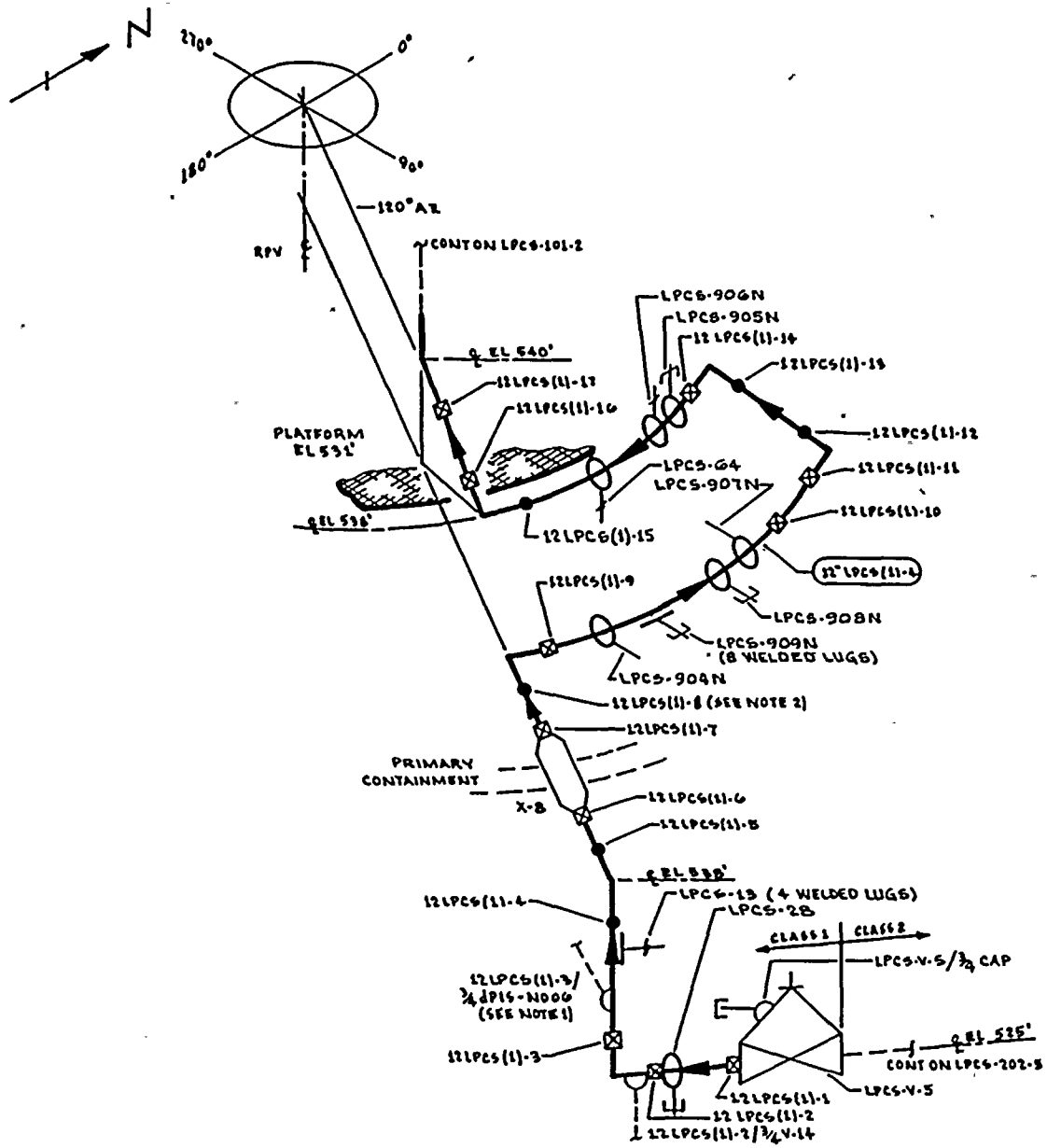

NOTES:

1. EXTEND VISUAL LEAKAGE EXAM THROUGH EXCESS FLOW CHECK VALVE TO INSTRUMENT TUBING CONNECTION.
2. PIPING SYSTEM 12" LPCS(1)-4 IS CONSTRUCTED OF SEAMLESS SCH 80 PIPE & FITTINGS EXCEPT FOR THE 5R ELL ASSOCIATED WITH WELDS 12LPCS(1)-8 & 9 WHICH IS SEAMLESS SCH 100. USE CAL BLOCKS SHOWN BELOW ACCORDINGLY.
3. ACCESS TO 12LPCS(1)-5 & 12LPCS(1)-6 REQUIRES USE OF A LADDER.
4. ACCESS TO 12LPCS(1)-1 REQUIRES REMOVAL OF LPCS-28.

REFERENCES:

BOVEE & CRAIL ISOMETRICS

LPCS-TSG-19.21 REV 8
LPCS-TSG-22.24 REV 9

KEYPLAN

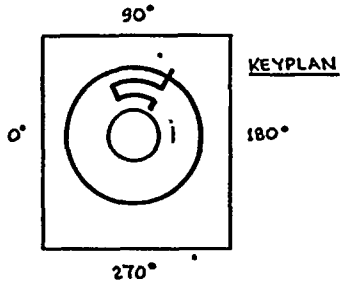

QUALITY CLASS: 1 | ASME CODE CLASS: 1

ENGR: G.A. KUGLER | DRAWN: K.McA | DATE: 10-26-78

WASHINGTON PUBLIC POWER SUPPLY SYSTEM
RICHLAND, WASHINGTON 99352

THIS DRAWING IS INTENDED FOR USE IN PRESERVICE AND INSERVICE INSPECTION PROGRAMS ONLY.

PIPING SYSTEM	NOM DIA (IN)	SCH	NOM WALL THK	MATERIAL SPECIFICATION	MATL TYPE	CAL BLOCK NO
12" LPCS(1)-4	12	80	0.688	SA 106 GR B	CS	UT-17
12" LPCS(1)-4	12	100	0.844	SA 106 GR B	CS	UT-16
LUGS	NA	NA	NA	SA 515 GR 70	CS	UT-46

NO	DATE	REVISION	BY	CHKD	APPVD
2	9-26-83	ADDED SUPPORTS, NOTES 3 & 4, LUGS. DELETED 3/4 LOC.	K.A.K.	DAK	TAK
1	11-27-79	ELBOW CHANGED TO SEAMLESS DOWNSTREAM OF 12LPCS(1)-8. PER AS BUILT. SN D-2.	K.McA	[illegible]	[illegible]
0	11-27-78	ISSUED FOR USE (REDRAWN)	KMcA	DAK	[illegible]
A	11-22-78	ISSUED FOR INFORMATION ONLY	KMcA	DAK	DAK

WNP-2
WELD & COMPONENT IDENTIFICATION DIAGRAM

TITLE: LPCS DISCHARGE TO VESSEL

DWG NO: LPCS-101-1 | REV 2

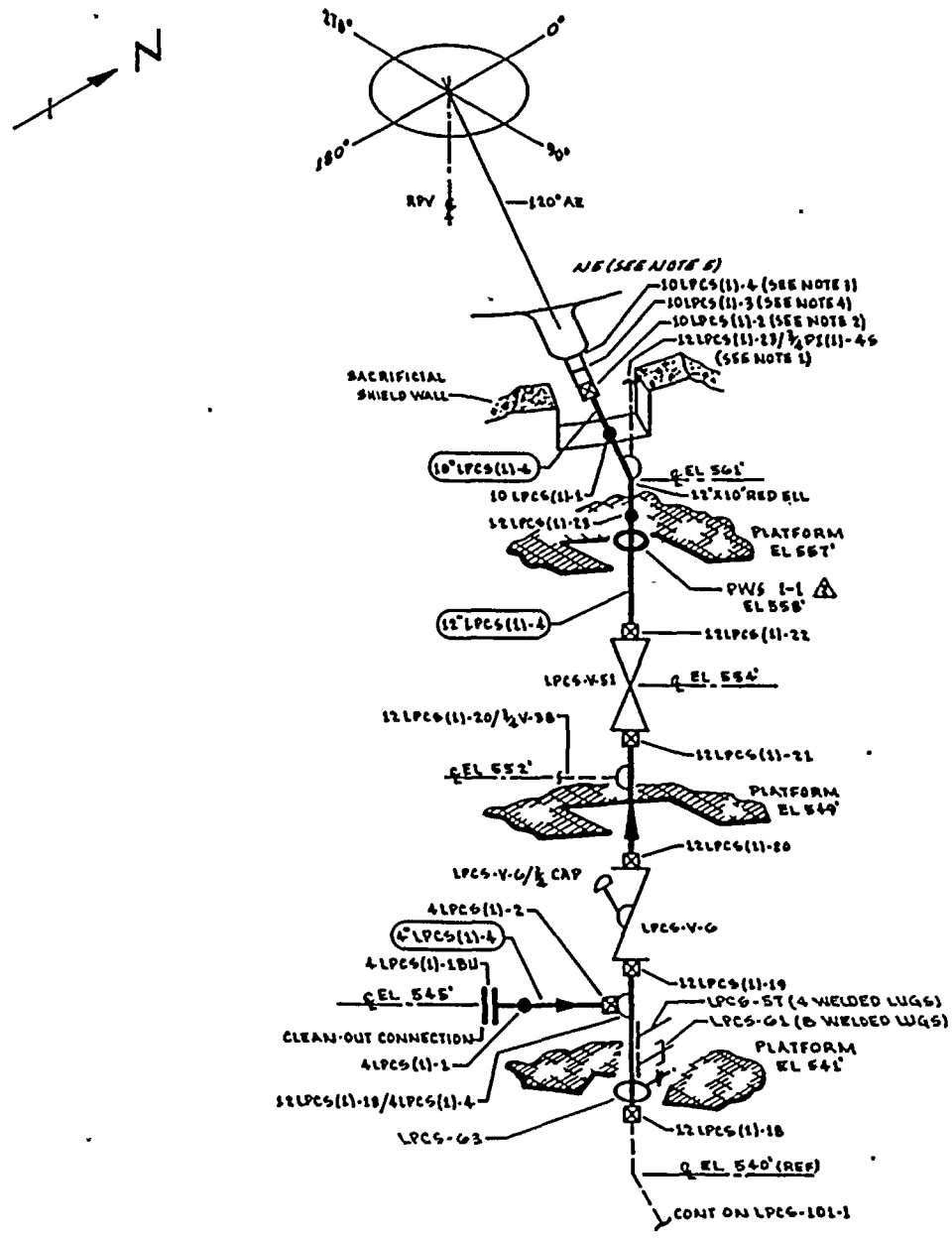

NOTES:

1. EXTEND VISUAL LEAKAGE EXAM THROUGH CONTAINMENT PENETRATION (X-73b) THROUGH EXCESS FLOW CHECK VALVE TO INSTRUMENT TUBING CONNECTION.
2. DISTANCE BETWEEN WELDS 10LPCS(1)-2 & 10LPCS(1)-3 IS LESS THAN 6".
3. DISSIMILAR METAL WELD, CS TO INCO, USE CAL BLOCK UT-102.
4. DISSIMILAR METAL WELD, INCO TO CS, USE CAL BLOCK UT-106.
5. FOR NOZZLE ASSEMBLY DETAILS SEE RPV-109.

REFERENCES:

BOYER & CRAIL ISOMETRICS

LPCS-736-22.24 REV 9
LPCS-736-25.26 REV 7

THIS DRAWING IS INTENDED FOR USE IN PRESERVICE AND INSERVICE INSPECTION PROGRAMS ONLY.

						PIPING SYSTEM	NOM DIA (IN)	SCH	NOM WALL THK	MATERIAL SPECIFICATION	MATL TYPE	CAL BLOCK NO
3	9-26-83	ADDED SUPPORTS, LUGS & LOC CAPPED	KLA	[illegible]	[illegible]	12" LPCS (1)-4	12	80	0.688	SA 106 GR B	CS	UT-17
2	11-5-80	ADDED NOTE 6 & AS NOTED	KLA	[illegible]	[illegible]	4" LPCS(1)-4	4	80	0.337	SA 106 GR B	CS	UT-30
1	1-18-79	REVISED REFERENCE TO NOTES 3 & 4	KLA	[illegible]	[illegible]	10" LPCS(1)-4	10	80	0.594	SA 106 GR B	CS	UT-22
0	11-17-78	ISSUED FOR USE (REDRAWN)	KLA	[illegible]	[illegible]	LUGS	NA	NA	NA	SA 515 GR 70	CS	UT-46
A	11-28-77	ISSUED FOR INFORMATION ONLY	KLA	[illegible]	[illegible]							
NO	DATE	REVISION	BY	CHKD	APPVD							

QUALITY CLASS: 1 | ASME CODE CLASS: 1

ENGR: GA KUGLER | DRAWN: K. McA | DATE: 10-31-77

WASHINGTON PUBLIC POWER SUPPLY SYSTEM
RICHLAND, WASHINGTON 99352

WNP-2
WELD & COMPONENT IDENTIFICATION DIAGRAM

TITLE: LPCS DISCHARGE TO VESSEL

DWG NO: LPCS-101-2 | REV 3

WNP-02
INTERVAL: PSI
PERIOD: NA
OUTAGE:
DRAWING NO. LPCS-101

WASHINGTON PUBLIC POWER SUPPLY SYSTEM
PROGRAM PLAN AND SCHEDULE
SYSTEM OR COMPONENT: LPCS(1)-4
DESCRIPTION: LOW PRES CORE SPRAY

DATE 12/14/84

IDENT. NO.	DESCRIPTION	SECT. XI EXAM.	EXAM MTH.	PROCEDURE	CAL. BLOCK	INSERVICE REQ.	INSERVICE SCHEDULED OUTAGE	NOTES
LPCS-V-5-BDY								
	VALVE BODY	B-M-2	VT-1	QCI 7-1				
LPCS-V-5-BLT								
	VALVE BOLTING	B-G-2	VT-1	QCI 7-1				
LPCS-V-5/3/4CAP								
	LEAKOFF CAPPED	B-P	VT-2	N/A				SEE NOTES #6 & #7.
12LPCS(1)-1								
	VLV TO PIPE	B-J	VOL	UTP-10	UT-17			
			SUR	PTP-1				
LPCS-28								
	PSA-3 SNUBBER	B-K-2	VT-3	303/8.2.17				S/N
			VT-4	303/8.2.17				S/N
12LPCS(1)-2								
	PIPE TO EL	B-J	VOL	UTP-10	UT-17			
			SUR	PTP-1				
12LPCS(1)-2/3/4V-14								
	TEST CONN	B-P	VT-2	N/A				SEE NOTES #6 & #7.
12LPCS(1)-3								
	EL TO PIPE	B-J	VOL	UTP-10	UT-17			
			SUR	PTP-1				
12LPCS(1)-3/3/4DPIS-N006								
	INSTR CONN	B-P	VT-2	N/A				SEE NOTES #6 &.#7.
LPCS-13(W)								
	4 WELDED LUGS	B-K-1	VOL	UTP-26	UT-17			
LPCS-13								
	SPRING	B-K-2	VT-3	303/8.2.17				
			VT-4	303/8.2.17				
12LPCS(1)-4								
	PIPE TO EL	B-J	VOL	UTP-10	UT-17			
			SUR	PTP-1				

WNP-02
INTERVAL: PSI
PERIOD: NA
OUTAGE:
DRAWING NO. LPCS-101

WASHINGTON PUBLIC POWER SUPPLY SYSTEM
PROGRAM PLAN AND SCHEDULE
SYSTEM OR COMPONENT: LPCS(1)-4
DESCRIPTION: LOW PRES CORE SPRAY

DATE 12/14/84

IDENT. NO.	DESCRIPTION	SECT. XI EXAM.	EXAM MTH.	PROCEDURE	CAL. BLOCK	INSERVICE REQ.	INSERVICE SCHEDULED OUTAGE	NOTES
12LPCS(1)-5								
	EL TO PIPE	B-J	VOL	UTP-10	UT-17			
			SUR	PTP-1				
12LPCS(1)-6								
	PIPE TO PEN	B-J	VOL	UTP-10	UT-17			
			SUR	PTP-1				
12LPCS(1)-7								
	PEN TO PIPE	B-J	VOL	UTP-10	UT-17			
			SUR	PTP-1				
12LPCS(1)-8								
	PIPE TO EL	B-J	VOL	UTP-10	UT-17			
			SUR	PTP-1				
12LPCS(1)-9								
	EL TO PIPE	B-J	VOL	QCI 6-13	UT-17			
			SUR	QCI 3-3				
LPCS-904N								
	STRUT	B-K-2	VT-3	303/8.2.17				
LPCS-909N(W)								
	8 WELDED LUGS	B-K-1	VOL	UTP-26	UT-17			
LPCS-909N								
	PSA-3 SN(2)	B-K-2	VT-3	303/8.2.17				S/N 1066/3921
			VT-4	303/8.2.17				S/N 1066/3921
LPCS-908N								
	PSA-10 SNUBBER	B-K-2	VT-3	303/8.2.17				S/N 1485
			VT-4	303/8.2.17				S/N 1485
LPCS-907N								
	STRUT	B-K-2	VT-3	303/8.2.17				
12LPCS(1)-10								
	PIPE TO PIPE	B-J	VOL	UTP-10	UT-17			

WNP-02
INTERVAL: PSI
PERIOD: NA
OUTAGE:
DRAWING NO. LPCS-101

WASHINGTON PUBLIC POWER SUPPLY SYSTEM
PROGRAM PLAN AND SCHEDULE
SYSTEM OR COMPONENT: LPCS(1)-4
DESCRIPTION: LOW PRES CORE SPRAY

DATE 12/14/84

IDENT. NO.	DESCRIPTION	SECT. XI EXAM.	EXAM MTH.	PROCEDURE	CAL. BLOCK	INSERVICE REQ.	INSERVICE SCHEDULED OUTAGE	NOTES
			SUR	PTP-1				
12LPCS(1)-11	PIPE TO EL	B-J	VOL	UTP-10	UT-17			
			SUR	PTP-1				
12LPCS(1)-12	EL TO PIPE	B-J	VOL	UTP-10	UT-17			
			SUR	PTP-1				
12LPCS(1)-13	PIPE TO EL	B-J	VOL	UTP-10	UT-17			
			SUR	PTP-1				
12LPCS(1)-14	EL TO PIPE	B-J	VOL	UTP-10	UT-17			
			SUR	PTP-1				
LPCS-905N	PSA-3 SNUBBER	B-K-2	VT-3	303/8.2.17				S/N 4469
			VT-4	303/8.2.17				S/N 4469
LPCS-906N	SPRING	B-K-2	VT-3	303/8.2.17				
			VT-4	303/8.2.17				
LPCS-64	SPRING	B-K-2	VT-3	303/8.2.17				
			VT-4	303/8.2.17				
12LPCS(1)-15	PIPE TO EL	B-J	VOL	UTP-10	UT-17			
			SUR	QCI 3-3				
12LPCS(1)-16	EL TO PIPE	B-J	VOL	QCI 6-13	UT-17			

WNP-02
INTERVAL: PSI
PERIOD: NA
OUTAGE:
DRAWING NO. LPCS-101

WASHINGTON PUBLIC POWER SUPPLY SYSTEM
PROGRAM PLAN AND SCHEDULE
SYSTEM OR COMPONENT: LPCS(1)-4
DESCRIPTION: LOW PRES CORE SPRAY

IDENT. NO.	DESCRIPTION	SECT. XI EXAM.	EXAM MTH.	PROCEDURE	CAL. BLOCK	INSERVICE REQ.	INSERVICE SCHEDULED OUTAGE	NOTES
			SUR	QCI 3-3				
12LPCS(1)-17								
	PIPE TO EL	B-J	VOL	UTP-10	UT-17			
			SUR	PTP-1				
12LPCS(1)-18								
	EL TO PIPE	B-J	VOL	UTP-10	UT-17			
			SUR	PTP-1				
LPCS-63								
	SPRING	B-K-2	VT-3	303/8.2.17				
			VT-4	303/8.2.17				
LPCS-61(W)								
	8 WELDED LUGS	B-K-1	VOL	QCI 6-15	UT-17			
LPCS-61								
	PSA-10 SN(2)	B-K-2	VT-3	303/8.2.17				S/N 327/291
			VT-4	303/8.2.17				S/N 327/291
LPCS-57(W)								
	4 WELDED LUGS	B-K-1	VOL	UTP-26	UT-17			3/4"W x 2"H x 3"L.
LPCS-57								
	BOX	B-K-2	VT-3	303/8.2.17				
12LPCS(1)-18/4LPCS(1)-4								
	WOL TO PIPE	B-J	SUR	PTP-1				
4LPCS(1)-1BU								
	FLANGE BOLTING	B-G-2	VT-1	QCI 7-1				
4LPCS(1)-1								
	FLANGE TO PIPE	B-J	VOL	UTP-10	UT-30			
			SUR	PTP-1				
4LPCS(1)-2								
	PIPE TO WOL	B-J	VOL	UTP-10	UT-30			
			SUR	PTP-1				

WNP-02
INTERVAL: PSI
PERIOD: NA
OUTAGE:
DRAWING NO. LPCS-101

WASHINGTON PUBLIC POWER SUPPLY SYSTEM
PROGRAM PLAN AND SCHEDULE
SYSTEM OR COMPONENT: LPCS(1)-4
DESCRIPTION: LOW PRES CORE SPRAY

DATE 12/14/84

IDENT. NO.	DESCRIPTION	SECT. XI EXAM.	EXAM MTH.	PROCEDURE	CAL. BLOCK	INSERVICE REQ.	SCHEDULED OUTAGE	NOTES
12LPCS(1)-19								
	PIPE TO VLV	B-J	VOL	UTP-10	UT-17			
			SUR	PTP-1				
LPCS-V-6-BDY								
	VALVE BODY	B-M-2	VT-1	QCI 7-1				
LPCS-V-6-BLT								
	VALVE BOLTING	B-G-2	VT-1	QCI 7-1				
LPCS-V-6/3/4CAP								
	LEADOFF CAPPED	B-P	VT-2	N/A				SEE NOTES #6 & #7.
12LPCS(1)-20								
	VLV TO PIPE	B-J	VOL	UTP-10	UT-17			
			SUR	PTP-1				
12LPCS(1)-20/3/4V-38								
	TEST CONN	B-P	VT-2	QCI 7-1				
12LPCS(1)-21								
	PIPE TO VLV	B-J	VOL	UTP-10	UT-17			
			SUR	PTP-1				
LPCS-V-51-BDY								
	VALVE BODY	B-M-2	VT-1	QCI 7-1				
LPCS-V-51-BLT								
	VALVE BOLTING	B-G-2	VT-1	QCI 7-1				
12LPCS(1)-22								
	VLV TO PIPE	B-J	VOL	UTP-10	UT-17			
			SUR	PTP-1				
PWS-1-1								
	PIPE WHIP	N/A	N/A	N/A				SEE NOTE #1
12LPCS(1)-23								
	PIPE TO EL	B-J	VOL	UTP-10	UT-17			
			SUR	PTP-1				

WNP-02
INTERVAL: PSI
PERIOD: NA
OUTAGE:
DRAWING NO. LPCS-101

WASHINGTON PUBLIC POWER SUPPLY SYSTEM
PROGRAM PLAN AND SCHEDULE
SYSTEM OR COMPONENT: LPCS(1)-4
DESCRIPTION: LOW PRES CORE SPRAY

IDENT. NO.	DESCRIPTION	SECT. XI EXAM.	EXAM MTH.	PROCEDURE	CAL. BLOCK	INSERVICE REQ.	INSERVICE SCHEDULED OUTAGE	NOTES
12LPCS(1)-23/3/4PI(1)-4S								
	PRESSURE TAP	B-P	VT-2	N/A				SEE NOTES #6 & #7.
10LPCS(1)-1								
	EL TO PIPE	B-J	VOL	UTP-10	UT-22			
			SUR	PTP-1				
10LPCS(1)-2								
	PIPE TO SE EXT	B-J	VOL	UTP-10	UT-22			SEE RPV-105,NOZ N5
			SUR	PTP-1				SEE RPV-105,NOZ N5
10LPCS(1)-3								
	SE EXT TO SE	B-F	VOL	UTP-10	UT-106			SEE RPV-105,NOZ N5
			SUR	PTP-1				SEE RPV-105,NOZ N5
10LPCS(1)-4								
	SE TO NOZZLE	B-F	VOL	UTP-10	UT-102			SEE RPV-105,NOZ N5
			SUR	PTP-1				SEE RPV-105,NOZ N5
LPCS-PB-101								
	LPCS PRES BNDRY	B-P	VT-2	N/A				SEE NOTES #6 & #7.

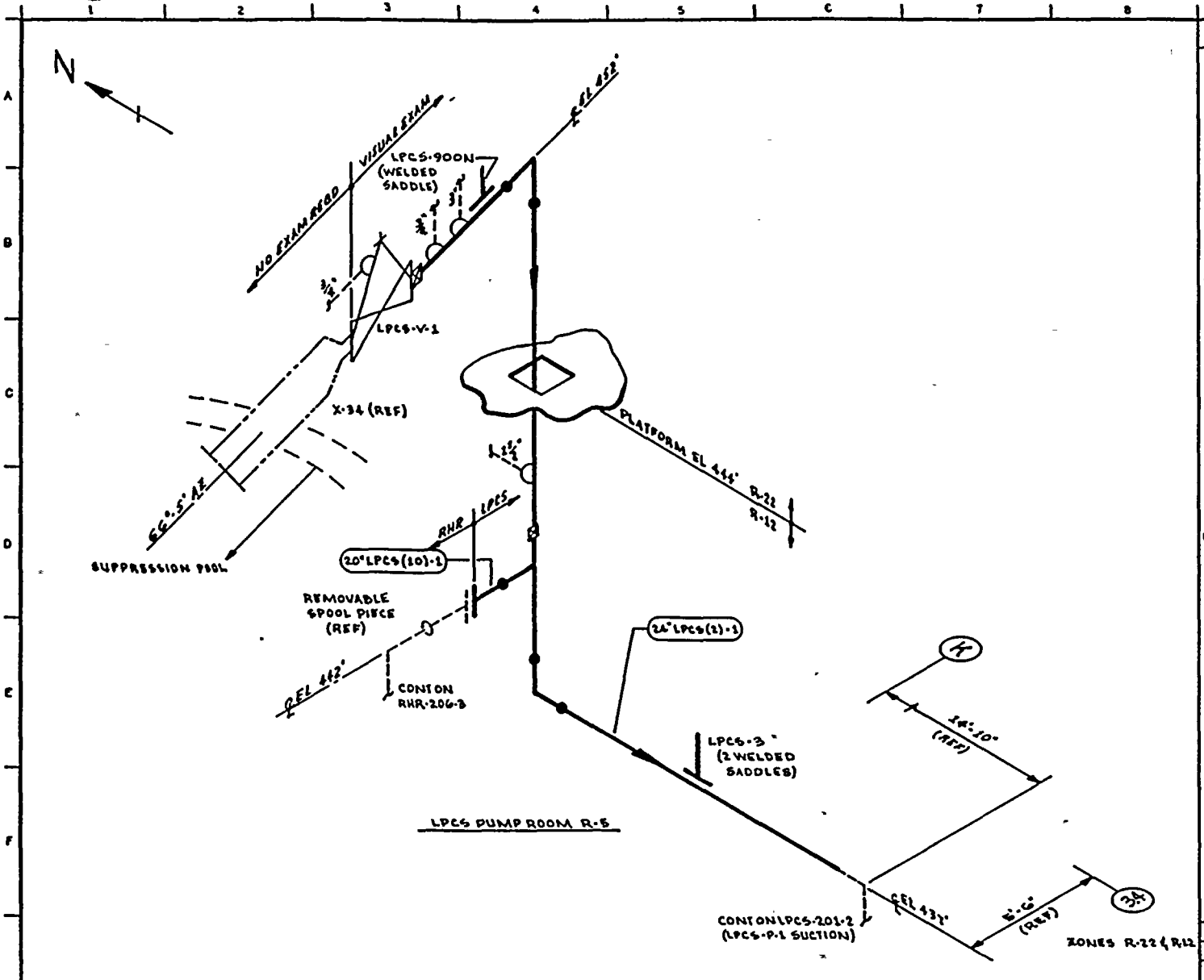

NOTES:

1. THIS DRAWING IDENTIFIES PIPING & COMPONENTS SUBJECT TO A VISUAL EXAM FOR EVIDENCE OF LEAKAGE DURING SYSTEM HYDRO OR OPERABILITY TESTS. TESTS ARE TO BE CONDUCTED PER THE REQUIREMENTS OF ASME SECTION XI, PARAGRAPH IWA-5000.
2. FOR BRANCH PIPING 4" DIA OR LESS (CONN SHOWN IN DASHED LINES) EXTEND VISUAL LEAKAGE EXAM THROUGH THE OUTERMOST NORMALLY CLOSED NUCLEAR CLASS VALVE OR UNTIL TRANSITION TO INSTRUMENT TUBING, UNLESS OTHERWISE NOTED.
3. AT LOCATIONS WHERE LEAKAGE IS NORMALLY EXPECTED (EG, VALVE STEM & PUMP SEAL LEAK-OFF CONN) VERIFY LEAKAGE COLLECTION SYSTEM OPERABILITY ONLY. NO HYDRO TEST OF COLLECTION SYSTEM IS REQUIRED.

REFERENCES:

BOVEE & CRAIL ISOMETRICS
LPCS-758-1.2 REV 13

QUALITY CLASS: 1	ASME CODE CLASS: 2	
ENGR: G.A. KUGLER	DRAWN: K.McA.	DATE: 8-16-78

WASHINGTON PUBLIC POWER SUPPLY SYSTEM
RICHLAND WASHINGTON 99352

THIS DRAWING IS INTENDED FOR USE IN PRESERVICE AND INSERVICE INSPECTION PROGRAMS ONLY.

PIPING SYSTEM	NOM DIA (IN)	SCH	NOM WALL THK	MATERIAL SPECIFICATION	MATL TYPE	CAL BLOCK NO
24" LPCS (2)-1	24	STD	0.375	SA 106 GR B	CS	NA
20" LPCS (10)-1	20	STD	0.375	SA 106 GR B	CS	NA

NO	DATE	REVISION	BY	CHKD	APPVD
1	10-15-83	ADDED 3/4 CONN, LPCS-900N DELETED LPCS-4,5,6 & 7	K.McA	[illegible]	[illegible]
0	12-2-81	ISSUED FOR USE	K.McA	[illegible]	[illegible]
A	8-3-78	ISSUED FOR INFORMATION ONLY	K.McA	[illegible]	[illegible]

WNP-2
WELD & COMPONENT IDENTIFICATION DIAGRAM

TITLE: LPCS SUPPRESSION POOL SUCTION

DWG NO: LPCS-201-1 REV 1

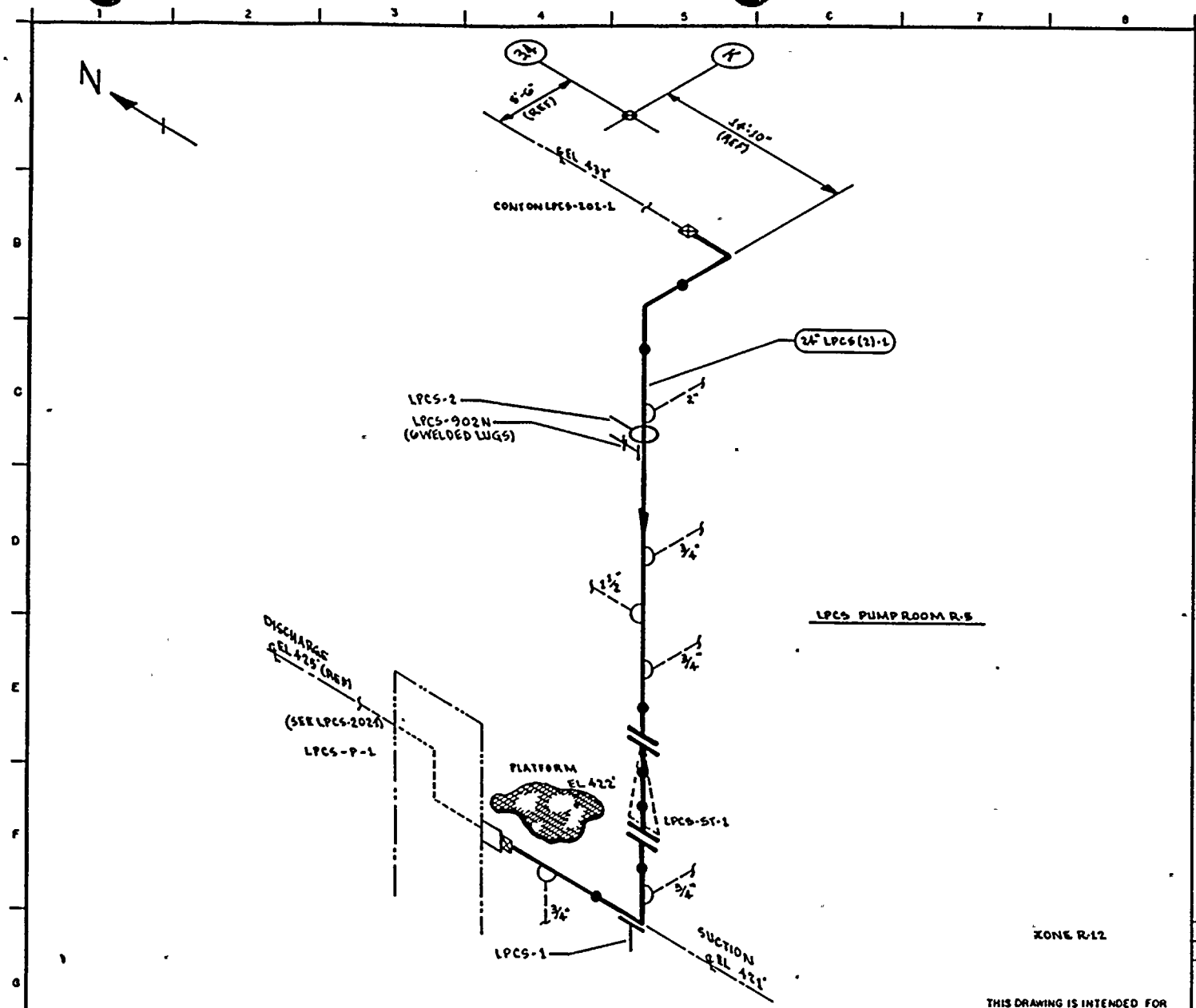

NOTES:

1. THIS DRAWING IDENTIFIES PIPING & COMPONENTS SUBJECT TO A VISUAL EXAM FOR EVIDENCE OF LEAKAGE DURING SYSTEM HYDRO OR OPERABILITY TESTS. TESTS ARE TO BE CONDUCTED PER THE REQUIREMENTS OF ASME SECTION XI, PARAGRAPH IWA-5000.
2. FOR BRANCH PIPING 4" DIA OR LESS (CONN SHOWN IN DASHED LINES) EXTEND VISUAL LEAKAGE EXAM THROUGH THE OUTERMOST NORMALLY CLOSED NUCLEAR CLASS VALVE OR UNTIL TRANSITION TO INSTRUMENT TUBING, UNESS OTHERWISE NOTED.

REFERENCES:

BOVEE & CRAIL ISOMETRICS
LPCS-758-3-5 REV 7

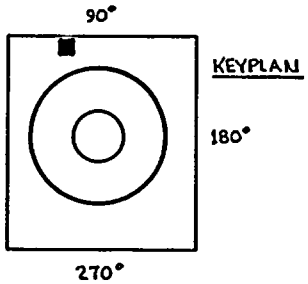

THIS DRAWING IS INTENDED FOR USE IN PRESERVICE AND INSERVICE INSPECTION PROGRAMS ONLY.

PIPING SYSTEM	NOM DIA (IN)	SCH	NOM WALL THK	MATERIAL SPECIFICATION	MATL TYPE	CAL BLOCK NO
24" LPCS(2)-1	24	STD	0.375	SA 106 GR B	CS	NA

NO	DATE	REVISION	BY	CHKD	APPVD
1	9-26-95	ADDED LPCS-1, 2 & 902N & KEYPLAN	KMcA	DAK	TTH
0	11-22-78	ISSUED FOR USE	KMcA	DAK	[illegible]
A	10-5-78	ISSUED FOR INFORMATION ONLY	KMcA	DAK	[illegible]

QUALITY CLASS: 1 | ASME CODE CLASS: 2
ENGR: G.A. KUGLER | DRAWN: K. McA | DATE: 8-17-78

WASHINGTON PUBLIC POWER SUPPLY SYSTEM
RICHLAND WASHINGTON 99352

WNP-2
WELD & COMPONENT IDENTIFICATION DIAGRAM

TITLE: LPCS-PUMP-1 SUCTION

DWG NO: LPCS-201-2 | REV 1

WNP-02
INTERVAL: PSI
PERIOD: NA
OUTAGE:
DRAWING NO. LPCS-201

WASHINGTON PUBLIC POWER SUPPLY SYSTEM
PROGRAM PLAN AND SCHEDULE
SYSTEM OR COMPONENT: LPCS(2)-1
DESCRIPTION: LPCS-P-1 SUCTION

DATE 12/14/84

IDENT. NO.	DESCRIPTION	SECT. XI EXAM.	EXAM MTH.	PROCEDURE	CAL. BLOCK	INSERVICE REQ.	INSERVICE SCHEDULED OUTAGE	NOTES
LPCS-900N								
	BOX	C-E-2	VT-3	303/8.2.17				
LPCS-3								
	ANCHOR	C-E-2	VT-3	303/8.2.17				
LPCS-2								
	RIGID	C-E-2	VT-3	303/8.2.17				
LPCS-902N								
	SPRING	C-E-2	VT-3	303/8.2.17				
			VT-4	303/8.2.17				
LPCS-1								
	RIGID	C-E-2	VT-3	303/8.2.17				
LPCS-PB-201								
	LPCS PRES BNDRY	N/A	VT-2	N/A				SEE NOTES #6 & #7.

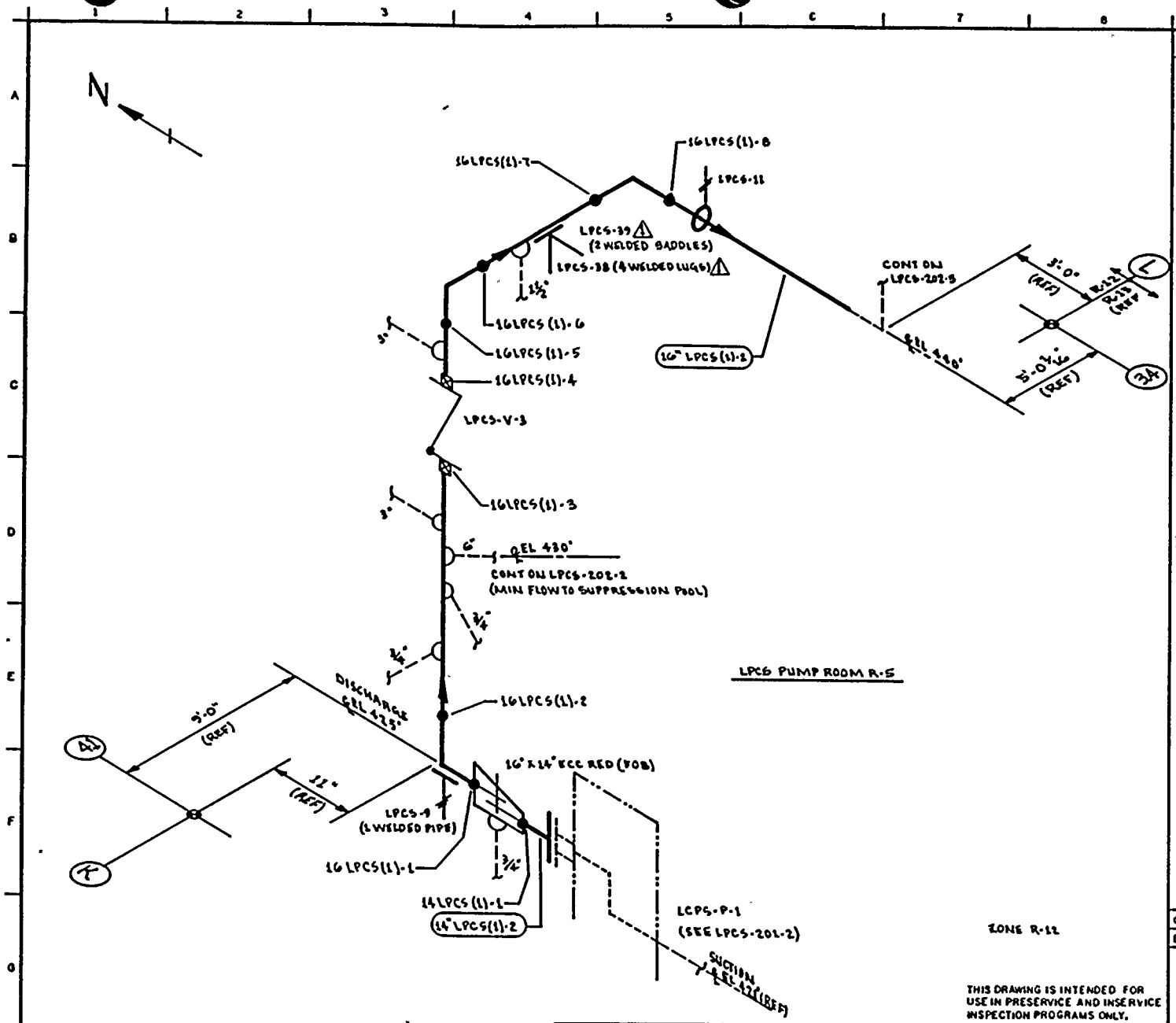

NOTES:

1. THIS DRAWING IDENTIFIES PIPING & COMPONENTS SUBJECT TO A VISUAL EXAM FOR EVIDENCE OF LEAKAGE DURING SYSTEM HYDRO OR OPERABILITY TESTS. TESTS ARE TO BE CONDUCTED PER THE REQUIREMENTS OF ASME SECTION XI, PARAGRAPH IWA-5000.
2. FOR BRANCH PIPING 4" DIA OR LESS (CONN SHOWN IN DASHED LINES) EXTEND VISUAL LEAKAGE EXAM THROUGH THE OUTERMOST NORMALLY CLOSED NUCLEAR CLASS VALVE OR UNTIL TRANSITION TO INSTRUMENT TUBING, UNLESS OTHERWISE NOTED.
3. THE FOLLOWING WELD REQUIRES A SURFACE EXAM. THIS REPRESENTS 10% OF THE WELDS EXEMPTED BY IWC-1220 (c).

   16 LPCS (1)-5

REFERENCES:

BOVEE & CRAIL ISOMETRIC
LPCS-T56-1.4 REV 10

KEYPLAN

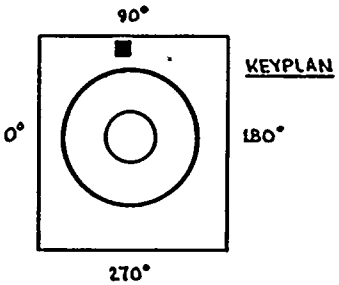

THIS DRAWING IS INTENDED FOR USE IN PRESERVICE AND INSERVICE INSPECTION PROGRAMS ONLY.

PIPING SYSTEM	NOM DIA (IN)	SCH	NOM WALL THK	MATERIAL SPECIFICATION	MATL TYPE	CAL BLOCK NO
16" LPCS (1)-2	16	STD	0.375	SA 106 GR B	CS	NA
14" LPCS (1)-2	14	STD	0.375	SA 106 GR B	CS	NA

NO	DATE	REVISION	BY	CHKD	APPVD
1	9-26-83	NUMBERED WELDS, ADDED NOTE 3, 14"LPCS(1)-2 DEL LPCS(1)	KMcA	[illegible]	TFH
0	11-22-78	ISSUED FOR USE	KMcA	[illegible]	[illegible]
A	10-3-78	ISSUED FOR INFORMATION ONLY	KMcA	[illegible]	[illegible]

QUALITY CLASS: 1 | ASME CODE CLASS: 2
ENGR: G.A. KUGLER | DRAWN: K.McA | DATE: 8-17-78

WASHINGTON PUBLIC POWER SUPPLY SYSTEM
RICHLAND WASHINGTON 99352

WNP-2
WELD & COMPONENT IDENTIFICATION DIAGRAM

TITLE: LPCS-PUMP-1 DISCHARGE

DWG NO: LPCS-202-1 | REV 1

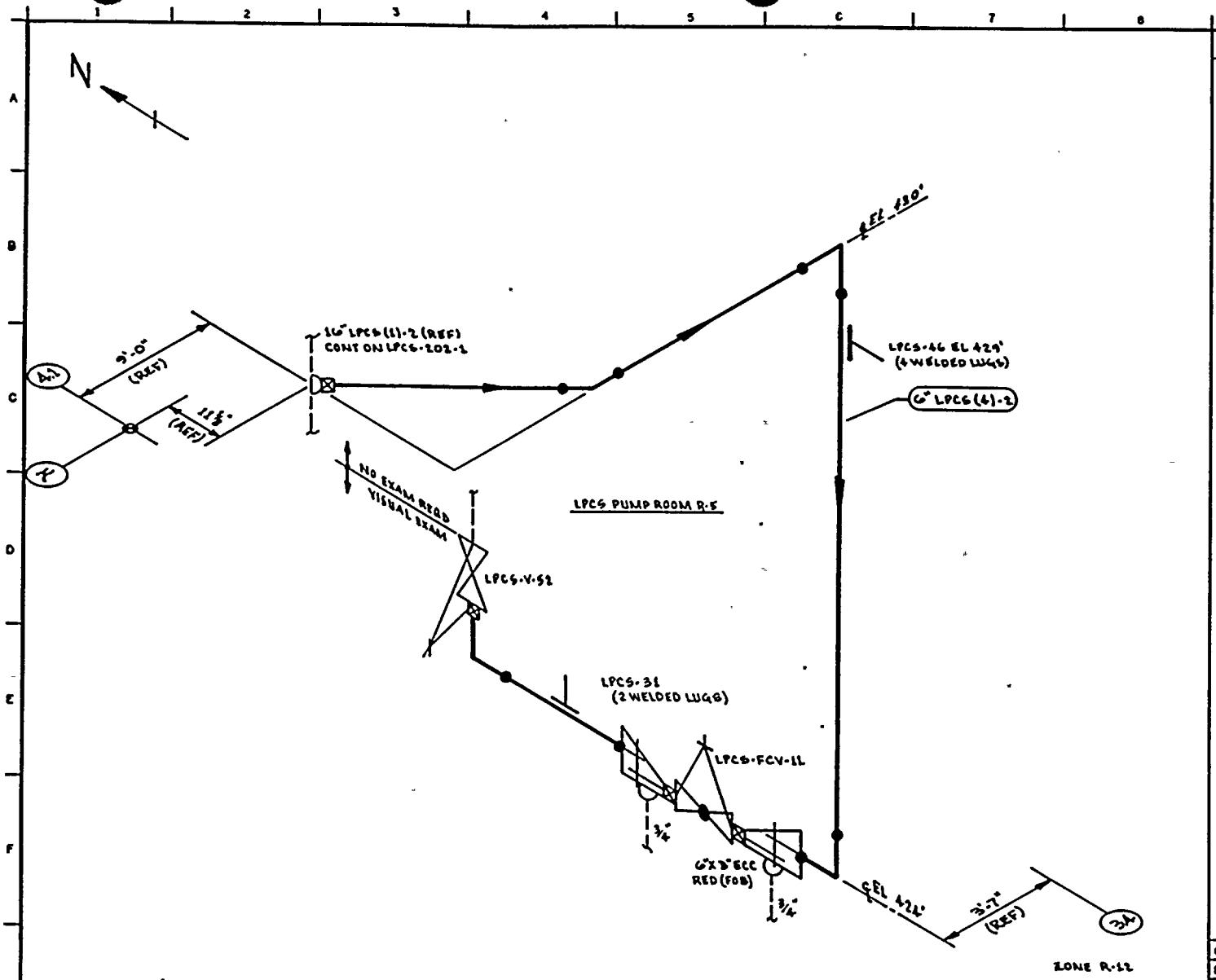

NOTES:

1. THIS DRAWING IDENTIFIES PIPING & COMPONENTS SUBJECT TO A VISUAL EXAM FOR EVIDENCE OF LEAKAGE DURING SYSTEM HYDRO OR OPERABILITY TESTS. TESTS ARE TO BE CONDUCTED PER THE REQUIREMENTS OF ASME SECTION XI, PARAGRAPH IWA-5000.
2. FOR BRANCH PIPING 4" DIA OR LESS (CONN SHOWN IN DASHED LINES) EXTEND VISUAL LEAKAGE EXAM THROUGH THE OUTERMOST NORMALLY CLOSED NUCLEAR CLASS VALVE OR UNTIL TRANSITION TO INSTRUMENT TUBING, UNLESS OTHERWISE NOTED.

REFERENCES:

BOVER & CRAIL ISOMETRIC
LPCS-786-5-2 REV 11

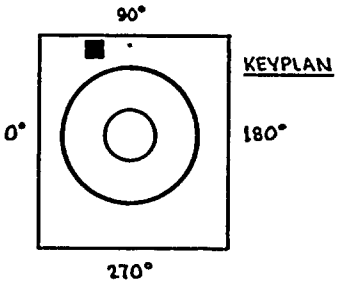

THIS DRAWING IS INTENDED FOR USE IN PRESERVICE AND INSERVICE INSPECTION PROGRAMS ONLY.

PIPING SYSTEM	NOM DIA (IN)	SCH	NOM WALL THK	MATERIAL SPECIFICATION	MATL TYPE	CAL BLOCK NO
6" LPCS(4)-2	6	STD	0.280	SA 106 GR B	CS	NA

NO	DATE	REVISION	BY	CHKD	APPVD
1	9-26-83	ADDED LPCS-31 ADDED KEYPLAN	K.M.A	[illegible]	[illegible]
0	12-22-78	ISSUED FOR USE	K.M.A	[illegible]	[illegible]
A	11-3-78	ISSUED FOR INFORMATION ONLY	K.M.A	[illegible]	DAR

QUALITY CLASS: 1 | ASME CODE CLASS: 2
ENGR: G.A. KIGLER | DRAWN: K.M.A | DATE: 8-17-78

WASHINGTON PUBLIC POWER SUPPLY SYSTEM
RICHLAND WASHINGTON 99352

WNP-2
WELD & COMPONENT IDENTIFICATION DIAGRAM

TITLE:
LPCS MINIMUM FLOW LINE TO SUPPRESSION POOL

DWG NO: LPCS-202-2 | REV 1

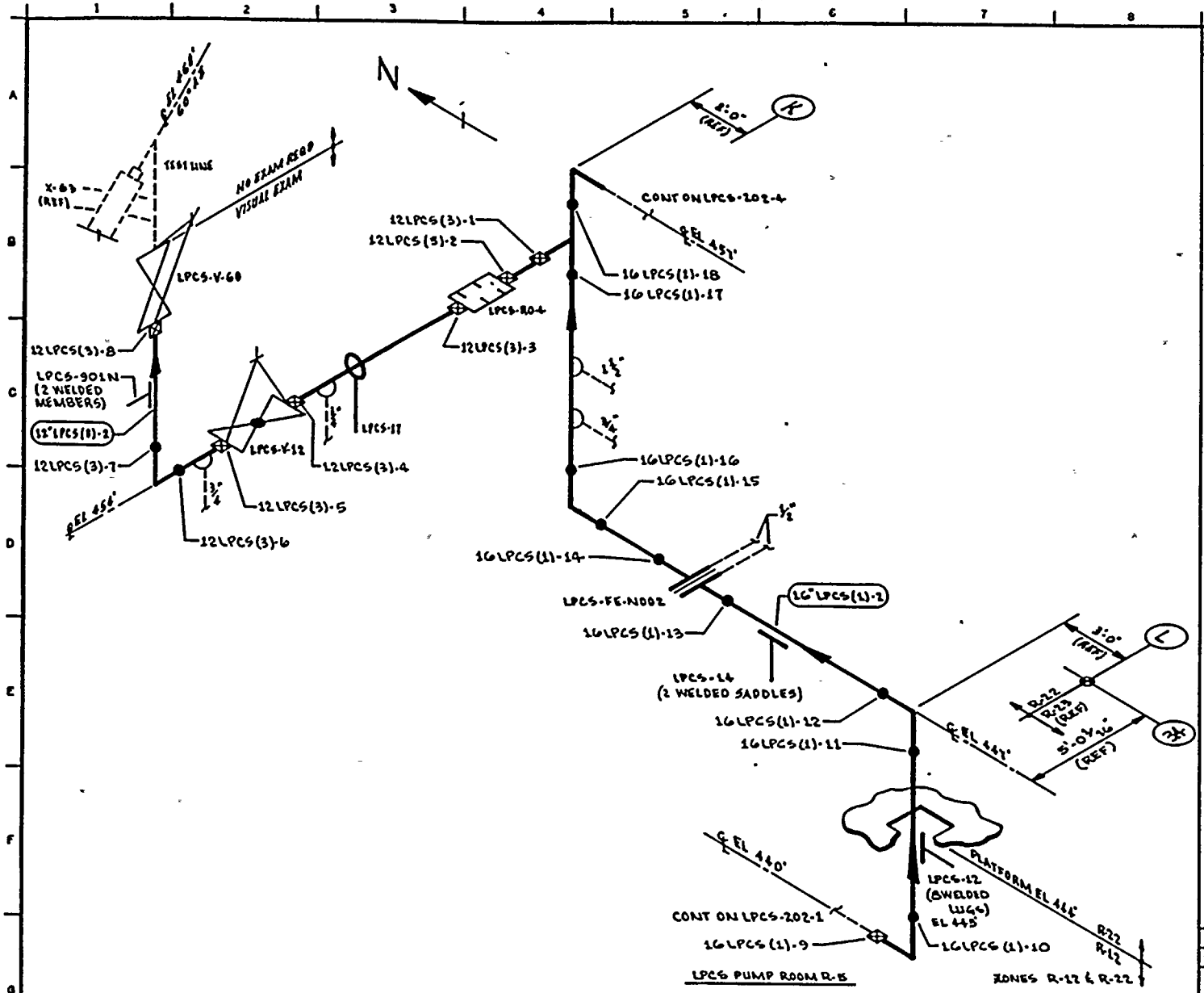

NOTES:

1. THIS DRAWING IDENTIFIES PIPING & COMPONENTS SUBJECT TO A VISUAL EXAM FOR EVIDENCE OF LEAKAGE DURING SYSTEM HYDRO OR OPERABILITY TESTS. TESTS ARE TO BE CONDUCTED PER THE REQUIREMENTS OF ASME SECTION XI, PARAGRAPH IWA-5000.
2. FOR BRANCH PIPING 4" DIA OR LESS (CONN SHOWN IN DASHED LINES) EXTEND VISUAL LEAKAGE EXAM THROUGH THE OUTERMOST NORMALLY CLOSED NUCLEAR CLASS VALVE OR UNTIL TRANSITION TO INSTRUMENT TUBING, UNLESS OTHERWISE NOTED.

REFERENCES:

BOVEE & CRAIL ISOMETRICS

LPCS-756-8.10 REV 8
LPCS-759-1 REV 9

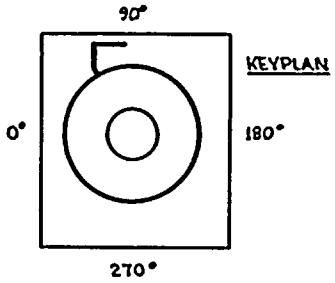

KEYPLAN

QUALITY CLASS: 1	ASME CODE CLASS: 2	
ENGR G.A. KUGLER	DRAWN: K.McA	DATE: 8-18-78

WASHINGTON PUBLIC POWER SUPPLY SYSTEM
RICHLAND WASHINGTON 99352

THIS DRAWING IS INTENDED FOR USE IN PRESERVICE AND INSERVICE INSPECTION PROGRAMS ONLY.

PIPING SYSTEM	NOM DIA (IN)	SCH	NOM WALL THK	MATERIAL SPECIFICATION	MATL TYPE	CAL BLOCK NO
16" LPCS(1)-2	16	STD	0.375	SA 106 GR B	CS	NA
12" LPCS(3)-2	12	STD	0.375	SA 106 GR B	CS	NA

NO	DATE	REVISION	BY	CHKD	APPVD
1	8-26-83	NUMBERED WELDS, ADDED LPCS-901N, DELETED LPCS-16, 39, 15 & 40, CHANGED LPCS-12 & 17	K.McA		
0	12-13-78	ISSUED FOR USE	K.McA		
A	11-3-78	ISSUED FOR INFORMATION ONLY	K.McA		

WNP-2
WELD & COMPONENT IDENTIFICATION DIAGRAM

TITLE: LPCS-PUMP-1 DISCHARGE & TEST LINES

DWG NO: LPCS-202-3 REV 1

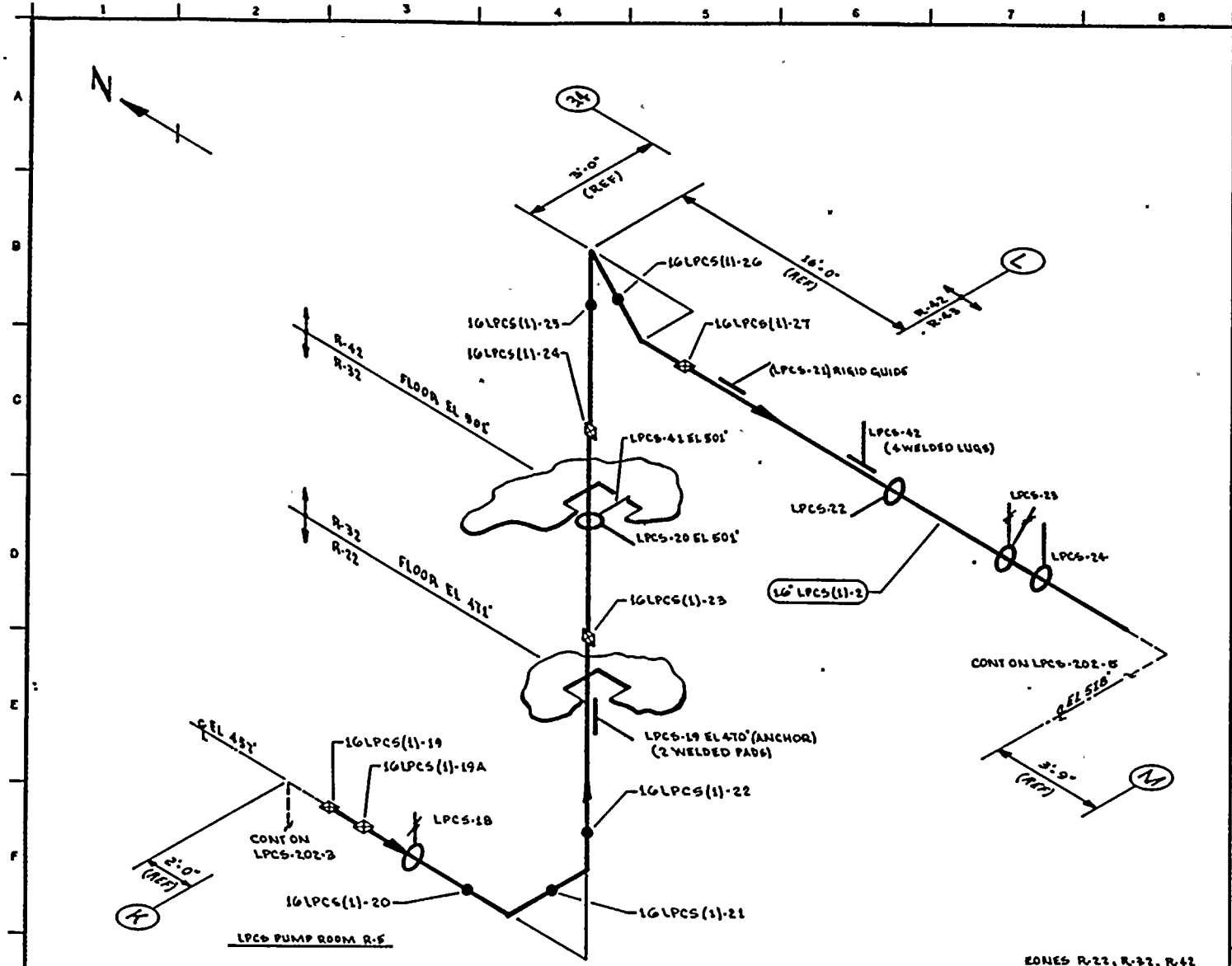

NOTES:

1. THIS DRAWING IDENTIFIES PIPING & COMPONENTS SUBJECT TO A VISUAL EXAM FOR EVIDENCE OF LEAKAGE DURING SYSTEM HYDRO OR OPERABILITY TESTS. TESTS ARE TO BE CONDUCTED PER THE REQUIREMENTS OF ASME SECTION XI, PARAGRAPH IWA-5000.

REFERENCES:

BOVEE & CRAIL ISOMETRICS:

LPCS-756-11.15 REV 5

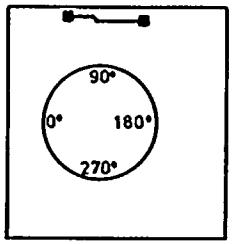

KEYPLAN

THIS DRAWING IS INTENDED FOR USE IN PRESERVICE AND INSERVICE INSPECTION PROGRAMS ONLY.

PIPING SYSTEM	NOM DIA (IN)	SCH	NOM WALL THK	MATERIAL SPECIFICATION	MATL TYPE	CAL BLOCK NO
16" LPCS(1)-2	16	STD	0.375	SA 106 GR B	CS	NA

NO	DATE	REVISION	BY	CHKD	APPVD
1	9-26-83	NUMBERED WELDS. LPCS-20, 22 & 24 NOW RIGID	K.McA		
0	12-27-78	ISSUED FOR USE	K.McA		
A	10-5-78	ISSUED FOR INFORMATION ONLY	K.McA		

QUALITY CLASS: 1 | ASME CODE CLASS: 2

ENGR G.A. KUGLER | DRAWN: K.McA | DATE: 8-22-78

WASHINGTON PUBLIC POWER SUPPLY SYSTEM
RICHLAND, WASHINGTON 99352

WNP-2
WELD & COMPONENT IDENTIFICATION DIAGRAM

TITLE: LPCS-PUMP 1 DISCHARGE

DWG NO: LPCS-202-4 | REV 1

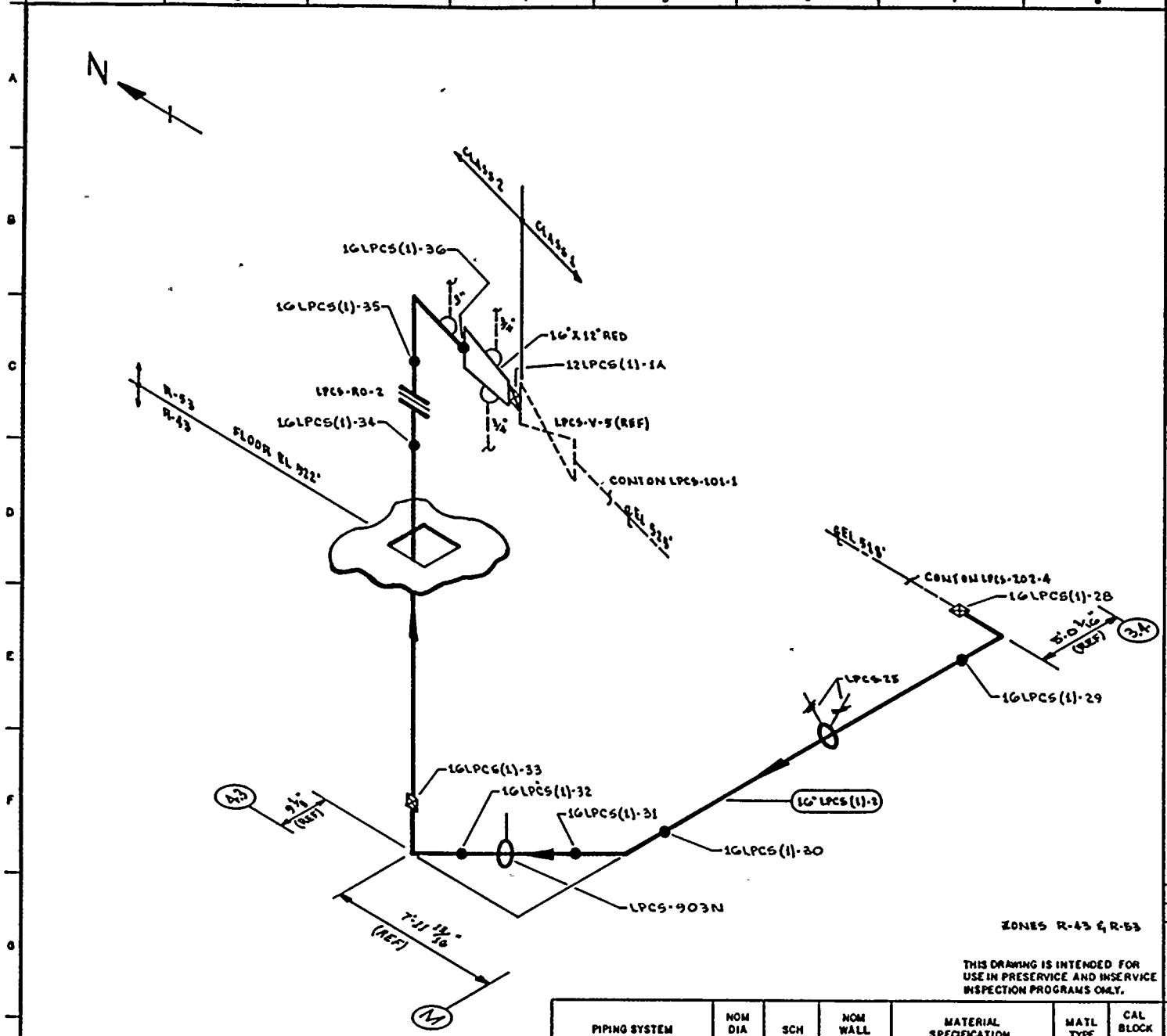

ZONES R-43 & R-53

THIS DRAWING IS INTENDED FOR USE IN PRESERVICE AND INSERVICE INSPECTION PROGRAMS ONLY.

NOTES:

1. THIS DRAWING IDENTIFIES PIPING & COMPONENTS SUBJECT TO A VISUAL EXAM FOR EVIDENCE OF LEAKAGE DURING SYSTEM HYDRO OR OPERABILITY TESTS. TESTS ARE TO BE CONDUCTED PER THE REQUIREMENTS OF ASME SECTION XI, PARAGRAPH IWA-5000.
2. FOR BRANCH PIPING 4" DIA OR LESS (CONN SHOWN IN DASHED LINES) EXTEND VISUAL LEAKAGE EXAM THROUGH THE OUTERMOST NORMALLY CLOSED NUCLEAR CLASS VALVE OR UNTIL TRANSITION TO INSTRUMENT TUBING, UNLESS OTHERWISE NOTED.
3. THE FOLLOWING WELDS REQUIRE A SURFACE EXAM. THEY REPRESENT 10% OF THE WELDS EXEMPTED BY IWC-1200 (c):

   12 LPCS (1)-1A
   16 LPCS (1)-28
   16 LPCS (1)-30
   16 LPCS (1)-31
   16 LPCS (1)-32
   16 LPCS (1)-33
   16 LPCS (1)-35

REFERENCES:

BOVEE & CRAIL ISOMETRICS

LPCS-756-11.15	REV 5
LPCS-756-16.18	REV 3

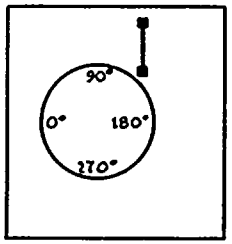

KEYPLAN.

PIPING SYSTEM	NOM DIA (IN)	SCH	NOM WALL THK	MATERIAL SPECIFICATION	MATL TYPE	CAL BLOCK NO
16" LPCS(1)-2	16	STD	0.375	SA 106 GR B	CS	NA
12" LPCS(1)-2	12	STD	0.375	SA 106 GR B	CS	NA

NO	DATE	REVISION	BY	CHKD	APPVD
1	9-26-89	NUMBERED WELDS, ADDED NOTE 3, LPCS-903N, DELETED LPCS-37, 43 & 44, & 76, ADDED 12"LPCS(1)-1	KMcA	LDR	TRP
0	12-22-88	ISSUED FOR USE	KMcA	TRP	
A	10-3-88	ISSUED FOR INFORMATION ONLY	KMcA	DEK	DWP

QUALITY CLASS: 1 | ASME CODE CLASS: 2

ENGR G.A. KUGLER | DRAWN: K.McA | DATE: 8-21-88

WASHINGTON PUBLIC POWER SUPPLY SYSTEM
RICHLAND, WASHINGTON 99352

WNP-2
WELD & COMPONENT IDENTIFICATION DIAGRAM

TITLE: LPCS-PUMP-1 DISCHARGE

DWG NO: LPCS-202-5 | REV 1

WNP-02
INTERVAL: PSI
PERIOD: NA
OUTAGE:
DRAWING NO. LPCS-202

WASHINGTON PUBLIC POWER SUPPLY SYSTEM
PROGRAM PLAN AND SCHEDULE
SYSTEM OR COMPONENT: LPCS(1)-2
DESCRIPTION: LPCS-P-1 DISCHARGE

DATE 12/14/84

IDENT. NO.	DESCRIPTION	SECT. XI EXAM.	EXAM MTH.	PROCEDURE	CAL. BLOCK	INSERVICE REQ.	INSERVICE SCHEDULED OUTAGE	NOTES
LPCS-9								
	SPRING	C-E-2	VT-3	303/8.2.17				
			VT-4	303/8.2.17				
LPCS-46								
	BOX	C-E-2	VT-3	303/8.2.17				
LPCS-31								
	BOX	C-E-2	VT-3	303/8.2.17				
16LPCS(1)-5								
	PIPE TO EL	N/A	SUR	QCI 3-3				SEE NOTE #8.
LPCS-38								
	BOX	C-E-2	VT-3	303/8.2.17				
LPCS-39								
	BOX	C-E-2	VT-3	303/8.2.17				
LPCS-11								
	SPRING	C-E-2	VT-3	303/8.2.17				
			VT-4	303/8.2.17				
LPCS-12								
	BOX	C-E-2	VT-3	303/8.2.17				
LPCS-14								
	ANCHOR	C-E-2	VT-3	303/8.2.17				
LPCS-17								
	BOX	C-E-2	VT-3	303/8.2.17				
LPCS-901N								
	ANCHOR	C-E-2	VT-3	303/8.2.17				
LPCS-18								
	SPRING	C-E-2	VT-3	303/8.2.17				
			VT-4	303/8.2.17				
LPCS-19								
	ANCHOR	C-E-2	VT-3	303/8.2.17				
LPCS-20								
	STRUT	C-E-2	VT-3	303/8.2.17				
LPCS-41								
	STRUT	C-E-2	VT-3	303/8.2.17				

WNP-02
INTERVAL: PSI
PERIOD: NA
OUTAGE:
DRAWING NO. LPCS-202

WASHINGTON PUBLIC POWER SUPPLY SYSTEM
PROGRAM PLAN AND SCHEDULE
SYSTEM OR COMPONENT: LPCS(1)-2
DESCRIPTION: LPCS-P-1 DISCHARGE

DATE 12/14/84

IDENT. NO.	DESCRIPTION	SECT. XI EXAM.	EXAM MTH.	PROCEDURE	CAL. BLOCK	INSERVICE REQ.	INSERVICE SCHEDULED OUTAGE	NOTES
LPCS-21								
	BOX	C-E-2	VT-3	303/8.2.17				
LPCS-42								
	BOX	C-E-2	VT-3	303/8.2.17				
LPCS-22								
	RIGID	C-E-2	VT-3	303/8.2.17				
LPCS-23								
	SPRING	C-E-2	VT-3	303/8.2.17				
			VT-4	303/8.2.17				
LPCS-24								
	BOX	C-E-2	VT-3	303/8.2.17				
LPCS-25								
	SPRING	C-E-2	VT-3	303/8.2.17				
			VT-4	303/8.2.17				
16LPCS(1)-30								
	PIPE TO EL	N/A	SUR	QCI 3-3				SEE NOTE #8.
LPCS-903N								
	ANCHOR	C-E-2	VT-3	303/8.2.17				
16LPCS(1)-32								
	PIPE TO EL	N/A	SUR	PTP-1				SEE NOTE #8.
16LPCS(1)-33								
	EL TO PIPE	N/A	SUR	PTP-1				SEE NOTE #8.
16LPCS(1)-35								
	FLANGE TO EL	N/A	SUR	QCI 3-3				SEE NOTE #8.
12LPCS(1)-1A								
	RED TO VALVE	N/A	SUR	QCI 3-3				SEE NOTE #8.
LPCS-PB-202								
	LPCS PRES BNDRY	N/A	VT-2	N/A				SEE NOTES #6 & #7.

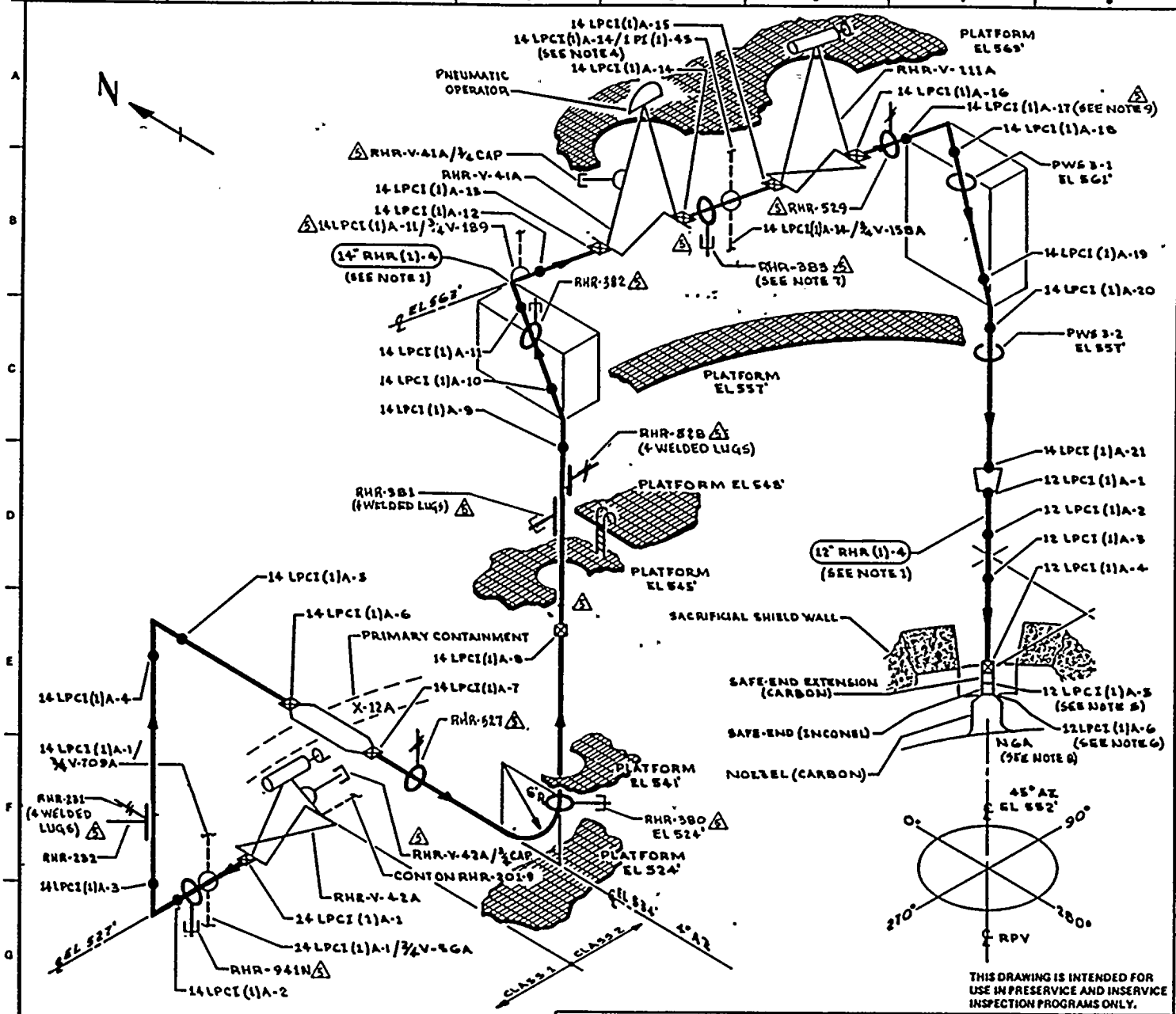

NOTES:

1. WELD NUMBERING UTILIZES "LPCI" RATHER THAN "RHR" FOR SYSTEM DESIGNATION FOR CLARITY.
2. ACCESS TO WELDS AT NOZZEL N6A REQUIRES TEMPORARY SCAFFOLDING.
3. PWS 18 PR 15 WITHIN ~4" OF WELD 14 LPCI(1)-18
4. EXTEND LEAKAGE EXAM THROUGH CONTAINMENT (X-74-b) THROUGH EXCESS FLOW CHECK VALVE TO INSTRUMENT TUBING CONNECTION.
5. DISSIMILAR METAL WELD, CS TO INCO,- USE CAL BLOCK UT-106.
6. DISSIMILAR METAL WELD, INCO TO CS,- USE CAL BLOCK UT-102.
7. ACCESS TO WELD 14 LPCI(1)A-15 REQUIRES REMOVAL OF RHR-383.
8. FOR DETAILS OF NOZZLE ASSEMBLY SEE RPV-110.
9. ACCESS TO WELD 14 LPCI(1)A-17 REQUIRES REMOVAL OF RHR-529.

REFERENCES:

BOVEE & CRAIL ISOMETRICS:

RHR-851-20 REV 7
RHR-851-21.24 REV 6

THIS DRAWING IS INTENDED FOR USE IN PRESERVICE AND INSERVICE INSPECTION PROGRAMS ONLY.

NO	DATE	REVISION	BY	CHKD	APPVD
5	6-24-83	ADDED KEYPLAN & AS NOTED ADDED LUGS			
4	8-24-81	REVISED AS NOTED			
3	11-6-80	CORRECTED SCH & WALL THK FOR 12" RHR(1)-4			
2	8-30-79	ADDED NOTES. ADDED CALLOUT IN A-4			
1	5-10-79	CAL BLOCK REFERENCE CHANGED (NOTE 3)			
0	11-27-78	ISSUED FOR USE			
A	3-15-78	ISSUED FOR INFORMATION ONLY			

PIPING SYSTEM	NOM DIA (IN)	SCH	NOM WALL THK	MATERIAL SPECIFICATION	MATL TYPE	CAL BLOCK NO
14" RHR(1)-4	14	80	0.750	SA 106 GR B	CS	UT-14
12" RHR(1)-4	12	80	0.688	SA 106 GR B	CS	UT-17
LUGS	NA	NA	NA	SA 516 GR 70	CS	UT-46

QUALITY CLASS: 1 | ASME CODE CLASS: 1

ENGR: D PORTER | DRAWN: K. McA. | DATE: 12-2-77

WASHINGTON PUBLIC POWER SUPPLY SYSTEM

RICHLAND, WASHINGTON 99352

WNP-2
WELD & COMPONENT IDENTIFICATION DIAGRAM

TITLE: RHR/LPCI LOOP "A"

DWG NO: RHR-101 | REV 5

WNP-02
INTERVAL: PSI
PERIOD: NA
OUTAGE:
DRAWING NO. RHR-101

WASHINGTON PUBLIC POWER SUPPLY SYSTEM
PROGRAM PLAN AND SCHEDULE
SYSTEM OR COMPONENT: RHR(1)-4
DESCRIPTION: RHR/LPCI LOOP "A"

DATE 12/14/84

IDENT. NO.	DESCRIPTION	SECT. XI EXAM.	EXAM MTH.	PROCEDURE	CAL. BLOCK	INSERVICE REQ.	INSERVICE SCHEDULED OUTAGE	NOTES
RHR-V-42A-BDY								
	VALVE BODY	B-M-2	VT-1	QCI 7-1				
RHR-V-42A-BLT								
	VALVE BOLTING	B-G-2	VT-1	QCI 7-1				
RHR-V-42A/3/4CAP								
	LEAKOFF CAPPED	B-P	VT-2	N/A				SEE NOTES #6 & #7.
14LPCI(1)A-1								
	VLV TO PIPE	B-J	VOL	UTP-10	UT-14			
			SUR	PTP-1				
14LPCI(1)A-1/3/4V-709A								
	PRESSURE TAP	B-P	VT-2	N/A				SEE NOTES #6 & #7.
14LPCI(1)A-1/3/4V-56A								
	TEST CONN	B-P	VT-2	N/A				SEE NOTES #6 & #7.
RHR-941N								
	PSA-3 SNUBBER	B-K-2	VT-3	303/8.2.17				S/N 110
			VT-4	303/8.2.17				S/N 110
14LPCI(1)A-2								
	PIPE TO EL	B-J	VOL	UTP-10	UT-14			
			SUR	PTP-1				
14LPCI(1)A-3								
	EL TO PIPE	B-J	VOL	UTP-10	UT-14			
			SUR	PTP-1				
RHR-231(W)								
	4 WELDED LUGS	B-K-1	VOL	QCI 6-15	UT-14			
RHR-231								
	SPRING	B-K-2	VT-3	303/8.2.17				
			VT-4	303/8.2.17				
14LPCI(1)A-4								
	PIPE TO EL	B-J	VOL	UTP-10	UT-14			
			SUR	PTP-1				

WNP-02
INTERVAL: PSI
PERIOD: NA
OUTAGE:
DRAWING NO. RHR-101

WASHINGTON PUBLIC POWER SUPPLY SYSTEM
PROGRAM PLAN AND SCHEDULE
SYSTEM OR COMPONENT: RHR(1)-4
DESCRIPTION: RHR/LPCI LOOP "A"

DATE 12/14/84

IDENT. NO.	DESCRIPTION	SECT. XI EXAM.	EXAM MTH.	PROCEDURE	CAL. BLOCK	INSERVICE REQ.	INSERVICE SCHEDULED OUTAGE	NOTES
14LPCI(1)A-5								
	EL TO PIPE	B-J	VOL	UTP-10	UT-14			
			SUR	PTP-1				
14LPCI(1)A-6								
	PIPE TO PEN	B-J	VOL	UTP-10	UT-14			
			SUR	PTP-1				
14LPCI(1)A-7								
	PEN TO PIPE	B-J	VOL	UTP-10	UT-14			
			SUR	PTP-1				
RHR-527								
	SPRING	B-K-2	VT-3	303/8.2.17				
			VT-4	303/8.2.17				
RHR-380								
	PSA-10 SNUBBER	B-K-2	VT-3	303/8.2.17				S/N 692
			VT-4	303/8.2.17				S/N 692
14LPCI(1)A-8								
	PIPE TO PIPE	B-J	VOL	UTP-10	UT-14			
			SUR	PTP-1				
RHR-381								
	PSA-10 SN(2)	B-K-2	VT-3	303/8.2.17				S/N E695/W683
			VT-4	303/8.2.17				S/N E695/W683
RHR-528(W)								
	4 WELDED LUGS	B-K-1	VOL	UTP-26	UT-14			
RHR-528								
	SPRING	B-K-2	VT-3	303/8.2.17				
			VT-4	303/8.2.17				
14LPCI(1)A-9								
	PIPE TO EL	B-J	VOL	UTP-10	UT-14			

WNP-02
INTERVAL: PSI
PERIOD: NA
OUTAGE:
DRAWING NO. RHR-101

WASHINGTON PUBLIC POWER SUPPLY SYSTEM
PROGRAM PLAN AND SCHEDULE.
SYSTEM OR COMPONENT: RHR(1)-4
DESCRIPTION: RHR/LPCI LOOP "A"

DATE 12/14/84

IDENT. NO.	DESCRIPTION	SECT. XI EXAM.	EXAM MTH.	PROCEDURE	CAL. BLOCK	INSERVICE REQ.	INSERVICE SCHEDULED OUTAGE	NOTES
			SUR	PTP-1				
14LPCI(1)A-10								
	EL TO PIPE	B-J	VOL	UTP-10	UT-14			
			SUR	PTP-1				
RHR-382								
	PSA-35 SNUBBER	B-K-2	VT-3	303/8.2.17				SN 6126
			VT-4	303/8.2.17				SN 6126
14LPCI(1)A-11								
	PIPE TO EL	B-J	VOL	UTP-10	UT-14			
			SUR	PTP-1				
14LPCI(1)A-11/3/4V-189								
	PRESSURE TAP	B-P	VT-2	N/A				SEE NOTES #6 & #7.
14LPCI(1)A-12								
	EL TO PIPE	B-J	VOL	UTP-10	UT-14			
			SUR	QCI 3-3				
14LPCI(1)A-13								
	PIPE TO VLV	B-J	VOL	UTP-10	UT-14			
			SUR	QCI 3-3				
RHR-V-41A-BDY								
	VALVE BODY	B-M-2	VT-1	QCI 7-1				
RHR-V-41A-BLT								
	VALVE BOLTING	B-G-2	VT-1	QCI 7-1				
RHR-V-41A/3/4CAP								
	LEAKOFF CAPPED	B-P	VT-2	N/A				SEE NOTES #6 & #7.
14LPCI(1)A-14								
	VLV TO PIPE	B-J	VOL	UTP-10	UT-14			
			SUR	PTP-1				

WNP-02
INTERVAL: PSI
PERIOD: NA
OUTAGE:
DRAWING NO. RHR-101

WASHINGTON PUBLIC POWER SUPPLY SYSTEM
PROGRAM PLAN AND SCHEDULE
SYSTEM OR COMPONENT: RHR(1)-4
DESCRIPTION: RHR/LPCI LOOP "A"

DATE 12/14/84

IDENT. NO.	DESCRIPTION	SECT. XI EXAM.	EXAM MTH.	PROCEDURE	CAL. BLOCK	INSERVICE REQ.	INSERVICE SCHEDULED OUTAGE	NOTES
RHR-383								
	PSA-35 SNUBBER	B-K-2	VT-3	303/8.2.17				S/N 10568
			VT-4	303/8.2.17				S/N 10568
14LPCI(1)A-14/1PI(1)-4S								
	PRESSURE TAP	B-P	VT-2	N/A				SEE NOTES #6 & #7.
14LPCI(1)A-14/3/4V-158A								
	PRESSURE TAP	B-P	VT-2	N/A				SEE NOTES #6 & #7.
14LPCI(1)A-15								
	PIPE TO VALVE	B-J	VOL	UTP-10	UT-14			
			SUR	PTP-1				
RHR-V-111A-BDY								
	VALVE BODY	B-M-2	VT-1	OCI 7-1				
RHR-V-111A-BLT								
	VALVE BOLTING	B-G-2	VT-1	OCI 7-1				
14LPCI(1)A-16								
	VLV TO PIPE	B-J	VOL	UTP-10	UT-14			
			SUR	PTP-1				
RHR-529								
	SPRING	B-K-2	VT-3	303/8.2.17				
			VT-4	303/8.2.17				
14LPCI(1)A-17								
	EL TO PIPE	B-J	VOL	UTP-10	UT-14			
			SUR	PTP-1				
14LPCI(1)A-18								
	EL TO PIPE	B-J	VOL	UTP-10	UT-14			
			SUR	PTP-1				
PWS-3-1								
	PIPE WHIP	N/A	N/A	N/A				SEE NOTE #1
14LPCI(1)A-19								
	PIPE TO EL	B-J	VOL	UTP-10	UT-14			

WNP-02
INTERVAL: PSI
PERIOD: NA
OUTAGE:
DRAWING NO. RHR-101

WASHINGTON PUBLIC POWER SUPPLY SYSTEM
PROGRAM PLAN AND SCHEDULE
SYSTEM OR COMPONENT: RHR(1)-4
DESCRIPTION: RHR/LPCI LOOP "A"

DATE 12/14/84

IDENT. NO.	DESCRIPTION	SECT. XI EXAM.	EXAM MTH.	PROCEDURE	CAL. BLOCK	INSERVICE REQ.	INSERVICE SCHEDULED OUTAGE	NOTES
			SUR	PTP-1				
14LPCI(1)A-20								
	EL TO PIPE	B-J	VOL	UTP-10	UT-14			
			SUR	PTP-1				
PWS-3-2								
	PIPE WHIP	N/A	N/A	N/A				SEE NOTE #1
14LPCI(1)A-21								
	PIPE TO REDUCER	B-J	VOL	UTP-10	UT-14			
			SUR	PTP-1				
12LPCI(1)A-1								
	REDUCER TO PIPE	B-J	VOL	UTP-10	UT-17			
			SUR	PTP-1				
12LPCI(1)A-2								
	PIPE TO EL	B-J	VOL	UTP-10	UT-17			
			SUR	PTP-1				
12LPCI(1)A-3								
	EL TO PIPE	B-J	VOL	UTP-10	UT-17			
			SUR	PTP-1				
12LPCI(1)A-4								
	PIPE TO SE	B-J	VOL	UTP-10	UT-17			
			SUR	PTP-1				
12LPCI(1)A-5								
	SE EXT TO SE	B-F	VOL	UTP-10	UT-106			DISSIMILAR METAL (CS-INCO)
			SUR	PTP-1				DISSIMILAR METAL (CS-INCO)

WNP-02
INTERVAL: PSI
PERIOD: NA
OUTAGE:
DRAWING NO. RHR-101

WASHINGTON PUBLIC POWER SUPPLY SYSTEM
PROGRAM PLAN AND SCHEDULE
SYSTEM OR COMPONENT: RHR(1)-4
DESCRIPTION: RHR/LPCI LOOP "A"

DATE 12/14/84

IDENT. NO.	DESCRIPTION	SECT. XI EXAM.	EXAM MTH.	PROCEDURE	CAL. BLOCK	INSERVICE REQ.	INSERVICE SCHEDULED OUTAGE	NOTES
12LPCI(1)A-6								
	SE TO NOZZLE	B-F	VOL	UTP-10	UT-102			DISSIMILAR METAL (CS-INCO)
			SUR	PTP-1				DISSIMILAR METAL (CS-INCO)
RHR-PB-101								
	RHR PRES BNDRY	B-P	VT-2	N/A				SEE NOTES #6 & #7.

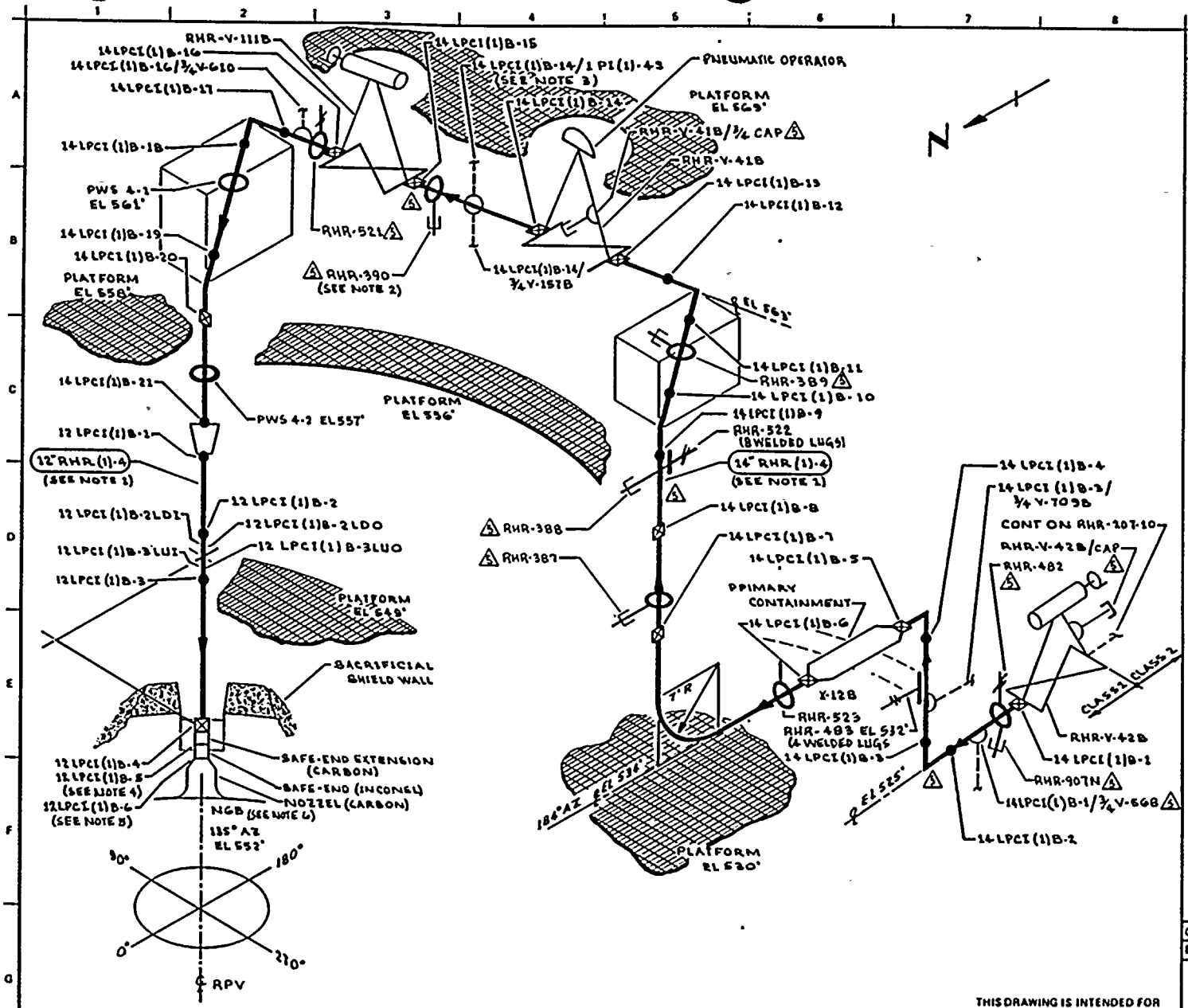

NOTES:

1. WELD NUMBERING UTILIZES "LPCI" RATHER THAN "RHR" FOR SYSTEM DESIGNATION FOR CLARITY.
2. ACCESS TO WELD 14 LPCI (1)B-15 REQUIRES REMOVAL OF RHR-390.
3. EXTEND LEAKAGE EXAM THROUGH CONTAINMENT (X-39b) THROUGH EXCESS FLOW CHECK VALVE TO INSTRUMENT TUBING CONNECTION.
4. DISSIMILAR METAL WELD, CS TO INCO, USE CAL BLOCK UT-106.
5. DISSIMILAR METAL WELD, INCO TO CS, USE CAL BLOCK UT-102.
6. FOR DETAILS OF NOZZLE ASSEMBLY SEE RPV-110.

REFERENCES:

BOVEE & CRAIL ISOMETRICS:

RHR-899-38 REV 8
RHR-899-39-44 REV 9

KEYPLAN

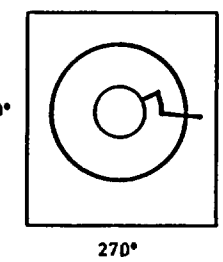

THIS DRAWING IS INTENDED FOR USE IN PRESERVICE AND INSERVICE INSPECTION PROGRAMS ONLY.

5	9-26-83	REVISED AS NOTED. ADDED KEYPLAN & LUGS	K.M.A	[illegible]	[illegible]
4	12-2-81	REVISED AS NOTED	K.M.A	[illegible]	[illegible]
3	11-5-80	CORRECTED ECN & WALL THK FOR 12" RHR (1)-4	K.M.A	[illegible]	[illegible]
2	7-22-79	DELETED ELBOW SEAM WELDS DOWN STREAM FROM [illegible]	[illegible]	[illegible]	[illegible]
1	1-10-79	CAL BLOCK REFERENCE CHANGED (NOTE 4)	[illegible]	[illegible]	[illegible]
0	11-27-78	ISSUED FOR USE	K.M.A	[illegible]	[illegible]
A	8-15-78	ISSUED FOR INFORMATION ONLY	K.M.A	8-15-78	[illegible]
NO	DATE	REVISION	BY	CHKD	APPVD

PIPING SYSTEM	NOM DIA (IN)	SCH	NOM WALL THK	MATERIAL SPECIFICATION	MATL TYPE	CAL BLOCK NO
14" RHR (1)-4	14	80	0.750	SA-106 GR B	CS	UT-14
12" RHR (1)-4	12	80	0.688	SA-106 GR B	CS	UT-17
LUGS	NA	NA	NA	SA 516 GR 70	CS	UT-46

QUALITY CLASS: 1 | ASME CODE CLASS: 1

ENGR: D PORTER | DRAWN: K.M.A | DATE: 12-9-77

WASHINGTON PUBLIC POWER SUPPLY SYSTEM

RICHLAND WASHINGTON 99352

WNP-2
WELD & COMPONENT IDENTIFICATION DIAGRAM

TITLE: RHR/LPCI LOOP "B"

DWG NO: RHR-102 | REV 5

WNP-02
INTERVAL: PSI
PERIOD: NA
OUTAGE:
DRAWING NO. RHR-102

WASHINGTON PUBLIC POWER SUPPLY SYSTEM
PROGRAM PLAN AND SCHEDULE
SYSTEM OR COMPONENT: RHR(1)-4
DESCRIPTION: RHR/LPCI LOOP "B"

DATE 12/14/84

IDENT. NO.	DESCRIPTION	SECT. XI EXAM.	EXAM MTH.	PROCEDURE	CAL. BLOCK	INSERVICE REQ.	INSERVICE SCHEDULED OUTAGE	NOTES
RHR-V-42B-BDY								
	VALVE BODY	B-M-2	VT-1	OCI 7-1				
RHR-V-42B-BLT								
	VALVE BOLTING	B-G-2	VT-1	OCI 7-1				
RHR-V-42B/3/4CAP								
	LEAKOFF CAPPED	B-P	VT-2	N/A				SEE NOTES #6 & #7.
14LPCI(1)B-1								
	VLV TO PIPE	B-J	VOL	UTP-10	UT-14			
			SUR	PTP-1				
RHR-907N								
	PSA-35 SNUBBER	B-K-2	VT-3	303/8.2.17				S/N 6234
			VT-4	303/8.2.17				S/N 6234
RHR-482								
	STRUT	B-K-2	VT-3	303/8.2.17				
14LPCI(1)B-1/3/4V-568								
	TEST CONN	B-P	VT-2	N/A				SEE NOTES #6 & #7.
14LPCI(1)B-2								
	PIPE TO EL	B-J	VOL	UTP-10	UT-14			
			SUR	PTP-1				
14LPCI(1)B-3								
	EL TO PIPE	B-J	VOL	UTP-10	UT-14			
			SUR	PTP-1				
14LPCI(1)B-3/3/4V-709B								
	PRESSURE TAP	B-P	VT-2	N/A				SEE NOTES #6 & #7.
RHR-483								
	SPRING	B-K-2	VT-3	303/8.2.17				
			VT-4	303/8.2.17				
RHR-483(W)								
	4 WELDED LUGS	B-K-1	VOL	UTP-26	UT-14			
14LPCI(1)B-4								
	PIPE TO EL	B-J	VOL	UTP-10	UT-14			

WNP-02
INTERVAL: PSI
PERIOD: NA
OUTAGE:
DRAWING NO. RHR-102

WASHINGTON PUBLIC POWER SUPPLY SYSTEM
PROGRAM PLAN AND SCHEDULE
SYSTEM OR COMPONENT: RHR(1)-4
DESCRIPTION: RHR/LPCI LOOP "B"

DATE 12/14/84

IDENT. NO.	DESCRIPTION	SECT. XI EXAM.	EXAM MTH.	PROCEDURE	CAL. BLOCK	INSERVICE REQ.	INSERVICE SCHEDULED OUTAGE	NOTES
			SUR	PTP-1				
14LPCI(1)B-5	EL TO PEN	B-J	VOL	UTP-10	UT-14			
			SUR	PTP-1				
14LPCI(1)B-6	PEN TO PIPE	B-J	VOL	UTP-10	UT-14			
			SUR	PTP-1				
RHR-523	SPRING	B-K-2	VT-3	303/8.2.17				
			VT-4	303/8.2.17				
14LPCI(1)B-7	PIPE TO PIPE	B-J	VOL	UTP-10	UT-14			
			SUR	PTP-1				
RHR-387	PSA-10 SNUBBER	B-K-2	VT-3	303/8.2.17				S/N 11867
			VT-4	303/8.2.17				S/N 11867
14LPCI(1)B-8	PIPE TO PIPE	B-J	VOL	UTP-10	UT-14			
			SUR	PTP-1				
RHR-388	PSA-10 SNUBBER	B-K-2	VT-3	303/8.2.17				S/N W1486/E1489
			VT-4	303/8.2.17				S/N W1486/E1489
RHR-522	SPRING	B-K-2	VT-3	303/8.2.17				
			VT-4	303/8.2.17				
14LPCI(1)B-9	PIPE TO EL	B-J	VOL	UTP-10	UT-14			

WNP-02
INTERVAL: PSI
PERIOD: NA
OUTAGE:
DRAWING NO. RHR-102

WASHINGTON PUBLIC POWER SUPPLY SYSTEM
PROGRAM PLAN AND SCHEDULE
SYSTEM OR COMPONENT: RHR(1)-4
DESCRIPTION: RHR/LPCI LOOP "B"

DATE 12/14/84

IDENT. NO.	DESCRIPTION	SECT. XI EXAM.	EXAM MTH.	PROCEDURE	CAL. BLOCK	INSERVICE REQ.	INSERVICE SCHEDULED OUTAGE	NOTES
			SUR	PTP-1				
14LPCI(1)B-10								
	EL TO PIPE	B-J	VOL	UTP-10	UT-14			
			SUR	PTP-1				
RHR-389								
	PSA-35 SNUBBER	B-K-2	VT-3	303/8.2.17				S/N 7040
			VT-4	303/8.2.17				S/N 7040
14LPCI(1)B-11								
	PIPE TO EL	B-J	VOL	UTP-10	UT-14			
			SUR	PTP-1				
14LPCI(1)B-12								
	EL TO PIPE	B-J	VOL	UTP-10	UT-14			
			SUR	PTP-1				
14LPCI(1)B-13								
	PIPE TO VALVE	B-J	VOL	UTP-10	UT-14			
			SUR	PTP-1				
RHR-V-41B-BDY								
	VALVE BODY	B-M-2	VT-1	QCI 7-1				
RHR-V-41B-BLT								
	VALVE BOLTING	B-G-2	VT-1	QCI 7-1				
RHR-V-41B/3/4CAP								
	LEAKOFF CAPPED	B-P	VT-2	N/A				SEE NOTES #6 & #7.
14LPCI(1)B-14								
	VALVE TO PIPE	B-J	VOL	UTP-10	UT-14			
			SUR	PTP-1				
14LPCI(1)B-14/1PI(1)-4S								
	PRESSURE TAP	B-P	VT-2	N/A				SEE NOTES #6 & #7.

WNP-02
INTERVAL: PSI
PERIOD: NA
OUTAGE:
DRAWING NO. RHR-102

WASHINGTON PUBLIC POWER SUPPLY SYSTEM
PROGRAM PLAN AND SCHEDULE
SYSTEM OR COMPONENT: RHR(1)-4
DESCRIPTION: RHR/LPCI LOOP "B"

DATE 12/14/84

IDENT. NO.	DESCRIPTION	SECT. XI EXAM.	EXAM MTH.	PROCEDURE	CAL. BLOCK	INSERVICE REQ.	INSERVICE SCHEDULED OUTAGE	NOTES
14LPCI(1)B-14/3/4V-157B								
	TEST CONN	B-P	VT-2	N/A				SEE NOTES #6 & #7.
RHR-390								
	PSA-35 SNUBBER	B-K-2	VT-3	303/8.2.17				S/N 2636
			VT-4	303/8.2.17				S/N 2636
14LPCI(1)B-15								
	PIPE TO VALVE	B-J	VOL	UTP-10	UT-14			
			SUR	PTP-1				
RHR-V-111B-BDY								
	VALVE BODY	B-M-2	VT-1	QCI 7-1				
RHR-V-111B-BLT								
	VALVE BOLTING	B-G-2	VT-1	QCI 7-1				
14LPCI(1)B-16								
	VALVE TO PIPE	B-J	VOL	UTP-10	UT-14			
			SUR	PTP-1				
RHR-521								
	SPRING	B-K-2	VT-3	303/8.2.17				
			VT-4	303/8.2.17				
14LPCI(1)B-16/3/4V-610								
	TEST CONN	B-P	VT-2	N/A				SEE NOTES #6 & #7.
14LPCI(1)B-17								
	PIPE TO EL	B-J	VOL	UTP-10	UT-14			
			SUR	PTP-1				
14LPCI(1)B-18								
	EL TO PIPE	B-J	VOL	UTP-10	UT-14			
			SUR	PTP-1				
PWS-4-1								
	PIPE WHIP	N/A	N/A	N/A				SEE NOTE #1
14LPCI(1)B-19								
	PIPE TO EL	B-J	VOL	UTP-10	UT-14			

WNP-02
INTERVAL: PSI
PERIOD: NA
OUTAGE:
DRAWING NO. RHR-102

WASHINGTON PUBLIC POWER SUPPLY SYSTEM
PROGRAM PLAN AND SCHEDULE
SYSTEM OR COMPONENT: RHR(1)-4
DESCRIPTION: RHR/LPCI LOOP "B"

DATE 12/14/84

IDENT. NO.	DESCRIPTION	SECT. XI EXAM.	EXAM MTH.	PROCEDURE	CAL. BLOCK	INSERVICE REQ.	INSERVICE SCHEDULED OUTAGE	NOTES
14LPCI(1)B-20			SUR	PTP-1				
	EL TO PIPE	B-J	VOL	UTP-10	UT-14			
PWS-4-2			SUR	PTP-1				
	PIPE WHIP	N/A	N/A	N/A				SEE NOTE #1
14LPCI(1)B-21								
	PIPE TO REDUCER	B-J	VOL	UTP-10	UT-14			
12LPCI(1)B-1			SUR	PTP-1				
	REDUCER TO PIPE	B-J	VOL	UTP-10	UT-17			
12LPCI(1)B-2			SUR	PTP-1				
	PIPE TO EL	B-J	VOL	UTP-10	UT-17			
12LPCI(1)B-2LDI			SUR	PTP-1				
	EL SEAM	B-J	VOL	UTP-10	UT-17			
12LPCI(1)B-2LDO			SUR	PTP-1				
	EL SEAM	B-J	VOL	UTP-10	UT-17			
12LPCI(1)B-3LUI			SUR	PTP-1				
	EL SEAM	B-J	VOL	UTP-10	UT-17			
12LPCI(1)B-3LUO			SUR	PTP-1				
	EL SEAM	B-J	VOL	UTP-10	UT-17			
			SUR	PTP-1				

WNP-02
INTERVAL: PSI
PERIOD: NA
OUTAGE:
DRAWING NO. RHR-102

WASHINGTON PUBLIC POWER SUPPLY SYSTEM
PROGRAM PLAN AND SCHEDULE
SYSTEM OR COMPONENT: RHR(1)-4
DESCRIPTION: RHR/LPCI LOOP "B"

IDENT. NO.	DESCRIPTION	SECT. XI EXAM.	EXAM MTH.	PROCEDURE	CAL. BLOCK	INSERVICE REQ.	INSERVICE SCHEDULED OUTAGE	NOTES
12LPCI(1)B-3								
	EL TO PIPE	B-J	VOL	UTP-10	UT-17			
			SUR	PTP-1				
12LPCI(1)B-4								
	PIPE TO SE EXT	B-J	VOL	UTP-10	UT-17			
			SUR	PTP-1				
12LPCI(1)B-5								
	SE EXT TO SE	B-F	VOL	UTP-10	UT-105			DISSIMILAR METAL (CS-INCO)
			SUR	PTP-1				DISSIMILAR METAL (CS-INCO)
12LPCI(1)B-6								
	SE TO NOZZLE	B-F	VOL	UTP-10	UT-102			DISSIMILAR METAL (CS-INCO)
			SUR	PTP-1				DISSIMILAR METAL (CS-INCO)
RHR-PB-102								
	RHR PRES BNDRY	B-P	VT-2	N/A				SEE NOTES #6 & #7.

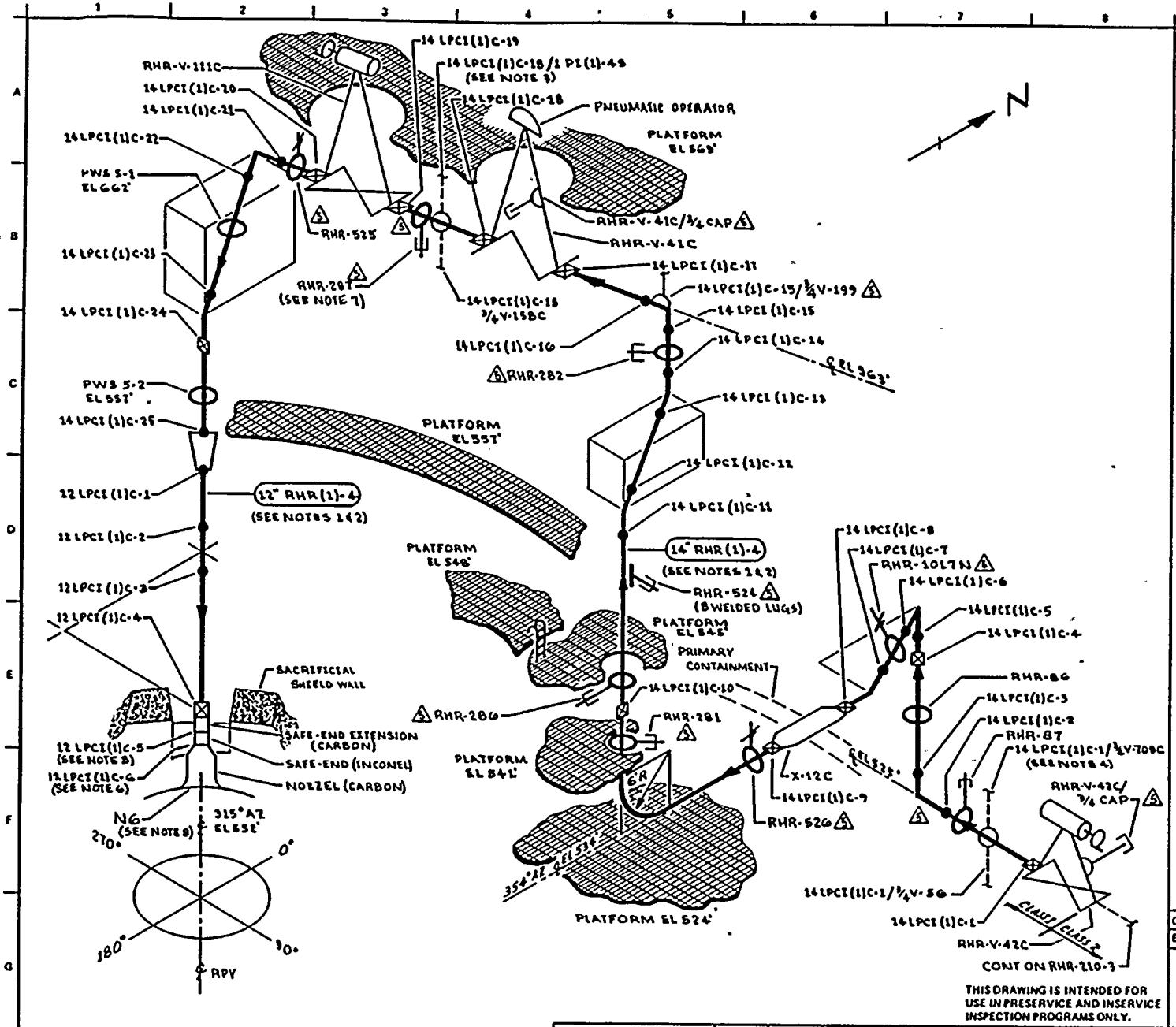

THIS DRAWING IS INTENDED FOR USE IN PRESERVICE AND INSERVICE INSPECTION PROGRAMS ONLY.

NOTES:

1. WELD NUMBERING UTILIZES "LPCI" RATHER THAN "RHR" FOR SYSTEM DESIGNATION FOR CLARITY.
2. ACCESS TO WELDS 12 LPCI(1)C-1 THROUGH 12 LPCI(1)C-6 & 14 LPCI(1)C-24 REQUIRES TEMPORARY SCAFFOLDING.
3. EXTEND VISUAL LEAKAGE EXAM THROUGH CONTAINMENT (X-39C) THROUGH EXCESS FLOW CHECK VALVE TO INSTRUMENT TUBING CONNECTION.
4. EXTEND VISUAL LEAKAGE EXAM THROUGH EXCESS FLOW CHECK VALVE TO INSTRUMENT TUBING CONNECTION.
5. DISSIMILAR METAL WELD, CS TO INCO,- USE CAL BLOCK UT-100.
6. DISSIMILAR METAL WELD, INCO TO CS,- USE CAL BLOCK UT-102.
7. ACCESS TO WELD 14 LPCI(1)C-18 REQUIRES REMOVAL RHR-287.
8. FOR DETAILS OF NOZZLE ASSEMBLY SEE RPV-110

REFERENCES:

BOVEE & CRAIL ISOMETRICS:

RHR-897-19 REV 8
RHR-897-20-24 REV 9

QUALITY CLASS: 1	ASME CODE CLASS: 1	
ENGR: D PORTER	DRAWN: K. McA.	DATE: 12-9-77

WASHINGTON PUBLIC POWER SUPPLY SYSTEM
RICHLAND WASHINGTON 99352

WNP-2
WELD & COMPONENT IDENTIFICATION DIAGRAM

TITLE: RHR/LPCI LOOP "C"

DWG NO: RHR-103 REV 5

NO	DATE	REVISION	BY	CHKD	APPVD
5	9-26-83	REVISED AS NOTED. ADDED KEYPLAN & LUGS	K.L.A	BMR	TRF
4	12-2-81	REVISED AS NOTED	K.L.A	RMY	TRF
3	11-6-80	CORRECTED SCH & WALL THK FOR 12" RHR(1)-4 & NOTED	K.L.A	[illegible]	[illegible]
2	5-7-79	CORRECTED NOTE 7, ADDED NOTE 8 & CALL-OUT EN A-4	K.L.A	[illegible]	[illegible]
1	1-10-79	CAL BLOCK REFERENCE CHANGED (NOTE 5)	K.L.A	[illegible]	[illegible]
0	11-27-78	ISSUED FOR USE	K.L.A	[illegible]	[illegible]
A	3-15-78	ISSUED FOR INFORMATION ONLY	K.L.A	[illegible]	[illegible]

PIPING SYSTEM	NOM DIA (IN)	SCH	NOM WALL THK	MATERIAL SPECIFICATION	MATL TYPE	CAL BLOCK NO
14" RHR(1)-4	14	80	0.750	SA-106 GR B	CS	UT-14
12" RHR(1)-4	12	80	0.688	SA-106 GR B	CS	UT-17
LUGS	NA	NA	NA	SA 516 GR 70	CS	UT-46

WNP-02
INTERVAL: PSI
PERIOD: NA
OUTAGE:
DRAWING NO. RHR-103

WASHINGTON PUBLIC POWER SUPPLY SYSTEM
PROGRAM PLAN AND SCHEDULE
SYSTEM OR COMPONENT: RHR(1)-4
DESCRIPTION: RHR SHUTDN COOL SUCT

IDENT. NO.	DESCRIPTION	SECT. XI EXAM.	EXAM MTH.	PROCEDURE	CAL. BLOCK	INSERVICE REQ.	INSERVICE SCHEDULED OUTAGE	NOTES
RHR-V-42C-BDY								
	VALVE BODY	B-M-2	VT-1	QCI 7-1				
RHR-V-42C-BLT								
	VALVE BOLTING	B-G-2	VT-1	QCI 7-1				
RHR-V-42C/3/4CAP								
	LEAKOFF CAPPED	B-P	VT-2	N/A				SEE NOTES #6 & #7.
14LPCI(1)C-1								
	VLV TO PIPE	B-J	VOL	UTP-10	UT-14			
			SUR	PTP-1				
14LPCI(1)C-1/3/4V-56								
	TEST CONN	B-P	VT-2	N/A				SEE NOTES #6 & #7.
14LPCI(1)C-1/3/4V-709C								
	PRESSURE TAP	B-P	VT-2	N/A				SEE NOTES #6 & #7.
RHR-87								
	PSA-10 SNUBBER	B-K-2	VT-3	303/8.2.17				S/N 773
			VT-4	303/8.2.17				S/N 773
14LPCI(1)C-2								
	PIPE TO EL	B-J	VOL	UTP-10	UT-14			
			SUR	PTP-1				
14LPCI(1)C-3								
	EL TO PIPE	B-J	VOL	UTP-10	UT-14			
			SUR	PTP-1				
14LPCI(1)C-4								
	PIPE TO PIPE	B-J	VOL	UTP-10	UT-14			
			SUR	PTP-1				
14LPCI(1)C-5								
	PIPE TO EL	B-J	VOL	UTP-10	UT-14			
			SUR	PTP-1				
14LPCI(1)C-6								
	EL TO PIPE	B-J	VOL	UTP-10	UT-14			

WNP-02
INTERVAL: PSI
PERIOD: NA
OUTAGE:
DRAWING NO. RHR-103

WASHINGTON PUBLIC POWER SUPPLY SYSTEM
PROGRAM PLAN AND SCHEDULE
SYSTEM OR COMPONENT: RHR(1)-4
DESCRIPTION: RHR SHUTDN COOL SUCT

IDENT. NO.	DESCRIPTION	SECT. XI EXAM.	EXAM MTH.	PROCEDURE	CAL. BLOCK	INSERVICE REQ.	SCHEDULED OUTAGE	NOTES
			SUR	PTP-1				
RHR-1017N								
	SPRING	B-K-2	VT-3	303/8.2.17				
			VT-4	303/8.2.17				
14LPCI(1)C-7								
	PIPE TO EL	B-J	VOL	UTP-10	UT-14			
			SUR	PTP-1				
14LPCI(1)C-8								
	EL TO PEN	B-J	VOL	UTP-10	UT-14			
			SUR	PTP-1				
14LPCI(1)C-9								
	PEN TO PIPE	B-J	VOL	UTP-10	UT-14			
			SUR	PTP-1				
RHR-526								
	SPRING	B-K-2	VT-3	303/8.2.17				
			VT-4	303/8.2.17				
RHR-281								
	PSA-10 SNUBBER	B-K-2	VT-3	303/8.2.17				S/N 11868
			VT-4	303/8.2.17				S/N 11868
14LPCI(1)C-10								
	PIPE TO PIPE	B-J	VOL	UTP-10	UT-14			
			SUR	PTP-1				
RHR-286								
	PSA-10 SN(2)	B-K-2	VT-3	303/8.2.17				S/N 15466/154
			VT-4	303/8.2.17				S/N 15466/154
RHR-524								
	SPRING	B-K-2	VT-3	303/8.2.17				

WNP-02
INTERVAL: PSI
PERIOD: NA
OUTAGE:
DRAWING NO. RHR-103

WASHINGTON PUBLIC POWER SUPPLY SYSTEM
PROGRAM PLAN AND SCHEDULE
SYSTEM OR COMPONENT: RHR(1)-4
DESCRIPTION: RHR SHUTDN COOL SUCT

IDENT. NO.	DESCRIPTION	SECT. XI EXAM.	EXAM MTH.	PROCEDURE	CAL. BLOCK	INSERVICE REQ.	INSERVICE SCHEDULED OUTAGE	NOTES
			VT-4	303/8.2.17				
RHR-524(W)								
	8 WELDED LUGS	B-K-1	VOL	UTP-26	UT-14			
14LPCI(1)C-11								
	PIPE TO EL	B-J	VOL	UTP-10	UT-14			
			SUR	PTP-1				
14LPCI(1)C-12								
	EL TO PIPE	B-J	VOL	UTP-10	UT-14			
			SUR	PTP-1				
14LPCI(1)C-13								
	PIPE TO EL	B-J	VOL	UTP-10	UT-14			
			SUR	PTP-1				
14LPCI(1)C-14								
	EL TO PIPE	B-J	VOL	UTP-10	UT-14			
			SUR	PTP-1				
RHR-282								
	PSA-35 SNUBBER	B-K-2	VT-3	303/8.2.17				S/N 10568
			VT-4	303/8.2.17				S/N 10568
14LPCI(1)C-15								
	PIPE TO EL	B-J	VOL	UTP-10	UT-14			
			SUR	PTP-1				
14LPCI(1)C-15/3/4V-199								
	TEST CONN	B-P	VT-2	N/A				SEE NOTES #6 & #7.
14LPCI(1)C-16								
	EL TO PIPE	B-J	VOL	UTP-10	UT-14			
			SUR	PTP-1				
14LPCI(1)C-17								
	PIPE TO VALVE	B-J	VOL	UTP-10	UT-14			

WNP-02
INTERVAL: PSI
PERIOD: NA
OUTAGE:
DRAWING NO. RHR-103

WASHINGTON PUBLIC POWER SUPPLY SYSTEM
PROGRAM PLAN AND SCHEDULE
SYSTEM OR COMPONENT: RHR(1)-4
DESCRIPTION: RHR SHUTDN COOL SUCT

IDENT. NO.	DESCRIPTION	SECT. XI EXAM.	EXAM MTH.	PROCEDURE	CAL. BLOCK	INSERVICE REQ.	SCHEDULED OUTAGE	NOTES
			SUR	PTP-1				
RHR-V-41C-BDY								
	VALVE BODY	B-M-2	VT-1	QCI 7-1				
RHR-V-41C-BLT								
	VALVE BOLTING	B-G-2	VT-1	QCI 7-1				
RHR-V-41C/3/4CAP								
	LEAKOFF CAPPED	B-P	VT-2	N/A				SEE NOTES #6 & #7.
14LPCI(1)C-18								
	VLV TO PIPE	B-J	VOL	UTP-10	UT-14			
			SUR	PTP-1				
14LPCI(1)C-18/1PI(1)-4S								
	PRESSURE TAP	B-P	VT-2	N/A				SEE NOTES #6 & #7.
14LPCI(1)C-18/3/4V-158C								
	TEST CONN	B-P	VT-2	N/A				SEE NOTES #6 & #7.
RHR-287								
	PSA-35 SNUBBER	B-K-2	VT-3	303/8.2.17				S/N 10567
			VT-4	303/8.2.17				S/N 10567
14LPCI(1)C-19								
	PIPE TO VALVE	B-J	VOL	UTP-10	UT-14			
			SUR	PTP-1				
RHR-V-111C-BDY								
	VALVE BODY	B-M-2	VT-1	QCI 7-1				
RHR-V-111C-BLT								
	VALVE BOLTING	B-G-2	VT-1	QCI 7-1				
14LPCI(1)C-20								
	VALVE TO PIPE	B-J	VOL	UTP-10	UT-14			
			SUR	PTP-1				
RHR-525								
	SPRING	B-K-2	VT-3	303/8.2.17				
			VT-4	303/8.2.17				

WNP-02
INTERVAL: PSI
PERIOD: NA
OUTAGE:
DRAWING NO. RHR-103

WASHINGTON PUBLIC POWER SUPPLY SYSTEM
PROGRAM PLAN AND SCHEDULE
SYSTEM OR COMPONENT: RHR(1)-4
DESCRIPTION: RHR SHUTDN COOL SUCT

IDENT. NO.	DESCRIPTION	SECT. XI EXAM.	EXAM MTH.	PROCEDURE	CAL. BLOCK	INSERVICE REQ.	INSERVICE SCHEDULED OUTAGE	NOTES
14LPCI(1)C-21								
	PIPE TO EL	B-J	VOL	UTP-10	UT-14			
			SUR	PTP-1				
14LPCI(1)C-22								
	EL TO PIPE	B-J	VOL	UTP-10	UT-14			
			SUR	PTP-1				
PWS-5-1								
	PIPE WHIP	N/A	N/A	N/A				SEE NOTE #1
14LPCI(1)C-23								
	PIPE TO EL	B-J	VOL	UTP-10	UT-14			
			SUR	PTP-1				
14LPCI(1)C-24								
	EL TO PIPE	B-J	VOL	UTP-10	UT-14			
			SUR	PTP-1				
PWS-5-2								
	PIPE WHIP	N/A	N/A	N/A				SEE NOTE #1
14LPCI(1)C-25								
	PIPE TO REDUCER	B-J	VOL	UTP-10	UT-14			
			SUR	PTP-1				
12LPCI(1)C-1								
	REDUCER TO PIPE	B-J	VOL	UTP-10	UT-17			
			SUR	PTP-1				
12LPCI(1)C-2								
	PIPE TO EL	B-J	VOL	UTP-10	UT-17			
			SUR	PTP-1				
12LPCI(1)C-3								
	EL TO PIPE	B-J	VOL	UTP-10	UT-17			
			SUR	PTP-1				

WNP-02
INTERVAL: PSI
PERIOD: NA
OUTAGE:
DRAWING NO. RHR-103

WASHINGTON PUBLIC POWER SUPPLY SYSTEM
PROGRAM PLAN AND SCHEDULE
SYSTEM OR COMPONENT: RHR(1)-4
DESCRIPTION: RHR SHUTDN COOL SUCT

DATE 12/14/84

IDENT. NO.	DESCRIPTION	SECT. XI EXAM.	EXAM MTH.	PROCEDURE	CAL. BLOCK	INSERVICE REQ.	INSERVICE SCHEDULED OUTAGE	NOTES
12LPCI(1)C-4								
	PIPE TO SE EXT	B-J	VOL	UTP-10	UT-17			
			SUR	PTP-1				
12LPCI(1)C-5								
	SE EXT TO SE	B-F	VOL	UTP-10	UT-106			DISSIMILAR METAL (CS-INCO)
			SUR	PTP-1				DISSIMILAR METAL (CS-INCO)
12LPCI(1)C-6								
	SE TO NOZZLE	B-F	VOL	UTP-10	UT-102			DISSIMILAR METAL (CS-INCO)
			SUR	PTP-1				DISSIMILAR METAL (CS-INCO)
RHR-PB-103								
	RHR PRES BNDRY	B-P	VT-2	N/A				SEE NOTES #6 & #7.

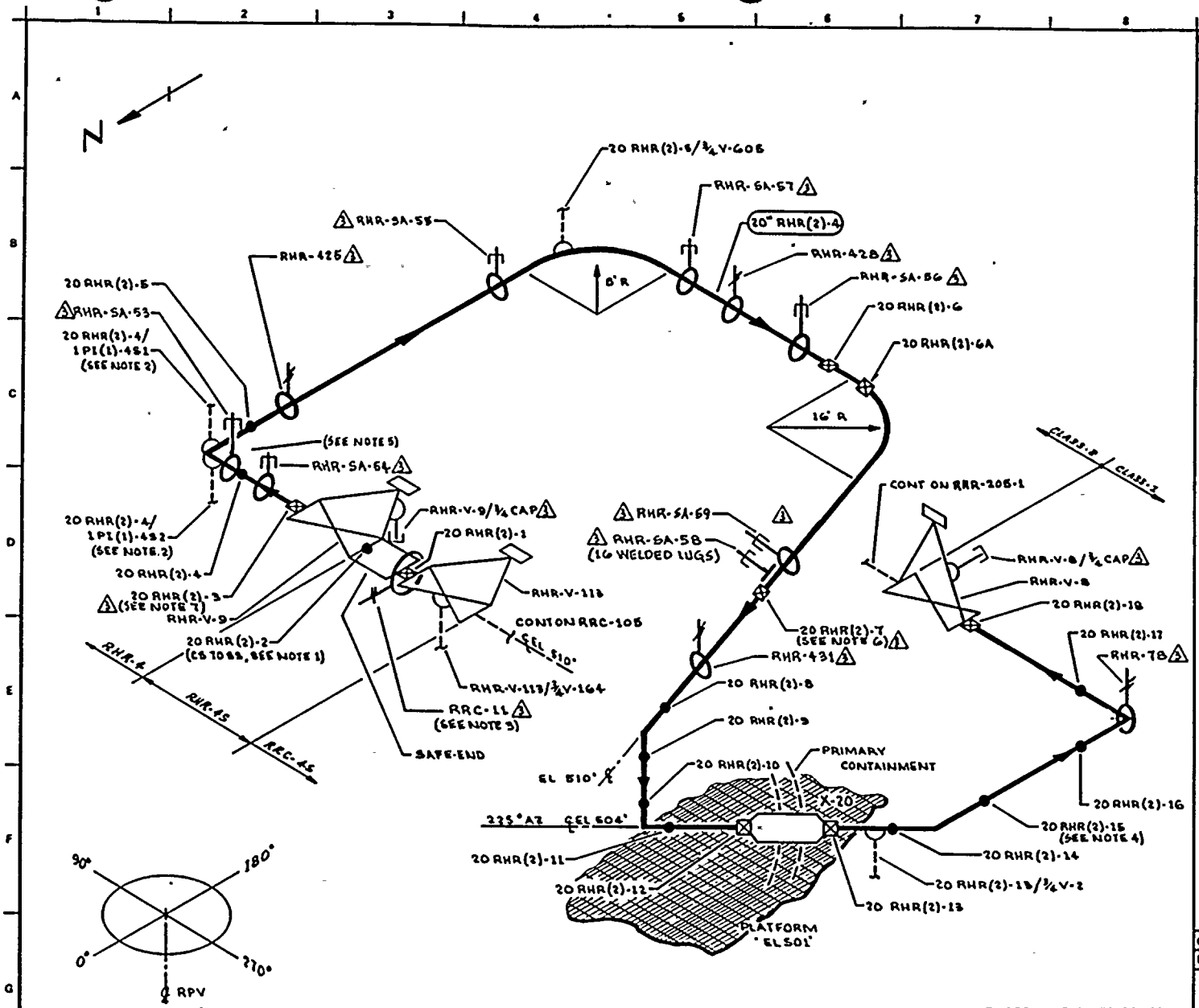

NOTES:

1. DISSIMILAR METAL WELD, CS TO SS USE CAL BLOCK UT-9
2. EXTEND VISUAL LEAKAGE EXAM THROUGH CONTAINMENT (X-37 & F) THROUGH EXCESS FLOW CHECK VALVE TO INSTRUMENT TUBING CONNECTION.
3. △3 ACCESS TO WELDS 20 RHR(2)-1 & 20 RHR(2)-2 REQUIRES REMOVAL OF RRC-11
4. △3 DISTANCE BETWEEN WELDS 20 RHR(2)-15 & 20 RHR(2)-16 IS 4".
5. AN ELECTRICAL JUNCTION BOX IS ABOVE PIPE WITH 4" CLEARANCE.
6. △3 ACCESS TO WELD 20 RHR(2)-7 REQUIRES REMOVAL OF RHR-SA-58.
7. △3 ACCESS TO WELD 20 RHR(2)-3 REQUIRES REMOVAL OF RHR-SA-54.

REFERENCES:

BOVEE & CRAIL ISOMETRICS:

RHR-874-1.3 REV 10
RHR-874-6 REV 10

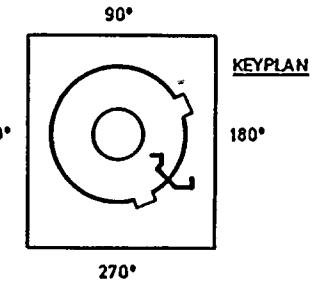

QUALITY CLASS: 1	ASME CODE CLASS: 1	
ENGR: D PORTER	DRAWN: V. M. & A.	DATE: 12-13-77

THIS DRAWING IS INTENDED FOR USE IN PRESERVICE AND INSERVICE INSPECTION PROGRAMS ONLY.

WASHINGTON PUBLIC POWER SUPPLY SYSTEM
RICHLAND, WASHINGTON 99352

NO	DATE	REVISION	BY	CHKD	APPVD
3	9-26-83	REVISED AS NOTED. ADDED KEYPLAN, LUGS			
2	12-2-81	REVISED AS NOTED			
1	8-27-79	ADDED FIELD WELD 20 RHR(2)-6A PER AS BUILT. ZN C-6			
0	11-27-78	ISSUED FOR USE			
A	2-15-78	ISSUED FOR INFORMATION ONLY			

PIPING SYSTEM	NOM DIA (IN)	SCH	NOM WALL THK	MATERIAL SPECIFICATION	MATL TYPE	CAL BLOCK NO
20" RHR(2)-4	20	80	1.031	SA 106 GR B	CS	UT-10
20" RHR(2)-45	20	80	1.031	SA 376 TP 304	SS	UT-9
LUGS	NA	NA	NA	SA 516 GR 70	CS	UT-46
LUGS	NA	NA	NA	SA 240 TP 304	SS	UT-47

WNP-2
WELD & COMPONENT
IDENTIFICATION DIAGRAM

TITLE: RHR SHUTDOWN COOLING SUCTION

DWG NO: RHR-104 REV 3

WNP-02
INTERVAL: PSI
PERIOD: NA
OUTAGE:
DRAWING NO. RHR-104

WASHINGTON PUBLIC POWER SUPPLY SYSTEM
PROGRAM PLAN AND SCHEDULE
SYSTEM OR COMPONENT: RHR(2)-4
DESCRIPTION: RHR SHUTDN COOL SUCT

DATE 12/14/84

IDENT. NO.	DESCRIPTION	SECT. XI EXAM.	EXAM MTH.	PROCEDURE	CAL. BLOCK	INSERVICE REQ.	INSERVICE SCHEDULED OUTAGE	NOTES
RHR-V-113-BDY								
	VALVE BODY	B-M-2	VT-1	QCI 7-1				
RHR-V-113/3/4V-164								
	STEM LEAKOFF	B-P	VT-2	QCI 7-1				SEE NOTES #5 & #6.
20RHR(2)-1								
	VLV TO SE	B-J	VOL	UTP-10	UT-9			
			SUR	PTP-1				
RRC-11								
	SPRING	B-K-2	VT-3	303/8.2.17				
			VT-4	303/8.2.17				
20RHR(2)-2								
	SE TO PIPE	B-F	VOL	UTP-10	UT-9			DISSIMILAR METAL (SS-CS)
			SUR	PTP-1				DISSIMILAR METAL (SS-CS)
RHR-V-9-BDY								
	VALVE BODY	B-M-2	VT-1	QCI 7-1				
RHR-V-9/3/4CAP								
	LEAKOFF CAPPED	B-P	VT-2	N/A				SEE NOTE #6 & #7.
20RHR(2)-3								
	VLV TO PIPE	B-J	VOL	UTP-10	UT-10			
			SUR	PTP-1				
RHR-SA-54								
	PSA-35 SNUBBER	B-K-2	VT-3	303/8.2.17				S/N 6125
			VT-4	303/8.2.17				S/N 6125
20RHR(2)-4								
	PIPE TO EL	B-J	VOL	UTP-10	UT-10			
			SUR	PTP-1				

WNP-02
INTERVAL: PSI
PERIOD: NA
OUTAGE:
DRAWING NO. RHR-104

WASHINGTON PUBLIC POWER SUPPLY SYSTEM
PROGRAM PLAN AND SCHEDULE
SYSTEM OR COMPONENT: RHR(2)-4
DESCRIPTION: RHR SHUTDN COOL SUCT

DATE 12/14/84

IDENT. NO.	DESCRIPTION	SECT. XI EXAM.	EXAM MTH.	PROCEDURE	CAL. BLOCK	INSERVICE REQ.	INSERVICE SCHEDULED OUTAGE	NOTES
RHR-SA-53								
	PSA-10 SNUBBER	B-K-2	VT-3	303/8.2.17				S/N 113
			VT-4	303/8.2.17				S/N 113
20RHR(2)-4/1PI(1)-4S1								
	PRESSURE TAP	B-P	VT-2	N/A				SEE NOTES #6 & #7.
20RHR(2)-4/1PI(1)-4S2								
	PRESSURE TAP	B-P	VT-2	N/A				SEE NOTES #6 & #7.
20RHR(2)-5								
	EL TO PIPE	B-J	VOL	UTP-10	UT-10			
			SUR	PTP-1				
RHR-425								
	SPRING	B-K-2	VT-3	303/8.2.17				
			VT-4	303/8.2.17				
RHR-SA-55								
	PSA-100 SNUBBER	B-K-2	VT-3	303/8.2.17				S/N 1053
			VT-4	303/8.2.17				S/N 1053
20RHR(2)-5/3/4V-605								
	TEST CONN	B-P	VT-2	N/A				SEE NOTES #6 & #7.
RHR-SA-57								
	PSA-35 SNUBBER	B-K-2	VT-3	303/8.2.17				S/N 10567
			VT-4	303/8.2.17				S/N 10567
RHR-428								
	SPRING	B-K-2	VT-3	303/8.2.17				
			VT-4	303/8.2.17				
RHR-SA-56								
	PSA-10 SNUBBER	B-K-2	VT-3	303/8.2.17				S/N 707
			VT-4	303/8.2.17				S/N 707
20RHR(2)-6								
	PIPE TO PIPE	B-J	VOL	UTP-10	UT-10			

WNP-02
INTERVAL: PSI
PERIOD: NA
OUTAGE:
DRAWING NO. RHR-104

WASHINGTON PUBLIC POWER SUPPLY SYSTEM
PROGRAM PLAN AND SCHEDULE
SYSTEM OR COMPONENT: RHR(2)-4
DESCRIPTION: RHR SHUTDN COOL SUCT

DATE 12/14/84

IDENT. NO.	DESCRIPTION	SECT. XI EXAM.	EXAM MTH.	PROCEDURE	CAL. BLOCK	INSERVICE REQ.	INSERVICE SCHEDULED OUTAGE	NOTES
20RHR(2)-6A			SUR	PTP-1				
	PIPE TO PIPE	B-J	VOL	UTP-10	UT-10			
RHR-SA-59			SUR	PTP-1				
	PSA-35 SNUBBER	B-K-2	VT-3	303/8.2.17				S/N 6278
RHR-SA-58(W)			VT-4	303/8.2.17				S/N 6278
	16 WELDED LUGS	B-K-1	VOL	UTP-26	UT-10			.75"Wx2.125"Hx4"L.
RHR-SA-58	PSA-35 SN(2)	B-K-2	VT-3	303/8.2.17				S/N 62156/526
20RHR(2)-7			VT-4	303/8.2.17				S/N 62156/526
	PIPE TO PIPE	B-J	VOL	UTP-10	UT-10			
RHR-431			SUR	PTP-1				
	SPRING	B-K-2	VT-3	303/8.2.17				
20RHR(2)-8			VT-4	303/8.2.17				
	PIPE TO EL	B-J	VOL	UTP-10	UT-10			
20RHR(2)-9			SUR	PTP-1				
	EL TO PIPE	B-J	VOL	UTP-10	UT-10			
20RHR(2)-10			SUR	PTP-1				
	PIPE TO EL	B-J	VOL	UTP-10	UT-10			
			SUR	PTP-1				

WNP-02
INTERVAL: PSI
PERIOD: NA
OUTAGE:
DRAWING NO. RHR-104

WASHINGTON PUBLIC POWER SUPPLY SYSTEM
PROGRAM PLAN AND SCHEDULE
SYSTEM OR COMPONENT: RHR(2)-4
DESCRIPTION: RHR SHUTDN COOL SUCT

DATE 12/14/84

IDENT. NO.	DESCRIPTION	SECT. XI EXAM.	EXAM MTH.	PROCEDURE	CAL. BLOCK	INSERVICE REQ.	INSERVICE SCHEDULED OUTAGE	NOTES
20RHR(2)-11								
	EL TO PIPE	B-J	VOL	UTP-10	UT-10			
			SUR	PTP-1				
20RHR(2)-12								
	PIPE TO PEN	B-J	VOL	UTP-10	UT-10			
			SUR	PTP-1				
20RHR(2)-13								
	PEN TO PIPE	B-J	VOL	UTP-10	UT-10			
			SUR	PTP-1				
20RHR(2)-13/3/4V-2								
	TEST CONN	B-P	VT-2	N/A				SEE NOTES #6 & #7.
20RHR(2)-14								
	PIPE TO EL	B-J	VOL	UTP-10	UT-10			
			SUR	PTP-1				
20RHR(2)-15								
	EL TO PIPE	B-J	VOL	UTP-10	UT-10			FITTING TO FITTING
			SUR	PTP-1				FITTING TO FITTING
20RHR(2)-16								
	PIPE TO EL	B-J	VOL	UTP-10	UT-10			FITTING TO FITTING
			SUR	PTP-1				FITTING TO FITTING
RHR-78								
	SPRING	B-K-2	VT-3	303/8.2.17				
			VT-4	303/8.2.17				
20RHR(2)-17								
	EL TO PIPE	B-J	VOL	UTP-10	UT-10			
			SUR	PTP-1				
20RHR(2)-18								
	PIPE TO VALVE	B-J	VOL	UTP-10	UT-10			

WNP-02
INTERVAL: PSI
PERIOD: NA
OUTAGE:
DRAWING NO. RHR-104

WASHINGTON PUBLIC POWER SUPPLY SYSTEM
PROGRAM PLAN AND SCHEDULE
SYSTEM OR COMPONENT: RHR(2)-4
DESCRIPTION: RHR SHUTDN COOL SUCT

DATE 12/14/84

IDENT. NO.	DESCRIPTION	SECT. XI EXAM.	EXAM MTH.	PROCEDURE	CAL. BLOCK	INSERVICE REQ.	INSERVICE SCHEDULED OUTAGE	NOTES
RHR-V-8-BDY			SUR	PTP-1				
	VALVE BODY	B-M-2	VT-1	QCI 7-1				
RHR-V-8/3/4CAP								
	LEAKOFF CAPPED	B-P	VT-2	N/A				SEE NOTES #6 & #7.
RHR-PB-104								
	RHR PRES BNDRY	B-P	VT-2	N/A				SEE NOTES #6 & #7.

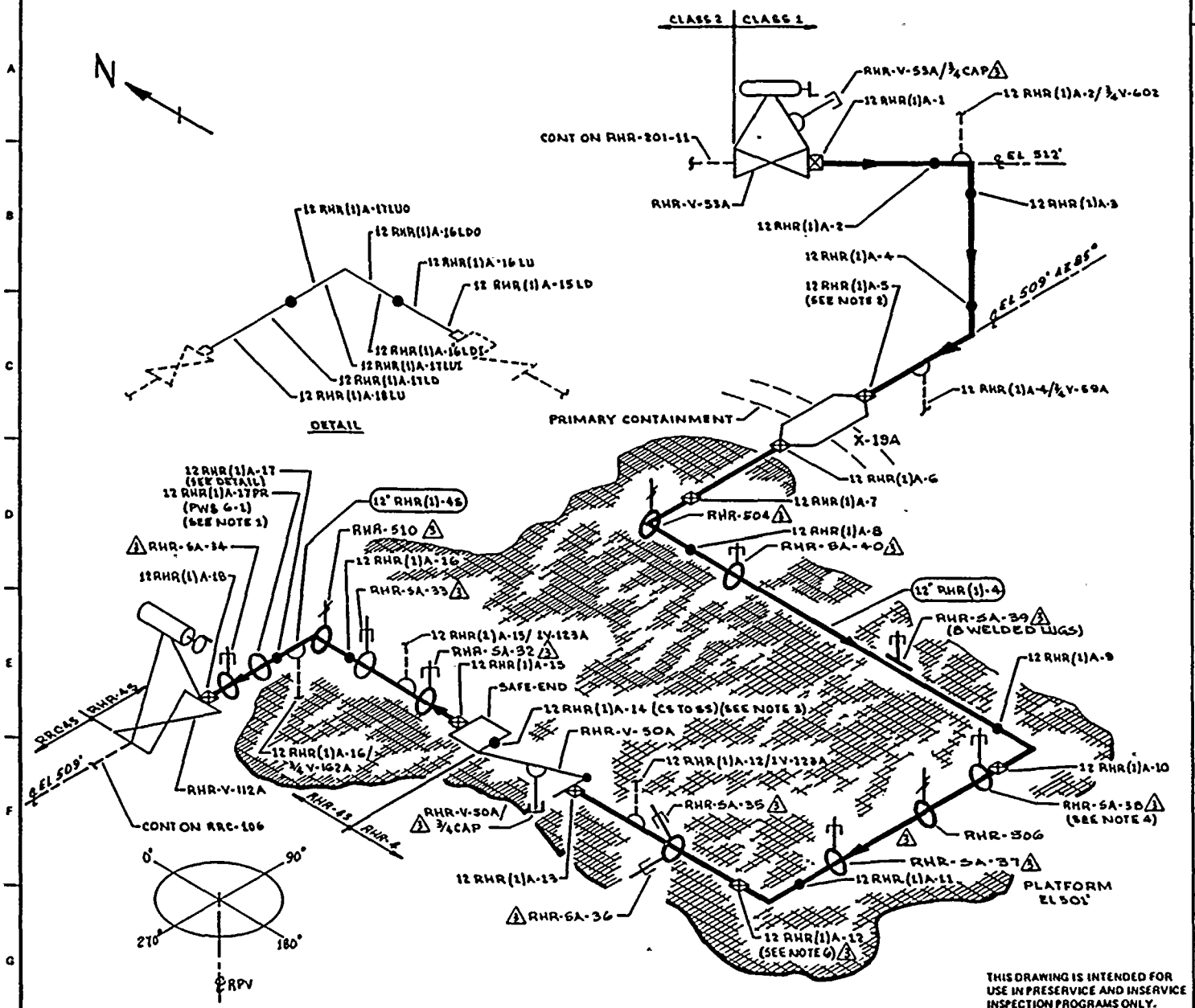

THIS DRAWING IS INTENDED FOR USE IN PRESERVICE AND INSERVICE INSPECTION PROGRAMS ONLY.

NOTES:

1. ACCESS TO WELD 12 RHR(1)A-18 REQUIRES REMOVAL OF 12 RHR(1)A-17PR.
2. WELD 12 RHR(1)A-5 IS FITTING TO FITTING
3. DISSIMILAR METAL WELD, CS TO SS, - USE CAL BLOCK
4. ACCESS TO WELD 12 RHR(1)A-10 REQUIRES REMOVAL OF RHR-SA-38.
5. DELETED
6. CONDUIT 2½" ABOVE WELD 12 RHR(1)A-12.

REFERENCES

BOVEE & CRAIL ISOMETRICS:

RHR-851-14	REV 8
RHR-851-15,16	REV 7
RHR-851-17	REV 8

KEYPLAN

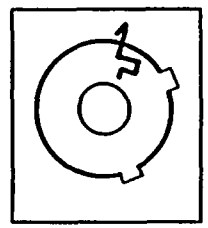

QUALITY CLASS: 1	ASME CODE CLASS: 1	
ENGR: D PORTER	DRAWN: K.McA	DATE: 12-14-77

WASHINGTON PUBLIC POWER SUPPLY SYSTEM
RICHLAND, WASHINGTON 99352

WNP-2
WELD & COMPONENT IDENTIFICATION DIAGRAM

TITLE: SHUTDOWN COOLING RETURN LOOP "A"

DWG NO: RHR-105 REV 3

NO	DATE	REVISION	BY	CHKD	APPVD
3	9-26-83	REVISED AS NOTED. ADDED KEYPLAN	KMcA	[illegible]	TFH
2	12-2-81	REVISED AS NOTED	KMcA	[illegible]	TFH
1	8-30-79	ADDED LONG SEAM DOWNSTREAM FROM WELDS 12 RHR(1)A-15,16 & 17 PER AS BUILT. ADDED DETAIL FOR CLARITY. 2 IN C-3	KMcA	TFH	[illegible]
0	11-22-78	ISSUED FOR USE	KMcA	[illegible]	[illegible]
A	3-15-78	ISSUED FOR INFORMATION ONLY	KMcA	[illegible]	[illegible]

PIPING SYSTEM	NOM DIA (IN)	SCH	NOM WALL THK	MATERIAL SPECIFICATION	MATL TYPE	CAL BLOCK NO
12" RHR (1)-4	12	100	0.844	SA 106 GR B	CS	UT-16
12" RHR (1)-46	12	80	0.688	SA 312 GR B	SS	UT-19

WNP-02
INTERVAL: PSI
PERIOD: NA
OUTAGE:
DRAWING NO. RHR-105

WASHINGTON PUBLIC POWER SUPPLY SYSTEM
PROGRAM PLAN AND SCHEDULE
SYSTEM OR COMPONENT: RHR(1)-4
DESCRIPTION: SHUTDN COOL RET-LP-A

DATE 12/14/84

IDENT. NO.	DESCRIPTION	SECT. XI EXAM.	EXAM MTH.	PROCEDURE	CAL. BLOCK	INSERVICE REQ.	INSERVICE SCHEDULED OUTAGE	NOTES
RHR-V-53A-BDY								
	VALVE BODY	B-M-2	VT-1	OCI 7-1				
RHR-V-53A/3/4CAP								
	LEAKOFF CAPPED	B-P	VT-2	N/A				SEE NOTES #6 & #7.
12RHR(1)A-1								
	VLV TO PIPE	B-J	VOL	UTP-10	UT-16			
			SUR	PTP-1				
12RHR(1)A-2								
	PIPE TO EL	B-J	VOL	UTP-10	UT-16			
			SUR	PTP-1				
12RHR(1)A-2/3/4V-602								
	VENT CONN	B-P	VT-2	N/A				SEE NOTES #6 & #7.
12RHR(1)A-3								
	EL TO PIPE	B-J	VOL	UTP-10	UT-16			
			SUR	PTP-1				
12RHR(1)A-4								
	PIPE TO EL	B-J	VOL	UTP-10	UT-16			
			SUR	PTP-1				
12RHR(1)A-4/3/4V-59A								
	TEST CONN	B-P	VT-2	N/A				SEE NOTES #6 & #7.
12RHR(1)A-5								
	EL TO PEN	B-J	VOL	UTP-10	UT-16			
			SUR	PTP-1				
12RHR(1)A-6								
	PEN TO PIPE	B-J	VOL	UTP-10	UT-16			
			SUR	PTP-1				
12RHR(1)A-7								
	PIPE TO EL	B-J	VOL	UTP-10	UT-16			
			SUR	PTP-1				

WNP-02
INTERVAL: PSI
PERIOD: NA
OUTAGE:
DRAWING NO. RHR-105

WASHINGTON PUBLIC POWER SUPPLY SYSTEM
PROGRAM PLAN AND SCHEDULE
SYSTEM OR COMPONENT: RHR(1)-4
DESCRIPTION: SHUTDN COOL RET LP-A

DATE 12/14/84

IDENT. NO.	DESCRIPTION	SECT. XI EXAM.	EXAM MTH.	PROCEDURE	CAL. BLOCK	INSERVICE REQ.	INSERVICE SCHEDULED OUTAGE	NOTES
RHR-504								
	SPRING	B-K-2	VT-3	303/8.2.17				
			VT-4	303/8.2.17				
12RHR(1)A-8								
	EL TO PIPE	B-J	VOL	UTP-10	UT-16			
			SUR	PTP-1				
RHR-SA-40								
	PSA-10 SNUBBER	B-K-2	VT-3	303/8.2.17				S/N 296
			VT-4	303/8.2.17				S/N 296
RHR-SA-39(W)								
	8 WELDED LUGS	B-K-1	VOL	UTP-26	UT-16			
RHR-SA-39								
	PSA-10 SN(2)	B-K-2	VT-3	303/8.2.17				S/N 4856/4857
			VT-4	303/8.2.17				S/N 4856/4857
12RHR(1)A-9								
	PIPE TO EL	B-J	VOL	UTP-10	UT-16			
			SUR	PTP-1				
12RHR(1)A-10								
	EL TO PIPE	B-J	VOL	UTP-10	UT-16			
			SUR	PTP-1				
RHR-SA-38								
	PSA-10 SNUBBER	B-K-2	VT-3	303/8.2.17				S/N 1449
			VT-4	303/8.2.17				S/N 1449
RHR-506								
	SPRING	B-K-2	VT-3	303/8.2.17				
			VT-4	303/8.2.17				

WNP-02
INTERVAL: PSI
PERIOD: NA
OUTAGE:
DRAWING NO. RHR-105

WASHINGTON PUBLIC POWER SUPPLY SYSTEM
PROGRAM PLAN AND SCHEDULE
SYSTEM OR COMPONENT: RHR(1)-4
DESCRIPTION: SHUTDN COOL RET LP-A

DATE 12/14/84

IDENT. NO.	DESCRIPTION	SECT. XI EXAM.	EXAM MTH.	PROCEDURE	CAL. BLOCK	INSERVICE REQ.	INSERVICE SCHEDULED OUTAGE	NOTES
RHR-SA-37								
	PSA-10 SNUBBER	B-K-2	VT-3	303/8.2.17				S/N 10734
			VT-4	303/8.2.17				S/N 10734
12RHR(1)A-11								
	PIPE TO EL	B-J	VOL	UTP-10	UT-10			
			SUR	PTP-1				
12RHR(1)A-12								
	EL TO PIPE	B-J	VOL	UTP-10	UT-16			
			SUR	PTP-1				
RHR-SA-36								
	PSA-10 SNUBBER	B-K-2	VT-3	303/8.2.17				S/N 10735
			VT-4	303/8.2.17				S/N 10735
RHR-SA-35								
	PSA-10 SNUBBER	B-K-2	VT-3	303/8.2.17				S/N 4855
			VT-4	303/8.2.17				S/N 4855
12RHR(1)A-12/1V-123A								
	BYPASS CONN	B-P	VT-2	N/A				SEE NOTES #6 & #7.
12RHR(1)A-13								
	PIPE TO VALVE	B-J	VOL	UTP-10	UT-16			
			SUR	PTP-1				
RHR-V-50A-BDY								
	VALVE BODY	B-M-2	VT-1	OCI 7-1				
RHR-V-50A-BLT								
	VALVE BOLTING	B-G-2	VT-1	OCI 7-1				
RHR-V-50A/3/4CAP								
	LEAKOFF CAPPED	B-P	VT-2	N/A				SEE NOTES #6 & #7.
12RHR(1)A-14								
	VALVE TO SE	B-F	VOL	UTP-10	UT-19			DISSIMILAR METAL (CS-SS)

WNP-02
INTERVAL: PSI
PERIOD: NA
OUTAGE:
DRAWING NO. RHR-105

WASHINGTON PUBLIC POWER SUPPLY SYSTEM
PROGRAM PLAN AND SCHEDULE
SYSTEM OR COMPONENT: RHR(1)-4S
DESCRIPTION: SHUTDN COOL RET LP-A

IDENT. NO.	DESCRIPTION	SECT. XI EXAM.	EXAM MTH.	PROCEDURE	CAL. BLOCK	INSERVICE REQ.	INSERVICE SCHEDULED OUTAGE	NOTES
			SUR	PTP-1				DISSIMILAR METAL (CS-SS)
12RHR(1)A-15	SE TO PIPE	B-J	VOL	UTP-10	UT-19			
			SUR	PTP-1				
12RHR(1)A-15LD	PIPE SEAM	B-J	VOL	UTP-10	UT-19			
			SUR	PTP-1				
RHR-SA-32	PSA-10 SN(2)	B-K-2	VT-3	303/8.2.17				S/N 13031/993
			VT-4	303/8.2.17				S/N 13031/993
12RHR(1)A-15/1V-123A	BYPASS CONN	B-P	VT-2	N/A				SEE NOTES #6 & #7.
RHR-SA-33	PSA-10 SNUBBER	B-K-2	VT-3	303/8.2.17				S/N 11849
			VT-4	303/8.2.17				S/N 11849
12RHR(1)A-16LU	PIPE SEAM	B-J	VOL	UTP-10	UT-19			
			SUR	PTP-1				
12RHR(1)A-16	PIPE TO EL	B-J	VOL	UTP-10	UT-19			
			SUR	PTP-1				
12RHR(1)A-16LDI	EL SEAM	B-J	VOL	UTP-10	UT-19			
			SUR	PTP-1				
12RHR(1)A-16LDO	EL SEAM	B-J	VOL	UTP-10	UT-19			

WNP-02
INTERVAL: PSI
PERIOD: NA
OUTAGE:
DRAWING NO. RHR-105

WASHINGTON PUBLIC POWER SUPPLY SYSTEM
PROGRAM PLAN AND SCHEDULE
SYSTEM OR COMPONENT: RHR(1)-4S
DESCRIPTION: SHUTDN COOL RET LP-A

DATE 12/14/84

IDENT. NO.	DESCRIPTION	SECT. XI EXAM.	EXAM MTH.	PROCEDURE	CAL. BLOCK	INSERVICE REQ.	SCHEDULED OUTAGE	NOTES
			SUR	PTP-1				
RHR-510								
	SPRING	B-K-2	VT-3	303/8.2.17				
			VT-4	303/8.2.17				
12RHR(1)A-16/3/4V-162A								
	TEST CONN	B-P	VT-2	N/A				SEE NOTES #6 & #7.
12RHR(1)A-17LUI								
	EL SEAM	B-J	VOL	UTP-10	UT-19			
			SUR	PTP-1				
12RHR(1)A-17LUO								
	EL SEAM	B-J	VOL	UTP-10	UT-19			
			SUR	PTP-1				
12RHR(1)A-17								
	EL TO PIPE	B-J	VOL	UTP-10	UT-19			
			SUR	PTP-1				
12RHR(1)A-17LD								
	PIPE SEAM	B-J	VOL	UTP-10	UT-19			
			SUR	PTP-1				
FWS-6-1								
	PIPE WHIP	N/A	N/A	N/A				SEE NOTE #1
RHR-SA-34								
	PSA-35 SN(2)	B-K-2	VT-3	303/8.2.17				S/N 9949/9261
			VT-4	303/8.2.17				S/N 9949/9261
12RHR(1)A-18LU								
	PIPE SEAM	B-J	VOL	UTP-10	UT-19			
			SUR	PTP-1				
12RHR(1)A-18								
	PIPE TO VLV	B-J	VOL	UTP-10	UT-19			

WNP-02
INTERVAL: PSI
PERIOD: NA
OUTAGE:
DRAWING NO. RHR-105

WASHINGTON PUBLIC POWER SUPPLY SYSTEM
PROGRAM PLAN AND SCHEDULE
SYSTEM OR COMPONENT: RHR(1)-4S
DESCRIPTION: SHUTDN COOL RET LP-A

DATE 12/14/84

IDENT. NO.	DESCRIPTION	SECT. XI EXAM.	EXAM MTH.	PROCEDURE	CAL. BLOCK	INSERVICE REQ.	SCHEDULED OUTAGE	NOTES
			SUR	PTP-1				
RHR-V-112A-BDY	VALVE BODY	B-M-2	VT-1	QCI 7-1				
RHR-V-112A-BLT	VALVE BOLTING	B-G-2	VT-1	QCI 7-1				
RHR-PB-105	RHR PRES BNDRY	B-P	VT-2	N/A				SEE NOTES #6 & #7.

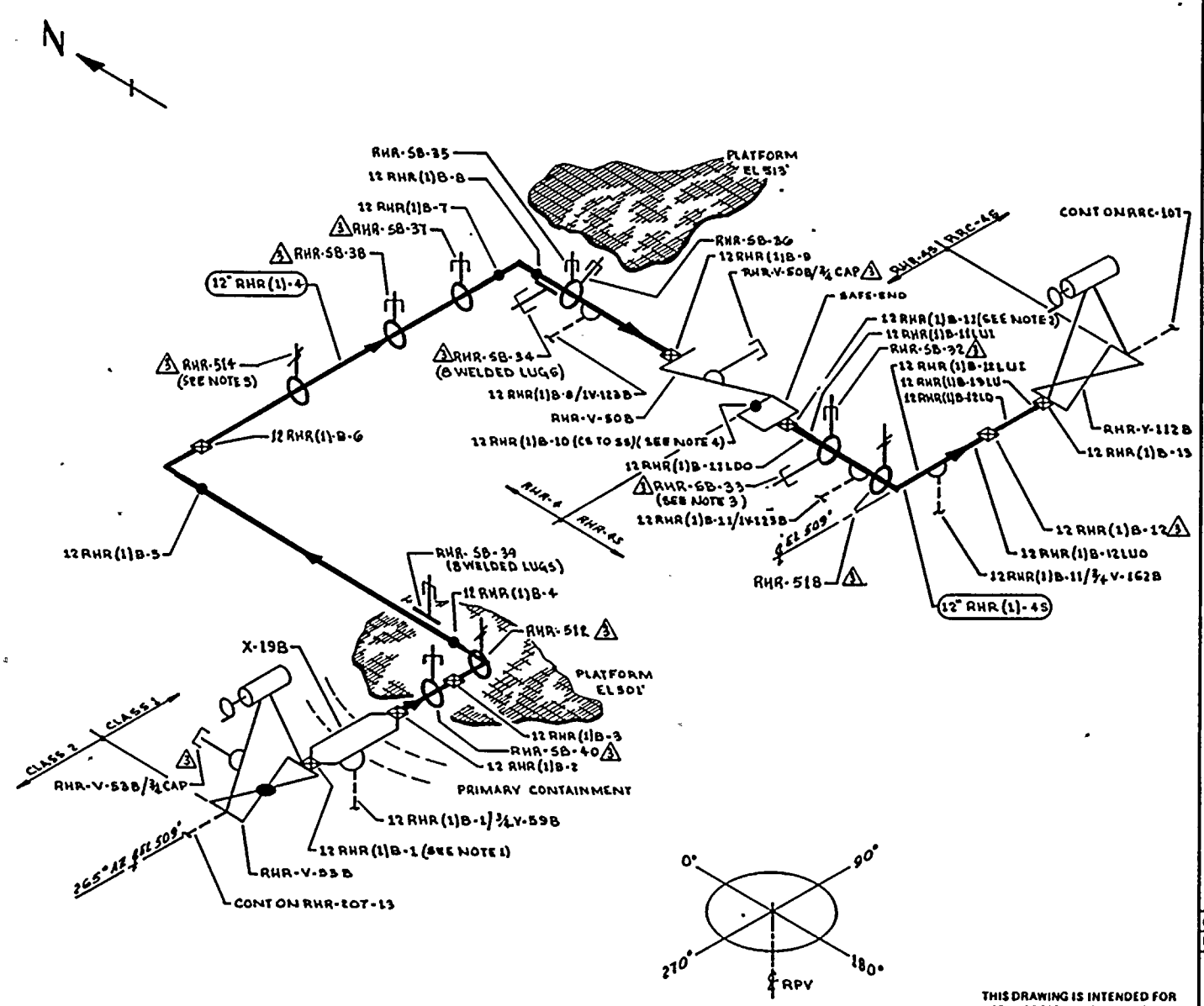

NOTES:

1. WELD Nº 12 RHR(1)B-1 IS FITTING TO FITTING.
2. WELD Nº 12 RHR(1)B-11 IS FITTING TO FITTING.
3. (3) ACCESS TO WELD Nº 12 RHR(1)B-11 REQUIRES REMOVAL OF RHR-SB-32 & RHR-SB-33.
4. DISSIMILAR METAL WELD, CS TO SS, USE CAL BLOCK UT-19.
5. (3) ACCESS TO WELD Nº 12 RHR(1)B-6 REQUIRES REMOVAL OF RHR-514.

REFERENCES:

BOVEE & CRAIL ISOMETRICS:

RHR-899-46-47 REV 8
RHR-899-48 REV 8

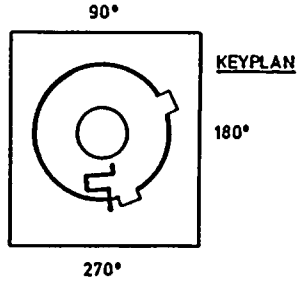

QUALITY CLASS: 1	ASME CODE CLASS: 1	
ENGR: D PORTER	DRAWN: K.M.A.	DATE: 12-15-77

WASHINGTON PUBLIC POWER SUPPLY SYSTEM
RICHLAND, WASHINGTON 99352

THIS DRAWING IS INTENDED FOR USE IN PRESERVICE AND INSERVICE INSPECTION PROGRAMS ONLY.

NO	DATE	REVISION	BY	CHKD	APPVD
3	4-26-83	REVISED AS NOTED. ADDED KEYPLAN, LUGS	K.M.A.	DP	TFH
2	12-2-81	REVISED AS NOTED	K.M.A.	.	TFH
1	1-17-79	ADDED LONG SEAM DOWN STREAM FROM WELD 12 RHR(1)B-12 PER AS BUILT, FAI C-7	K.M.A.	[illegible]	[illegible]
0	11-22-78	ISSUED FOR USE	K.M.A.	DP	[illegible]
A	2-15-78	ISSUED FOR INFORMATION ONLY	K.M.A.	[illegible]	[illegible]

PIPING SYSTEM	NOM DIA (IN)	SCH	NOM WALL THK	MATERIAL SPECIFICATION	MATL TYPE	CAL BLOCK NO
12" RHR(1)-4	12	100	0.844	SA 106 GR B	CS	UT-16
12" RHR(1)-45	12	80	0.688	SA 312 TP 304	SS	UT-19
LUGS	NA	NA	NA	SA 516 GR 70	CS	UT-46
LUGS	NA	NA	NA	SA 240 TP 304	SS	UT-47

WNP-2
WELD & COMPONENT IDENTIFICATION DIAGRAM

TITLE: SHUTDOWN COOLING RETURN LOOP "B"

DWG NO: RHR-106 REV 3

WNP-02
INTERVAL: PSI
PERIOD: NA
OUTAGE:
DRAWING NO. RHR-106

WASHINGTON PUBLIC POWER SUPPLY SYSTEM
PROGRAM PLAN AND SCHEDULE
SYSTEM OR COMPONENT: RHR(1)-4
DESCRIPTION: SHUTDN COOL RET LP-B

DATE 12/14/84

IDENT. NO.	DESCRIPTION	SECT. XI EXAM.	EXAM MTH.	PROCEDURE	CAL. BLOCK	INSERVICE REQ.	SCHEDULED OUTAGE	NOTES
RHR-V-53B-BDY								
	VALVE BODY	B-M-2	VT-1	OCI 7-1				
RHR-V-53B/3/4CAP								
	LEAKOFF CAPPED	B-P	VT-2	N/A				SEE NOTES #6 & #7.
12RHR(1)B-1								
	VLV TO PEN	B-J	VOL	UTP-10	UT-16			
			SUR	PTP-1				
12RHR(1)B-1/3/4V-59B								
	TEST CONN	B-P	VT-2	N/A				SEE NOTES #6 & #7.
12RHR(1)B-2								
	PEN TO PIPE	B-J	VOL	UTP-10	UT-16			
			SUR	PTP-1				
RHR-SB-40								
	PSA-10 SNUBBER	B-K-2	VT-3	303/8.2.17				S/N 4873
			VT-4	303/8.2.17				S/N 4873
12RHR(1)B-3								
	PIPE TO EL	B-J	VOL	UTP-10	UT-16			
			SUR	PTP-1				
RHR-512								
	SPRING	B-K-2	VT-3	303/8.2.17				
			VT-4	303/8.2.17				
12RHR(1)B-4								
	EL TO PIPE	B-J	VOL	UTP-10	UT-16			
			SUR	PTP-1				
RHR-SB-39(W)								
	8 WELDED LUGS	B-K-1	VOL	UTP-26	UT-16			
RHR-SB-39								
	PSA-10 SN(2)	B-K-2	VT-3	303/8.2.17				S/N 4863

WNP-02
INTERVAL: PSI
PERIOD: NA
OUTAGE:
DRAWING NO. RHR-106

WASHINGTON PUBLIC POWER SUPPLY SYSTEM
PROGRAM PLAN AND SCHEDULE
SYSTEM OR COMPONENT: RHR(1)-4
DESCRIPTION: SHUTDN COOL RET LP-B

IDENT. NO.	DESCRIPTION	SECT. XI EXAM.	EXAM MTH.	PROCEDURE	CAL. BLOCK	INSERVICE REQ.	INSERVICE SCHEDULED OUTAGE	NOTES
			VT-4	303/8.2.17				S/N 4863
12RHR(1)B-5	PIPE TO EL	B-J	VOL	UTP-10	UT-16			
			SUR	PTP-1				
12RHR(1)B-6	EL TO PIPE	B-J	VOL	UTP-10	UT-16			
			SUR	PTP-1				
RHR-514	SPRING	B-K-2	VT-3	303/8.2.17				
			VT-4	303/8.2.17				
RHR-SB-38	PSA-10 SNUBBER	B-K-2	VT-3	303/8.2.17				S/N 705
			VT-4	303/8.2.17				S/N 705
RHR-SB-37	PSA-10 SNUBBER	B-K-2	VT-3	303/8.2.17				S/N 114
			VT-4	303/8.2.17				S/N 114
12RHR(1)B-7	PIPE TO EL	B-J	VOL	UTP-10	UT-16			
			SUR	PTP-1				
12RHR(1)B-8	EL TO PIPE	B-J	VOL	UTP-10	UT-16			
			SUR	PTP-1				
RHR-SB-34(W)	8 WELDED LUGS	B-K-1	VOL	UTP-26	UT-16			
RHR-SB-34	PSA-10 SN(2)	B-K-2	VT-3	303/8.2.17				S/N 13060/130

WNP-02
INTERVAL: PSI
PERIOD: NA
OUTAGE:
DRAWING NO. RHR-106

WASHINGTON PUBLIC POWER SUPPLY SYSTEM
PROGRAM PLAN AND SCHEDULE
SYSTEM OR COMPONENT: RHR(1)-4
DESCRIPTION: SHUTDN COOL RET LP-B

DATE 12/14/84

IDENT. NO.	DESCRIPTION	SECT. XI EXAM.	EXAM MTH.	PROCEDURE	CAL. BLOCK	INSERVICE REQ.	INSERVICE SCHEDULED OUTAGE	NOTES
			VT-4	303/8.2.17				S/N 13060/130
RHR-SB-35								
	PSA-10 SNUBBER	B-K-2	VT-3	303/8.2.17				S/N 11869
			VT-4	303/8.2.17				S/N 11869
RHR-SB-36								
	PSA-10 SNUBBER	B-K-2	VT-3	303/8.2.17				S/N 691
			VT-4	303/8.2.17				S/N 691
12RHR(1)B-8/1V-123B								
	BYPASS CONN	B-P	VT-2	N/A				SEE NOTES #6 & #7.
12RHR(1)B-9								
	PIPE TO VLV	B-J	VOL	UTP-10	UT-16			
			SUR	PTP-1				
RHR-V-50B-BDY								
	VALVE BODY	B-M-2	VT-1	OCI 7-1				
RHR-V-50B-BLT								
	VALVE BOLTING	B-G-2	VT-1	OCI 7-1				
RHR-V-50B/3/4CAP								
	LEAKOFF CAPPED	B-P	VT-2	N/A				SEE NOTES #6 & #7.
12RHR(1)B-10								
	VLV TO SE	B-F	VOL	UTP-10	UT-19			
			SUR	PTP-1				
12RHR(1)B-11								
	SE TO PIPE	B-J	VOL	UTP-10	UT-19			
			SUR	PTP-1				
12RHR(1)B-11LDI								
	EL SEAM	B-J	VOL	UTP-10	UT-19			
			SUR	PTP-1				
12RHR(1)B-11LDO								
	EL SEAM	B-J	VOL	UTP-10	UT-19			

WNP-02
INTERVAL: PSI
PERIOD: NA
OUTAGE:
DRAWING NO. RHR-106

WASHINGTON PUBLIC POWER SUPPLY SYSTEM
PROGRAM PLAN AND SCHEDULE
SYSTEM OR COMPONENT: RHR(1)-4S
DESCRIPTION: SHUTDN COOL RET LP-B

IDENT. NO.	DESCRIPTION	SECT. XI EXAM.	EXAM MTH.	PROCEDURE	CAL. BLOCK	INSERVICE REQ.	INSERVICE SCHEDULED OUTAGE	NOTES
			SUR	PTP-1				
RHR-SB-32								
	PSA-10 SNUBBER	B-K-2	VT-3	303/8.2.17				S/N 11862
			VT-4	303/8.2.17				S/N 11862
RHR-SB-33								
	PSA-10 SNUBBER	B-K-2	VT-3	303/8.2.17				S/N 11851
			VT-4	303/8.2.17				S/N 11851
12RHR(1)B-11/1V-123B								
	BYPASS CONN	B-P	VT-2	N/A				SEE NOTES #6 & #7.
RHR-518								
	SPRING	B-K-2	VT-3	303/8.2.17				
			VT-4	303/8.2.17				
12RHR(1)B-11/3/4V-162B								
	TEST CONN	B-P	VT-2	N/A				SEE NOTES #6 & #7.
12RHR(1)B-12LUI								
	EL SEAM	B-J	VOL	UTP-10	UT-19			
			SUR	PTP-1				
12RHR(1)B-12LUO								
	EL SEAM	B-J	VOL	UTP-10	UT-19			
			SUR	PTP-1				
12RHR(1)B-12								
	EL TO PIPE	B-J	VOL	QCI 6-13	UT-19			
			SUR	QCI 3-3				
12RHR(1)B-12LD								
	PIPE SEAM	B-J	VOL	UTP-10	UT-19			
			SUR	PTP-1				

WNP-02
INTERVAL: PSI
PERIOD: NA
OUTAGE:
DRAWING NO. RHR-106

WASHINGTON PUBLIC POWER SUPPLY SYSTEM
PROGRAM PLAN AND SCHEDULE
SYSTEM OR COMPONENT: RHR(1)-4S
DESCRIPTION: SHUTDN COOL RET LP-B

IDENT. NO.	DESCRIPTION	SECT. XI EXAM.	EXAM MTH.	PROCEDURE	CAL. BLOCK	INSERVICE REQ.	INSERVICE SCHEDULED OUTAGE	NOTES
PWS-7-1								
12RHR(1)B-13LU	PIPE WHIP	N/A	N/A	N/A				SEE NOTE #1
	PIPE SEAM	B-J	VOL	UTP-10	UT-19			
			SUR	PTP-1				
12RHR(1)B-13	PIPE TO VLV	B-J	VOL	UTP-10	UT-19			
			SUR	PTP-1				
RHR-V-112B-BDY	VALVE BODY	B-M-2	VT-1	QCI 7-1				
RHR-V-112B-BLT	VALVE BOLTING	B-G-2	VT-1	QCI 7-1				
RHR-PB-106	RHR PRES BNDRY	B-P	VT-2	N/A				SEE NOTES #6 & #7.

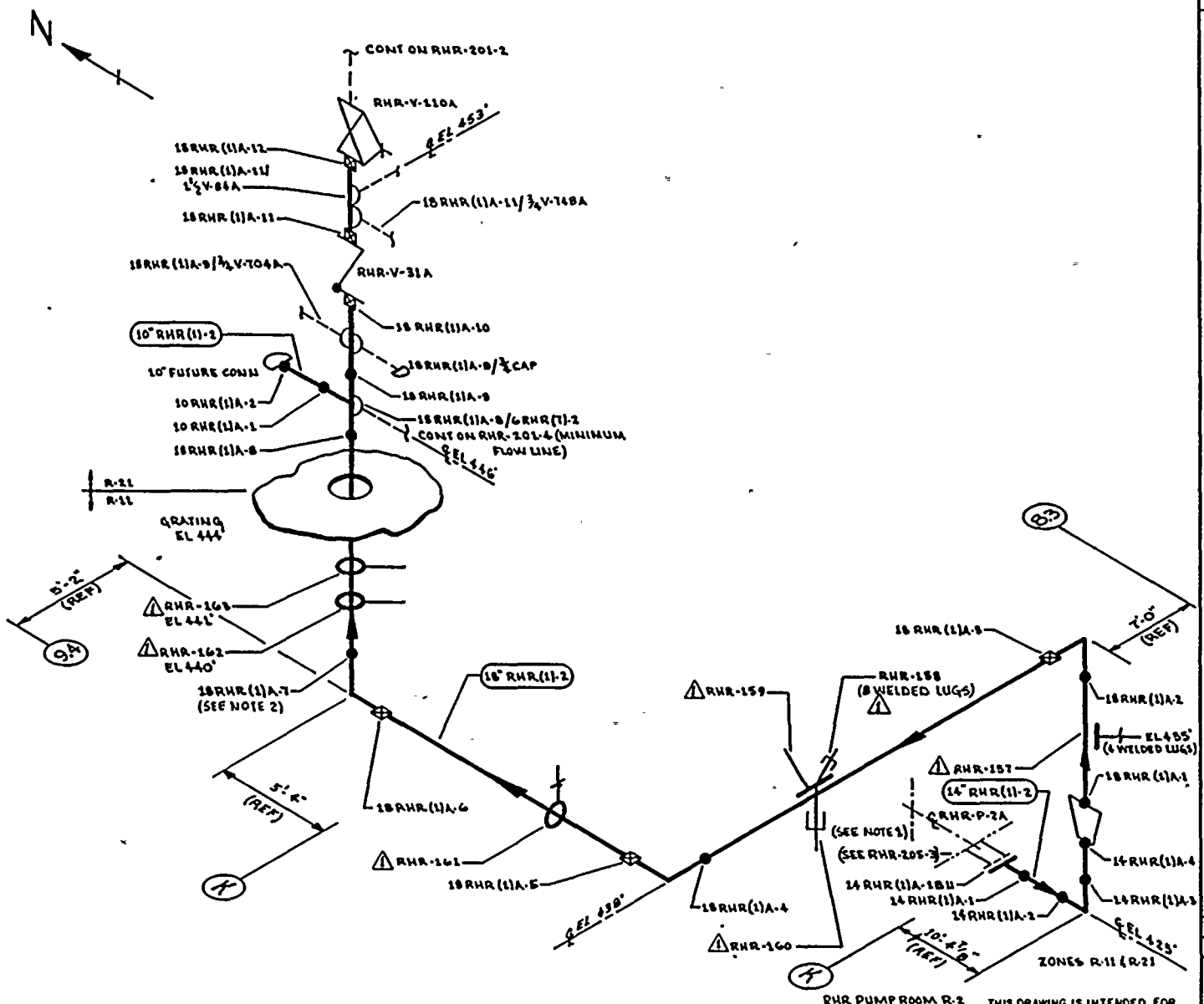

NOTES:

1. EXTEND VISUAL LEAKAGE EXAM OF RHR-PUMP-2A VENTS & DRAINS TO OUTERMOST NORMALLY CLOSED VALVE.
2. ACCESS TO 18RHR(1)A-7 REQUIRES REMOVAL OF RHR-162.
3. SCAFFOLDING IS REQUIRED.

REFERENCES:

BOVER & CRAIL ISOMETRICS

RHR-867-1.4 REV 7
RHR-867-5.7 REV 6

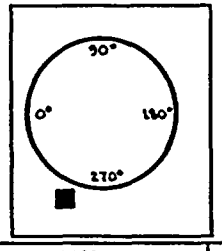

KEY PLAN

THIS DRAWING IS INTENDED FOR USE IN PRESERVICE AND INSERVICE INSPECTION PROGRAMS ONLY.

PIPING SYSTEM	NOM DIA (IN)	SCH	NOM WALL THK	MATERIAL SPECIFICATION	MATL TYPE	CAL BLOCK NO
14" RHR (1)-2	14	STD	0.375	SA 106 GR B	CS	NA
18" RHR (1)-2	18	20	0.438	SA 106 GR B	CS	NA
10" RHR (1)-2	10	40	0.365	SA 106 GR B	CS	NA

NO	DATE	REVISION	BY	CHKD	APPVD
2	9-26-83	ADDED ¾" SOL, NOTES 2 & 3. RHR-162 & 163 HAW RVGID.	K-M&A	[illegible]	[illegible]
1	12-2-81	REVISED AS NOTED	K-M&A	[illegible]	[illegible]
0	12-21-78	ISSUED FOR USE	K-M&A	[illegible]	[illegible]
A	5-11-78	ISSUED FOR INFORMATION ONLY	K-M&A	CAK	[illegible]

QUALITY CLASS: 1 | ASME CODE CLASS: 2

ENGR: GA KUGLER | DRAWN: K-M&A | DATE: 5-1-78

WASHINGTON PUBLIC POWER SUPPLY SYSTEM
RICHLAND WASHINGTON 99352

WNP-2
WELD & COMPONENT IDENTIFICATION DIAGRAM

TITLE: RHR LOOP A SUPPLY TO RHR-HX-1A

DWG NO: RHR-201-1 | REV 2

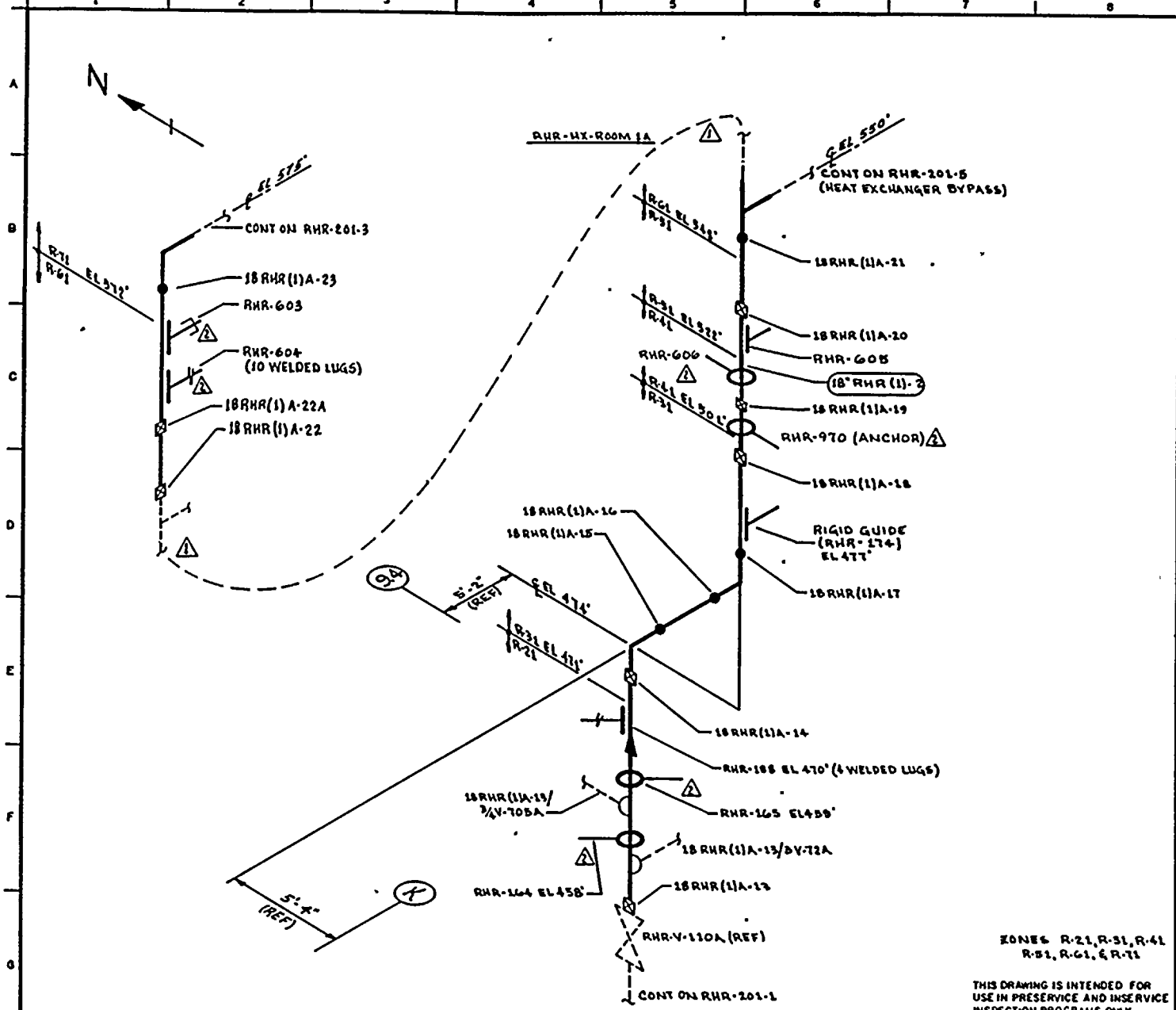

ZONES R-21, R-31, R-41 R-51, R-61, & R-71

THIS DRAWING IS INTENDED FOR USE IN PRESERVICE AND INSERVICE INSPECTION PROGRAMS ONLY.

NOTES:

REFERENCES:

BOVEE & CRAIL ISOMETRICS

RHR-867-8-7 REV 6
RHR-867-8-12 REV 5

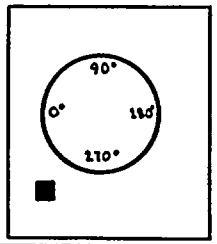

KEY PLAN

QUALITY CLASS: 1 | ASME CODE CLASS: 2

ENGR: G.A. KUGLER | DRAWN: K.M.A. | DATE: 8-1-78

WASHINGTON PUBLIC POWER SUPPLY SYSTEM
RICHLAND, WASHINGTON 99352

PIPING SYSTEM	NOM DIA (IN)	SCH	NOM WALL THK	MATERIAL SPECIFICATION	MATL TYPE	CAL BLOCK NO
18" RHR(1)-2	18	80	0.438	SA 106 GR B	CS	NA

WNP-2
WELD & COMPONENT IDENTIFICATION DIAGRAM

TITLE: RHR LOOP A SUPPLY TO RHR-HX-1A

DWG NO: RHR-201-2 | REV 2

NO	DATE	REVISION	BY	CHKD	APPVD
2	9-26-83	REVISED AS NOTED	KMcA	[illegible]	TFH
1	12-28-81	REVISED AS NOTED	KMcA	[illegible]	TFH
0	12-22-78	ISSUED FOR USE	KMcA	[illegible]	[illegible]
A	8-16-78	ISSUED FOR INFORMATION ONLY	KMcA	GAK	[illegible]

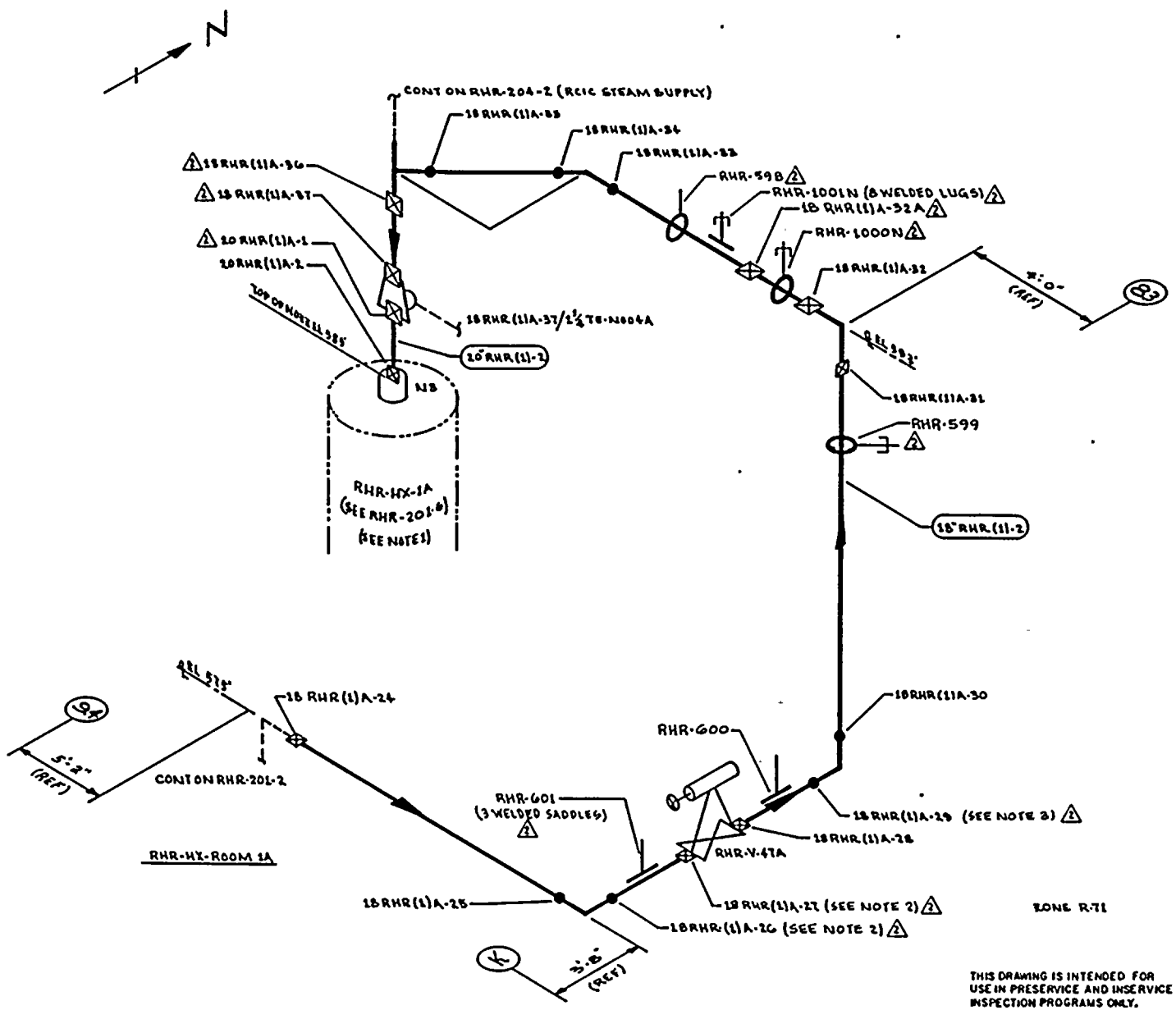

NOTES:

1. EXTEND VISUAL LEAKAGE EXAM OF RHR-HX-1A VENTS & DRAINS THROUGH OUTERMOST NORMALLY CLOSED ISOLATION VALVE, RELIEF VALVE OR TRANSITION TO INSTRUMENT TUBING.
2. RHR-601 - WELDED SADDLE 1" FROM WELD 18RHR(1)A-26 CENTERLINE & 2" FROM WELD 18RHR(1)A-27 CENTERLINE.
3. RHR-600 - 4" DIA PIPE WELDED TO LINE, 1½" FROM WELD 18RHR(1)A-29 CENTERLINE AT 90° & 270°.

REFERENCES:

BOVEE & CRAIL ISOMETRIC

RHR-BGT-13.18 REV 5

KEY PLAN

90° 0° 180° 270°

THIS DRAWING IS INTENDED FOR USE IN PRESERVICE AND INSERVICE INSPECTION PROGRAMS ONLY.

PIPING SYSTEM	NOM DIA (IN)	SCH	NOM WALL THK	MATERIAL SPECIFICATION	MATL TYPE	CAL BLOCK NO
18" RHR (1)-2	18	30	0.438	SA 106 GR B	C6	NA
20" RHR (1)-2	20	30	0.500	SA 106 GR B	C6	NA

NO	DATE	REVISION	BY	CHKD	APPVD
2	9-26-83	REVISED AS NOTED	KMcA	[illegible]	[illegible]
1	12-2-81	REVISED AS NOTED	KMcA	[illegible]	[illegible]
0	12-22-78	ISSUED FOR USE	KMcA	[illegible]	[illegible]
A	5-26-78	ISSUED FOR INFORMATION ONLY	KMcA	[illegible]	[illegible]

QUALITY CLASS: 1 | ASME CODE CLASS: 2

ENGR: GA KUGLER | DRAWN: K.McA | DATE: 5-2-78

WASHINGTON PUBLIC POWER SUPPLY SYSTEM

RICHLAND, WASHINGTON 99352

WNP-2

WELD & COMPONENT IDENTIFICATION DIAGRAM

TITLE: RHR LOOP A SUPPLY TO RHR-HX-1A

DWG NO: RHR-201-3 | REV 2

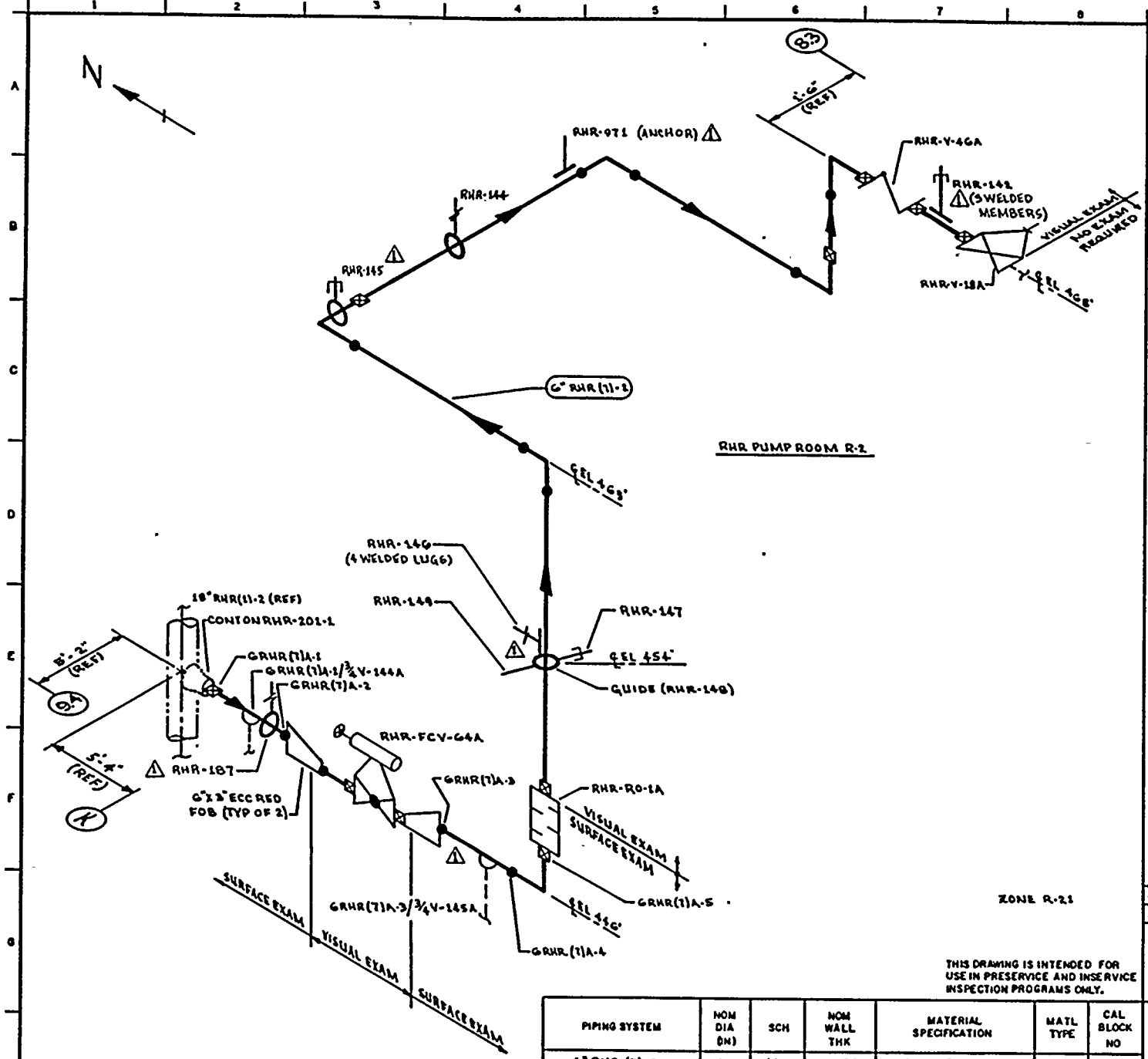

NOTES:

1. PORTIONS OF THIS DRAWING IDENTIFY PIPING & COMPONENTS SUBJECT ONLY TO A VISUAL EXAM FOR EVIDENCE OF LEAKAGE DURING SYSTEM HYDRO OR OPERABILITY TESTS. TESTS ARE TO BE CONDUCTED PER THE REQUIREMENTS OF ASME SECTION XI, PARAGRAPH IWA-5000.
2. △1 SCAFFOLDING IS REQUIRED.

REFERENCES:

BOVEE & CRAIL ISOMETRICS

RHR-BC7-16.19 REV 5
RHR-BC7-20.22 REV 6

KEY PLAN

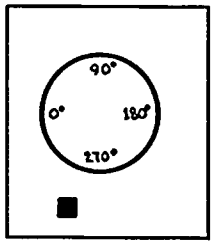

THIS DRAWING IS INTENDED FOR USE IN PRESERVICE AND INSERVICE INSPECTION PROGRAMS ONLY.

PIPING SYSTEM	NOM DIA (IN)	SCH	NOM WALL THK	MATERIAL SPECIFICATION	MATL TYPE	CAL BLOCK NO
6" RHR (7)-2	6	40	0.280	SA-106 GRB	CS	NA

NO	DATE	REVISION	BY	CHKD	APPVD
1	10-13-83	REVISED AS NOTED			
0	3-28-78	ISSUED FOR USE			
A	5-26-78	ISSUED FOR INFORMATION ONLY			

QUALITY CLASS: 1 | ASME CODE CLASS: 2

ENGR: G.A. KUGLER | DRAWN: | DATE: 5-2-78

WASHINGTON PUBLIC POWER SUPPLY SYSTEM
RICHLAND, WASHINGTON 99352

WNP-2
WELD & COMPONENT IDENTIFICATION DIAGRAM

TITLE: RHR LOOP A MINIMUM FLOW LINE TO SUPPRESSION POOL

DWG NO: RHR-201-4 | REV 1

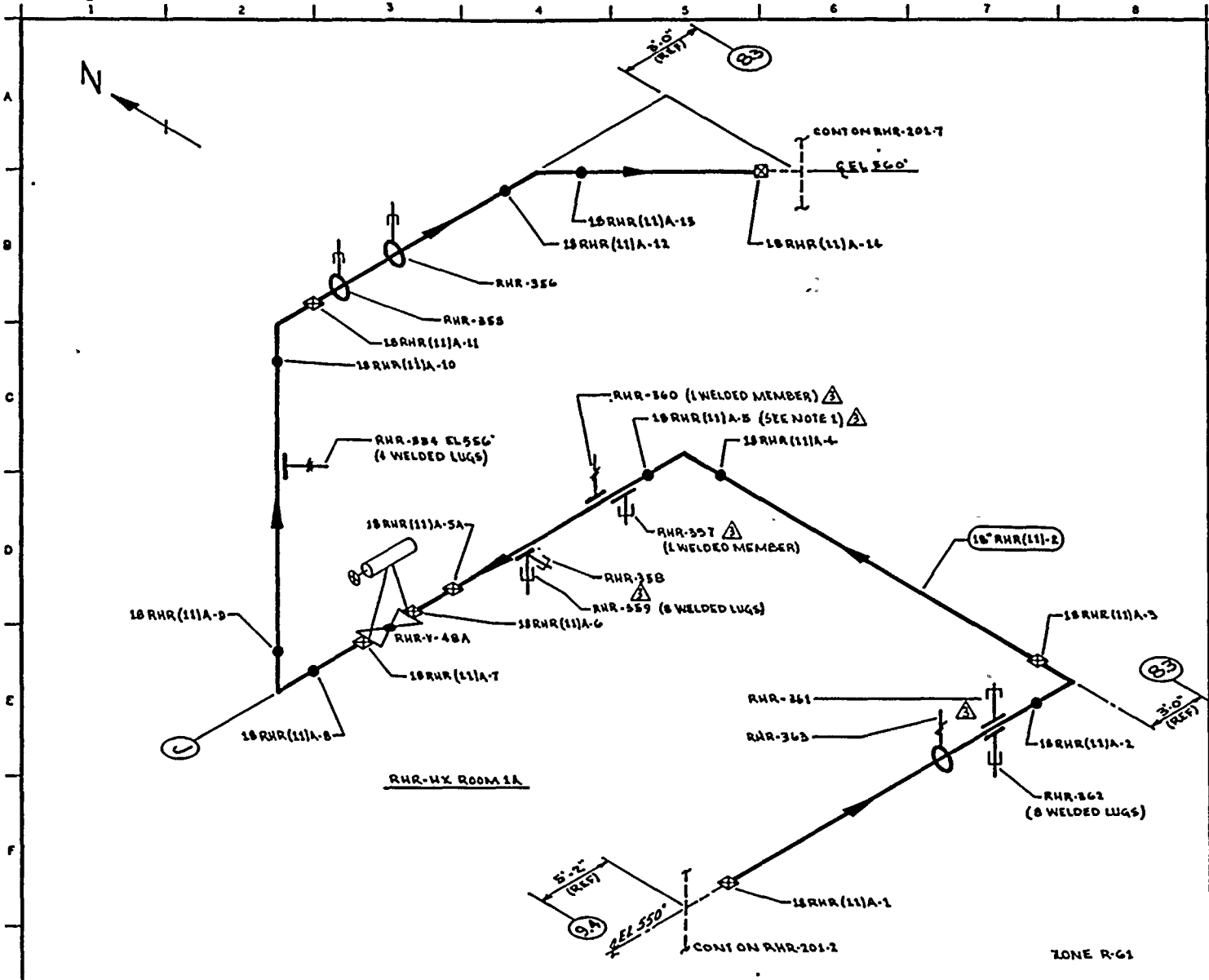

NOTES:

1. RHR-357 WELDED MEMBER IS 1½" FROM WELD 18 RHR(11)A-5 CENTERLINE AT 0°. 3
2. SCAFFOLDING IS REQUIRED. 3

REFERENCES:

BOVEE & CRAIL ISOMETRICS

RHR-852-1.4 REV 5

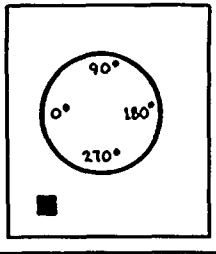

KEY PLAN

QUALITY CLASS: 1 | ASME CODE CLASS: 2

ENGR: GA KUGLER | DRAWN: K.M.A. | DATE: 5-7-78

WASHINGTON PUBLIC POWER SUPPLY SYSTEM

RICHLAND, WASHINGTON 99352

THIS DRAWING IS INTENDED FOR USE IN PRESERVICE AND INSERVICE INSPECTION PROGRAMS ONLY.

PIPING SYSTEM	NOM DIA (IN)	SCH	NOM WALL THK	MATERIAL SPECIFICATION	MATL TYPE	CAL BLOCK NO
18" RHR (11)-2	18	30	0.438	SA 106 GR B	CS	NA

NO	DATE	REVISION	BY	CHKD	APPVD
3	4-16-83	REVISED AS NOTED	KMA	TFH	TFH
2	12-2-81	REVISED AS NOTED	KMA	DAR	TFH
1	11-6-80	ADDED FIELD WELD 18RHR(11)A-5A & AS NOTED	KMA	TFH	QLV
0	11-11-78	ISSUED FOR USE	KMA	[illegible]	[illegible]
A	5-16-78	ISSUED FOR INFORMATION ONLY	KMA	GAK	[illegible]

WNP-2

WELD & COMPONENT IDENTIFICATION DIAGRAM

TITLE: RHR LOOP A RHR-HEAT-EXCHANGER BYPASS

DWG NO: RHR-201-5 | REV 3

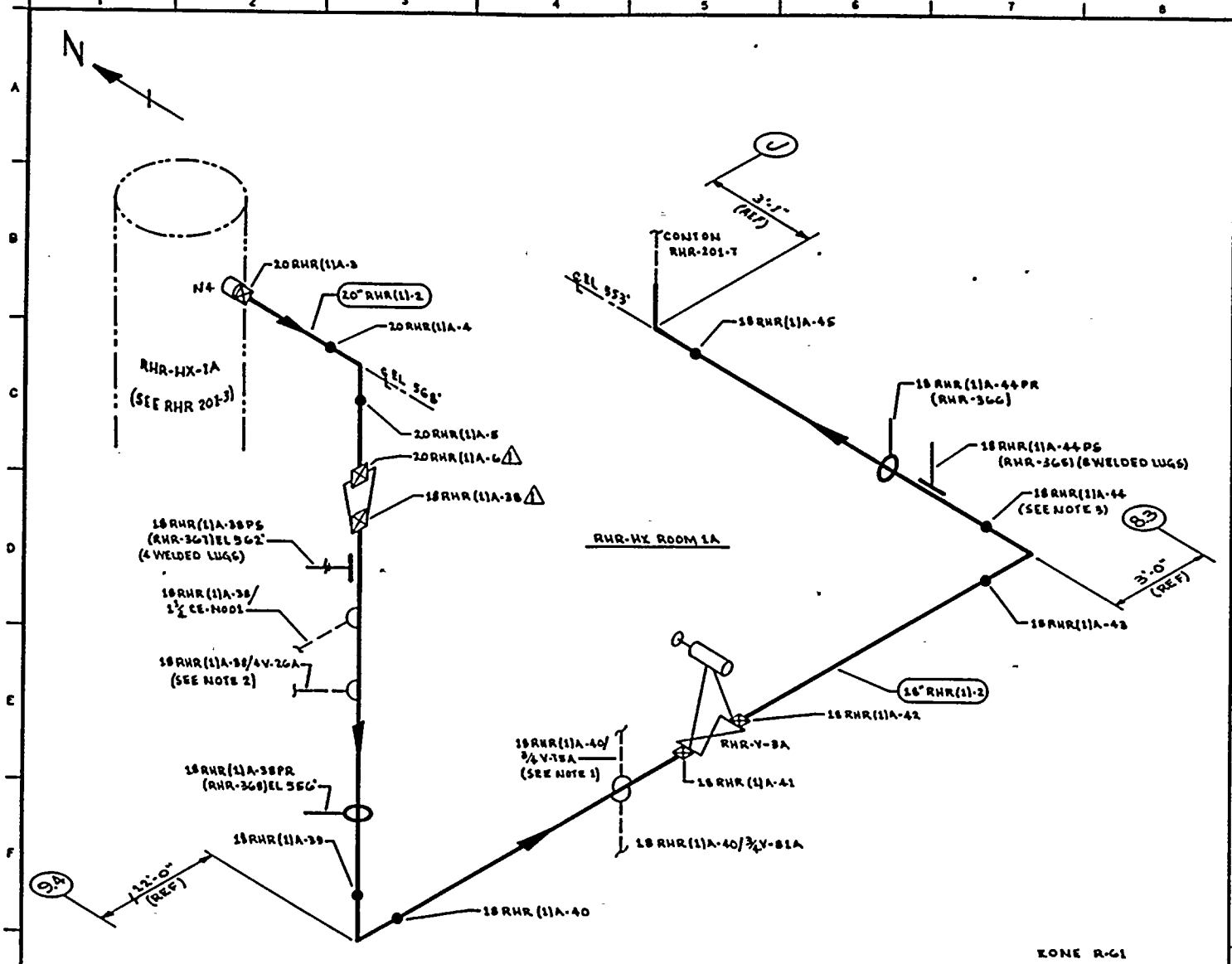

NOTES:

1. THIS IS A 1½" CONNECTION WITH VISUAL EXAM EXTENDING TO ¾" V-75A.
2. TERMINATE VISUAL EXAM AT V-26A, V-11A & V-150A.
3. FOUR LUGS FROM RHR-366 ARE 1" FROM WELD 18 RHR(1)A-44 CENTERLINE.
4. SCAFFOLDING IS REQUIRED.

REFERENCES:

BOVEE & CRAIL ISOMETRICS

RHR-851-1.2 REV 9

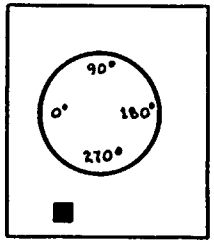

KEY PLAN

QUALITY CLASS: 1	ASME CODE CLASS: 2	
ENGR: GA KUGLER	DRAWN: K. McA	DATE: 5-4-78

THIS DRAWING IS INTENDED FOR USE IN PRESERVICE AND INSERVICE INSPECTION PROGRAMS ONLY.

WASHINGTON PUBLIC POWER SUPPLY SYSTEM
RICHLAND, WASHINGTON 99352

PIPING SYSTEM	NOM DIA (IN)	SCH	NOM WALL THK	MATERIAL SPECIFICATION	MATL TYPE	CAL BLOCK NO
18" RHR(1)-2	18	30	0.438	SA 106 GR B	CS	NA
20" RHR(1)-2	20	30	0.500	SA 106 GR B	CS	NA

NO	DATE	REVISION	BY	CHKD	APPVD
1	9-26-83	ADDED NOTES 3 & 4, CHGD 20RHR(1)A-6 & 38 TO FW	KMcA	[illegible]	[illegible]
0	11-15-78	ISSUED FOR USE	KMcA	[illegible]	[illegible]
A	5-4-78	ISSUED FOR INFORMATION ONLY	KMcA	GOK	[illegible]

WNP-2
WELD & COMPONENT IDENTIFICATION DIAGRAM

TITLE: RHR LOOP A SUPPLY FROM RHR-HX-1A

DWG NO: RHR-201-6 REV 1

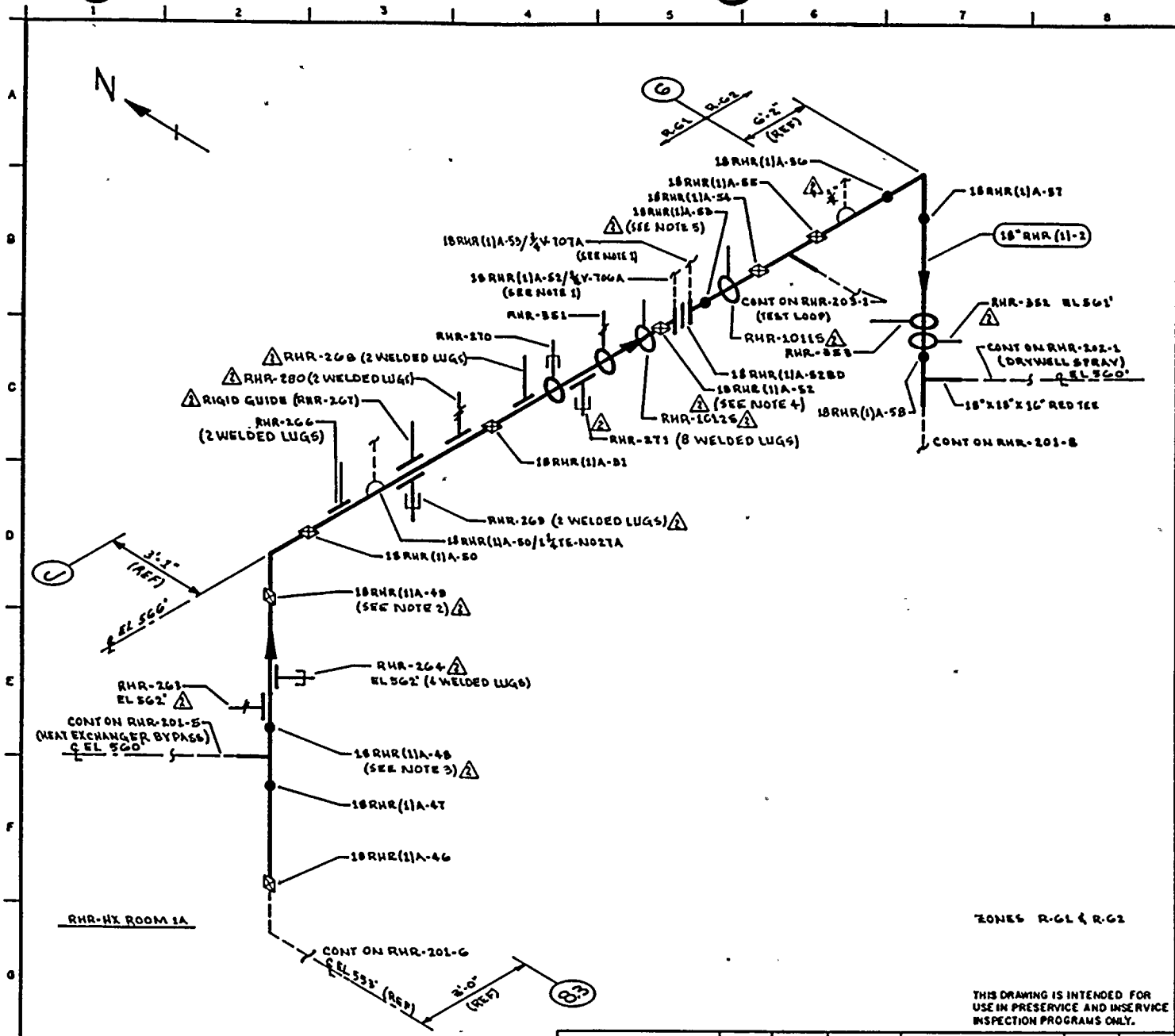

ZONES R-G1 & R-G2

THIS DRAWING IS INTENDED FOR USE IN PRESERVICE AND INSERVICE INSPECTION PROGRAMS ONLY.

NOTES:

1. THESE ARE ½" CONNECTIONS WITH VISUAL EXAM EXTEND TO ¾V-706A, ¾V-707A, ¾V-728A & ¾V-729A.
2. △1 RHR-264 LUGS ARE 1¼" FROM WELD 18 RHR (1)A-49 CENTERLINE.
3. △1 RHR-263 LUGS ARE 1¼" FROM WELD 18 RHR(1)A-48 CENTERLINE.
4. △1 ACCESS TO WELD 18RHR(1)A-52 REQUIRES REMOVAL OF RHR-1012S.
5. △1 ACCESS TO WELD 18 RHR(1)A-53 REQUIRES REMOVAL OF RHR-1011S.

REFERENCES:

BOVEE & CRAIL ISOMETRIC
RHR-851-3.9 REV 8

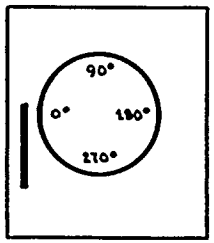

KEY PLAN

QUALITY CLASS: 1	ASME CODE CLASS: 2	
ENGR:	DRAWN: K.McA	DATE: 5-4-78

WASHINGTON PUBLIC POWER SUPPLY SYSTEM
RICHLAND, WASHINGTON 99352

PIPING SYSTEM	NOM DIA (IN)	SCH	NOM WALL THK	MATERIAL SPECIFICATION	MATL TYPE	CAL BLOCK NO
18" RHR (1)-2	18	30	0.438	SA 106 GR B	CS	NA

WNP-2
WELD & COMPONENT IDENTIFICATION DIAGRAM

TITLE: RHR LOOP A SUPPLY FROM RHR-HX-1A

DWG NO: RHR-201-7 REV 2

NO	DATE	REVISION	BY	CHKD	APPVD
2	10-15-82	REVISED AS NOTED	KMcA	JPR	TFH
1	12-2-81	REVISED AS NOTED	KMcA	DMT	TFH
0	12-22-78	ISSUED FOR USE	KMcA	KMcA	[illegible]
A	5-24-78	ISSUED FOR INFORMATION ONLY	KMcA	GOK	RJR

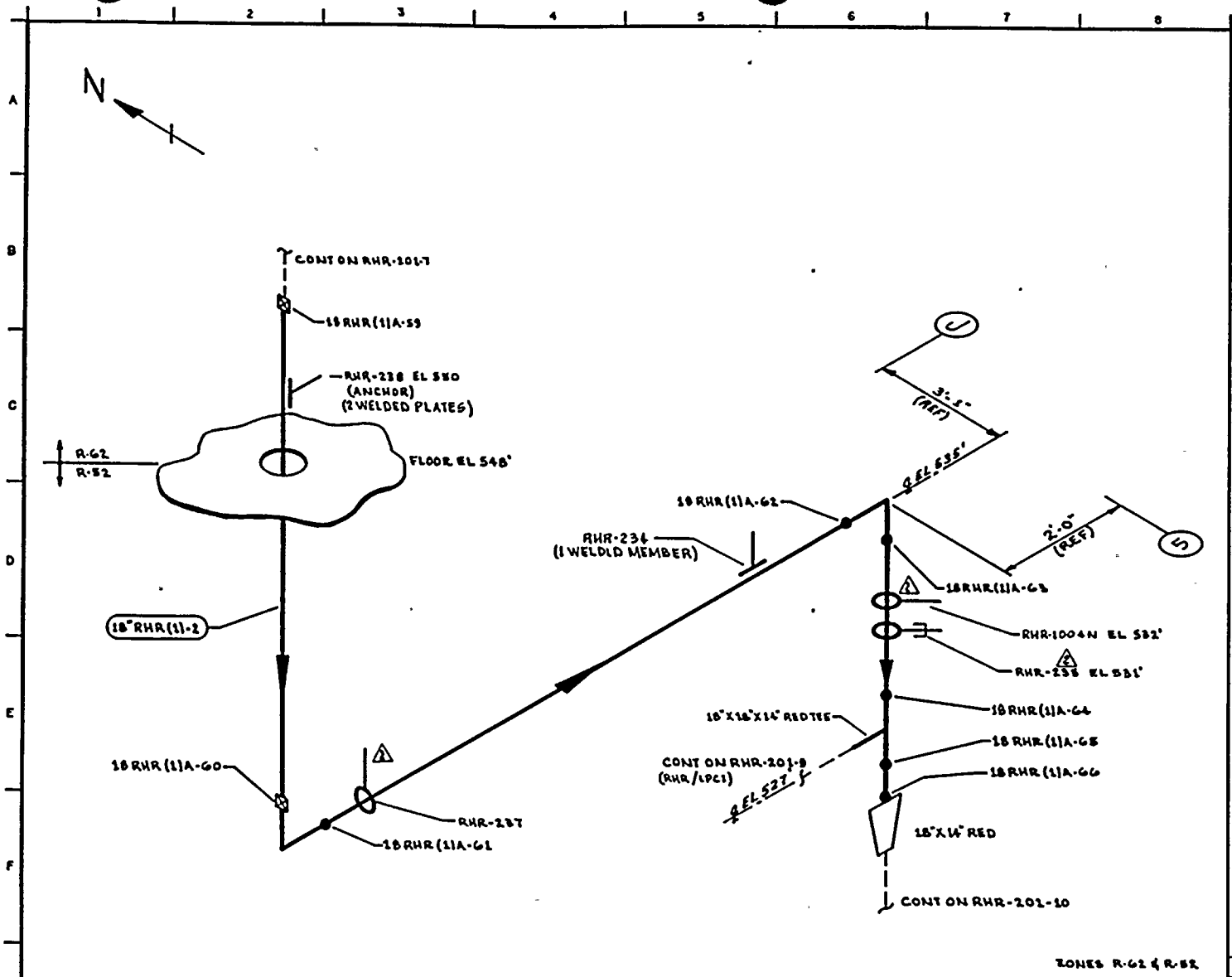

NOTES:

1. SCAFFOLDING IS REQUIRED.

REFERENCES:

BOVEE & CRAIL ISOMETRIC
RHR-B51-3.9 REV G

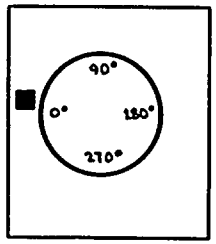

KEY PLAN

QUALITY CLASS: 1 | ASME CODE CLASS: 2

ENGR: GA KUGLER | DRAWN: K. McA | DATE: 5-4-78

THIS DRAWING IS INTENDED FOR USE IN PRESERVICE AND INSERVICE INSPECTION PROGRAMS ONLY.

WASHINGTON PUBLIC POWER SUPPLY SYSTEM
RICHLAND, WASHINGTON 99352

PIPING SYSTEM	NOM DIA (DN)	SCH	NOM WALL THK	MATERIAL SPECIFICATION	MATL TYPE	CAL BLOCK NO
18" RHR (1)-2	18	80	0.438	SA 106 GR B	C4	NA

WNP-2
WELD & COMPONENT IDENTIFICATION DIAGRAM

TITLE: RHR LOOP A SUPPLY FROM RHR-HX-1A

DWG NO: RHR-201-8 | REV 2

NO	DATE	REVISION	BY	CHKD	APPVD
2	9-26-83	REVISED AS NOTED	KMcA	DMS	TFK
1	12-2-81	REVISED AS NOTED	KMcA	[illegible]	TFK
0	11-22-78	ISSUED FOR USE	KMcA	[illegible]	[illegible]
A	5-26-78	ISSUED FOR INFORMATION ONLY	KMcA	GAK	[illegible]

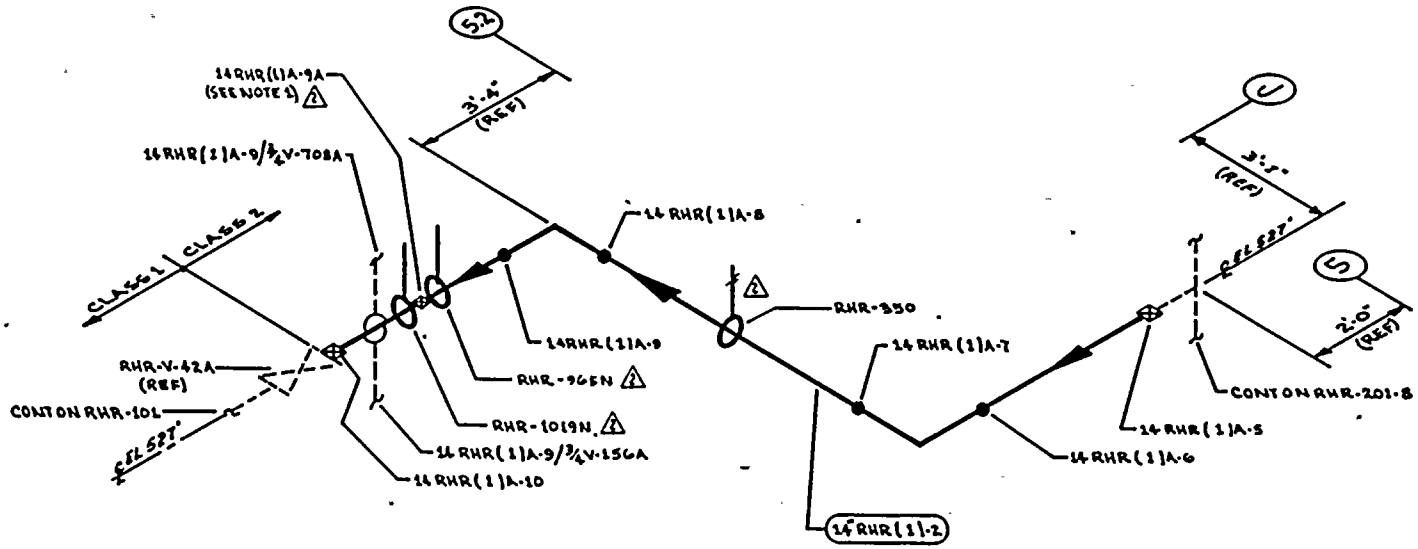

NOTES:

1. ACCESS TO WELD 14 RHR(1)A-9A REQUIRES REMOVAL OF RHR-1019N. CLAMP IS 1 1/2 FROM WELD CENTERLINE.

REFERENCES:

BOVEE & CRAIL ISOMETRIC RHR-B51-18.19 REV 8

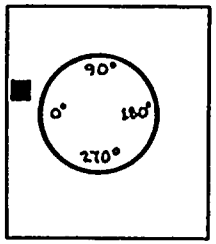

KEY PLAN

THIS DRAWING IS INTENDED FOR USE IN PRESERVICE AND INSERVICE INSPECTION PROGRAMS ONLY.

QUALITY CLASS: 1	ASME CODE CLASS: 2	
ENGR: G.A. KUGLER	DRAWN: K.M.A.	DATE: 5-5-78

WASHINGTON PUBLIC POWER SUPPLY SYSTEM
RICHLAND, WASHINGTON 99352

WNP-2
WELD & COMPONENT IDENTIFICATION DIAGRAM

TITLE: RHR LOOP A / LPCI RETURN

DWG NO: RHR-201-9 REV 2

PIPING SYSTEM	NOM DIA (IN)	SCH	NOM WALL THK	MATERIAL SPECIFICATION	MATL TYPE	CAL BLOCK NO
14" RHR (1)-2	14	STD	0.375	SA 106 GR B	CS	NA

NO	DATE	REVISION	BY	CHKD	APPVD
2	9-26-83	REVISED AS NOTED	K.L.A.	[illegible]	[illegible]
1	11-5-80	ADDED FIELD WELD 14 RHR(1)A-9A & AS NOTED	K.M.A.	[illegible]	[illegible]
0	[illegible]	ISSUED FOR USE	K.M.A.	[illegible]	[illegible]
A	5-26-78	ISSUED FOR INFORMATION ONLY	K.M.A.	[illegible]	[illegible]

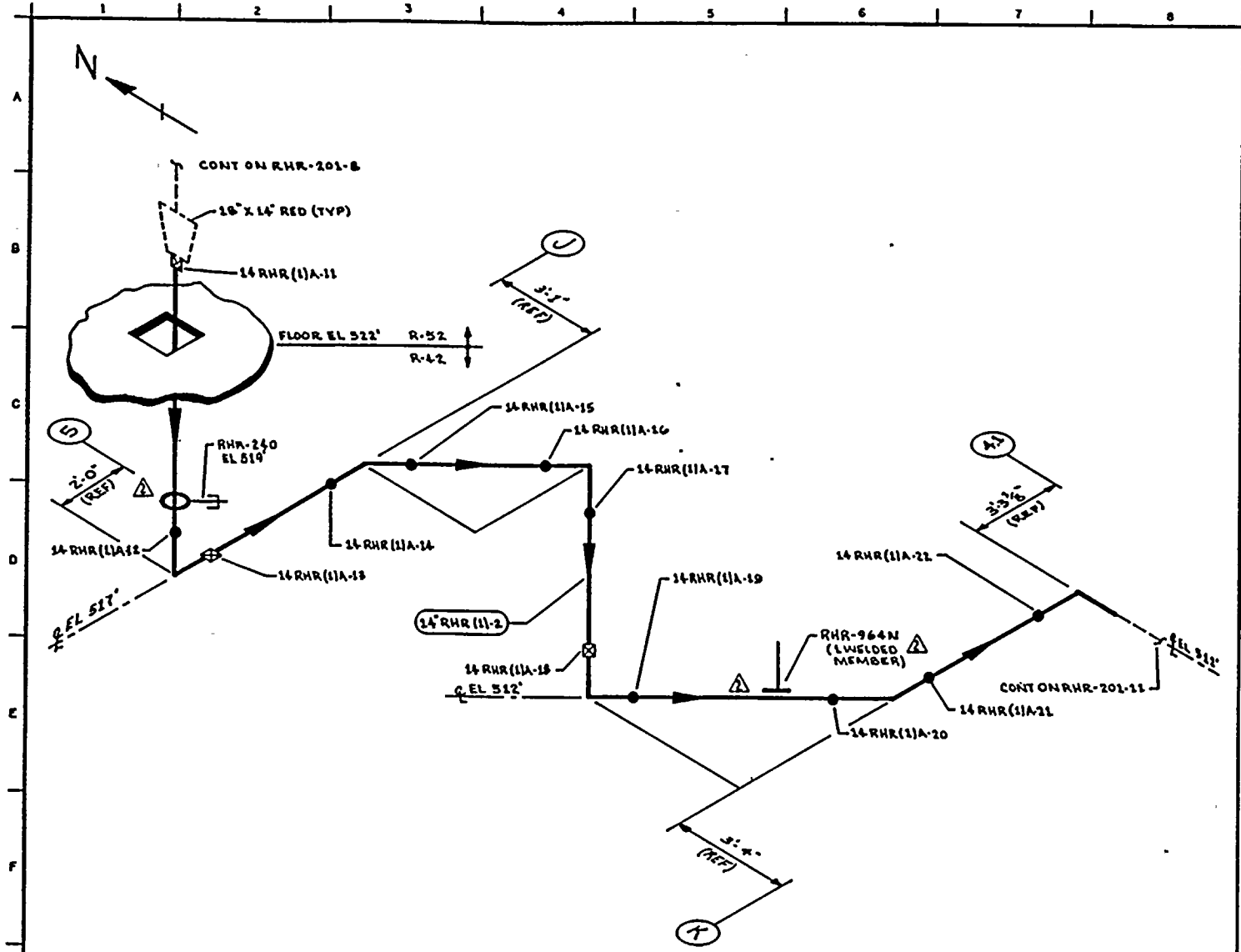

ZONES R-42 & R-52

THIS DRAWING IS INTENDED FOR USE IN PRESERVICE AND INSERVICE INSPECTION PROGRAMS ONLY.

NOTES:

REFERENCES
BOVEE & CRAIL ISOMETRICS
RHR-852-10-12 REV 5

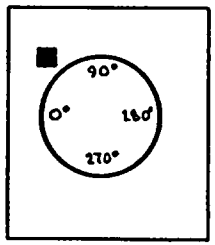

KEY PLAN

PIPING SYSTEM	NOM DIA (IN)	SCH	NOM WALL THK	MATERIAL SPECIFICATION	MATL TYPE	CAL BLOCK NO
14" RHR (1)-2	14	STD	0.375	SA 106 GR B	CS	NA

NO	DATE	REVISION	BY	CHKD	APPVD
2	9-26-83	REVISED AS NOTED	KLKA	[illegible]	[illegible]
1	12-2-81	REVISED AS NOTED	KLKA	[illegible]	TFH
0	11-11-78	ISSUED FOR USE	KLKA	[illegible]	[illegible]
A	5-26-78	ISSUED FOR INFORMATION ONLY	KLKA	[illegible]	[illegible]

QUALITY CLASS: 1 | ASME CODE CLASS: 2
ENGR: G.A. KUGLER | DRAWN: K. McA | DATE: 5-8-78

WASHINGTON PUBLIC POWER SUPPLY SYSTEM
RICHLAND, WASHINGTON 99352

WNP-2
WELD & COMPONENT IDENTIFICATION DIAGRAM

TITLE:
RHR LOOP A
SUPPLY FROM RHR-HX-1A

DWG NO: RHR-201-10 | REV 2

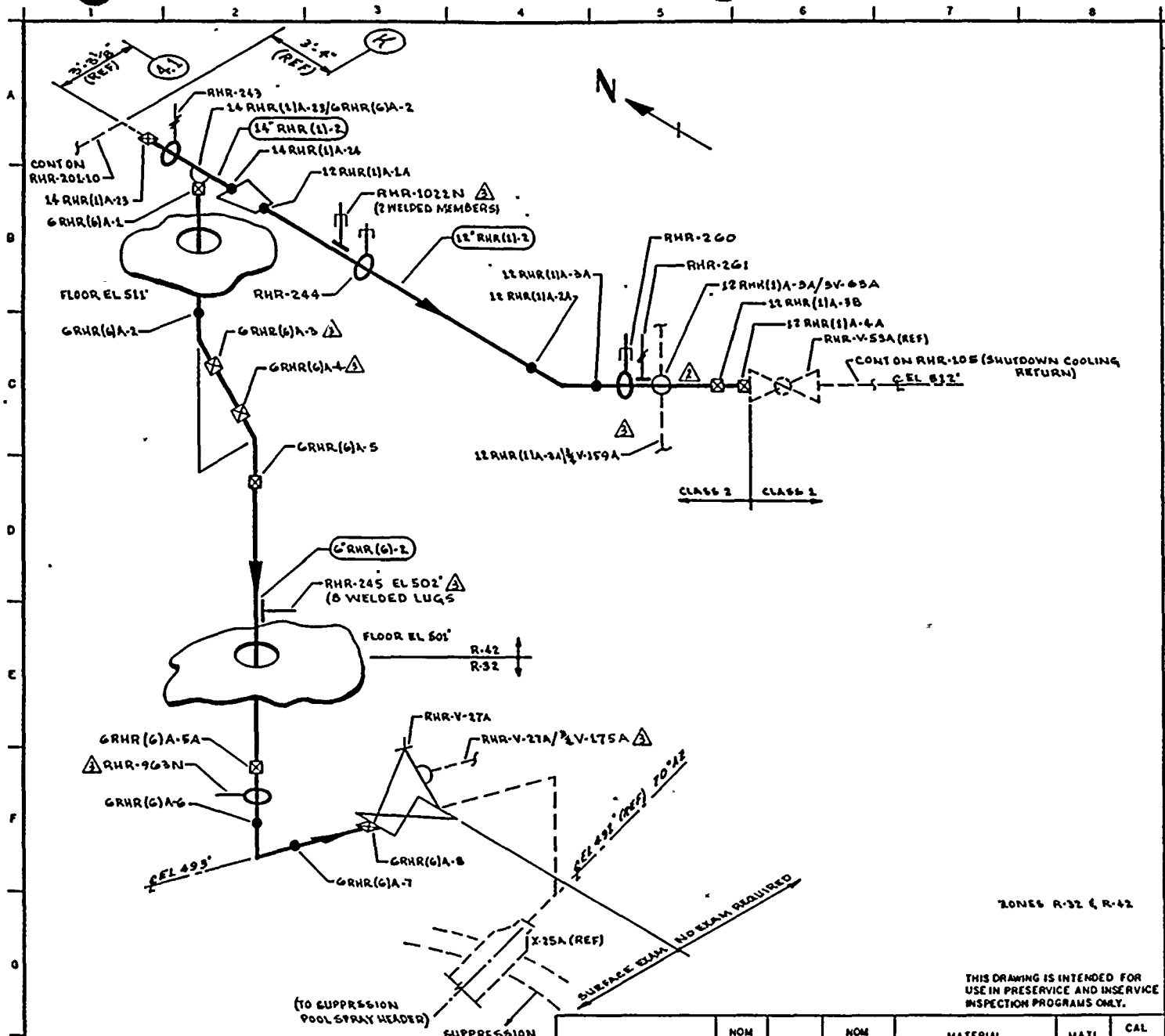

NOTES:

3

REFERENCES:

BOVER & CRAIL ISOMETRICS:

RHR-851-13 REV 6
RHR-855-13 REV 7

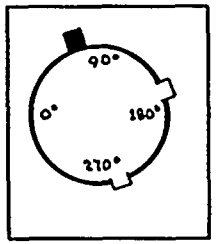

KEY PLAN

QUALITY CLASS: 1	ASME CODE CLASS: 2	
ENGR: GA KUGLER	DRAWN: K.M.C.A.	DATE: 5-8-78

WASHINGTON PUBLIC POWER SUPPLY SYSTEM
RICHLAND, WASHINGTON 99352

THIS DRAWING IS INTENDED FOR USE IN PRESERVICE AND INSERVICE INSPECTION PROGRAMS ONLY.

PIPING SYSTEM	NOM DIA (IN)	SCH	NOM WALL THK	MATERIAL SPECIFICATION	MATL TYPE	CAL BLOCK NO
14" RHR(1)-2	14	STD	0.375	SA 106 GR B	CS	NA
12" RHR(1)-2	12	STD	0.375	SA 106 GR B	CS	NA
6" RHR(6)-2	6	40	0.280	SA 106 GR B	CS	NA

NO	DATE	REVISION	BY	CHKD	APPVD
3	9-22-83	REVISED AS NOTED	K.M.C.A.	DPK	TRH
2	12-2-81	REVISED AS NOTED	K.M.C.A.	DPK	TRH
1	11-5-80	REVISED AS NOTED	K.M.C.A.	TRH	[illegible]
0	12-11-79	ISSUED FOR USE	K.M.C.A.	[illegible]	[illegible]
A	5-26-78	ISSUED FOR INFORMATION ONLY	K.M.C.A.	GAK	[illegible]

WNP-2
WELD & COMPONENT IDENTIFICATION DIAGRAM

TITLE:
RHR LOOP A SHUTDOWN COOLING RETURN & SUPPRESSION POOL SPRAY SUPPLY

DWG NO: RHR-201-11 REV 3

WNP-02
INTERVAL: PSI
PERIOD: NA
OUTAGE:
DRAWING NO. RHR-201

WASHINGTON PUBLIC POWER SUPPLY SYSTEM
PROGRAM PLAN AND SCHEDULE
SYSTEM OR COMPONENT: RHR(1)-2
DESCRIPTION: STM SPLY TO RHR HX1A

DATE 12/14/84

IDENT. NO.	DESCRIPTION	SECT. XI EXAM.	EXAM MTH.	PROCEDURE	CAL. BLOCK	INSERVICE REQ.	SCHEDULED OUTAGE	NOTES
14RHR(1)A-1	FLANGE TO PIPE	C-F	SUR	PTP-1				
14RHR(1)A-2	PIPE TO EL	C-F	SUR	PTP-1				
14RHR(1)A-3	EL TO PIPE	C-F	SUR	PTP-1				
14RHR(1)A-4	PIPE TO REDUCER	C-F	SUR	PTP-1				
18RHR(1)A-1	REDUCER TO PIPE	C-F	SUR	PTP-1				
RHR-157(W)	4 WELDED LUGS	C-E-1	SUR	MTP-1				
RHR-157	SPRING	C-E-2	VT-3	303/8.2.17				
			VT-4	303/8.2.17				
18RHR(1)A-2	PIPE TO EL	C-F	SUR	PTP-1				
18RHR(1)A-3	EL TO PIPE	C-F	SUR	PTP-1				
RHR-159	STRUT	C-E-2	VT-3	303/8.2.17				
RHR-158(W)	8 WELDED LUGS	C-E-1	SUR	MTP-1				
RHR-158	PSA-3 SNUBBER	C-E-2	VT-3	303/8.2.17				S/N 494
			VT-4	303/8.2.17				S/N 494
RHR-160	PSA-3 SNUBBER	C-E-2	VT-3	303/8.2.17				S/N 3937
			VT-4	303/8.2.17				S/N 3937
18RHR(1)A-4	PIPE TO EL	C-F	SUR	PTP-1				
18RHR(1)A-5	EL TO PIPE	C-F	SUR	PTP-1				

WNP-02
INTERVAL: PSI
PERIOD: NA
OUTAGE:
DRAWING NO. RHR-201

WASHINGTON PUBLIC POWER SUPPLY SYSTEM
PROGRAM PLAN AND SCHEDULE
SYSTEM OR COMPONENT: RHR(1)-2
DESCRIPTION: STM SPLY TO RHR HX1A

IDENT. NO.	DESCRIPTION	SECT. XI EXAM.	EXAM MTH.	PROCEDURE	CAL. BLOCK	INSERVICE REQ.	SCHEDULED OUTAGE	NOTES
RHR-161								
	SPRING	C-E-2	VT-3	303/8.2.17				
			VT-4	303/8.2.17				
18RHR(1)A-6								
	PIPE TO EL	C-F	SUR	PTP-1				
18RHR(1)A-7								
	EL TO PIPE	C-F	SUR	PTP-1				
RHR-162								
	STRUT	C-E-2	VT-3	303/8.2.17				
RHR-163								
	STRUT	C-E-2	VT-3	303/8.2.17				
18RHR(1)A-8								
	PIPE TO TEE	C-F	SUR	PTP-1				
10RHR(1)A-1								
	TEE TO PIPE	C-F	SUR	PTP-1				
10RHR(1)A-2								
	PIPE TO CAP	C-F	SUR	PTP-1				
18RHR(1)A-8/6RHR(7)-2								
	BRANCH CONN	C-F	SUR	PTP-1				
18RHR(1)A-9								
	TEE TO PIPE	C-F	SUR	PTP-1				
18RHR(1)A-9/3/4CAP								
	CAPPED CONN	N/A	VT-2	N/A				IWC-2510, SEE NOTES #6 & #7.
18RHR(1)A-9/3/4V-704A								
	INST CONN	N/A	VT-2	N/A				IWC-2510, SEE NOTES #6 & #7.
18RHR(1)A-10								
	PIPE TO VALVE	C-F	SUR	PTP-1				
18RHR(1)A-11								
	VALVE TO PIPE	C-F	SUR	PTP-1				
18RHR(1)A-11/3/4V-748A								
	INSTR CONN	N/A	VT-2	N/A				

WNP-02
INTERVAL: PSI
PERIOD: NA
OUTAGE:
DRAWING NO. RHR-201

WASHINGTON PUBLIC POWER SUPPLY SYSTEM
PROGRAM PLAN AND SCHEDULE
SYSTEM OR COMPONENT: RHR(1)-2
DESCRIPTION: STM SPLY TO RHR HX1A

DATE 12/14/84

IDENT. NO.	DESCRIPTION	SECT. XI EXAM.	EXAM MTH.	PROCEDURE	CAL. BLOCK	INSERVICE REQ.	INSERVICE SCHEDULED OUTAGE	NOTES
18RHR(1)A-11/1-1/2V-84A								
	CROSSTIE CONN	N/A	VT-2	N/A				IWC-2510, SEE NOTES #6 & #7.
18RHR(1)A-12								
	PIPE TO VALVE	C-F	SUR	PTP-1				
18RHR(1)A-13								
	VALVE TO PIPE	C-F	SUR	PTP-1				
18RHR(1)A-13/3V-72A								
	FLUSH CONN	N/A	VT-2	N/A				IWC-2510, SEE NOTES #6 & #7.
RHR-164								
	STRUT	C-E-2	VT-3	303/8.2.17				
18RHR(1)A-13/3/4V-705A								
	INST CONN	N/A	VT-2	N/A				IWC-2510, SEE NOTES #6 & #7.
RHR-165								
	STRUT	C-E-2	VT-3	303/8.2.17				
RHR-188(W)								
	4 WELDED LUGS	C-E-1	SUR	MTP-1				
RHR-188								
	SPRING	C-E-2	VT-3	303/8.2.17				
			VT-4	303/8.2.17				
18RHR(1)A-14								
	PIPE TO EL	C-F	SUR	PTP-1				
18RHR(1)A-15								
	EL TO PIPE	C-F	SUR	PTP-1				
18RHR(1)A-16								
	PIPE TO EL	C-F	SUR	PTP-1				
18RHR(1)A-17								
	EL TO PIPE	C-F	SUR	PTP-1				
RHR-174								
	BOX	C-E-2	VT-3	303/8.2.17				
18RHR(1)A-18								
	PIPE TO PIPE	C-F	SUR	PTP-1				

WNP-02
INTERVAL: PSI
PERIOD: NA
OUTAGE:
DRAWING NO. RHR-201

WASHINGTON PUBLIC POWER SUPPLY SYSTEM
PROGRAM PLAN AND SCHEDULE
SYSTEM OR COMPONENT: RHR(1)-2
DESCRIPTION: STM SPLY TO RHR HX1A

DATE 12/14/84

IDENT. NO.	DESCRIPTION	SECT. XI EXAM.	EXAM MTH.	PROCEDURE	CAL. BLOCK	INSERVICE REQ.	INSERVICE SCHEDULED OUTAGE	NOTES
RHR-970N	ANCHOR	C-E-2	VT-3	303/8.2.17				
18RHR(1)A-19	PIPE TO PIPE	C-F	SUR	PTP-1				
RHR-606	STRUT	C-E-2	VT-3	303/8.2.17				
RHR-605	STRUT	C-E-2	VT-3	303/8.2.17				
18RHR(1)A-20	PIPE TO PIPE	C-F	SUR	PTP-1				
18RHR(1)A-21	PIPE TO TEE	C-F	SUR	PTP-1				
18RHR(1)A-22	TEE TO PIPE	C-F	SUR	PTP-1				
18RHR(1)A-22A	PIPE TO PIPE	C-F	SUR	PTP-1				
RHR-604	SPRING	C-E-2	VT-3	303/8.2.17				
			VT-4	303/8.2.17				
RHR-603	PSA-3 SN(2)	C-E-2	VT-3	303/8.2.17				S/N 4470/4497
			VT-4	303/8.2.17				S/N 4470/4497
18RHR(1)A-23	PIPE TO EL	C-F	SUR	PTP-1				
18RHR(1)A-24	EL TO PIPE	C-F	SUR	PTP-1				
18RHR(1)A-25	PIPE TO EL	C-F	SUR	PTP-1				
18RHR(1)A-26	EL TO PIPE	C-F	SUR	PTP-1				
RHR-601	STRUT	C-E-2	VT-3	303/8.2.17				W/3 WELDED SADDLES.
18RHR(1)A-27	PIPE TO VLV	C-F	SUR	PTP-1				

WNP-02
INTERVAL: PSI
PERIOD: NA
OUTAGE:
DRAWING NO. RHR-201

WASHINGTON PUBLIC POWER SUPPLY SYSTEM
PROGRAM PLAN AND SCHEDULE
SYSTEM OR COMPONENT: RHR(1)-2
DESCRIPTION: SIM SPLY TO RHR HX1A

DATE 12/14/84

IDENT. NO.	DESCRIPTION	SECT. XI EXAM.	EXAM MTH.	PROCEDURE	CAL. BLOCK	INSERVICE REQ.	INSERVICE SCHEDULED OUTAGE	NOTES
18RHR(1)A-28								
	PIPE TO PIPE	C-F	SUR	PTP-1				
RHR-600								
	STRUT	C-E-2	VT-3	303/8.2.17				
18RHR(1)A-29								
	PIPE TO EL	C-F	SUR	PTP-1				
18RHR(1)A-30								
	EL TO PIPE	C-F	SUR	PTP-1				
RHR-599								
	PSA-3 SNUBBER	C-E-2	VT-3	303/8.2.17				S/N 3906
			VT-4	303/8.2.17				S/N 3906
18RHR(1)A-31								
	PIPE TO EL	C-F	SUR	PTP-1				
18RHR(1)A-32								
	EL TO PIPE	C-F	SUR	PTP-1				
RHR-1000N								
	PSA-3 SNUBBER	C-E-2	VT-3	303/8.2.17				S/N 3931
			VT-4	303/8.2.17				S/N 3931
18RHR(1)A-32A								
	PIPE TO PIPE	C-F	SUR	QCI 3-3				
RHR-1001N(W)								
	8 WELDED LUGS	C-E-1	SUR	QCI 4-3				
RHR-1001N								
	PSA-1 SN(2)	C-E-2	VT-3	303/8.2.17				S/N 4410/2785
			VT-4	303/8.2.17				S/N 4410/2785
RHR-598								
	SPRING	C-E-2	VT-3	303/8.2.17				
			VT-4	303/8.2.17				
18RHR(1)A-33								
	PIPE TO EL	C-F	SUR	PTP-1				
18RHR(1)A-34								
	EL TO PIPE	C-F	SUR	PTP-1				

WNP-02
INTERVAL: PSI
PERIOD: NA
OUTAGE:
DRAWING NO. RHR-201

WASHINGTON PUBLIC POWER SUPPLY SYSTEM
PROGRAM PLAN AND SCHEDULE
SYSTEM OR COMPONENT: RHR(1)-2
DESCRIPTION: STM SPLY TO RHR HX1A

DATE 12/14/84

IDENT. NO.	DESCRIPTION	SECT. XI EXAM.	EXAM MTH.	PROCEDURE	CAL. BLOCK	INSERVICE REQ.	INSERVICE SCHEDULED OUTAGE	NOTES
18RHR(1)A-35								
	PIPE TO TEE	C-F	SUR	PTP-1				
18RHR(1)A-36								
	TEE TO PIPE	C-F	SUR	PTP-1				
18RHR(1)A-37								
	PIPE TO REDUCER	C-F	SUR	PTP-1				
20RHR(1)A-1								
	REDUCER TO PIPE	C-F	SUR	PTP-1				
18RHR(1)A-37/5/4TE-N004A								
	INSTR CONN	N/A	VT-2	N/A				IWC-2510, SEE NOTES #6 & #7.
20RHR(1)A-2								
	PIPE TO NOZZLE	C-F	SUR	PTP-1				
6RHR(7)A-1								
	WOL TO PIPE	C-F	SUR	PTP-1				
6RHR(7)A-1/3/4V-144A								
	TEST CONN	N/A	VT-2	N/A				IWC-2510, SEE NOTES #6 & #7.
RHR-187								
	SPRING	C-E-2	VT-3	303/8.2.17				
			VT-4	303/8.2.17				
6RHR(7)A-2								
	PIPE TO REDUCER	C-F	SUR	PTP-1				
6RHR(7)A-3								
	REDUCER TO PIPE	C-F	SUR	PTP-1				
6RHR(7)A-3/3/4V-145A								
	TEST CONN	N/A	VT-2	N/A				IWC-2510, SEE NOTES #6 & #7.
6RHR(7)A-4								
	PIPE TO EL	C-F	SUR	PTP-1				
6RHR(7)A-5								
	FL TO ORIFICE	C-F	SUR	PTP-1				
RHR-149								
	STRUT	C-E-2	VT-3	303/8.2.17				

WNP-02
INTERVAL: PSI
PERIOD: NA
OUTAGE:
DRAWING NO. RHR-201

WASHINGTON PUBLIC POWER SUPPLY SYSTEM
PROGRAM PLAN AND SCHEDULE
SYSTEM OR COMPONENT: RHR(1)-2
DESCRIPTION: STM SPLY TO RHR HX1A

DATE 12/14/84

IDENT. NO.	DESCRIPTION	SECT. XI EXAM.	EXAM MTH.	PROCEDURE	CAL. BLOCK	INSERVICE REQ.	INSERVICE SCHEDULED OUTAGE	NOTES
RHR-148								
	BOX	C-E-2	VT-3	303/8.2.17				
RHR-147								
	PSA-1 SN(2)	C-E-2	VT-3	303/8.2.17				S/N E628/W607.
			VT-4	303/8.2.17				S/N E628/W607
RHR-146								
	SPRING	C-E-2	VT-3	303/8.2.17				
			VT-4	303/8.2.17				
RHR-145								
	PSA-1 SNUBBER	C-E-2	VT-3	303/8.2.17				S/N 342
			VT-4	303/8.2.17				S/N 342
RHR-144								
	SPRING	C-E-2	VT-3	303/8.2.17				
			VT-4	303/8.2.17				
RHR-971N								
	ANCHOR	C-E-2	VT-3	303/8.2.17				
RHR-142								
	PSA-1 SN(2)	C-E-2	VT-3	303/8.2.17				S/N W354/E355
			VT-4	303/8.2.17				S/N W354/E355
18RHR(11)A-1								
	TEE TO PIPE	C-F	SUR	PTP-1				
RHR-363								
	SPRING	C-E-2	VT-3	303/8.2.17				
			VT-4	303/8.2.17				
RHR-361								
	PSA-3 SNUBBER	C-E-2	VT-3	303/8.2.17				S/N 2786
			VT-4	303/8.2.17				S/N 2786
RHR-362(W)								
	8 WELDED LUGS	C-E-1	SUR	MTP-1				

WNP-02
INTERVAL: PSI
PERIOD: NA
OUTAGE:
DRAWING NO. RHR-201

WASHINGTON PUBLIC POWER SUPPLY SYSTEM
PROGRAM PLAN AND SCHEDULE
SYSTEM OR COMPONENT: RHR(1)-2
DESCRIPTION: STM SPLY TO RHR HX1A

IDENT. NO.	DESCRIPTION	SECT. XI EXAM.	EXAM MTH.	PROCEDURE	CAL. BLOCK	INSERVICE REQ.	SCHEDULED OUTAGE	NOTES
RHR-362								
	PSA-3 SN(2)	C-E-2	VT-3	303/8.2.17				S/N 3927/3952
			VT-4	303/8.2.17				S/N 3927/3952
18RHR(11)A-2								
	PIPE TO EL	C-F	SUR	PTP-1				
18RHR(11)A-3								
	EL TO PIPE	C-F	SUR	PTP-1				
18RHR(11)A-4								
	PIPE TO EL	C-F	SUR	PTP-1				
18RHR(11)A-5								
	EL TO PIPE	C-F	SUR	PTP-1				
RHR-357								
	PSA-3 SNUBBER	C-E-2	VT-3	303/8.2.17				S/N 9951
			VT-4	303/8.2.17				S/N 9951
RHR-360								
	SPRING	C-E-2	VT-3	303/8.2.17				
			VT-4	303/8.2.17				
RHR-359								
	PSA-3 SNUBBER	C-E-2	VT-3	303/8.2.17				S/N 2346
			VT-4	303/8.2.17				S/N 2346
RHR-358								
	BOX	C-E-2	VT-3	303/8.2.17				
18RHR(11)A-5A								
	PIPE TO PIPE	C-F	SUR	PTP-1				
18RHR(11)A-6								
	PIPE TO VALVE	C-F	SUR	OCI 3-3				
18RHR(11)A-7								
	VALVE TO PIPE	C-F	SUR	PTP-1				
18RHR(11)A-8								
	PIPE TO EL	C-F	SUR	PTP-1				
18RHR(11)A-9								
	EL TO PIPE	C-F	SUR	OCI 3-3				

WNP-02
INTERVAL: PSI
PERIOD: NA
OUTAGE:
DRAWING NO. RHR-201

WASHINGTON PUBLIC POWER SUPPLY SYSTEM
PROGRAM PLAN AND SCHEDULE
SYSTEM OR COMPONENT: RHR(1)-2
DESCRIPTION: STM SPLY TO RHR HX1A

IDENT. NO.	DESCRIPTION	SECT. XI EXAM.	EXAM MTH.	PROCEDURE	CAL. BLOCK	INSERVICE REQ.	INSERVICE SCHEDULED OUTAGE	NOTES
RHR-354(W)	4 WELDED LUGS	C-E-1	SUR	MTP-1				
RHR-354	SPRING	C-E-2	VT-3	303/8.2.17				
			VT-4	303/8.2.17				
18RHR(11)A-10	PIPE TO EL	C-F	SUR	PTP-1				
18RHR(11)A-11	EL TO PIPE	C-F	SUR	PTP-1				
RHR-355	PSA-3 SNUBBER	C-E-2	VT-3	303/8.2.17				S/N 4483
			VT-4	303/8.2.17				S/N 4483
RHR-356	PSA-3 SNUBBER	C-E-2	VT-3	303/8.2.17				S/N 13028
			VT-4	303/8.2.17				S/N 13028
18RHR(11)A-12	PIPE TO EL	C-F	SUR	PTP-1				
18RHR(11)A-13	EL TO PIPE	C-F	SUR	PTP-1				
18RHR(11)A-14	PIPE TO TEE	C-F	SUR	QCI 3-3				
20RHR(1)A-3	NOZZLE TO PIPE	C-F	SUR	PTP-1				
20RHR(1)A-4	PIPE TO EL	C-F	SUR	PTP-1				
20RHR(1)A-5	EL TO PIPE	C-F	SUR	PTP-1				
20RHR(1)A-6	PIPE TO REDUCER	C-F	SUR	QCI 3-3				
18RHR(1)A-38	REDUCER TO PIPE	C-F	SUR	PTP-1				
RHR-367(W)	4 WELDED LUGS	C-E-1	SUR	MTP-1				

WNP-02
INTERVAL: PSI
PERIOD: NA
OUTAGE:
DRAWING NO. RHR-201

WASHINGTON PUBLIC POWER SUPPLY SYSTEM
PROGRAM PLAN AND SCHEDULE
SYSTEM OR COMPONENT: RHR(1)-2
DESCRIPTION: STM SPLY TO RHR HX1A

DATE 12/14/84

IDENT. NO.	DESCRIPTION	SECT. XI EXAM.	EXAM MTH.	PROCEDURE	CAL. BLOCK	INSERVICE REQ.	INSERVICE SCHEDULED OUTAGE	NOTES
RHR-367								
	SPRING	C-E-2	VT-3	303/8.2.17				
			VT-4	303/8.2.17				
18RHR(1)A-38/5/4CE-N001								
	INSTR CONN	N/A	VT-2	N/A				IWC-2510, SEE NOTES #6 & #7.
18RHR(1)A-38/4V-26A								
	BRANCH CONN	N/A	VT-2	N/A				IWC-2510, SEE NOTES #6 & #7.
RHR-368								
	STRUT	C-E-2	VT-3	303/8.2.17				
18RHR(1)A-39								
	PIPE TO EL	C-F	SUR	PTP-1				
18RHR(1)A-40								
	EL TO PIPE	C-F	SUR	PTP-1				
18RHR(1)A-40/3/4V-81A								
	DRAIN CONN	N/A	VT-2	N/A				IWC-2510, SEE NOTES #6 & #7.
18RHR(1)A-40/3/4V-75A								
	SAMPLING CONN	N/A	VT-2	N/A				IWC-2510, SEE NOTES #6 & #7.
18RHR(1)A-41								
	PIPE TO VALVE	C-F	SUR	QCI 3-3				
18RHR(1)A-42								
	VALVE TO PIPE	C-F	SUR	PTP-1				
18RHR(1)A-43								
	PIPE TO EL	C-F	SUR	PTP-1				
18RHR(1)A-44								
	EL TO PIPE	C-F	SUR	PTP-1				
RHR-365(W)								
	8 WELDED LUGS	C-E-1	SUR	MTP-1				
RHR-365								
	STRUT	C-E-2	VT-3	303/8.2.17				
RHR-366								
	STRUT	C-E-2	VT-3	303/8.2.17				

WNP-02
INTERVAL: PSI
PERIOD: NA
OUTAGE:
DRAWING NO. RHR-201

WASHINGTON PUBLIC POWER SUPPLY SYSTEM
PROGRAM PLAN AND SCHEDULE
SYSTEM OR COMPONENT: RHR(1)-2
DESCRIPTION: STM SPLY TO RHR HX1A

IDENT. NO.	DESCRIPTION	SECT. XI EXAM.	EXAM MTH.	PROCEDURE	CAL. BLOCK	INSERVICE REQ.	INSERVICE SCHEDULED OUTAGE	NOTES
18RHR(1)A-45	PIPE TO EL	C-F	SUR	PTP-1				
18RHR(1)A-46	EL TO PIPE	C-F	SUR	PTP-1				
18RHR(1)A-47	PIPE TO TEE	C-F	SUR	PTP-1				
18RHR(1)A-48	TEE TO PIPE	C-F	SUR	PTP-1				
RHR-263	SPRING	C-E-2	VT-3	303/8.2.17				
			VT-4	303/8.2.17				
RHR-264	PSA-3 SNUBBER	C-E-2	VT-3	303/8.2.17				S/N 4428
			VT-4	303/8.2.17				S/N 4428
18RHR(1)A-49	PIPE TO EL	C-F	SUR	PTP-1				
18RHR(1)A-50	EL TO PIPE	C-F	SUR	PTP-1				
RHR-266	BOX	C-E-2	VT-3	303/8.2.17				
18RHR(1)A-50/5/4TE-N027A	INST CONN	N/A	VT-2	N/A				SEE NOTES #6 & #7.
RHR-267	BOX	C-E-2	VT-3	303/8.2.17				
RHR-269	PSA-3 SNUBBER	C-E-2	VT-3	303/8.2.17				S/N 2385
			VT-4	303/8.2.17				S/N 2385
RHR-280	SPRING	C-E-2	VT-3	303/8.2.17				
			VT-4	303/8.2.17				
18RHR(1)A-51	PIPE TO PIPE	C-F	SUR	PTP-1				

WNP-02
INTERVAL: PSI
PERIOD: NA
OUTAGE:
DRAWING NO. RHR-201

WASHINGTON PUBLIC POWER SUPPLY SYSTEM
PROGRAM PLAN AND SCHEDULE
SYSTEM OR COMPONENT: RHR(1)-2
DESCRIPTION: STM SPLY TO RHR HX1A

IDENT. NO.	DESCRIPTION	SECT. XI EXAM.	EXAM MTH.	PROCEDURE	CAL. BLOCK	INSERVICE REQ.	SCHEDULED OUTAGE	NOTES
RHR-268								
	BOX	C-F-2	VT-3	303/8.2.17				
RHR-270								
	PSA-3 SNUBBER	C-E-2	VT-3	303/8.2.17				S/N 362/616
			VT-4	303/8.2.17				S/N 362/616
RHR-271								
	PSA-3 SN(2)	C-E-2	VT-3	303/8.2.17				S/N 3885/3941
			VT-4	303/8.2.17				S/N 3883/3941
RHR-351								
	SPRING	C-E-2	VT-3	303/8.2.17				
			VT-4	303/8.2.17				
RHR-1012S								
	PIPE CLAMP	C-E-2	VT-3	303/8.2.17				
18RHR(1)A-52								
	PIPE TO FLANGE	C-F	SUR	PTP-1				
18RHR(1)A-52/3/4V-706A								
	INST CONN	N/A	VT-2	N/A				IWC-2510, SEE NOTES #6 & #7.
18RHR(1)A-52/3/4V-707A								
	INST CONN	N/A	VT-2	N/A				IWC-2510, SEE NOTES #6 & #7.
18RHR(1)A-53								
	FLANGE TO PIPE	C-F	SUR	PTP-1				
RHR-1011S								
	PIPE CLAMP	C-E-2	VT-3	303/8.2.17				
18RHR(1)A-54								
	PIPE TO TEE	C-F	SUR	PTP-1				
18RHR(1)A-55								
	TEE TO PIPE	C-F	SUR	PTP-1				
18RHR(1)A-56								
	PIPE TO EL	C-F	SUR	QCI 3-3				
18RHR(1)A-57								
	EL TO PIPE	C-F	SUR	PTP-1				

WNP-02
INTERVAL: PSI
PERIOD: NA
OUTAGE:
DRAWING NO. RHR-201

WASHINGTON PUBLIC POWER SUPPLY SYSTEM
PROGRAM PLAN AND SCHEDULE
SYSTEM OR COMPONENT: RHR(1)-2
DESCRIPTION: STM SPLY TO RHR HX1A

DATE 12/14/84

IDENT. NO.	DESCRIPTION	SECT. XI EXAM.	EXAM MTH.	PROCEDURE	CAL. BLOCK	INSERVICE REQ.	SCHEDULED OUTAGE	NOTES
RHR-353								
	STRUT	C-E-2	VT-3	303/8.2.17				
RHR-352								
	STRUT	C-E-2	VT-3	303/8.2.17				
18RHR(1)A-58								
	PIPE TO TEE	C-F	SUR	PTP-1				
18RHR(1)A-59								
	TEE TO PIPE	C-F	SUR	PTP-1				
RHR-238(S)								
	2 WELDED SADDLE	C-E-1	SUR	QCI 4-3				
RHR-238								
	ANCHOR	C-E-2	VT-3	303/8.2.17				
18RHR(1)A-60								
	PIPE TO EL	C-F	SUR	PTP-1				
18RHR(1)A-61								
	EL TO PIPE	C-F	SUR	PTP-1				
RHR-237								
	STRUT	C-E-2	VT-3	303/8.2.17				
RHR-234								
	BOX	C-E-2	VT-3	303/8.2.17				
18RHR(1)A-62								
	PIPE TO EL	C-F	SUR	PTP-1				
18RHR(1)A-63								
	EL TO PIPE	C-F	SUR	PTP-1				
RHR-1004N								
	STRUT	C-E-2	VT-3	303/8.2.17				
RHR-235								
	PSA-10 SNUBBER	C-E-2	VT-3	303/8.2.17				S/N 1462
			VT-4	303/8.2.17				S/N 1462
18RHR(1)A-64								
	PIPE TO TEE	C-F	SUR	PTP-1				
18RHR(1)A-65								
	TEE TO PIPE	C-F	SUR	PTP-1				
18RHR(1)A-66								
	PIPE TO REDUCER	C-F	SUR	PTP-1				

WNP-02
INTERVAL: PSI
PERIOD: NA
OUTAGE:
DRAWING NO. RHR-201

WASHINGTON PUBLIC POWER SUPPLY SYSTEM
PROGRAM PLAN AND SCHEDULE
SYSTEM OR COMPONENT: RHR(1)-2
DESCRIPTION: STM SPLY TO RHR HX1A

DATE 12/14/84

IDENT. NO.	DESCRIPTION	SECT. XI EXAM.	EXAM MTH.	PROCEDURE	CAL. BLOCK	INSERVICE REQ.	SCHEDULED OUTAGE	NOTES
14RHR(1)A-5	TEE TO PIPE	C-F	SUR	PTP-1				
14RHR(1)A-6	PIPE TO EL	C-F	SUR	PTP-1				
14RHR(1)A-7	EL TO PIPE	C-F	SUR	PTP-1				
RHR-350	SPRING	C-E-2	VT-3	303/8.2.17				
			VT-4	303/8.2.17				
14RHR(1)A-8	PIPE TO EL	C-F	SUR	PTP-1				
14RHR(1)A-9	EL TO PIPE	C-F	SUR	PTP-1				
RHR-965N	ANCHOR	C-E-2	VT-3	303/8.2.17				
14RHR(1)A-9A	PIPE TO PIPE	C-F	SUR	QCI 3-3				
RHR-1019N	STRUT	C-E-2	VT-3	303/8.2.17				
14RHR(1)A-9/3/4V-708	INSTR CONN	N/A	VT-2	N/A				IWC-2510, SEE NOTES #6 & #7.
14RHR(1)A-9/3/4V-156A	TEST CONN	N/A	VT-2	N/A				IWC-2510, SEE NOTES #6 & #7.
14RHR(1)A-10	PIPE TO VALVE	C-F	SUR	PTP-1				
14RHR(1)A-11	REDUCER TO PIPE	C-F	SUR	PTP-1				
RHR-240	BOX	C-E-2	VT-3	303/8.2.17				
14RHR(1)A-12	PIPE TO EL	C-F	SUR	PTP-1				
14RHR(1)A-13	EL TO PIPE	C-F	SUR	PTP-1				

WNP-02
INTERVAL: PSI
PERIOD: NA
OUTAGE:
DRAWING NO. RHR-201

WASHINGTON PUBLIC POWER SUPPLY SYSTEM
PROGRAM PLAN AND SCHEDULE
SYSTEM OR COMPONENT: RHR(1)-2
DESCRIPTION: STM SPLY TO RHR HX1A

IDENT. NO.	DESCRIPTION	SECT. XI EXAM.	EXAM MTH.	PROCEDURE	CAL. BLOCK	INSERVICE REQ.	SCHEDULED OUTAGE	NOTES
14RHR(1)A-14								
	PIPE TO EL	C-F	SUR	PTP-1				
14RHR(1)A-15								
	EL TO PIPE	C-F	SUR	PTP-1				
14RHR(1)A-16								
	PIPE TO EL	C-F	SUR	PTP-1				
14RHR(1)A-17								
	PIPE TO EL	C-F	SUR	PTP-1				
14RHR(1)A-18								
	PIPE TO EL	C-F	SUR	PTP-1				
14RHR(1)A-19								
	EL TO PIPE	C-F	SUR	PTP-1				
RHR-964N								
	ANCHOR	C-E-2	VT-3	303/8.2.17				W/1 WELDED SADDLE.
14RHR(1)A-20								
	PIPE TO EL	C-F	SUR	PTP-1				
14RHR(1)A-21								
	EL TO PIPE	C-F	SUR	PTP-1				
14RHR(1)A-22								
	PIPE TO EL	C-F	SUR	PTP-1				
14RHR(1)A-23								
	EL TO PIPE	C-F	SUR	PTP-1				
RHR-243								
	SPRING	C-E-2	VT-3	303/8.2.17				
			VT-4	303/8.2.17				
14RHR(1)A-23/6RHR(6)A-2								
	BRANCH CONN	C-F	SUR	PTP-1				
14RHR(1)A-24								
	PIPE TO REDUCER	C-F	SUR	PTP-1				
12RHR(1)A-1A								
	REDUCER TO PIPE	C-F	SUR	PTP-1				
RHR-1022N								
	PSA-35 SN(2)	C-E-2	VT-3	303/8.2.17				S/N N3007/S3008

WNP-02
INTERVAL: PSI
PERIOD: NA
OUTAGE:
DRAWING NO. RHR-201

WASHINGTON PUBLIC POWER SUPPLY SYSTEM
PROGRAM PLAN AND SCHEDULE
SYSTEM OR COMPONENT: RHR(1)-2
DESCRIPTION: STM SPLY TO RHR HX1A

DATE 12/14/84

IDENT. NO.	DESCRIPTION	SECT. XI EXAM.	EXAM MTH.	PROCEDURE	CAL. BLOCK	INSERVICE REQ.	SCHEDULED OUTAGE	NOTES
			VT-4	303/8.2.17				S/N N3007/S3008
RHR-244								
	PSA-35 SNUBBER	C-E-2	VT-3	303/8.2.17				S/N 6239
			VT-4	303/8.2.17				S/N 6239
12RHR(1)A-2A								
	PIPE TO EL	C-F	SUR	PTP-1				
12RHR(1)A-3A								
	PIPE TO EL	C-F	SUR	PTP-1				
RHR-260								
	PSA-3 SNUBBER	C-E-2	VT-3	303/8.2.17				S/N 716
			VT-4	303/8.2.17				S/N 716
RHR-261								
	SPRING	C-E-2	VT-3	303/8.2.17				
			VT-4	303/8.2.17				
12RHR(1)A-3A/3V-63A								
	FLUSH CONN	N/A	VT-2	N/A				IWC-2510, SEE NOTES #6 & #7.
12RHR(1)A-3A/3/4V-159A								
	TEST CONN	N/A	VT-2	N/A				IWC-2510, SEE NOTES #6 & #7.
12RHR(1)A-3B								
	PIPE TO PIPE	C-F	SUR	PTP-1				
12RHR(1)A-4A								
	PIPE TO VALVE	C-F	SUR	PTP-1				
6RHR(6)A-1								
	WOL TO PIPE	C-F	SUR	PTP-1				
6RHR(6)A-2								
	PIPE TO EL	C-F	SUR	PTP-1				
6RHR(6)A-3								
	EL TO PIPE	C-F	SUR	PTP-1				
6RHR(6)A-4								
	PIPE TO EL	C-F	SUR	PTP-1				

WNP-02
INTERVAL: PSI
PERIOD: NA
OUTAGE:
DRAWING NO. RHR-201

WASHINGTON PUBLIC POWER SUPPLY SYSTEM
PROGRAM PLAN AND SCHEDULE
SYSTEM OR COMPONENT: RHR(1)-2
DESCRIPTION: STM SPLY TO RHR HX1A

IDENT. NO.	DESCRIPTION	SECT. XI EXAM.	EXAM MTH.	PROCEDURE	CAL. BLOCK	INSERVICE REQ.	INSERVICE SCHEDULED OUTAGE	NOTES
6RHR(6)A-5	EL TO PIPE	C-F	SUR	PTP-1				
RHR-245(W)	8 WELDED LUGS	C-E-1	SUR	MTP-1				
RHR-245	BOX	C-E-2	VT-3	303/8.2.17				
6RHR(6)A-5A	PIPE TO PIPE	C-F	SUR	PTP-1				
RHR-963N	BOX	C-E-2	VT-3	303/8.2.17				
6RHR(6)A-6	PIPE TO EL	C-F	SUR	PTP-1				
6RHR(6)A-7	EL TO PIPE	C-F	SUR	PTP-1				
6RHR(6)A-8	PIPE TO VALVE	C-F	SUR	PTP-1				
RHR-V-27A/3/4V-175A	STEM LEAKOFF	N/A	VT-2	QCI 7-1				IWC-2510, SEE NOTES #5 & #6.
RHR-PB-201	RHR PRESS BNDRY	N/A	VT-2	N/A				IWC-2510, SEE NOTES #6 & #7.

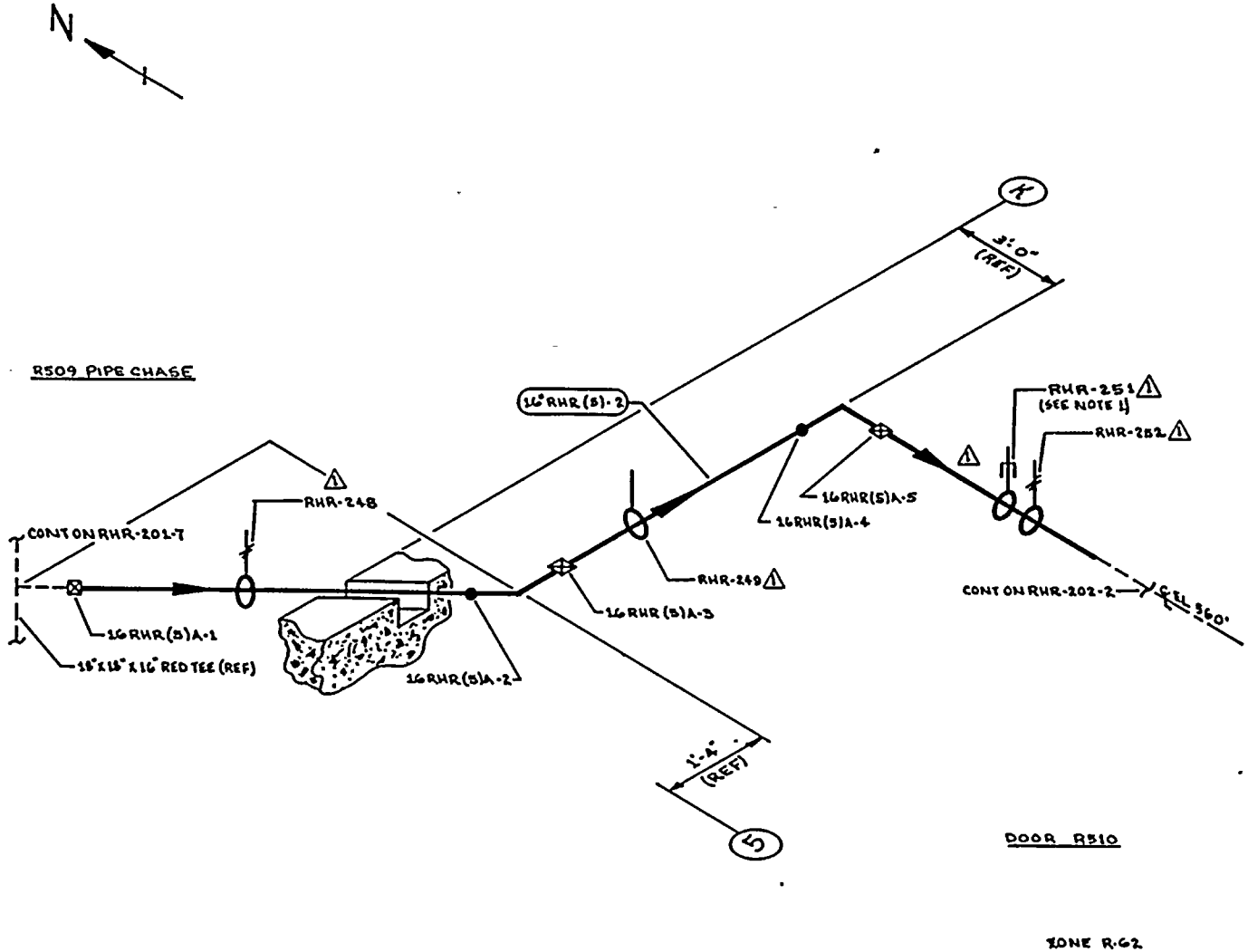

NOTES:

1. STAMPING ON CLAMP IS RHR-912N.
2. SCAFFOLDING IS REQUIRED.

REFERENCES:

BOVEE & CRAIL ISOMETRICS
RHR-853-L4 REV 5

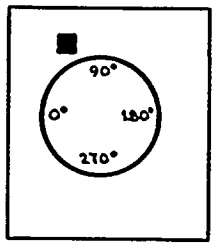

KEY PLAN

THIS DRAWING IS INTENDED FOR USE IN PRESERVICE AND INSERVICE INSPECTION PROGRAMS ONLY.

PIPING SYSTEM	NOM DIA (IN)	SCH	NOM WALL THK	MATERIAL SPECIFICATION	MATL TYPE	CAL BLOCK NO
16" RHR (5)-2	16	40	0.500	SA 106 GR B	CS	NA

NO	DATE	REVISION	BY	CHKD	APPVD
1	9-26-83	REVISED AS NOTED	KMcA	[illegible]	TEW
0	12-22-79	ISSUED FOR USE	KMcA	[illegible]	[illegible]
A	4-12-78	ISSUED FOR INFORMATION ONLY	KMcA	GHK	[illegible]

QUALITY CLASS: 1 | ASME CODE CLASS: 2

ENGR: GA KUGLER | DRAWN: K. McA | DATE: 5-12-78

WASHINGTON PUBLIC POWER SUPPLY SYSTEM
RICHLAND, WASHINGTON 99352

WNP-2
WELD & COMPONENT
IDENTIFICATION DIAGRAM

TITLE:
RHR LOOP A
DRYWELL SPRAY SUPPLY

DWG NO: RHR-202-1 | REV 1

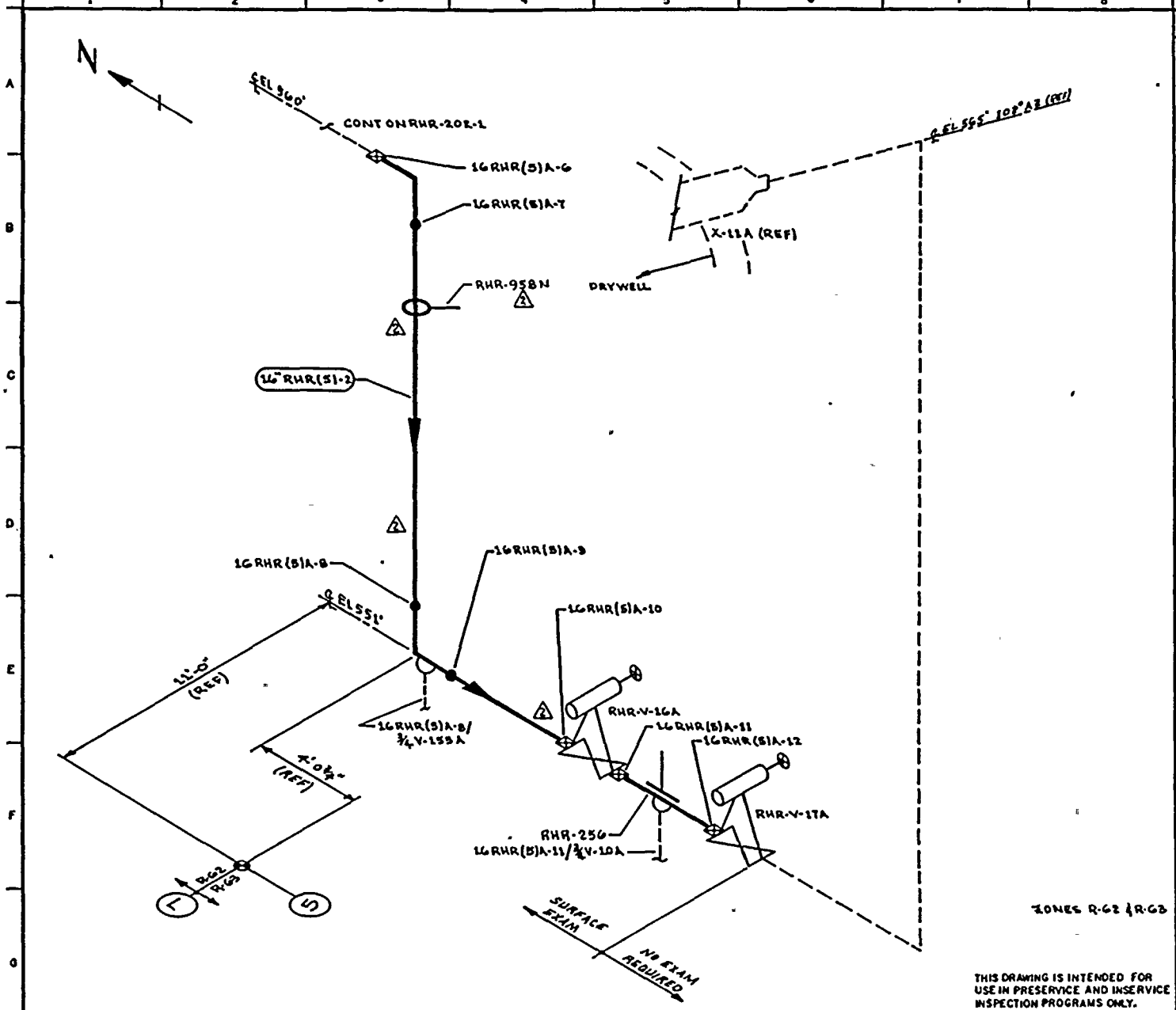

NOTES:

REFERENCES:

BOVEE & CRAIL ISOMETRICS

RHR-853-1.4 REV 6
RHR-853-5.6 REV 4

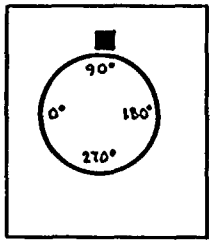

KEY PLAN

THIS DRAWING IS INTENDED FOR USE IN PRESERVICE AND INSERVICE INSPECTION PROGRAMS ONLY.

PIPING SYSTEM	NOM DIA (IN)	SCH	NOM WALL THK	MATERIAL SPECIFICATION	MATL TYPE	CAL BLOCK NO
16" RHR(B)-2	16	40	0.500	SA 106 GR B	CS	NA

NO	DATE	REVISION	BY	CHKD	APPVD
2	4-26-85	REVISED AS NOTED	KMcA	[illegible]	TFH
1	12-2-81	REVISED AS NOTED	KMcA	[illegible]	TFH
0	12-22-78	ISSUED FOR USE	KMcA	[illegible]	[illegible]
A	9-12-78	ISSUED FOR INFORMATION ONLY	KMcA	[illegible]	RWP

QUALITY CLASS: 1 | ASME CODE CLASS: 2

ENGR: GA KUGLER | DRAWN: KMcA | DATE: 8-12-78

WASHINGTON PUBLIC POWER SUPPLY SYSTEM
RICHLAND, WASHINGTON 99352

WNP-2
WELD & COMPONENT IDENTIFICATION DIAGRAM

TITLE: RHR LOOP A DRYWELL SPRAY SUPPLY

DWG NO: RHR-202-2 | REV 2

WNP-02
INTERVAL: PSI
PERIOD: NA
OUTAGE:
DRAWING NO. RHR-202

WASHINGTON PUBLIC POWER SUPPLY SYSTEM
PROGRAM PLAN AND SCHEDULE
SYSTEM OR COMPONENT: 16RHR(5)-2
DESCRIPTION: DRYWELL SPRAY SUP"A"

DATE 12/14/84

IDENT. NO.	DESCRIPTION	SECT. XI EXAM.	EXAM MTH.	PROCEDURE	CAL. BLOCK	INSERVICE REQ.	INSERVICE SCHEDULED OUTAGE	NOTES
16RHR(5)A-1								
	TEE TO PIPE	C-F	SUR	PTP-1				
RHR-248								
	SPRING	C-E-2	VT-3	303/8.2.17				
			VT-4	303/8.2.17				
16RHR(5)A-2								
	PIPE TO EL	C-F	SUR	PTP-1				
16RHR(5)A-3								
	EL TO PIPE	C-F	SUR	PTP-1				
RHR-249								
	BOX	C-E-2	VT-3	303/8.2.17				
16RHR(5)A-4								
	PIPE TO EL	C-F	SUR	PTP-1				
16RHR(5)A-5								
	EL TO PIPE	C-F	SUR	PTP-1				
RHR-251								
	PSA-3 SNUBBER	C-E-2	VT-3	303/8.2.17				S/N 2387
			VT-4	303/8.2.17				S/N 2387
RHR-252								
	SPRING	C-E-2	VT-3	303/8.2.17				
			VT-4	303/8.2.17				
16RHR(5)A-6								
	PIPE TO EL	C-F	SUR	PTP-1				
16RHR(5)A-7								
	EL TO PIPE	C-F	SUR	PTP-1				
RHR-958N								
	ANCHOR	C-E-2	VT-3	303/8.2.17				
16RHR(5)A-8								
	PIPE TO EL	C-F	SUR	PTP-1				
16RHR(5)A-8/3/4V-153A								
	TEST CONN	N/A	VT-2	N/A				IWC-2510, SEE NOTES #6 & #7.

WNP-02
INTERVAL: PSI
PERIOD: NA
OUTAGE:
DRAWING NO. RHR-202

WASHINGTON PUBLIC POWER SUPPLY SYSTEM
PROGRAM PLAN AND SCHEDULE
SYSTEM OR COMPONENT: 16RHR(5)-2
DESCRIPTION: DRYWELL SPRAY SUP"A"

DATE 12/14/84

IDENT. NO.	DESCRIPTION	SECT. XI EXAM.	EXAM MTH.	PROCEDURE	CAL. BLOCK	INSERVICE REQ.	INSERVICE SCHEDULED OUTAGE	NOTES
16RHR(5)A-9								
	EL TO PIPE	C-F	SUR	PTP-1				
16RHR(5)A-10								
	PIPE TO VALVE	C-F	SUR	PTP-1				
16RHR(5)A-11								
	VALVE TO PIPE	C-F	SUR	PTP-1				
RHR-256								
	PSA-35 SNUBBER	C-E-2	VT-3	303/8.2.17				S/N 10730
			VT-4	303/8.2.17				S/N 10730
16RHR(5)A-11/3/4V-10A								
	TEST CONN	N/A	VT-2	N/A				IWC-2510, SEE NOTES #6 & #7.
16RHR(5)A-12								
	PIPE TO VALVE	C-F	SUR	PTP-1				
RHR-PB-202								
	RHR PRESS BNDRY	N/A	VT-2	N/A				IWC-2510, SEE NOTES #6 & #7.

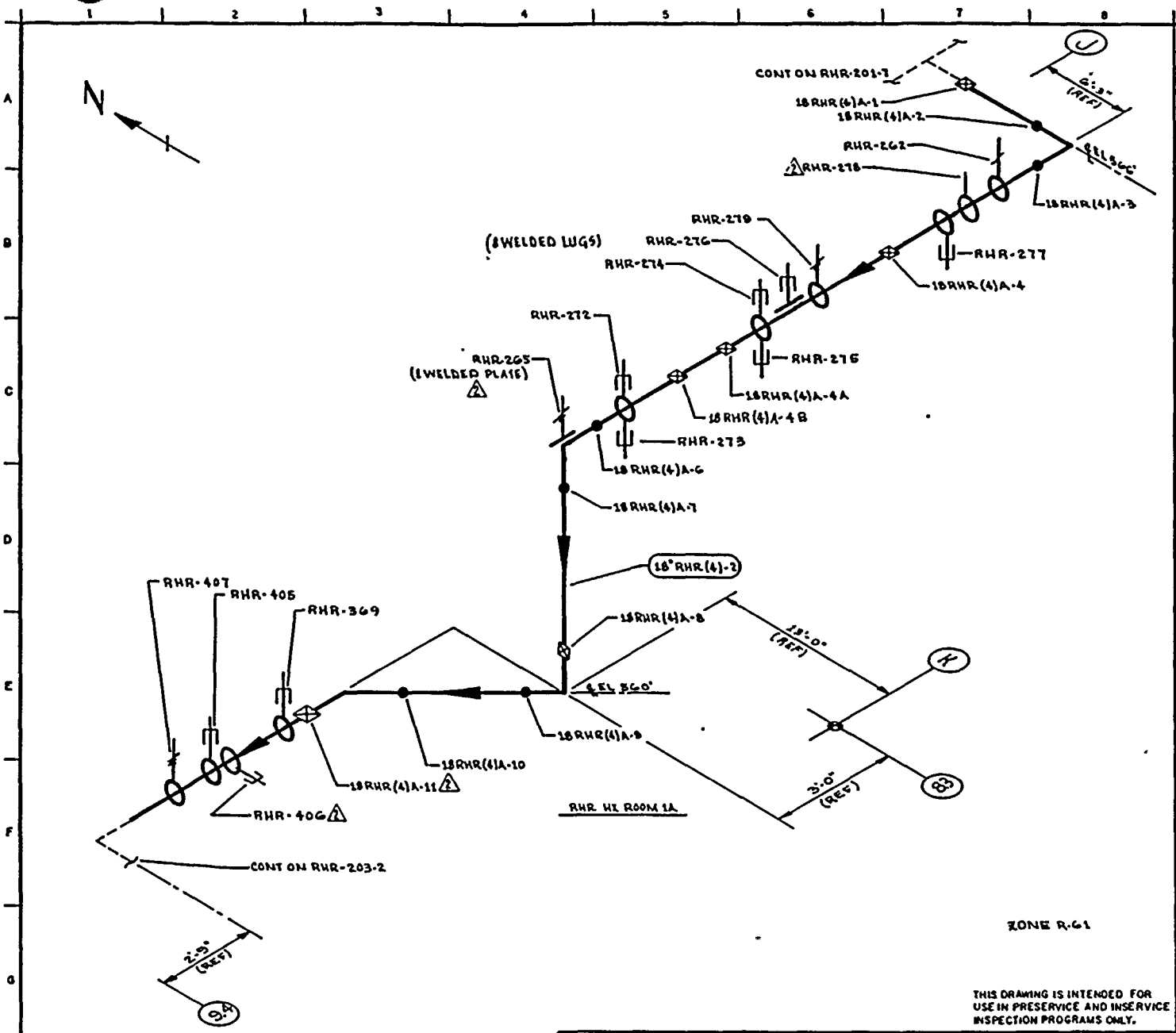

ZONE R-61

THIS DRAWING IS INTENDED FOR USE IN PRESERVICE AND INSERVICE INSPECTION PROGRAMS ONLY.

NOTES:

REFERENCES:
BOVEE & CRAIL ISOMETRICS,
RHR-854-LB REV 4

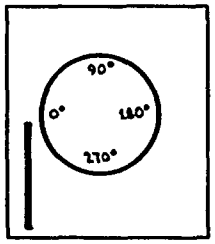

KEY PLAN

QUALITY CLASS: 1	ASME CODE CLASS: 2	
ENGR: GA KUGLER	DRAWN: K.M.A.	DATE: 5-12-78

WASHINGTON PUBLIC POWER SUPPLY SYSTEM
RICHLAND, WASHINGTON 99352

WNP-2
WELD & COMPONENT
IDENTIFICATION DIAGRAM

TITLE:
RHR LOOP A TEST LINE

DWG NO: RHR-203-1 REV 2

PIPING SYSTEM	NOM DIA (IN)	SCH	NOM WALL THK	MATERIAL SPECIFICATION	MATL TYPE	CAL BLOCK NO
18" RHR (4)-2	18	30	0.438	SA 106 GR B	CS	NA

NO	DATE	REVISION	BY	CHKD	APPVD
2	9-26-83	REVISED AS NOTED	KMA	[illegible]	[illegible]
1	11-5-80	REVISED AS NOTED	KMA	[illegible]	[illegible]
0	12-22-78	ISSUED FOR USE	KMA	[illegible]	[illegible]
A	9-12-78	ISSUED FOR INFORMATION ONLY	KMA	[illegible]	[illegible]

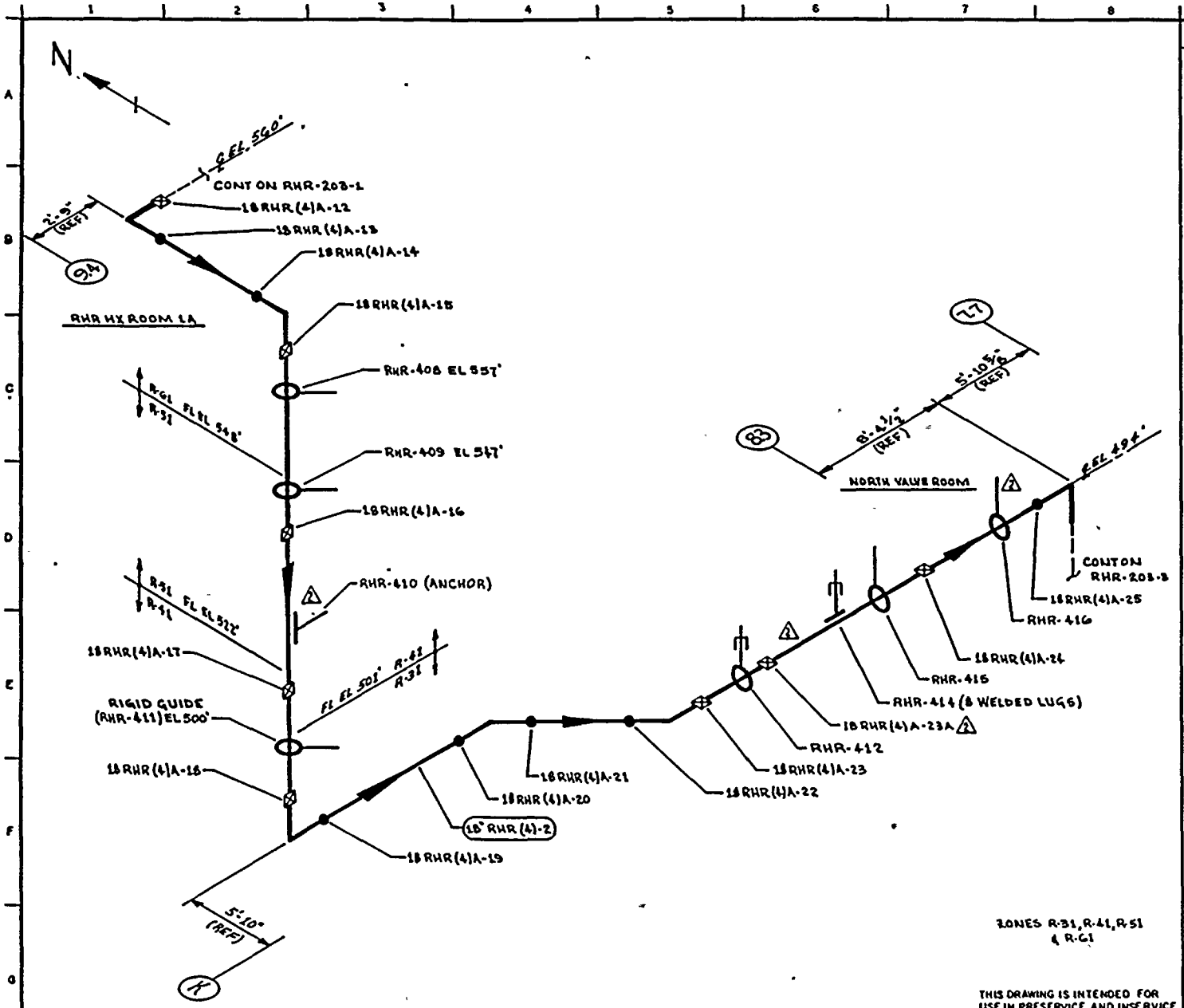

NOTES:

1. SCAFFOLDING IS REQUIRED.

REFERENCES:

BOVEE & CRAIL ISOMETRICS

RHR-854-1.5 REV 4
RHR-854-6.11 REV 7

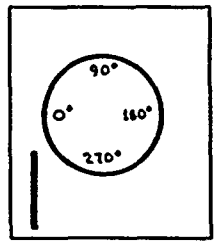

KEY PLAN

THIS DRAWING IS INTENDED FOR USE IN PRESERVICE AND INSERVICE INSPECTION PROGRAMS ONLY.

QUALITY CLASS: 1	ASME CODE CLASS: 2	
ENGR: G.A. KUGLER	DRAWN: K.H.C.A.	DATE: 5-15-78

WASHINGTON PUBLIC POWER SUPPLY SYSTEM
RICHLAND WASHINGTON 99352

PIPING SYSTEM	NOM DIA (IN)	SCH	NOM WALL THK	MATERIAL SPECIFICATION	MATL TYPE	CAL BLOCK NO
18" RHR(4)-2	18	30	0.438	SA 106 GR B	CS	NA

NO	DATE	REVISION	BY	CHKD	APPVD
2	9-22-83	REVISED AS NOTED	KHCA		TFH
1	12-2-81	REVISED AS NOTED	KHCA		TFH
0	12-22-78	ISSUED FOR USE	KHCA		
A	9-12-78	ISSUED FOR INFORMATION ONLY	KHCA		RWR

WNP-2
WELD & COMPONENT IDENTIFICATION DIAGRAM

TITLE: RHR LOOP A TEST LINE

DWG NO: RHR-203-2 REV 2

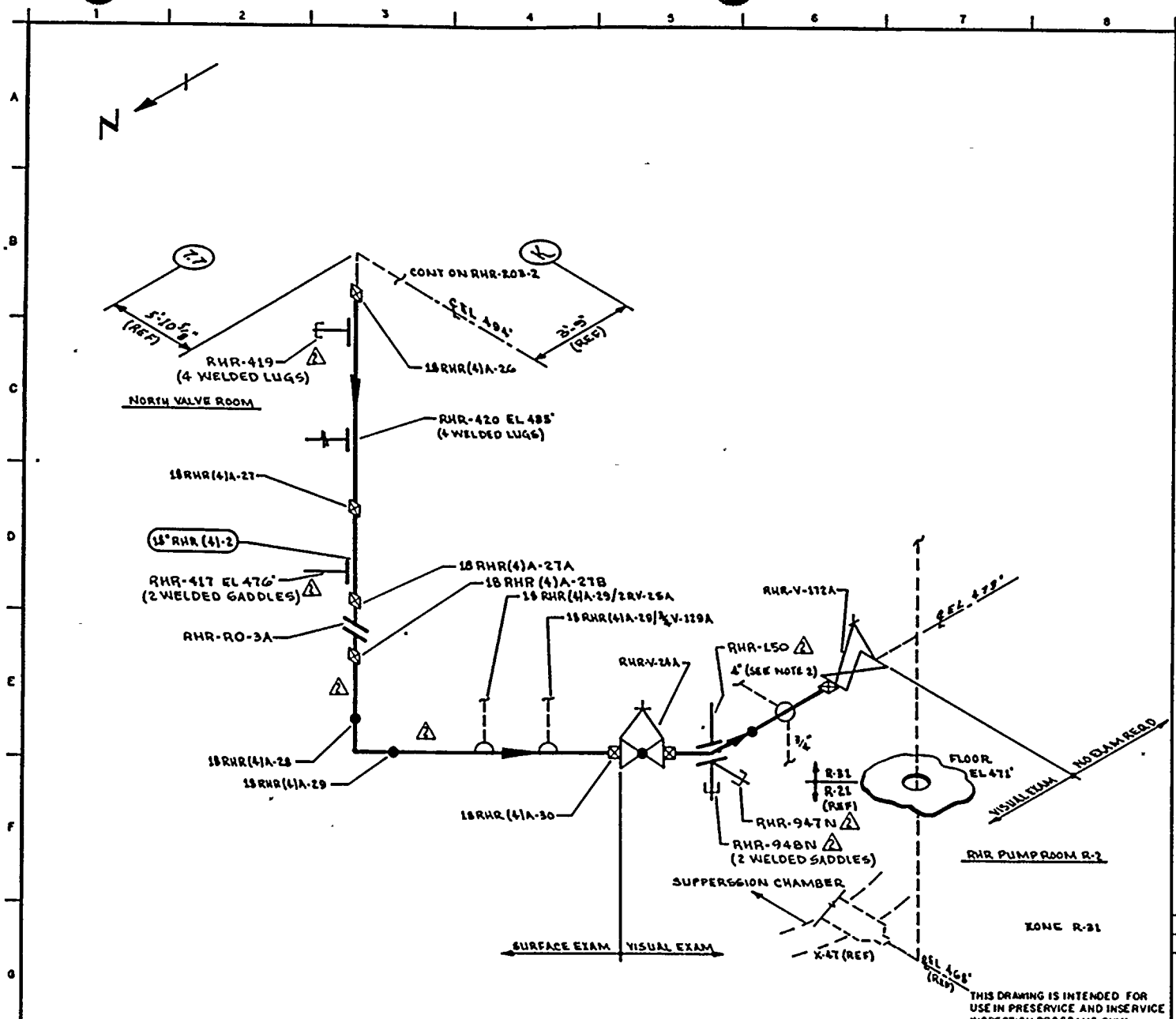

THIS DRAWING IS INTENDED FOR USE IN PRESERVICE AND INSERVICE INSPECTION PROGRAMS ONLY.

NOTES:

1. FOR BRANCH PIPING 4" DIA OR LESS (CONN SHOWN IN DASHED LINES) EXTEND VISUAL LEAKAGE EXAM THROUGH OUTERMOST NORMALLY CLOSED NUCLEAR VALVE OR UNTIL TRANSITION TO INSTRUMENT TUBING, UNLESS OTHERWISE NOTED.
2. EXTEND VISUAL LEAKAGE EXAM THROUGH RHR-V-11A.
3. PORTIONS OF THIS DRAWING IDENTIFY PIPING & COMP. THAT ARE SUBJECT ONLY TO A VISUAL EXAM FOR EVIDENCE OF LEAKAGE DURING SYSTEM HYDRO OR OPERABILITY TESTS. TESTS ARE TO BE CONDUCTED PER THE REQUIREMENTS OF ASME SECTION XI, PARAGRAPH IWA-5000.

REFERENCES:

BOVEE & CRAIL ISOMETRICS
RHR-854-12.16 REV 9

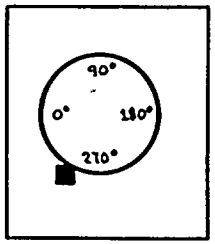

KEY PLAN

QUALITY CLASS: 1	ASME CODE CLASS: 2	
ENGR: GA KUGLER	DRAWN: K. McA	DATE: 5-15-78

WASHINGTON PUBLIC POWER SUPPLY SYSTEM
RICHLAND, WASHINGTON 99352

PIPING SYSTEM	NOM DIA (IN)	SCH	NOM WALL THK	MATERIAL SPECIFICATION	MATL TYPE	CAL BLOCK NO
18" RHR (4)-2	18	30	0.438	SA 106 GRB	CS	NA

NO	DATE	REVISION	BY	CHKD	APPVD
2	9-26-83	REVISED AS NOTED	K. McA	EPK	TFK
1	11-5-80	REVISED AS NOTED	K. McA	TFK	DWK
0	12-22-78	ISSUED FOR USE	K. McA	[illegible]	[illegible]
A	9-12-78	ISSUED FOR INFORMATION ONLY	K. McA	DAK	DWR

WNP-2
WELD & COMPONENT IDENTIFICATION DIAGRAM

TITLE: RHR LOOP A TEST LINE

DWG NO: RHR-203-3 REV 2

WNP-02
INTERVAL: PSI
PERIOD: NA
OUTAGE:
DRAWING NO. RHR-203

WASHINGTON PUBLIC POWER SUPPLY SYSTEM
PROGRAM PLAN AND SCHEDULE
SYSTEM OR COMPONENT: 18RHR(4)-2
DESCRIPTION: RHR TEST LINE LOOP A

DATE 12/14/84

IDENT. NO.	DESCRIPTION	SECT. XI EXAM.	EXAM MTH.	PROCEDURE	CAL. BLOCK	INSERVICE REQ.	INSERVICE SCHEDULED OUTAGE	NOTES
18RHR(4)A-1								
	TEE TO PIPE	C-F	SUR	PTP-1				
18RHR(4)A-2								
	PIPE TO EL	C-F	SUR	PTP-1				
18RHR(4)A-3								
	EL TO PIPE	C-F	SUR	PTP-1				
RHR-262								
	SPRING	C-E-2	VT-3	303/8.2.17				
			VT-4	303/8.2.17				
RHR-278								
	BOX	C-E-2	VT-3	303/8.2.17				
RHR-277								
	PSA-3 SNUBBER	C-E-2	VT-3	303/8.2.17				S/N 509
			VT-4	303/8.2.17				S/N 509
18RHR(4)A-4								
	PIPE TO PIPE	C-F	SUR	PTP-1				
RHR-279								
	SPRING	C-F-2	VT-3	303/8.2.17				
			VT-4	303/8.2.17				
RHR-276								
	PSA-1 SN(?)	C-E-2	VT-3	303/8.2.17				S/N S2796/N2576
			VT-4	303/8.2.17				S/N S2796/N2576
RHR-274								
	PSA-3 SNUBBER	C-E-2	VT-3	303/8.2.17				S/N 2590
			VT-4	303/8.2.17				S/N 2590
RHR-275								
	PSA-3 SNUBBER	C-E-2	VT-3	303/8.2.17				S/N 2379
			VT-4	303/8.2.17				S/N 2379
18RHR(4)A-4A								
	PIPE TO PIPE	C-F	SUR	PTP-1				

WNP-02
INTERVAL: PSI
PERIOD: NA
OUTAGE:
DRAWING NO. RHR-203

WASHINGTON PUBLIC POWER SUPPLY SYSTEM
PROGRAM PLAN AND SCHEDULE
SYSTEM OR COMPONENT: 18RHR(4)-2
DESCRIPTION: RHR TEST LINE LOOP A

DATE 12/14/84

IDENT. NO.	DESCRIPTION	SECT. XI EXAM.	EXAM MTH.	PROCEDURE	CAL. BLOCK	INSERVICE REQ.	INSERVICE SCHEDULED OUTAGE	NOTES
18RHR(4)A-4B								
	PIPE TO PIPE	C-F	SUR	PTP-1				
RHR-272								
	PSA-3 SNUBBER	C-E-2	VT-3	303/8.2.17				S/N 258
			VT-4	303/8.2.17				S/N 258
RHR-273								
	PSA-3 SNUBBER	C-E-2	VT-3	303/8.2.17				S/N 508
			VT-4	303/8.2.17				S/N 508
18RHR(4)A-6								
	PIPE TO EL	C-F	SUR	PTP-1				
RHR-265								
	SPRING	C-E-2	VT-3	303/8.2.17				W/1 WELDED PLATE.
			VT-4	303/8.2.17				W/1 WELDED PLATE.
18RHR(4)A-7								
	EL TO PIPE	C-F	SUR	PTP-1				
18RHR(4)A-8								
	PIPE TO EL	C-F	SUR	PTP-1				
18RHR(4)A-9								
	EL TO PIPE	C-F	SUR	PTP-1				
18RHR(4)A-10								
	PIPE TO EL	C-F	SUR	PTP-1				
18RHR(4)A-11								
	EL TO PIPE	C-F	SUR	PTP-1				
RHR-369								
	PSA-3 SNUBBER	C-E-2	VT-3	303/8.2.17				S/N 646
			VT-4	303/8.2.17				S/N 646
RHR-406								
	PSA-3 SNUBBER	C-E-2	VT-3	303/8.2.17				S/N 2588
			VT-4	303/8.2.17				S/N 2588

WNP-02
INTERVAL: PSI
PERIOD: NA
OUTAGE:
DRAWING NO. RHR-203

WASHINGTON PUBLIC POWER SUPPLY SYSTEM
PROGRAM PLAN AND SCHEDULE
SYSTEM OR COMPONENT: 18RHR(4)-2
DESCRIPTION: RHR TEST LINE LOOP A

IDENT. NO.	DESCRIPTION	SECT. XI EXAM.	EXAM MTH.	PROCEDURE	CAL. BLOCK	INSERVICE REQ.	SCHEDULED OUTAGE	NOTES
RHR-405								
	PSA-3 SNUBBER	C-E-2	VT-3	303/8.2.17				S/N 4420
			VT-4	303/8.2.17				S/N 4420
RHR-407								
	SPRING	C-E-2	VT-3	303/8.2.17				
			VT-4	303/8.2.17				
18RHR(4)A-12								
	PIPE TO EL	C-F	SUR	PTP-1				
18RHR(4)A-13								
	EL TO PIPE	C-F	SUR	PTP-1				
18RHR(4)A-14								
	PIPE TO EL	C-F	SUR	PTP-1				
18RHR(4)A-15								
	EL TO PIPE	C-F	SUR	PTP-1				
RHR-408								
	STRUT	C-E-2	VT-3	303/8.2.17				
RHR-409								
	BOX	C-E-2	VT-3	303/8.2.17				
18RHR(4)A-16								
	PIPE TO PIPE	C-F	SUR	PTP-1				
RHR-410(S)								
	WELDED SADDLE	C-E-1	SUR	NTP-1				
RHR-410								
	ANCHOR	C-E-2	VT-3	303/8.2.17				
18RHR(4)A-17								
	PIPE TO PIPE	C-F	SUR	PTP-1				
RHR-411								
	BOX	C-E-2	VT-3	303/8.2.17				
18RHR(4)A-18								
	PIPE TO EL	C-F	SUR	PTP-1				
18RHR(4)A-19								
	EL TO PIPE	C-F	SUR	PTP-1				
18RHR(4)A-20								
	PIPE TO EL	C-F	SUR	PTP-1				

WNP-02
INTERVAL: PSI
PERIOD: NA
OUTAGE:
DRAWING NO. RHR-203

WASHINGTON PUBLIC POWER SUPPLY SYSTEM
PROGRAM PLAN AND SCHEDULE
SYSTEM OR COMPONENT: 18RHR(4)-2
DESCRIPTION: RHR TEST LINE LOOP A

DATE 12/14/84

IDENT. NO.	DESCRIPTION	SECT. XI EXAM.	EXAM MTH.	PROCEDURE	CAL. BLOCK	INSERVICE REQ.	SCHEDULED OUTAGE	NOTES
18RHR(4)A-21								
	EL TO PIPE	C-F	SUR	PTP-1				
18RHR(4)A-22								
	PIPE TO EL	C-F	SUR	QCI 3-3				
18RHR(4)A-23								
	EL TO PIPE	C-F	SUR	PTP-1				
RHR-412								
	STRUT	C-E-2	VT-3	303/8.2.17				
18RHR(4)A-23A								
	PIPE TO PIPE	C-F	SUR	QCI 3-3				
RHR-414								
	PSA-3 SN(2)	C-E-2	VT-3	303/8.2.17				S/N N2353/S2586
			VT-4	303/8.2.17				S/N N2353/S2586
RHR-415								
	STRUT	C-E-2	VT-3	303/8.2.17				
18RHR(4)A-24								
	PIPE TO PIPE	C-F	SUR	PTP-1				
RHR-416								
	PSA-10 SN(2)	C-E-2	VT-3	303/8.2.17				S/N T9906/B9934
			VT-4	303/8.2.17				S/N T9906/B9934
18RHR(4)A-25								
	PIPE TO EL	C-F	SUR	PTP-1				
18RHR(4)A-26								
	EL TO PIPE	C-F	SUR	PTP-1				
RHR-419(W)								
	8 WELDED LUGS	C-E-1	SUR	QCI 4-3				
RHR-419								
	PSA-3 SN(2)	C-E-2	VT-3	303/8.2.17				S/N E4432/W5744
			VT-4	303/8.2.17				S/N E4432/W5744
RHR-420(W)								
	4 WELDED LUGS	C-E-1	SUR	MTP-1				
RHR-420								
	SPRING	C-E-2	VT-3	303/8.2.17				

WNP-02
INTERVAL: PSI
PERIOD: NA
OUTAGE:
DRAWING NO. RHR-203

WASHINGTON PUBLIC POWER SUPPLY SYSTEM
PROGRAM PLAN AND SCHEDULE
SYSTEM OR COMPONENT: 18RHR(4)-2
DESCRIPTION: RHR TEST LINE LOOP A

DATE 12/14/84

IDENT. NO.	DESCRIPTION	SECT. XI EXAM.	EXAM MTH.	PROCEDURE	CAL. BLOCK	INSERVICE REQ.	SCHEDULED OUTAGE	NOTES
			VT-4	303/8.2.17				
18RHR(4)A-27								
	PIPE TO PIPE	C-F	SUR	PTP-1				
RHR-417								
	STRUT	C-E-2	VT-3	303/8.2.17				
18RHR(4)A-27A								
	PIPE TO FLANGE	C-F	SUR	PTP-1				
18RHR(4)A-27B								
	FLANGE TO PIPE	C-F	SUR	PTP-1				
18RHR(4)A-28								
	PIPE TO EL	C-F	SUR	PTP-1				
18RHR(4)A-29								
	EL TO PIPE	C-F	SUR	PTP-1				
18RHR(4)A-29/2RV-25A								
	THERMAL RELIEF	N/A	VT-2	N/A				IWC-2510, SEE NOTES #6 & #7.
18RHR(4)A-29/3/4V-129A								
	TEST CONN	N/A	VT-2	N/A				IWC-2510, SEE NOTES #6 & #7.
18RHR(4)A-30								
	PIPE TO VALVE	C-F	SUR	PTP-1				
RHR-150								
	SPRING	C-E-2	VT-3	303/8.2.17				
			VT-4	303/8.2.17				
RHR-948N(S)								
	2 WELDED SADDLE	C-E-1	SUR	QCI 4-3				SADDLE 'T' = 1.031".
RHR-948N								
	PSA-3 SN(2)	C-E-2	VT-3	303/8.2.17				S/N T2789/82580
			VT-4	303/8.2.17				S/N T2789/82580
RHR-947N								
	PSA-3 SN(2)	C-E-2	VT-3	303/8.2.17				S/N 3905/3882

WNP-02
INTERVAL: PSI
PERIOD: NA
OUTAGE:
DRAWING NO. RHR-203

WASHINGTON PUBLIC POWER SUPPLY SYSTEM
PROGRAM PLAN AND SCHEDULE
SYSTEM OR COMPONENT: 18RHR(4)-2
DESCRIPTION: RHR TEST LINE LOOP A

DATE 12/14/84

IDENT. NO.	DESCRIPTION	SECT. XI EXAM.	EXAM MTH.	PROCEDURE	CAL. BLOCK	INSERVICE REQ.	SCHEDULED OUTAGE	NOTES
			VT-4	303/8.2.17				S/N 3905/3882
FHR-PB-203	RHR PRESS BNDRY	N/A	VT-2	N/A				IWC-2510, SEE NOTES #6 & #7.

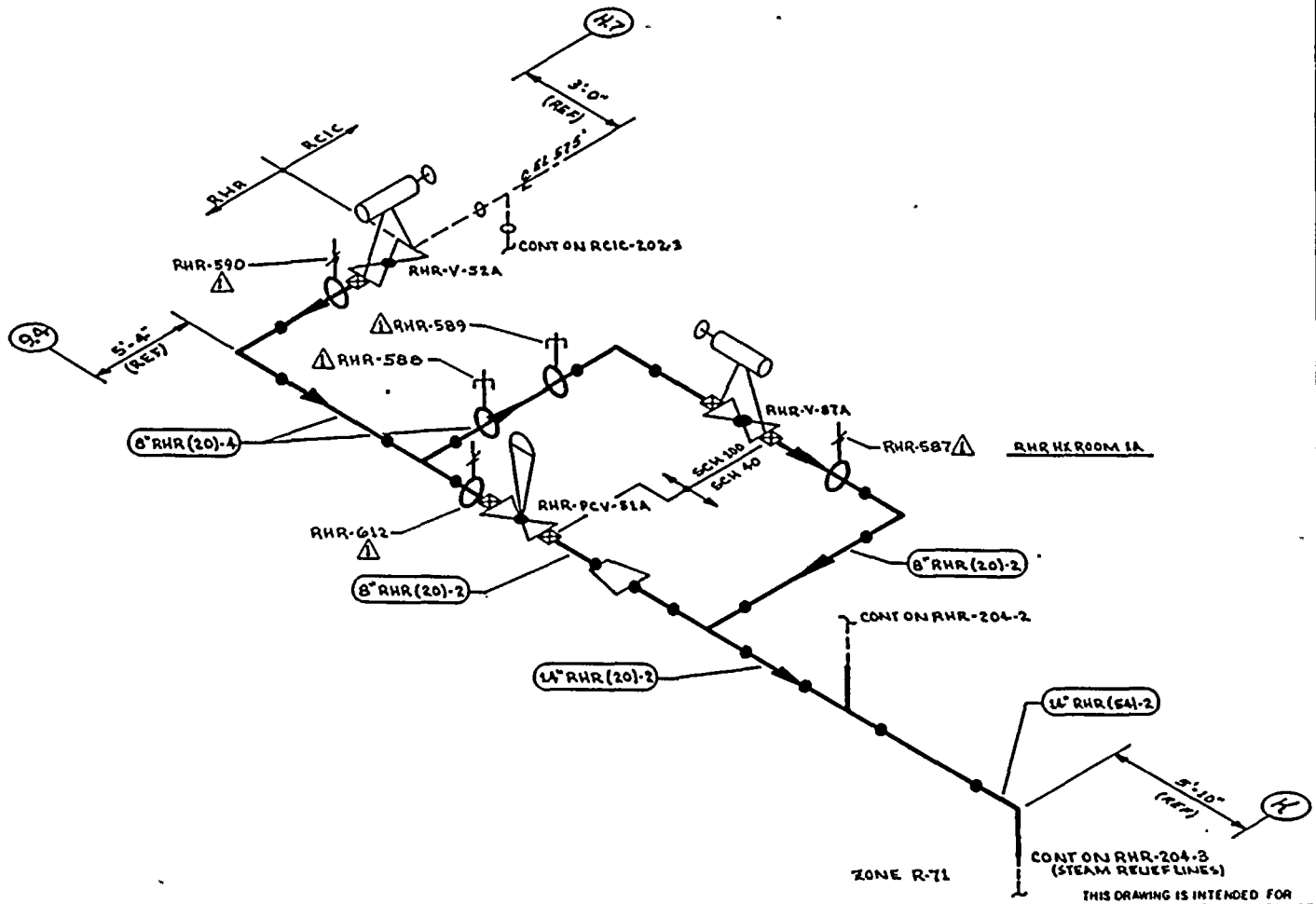

THIS DRAWING IS INTENDED FOR USE IN PRESERVICE AND INSERVICE INSPECTION PROGRAMS ONLY.

NOTES:

1. THIS DRAWING IDENTIFIES PIPING & COMPONENTS SUBJECT TO A VISUAL EXAM FOR EVIDENCE OF LEAKAGE DURING SYSTEM HYDRO OR OPERABILITY TESTS. TESTS ARE TO BE CONDUCTED PER THE REQUIREMENTS OF ASME SECTION XI, PARAGRAPH IWA-5000.

REFERENCES:

BOVEE & CRAIL ISOMETRIC
RHR-BCT-24.25 REV 7

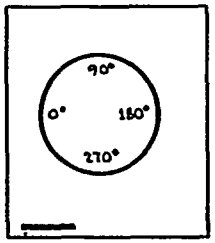

KEY PLAN

PIPING SYSTEM	NOM DIA (IN)	SCH	NOM WALL THK	MATERIAL SPECIFICATION	MATL TYPE	CAL BLOCK NO
8" RHR (20)-4	8	100	0.594	SA 106 GR B	CS	NA
8" RHR (20)-2	8	40	0.322	SA 106 GR B	CS	NA
14" RHR (20)-2	14	STD	0.375	SA 106 GR B	CS	NA
14" RHR (54)-2	14	STD	0.315	SA 106 GR B	CS	NA

NO	DATE	REVISION	BY	CHKD	APPVD
1	9-22-93	REVISED AS NOTED	KMcA	[illegible]	[illegible]
0	11-22-78	ISSUED FOR USE	KMcA	[illegible]	[illegible]
A	9-12-78	ISSUED FOR INFORMATION ONLY	KMcA	JAK	[illegible]

QUALITY CLASS: 1 | ASME CODE CLASS: 2

ENGR: G.A. KUGLER | DRAWN: K.M.A. | DATE: 5-26-78

WASHINGTON PUBLIC POWER SUPPLY SYSTEM
RICHLAND, WASHINGTON 99352

WNP-2
WELD & COMPONENT IDENTIFICATION DIAGRAM

TITLE: RHR LOOP A
RCIC STEAM SUPPLY TO RHR-HX-1A

DWG NO: RHR-204-1 | REV 1

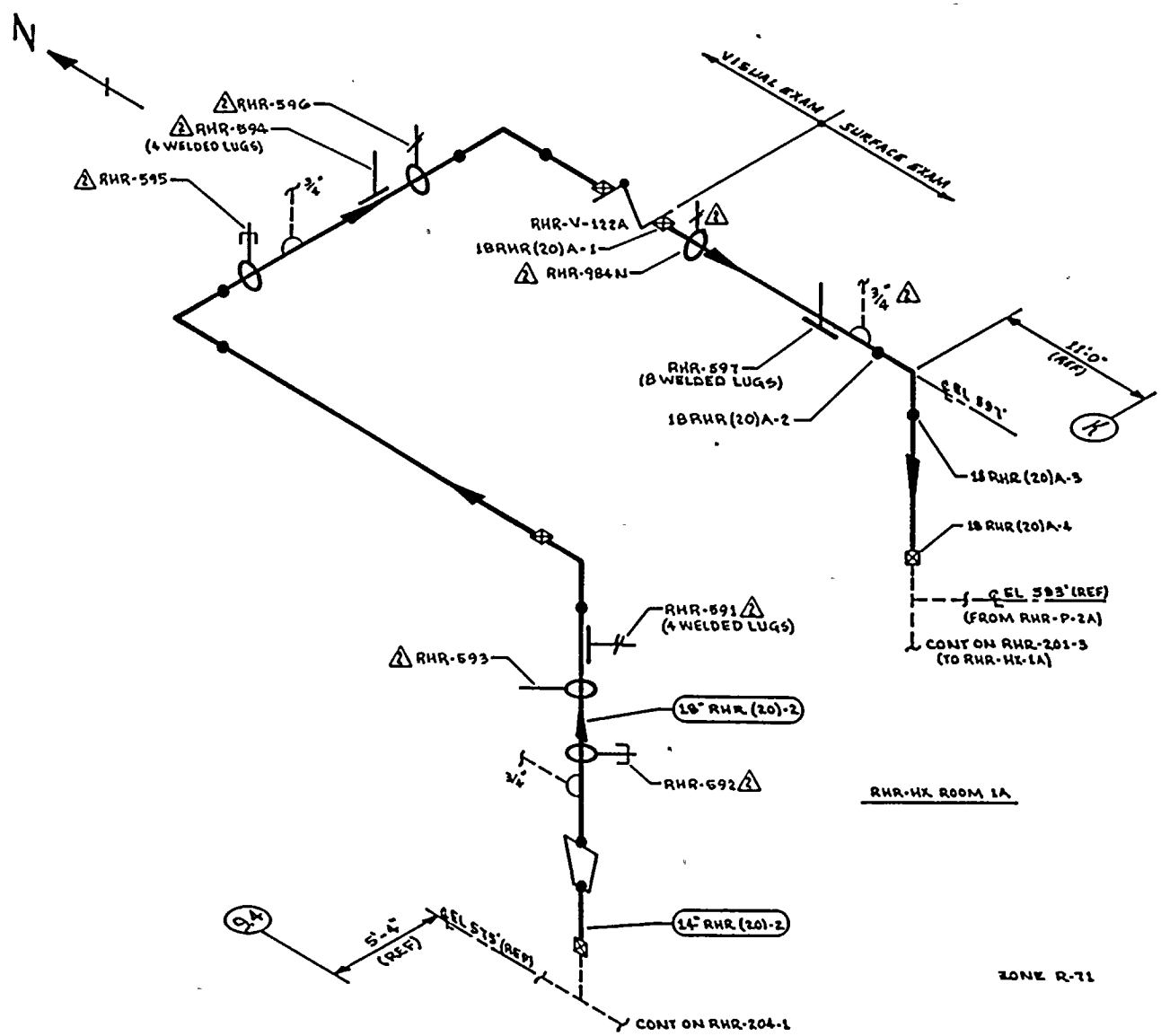

NOTES:

1. PORTIONS OF THIS DRAWING IDENTIFY PIPING & COMP THAT ARE SUBJECT ONLY TO A VISUAL EXAM FOR EVIDENCE OF LEAKAGE DURING SYSTEM HYDRO OR OPERABILITY TESTS. TESTS ARE TO BE CONDUCTED PER THE REQUIREMENTS OF ASME SECTION XI, PARAGRAPH IWA-5000.
2. FOR BRANCH PIPING 4" DIA OR LESS (CONN SHOWN IN DASHED LINES) EXTEND VISUAL LEAKAGE EXAM THROUGH THE OUTERMOST NORMALLY CLOSED NUCLEAR VALVE OR UNTIL TRANSITION TO INSTRUMENT TUBING, UNLESS OTHERWISE NOTED.
3. SCAFFOLDING IS REQUIRED. △4

REFERENCES:

BOVEE & CRAIL ISOMETRIC
RHR-867-28-30 REV 9

KEY PLAN

90° 0° 180° 270°

QUALITY CLASS: 1 | ASME CODE CLASS: 2

ENGR: G.A. KUGLER | DRAWN: K.M.L. | DATE: 5-16-78

WASHINGTON PUBLIC POWER SUPPLY SYSTEM
RICHLAND, WASHINGTON 99352

THIS DRAWING IS INTENDED FOR USE IN PRESERVICE AND INSERVICE INSPECTION PROGRAMS ONLY.

PIPING SYSTEM	NOM DIA (IN)	SCH	NOM WALL THK	MATERIAL SPECIFICATION	MATL TYPE	CAL BLOCK NO
24" RHR (20)-2	24	STD	0.375	SA 106 GR B	CS	NA
18" RHR (20)-2	18	30	0.438	SA 106 GR B	CS	NA

NO	DATE	REVISION	BY	CHKD	APPVD
2	9-26-83	REVISED AS NOTED	KMLA	DR	TFH
1	12-7-81	REVISED AS NOTED	KMLA	"	TFH
0	12-22-78	ISSUED FOR USE	KMLA	[illegible]	[illegible]
A	9-12-78	ISSUED FOR INFORMATION ONLY	KMLA	BAK	[illegible]

WNP-2
WELD & COMPONENT IDENTIFICATION DIAGRAM

TITLE:
RHR LOOP A
RCIC STEAM SUPPLY TO RHR-HX-1A

DWG NO: RHR-204-2 | REV 2

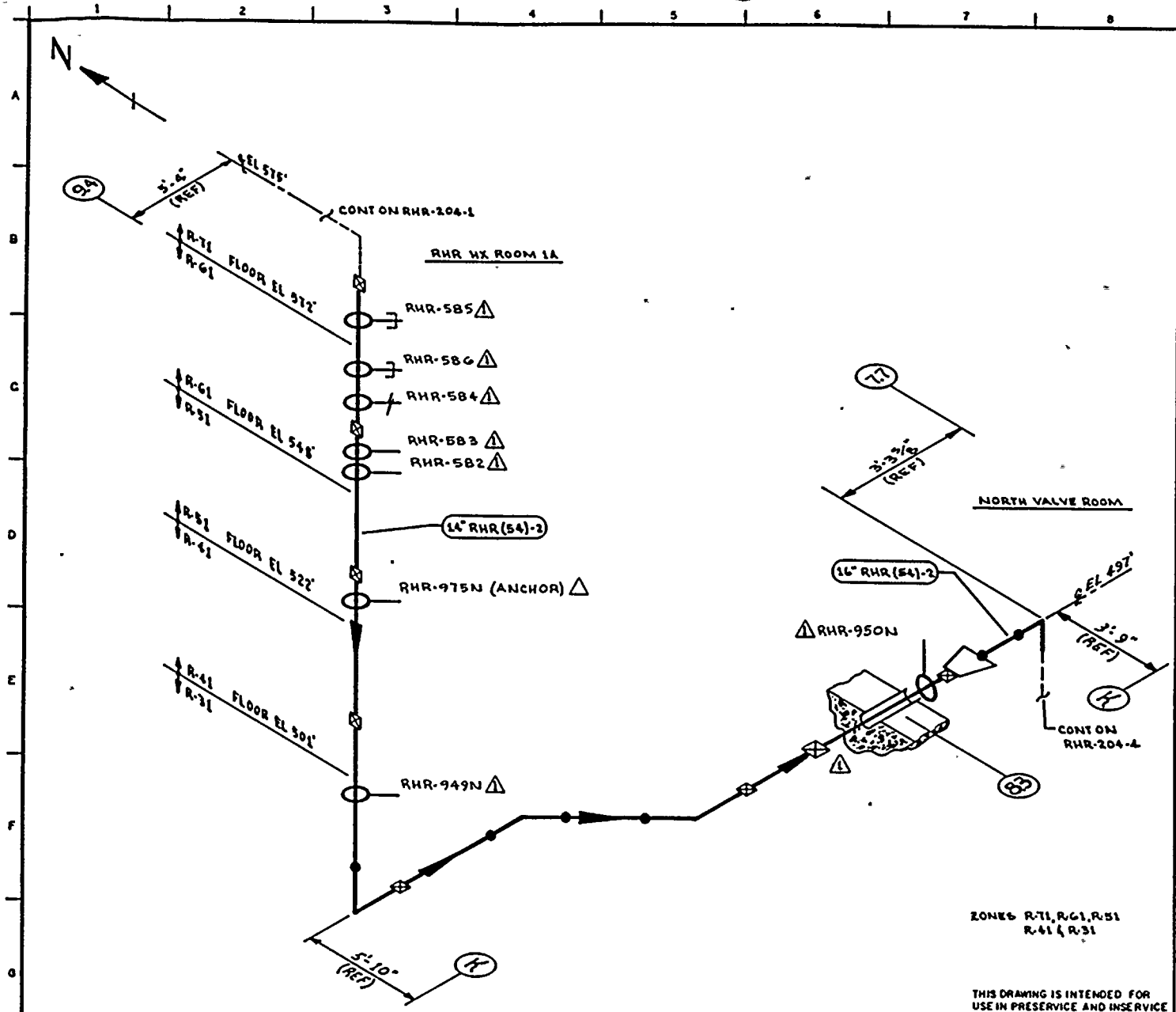

NOTES:

1. THIS DRAWING IDENTIFIES PIPING & COMPONENTS SUBJECT TO A VISUAL EXAM FOR EVIDENCE OF LEAKAGE DURING SYSTEM HYDRO OR OPERABILITY TESTS. TESTS ARE TO BE CONDUCTED PER THE REQUIREMENTS OF ASME SECTION XI PARAGRAPH IWA-5000.

REFERENCES:

BOVEE & CRAIL ISOMETRIC
RHR-867-21.27 REV 4

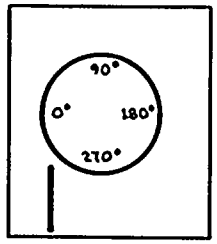

KEY PLAN

THIS DRAWING IS INTENDED FOR USE IN PRESERVICE AND INSERVICE INSPECTION PROGRAMS ONLY.

PIPING SYSTEM	NOM DIA (IN)	SCH	NOM WALL THK	MATERIAL SPECIFICATION	MATL TYPE	CAL BLOCK NO
14" RHR(54)-2	14	STD	0.375	SA 106 GR B	CS	NA
16" RHR(54)-2	16	40	0.500	SA 106 GR B	CS	NA

NO	DATE	REVISION	BY	CHKD	APPVD
1	9-26-83	REVISED AS NOTED	KMcA	DPK	TFH
0	12-22-78	ISSUED FOR USE	KMcA	[illegible]	[illegible]
A	9-12-78	ISSUED FOR INFORMATION ONLY	KMcA	DAK	FWR

QUALITY CLASS: 1 | ASME CODE CLASS: 2

ENGR: G.A. KUGLER | DRAWN: KMcA | DATE: 5-17-78

WASHINGTON PUBLIC POWER SUPPLY SYSTEM
RICHLAND, WASHINGTON 99352

WNP-2
WELD & COMPONENT IDENTIFICATION DIAGRAM

TITLE: RHR LOOP A
RCIC STEAM RELIEF LINES TO SUPPRESSION POOL

DWG NO: RHR-204-2 | REV 1

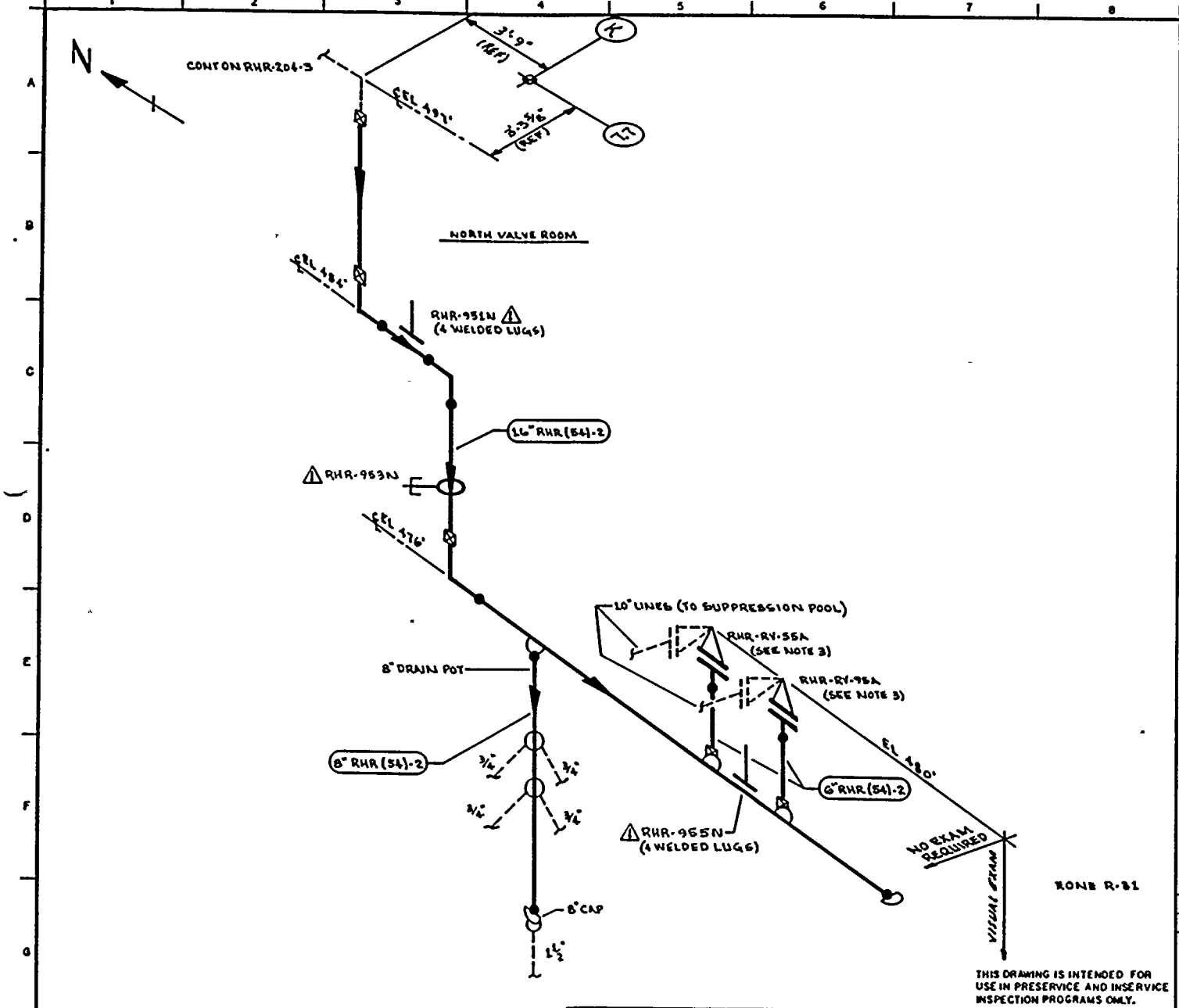

THIS DRAWING IS INTENDED FOR USE IN PRESERVICE AND INSERVICE INSPECTION PROGRAMS ONLY.

NOTES:

1. THIS DRAWING IDENTIFIES PIPING & COMPONENTS SUBJECT TO A VISUAL EXAM FOR EVIDENCE OF LEAKAGE DURING SYSTEM HYDRO OR OPERABILITY TESTS. TESTS ARE TO BE CONDUCTED PER THE REQUIREMENTS OF ASME SECTION XI PARAGRAPH IWA-5000.
2. FOR BRANCH PIPING 4" DIA OR LESS (CONN SHOWN IN DASHED LINES) EXTEND VISUAL LEAKAGE EXAM THROUGH THE OUTERMOST NORMALLY CLOSED NUCLEAR VALVE OR UNTIL TRANSITION TO INSTRUMENT TUBING, UNLESS OTHERWISE NOTED.
3. THE TWO LINES TO THE SUPPRESSION POOL FROM RHR-RV-55A & RHR-RV-95A ARE OPEN ENDED & THEREFORE EXEMPT FROM EXAM.

REFERENCES:

BOVEE & CRAIL ISOMETRICS

RHR-867-38.39 REV G
RHR-867-40.44 REV G

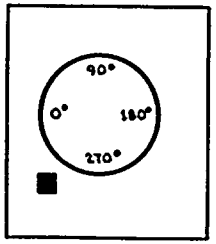

KEY PLAN

QUALITY CLASS: 1	ASME CODE CLASS: 2
ENGR: G.A. KUGLER	DRAWN: K. McA. / DATE: 5-17-78

WASHINGTON PUBLIC POWER SUPPLY SYSTEM
RICHLAND, WASHINGTON 99352

PIPING SYSTEM	NOM DIA (IN)	SCH	NOM WALL THK	MATERIAL SPECIFICATION	MATL TYPE	CAL BLOCK NO
16" RHR (54)-2	16	40	0.500	SA 106 GR B	CS	NA
8" RHR (54)-2	8	40	0.322	SA 106 GR B	CS	NA
6" RHR (54)-2	6	40	0.280	SA 106 GR B	CS	NA

NO	DATE	REVISION	BY	CHKD	APPVD
1	9-26-83	REVISED AS NOTED	KMcA	BOK	TRK
0	11-22-78	ISSUED FOR USE	KMcA	RWS	TRK
A	9-12-78	ISSUED FOR INFORMATION ONLY	KMcA	BOK	RWR

WNP-2
WELD & COMPONENT IDENTIFICATION DIAGRAM

TITLE: RHR LOOP A RCIC STEAM RELIEF LINES TO SUPPRESSION POOL

DWG NO: RHR-204-4 REV 1

WNP-02
INTERVAL: PSI
PERIOD: NA
OUTAGE:
DRAWING NO. RHR-204

WASHINGTON PUBLIC POWER SUPPLY SYSTEM
PROGRAM PLAN AND SCHEDULE
SYSTEM OR COMPONENT: 18RHR(20)2
DESCRIPTION: RCIC STM-RHR HX-1A

DATE 12/14/84

IDENT. NO.	DESCRIPTION	SECT. XI EXAM.	EXAM MTH.	PROCEDURE	CAL. BLOCK	INSERVICE REQ.	INSERVICE SCHEDULED OUTAGE	NOTES
RHR-590								
	SPRING	C-E-2	VT-3	303/8.2.17				
			VT-4	303/8.2.17				
RHR-612								
	SPRING	C-E-2	VT-3	303/8.2.17				
			VT-4	303/8.2.17				
RHR-588								
	PSA-3 SN(2)	C-E-2	VT-3	303/8.2.17				S/N T2792/B2347
			VT-4	303/8.2.17				S/N T2792/B2347
RHR-589								
	PSA-3 SNUBBER	C-E-2	VT-3	303/8.2.17				S/N 4493
			VT-4	303/8.2.17				S/N 4493
RHR-587								
	SPRING	C-E-2	VT-3	303/8.2.17				
			VT-4	303/8.2.17				
RHR-592								
	PSA-1/2 SNUBBER	C-E-2	VT-3	303/8.2.17				S/N 2782
			VT-4	303/8.2.17				S/N 2782
RHR-593								
	STRUT	C-E-2	VT-3	303/8.2.17				
RHR-591								
	SPRING	C-E-2	VT-3	303/8.2.17				
			VT-4	303/8.2.17				
RHR-595								
	PSA-1 SNUBBER	C-E-2	VT-3	303/8.2.17				S/N 3888
			VT-4	303/8.2.17				S/N 3888
RHR-594								
	STRUT	C-E-2	VT-3	303/8.2.17				

WNP-02
INTERVAL: PSI
PERIOD: NA
OUTAGE:
DRAWING NO. RHR-204

WASHINGTON PUBLIC POWER SUPPLY SYSTEM
PROGRAM PLAN AND SCHEDULE
SYSTEM OR COMPONENT: 18RHR(20)2
DESCRIPTION: RCIC STM-RHR HY-1A

DATE 12/14/84

IDENT. NO.	DESCRIPTION	SECT. XI EXAM.	EXAM MTH.	PROCEDURE	CAL. BLOCK	INSERVICE REQ.	SCHEDULED OUTAGE	NOTES
RHR-596								
	SPRING	C-E-2	VT-3	303/8.2.17				
			VT-4	303/8.2.17				
18RHR(20)A-1								
	VALVE TO PIPE	C-F	SUR	PTP-1				
RHR-984N								
	SPRING	C-E-2	VT-3	303/8.2.17				
			VT-4	303/8.2.17				
RHR-597(W)								
	8 WELDED LUGS	C-E-1	SUR	QCI 4-3				
RHR-597								
	STRUT	C-E-2	VT-3	303/8.2.17				
18RHR(20)A-2								
	PIPE TO EL	C-F	SUR	PTP-1				
18RHR(20)A-3								
	EL TO PIPE	C-F	SUR	PTP-1				
18RHR(20)A-4								
	PIPE TO TEE	C-F	SUR	PTP-1				
RHR-585								
	PSA-3 SNUBBER	C-E-2	VT-3	303/8.2.17				S/N 9929
			VT-4	303/8.2.17				S/N 9929
RHR-586								
	PSA-3 SNUBBER	C-E-2	VT-3	303/8.2.17				S/N 3894
			VT-4	303/8.2.17				S/N 3894
RHR-584								
	SPRING	C-E-2	VT-3	303/8.2.17				
			VT-4	303/8.2.17				
RHR-583								
	STRUT	C-E-2	VT-3	303/8.2.17				
RHR-582								
	STRUT	C-E-2	VT-3	303/8.2.17				

WNP-02
INTERVAL: PSI
PERIOD: NA
OUTAGE:
DRAWING NO. RHR-204

WASHINGTON PUBLIC POWER SUPPLY SYSTEM
PROGRAM PLAN AND SCHEDULE
SYSTEM OR COMPONENT: 18RHR(20)2
DESCRIPTION: RCIC STM-RHR HX-1A

DATE 12/14/84

IDENT. NO.	DESCRIPTION	SECT. XI EXAM.	EXAM MTH.	PROCEDURE	CAL. BLOCK	INSERVICE REQ.	INSERVICE SCHEDULED OUTAGE	NOTES
RHR-975N	ANCHOR	C-E-2	VT-3	303/8.2.17				
RHR-949N	BOX	C-E-2	VT-3	303/8.2.17				
RHR-950N	BOX	C-E-2	VT-3	303/8.2.17				
RHR-951N	BOX	C-E-2	VT-3	303/8.2.17				
RHR-953N	PSA-3 SNUBBER	C-E-2	VT-3	303/8.2.17				S/N 3879
			VT-4	303/8.2.17				S/N 3879
RHR-955N	BOX	C-E-2	VT-3	303/8.2.17				
RHR-PB-204	RHR PRESS BNDRY	N/A	VT-2	N/A				IWC-2510, SEE NOTES #6 & #7.

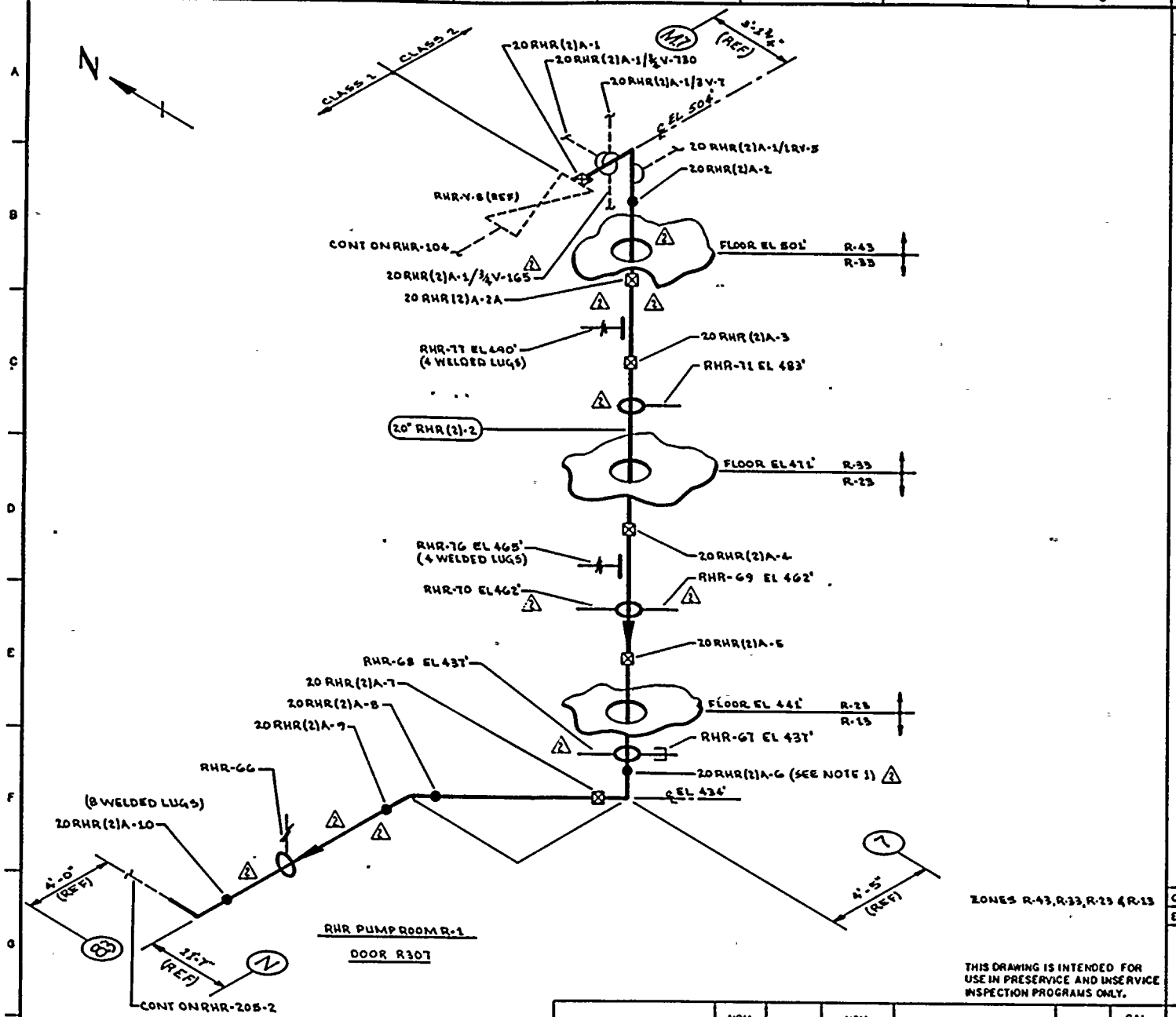

NOTES:

1. ACCESS TO WELD 20 RHR (2) A-6 REQUIRES REMOVAL OF RHR-68.
2. SCAFFOLDING IS REQUIRED.

REFERENCES:

BOVEE & CRAIL ISOMETRICS
RHR-875-1.5 REV 8

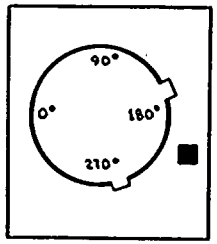

KEY PLAN

THIS DRAWING IS INTENDED FOR USE IN PRESERVICE AND INSERVICE INSPECTION PROGRAMS ONLY.

PIPING SYSTEM	NOM DIA (IN)	SCH	NOM WALL THK	MATERIAL SPECIFICATION	MATL TYPE	CAL BLOCK NO
20" RHR(2)-2	20	STD	0.375	SA 106 GR B	CS	NA

NO	DATE	REVISION	BY	CHKD	APPVD
2	9-26-83	REVISED AS NOTED	KMcA	[illegible]	[illegible]
1	11-5-80	ADDED FIELD WELD 20 RHR (2)A-2A & AS NOTED	KMcA	[illegible]	[illegible]
0	12-29-79	ISSUED FOR USE	KMcA	[illegible]	[illegible]
A	9-12-78	ISSUED FOR INFORMATION ONLY	KMcA	[illegible]	[illegible]

QUALITY CLASS: 1 | ASME CODE CLASS: 2
ENGR GA KUGLER | DRAWN: K. McA | DATE: 5-29-78

WASHINGTON PUBLIC POWER SUPPLY SYSTEM
RICHLAND WASHINGTON 99352

WNP-2
WELD & COMPONENT IDENTIFICATION DIAGRAM

TITLE:
RHR
SHUTDOWN COOLING SUCTION

DWG NO: RHR-205-1 | REV 2

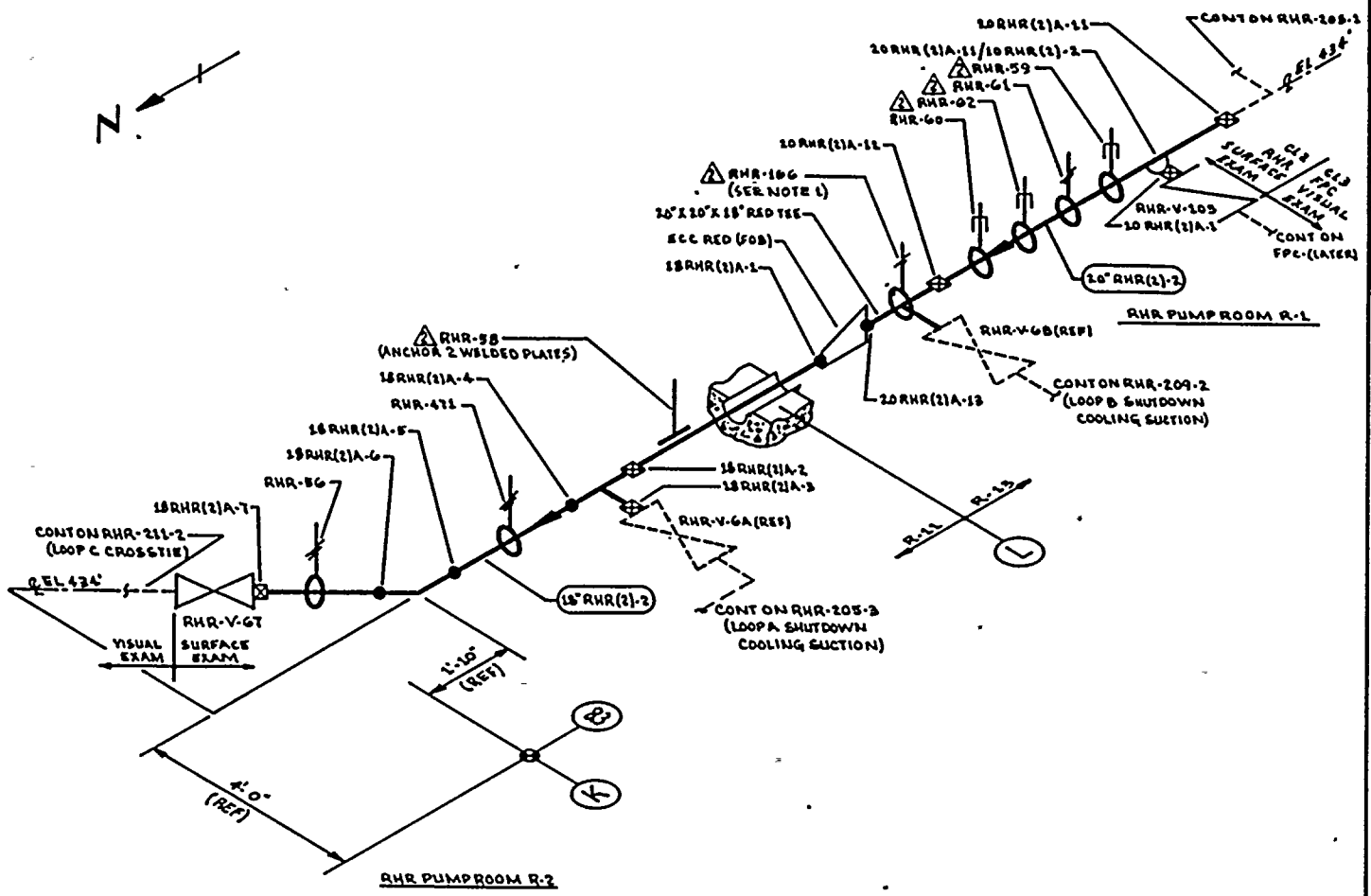

NOTES:

1. ACCESS TO WELDS 20 RHR(2)A-12 & 13 REQUIRES REMOVAL OF RHR-106.
2. SCAFFOLDING IS REQUIRED.

REFERENCES:

BOVEE & CRAIL ISOMETRICS
RHR-875-6.8 REV 6

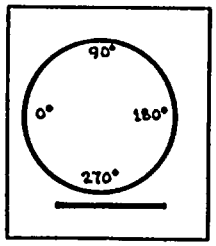

KEY PLAN

ZONES R-11 & R-13

THIS DRAWING IS INTENDED FOR USE IN PRESERVICE AND INSERVICE INSPECTION PROGRAMS ONLY.

QUALITY CLASS: 1 | ASME CODE CLASS: 2

ENGR: G.A. KUGLER | DRAWN: K.M.A. | DATE: 5-19-78

WASHINGTON PUBLIC POWER SUPPLY SYSTEM
RICHLAND, WASHINGTON 99352

PIPING SYSTEM	NOM DIA (IN)	SCH	NOM WALL THK	MATERIAL SPECIFICATION	MATL TYPE	CAL BLOCK NO
20" RHR(2)-2	20	STD	0.375	SA 106 GR B	CS	NA
18" RHR(2)-2	18	STD	0.375	SA 106 GR B	CS	NA
10" RHR(2)-2	10	STD	0.365	SA 234 GR WPB (WOL MATL)	CS	NA

NO	DATE	REVISION	BY	CHKD	APPVD
2	9-26-83	REVISED AS NOTED	K.M.A.	EPK	TAA
1	12-2-81	REVISED AS NOTED	K.M.A.	EPK	TAA
0	12-22-78	ISSUED FOR USE	K.M.A.	[illegible]	[illegible]
A	9-12-78	ISSUED FOR INFORMATION ONLY	K.M.A.	EAK	[illegible]

WNP-2
WELD & COMPONENT IDENTIFICATION DIAGRAM

TITLE: RHR SHUTDOWN COOLING SUCTION & FPC INTERTIE

DWG NO: RHR-205-2 | REV 2

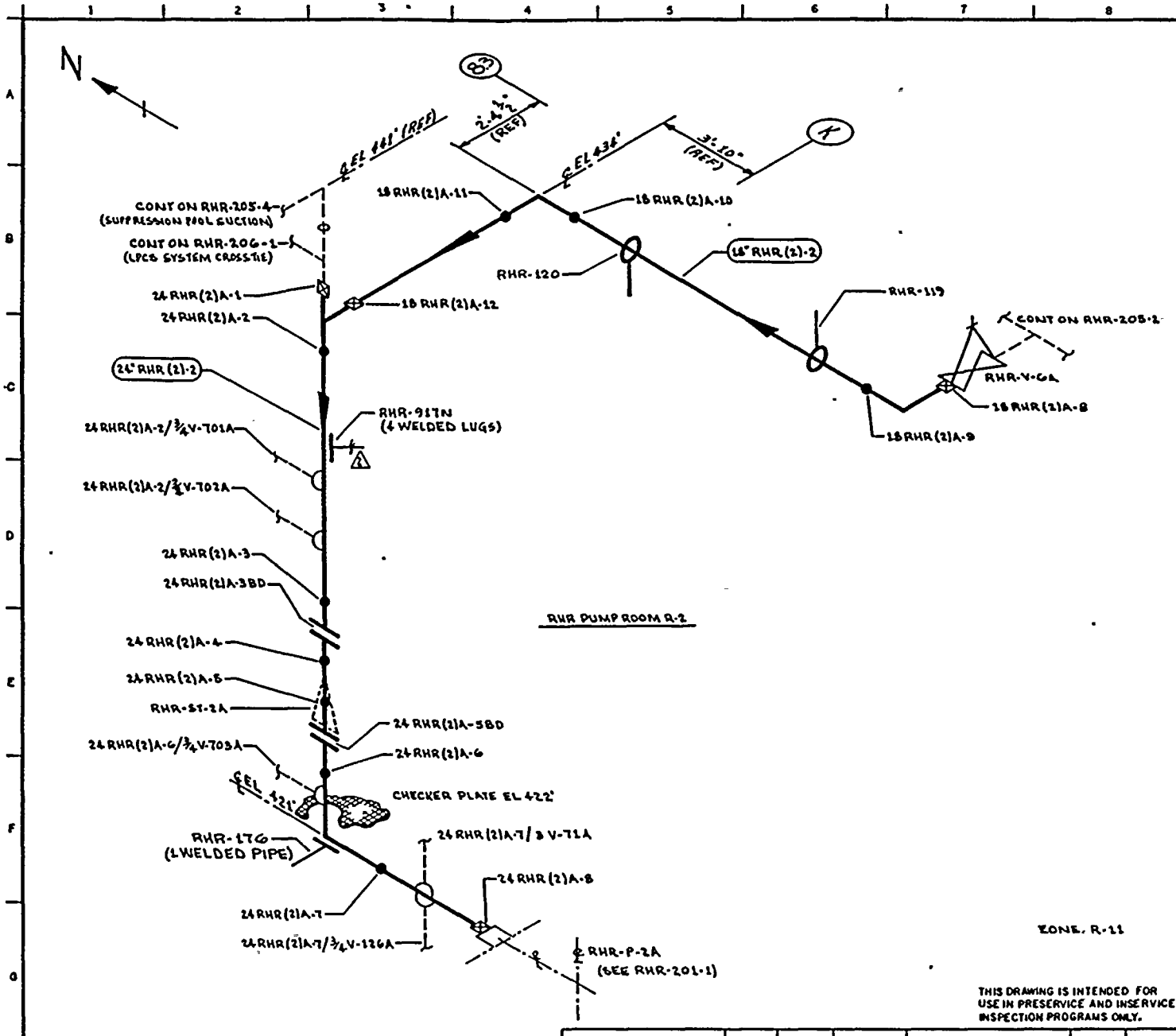

NOTES:

1. SCAFFOLDING IS REQUIRED.

REFERENCES:

BOVEE & CRAIL ISOMETRICS
RHR-878-13.16 REV 4

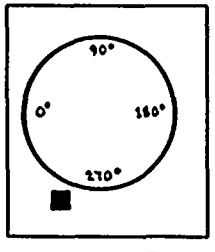

KEY PLAN

THIS DRAWING IS INTENDED FOR USE IN PRESERVICE AND INSERVICE INSPECTION PROGRAMS ONLY.

QUALITY CLASS: 1 | ASME CODE CLASS: 2

ENGR: G.A. KUGLER | DRAWN: K. McA. | DATE: 5-19-78

WASHINGTON PUBLIC POWER SUPPLY SYSTEM
RICHLAND, WASHINGTON 99352

PIPING SYSTEM	NOM DIA (IN)	SCH	NOM WALL THK	MATERIAL SPECIFICATION	MATL TYPE	CAL BLOCK NO
18" RHR (2)-2	18	STD	0.375	SA 106 GR B	CS	NA
24" RHR (2)-2	24	STD	0.375	SA 106 GR B	CS	NA

WNP-2
WELD & COMPONENT IDENTIFICATION DIAGRAM

TITLE: RHR LOOP A SHUTDOWN COOLING SUCTION

DWG NO: RHR-205-3 | REV 2

NO	DATE	REVISION	BY	CHKD	APPVD
2	9-26-83	ADDED NOTE 1. RHR-917N CHANGED.	KWcA	[illegible]	TFH
1	11-2-81	REVISED AS NOTED	KWcA	[illegible]	TFH
0	11-13-78	ISSUED FOR USE	KWcA	[illegible]	[illegible]
A	9-12-78	ISSUED FOR INFORMATION ONLY	KWcA	[illegible]	[illegible]

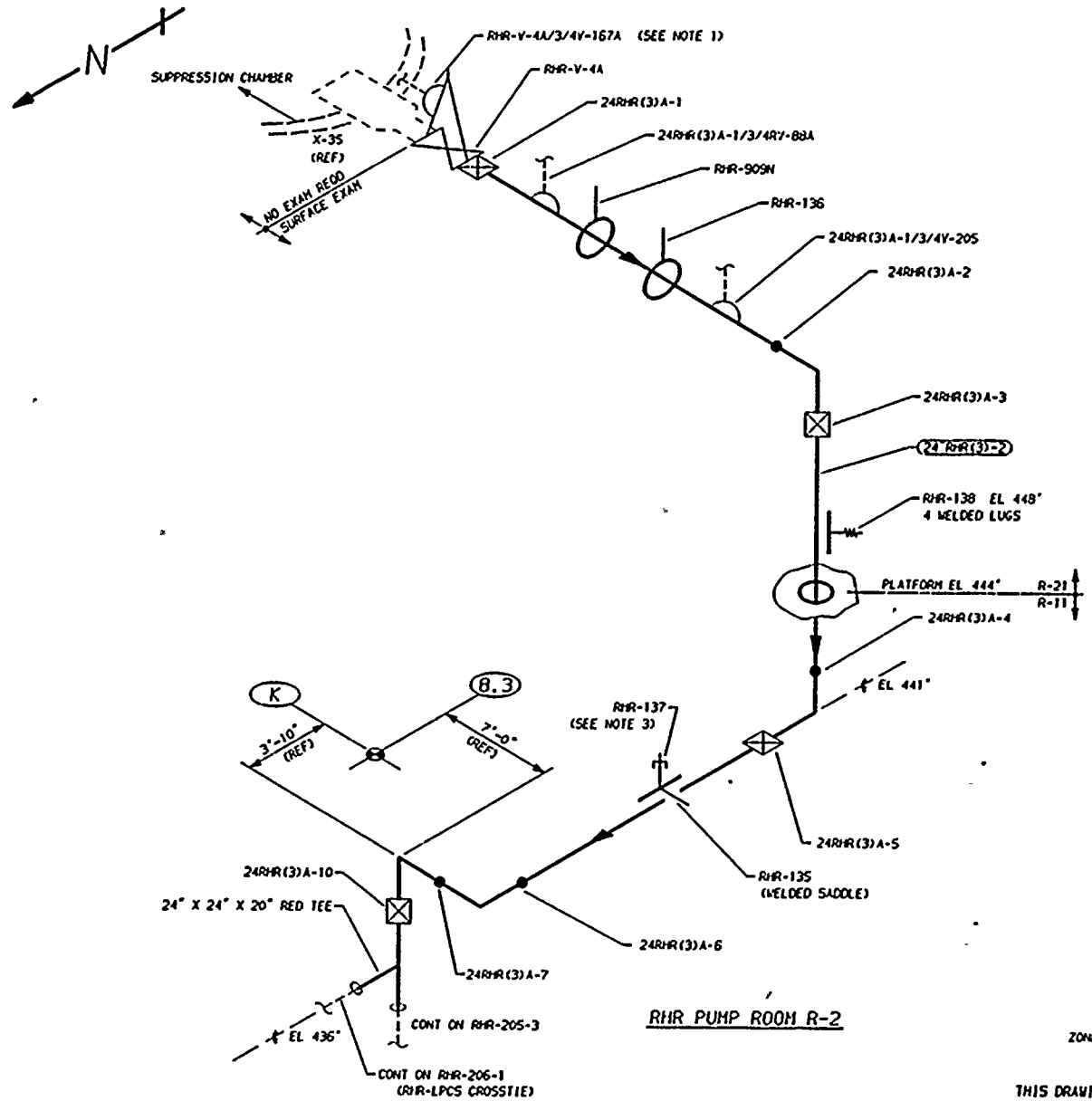

RHR PUMP ROOM R-2

ZONES R-21 & R-11

THIS DRAWING IS INTENDED FOR USE IN PRESERVICE AND INSERVICE INSPECTIONS PROGRAMS ONLY.

NOTES:

1. THIS IS A 1/4" CONNECTION WITH VISUAL EXAM EXTENDING TO 3/4"V-167A.
2. WELD 24RHR(3)A-7 IS FITTING TO FITTING.
3. THERE ARE EIGHT ABANDONED LUGS IN THE VICINITY OF RHR-137. NO EXAM IS REQUIRED.
4. SCAFFOLDING IS REQUIRED.

REFERENCES:

BOVEE AND CRAIL ISOMETRIC RHR-881-1.3 REV 2

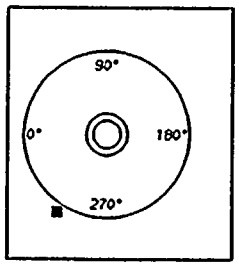

KEYPLAN

QUALITY CLASS: 1	ASME CODE CLASS: 2
ENGR: GA KUGLER	DRAWN: K-McA	DATE: 5-19-78

WASHINGTON PUBLIC POWER SUPPLY SYSTEM
RICHLAND, WASHINGTON 99352

WNP-2
WELD & COMPONENT
IDENTIFICATION DIAGRAM

TITLE: RHR LOOP A SUPPRESSION POOL SUCTION

DWG NO: RHR-205-4 REV 2

PIPING SYSTEM	NOM DIA (IND)	SCH	NOM WALL THK	MATERIAL SPECIFICATION	MATL TYPE	CAL BLOCK NO
24"RHR(3)-2	24	STD	0.375	SA 106 GR B	CS	NA

NO	DATE	REVISION	BY	CHKD	APVD
2		REVISED HANGERS, REDRAWN.		DPC	MK
1	11-5-80	DELETED WELDS 24RHR(3)A-8 & 9, AND AS NOTED	K-McA	TFH	DWP
0	12-22-78	ISSUED FOR USE	K-McA	TFH / DWP	LFB
A	9-12-78	ISSUED FOR INFORMATION ONLY	K-McA	GAK	DWP

WNP-02
INTERVAL: PSI
PERIOD: NA
OUTAGE:
DRAWING NO. RHR-205

WASHINGTON PUBLIC POWER SUPPLY SYSTEM
PROGRAM PLAN AND SCHEDULE
SYSTEM OR COMPONENT: 20RHR(2)-2
DESCRIPTION: RHR SHUTDN COOL SUCT

DATE 12/14/84

IDENT. NO.	DESCRIPTION	SECT. XI EXAM.	EXAM MTH.	PROCEDURE	CAL. BLOCK	INSERVICE REQ.	SCHEDULED OUTAGE	NOTES
20RHR(2)A-1								
	VALVE TO EL	C-F	SUR	PTP-1				
20RHR(2)A-1/3/4V-730								
	INST CONN	N/A	VT-2	N/A				IWC-2510, SEE NOTES #6 & #7.
20RHR(2)A-1/3/4V-165								
	TEST CONN	N/A	VT-2	N/A				IWC-2510, SEE NOTES #6 & #7.
20RHR(2)A-1/3V-7								
	FLUSH CONN	N/A	VT-2	N/A				IWC-2510, SEE NOTES #6 & #7.
20RHR(2)A-1/1RV-5								
	RELIEF CONN	N/A	VT-2	N/A				IWC-2510, SEE NOTES #6 & #7.
20RHR(2)A-2								
	EL TO PIPE	C-F	SUR	PTP-1				
20RHR(2)A-2A								
	PIPE TO PIPE	C-F	SUR	PTP-1				
RHR-77(W)								
	4 WELDED LUGS	C-E-1	SUR	MTP-1				
RHR-77								
	SPRING	C-E-2	VT-3	303/8.2.17				
			VT-4	303/8.2.17				
20RHR(2)A-3								
	PIPE TO PIPE	C-F	SUR	PTP-1				
RHR-71								
	ANCHOR	C-E-2	VT-3	303/8.2.17				
20RHR(2)A-4								
	PIPE TO PIPE	C-F	SUR	PTP-1				
RHR-76(W)								
	4 WELDED LUGS	C-E-1	SUR	MTP-1				
RHR-76								
	SPRING	C-E-2	VT-3	303/8.2.17				
			VT-4	303/8.2.17				

WNP-02
INTERVAL: PSI
PERIOD: NA
OUTAGE:
DRAWING NO. RHR-205

WASHINGTON PUBLIC POWER SUPPLY SYSTEM
PROGRAM PLAN AND SCHEDULE
SYSTEM OR COMPONENT: 20RHR(2)-2
DESCRIPTION: RHR SHUTDN COOL SUCT

DATE 12/14/84

IDENT. NO.	DESCRIPTION	SECT. XI EXAM.	EXAM MTH.	PROCEDURE	CAL. BLOCK	INSERVICE REQ.	SCHEDULED OUTAGE	NOTES
RHR-69								
	STRUT	C-E-2	VT-3	303/8.2.17				
RHR-70								
	STRUT	C-E-2	VT-3	303/8.2.17				
20RHR(2)A-5								
	PIPE TO PIPE	C-F	SUR	PTP-1				
RHR-67								
	PSA-3 SNUBBER	C-E-2	VT-3	303/8.2.17				S/N 475
			VT-4	303/8.2.17				S/N 475
RHR-68								
	STRUT	C-E-2	VT-3	303/8.2.17				
20RHR(2)A-6								
	PIPE TO EL	C-F	SUR	PTP-1				
20RHR(2)A-7								
	EL TO PIPE	C-F	SUR	PTP-1				
20RHR(2)A-8								
	PIPE TO EL	C-F	SUR	PTP-1				
20RHR(2)A-9								
	EL TO PIPE	C-F	SUR	PTP-1				
RHR-66								
	SPRING	C-E-2	VT-3	303/8.2.17				
			VT-4	303/8.2.17				
20RHR(2)A-10			U					
	PIPE TO EL	C-F	SUR	PTP-1				
20RHR(2)A-11								
	EL TO PIPE	C-F	SUR	PTP-1				
20RHR(2)A-11/10RHR(2)-2								
	PIPE TO WOL	C-F	SUR	PTP-1				
10RHR(2)A-1								
	WOL TO PIPE	C-F	SUR	PTP-1				
RHR-59								
	PSA-10 SNUBBER	C-E-2	VT-3	303/8.2.17				S/N 9942

WNP-02
INTERVAL: PSI
PERIOD: NA
OUTAGE:
DRAWING NO. RHR-205

WASHINGTON PUBLIC POWER SUPPLY SYSTEM
PROGRAM PLAN AND SCHEDULE
SYSTEM OR COMPONENT: 10RHR(2)-2
DESCRIPTION: RHR SHUTDN COOL SUCT

DATE 12/14/84

IDENT. NO.	DESCRIPTION	SECT. XI EXAM.	EXAM MTH.	PROCEDURE	CAL. BLOCK	INSERVICE REQ.	INSERVICE SCHEDULED OUTAGE	NOTES
RHR-61			VT-4	303/8.2.17				S/N 9942
	PSA-10 SNUBBER	C-E-2	VT-3	303/8.2.17				S/N 680
RHR-62			VT-4	303/8.2.17				S/N 680
	SPRING	C-F-2	VT-3	303/8.2.17				
RHR-60			VT-4	303/8.2.17				
	PSA-3 SNUBBER	C-E-2	VT-3	303/8.2.17				S/N 2369
20RHR(2)A-12			VT-4	303/8.2.17				S/N 2369
	PIPE TO TEE	C-F	SUR	PTP-1				
RHR-166								
	SPRING	C-E-2	VT-3	303/8.2.17				
20RHR(2)A-13			VT-4	303/8.2.17				
	TEE TO REDUCER	C-F	SUR	PTP-1				
18RHR(2)A-1								
	REDUCER TO PIPE	C-F	SUR	PTP-1				
RHR-58								
	ANCHOR	C-E-2	VT-3	303/8.2.17				W/2 WELDED PLATES.
18RHR(2)A-2								
	PIPE TO TEE	C-F	SUR	PTP-1				
18RHR(2)A-3								
	TEE TO VALVE	C-F	SUR	PTP-1				
18RHR(2)A-4								
	TEE TO PIPE	C-F	SUR	PTP-1				
RHR-471								
	SPRING	C-E-2	VT-3	303/8.2.17				
			VT-4	303/8.2.17				

WNP-02
INTERVAL: PSI
PERIOD: NA
OUTAGE:
DRAWING NO. RHR-205

WASHINGTON PUBLIC POWER SUPPLY SYSTEM
PROGRAM PLAN AND SCHEDULE
SYSTEM OR COMPONENT: 18RHR(2)-2
DESCRIPTION: RHR SHUTDN COOL SUCT

DATE 12/14/84

IDENT. NO.	DESCRIPTION	SECT. XI EXAM.	EXAM MTH.	PROCEDURE	CAL. BLOCK	INSERVICE REQ.	SCHEDULED OUTAGE	NOTES
18RHR(2)A-5								
	PIPE TO EL	C-F	SUR	PTP-1				
18RHR(2)A-6								
	EL TO PIPE	C-F	SUR	PTP-1				
RHR-56								
	SPRING	C-E-2	VT-3	303/8.2.17				
			VT-4	303/8.2.17				
18RHR(2)A-7								
	PIPE TO VALVE	C-F	SUR	PTP-1				
18RHR(2)A-8								
	VALVE TO EL	C-F	SUR	OCI 3-3				
18RHR(2)A-9								
	EL TO PIPE	C-F	SUR	PTP-1				
RHR-119								
	STRUT	C-E-2	VT-3	303/8.2.17				
RHR-120								
	STRUT	C-E-2	VT-3	303/8.2.17				
18RHR(2)A-10								
	PIPE TO EL	C-F	SUR	PTP-1				
18RHR(2)A-11								
	EL TO PIPE	C-F	SUR	PTP-1				
18RHR(2)A-12								
	PIPE TO TEE	C-F	SUR	PTP-1				
24RHR(2)A-1								
	TEE TO TEE	C-F	SUR	PTP-1				
24RHR(2)A-2								
	TEE TO PIPE	C-F	SUR	PTP-1				
RHR-917N(W)								
	4 WELDED LUGS	C-E-1	SUR	OCI 4-3				
RHR-917N								
	SPRING	C-E-2	VT-3	303/8.2.17				
			VT-4	303/8.2.17				

WNP-02
INTERVAL: PSI
PERIOD: NA
OUTAGE:
DRAWING NO. RHR-205

WASHINGTON PUBLIC POWER SUPPLY SYSTEM
PROGRAM PLAN AND SCHEDULE
SYSTEM OR COMPONENT: 24RHR(2)-2
DESCRIPTION: RHR SHUTDN COOL SUCT

DATE 12/14/84

IDENT. NO.	DESCRIPTION	SECT. XI EXAM.	EXAM MTH.	PROCEDURE	CAL. BLOCK	INSERVICE REQ.	SCHEDULED OUTAGE	NOTES
24RHR(2)A-2/3/4V-701A	INSTR CONN	N/A	VT-2	N/A				IWC-2510, SEE NOTES #6 & #7.
24RHR(2)A-2/3/4V-702A	INSTR CONN	N/A	VT-2	N/A				IWC-2510, SEE NOTES #6 & #7.
24RHR(2)A-3	PIPE TO FLANGE	C-F	SUR	PTP-1				
24RHR(2)A-4	FLANGE TO PIPE	C-F	SUR	PTP-1				
24RHR(2)A-5	PIPE TO FLANGE	C-F	SUR	PTP-1				
24RHR(2)A-6	FLANGE TO EL	C-F	SUR	PTP-1				
24RHR(2)A-6/3/4V-703A	INSTR CONN	N/A	VT-2	N/A				IWC-2510, SEE NOTES #6 & #7.
RHR-176	STRUT	C-E-2	VT-3	303/8.2.17				
24RHR(2)A-7	FL TO PIPE	C-F	SUR	PTP-1				
24RHR(2)A-7/3V-71A	FLUSH CONN	N/A	VT-2	N/A				IWC-2510, SEE NOTES #6 & #7.
24RHR(2)A-7/3/4V-126A	DRAIN CONN	N/A	VT-2	N/A				IWC-2510, SEE NOTES #6 & #7.
24RHR(2)A-8	PIPE TO PUMP	C-F	SUR	PTP-1				
RHR-V-4A/3/4V-167A	TEST CONN	N/A	VT-2	N/A				IWC-2510, SEE NOTES #6 & #7.
24RHR(3)A-1	VALVE TO PIPE	C-F	SUR	PTP-1				

WNP-02
INTERVAL: PSI
PERIOD: NA
OUTAGE:
DRAWING NO. RHR-205

WASHINGTON PUBLIC POWER SUPPLY SYSTEM
PROGRAM PLAN AND SCHEDULE
SYSTEM OR COMPONENT: 24RHR(2)-2
DESCRIPTION: RHR SHUTDN COOL SUCT

DATE 12/14/84

IDENT. NO.	DESCRIPTION	SECT. XI EXAM.	EXAM MTH.	PROCEDURE	CAL. BLOCK	INSERVICE REQ.	SCHEDULED OUTAGE	NOTES
24RHR(3)A-1/3/4RV-88A								
	RELIEF CONN	N/A	VT-2	N/A				IWC-2510, SEE NOTES #6 & #7.
RHR-909N								
	STRUT	C-E-2	VT-3	303/8.2.17				
RHR-136								
	STRUT	C-E-2	VT-3	303/8.2.17				
24RHR(3)A-1/3/4V-205								
	BRANCH CONN	N/A	VT-2	N/A				
24RHR(3)A-2								
	PIPE TO EL	C-F	SUR	PTP-1				
24RHR(3)A-3								
	EL TO PIPE	C-F	SUR	PTP-1				
RHR-138(W)								
	4 WELDED LUGS	C-E-1	SUR	MTP-1				
RHR-138								
	SPRING	C-E-2	VT-3	303/8.2.17				
			VT-4	303/8.2.17				
24RHR(3)A-4								
	PIPE TO EL	C-F	SUR	PTP-1				
24RHR(3)A-5								
	EL TO PIPE	C-F	SUR	PTP-1				
RHR-135								
	STRUT	C-E-2	VT-3	303/8.2.17				
RHR-137								
	PSA-3 SN(2)	C-E-2	VT-3	303/8.2.17				S/N E14554/W14553
			VT-4	303/8.2.17				S/N E14554/W14553
24RHR(3)A-6								
	PIPE TO EL	C-F	SUR	PTP-1				
24RHR(3)A-7								
	EL TO EL	C-F	SUR	PTP-1				
24RHR(3)A-10								
	EL TO TEE	C-F	SUR	PTP-1				

WNP-02
INTERVAL: PSI
PERIOD: NA
OUTAGE:
DRAWING NO. RHR-205

WASHINGTON PUBLIC POWER SUPPLY SYSTEM
PROGRAM PLAN AND SCHEDULE
SYSTEM OR COMPONENT: 24RHR(2)-2
DESCRIPTION: RHR SHUTDN COOL SUCT

IDENT. NO.	DESCRIPTION	SECT. XT EXAM.	EXAM MTH.	PROCEDURE	CAL. BLOCK	INSERVICE REQ.	SCHEDULED OUTAGE	NOTES
RHR-PB-205	RHR PRESS BNDRY	N/A	VT-2	N/A				IWC-2510, SEE NOTES #6 & #7.

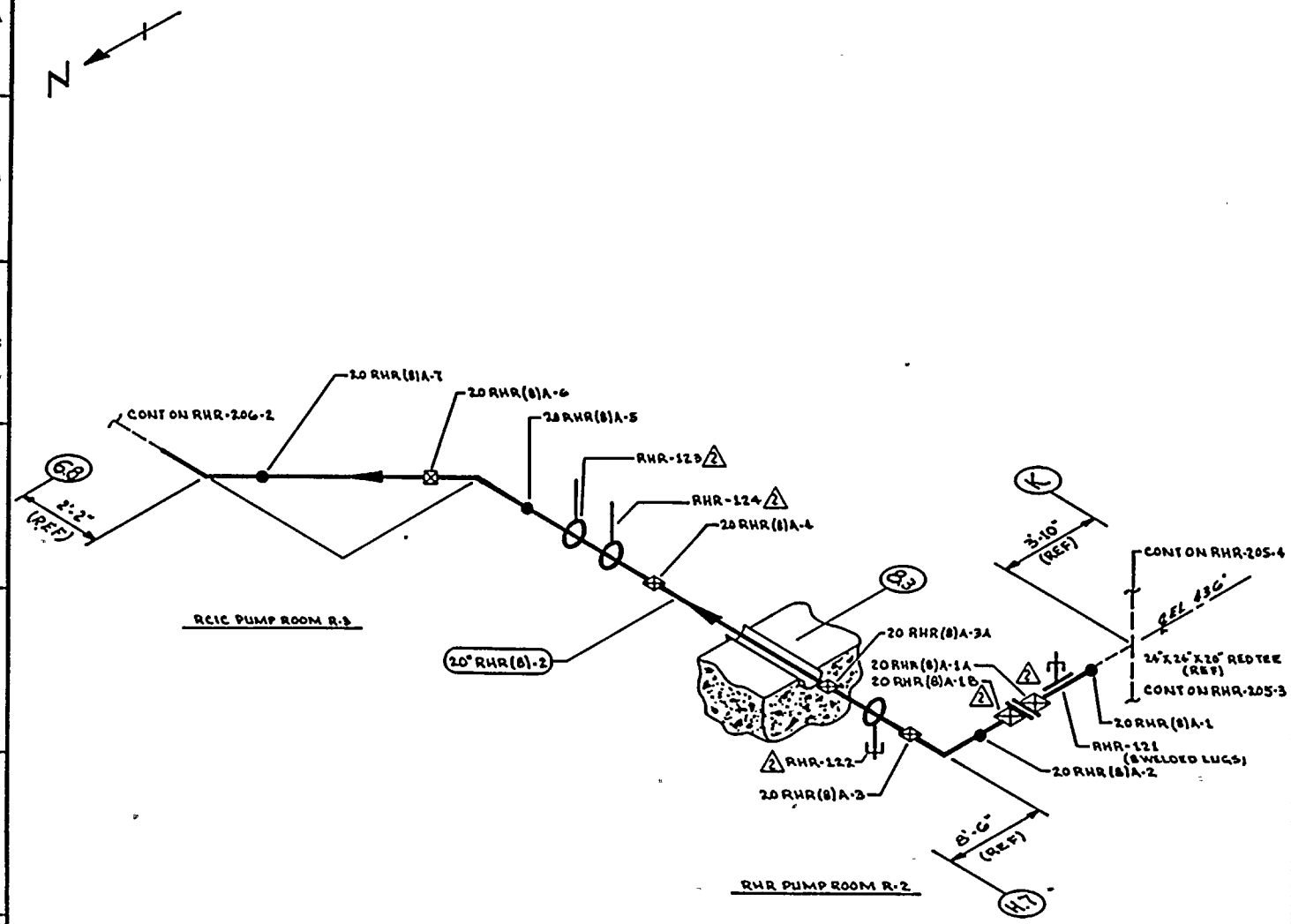

NOTES:

1. SCAFFOLDING IS REQUIRED.

REFERENCES:

BOVEE & CRAIL ISOMETRICS
RHR-881-4.7 REV 6

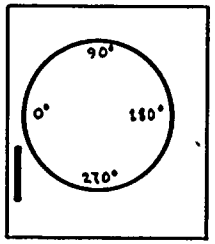

KEY PLAN

THIS DRAWING IS INTENDED FOR USE IN PRESERVICE AND INSERVICE INSPECTION PROGRAMS ONLY.

PIPING SYSTEM	NOM DIA (IN)	SCH	NOM WALL THK	MATERIAL SPECIFICATION	MATL TYPE	CAL BLOCK NO
20" RHR(8)-2	20	STD	0.375	SA 106 GR B	CS	NA

NO	DATE	REVISION	BY	CHKD	APPVD
2	9-26-83	REVISED AS NOTED	KMcA	DK	TEB
1	11-5-80	ADDED FIELD WELD 20 RHR(8)A-3A & AS NOTED	KMcA	TEB	SEB
0	12-22-79	ISSUED FOR USE	KMcA	TEB	SEB
A	9-22-78	ISSUED FOR INFORMATION ONLY	KMcA	DJV	RWN

QUALITY CLASS: 1 | ASME CODE CLASS: 2
ENGR: GA KUGLER | DRAWN: KMcA | DATE: 5-22-78

WASHINGTON PUBLIC POWER SUPPLY SYSTEM
RICHLAND WASHINGTON 99352

WNP-2
WELD & COMPONENT IDENTIFICATION DIAGRAM

TITLE: RHR-LPCS CROSSTIE

DWG NO: RHR-206-1 | REV 2

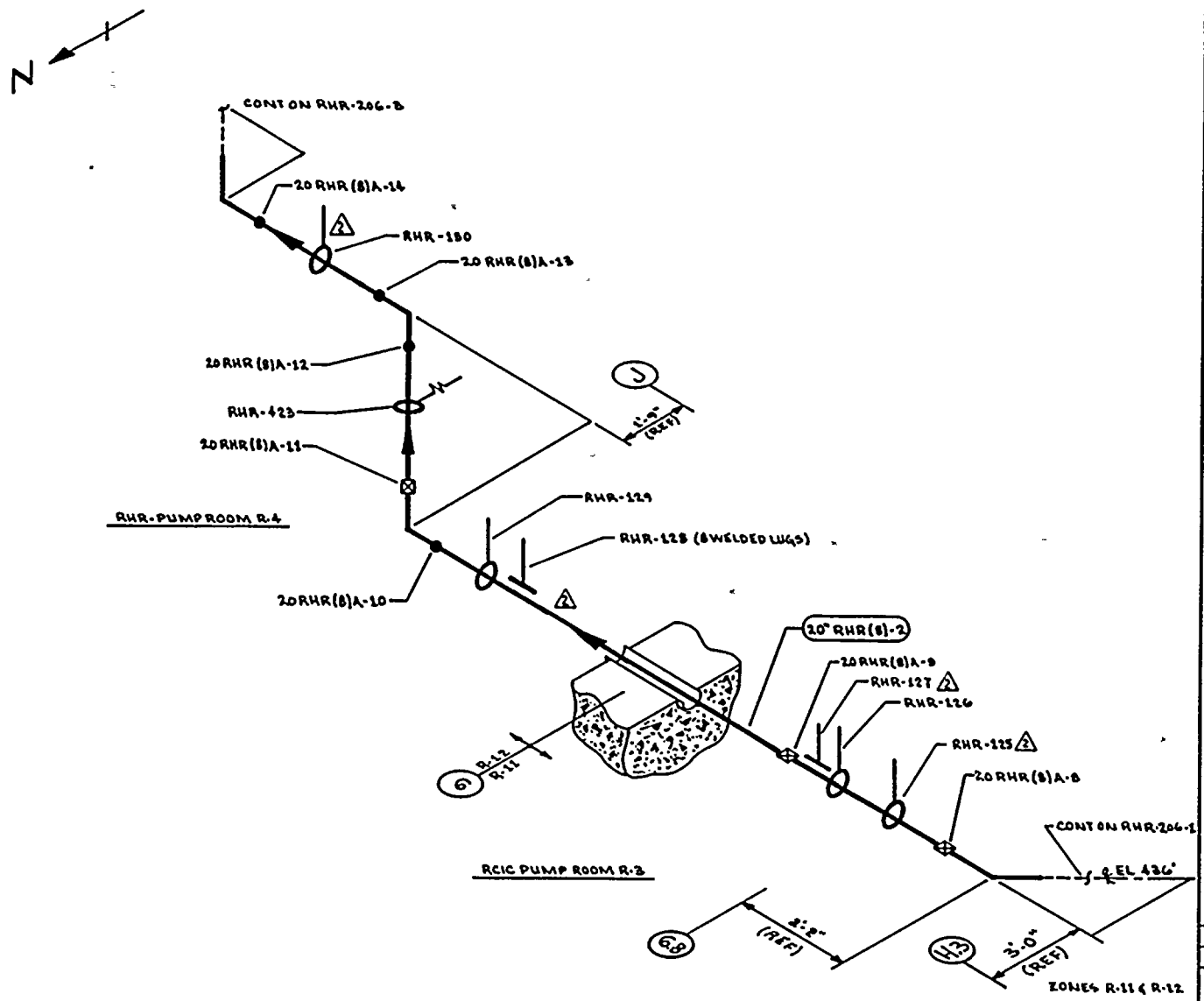

NOTES:

1. SCAFFOLDING IS REQUIRED.

REFERENCES:

BOYES & CRAIL ISOMETRIC
RHR-881-8.13 REV 4

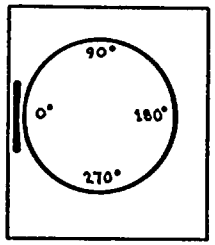

KEY PLAN

QUALITY CLASS: 1	ASME CODE CLASS: 2	
ENGR: G.A. KUGLER	DRAWN: K.McA.	DATE: 5-22-78

WASHINGTON PUBLIC POWER SUPPLY SYSTEM
RICHLAND, WASHINGTON 99352

PIPING SYSTEM	NOM DIA (IN)	SCH	NOM WALL THK	MATERIAL SPECIFICATION	MATL TYPE	CAL BLOCK NO
20" RHR(B)-2	20	STD	0.375	SA 106 GR B	CS	NA

WNP-2
WELD & COMPONENT IDENTIFICATION DIAGRAM

TITLE: RHR-LPCS CROSSTIE

DWG NO: RHR-206-2 REV 2

NO	DATE	REVISION	BY	CHKD	APPVD
2	9-26-83	REVISED AS NOTED	KGK	[illegible]	JTK
1	12-2-81	REVISED AS NOTED	KGK	[illegible]	JTK
0	12-22-78	ISSUED FOR USE	KGK	[illegible]	JTK
A	9-12-78	ISSUED FOR INFORMATION ONLY	KGK	[illegible]	JTK

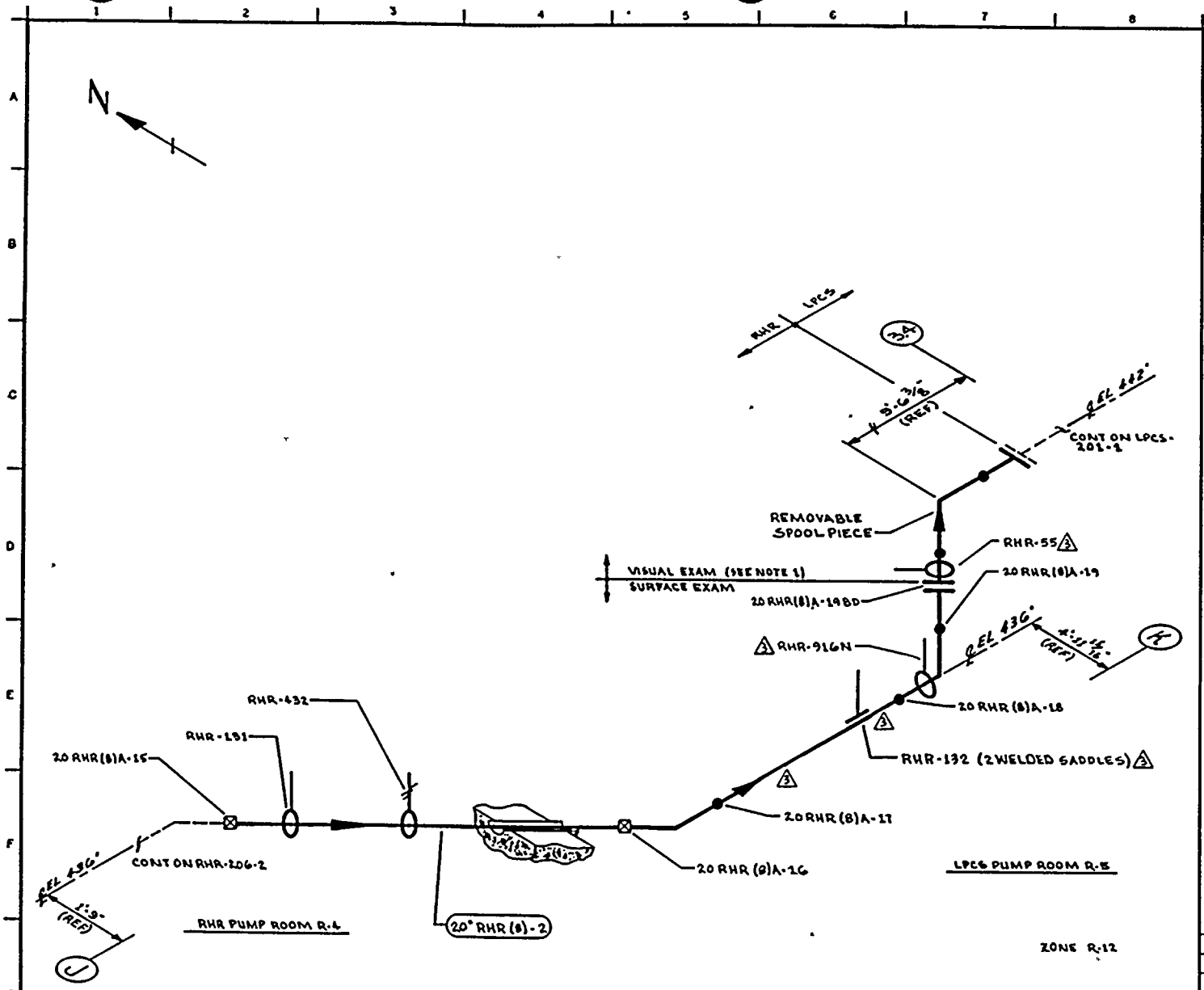

NOTES:

1. SPOOL PIECE REMOVED DURING NORMAL OPERATION. BLANKED FLANGE IS THE LIMIT OF CLASS 2 PRESSURE BOUNDARY. NO EXAMS REQUIRED OF SPOOL PIECE ITSELF, AS IT IS USED FOR PREOPERATIONAL TESTING ONLY.

REFERENCES:

BOVEE & CRAIL ISOMETRIC
RHR-881-9.13 REV 4

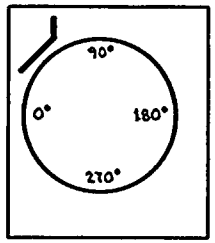

KEY PLAN

THIS DRAWING IS INTENDED FOR USE IN PRESERVICE AND INSERVICE INSPECTION PROGRAMS ONLY.

NO	DATE	REVISION	BY	CHKD	APPVD
3	9-26-84	REVISED AS NOTED	[illegible]	[illegible]	JFH
2	12-2-81	REVISED AS NOTED	[illegible]	[illegible]	JFH
1	1-27-79	CHANGED REMOVABLE SPOOL PIECE TO VISUAL ONLY. ADDED NOTE 1.	[illegible]	[illegible]	[illegible]
0	11-22-77	ISSUED FOR USE	[illegible]	[illegible]	[illegible]
A	9-12-78	ISSUED FOR INFORMATION ONLY	[illegible]	[illegible]	[illegible]

PIPING SYSTEM	NOM DIA (IN)	SCH	NOM WALL THK	MATERIAL SPECIFICATION	MATL TYPE	CAL BLOCK NO
20" RHR (8)-2	20	STD	0.375	SA 106 GR B	CS	NA

QUALITY CLASS: 1 | ASME CODE CLASS: 2

ENGR: G.A. KUGLER | DRAWN: [illegible] | DATE: 5-22-78

WASHINGTON PUBLIC POWER SUPPLY SYSTEM
RICHLAND WASHINGTON 99352

WNP-2
WELD & COMPONENT IDENTIFICATION DIAGRAM

TITLE: RHR-LPCS CROSSTIE

DWG NO: RHR-206-3 | REV 3

WNP-02
INTERVAL: PSI
PERIOD: NA
OUTAGE:
DRAWING NO. RHR-206

WASHINGTON PUBLIC POWER SUPPLY SYSTEM
PROGRAM PLAN AND SCHEDULE
SYSTEM OR COMPONENT: 20RHR(8)-2
DESCRIPTION: RHR-LPCS CROSSTIE

DATE 12/14/84

IDENT. NO.	DESCRIPTION	SECT. XI EXAM.	EXAM MTH.	PROCEDURE	CAL. BLOCK	INSERVICE REQ.	INSERVICE SCHEDULED OUTAGE	NOTES
20RHR(8)A-1								
	TEE TO PIPE	C-F	SUR	PTP-1				
RHR-121(W)								
	8 WELDED LUGS	C-E-1	SUR	MTP-1				
RHR-121								
	PSA-10 SN(2)	C-E-2	VT-3	303/8.2.17				S/N W11860/E11855
			VT-4	303/8.2.17				S/N W11860/E11855
20RHR(8)A-1A								
	PIPE TO FLANGE	C-F	SUR	PTP-1				
20RHR(8)A-1B								
	FLANGE TO PIPE	C-F	SUR	PTP-1				
20RHR(8)A-2								
	PIPE TO EL	C-F	SUR	PTP-1				
20RHR(8)A-3								
	EL TO PIPE	C-F	SUR	PTP-1				
RHR-122								
	STRUT	C-E-2	VT-3	303/8.2.17				
20RHR(8)A-3A								
	PIPE TO PIPE	C-F	SUR	PTP-1				
20RHR(8)A-4								
	PIPE TO PIPE	C-F	SUR	PTP-1				
RHR-124								
	STRUT	C-E-2	VT-3	303/8.2.17				
RHR-123								
	BOX	C-E-2	VT-3	303/8.2.17				
20RHR(8)A-5								
	PIPE TO EL	C-F	SUR	PTP-1				
20RHR(8)A-6								
	EL TO PIPE	C-F	SUR	PTP-1				
20RHR(8)A-7								
	PIPE TO EL	C-F	SUR	PTP-1				
20RHR(8)A-8								
	EL TO PIPE	C-F	SUR	PTP-1				
RHR-125								
	STRUT	C-E-2	VT-3	303/8.2.17				

WNP-02
INTERVAL: PSI
PERIOD: NA
OUTAGE:
DRAWING NO. RHR-206

WASHINGTON PUBLIC POWER SUPPLY SYSTEM
PROGRAM PLAN AND SCHEDULE
SYSTEM OR COMPONENT: 20RHR(8)-2
DESCRIPTION: RHR-LPCS CROSSTIE

DATE 12/14/84

IDENT. NO.	DESCRIPTION	SECT. XI EXAM.	EXAM MTH.	PROCEDURE	CAL. BLOCK	INSERVICE REQ.	INSERVICE SCHEDULED OUTAGE	NOTES
RHR-126								
	STRUT	C-E-2	VT-3	303/8.2.17				
RHR-127								
	BOX	C-E-2	VT-3	303/8.2.17				
20RHR(8)A-9								
	PIPE TO PIPE	C-F	SUR	PTP-1				
RHR-128								
	BOX	C-E-2	VT-3	303/8.2.17				
RHR-129								
	STRUT	C-E-2	VT-3	303/8.2.17				
20RHR(8)A-10								
	PIPE TO EL	C-F	SUR	PTP-1				
20RHR(8)A-11								
	EL TO PIPE	C-F	SUR	PTP-1				
RHR-423								
	SPRING	C-E-2	VT-3	303/8.2.17				
			VT-4	303/8.2.17				
20RHR(8)A-12								
	PIPE TO EL	C-F	SUR	PTP-1				
20RHR(8)A-13								
	EL TO PIPE	C-F	SUR	PTP-1				
RHR-130								
	BOX	C-E-2	VT-3	303/8.2.17				
20RHR(8)A-14								
	PIPE TO EL	C-F	SUR	PTP-1				
20RHR(8)A-15								
	EL TO PIPE	C-F	SUR	PTP-1				
RHR-131								
	STRUT	C-E-2	VT-3	303/8.2.17				
RHR-432								
	SPRING	C-E-2	VT-3	303/8.2.17				
			VT-4	303/8.2.17				
20RHR(8)A-16								
	PIPE TO EL	C-F	SUR	PTP-1				

WNP-02
INTERVAL: PSI
PERIOD: NA
OUTAGE:
DRAWING NO. RHR-206

WASHINGTON PUBLIC POWER SUPPLY SYSTEM
PROGRAM PLAN AND SCHEDULE
SYSTEM OR COMPONENT: 20RHR(8)-2
DESCRIPTION: RHR-LPCS CROSSTIE

DATE 12/14/84

IDENT. NO.	DESCRIPTION	SECT. XI EXAM.	EXAM MTH.	PROCEDURE	CAL. BLOCK	INSERVICE REQ.	INSERVICE SCHEDULED OUTAGE	NOTES
20RHR(8)A-17								
	EL TO PIPE	C-F	SUR	PTP-1				
RHR-132								
	ANCHOR	C-E-2	VT-3	303/8.2.17				W/2 WELDED SADDLES.
20RHR(8)A-18								
	PIPE TO EL	C-F	SUR	PTP-1				
RHR-916N								
	RIGID	C-E-2	VT-3	303/8.2.17				
20RHR(8)A-19								
	EL TO FLANGE	C-F	SUR	PTP-1				
RHR-55								
	BOX	C-E-2	VT-3	303/8.2.17				
RHR-PB-206								
	RHR PRESS BNDRY	N/A	VT-2	N/A				IWC-2510, SEE NOTES #6 & #7.

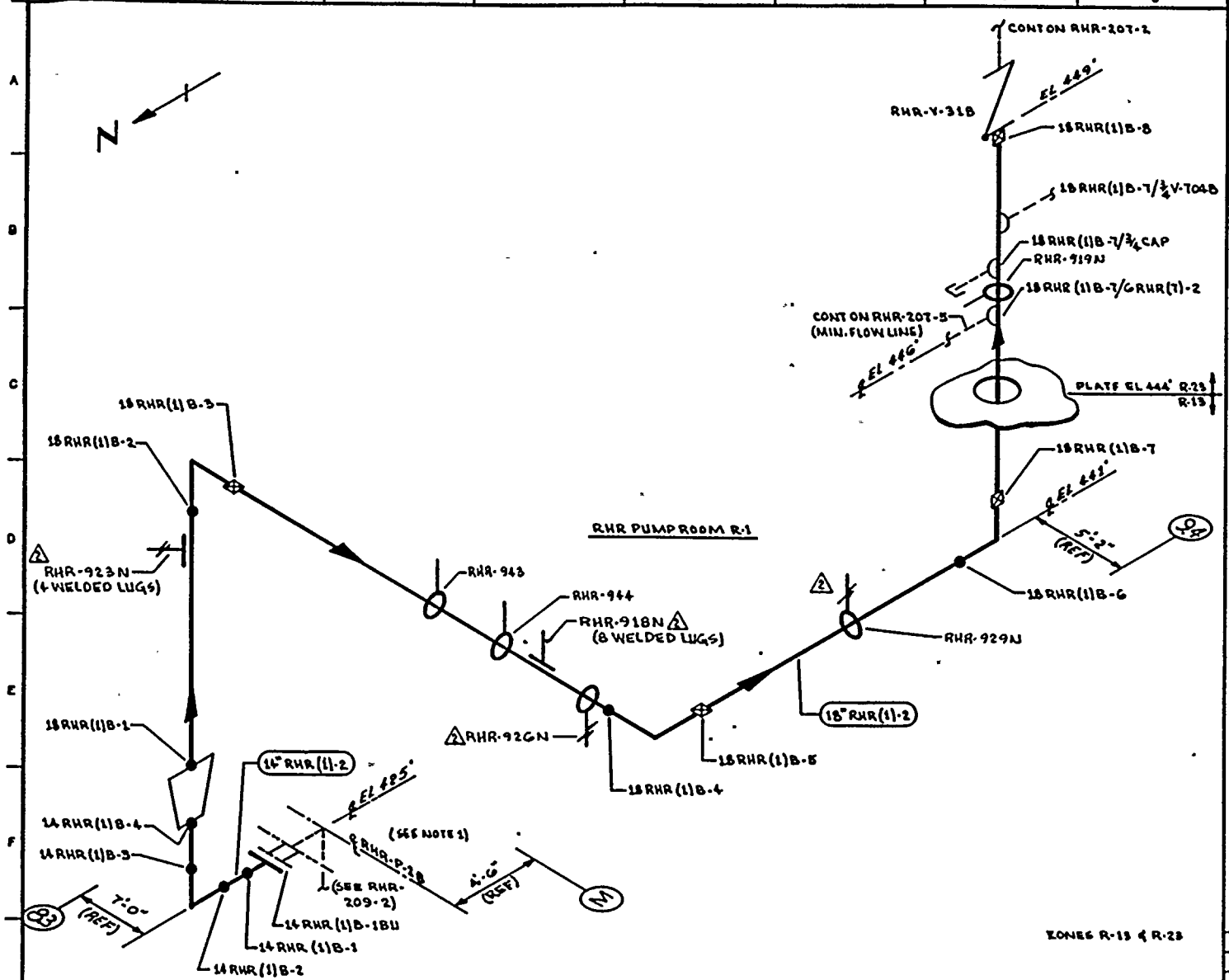

NOTES:

1. EXTEND VISUAL LEAKAGE EXAM OF RHR-PUMP-2B VENTS & DRAINS TO OUTERMOST NORMALLY CLOSED VALVE.
2. SCAFFOLDING IS REQUIRED.

REFERENCES:

BOVEE & GRAIL ISOMETRIC
RHR-898-1.4 REV 9

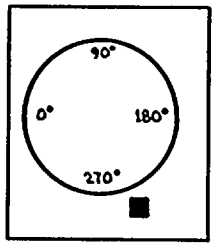

KEY PLAN

THIS DRAWING IS INTENDED FOR USE IN PRESERVICE AND INSERVICE INSPECTION PROGRAMS ONLY.

PIPING SYSTEM	NOM DIA (IN)	SCH	NOM WALL THK	MATERIAL SPECIFICATION	MATL TYPE	CAL BLOCK NO
14" RHR (1)-2	14	STD	0.375	SA 106 GR B	CS	NA
18" RHR (1)-2	18	30	0.438	SA 106 GR B	CS	NA

NO	DATE	REVISION	BY	CHKD	APPVD
2	12-2-83	REVISED AS NOTED	KMcA	WR	TFH
1	12-2-81	REVISED AS NOTED	KMcA	"	TFH
0	11-13-78	ISSUED FOR USE	KMcA	[illegible]	[illegible]
A	9-11-78	ISSUED FOR INFORMATION ONLY	KMcA	[illegible]	[illegible]

QUALITY CLASS: 1 | ASME CODE CLASS: 2

ENGR: GA KUGLER | DRAWN: K.McA | DATE: 6-5-78

WASHINGTON PUBLIC POWER SUPPLY SYSTEM
RICHLAND, WASHINGTON 99352

WNP-2
WELD & COMPONENT IDENTIFICATION DIAGRAM

TITLE: RHR LOOP B SUPPLY TO RHR-HX-1B

DWG NO: RHR-207-1 | REV 2

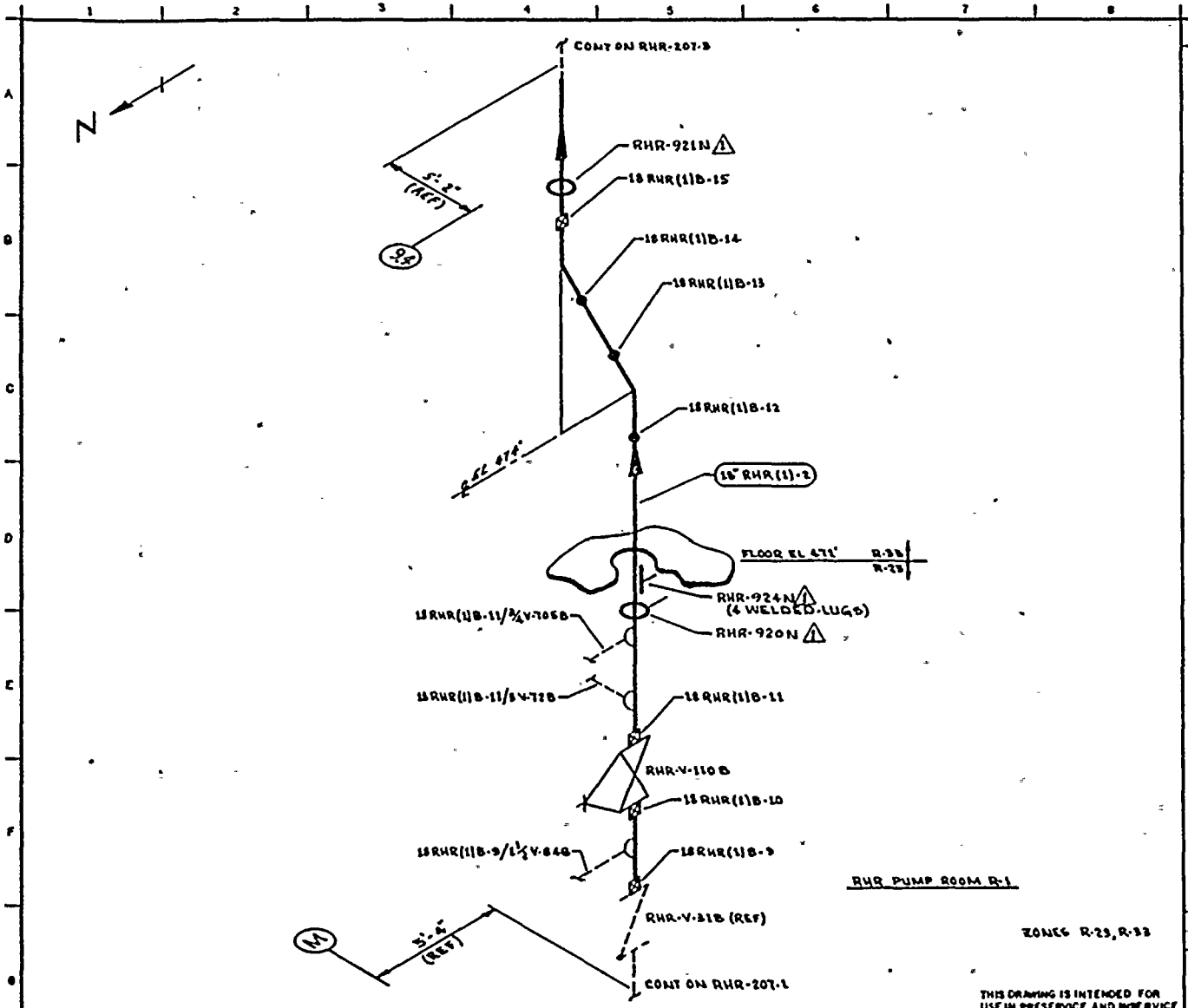

NOTES:

REFERENCES:
BOVEE & CRAIL ISOMETRIC
RHR-858-5.8 REV 0

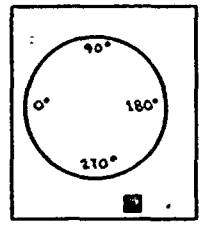

KEY PLAN

QUALITY CLASS: 1	ASME CODE CLASS: 2
ENGR. GA KUGLER	DRAWN: V. McA. / DATE: 6-5-78

WASHINGTON PUBLIC POWER SUPPLY SYSTEM
RICHLAND, WASHINGTON 99352

PIPING SYSTEM	NOM DIA (IN)	SCH	NOM WALL THK	MATERIAL SPECIFICATION	MATL TYPE	CAL BLOCK NO
18" RHR(1)-2	18	30	0.438	SA 106 GR B	CS	NA

WNP-2
WELD & COMPONENT IDENTIFICATION DIAGRAM

TITLE:
RHR LOOP B
SUPPLY TO RHR-HX-1B

DWG NO: RHR-207-2 REV 1

NO	DATE	REVISION	BY	CHKD	APPVD
1		REVISED AS NOTED	KLL	DPE	TTK
0	12-29-78	ISSUED FOR USE	KLL	DPE	TTK
A	4-12-78	ISSUED FOR INFORMATION ONLY	KLL	BNK	DLR

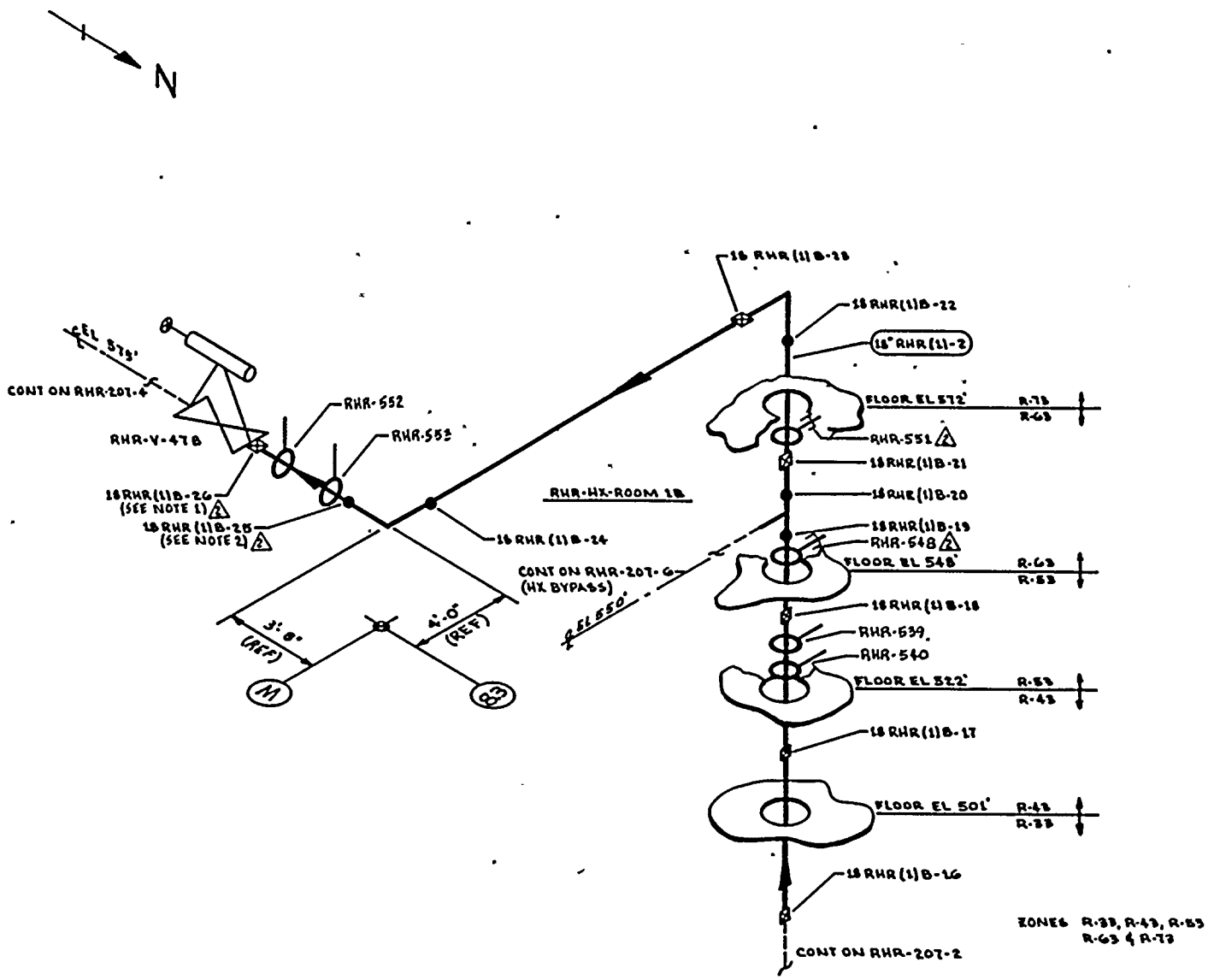

ZONES R-33, R-43, R-53 R-63 & R-73

THIS DRAWING IS INTENDED FOR USE IN PRESERVICE AND INSERVICE INSPECTION PROGRAMS ONLY.

NOTES:

1. ACCESS TO WELD 18RHR(1)B-26 REQUIRES REMOVAL OF RHR-552.
2. ACCESS TO WELD 18RHR(1)B-25 REQUIRES REMOVAL OF RHR-553.

REFERENCES

BOVEE & CRAIL ISOMETRICS

RHR-898-8.8 REV 5
RHR-898-9.14 REV 9

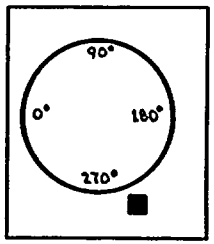

KEY PLAN

PIPING SYSTEM	NOM DIA (IN)	SCH	NOM WALL THK	MATERIAL SPECIFICATION	MATL TYPE	CAL BLOCK NO
18" RHR(1)-2	18	20	0.438	SA 106 GR B	CS	NA

NO	DATE	REVISION	BY	CHKD	APPVD
2	10-13-83	REVISED AS NOTED	KMcA	[illegible]	TFG
1	12-2-81	REVISED AS NOTED	KMcA	[illegible]	TFG
0	11-23-78	ISSUED FOR USE	KMcA	[illegible]	[illegible]
A	6-12-78	ISSUED FOR INFORMATION ONLY	KMcA	[illegible]	[illegible]

QUALITY CLASS: 1 | ASME CODE CLASS: 2

ENGR: G.A. KUGLER | DRAWN: K.M.A. | DATE: 6-6-78

WASHINGTON PUBLIC POWER SUPPLY SYSTEM
RICHLAND, WASHINGTON 99352

WNP-2
WELD & COMPONENT IDENTIFICATION DIAGRAM

TITLE:
RHR LOOP B
SUPPLY TO RHR-HX-1B

DWG NO: RHR-207-5 | REV 2

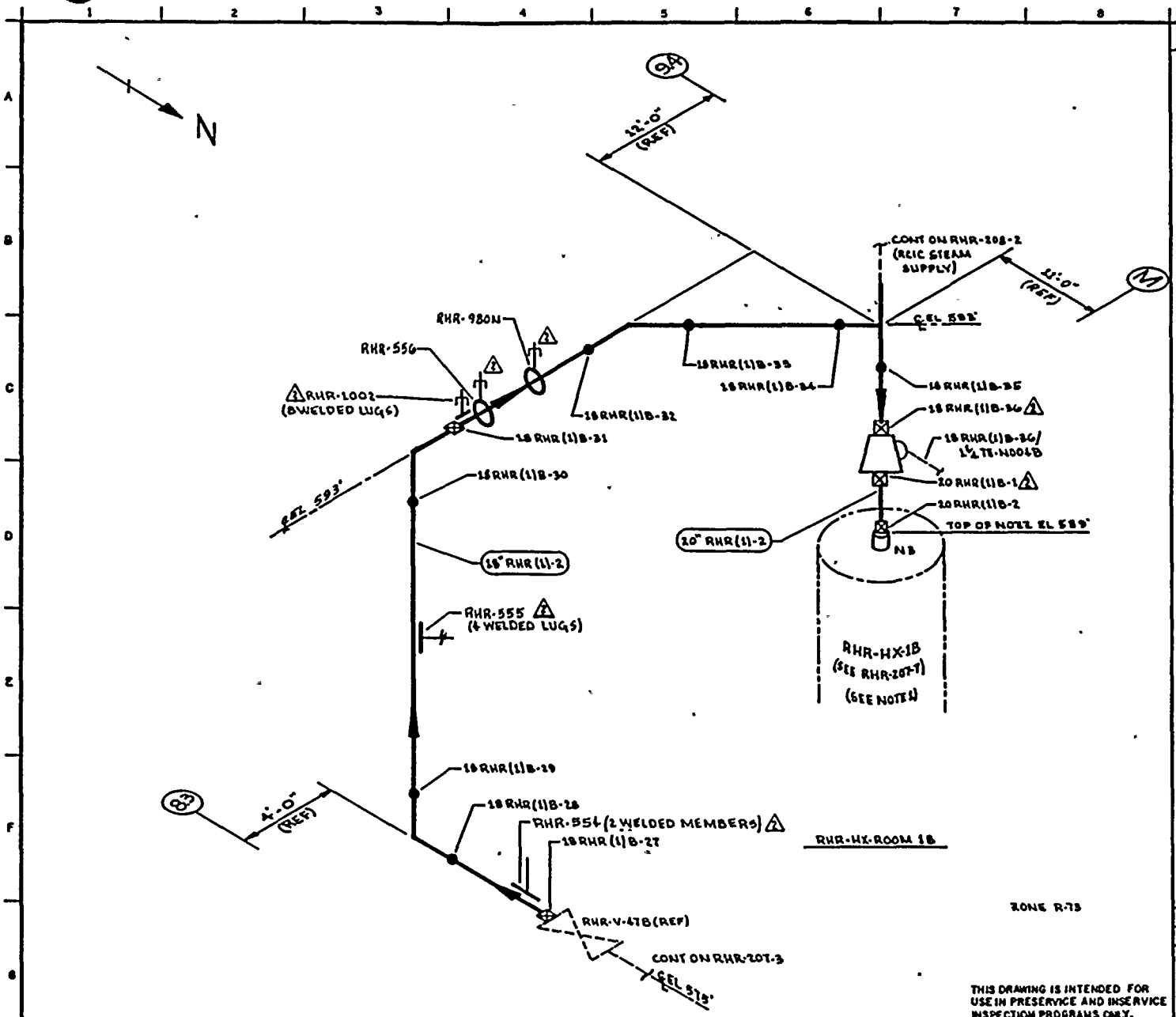

NOTES:

1. EXTEND VISUAL LEAKAGE EXAM OF RHR-HX-1B VENTS & DRAINS THROUGH OUTERMOST NORMALLY CLOSED ISOLATION VALVE, RELIEF VALVE OR TRANSITION TO INSTRUMENT TUBING.
2. SCAFFOLDING IS REQUIRED.

REFERENCES:

BOVEE & CRAIL ISOMETRIC RHR-898-9.16 REV 9

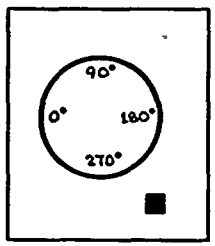

KEY PLAN

THIS DRAWING IS INTENDED FOR USE IN PRESERVICE AND INSERVICE INSPECTION PROGRAMS ONLY.

QUALITY CLASS: 1	ASME CODE CLASS: 2
ENGR: G.A. KUGLER / DRAWN: K.M.A.	DATE: 6-6-78

WASHINGTON PUBLIC POWER SUPPLY SYSTEM
RICHLAND, WASHINGTON 99352

PIPING SYSTEM	NOM DIA (IN)	SCH	NOM WALL THK	MATERIAL SPECIFICATION	MATL TYPE	CAL BLOCK NO
18" RHR (1)-2	18	30	0.438	SA 106 GR B	CS	NA
20" RHR(1)-2	20	30	0.500	SA 106 GR B	CS	NA

NO	DATE	REVISION	BY	CHKD	APPVD
2	10-13-81	REVISED AS NOTED	KMA		
1	12-2-81	REVISED AS NOTED	KMA		
0	11-23-78	ISSUED FOR USE	KMA		
A	9-12-78	ISSUED FOR INFORMATION ONLY	KMA		

WNP-2
WELD & COMPONENT IDENTIFICATION DIAGRAM

TITLE: RHR LOOP B SUPPLY TO RHR-HX-1B

DWG NO: RHR-207-4 REV 2

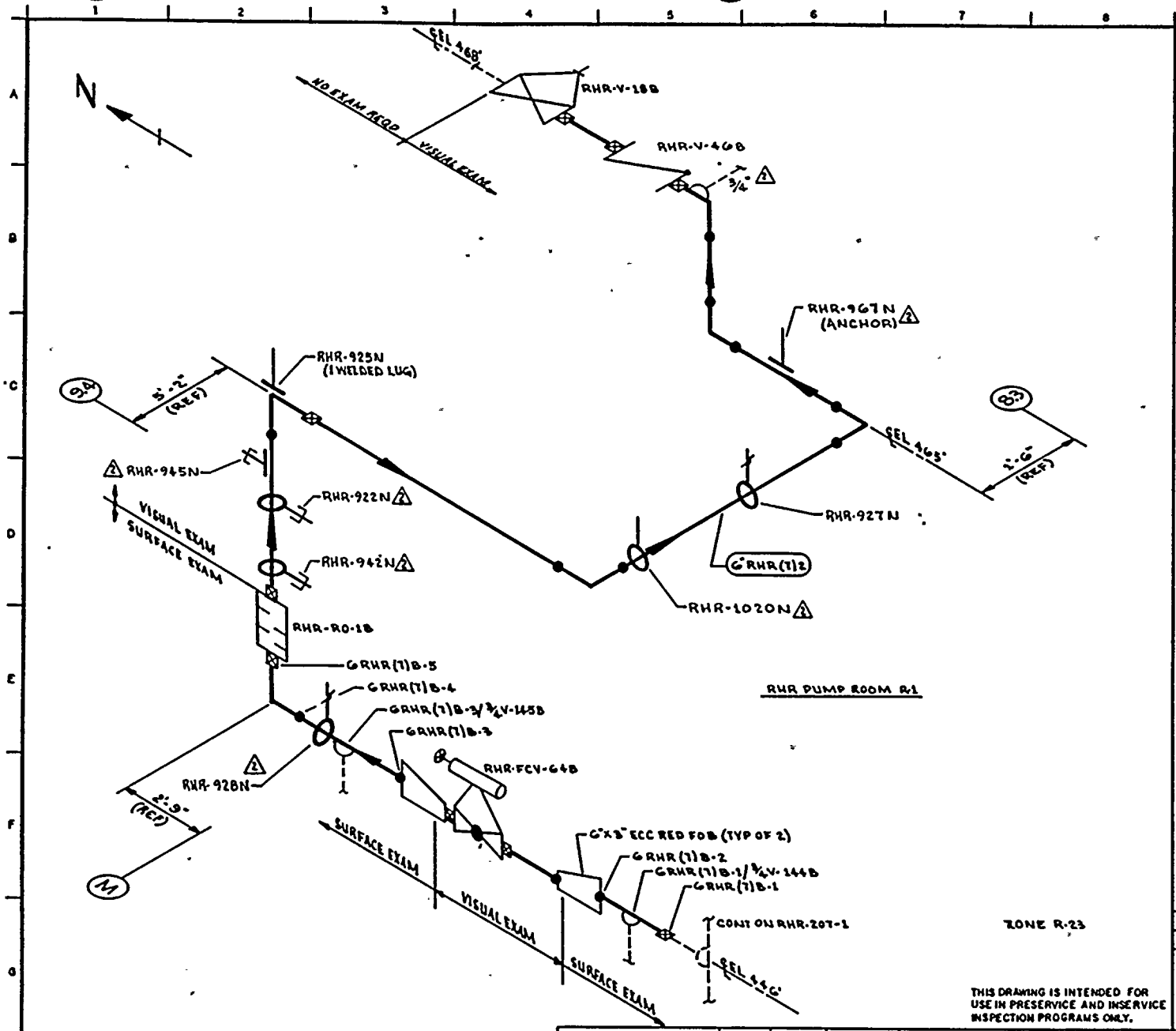

THIS DRAWING IS INTENDED FOR USE IN PRESERVICE AND INSERVICE INSPECTION PROGRAMS ONLY.

NOTES:

1. PORTIONS OF THIS DRAWING IDENTIFY PIPING & COMPONENTS THAT ARE SUBJECT ONLY TO A VISUAL EXAM FOR EVIDENCE OF LEAKAGE DURING SYSTEM HYDRO OR OPERABILITY TESTS. TESTS ARE TO BE CONDUCTED PER THE REQUIREMENTS OF ASME SECTION XI, PARAGRAPH IWA-5000.

REFERENCES:

BOVEE & CRAIL ISOMETRICS

RHR-898-36.38 REV 9
RHR-898-39.40 REV 7

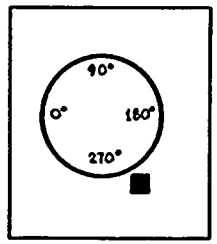

KEY PLAN

PIPING SYSTEM	NOM DIA (IN)	SCH	NOM WALL THK	MATERIAL SPECIFICATION	MATL TYPE	CAL BLOCK NO
6" RHR (T)-2	6	40	0.280	SA 106 GRB	CS	NA

NO	DATE	REVISION	BY	CHKD	APPVD
2	9-26-83	REVISED AS NOTED	KWL	[illegible]	TFB
1	12-2-81	REVISED AS NOTED	KWL	[illegible]	TFB
0	12-29-79	ISSUED FOR USE	KWL	[illegible]	[illegible]
A	9-12-78	ISSUED FOR INFORMATION ONLY	KWL	[illegible]	[illegible]

QUALITY CLASS: 1 | ASME CODE CLASS: 2

ENGR: G.A. KUGLER | DRAWN: K. McA | DATE: 6-6-78

WASHINGTON PUBLIC POWER SUPPLY SYSTEM
RICHLAND, WASHINGTON 99352

WNP-2
WELD & COMPONENT IDENTIFICATION DIAGRAM

TITLE:
RHR LOOP B
MINIMUM FLOW LINE TO SUPPRESSION POOL

DWG NO: RHR-207-B | REV 2

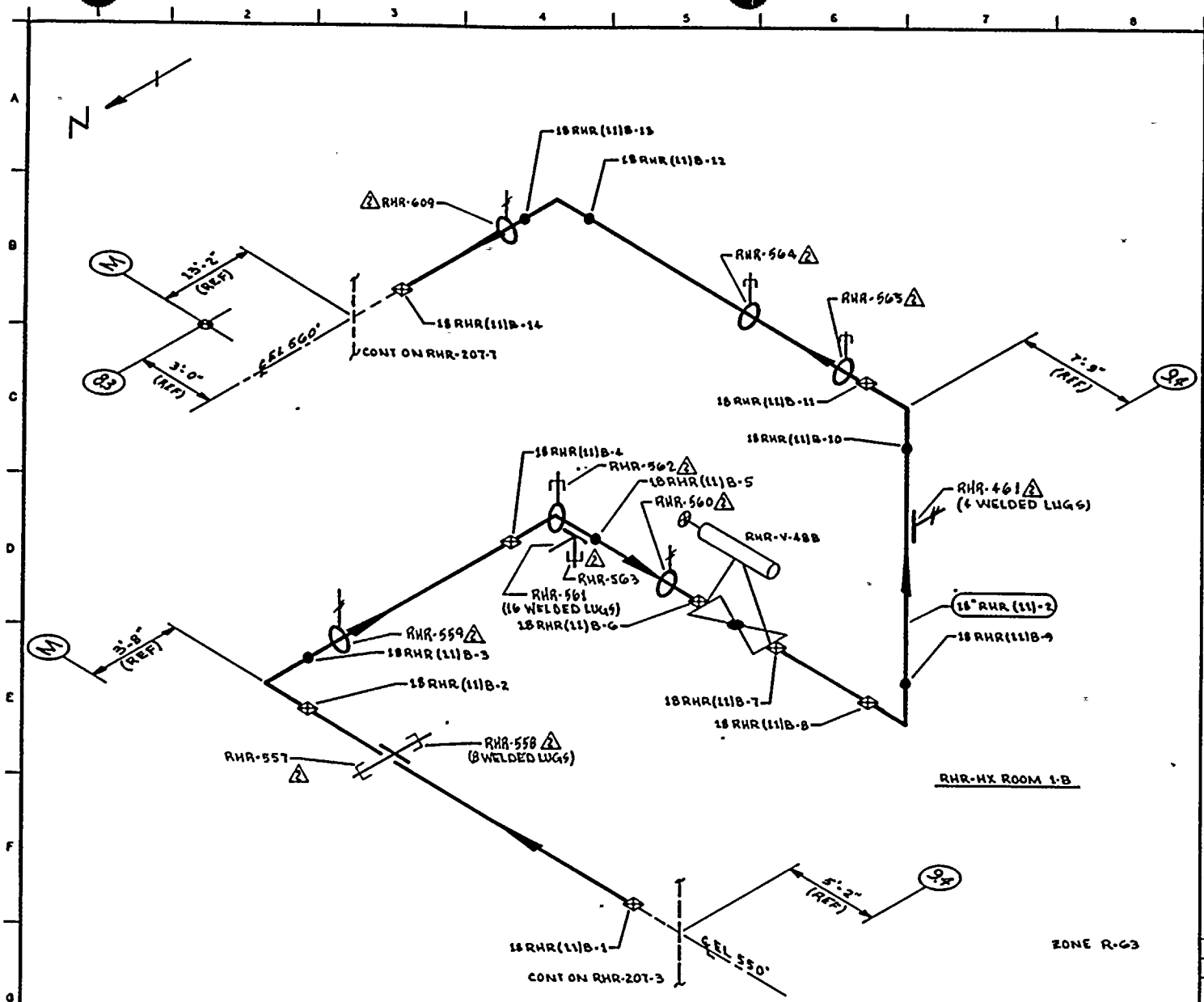

NOTES:

REFERENCES:
BOVEE & CRAIL ISOMETRIC
RHR-900-1.5 REV 5

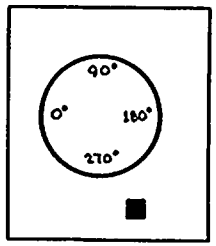

KEY PLAN

QUALITY CLASS: 1 | ASME CODE CLASS: 2

ENGR: G.A. KUGLER | DRAWN: K.McA | DATE: 6-7-78

WASHINGTON PUBLIC POWER SUPPLY SYSTEM
RICHLAND, WASHINGTON 99352

THIS DRAWING IS INTENDED FOR USE IN PRESERVICE AND INSERVICE INSPECTION PROGRAMS ONLY.

PIPING SYSTEM	NOM DIA (IN)	SCH	NOM WALL THK	MATERIAL SPECIFICATION	MATL TYPE	CAL BLOCK NO
18" RHR (11)-2	18	30	0.438	SA 106 GR B	CS	NA

NO	DATE	REVISION	BY	CHKD	APPVD
2	9-26-83	REVISED AS NOTED	K.McA	JPK	TFK
1	12-2-82	REVISED AS NOTED	K.McA	JPK	TFK
0	11-18-78	ISSUED FOR USE	K.McA	[illegible]	[illegible]
A	9-11-78	ISSUED FOR INFORMATION ONLY	K.McA	[illegible]	[illegible]

WNP-2
WELD & COMPONENT IDENTIFICATION DIAGRAM

TITLE:
RHR LOOP B
RHR HEAT EXCHANGER BYPASS

DWG NO: RHR-207-6 | REV 2

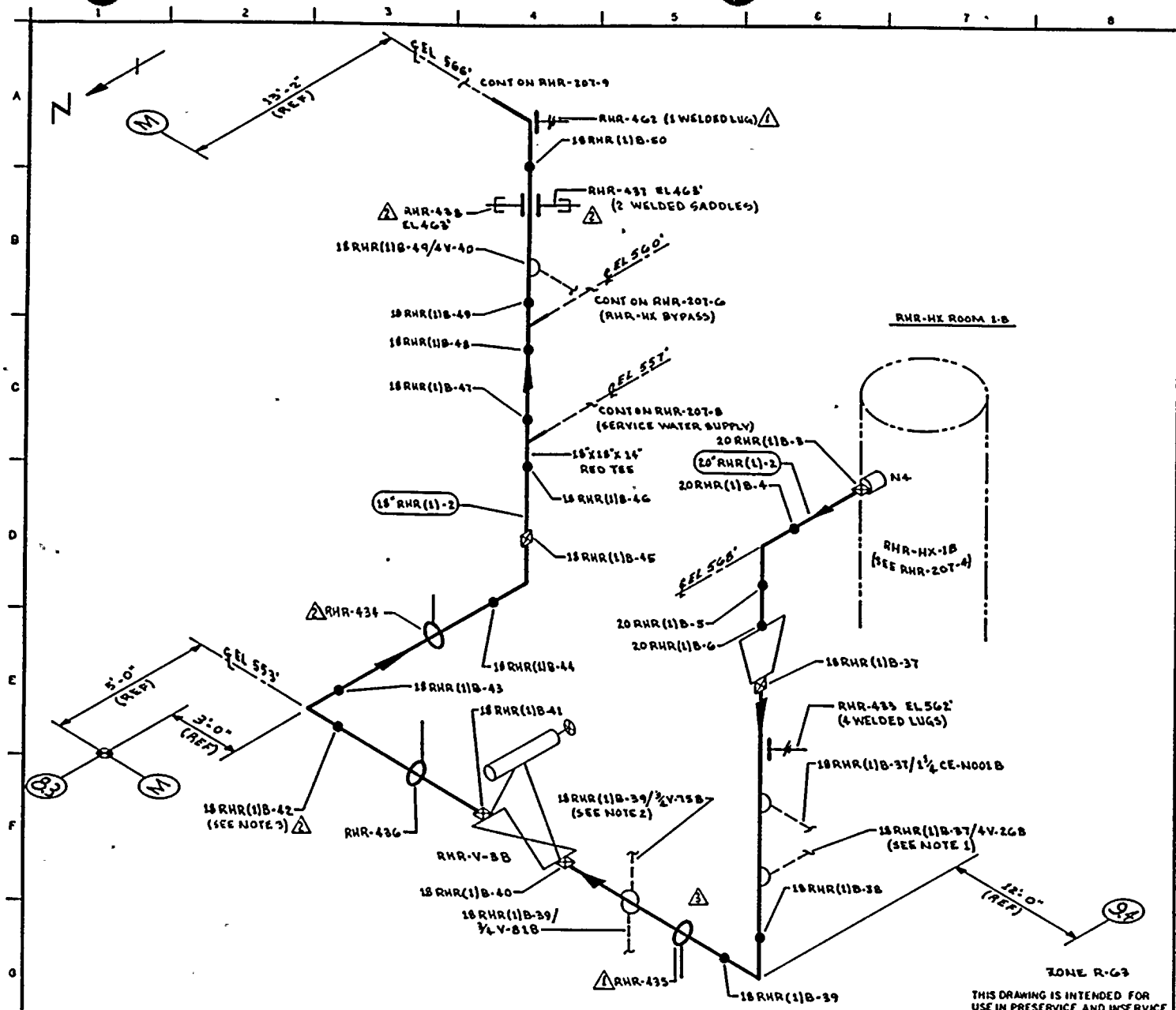

THIS DRAWING IS INTENDED FOR USE IN PRESERVICE AND INSERVICE INSPECTION PROGRAMS ONLY.

NOTES:

1. TERMINATE VISUAL EXAM AT V-26B, V-11B & V-150B.
2. THIS IS A 1½" WOL WITH ¾" BRANCH PIPE. EXTEND VISUAL EXAM TO ¾" V-75B.
3. WELD 18RHR(1)B-42 IS PARTIALLY OBSTRUCTED BY TRUNION ATTACHED TO RHR-436.
4. SCAFFOLDING IS REQUIRED.

REFERENCES:

BOVEE & CRAIL ISOMETRICS
RHR-899-14 REV 9

KEY PLAN

90° 0° 180° 270°

QUALITY CLASS: 1 | ASME CODE CLASS: 2

ENGR: GA KUGLER | DRAWN: K. McA | DATE: 6-7-78

WASHINGTON PUBLIC POWER SUPPLY SYSTEM
RICHLAND WASHINGTON 99352

WNP-2
WELD & COMPONENT IDENTIFICATION DIAGRAM

TITLE: RHR LOOP B SUPPLY FROM RHR-HX-1B

DWG NO: RHR-207-7 | REV 2

PIPING SYSTEM	NOM DIA (IN)	SCH	NOM WALL THK	MATERIAL SPECIFICATION	MATL TYPE	CAL BLOCK NO
18" RHR (1)-2	18	30	0.438	SA 106 GR B	CS	NA
20" RHR (1)-2	20	30	0.500	SA 106 GR B	CS	NA

NO	DATE	REVISION	BY	CHKD	APPVD
2	9-26-81	REVISED AS NOTED	K. McA	[illegible]	[illegible]
1	12-2-81	REVISED AS NOTED	K. McA	[illegible]	[illegible]
0	11-19-81	ISSUED FOR USE	K. McA	[illegible]	[illegible]
A	9-12-81	ISSUED FOR INFORMATION ONLY	K. McA	[illegible]	[illegible]

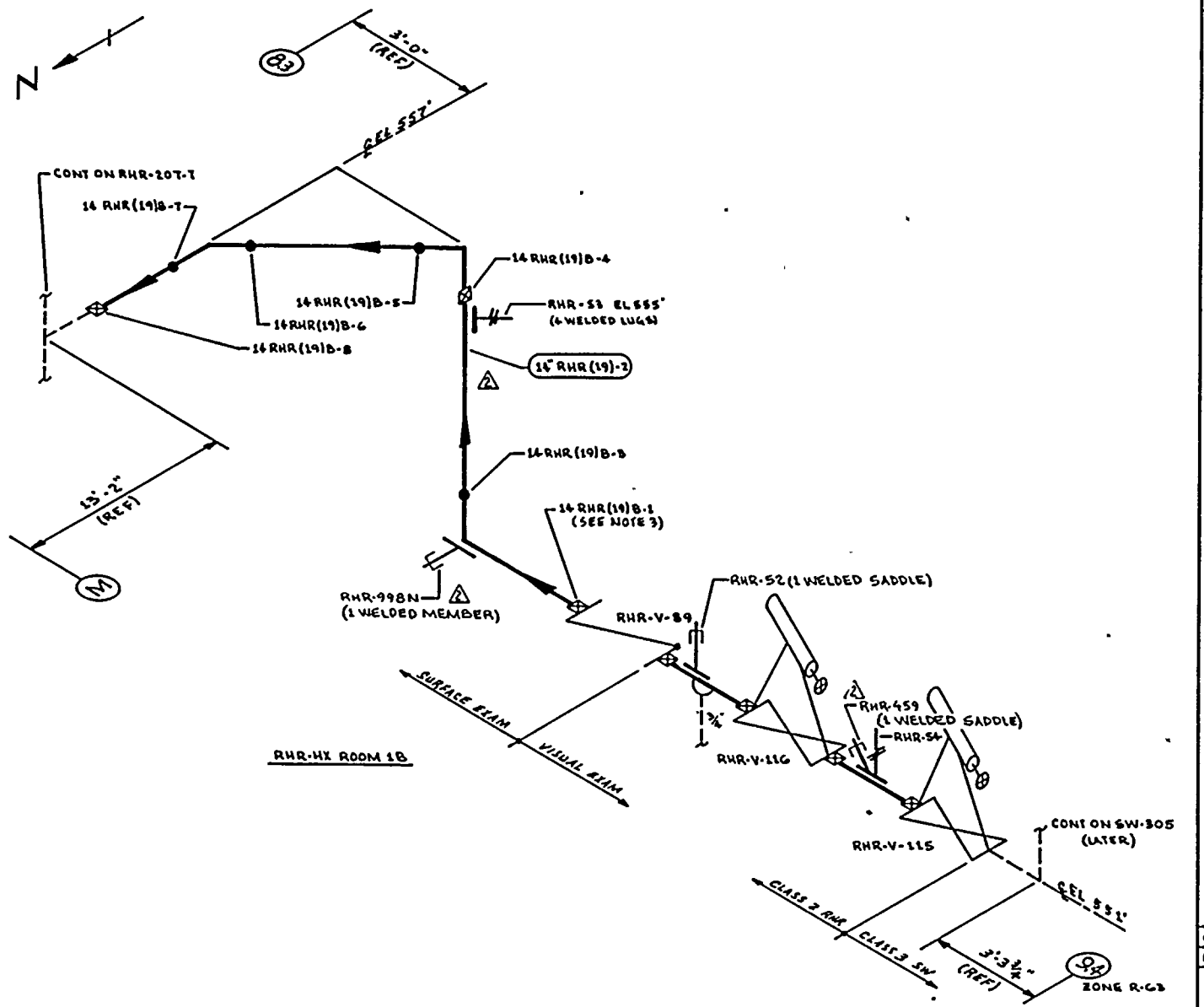

THIS DRAWING IS INTENDED FOR USE IN PRESERVICE AND INSERVICE INSPECTION PROGRAMS ONLY.

NOTES:

1. PORTIONS OF THIS DRAWING IDENTIFY PIPING & COMPONENTS THAT ARE SUBJECT ONLY TO A VISUAL EXAM FOR EVIDENCE OF LEAKAGE DURING SYSTEM HYDRO OR OPERABILITY TESTS. TESTS ARE TO BE CONDUCTED PER THE REQUIREMENTS OF ASME SECTION XI, PARAGRAPH IWA-5000.
2. FOR BRANCH PIPING 4" DIA OR LESS (CONN SHOWN IN DASHED LINES) EXTEND VISUAL LEAKAGE EXAM THROUGH THE OUTERMOST NORMALLY CLOSED NUCLEAR VALVE OR UNTIL TRANSITION TO INSTRUMENT TUBING, UNLESS OTHERWISE NOTED.
3. ELBOW BETWEEN WELDS 14 RHR (19)B-1 & 3 IS FITTING TO VALVE. (2)
4. SCAFFOLDING IS REQUIRED DOWNSTREAM OF WELD 14 RHR(19)B-4. (2)

REFERENCES:

BOVEE & CRAIL ISOMETRICS
RHR-978-1.4 REV 11

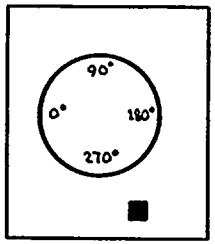

KEY PLAN

QUALITY CLASS: 1	ASME CODE CLASS: 2	
ENGR GA KUGLER	DRAWN: K. McA	DATE: 6-8-78

WASHINGTON PUBLIC POWER SUPPLY SYSTEM
RICHLAND, WASHINGTON 99352

PIPING SYSTEM	NOM DIA (IN)	SCH	NOM WALL THK	MATERIAL SPECIFICATION	MATL TYPE	CAL BLOCK NO
14" RHR(19)-2	14	STD	0.375	SA 106 GR B	CS	NA

NO	DATE	REVISION	BY	CHKD	APPVD
2	12-2-83	REVISED AS NOTED	KMcA	[illegible]	[illegible]
1	11-5-80	DELETED WELD 14 RHR(19)B-2, ADDED NOTE 3, & NOTE 4	KMcA	[illegible]	[illegible]
0	12-22-78	ISSUED FOR USE	KMcA	[illegible]	[illegible]
A	9-12-78	ISSUED FOR INFORMATION ONLY	KMcA	[illegible]	[illegible]

WNP-2
WELD & COMPONENT IDENTIFICATION DIAGRAM

TITLE:
RHR LOOP B
SERVICE WATER SUPPLY TO RHR-HX-1B DISCHARGE

DWG NO: RHR-207-8 REV 2

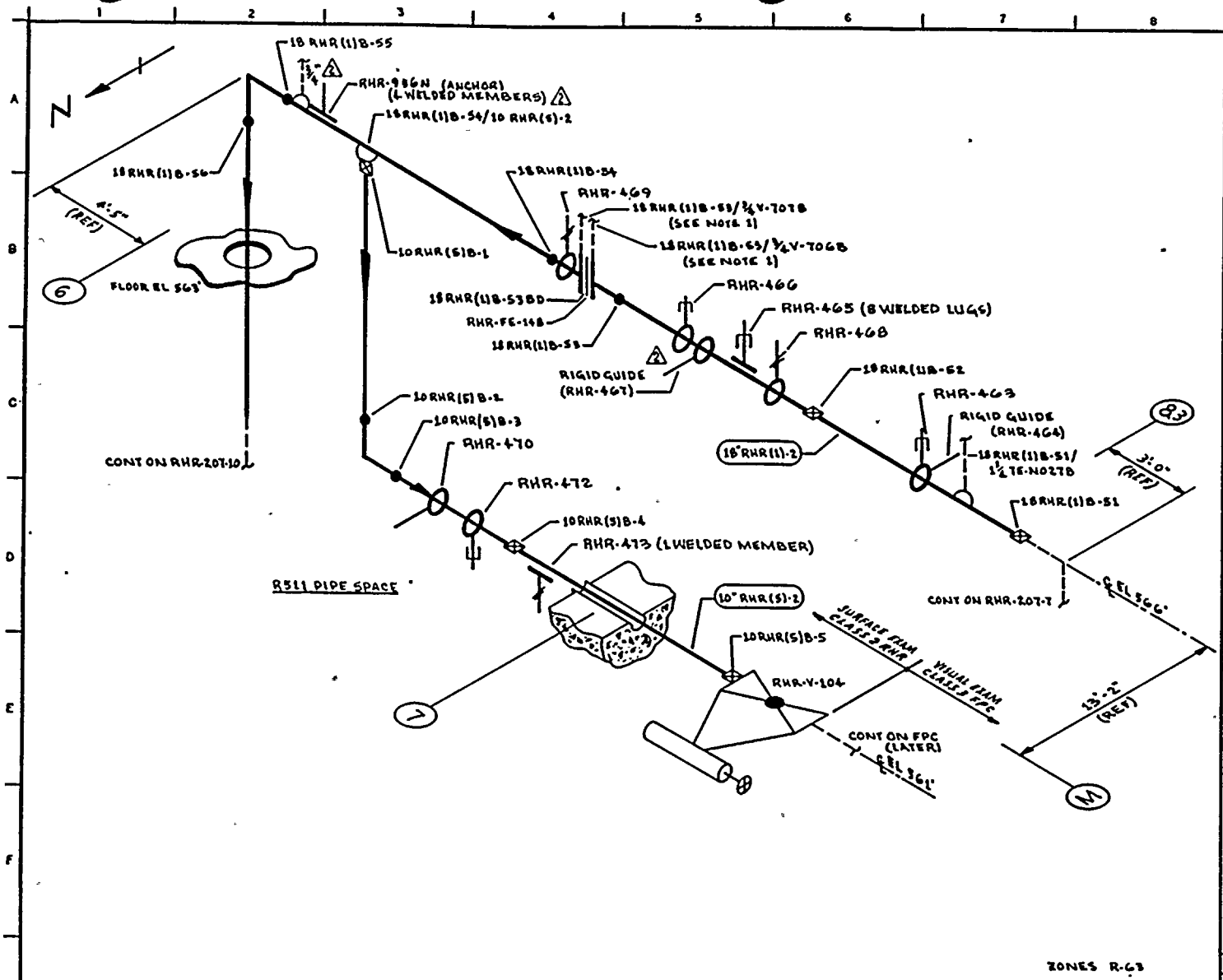

NOTES:

1. THESE ARE 1/2" CONNECTIONS WITH VISUAL EXAM EXTENDING TO 3/4V-706B, 3/4V-707B, 3/4V-728B & 3/4V-729B.

REFERENCES:

BOVEE & CRAIL ISOMETRICS

RHR-899-5.7 REV 7
RHR-899-36.37 REV 4

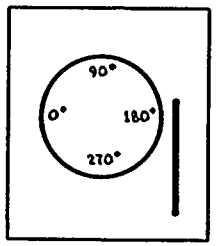

KEY PLAN

ZONES R-63

THIS DRAWING IS INTENDED FOR USE IN PRESERVICE AND INSERVICE INSPECTION PROGRAMS ONLY.

PIPING SYSTEM	NOM DIA (IN)	SCH	NOM WALL THK	MATERIAL SPECIFICATION	MATL TYPE	CAL BLOCK NO
18" RHR (1)-2	18	30	0.438	SA 106 GR B	CS	NA
10" RHR (S)-2	10	40	0.365	SA 106 GR B	CS	NA

NO	DATE	REVISION	BY	CHKD	APPVD
2	9-26-83	REVISED AS NOTED	K.M.A	DR	TFK
1	12-2-81	REVISED AS NOTED	K.M.A	DR	TFK
0	[illegible]	ISSUED FOR USE	K.M.A	[illegible]	[illegible]
A	9-11-78	ISSUED FOR INFORMATION ONLY	K.M.A	[illegible]	[illegible]

QUALITY CLASS: 1 | ASME CODE CLASS: 2

ENGR: G.A. KUGLER | DRAWN: K.M.A | DATE: 6-8-78

WASHINGTON PUBLIC POWER SUPPLY SYSTEM
RICHLAND, WASHINGTON 99352

WNP-2
WELD & COMPONENT
IDENTIFICATION DIAGRAM

TITLE:
RHR LOOP B
SUPPLY FROM RHR-HX-1B
& FPC INTERTIE

DWG NO: RHR-207-9 | REV 2

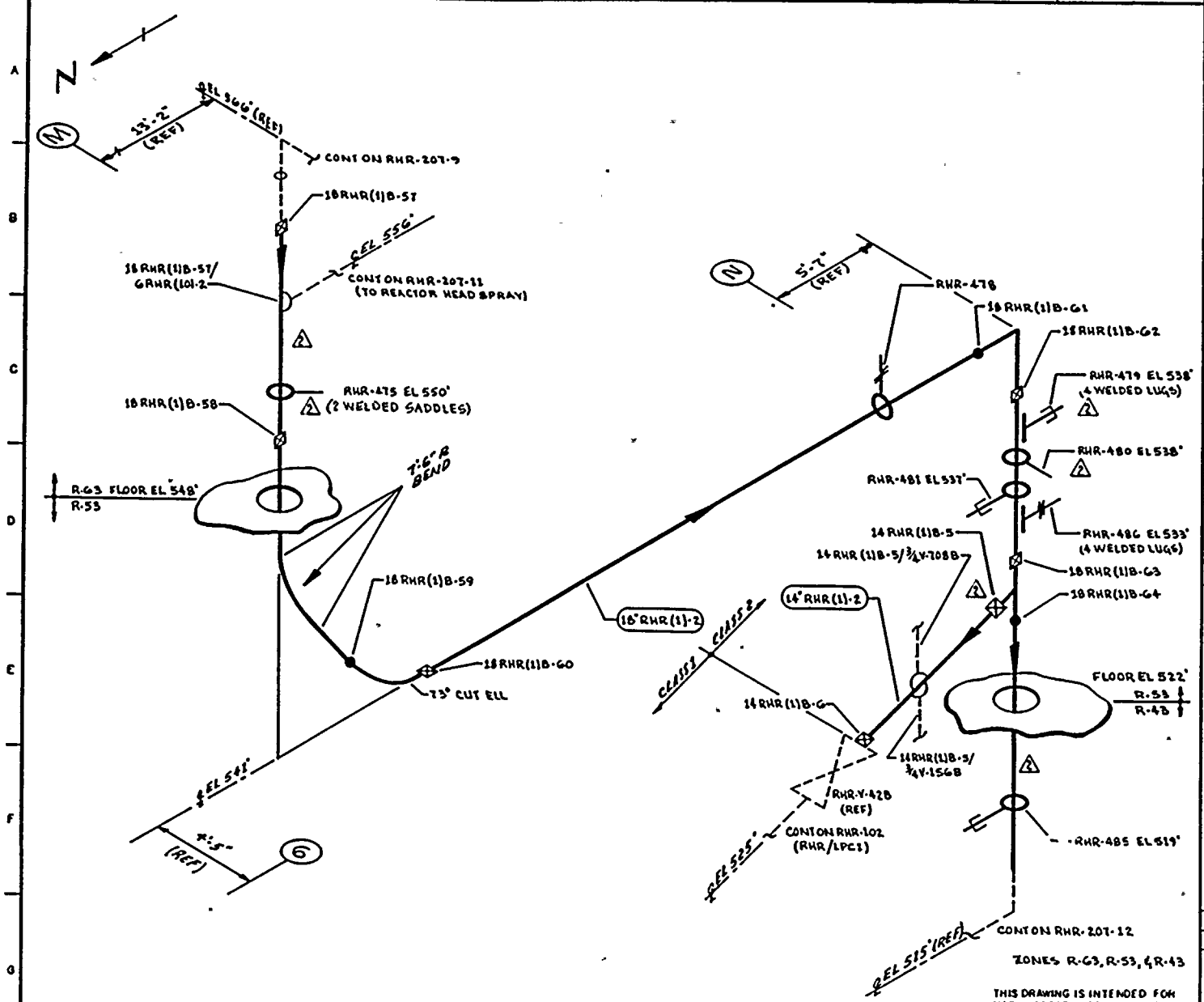

THIS DRAWING IS INTENDED FOR USE IN PRESERVICE AND INSERVICE INSPECTION PROGRAMS ONLY.

NOTES:

REFERENCES:

BOVEE & CRAIL ISOMETRICS

RHR-899-8.11 REV 6
RHR-899-12.17 REV 9

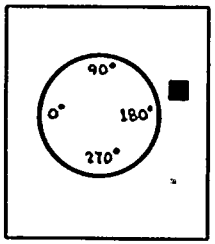

KEY PLAN

QUALITY CLASS: 1	ASME CODE CLASS: 2
ENGR: GA KUGLER	DRAWN: K.M.L.A. / DATE: 6-12-78

WASHINGTON PUBLIC POWER SUPPLY SYSTEM
RICHLAND WASHINGTON 99352

PIPING SYSTEM	NOM DIA (IN)	SCH	NOM WALL THK	MATERIAL SPECIFICATION	MATL TYPE	CAL BLOCK NO
18" RHR (1)-2	18	30	0.438	SA 106 GR B	CS	NA
14" RHR (1)-2	14	STD	0.375	SA 106 GR B	CS	NA

NO	DATE	REVISION	BY	CHKD	APPVD
2	10-13-83	REVISED AS NOTED	K.M.L.A.	JWR	TFH
1	12-2-81	REVISED AS NOTED	K.M.L.A.	JWR	TFH
0	12-22-78	ISSUED FOR USE	K.M.L.A.	[illegible]	TFH
A	9-12-78	ISSUED FOR INFORMATION ONLY	K.M.L.A.	[illegible]	[illegible]

WNP-2
WELD & COMPONENT IDENTIFICATION DIAGRAM

TITLE:
RHR LOOP B
SUPPLY FROM RHR-HX-1B

DWG NO: RHR-207-10 REV 2

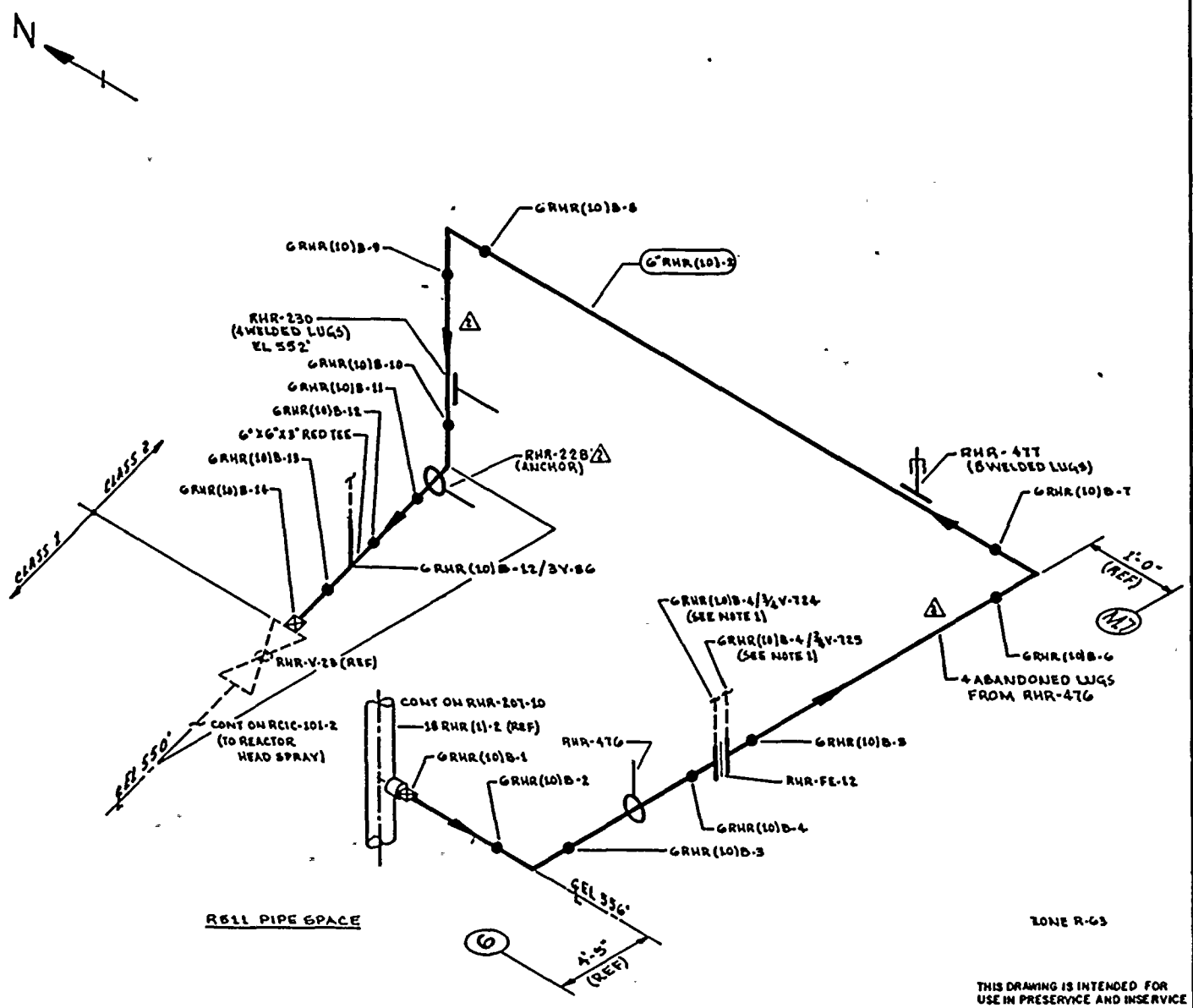

NOTES:

1. THESE ARE 3/4" CONNECTIONS WITH VISUAL EXAM EXTENDING TO 3/4V-724 & 3/4V-725.

REFERENCES:

BOVEE & CRAIL ISOMETRICS

RHR-745-1.2 REV 7

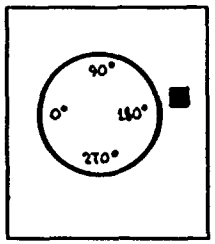

KEY PLAN

THIS DRAWING IS INTENDED FOR USE IN PRESERVICE AND INSERVICE INSPECTION PROGRAMS ONLY.

QUALITY CLASS: 1	ASME CODE CLASS: 2
ENGR: GA KUGLER	DRAWN: K. McA	DATE: 6-12-78

WASHINGTON PUBLIC POWER SUPPLY SYSTEM
RICHLAND, WASHINGTON 99352

PIPING SYSTEM	NOM DIA (IN)	SCH	NOM WALL THK	MATERIAL SPECIFICATION	MATL TYPE	CAL BLOCK NO
6" RHR (10)-2	6	40	0.280	SA 106 GR B	C6	NA

WNP-2
WELD & COMPONENT
IDENTIFICATION DIAGRAM

TITLE:
RHR LOOP B
REACTOR HEAD SPRAY SUPPLY

DWG NO: RHR-207-11 REV 2

NO	DATE	REVISION	BY	CHKD	APPVD
2	9-24-83	REVISED AS NOTED	K.M.A	JPR	JFH
1	12-2-81	REVISED AS NOTED	K.M.A	JPR	JFH
0	11-11-81	ISSUED FOR USE	K.M.A	[illegible]	[illegible]
A	9-12-78	ISSUED FOR INFORMATION ONLY	KMA	JPR	[illegible]

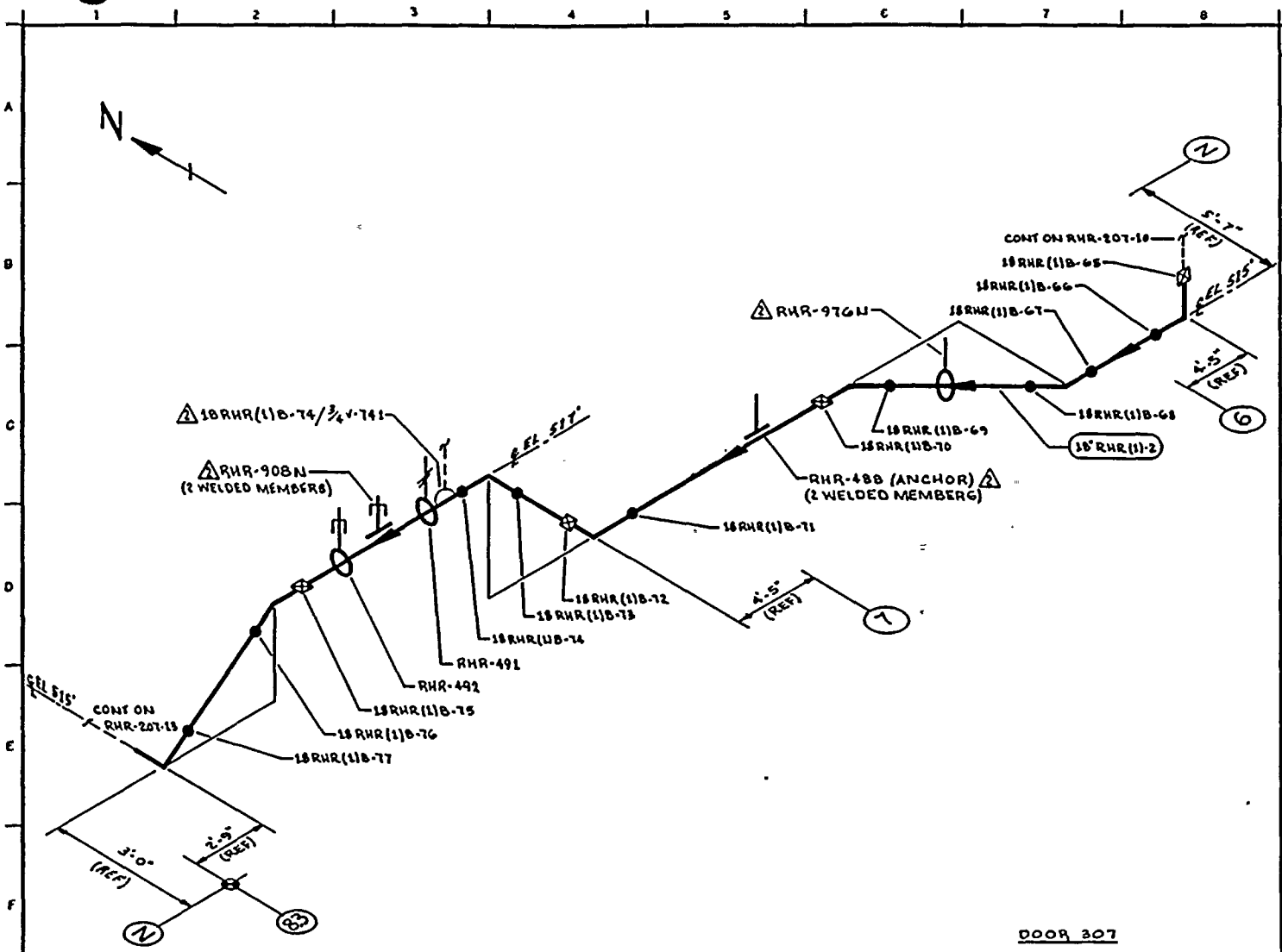

DOOR 307

ZONE R-43

THIS DRAWING IS INTENDED FOR USE IN PRESERVICE AND INSERVICE INSPECTION PROGRAMS ONLY.

NOTES:

REFERENCES:
BOVEE & CRAIL ISOMETRICS
RHR-899-12-17 REV 7

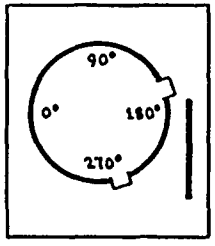

KEY PLAN

QUALITY CLASS: 1 | ASME CODE CLASS: 2
ENGR: GA KUGLER | DRAWN: K.McA | DATE: 6-12-78

WASHINGTON PUBLIC POWER SUPPLY SYSTEM
RICHLAND, WASHINGTON 99352

PIPING SYSTEM	NOM DIA (IN)	SCH	NOM WALL THK	MATERIAL SPECIFICATION	MATL TYPE	CAL BLOCK NO
18" RHR(1)-2	18	30	0.438	SA 106 GR B	CS	NA

WNP-2
WELD & COMPONENT IDENTIFICATION DIAGRAM

TITLE:
RHR LOOP B
SUPPLY FROM RHR-HX-1B

DWG NO: RHR-207-12 | REV 2

NO	DATE	REVISION	BY	CHKD	APPVD
2	9-26-83	REVISED AS NOTED	KMcA	DAR	TFH
1	12-2-81	REVISED AS NOTED	KMcA	GR	TFH
0	12-22-79	ISSUED FOR USE	KMcA	[illegible]	[illegible]
A	9-12-78	ISSUED FOR INFORMATION ONLY	KMcA	[illegible]	[illegible]

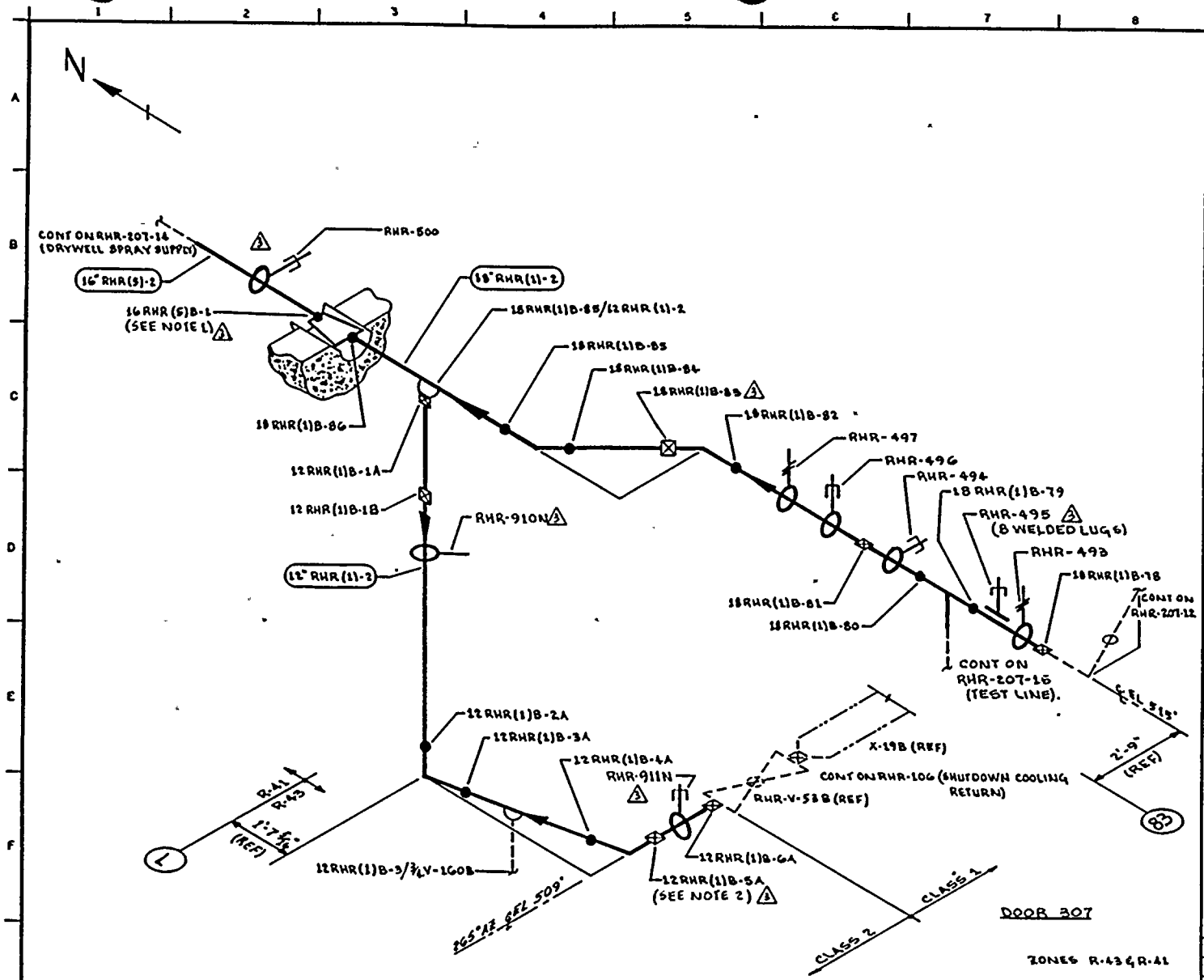

NOTES:

1. ACCESS TO WELD 16RHR(5)B-1 REQUIRES REMOVAL OF RHR-500.
2. ACCESS TO WELD 12RHR(1)B-6A REQUIRES REMOVAL OF RHR-911N.
3. LADDER IS REQUIRED.

REFERENCES:

BOVEE & CRAIL ISOMETRICS

RHR-899-18,19	REV 5
RHR-899-45	REV 4

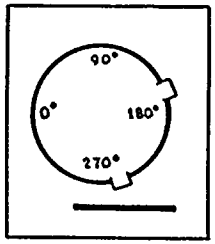

KEY PLAN

THIS DRAWING IS INTENDED FOR USE IN PRESERVICE AND INSERVICE INSPECTION PROGRAMS ONLY.

NO	DATE	REVISION	BY	CHKD	APPVD
3	9-16-83	REVISED AS NOTED			
2	12-2-81	REVISED AS NOTED & WELD Nos ON 12" RHR (1)-2			
1	11-5-80	ADDED FIELD WELD 12 RHR (1)B-1A & AS NOTED			
0	12-23-79	ISSUED FOR USE			
A	9-12-78	ISSUED FOR INFORMATION ONLY			

PIPING SYSTEM	NOM DIA (IN)	SCH	NOM WALL THK	MATERIAL SPECIFICATION	MATL TYPE	CAL BLOCK NO
18" RHR (1)-2	18	30	0.438	SA 106 GR B	CS	NA
16" RHR (5)-2	16	40	0.500	SA 106 GR B	CS	NA
12" RHR (1)-2	12	STD	0.375	SA 106 GR B	CS	NA

QUALITY CLASS: 1 | ASME CODE CLASS: 2

ENGR: G.A. KUGLER | DRAWN: K.McA | DATE: 6-13-78

WASHINGTON PUBLIC POWER SUPPLY SYSTEM

RICHLAND, WASHINGTON 99352

WNP-2
WELD & COMPONENT IDENTIFICATION DIAGRAM

TITLE: RHR LOOP B SUPPLY FROM RHR-HX-1B & SHUTDOWN COOLING RETURN

DWG NO: RHR-207-13 | REV 3

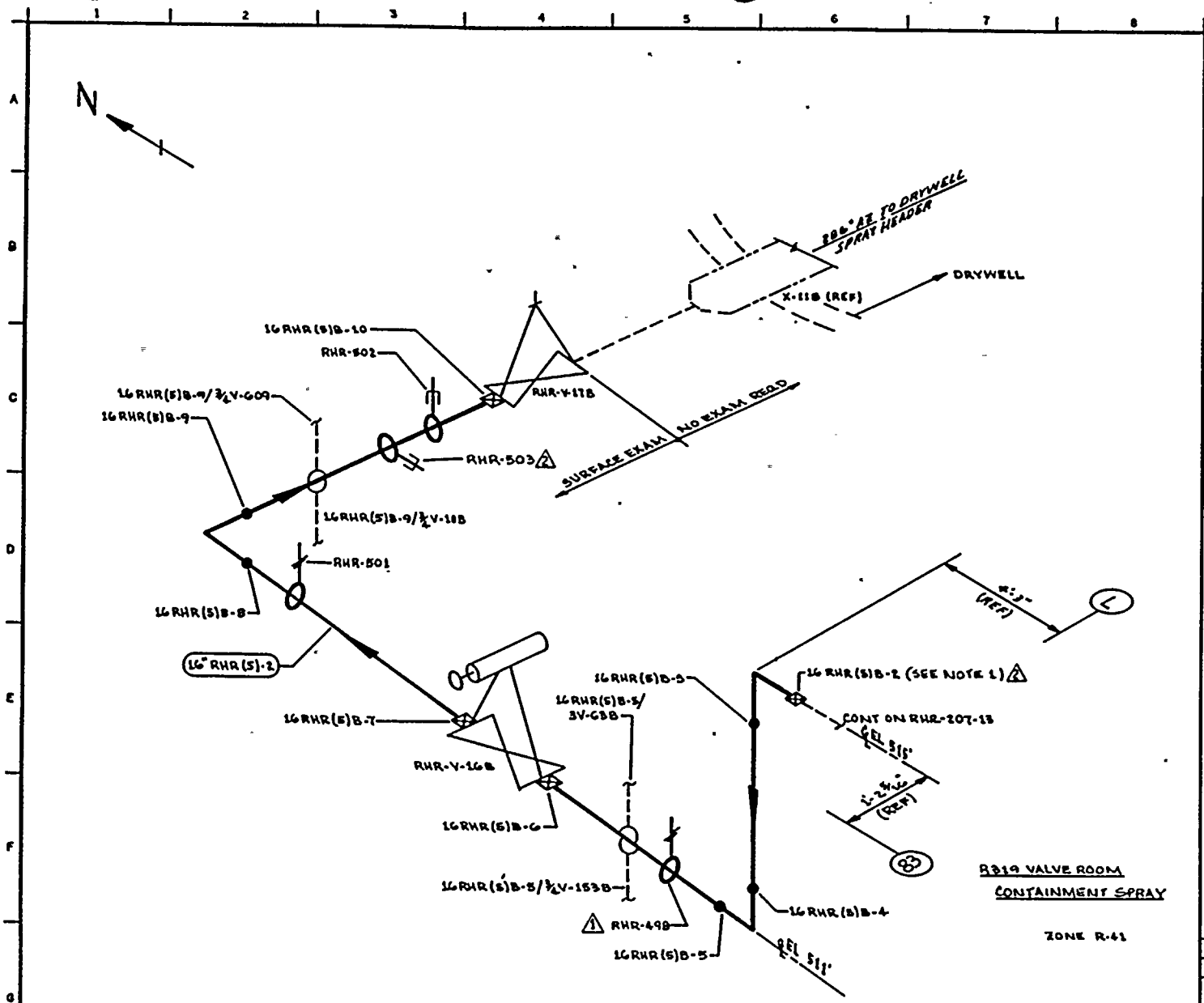

NOTES:

1. ACCESS TO WELD 16 RHR (5)B-2 REQUIRES REMOVAL OF RHR-500.
2. LADDER IS REQUIRED.

REFERENCES:

BOVEE & CRAIL ISOMETRICS
RHR-899-20-22 REV 7

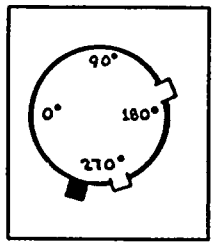

KEY PLAN

THIS DRAWING IS INTENDED FOR USE IN PRESERVICE AND INSERVICE INSPECTION PROGRAMS ONLY.

PIPING SYSTEM	NOM DIA (IN)	SCH	NOM WALL THK	MATERIAL SPECIFICATION	MATL TYPE	CAL BLOCK NO
16" RHR(5)-2	16	40	0.500	SA 106 GR B	CS	NA

NO	DATE	REVISION	BY	CHKD	APPVD
2	9-26-83	REVISED AS NOTED	KMcA	JPK	TRK
1	12-2-81	REVISED AS NOTED	KMcA	JPK	TRK
0	12-22-79	ISSUED FOR USE	KMcA	[illegible]	[illegible]
A	9-12-78	ISSUED FOR INFORMATION ONLY	KMcA	[illegible]	[illegible]

QUALITY CLASS: 1 | ASME CODE CLASS: 2

ENGR: G.A. KUGLER | DRAWN: K. McA. | DATE: 6-14-78

WASHINGTON PUBLIC POWER SUPPLY SYSTEM
RICHLAND, WASHINGTON 99352

WNP-2
WELD & COMPONENT IDENTIFICATION DIAGRAM

TITLE:
RHR LOOP B
DRYWELL SPRAY SUPPLY

DWG NO: RHR-207-14 | REV 2

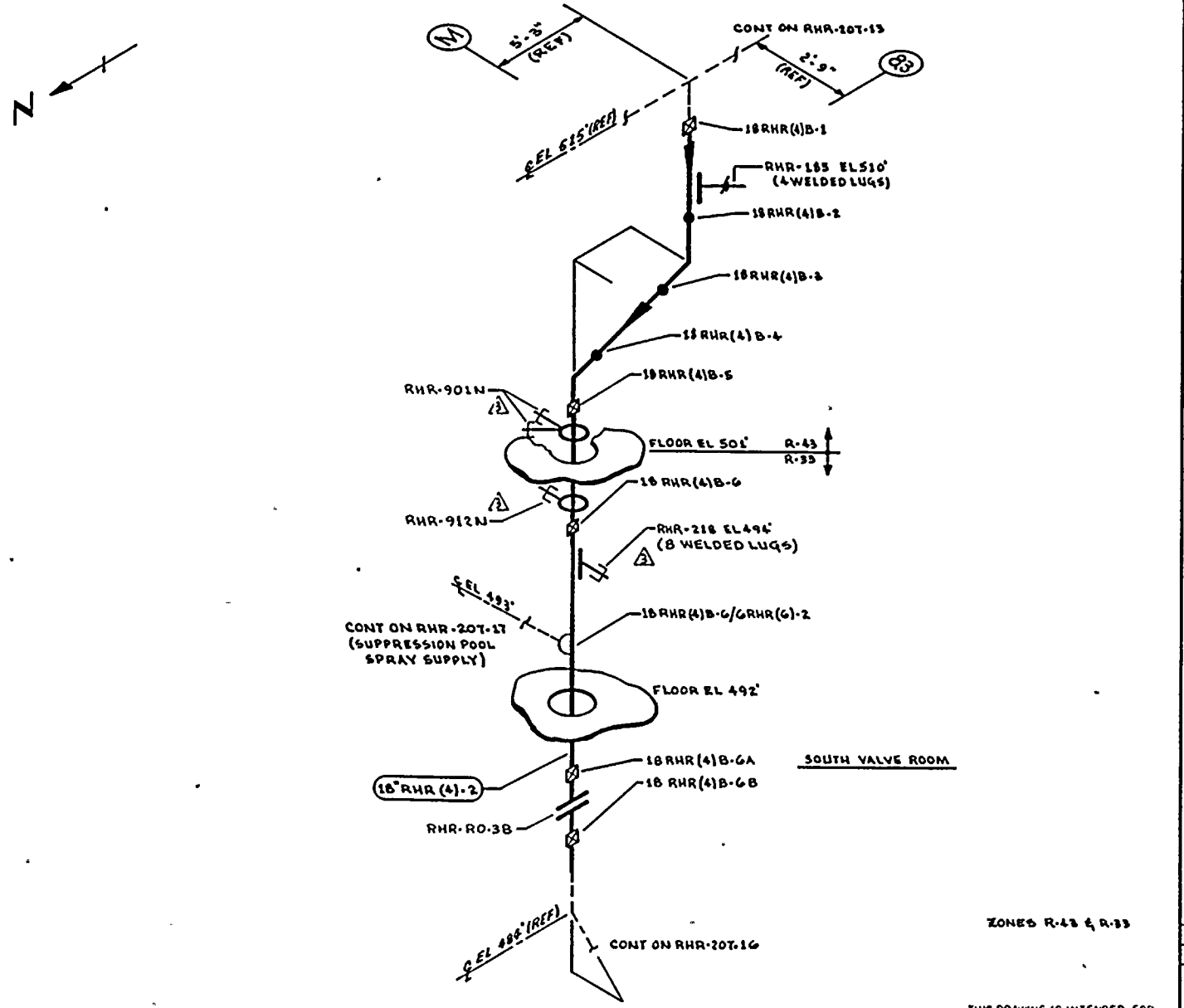

NOTES:

REFERENCES:
BOVEE & CRAIL ISOMETRICS
RHR-975-1.4 REV 11

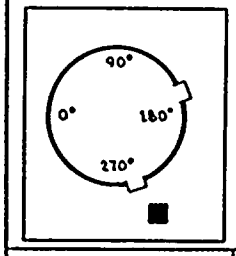

KEY PLAN

THIS DRAWING IS INTENDED FOR USE IN PRESERVICE AND INSERVICE INSPECTION PROGRAMS ONLY.

QUALITY CLASS: 1	ASME CODE CLASS: 2	
ENGR G.A. KUGLER	DRAWN: K.M.C.A.	DATE: 6-13-78

WASHINGTON PUBLIC POWER SUPPLY SYSTEM
RICHLAND, WASHINGTON 99352

PIPING SYSTEM	NOM DIA (IN)	SCH	NOM WALL THK	MATERIAL SPECIFICATION	MATL TYPE	CAL BLOCK NO
18" RHR (4)-2	18	30	0.438	SA 106 GR B	CS	NA

NO	DATE	REVISION	BY	CHKD	APPVD
3	9-26-83	REVISED AS NOTED	KMCA	[illegible]	[illegible]
2	12-8-81	REVISED AS NOTED	KMCA	[illegible]	[illegible]
1	11-5-80	ADDED FLG & FW 18 RHR(4)B-6A & 6B & AS NOTED	KMCA	[illegible]	[illegible]
0	12-29-79	ISSUED FOR USE	KMCA	[illegible]	[illegible]
A	9-22-78	ISSUED FOR INFORMATION ONLY	KMCA	[illegible]	[illegible]

WNP-2
WELD & COMPONENT IDENTIFICATION DIAGRAM

TITLE:
RHR LOOP B
TEST LINE

DWG NO: RHR-207-16 REV 3

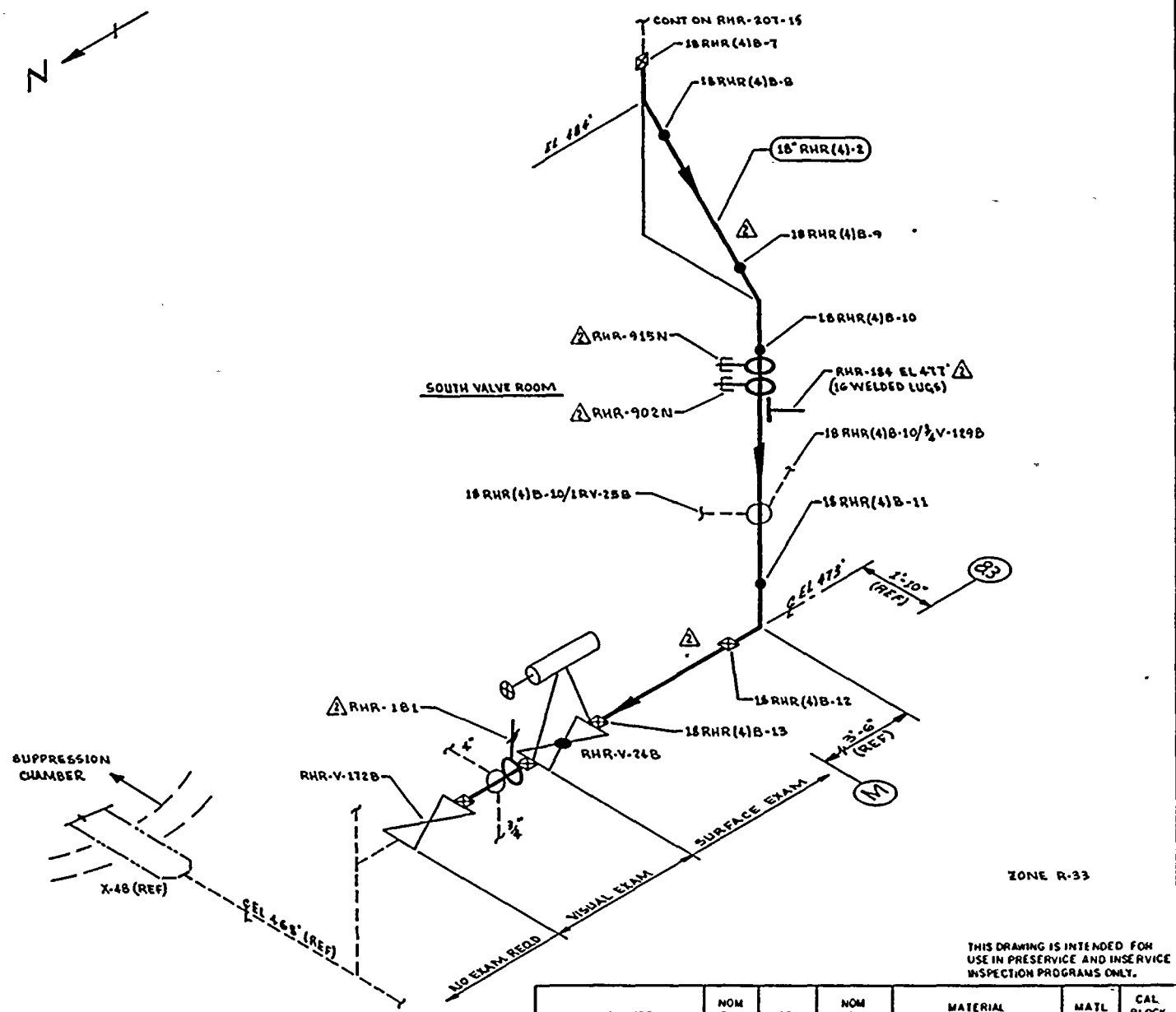

ZONE R-33

THIS DRAWING IS INTENDED FOR USE IN PRESERVICE AND INSERVICE INSPECTION PROGRAMS ONLY.

NOTES:

1. PORTIONS OF THIS DRAWING IDENTIFY PIPING & COMPONENTS THAT ARE SUBJECT ONLY TO A VISUAL EXAM FOR EVIDENCE OF LEAKAGE DURING SYSTEM HYDRO OR OPERABILITY TESTS. TESTS ARE TO BE CONDUCTED PER THE REQUIREMENTS OF ASME SECTION XI, PARAGRAPH IWA-5000.
2. FOR BRANCH PIPING 4" DIA OR LESS (CONN SHOWN IN DASHED LINES) EXTEND VISUAL LEAKAGE EXAM THROUGH THE NORMALLY CLOSED NUCLEAR CLASS VALVE OR UNTIL TRANSITION TO INSTRUMENT TUBING, UNLESS OTHERWISE NOTED.
3. SCAFFOLDING IS REQUIRED. (2)

REFERENCES:

BOVEE & CRAIL ISOMETRICS

RHR-976-1.4 REV 11
RHR-976-5.6 REV 5

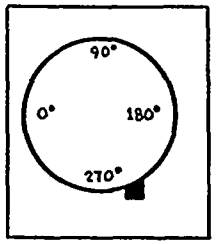

KEY PLAN

QUALITY CLASS: 1 | ASME CODE CLASS: 2

ENGR: GA KUGLER | DRAWN: K. McA | DATE: 6-14-78

WASHINGTON PUBLIC POWER SUPPLY SYSTEM
RICHLAND WASHINGTON 99352

PIPING SYSTEM	NOM DIA (IN)	SCH	NOM WALL THK	MATERIAL SPECIFICATION	MATL TYPE	CAL BLOCK NO
18" RHR(4)-2	18	30	0.438	SA-106 GR B	CS	NA

NO	DATE	REVISION	BY	CHKD	APPVD
2	9-26-83	REVISED AS NOTED	KMcA	[illegible]	TEH
1	12-2-81	REVISED AS NOTED	KMcA	[illegible]	TEH
0	12-11-78	ISSUED FOR USE	KMcA	[illegible]	[illegible]
A	9-12-78	ISSUED FOR INFORMATION ONLY	KMcA	[illegible]	[illegible]

WNP-2
WELD & COMPONENT IDENTIFICATION DIAGRAM

TITLE: RHR LOOP B TEST LINE

DWG NO: RHR-207-16 | REV 2

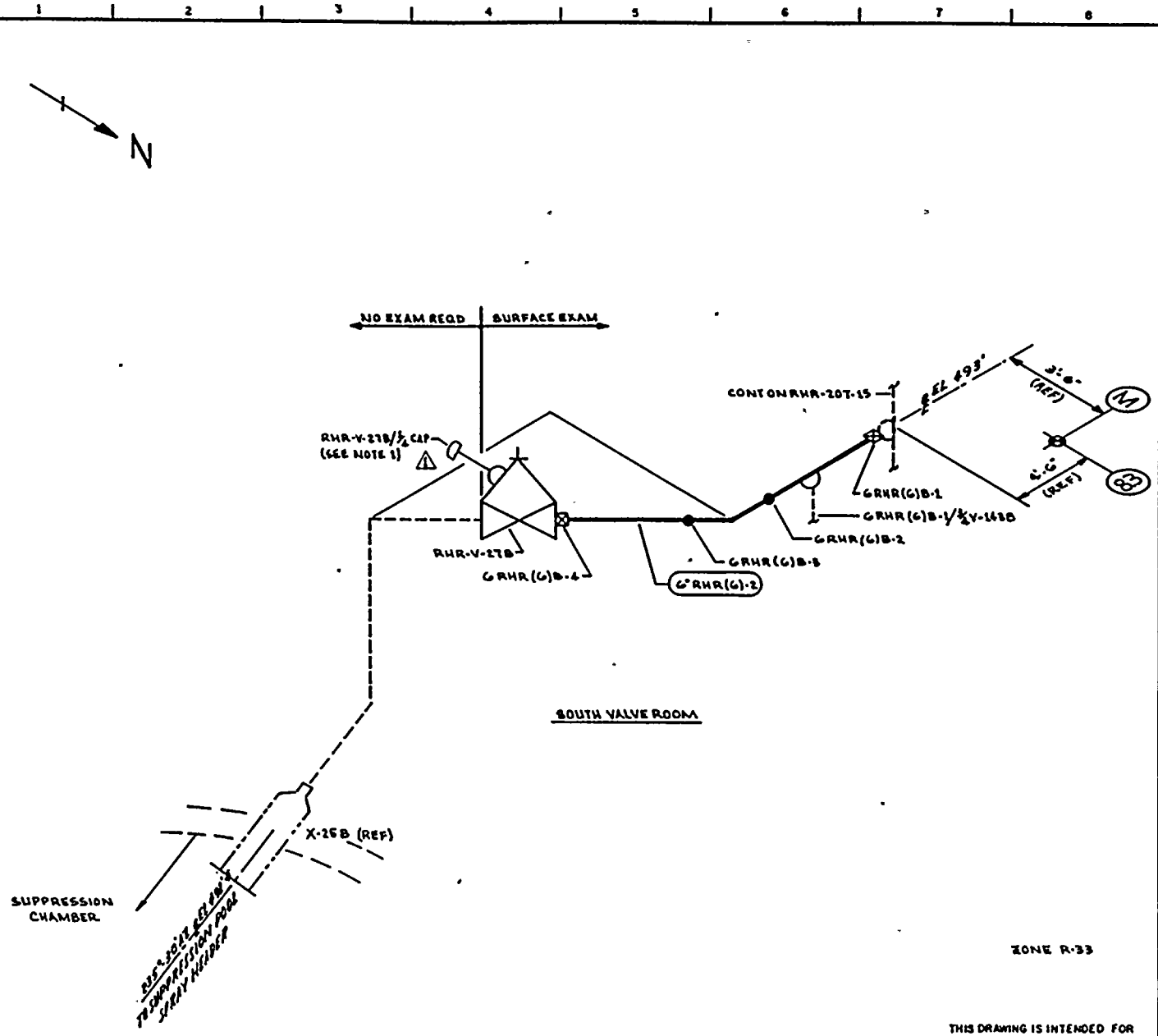

NOTES:

1. THIS IS A 3/4" CONNECTION WITH VISUAL EXAM EXTENDING TO 3/4" CAP. ⚠

REFERENCES:

BOVEE & CRAIL ISOMETRIC RHR-976-7.8 REV 0

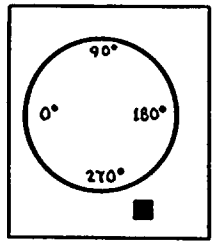

KEY PLAN

THIS DRAWING IS INTENDED FOR USE IN PRESERVICE AND INSERVICE INSPECTION PROGRAMS ONLY.

PIPING SYSTEM	NOM DIA (IN)	SCH	NOM WALL THK	MATERIAL SPECIFICATION	MATL TYPE	CAL BLOCK NO
6"RHR(G)-2	6	40	0.280	SA 106 GR B	C6	NA

NO	DATE	REVISION	BY	CHKD	APPVD
1	9-26-83	CAPPED LEAK-OFF CONNECTION	K.M.A	DPR	THK
0	12-13-78	ISSUED FOR USE	K.M.A	DPR	TAB
A	9-12-78	ISSUED FOR INFORMATION ONLY	K.M.A	DAK	GLB

QUALITY CLASS: 1 | ASME CODE CLASS: 2

ENGR: GA KUGLER | DRAWN: K.M.A | DATE: 6-26-78

WASHINGTON PUBLIC POWER SUPPLY SYSTEM
RICHLAND, WASHINGTON 99352

WNP-2
WELD & COMPONENT IDENTIFICATION DIAGRAM

TITLE: RHR LOOP B SUPPRESSION SPRAY SUPPLY

DWG NO: RHR-207-17 | REV 1

WNP-02
INTERVAL: PSI
PERIOD: NA
OUTAGE:
DRAWING NO. RHR-207

WASHINGTON PUBLIC POWER SUPPLY SYSTEM
PROGRAM PLAN AND SCHEDULE
SYSTEM OR COMPONENT: RHR(1)2
DESCRIPTION: LOOP B SPLY-RHR HX1B

DATE 12/14/84

IDENT. NO.	DESCRIPTION	SECT. XI EXAM.	EXAM MTH.	PROCEDURE	CAL. BLOCK	INSERVICE REQ.	SCHEDULED OUTAGE	NOTES
14RHR(1)B-1								
	FLANGE TO PIPE	C-F	SUR	PTP-1				
14RHR(1)B-2								
	PIPE TO EL	C-F	SUR	PTP-1				
14RHR(1)B-3								
	EL TO PIPE	C-F	SUR	PTP-1				
14RHR(1)B-4								
	PIPE TO REDUCER	C-F	SUR	PTP-1				
18RHR(1)B-1								
	REDUCER TO PIPE	C-F	SUR	PTP-1				
RHR-923N								
	SPRING	C-E-2	VT-3	303/8.2.17				
			VT-4	303/8.2.17				
18RHR(1)B-2								
	PIPE TO EL	C-F	SUR	PTP-1				
18RHR(1)B-3								
	EL TO PIPE	C-F	SUR	PTP-1				
RHR-943N								
	PSA-3 SNUBBER	C-E-2	VT-3	303/8.2.17				S/N 3900
			VT-4	303/8.2.17				S/N 3900
RHR-944N								
	PSA-3 SNUBBER	C-E-2	VT-3	303/8.2.17				S/N 4411
			VT-4	303/8.2.17				S/N 4411
RHR-918N(W)								
	8 WELDED LUGS	C-E-1	SUR	QCI 4-3				
RHR-918N								
	BOX	C-E-2	VT-3	303/8.2.17				
RHR-926N								
	SPRING	C-E-2	VT-3	303/8.2.17				
			VT-4	303/8.2.17				
18RHR(1)B-4								
	PIPE TO EL	C-F	SUR	PTP-1				

WNP-02
INTERVAL: PSI
PERIOD: NA
OUTAGE:
DRAWING NO. RHR-207

WASHINGTON PUBLIC POWER SUPPLY SYSTEM
PROGRAM PLAN AND SCHEDULE
SYSTEM OR COMPONENT: RHR(1)2
DESCRIPTION: LOOP B SPLY-RHR HX1B

DATE 12/14/84

IDENT. NO.	DESCRIPTION	SECT. XI EXAM.	EXAM MTH.	PROCEDURE	CAL. BLOCK	INSERVICE REQ.	INSERVICE SCHEDULED OUTAGE	NOTES
18RHR(1)B-5								
	EL TO PIPE	C-F	SUR	PTP-1				
RHR-929N								
	SPRING	C-E-2	VT-3	303/8.2.17				
			VT-4	303/8.2.17				
18RHR(1)B-6								
	PIPE TO EL	C-F	SUR	PTP-1				
18RHR(1)B-7								
	EL TO PIPE	C-F	SUR	PTP-1				
18RHR(1)B-7/6RHR(7)-2								
	BRANCH CONN	C-F	SUR	PTP-1				
RHR-919N								
	BOX	C-E-2	VT-3	303/8.2.17				
18RHR(1)B-7/3/4CAP								
	CAPPED CONN	N/A	VT-2	N/A				IWC-2510, SEE NOTES #6 & #7.
18RHR(1)B-7/3/4V-704B								
	INST CONN	N/A	VT-2	N/A				IWC-2510, SEE NOTES #6 & #7.
18RHR(1)B-8								
	PIPE TO VALVE	C-F	SUR	PTP-1				
18RHR(1)B-9								
	VALVE TO PIPE	C-F	SUR	PTP-1				
18RHR(1)B-9/1-1/2V-84B								
	CROSSTIE CONN	N/A	VT-2	N/A				IWC-2510, SEE NOTES #6 & #7.
18RHR(1)B-10								
	PIPE TO VALVE	C-F	SUR	PTP-1				
18RHR(1)B-11								
	VALVE TO PIPE	C-F	SUR	PTP-1				
18RHR(1)B-11/3V-72B								
	FLUSH CONN	N/A	VT-2	N/A				IWC-2510, SEE NOTES #6 & #7.

WNP-02
INTERVAL: PSI
PERIOD: NA
OUTAGE:
DRAWING NO. RHR-207

WASHINGTON PUBLIC POWER SUPPLY SYSTEM
PROGRAM PLAN AND SCHEDULE
SYSTEM OR COMPONENT: RHR(1)2
DESCRIPTION: LOOP B SPLY-RHR HX1B

IDENT. NO.	DESCRIPTION	SECT. XI EXAM.	EXAM MTH.	PROCEDURE	CAL. BLOCK	INSERVICE REQ.	SCHEDULED OUTAGE	NOTES
18RHR(1)B-11/3/4V-705B								
	INSTR CONN	N/A	VT-2	N/A				IWC-2510, SEE NOTES #6 & #7.
RHR-920N								
	BOX	C-E-2	VT-3	303/8.2.17				
RHR-924N								
	SPRING	C-E-2	VT-3	303/8.2.17				
			VT-4	303/8.2.17				
RHR-924N(W)								
	4 WELDED LUGS	C-E-1	SUR	MTP-1				
18RHR(1)B-12								
	PIPE TO EL	C-F	SUR	QCI 3-3				
18RHR(1)B-13								
	EL TO PIPE	C-F	SUR	PTP-1				
18RHR(1)B-14								
	PIPE TO EL	C-F	SUR	PTP-1				
18RHR(1)B-15								
	EL TO PIPE	C-F	SUR	PTP-1				
RHR-921N								
	BOX	C-E-2	VT-3	303/8.2.17				
RHR-968N								
	ANCHOR	C-E-2	VT-3	303/8.2.17				
18RHR(1)B-16								
	PIPE TO PIPE	C-F	SUR	PTP-1				
18RHR(1)B-17								
	PIPE TO PIPE	C-F	SUR	PTP-1				
RHR-540								
	STRUT	C-E-2	VT-3	303/8.2.17				
RHR-539								
	STRUT	C-E-2	VT-3	303/8.2.17				
18RHR(1)B-18								
	PIPE TO PIPE	C-F	SUR	PTP-1				
RHR-548								
	PSA-1 SN(2)	C-E-2	VT-3	303/8.2.17				S/N 630/503

WNP-02
INTERVAL: PSI
PERIOD: NA
OUTAGE:
DRAWING NO. RHR-207

WASHINGTON PUBLIC POWER SUPPLY SYSTEM
PROGRAM PLAN AND SCHEDULE
SYSTEM OR COMPONENT: RHR(1)2
DESCRIPTION: LOOP B SPLY-RHR HX1B

DATE 12/14/84

IDENT. NO.	DESCRIPTION	SECT. XI EXAM.	EXAM MTH.	PROCEDURE	CAL. BLOCK	INSERVICE REQ.	INSERVICE SCHEDULED OUTAGE	NOTES
			VT-4	303/8.2.17				S/N 630/503
18RHR(1)B-19								
	PIPE TO TEE	C-F	SUR	PTP-1				
18RHR(1)B-20								
	TEE TO PIPE	C-F	SUR	PTP-1				
18RHR(1)B-21								
	PIPE TO PIPE	C-F	SUR	PTP-1				
RHR-551								
	PSA-3 SN(2)	C-E-2	VT-3	303/8.2.17				S/N 3914/3940
			VT-4	303/8.2.17				S/N 3914/3940
18RHR(1)B-22								
	PIPE TO EL	C-F	SUR	PTP-1				
18RHR(1)B-23								
	EL TO PIPE	C-F	SUR	PTP-1				
18RHR(1)B-24								
	PIPE TO EL	C-F	SUR	PTP-1				
18RHR(1)B-25								
	EL TO PIPE	C-F	SUR	PTP-1				
RHR-553								
	STRUT	C-E-2	VT-3	303/8.2.17				
RHR-552								
	STRUT	C-E-2	VT-3	303/8.2.17				
18RHR(1)B-26								
	PIPE TO VALVE	C-F	SUR	PTP-1				
18RHR(1)B-27								
	VALVE TO PIPE	C-F	SUR	PTP-1				
RHR-554								
	STRUT	C-E-2	VT-3	303/8.2.17				
18RHR(1)B-28								
	PIPE TO EL	C-F	SUR	PTP-1				
18RHR(1)B-29								
	EL TO PIPE	C-F	SUR	PTP-1				
RHR-555								
	SPRING	C-E-2	VT-3	303/8.2.17				

WNP-02
INTERVAL: PSI
PERIOD: NA
OUTAGE:
DRAWING NO. RHR-207

WASHINGTON PUBLIC POWER SUPPLY SYSTEM
PROGRAM PLAN AND SCHEDULE
SYSTEM OR COMPONENT: RHR(1)2
DESCRIPTION: LOOP B SPLY-RHR HX1B

IDENT. NO.	DESCRIPTION	SECT. XI EXAM.	EXAM MTH.	PROCEDURE	CAL. BLOCK	INSERVICE REQ.	INSERVICE SCHEDULED OUTAGE	NOTES
			VT-4	303/8.2.17				
RHR-555(W)								
	4 WELDED LUGS	C-E-1	SUR	QCI 4-3				
18RHR(1)B-30								
	PIPE TO EL	C-F	SUR	PTP-1				
18RHR(1)B-31								
	EL TO PIPE	C-F	SUR	PTP-1				
RHR-1002N								
	PSA-3 SN(2)	C-E-2	VT-3	303/8.2.17				S/N 4495/4418
			VT-4	303/8.2.17				S/N 4495/4418
RHR-556								
	PSA-3 SNUBBER	C-E-2	VT-3	303/8.2.17				S/N 3920
			VT-4	303/8.2.17				S/N 3920
RHR-980N								
	PSA-3 SNUBBER	C-E-2	VT-3	303/8.2.17				S/N 11850
			VT-4	303/8.2.17				S/N 11850
18RHR(1)B-32								
	PIPE TO EL	C-F	SUR	PTP-1				
18RHR(1)B-33								
	EL TO PIPE	C-F	SUR	PTP-1				
18RHR(1)B-34								
	PIPE TO TEE	C-F	SUR	PTP-1				
18RHR(1)B-35								
	TEE TO PIPE	C-F	SUR	PTP-1				
18RHR(1)B-36								
	PIPE TO REDUCER	C-F	SUR	QCI 3-3				
18RHR(1)B-36/5/4TE-N004B								
	INST CONN	N/A	VT-2	N/A				IWC-2510, SEE NOTES #6 & #7.
20RHR(1)B-1								
	REDUCER TO PIPE	C-F	SUR	QCI 3-3				

WNP-02
INTERVAL: PSI
PERIOD: NA
OUTAGE:
DRAWING NO. RHR-207

WASHINGTON PUBLIC POWER SUPPLY SYSTEM
PROGRAM PLAN AND SCHEDULE
SYSTEM OR COMPONENT: RHR(1)2
DESCRIPTION: LOOP B SPLY-RHR HX1B

DATE 12/14/84

IDENT. NO.	DESCRIPTION	SECT. XI EXAM.	EXAM MTH.	PROCEDURE	CAL. BLOCK	INSERVICE REQ.	SCHEDULED OUTAGE	NOTES
20RHR(1)B-2								
	PIPE TO NOZZLE	C-F	SUR	PTP-1				
6RHR(7)B-1								
	WOL TO PIPE	C-F	SUR	PTP-1				
6RHR(7)B-1/3/4V-144B								
	TEST CONN	N/A	VT-2	N/A				IWC-2510, SEE NOTES #6 & #7.
6RHR(7)B-2								
	PIPE TO REDUCER	C-F	SUR	PTP-1				
6RHR(7)B-3								
	REDUCER TO PIPE	C-F	SUR	PTP-1				
6RHR(7)B-3/3/4V-145B								
	TEST CONN	N/A	VT-2	N/A				IWC-2510, SEE NOTES #6 & #7.
RHR-928N								
	SPRING	C-E-2	VT-3	303/8.2.17				
			VT-4	303/8.2.17				
6RHR(7)B-4								
	PIPE TO EL	C-F	SUR	PTP-1				
6RHR(7)B-5								
	EL TO RO-18	C-F	SUR	PTP-1				
RHR-942N								
	PSA-1 SN(2)	C-E-2	VT-3	303/8.2.17				S/N N371/S609
			VT-4	303/8.2.17				S/N N371/S609
RHR-922N								
	PSA-1 SNUBBER	C-E-2	VT-3	303/8.2.17				S/N 631
			VT-4	303/8.2.17				S/N 631
RHR-945N(W)								
	8 WELDED LUGS	C-E-1	SUR	OCI 4-3				
RHR-945N								
	PSA-1 SN(2)	C-E-2	VT-3	303/8.2.17				S/N E130/W134

WNP-02
INTERVAL: PSI
PERIOD: NA
OUTAGE:
DRAWING NO. RHR-207

WASHINGTON PUBLIC POWER SUPPLY SYSTEM
PROGRAM PLAN AND SCHEDULE
SYSTEM OR COMPONENT: RHR(1)2
DESCRIPTION: LOOP B SPLY-RHR HX1B

IDENT. NO.	DESCRIPTION	SECT. XI EXAM.	EXAM MTH.	PROCEDURE	CAL. BLOCK	INSERVICE REQ.	INSERVICE SCHEDULED OUTAGE	NOTES
RHR-925N			VT-4	303/8.2.17				S/N E130/W134
	SPRING	C-E-2	VT-3	303/8.2.17				
RHR-1020N			VT-4	303/8.2.17				
	STRUT	C-E-2	VT-3	303/8.2.17				
RHR-927N								
	SPRING	C-E-2	VT-3	303/8.2.17				
RHR-967N			VT-4	303/8.2.17				
	ANCHOR	C-E-2	VT-3	303/8.2.17				
RHR-967N(S)								
	WELDED SADDLE	C-E-1	SUR	MTP-1				
18RHR(11)B-1								
	TEE TO PIPE	C-F	SUR	PTP-1				
RHR-558								
	PSA-3 SNUBBER	C-E-2	VT-3	303/8.2.17				S/N 4414
RHR-557(W)			VT-4	303/8.2.17				S/N 4414
	8 WELDED LUGS	C-E-1	SUR	MTP-1				
RHR-557								
	PSA-3 SN(2)	C-E-2	VT-3	303/8.2.17				S/N 4480/3928
18RHR(11)B-2			VT-4	303/8.2.17				S/N 4480/3928
	PIPE TO EL	C-F	SUR	PTP-1				
18RHR(11)B-3								
	EL TO PIPE	C-F	SUR	PTP-1				
RHR-559								
	SPRING	C-E-2	VT-3	303/8.2.17				
			VT-4	303/8.2.17				

WNP-02
INTERVAL: PSI
PERIOD: NA
OUTAGE:
DRAWING NO. RHR-207

WASHINGTON PUBLIC POWER SUPPLY SYSTEM
PROGRAM PLAN AND SCHEDULE
SYSTEM OR COMPONENT: RHR(1)2
DESCRIPTION: LOOP B SPLY-RHR HX1B

IDENT. NO.	DESCRIPTION	SECT. XI EXAM.	EXAM MTH.	PROCEDURE	CAL. BLOCK	INSERVICE REQ.	INSERVICE SCHEDULED OUTAGE	NOTES
18RHR(11)B-4								
	PIPE TO EL	C-F	SUR	PTP-1				
RHR-562								
	PSA-3 SNUBBER	C-E-2	VT-3	303/8.2.17				S/N 4491
			VT-4	303/8.2.17				S/N 4491
RHR-561								
	STRUT	C-E-2	VT-3	303/8.2.17				
RHR-563								
	PSA-1 SN(2)	C-E-2	VT-3	303/8.2.17				S/N 345/361
			VT-4	303/8.2.17				S/N 345/361
18RHR(11)B-5								
	EL TO PIPE	C-F	SUR	PTP-1				
RHR-560								
	SPRING	C-E-2	VT-3	303/8.2.17				
			VT-4	303/8.2.17				
18RHR(11)B-6								
	PIPE TO VALVE	C-F	SUR	PTP-1				
18RHR(11)B-7								
	VALVE TO PIPE	C-F	SUR	QCI 3-3				
18RHR(11)B-8								
	PIPE TO EL	C-F	SUR	QCI 3-3				
18RHR(11)B-9								
	EL TO PIPE	C-F	SUR	PTP-1				
RHR-461								
	SPRING	C-E-2	VT-3	303/8.2.17				
			VT-4	303/8.2.17				
18RHR(11)B-10								
	PIPE TO EL	C-F	SUR	PTP-1				
18RHR(11)B-11								
	EL TO PIPE	C-F	SUR	PTP-1				

WNP-02
INTERVAL: PSI
PERIOD: NA
OUTAGE:
DRAWING NO. RHR-207

WASHINGTON PUBLIC POWER SUPPLY SYSTEM
PROGRAM PLAN AND SCHEDULE
SYSTEM OR COMPONENT: RHR(1)2
DESCRIPTION: LOOP B SPLY-RHR HX1B

IDENT. NO.	DESCRIPTION	SECT. XI EXAM.	EXAM MTH.	PROCEDURE	CAL. BLOCK	INSERVICE REQ.	INSERVICE SCHEDULED OUTAGE	NOTES
RHR-565	PSA-3 SNUBBER	C-E-2	VT-3	303/8.2.17				S/N 3887
			VT-4	303/8.2.17				S/N 3887
RHR-564	PSA-3 SNUBBER	C-E-2	VT-3	303/8.2.17				S/N 4500
			VT-4	303/8.2.17				S/N 4500
18RHR(11)B-12	PIPE TO EL	C-F	SUR	PTP-1				
18RHR(11)B-13	EL TO PIPE	C-F	SUR	PTP-1				
RHR-609	SPRING	C-E-2	VT-3	303/8.2.17				
			VT-4	303/8.2.17				
18RHR(11)B-14	PIPE TO TEE	C-F	SUR	PTP-1				
20RHR(1)B-3	NOZZLE TO PIPE	C-F	SUR	OCI 3-3				
20RHR(1)B-4	PIPE TO EL	C-F	SUR	PTP-1				
20RHR(1)B-5	EL TO PIPE	C-F	SUR	PTP-1				
20RHR(1)B-6	PIPE TO REDUCER	C-F	SUR	PTP-1				
18RHR(1)B-37	REDUCER TO PIPE	C-F	SUR	PTP-1				
RHR-433	SPRING	C-E-2	VT-3	303/8.2.17				
			VT-4	303/8.2.17				
18RHR(1)B-37/5/4CE-N0018	INST CONN	N/A	VT-2	N/A				IWC-2510. SEE NOTES #6 & #7.

WNP-0
INTERVAL: PSI
PERIOD: NA
OUTAGE:
DRAWING NO. RHR-207

WASHINGTON PUBLIC POWER SUPPLY SYSTEM
PROGRAM PLAN AND SCHEDULE
SYSTEM OR COMPONENT: RHR(1)2
DESCRIPTION: LOOP B SPLY-RHR HX1B

IDENT. NO.	DESCRIPTION	SECT. XI EXAM.	EXAM MTH.	PROCEDURE	CAL. BLOCK	INSERVICE REQ.	INSERVICE SCHEDULED OUTAGE	NOTES
18RHR(1)B-37/4V-26B								
	BRANCH CONN	N/A	VT-2	N/A				IWC-2510, SEE NOTES #6 & #7.
18RHR(1)B-38								
	PIPE TO EL	C-F	SUR	PTP-1				
18RHR(1)B-39								
	EL TO PIPE	C-F	SUR	PTP-1				
RHR-435								
	STRUT	C-E-2	VT-3	303/8.2.17				
18RHR(1)B-39/3/4V-81B								
	DRAIN CONN	N/A	VT-2	N/A				IWC-2510, SEE NOTES #6 & #7.
18RHR(1)B-39/3/4V-75B								
	SAMPLE CONN	N/A	VT-2	N/A				1 1/2"WOL,3/4"BRANCH IWC-2510, SEE NOTES #6 & #7.
18RHR(1)B-40								
	PIPE TO VALVE	C-F	SUR	PTP-1				
18RHR(1)B-41								
	VALVE TO PIPE	C-F	SUR	PTP-1				
RHR-436								
	BOX	C-E-2	VT-3	303/8.2.17				
18RHR(1)B-42								
	PIPE TO EL	C-F	SUR	QCI 3-3				
18RHR(1)B-43								
	EL TO PIPE	C-F	SUR	PTP-1				
RHR-434								
	BOX	C-E-2	VT-3	303/8.2.17				
18RHR(1)B-44								
	PIPE TO EL	C-F	SUR	PTP-1				
18RHR(1)B-45								
	EL TO PIPE	C-F	SUR	PTP-1				
18RHR(1)B-46								
	PIPE TO TEE	C-F	SUR	PTP-1				
18RHR(1)B-47								
	TEE TO PIPE	C-F	SUR	PTP-1				

WNP-02
INTERVAL: PSI
PERIOD: NA
OUTAGE:
DRAWING NO. RHR-207

WASHINGTON PUBLIC POWER SUPPLY SYSTEM
PROGRAM PLAN AND SCHEDULE
SYSTEM OR COMPONENT: RHR(1)2
DESCRIPTION: LOOP B SPLY-RHR HX1B

DATE 12/14/84

IDENT. NO.	DESCRIPTION	SECT. XI EXAM.	EXAM MTH.	PROCEDURE	CAL. BLOCK	INSERVICE REQ.	INSERVICE SCHEDULED OUTAGE	NOTES
18RHR(1)B-48								
	PIPE TO TEE	C-F	SUR	PTP-1				
18RHR(1)B-49								
	TEE TO PIPE	C-F	SUR	PTP-1				
18RHR(1)B-49/4V-40								
	DRAIN CONN	N/A	VT-2	N/A				IWC-2510, SEE NOTES #6 & #7.
RHR-438								
	STRUT	C-E-2	VT-3	303/8.2.17				
RHR-437								
	PSA-3 SN(2)	C-E-2	VT-3	303/8.2.17				S/N 226/4456
			VT-4	303/8.2.17				S/N 226/4456
18RHR(1)B-50								
	PIPE TO EL	C-F	SUR	PTP-1				
RHR-462								
	SPRING	C-E-2	VT-3	303/8.2.17				
			VT-4	303/8.2.17				
RHR-54								
	SPRING	C-E-2	VT-3	303/8.2.17				
			VT-4	303/8.2.17				
RHR-459								
	PSA-10 SNUBBER	C-E-2	VT-3	303/8.2.17				S/N 109
			VT-4	303/8.2.17				S/N 109
RHR-52								
	PSA-3 SNUBBER	C-E-2	VT-3	303/8.2.17				S/N 4463
			VT-4	303/8.2.17				S/N 4463
14RHR(19)B-1								
	VALVE TO EL	C-F	SUR	PTP-1				
RHR-998N								
	PSA-3 SNUBBER	C-E-2	VT-3	303/8.2.17				S/N 3936

WNP-02
INTERVAL: PSI
PERIOD: NA
OUTAGE:
DRAWING NO. RHR-207

WASHINGTON PUBLIC POWER SUPPLY SYSTEM
PROGRAM PLAN AND SCHEDULE
SYSTEM OR COMPONENT: RHR(1)2
DESCRIPTION: LOOP B SPLY-RHR HX1B

DATE 12/14/84

IDENT. NO.	DESCRIPTION	SECT. XI EXAM.	EXAM MTH.	PROCEDURE	CAL. BLOCK	INSERVICE REQ.	SCHEDULED OUTAGE	NOTES
			VT-4	303/8.2.17				S/N 3936
14RHR(19)B-3								
	EL TO PIPE	C-F	SUR	PTP-1				
RHR-53(W)								
	4 WELDED LUGS	C-E-1	SUR	QCI 4-3				
RHR-53								
	SPRING	C-E-2	VT-3	303/8.2.17				
			VT-4	303/8.2.17				
14RHR(19)B-4								
	PIPE TO EL	C-F	SUR	PTP-1				
14RHR(19)B-5								
	EL TO PIPE	C-F	SUR	PTP-1				
14RHR(19)B-6								
	PIPE TO EL	C-F	SUR	PTP-1				
14RHR(19)B-7								
	EL TO PIPE	C-F	SUR	PTP-1				
14RHR(19)B-8								
	PIPE TO TEE	C-F	SUR	PTP-1				
18RHR(1)B-51								
	EL TO PIPE	C-F	SUR	PTP-1				
18RHR(1)B-51/5/4TE-N027B								
	INSTR CONN	N/A	VT-2	N/A				IWC-2510, SEE NOTES #6 & #7.
RHR-463								
	PSA-3 SNUBBER	C-E-2	VT-3	303/8.2.17				S/N 2391
			VT-4	303/8.2.17				S/N 2391
RHR-464								
	BOX	C-E-2	VT-3	303/8.2.17				
18RHR(1)B-52								
	PIPE TO PIPE	C-F	SUR	PTP-1				
RHR-468								
	SPRING	C-E-2	VT-3	303/8.2.17				

WNP-02
INTERVAL: PSI
PERIOD: NA
OUTAGE:
DRAWING NO. RHR-207

WASHINGTON PUBLIC POWER SUPPLY SYSTEM
PROGRAM PLAN AND SCHEDULE
SYSTEM OR COMPONENT: RHR(1)2
DESCRIPTION: LOOP B SPLY-RHR HX1B

IDENT. NO.	DESCRIPTION	SECT. XI EXAM.	EXAM MTH.	PROCEDURE	CAL. BLOCK	INSERVICE REQ.	INSERVICE SCHEDULED OUTAGE	NOTES
			VT-4	303/8.2.17				
RHR-465(U)								
	8 WELDED LUGS	C-E-1	SUR	MTP-1				
RHR-465								
	PSA-3 SN(2)	C-E-2	VT-3	303/8.2.17				S/N N1069/S2364
			VT-4	303/8.2.17				S/N N1069/S2364
RHR-467								
	STRUT	C-E-2	VT-3	303/8.2.17				
RHR-466								
	PSA-3 SNUBBER	C-E-2	VT-3	303/8.2.17				S/N 3896
			VT-4	303/8.2.17				S/N 3896
18RHR(1)B-53								
	PIPE TO FLANGE	C-F	SUR	PTP-1				
18RHR(1)B-53/3/4V-706B								
	INSTR CONN	N/A	VT-2	N/A				IWC 2510, SEE NOTES #6 & #7.
18RHR(1)B-53/3/4V-707B								
	INSTR CONN	N/A	VT-2	N/A				IWC 2510, SEE NOTES #6 & #7.
RHR-469								
	SPRING	C-E-2	VT-3	303/8.2.17				
			VT-4	303/8.2.17				
18RHR(1)B-54								
	FLANGE TO PIPE	C-F	SUR	PTP-1				
18RHR(1)B-54/10RHR(5)-2								
	BRANCH CONN	C-F	SUR	PTP-1				
RHR-956N								
	BOX	C-E-2	VT-3	303/8.2.17				
18RHR(1)B-55								
	PIPE TO EL	C-F	SUR	PTP-1				
18RHR(1)B-56								
	EL TO PIPE	C-F	SUR	PTP-1				

WNP-02
INTERVAL: PSI
PERIOD: NA
OUTAGE:
DRAWING NO. RHR-207

WASHINGTON PUBLIC POWER SUPPLY SYSTEM
PROGRAM PLAN AND SCHEDULE
SYSTEM OR COMPONENT: RHR(1)2
DESCRIPTION: LOOP B SPLY-RHR HX1B

IDENT. NO.	DESCRIPTION	SECT. XI EXAM.	EXAM MTH.	PROCEDURE	CAL. BLOCK	INSERVICE REQ.	SCHEDULED OUTAGE	NOTES
10RHR(5)B-1								
	WOL TO PIPE	C-F	SUR	PTP-1				
10RHR(5)B-2								
	PIPE TO EL	C-F	SUR	PTP-1				
10RHR(5)B-3								
	EL TO PIPE	C-F	SUR	PTP-1				
RHR-470								
	STRUT	C-E-2	VT-3	303/8.2.17				
RHR-472								
	PSA-1 SNUBBER	C-E-2	VT-3	303/8.2.17				S/N 2574
			VT-4	303/8.2.17				S/N 2574
10RHR(5)B-4								
	PIPE TO PIPE	C-F	SUR	PTP-1				
RHR-473								
	SPRING	C-E-2	VT-3	303/8.2.17				S/N
			VT-4	303/8.2.17				
10RHR(5)B-5								
	PIPE TO VALVE	C-F	SUR	PTP-1				
18RHR(1)B-57								
	PIPE TO PIPE	C-F	SUR	PTP-1				
18RHR(1)B-57/6RHR(10)-2								
	BRANCH CONN	C-F	SUR	PTP-1				
RHR-475								
	ANCHOR	C-E-2	VT-3	303/8.2.17				W/2 WELDED SADDLES.
RHR-475(S)								
	2 WELDED SADDLE	C-E-1	SUR	MTP-1				
18RHR(1)B-58								
	PIPE TO PIPE	C-F	SUR	PTP-1				
18RHR(1)B-59								
	PIPE TO EL	C-F	SUR	PTP-1				
18RHR(1)B-60								
	EL TO PIPE	C-F	SUR	PTP-1				
RHR-478								
	SPRING	C-E-2	VT-3	303/8.2.17				

WNP-02
INTERVAL: PSI
PERIOD: NA
OUTAGE:
DRAWING NO. RHR-207

WASHINGTON PUBLIC POWER SUPPLY SYSTEM
PROGRAM PLAN AND SCHEDULE
SYSTEM OR COMPONENT: RHR(1)2
DESCRIPTION: LOOP B SPLY-RHR HX1B

DATE 12/14/84

IDENT. NO.	DESCRIPTION	SECT. XI EXAM.	EXAM MTH.	PROCEDURE	CAL. BLOCK	INSERVICE REQ.	INSERVICE SCHEDULED OUTAGE	NOTES
			VT-4	303/8.2.17				
18RHR(1)B-61								
	PIPE TO EL	C-F	SUR	PTP-1				
18RHR(1)B-62								
	EL TO PIPE	C-F	SUR	QCI 3-3				
RHR-479(W)								
	4 WELDED LUGS	C-E-1	SUR	QCI 4-3				
RHR-479								
	PSA-3 SN(2)	C-E-2	VT-3	303/8.2.17				S/N 292/620
			VT-4	303/8.2.17				S/N 292/620
RHR-480								
	STRUT	C-E-2	VT-3	303/8.2.17				
RHR-481								
	PSA-35 SNUBBER	C-E-2	VT-3	303/8.2.17				S/N 10739
			VT-4	303/8.2.17				S/N 10739
RHR-486(W)								
	4 WELDED LUGS	C-E-1	SUR	MTP-1				
RHR-486								
	SPRING	C-E-2	VT-3	303/8.2.17				
			VT-4	303/8.2.17				
18RHR(1)B-63								
	PIPE TO TEE	C-F	SUR	PTP-1				
14RHR(1)B-5								
	TEE TO PIPE	C-F	SUR	QCI 3-3				
14RHR(1)B-5/3/4V-708B								
	INST CONN	N/A	VT-2	N/A				IWC-2510, SEE NOTES #6 & #7.
14RHR(1)B-5/3/4V-155B								
	TEST CONN	N/A	VT-2	N/A				IWC-2510, SEE NOTES #6 & #7.
14RHR(1)B-6								
	PIPE TO VALVE	C-F	SUR	PTP-1				

WNP-02
INTERVAL: PSI
PERIOD: NA
OUTAGE:
DRAWING NO. RHR-207

WASHINGTON PUBLIC POWER SUPPLY SYSTEM
PROGRAM PLAN AND SCHEDULE
SYSTEM OR COMPONENT: RHR(1)2
DESCRIPTION: LOCP B SPLY-RHR HX1B

DATE 12/14/84

IDENT. NO.	DESCRIPTION	SECT. XI EXAM.	EXAM MTH.	PROCEDURE	CAL. BLOCK	INSERVICE REQ.	SCHEDULED OUTAGE	NOTES
18RHR(1)B-64								
	TEE TO PIPE	C-F	SUR	PTP-1				
RHR-485								
	PSA-10 SNUBBER	C-E-2	VT-3	303/8.2.17				S/N 11856
			VT-4	303/8.2.17				S/N 11856
6RHR(10)B-1								
	WOL TO PIPE	C-F	SUR	PTP-1				
6RHR(10)B-2								
	PIPE TO EL	C-F	SUR	PTP-1				
6RHR(10)B-3								
	EL TO PIPE	C-F	SUR	PTP-1				
RHR-476								
	BOX	C-E-2	VT-3	303/8.2.17				
6RHR(10)B-4								
	PIPE TO FLANGE	C-F	SUR	PTP-1				
6RHR(10)B-4/3/4V-724								
	INST CONN	N/A	VT-2	N/A				IWC-2510, SEE NOTES #6 & #7.
6RHR(10)B-4/3/4V-725								
	INST CONN	N/A	VT-2	N/A				IWC-2510, SEE NOTES #6 & #7.
6RHR(10)B-5								
	FLANGE TO PIPE	C-F	SUR	PTP-1				
6RHR(10)B-6								
	PIPE TO EL	C-F	SUR	PTP-1				
6RHR(10)B-7								
	EL TO PIPE	C-F	SUR	PTP-1				
6RHR(10)B-8								
	PIPE TO EL	C-F	SUR	PTP-1				
6RHR(10)B-9								
	EL TO PIPE	C-F	SUR	PTP-1				
RHR-230								
	BOX	C-E-2	VT-3	303/8.2.17				
RHR-230(W)								
	4 WELDED LUGS	C-E-1	SUR	OCI 4-3				

WNP-02
INTERVAL: PSI
PERIOD: NA
OUTAGE:
DRAWING NO. RHR-207

WASHINGTON PUBLIC POWER SUPPLY SYSTEM
PROGRAM PLAN AND SCHEDULE
SYSTEM OR COMPONENT: RHR(1)2
DESCRIPTION: LOOP B SPLY-RHR HX1B

IDENT. NO.	DESCRIPTION	SECT. XI EXAM.	EXAM MTH.	PROCEDURE	CAL. BLOCK	INSERVICE REQ.	SCHEDULED OUTAGE	NOTES
6RHR(10)B-10								
	PIPE TO EL	C-F	SUR	PTP-1				
RHR-228								
	ANCHOR	C-E-2	VT-3	303/8.2.17				
6RHR(10)B-11								
	EL TO PIPE	C-F	SUR	PTP-1				
6RHR(10)B-12								
	PIPE TO TEE	C-F	SUR	PTP-1				
6RHR(10)B-12/3V-86								
	FLUSH CONN	N/A	VT-2	N/A				IWC-2510, SEE NOTES #6 & #7.
6RHR(10)B-13								
	TEE TO PIPE	C-F	SUR	PTP-1				
6RHR(10)B-14								
	PIPE TO VALVE	C-F	SUR	PTP-1				
18RHR(1)B-65								
	PIPE TO EL	C-F	SUR	PTP-1				
18RHR(1)B-66								
	EL TO PIPE	C-F	SUR	PTP-1				
18RHR(1)B-67								
	PIPE TO EL	C-F	SUR	PTP-1				
18RHR(1)B-68								
	EL TO PIPE	C-F	SUR	PTP-1				
RHR-976N								
	STRUT	C-E-2	VT-3	303/8.2.17				
18RHR(1)B-69								
	PIPE TO EL	C-F	SUR	PTP-1				
18RHR(1)B-70								
	EL TO PIPE	C-F	SUR	OCI 3-3				
RHR-488								
	ANCHOR	C-E-2	VT-3	303/8.2.17				
18RHR(1)B-71								
	PIPE TO EL	C-F	SUR	OCI 3-3				
18RHR(1)B-72								
	EL TO PIPE	C-F	SUR	OCI 3-3				

WNP-02
INTERVAL: PSI
PERIOD: NA
OUTAGE:
DRAWING NO. RHR-207

WASHINGTON PUBLIC POWER SUPPLY SYSTEM
PROGRAM PLAN AND SCHEDULE
SYSTEM OR COMPONENT: RHR(1)2
DESCRIPTION: LOOP B SPLY-RHR HX1B

DATE 12/14/84

IDENT. NO.	DESCRIPTION	SECT. XI EXAM.	EXAM MTH.	PROCEDURE	CAL. BLOCK	INSERVICE REQ.	SCHEDULED OUTAGE	NOTES
18RHR(1)B-73								
	PIPE TO EL	C-F	SUR	PTP-1				
18RHR(1)B-74								
	EL TO PIPE	C-F	SUR	PTP-1				
18RHR(1)B-74/3/4V-741								
	VENT CONN	N/A	VT-2	OCI 7-1				
RHR-491								
	SPRING	C-E-2	VT-3	303/8.2.17				
			VT-4	303/8.2.17				
RHR-908N								
	PSA-3 SN(2)	C-E-2	VT-3	303/8.2.17				S/N 1068/2358
			VT-4	303/8.2.17				S/N 1068/2358
RHR-492								
	PSA-3 SN(2)	C-E-2	VT-3	303/8.2.17				S/N 3950/3942
			VT-4	303/8.2.17				S/N 3950/3942
18RHR(1)B-75								
	PIPE TO EL	C-F	SUR	PTP-1				
18RHR(1)B-76								
	EL TO PIPE	C-F	SUR	PTP-1				
18RHR(1)B-77								
	PIPE TO EL	C-F	SUR	PTP-1				
18RHR(1)B-78								
	EL TO PIPE	C-F	SUR	PTP-1				
RHR-493								
	SPRING	C-E-2	VT-3	303/8.2.17				
			VT-4	303/8.2.17				
RHR-495								
	PSA-3 SN(2)	C-E-2	VT-3	303/8.2.17				S/N 6175/6163
			VT-4	303/8.2.17				S/N 6175/6163
RHR-495(W)								
	8 WELDED LUGS	C-E-1	SUR	OCI 4-3				

WNP-02
INTERVAL: PSI
PERIOD: NA
OUTAGE:
DRAWING NO. RHR-207

WASHINGTON PUBLIC POWER SUPPLY SYSTEM
PROGRAM PLAN AND SCHEDULE
SYSTEM OR COMPONENT: RHR(1)2
DESCRIPTION: LOOP B SPLY-RHR HX1B

DATE 12/14/84

IDENT. NO.	DESCRIPTION	SECT. XI EXAM.	EXAM MTH.	PROCEDURE	CAL. BLOCK	INSERVICE REQ.	SCHEDULED OUTAGE	NOTES
18RHR(1)B-79								
	PIPE TO TEE	C-F	SUR	PTP-1				
18RHR(1)B-80								
	TEE TO PIPE	C-F	SUR	PTP-1				
RHR-494								
	PSA-3 SNUBBER	C-E-2	VT-3	303/8.2.17				S/N 13034
			VT-4	303/8.2.17				S/N 13034
18RHR(1)B-81								
	PIPE TO PIPE	C-F	SUR	QCI 3-3				
RHR-496								
	PSA-3 SNUBBER	C-E-2	VT-3	303/8.2.17				S/N 13057
			VT-4	303/8.2.17				S/N 13057
RHR-497								
	SPRING	C-E-2	VT-3	303/8.2.17				
			VT-4	303/8.2.17				
18RHR(1)B-82								
	PIPE TO EL	C-F	SUR	PTP-1				
18RHR(1)B-83								
	EL TO PIPE	C-F	SUR	PTP-1				
18RHR(1)B-84								
	PIPE TO EL	C-F	SUR	PTP-1				
18RHR(1)B-85								
	EL TO PIPE	C-F	SUR	PTP-1				
18RHR(1)B-85/12RHR(1)-2								
	BRANCH CONN	C-F	SUR	PTP-1				
18RHR(1)B-86								
	PIPE TO REDUCER	C-F	SUR	PTP-1				
12RHR(1)B-1A								
	WOL TO PIPE	C-F	SUR	PTP-1				
12RHR(1)B-1B								
	PIPE TO PIPE	C-F	SUR	PTP-1				
RHR-910N								
	STRUT	C-E-2	VT-3	303/8.2.17				

WNP-02
INTERVAL: PSI
PERIOD: NA
OUTAGE:
DRAWING NO. RHR-207

WASHINGTON PUBLIC POWER SUPPLY SYSTEM
PROGRAM PLAN AND SCHEDULE
SYSTEM OR COMPONENT: RHR(1)2
DESCRIPTION: LOOP B SPLY-RHR HX1B

DATE 12/14/84

IDENT. NO.	DESCRIPTION	SECT. XI EXAM.	EXAM MTH.	PROCEDURE	CAL. BLOCK	INSERVICE REQ.	INSERVICE SCHEDULED OUTAGE	NOTES
12RHR(1)B-2A								
	PIPE TO EL	C-F	SUR	PTP-1				
12RHR(1)B-3A								
	EL TO PIPE	C-F	SUR	PTP-1				
12RHR(1)B-3/3/4V-160B								
	TEST CONN	N/A	VT-2	N/A				IWC-2510, SEE NOTES #6 & #7.
12RHR(1)B-4A								
	PIPE TO EL	C-F	SUR	PTP-1				
12RHR(1)B-5A								
	EL TO PIPE	C-F	SUR	PTP-1				
RHR-911N								
	PSA-10 SNUBBER	C-E-2	VT-3	303/8.2.17				S/N 7039
			VT-4	303/8.2.17				S/N 7039
12RHR(1)B-6A								
	PIPE TO VALVE	C-F	SUR	PTP-1				
16RHR(5)B-1								
	REDUCER TO PIPE	C-F	SUR	PTP-1				
RHR-500								
	PSA-3 SNUBBER	C-E-2	VT-3	303/8.2.17				S/N 699
			VT-4	303/8.2.17				S/N 699
16RHR(5)B-2								
	PIPE TO EL	C-F	SUR	PTP-1				
16RHR(5)B-3								
	EL TO PIPE	C-F	SUR	PTP-1				
16RHR(5)B-4								
	PIPE TO EL	C-F	SUR	PTP-1				
16RHR(5)B-5								
	EL TO PIPE	C-F	SUR	PTP-1				
RHR-498								
	SPRING	C-E-2	VT-3	303/8.2.17				
			VT-4	303/8.2.17				

WNP-02
INTERVAL: PSI
PERIOD: NA
OUTAGE:
DRAWING NO. RHR-207

WASHINGTON PUBLIC POWER SUPPLY SYSTEM
PROGRAM PLAN AND SCHEDULE
SYSTEM OR COMPONENT: RHR(1)2
DESCRIPTION: LOOP B SPLY-RHR HX1B

IDENT. NO.	DESCRIPTION	SECT. XI EXAM.	EXAM MTH.	PROCEDURE	CAL. BLOCK	INSERVICE REQ.	INSERVICE SCHEDULED OUTAGE	NOTES
16RHR(5)B-5/3V-63B								
	FLUSH CONN	N/A	VT-2	N/A				SEE NOTES #6 & #7.
16RHR(5)B-5/3/4V-153B								
	TEST CONN	N/A	VT-2	N/A				SEE NOTES #6 & #7.
16RHR(5)B-6								
	PIPE TO VALVE	C-F	SUR	PTP-1				
16RHR(5)B-7								
	VALVE TO PIPE	C-F	SUR	PTP-1				
RHR-501								
	SPRING	C-E-2	VT-3	303/8.2.17				
			VT-4	303/8.2.17				
16RHR(5)B-8								
	PIPE TO EL	C-F	SUR	PTP-1				
16RHR(5)B-9								
	EL TO PIPE	C-F	SUR	PTP-1				
16RHR(5)B-9/3/4V-10B								
	TEST CONN	N/A	VT-2	N/A				IWC-2510, SEE NOTES #6 & #7.
16RHR(5)B-9/3/4V-609								
	TEST CONN	N/A	VT-2	N/A				IWC-2510, SEE NOTES #6 & #7.
RHR-503								
	PSA-10 SNUBBER	C-E-2	VT-3	303/8.2.17				S/N 8687
			VT-4	303/8.2.17				S/N 8687
RHR-502								
	PSA-3 SNUBBER	C-E-2	VT-3	303/8.2.17				S/N 6178
			VT-4	303/8.2.17				S/N 6178
16RHR(5)B-10								
	PIPE TO VALVE	C-F	SUR	PTP-1				
18RHR(4)B-1								
	TEE TO PIPE	C-F	SUR	OCI 3-3				
RHR-185(W)								
	4 WELDED LUGS	C-E-1	SUR	OCI 4-3				

WNP-02
INTERVAL: PSI
PERIOD: NA
OUTAGE:
DRAWING NO. RHR-207

WASHINGTON PUBLIC POWER SUPPLY SYSTEM
PROGRAM PLAN AND SCHEDULE
SYSTEM OR COMPONENT: RHR(1)2
DESCRIPTION: LOOP B SPLY-RHR HX1B

DATE 12/14/84

IDENT. NO.	DESCRIPTION	SECT. XI EXAM.	EXAM MTH.	PROCEDURE	CAL. BLOCK	INSERVICE REQ.	SCHEDULED OUTAGE	NOTES
RHR-185								
	SPRING	C-E-2	VT-3	303/8.2.17				
			VT-4	303/8.2.17				
18RHR(4)B-2								
	PIPE TO EL	C-F	SUR	PTP-1				
18RHR(4)B-3								
	EL TO PIPE	C-F	SUR	PTP-1				
18RHR(4)B-4								
	PIPE TO EL	C-F	SUR	PTP-1				
18RHR(4)B-5								
	EL TO PIPE	C-F	SUR	PTP-1				
RHR-901N								
	PSA-3 SN(2)	C-E-2	VT-3	303/8.2.17				S/N 491
			VT-4	303/8.2.17				S/N 491
RHR-912N								
	PSA-3 SNUBBER	C-E-2	VT-3	303/8.2.17				S/N 15469
			VT-4	303/8.2.17				S/N 15469
18RHR(4)B-6								
	PIPE TO PIPE	C-F	SUR	QCI 3-3				
RHR-218(W)								
	8 WELDED LUGS	C-E-1	SUR	QCI 4-3				
RHR-218								
	PSA-3 SN(2)	C-E-2	VT-3	303/8.2.17				S/N W104/E308
			VT-4	303/8.2.17				S/N W104/E308
18RHR(4)B-6/6RHR(6)-2								
	BRANCH CONN	C-F	SUR	PTP-1				
18RHR(4)B-6A								
	PIPE TO FLANGE	C-F	SUR	PTP-1				
18RHR(4)B-6B								
	FLANGE TO PIPE	C-F	SUR	PTP-1				
18RHR(4)B-7								
	PIPE TO EL	C-F	SUR	PTP-1				

WNP-02
INTERVAL: PSI
PERIOD: NA
OUTAGE:
DRAWING NO. RHR-207

WASHINGTON PUBLIC POWER SUPPLY SYSTEM
PROGRAM PLAN AND SCHEDULE
SYSTEM OR COMPONENT: RHR(1)2
DESCRIPTION: LOOP B SPLY-RHR HX1B

DATE 12/14/84

IDENT. NO.	DESCRIPTION	SECT. XI EXAM.	EXAM MTH.	PROCEDURE	CAL. BLOCK	INSERVICE REQ.	INSERVICE SCHEDULED OUTAGE	NOTES
18RHR(4)B-8								
	EL TO PIPE	C-F	SUR	PTP-1				
18RHR(4)B-9								
	PIPE TO EL	C-F	SUR	PTP-1				
18RHR(4)B-10								
	EL TO PIPE	C-F	SUR	PTP-1				
RHR-915N								
	PSA-3 SNUBBER	C-E-2	VT-3	303/8.2.17				S/N 104
			VT-4	303/8.2.17				S/N 104
RHR-902N								
	PSA-3 SNUBBER	C-E-2	VT-3	303/8.2.17				S/N 303
			VT-4	303/8.2.17				S/N 303
RHR-184(W)								
	16 WELDED LUGS	C-E-1	SUR	QCI 4-3				
RHR-184								
	STRUT	C-E-2	VT-3	303/8.2.17				
18RHR(4)B-10/1RV-25B								
	RELIEF CONN	N/A	VT-2	N/A				IWC-2510, SEE NOTES #6 & #7.
18RHR(4)B-10/3/4V-129B								
	TEST CONN	N/A	VT-2	N/A				IWC-2510, SEE NOTES #6 & #7.
18RHR(4)B-11								
	PIPE TO EL	C-F	SUR	PTP-1				
18RHR(4)B-12								
	EL TO PIPE	C-F	SUR	QCI 3-3				
18RHR(4)B-13								
	PIPE TO VALVE	C-F	SUR	PTP-1				
RHR-181								
	SPRING	C-E-2	VT-3	303/8.2.17				
			VT-4	303/8.2.17				
6RHR(6)B-1								
	WOL TO PIPE	C-F	SUR	PTP-1				

WNP-02
INTERVAL: PSI
PERIOD: NA
OUTAGE:
DRAWING NO. RHR-207

WASHINGTON PUBLIC POWER SUPPLY SYSTEM
PROGRAM PLAN AND SCHEDULE
SYSTEM OR COMPONENT: RHR(1)2
DESCRIPTION: LOOP B SPLY-RHR HX1B

DATE 12/14/84

IDENT. NO.	DESCRIPTION	SECT. XI EXAM.	EXAM MTH.	PROCEDURE	CAL. BLOCK	INSERVICE REQ.	INSERVICE SCHEDULED OUTAGE	NOTES
6RHR(6)B-1/3/4V-143B	TEST CONN	N/A	VT-2	N/A				IWC-2510, SEE NOTES #6 & #7.
6RHR(6)B-2	PIPE TO EL	C-F	SUR	PTP-1				
6RHR(6)B-3	EL TO PIPE	C-F	SUR	PTP-1				
6RHR(6)B-4	PIPE TO VALVE	C-F	SUR	PTP-1				
RHR-V-27B/1/4CAP	STEM LEAKOFF	N/A	VT-2	GCI 7-1				IWC-2510, SEE NOTES #5 & #6.
RHR-PB-207	RHR PRESS BNDRY	N/A	VT-2	N/A				IWC-2510, SEE NOTES #6 & #7.

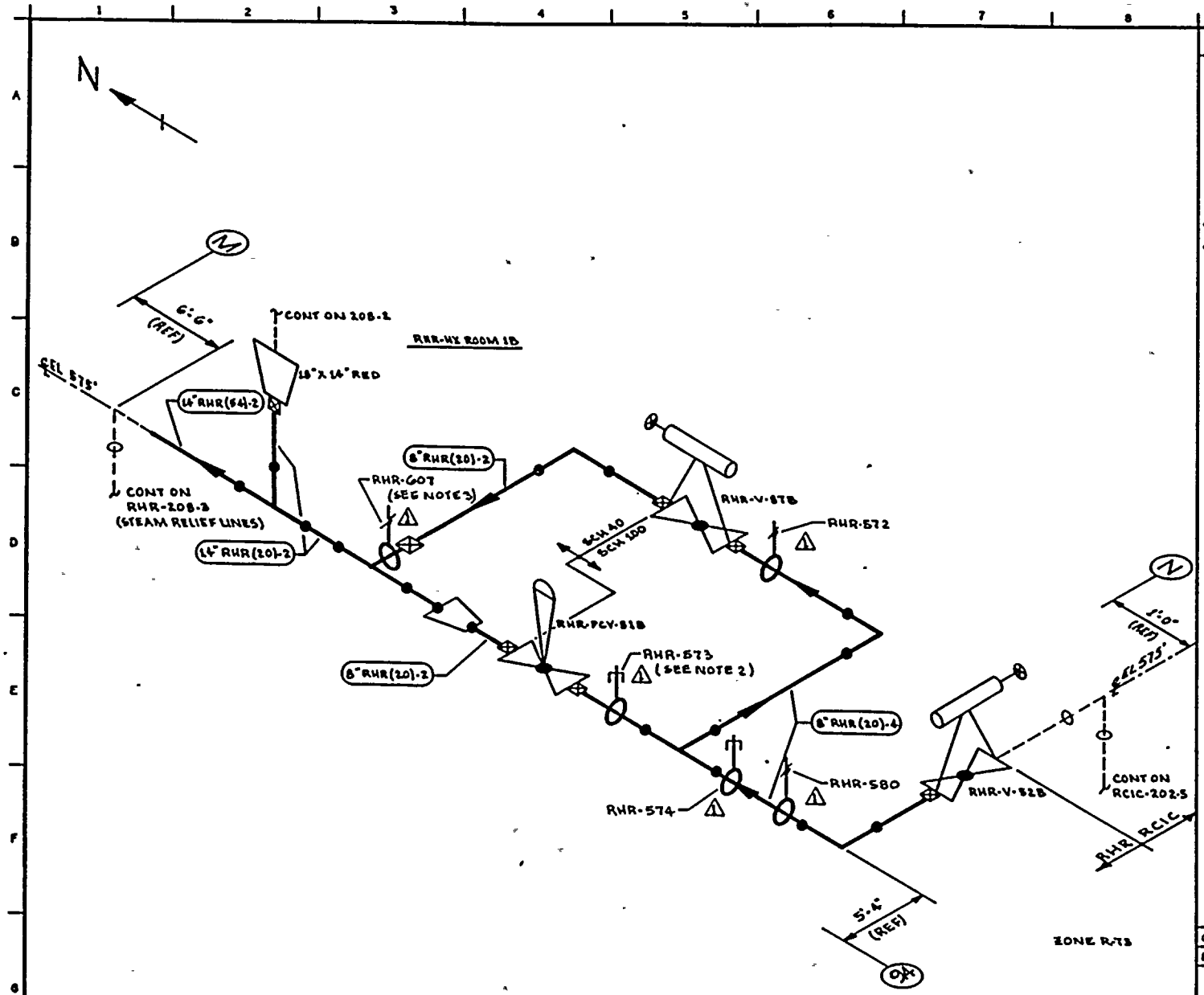

NOTES:

1. THIS DRAWING IDENTIFIES PIPING & COMPONENTS SUBJECT TO A VISUAL EXAMINATION FOR EVIDENCE OF LEAKAGE DURING SYSTEM HYDRO OR OPERABILITY TESTS. TESTS ARE TO BE CONDUCTED PER THE REQUIREMENTS OF ASME SECTION XI, PARAGRAPH IWA-5000.
2. △ CLAMP IS STAMPED RCIC-918N.
3. △ NAME PLATE IS STAMPED RHR-92. ATTACHMENT IS STAMPED RHR-607.

REFERENCES:

BOVEE & CRAIL ISOMETRICS

RHR-898-15 REV 8
RHR-898-16-17 REV 9

KEY PLAN

90° 0° 180° 270°

THIS DRAWING IS INTENDED FOR USE IN PRESERVICE AND INSERVICE INSPECTION PROGRAMS ONLY.

PIPING SYSTEM	NOM DIA (IN)	SCH	NOM WALL THK	MATERIAL SPECIFICATION	MATL TYPE	CAL BLOCK NO
8"RHR(20)-4	8	100	0.594	SA 106 GR B	CS	NA
8"RHR(20)-2	8	40	0.322	SA 106 GR B	CS	NA
14"RHR(20)-2	14	STD	0.375	SA 106 GR B	CS	NA
14"RHR(54)-2	14	STD	0.375	SA 106 GR B	CS	NA

NO	DATE	REVISION	BY	CHKD	APPVD
1	4-26-83	REVISED AS NOTED	KMcA	LWE	THK
0	11-17-81	ISSUED FOR USE	KMcA	[illegible]	[illegible]
A	9-22-78	ISSUED FOR INFORMATION ONLY	KMcA	[illegible]	[illegible]

QUALITY CLASS: 1 | ASME CODE CLASS: 2

ENGR: GA KUGLER | DRAWN: K.McA | DATE: 6-15-78

WASHINGTON PUBLIC POWER SUPPLY SYSTEM
RICHLAND, WASHINGTON 99352

WNP-2
WELD & COMPONENT IDENTIFICATION DIAGRAM

TITLE: RHR LOOP B
RCIC STEAM SUPPLY TO RHR-HX-1B

DWG NO: RHR-208-1 | REV 1

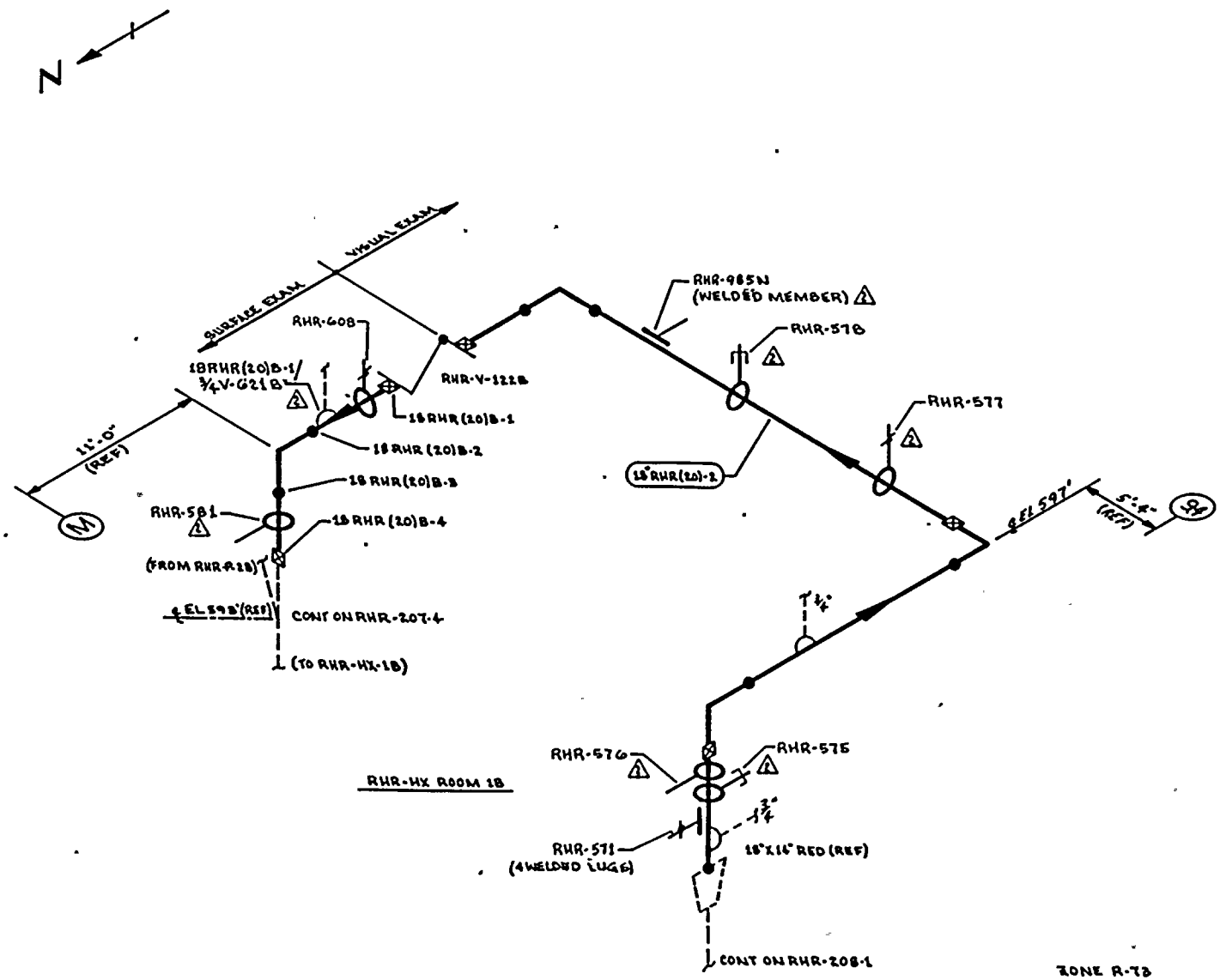

NOTES:

1. FOR BRANCH PIPING 4" DIA OR LESS (CONN SHOWN IN DASHED LINE) EXTEND VISUAL EXAM THROUGH THE OUTERMOST NORMALLY CLOSED NUCLEAR CLASS VALVE OR UNTIL TRANSITION TO INSTRUMENT TUBING, UNLESS OTHERWISE NOTED.
2. PORTIONS OF THIS DRAWING IDENTIFY PIPING & COMPONENTS SUBJECT TO A VISUAL EXAM FOR EVIDENCE OF LEAKAGE DURING SYSTEM HYDRO OR OPERABILITY TESTS. TESTS ARE TO BE CONDUCTED PER THE REQUIREMENTS OF ASME SECTION XI, PARAGRAPH IWA-5000.

REFERENCES:

BOVEE & CRAIL ISOMETRICS

RHR-898-16.17 REV 9
RHR-898-18.20 REV 6

KEY PLAN

90° 0° 180° 270°

THIS DRAWING IS INTENDED FOR USE IN PRESERVICE AND INSERVICE INSPECTION PROGRAMS ONLY.

PIPING SYSTEM	NOM DIA (IN)	SCH	NOM WALL THK	MATERIAL SPECIFICATION	MATL TYPE	CAL BLOCK NO
18"RHR(20)-2	18	80	0.438	SA 106 GR B	CS	NA

NO	DATE	REVISION	BY	CHKD	APPVD
2	9-26-83	REVISED AS NOTED	K.M.A	[illegible]	TTH
1	12-2-81	REVISED AS NOTED	K.M.A	[illegible]	TTH
0	11-15-81	ISSUED FOR USE	K.M.A	[illegible]	[illegible]
A	9-11-81	ISSUED FOR INFORMATION ONLY	K.M.A	[illegible]	[illegible]

QUALITY CLASS: 1 | ASME CODE CLASS: 2

ENGR: G.A. KUGLER | DRAWN: K.M.A. | DATE: 6-15-78

WASHINGTON PUBLIC POWER SUPPLY SYSTEM
RICHLAND, WASHINGTON 99352

WNP-2
WELD & COMPONENT IDENTIFICATION DIAGRAM

TITLE: RHR LOOP B
RCIC STEAM SUPPLY TO RHR-HX-1B

DWG NO: RHR-208-2 | REV 2

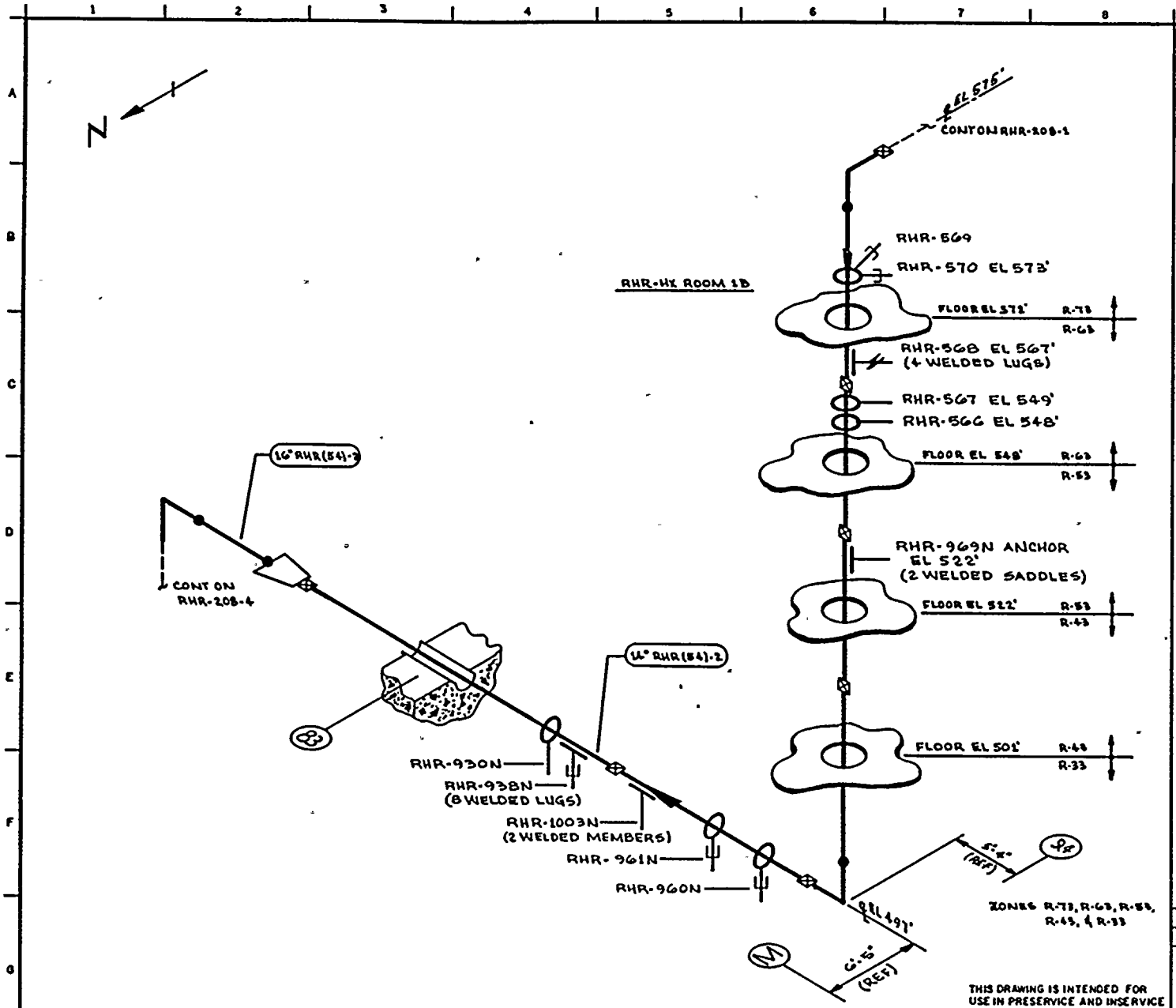

NOTES:

1. THIS DRAWING IDENTIFIES PIPING & COMPONENTS SUBJECT TO A VISUAL EXAM FOR EVIDENCE OF LEAKAGE DURING SYSTEM HYDRO OR OPERABILITY TESTS. TESTS ARE TO BE CONDUCTED PER THE REQUIREMENTS OF ASME SECTION XI, PARAGRAPH IWA-5000.
2. THE VERTICAL RUN OF PIPE IS IN PIPE CHASE BEHIND REMOVABLE SHIELD WALLS.

REFERENCES:

BOVEE & CRAIL ISOMETRICS
RHR-898-21.29 REV 11

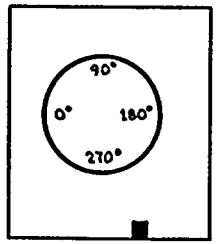

KEY PLAN

THIS DRAWING IS INTENDED FOR USE IN PRESERVICE AND INSERVICE INSPECTION PROGRAMS ONLY.

QUALITY CLASS: 1	ASME CODE CLASS: 2
ENGR: G.A. KUGLER	DRAWN: K. McA. / DATE: 6-16-78

WASHINGTON PUBLIC POWER SUPPLY SYSTEM
RICHLAND, WASHINGTON 99352

WNP-2
WELD & COMPONENT IDENTIFICATION DIAGRAM

TITLE:
RHR LOOP B
RCIC STEAM RELIEF LINES TO SUPPRESSION POOL

DWG NO: RHR-208-3 REV 1

PIPING SYSTEM	NOM DIAM (IN)	SCH	NOM WALL THK	MATERIAL SPECIFICATION	MATL TYPE	CAL BLOCK NO
14 RHR (54)-2	14	STD	0.375	SA 106 GR B	CS	NA
16 RHR (54)-2	16	40	0.500	SA 106 GR B	CS	NA

NO	DATE	REVISION	BY	CHKD	APPVD
1	12-14-83	ADDED HANGERS & NOTE 2	KMcA	[illegible]	[illegible]
0	11-29-78	ISSUED FOR USE	KMcA	[illegible]	[illegible]
A	9-13-78	ISSUED FOR INFORMATION ONLY	KMcA	[illegible]	[illegible]

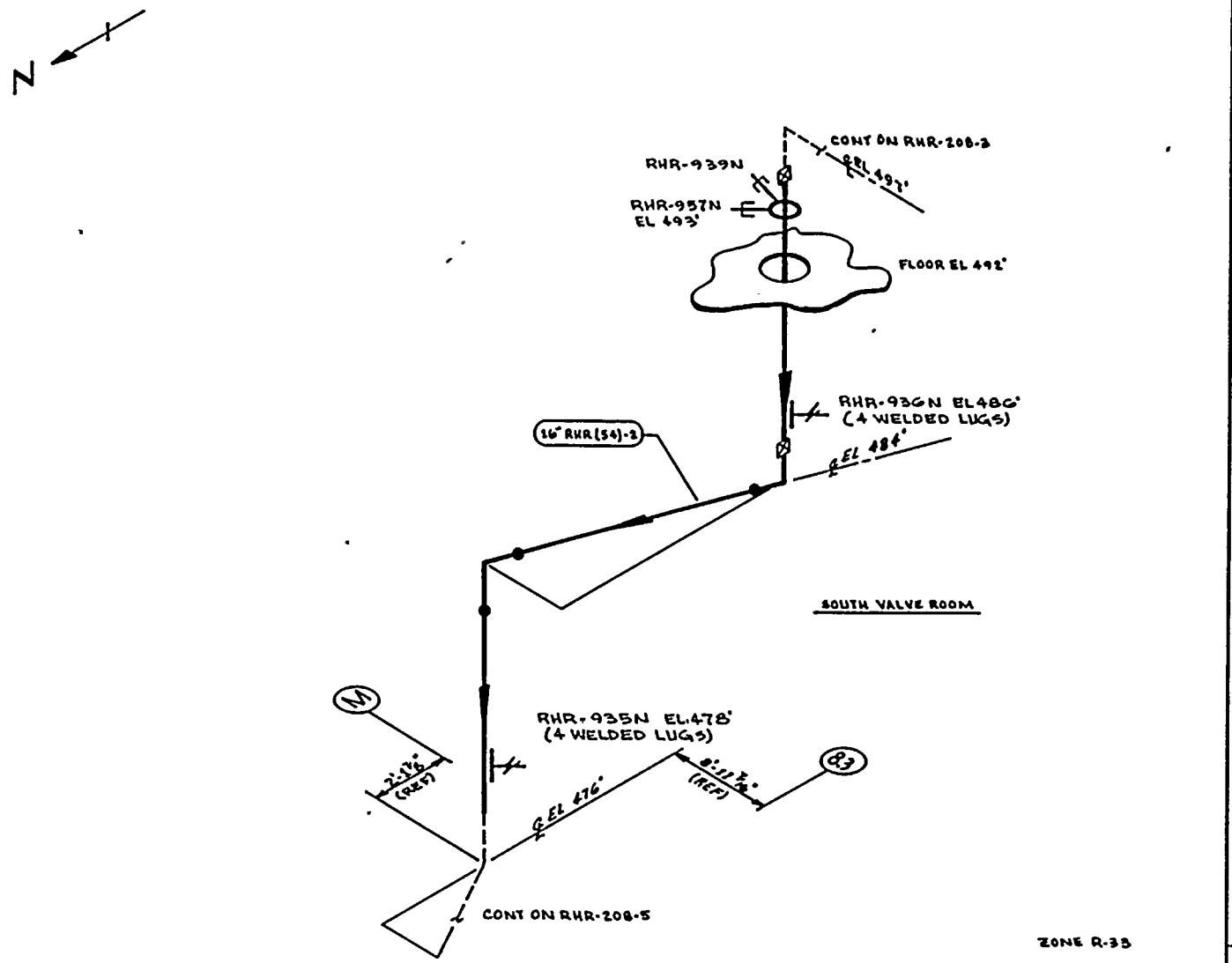

NOTES:

1. THIS DRAWING IDENTIFIES PIPING & COMPONENTS SUBJECT TO A VISUAL EXAM FOR EVIDENCE OF LEAKAGE DURING SYSTEM HYDRO OR OPERABILITY TESTS. TESTS ARE TO BE CONDUCTED PER THE REQUIREMENTS OF ASME SECTION XI, PARAGRAPH IWA-5000.

REFERENCES:

BOVEE & CRAIL ISOMETRIC
RHR-898-21.29 REV 11

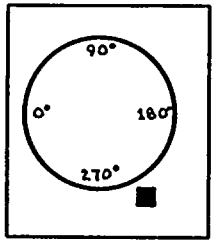

KEY PLAN

THIS DRAWING IS INTENDED FOR USE IN PRESERVICE AND INSERVICE INSPECTION PROGRAMS ONLY.

QUALITY CLASS: 1	ASME CODE CLASS: 2	
ENGR: G.A. KUGLER	DRAWN: K.M.C.A.	DATE: 6-16-78

WASHINGTON PUBLIC POWER SUPPLY SYSTEM
RICHLAND, WASHINGTON 99352

PIPING SYSTEM	NOM DIA (IN)	SCH	NOM WALL THK	MATERIAL SPECIFICATION	MATL TYPE	CAL BLOCK NO
16" RHR(54)-2	16	40	0.500	SA 106 GR B	CS	NA

NO	DATE	REVISION	BY	CHKD	APPVD
1	12-11-83	ADDED HANGERS	K.M.C.A.	CPK	TFH
0	11-8-78	ISSUED FOR USE	K.M.C.A.	[illegible]	[illegible]
A	9-12-78	ISSUED FOR INFORMATION ONLY	K.M.C.A.	[illegible]	[illegible]

WNP-2
WELD & COMPONENT IDENTIFICATION DIAGRAM

TITLE:
RHR LOOP B
RCIC STEAM RELIEF LINES TO SUPPRESSION POOL

DWG NO: RHR-208-4 REV 1

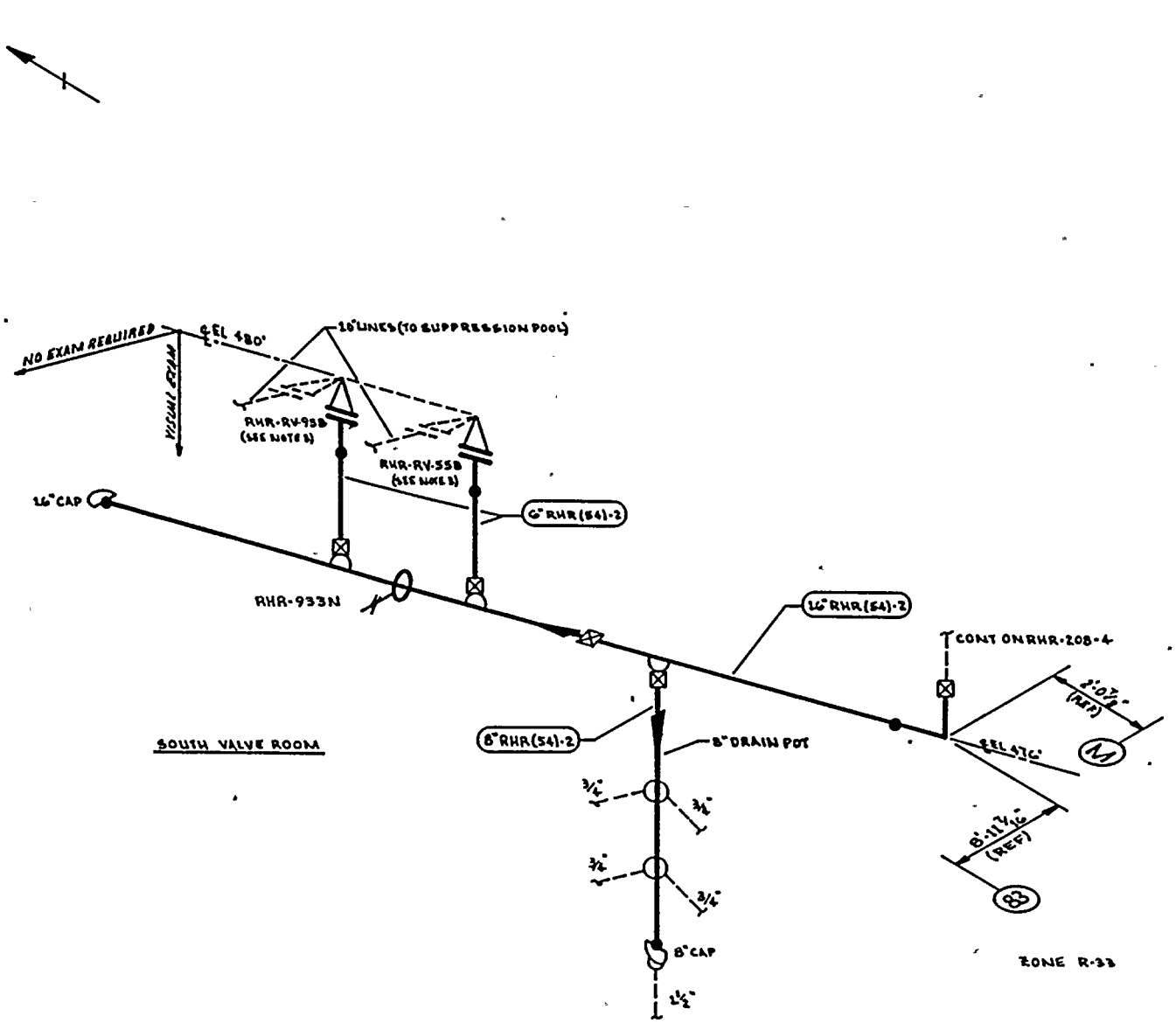

NOTES:

1. THIS DRAWING IDENTIFIES PIPING & COMPONENTS SUBJECT TO A VISUAL EXAM FOR EVIDENCE OF LEAKAGE DURING SYSTEM HYDRO OR OPERABILITY TESTS. TESTS ARE TO BE CONDUCTED PER THE REQUIREMENTS OF ASME SECTION XI, PARAGRAPH IWA-5000.
2. FOR BRANCH PIPING 4" DIA OR LESS (CONN SHOWN IN DASHED LINES) EXTEND VISUAL LEAKAGE EXAM THROUGH THE OUTERMOST NORMALLY CLOSED NUCLEAR CLASS VALVE OR UNTIL TRANSITION TO INSTRUMENT TUBING, UNLESS OTHERWISE NOTED.
3. THE TWO LINES TO THE SUPPRESSION POOL FROM RHR-RV-55B & RHR-RV-95B ARE OPEN ENDED & THEREFORE EXEMPT FROM EXAM.

REFERENCES:

BOVEE & CRAIL ISOMETRIC
RHR-898-30.32 REV 8

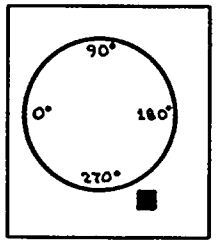

KEY PLAN

THIS DRAWING IS INTENDED FOR USE IN PRESERVICE AND INSERVICE INSPECTION PROGRAMS ONLY.

PIPING SYSTEM	NOM DIA (IN)	SCH	NOM WALL THK	MATERIAL SPECIFICATION	MATL TYPE	CAL BLOCK NO
16" RHR(54)-2	16	40	0.500	SA 106 GR B	CS	NA
8" RHR(54)-2	8	40	0.322	SA 106 GR B	CS	NA
6" RHR(54)-2	6	40	0.280	SA 106 GR B	CS	NA

NO	DATE	REVISION	BY	CHKD	APPVD
1	12-14-83	ADDED HANGER, FIELD WELD ZN E-5	KMcA	LAP	TFH
0	12-28-78	ISSUED FOR USE	KMcA	[illegible]	[illegible]
A	9-13-78	ISSUED FOR INFORMATION ONLY	KMcA	JAT	[illegible]

QUALITY CLASS: 1 | ASME CODE CLASS: 2

ENGR: GA KUGLER | DRAWN: K. McA | DATE: 6-16-78

WASHINGTON PUBLIC POWER SUPPLY SYSTEM
RICHLAND, WASHINGTON 99352

WNP-2
WELD & COMPONENT IDENTIFICATION DIAGRAM

TITLE:
RHR LOOP B
RCIC STEAM RELIEF LINES TO SUPPRESSION POOL

DWG NO: RHR-208-5 | REV 1

WNP-02
INTERVAL: PSI
PERIOD: NA
OUTAGE:
DRAWING NO. RHR-208

WASHINGTON PUBLIC POWER SUPPLY SYSTEM
PROGRAM PLAN AND SCHEDULE
SYSTEM OR COMPONENT: RHR(20)-2
DESCRIPTION: LOOP B SPLY-RHR HX1B

DATE 12/14/84

IDENT. NO.	DESCRIPTION	SECT. XI EXAM.	EXAM MTH.	PROCEDURE	CAL. BLOCK	INSERVICE REQ.	INSERVICE SCHEDULED OUTAGE	NOTES
RHR-580								
	SPRING	C-E-2	VT-3	303/8.2.17				
			VT-4	303/8.2.17				
RHR-574								
	PSA-3 SNUBBER	C-E-2	VT-3	303/8.2.17				S/N
			VT-4	303/8.2.17				S/N
RHR-573								
	PSA-3 SNUBBER	C-E-2	VT-3	303/8.2.17				S/N
			VT-4	303/8.2.17				S/N
RHR-572								
	SPRING	C-E-2	VT-3	303/8.2.17				
			VT-4	303/8.2.17				
RHR-607								
	SPRING	C-E-2	VT-3	303/8.2.17				
			VT-4	303/8.2.17				
RHR-571								
	SPRING	C-E-2	VT-3	303/8.2.17				
			VT-4	303/8.2.17				
RHR-575								
	PSA-3 SNUBBER	C-E-2	VT-3	303/8.2.17				S/N
			VT-4	303/8.2.17				S/N
RHR-576								
	STRUT	C-E-2	VT-3	303/8.2.17				
RHR-577								
	SPRING	C-E-2	VT-3	303/8.2.17				
			VT-4	303/8.2.17				

WNP-02
INTERVAL: PSI
PERIOD: NA
OUTAGE:
DRAWING NO. RHR-208

WASHINGTON PUBLIC POWER SUPPLY SYSTEM
PROGRAM PLAN AND SCHEDULE
SYSTEM OR COMPONENT: RHR(20)-2
DESCRIPTION: LOOP B SPLY-RHR HX1B

DATE 12/14/84

IDENT. NO.	DESCRIPTION	SECT. XI EXAM.	EXAM MTH.	PROCEDURE	CAL. BLOCK	INSERVICE REQ.	INSERVICE SCHEDULED OUTAGE	NOTES
RHR-578								
	PSA-3 SNUBBER	C-E-2	VT-3	303/8.2.17				S/N
			VT-4	303/8.2.17				S/N
RHR-985N								
	STRUT	C-E-2	VT-3	303/8.2.17				
18RHR(20)B-1								
	VALVE TO PIPE	C-F	SUR	PTP-1				
RHR-608								
	SPRING	C-E-2	VT-3	303/8.2.17				
			VT-4	303/8.2.17				
18RHR(20)B-1/3/4V-621B								
	VENT CONN	N/A	VT-2	OCI 7-1				
18RHR(20)B-2								
	PIPE TO EL	C-F	SUR	PTP-1				
18RHR(20)B-3								
	EL TO PIPE	C-F	SUR	PTP-1				
RHR-581								
	STRUT	C-E-2	VT-3	303/8.2.17				
18RHR(20)B-4								
	PIPE TO TEE	C-F	SUR	PTP-1				
RHR-569								
	PSA-3 SNUBBER	C-E-2	VT-3	303/8.2.17				S/N
			VT-4	303/8.2.17				S/N
RHR-570								
	PSA-3 SNUBBER	C-E-2	VT-3	303/8.2.17				S/N
			VT-4	303/8.2.17				S/N
RHR-568								
	SPRING	C-E-2	VT-3	303/8.2.17				
			VT-4	303/8.2.17				
RHR-567								
	STRUT	C-E-2	VT-3	303/8.2.17				

WNP-02
INTERVAL: PSI
PERIOD: NA
OUTAGE:
DRAWING NO. RHR-208

WASHINGTON PUBLIC POWER SUPPLY SYSTEM
PROGRAM PLAN AND SCHEDULE
SYSTEM OR COMPONENT: RHR(20)-2
DESCRIPTION: LOOP B SPLY-RHR HX1B

DATE 12/14/84

IDENT. NO.	DESCRIPTION	SECT. XI EXAM.	EXAM MTH.	PROCEDURE	CAL. BLOCK	INSERVICE REQ.	INSERVICE SCHEDULED OUTAGE	NOTES
RHR-566	STRUT	C-E-2	VT-3	303/8.2.17				
RHR-969N	ANCHOR	C-E-2	VT-3	303/8.2.17				
RHR-960N	PSA-1 SNUBBER	C-E-2	VT-3	303/8.2.17				S/N
			VT-4	303/8.2.17				S/N
RHR-961N	PSA-3 SNUBBER	C-E-2	VT-3	303/8.2.17				S/N
			VT-4	303/8.2.17				S/N
RHR-1003N	STRUT	C-E-2	VT-3	303/8.2.17				
RHR-938N	PSA-1 SN(2)	C-E-2	VT-3	303/8.2.17				S/N
			VT-4	303/8.2.17				S/N
RHR-930N	STRUT	C-E-2	VT-3	303/8.2.17				
RHR-939N	PSA-3 SNUBBER	C-E-2	VT-3	303/8.2.17				S/N
			VT-4	303/8.2.17				S/N
RHR-957N	PSA-3 SNUBBER	C-E-2	VT-3	303/8.2.17				S/N
			VT-4	303/8.2.17				S/N
RHR-936N	SPRING	C-E-2	VT-3	303/8.2.17				
			VT-4	303/8.2.17				
RHR-935N	SPRING	C-E-2	VT-3	303/8.2.17				
			VT-4	303/8.2.17				

WNP-02
INTERVAL: PSI
PERIOD: NA
OUTAGE:
DRAWING NO. RHR-208

WASHINGTON PUBLIC POWER SUPPLY SYSTEM
PROGRAM PLAN AND SCHEDULE
SYSTEM OR COMPONENT: RHR(20)-2
DESCRIPTION: LOOP B SPLY-RHR HX1B

DATE 12/14/84

IDENT. NO.	DESCRIPTION	SECT. XI EXAM.	EXAM MTH.	PROCEDURE	CAL. BLOCK	INSERVICE REQ.	INSERVICE SCHEDULED OUTAGE	NOTES
RHR-933N								
	SPRING	C-E-2	VT-3	303/8.2.17				
			VT-4	303/8.2.17				
RHR-PB-208								
	RHR PRESS BNDRY	N/A	VT-2	N/A				SEE NOTES #6 & #7.

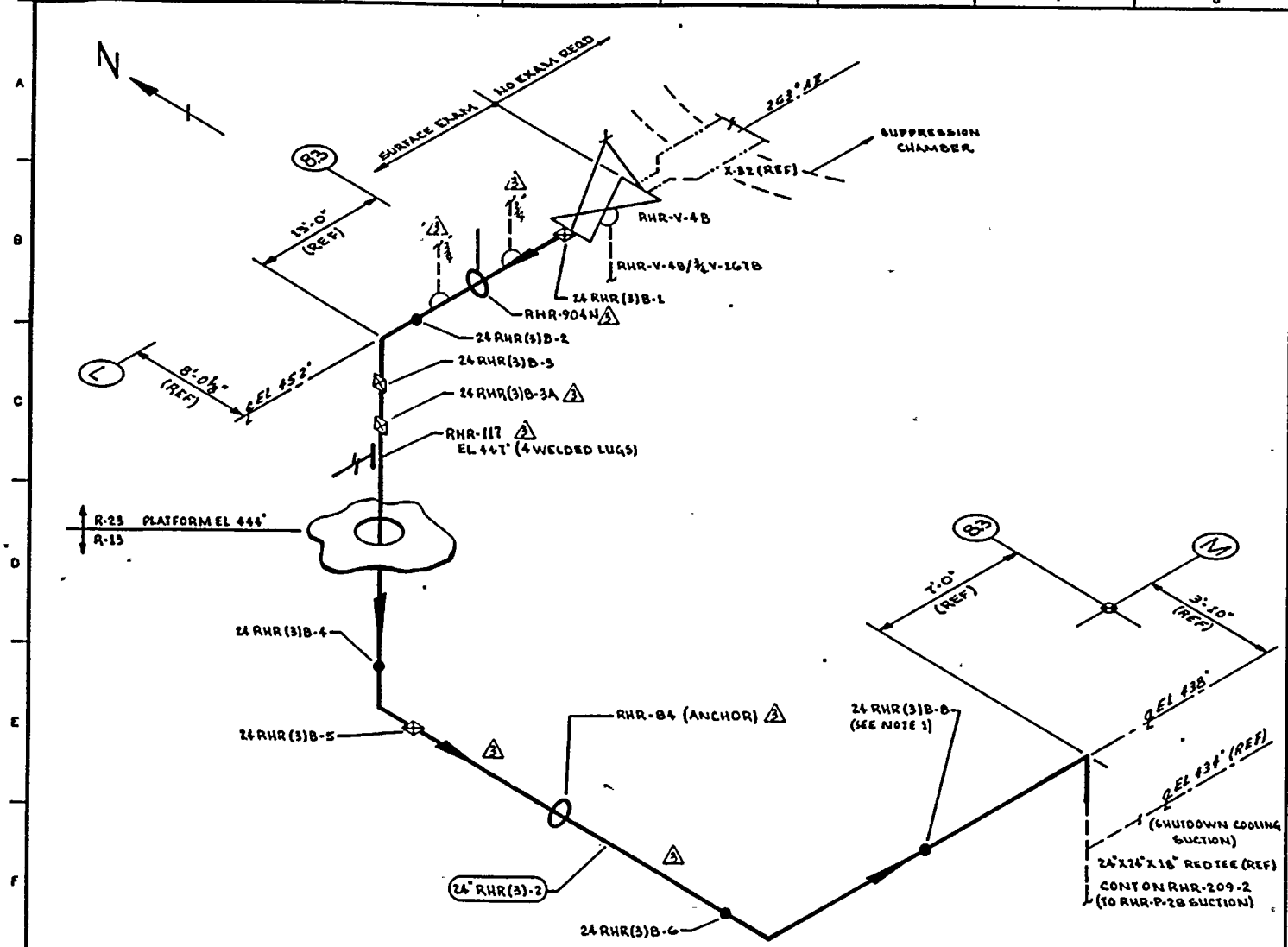

RHR PUMP ROOM R-1

ZONES R-23 & R-13

THIS DRAWING IS INTENDED FOR USE IN PRESERVICE AND INSERVICE INSPECTION PROGRAMS ONLY.

NOTES:

1. WELD 24 RHR (3)B-6 IS FITTING TO FITTING.
2. SCAFFOLD IS REQUIRED.

REFERENCES:

BOVEE & CRAIL ISOMETRICS

RHR-879-1.3 REV 6

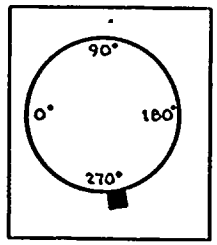

KEY PLAN

QUALITY CLASS: 1	ASME CODE CLASS: 2
ENGR: G.A. KUGLER	DRAWN: K. McA. / DATE: 6-19-78

WASHINGTON PUBLIC POWER SUPPLY SYSTEM

RICHLAND WASHINGTON 99352

PIPING SYSTEM	NOM DIA (IN)	SCH	NOM WALL THK	MATERIAL SPECIFICATION	MATL TYPE	CAL BLOCK NO
24" RHR (3)-2	24	STD	0.375	SA 106 GR B	CS	NA

NO	DATE	REVISION	BY	CHKD	APPVD
3	10-23-83	REVISED AS NOTED	KMcA	[illegible]	[illegible]
2	11-2-81	REVISED AS NOTED	KMcA	[illegible]	[illegible]
1	11-6-80	DELETED WELD 24 RHR (3)B-6, ADDED NOTE 1.	KMcA	[illegible]	[illegible]
0	11-11-79	ISSUED FOR USE	KMcA	[illegible]	[illegible]
A	9-12-79	ISSUED FOR INFORMATION ONLY	KMcA	[illegible]	[illegible]

WNP-2
WELD & COMPONENT IDENTIFICATION DIAGRAM

TITLE:
RHR LOOP B
SUPPRESSION POOL SUCTION

DWG NO: RHR-209-1 REV 3

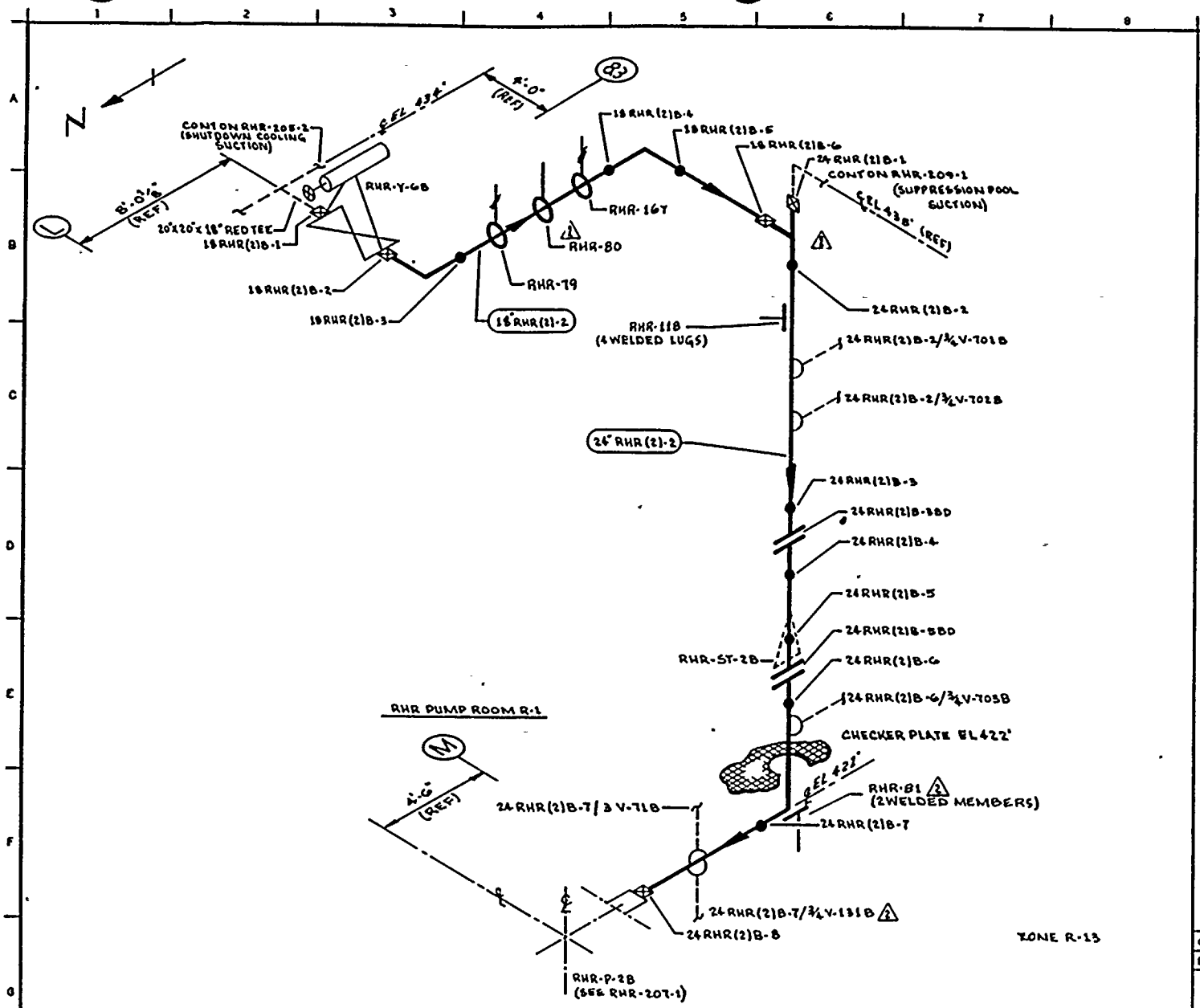

NOTES:

1. SCAFFOLDING IS REQUIRED.

REFERENCES:

BOVEE & CRAIL ISOMETRICS
RHR-875-9.12 REV 6

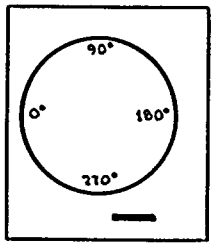

KEY PLAN

THIS DRAWING IS INTENDED FOR USE IN PRESERVICE AND INSERVICE INSPECTION PROGRAMS ONLY.

PIPING SYSTEM	NOM DIA (IN)	SCH	NOM WALL THK	MATERIAL SPECIFICATION	MATL TYPE	CAL BLOCK NO
18" RHR(2)-2	18	STD	0.375	SA 106 GR B	CS	NA
24" RHR(2)-2	24	STD	0.375	SA 106 GR B	CS	NA

NO	DATE	REVISION	BY	CHKD	APPVD
2	9-26-83	REVISED AS NOTED	K.McA	LDK	TFH
1	12-2-81	REVISED AS NOTED	K.McA		TFH
0	11-22-78	ISSUED FOR USE	K.McA		
A	9-22-78	ISSUED FOR INFORMATION ONLY	K.McA		

QUALITY CLASS: 1 | ASME CODE CLASS: 2

ENGR G.A. KUGLER | DRAWN: K. McA | DATE: 6.19.78

WASHINGTON PUBLIC POWER SUPPLY SYSTEM
RICHLAND WASHINGTON 99352

WNP-2
WELD & COMPONENT IDENTIFICATION DIAGRAM

TITLE:
RHR LOOP B
SHUTDOWN COOLING SUCTION

DWG NO: RHR-209-2 | REV 2

WNP-02
INTERVAL: PSI
PERIOD: NA
OUTAGE:
DRAWING NO. RHR-209

WASHINGTON PUBLIC POWER SUPPLY SYSTEM
PROGRAM PLAN AND SCHEDULE
SYSTEM OR COMPONENT: RHR(1)2
DESCRIPTION: LOOP B SPLY-RHR HX1B

DATE 12/14/84

IDENT. NO.	DESCRIPTION	SECT. XI EXAM.	EXAM MTH.	PROCEDURE	CAL. BLOCK	INSERVICE REQ.	INSERVICE SCHEDULED OUTAGE	NOTES
RHR-V-4B/3/4V-167B	TEST CONN	N/A	VT-2	N/A				IWC-2510, SEE NOTES #6 & #7.
24RHR(3)B-1	VALVE TO PIPE	C-F	SUR	QCI 3-3				
RHR-904N	STRUT	C-E-2	VT-3	303/8.2.17				
24RHR(3)B-2	PIPE TO EL	C-F	SUR	QCI 3-3				
24RHR(3)B-3	EL TO PIPE	C-F	SUR	PTP-1				
24RHR(3)B-3A	PIPE TO PIPE	C-F	SUR	PTP-1				
RHR-117(W)	4 WELDED LUGS	C-E-1	SUR	QCI 4-3				
RHR-117	SPRING	C-E-2	VT-3	303/8.2.17				
			VT-4	303/8.2.17				
24RHR(3)B-4	PIPE TO EL	C-F	SUR	PTP-1				
24RHR(3)B-5	EL TO PIPE	C-F	SUR	PTP-1				
RHR-84	ANCHOR	C-E-2	VT-3	303/8.2.17				
24RHR(3)B-6	PIPE TO EL	C-F	SUR	PTP-1				
24RHR(3)B-8	EL TO FL	C-F	SUR	QCI 3-3				
18RHR(2)B-1	TEE TO VALVE	C-F	SUR	PTP-1				
18RHR(2)B-2	VALVE TO EL	C-F	SUR	PTP-1				
18RHR(2)B-3	EL TO PIPE	C-F	SUR	PTP-1				

WNP-02
INTERVAL: PSI
PERIOD: NA
OUTAGE:
DRAWING NO. RHR-209

WASHINGTON PUBLIC POWER SUPPLY SYSTEM
PROGRAM PLAN AND SCHEDULE
SYSTEM OR COMPONENT: RHR(1)2
DESCRIPTION: LOOP B SPLY-RHR HX1B

IDENT. NO.	DESCRIPTION	SECT. XI EXAM.	EXAM MTH.	PROCEDURE	CAL. BLOCK	INSERVICE REQ.	SCHEDULED OUTAGE	NOTES
RHR-79								
	SPRING	C-E-2	VT-3	303/8.2.17				
			VT-4	303/8.2.17				
RHR-80								
	STRUT	C-E-2	VT-3	303/8.2.17				
RHR-167								
	SPRING	C-E-2	VT-3	303/8.2.17				
			VT-4	303/8.2.17				
18RHR(2)B-4								
	PIPE TO EL	C-F	SUR	PTP-1				
18RHR(2)B-5								
	EL TO PIPE	C-F	SUR	PTP-1				
18RHR(2)B-6								
	PIPE TO TEE	C-F	SUR	PTP-1				
24RHR(2)B-1								
	EL TO TEE	C-F	SUR	PTP-1				
24RHR(2)B-2								
	TEE TO PIPE	C-F	SUR	PTP-1				
RHR-118(W)								
	4 WELDED LUGS	C-E-1	SUR	MTP-1				
RHR-118								
	SPRING	C-E-2	VT-3	303/8.2.17				
			VT-4	303/8.2.17				
24RHR(2)B-2/3/4V-701B								
	INSTR CONN	N/A	VT-2	N/A				IWC-2510, SEE NOTES #6 & #7.
24RHR(2)B-2/3/4V-702B								
	INSTR CONN	N/A	VT-2	N/A				IWC-2510, SEE NOTES #6 & #7.
24RHR(2)B-3								
	PIPE TO FLANGE	C-F	SUR	PTP-1				
24RHR(2)B-4								
	FLANGE TO PIPE	C-F	SUR	PTP-1				

WNP-02
INTERVAL: PSI
PERIOD: NA
OUTAGE:
DRAWING NO. RHR-209

WASHINGTON PUBLIC POWER SUPPLY SYSTEM
PROGRAM PLAN AND SCHEDULE
SYSTEM OR COMPONENT: RHR(1)2
DESCRIPTION: LOOP B SPLY-RHR HX1B

IDENT. NO.	DESCRIPTION	SECT. XI EXAM.	EXAM MTH.	PROCEDURE	CAL. BLOCK	INSERVICE REQ.	INSERVICE SCHEDULED OUTAGE	NOTES
24RHR(2)B-5								
	PIPE TO FLANGE	C-F	SUR	PTP-1				
24RHR(2)B-6								
	FLANGE TO EL	C-F	SUR	PTP-1				
24RHR(2)B-6/3/4V-703B								
	INST CONN	N/A	VT-2	N/A				IWC-2510, SEE NOTES #6 & #7.
RHR-81								
	STRUT	C-E-2	VT-3	303/8.2.17				
24RHR(2)B-7								
	EL TO PIPE	C-F	SUR	PTP-1				
24RHR(2)B-7/3V-71B								
	FLUSH CONN	N/A	VT-2	N/A				IWC-2510, SEE NOTES #6 & #7.
24RHR(2)B-7/3/4V-131B								
	DRAIN CONN	N/A	VT-2	N/A				IWC-2510, SEE NOTES #6 & #7.
24RHR(2)B-8								
	PIPE TO PUMP	C-F	SUR	PTP-1				
RHR-PB-209								
	RHR PRESS BNDRY	N/A	VT-2	N/A				IWC-2510, SEE NOTES #6 & #7.

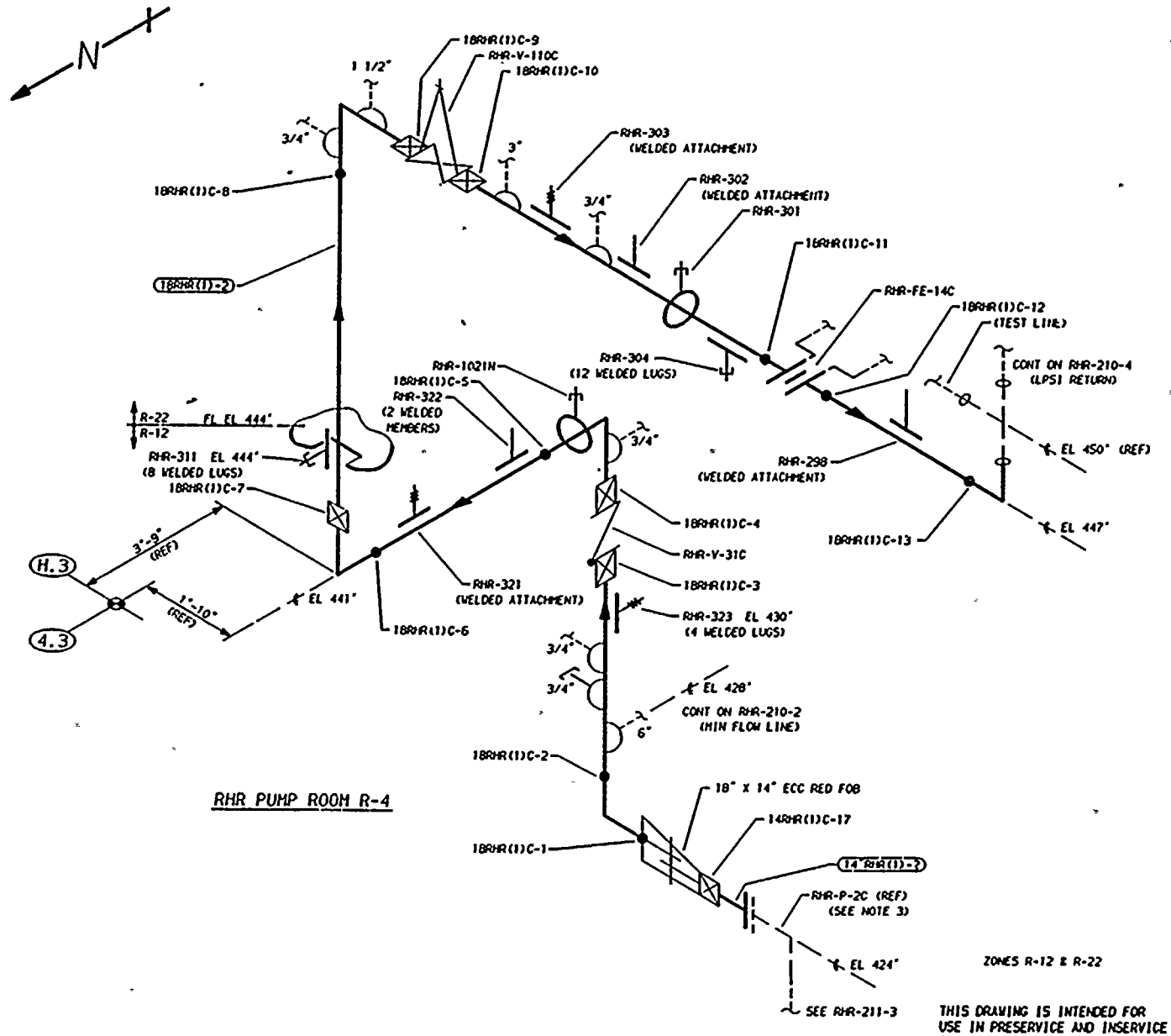

THIS DRAWING IS INTENDED FOR USE IN PRESERVICE AND INSERVICE INSPECTIONS PROGRAMS ONLY.

NOTES:

1. THIS DRAWING IDENTIFIES PIPING AND COMPONENTS SUBJECT TO A VISUAL EXAM FOR EVIDENCE OF LEAKAGE DURING SYSTEM HYDRO OR OPERABILITY TESTS. TESTS ARE TO BE CONDUCTED PER THE REQUIREMENTS OF ASME SECTION XI, PARAGRAPH IWA-5000.
2. FOR BRANCH PIPING 4" NOM. OR LESS (CONNECTION SHOWN IN DASHED LINES) EXTEND VISUAL LEAKAGE EXAM THROUGH THE OUTERMOST NORMALLY CLOSED NUCLEAR CLASS VALVE, OR UNTIL TRANSITION TO INSTRUMENT TUBING, UNLESS OTHERWISE NOTED.
3. EXTEND VISUAL LEAKAGE EXAM OF RHR-P-2C VENTS AND DRAINS TO OUTERMOST NORMALLY CLOSED VALVE.
4. SCAFFOLDING IS REQUIRED.

REFERENCES:

BOYEE AND CRAIL ISOMETRIC

RHR-897-1.2 REV 7
RHR-897-3.5 REV 9

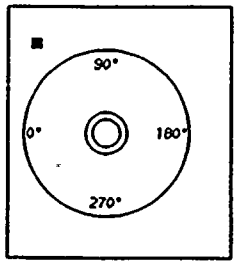

KEYPLAN

QUALITY CLASS: 1	ASME CODE CLASS: 2	
ENGR: GA KUGLER	DRAWN: K-McA	DATE: 6-19-78

WASHINGTON PUBLIC POWER SUPPLY SYSTEM
RICHLAND, WASHINGTON 99352

WNP-2
WELD & COMPONENT
IDENTIFICATION DIAGRAM

TITLE:
RHR LOOP C
SUPPRESSION POOL SUCTION

DWG NO: RHR-210-1 REV 1

PIPING SYSTEM	NOM DIA (IN)	SCH	NOM WALL THK	MATERIAL SPECIFICATION	MATL TYPE	CAL BLOCK NO
14"RHR(1)-2	14	STD	0.375	SA 106 GR B	CS	NA
18"RHR(1)-2	18	30	0.438	SA 106 GR B	CS	NA

NO	DATE	REVISION	BY	CHKD	APVD
1	10-19-83	REVISED HANGERS. REDRAWN	KMcA	DPR / TFH	TFH
0	12-22-78	ISSUED FOR USE	K-McA	DVP	LFB
A	9-12-78	ISSUED FOR INFORMATION ONLY	K-McA	GAK	DVP

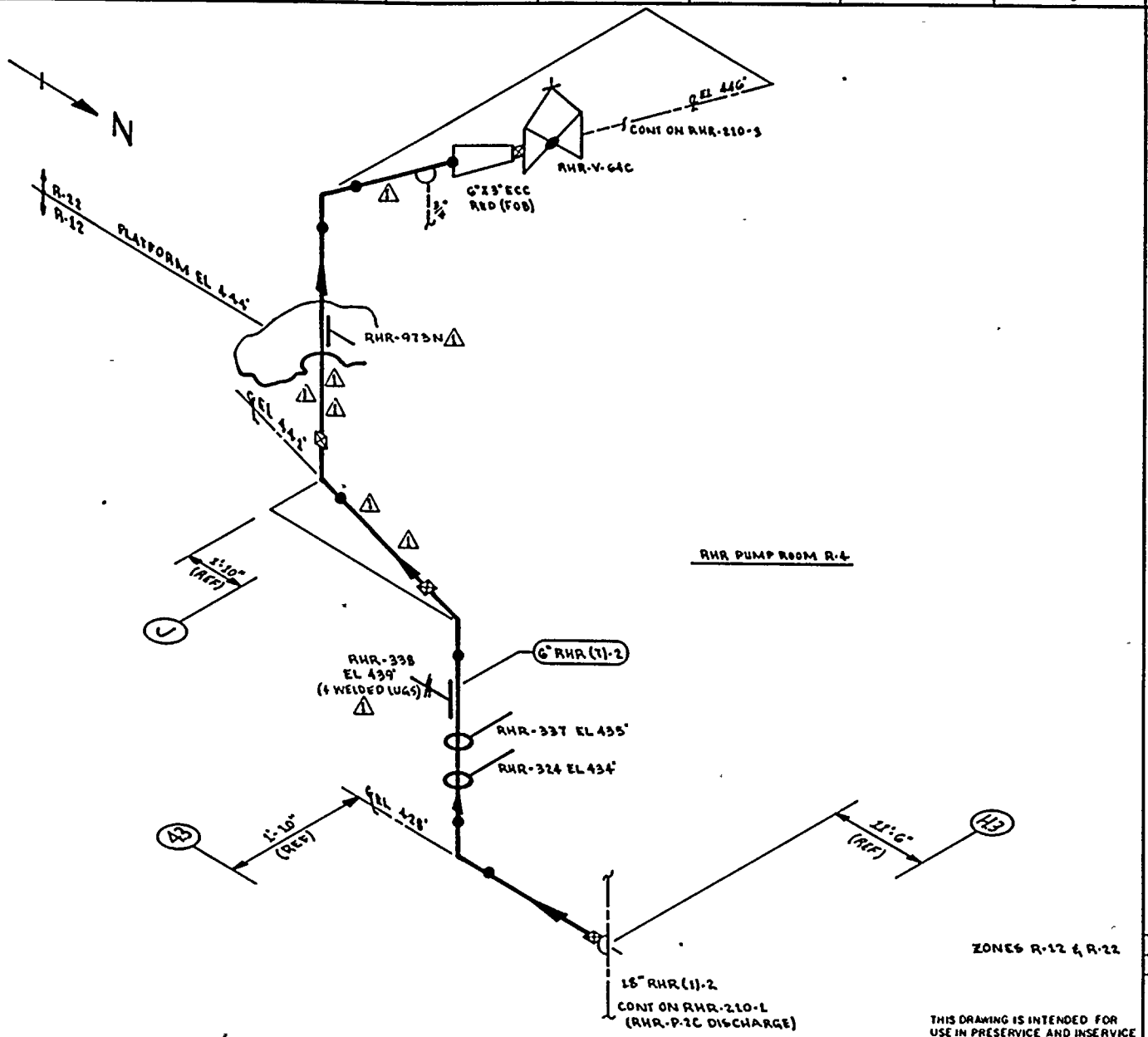

THIS DRAWING IS INTENDED FOR USE IN PRESERVICE AND INSERVICE INSPECTION PROGRAMS ONLY.

NOTES:

1. THIS DRAWING IDENTIFIES PIPING & COMPONENTS SUBJECT TO A VISUAL EXAM FOR EVIDENCE OF LEAKAGE DURING SYSTEM HYDRO OR OPERABILITY TESTS. TESTS ARE TO BE CONDUCTED PER THE REQUIREMENTS OF ASME SECTION XI, PARAGRAPH IWA-5000.
2. FOR BRANCH PIPING 4" DIA OR LESS (CONN SHOWN IN DASHED LINES) EXTEND VISUAL LEAKAGE EXAM THROUGH THE OUTERMOST NORMALLY CLOSED NUCLEAR CLASS VALVE OR UNTIL TRANSITION TO INSTRUMENT TUBING, UNLESS OTHERWISE NOTED.

REFERENCES:

BOVEE & CRAIL ISOMETRICS
RHR-897-25.30 REV 0

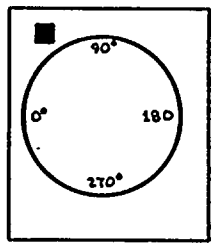

KEY PLAN

QUALITY CLASS: 1	ASME CODE CLASS: 2	
ENGR: G.A. KUGLER	DRAWN: K. McA	DATE: 6-20-78

WASHINGTON PUBLIC POWER SUPPLY SYSTEM
RICHLAND WASHINGTON 99352

PIPING SYSTEM	NOM DIA (IN)	SCH	NOM WALL THK	MATERIAL SPECIFICATION	MATL TYPE	CAL BLOCK NO
6" RHR (7)-2	6	40	0.280	SA 106 GR B	CS	NA

WNP-2
WELD & COMPONENT IDENTIFICATION DIAGRAM

TITLE:
RHR LOOP C
MINIMUM FLOW LINE TO SUPPRESSION POOL

DWG NO: RHR-210-2 REV 1

NO	DATE	REVISION	BY	CHKD	APPVD
1	9-26-83	REVISED AS NOTED	K.McA	LPK	TFH
0	12-22-78	ISSUED FOR USE	K.McA	[illegible]	[illegible]
A	9-12-78	ISSUED FOR INFORMATION ONLY	K.McA	[illegible]	[illegible]

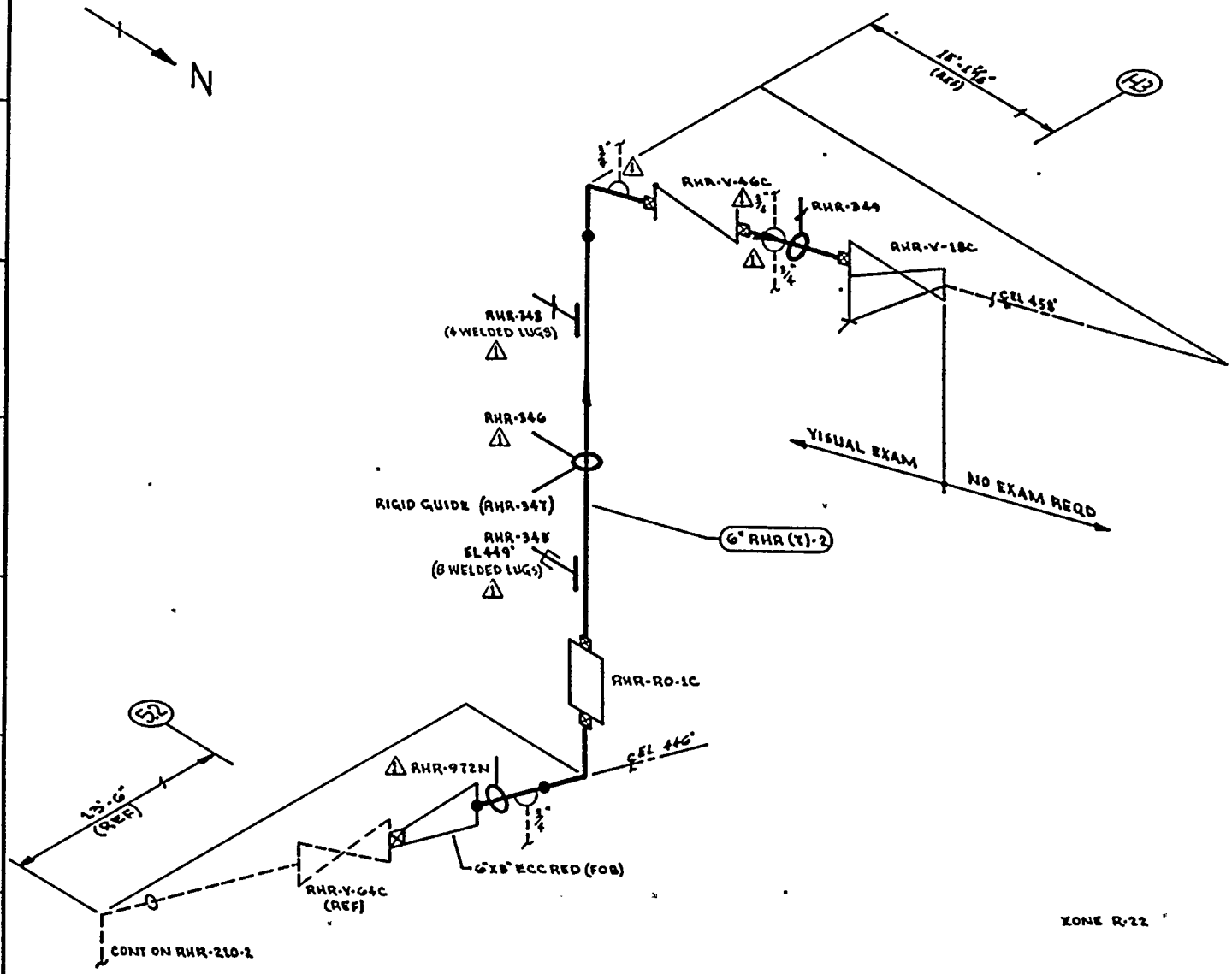

NOTES:

1. THIS DRAWING IDENTIFIES PIPING & COMPONENTS SUBJECT TO A VISUAL EXAM FOR EVIDENCE OF LEAKAGE DURING SYSTEM HYDRO OR OPERABILITY TESTS. TESTS ARE TO BE CONDUCTED PER THE REQUIREMENTS OF ASME SECTION XI, PARAGRAPH IWA-5000.
2. FOR BRANCH PIPING 4" DIA OR LESS (CONN SHOWN IN DASHED LINES) EXTEND VISUAL LEAKAGE EXAM THROUGH THE OUTERMOST NORMALLY CLOSED NUCLEAR CLASS VALVE OR UNTIL TRANSITION TO INSTRUMENT TUBING, UNLESS OTHERWISE NOTED.

REFERENCES:

BOVEE & CRAIL ISOMETRICS
RHR-897-25.30 REV 8

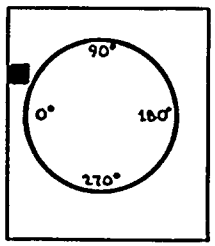

KEY PLAN

THIS DRAWING IS INTENDED FOR USE IN PRESERVICE AND INSERVICE INSPECTION PROGRAMS ONLY.

PIPING SYSTEM	NOM DIA (IN)	SCH	NOM WALL THK	MATERIAL SPECIFICATION	MATL TYPE	CAL BLOCK NO
6" RHR (7)-2	6	40	0.280	SA 106 GR B	CS	NA

NO	DATE	REVISION	BY	CHKD	APPVD
1	9-21-83	REVISED AS NOTED	KMcA	DPC	JFK
0	12-22-78	ISSUED FOR USE	KMcA	KGK	JFK
A	9-22-78	ISSUED FOR INFORMATION ONLY	KMcA	SAK	RCP

QUALITY CLASS: 1 | ASME CODE CLASS: 2
ENGR G.A. KUGLER | DRAWN: K. McA | DATE: 6-20-78

WASHINGTON PUBLIC POWER SUPPLY SYSTEM
RICHLAND WASHINGTON 99352

WNP-2
WELD & COMPONENT IDENTIFICATION DIAGRAM

TITLE: RHR LOOP C MINIMUM FLOW LINE TO SUPPRESSION POOL

DWG NO: RHR-210-3 | REV 1

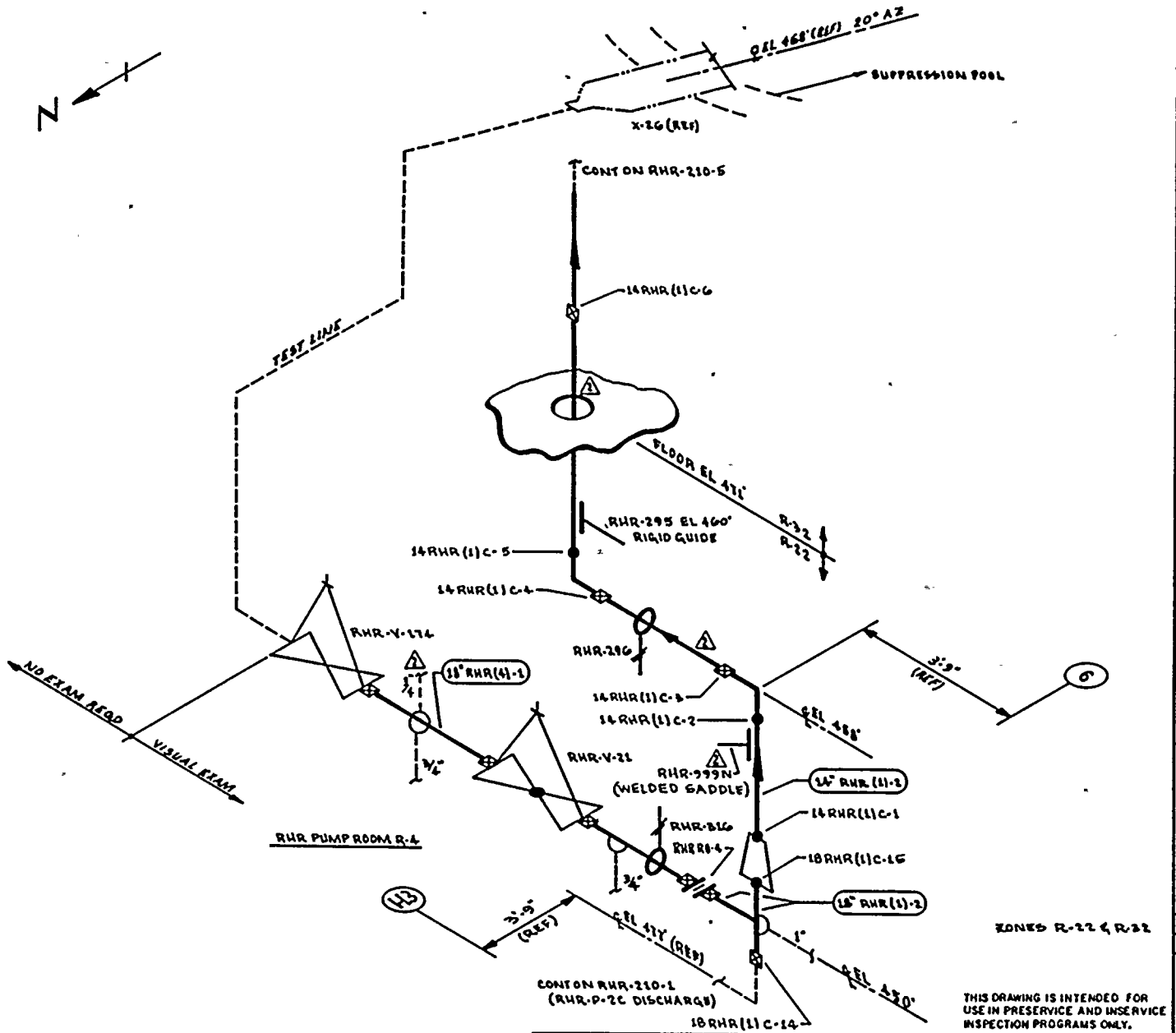

NOTES:

1. THIS DRAWING IDENTIFIES PIPING & COMPONENTS SUBJECT TO A VISUAL EXAM FOR EVIDENCE OF LEAKAGE DURING SYSTEM HYDRO OR OPERABILITY TEST. TESTS ARE TO BE CONDUCTED PER THE REQUIREMENTS OF ASME SECTION XI, PARAGRAPH IWA-5000.
2. FOR BRANCH PIPING 4" DIA OR LESS (CONN SHOWN IN DASHED LINES) EXTEND VISUAL LEAKAGE EXAM THROUGH THE OUTERMOST NORMALLY CLOSED NUCLEAR CLASS VALVE OR UNTIL TRANSITION TO INSTRUMENT TUBING, UNLESS OTHERWISE NOTED.
3. THE FOLLOWING WELDS REQUIRE A SURFACE EXAM. THEY REPRESENT 10% OF THE WELDS EXEMPTED BY IWC-1220 (c).

   18RHR(1)C-14
   14RHR(1)C-1

REFERENCES:

BOVEE & CRAIL ISOMETRICS

RHR-897-6.9	REV 12
RHR-897-10.14	REV 5

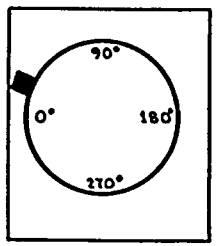

KEY PLAN

THIS DRAWING IS INTENDED FOR USE IN PRESERVICE AND INSERVICE INSPECTION PROGRAMS ONLY.

QUALITY CLASS: 1 | ASME CODE CLASS: 2

ENGR: G.A. KUGLER | DRAWN: K.M.L. | DATE: 6-20-78

WASHINGTON PUBLIC POWER SUPPLY SYSTEM
RICHLAND WASHINGTON 99352

PIPING SYSTEM	NOM DIA (IN)	SCH	NOM WALL THK	MATERIAL SPECIFICATION	MATL TYPE	CAL BLOCK NO
14" RHR(1)-2	14	STD	0.375	SA 106 GR B	CS	NA
18" RHR(1)-2	18	30	0.438	SA 106 GR B	CS	NA
18" RHR(4)-1	18	STD	0.375	SA 106 GR B	CS	NA

NO	DATE	REVISION	BY	CHKD	APPVD
2	10-15-82	NUMBERED WELDS, ADDED NOTE 3, & AS NOTED	KMLA	[illegible]	[illegible]
1	12-2-81	ADDED RHR-R0-4 IN V-5	KMLA	[illegible]	[illegible]
0	12-22-78	ISSUED FOR USE	KMLA	[illegible]	[illegible]
A	9-12-78	ISSUED FOR INFORMATION ONLY	KMLA	[illegible]	[illegible]

WNP-2
WELD & COMPONENT IDENTIFICATION DIAGRAM

TITLE:
RHR LOOP C/LPCI RETURN & TEST LINE

DWG NO: RHR-210-4 | REV 2

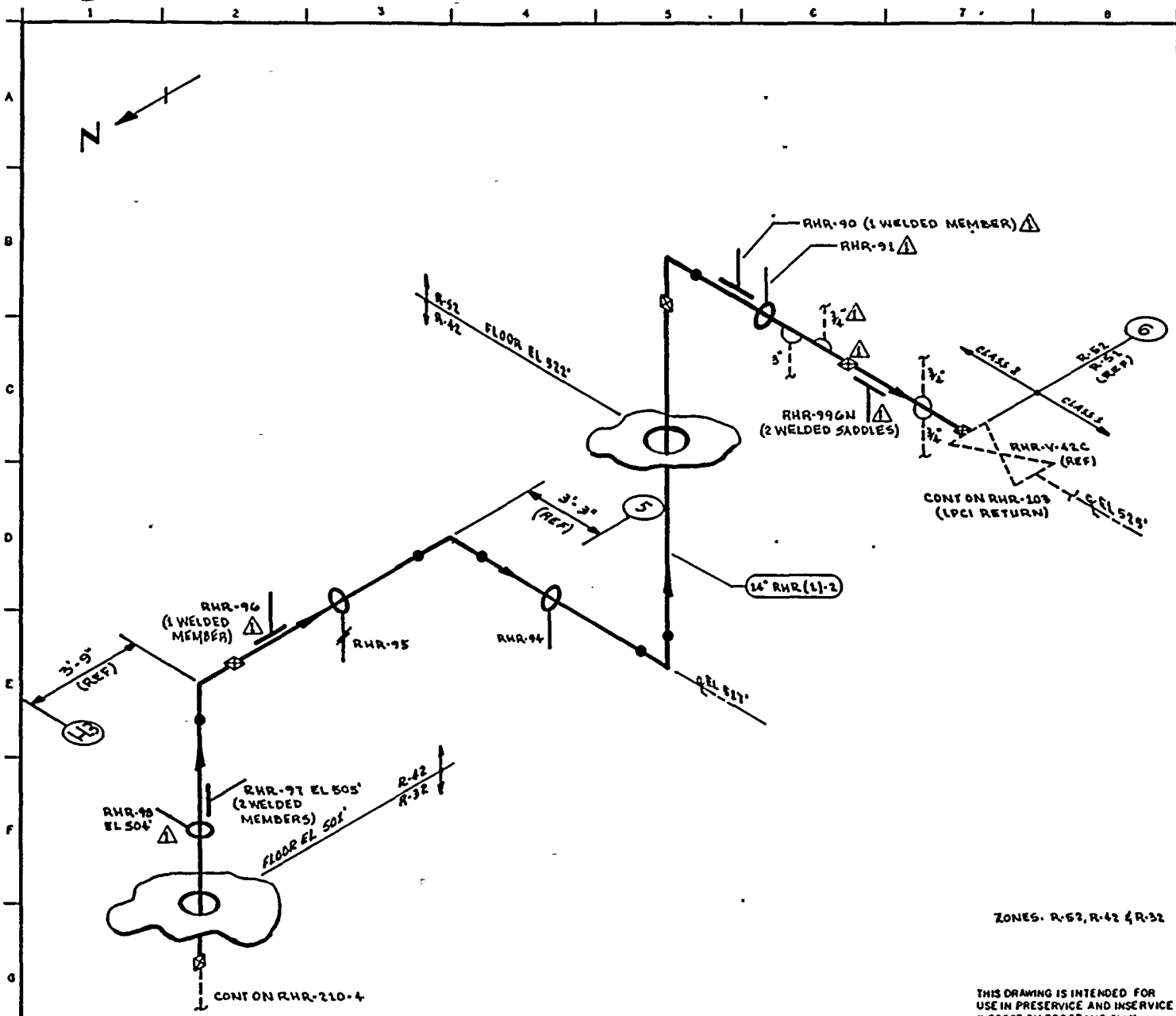

NOTES:

1. THIS DRAWING IDENTIFIES PIPING & COMPONENTS SUBJECT TO A VISUAL EXAM FOR EVIDENCE OF LEAKAGE DURING SYSTEM HYDRO OR OPERABILITY TESTS. TESTS ARE TO BE CONDUCTED PER THE REQUIREMENTS OF ASME SECTION XI, PARAGRAPH IWA-5000.
2. FOR BRANCH PIPING 4" DIA OR LESS (CONN SHOWN IN DASHED LINES) EXTEND VISUAL LEAKAGE EXAM THROUGH THE OUTERMOST NORMALLY CLOSED NUCLEAR CLASS VALVE OR UNTIL TRANSITION TO INSTRUMENT TUBING, UNLESS OTHERWISE NOTED.

REFERENCES:

BOVEE & CRAIL ISOMETRICS

RHR-897-10.14	REV 7
RHR-897-15.18	REV 10

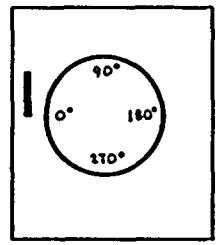

KEY PLAN

ZONES: R-52, R-42 & R-32

THIS DRAWING IS INTENDED FOR USE IN PRESERVICE AND INSERVICE INSPECTION PROGRAMS ONLY.

QUALITY CLASS: 1	ASME CODE CLASS 2	
ENGR G.A. KUGLER	DRAWN: K. McA	DATE: 8-16-78

WASHINGTON PUBLIC POWER SUPPLY SYSTEM
RICHLAND WASHINGTON 99352

PIPING SYSTEM	NOM DIA (IN)	SCH	NOM WALL THK	MATERIAL SPECIFICATION	MATL TYPE	CAL BLOCK NO
14" RHR (L)-2	14	STD	0.375	SA 106 GR B	CS	NA

NO	DATE	REVISION	BY	CHKD	APPVD
1	12-2-83	REVISED AS NOTED	K. McA	RPR	TFH
0	11-11-78	ISSUED FOR USE	K. McA	[illegible]	[illegible]
A	9-11-78	ISSUED FOR INFORMATION ONLY	K. McA	[illegible]	[illegible]

WNP- 2
WELD & COMPONENT IDENTIFICATION DIAGRAM

TITLE:
RHR LOOP C / LPCI RETURN

DWG NO: RHR-210-5 REV 1

WNP-02
INTERVAL: PSI
PERIOD: NA
OUTAGE:
DRAWING NO. RHR-210

WASHINGTON PUBLIC POWER SUPPLY SYSTEM
PROGRAM PLAN AND SCHEDULE
SYSTEM OR COMPONENT: RHR(1)-2
DESCRIPTION: LOOP C/LPCI RETURN

DATE 12/14/84

IDENT. NO.	DESCRIPTION	SECT. XI EXAM.	EXAM MTH.	PROCEDURE	CAL. BLOCK	INSERVICE REQ.	INSERVICE SCHEDULED OUTAGE	NOTES
RHR-323								
	SPRING	C-E-2	VT-3	303/8.2.17				
			VT-4	303/8.2.17				
RHR-1021N								
	PSA-3 SN(2)	C-E-2	VT-3	303/8.2.17				S/N W3947/E3930
			VT-4	303/8.2.17				S/N W3947/E3930
RHR-322								
	BOX	C-E-2	VT-3	303/8.2.17				
RHR-321								
	SPRING	C-E-2	VT-3	303/8.2.17				
			VT-4	303/8.2.17				
RHR-311								
	PSA-1 SN(2)	C-E-2	VT-3	303/8.2.17				S/N
			VT-4	303/8.2.17				S/N
RHR-303								
	SPRING	C-E-2	VT-3	303/8.2.17				
			VT-4	303/8.2.17				
RHR-302								
	STRUT	C-E-2	VT-3	303/8.2.17				
RHR-301								
	PSA-1 SNUBBER	C-E-2	VT-3	303/8.2.17				S/N 654
			VT-4	303/8.2.17				S/N 654
RHR-304								
	PSA-10 SNUBBER	C-E-2	VT-3	303/8.2.17				S/N
			VT-4	303/8.2.17				S/N
RHR-298								
	RIGID	C-E-2	VT-3	303/8.2.17				
RHR-324								
	STRUT	C-E-2	VT-3	303/8.2.17				

WNP-02
INTERVAL: PSI
PERIOD: NA
OUTAGE:
DRAWING NO. RHR-210

WASHINGTON PUBLIC POWER SUPPLY SYSTEM
PROGRAM PLAN AND SCHEDULE
SYSTEM OR COMPONENT: RHR(1)-2
DESCRIPTION: LOOP C/LPCI RETURN

DATE 12/14/84

IDENT. NO.	DESCRIPTION	SECT. XI EXAM.	EXAM MTH.	PROCEDURE	CAL. BLOCK	INSERVICE REQ.	SCHEDULED OUTAGE	NOTES
RHR-337								
	STRUT	C-E-2	VT-3	303/8.2.17				
RHR-338								
	SPRING	C-E-2	VT-3	303/8.2.17				
			VT-4	303/8.2.17				
RHR-973N								
	ANCHOR	C-E-2	VT-3	303/8.2.17				
RHR-972N								
	BOX	C-E-2	VT-3	303/8.2.17				
RHR-345								
	PSA-1/4 SN(2)	C-E-2	VT-3	303/8.2.17				S/N
			VT-4	303/8.2.17				S/N W570/E571
RHR-347								
	BOX	C-E-2	VT-3	303/8.2.17				
RHR-346								
	STRUT	C-E-2	VT-3	303/8.2.17				
RHR-348								
	SPRING	C-E-2	VT-3	303/8.2.17				
			VT-3	303/8.2.17				
RHR-349								
	SPRING	C-E-2	VT-3	303/8.2.17				
			VT-4	303/8.2.17				
RHR-316								
	SPRING	C-E-2	VT-3	303/8.2.17				
			VT-4	303/8.2.17				
18RHR(1)C-15								
	TEE TO RED	N/A	SUR	QCI 3-3				SEE NOTE #8.
14RHR(1)C-1								
	RED TO PIPE	N/A	SUR	QCI 3-3				SEE NOTE #8.
RHR-999N								
	STRUT	C-E-2	VT-3	303/8.2.17				

WNP-02
INTERVAL: PSI
PERIOD: NA
OUTAGE:
DRAWING NO. RHR-210

WASHINGTON PUBLIC POWER SUPPLY SYSTEM
PROGRAM PLAN AND SCHEDULE
SYSTEM OR COMPONENT: RHR(1)-2
DESCRIPTION: LOOP C/LPCI RETURN

DATE 12/14/84

IDENT. NO.	DESCRIPTION	SECT. XI EXAM.	EXAM MTH.	PROCEDURE	CAL. BLOCK	INSERVICE REQ.	INSERVICE SCHEDULED OUTAGE	NOTES
RHR-296	SPRING	C-E-2	VT-3	303/8.2.17				
			VT-4	303/8.2.17				
14RHR(1)C-13	PIPE TO ELB	N/A	SUR	PTP-1				SEE NOTE #8.
14RHR(1)C-14	PIPE TO EL	N/A	SUR	QCI 3-3				SEE NOTE #8.
14RHR(1)C-15	EL TO PIPE	N/A	SUR	QCI 3-3				SEE NOTE #8.
RHR-295	BOX	C-E-2	VT-3	303/8.2.17				
RHR-98	STRUT	C-E-2	VT-3	303/8.2.17				
RHR-97	BOX	C-E-2	VT-3	303/8.2.17				
RHR-96	BOX	C-E-2	VT-3	303/8.2.17				
RHR-95	SPRING	C-E-2	VT-3	303/8.2.17				
			VT-4	303/8.2.17				
RHR-94	STRUT	C-E-2	VT-3	303/8.2.17				
RHR-90	BOX	C-E-2	VT-3	303/8.2.17				
RHR-91	STRUT	C-E-2	VT-3	303/8.2.17				
RHR-996N	ANCHOR	C-E-2	VT-3	303/8.2.17				
RHR-PB-210	RHR PRES BNDRY	N/A	VT-2	N/A				SEE NOTES #6 & #7.

WNP-02
INTERVAL: PSI
PERIOD: NA
OUTAGE:
DRAWING NO. RRC-101

WASHINGTON PUBLIC POWER SUPPLY SYSTEM
PROGRAM PLAN AND SCHEDULE
SYSTEM OR COMPONENT: RRC(2)-4S
DESCRIPTION: REACTOR RECIR LOOP A

DATE 12/14/84

IDENT. NO.	DESCRIPTION	SECT. XI EXAM.	EXAM MTH.	PROCEDURE	CAL. BLOCK	INSERVICE REQ.	INSERVICE SCHEDULED OUTAGE	NOTES
24RRC(2)A-1								
	NOZ TO SE	B-F	VOL	UTP-10	UT-101			
			SUR	PTP-1				
24RRC(2)A-2								
	SE TO PIPE	B-J	VOL	UTP-10	UT-7			
			SUR	PTP-1				
24RRC(2)A-2LD								
	PIPE SEAM	B-J	VOL	UTP-10	UT-7			
			SUR	PTP-1				
24RRC(2)A-3LU								
	PIPE SEAM	B-J	VOL	UTP-10	UT-7			
			SUR	PTP-1				
24RRC(2)A-3								
	PIPE TO EL	B-J	VOL	UTP-10	UT-7			
			SUR	PTP-1				
24RRC(2)A-3LDO								
	EL SEAM	B-J	VOL	UTP-10	UT-7			
			SUR	PTP-1				
24RRC(2)A-3LDI								
	EL SEAM	B-J	VOL	UTP-10	UT-7			
			SUR	PTP-1				
24RRC(2)A-4LUO								
	EL SEAM	B-J	VOL	UTP-10	UT-7			
			SUR	PTP-1				
24RRC(2)A-4LUI								
	EL SEAM	B-J	VOL	UTP-10	UT-7			
			SUR	PTP-1				

WNP-02
INTERVAL: PSI
PERIOD: NA
OUTAGE:
DRAWING NO. RRC-101

WASHINGTON PUBLIC POWER SUPPLY SYSTEM
PROGRAM PLAN AND SCHEDULE
SYSTEM OR COMPONENT: RRC(2)-4S
DESCRIPTION: REACTOR RECIR LOOP A

DATE 12/14/84

IDENT. NO.	DESCRIPTION	SECT. XI EXAM.	EXAM MTH.	PROCEDURE	CAL. BLOCK	INSERVICE REQ.	INSERVICE SCHEDULED OUTAGE	NOTES
24RRC(2)A-4								
	EL TO PIPE	B-J	VOL	UTP-10	UT-7			
			SUR	PTP-1				
24RRC(2)A-4LD								
	PIPE SEAM	B-J	VOL	UTP-10	UT-7			
			SUR	PTP-1				
RCR-1A								
	PIPE WHIP	N/A	N/A	N/A				SEE NOTE #1
24RRC(2)A-5LU								
	PIPE SEAM	B-J	VOL	UTP-10	UT-7			
			SUR	PTP-1				
24RRC(2)A-5								
	PIPE TO PIPE	B-J	VOL	UTP-10	UT-7			
			SUR	PTP-1				
24RRC(2)A-5LD								
	PIPE SEAM	B-J	VOL	UTP-10	UT-7			
			SUR	PTP-1				
RRC-HA-1(W)								
	4 WELDED LUGS	B-K-1	VOL	UTP-26	UT-7			
RRC-HA-1								
	SPRING	B-K-2	VT-3	303/8.2.17				
			VT-4	303/8.2.17				
RCR-2A								
	PIPE WHIP	N/A	N/A	N/A				SEE NOTE #1
RRC-SA-20								
	PSA-35 SNUBBER	B-K-2	VT-3	303/8.2.17				S/N 4215
			VT-4	303/8.2.17				S/N 4215

WNP-02
INTERVAL: PSI
PERIOD: NA
OUTAGE:
DRAWING NO. RRC-101

WASHINGTON PUBLIC POWER SUPPLY SYSTEM
PROGRAM PLAN AND SCHEDULE
SYSTEM OR COMPONENT: RRC(2)-4S
DESCRIPTION: REACTOR RECIR LOOP A

DATE 12/14/84

IDENT. NO.	DESCRIPTION	SECT. XI EXAM.	EXAM MTH.	PROCEDURE	CAL. BLOCK	INSERVICE REQ.	SCHEDULED OUTAGE	NOTES
24RRC(2)A-7/3/4PS-N018								
	INSTR CONN	B-P	VT-2	N/A				SEE NOTES #6 & #7.
RCR-2B								
	PIPE WHIP	N/A	N/A	N/A				SEE NOTE #1
RRC-SA-25								
	PSA-35 SNUBBER	B-K-2	VT-3	303/8.2.17				S/N 4213
			VT-4	303/8.2.17				S/N 4213
RRC-SA-2								
	PSA-35 SNUBBER	B-K-2	VT-3	303/8.2.17				S/N 10733
			VT-4	303/8.2.17				S/N 10733
RRC-SA-2(W)								
	4 WELDED LUGS	B-K-1	VOL	UTP-26	UT-7			
24RRC(2)A-7/3/4PX-1A								
	INSTR CONN	B-P	VT-2	N/A				SEE NOTES #6 & # 7.
RRC-SA-1(W)								
	4 WELDED LUGS	B-K-1	VOL	UTP-26	UT-7			
RRC-SA-1								
	PSA-35 SNUBBER	B-K-2	VT-3	303/8.2.17				S/N 4157
			VT-4	303/8.2.17				S/N 4157
RCR-3A								
	PIPE WHIP	N/A	N/A	N/A				SEE NOTE #1
24RRC(2)A-8LU								
	PIPE SEAM	B-J	VOL	UTP-10	UT-7			
			SUR	PTP-1				
24RRC(2)A-8								
	PIPE TO PIPE	B-J	VOL	UTP-10	UT-7			
			SUR	PTP-1				
24RRC(2)A-8LDO								
	EL SEAM	B-J	VOL	UTP-10	UT-7			
			SUR	PTP-1				

WNP-02
INTERVAL: PSI
PERIOD: NA
OUTAGE:
DRAWING NO. RRC-101

WASHINGTON PUBLIC POWER SUPPLY SYSTEM
PROGRAM PLAN AND SCHEDULE
SYSTEM OR COMPONENT: RRC(2)-4S
DESCRIPTION: REACTOR RECIR LOOP A

IDENT. NO.	DESCRIPTION	SECT. XI EXAM.	EXAM MTH.	PROCEDURE	CAL. BLOCK	INSERVICE REQ.	INSERVICE SCHEDULED OUTAGE	NOTES
RRC-SA-19								
	PSA-35 SNUBBER	R-K-2	VT-3	303/8.2.17				S/N 4216
			VT-4	303/8.2.17				S/N 4216
24RRC(2)A-6LU								
	PIPE SEAM	B-J	VOL	UTP-10	UT-7			
			SUR	PTP-1				
24RRC(2)A-6								
	PIPE TO TEE	B-J	VOL	UTP-10	UT-7			
			SUR	PTP-1				
24RRC(2)A-6LDI								
	TEE SEAM	B-J	VOL	UTP-10	UT-7			
			SUR	PTP-1				
24RRC(2)A-6LDO								
	TEE SEAM	B-J	VOL	UTP-10	UT-7			
			SUR	PTP-1				
24RRC(2)A-7LUI								
	TEE SEAM	B-J	VOL	UTP-10	UT-7			
			SUR	PTP-1				
24RRC(2)A-7LUO								
	TEE SEAM	B-J	VOL	UTP-10	UT-7			
			SUR	PTP-1				
24RRC(2)A-7								
	TEE TO PIPE	B-J	VOL	UTP-10	UT-7			
			SUR	PTP-1				
24RRC(2)A-7LD								
	PIPE SEAM	B-J	VOL	UTP-10	UT-7			
			SUR	PTP-1				

WNP-02
INTERVAL: PSI
PERIOD: NA
OUTAGE:
DRAWING NO. RRC-101

WASHINGTON PUBLIC POWER SUPPLY SYSTEM
PROGRAM PLAN AND SCHEDULE
SYSTEM OR COMPONENT: RRC(2)-4S
DESCRIPTION: REACTOR RECIR LOOP A

DATE 12/14/84

IDENT. NO.	DESCRIPTION	SECT. XI EXAM.	EXAM MTH.	PROCEDURE	CAL. BLOCK	INSERVICE REQ.	INSERVICE SCHEDULED OUTAGE	NOTES
24RRC(2)A-10								
	VALVE TO PIPE	B-J	VOL	UTP-10	UT-7			
			SUR	PTP-1				
24RRC(2)A-10LD								
	PIPE SEAM	B-J	VOL	UTP-10	UT-7			
			SUR	PTP-1				
24RRC(2)A-10/4RRC(8)-4S								
	PIPE TO SWL	B-J	SUR	PTP-1				
4RRC(8)2A-1								
	SWL TO PIPE	B-J	VOL	UTP-10	UT-31			
			SUR	PTP-1				
4RRC(8)2A-2								
	PIPE TO FLANGE	B-J	VOL	UTP-10	UT-31			
			SUR	PTP-1				
4RRC(8)2A-2BD								
	FLANGE BOLTING	B-G-2	VT-1	QCI 7-1				
24RRC(2)A-10/3/4TE-N028								
	INSTR CONN.	B-P	VT-2	N/A				SEE NOTES #6 & #7.
24RRC(2)A-10/4RRC(4)-4S								
	PIPE TO SWL	B-J	SUR	PTP-1				
24RRC(2)A-10/3/4TE-N023								
	INSTR CONN	B-P	VT-2	N/A				SEE NOTES #6 & #7.
24RRC(2)A-10/3/4DPT-N015								
	INSTR CONN	B-P	VT-2	N/A				SEE NOTES #6 & #7.
24RRC(2)A-10/3/4TE-N035								
	INSTR CONN	B-P	VT-2	N/A				SEE NOTES #6 & #7.
24RRC(2)A-11LU								
	PIPE SEAM	B-J	VOL	UTP-10	UT-7			
			SUR	PTP-1				
24RRC(2)A-11								
	PIPE TO EL	B-J	VOL	UTP-10	UT-7			

WNP-02
INTERVAL: PSI
PERIOD: NA
OUTAGE:
DRAWING NO. RRC-101

WASHINGTON PUBLIC POWER SUPPLY SYSTEM
PROGRAM PLAN AND SCHEDULE
SYSTEM OR COMPONENT: RRC(2)-4S
DESCRIPTION: REACTOR RECIR LOOP A

DATE 12/14/84

IDENT. NO.	DESCRIPTION	SECT. XI EXAM.	EXAM MTH.	PROCEDURE	CAL. BLOCK	INSERVICE REQ.	INSERVICE SCHEDULED OUTAGE	NOTES
24RRC(2)A-8LDI								
	EL SEAM	B-J	VOL	UTP-10	UT-7			
			SUR	PTP-1				
24RRC(2)A-8/1PI(1)-4SA								
	INSTR CONN	B-P	VT-2	N/A				SEE NOTES #6 & #7.
24RRC(2)A-8/1PI(1)-4SB								
	INSTR CONN	B-P	VT-2	N/A				SEE NOTES #6 & #7.
24RRC(2)A-8/1PI(1)-4SC								
	INSTR CONN	B-P	VT-2	N/A				SEE NOTES #6 & #7.
24RRC(2)A-8/1PI(1)-4SD								
	INSTR CONN	B-P	VT-2	N/A				SEE NOTES #6 & #7.
RRC-SA-16								
	PSA-35 SNUBBER	B-K-2	VT-3	303/8.2.17				S/N 4197
			VT-4	303/8.2.17				S/N 4197
24RRC(2)A-9LUO								
	EL SEAM	B-J	VOL	UTP-10	UT-7			
			SUR	PTP-1				
24RRC(2)A-9LUI								
	EL SEAM	B-J	VOL	UTP-10	UT-7			
			SUR	PTP-1				
24RRC(2)A-9								
	EL TO VALVE	B-J	VOL	UTP-10	UT-7			FITTING TO FITTING
			SUR	PTP-1				FITTING TO FITTING
RRC-V-23A/3/4V-26A								
	VALVE DRAIN	B-P	VT-2	N/A				SEE NOTES #6 & #7.
RRC-V-23A/3/4V-26A								
	VALVE VENT	B-P	VT-2	N/A				SEE NOTES #6 & #7.
RRC-V-23A-BDY								
	VALVE BODY	B-M-2	VT-1	OCI 7-1				
RRC-V-23A-BLT								
	VALVE BOLTING	B-G-2	VT-1	OCI 7-1				

WNP-02
INTERVAL: PSI
PERIOD: NA
OUTAGE:
DRAWING NO. RRC-101

WASHINGTON PUBLIC POWER SUPPLY SYSTEM
PROGRAM PLAN AND SCHEDULE
SYSTEM OR COMPONENT: RRC(2)-4S
DESCRIPTION: REACTOR RECIR LOOP A

DATE 12/14/84

IDENT. NO.	DESCRIPTION	SECT. XI EXAM.	EXAM MTH.	PROCEDURE	CAL. BLOCK	INSERVICE REQ.	INSERVICE SCHEDULED OUTAGE	NOTES
24RRC(1)A-13/8CAP-1								
	SWL TO PIPE	B-J	VOL	UTP-10	UT-26			FITTING TO FITTING
			SUR	PTP-1				FITTING TO FITTING
24PRC(1)A-13/4RRC(8)-4S								
	PIPE TO SWL	B-J	SUR	PTP-1				
4RRC(8)1A-1								
	SWL TO PIPE	B-J	VOL	UTP-10	UT-31			
			SUR	PTP-1				
4RRC(8)1A-2								
	PIPE TO FLANGE	B-J	VOL	UTP-10	UT-31			
			SUR	PTP-1				
4RRC(8)1A-2BD								
	FLANGE BOLTING	B-G-2	VT-1	OCI 7-1				
RRC-SA-66								
	PSA-35 SNUBBER	B-K-2	VT-3	303/8.2.17				S/N 4167
			VT-4	303/8.2.17				S/N 4167
24RRC(1)A-14LU								
	PIPE SEAM	B-J	VOL	UTP-10	UT-7			
			SUR	PTP-1				
24RRC(1)A-14								
	PIPE TO VALVE	B-J	VOL	UTP-10	UT-7			
			SUR	PTP-1				
RRC-V-60A-BDY								
	VALVE BODY	B-M-2	VT-1	OCI 7-1				
RRC-V-60A-BLT								
	VALVE BOLTING	B-G-1	VOL	UTP-34	UT-43			STUDS: UT ONLY IN PLACE. PT & UT WHEN REMOVED

WNP-02
INTERVAL: PSI
PERIOD: NA
OUTAGE:
DRAWING NO. RRC-101

WASHINGTON PUBLIC POWER SUPPLY SYSTEM
PROGRAM PLAN AND SCHEDULE
SYSTEM OR COMPONENT: RRC(2)-4S
DESCRIPTION: REACTOR RECIR LOOP A

IDENT. NO.	DESCRIPTION	SECT. XI EXAM.	EXAM MTH.	PROCEDURE	CAL. BLOCK	INSERVICE REQ.	INSERVICE SCHEDULED OUTAGE	NOTES
24RRC(2)A-11LDO			SUR	PTP-1				
	EL SEAM	B-J	VOL	UTP-10	UT-7			
24RRC(2)A-11LDI			SUR	PTP-1				
	EL SEAM	B-J	VOL	UTP-10	UT-7			
24RRC(2)A-12LUO			SUR	PTP-1				
	EL SEAM	B-J	VOL	UTP-10	UT-7			
24RRC(2)A-12LUI			SUR	PTP-1				
	EL SEAM	B-J	VOL	UTP-10	UT-7			
24RRC(2)A-12			SUR	PTP-1				
	EL TO PUMP	B-J	VOL	UTP-10	UT-7			
24RRC(1)A-13			SUR	PTP-1				
	PUMP TO PIPE	B-J	VOL	UTP-10	UT-7			
24RRC(1)A-13LD			SUR	PTP-1				
	PIPE SEAM	B-J	VOL	UTP-10	UT-7			
24RRC(1)A-13/3/4DPT-N015			SUR	PTP-1				
	INSTR CONN	B-P	VT-2	N/A				SEE NOTES #6 & #7.
24RRC(1)A-13/8CAP								
	PIPE TO SWL	B-J	VOL	UTP-10	UT-7			
			SUR	PTP-1				

WNP-02
INTERVAL: PSI
PERIOD: NA
OUTAGE:
DRAWING NO. RRC-101

WASHINGTON PUBLIC POWER SUPPLY SYSTEM
PROGRAM PLAN AND SCHEDULE
SYSTEM OR COMPONENT: REC(2)-4S
DESCRIPTION: REACTOR RECIR LOOP A

IDENT. NO.	DESCRIPTION	SECT. XI EXAM.	EXAM MTH.	PROCEDURE	CAL. BLOCK	INSERVICE REQ.	INSERVICE SCHEDULED OUTAGE	NOTES
			SUR	PTP-1				STUDS: UT ONLY IN PLACE. PT & UT WHEN REMOVED
			VT-1	QCI 7-1				STUDS: UT ONLY IN PLACE. PT & UT WHEN REMOVED
RRC-V-60A/3/4LOC	STEM LEAKOFF	B-P	VT-2	QCI 7-1				SEE NOTES #5 & #6.
24RRC(1)A-15	VALVE TO PIPE	B-J	VOL	UTP-10	UT-7			
			SUR	PTP-1				
24RRC(1)A-15LD	PIPE SEAM	B-J	VOL	UTP-10	UT-7			
			SUR	PTP-1				
24RRC(1)A-16LU	PIPE SEAM	B-J	VOL	UTP-10	UT-7			
			SUR	PTP-1				
24RRC(1)A-16	PIPE TO EL	B-J	VOL	UTP-10	UT-7			
			SUR	PTP-1				
24RRC(1)A-16LDO	EL SEAM	B-J	VOL	UTP-10	UT-7			
			SUR	PTP-1				
24RRC(1)A-16LDI	EL SEAM	B-J	VOL	UTP-10	UT-7			
			SUR	PTP-1				
RRC-HA-7	SPRING	B-K-2	VT-3	303/8.2.17				

WNP-02
INTERVAL: PSI
PERIOD: NA
OUTAGE:
DRAWING NO. RRC-101

WASHINGTON PUBLIC POWER SUPPLY SYSTEM
PROGRAM PLAN AND SCHEDULE
SYSTEM OR COMPONENT: RRC(2)-4S
DESCRIPTION: REACTOR RECIR LOOP A

DATE 12/14/84

IDENT. NO.	DESCRIPTION	SECT. XI EXAM.	EXAM MTH.	PROCEDURE	CAL. BLOCK	INSERVICE REQ.	SCHEDULED OUTAGE	NOTES
			VT-4	303/8.2.17				
RRC-SA-65								
	PSA-35 SNUBBER	B-K-2	VT-3	303/8.2.17				S/N 4159
			VT-4	303/8.2.17				S/N 4159
RRC-SA-7								
	PSA-35 SNUBBER	B-K-2	VT-3	303/8.2.17				S/N 4209
			VT-4	303/8.2.17				S/N 4209
24RRC(1)A-17LUO								
	EL SEAM	B-J	VOL	UTP-10	UT-7			
			SUR	PTP-1				
24RRC(1)A-17LUI								
	EL SEAM	B-J	VOL	UTP-10	UT-7			
			SUR	PTP-1				
24RRC(1)A-17								
	EL TO PIPE	B-J	VOL	UTP-10	UT-7			
			SUR	PTP-1				
24RRC(1)A-17LD								
	PIPE SEAM	B-J	VOL	UTP-10	UT-7			
			SUR	PTP-1				
24RRC(1)A-18LU								
	PIPE SEAM	B-J	VOL	UTP-10	UT-7			
			SUR	PTP-1				
24RRC(1)A-18								
	PIPE TO VALVE	B-J	VOL	UTP-10	UT-7			
			SUR	PTP-1				

WNP-02
INTERVAL: PSI
PERIOD: NA
OUTAGE:
DRAWING NO. RRC-101

WASHINGTON PUBLIC POWER SUPPLY SYSTEM
PROGRAM PLAN AND SCHEDULE
SYSTEM OR COMPONENT: RRC(2)-4S
DESCRIPTION: REACTOR RECIR LOOP A

IDENT. NO.	DESCRIPTION	SECT. XI EXAM.	EXAM MTH.	PROCEDURE	CAL. BLOCK	INSERVICE REQ.	INSERVICE SCHEDULED OUTAGE	NOTES
RRC-V-67A/3/4V-71A								
	VALVE DRAIN	B-P	VT-2	N/A				SEE NOTES #6 & #7.
RRC-V-67A-BDY								
	VALVE BODY	B-M-2	VT-1	OCI 7-1				
RRC-V-67A-BLT								
	VALVE BOLTING	B-G-2	VT-1	OCI 7-1				
RRC-V-67A/3/4V-69A								
	VALVE VENT	B-P	VT-2	N/A				SEE NOTES #6 & #7.
24RRC(1)A-19								
	VALVE TO EL	B-J	VOL	UTP-10	UT-7			
			SUR	PTP-1				
24RRC(1)A-19LDO								
	EL SEAM	B-J	VOL	UTP-10	UT-7			
			SUR	PTP-1				
24RRC(1)A-19LDI								
	EL SEAM	B-J	VOL	UTP-10	UT-7			
			SUR	PTP-1				
RRC-SA-15								
	PSA-35 SNUBBER	B-K-2	VT-3	303/8.2.17				S/N 4169
			VT-4	303/8.2.17				S/N 4169
24RRC(1)A-20LUO								
	EL SEAM	B-J	VOL	UTP-10	UT-7			
			SUR	PTP-1				
24RRC(1)A-20LUI								
	EL SEAM	B-J	VOL	UTP-10	UT-7			
			SUR	PTP-1				
24RRC(1)A-20								
	EL TO PIPE	B-J	VOL	UTP-10	UT-7			
			SUR	PTP-1				

WNP-02
INTERVAL: PSI
PERIOD: NA
OUTAGE:
DRAWING NO. RRC-101

WASHINGTON PUBLIC POWER SUPPLY SYSTEM
PROGRAM PLAN AND SCHEDULE
SYSTEM OR COMPONENT: RRC(2)-4S
DESCRIPTION: REACTOR RECIR LOOP A

IDENT. NO.	DESCRIPTION	SECT. XI EXAM.	EXAM MTH.	PROCEDURE	CAL. BLOCK	INSERVICE REQ.	INSERVICE SCHEDULED OUTAGE	NOTES
24RRC(1)A-20LD								
	PIPE SEAM	B-J	VOL	UTP-10	UT-7			
			SUR	PTP-1				
RCR-8A								
	PIPE WHIP	N/A	N/A	N/A				SEE NOTE #1
24RRC(1)A-20/12RRC(7)-4S								
	PIPE TO SWL	B-J	VOL	UTP-10	UT-7			
			SUR	PTP-1				
24RRC(1)A-20/12CAP								
	PIPE TO SWL	B-J	VOL	UTP-10	UT-7			
			SUR	PTP-1				
24RRC(1)A-20/12CAP-1								
	SWL TO CAP	B-J	VOL	UTP-10	UT-19			FITTING TO FITTING
			SUR	PTP-1				FITTING TO FITTING
RRC-SA-8								
	PSA-35 SNUBBER	B-K-2	VT-3	303/8.2.17				S/N 4163
			VT-4	303/8.2.17				S/N 4163
RRC-SA-9								
	PSA-35 SNUBBER	B-K-2	VT-3	303/8.2.17				S/N 4165
			VT-4	303/8.2.17				S/N 4165
24RRC(1)A-20/3/4DO-14								
	SAMPLE CONN	B-P	VT-2	N/A				SEE NOTES #6 & #7.
RCR-9A								
	PIPE WHIP	N/A	N/A	N/A				SEE NOTE #1
RRC-SA-17								
	PSA-35 SNUBBER	B-K-2	VT-3	303/8.2.17				S/N 4217
			VT-4	303/8.2.17				S/N 4217

WNP-02
INTERVAL: PSI
PERIOD: NA
OUTAGE:
DRAWING NO. RRC-101

WASHINGTON PUBLIC POWER SUPPLY SYSTEM
PROGRAM PLAN AND SCHEDULE
SYSTEM OR COMPONENT: RRC(2)-4S
DESCRIPTION: REACTOR RECIR LOOP A

DATE 12/14/84

IDENT. NO.	DESCRIPTION	SECT. XI EXAM.	EXAM MTH.	PROCEDURE	CAL. BLOCK	INSERVICE REQ.	INSERVICE SCHEDULED OUTAGE	NOTES
RRC-SA-10								
	PSA-35 SNUBBER	B-K-2	VT-3	303/8.2.17				S/N 4219
			VT-4	303/8.2.17				S/N 4219
24RRC(1)A-21LU								
	PIPE SEAM	B-J	VOL	UTP-10	UT-7			
			SUR	PTP-1				
24RRC(1)A-21								
	PIPE TO CROSS	B-J	VOL	UTP-10	UT-7			
			SUR	PTP-1				
24RRC(1)A-21LDI								
	CROSS SEAM	B-J	VOL	UTP-10	UT-7			
			SUR	PTP-1				
24RRC(1)A-21LDO								
	CROSS SEAM	B-J	VOL	UTP-10	UT-7			
			SUR	PTP-1				
24RRC(1)A-22LUI								
	CROSS SEAM	B-J	VOL	UTP-10	UT-7			
			SUR	PTP-1				
24RRC(1)A-22LUO								
	CROSS SEAM	B-J	VOL	UTP-10	UT-7			
			SUR	PTP-1				
24RRC(1)A-22								
	CROSS-REDUCER	B-J	VOL	UTP-10	UT-7			FITTING TO FITTING
			SUR	PTP-1				FITTING TO FITTING
16RRC(1)A-1								
	CROSS TO PIPE	B-J	VOL	UTP-10	UT-13			
			SUR	PTP-1				

WNP-02
INTERVAL: PSI
PERIOD: NA
OUTAGE:
DRAWING NO. RRC-101

WASHINGTON PUBLIC POWER SUPPLY SYSTEM
PROGRAM PLAN AND SCHEDULE
SYSTEM OR COMPONENT: RRC(2)-4S
DESCRIPTION: REACTOR RECIR LOOP A

IDENT. NO.	DESCRIPTION	SECT. XI EXAM.	EXAM MTH.	PROCEDURE	CAL. BLOCK	INSERVICE REQ.	SCHEDULED OUTAGE	NOTES
16RRC(1)A-1LD								
	PIPE SEAM	B-J	VOL	UTP-10	UT-13			
			SUR	PTP-1				
RCR-13A								
	PIPE WHIP	N/A	N/A	N/A				SEE NOTE #1
RRC-HA-9								
	SPRING	B-K-2	VT-3	303/8.2.17				
			VT-4	303/8.2.17				
16RRC(1)A-1/12RRC(1)-N2D								
	PIPE TO SWL	B-J	VOL	UTP-10	UT-13			
			SUR	PTP-1				
RCR-14A								
	PIPE WHIP	N/A	N/A	N/A				SEE NOTE #1
RRC-SA-13								
	PSA-35 SNUBBER	B-K-2	VT-3	303/8.2.17				S/N 4193
			VT-4	303/8.2.17				S/N 4193
RRC-SA-11								
	PSA-35 SNUBBER	B-K-2	VT-3	303/8.2.17				S/N 4198
			VT-4	303/8.2.17				S/N 4198
RCR-15A								
	PIPE WHIP	N/A	N/A	N/A				SEE NOTE #1
16RRC(1)A-1/12RRC(1)-N2E								
	PIPE TO SWL	B-J	VOL	UTP-10	UT-13			
			SUR	PTP-1				
16RRC(1)A-2LU								
	PIPE SEAM	B-J	VOL	UTP-10	UT-13			
			SUR	PTP-1				
16RRC(1)A-2								
	PIPE TO CAP	B-J	VOL	UTP-10	UT-13			

WNP-02
INTERVAL: PSI
PERIOD: NA
OUTAGE:
DRAWING NO. RRC-101

WASHINGTON PUBLIC POWER SUPPLY SYSTEM
PROGRAM PLAN AND SCHEDULE
SYSTEM OR COMPONENT: RRC(2)-4S
DESCRIPTION: REACTOR RECIR LOOP A

DATE 12/14/84

IDENT. NO.	DESCRIPTION	SECT. XI EXAM.	EXAM MTH.	PROCEDURE	CAL. BLOCK	INSERVICE REQ.	INSERVICE SCHEDULED OUTAGE	NOTES
			SUR	PTP-1				
16RRC(1)A-3	CROSS TO PIPE	B-J	VOL	UTP-10	UT-13			
			SUR	PTP-1				
16RRC(1)A-3LD	PIPE SEAM	B-J	VOL	UTP-10	UT-13			
			SUR	PTP-1				
RCR-12A	PIPE WHIP	N/A	N/A	N/A				SEE NOTE #1
RRC-HA-8	SPRING	B-K-2	VT-3	303/8.2.17				
			VT-4	303/8.2.17				
16RRC(1)A-3/12RRC(1)-N2B	PIPE TO SWL	B-J	VOL	UTP-10	UT-13			
			SUR	PTP-1				
RCR-11A	PIPE WHIP	N/A	N/A	N/A				SEE NOTE #1
RRC-SA-12	PSA-35 SNUBBER	B-K-2	VT-3	303/8.2.17				S/N 4200
			VT-4	303/8.2.17				S/N 4200
RRC-SA-14	PSA-35 SNUBBER	B-K-2	VT-3	303/8.2.17				S/N 4195
			VT-4	303/8.2.17				S/N 4195
RCR-10A	PIPE WHIP	N/A	N/A	N/A				SEE NOTE #1
16RRC(1)A-3/12RRC(1)-N2A	PIPE TO SWL	B-J	VOL	UTP-10	UT-13			
			SUR	PTP-1				

WNP-02
INTERVAL: PSI
PERIOD: NA
OUTAGE:
DRAWING NO. RRC-101

WASHINGTON PUBLIC POWER SUPPLY SYSTEM
PROGRAM PLAN AND SCHEDULE
SYSTEM OR COMPONENT: RRC(2)-4S
DESCRIPTION: REACTOR RECIR LOOP A

DATE 12/14/84

IDENT. NO.	DESCRIPTION	SECT. XI EXAM.	EXAM MTH.	PROCEDURE	CAL. BLOCK	INSERVICE REQ.	SCHEDULED OUTAGE	NOTES
16RRC(1)A-4LU	PIPE SEAM	B-J	VOL	UTP-10	UT-13			
			SUR	PTP-1				
16RRC(1)A-4	PIPE TO CAP	B-J	VOL	UTP-10	UT-13			
			SUR	PTP-1				
12RRC(1)-N2A-1	SWL TO PIPE	B-J	VOL	UTP-10	UT-19			
			SUR	PTP-1				
12RRC(1)-N2A-1LD	PIPE SEAM	B-J	VOL	UTP-10	UT-19			
			SUR	PTP-1				
12RRC(1)-N2A-1ALU	PIPE SEAM	B-J	VOL	UTP-10	UT-19			
			SUR	PTP-1				
12RRC(1)-N2A-1A	PIPE TO PIPE	B-J	VOL	UTP-10	UT-19			
			SUR	PTP-1				
12RRC(1)-N2A-1ALD	PIPE SEAM	B-J	VOL	UTP-10	UT-19			
			SUR	PTP-1				
RCR-16A	PIPE WHIP	N/A	N/A	N/A				SEE NOTE #1
12RRC(1)-N2A-2LU	PIPE SEAM	B-J	VOL	UTP-10	UT-19			
			SUR	PTP-1				
12RRC(1)-N2A-2	PIPE TO EL	B-J	VOL	UTP-10	UT-19			

WNP-02
INTERVAL: PSI
PERIOD: NA
OUTAGE:
DRAWING NO. RRC-101

WASHINGTON PUBLIC POWER SUPPLY SYSTEM
PROGRAM PLAN AND SCHEDULE
SYSTEM OR COMPONENT: RRC(2)-4S
DESCRIPTION: REACTOR RECIR LOOP A

IDENT. NO.	DESCRIPTION	SECT. XI EXAM.	EXAM MTH.	PROCEDURE	CAL. BLOCK	INSERVICE REQ.	SCHEDULED OUTAGE	NOTES
			SUR	PTP-1				
12RRC(1)-N2B-1	SWL TO PIPE	B-J	VOL	UTP-10	UT-19			
			SUR	PTP-1				
12RRC(1)-N2B-1LD	PIPE SEAM	B-J	VOL	UTP-10	UT-19			
			SUR	PTP-1				
12RRC(1)-N2B-1ALU	PIPE SEAM	B-J	VOL	UTP-10	UT-19			
			SUR	PTP-1				
12RRC(1)-N2B-1A	PIPE TO PIPE	B-J	VOL	UTP-10	UT-19			
			SUR	PTP-1				
12RRC(1)-N2B-1ALD	PIPE SEAM	B-J	VOL	UTP-10	UT-19			
			SUR	PTP-1				
RCR-17A	PIPE WHIP	N/A	N/A	N/A				SEE NOTE #1
12RRC(1)-N2B-2LU	PIPE SEAM	B-J	VOL	UTP-10	UT-19			
			SUR	PTP-1				
12RRC(1)-N2B-2	PIPE TO EL	B-J	VOL	UTP-10	UT-19			
			SUR	PTP-1				
12RRC(1)-N2B-2LDD	EL SEAM	B-J	VOL	UTP-10	UT-19			
			SUR	PTP-1				

WNP-02
INTERVAL: PSI
PERIOD: NA
OUTAGE:
DRAWING NO. RRC-101

WASHINGTON PUBLIC POWER SUPPLY SYSTEM
PROGRAM PLAN AND SCHEDULE
SYSTEM OR COMPONENT: RRC(2)-4S
DESCRIPTION: REACTOR RECIR LOOP A

IDENT. NO.	DESCRIPTION	SECT. XI EXAM.	EXAM MTH.	PROCEDURE	CAL. BLOCK	INSERVICE REQ.	INSERVICE SCHEDULED OUTAGE	NOTES
12RRC(1)-N2A-2LDO	EL SEAM	B-J	SUR	PTP-1				
			VOL	UTP-10	UT-19			
12RRC(1)-N2A-2LDI	EL SEAM	B-J	SUR	PTP-1				
			VOL	UTP-10	UT-19			
12RRC(1)-N2A-3LUO	EL SEAM	B-J	SUR	PTP-1				
			VOL	UTP-10	UT-19			
12RRC(1)-N2A-3LUI	EL SEAM	B-J	SUR	PTP-1				
			VOL	UTP-10	UT-19			
12RRC(1)-N2A-3	EL SEAM	B-J	SUR	PTP-1				
			VOL	UTP-10	UT-19			
12RRC(1)-N2A-3LD	PIPE SEAM	B-J	SUR	PTP-1				
			VOL	UTP-10	UT-19			
12RRC(1)-N2A-4LU	PIPE SEAM	B-J	SUR	PTP-1				
			VOL	UTP-10	UT-19			
12RRC(1)-N2A-4	PIPE TO SE EXT	B-J	SUR	PTP-1				
			VOL	UTP-10	UT-19			
12RRC(1)-N2A-6	SE TO NOZ	B-F	SUR	PTP-1				
			VOL	UTP-10	UT-111			

WNP-02
INTERVAL: PSI
PERIOD: NA
OUTAGE:
DRAWING NO. RRC-101

WASHINGTON PUBLIC POWER SUPPLY SYSTEM
PROGRAM PLAN AND SCHEDULE
SYSTEM OR COMPONENT: RRC(2)-4S
DESCRIPTION: REACTOR RECIR LOOP A

IDENT. NO.	DESCRIPTION	SECT. XI EXAM.	EXAM MTH.	PROCEDURE	CAL. BLOCK	INSERVICE REQ.	SCHEDULED OUTAGE	NOTES
12RRC(1)-N2B-2LDI	EL SEAM	B-J	VOL	UTP-10	UT-19			
			SUR	PTP-1				
12RRC(1)-N2B-3LUO	EL SEAM	B-J	VOL	UTP-10	UT-19			
			SUR	PTP-1				
12RRC(1)-N2B-3LUI	EL SEAM	B-J	VOL	UTP-10	UT-19			
			SUR	PTP-1				
12RRC(1)-N2B-3	EL TO PIPE	B-J	VOL	UTP-10	UT-19			
			SUR	PTP-1				
12RRC(1)-N2B-3LD	PIPE SEAM	B-J	VOL	UTP-10	UT-19			
			SUR	PTP-1				
12RRC(1)-N2B-4LU	PIPE SEAM	B-J	VOL	UTP-10	UT-19			
			SUR	PTP-1				
12RRC(1)-N2B-4	PIPE TO SE EXT	B-J	VOL	UTP-10	UT-19			
			SUR	PTP-1				
12RRC(1)-N2B-6	SE TO NOZ	B-F	VOL	UTP-10	UT-111			
			SUR	PTP-1				
12RRC(1)-N2C-1	REDUCER TO PIPE	B-J	VOL	UTP-10	UT-19			
			SUR	PTP-1				

WNP-02
INTERVAL: PSI
PERIOD: NA
OUTAGE:
DRAWING NO. RRC-101

WASHINGTON PUBLIC POWER SUPPLY SYSTEM
PROGRAM PLAN AND SCHEDULE
SYSTEM OR COMPONENT: RRC(2)-4S
DESCRIPTION: REACTOR RECIR LOOP A

IDENT. NO.	DESCRIPTION	SECT. XI EXAM.	EXAM MTH.	PROCEDURE	CAL. BLOCK	INSERVICE REQ.	INSERVICE SCHEDULED OUTAGE	NOTES
12RRC(1)-N2C-1LD	PIPE SEAM	B-J	VOL	UTP-10	UT-19			
			SUR	PTP-1				
12RRC(1)-N2C-1ALU	PIPE SEAM	B-J	VOL	UTP-10	UT-19			
			SUR	PTP-1				
12RRC(1)-N2C-1A	PIPE TO PIPE	B-J	VOL	UTP-10	UT-19			
			SUR	PTP-1				
12RRC(1)-N2C-1ALD	PIPE SEAM	B-J	VOL	UTP-10	UT-19			
			SUR	PTP-1				
RCR-18A	PIPE WHIP	N/A	N/A	N/A				SEE NOTE #1
12RRC(1)-N2C-2LU	PIPE SEAM	B-J	VOL	UTP-10	UT-19			
			SUR	PTP-1				
12RRC(1)-N2C-2	PIPE TO EL	B-J	VOL	UTP-10	UT-19			
			SUR	PTP-1				
12RRC(1)-N2C-2LDO	EL SEAM	B-J	VOL	UTP-10	UT-19			
			SUR	PTP-1				
12RRC(1)-N2C-2LDI	EL SEAM	B-J	VOL	UTP-10	UT-19			
			SUR	PTP-1				
12RRC(1)-N2C-3LUO	EL SEAM	B-J	VOL	UTP-10	UT-19			

WNP-02
INTERVAL: PSI
PERIOD: NA
OUTAGE:
DRAWING NO. RRC-101

WASHINGTON PUBLIC POWER SUPPLY SYSTEM
PROGRAM PLAN AND SCHEDULE
SYSTEM OR COMPONENT: RRC(2)-4S
DESCRIPTION: REACTOR RECIR LOOP A

IDENT. NO.	DESCRIPTION	SECT. XI EXAM.	EXAM MTH.	PROCEDURE	CAL. BLOCK	INSERVICE REQ.	INSERVICE SCHEDULED OUTAGE	NOTES
12RRC(1)-N2C-3LUI	EL SEAM	B-J	SUR	PTP-1				
			VOL	UTP-10	UT-19			
12RRC(1)-N2C-3	EL TO PIPE	B-J	SUR	PTP-1				
			VOL	UTP-10	UT-19			
12RRC(1)-N2C-3LD	PIPE SEAM	B-J	SUR	PTP-1				
			VOL	UTP-10	UT-19			
12RRC(1)-N2C-4LU	PIPE SEAM	B-J	SUR	PTP-1				
			VOL	UTP-10	UT-19			
12RRC(1)-N2C-4	PIPE TO SE EXT	B-J	SUR	PTP-1				
			VOL	UTP-10	UT-19			
12RRC(1)-N2C-6	SE TO NOZ	B-J	SUR	PTP-1				
			VOL	UTP-10	UT-111			
12RRC(1)-N2D-1	SWL TO PIPE	B-J	SUR	PTP-1				
			VOL	UTP-10	UT-19			
12RRC(1)-N2D-1LD	PIPE SEAM	B-J	SUR	PTP-1				
			VOL	UTP-10	UT-19			
12RRC(1)-N2D-1ALU	PIPE SEAM	B-J	SUR	PTP-1				
			VOL	UTP-10	UT-19			

WNP-02
INTERVAL: PSI
PERIOD: NA
OUTAGE:
DRAWING NO. RRC-101

WASHINGTON PUBLIC POWER SUPPLY SYSTEM
PROGRAM PLAN AND SCHEDULE
SYSTEM OR COMPONENT: RRC(2)-4S
DESCRIPTION: REACTOR RECIR LOOP A

IDENT. NO.	DESCRIPTION	SECT. XI EXAM.	EXAM MTH.	PROCEDURE	CAL. BLOCK	INSERVICE REQ.	SCHEDULED OUTAGE	NOTES
			SUR	PTP-1				
12RRC(1)-N2D-1A	PIPE TO PIPE	B-J	VOL	UTP-10	UT-19			
			SUR	PTP-1				
12RRC(1)-N2D-1ALD	PIPE SEAM	B-J	VOL	UTP-10	UT-19			
			SUR	PTP-1				
RCR-19A	PIPE WHIP	N/A	N/A	N/A				SEE NOTE #1
12RRC(1)-N2D-2LU	PIPE SEAM	B-J	VOL	UTP-10	UT-19			
			SUR	PTP-1				
12RRC(1)-N2D-2	PIPE TO EL	B-J	VOL	UTP-10	UT-19			
			SUR	PTP-1				
12RRC(1)-N2D-2LDO	EL SEAM	B-J	VOL	UTP-10	UT-19			
			SUR	PTP-1				
12RRC(1)-N2D-2LDI	EL SEAM	B-J	VOL	UTP-10	UT-19			
			SUR	PTP-1				
12RRC(1)-N2D-3LUO	EL SEAM	B-J	VOL	UTP-10	UT-19			
			SUR	PTP-1				
12RRC(1)-N2D-3LUI	EL SEAM	B-J	VOL	UTP-10	UT-19			
			SUR	PTP-1				

WNP-02
INTERVAL: PSI
PERIOD: NA
OUTAGE:
DRAWING NO. RRC-101

WASHINGTON PUBLIC POWER SUPPLY SYSTEM
PROGRAM PLAN AND SCHEDULE
SYSTEM OR COMPONENT: RRC(2)-4S
DESCRIPTION: REACTOR RECIR LOOP A

IDENT. NO.	DESCRIPTION	SECT. XI EXAM.	EXAM MTH.	PROCEDURE	CAL. BLOCK	INSERVICE REQ.	INSERVICE SCHEDULED OUTAGE	NOTES
12RRC(1)-N2E-1ALD	PIPE SEAM	B-J	VOL	UTP-10	UT-19			
			SUR	PTP-1				
RCR-20A	PIPE WHIP	N/A	N/A	N/A				SEE NOTE #1
12RRC(1)-N2E-2LU	PIPE SEAM	B-J	VOL	UTP-10	UT-19			
			SUR	PTP-1				
12RRC(1)-N2E-2	PIPE TO EL	B-J	VOL	UTP-10	UT-19			
			SUR	PTP-1				
12RRC(1)-N2E-2LDO	EL SEAM	B-J	VOL	UTP-10	UT-19			
			SUR	PTP-1				
12RRC(1)-N2E-2LDI	EL SEAM	B-J	VOL	UTP-10	UT-19			
			SUR	PTP-1				
12RRC(1)-N2E-3LUO	EL SEAM	B-J	VOL	UTP-10	UT-19			
			SUR	PTP-1				
12RRC(1)-N2E-3LUI	EL SEAM	B-J	VOL	UTP-10	UT-19			
			SUR	PTP-1				
12RRC(1)-N2E-3	EL TO PIPE	B-J	VOL	UTP-10	UT-19			
			SUR	PTP-1				
12RRC(1)-N2E-3LD	PIPE SEAM	B-J	VOL	UTP-10	UT-19			

WNP-02
INTERVAL: PSI
PERIOD: NA
OUTAGE:
DRAWING NO. RRC-101

WASHINGTON PUBLIC POWER SUPPLY SYSTEM
PROGRAM PLAN AND SCHEDULE
SYSTEM OR COMPONENT: RRC(2)-4S
DESCRIPTION: REACTOR RECIR LOOP A

IDENT. NO.	DESCRIPTION	SECT. XI EXAM.	EXAM MTH.	PROCEDURE	CAL. BLOCK	INSERVICE REQ.	SCHEDULED OUTAGE	NOTES
12RRC(1)-N2D-3	EL TO PIPE	B-J	VOL	UTP-10	UT-19			
			SUR	PTP-1				
12RRC(1)-N2D-3LD	PIPE SEAM	B-J	VOL	UTP-10	UT-19			
			SUR	PTP-1				
12RRC(1)-N2D-4LU	PIPE SEAM	B-J	VOL	UTP-10	UT-19			
			SUR	PTP-1				
12RRC(1)-N2D-4	PIPE TO SE EXT	B-J	VOL	UTP-10	UT-19			
			SUR	PTP-1				
12RRC(1)-N2D-6	SE TO NOZ	B-J	VOL	UTP-10	UT-111			
			SUR	PTP-1				
12RRC(1)-N2E-1	SWL TO PIPE	B-J	VOL	UTP-10	UT-19			
			SUR	PTP-1				
12RRC(1)-N2E-1LD	PIPE SEAM	B-J	VOL	UTP-10	UT-19			
			SUR	PTP-1				
12RRC(1)-N2E-1ALU	PIPE SEAM	B-J	VOL	UTP-10	UT-19			
			SUR	PTP-1				
12RRC(1)-N2E-1A	PIPE TO PIPE	B-J	VOL	UTP-10	UT-19			
			SUR	PTP-1				

WNP-02
INTERVAL: PSI
PERIOD: NA
OUTAGE:
DRAWING NO. RRC-101

WASHINGTON PUBLIC POWER SUPPLY SYSTEM
PROGRAM PLAN AND SCHEDULE
SYSTEM OR COMPONENT: RRC(2)-4S
DESCRIPTION: REACTOR RECIR LOOP A

DATE 12/14/84

IDENT. NO.	DESCRIPTION	SECT. XI EXAM.	EXAM MTH.	PROCEDURE	CAL. BLOCK	INSERVICE REQ.	INSERVICE SCHEDULED OUTAGE	NOTES
			SUR	PTP-1				
12RRC(1)-N2E-4LU	PIPE SEAM	B-J	VOL	UTP-10	UT-19			
			SUR	PTP-1				
12RRC(1)-N2E-4	PIPE TO SE EXT	B-J	VOL	UTP-10	UT-19			
			SUR	PTP-1				
12RRC(1)-N2E-6	SE TO NOZ	B-F	VOL	UTP-10	UT-111			
			SUR	PTP-1				
RRC-PB-101	RRC PRES BNDRY	B-P	VT-2	N/A				SEE NOTES #6 & #7.

WNP-02
INTERVAL: PSI
PERIOD: NA
OUTAGE:
DRAWING NO. RFW-103

WASHINGTON PUBLIC POWER SUPPLY SYSTEM
PROGRAM PLAN AND SCHEDULE
SYSTEM OR COMPONENT: RFW(11)-4
DESCRIPTION: REACTOR FEEDWATER

IDENT. NO.	DESCRIPTION	SECT. XI EXAM.	EXAM MTH.	PROCEDURE	CAL. BLOCK	INSERVICE REQ.	INSERVICE SCHEDULED OUTAGE	NOTES
RWCU-V-40-BDY								
	VALVE BODY	B-M-2	VT-1	GCI 7-1				
RWCU-V-40-BLT								
	VALVE BOLTING	B-G-2	VT-1	GCI 7-1				
6RFW(11)-1								
	VALVE TO PIPE	B-J	VOL	UTP-10	UT-28			AUGMT
			SUR	PTP-1				AUGMT
6RFW(11)-2								
	PIPE TO EL	B-J	VOL	UTP-10	UT-28			AUGMT
			SUR	PTP-1				AUGMT
6RFW(11)-2/3/4V-124								
	TEST CONN	B-P	VT-2	N/A				SEE NOTES #6 & #7.
6RFW(11)-2/3/4V-71								
	TEST CONN	B-P	VT-2	N/A				SEE NOTES #6 & #7.
6RFW(11)-3								
	EL TO PIPE	B-J	VOL	UTP-10	UT-28			AUGMT
			SUR	PTP-1				AUGMT
RFW-177								
	SPRING	B-K-2	VT-3	303/8.2.17				
			VT-4	303/8.2.17				
RFW-178								
	BOX	B-K-2	VT-3	303/8.2.17				
RFW-942N								
	PSA-1 SN(2)	B-K-2	VT-3	303/8.2.17				S/N 371
			VT-4	303/8.2.17				S/N 371
6RFW(11)-4								
	PIPE TO EL	B-J	VOL	UTP-10	UT-28			AUGMT
			SUR	PTP-1				AUGMT

WNP-02
INTERVAL: PSI
PERIOD: NA
OUTAGE:
DRAWING NO. RFW-103

WASHINGTON PUBLIC POWER SUPPLY SYSTEM
PROGRAM PLAN AND SCHEDULE
SYSTEM OR COMPONENT: RFW(11)-4
DESCRIPTION: REACTOR FEEDWATER

DATE 12/14/84

IDENT. NO.	DESCRIPTION	SECT. XI EXAM.	EXAM MTH.	PROCEDURE	CAL. BLOCK	INSERVICE REQ.	INSERVICE SCHEDULED OUTAGE	NOTES
6RFW(11)-5								
	EL TO PIPE	B-J	VOL	UTP-10	UT-28			AUGMT
			SUR	PTP-1				AUGMT
6RFW(11)-6								
	PIPE TO EL	B-J	VOL	UTP-10	UT-28			AUGMT
			SUR	PTP-1				AUGMT
6RFW(11)-7								
	EL TO PIPE	B-J	VOL	UTP-10	UT-28			AUGMT
			SUR	PTP-1				AUGMT
RFW-179								
	SPRING	B-K-2	VT-3	303/8.2.17				
			VT-4	303/8.2.17				
6RFW(11)-8								
	PIPE TO TEE	B-J	VOL	UTP-10	UT-28			AUGMT
			SUR	PTP-1				AUGMT
4RFW(11)A-1								
	TEE TO PIPE	B-J	VOL	QCI 6-13	UT-30			AUGMT
			SUR	QCI 3-3				AUGMT
4RFW(11)A-2								
	PIPE TO EL	B-J	VOL	UTP-10	UT-30			AUGMT
			SUR	PTP-1				AUGMT
4RFW(11)A-3								
	EL TO SLEEVE	B-J	VOL	UTP-10	UT-30			AUGMT
			SUR	PTP-1				AUGMT
6RFW(11)-9								
	TEE TO PIPE	B-J	VOL	UTP-10	UT-28			AUGMT

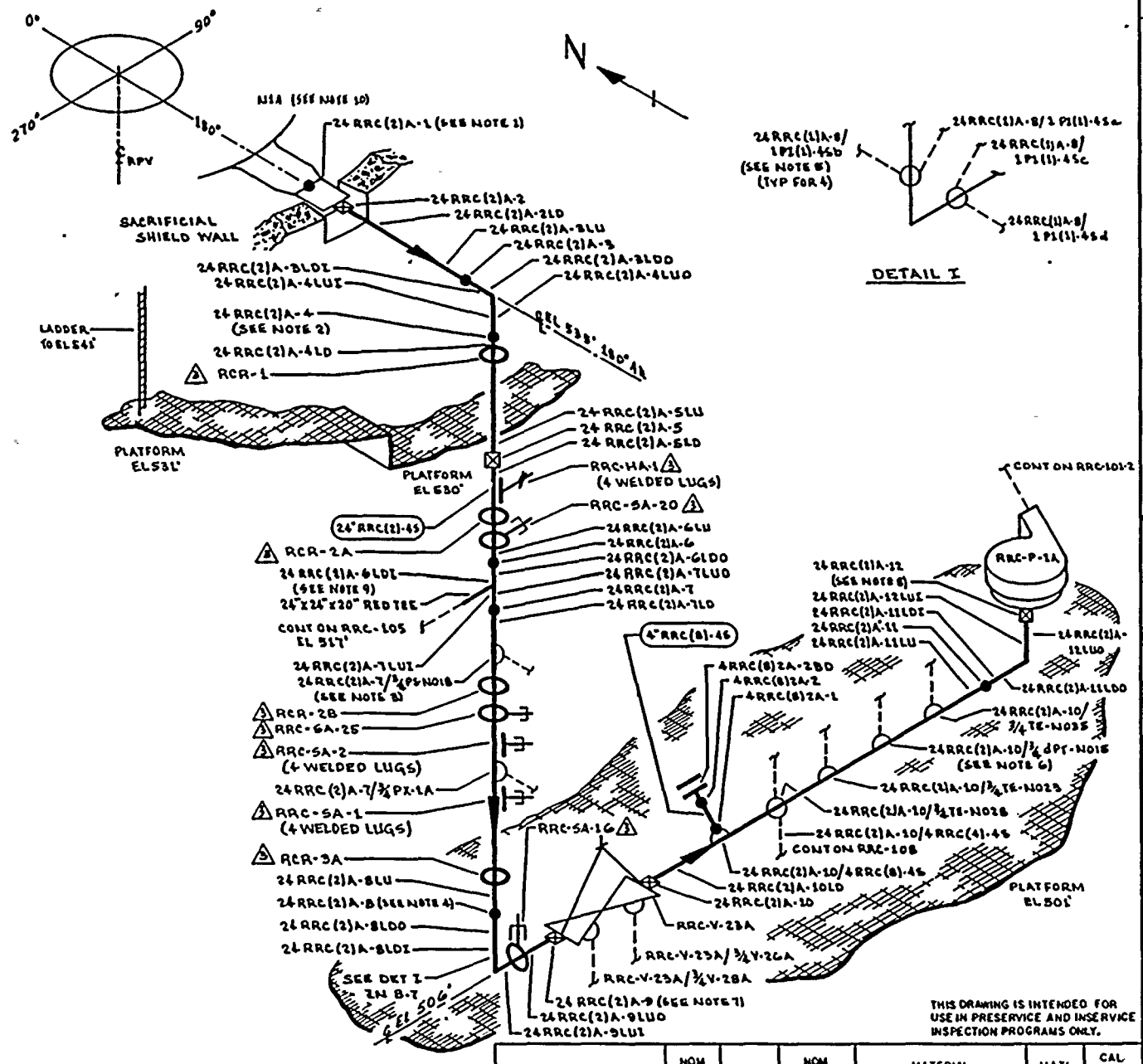

NOTES:

1. WELD 24RRC(2)A-1 UTILIZES CAL BLOCK UT-101.
2. ACCESS TO WELD 24RRC(2)A-4 REQUIRES REMOVAL OF RCR-1.
3. EXTEND LEAKAGE EXAM THROUGH CONTAINMENT PENETRATION (L-78C) THROUGH EXCESS FLOW CHECK VALVE TO INSTRUMENT TUBING CONNECTION.
4. ACCESS TO WELD 24RRC(2)A-8 REQUIRES REMOVAL OF RCR-3A.
5. EXTEND LEAKAGE EXAM THROUGH CONTAINMENT PENETRATIONS (X-40c, X-40d, X-61a, & X-61b) THROUGH EXCESS FLOW CHECK VALVES TO INSTRUMENT TUBING CONNECTIONS.
6. EXTEND LEAKAGE EXAM THROUGH CONTAINMENT PENETRATION (X-70F) THROUGH EXCESS FLOW CHECK VALVE TO INSTRUMENT TUBING CONNECTION.
7. WELD 24RRC(2)A-9 IS FITTING TO FITTING.
8. WELD 24RRC(2)A-12 IS FITTING TO FITTING.
9. LONGITUDINAL WELDS LOCATED INBOARD & OUTBOARD ON THE RED TEE, WITH RESPECT TO THE RPV, ARE 90° FROM THE BRANCH CONNECTION.
10. FOR NOZZLE ASSY. DET SEE RPV-105.
11. PIPING PURCHASED TO MIN. WALL SPEC – 0.910".

REFERENCES:

GENERAL ELECTRIC DRAWINGS

761 E 424	REV 2	761 E 735	REV 6
162 E 538 SH 1	REV 3	131 C 7587	REV 3
162 E 538 SH 2	REV 3	131 C 7586	REV 4

CBS NUCLEAR CO.

48, REV 4, N1 NOZZLE ASSEMBLY

BOVEE CRAIL/GERI

BC/G-215 REV 7

KEYPLAN

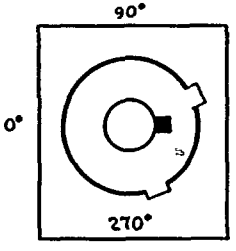

QUALITY CLASS: 1	ASME CODE CLASS: 1	
ENGR: D TIMMINS	DRAWN: K.M.A.	DATE: 4-3-78

THIS DRAWING IS INTENDED FOR USE IN PRESERVICE AND INSERVICE INSPECTION PROGRAMS ONLY.

WASHINGTON PUBLIC POWER SUPPLY SYSTEM
RICHLAND WASHINGTON 99352

PIPING SYSTEM	NOM DIA (IN)	SCH	NOM WALL THK	MATERIAL SPECIFICATION	MATL TYPE	CAL BLOCK NO
24" RRC(2)-45	24	XXX	SEE NOTE 11	SA 358 GR 304 CL 2	SS	UT-7
4" RRC(8)-45	4	80	0.237	SA 376 TP 304	SS	UT-31
LUGS	NA	NA	NA	SA 240 TP 304	SS	UT-47

NO	DATE	REVISION	BY	CHKD	APPVD
B	12-11-83	REVISED AS NOTED ADDED KEYPLAN & LUGS	K.M.A.	MK	TTH
2	11-5-80	ADDED NOTE 10, REVISED AS NOTED	K.M.A.	[illegible]	[illegible]
1	7-12-79	CORRECTED TEE TO WELDED TEE, ZN D-4	K.M.A.	[illegible]	[illegible]
0	11-27-78	ISSUED FOR USE	K.M.A.	[illegible]	[illegible]
A	5-19-78	ISSUED FOR INFORMATION ONLY	K.M.A.	[illegible]	[illegible]

WNP-2
WELD & COMPONENT IDENTIFICATION DIAGRAM

TITLE: REACTOR RECIRCULATION LOOP A

DWG NO: RRC-101-1 REV B

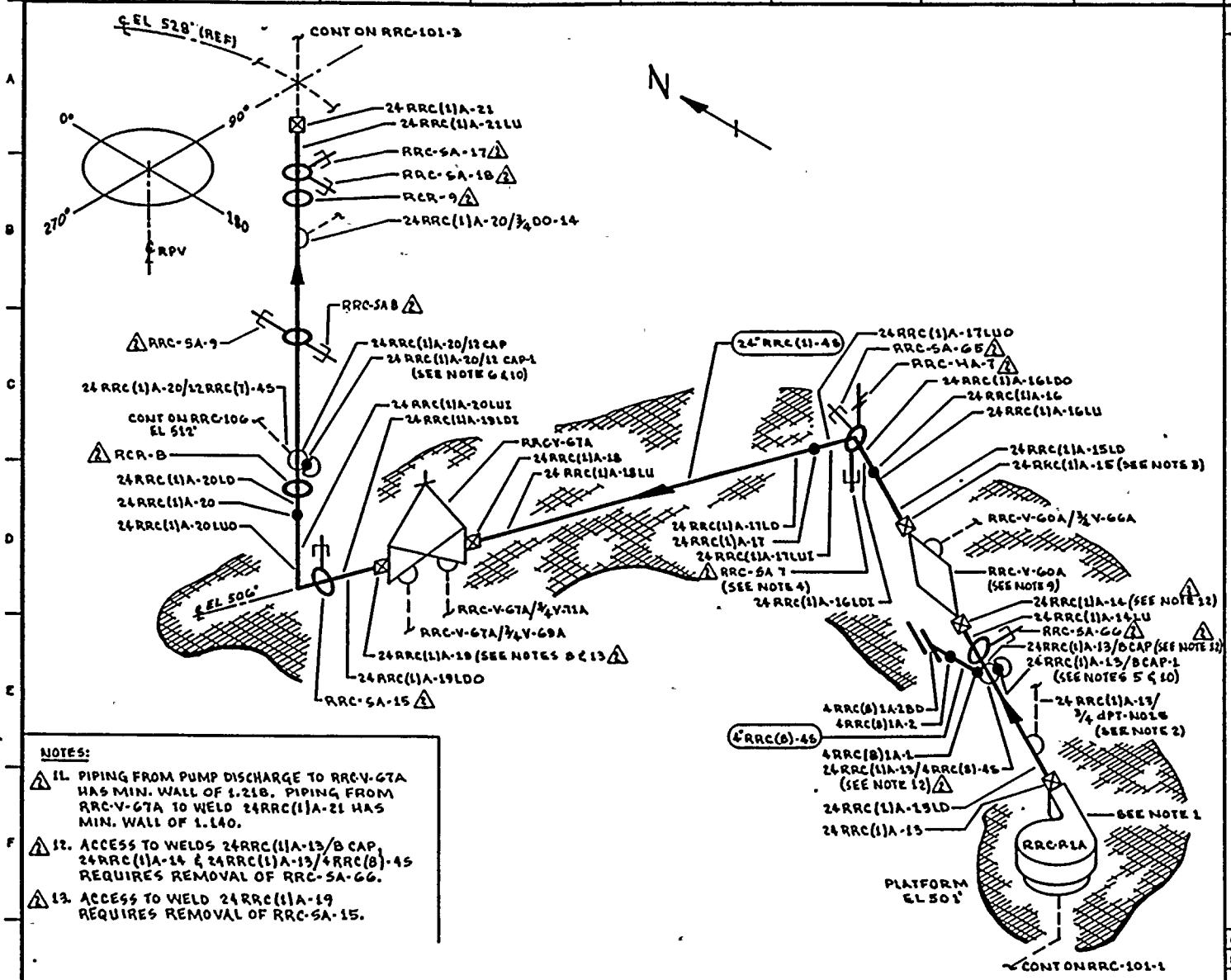

NOTES:

△1 11. PIPING FROM PUMP DISCHARGE TO RRC-V-67A HAS MIN. WALL OF 1.218. PIPING FROM RRC-V-67A TO WELD 24RRC(1)A-21 HAS MIN. WALL OF 1.140.

△1 12. ACCESS TO WELDS 24RRC(1)A-13/B CAP, 24RRC(1)A-14 & 24RRC(1)A-13/4RRC(8)-45 REQUIRES REMOVAL OF RRC-SA-66.

△1 13. ACCESS TO WELD 24RRC(1)A-19 REQUIRES REMOVAL OF RRC-SA-15.

NOTES:

1. SEE RRC-P-1A DETAIL DWG RRC-103 FOR PUMP SUPPORT DETAILS.
2. EXTEND LEAKAGE EXAM THROUGH CONTAINMENT PENETRATION (X-704) THROUGH EXCESS FLOW CHECK VALVE TO INSTRUMENT TUBING CONNECTION.
3. DELETED △1
4. SPECIAL CLAMP WITH HA7 & SA7 ATTACHMENTS.
5. WELD 24RRC(1)A-13/8CAP 1 IS FITTING TO FITTING.
6. WELD 24RRC(1)A-20/10 CAP 1 IS FITTING TO FITTING.
7. EXTEND LEAKAGE EXAM THROUGH CONTAINMENT PENETRATION (X-694) THROUGH VALVE RRC-V-20.
8. WELD 24RRC(1)A-19 IS FITTING TO FITTING.
9. RRC-V-60A HAS TWELVE (12) 2¼" X 15" BODY TO BONNET STUDS.
10. CAP TO NOZZLE WELDS ARE CLAD ON THE ID IN THE WELD AREAS. SEE REF. DWGS. 131 C 1588 & 131 C 1589.

REFERENCES:

GENERAL ELECTRIC DRAWINGS:

761 E 424	REV 2	131 C 1588	REV 3
162 E 538 SH 1	REV 1	131 C 1589	REV 5
162 E 538 SH 2	REV 1	131 C 1582	REV 3
761 E 735	REV 6		

BOVEE CRAIL/GERI

BC/G-216 REV B

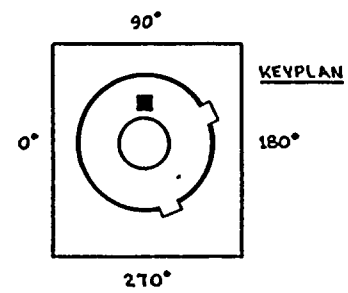

THIS DRAWING IS INTENDED FOR USE IN PRESERVICE AND INSERVICE INSPECTION PROGRAMS ONLY.

PIPING SYSTEM	NOM DIA (IN)	SCH	NOM WALL THK	MATERIAL SPECIFICATION	MATL TYPE	CAL BLOCK NO
24" RRC(1)-45	24	XXX	SEE NOTE 11	SA 358 GR 304 CL 2	SS	UT-7
4" RRC(8)-45	4	80	0.337	SA 376 Tp 304	SS	UT-31
CAP	12	80	0.688	SA 403 GR WP 304	-	UT-19
CAP	8	-	0.500	- - - - -	-	UT-26

NO	DATE	REVISION	BY	CHKD	APPVD
2	10-15-82	REVISED AS NOTED ADDED KEYPLAN.	KMA	JAC	DW
1	11-5-80	REVISED AS NOTED	KMA	TTK	DW
0	11-27-78	ISSUED FOR USE	KMA	RCJ	DW
A	5-19-78	ISSUED FOR INFORMATION ONLY	KMA	HCM	DW

QUALITY CLASS: 1 | ASME CODE CLASS: 1

ENGR: D TIMMINS | DRAWN: K. M. A | DATE: 4-6-78

WASHINGTON PUBLIC POWER SUPPLY SYSTEM

RICHLAND, WASHINGTON 99352

WNP-2

WELD & COMPONENT IDENTIFICATION DIAGRAM

TITLE: REACTOR RECIRCULATION LOOP A

DWG NO: RRC-101-2 | REV 2

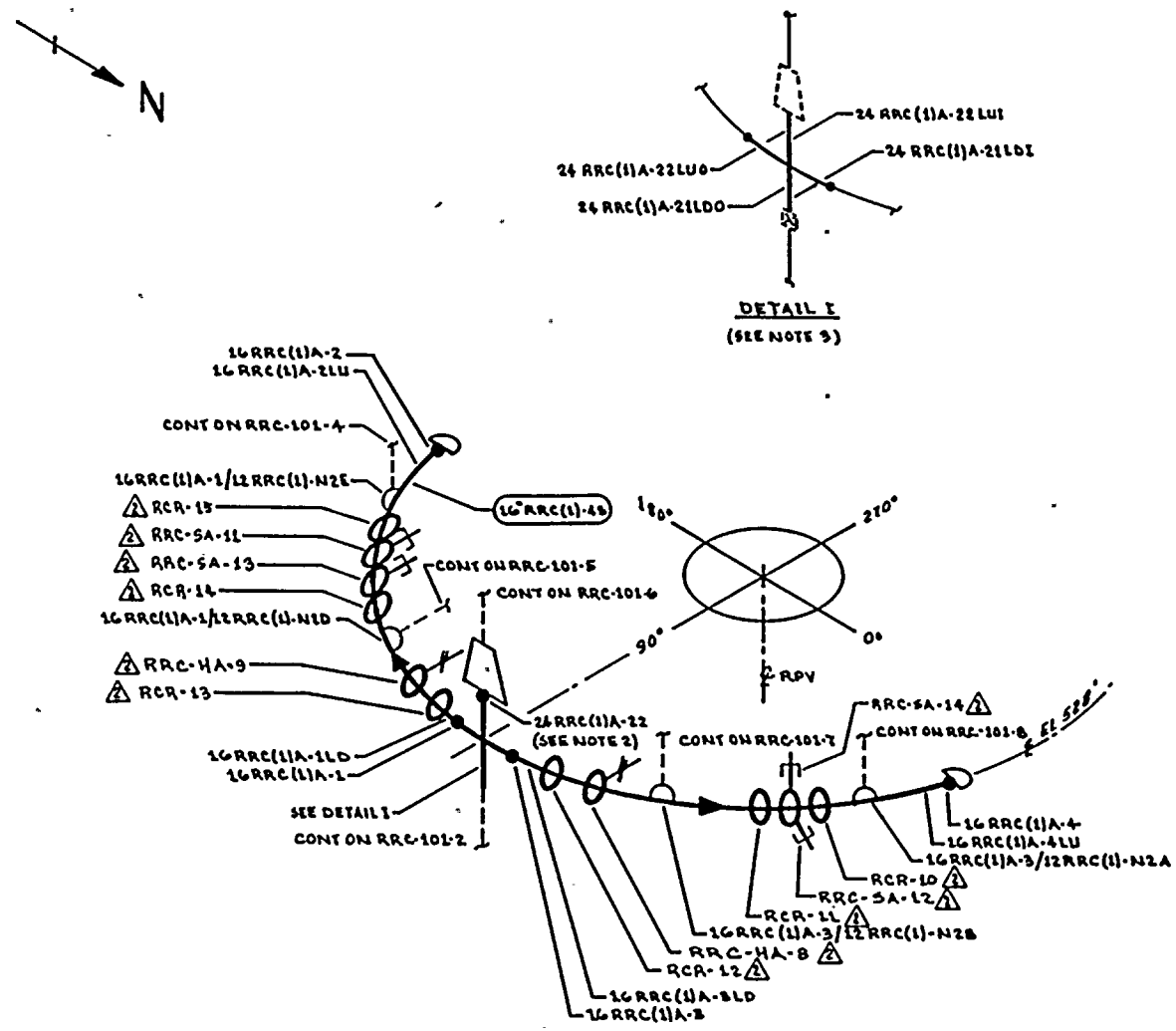

NOTES:

1. ACCESS TO WELDS 16 RRC(1)A-1 THRU 4 & 24 RRC(1)A-22 REQUIRES TEMPORARY SCAFFOLDING.
2. WELD 24 RRC(1)A-22 IS FITTING TO FITTING.
3. LONGITUDINAL WELDS ON CROSS LOCATED INBOARD & OUTBOARD, WITH RESPECT TO RPV, ARE 90° FROM THE HEADER CONN.
4. PIPING PURCHASED TO MIN WALL SPECIFICATION. MIN WALL 0.758". (1)

REFERENCES:

GENERAL ELECTRIC DRAWINGS

761 E 424		REV 2
762 E 538	SH 1	REV 3
762 E 538	SH 2	REV 3
761 E 735		REV 6
131 C 7590		REV 1

BOVEE CRAIL / GERT

BC/G-216 REV 8

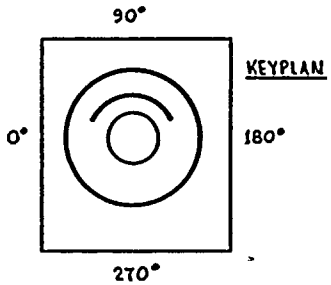

QUALITY CLASS: 1	ASME CODE CLASS: 1	
ENGR: D TIMMINS	DRAWN: K. McA	DATE: 4-6-78

THIS DRAWING IS INTENDED FOR USE IN PRESERVICE AND INSERVICE INSPECTION PROGRAMS ONLY.

WASHINGTON PUBLIC POWER SUPPLY SYSTEM
RICHLAND, WASHINGTON 99352

PIPING SYSTEM	NOM DIA (IN)	SCH	NOM WALL THK	MATERIAL SPECIFICATION	MATL TYPE	CAL BLOCK NO
16" RRC(1)-4S	16	XXX	SEE NOTE 4	SA 358 GR 304 CL I	33	U1-13

NO	DATE	REVISION	BY	CHKD	APPVD
2	10-13-83	REVISED AS NOTED ADDED KEYPLAN	K.McA		
1	7-27-79	REVISED RISER LETTERING TO REFLECT AS BUILT, REVISED CROSS TO WELDED CROSS, ADDED DETAIL FOR CLARITY	K.McA		
0	11-27-78	ISSUED FOR USE	K.McA		
A	5-19-78	ISSUED FOR INFORMATION ONLY	K.McA		

WNP-2
WELD & COMPONENT IDENTIFICATION DIAGRAM

TITLE:
REACTOR RECIRCULATION LOOP A

DWG NO: RRC-101-3 REV 2

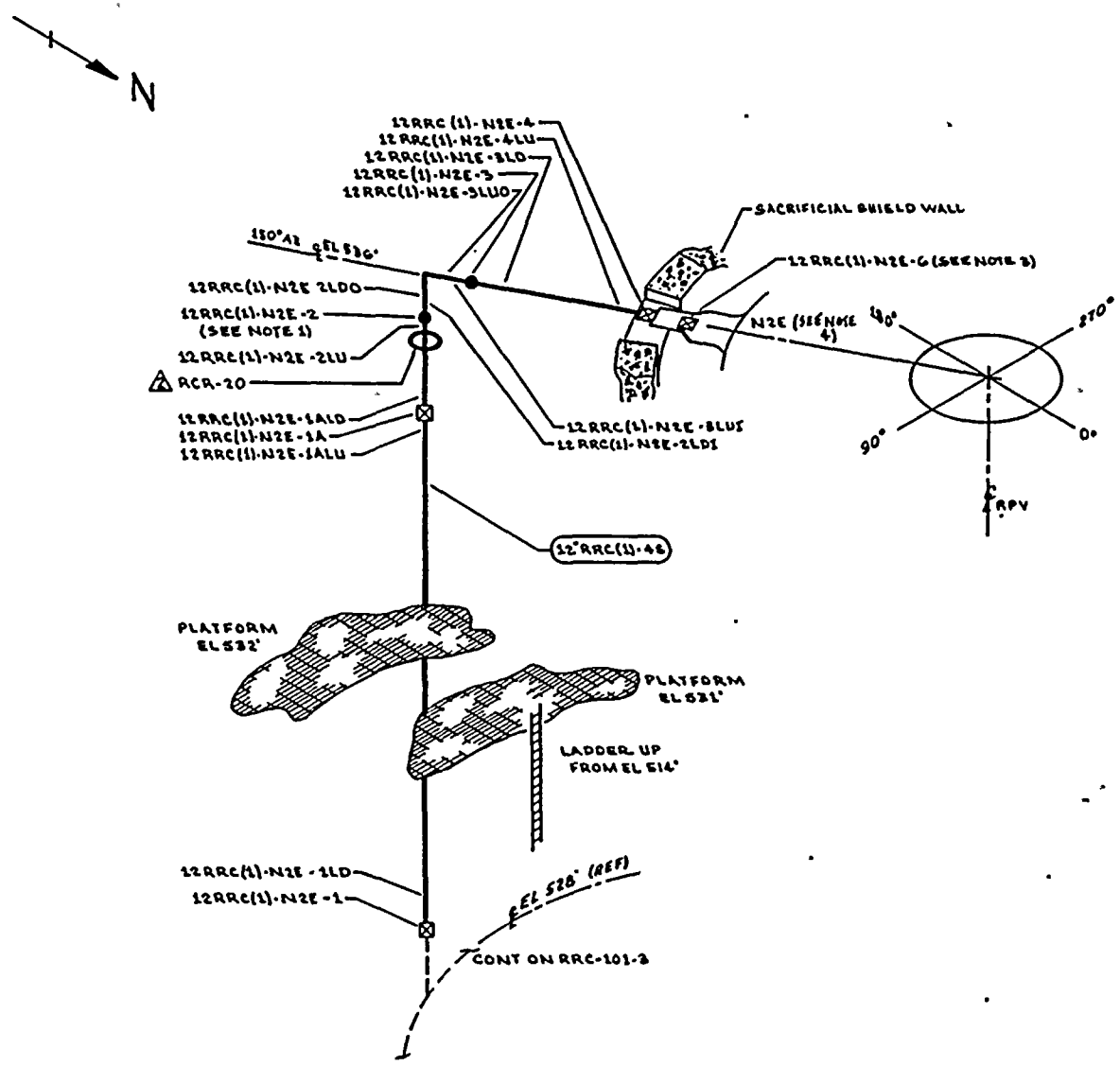

NOTES:

1. ACCESS TO WELD 12 RRC(1)-N2E-2 REQUIRES REMOVAL OF RCR-20.
2. DELETED
3. WELD 12 RRC(1)-N2E-6 UTILIZES CAL BLOCK UT-111.
4. FOR NOZZLE ASSEMBLY DETAILS SEE RPV-106.
5. PIPING PURCHASED TO MIN WALL SPECIFICATION. MIN WALL 0.604".

REFERENCES:

GENERAL ELECTRIC DRAWINGS

761 E 424		REV 2
762 E 538	SH 1	REV 3
762 E 538	SH 2	REV 3
761 E 735		REV 6

CBI NUCLEAR CO.

52, REV 12, N2 NOZZLE ASSEMBLY

BOVEE CRAIL / GERI

BC/G-216 REV 8

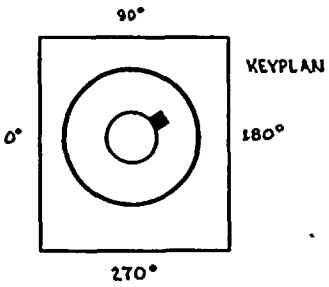

QUALITY CLASS: 1	ASME CODE CLASS: 1	
ENGR: D TIMMING	DRAWN: K. McA	DATE: 4-4-78

WASHINGTON PUBLIC POWER SUPPLY SYSTEM
RICHLAND, WASHINGTON 99352

THIS DRAWING IS INTENDED FOR USE IN PRESERVICE AND INSERVICE INSPECTION PROGRAMS ONLY.

PIPING SYSTEM	NOM DIA (IN)	SCH	NOM WALL THK	MATERIAL SPECIFICATION	MATL TYPE	CAL BLOCK NO
12" RRC(1)-46	12	XXX	SEE NOTE 5	SA 358 GR 304 CL 1	S6	UT-19

NO	DATE	REVISION	BY	CHKD	APPVD
2	10-13-83	REVISED AS NOTED ADDED KEYPLAN	KMA	DPR	TFK
1	7-22-79	REVISED OUTER LETTERING FROM A TO E, DELETED NOTE 2, WELD 5 ADDED WELDS 2LU & 1ALD & FW 1A, PER AS BUILT.	KMA	TFK	
0	11-22-78	ISSUED FOR USE	KMA		
A	5-19-78	ISSUED FOR INFORMATION ONLY	KMA		

WNP-2
WELD & COMPONENT IDENTIFICATION DIAGRAM

TITLE:
REACTOR RECIRCULATION LOOP A

DWG NO: RRC-101-4 REV 2

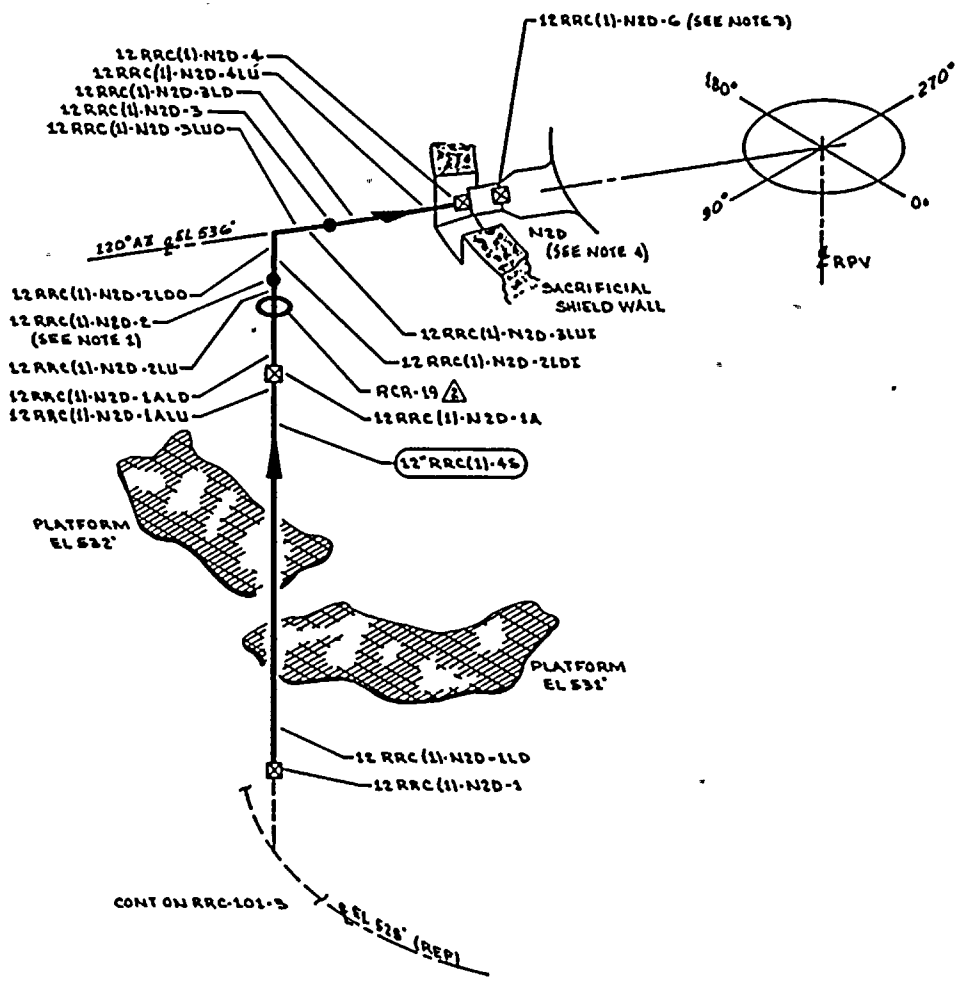

NOTES:

1. ACCESS TO WELD 12RRC(1)-N2D-2 REQUIRES REMOVAL OF RCR-19. △1
2. DELETED
3. WELD 12 RRC(1)-N2D-6 UTILIZES CAL BLOCK UT-111.
4. FOR NOZZLE ASSEMBLY DETAILS SEE RPV-106.
5. PIPING PURCHASED TO MIN WALL SPECIFICATION. MIN WALL 0.604". △1

REFERENCES:

GENERAL ELECTRIC DRAWINGS

761 E		REV 2
762 E	SH 1	REV 3
762 E	SH 2	REV 3
761 E		REV 6

CBI NUCLEAR CO.

52, REV 10, N2 NOZZLE ASSEMBLY

BOVEE CRAIL / GERI

BC/G-216 REV 8

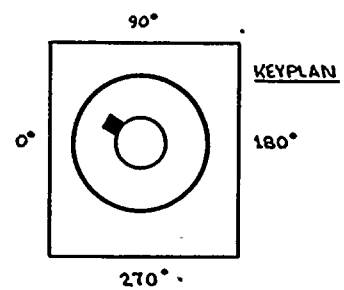

QUALITY CLASS: 1	ASME CODE CLASS: 1	
ENGR: D TIMMINS	DRAWN: K.McA	DATE: 4-4-78

WASHINGTON PUBLIC POWER SUPPLY SYSTEM
RICHLAND, WASHINGTON 99352

THIS DRAWING IS INTENDED FOR USE IN PRESERVICE AND INSERVICE INSPECTION PROGRAMS ONLY.

PIPING SYSTEM	NOM DIA (IN)	SCH	NOM WALL THK	MATERIAL SPECIFICATION	MATL TYPE	CAL BLOCK NO
12" RRC(1)-46	12	XXX	SEE NOTE 6	SA358 GR304 CL1	66	UT-19

NO	DATE	REVISION	BY	CHKD	APPVD
2	30-1-83	REVISED AS NOTED ADDED KEYPLAN	K.McA	DPR	TAP
1	2-11-79	REVISED RISER LETTERING FROM B TO D. DELETED NOTE 2 & WELD 3. ADDED FW 5A & WELDS 5A1U & 5A1D, PER AS BUILT.	K.McA	[illegible]	[illegible]
0	11-27-78	ISSUED FOR USE	K.McA	[illegible]	[illegible]
A	5-19-78	ISSUED FOR INFORMATION ONLY	K.McA	[illegible]	[illegible]

WNP-2
WELD & COMPONENT IDENTIFICATION DIAGRAM

TITLE: REACTOR RECIRCULATION LOOP A

DWG NO: RRC-101-5 REV 2

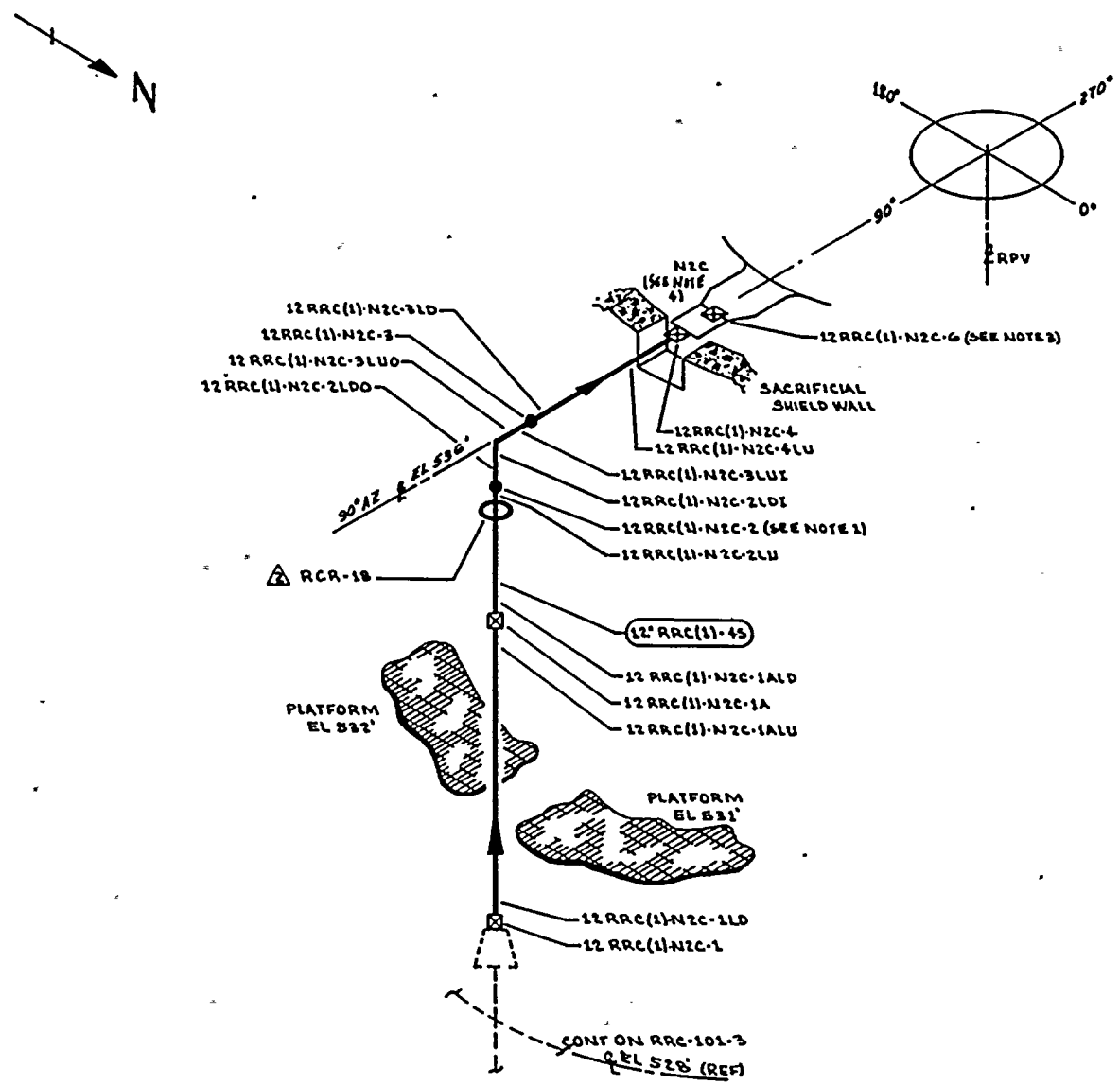

NOTES:

1. ACCESS TO WELD 12 RRC(1)-N2C-2 REQUIRES REMOVAL OF RCR-18.
2. DELETED
3. WELD 12 RRC(1)-N2C-6 UTILIZES CAL BLOCK UT-111.
4. FOR NOZZLE ASSEMBLY DETAILS SEE RPV-106.
5. PIPING PURCHASED TO MIN WALL SPECIFICATION. MIN WALL 0.604".

REFERENCES:

GENERAL ELECTRIC DRAWINGS

761 E REV 2
762 E SH1 REV 3
762 E SH2 REV 3
761 E REV 6

CBI NUCLEAR CO.

52, REV 10, N2 NOZZLE ASSEMBLY

BOVEE CRAIL/GERI

BC/G-216 REV 8

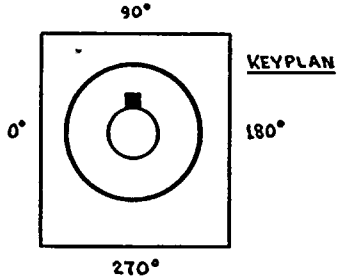

QUALITY CLASS: 1	ASME CODE CLASS: 1	
ENGR: D TIMMINS	DRAWN: K. McA	DATE: 4-4-78

WASHINGTON PUBLIC POWER SUPPLY SYSTEM
RICHLAND, WASHINGTON 99352

THIS DRAWING IS INTENDED FOR USE IN PRESERVICE AND INSERVICE INSPECTION PROGRAMS ONLY.

PIPING SYSTEM	NOM DIA (IN)	SCH	NOM WALL THK	MATERIAL SPECIFICATION	MATL TYPE	CAL BLOCK NO
12" RRC (1)-4S	12	XXX	SEE NOTES	SA 358 GR 304-CL1	SS	UT-19

NO	DATE	REVISION	BY	CHKD	APPVD
2	10-8-93	REVISED AS NOTED ADDED KEYPLAN	KMcA	[illegible]	[illegible]
1	7-17-79	DELETED NOTE #2 & WELD #5. ADDED FW #1A & WELDS 5A1U & 5A1D PER AS BUILT.	KMcA	[illegible]	[illegible]
0	11-22-78	ISSUED FOR USE	KMcA	[illegible]	[illegible]
A	5-19-78	ISSUED FOR INFORMATION ONLY	KMcA	[illegible]	[illegible]

WNP-2
WELD & COMPONENT IDENTIFICATION DIAGRAM

TITLE: REACTOR RECIRCULATION LOOP A

DWG NO: RRC-101-6 REV 2

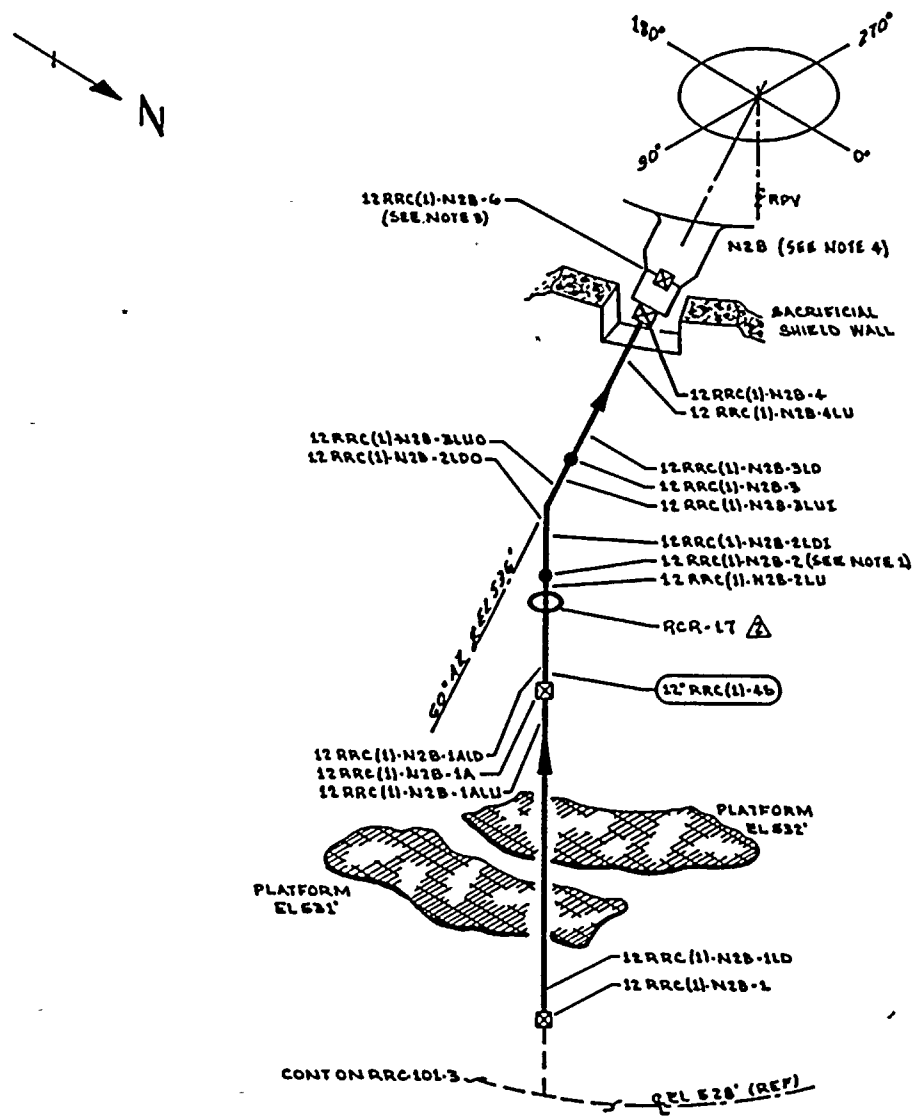

NOTES:

1. ACCESS TO WELD 12RRC(1)-N2B-2 REQUIRES REMOVAL OF 12RRC(1)-N2B-1PR.
2. DELETED
3. WELD 12RRC(1)-N2B-6 UTILIZES CAL BLOCK UT-111.
4. FOR NOZZLE ASSEMBLY DETAILS SEE RPV-106.

REFERENCES:

GENERAL ELECTRIC DRAWINGS

761 E 424 REV 2
762 E 538 SH1 REV 3
762 E 538 SH2 REV 3
761 E 735 REV 6

CBI NUCLEAR CO.

52, REV 10, N2 NOZZLE ASSEMBLY

BOVEE & CRRIL/GERI

BC/G-216 REV 9

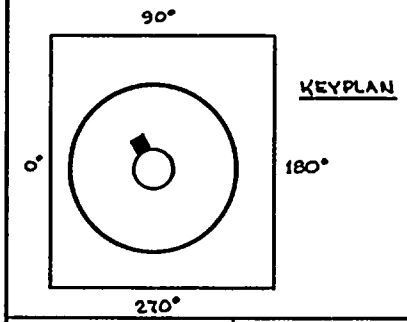

QUALITY CLASS: 1	ASME CODE CLASS: 1	
ENGR: D TIMMINS	DRAWN: K. McA	DATE: 4-4-78

WASHINGTON PUBLIC POWER SUPPLY SYSTEM
RICHLAND, WASHINGTON 99352

THIS DRAWING IS INTENDED FOR USE IN PRESERVICE AND INSERVICE INSPECTION PROGRAMS ONLY.

PIPING SYSTEM	NOM DIA (IN)	SCH	NOM WALL THK	MATERIAL SPECIFICATION	MATL TYPE	CAL BLOCK NO
12" RRC(1)-4S	12	XXX	0.604	SA 358 GR 304 CL 1	SS	UT-19

NO	DATE	REVISION	BY	CHKD	APPVD
2	12-2-83	REVISED AS NOTED ADDED KEYPLAN	K.M.A	DWK	TTH
1	7-27-79	REVISED RISER LABELLING FROM D TO B, DELETED NOTE #2 & WELD #5 ADDED TWO 10 LYMLOY 1ALU & 1ALD. PER AS BUILT.	K.M.A	[illegible]	[illegible]
0	11-27-78	ISSUED FOR USE	K.M.A	[illegible]	[illegible]
A	5-19-78	ISSUED FOR INFORMATION ONLY	K.M.A	[illegible]	[illegible]

WNP-2
WELD & COMPONENT IDENTIFICATION DIAGRAM

TITLE:
REACTOR RECIRCULATION LOOP A

DWG NO: RRC-101-7 REV 2

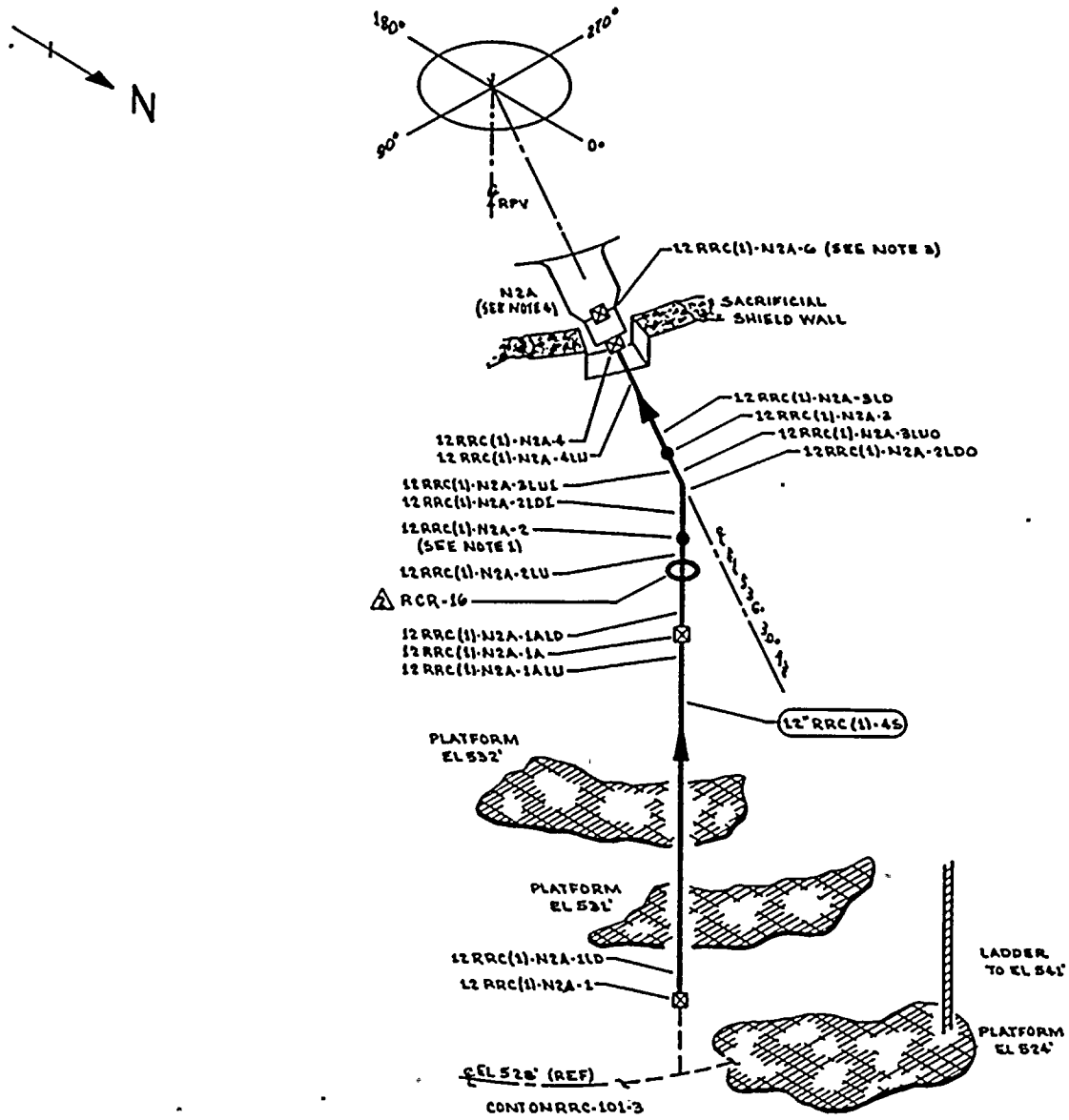

NOTES:

1. ACCESS TO WELD 12RRC(1)-N2A-2 REQUIRES REMOVAL OF RCR-16.
2. DELETED
3. WELD 12RRC(1)-N2A-G UTILIZES CAL BLOCK UT-111.
4. FOR NOZZLE ASSEMBLY DETAILS SEE RPV-106.
5. PIPING PURCHASED TO MIN WALL SPECIFICATION. MIN WALL 0.604".

REFERENCES:

GENERAL ELECTRIC DRAWINGS

721 E 424		REV 2
762 E 538	SH 1	REV 3
762 E 538	SH 2	REV 3
761 E 735		REV 6

CBI NUCLEAR CO.

52, REV 10, N2 NOZZLE ASSEMBLY

BOVEE CRAIL / GERI

BC/Q-216 REV 8

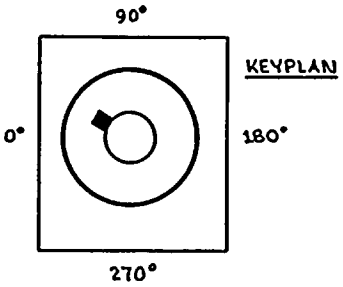

QUALITY CLASS: 1	ASME CODE CLASS: 1	
ENGR'D TIMMING	DRAWN: K.M.L.	DATE: 4-4-78

WASHINGTON PUBLIC POWER SUPPLY SYSTEM
RICHLAND, WASHINGTON 99352

THIS DRAWING IS INTENDED FOR USE IN PRESERVICE AND INSERVICE INSPECTION PROGRAMS ONLY.

PIPING SYSTEM	NOM DIA (IN)	SCH	NOM WALL THK	MATERIAL SPECIFICATION	MATL TYPE	CAL BLOCK NO
12" RRC(1)-4S	12	XXX	SEE NOTE 5	SA 358 GR 304 CL 1	SS	UT-19

NO	DATE	REVISION	BY	CHKD	APPVD
2	10-15-85	REVISED AS NOTED ADDED KEYPLAN	KMLA	EWC	TPK
1	7-27-79	REVISED RISER LETTERING FROM E TO A, DELETED NOTE #2 & WELD #5, ADDED FW #3A & WELDS & VALVES ADD PER AS BUILT.	KMLA	TDB	
0	11-27-78	ISSUED FOR USE	KMLA	DCJ	
A	5-19-78	ISSUED FOR INFORMATION ONLY	KMLA		

WNP-2
WELD & COMPONENT
IDENTIFICATION DIAGRAM

TITLE:
REACTOR RECIRCULATION LOOP A

DWG NO: RRC-101-A REV 2

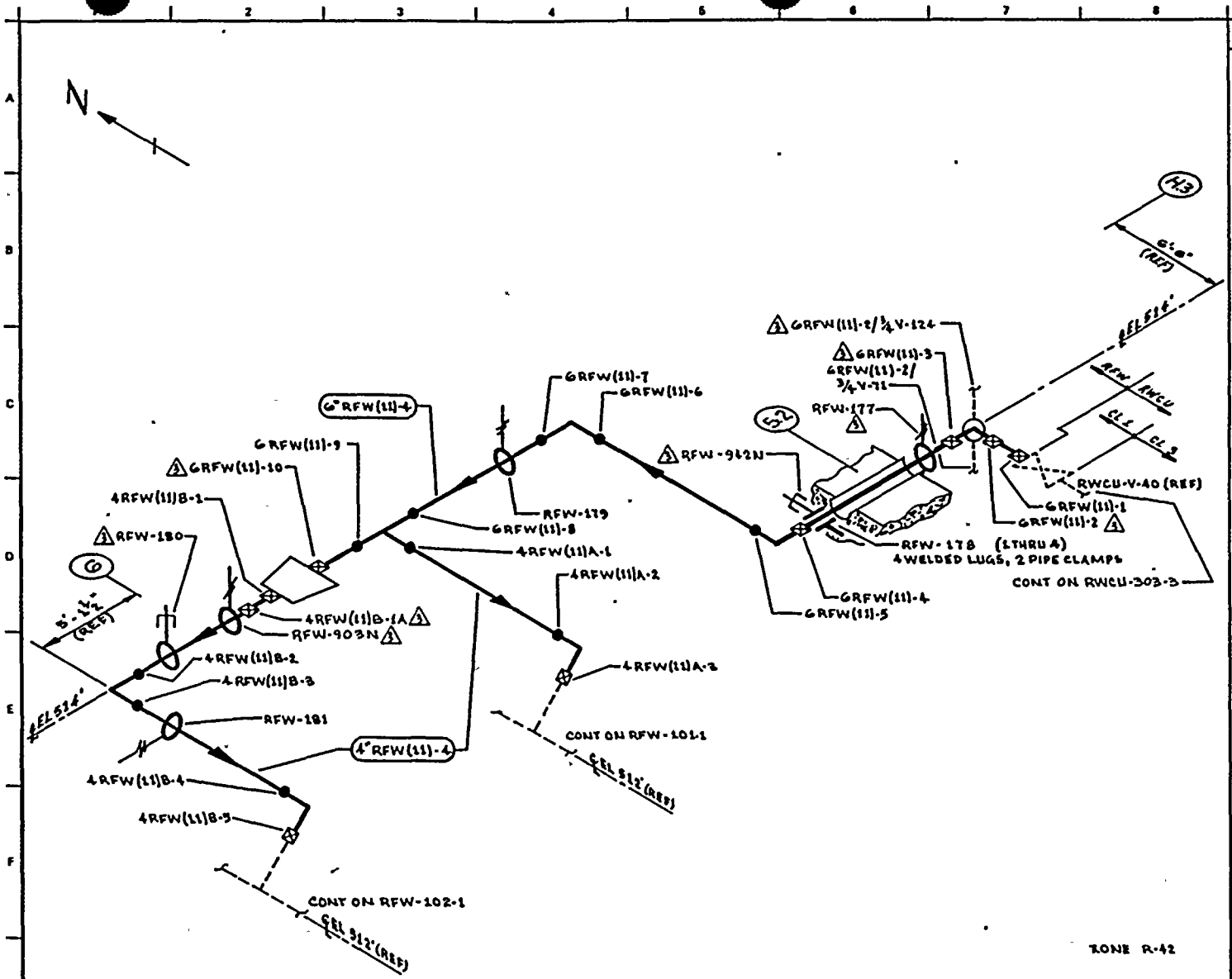

ZONE R-42

NOTES:

1. ALL CIRCUMFERENTIAL BUTT WELDS GREATER THAN 1 INCH REQUIRE AUGMENTED ISI.
2. AUGMENTED ISI CONTINUES ON RWCU-303-3.

REFERENCES:

BOVEE & CRAIL ISOMETRICS

RFW-438-1.2 REV 11
RFW-438-3 REV 5

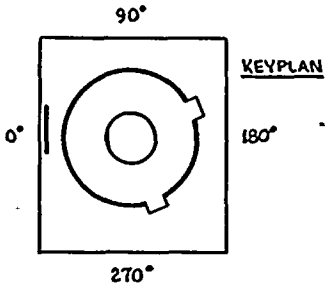

QUALITY CLASS: 1 | ASME CODE CLASS: 1

ENGR: D TIMMINS | DRAWN: K. McA. | DATE: 3-15-78

THIS DRAWING IS INTENDED FOR USE IN PRESERVICE AND INSERVICE INSPECTION PROGRAMS ONLY.

WASHINGTON PUBLIC POWER SUPPLY SYSTEM
RICHLAND, WASHINGTON 99352

WNP-2
WELD & COMPONENT IDENTIFICATION DIAGRAM

TITLE: REACTOR FEED WATER RWCU/CRD INTER-TIE

DWG NO: RFW-103 | REV 3

NO	DATE	REVISION	BY	CHKD	APPVD
3	11-13-81	REVISED AS NOTED ADDED KEYPLAN	K.M.A.	SAP	TH
2	12-2-91	REVISED AS NOTED	K.M.A.	DTP	TH
1	1-10-79	CAL BLOCK REFERENCE CHANGED, DELETED 3" PIPING	K.M.A.	[illegible]	[illegible]
0	12-12-78	ISSUED FOR USE	K.M.A.	[illegible]	[illegible]
A	4-21-78	ISSUED FOR INFORMATION ONLY	K.M.A.	DCJ	DLB

PIPING SYSTEM	NOM DIA (IN)	SCH	NOM WALL THK	MATERIAL SPECIFICATION	MATL TYPE	CAL BLOCK NO
6" RFW(11)-4	6	80	0.432	SA 106 GR B	CS	UT-28
4" RFW(11)-4	4	80	0.337	SA 106 GR B	CS	UT-30

WNP-02
INTERVAL: PSI
PERIOD: NA
OUTAGE:
DRAWING NO. RFW-102

WASHINGTON PUBLIC POWER SUPPLY SYSTEM
PROGRAM PLAN AND SCHEDULE
SYSTEM OR COMPONENT: RFW(1)-4
DESCRIPTION: RX FEEDWATER LINE B

DATE 12/14/84

IDENT. NO.	DESCRIPTION	SECT. XI EXAM.	EXAM MTH.	PROCEDURE	CAL. BLOCK	INSERVICE REQ.	SCHEDULED OUTAGE	NOTES
RFW-PB-102	RFW PRES BNDRY	B-P	VT-2	N/A				SEE NOTES #6 & #7.

WNP-02
INTERVAL: PSI
PERIOD: NA
OUTAGE:
DRAWING NO. RFW-102

WASHINGTON PUBLIC POWER SUPPLY SYSTEM
PROGRAM PLAN AND SCHEDULE
SYSTEM OR COMPONENT: RFW(1)-4
DESCRIPTION: RX FEEDWATER LINE B

IDENT. NO.	DESCRIPTION	SECT. XI EXAM.	EXAM MTH.	PROCEDURE	CAL. BLOCK	INSERVICE REQ.	INSERVICE SCHEDULED OUTAGE	NOTES
			VT-4	303/8.2.17				S/N 1467
PWS-28-6								
	PIPE WHIP	N/A	N/A	N/A				SEE NOTE #1
PWS-28-5								
	PIPE WHIP	N/A	N/A	N/A				SEE NOTE #1
RFW-183(W)								
	4 WELDED LUGS	B-K-1	VOL	UTP-26	UT-15			
RFW-183								
	SPRING	B-K-2	VT-3	303/8.2.17				
			VT-4	303/8.2.17				
12RFW(1)BD-6								
	PIPE TO EL	B-J	VOL	UTP-10	UT-15			
			SUR	PTP-1				
12RFW(1)BD-7								
	EL TO PIPE	B-J	VOL	UTP-10	UT-15			
			SUR	PTP-1				
12RFW(1)BD-8								
	PIPE TO SE EXT	B-J	VOL	UTP-10	UT-15			
			SUR	PTP-1				
12RFW(1)BD-9								
	SE EXT-SE STUB	B-F	VOL	UTP-10	UT-106			
			SUR	PTP-1				
12RFW(1)BD-10								
	SE STUB TO SE	B-J	VOL	UTP-10	UT-105			
			SUR	PTP-1				
12RFW(1)BD-11								
	SE TO N4	B-F	VOL	UTP-10	UT-102			
			SUR	PTP-1				

WNP-02
INTERVAL: PSI
PERIOD: NA
OUTAGE:
DRAWING NO. RFW-102

WASHINGTON PUBLIC POWER SUPPLY SYSTEM
PROGRAM PLAN AND SCHEDULE
SYSTEM OR COMPONENT: RFW(1)-4
DESCRIPTION: RX FEEDWATER LINE B

DATE 12/14/84

IDENT. NO.	DESCRIPTION	SECT. XI EXAM.	EXAM MTH.	PROCEDURE	CAL. BLOCK	INSERVICE REQ.	INSERVICE SCHEDULED OUTAGE	NOTES
			VT-4	303/8.2.17				
PWS-28-12								
	PIPE WHIP	N/A	N/A	N/A				SEE NOTE #1
12RFW(1)BD-2								
	PIPE TO EL	B-J	VOL	UTP-10	UT-15			
			SUR	PTP-1				
12RFW(1)BD-3								
	EL TO PIPE	B-J	VOL	UTP-10	UT-15			
			SUR	PTP-1				
PWS-28-8								
	PIPE WHIP	N/A	N/A	N/A				SEE NOTE #1
RFW-172								
	PSA-35 SNUBBER	B-K-2	VT-3	303/8.2.17				S/N 6152
			VT-4	303/8.2.17				S/N 6152
PWS-28-7								
	PIPE WHIP	N/A	N/A	N/A				SEE NOTE #1
12RFW(1)BD-4								
	PIPE TO EL	B-J	VOL	UTP-10	UT-15			
			SUR	PTP-1				
12RFW(1)BD-5								
	EL TO PIPE	B-J	VOL	UTP-10	UT-15			
			SUR	PTP-1				
RFW-171								
	PSA-10 SNUBBER	B-K-2	VT-3	303/8.2.17				S/N 579
			VT-4	303/8.2.17				S/N 579
RFW-915N								
	PSA-10 SNUBBER	B-K-2	VT-3	303/8.2.17				S/N 1467

WNP-02
INTERVAL: PSI
PERIOD: NA
OUTAGE:
DRAWING NO. RFW-102

WASHINGTON PUBLIC POWER SUPPLY SYSTEM
PROGRAM PLAN AND SCHEDULE
SYSTEM OR COMPONENT: RFW(1)-4
DESCRIPTION: RX FEEDWATER LINE B

IDENT. NO.	DESCRIPTION	SECT. XI EXAM.	EXAM MTH.	PROCEDURE	CAL. BLOCK	INSERVICE REQ.	INSERVICE SCHEDULED OUTAGE	NOTES
12RFW(1)BE-7			SUR	PTP-1				
	EL TO PIPE	B-J	VOL	UTP-10	UT-15			
12RFW(1)BE-8			SUR	PTP-1				
	PIPE TO SE EXT	B-J	VOL	UTP-10	UT-15			
12RFW(1)BE-9			SUR	PTP-1				
	SE EXT-SE STUB	B-F	VOL	UTP-10	UT-106			
12RFW(1)BE-10			SUR	PTP-1				
	SE STUB TO SE	B-J	VOL	UTP-10	UT-105			
12RFW(1)BE-11			SUR	PTP-1				
	SE TO N4	B-F	VOL	UTP-10	UT-102			
18RFW(1)B-3			SUR	PTP-1				
	TEE TO PIPE	B-J	VOL	UTP-10	UT-11			
18RFW(1)B-4			SUR	PTP-1				
	PIPE TO REDUCER	B-J	VOL	UTP-10	UT-11			
12RFW(1)BD-1			SUR	PTP-1				
	REDUCER TO PIPE	B-J	VOL	UTP-10	UT-15			
RFW-173			SUR	PTP-1				
	SPRING	B-K-2	VT-3	303/8.2.17				

WNP-02
INTERVAL: PSI
PERIOD: NA
OUTAGE:
DRAWING NO. RFW-102

WASHINGTON PUBLIC POWER SUPPLY SYSTEM
PROGRAM PLAN AND SCHEDULE
SYSTEM OR COMPONENT: RFW(1)-4
DESCRIPTION: RX FEEDWATER LINE P

DATE 12/14/84

IDENT. NO.	DESCRIPTION	SECT. XI EXAM.	EXAM MTH.	PROCEDURE	CAL. BLOCK	INSERVICE REQ.	SCHEDULED OUTAGE	NOTES
			SUR	PTP-1				
FWS-28-9	PIPE WHIP	N/A	N/A	N/A				SEE NOTE #1
12RFW(1)BE-2	PIPE TO EL	B-J	VOL	UTP-10	UT-15			
			SUR	PTP-1				
12RFW(1)BE-3	EL TO PIPE	B-J	VOL	UTP-10	UT-15			
			SUR	PTP-1				
FWS-28-11	PIPE WHIP	N/A	N/A	N/A				SEE NOTE #1
12RFW(1)BE-4	PIPE TO EL	B-J	VOL	UTP-10	UT-15			
			SUR	PTP-1				
12RFW(1)BE-5	EL TO PIPE	B-J	VOL	UTP-10	UT-15			
			SUR	PTP-1				
FWS-28-4	PIPE WHIP	N/A	N/A	N/A				SEE NOTE #1
12RFW(1)BE-5A	PIPE TO PIPE	B-J	VOL	UTP-10	UT-15			
			SUR	PTP-1				
FWS-28-3	PIPE WHIP	N/A	N/A	N/A				SEE NOTE #1
RFW-184	SPRING	B-K-2	VT-3	303/8.2.17				
			VT-4	303/8.2.17				
12RFW(1)BE-6	PIPE TO EL	B-J	VOL	UTP-10	UT-15			

WNP-02
INTERVAL: PSI
PERIOD: NA
OUTAGE:
DRAWING NO. RFW-102

WASHINGTON PUBLIC POWER SUPPLY SYSTEM
PROGRAM PLAN AND SCHEDULE
SYSTEM OR COMPONENT: RFW(1)-4
DESCRIPTION: RX FEEDWATER LINE B

DATE 12/14/84

IDENT. NO.	DESCRIPTION	SECT. XI EXAM.	EXAM MTH.	PROCEDURE	CAL. BLOCK	INSERVICE REQ.	INSERVICE SCHEDULED OUTAGE	NOTES
24RFW(1)B-17			SUR	PTP-1				
	PIPE TO REDUCER	B-J	VOL	UTP-10	UT-5			
18RFW(1)B-1			SUR	PTP-1				
	REDUCER TO PIPE	B-J	VOL	UTP-10	UT-11			
RFW-167			SUR	PTP-1				
	PSA-10 SN(2)	B-K-2	VT-3	303/8.2.17				S/N 13036/130
			VT-4	303/8.2.17				S/N 13036/130
RFW-166								
	PSA-10 SN(2)	B-K-2	VT-3	303/8.2.17				S/N 120/687
			VT-4	303/8.2.17				S/N 120/687
RFW-168(W)								
	12 WELDED LUGS	B-K-1	VOL	UTP-26	UT-11			
RFW-168								
	PSA-10 SN(2)	B-K-2	VT-3	303/8.2.17				S/N 14555/145
			VT-4	303/8.2.17				S/N 14555/145
PWS-28-10								
	PIPE WHIP	N/A	N/A	N/A				SEE NOTE #1
RFW-170								
	PSA-10 SN(2)	B-K-2	VT-3	303/8.2.17				S/N 7785/7782
			VT-4	303/8.2.17				S/N 7785/7782
18RFW(1)B-2								
	PIPE TO TEE	B-J	VOL	UTP-10	UT-11			
12RFW(1)BE-1			SUR	PTP-1				
	TEE TO PIPE	B-J	VOL	UTP-10	UT-15			

WNP-02
INTERVAL: PSI
PERIOD: NA
OUTAGE:
DRAWING NO. RFW-102

WASHINGTON PUBLIC POWER SUPPLY SYSTEM
PROGRAM PLAN AND SCHEDULE
SYSTEM OR COMPONENT: RFW(1)-4
DESCRIPTION: RX FEEDWATER LINE B

DATE 12/14/84

IDENT. NO.	DESCRIPTION	SECT. XI EXAM.	EXAM MTH.	PROCEDURE	CAL. BLOCK	INSERVICE REQ.	INSERVICE SCHEDULED OUTAGE	NOTES
PWS-28-2	PIPE WHIP	N/A	N/A	N/A				SEE NOTE #1
PWS-28-1	PIPE WHIP	N/A	N/A	N/A				SEE NOTE #1
RFW-185(W)	4 WELDED LUGS	B-K-1	VOL	UTP-26	UT-15			
RFW-185	SPRING	B-K-2	VT-3	303/8.2.17				
			VT-4	303/8.2.17				
12RFW(1)BF-9	PIPE TO EL	B-J	VOL	UTP-10	UT-15			
			SUR	PTP-1				
12RFW(1)BF-10	EL TO PIPE	B-J	VOL	UTP-10	UT-15			
			SUR	PTP-1				
12RFW(1)BF-11	PIPE TO SE EXT	B-J	VOL	UTP-10	UT-15			
			SUR	PTP-1				
12RFW(1)BF-12	SE EXT-SE STUB	B-F	VOL	UTP-10	UT-106			
			SUR	PTP-1				
12RFW(1)BF-13	SE STUB TO SE	B-J	VOL	UTP-10	UT-105			
			SUR	PTP-1				
12RFW(1)BF-14	SE TO N4	B-F	VOL	UTP-10	UT-102			
			SUR	PTP-1				
24RFW(1)B-16	TEE TO PIPE	B-J	VOL	UTP-10	UT-5			

WNP-02
INTERVAL: PSI
PERIOD: NA
OUTAGE:
DRAWING NO. RFW-102

WASHINGTON PUBLIC POWER SUPPLY SYSTEM
PROGRAM PLAN AND SCHEDULE
SYSTEM OR COMPONENT: RFW(1)-4
DESCRIPTION: RX FEEDWATER LINE B

IDENT. NO.	DESCRIPTION	SECT. XI EXAM.	EXAM MTH.	PROCEDURE	CAL. BLOCK	INSERVICE REQ.	SCHEDULED OUTAGE	NOTES
RFW-175(W)								
	6 WELDED LUGS	B-K-1	VOL	UTP-26	UT-15			
RFW-175								
	SPRING	B-K-2	VT-3	303/8.2.17				
			VT-4	303/8.2.17				
12RFW(1)BF-2								
	PIPE TO EL	B-J	VOL	UTP-10	UT-15			
			SUR	PTP-1				
12RFW(1)BF-3								
	EL TO PIPE	B-J	VOL	UTP-10	UT-15			
			SUR	PTP-1				
PWS-28-15								
	PIPE WHIP	N/A	N/A	N/A				SEE NOTE #1
12RFW(1)BF-4								
	PIPE TO EL	B-J	VOL	UTP-10	UT-15			
			SUR	PTP-1				
12RFW(1)BF-5								
	EL TO PIPE	B-J	VOL	UTP-10	UT-15			
			SUR	PTP-1				
12RFW(1)BF-6								
	PIPE TO PIPE	B-J	VOL	UTP-10	UT-15			
			SUR	PTP-1				
12RFW(1)BF-7								
	PIPE TO EL	B-J	VOL	UTP-10	UT-15			
			SUR	PTP-1				
12RFW(1)BF-8								
	EL TO PIPE	B-J	VOL	UTP-10	UT-15			
			SUR	PTP-1				

WNP-02
INTERVAL: PSI
PERIOD: NA
OUTAGE:
DRAWING NO. RFW-102

WASHINGTON PUBLIC POWER SUPPLY SYSTEM
PROGRAM PLAN AND SCHEDULE
SYSTEM OR COMPONENT: RFW(1)-4
DESCRIPTION: RX FEEDWATER LINE B

DATE 12/14/84

IDENT. NO.	DESCRIPTION	SECT. XI EXAM.	EXAM MTH.	PROCEDURE	CAL. BLOCK	INSERVICE REQ.	INSERVICE SCHEDULED OUTAGE	NOTES
24RFW(1)B-9								
	VALVE TO PIPE	B-J	VOL	UTP-10	UT-5			
			SUR	PTP-1				
PWS-28-18								
	PIPE WHIP	N/A	N/A	N/A				SEE NOTE #1
24RFW(1)B-10								
	PIPE TO PIPE	B-J	VOL	UTP-10	UT-5			
			SUR	PTP-1				
24RFW(1)B-11								
	PIPE TO EL	B-J	VOL	UTP-10	UT-33			
			SUR	PTP-1				
24RFW(1)B-12								
	EL TO PIPE	B-J	VOL	UTP-10	UT-33			
			SUR	PTP-1				
24RFW(1)B-13								
	PIPE TO EL	B-J	VOL	UTP-10	UT-33			
			SUR	PTP-1				
24RFW(1)B-14								
	EL TO PIPE	B-J	VOL	UTP-10	UT-5			
			SUR	PTP-1				
PWS-28-16								
	PIPE WHIP	N/A	N/A	N/A				SEE NOTE #1
24RFW(1)B-15								
	PIPE TO TEE	B-J	VOL	UTP-10	UT-5			
			SUR	PTP-1				
12RFW(1)BF-1								
	TEE TO PIPE	B-J	VOL	UTP-10	UT-15			
			SUR	PTP-1				

WNP-02
INTERVAL: PSI
PERIOD: NA
OUTAGE:
DRAWING NO. RFW-102

WASHINGTON PUBLIC POWER SUPPLY SYSTEM
PROGRAM PLAN AND SCHEDULE
SYSTEM OR COMPONENT: RFW(1)-4
DESCRIPTION: RX FEEDWATER LINE B

IDENT. NO.	DESCRIPTION	SECT. XI EXAM.	EXAM MTH.	PROCEDURE	CAL. BLOCK	INSERVICE REQ.	INSERVICE SCHEDULED OUTAGE	NOTES
24RFW(1)B-7								
	EL TO PIPE	B-J	VOL	UTP-10	UT-5			
			SUR	PTP-1				
RFW-182(W)								
	6 WELDED LUGS	B-K-1	VOL	UTP-26	UT-5			3/4"W x 2"H x2"L.
RFW-182								
	SPRING	B-K-2	VT-3	303/8.2.17				
			VT-4	303/8.2.17				
RFW-162								
	PSA-10 SN(2)	B-K-2	VT-3	303/8.2.17				S/N 128/132
			VT-4	303/8.2.17				S/N 128/132
RFW-162(W)								
	6 WELDED LUGS	B-K-1	VOL	UTP-26	UT-15			3/4"W x 2"H x 4"L.
PWS-28-13								
	PIPE WHIP	N/A	N/A	N/A				SEE NOTE #1
RFW-163								
	PSA-100 SNUBBER	B-K-2	VT-3	303/8.2.17				S/N 594
			VT-4	303/8.2.17				S/N 594
RFW-164								
	PSA-35 SNUBBER	B-K-2	VT-3	303/8.2.17				S/N 594
			VT-4	303/8.2.17				S/N 594
PWS-28-17								
	PIPE WHIP	N/A	N/A	N/A				SEE NOTE #1
24RFW(1)B-7/3/4V-45B								
	TEST CONN	B-P	VT-2	N/A				SEE NOTES #6 & #7.
24RFW(1)B-8								
	PIPE TO VALVE	B-J	VOL	UTP-10	UT-5			
			SUR	PTP-1				
RFW-V-11B-BDY								
	VALVE BODY	B-M-2	VT-1	QCI 7-1				

WNP-02
INTERVAL: PSI
PERIOD: NA
OUTAGE:
DRAWING NO. RFW-102

WASHINGTON PUBLIC POWER SUPPLY SYSTEM
PROGRAM PLAN AND SCHEDULE
SYSTEM OR COMPONENT: RFW(1)-4
DESCRIPTION: RX FEEDWATER LINE B

DATE 12/14/84

IDENT. NO.	DESCRIPTION	SECT. XI EXAM.	EXAM MTH.	PROCEDURE	CAL. BLOCK	INSERVICE REQ.	INSERVICE SCHEDULED OUTAGE	NOTES
24RFW(1)B-3								
	VALVE TO PENE	B-J	VOL	OCI 6-13	UT-5			AUGMT
			SUR	PTP-1				AUGMT
24RFW(1)B-4								
	PENE TO VALVE	B-J	VOL	UTP-10	UT-5			AUGMT
			SUR	PTP-1				AUGMT
RFW-V-10B-BDY								
	VALVE BODY	B-M-2	VT-1	OCI 7-1				
24RFW(1)B-5								
	VALVE TO PIPE	B-J	VOL	UTP-10	UT-5			AUGMT
			SUR	PTP-1				AUGMT
PWS-28-14								
	PIPE WHIP	N/A	N/A	N/A				SEE NOTE #1
24RFW(1)B-6								
	PIPE TO EL	B-J	VOL	UTP-10	UT-5			
			SUR	PTP-1				
24RFW(1)B-6LDO								
	EL SEAM	B-J	VOL	UTP-10	UT-33			
			SUR	PTP-1				
24RFW(1)B-6LDI								
	EL SEAM	B-J	VOL	UTP-10	UT-33			
			SUR	PTP-1				
24RFW(1)B-7LUI								
	EL SEAM	B-J	VOL	UTP-10	UT-33			
			SUR	PTP-1				
24RFW(1)B-7LUO								
	EL SEAM	B-J	VOL	UTP-10	UT-33			
			SUR	PTP-1				

WNP-02
INTERVAL: PSI
PERIOD: NA
OUTAGE:
DRAWING NO. RFW-102

WASHINGTON PUBLIC POWER SUPPLY SYSTEM
PROGRAM PLAN AND SCHEDULE
SYSTEM OR COMPONENT: RFW(1)-4
DESCRIPTION: RX FEEDWATER LINE B

DATE 12/14/84

IDENT. NO.	DESCRIPTION	SECT. XI EXAM.	EXAM MTH.	PROCEDURE	CAL. BLOCK	INSERVICE REQ.	INSERVICE SCHEDULED OUTAGE	NOTES
RFW-V-65B/3/4CAP								
	LEAKOFF CAPPED	B-P	VT-2	N/A				SEE NOTES #6 & #7.
RFW-V-65B-BDY								
	VALVE BODY	B-M-2	VT-1	OCI 7-1				
24RFW(1)B-1A								
	PIPE TO VLV	AUGMT	VOL	OCI 6-13	UT-			
24RFW(1)B-1								
	VALVE TO PIPE	B-J	VOL	OCI 6-13	UT-5			AUGMT
			SUR	OCI 3-3				AUGMT
24RFW(1)B-1/3/4V-31B								
	TEST CONN	B-P	VT-2	N/A				SEE NOTES #6 & #7.
24RFW(1)B-1/5RFW(11)-4								
	PIPE TO WOL	B-J	VOL	OCI 6-13	UT-5			AUGMT
			SUR	PTP-1				AUGMT
5RFW(11)B-2								
	SLEEVE TO WOL	B-J	VOL	UTP-10	UT-32			AUGMT
			SUR	PTP-1				AUGMT
5RFW(11)B-1								
	SLEEVE-SLEEVE	B-J	SUR	PTP-1				AUGMT.THIS IS SOCKET TYPE.WELD.SEE DETAIL I DRAWING RFW-102-1.
24RFW(1)B-2								
	PIPE TO VALVE	B-J	VOL	UTP-10	UT-5			AUGMT.
			SUR	PTP-1				AUGMT
RFW-V-32B/3/4CAP								
	LEAKOFF CAPPED	B-P	VT-2	N/A				SEE NOTES #6 & #7.
RFW-V-32B-BDY								
	VALVE BODY	B-M-2	VT-1	OCI 7-1				
RFW-V-32B/3/4V-68								
	TEST CONN	B-P	VT-2.	N/A				SEE NOTES #6 & #7.

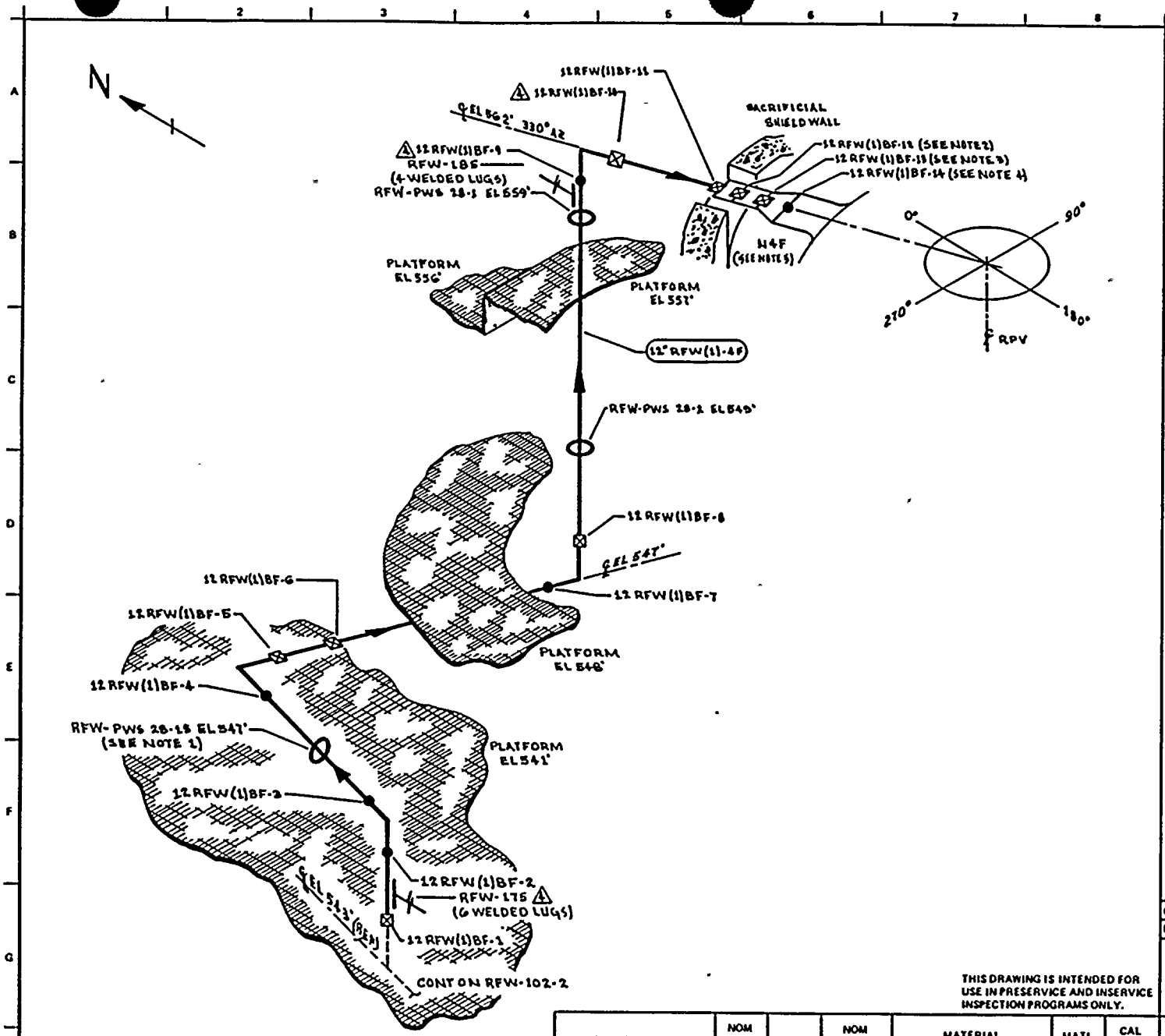

NOTES:

1. ACCESS TO WELDS 12 RFW(1)BF-3 & 12 RFW(1)BF-4 REQUIRES REMOVAL OF RFW-PWS 28-15
2. WELD 12 RFW(1)BF-12 UTILIZES CAL BLOCK UT-106.
3. WELD 12 RFW(1)BF-13 UTILIZES CAL BLOCK UT-105.
4. WELD 12 RFW(1)BF-14 UTILIZES CAL BLOCK UT-102.
5. FOR NOZZLE ASSEMBLY DETAILS SEE RPV-108.

REFERENCES:

BOVEE & GRAIL ISOMETRIC
RFW-419-12.13 REV 8
CBI NUCLEAR CO.
59, REV 5, N4 NOZZLE

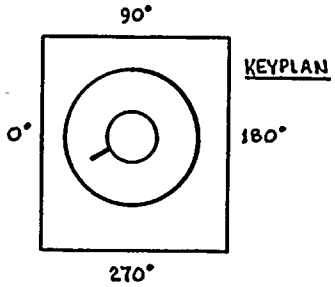

QUALITY CLASS: 1	ASME CODE CLASS: 1	
ENGR. D TIMMINS	DRAWN: K. McA	DATE: 3-13-78

THIS DRAWING IS INTENDED FOR USE IN PRESERVICE AND INSERVICE INSPECTION PROGRAMS ONLY.

WASHINGTON PUBLIC POWER SUPPLY SYSTEM
RICHLAND, WASHINGTON 99352

PIPING SYSTEM	NOM DIA (IN)	SCH	NOM WALL THK	MATERIAL SPECIFICATION	MATL TYPE	CAL BLOCK NO
12" RFW(1)-4	12	120	1.000	SA 106 GR B	CS	UT-15
LUGS	NA	NA	NA	SA 516 GR 70	CS	UT-46

NO	DATE	REVISION	BY	CHKD	APPVD
4	11-17-83	REVISED AS NOTED ADDED LUGS & KEYPLAN	KMcA	JPR	TRK
3	12-2-81	REVISED AS NOTED	KMcA	JPR	TRK
2	7-11-79	CORRECTED AZYMUTH 350° TO 330° IN A-4 ADDED NOTE 5.	KMcA	JPR	TRK
1	5-10-79	CAL BLOCK REFERENCE CHANGED (NOTE 2)	KMcA	KMcA	TRK
0	11-9-78	ISSUED FOR USE	KMcA	JPR	TRK
A	4-21-78	ISSUED FOR INFORMATION ONLY	KMcA	JPR	TRK

WNP-2
WELD & COMPONENT IDENTIFICATION DIAGRAM

TITLE:
REACTOR FEED WATER LINE BF

DWG NO: RFW-102-B REV 4

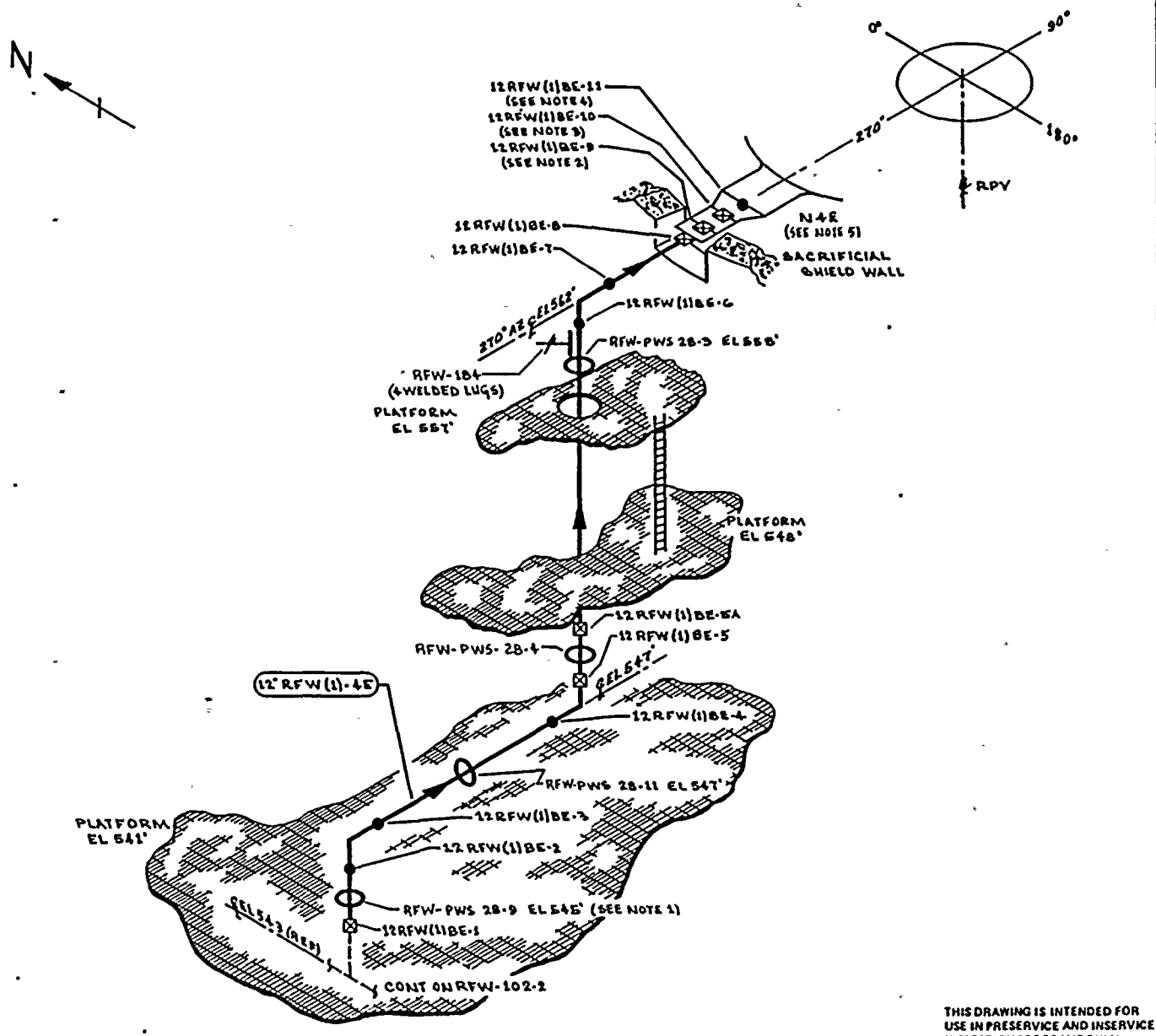

NOTES:

1. ACCESS TO WELD 12 RFW(1)BE-2 REQUIRES REMOVAL OF RFW-PWS 28-9.
2. WELD 12 RFW(1)BE-9 UTILIZES CAL BLOCK UT-106.
3. WELD 12 RFW(1)BE-10 UTILIZES CAL BLOCK UT-105.
4. WELD 12 RFW(1)BE-11 UTILIZES CAL BLOCK UT-102.
5. FOR NOZZLE ASSEMBLY DETAILS SEE RPV-108.

REFERENCES:

BOVEE & CRAIL ISOMETRIC RFW-419-10.11 REV 6

CBI NUCLEAR CO. 59, REV 5, N4 NOZZLE

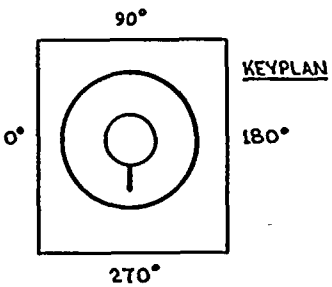

QUALITY CLASS: 1 | ASME CODE CLASS: 1

ENGR: D TIMMINS | DRAWN: K.M.A. | DATE: 3-7-78

WASHINGTON PUBLIC POWER SUPPLY SYSTEM
RICHLAND, WASHINGTON 99352

THIS DRAWING IS INTENDED FOR USE IN PRESERVICE AND INSERVICE INSPECTION PROGRAMS ONLY.

NO	DATE	REVISION	BY	CHKD	APPVD
4	10-13-83	REVISED AS NOTED ADDED KEYPLAN	KMA	DJR	TFH
3	12-2-81	REVISED AS NOTED	KMA	DJR	TFH
2	7-22-79	ADDED 12 RFW(1)BE-5A PER AS BUILT, IN E-5, ADDED NOTE 5	KMA	DJR	
1	1-10-78	CAL BLOCK REFERENCE CHANGED (NOTE 2)	KMA	DJR	DJR
0	11-27-78	ISSUED FOR USE	KMA	DJR	
A	1-9-78	ISSUED FOR INFORMATION ONLY	KMA	DCJ	DJR

PIPING SYSTEM	NOM DIA (IN)	SCH	NOM WALL THK	MATERIAL SPECIFICATION	MATL TYPE	CAL BLOCK NO
12" RFW(1)-4	12	120	1.000	SA 106 GR B	CS	UT-15

WNP-2
WELD & COMPONENT IDENTIFICATION DIAGRAM

TITLE: REACTOR FEED WATER LINE BE

DWG NO: RFW-102-A | REV 4

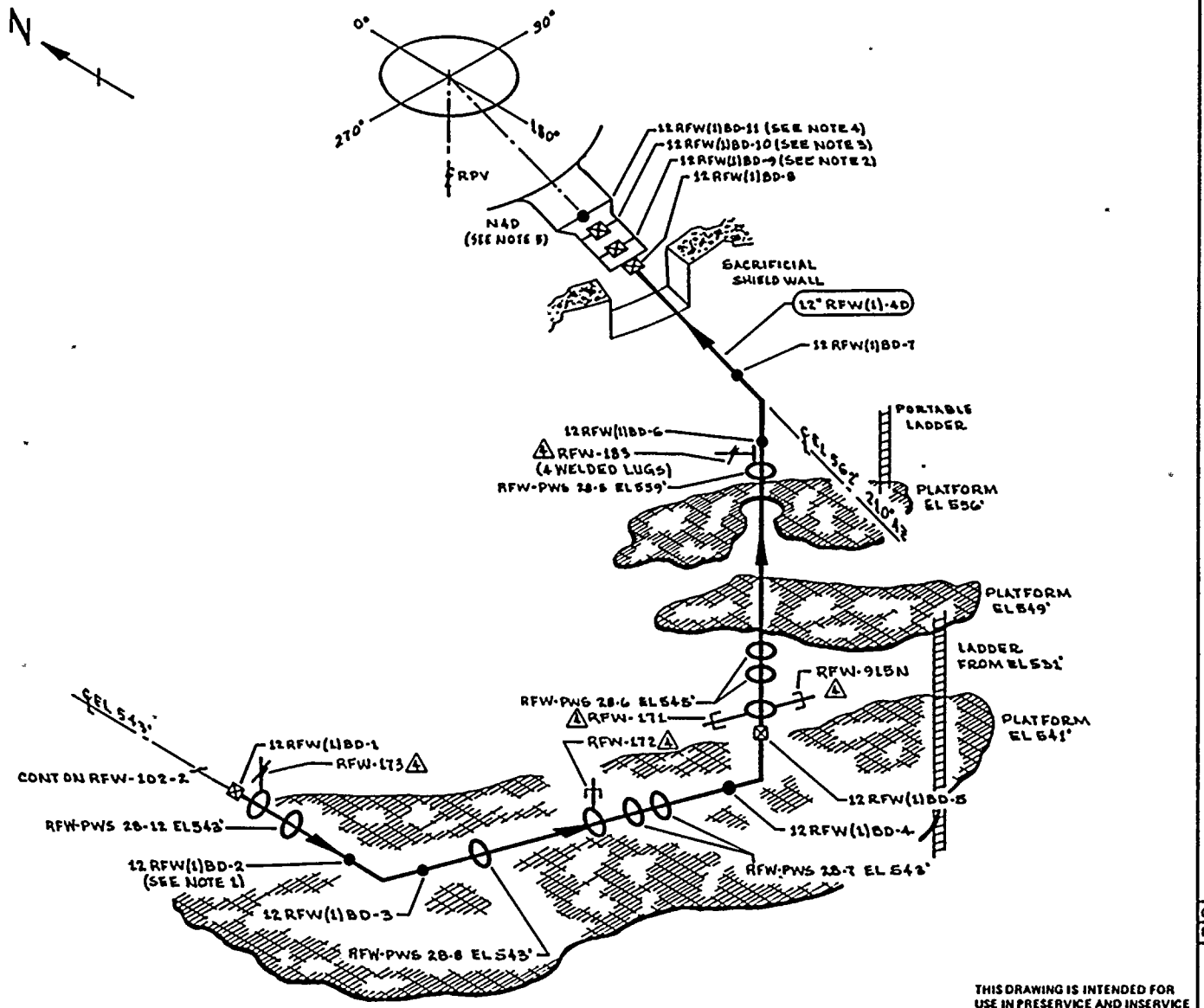

NOTES:

1. ACCESS TO WELD 12 RFW(1)BD-2 REQUIRES REMOVAL OF RFW-PWS 28-12.
2. WELD 12 RFW(1)BD-9 UTILIZES CAL BLOCK UT-106.
3. WELD 12 RFW(1)BD-10 UTILIZES CAL BLOCK UT-105.
4. WELD 12 RFW(1)BD-11 UTILIZES CAL BLOCK UT-102.
5. FOR NOZZLE ASSEMBLY DETAILS SEE RPV-108

REFERENCES:

BOVEE & CRAIL ISOMETRIC
RFW-419-8.5 REV 8

CBI NUCLEAR CO.
59, REV9, N4 NOZZLE

KEYPLAN

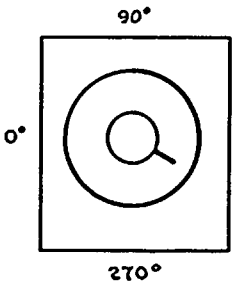

QUALITY CLASS: 1	ASME CODE CLASS: 1	
ENGR: D TIMMINS	DRAWN: K McA	DATE: 3-7-78

WASHINGTON PUBLIC POWER SUPPLY SYSTEM
RICHLAND, WASHINGTON 99352

THIS DRAWING IS INTENDED FOR USE IN PRESERVICE AND INSERVICE INSPECTION PROGRAMS ONLY.

NO	DATE	REVISION	BY	CHKD	APPVD
4	10-22-83	REVISED AS NOTED ADDED LUGS & KEYPLAN	KMcA	JMR	TFH
3	12-7-81	REVISED AS NOTED	KMcA	JMR	TFH
2	8-30-79	ADDED NOTE 5.	KMcA	[illegible]	[illegible]
1	5-10-79	CAL BLOCK REFERENCE CHANGED (NOTE 2)	KMcA	[illegible]	[illegible]
0	11-27-78	ISSUED FOR USE	KMcA	BLP	[illegible]
A	4-21-78	ISSUED FOR INFORMATION ONLY	KMcA	[illegible]	[illegible]

PIPING SYSTEM	NOM DIA (IN)	SCH	NOM WALL THK	MATERIAL SPECIFICATION	MATL TYPE	CAL BLOCK NO
12" RFW(1)-4	12	120	1.000	SA 106 GR B	CS	UT-15
LUGS	NA	NA	NA	SA 516 GR 70	CS	UT-46

WNP-2
WELD & COMPONENT
IDENTIFICATION DIAGRAM

TITLE:
REACTOR FEED WATER LINE BD

DWG NO: RFW-102-3 REV 4

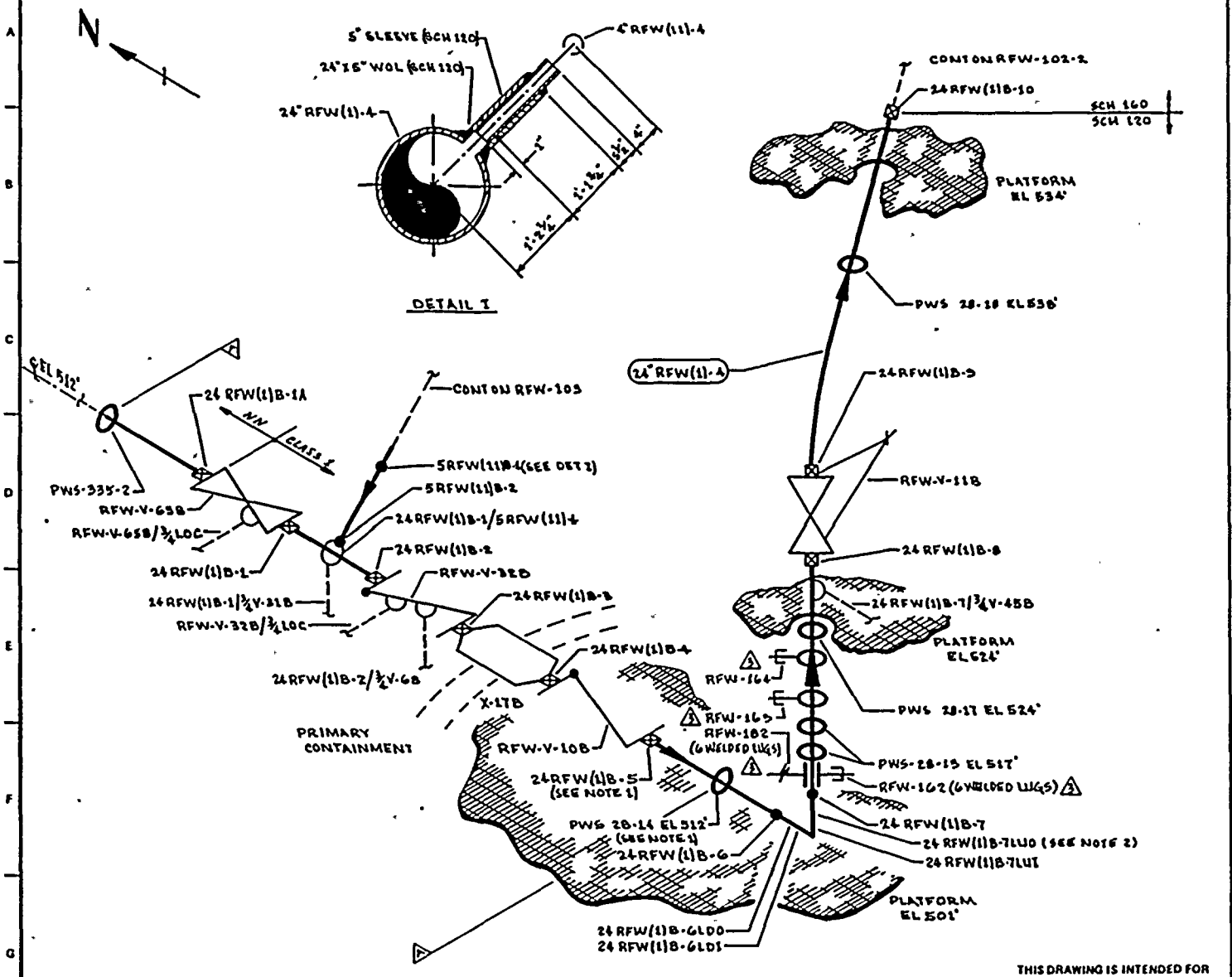

NOTES:

1. ACCESS TO WELDS 24 RFW(1)B-5 & 24 RFW(1)B-6 REQUIRES REMOVAL OF PWS 28-14.
2. ELBOW BETWEEN WELDS 24 RFW(1)B-6 & 7 IS SCH 160, WELDED & SHORT RADIUS.

REFERENCES:

BOVEE & CRAIL ISOMETRICS

RFW-419-3	REV 6
RFW-419-4	REV 5
RFW-419-5,7	REV 9

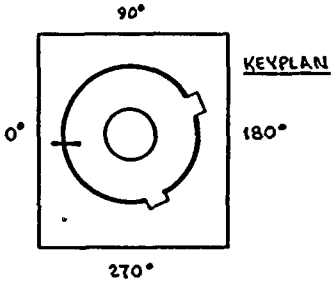

THIS DRAWING IS INTENDED FOR USE IN PRESERVICE AND INSERVICE INSPECTION PROGRAMS ONLY.

						PIPING SYSTEM	NOM DIA (IN)	SCH	NOM WALL THK	MATERIAL SPECIFICATION	MATL TYPE	CAL BLOCK NO
3	12-2-83	REVISED AS NOTED ADDED KEYPLAN & LUGS	KMcA	DRK	TFH	24" RFW(1)-4	24	120	1.812	SA 106 GR B	CS	UT-5
2	12-2-81	AUGMENTED ISI ADDED	KMcA	DRK	TFH	5" RFW(11)-4	5	120	0.500	SA 106 GR B	CS	UT-32
1	11-5-80	ADDED NOTE 2 & PIPE SCH BREAK	KMcA	TFH	[illegible]	24" RFW(1)-4	24	160	2.062	SA 106 GR B	CS	UT-33
0	11-7-78	ISSUED FOR USE	KMcA	DWR	[illegible]	LUGS	NA	NA	NA	SA 516 GR 70	CS	UT-46
A	4-21-78	ISSUED FOR INFORMATION ONLY	KMcA	DCJ	[illegible]							
NO	DATE	REVISION	BY	CHKD	APPVD							

QUALITY CLASS: 1 | ASME CODE CLASS: 1

ENGR: D TIMMINS | DRAWN: K.M.A. | DATE: 3-6-78

WASHINGTON PUBLIC POWER SUPPLY SYSTEM

RICHLAND, WASHINGTON 99352

WNP-2
WELD & COMPONENT IDENTIFICATION DIAGRAM

TITLE: REACTOR FEED WATER LINE B

DWG NO: RFW-102-1 | REV 3

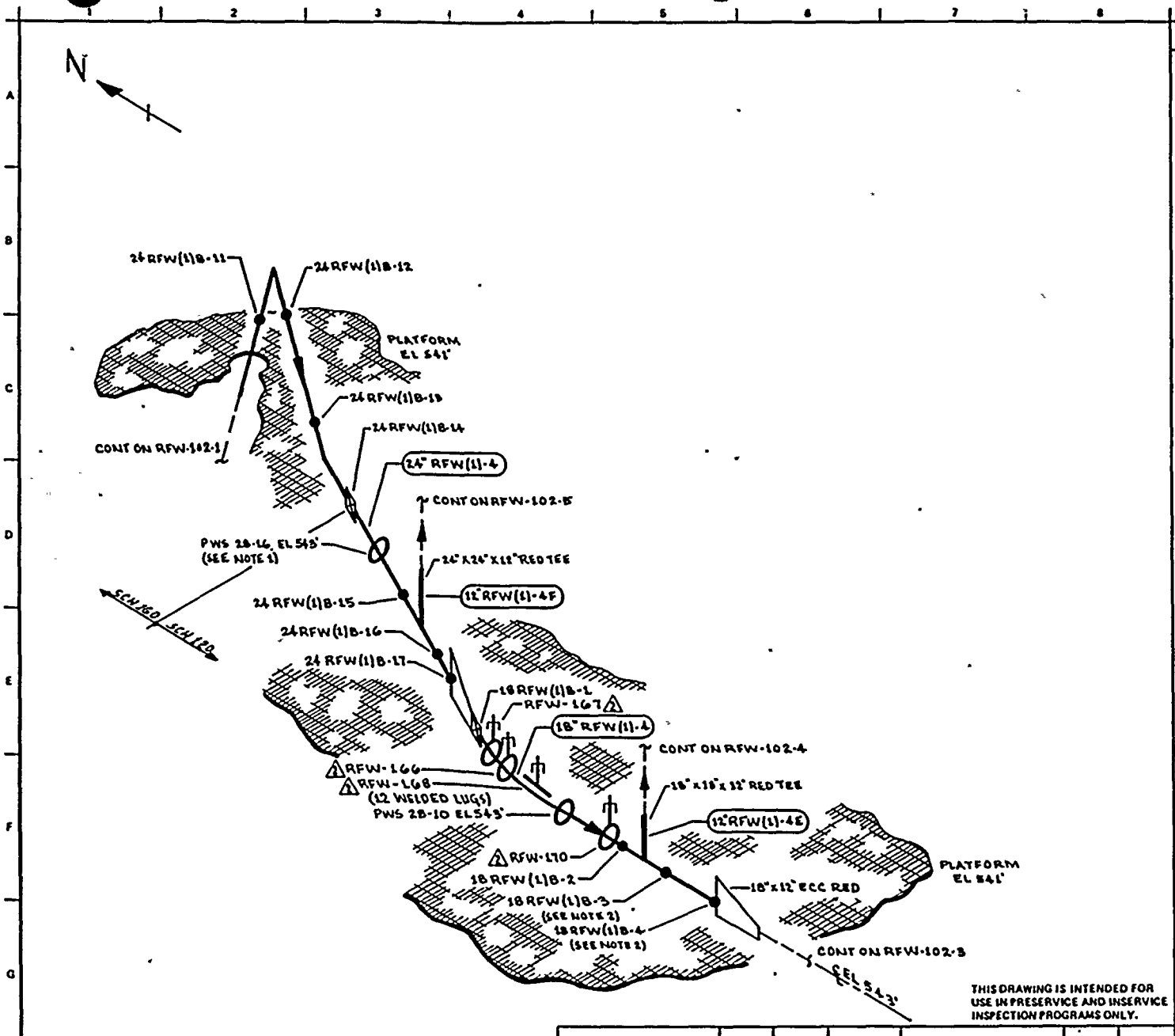

NOTES:

1. ACCESS TO WELD 24 RFW(1)B-14 REQUIRES REMOVAL OF PWS-28-16.
2. WELDS 18 RFW(1)B-3 & 18 RFW(1)B-4 ARE FITTING TO FITTING. SPACING IS 3½".

REFERENCES:

BOVEE & CRAIL ISOMETRIC
RFW-419-5.7 REV 9

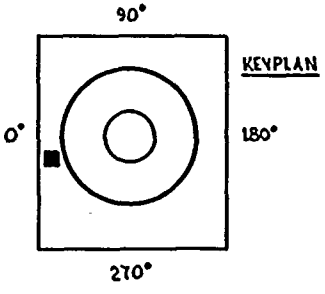

THIS DRAWING IS INTENDED FOR USE IN PRESERVICE AND INSERVICE INSPECTION PROGRAMS ONLY.

						PIPING SYSTEM	NOM DIA (IN)	SCH	NOM WALL THK	MATERIAL SPECIFICATION	MATL TYPE	CAL BLOCK NO
						24" RFW (1)-4	24	120	1.812	SA 106 GR B	CS	UT-5
2	13-17-81	REVISED AS NOTED ADDED LUGS & KEYPLAN	KMA	[illegible]	[illegible]	18" RFW (1)-4	18	120	1.375	SA 106 GR B	CS	UT-11
1	11-5-80	ADDED PIPE SCH BREAK & AS NOTED	KMA	TFK	[illegible]	24" RFW (1)-4	24	160	2.344	SA 106 GR B	CS	UT-23
0	11-27-78	ISSUED FOR USE	KMA	[illegible]	[illegible]	LUGS	NA	NA	NA	SA 516 GR 70	CS	UT-46
A	6-21-78	ISSUED FOR INFORMATION ONLY	KMA	[illegible]	[illegible]							
NO	DATE	REVISION	BY	CHKD	APPVD							

QUALITY CLASS: 1 | ASME CODE CLASS: 1

ENGR: D TIMMINS | DRAWN: K M A | DATE: 3-6-78

WASHINGTON PUBLIC POWER SUPPLY SYSTEM
RICHLAND, WASHINGTON 99352

WNP-2
WELD & COMPONENT IDENTIFICATION DIAGRAM

TITLE:
REACTOR FEED WATER LINE B

DWG NO: RFW-102-2 | REV 2

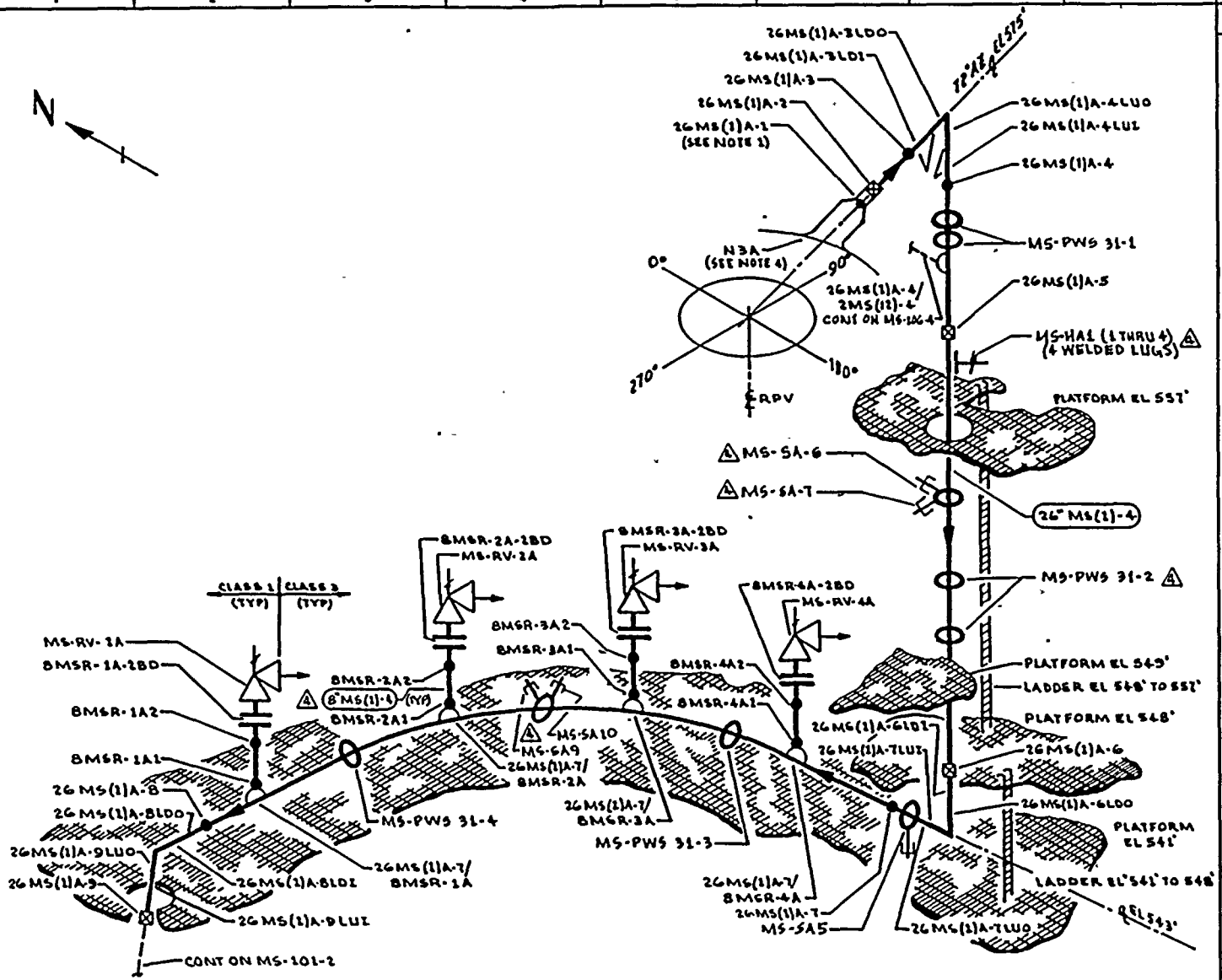

NOTES:

1. WELD 26MS(1)A-1 UTILIZES CAL BLOCK UT-104.
2. ACCESS TO WELDS 26MS(1)A-1 THRU 26MS(1)A-3 REQUIRES TEMPORARY SCAFFOLDING.
3. ACCESS TO WELD 26MS(1)A-7 REQUIRES REMOVAL OF MS-SA5.
4. FOR NOZZLE ASSEMBLY DETAILS SEE RPV-107.

REFERENCES:

GENERAL ELECTRIC DRAWINGS:

761 E 992	131 C 8031
131 C 7731	131 C 8030
131 C 8403	131 C 8046
131 C 8501	

CBI NUCLEAR CO.

55, REV 3, N3 NOZZLE

BOYCE CRAIL/GERI

BC/Q - 211A REV 4

KEYPLAN

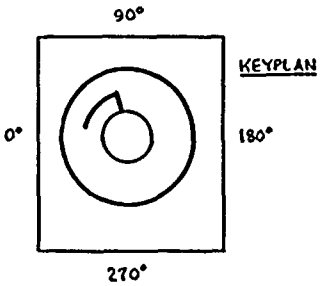

QUALITY CLASS: 1	ASME CODE CLASS: 1	
ENGR: D TIMMINS	DRAWN: K.McA	DATE: 1-10-78

WASHINGTON PUBLIC POWER SUPPLY SYSTEM

RICHLAND, WASHINGTON 99352

THIS DRAWING IS INTENDED FOR USE IN PRESERVICE AND INSERVICE INSPECTION PROGRAMS ONLY.

NO	DATE	REVISION	BY	CHKD	APPVD
4	9-26-83	ADDED UT-46 LUGS & AS NOTED. ADDED KEYPLAN	K.McA	[illegible]	[illegible]
3	12-2-81	REVISED AS NOTED	K.McA	[illegible]	[illegible]
2	8-20-79	ADDED NOTE 4.	K.McA	[illegible]	[illegible]
1	1-10-79	CAL BLOCK REFERENCE CHANGED (FOR 8" PIPING)	K.McA	[illegible]	[illegible]
0	11-27-78	ISSUED FOR USE	K.McA	[illegible]	
A	4-21-78	ISSUED FOR INFORMATION ONLY	K.McA	[illegible]	

PIPING SYSTEM	NOM DIA (IN)	SCH	NOM WALL THK	MATERIAL SPECIFICATION	MATL TYPE	CAL BLOCK NO
26" MS(1)-4	26	XXX	1.125	SA 106 GR B	CS	UT-4
8" MS(1)-4	8	160	0.906	SA 106 GR B	CS	UT-24
LUGS	NA	NA	NA	SA 515 GR 70	CS	UT-46

WNP-2

WELD & COMPONENT IDENTIFICATION DIAGRAM

TITLE: MAIN STEAM LINE A

DWG NO: MS-101-1 REV 4

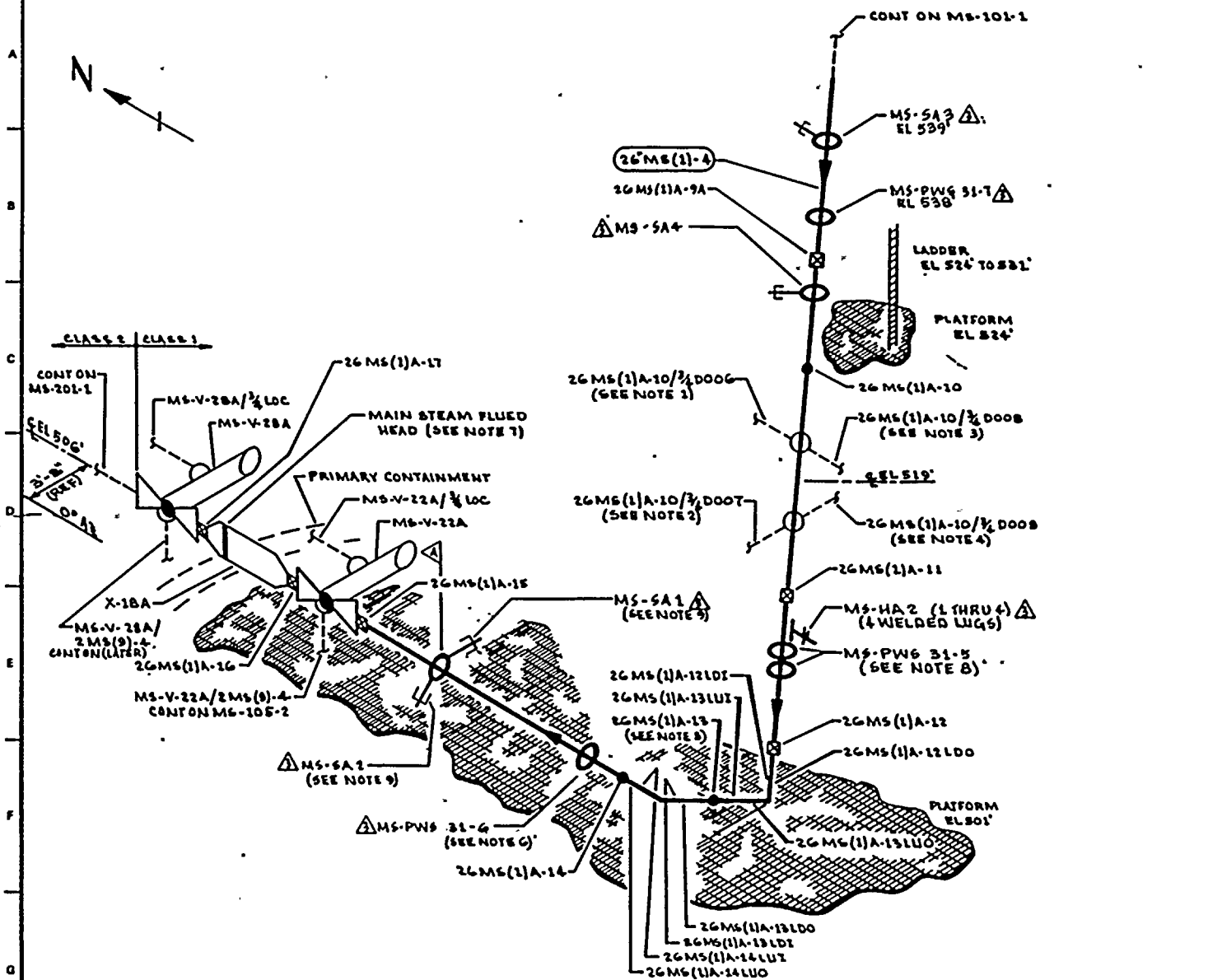

NOTES:

1. EXTEND LEAKAGE EXAM THROUGH CONTAINMENT (X-69a) THROUGH EXCESS FLOW CHECK VALVE TO INSTRUMENT TUBING CONNECTION.
2. EXTEND LEAKAGE EXAM THROUGH CONTAINMENT (X-69b) THROUGH EXCESS FLOW CHECK VALVE TO INSTRUMENT TUBING CONNECTION.
3. EXTEND LEAKAGE EXAM THROUGH CONTAINMENT (X-42a) THROUGH EXCESS FLOW CHECK VALVE TO INSTRUMENT TUBING CONNECTION.
4. EXTEND LEAKAGE EXAM THROUGH CONTAINMENT (X-42b) THROUGH EXCESS FLOW CHECK VALVE TO INSTRUMENT TUBING CONNECTION.
5. WELD 26MS(1)A-13 IS FITTING TO FITTING.
6. ACCESS TO WELD 26MS(1)A-14 REQUIRES REMOVAL OF MS-PWS 31-6.
7. FOR EXAM OF MAIN STEAM FLUED HEAD SEE DWG MS-101-2.
8. ACCESS TO WELD 26MS(1)A-12 IS RESTRICTED BY PWS 31-5.
9. ACCESS TO WELD 26MS(1)A-15 IS RESTRICTED BY MS-SA1 & MS-SA2.

REFERENCES:

GENERAL ELECTRIC DRAWINGS

761 E 992	131 C 8031
131 C 7731	131 C 8030
131 C 8403	131 C 8046
131 C 8501	

BOVEE CRAIL/GERI

BC/G-211A REV 4

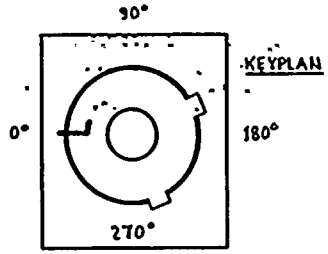

THIS DRAWING IS INTENDED FOR USE IN PRESERVICE AND INSERVICE INSPECTION PROGRAMS ONLY.

3	9-26-83	REVISED AS NOTED. ADDED KEYPLAN & LUGS	KMA	[illegible]	[illegible]	26" MS(1)-4	26	XXX	1.125	SA 106 GR B	CS	UT-4
2	12-2-81	REVISED AS NOTED, AUGMENTED TSL ADDED	KMA	[illegible]	[illegible]	LUGS	NA	NA	NA	SA 516 GR 70	CS	UT-46
1	8-30-79	ADDED FIELD WELD 26MS(1)A-9A IN B-6	KMA	[illegible]	[illegible]							
0	11-27-78	ISSUED FOR USE	KMA	[illegible]	[illegible]							
A	4-21-78	ISSUED FOR INFORMATION ONLY	KMA	DCJ	[illegible]							
NO	DATE	REVISION	BY	CHKD	APPVD							

QUALITY CLASS: 1 | ASME CODE CLASS: 1

ENGR: D TIMMINS | DRAWN: K. McA | DATE: 1-10-78

WASHINGTON PUBLIC POWER SUPPLY SYSTEM

RICHLAND, WASHINGTON 99352

WNP-2
WELD & COMPONENT IDENTIFICATION DIAGRAM

TITLE: MAIN STEAM LINE A

DWG NO: MS-101-2 | REV 3

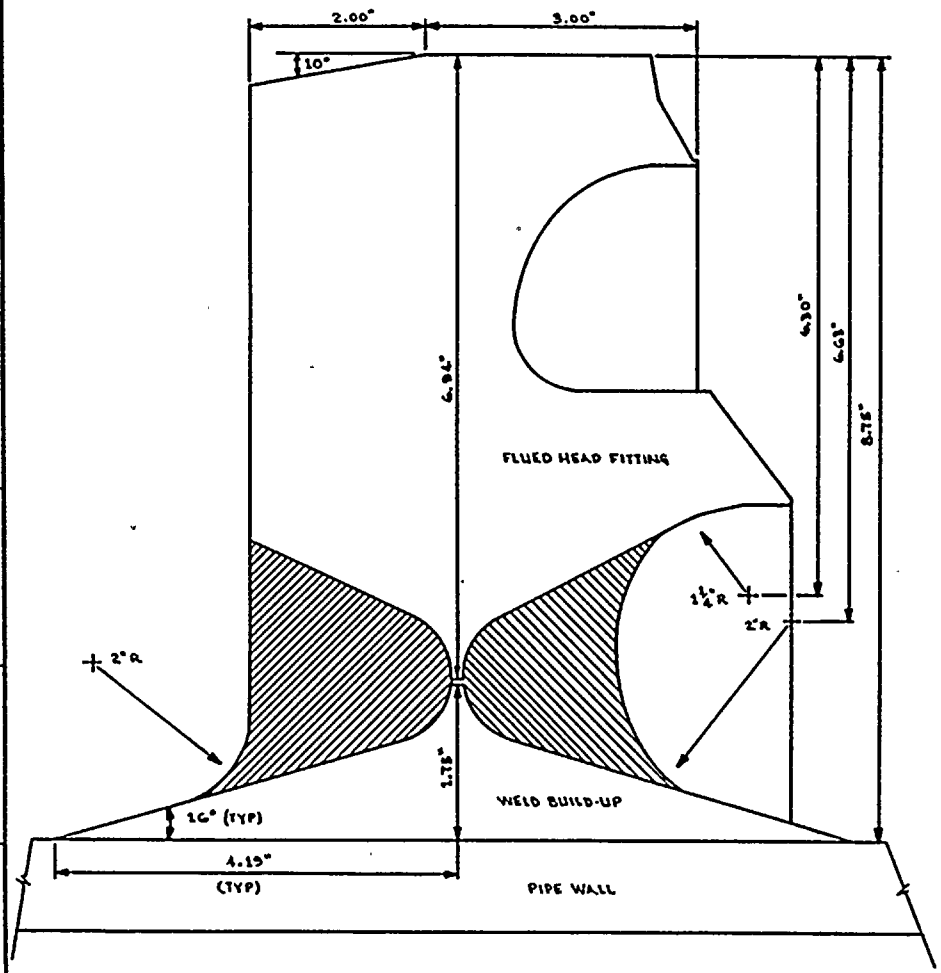

SECTION A-A

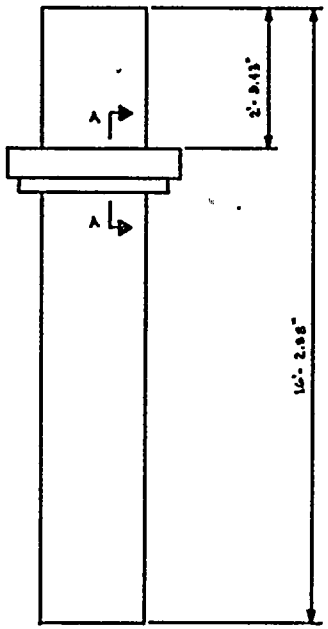

NOTES:

1. THIS DETAIL OF THE MAIN STEAM FLUED HEAD IS ASSOCIATED WITH MS-101-2 MS-102-2, MS-103-2 & MS-104-2.

QUALITY CLASS: 1		ASME CODE CLASS: 1
ENGR: D TIMMINS	DRAWN: K.M.A.	DATE: 4-24-78

WASHINGTON PUBLIC POWER SUPPLY SYSTEM
RICHLAND, WASHINGTON 99352

THIS DRAWING IS INTENDED FOR USE IN PRESERVICE AND INSERVICE INSPECTION PROGRAMS ONLY.

PIPING SYSTEM	NOM DIA (IN)	SCH	NOM WALL THK	MATERIAL SPECIFICATION	MATL TYPE	CAL BLOCK NO
26" MG(1)-4	26	XXX	1.125	SA 106 GR B	CS	UT-4
FLUED HEAD	NA	NA	NA	SA 105	CS	UT-40

WNP-2
WELD & COMPONENT IDENTIFICATION DIAGRAM

TITLE: MAIN STEAM FLUED HEAD

DWG NO: MS-101-3 REV 0

NO	DATE	REVISION	BY	CHKD	APPVD
0	11-27-78	ISSUED FOR USE	KMCA	DWB	
A	5-19-78	ISSUED FOR INFORMATION ONLY	KMCA	DWB	

WNP-02
INTERVAL: PSI
PERIOD: NA
OUTAGE:
DRAWING NO. MS-101

WASHINGTON PUBLIC POWER SUPPLY SYSTEM
PROGRAM PLAN AND SCHEDULE
SYSTEM OR COMPONENT: MS(1)-4
DESCRIPTION: MAIN STEAM LINE A

DATE 12/14/84

IDENT. NO.	DESCRIPTION	SECT. XI EXAM.	EXAM MTH.	PROCEDURE	CAL. BLOCK	INSERVICE REQ.	INSERVICE SCHEDULED OUTAGE	NOTES
26MS(1)A-1								
	NZ/TRANSITION	B-J	VOL	UTP-10	UT-104			
			SUR	PTP-1				
26MS(1)A-2								
	TRANSITION/PIPE	B-J	VOL	UTP-10	UT-4			
			SUR	PTP-1				
26MS(1)A-3								
	PIPE TO EL	B-J	VOL	UTP-10	UT-4			
			SUR	PTP-1				
26MS(1)A-3LDI								
	EL SEAM	B-J	VOL	UTP-10	UT-4			
			SUR	PTP-1				
26MS(1)A-3LDO								
	EL SEAM	B-J	VOL	UTP-10	UT-4			
			SUR	PTP-1				
26MS(1)A-4LUI								
	EL SEAM	B-J	VOL	UTP-10	UT-4			
			SUR	PTP-1				
26MS(1)A-4LUO								
	EL SEAM	B-J	VOL	UTP-10	UT-4			
			SUR	PTP-1				
26MS(1)A-4								
	EL TO PIPE	B-J	VOL	UTP-10	UT-4			
			SUR	PTP-1				
PWS-31-1								
	PIPE WHIP	N/A	N/A	N/A				SEE NOTE #1
26MS(1)A-4/2MS(12)-4								
	HEAD VENT CONN	B-J	SUR	PTP-1				

WHP-02
INTERVAL: PSI
PERIOD: NA
OUTAGE:
DRAWING NO. MS-101

WASHINGTON PUBLIC POWER SUPPLY SYSTEM
PROGRAM PLAN AND SCHEDULE
SYSTEM OR COMPONENT: MS(1)-4
DESCRIPTION: MAIN STEAM LINE A

DATE 12/14/84

IDENT. NO.	DESCRIPTION	SECT. XI EXAM.	EXAM MTH.	PROCEDURE	CAL. BLOCK	INSERVICE REQ.	INSERVICE SCHEDULED OUTAGE	NOTES
26MS(1)A-5								
	PIPE TO PIPE	B-J	VOL	UTP-10	UT-4			
			SUR	PTP-1				
MS-HA-1(W)								
	4 WELDED LUGS	B-K-1	VOL	UTP-26	UT-4			
MS-HA-1								
	SPRING (2)	B-K-2	VT-3	303/8.2.17				
			VT-4	303/8.2.17				
MS-SA-6								
	PSA-35 SNUBBER	B-K-2	VT-3	303/8.2.17				S/N 4205
			VT-4	303/8.2.17				S/N 4205
MS-SA-7								
	PSA-35 SNUBBER	B-K-2	VT-3	303/8.2.17				S/N 4209
			VT-4	303/8.2.17				S/N 4209
PWS-31-2								
	PIPE WHIP	N/A	N/A	N/A				
26MS(1)A-6								
	PIPE TO EL	B-J	VOL	UTP-10	UT-4			
			SUR	PTP-1				
26MS(1)A-6LDI								
	EL SEAM	B-J	VOL	UTP-10	UT-4			
			SUR	PTP-1				
26MS(1)A-6LDO								
	EL SEAM	B-J	VOL	UTP-10	UT-4			
			SUR	PTP-1				
26MS(1)A-7LUI								
	EL SEAM	B-J	VOL	UTP-10	UT-1			
			SUR	PTP-1				

WNP-02
INTERVAL: PSI
PERIOD: NA
OUTAGE:
DRAWING NO. MS-101

WASHINGTON PUBLIC POWER SUPPLY SYSTEM
PROGRAM PLAN AND SCHEDULE
SYSTEM OR COMPONENT: MS(1)-4
DESCRIPTION: MAIN STEAM LINE A

DATE 12/14/84

IDENT. NO.	DESCRIPTION	SECT. XI EXAM.	EXAM MTH.	PROCEDURE	CAL. BLOCK	INSERVICE REQ.	SCHEDULED OUTAGE	NOTES
26MS(1)A-7LUG								
	EL SEAM	B-J	VOL	UTP-10	UT-4			
			SUR	PTP-1				
MS-SA-5								
	PSA-35 SNUBBER	B-K-2	VT-3	303/8.2.17				S/N 4139
			VT-4	303/8.2.17				S/N 4139
26MS(1)A-7								
	EL TO PIPE	B-J	VOL	UTP-10	UT-4			
			SUR	PTP-1				
26MS(1)A-7/8MSR-4A								
	PIPE TO SWL	B-J	VOL	UTP-10	UT-4			
			SUR	PTP-1				
8MSR-4A1								
	SWL TO PIPE	B-J	VOL	UTP-10	UT-24			
			SUR	PTP-1				
8MSR-4A2								
	PIPE TO FLANGE	B-J	VOL	UTP-10	UT-24			
			SUR	PTP-1				
8MSR-4A-2BO								
	FLANGE BOLTING	B-G-2	VT-1	OCI 7-1				
MS-RV-4A-BLT								
	VALVE BOLTING	B-G-2	VT-1	OCI 7-1				
MS-RV-4A-BDY								
	VALVE BODY	B-M-2	VT-1	OCI 7-1				
PWS-31-3								
	PIPE WHIP	N/A	N/A	N/A				SEE NOTE #1
26MS(1)A-7/8MSR-3A								
	PIPE TO SWL	B-J	VOL	UTP-10	UT-4			
			SUR	PTP-1				

WNP-02
INTERVAL: PSI
PERIOD: NA
OUTAGE:
DRAWING NO. MS-101

WASHINGTON PUBLIC POWER SUPPLY SYSTEM
PROGRAM PLAN AND SCHEDULE
SYSTEM OR COMPONENT: MS(1)-4
DESCRIPTION: MAIN STEAM LINE A

DATE 12/14/84

IDENT. NO.	DESCRIPTION	SECT. XI EXAM.	EXAM MTH.	PROCEDURE	CAL. BLOCK	INSERVICE REQ.	INSERVICE SCHEDULED OUTAGE	NOTES
8MSR-3A1								
	SWL TO PIPE	B-J	VOL	UTP-10	UT-24			
			SUR	PTP-1				
8MSR-3A2								
	PIPE TO FLANGE	B-J	VOL	UTP-10	UT-24			
			SUR	PTP-1				
8MSR-3A-2BD								
	FLANGE BOLTING	B-G-2	VT-1	QCI 7-1				
MS-RV-3A-BLT								
	VALVE BOLTING	B-G-2	VT-1	QCI 7-1				
MS-RV-3A-BDY								
	VALVE BODY	B-M-2	VT-1	QCI 7-1				
MS-SA-9								
	PSA-35 SNUBBER	B-K-2	VT-3	303/8.2.17				S/N 4141
			VT-4	303/8.2.17				S/N 4141
MS-SA-10								
	PSA-35 SNUBBER	B-K-2	VT-3	303/8.2.17				S/N 4143
			VT-4	303/8.2.17				S/N 4143
26MS(1)A-7/8MSR-2A								
	PIPE TO SWL	B-J	VOL	UTP-10	UT-4			
			SUR	PTP-1				
8MSR-2A1								
	SWL TO PIPE	B-J	VOL	UTP-10	UT-24			
			SUR	PTP-1				
8MSR-2A2								
	PIPE TO FLANGE	B-J	VOL	UTP-10	UT-24			
			SUR	PTP-1				
8MSR-2A-2BD								
	FLANGE BOLTING	B-G-2	VT-1	QCI 7-1				

WNP-02
INTERVAL: PSI
PERIOD: NA
OUTAGE:
DRAWING NO. MS-101

WASHINGTON PUBLIC POWER SUPPLY SYSTEM
PROGRAM PLAN AND SCHEDULE
SYSTEM OR COMPONENT: MS(1)-4
DESCRIPTION: MAIN STEAM LINE A

IDENT. NO.	DESCRIPTION	SECT. XI EXAM.	EXAM MTH.	PROCEDURE	CAL. BLOCK	INSERVICE REQ.	INSERVICE SCHEDULED OUTAGE	NOTES
MS-RV-2A-BLT	VALVE BOLTING	B-G-2	VT-1	QCI 7-1				
MS-RV-2A-BDY	VALVE BODY	B-M-2	VT-1	QCI 7-1				
FWS-31-4	PIPE WHIP	N/A	N/A	N/A				SEE NOTE #1
26MS(1)A-7/8MSR-1A	PIPE TO SWL	B-J	VOL	UTP-10	UT-4			
			SUR	PTP-1				
8MSR-1A1	SWL TO PIPE	B-J	VOL	UTP-10	UT-24			
			SUR	PTP-1				
8MSR-1A2	PIPE TO FLANGE	B-J	VOL	UTP-10	UT-24			
			SUR	PTP-1				
8MSR-1A-2BD	FLANGE BOLTING	B-G-2	VT-1	QCI 7-1				
MS-RV-1A-BLT	VALVE BOLTING	B-G-2	VT-1	QCI 7-1				
MS-RV-1A-BDY	VALVE BODY	B-M-2	VT-1	QCI 7-1				
26MS(1)A-8	PIPE TO FL	B-J	VOL	UTP-10	UT-4			
			SUR	PTP-1				
26MS(1)A-8LDI	EL SEAM	B-J	VOL	UTP-10	UT-4			
			SUR	PTP-1				
26MS(1)A-8LDO	EL SEAM	B-J	VOL	UTP-10	UT-4			
			SUR	PTP-1				

WNP-02
INTERVAL: PSI
PERIOD: NA
OUTAGE:
DRAWING NO. MS-101

WASHINGTON PUBLIC POWER SUPPLY SYSTEM
PROGRAM PLAN AND SCHEDULE
SYSTEM OR COMPONENT: MS(1)-4
DESCRIPTION: MAIN STEAM LINE A

DATE 12/14/84

IDENT. NO.	DESCRIPTION	SECT. XI EXAM.	EXAM MTH.	PROCEDURE	CAL. BLOCK	INSERVICE REQ.	INSERVICE SCHEDULED OUTAGE	NOTES
26MS(1)A-9LUM								
	EL SEAM	B-J	VOL	UTP-10	UT-4			
			SUR	PTP-1				
26MS(1)A-9LUO								
	EL SEAM	B-J	VOL	UTP-10	UT-4			
			SUR	PTP-1				
26MS(1)A-9								
	EL TO PIPE	B-J	VOL	UTP-10	UT-4			
			SUR	PTP-1				
MS-SA-3								
	PSA-35 SNUBBER	B-K-2	VT-3	303/8.2.17				S/N 4145
			VT-4	303/8.2.17				S/N 4145
PWS-31-7								
	PIPE WHIP	N/A	N/A	N/A				SEE NOTE #1
26MS(1)A-9A								
	PIPE TO PIPE	B-J	VOL	UTP-10	UT-4			
			SUR	PTP-1				
MS-SA-4								
	PSA-35 SNUBBER	B-K-2	VT-3	303/9.2.17				S/N 4147
			VT-4	303/8.2.17				S/N 4147
26MS(1)A-10								
	PIPE TO PIPE	B-J	VOL	UTP-10	UT-4			
			SUR	PTP-1				
26MS(1)A-10/3/4-D006								
	INSTR CONN	B-P	VT-2	N/A				SEE NOTES #6 & #7.
26MS(1)A-10/3/4-D008								
	INSTR CONN	B-P	VT-2	N/A				SEE NOTES #6 & #7.

WNP-02
INTERVAL: PSI
PERIOD: NA
OUTAGE:
DRAWING NO. MS-101

WASHINGTON PUBLIC POWER SUPPLY SYSTEM
PROGRAM PLAN AND SCHEDULE
SYSTEM OR COMPONENT: MS(1)-4
DESCRIPTION: MAIN STEAM LINE A

IDENT. NO.	DESCRIPTION	SECT. XI EXAM.	EXAM MTH.	PROCEDURE	CAL. BLOCK	INSERVICE REQ.	INSERVICE SCHEDULED OUTAGE	NOTES
26MS(1)A-10/3/4-D007								
	INSTR CONN	B-P	VT-2	N/A				SEE NOTES #6 & #7.
26MS(1)A-10/3/4-D009								
	INSTR CONN	B-P	VT-2	N/A				SEE NOTES #6 & #7.
26MS(1)A-11								
	PIPE TO PIPE	B-J	VOL	UTP-10	UT-4			
			SUR	PTP-1				
MS-HA-2(W)								
	4 WELDED LUGS	B-K-1	VOL	UTP-26	UT-4			
MS-HA-2								
	SPRING (2)	B-K-2	VT-3	303/8.2.17				
			VT-4	303/8.2.17				
PWS-31-E								
	PIPE WHIP	N/A	N/A	N/A				SEE NOTE #1
26MS(1)A-12								
	PIPE TO EL	B-J	VOL	UTP-10	UT-4			
			SUR	PTP-1				
26MS(1)A-12LDI								
	EL SEAM	B-J	VOL	UTP-10	UT-4			
			SUR	PTP-1				
26MS(1)A-12LDO								
	EL SEAM	B-J	VOL	UTP-10	UT-4			
			SUR	PTP-1				
26MS(1)A-13LUI								
	EL SEAM	B-J	VOL	UTP-10	UT-4			
			SUR	PTP-1				
26MS(1)A-13LUO								
	EL SEAM	B-J	VOL	UTP-10	UT-4			
			SUR	PTP-1				

WNP-02
INTERVAL: PSI
PERIOD: NA
OUTAGE:
DRAWING NO. MS-101

WASHINGTON PUBLIC POWER SUPPLY SYSTEM
PROGRAM PLAN AND SCHEDULE
SYSTEM OR COMPONENT: MS(1)-4
DESCRIPTION: MAIN STEAM LINE A

DATE 12/14/84

IDENT. NO.	DESCRIPTION	SECT. XI EXAM.	EXAM MTH.	PROCEDURE	CAL. BLOCK	INSERVICE REQ.	SCHEDULED OUTAGE	NOTES
26MS(1)A-13	EL TO EL	B-J	VOL	UTP-10	UT-4			
			SUR	PTP-1				
26MS(1)A-13LDI	EL SEAM	B-J	VOL	UTP-10	UT-4			
			SUR	PTP-1				
26MS(1)A-13LDO	EL SEAM	B-J	VOL	UTP-10	UT-4			
			SUR	PTP-1				
26MS(1)A-14LUI	EL SEAM	B-J	VOL	UTP-10	UT-4			
			SUR	PTP-1				
26MS(1)A-14LUO	EL SEAM	B-J	VOL	UTP-10	UT-4			
			SUR	PTP-1				
26MS(1)A-14	EL TO PIPE	B-J	VOL	UTP-10	UT-4			
			SUR	PTP-1				
PWS-31-6	PIPE WHIP	N/A	N/A	N/A				SEE NOTE #1
MS-SA-1	PSA-100 SNUBBER	B-K-2	VT-3	303/8.2.17				S/N 608
			VT-4	303/8.2.17				S/N 608
MS-SA-2	PSA-100 SNUBBER	B-K-2	VT-3	303/8.2.17				S/N 610
			VT-4	303/8.2.17				S/N 610

WNP-02
INTERVAL: PSI
PERIOD: NA
OUTAGE:
DRAWING NO. MS-101

WASHINGTON PUBLIC POWER SUPPLY SYSTEM
PROGRAM PLAN AND SCHEDULE
SYSTEM OR COMPONENT: MS(1)-4
DESCRIPTION: MAIN STEAM LINE A

DATE 12/14/84

IDENT. NO.	DESCRIPTION	SECT. XI EXAM.	EXAM MTH.	PROCEDURE	CAL. BLOCK	INSERVICE REQ.	INSERVICE SCHEDULED OUTAGE	NOTES
26MS(1)A-15								
	PIPE TO VALVE	B-J	VOL	UTP-10	UT-4			AUGMT
			SUR	PTP-1				AUGMT
MS-V-22A/2MS(9)-4								
	DRAIN CONN	B-J	SUR	PTP-1				
MS-V-22A-BLT								
	VALVE BOLTING	B-G-2	VT-1	QCI 7-1				
MS-V-22A-BDY								
	VALVE BODY	B-G-2	VT-1	QCI 7-1				
MS-V-22A/3/4CAP								
	LEAKOFF CAPPED	B-P	VT-2	N/A				
26MS(1)A-16								
	VALVE TO PENE	B-J	VOL	UTP-10	UT-4			AUGMT
			SUR	PTP-1				AUGMT
MS FLUED HEAD A								
	FLUED HEAD WELD	B-K-1	VOL	UTP-33	UT-40			SEE DWG. #MS-101-3, AUGMT.
			SUR	MTP-1				SEE DWG. #MS-101-3, AUGMT.
26MS(1)A-17								
	PENE TO VALVE	B-J	VOL	UTP-10	UT-4			AUGMT
			SUR	PTP-1				AUGMT
MS-V-28A/2MS(9)-4								
	DRAIN CONN	B-J	SUR	PTP-1				AUGMT
MS-V-28A-BLT								
	VALVE BOLTING	B-G-2	VT-1	QCI 7-1				
MS-V-28A-BDY								
	VALVE BODY	B-N-2	VT-1	QCI 7-1				
MS-V-28A/3/4CAP								
	LEAKOFF CAPPED	B-P	VT-2	N/A				

WNP-02
INTERVAL: PSI
PERIOD: NA
OUTAGE:
DRAWING NO. MS-101

WASHINGTON PUBLIC POWER SUPPLY SYSTEM
PROGRAM PLAN AND SCHEDULE
SYSTEM OR COMPONENT: MS(1)-4
DESCRIPTION: MAIN STEAM LINE A

IDENT. NO.	DESCRIPTION	SECT. XI EXAM.	EXAM MTH.	PROCEDURE	CAL. BLOCK	INSERVICE REQ.	SCHEDULED OUTAGE	NOTES
MS-PB-101	MS PRESS BNDRY	B-P	VT-2	N/A				SEE NOTES #6 & #7.

WNP-02
INTERVAL: PSI
PERIOD: NA
OUTAGE:
DRAWING NO. RFW-103

WASHINGTON PUBLIC POWER SUPPLY SYSTEM
PROGRAM PLAN AND SCHEDULE
SYSTEM OR COMPONENT: RFW(11)-4
DESCRIPTION: REACTOR FEEDWATER

DATE 12/14/84

IDENT. NO.	DESCRIPTION	SECT. XI EXAM.	EXAM MTH.	PROCEDURE	CAL. BLOCK	INSERVICE REQ.	SCHEDULED OUTAGE	NOTES
			SUR	PTP-1				AUGMT
6RFW(11)-10								
	PIPE TO REDUCER	B-J	VOL	QCI 6-13	UT-28			AUGMT
			SUR	QCI 3-3				AUGMT
4RFW(11)B-1								
	REDUCER TO PIPE	B-J	VOL	QCI 6-13	UT-30			AUGMT
			SUR	QCI 3-3				AUGMT
4RFW(11)B-1A								
	PIPE TO PIPE	B-J	VOL	QCI 6-13	UT-30			AUGMT
			SUR	QCI 3-3				AUGMT
RFW-903N								
	SPRING	B-K-2	VT-3	303/8.2.17				
			VT-4	303/8.2.17				
RFW-180								
	PSA-1 SNUBBER	B-K-2	VT-3	303/8.2.17				S/N 22345
			VT-4	303/8.2.17				S/N 22345
4RFW(11)B-2								
	PIPE TO EL	B-J	VOL	UTP-10	UT-30			AUGMT
			SUR	PTP-1				AUGMT
4RFW(11)B-3								
	EL TO PIPE	B-J	VOL	UTP-10	UT-30			AUGMT
			SUR	PTP-1				AUGMT
RFW-181								
	SPRING	B-K-2	VT-3	303/8.2.17				
			VT-4	303/8.2.17				

WNP-02
INTERVAL: PSI
PERIOD: NA
OUTAGE:
DRAWING NO. RFW-103

WASHINGTON PUBLIC POWER SUPPLY SYSTEM
PROGRAM PLAN AND SCHEDULE
SYSTEM OR COMPONENT: RFW(11)-4
DESCRIPTION: REACTOR FEEDWATER

DATE 12/14/84

IDENT. NO.	DESCRIPTION	SECT. XI EXAM.	EXAM MTH.	PROCEDURE	CAL. BLOCK	INSERVICE REQ.	INSERVICE SCHEDULED OUTAGE	NOTES
4RFW(11)B-4								
	PIPE TO EL	B-J	VOL	UTP-10	UT-30			AUGMT
			SUR	PTP-1				AUGMT
4RFW(11)B-5								
	EL TO SLEEVE	B-J	VOL	UTP-10	UT-30			AUGMT
			SUR	PTP-1				AUGMT
RFW-PB-103								
	RFW PRES BNDRY	B-P	VT-2	N/A				SEE NOTES #6 & #7.

WNP-02
INTERVAL: PSI
PERIOD: NA
OUTAGE:
DRAWING NO. RFW-101

WASHINGTON PUBLIC POWER SUPPLY SYSTEM
PROGRAM PLAN AND SCHEDULE
SYSTEM OR COMPONENT: RFW(1)-4
DESCRIPTION: RX FEEDWATER LINE A

IDENT. NO.	DESCRIPTION	SECT. XI EXAM.	EXAM MTH.	PROCEDURE	CAL. BLOCK	INSERVICE REQ.	INSERVICE SCHEDULED OUTAGE	NOTES
RFW-PB-101	RFW PRES BNDRY	B-P	VT-2	N/A				SEE NOTES #6 & #7.

WNP-02
INTERVAL: PSI
PERIOD: NA
OUTAGE:
DRAWING NO. RFW-101

WASHINGTON PUBLIC POWER SUPPLY SYSTEM
PROGRAM PLAN AND SCHEDULE
SYSTEM OR COMPONENT: RFW(1)-4
DESCRIPTION: RX FEEDWATER LINE A

DATE 12/14/84

IDENT. NO.	DESCRIPTION	SECT. XI EXAM.	EXAM MTH.	PROCEDURE	CAL. BLOCK	INSERVICE REQ.	INSERVICE SCHEDULED OUTAGE	NOTES
			VT-4	303/8.2.17				S/N 278/279
PWS-27-6	PIPE WHIP	N/A	N/A	N/A				SEE NOTE #1
PWS-27-5	PIPE WHIP	N/A	N/A	N/A				SEE NOTE #1
RFW-159(W)	4 WELDED LUGS	B-K-1	VOL	UTP-26	UT-15			SEE NOTE #1
RFW-159	SPRING	B-K-2	VT-3	303/8.2.17				
			VT-4	303/8.2.17				
12RFW(1)AA-6	PIPE TO EL	B-J	VOL	UTP-10	UT-15			
			SUR	PTP-1				
12RFW(1)AA-7	EL TO PIPE	B-J	VOL	UTP-10	UT-15			
			SUR	PTP-1				
12RFW(1)AA-8	PIPE TO SE EXT	B-J	VOL	UTP-10	UT-15			
			SUR	PTP-1				
12RFW(1)AA-9	SE EXT-SE STUB	B-F	VOL	UTP-10	UT-106			
			SUR	PTP-1				
12RFW(1)AA-10	SE STUB-SE EXT	B-J	VOL	UTP-10	UT-105			
			SUR	PTP-1				
12RFW(1)AA-11	SE TO N4	B-F	VOL	UTP-10	UT-102			
			SUR	PTP-1				

WNP-02
INTERVAL: PSI
PERIOD: NA
OUTAGE:
DRAWING NO. RFW-101

WASHINGTON PUBLIC POWER SUPPLY SYSTEM
PROGRAM PLAN AND SCHEDULE
SYSTEM OR COMPONENT: RFW(1)-4
DESCRIPTION: RX FEEDWATER LINE A

DATE 12/14/84

IDENT. NO.	DESCRIPTION	SECT. XI EXAM.	EXAM MTH.	PROCEDURE	CAL. BLOCK	INSERVICE REQ.	INSERVICE SCHEDULED OUTAGE	NOTES
			VT-4	303/8.2.17				
PWS-27-12								
	PIPE WHIP	N/A	N/A	N/A				SEE NOTE #1
12RFW(1)AA-2								
	PIPE TO EL	B-J	VOL	UTP-10	UT-15			
			SUR	PTP-1				
12RFW(1)AA-3								
	EL TO PIPE	B-J	VOL	UTP-10	UT-15			
			SUR	PTP-1				
PWS-27-8								
	PIPE WHIP	N/A	N/A	N/A				SEE NOTE #1
PWS-27-7								
	PIPE WHIP	N/A	N/A	N/A				SEE NOTE #1
RFW-151								
	PSA-10 SNUBBER	B-K-2	VT-3	303/8.2.17				S/N 10732
			VT-4	303/8.2.17				S/N 10732
RFW-153								
	PSA-10 SNUBBER	B-K-2	VT-3	303/8.2.17				S/N 9931
			VT-4	303/8.2.17				S/N 9931
12RFW(1)AA-4								
	PIPE TO EL	B-J	VOL	UTP-10	UT-15			
			SUR	PTP-1				
12RFW(1)AA-5								
	EL TO PIPE	B-J	VOL	UTP-10	UT-15			
			SUR	PTP-1				
RFW-929N								
	PSA-10 SN(2)	B-K-2	VT-3	303/8.2.17				S/N 278/279

WNP-02
INTERVAL: PSI
PERIOD: NA
OUTAGE:
DRAWING NO. RFW-101

WASHINGTON PUBLIC POWER SUPPLY SYSTEM
PROGRAM PLAN AND SCHEDULE
SYSTEM OR COMPONENT: RFW(1)-4
DESCRIPTION: RX FEEDWATER LINE A

DATE 12/14/84

IDENT. NO.	DESCRIPTION	SECT. XI EXAM.	EXAM MTH.	PROCEDURE	CAL. BLOCK	INSERVICE REQ.	INSERVICE SCHEDULED OUTAGE	NOTES
12RFW(1)AB-7			SUR	PTP-1				
	EL TO PIPE	B-J	VOL	UTP-10	UT-15			
12RFW(1)AB-8			SUR	PTP-1				
	PIPE-SE EXT	B-J	VOL	UTP-10	UT-15			
12RFW(1)AB-9			SUR	PTP-1				
	SE EXT-SE STUB	B-F	VOL	UTP-10	UT-106			
12RFW(1)AB-10			SUR	PTP-1				
	SE STUB TO SE	B-J	VOL	UTP-10	UT-105			
12RFW(1)AB-11			SUR	PTP-1				
	SE TO N4	B-F	VOL	UTP-10	UT-102			
18RFW(1)A-3			SUR	PTP-1				
	TEE TO PIPE	B-J	VOL	UTP-10	UT-11			
18RFW(1)A-4			SUR	PTP-1				
	PIPE TO REDUCER	B-J	VOL	UTP-10	UT-11			
12RFW(1)AA-1			SUR	PTP-1				
	REDUCER TO PIPE	B-J	VOL	UTP-10	UT-15			
RFW-152			SUR	PTP-1				
	SPRING	B-K-2	VT-3	303/8.2.17				

WNP-02
INTERVAL: PSI
PERIOD: NA
OUTAGE:
DRAWING NO. RFW-101

WASHINGTON PUBLIC POWER SUPPLY SYSTEM
PROGRAM PLAN AND SCHEDULE
SYSTEM OR COMPONENT: RFW(1)-4
DESCRIPTION: RX FEEDWATER LINE A

IDENT. NO.	DESCRIPTION	SECT. XI EXAM.	EXAM MTH.	PROCEDURE	CAL. BLOCK	INSERVICE REQ.	SCHEDULED OUTAGE	NOTES
			SUR	PTP-1				
12RFW(1)AB-1	TEE TO PIPE	B-J	VOL	UTP-10	UT-11			
			SUR	PTP-1				
PWS-27-9	PIPE WHIP	N/A	N/A	N/A				SEE NOTE #1
12RFW(1)AB-2	PIPE TO EL	B-J	VOL	UTP-10	UT-15			
			SUR	PTP-1				
12RFW(1)AB-3	EL TO PIPE	B-J	VOL	UTP-10	UT-15			
			SUR	PTP-1				
PWS-27-11	PIPE WHIP	N/A	N/A	N/A				SEE NOTE #1
12RFW(1)AB-4	PIPE TO EL	B-J	VOL	UTP-10	UT-15			
			SUR	PTP-1				
12RFW(1)AB-5	EL TO PIPE	B-J	VOL	UTP-10	UT-15			
			SUR	PTP-1				
PWS-27-4	PIPE WHIP	N/A	N/A	N/A				SEE NOTE #1
PWS-27-3	PIPE WHIP	N/A	N/A	N/A				SEE NOTE #1
RFW-158	SPRING	B-K-2	VT-3	303/8.2.17				
			VT-4	303/8.2.17				
12RFW(1)AB-6	PIPE TO EL	B-J	VOL	UTP-10	UT-15			

WNP-02
INTERVAL: PSI
PERIOD: NA
OUTAGE:
DRAWING NO. RFW-101

WASHINGTON PUBLIC POWER SUPPLY SYSTEM
PROGRAM PLAN AND SCHEDULE
SYSTEM OR COMPONENT: RFW(1)-4
DESCRIPTION: RX FEEDWATER LINE A

IDENT. NO.	DESCRIPTION	SECT. XI EXAM.	EXAM MTH.	PROCEDURE	CAL. BLOCK	INSERVICE REQ.	INSERVICE SCHEDULED OUTAGE	NOTES
24RFW(1)A-16			SUR	PTP-1				
	TEE TO PIPE	B-J	VOL	UTP-10	UT-5			
24RFW(1)A-17			SUR	PTP-1				
	PIPE TO REDUCER	B-J	VOL	UTP-10	UT-5			
18RFW(1)A-1			SUR	PTP-1				
	REDUCER TO PIPE	B-J	VOL	UTP-10	UT-11			
RFW-160			SUR	PTP-1				
	PSA-10 SN(2)	B-K-2	VT-3	303/8.2.17				S/N 288/1475
			VT-4	303/8.2.17				S/N 288/1475
RFW-154								
	PSA-10 SN(2)	B-K-2	VT-3	303/8.2.17				S/N 9958/9939
			VT-4	303/8.2.17				S/N 9958/9939
RFW-155								
	PSA-10 SN(2)	B-K-2	VT-3	303/8.2.17				S/N 14559/145
			VT-4	303/8.2.17				S/N 14559/145
RFW-155(W)								
	8 WELDED LUGS	B-K-1	VOL	UTP-26	UT-15			3/4"W x 2"H x 4"L.
RFW-156								
	PSA-10 SN(2)	B-K-2	VT-3	303/8.2.17				S/N 581/ 136
			VT-4	303/8.2.17				S/N 581/ 136
PWS-27-10								
	PIPE WHIP	N/A	N/A	N/A				SEE NOTE #1
18RFW(1)A-2								
	PIPE TO TEE	B-J	VOL	UTP-10	UT-11			

WNP-02
INTERVAL: PSI
PERIOD: NA
OUTAGE:
DRAWING NO. RFW-101

WASHINGTON PUBLIC POWER SUPPLY SYSTEM
PROGRAM PLAN AND SCHEDULE
SYSTEM OR COMPONENT: RFW(1)-4
DESCRIPTION: RX FEEDWATER LINE A

DATE 12/14/84

IDENT. NO.	DESCRIPTION	SECT. XI EXAM.	EXAM MTH.	PROCEDURE	CAL. BLOCK	INSERVICE REQ.	INSERVICE SCHEDULED OUTAGE	NOTES
			SUR	PTP-1				
PWS-27-2	PIPE WHIP	N/A	N/A	N/A				SEE NOTE #1
PWS-27-1	PIPE WHIP	N/A	N/A	N/A				SEE NOTE #1
RFW-157(W)	4 WELDED LUGS	B-K-1	VOL	UTP-26	UT-15			3/4"W x 2 1/8"H x 2"L.
RFW-157	SPRING	B-K-2	VT-3	303/8.2.17				
			VT-4	303/8.2.17				
12RFW(1)AC-8	PIPE TO EL	B-J	VOL	UTP-10	UT-15			
			SUR	PTP-1				
12RFW(1)AC-9	EL TO PIPE	B-J	VOL	UTP-10	UT-15			
			SUR	PTP-1				
12RFW(1)AC-10	PIPE-SE EXT	B-J	VOL	UTP-10	UT-15			
			SUR	PTP-1				
12RFW(1)AC-11	SE/EX-SE/STUB	B-F	VOL	UTP-10	UT-106			
			SUR	PTP-1				
12RFW(1)AC-12	SE/STUB TO SE	B-J	VOL	UTP-10	UT-105			
			SUR	PTP-1				
12RFW(1)AC-13	SE / N4	B-F	VOL	UTP-10	UT-102			

WNP-02
INTERVAL: PSI
PERIOD: NA
OUTAGE:
DRAWING NO. RFW-101

WASHINGTON PUBLIC POWER SUPPLY SYSTEM
PROGRAM PLAN AND SCHEDULE
SYSTEM OR COMPONENT: RFW(1)-4
DESCRIPTION: RX FEEDWATER LINE A

IDENT. NO.	DESCRIPTION	SECT. XI EXAM.	EXAM MTH.	PROCEDURE	CAL. BLOCK	INSERVICE REQ.	INSERVICE SCHEDULED OUTAGE	NOTES
			SUR	PTP-1				
RFW-156	SPRING	B-K-2	VT-3	303/8.2.17				
			VT-4	303/8.2.17				
RFW-156(W)	6 WELDED LUGS	B-K-1	VOL	UTP-26	UT-15			5/8"W x 2"H x 4"L.
12RFW(1)AC-2	PIPE TO EL	B-J	VOL	UTP-10	UT-15			
			SUR	PTP-1				
12RFW(1)AC-3	EL TO PIPE	B-J	VOL	UTP-10	UT-15			
			SUR	PTP-1				
PWS-27-15	PIPE WHIP	N/A	N/A	N/A				SEE NOTE #1
12RFW(1)AC-4	PIPE TO EL	B-J	VOL	UTP-10	UT-15			
			SUR	PTP-1				
12RFW(1)AC-5	EL TO PIPE	B-J	VOL	UTP-10	UT-15			
			SUR	PTP-1				
12RFW(1)AC-6	PIPE TO EL	B-J	VOL	UTP-10	UT-15			
			SUR	PTP-1				
12RFW(1)AC-7	EL TO PIPE	B-J	VOL	UTP-10	UT-15			
			SUR	PTP-1				
12RFW(1)AC-7A	PIPE TO PIPE	B-J	VOL	UTP-10	UT-15			

WNP-02
INTERVAL: PSI
PERIOD: NA
OUTAGE:
DRAWING NO. RFW-101

WASHINGTON PUBLIC POWER SUPPLY SYSTEM
PROGRAM PLAN AND SCHEDULE
SYSTEM OR COMPONENT: RFW(1)-4
DESCRIPTION: RX FEEDWATER LINE A

DATE 12/14/84

IDENT. NO.	DESCRIPTION	SECT. XI EXAM.	EXAM MTH.	PROCEDURE	CAL. BLOCK	INSERVICE REQ.	INSERVICE SCHEDULED OUTAGE	NOTES
RFW-V-11A-BODY	VALVE BODY	B-M-2	VT-1	QCI 7-1				
24RFW(1)A-9	VALVE TO PIPE	B-J	VOL	UTP-10	UT-5			
			SUR	PTP-1				
PWS-27-18	PIPE WHIP	N/A	N/A	N/A				SEE NOTE #1
24RFW(1)A-10	PIPE TO PIPE	B-J	VOL	UTP-10	UT-5			
			SUR	PTP-1				
24RFW(1)A-11	PIPE TO EL	B-J	VOL	UTP-10	UT-33			
			SUR	PTP-1				
24RFW(1)A-12	EL TO PIPE	B-J	VOL	UTP-10	UT-33			
			SUR	PTP-1				
24RFW(1)A-13	PIPE TO EL	B-J	VOL	UTP-10	UT-33			
			SUR	PTP-1				
24RFW(1)A-14	EL TO PIPE	B-J	VOL	UTP-10	UT-5			
			SUR	PTP-1				
PWS-27-15	PIPE WHIP	N/A	N/A	N/A				SEE NOTE #1
24RFW(1)A-15	PIPE TO TEE	B-J	VOL	UTP-10	UT-5			
			SUR	PTP-1				
12RFW(1)AC-1	TEE TO PIPE	B-J	VOL	UTP-10	UT-15			

WNP-02
INTERVAL: PSI
PERIOD: NA
OUTAGE:
DRAWING NO. RFW-101

WASHINGTON PUBLIC POWER SUPPLY SYSTEM
PROGRAM PLAN AND SCHEDULE
SYSTEM OR COMPONENT: RFW(1)-4
DESCRIPTION: RX FEEDWATER LINE A

IDENT. NO.	DESCRIPTION	SECT. XI EXAM.	EXAM MTH.	PROCEDURE	CAL. BLOCK	INSERVICE REQ.	INSERVICE SCHEDULED OUTAGE	NOTES
			SUR	PTP-1				
24RFW(1)A-7								
	EL TO PIPE	B-J	VOL	UTP-10	UT-5			
			SUR	PTP-1				
PWS-27-13								
	PIPE WHIP	N/A	N/A	N/A				SEE NOTE #1
RFW-186(W)								
	6 WELDED LUGS	B-K-1	VOL	UTP-26	UT-5			3/4"W x 2"H x 2"L.
RFW-186								
	SPRING	B-K-2	VT-3	303/8.2.17				
			VT-4	303/8.2.17				
RFW-146								
	PSA-10 SN(2)	B-K-2	VT-3	303/8.2.17				S/N 131/13044
			VT-4	303/8.2.17				S/N 131/13044
RFW-146(W)								
	6 WELDED LUGS	B-K-1	VOL	UTP-26	UT-5			3/4"W x 2"H x 4"L.
RFW-147								
	PSA-100 SNUBBER	B-K-2	VT-3	303/8.2.17				S/N 500
			VT-4	303/8.2.17				S/N 500
PWS-27-17								
	PIPE WHIP	N/A	N/A	N/A				SEE NOTE #1
RFW-148								
	PSA-35 SNUBBER	B-K-2	VT-3	303/8.2.17				S/N 8930
			VT-4	303/8.2.17				S/N 8930
24RFW(1)A-7/3/4V-44R								
	TEST CONN	B-P	VT-2	N/A				SEE NOTES #6 & #7.
24RFW(1)A-8								
	PIPE TO VALVE	B-J	VOL	UTP-10	UT-5			
			SUR	PTP-1				

WNP-02
INTERVAL: PSI
PERIOD: NA
OUTAGE:
DRAWING NO. RFW-101

WASHINGTON PUBLIC POWER SUPPLY SYSTEM
PROGRAM PLAN AND SCHEDULE
SYSTEM OR COMPONENT: RFW(1)-4
DESCRIPTION: PX FEEDWATER LINE A

DATE 12/14/84

IDENT. NO.	DESCRIPTION	SECT. XI EXAM.	EXAM MTH.	PROCEDURE	CAL. BLOCK	INSERVICE REQ.	SCHEDULED OUTAGE	NOTES
24RFW(1)A-3								
	VALVE TO PENE	B-J	VOL	UTP-10	UT-5			AUGMT
			SUR	PTP-1				AUGMT
24RFW(1)A-4								
	PENE TO VALVE	B-J	VOL	UTP-10	UT-5			AUGMT
			SUR	PTP-1				AUGMT
RFW-V-10A-BDY								
	VALVE BODY	B-M-2	VT-1	OCI 7-1				
24RFW(1)A-5								
	VALVE TO PIPE	B-J	VOL	UTP-10	UT-5			AUGMT
			SUR	PTP-1				AUGMT
PWS-27-14								
	PIPE WHIP	N/A	N/A	N/A				SEE NOTE #1
24RFW(1)A-6								
	PIPE TO EL	B-J	VOL	UTP-10	UT-5			
			SUR	PTP-1				
24RFW(1)A-6/3/4V-120								
	VENT CONN	B-P	VT-2	N/A				SEE NOTES #6 & #7.
24RFW(1)A-6LDO								
	EL PIPE	B-J	VOL	UTP-10	UT-33			
			SUR	PTP-1				
24RFW(1)A-6LDI								
	EL PIPE	B-J	VOL	UTP-10	UT-33			
			SUR	PTP-1				
24RFW(1)A-7LUI								
	EL PIPE	B-J	VOL	UTP-10	UT-33			
			SUR	PTP-1				
24RFW(1)A-7LUO								
	EL PIPE	B-J	VOL	UTP-10	UT-33			

WNP-02
INTERVAL: PSI
PERIOD: NA
OUTAGE:
DRAWING NO. RFW-101

WASHINGTON PUBLIC POWER SUPPLY SYSTEM
PROGRAM PLAN AND SCHEDULE
SYSTEM OR COMPONENT: RFW(1)-4
DESCRIPTION: RX FEEDWATER LINE A

IDENT. NO.	DESCRIPTION	SECT. XI EXAM.	EXAM MTH.	PROCEDURE	CAL. BLOCK	INSERVICE REQ.	INSERVICE SCHEDULED OUTAGE	NOTES
RFW-V-65A/3/4CAP	LEAKOFF CAPPED	B-P	VT-2	N/A				SEE NOTES #6 & #7.
RFW-V-65A-BDY	VALVE BODY	B-M-2	VT-1	OCI 7-1				
24RFW(1)A-1A	PIPE TO VALVE	AUGMT	VOL	UTP-10	UT-5			
24RFW(1)A-1	VALVE TO PIPE	B-J	VOL	UTP-10	UT-5			AUGMT
			SUR	PTP-1				AUGMT
24RFW(1)A-1/3/4V-31A	TEST CONN	B-P	VT-2	N/A				SEE NOTES #6 & #7.
24RFW(1)A-1/5RFW(11)-4	PIPE TO WOL	B-J	VOL	OCI 6-13	UT-5			AUGMT
			SUR	OCI 3-3				AUGMT
5RFW(11)A-2	SLEEVE TO WOL	B-J	VOL	UTP-10	UT-32			AUGMT
			SUR	PTP-1				AUGMT
5RFW(11)A-1	SLEEVE-SLEEVE	B-J	SUR	PTP-1				AUGMT.THIS IS SOCKET TYPE WELD,SEE DETAIL I DRAWING RFW-101-1.
24RFW(1)A-2	PIPE TO VALVE	B-J	VOL	UTP-10	UT-5			AUGMT
			SUR	PTP-1				AUGMT
RFW-V-32A/3/4CAP	LEAKOFF CAPPED	B-P	VT-2	N/A				SEE NOTES #6 & #7.
RFW-V-32A-BDY	VALVE BODY	B-M-2	VT-1	OCI 7-1				
RFW-V-32A/3/4V-67	TEST CONN	B-P	VT-2	N/A				SEE NOTES #6 & #7.

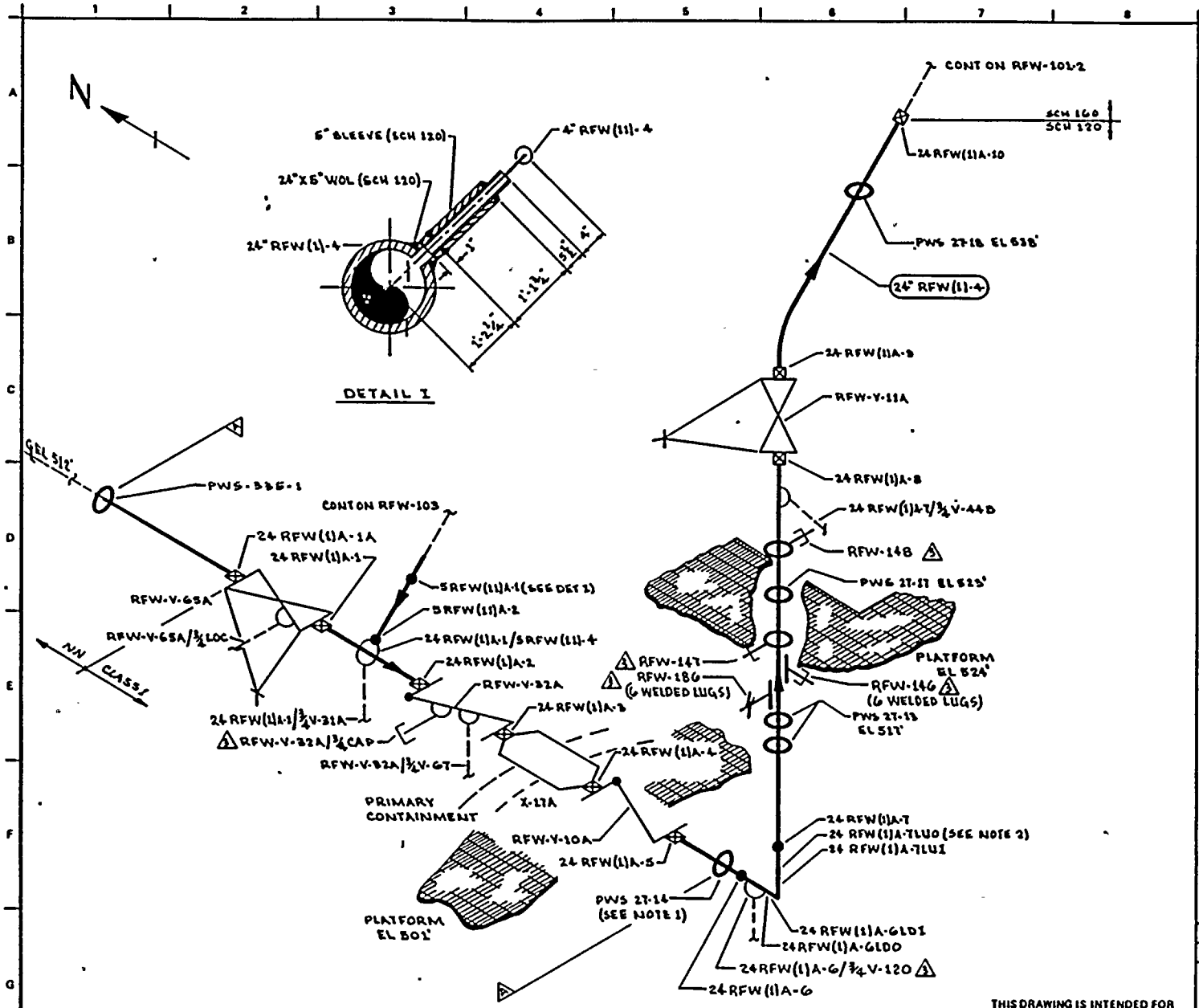

NOTES:

1. ACCESS TO WELDS 24 RFW(1)A-5 & 24 RFW(1)A-6 REQUIRES REMOVAL OF PWS 27-14.
2. ELBOW BETWEEN WELDS 24 RFW(1)A-6 & 7 IS SCH 160, WELDED & SHORT RADIUS.

REFERENCES:

BOVEE & CRAIL ISOMETRICS

RFW-418-3 REV 6
RFW-418-4 REV 8
RFW-418-5.6 REV 8

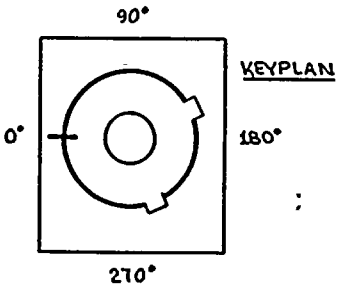

THIS DRAWING IS INTENDED FOR USE IN PRESERVICE AND INSERVICE INSPECTION PROGRAMS ONLY.

QUALITY CLASS: 1	ASME CODE CLASS: 1	
ENGR: D TIMMINS	DRAWN: K. McA	DATE: 3-2-78

WASHINGTON PUBLIC POWER SUPPLY SYSTEM
RICHLAND, WASHINGTON 99352

WNP-2
WELD & COMPONENT IDENTIFICATION DIAGRAM

TITLE: REACTOR FEED WATER LINE A

DWG NO: RFW-101-1 REV 3

NO	DATE	REVISION	BY	CHKD	APPVD
3	10-13-83	REVISED AS NOTED ADDED LUGS & KEYPLAN	KMcA	DJC	TFR
2	12-2-81	AUGMENTED IST ADDED	KMcA	DJC	TFR
1	11-5-80	ADDED NOTE 2 & PIPE SCH BREAK & AS NOTED	KMcA	TFR	DJC
0	12-27-78	ISSUED FOR USE	KMcA	DJC	[illegible]
A	6-21-78	ISSUED FOR INFORMATION ONLY	KMcA	DJC	DJC

PIPING SYSTEM	NOM DIA (IN)	SCH	NOM WALL THK	MATERIAL SPECIFICATION	MATL TYPE	CAL BLOCK NO
24" RFW(1)-4	24	120	1.812	SA 106 GR B	CS	UT-5
5" RFW(11)-4	5	120	0.500	SA 106 GR B	CS	UT-32
24" RFW(1)-4	24	160	2.062	SA 106 GR B	CS	UT-33
LUGS	NA	NA	NA	SA 516 GR 70	CS	UT-46

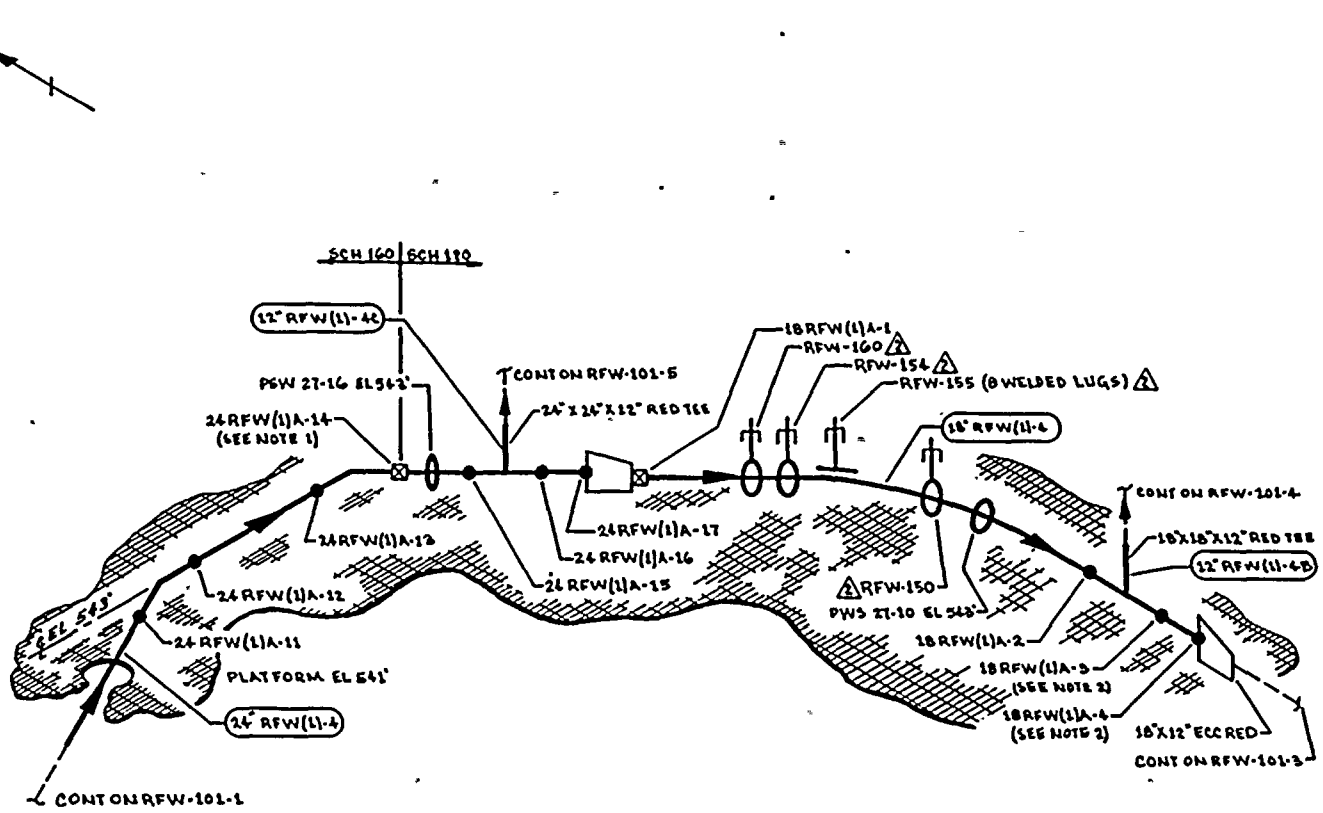

NOTES:

1. ACCESS TO WELD 24RFW(1)A-14 REQUIRES REMOVAL OF PWG-27-16. (1)
2. WELDS 18RFW(1)A-3 & 18RFW(1)A-4 ARE FITTING TO FITTING. SPACING IS 3½".

REFERENCES:

BOVEE & CRAIL ISOMETRICS

RFW-418-5.6 REV 8
RFW-418-7.8 REV 7

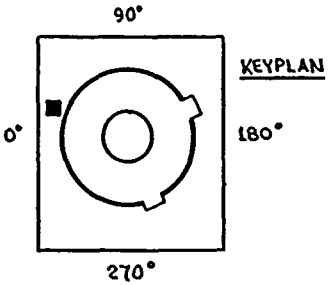

QUALITY CLASS: 1	ASME CODE CLASS: 1	
ENGR: D TIMMING	DRAWN: K. McA	DATE: 3-2-78

WASHINGTON PUBLIC POWER SUPPLY SYSTEM
RICHLAND, WASHINGTON 99352

THIS DRAWING IS INTENDED FOR USE IN PRESERVICE AND INSERVICE INSPECTION PROGRAMS ONLY.

PIPING SYSTEM	NOM DIA (IN)	SCH	NOM WALL THK	MATERIAL SPECIFICATION	MATL TYPE	CAL BLOCK NO
24" RFW(1)-4	24	120	1.812	SA 106 GR B	CS	UT-5
18" RFW(1)-4	18	120	1.375	SA 106 GR B	CS	UT-11
24" RFW(1)-4	24	160	2.344	SA 106 GR B	CS	UT-33
LUGS	NA	NA	NA	SA 516 GR 70	CS	UT-46

NO	DATE	REVISION	BY	CHKD	APPVD
2	12-13-83	REVISED AS NOTED ADDED LUGS & KEYPLAN	KMcA	DK	RK
1	11-5-80	ADDED PIPE SCH BREAK & AS NOTED	KMcA	DK	RK
0	11-27-78	ISSUED FOR USE	KMcA	DK	RK
A	4-21-78	ISSUED FOR INFORMATION ONLY	KMcA	DCJ	RKP

WNP-2
WELD & COMPONENT IDENTIFICATION DIAGRAM

TITLE: REACTOR FEED WATER LINE A

DWG NO: RFW-101-2 REV 2

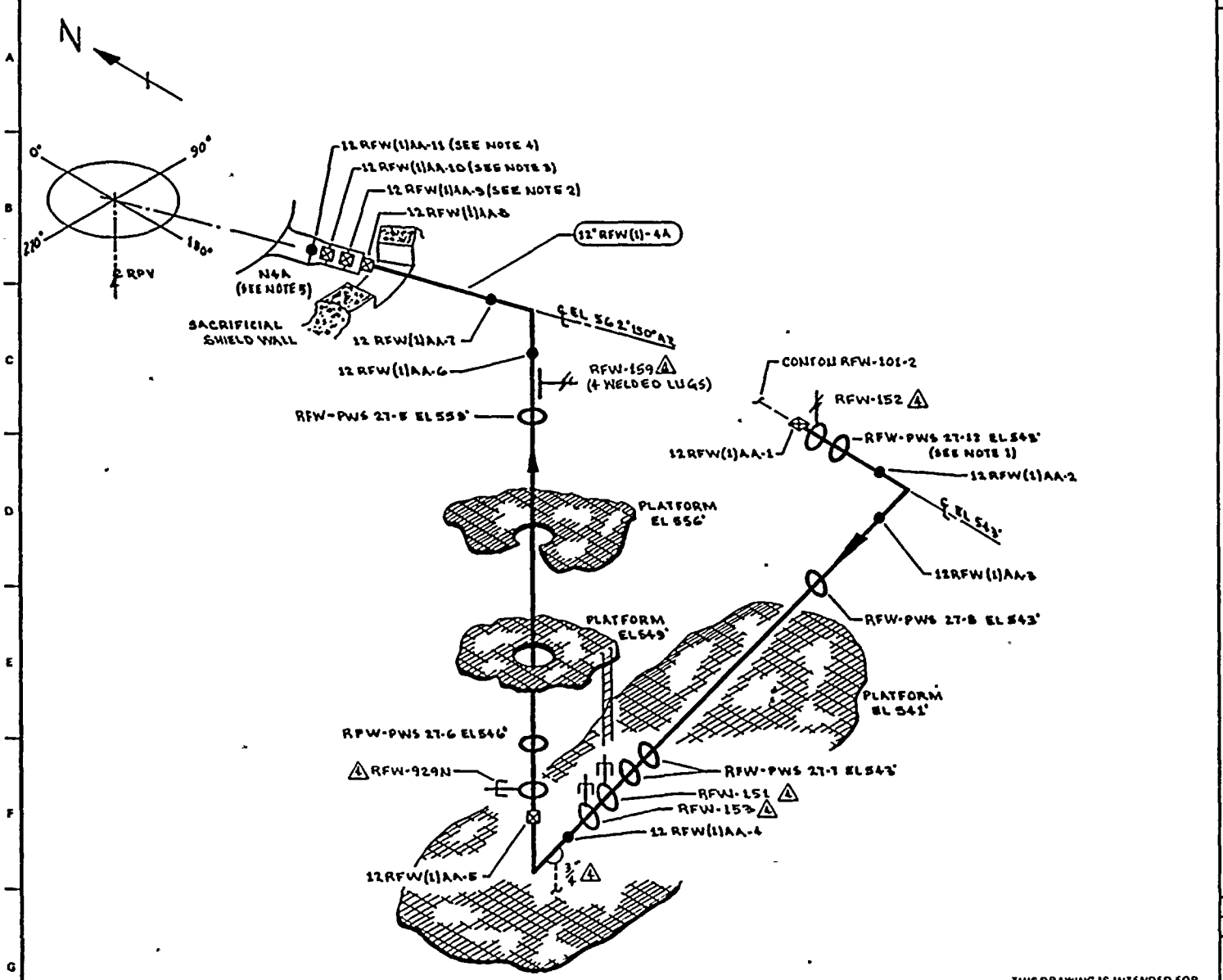

NOTES:

1. ACCESS TO WELD 12 RFW(1)AA-2 REQUIRES REMOVAL OF RFW-PWS 27-12.
2. WELD 12 RFW(1)AA-9 UTILIZES CAL BLOCK UT-106.
3. WELD 12 RFW(1)AA-10 UTILIZES CAL BLOCK UT-105.
4. WELD 12 RFW(1)AA-11 UTILIZES CAL BLOCK UT-102.
5. FOR NOZZLE ASSEMBLY DETAILS SEE RPV-108.

REFERENCES:

BOVEE & CRAIL ISOMETRICS
RFW-418-7.8 REV 7
RFW-418-13 REV 8

CBI NUCLEAR CO.
59, REV 5, N4 NOZZLE

KEYPLAN

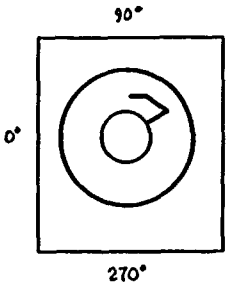

QUALITY CLASS: 1		ASME CODE CLASS: 1
ENGR: D TIMMINS	DRAWN: K.M.A.	DATE: 8-2-78

THIS DRAWING IS INTENDED FOR USE IN PRESERVICE AND INSERVICE INSPECTION PROGRAMS ONLY.

WASHINGTON PUBLIC POWER SUPPLY SYSTEM
RICHLAND WASHINGTON 99352

NO	DATE	REVISION	BY	CHKD	APPVD
4	12-2-83	REVISED AS NOTED ADDED KEYPLAN & LUGS	K.M.A.	DJR	JFH
3	12-2-81	REVISED AS NOTED	K.M.A.	DJR	JFH
2	8-30-79	ADDED NOTE 5.	K.M.A.	[illegible]	[illegible]
1	1-10-79	CAL BLOCK REFERENCE CHANGED (NOTE 2)	K.M.A.	[illegible]	[illegible]
0	11-27-78	ISSUED FOR USE	K.M.A.	[illegible]	[illegible]
A	4-21-78	ISSUED FOR INFORMATION ONLY	K.M.A.	DCJ	DJR

PIPING SYSTEM	NOM DIA (IN)	SCH	NOM WALL THK	MATERIAL SPECIFICATION	MATL TYPE	CAL BLOCK NO
12" RFW(1)-4	12	120	1.000	SA 106 GR B	CS	UT-15
LUGS	NA	NA	NA	SA 516 GR 70	CS	UT-46

WNP-2
WELD & COMPONENT IDENTIFICATION DIAGRAM

TITLE: REACTOR FEED WATER LINE A.A.

DWG NO: RFW-101-3 REV 4

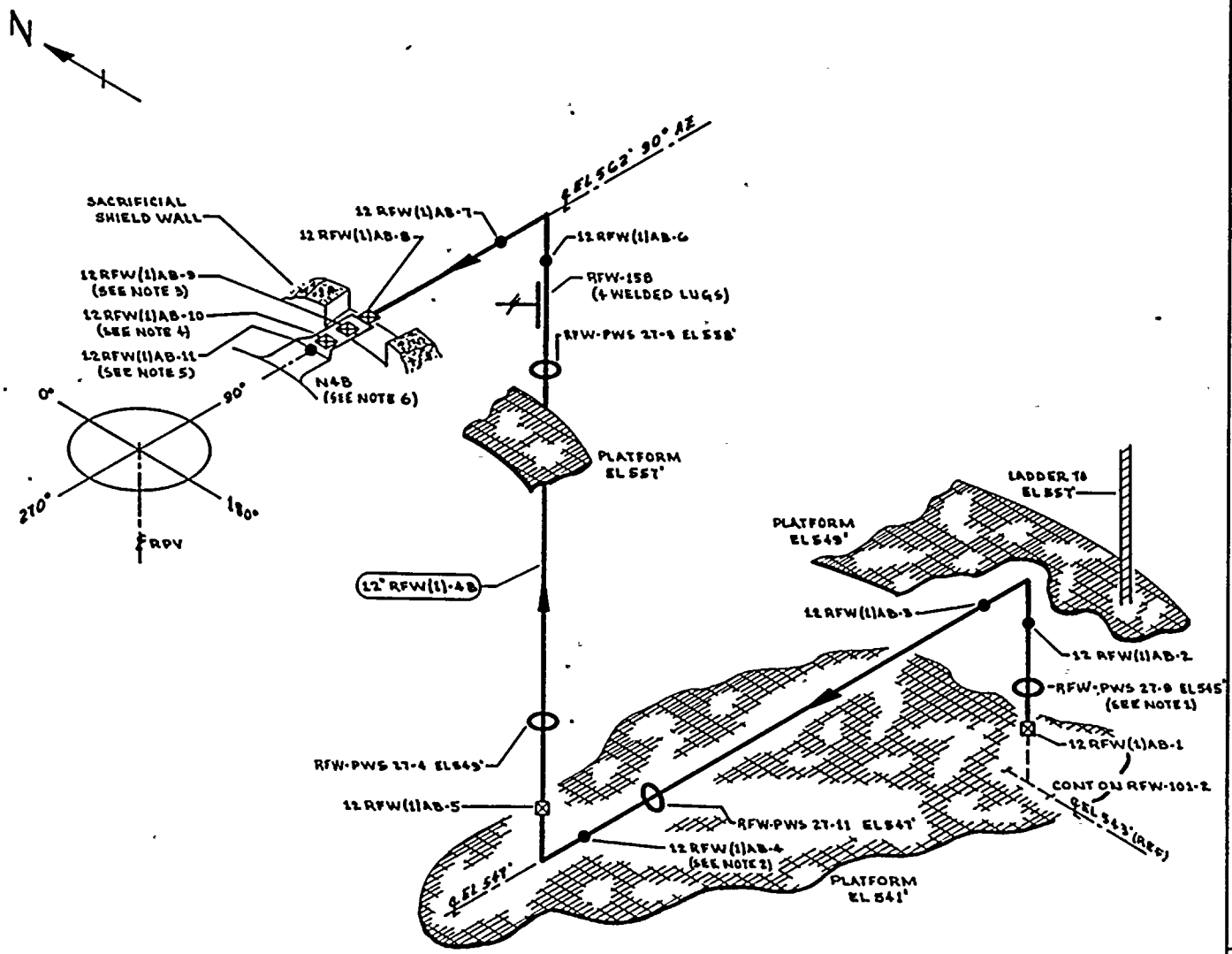

NOTES:

1. ACCESS TO WELD 12RFW(1)AB-2 REQUIRES REMOVAL OF RFW-PWS 27-9.
2. ACCESS TO WELD 12RFW(1)AB-4 REQUIRES REMOVAL OF RFW-PWS 27-11.
3. WELD 12RFW(1)AB-9 UTILIZES CAL BLOCK UT-106.
4. WELD 12 RFW(1)AB-10 UTILIZES CAL BLOCK UT-105.
5. WELD 12 RFW(1)AB-11 UTILIZES CAL BLOCK UT-102.
6. FOR NOZZLE ASSEMBLY DETAILS SEE RPV-108.

REFERENCES:

BOVEE & CRAIL ISOMETRICS
RFW-418-11.12 REV 7

CBI NUCLEAR CO.
59, REV 9, N4 NOZZLE

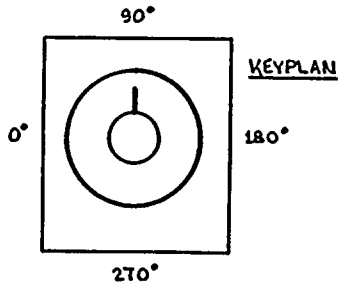

QUALITY CLASS: 1	ASME CODE CLASS: 1	
ENGR: D TIMMING	DRAWN: K.M.A.	DATE: 3-2-78

WASHINGTON PUBLIC POWER SUPPLY SYSTEM
RICHLAND, WASHINGTON 99352

THIS DRAWING IS INTENDED FOR USE IN PRESERVICE AND INSERVICE INSPECTION PROGRAMS ONLY.

NO	DATE	REVISION	BY	CHKD	APPVD
4	10-13-83	ADDED RFW-158 & KEYPLAN	KMA	DTM	TKV
3	12-2-81	REVISED AS NOTED	KMA	DTM	TKV
2	8-30-79	ADDED NOTE 6.	KMA	DTM	TKV
1	1-10-79	CAL BLOCK REFERENCE CHANGED (NOTE 3)	KMA	DTM	TKV
0	11-27-78	ISSUED FOR USE	KMA	DTM	TKV
A	4-21-78	ISSUED FOR INFORMATION ONLY	KMA	DTM	TKV

PIPING SYSTEM	NOM DIA (IN)	SCH	NOM WALL THK	MATERIAL SPECIFICATION	MATL TYPE	CAL BLOCK NO
12" RFW(1)-4	12	120	1.000	SA 106 GR B	CS	UT-15

WNP-2
WELD & COMPONENT IDENTIFICATION DIAGRAM

TITLE: REACTOR FEED WATER LINE AB.

DWG NO: RFW-101-4 REV 4

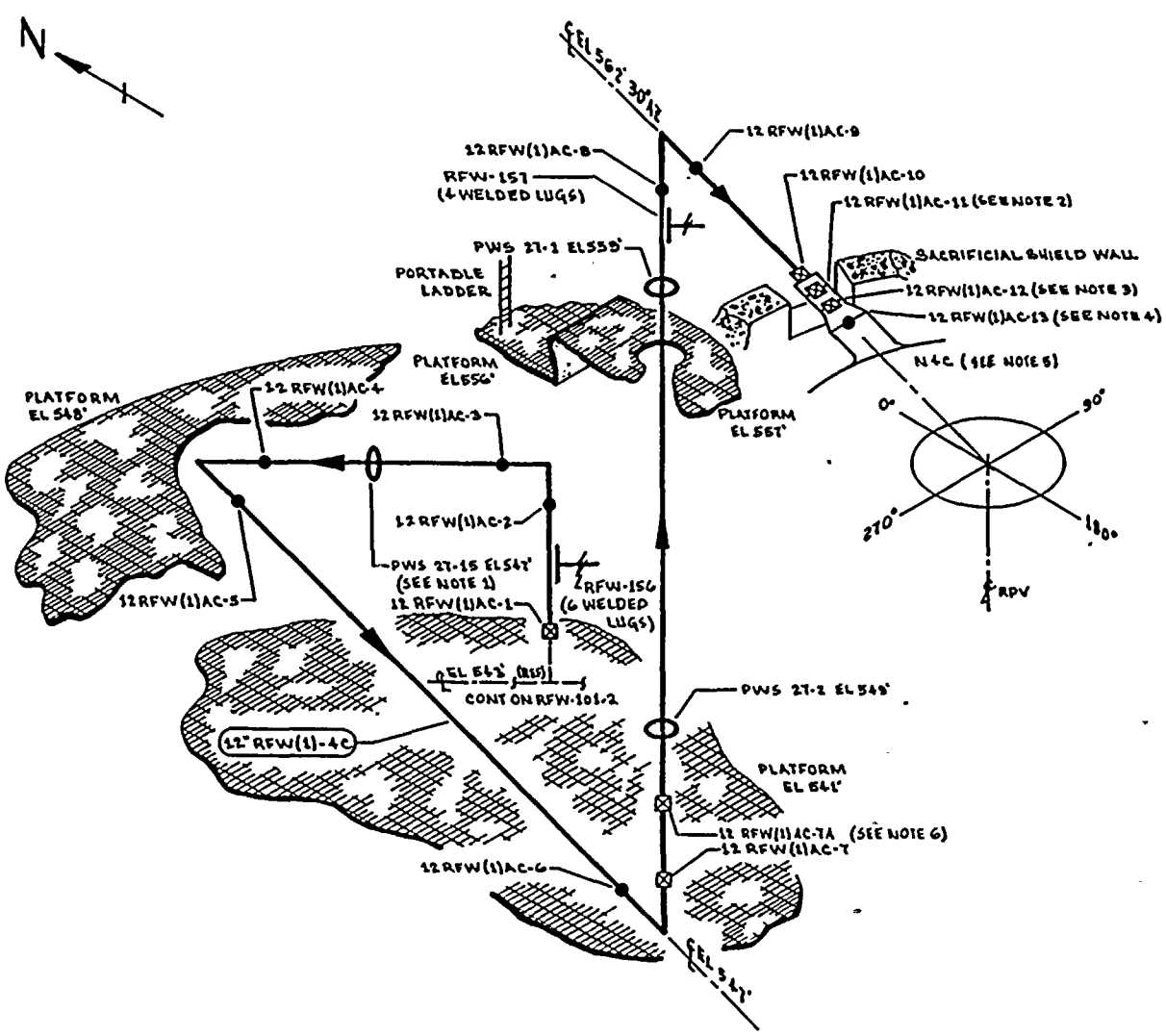

NOTES:

1. ACCESS TO WELDS 12 RFW(1)AC-3 & 12 RFW(1)AC-4 REQUIRES REMOVAL OF PWS 27-15.
2. WELD 12 RFW(1)AC-11 UTILIZES CAL BLOCK UT-106.
3. WELD 12 RFW(1)AC-12 UTILIZES CAL BLOCK UT-105.
4. WELD 12 RFW(1)AC-13 UTILIZES CAL BLOCK UT-102.
5. FOR NOZZLE ASSEMBLY DETAILS SEE RPV-108.
6. ACCESS TO 12 RFW(1)AC-7A IS LIMITED BY PWS 27-2.

REFERENCES:

BOVEE & CRAIL ISOMETRIC
RFW-418-B.10 REV 8

CBI NUCLEAR CO.
55, REV 9, N4 NOZZLE

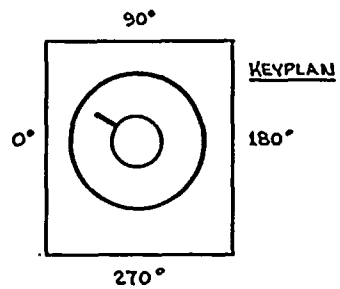

QUALITY CLASS: 1	ASME CODE CLASS: 1	
ENGR: D TIMMINS	DRAWN: W.M.A.	DATE: 3-3-78

WASHINGTON PUBLIC POWER SUPPLY SYSTEM
RICHLAND, WASHINGTON 99352

THIS DRAWING IS INTENDED FOR USE IN PRESERVICE AND INSERVICE INSPECTION PROGRAMS ONLY.

NO	DATE	REVISION	BY	CHKD	APPVD
4	6-13-83	ADDED RFW-156, RFW-157, LUGS & KEYPLAN			
3	11-5-80	REVISED AS NOTED			
2	8-30-79	ADDED NOTE 5.			
1	1-10-79	CAL BLOCK REFERENCE CHANGED (NOTE 2)			
0	11-27-78	ISSUED FOR USE			
A	4-21-78	ISSUED FOR INFORMATION ONLY			

PIPING SYSTEM	NOM DIA (IN)	SCH	NOM WALL THK	MATERIAL SPECIFICATION	MATL TYPE	CAL BLOCK NO
12" RFW(1)-4	12	120	1.000	SA 106 GR B	CS	UT-16
LUGS	NA	NA	NA	SA 516 GR 70	CS	UT-46

WNP-2
WELD & COMPONENT IDENTIFICATION DIAGRAM

TITLE: REACTOR FEED WATER LINE A.C.

DWG NO: RFW-101-B REV 4

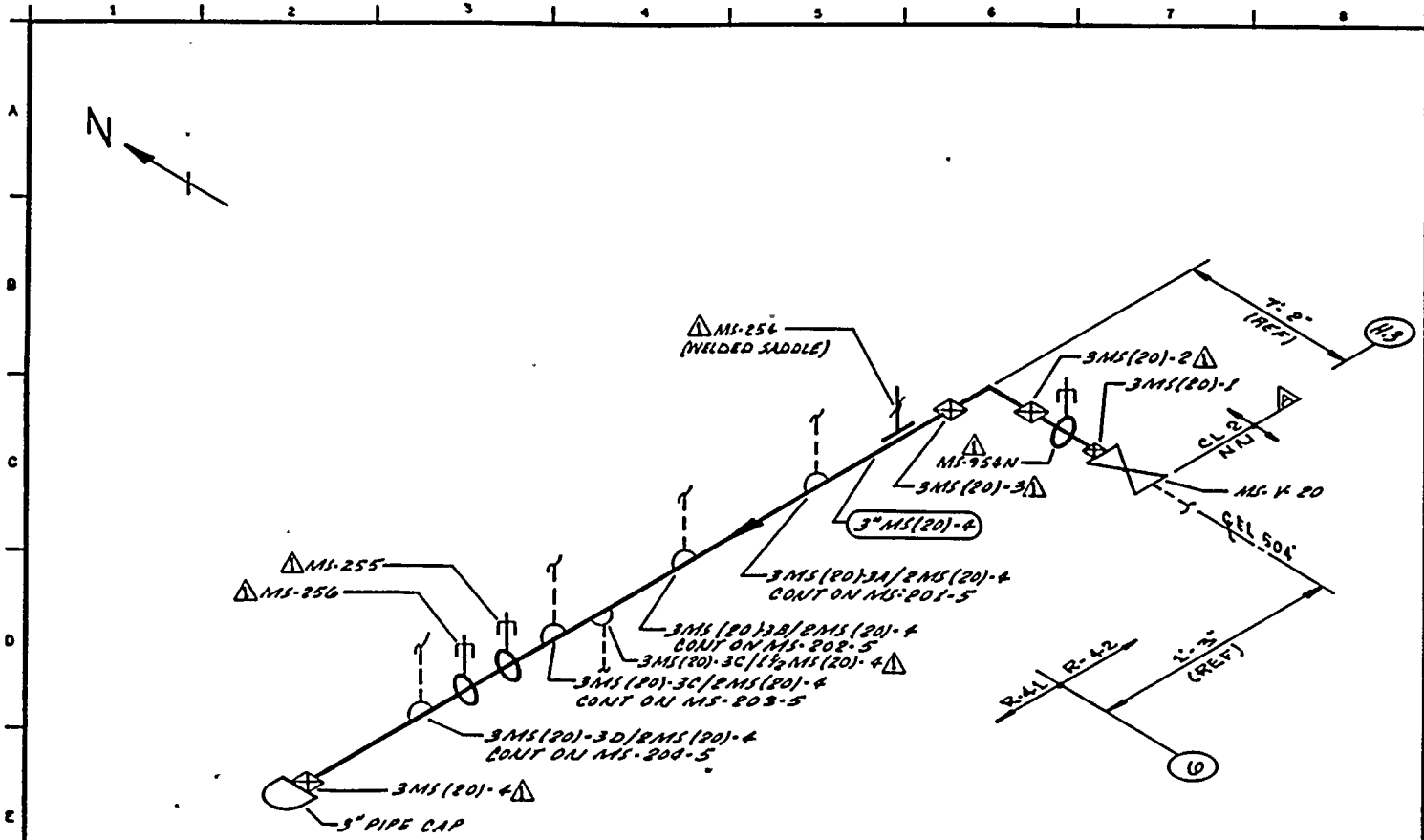

NOTES:

1. THIS DWG. IDENTIFIES PIPING WELDS THAT REQUIRE AUGMENTED ISI.

REFERENCES:

BOVEE CRAIL ISOMETRIC
MS-582-5 REV 4

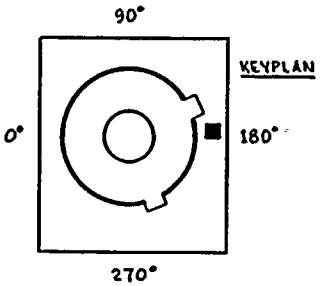

QUALITY CLASS: 1	ASME CODE CLASS: 2
ENGR: [illegible] DRAWN: [illegible]	DATE: 12-7-81

WASHINGTON PUBLIC POWER SUPPLY SYSTEM
RICHLAND, WASHINGTON 99352

THIS DRAWING IS INTENDED FOR USE IN PRESERVICE AND INSERVICE INSPECTION PROGRAMS ONLY.

PIPING SYSTEM	NOM DIA (IN)	SCH	NOM WALL THK	MATERIAL SPECIFICATION	MATL TYPE	CAL BLOCK NO
3"MS(20)-4	3	160	0.438	SA 106 GR B	CS	44

WNP-2
WELD & COMPONENT IDENTIFICATION DIAGRAM

TITLE: MAIN STEAM PRESSURE STABILIZATION LINE

DWG NO: MS-206 REV 1

NO	DATE	REVISION	BY	CHKD	APPVD
1	9-25-82	REVISED AS NOTED ADDED KEYPLAN	[illegible]	[illegible]	TFH
0	12-8-81	ISSUED FOR USE	[illegible]	[illegible]	TFH

WNP-02
INTERVAL: PSI
PERIOD: NA
OUTAGE:
DRAWING NO. MS-206

WASHINGTON PUBLIC POWER SUPPLY SYSTEM
PROGRAM PLAN AND SCHEDULE
SYSTEM OR COMPONENT: 3MS(20)-4
DESCRIPTION: MS PRESS STAB. LINE

DATE 12/14/84

IDENT. NO.	DESCRIPTION	SECT. XI EXAM.	EXAM MTH.	PROCEDURE	CAL. BLOCK	INSERVICE REQ.	INSERVICE SCHEDULED OUTAGE	NOTES
3MS(20)-1	VALVE TO PIPE	N/A	VOL	UTP-10	UT-44			AUGMT
3MS(20)-2	PIPE TO EL	N/A	VOL	UTP-10	UT-44			AUGMT
3MS(20)-3	EL TO PIPE	N/A	VOL	UTP-10	UT-44			AUGMT
3MS(20)-4	PIPE TO CAP	N/A	VOL	UTP-10	UT-44			AUGMT

WNP-02
INTERVAL: PSI
PERIOD: NA
OUTAGE:
DRAWING NO. MS-205

WASHINGTON PUBLIC POWER SUPPLY SYSTEM
PROGRAM PLAN AND SCHEDULE
SYSTEM OR COMPONENT: MS(1)-4
DESCRIPTION: MS HDR / BYPASS VLV

DATE 12/14/84

IDENT. NO.	DESCRIPTION	SECT. XI EXAM.	EXAM MTH.	PROCEDURE	CAL. BLOCK	INSERVICE REQ.	INSERVICE SCHEDULED OUTAGE	NOTES
24MS(1)-1								
	CAP TO PIPE	C-F	VOL	UTP-10	UT-6			
			SUR	PTP-1				
MS-180								
	ROD	C-E-2	VT-3	303/8.2.17				
MS-180(S)								
	1 WELDED SADDLE	C-E-1	SUR	QCI 4-3				
24MS(1)-1/18MS(1)-4D								
	WOL TO PIPE	C-F	SUR	PTP-1				
24MS(1)-1/18MS(1)-4C								
	WOL TO PIPE	C-F	SUR	PTP-1				
MS-181								
	ROD	C-E-2	VT-3	303/8.2.17				
MS-181(S)								
	3 WELDED SADDLE	C-E-1	SUR	QCI 4-3				
24MS(1)-1/18MS(1)-4A								
	WOL TO PIPE	C-F	SUR	PTP-1				
24MS(1)-1/18MS(1)-4B								
	WOL TO PIPE	C-F	SUR	PTP-1				
MS-182								
	ROD	C-E-2	VT-3	303/8.2.17				
MS-182(S)								
	1 WELDED SADDLE	C-E-1	SUR	QCI 4-3				
24MS(1)-2								
	PIPE TO VALVE	C-F	VOL	UTP-10	UT-6			
			SUR	PTP-1				
MS-PB-205								
	MS PRES BNDRY	N/A	VT-2	N/A				IWC-2510, SEE NOTES #6 & #7.

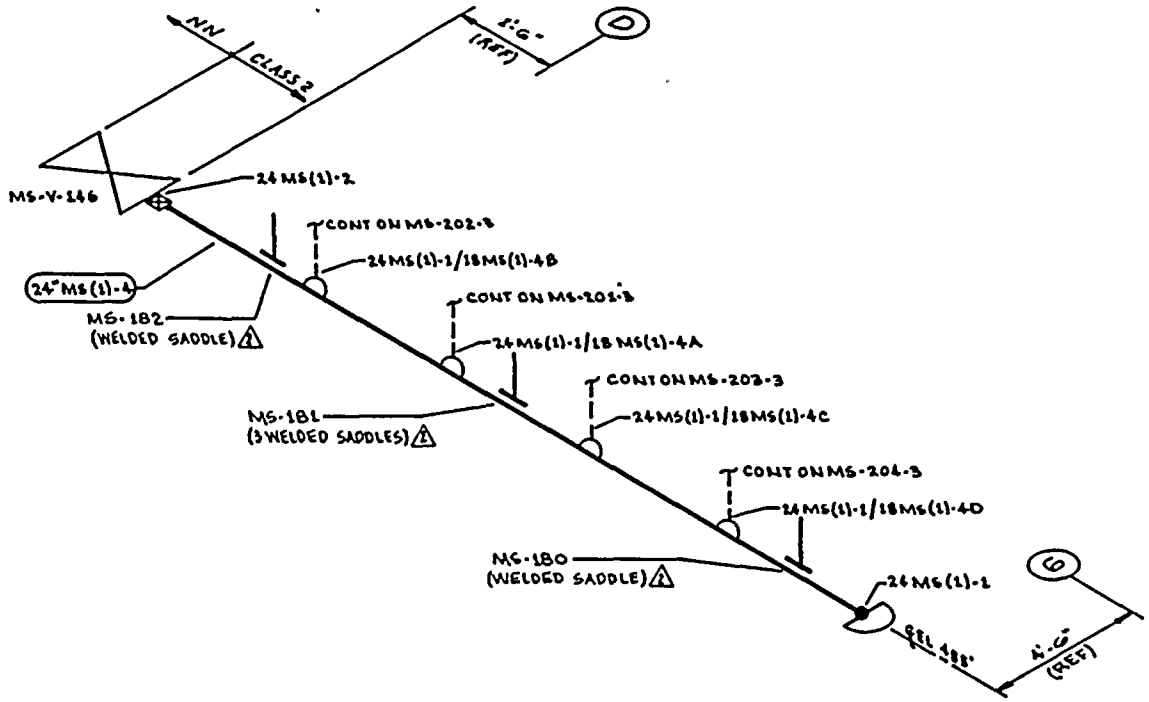

ZONES T-23 & T-26

NOTES:

1. SCAFFOLDING IS REQUIRED.

REFERENCES:

BOVEE & CRAIL ISOMETRIC
MS-534-1 REV 4

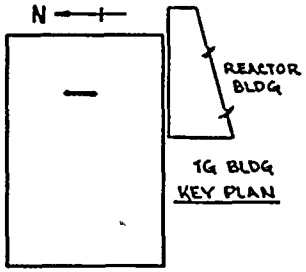

KEY PLAN

THIS DRAWING IS INTENDED FOR USE IN PRESERVICE AND INSERVICE INSPECTION PROGRAMS ONLY.

QUALITY CLASS: 1	ASME CODE CLASS: 2	
ENGR: D TIMMINS	DRAWN: K.M.A.	DATE: 3-23-78

WASHINGTON PUBLIC POWER SUPPLY SYSTEM
RICHLAND, WASHINGTON 99352

PIPING SYSTEM	NOM DIA (IN)	SCH	NOM WALL THK	MATERIAL SPECIFICATION	MATL TYPE	CAL BLOCK NO
24"MS(1)-4	24	80	1.218	SA 106 GR B	CS	UT-6

WNP-2
WELD & COMPONENT IDENTIFICATION DIAGRAM

TITLE: MAIN STEAM HEADER

DWG NO: MS-205 REV 2

NO	DATE	REVISION	BY	CHKD	APPVD
2	9-26-83	REVISED AS NOTED.	KMA	DMT	TFH
1	11-2-81	REVISED AS NOTED	KMA	DMT	TFH
0	1-9-79	ISSUED FOR USE	KMA	[illegible]	[illegible]
A	5-24-78	ISSUED FOR INFORMATION ONLY	KMA	[illegible]	[illegible]

WNP-02
INTERVAL: PSI
PERIOD: NA
OUTAGE:
DRAWING NO. MS-204

WASHINGTON PUBLIC POWER SUPPLY SYSTEM
PROGRAM PLAN AND SCHEDULE
SYSTEM OR COMPONENT: 2MS(20)-4
DESCRIPTION: MS PRESS STAR. LINE

DATE 12/14/84

IDENT. NO.	DESCRIPTION	SECT. XI EXAM.	EXAM MTH.	PROCEDURE	CAL. BLOCK	INSERVICE REQ.	INSERVICE SCHEDULED OUTAGE	NOTES
2MS(20)D-1	SOL TO PIPE	N/A	SUR	PTP-1				AUGMT
2MS(20)D-2	PIPE TO EL	N/A	SUR	PTP-1				AUGMT
2MS(20)D-3	EL TO PIPE	N/A	SUR	PTP-1				AUGMT
2MS(20)D-4	PIPE TO TEE	N/A	SUR	PTP-1				AUGMT
2MS(20)D-5	TEE TO RED	N/A	SUR	PTP-1				AUGMT
2MS(20)D-6	TEE TO PIPE	N/A	SUR	PTP-1				AUGMT
2MS(20)D-7	PIPE TO SOL	N/A	SUR	PTP-1				AUGMT

WNP-02
INTERVAL: PSI
PERIOD: NA
OUTAGE:
DRAWING NO. MS-204

WASHINGTON PUBLIC POWER SUPPLY SYSTEM
PROGRAM PLAN AND SCHEDULE
SYSTEM OR COMPONENT: MS(1)-4
DESCRIPTION: MAIN STEAM LINE D

IDENT. NO.	DESCRIPTION	SECT. XI EXAM.	EXAM MTH.	PROCEDURE	CAL. BLOCK	INSERVICE REQ.	INSERVICE SCHEDULED OUTAGE	NOTES
30MS(1)D-26LU			SUR	PTP-1				
	PIPE LONG SEAM	C-F	VOL	UTP-10	UT-1			
30MS(1)D-26			SUR	PTP-1				
	PIPE TO REDUCER	C-F	VOL	UTP-10	UT-1			
28MS(1)D-1			SUR	PTP-1				
	REDUCER TO PIPE	C-F	VOL	UTP-10	UT-2			
MS-PB-204			SUR	PTP-1				
	MS PRES BNDRY	N/A	VT-2	N/A				IWC-2510, SEE NOTES #6 & #7.

WNP-02
INTERVAL: PSI
PERIOD: NA
OUTAGE:
DRAWING NO. MS-204

WASHINGTON PUBLIC POWER SUPPLY SYSTEM
PROGRAM PLAN AND SCHEDULE
SYSTEM OR COMPONENT: MS(1)-4
DESCRIPTION: MAIN STEAM LINE D

IDENT. NO.	DESCRIPTION	SECT. XI EXAM.	EXAM MTH.	PROCEDURE	CAL. BLOCK	INSERVICE REQ.	INSERVICE SCHEDULED OUTAGE	NOTES
6MS(1)D-1/2MD(1)-2								
	DRAIN CONN	N/A	VT-2	N/A				IWC-2510, SEE NOTES #6 & #7.
6MS(1)D-2								
	CAP TO PIPE	C-F	SUR	PTP-1				
MS-1012S								
	PSA-1/4 SNUBBER	C-E-2	VT-3	303/8.2.17				S/N 314, LOCATED BY MS-V-119D.
			VT-4	303/8.2.17				S/N 314, LOCATED BY MS-V-119D.
6MS(1)D-2/3/4V-119D								
	DRAIN CONN	N/A	VT-2	N/A				IWC-2510, SEE NOTES #6 & #7.
30MS(1)D-24LU								
	PIPE LONG SEAM	C-F	VOL	UTP-10	UT-1			
			SUR	PTP-1				
30MS(1)D-24								
	PIPE TO EL	C-F	VOL	UTP-10	UT-1			
			SUR	PTP-1				
30MS(1)D-24LDO								
	EL SEAM	C-F	VOL	UTP-10	UT-1			
			SUR	PTP-1				
30MS(1)D-25LUO								
	EL SEAM	C-F	VOL	UTP-10	UT-1			
			SUR	PTP-1				
30MS(1)D-25								
	EL TO PIPE	C-F	VOL	UTP-10	UT-1			
			SUR	PTP-1				
30MS(1)D-25LD								
	PIPE LONG SEAM	C-F	VOL	UTP-10	UT-1			

WNF-02
INTERVAL: PSI
PERIOD: NA
OUTAGE:
DRAWING NO. MS-204

WASHINGTON PUBLIC POWER SUPPLY SYSTEM
PROGRAM PLAN AND SCHEDULE
SYSTEM OR COMPONENT: MS(1)-4
DESCRIPTION: MAIN STEAM LINE D

IDENT. NO.	DESCRIPTION	SECT. XI EXAM.	EXAM MTH.	PROCEDURE	CAL. BLOCK	INSERVICE REQ.	INSERVICE SCHEDULED OUTAGE	NOTES
30MS(1)D-23LD								
	PIPE LONG SEAM	C-F	VOL	UTP-10	UT-1			
			SUR	PTP-1				
30MS(1)D-23/3/4V-707D								
	INSTR CONN	N/A	VT-2	N/A				IWC-2510, SEE NOTES #6 & #7.
30MS(1)D-23/1TX-1D								
	INSTR CONN	N/A	VT-2	N/A				IWC-2510, SEE NOTES #6 & #7.
30MS(1)D-23/1TE-1D								
	INSTR CONN	N/A	VT-2	N/A				IWC-2510, SEE NOTES #6 & #7.
MS-50								
	SPRING	C-E-2	VT-3	303/8.2.17				
			VT-4	303/8.2.17				
30MS(1)D-23/6MS(1)-4								
	WOL TO PIPE	C-F	SUR	PTP-1				
6MS(1)D-1								
	PIPE TO WOL	C-F	SUR	PTP-1				
MS-1011S								
	PSA-1/4 SNUBBER	C-E-2	VT-3	303/8.2.17				S/N 277, LOCATED ON LS-24D.
			VT-4	303/8.2.17				S/N 277, LOCATED ON LS-24D.
6MS(1)D-1/1LS-24DD								
	INSTR CONN	N/A	VT-2	N/A				IWC-2510, SEE NOTES #6 & #7.
6MS(1)D-2/1LS-24DU								
	INSTR CONN	N/A	VT-2	N/A				IWC-2510, SEE NOTES #6 & #7.

WNP-02
INTERVAL: PSI
PERIOD: NA
OUTAGE:
DRAWING NO. MS-204

WASHINGTON PUBLIC POWER SUPPLY SYSTEM
PROGRAM PLAN AND SCHEDULE
SYSTEM OR COMPONENT: MS(1)-4
DESCRIPTION: MAIN STEAM LINE D

DATE 12/14/84

IDENT. NO.	DESCRIPTION	SECT. XI EXAM.	EXAM MTH.	PROCEDURE	CAL. BLOCK	INSERVICE REQ.	SCHEDULED OUTAGE	NOTES
			SUR	PTP-1				
30MS(1)D-21LD	PIPE LONG SEAM	C-F	VOL	UTP-10	UT-1			
			SUR	PTP-1				
MS-51(W)	4 WELDED LUGS	C-E-1	SUR	MTP-1				
MS-51	SPRING (2)	C-E-2	VT-3	303/8.2.17				
			VT-4	303/8.2.17				
MS-1005N	PSA-35 SNUBBER	C-E-2	VT-3	303/8.2.17				S/N 9257
			VT-4	303/8.2.17				S/N 9257
30MS(1)D-22LU	PIPE LONG SEAM	C-F	VOL	UTP-10	UT-1			
			SUR	PTP-1				
30MS(1)D-22	PIPE TO EL	C-F	VOL	UTP-10	UT-1			
			SUR	PTP-1				
30MS(1)D-22LDO	EL SEAM	C-F	VOL	UTP-10	UT-1			
			SUR	PTP-1				
30MS(1)D-23LUO	EL SEAM	C-F	VOL	UTP-10	UT-1			
			SUR	PTP-1				
30MS(1)D-23	EL TO PIPE	C-F	VOL	UTP-10	UT-1			
			SUR	PTP-1				

WNP-02
INTERVAL: PSI
PERIOD: NA
OUTAGE:
DRAWING NO. MS-204

WASHINGTON PUBLIC POWER SUPPLY SYSTEM
PROGRAM PLAN AND SCHEDULE
SYSTEM OR COMPONENT: MS(1)-4
DESCRIPTION: MAIN STEAM LINE D

IDENT. NO.	DESCRIPTION	SECT. XI EXAM.	EXAM MTH.	PROCEDURE	CAL. BLOCK	INSERVICE REQ.	INSERVICE SCHEDULED OUTAGE	NOTES
			SUR	PTP-1				
30MS(1)D-19LD	PIPE LONG SEAM	C-F	VOL	UTP-10	UT-1			
			SUR	PTP-1				
30MS(1)D-19/1V-706D	INSTR CONN	N/A	VT-2	N/A				IWC-2510, SEE NOTES #6 & #7.
MS-53	PSA-35 SN(2)	C-E-2	VT-3	303/8.2.17				S/N E3010/W2
			VT-4	303/8.2.17				S/N E3010/W2
MS-54	PSA-10 SNUBBER	C-E-2	VT-3	303/8.2.17				S/N 1494
			VT-4	303/8.2.17				S/N 1494
30MS(1)D-20LU	PIPE LONG SEAM	C-F	VOL	UTP-10	UT-1			
			SUR	PTP-1				
30MS(1)D-20	PIPE TO EL	C-F	VOL	UTP-10	UT-1			
			SUR	PTP-1				
30MS(1)D-20LDO	EL SEAM	C-F	VOL	UTP-10	UT-1			
			SUR	PTP-1				
30MS(1)D-21LUO	EL SEAM	C-F	VOL	UTP-10	UT-1			
			SUR	PTP-1				
30MS(1)D-21	EL TO PIPE	C-F	VOL	UTP-10	UT-1			

WNP-02
INTERVAL: PSI
PERIOD: NA
OUTAGE:
DRAWING NO. MS-204

WASHINGTON PUBLIC POWER SUPPLY SYSTEM
PROGRAM PLAN AND SCHEDULE
SYSTEM OR COMPONENT: MS(1)-4
DESCRIPTION: MAIN STEAM LINE D

IDENT. NO.	DESCRIPTION	SECT. XI EXAM.	EXAM MTH.	PROCEDURE	CAL. BLOCK	INSERVICE REQ.	INSERVICE SCHEDULED OUTAGE	NOTES
			VT-4	303/8.2.17				
18MS(1)D-6								
	PIPE TO EL	C-F	VOL	UTP-10	UT-12			
			SUR	PTP-1				
18MS(1)D-7								
	EL TO PIPE	C-F	VOL	UTP-10	UT-12			
			SUR	PTP-1				
18MS(1)D-8								
	PIPE TO WOL	C-F	VOL	UTP-10	UT-12			
			SUR	PTP-1				
30MS(1)D-18LU								
	PIPE SEAM	C-F	VOL	UTP-10	UT-1			
			SUR	PTP-1				
30MS(1)D-18								
	PIPE TO PIPE	C-F	VOL	UTP-10	UT-1			
			SUR	PTP-1				
30MS(1)D-18LD								
	PIPE LONG SEAM	C-F	VOL	UTP-10	UT-1			
			SUR	PTP-1				
MS-55								
	SPRING (2)	C-E-2	VT-3	303/8.2.17				
			VT-4	303/8.2.17				
30MS(1)D-19LU								
	PIPE LONG SEAM	C-F	VOL	UTP-10	UT-1			
			SUR	PTP-1				
30MS(1)D-19								
	PIPE TO PIPE	C-F	VOL	UTP-10	UT-1			

WNP-02
INTERVAL: PSI
PERIOD: NA
OUTAGE:
DRAWING NO. MS-204

WASHINGTON PUBLIC POWER SUPPLY SYSTEM
PROGRAM PLAN AND SCHEDULE
SYSTEM OR COMPONENT: MS(1)-4
DESCRIPTION: MAIN STEAM LINE D

IDENT. NO.	DESCRIPTION	SECT. XI EXAM.	EXAM MTH.	PROCEDURE	CAL. BLOCK	INSERVICE REQ.	INSERVICE SCHEDULED OUTAGE	NOTES
MS-56								
	PSA-10 SN(2)	C-E-2	VT-3	303/8.2.17				S/N 9896/9907
			VT-4	303/8.2.17				S/N 9896/9907
30MS(1)D-16/18MS(1)-4								
	PIPE TO WOL	C-F	SUR	PTP-1				
18MS(1)D-1								
	WOL TO PIPE	C-F	VOL	UTP-10	UT-12			
			SUR	PTP-1				
18MS(1)D-2								
	PIPE TO EL	C-F	VOL	UTP-10	UT-12			
			SUR	PTP-1				
18MS(1)D-3								
	EL TO PIPE	C-F	VOL	UTP-10	UT-12			
			SUR	PTP-1				
18MS(1)D-4								
	PIPE TO EL	C-F	VOL	UTP-10	UT-12			
			SUR	PTP-1				
18MS(1)D-4A								
	EL TO EL	C-F	VOL	UTP-10	UT-12			
			SUR	PTP-1				
MS-86								
	PSA-3 SNUBBER	C-E-2	VT-3	303/8.2.17				S/N 625
			VT-4	303/8.2.17				S/N 625
18MS(1)D-5								
	EL TO PIPE	C-F	VOL	UTP-10	UT-12			
			SUR	PTP-1				
MS-87								
	SPRING	C-E-2	VT-3	303/8.2.17				

WNP-02
INTERVAL: PSI
PERIOD: NA
OUTAGE:
DRAWING NO. MS-204

WASHINGTON PUBLIC POWER SUPPLY SYSTEM
PROGRAM PLAN AND SCHEDULE
SYSTEM OR COMPONENT: MS(1)-4
DESCRIPTION: MAIN STEAM LINE D

DATE 12/14/84

IDENT. NO.	DESCRIPTION	SECT. XI EXAM.	EXAM MTH.	PROCEDURE	CAL. BLOCK	INSERVICE REQ.	SCHEDULED OUTAGE	NOTES
MS-59(S)								
	1 WELDED SADDLE	C-E-1	SUR	MTP-1				
30MS(1)D-15LU								
	PIPE LONG SEAM	C-F	VOL	UTP-10	UT-1			
			SUR	PTP-1				
30MS(1)D-15								
	PIPE TO EL	C-F	VOL	UTP-10	UT-1			
			SUR	PTP-1				
30MS(1)D-15LDO								
	EL SEAM	C-F	VOL	UTP-10	UT-1			
			SUR	PTP-1				
30MS(1)D-16LUO								
	EL SEAM	C-F	VOL	UTP-10	UT-1			
			SUR	PTP-1				
30MS(1)D-16								
	EL TO PIPE	C-F	VOL	UTP-10	UT-1			
			SUR	PTP-1				
30MS(1)D-16LD								
	PIPE LONG SEAM	C-F	VOL	UTP-10	UT-1			
			SUR	PTP-1				
MS-58								
	SPRING (2)	C-E-2	VT-3	303/8.2.17				
			VT-4	303/8.2.17				
MS-57								
	PSA-3 SN(2)	C-E-2	VT-3	303/8.2.17				S/N 284/294
			VT-4	303/8.2.17				S/N 284/294

WNP-02
INTERVAL: PSI
PERIOD: NA
OUTAGE:
DRAWING NO. MS-204

WASHINGTON PUBLIC POWER SUPPLY SYSTEM
PROGRAM PLAN AND SCHEDULE
SYSTEM OR COMPONENT: MS(1)-4
DESCRIPTION: MAIN STEAM LINE D

IDENT. NO.	DESCRIPTION	SECT. XI EXAM.	EXAM MTH.	PROCEDURE	CAL. BLOCK	INSERVICE REQ.	INSERVICE SCHEDULED OUTAGE	NOTES
30MS(1)D-12LDO								
	EL SEAM	C-F	VOL	UTP-10	UT-1			
			SUR	PTP-1				
30MS(1)D-13LUO								
	EL SEAM	C-F	VOL	UTP-10	UT-1			
			SUR	PTP-1				
30MS(1)D-13								
	EL TO PIPE	C-F	VOL	UTP-10	UT-1			
			SUR	PTP-1				
30MS(1)D-13LD								
	PIPE LONG SEAM	C-F	VOL	UTP-10	UT-1			
			SUR	PTP-1				
MS-61								
	STRUT	C-E-2	VT-3	303/8.2.17				
MS-61(S)								
	1 WELDED SADDLE	C-E-1	SUR	MTP-1				
30MS(1)D-14LU								
	PIPE LONG SEAM	C-F	VOL	UTP-10	UT-1			
			SUR	PTP-1				
30MS(1)D-14								
	PIPE TO PIPE	C-F	VOL	UTP-10	UT-1			
			SUR	PTP-1				
30MS(1)D-14LD								
	PIPE LONG SEAM	C-F	VOL	UTP-10	UT-1			
			SUR	PTP-1				
MS-1009N								
	RIGID	C-E-2	VT-3	303/8.2.17				
MS-59								
	STRUT	C-E-2	VT-3	303/8.2.17				

WNP-02
INTERVAL: PSI
PERIOD: NA
OUTAGE:
DRAWING NO. MS-204

WASHINGTON PUBLIC POWER SUPPLY SYSTEM
PROGRAM PLAN AND SCHEDULE
SYSTEM OR COMPONENT: MS(1)-4
DESCRIPTION: MAIN STEAM LINE D

DATE 12/14/84

IDENT. NO.	DESCRIPTION	SECT. XI EXAM.	EXAM MTH.	PROCEDURE	CAL. BLOCK	INSERVICE REQ.	SCHEDULED OUTAGE	NOTES
30MS(1)D-1CLD								
	PIPE LONG SEAM	C-F	VOL	UTP-10	UT-1			
			SUR	PTP-1				
MS-63								
	SPRING (2)	C-E-2	VT-3	303/8.2.17				
			VT-4	303/8.2.17				
MS-906N								
	PSA-3 SN(2)	C-E-2	VT-3	303/8.2.17				S/N E4486/W450
			VT-4	303/8.2.17				S/N E4486/W450
30MS(1)D-11LU								
	PIPE LONG SEAM	C-F	VOL	UTP-10	UT-1			
			SUR	PTP-1				
30MS(1)D-11								
	PIPE TO PIPE	C-F	VOL	UTP-10	UT-1			
			SUR	PTP-1				
30MS(1)D-11LD								
	PIPE LONG SEAM	C-F	VOL	UTP-10	UT-1			
			SUR	PTP-1				
MS-62								
	SPRING (2)	C-E-2	VT-3	303/8.2.17				
			VT-4	303/8.2.17				
30MS(1)D-12LU								
	PIPE LONG SEAM	C-F	VOL	UTP-10	UT-1			
			SUR	PTP-1				
30MS(1)D-12								
	PIPE TO EL	C-F	VOL	UTP-10	UT-1			
			SUR	PTP-1				

WNP-02
INTERVAL: PSI
PERIOD: NA
OUTAGE:
DRAWING NO. MS-204

WASHINGTON PUBLIC POWER SUPPLY SYSTEM
PROGRAM PLAN AND SCHEDULE
SYSTEM OR COMPONENT: MS(1)-4
DESCRIPTION: MAIN STEAM LINE D

IDENT. NO.	DESCRIPTION	SECT. XI EXAM.	EXAM MTH.	PROCEDURE	CAL. BLOCK	INSERVICE REQ.	INSERVICE SCHEDULED OUTAGE	NOTES
30MS(1)D-9LD	PIPE LONG SEAM	C-F	VOL	UTP-10	UT-1			
			SUR	PTP-1				
30MS(1)D-9ALU	PIPE LONG SEAM	C-F	VOL	UTP-10	UT-1			
			SUR	PTP-1				
30MS(1)D-9A	PIPE TO PIPE	C-F	VOL	UTP-10	UT-1			
			SUR	PTP-1				
30MS(1)D-9ALD	PIPE LONG SEAM	C-F	VOL	UTP-10	UT-1			
			SUR	PTP-1				
MS-1010N(W)	8 WELDED LUGS	C-E-1	SUR	MTP-1				
MS-1010N	PSA-10 SN(2)	C-E-2	VT-3	303/8.2.17				S/N 693/1454
			VT-4	303/8.2.17				S/N 693/1454
MS-65	STRUT	C-E-2	VT-3	303/8.2.17				
MS-1006N	PSA-3 SN(2)	C-E-2	VT-3	303/8.2.17				S/N 4462/4440
			VT-4	303/8.2.17				S/N 4462/4440
30MS(1)D-10LU	PIPE LONG SEAM	C-F	VOL	UTP-10	UT-1			
			SUR	PTP-1				
30MS(1)D-10	PIPE TO PIPE	C-F	VOL	UTP-10	UT-1			
			SUR	PTP-1				

WNP-02
INTERVAL: PSI
PERIOD: NA
OUTAGE:
DRAWING NO. MS-204

WASHINGTON PUBLIC POWER SUPPLY SYSTEM
PROGRAM PLAN AND SCHEDULE
SYSTEM OR COMPONENT: MS(1)-4
DESCRIPTION: MAIN STEAM LINE D

DATE 12/14/84

IDENT. NO.	DESCRIPTION	SECT. XI EXAM.	EXAM MTH.	PROCEDURE	CAL. BLOCK	INSERVICE REQ.	SCHEDULED OUTAGE	NOTES
MS-66								
	SPRING (2)	C-E-2	VT-3	303/8.2.17				
			VT-4	303/8.2.17				
30MS(1)D-7LU								
	PIPE LONG SEAM	C-F	VOL	UTP-10	UT-1			
			SUR	PTP-1				
30MS(1)D-7								
	PIPE TO EL	C-F	VOL	UTP-10	UT-1			
			SUR	PTP-1				
30MS(1)D-7LDO								
	EL SEAM	C-F	VOL	UTP-10	UT-1			
			SUR	PTP-1				
30MS(1)D-8LUO								
	EL SEAM	C-F	VOL	UTP-10	UT-1			
			SUR	PTP-1				
30MS(1)D-8								
	EL TO PIPE	C-F	VOL	UTP-10	UT-1			
			SUR	PTP-1				
30MS(1)D-8LD								
	PIPE LONG SEAM	C-F	VOL	UTP-10	UT-1			
			SUR	PTP-1				
30MS(1)D-9LU								
	PIPE LONG SEAM	C-F	VOL	UTP-10	UT-1			
			SUR	PTP-1				
30MS(1)D-9								
	PIPE TO PIPE	C-F	VOL	UTP-10	UT-1			
			SUR	PTP-1				

WNP-02
INTERVAL: PSI
PERIOD: NA
OUTAGE:
DRAWING NO. MS-204

WASHINGTON PUBLIC POWER SUPPLY SYSTEM
PROGRAM PLAN AND SCHEDULE
SYSTEM OR COMPONENT: MS(1)-4
DESCRIPTION: MAIN STEAM LINE D

DATE 12/14/84

IDENT. NO.	DESCRIPTION	SECT. XI EXAM.	EXAM MTH.	PROCEDURE	CAL. BLOCK	INSERVICE REQ.	INSERVICE SCHEDULED OUTAGE	NOTES
30MS(1)D-5LD								
	PIPE LONG SEAM	C-F	VOL	UTP-10	UT-1			
			SUR	PTP-1				
30MS(1)D-5/3MD(16)-4								
	DRAIN CONN	N/A	VT-2	N/A				SEE NOTES #6 & #7.
MS-69								
	SPRING	C-E-2	VT-3	303/8.2.17				
			VT-4	303/8.2.17				
MS-908N								
	PSA-35 SN(2)	C-E-2	VT-3	303/8.2.17				S/N 6092/6094
			VT-4	303/8.2.17				S/N 6092/6094
MS-908N(S)								
	1 WELDED SADDLE	C-E-1	SUR	MTP-1				
30MS(1)D-6LU								
	PIPE LONG SEAM	C-F	VOL	UTP-10	UT-1			
			SUR	PTP-1				
30MS(1)D-6								
	PIPE TO PIPE	C-F	VOL	UTP-10	UT-1			
			SUR	PTP-1				
30MS(1)D-6LD								
	PIPE LONG SEAM	C-F	VOL	UTP-10	UT-1			
			SUR	PTP-1				
MS-1007N								
	PSA-10 SN(2)	C-E-2	VT-3	303/8.2.17				S/N 708/289
			VT-4	303/8.2.17				S/N 708/289
MS-1007N(W)								
	8 WELDED LUGS	C-E-1	SUR	MTP-1				
MS-68								
	STRUT	C-F-2	VT-3	303/8.2.17				

WNP-02
INTERVAL: PSI
PERIOD: NA
OUTAGE:
DRAWING NO. MS-204

WASHINGTON PUBLIC POWER SUPPLY SYSTEM
PROGRAM PLAN AND SCHEDULE
SYSTEM OR COMPONENT: MS(1)-4
DESCRIPTION: MAIN STEAM LINE D

IDENT. NO.	DESCRIPTION	SECT. XI EXAM.	EXAM MTH.	PROCEDURE	CAL. BLOCK	INSERVICE REQ.	SCHEDULED OUTAGE	NOTES
			SUR	PTP-1				
30MS(1)D-3LUO	EL SEAM	C-F	VOL	UTP-10	UT-1			
			SUR	PTP-1				
30MS(1)D-3	EL TO PIPE	C-F	VOL	UTP-10	UT-1			
			SUR	PTP-1				
30MS(1)D-3LD	PIPE LONG SEAM	C-F	VOL	UTP-10	UT-1			
			SUR	PTP-1.				
PWS-315-10	PIPE WHIP	N/A	N/A	N/A				
30MS(1)D-4LU	PIPE LONG SEAM	C-F	VOL	UTP-10	UT-1			
			SUR	PTP-1				
30MS(1)D-4	PIPE TO EL	C-F	VOL	UTP-10	UT-1			
			SUR	PTP-1				
30MS(1)D-4LDO	EL SEAM	C-F	VOL	UTP-10	UT-1			
			SUR	PTP-1				
30MS(1)D-5LUO	EL SEAM	C-F	VOL	UTP-10	UT-1			
			SUR	PTP-1				
30MS(1)D-5	EL TO PIPE	C-F	VOL	UTP-10	UT-1			
			SUR	PTP-1				

WNP-02
INTERVAL: PSI
PERIOD: NA
OUTAGE:
DRAWING NO. MS-204

WASHINGTON PUBLIC POWER SUPPLY SYSTEM
PROGRAM PLAN AND SCHEDULE
SYSTEM OR COMPONENT: MS(1)-4
DESCRIPTION: MAIN STEAM LINE D

DATE 12/14/84

IDENT. NO.	DESCRIPTION	SECT. XI EXAM.	EXAM MTH.	PROCEDURE	CAL. BLOCK	INSERVICE REQ.	INSERVICE SCHEDULED OUTAGE	NOTES
MS-71			SUR	PTP-1				
	SPRING	C-E-2	VT-3	303/8.2.17				
MS-71(H)			VT-4	303/8.2.17				
	2 WELDED LUGS	C-E-1	SUR	MTP-1				
26MS(1)D-22LU								
	PIPE LONG SEAM	C-F	VOL	UTP-10	UT-3			
26MS(1)D-22			SUR	PTP-1				
	PIPE TO REDUCER	C-F	VOL	UTP-10	UT-3			
30MS(1)D-1			SUR	PTP-1				
	REDUCER TO PIPE	C-F	VOL	UTP-10	UT-1			
30MS(1)D-1LD			SUR	PTP-1				
	PIPE LONG SEAM	C-F	VOL	UTP-10	UT-1			
PWS-315-8			SUR	PTP-1				
	PIPE WHIP	N/A	N/A	N/A				
30MS(1)D-2LU								
	PIPE LONG SEAM	C-F	VOL	UTP-10	UT-1			
30MS(1)D-2			SUR	PTP-1				
	PIPE TO EL	C-F	VOL	UTP-10	UT-1			
30MS(1)D-2LDO			SUR	PTP-1				
	EL SEAM	C-F	VOL	UTP-10	UT-1			

WNP-02
INTERVAL: PSI
PERIOD: NA
OUTAGE:
DRAWING NO. MS-204

WASHINGTON PUBLIC POWER SUPPLY SYSTEM
PROGRAM PLAN AND SCHEDULE
SYSTEM OR COMPONENT: MS(1)-4
DESCRIPTION: MAIN STEAM LINE D

IDENT. NO.	DESCRIPTION	SECT. XI EXAM.	EXAM MTH.	PROCEDURE	CAL. BLOCK	INSERVICE REQ.	INSERVICE SCHEDULED OUTAGE	NOTES
MS-72								
	PSA-35 SNUBBER	C-E-2	VT-3	303/8.2.17				S/N 8691
			VT-4	303/8.2.17				S/N 8691
PWS-315-4								
	PIPE WHIP	N/A	N/A	N/A				
26MS(1)D-20LU								
	PIPE LONG SEAM	C-F	VOL	UTP-10	UT-3			
			SUR	PTP-1				
26MS(1)D-20								
	PIPE TO EL	C-F	VOL	UTP-10	UT-3			
			SUR	PTP-1				
26MS(1)D-20LDI								
	EL SEAM	C-F	VOL	UTP-10	UT-3			
			SUR	PTP-1				
26MS(1)D-20LDO								
	EL SEAM	C-F	VOL	UTP-10	UT-3			
			SUR	PTP-1				
26MS(1)D-21LUI								
	EL SEAM	C-F	VOL	UTP-10	UT-3			
			SUR	PTP-1				
26MS(1)D-21LUO								
	EL SEAM	C-F	VOL	UTP-10	UT-3			
			SUR	PTP-1				
26MS(1)D-21								
	EL TO PIPE	C-F	VOL	UTP-10	UT-3			
			SUR	PTP-1				
26MS(1)D-21LD								
	PIPE LONG SEAM	C-F	VOL	UTP-10	UT-3			

WNP-02
INTERVAL: PSI
PERIOD: NA
OUTAGE:
DRAWING NO. MS-204

WASHINGTON PUBLIC POWER SUPPLY SYSTEM
PROGRAM PLAN AND SCHEDULE
SYSTEM OR COMPONENT: MS(1)-4
DESCRIPTION: MAIN STEAM LINE D

DATE 12/14/84

IDENT. NO.	DESCRIPTION	SECT. XI EXAM.	EXAM MTH.	PROCEDURE	CAL. BLOCK	INSERVICE REQ.	INSERVICE SCHEDULED OUTAGE	NOTES
26MS(1)D-18								
	VALVE TO PIPE	C-F	VOL	UTP-10	UT-3			AUGMT
			SUR	PTP-1				AUGMT
26MS(1)D-18LD								
	PIPE LONG SEAM	C-F	VOL	UTP-10	UT-3			
			SUR	PTP-1				
26MS(1)D-18/3/4CAP								
	CAPPED CONN	N/A	VT-2	N/A				IWC-2510, SEE NOTES #6 & #7.
26MS(1)D-18/3/4V-47								
	TEST CONN	N/A	VT-2	N/A				IWC-2510, SEE NOTES #6 & #7.
MS-74								
	SPRING	C-E-2	VT-3	303/8.2.17				
			VT-4	303/8.2.17				
26MS(1)D-19LU								
	PIPE LONG SEAM	C-F	VOL	UTP-10	UT-3			
			SUR	PTP-1				
26MS(1)D-19								
	PIPE TO PIPE	C-F	VOL	UTP-10	UT-3			AUGMT
			SUR	PTP-1				AUGMT
26MS(1)D-19LD								
	PIPE LONG SEAM	C-F	VOL	UTP-10	UT-3			
			SUR	PTP-1				
26MS(1)D-19/3V-20								
	DRAIN CONN	N/A	SUR	PTP-1				IWC-2510, AUGMT.
26MS(1)D-19/3/4V-744D								
	INSTR CONN	N/A	VT-2	N/A				IWC-2510, SEE NOTES #6 & #7.

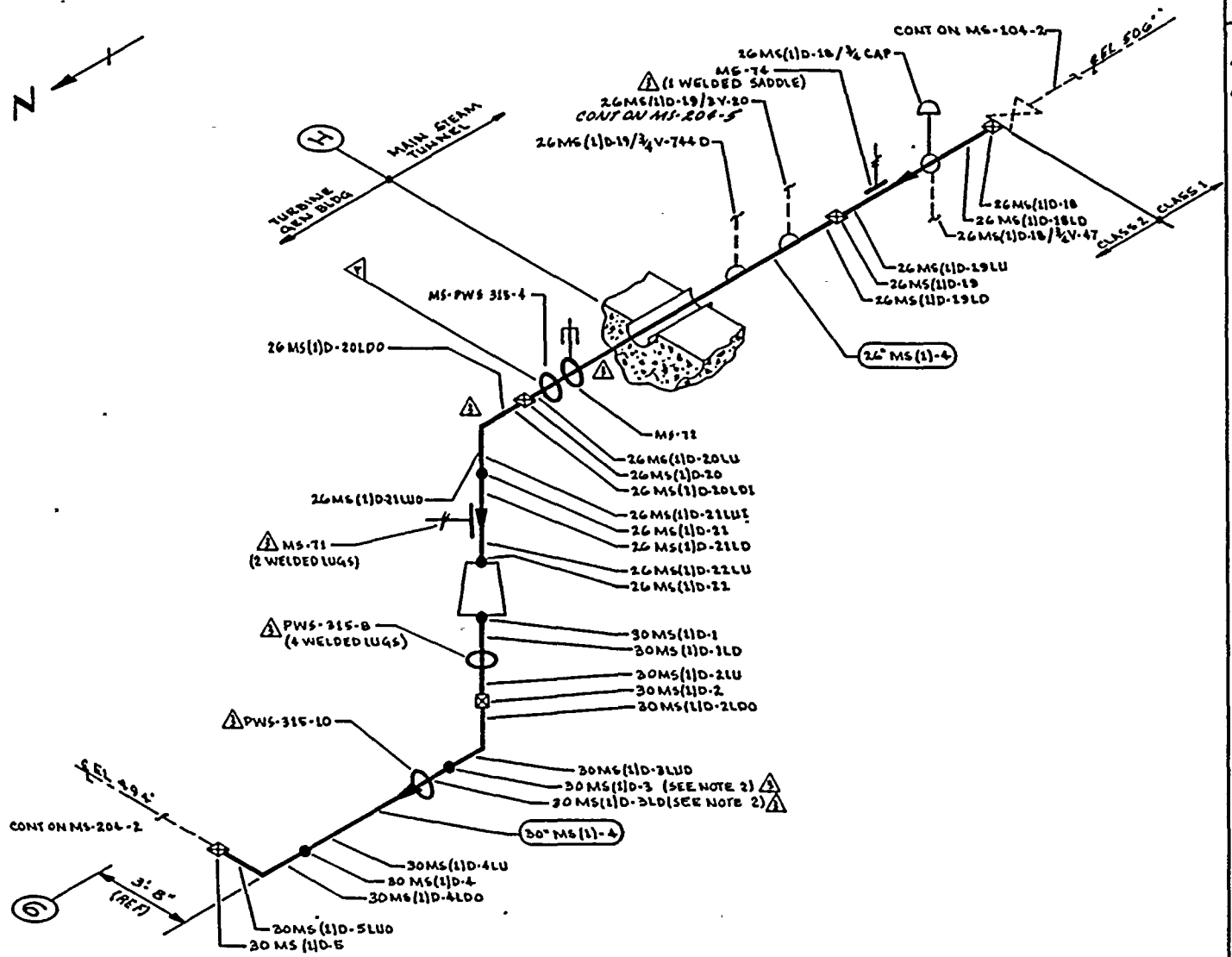

NOTES:

1. SCAFFOLD IS REQUIRED
2. ACCESS TO WELDS 30MS(1)D-3LD & 30MS(1)D-3 REQUIRES REMOVAL OF PWS-315-10.

REFERENCES:

BOVEE & CRAIL ISOMETRIC
MS-831-1.3 REV 9

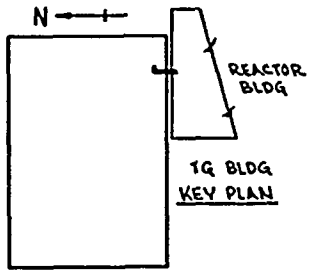

KEY PLAN

QUALITY CLASS: 1 | ASME CODE CLASS: 2

ENGR. D TIMMINS | DRAWN: K. McA | DATE: 2-8-78

THIS DRAWING IS INTENDED FOR USE IN PRESERVICE AND INSERVICE INSPECTION PROGRAMS ONLY.

WASHINGTON PUBLIC POWER SUPPLY SYSTEM
RICHLAND, WASHINGTON 99352

NO	DATE	REVISION	BY	CHKD	APPVD	PIPING SYSTEM	NOM DIA (IN)	SCH	NOM WALL THK	MATERIAL SPECIFICATION	MATL TYPE	CAL BLOCK NO
3	9-22-83	REVISED AS NOTED.	KMcA	DPT	TFH	30" MS(1)-4	30	XXX	1.25	SA 155 CL1 KCF 70	CS	UT-1
2	12-2-81	REVISED AS NOTED, AUGMENTED ISI ADDED	KMcA	WR	TFH	26" MS(1)-4	26	XXX	1.125	SA 155 CL1 KCF 70	CS	UT-3
1	11-5-80	DELETED WELDS 2LDI, 3LUI, 4LDI & 5LUI	KMcA	TFH	DEP							
0	1-9-79	ISSUED FOR USE	KMcA	[illegible]	[illegible]							
A	4-26-78	ISSUED FOR INFORMATION ONLY	KMcA	DCJ	[illegible]							

WNP-2
WELD & COMPONENT IDENTIFICATION DIAGRAM

TITLE: MAIN STEAM LINE D

DWG NO: MS-204-1 | REV 3

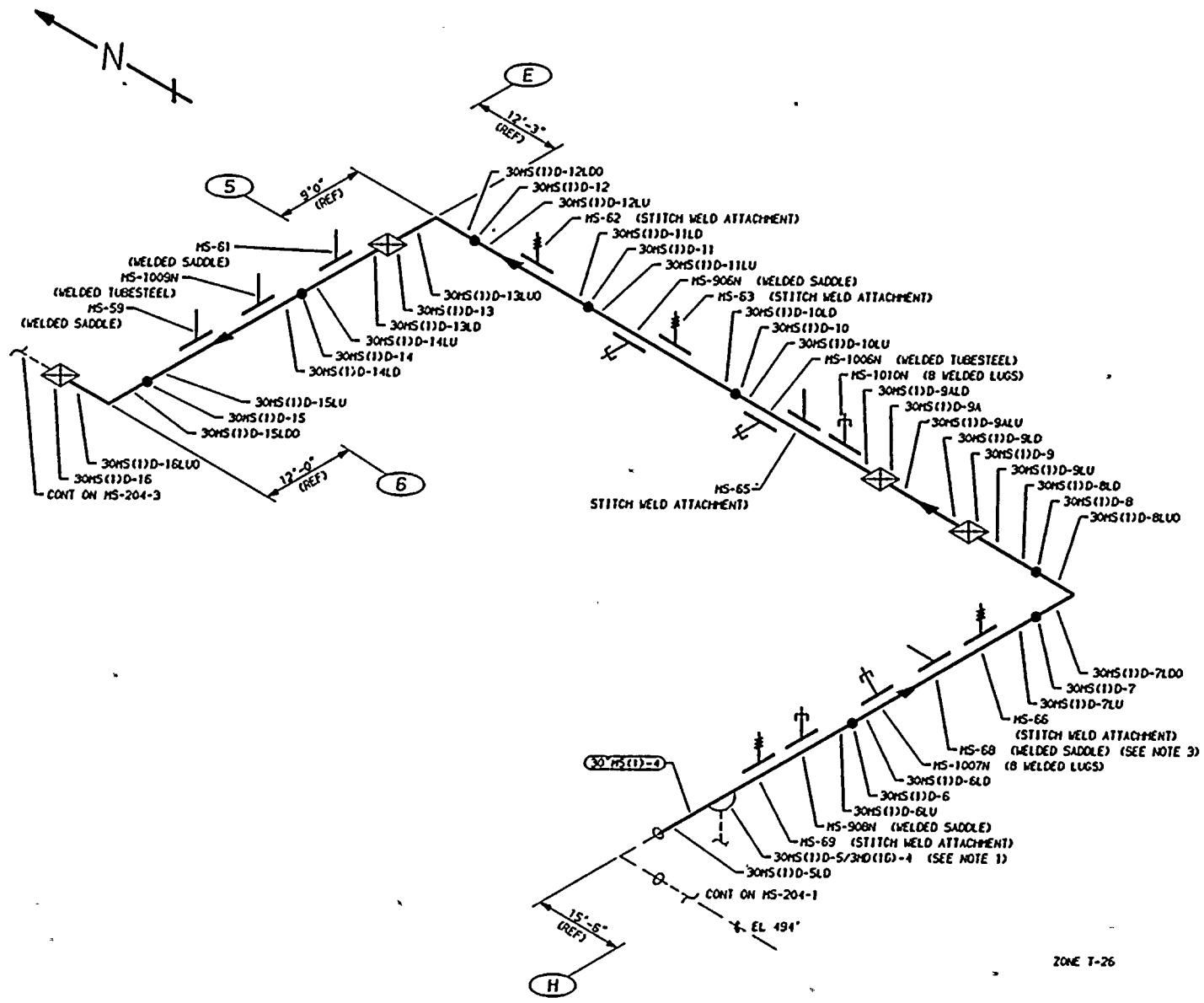

THIS DRAWING IS INTENDED FOR USE IN PRESERVICE AND INSERVICE INSPECTIONS PROGRAMS ONLY.

NOTES

1. EXTEND LEAKAGE EXAM THROUGH DRAINAGE SYSTEM TO VALVES MS-V-72 & MS-V-73.
2. SCAFFOLDING IS REQUIRED.
3. THERE ARE FOUR ABANDONED LUGS BETWEEN MS-68 AND MS-1007N THAT DO NOT REQUIRE EXAMINATION.

REFERENCES:

BOVEE AND CRAIL ISOMETIC
MS-531-4.6 REV 5

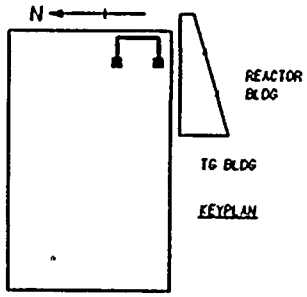

QUALITY CLASS: 1	ASME CODE CLASS: 2
ENGR: D TIMMINS	DRAWN: K-McA	DATE: 2-17-78

WASHINGTON PUBLIC POWER
SUPPLY SYSTEM
RICHLAND, WASHINGTON 99352

NO	DATE	REVISION	BY	CHKD	APVD
3	10-13-83	GENERAL UP-DATE REDRAWN	K-McA	DPR	TFH
2	12-2-81	REVISED AS NOTED	K-McA	DPR	TFH
1	11-5-80	REVISED AS NOTED	K-McA	TFH	DWP
0	1-9-79	ISSUED FOR USE	K-McA	TFH / DWP	DWP / LEH
A	4-20-78	ISSUED FOR INFORMATION ONLY	K-McA	MCH / DCI	DWP

PIPING SYSTEM	NOM DIA (IN)	SCH	NOM WALL THK	MATERIAL SPECIFICATION	MATL TYPE	CAL BLOCK NO
30"MS(1)-4	30	XXX	1.25	SA 155 CL 1 KCF 70	CS	UT-1

WNP-2
WELD & COMPONENT
IDENTIFICATION DIAGRAM

TITLE:
MAIN STEAM LINE D

DWG NO: MS-204-2 | REV 3

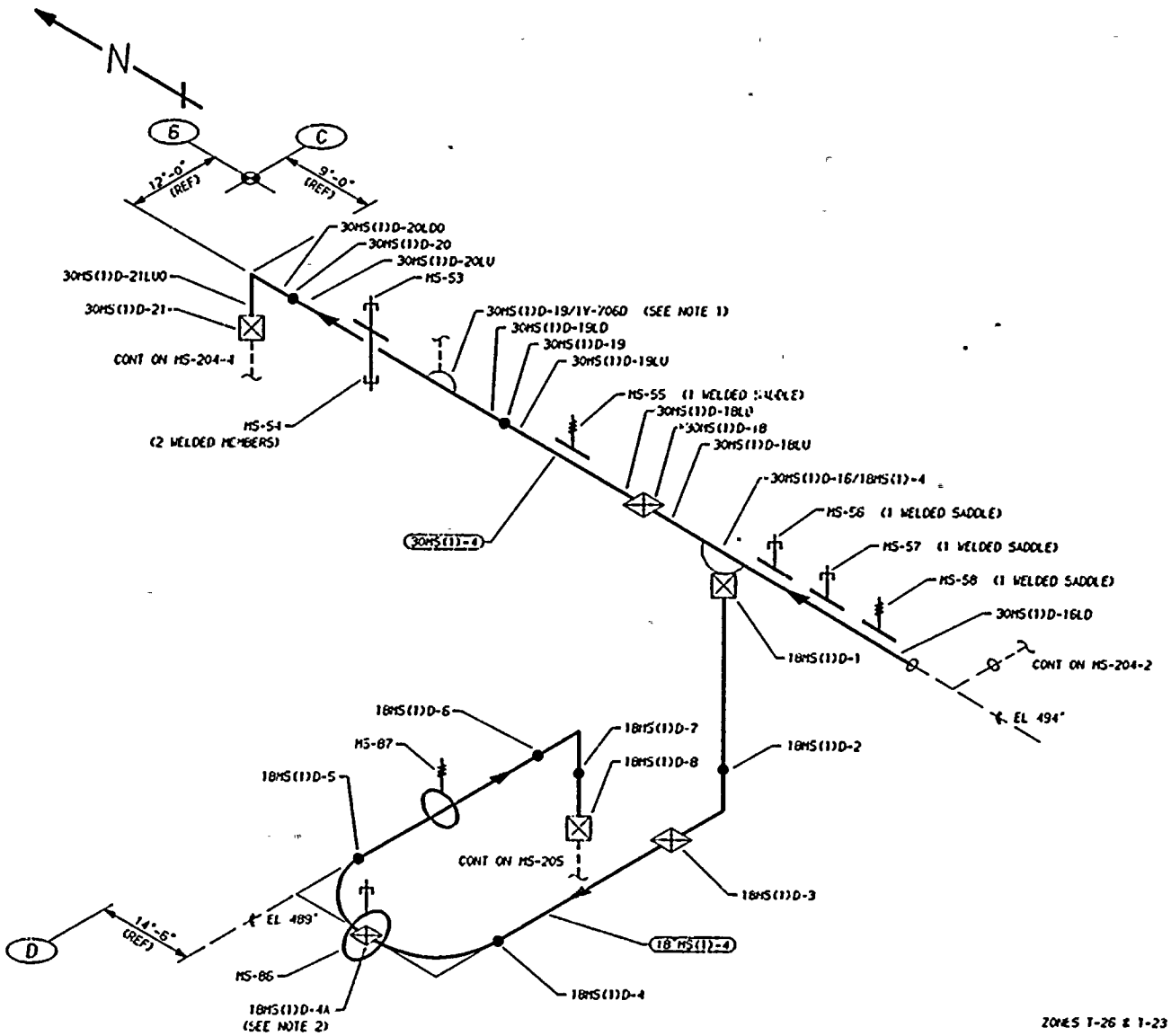

THIS DRAWING IS INTENDED FOR USE IN PRESERVICE AND INSERVICE INSPECTIONS PROGRAMS ONLY.

NOTES

1. EXTEND LEAKAGE EXAM THROUGH VALVE MS-V-706D TO MAIN STEAM PRESSURE AVERAGING MANIFOLD.
2. WELD 18MS(1)D-4A IS FITTING TO FITTING. ACCESS TO WELD 18MS(1)D-4A REQUIRES REMOVAL OF MS-86.

REFERENCES:

BOVEE AND CRAIL ISOMETIC
MS-531-7.10 REV 7

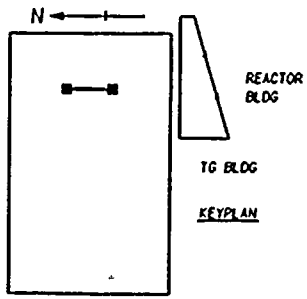

QUALITY CLASS: 1	ASME CODE CLASS: 2	
ENGR: D TIMMINS	DRAWN: K-McA	DATE: 2-21-78

WASHINGTON PUBLIC POWER
SUPPLY SYSTEM
RICHLAND, WASHINGTON 99352

WNP-2
WELD & COMPONENT
IDENTIFICATION DIAGRAM

TITLE: MAIN STEAM LINE D

DWG NO: MS-204-3 REV 4

NO	DATE	REVISION	BY	CHKD	APVD
4	12-2-83	REVISED HANGERS REDRAWN	[illegible]	[illegible]	[illegible]
3	12-2-81	REVISED AS NOTED	K-McA	DPR	TFH
2	11-5-80	REDRAWN ADDED FM 4A, NOTE 2, AND MODIFIED SUPPORT NOS.	K-McA	TFH	DWP
1	9-13-79	DELETED TEE AND CORRESPONDING WELDS. ADDED WOL IN D-5	K-McA	TFH	DWP
0	1-9-79	ISSUED FOR USE	K-McA	TFH	DWP
A	4-20-78	ISSUED FOR INFORMATION ONLY	K-McA	RCH	DWP

PIPING SYSTEM	NOM DIA (IN)	SCH	NOM WALL THK	MATERIAL SPECIFICATION	MATL TYPE	CAL BLOCK NO
30"MS(1)-4	30	XXX	1.25	SA 155 CL 1 KCF 70	CS	UT-1
18"MS(1)-4	18	80	0.938	SA 106 GR B	CS	UT-12

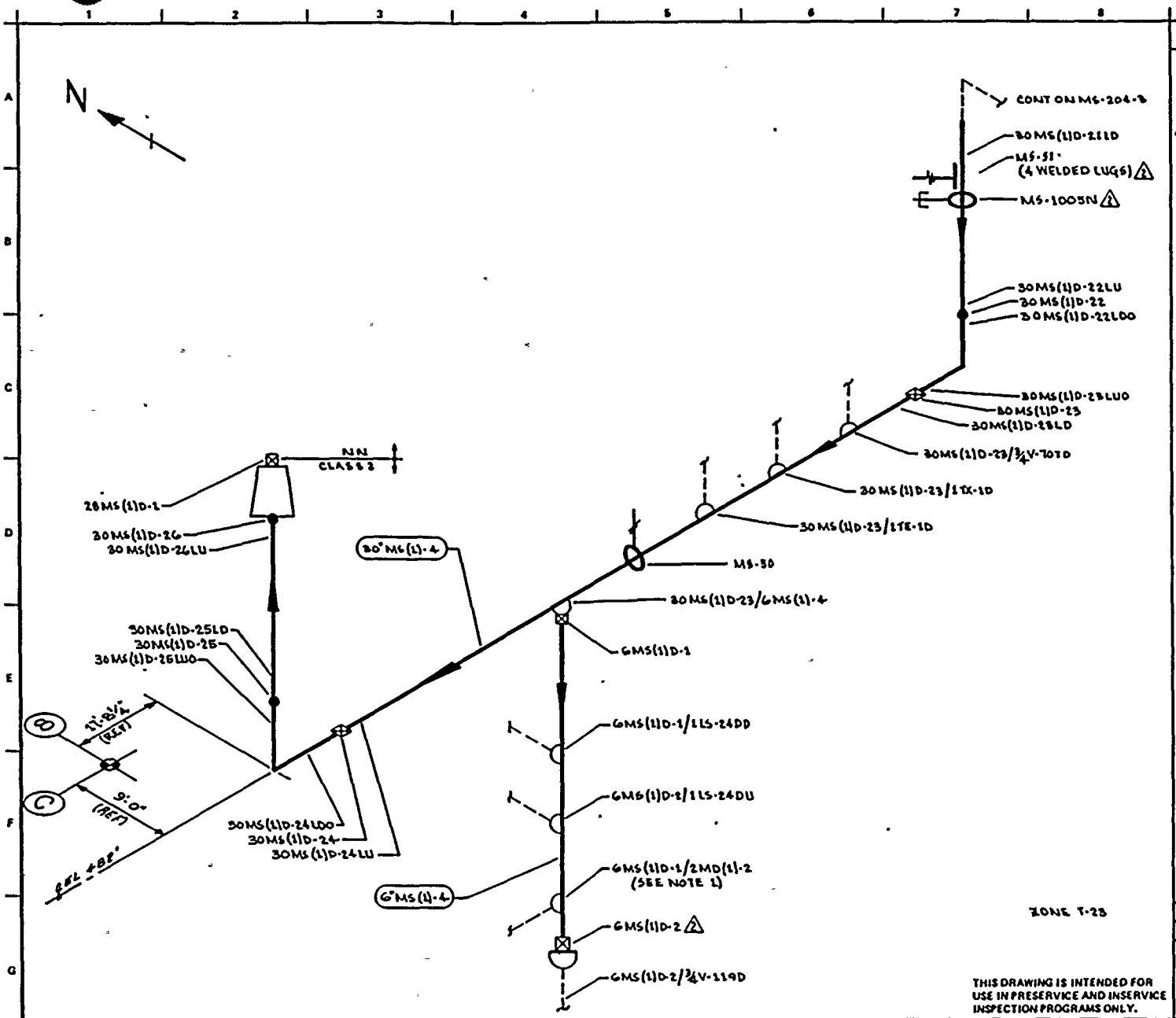

NOTES:

1. EXTEND LEAKAGE EXAM THROUGH VALVES MD-V-120D & MD-V117D.
2. SCAFFOLDING IS REQUIRED.

REFERENCES:

BOVEE & CRAIL ISOMETRICS

MS-531-11	REV 7
MS-531-12	REV 8
MS-531-7.10	REV 8

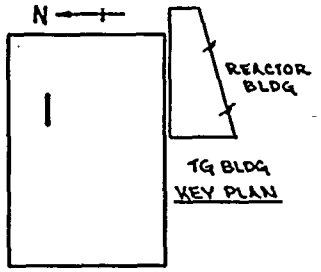

KEY PLAN

THIS DRAWING IS INTENDED FOR USE IN PRESERVICE AND INSERVICE INSPECTION PROGRAMS ONLY.

PIPING SYSTEM	NOM DIA (IN)	SCH	NOM WALL THK	MATERIAL SPECIFICATION	MATL TYPE	CAL BLOCK NO
30" MS (1)-4	30	XXX	1.25	SA 155 CL 1 KCF 70	CS	UT-1
6" MS (1)-4	6	80	0.432	SA 106 GR B	CS	NA
28" MS (1)-4	28	XXX	1.420	SA 155 CL 1 KCF 70	CS	UT-2

NO	DATE	REVISION	BY	CHKD	APPVD
2	9-26-83	REVISED AS NOTED	KMA	DRK	TAW
1	11-6-80	DELETED WELDS 22LDI, 23LUI, 24LDI & 25LUI & AS NOTED	KMA	TAW	[illegible]
0	1-9-79	ISSUED FOR USE	KMA	[illegible]	[illegible]
A	4-20-78	ISSUED FOR INFORMATION ONLY	KMA	[illegible]	[illegible]

QUALITY CLASS: 1 | ASME CODE CLASS: 2

ENGR: D TIMMINS | DRAWN: K. McA | DATE: 2-22-78

WASHINGTON PUBLIC POWER SUPPLY SYSTEM

RICHLAND, WASHINGTON 99352

WNP-2
WELD & COMPONENT
IDENTIFICATION DIAGRAM

TITLE: MAIN STEAM LINE D

DWG NO: MS-204-4 | REV 2

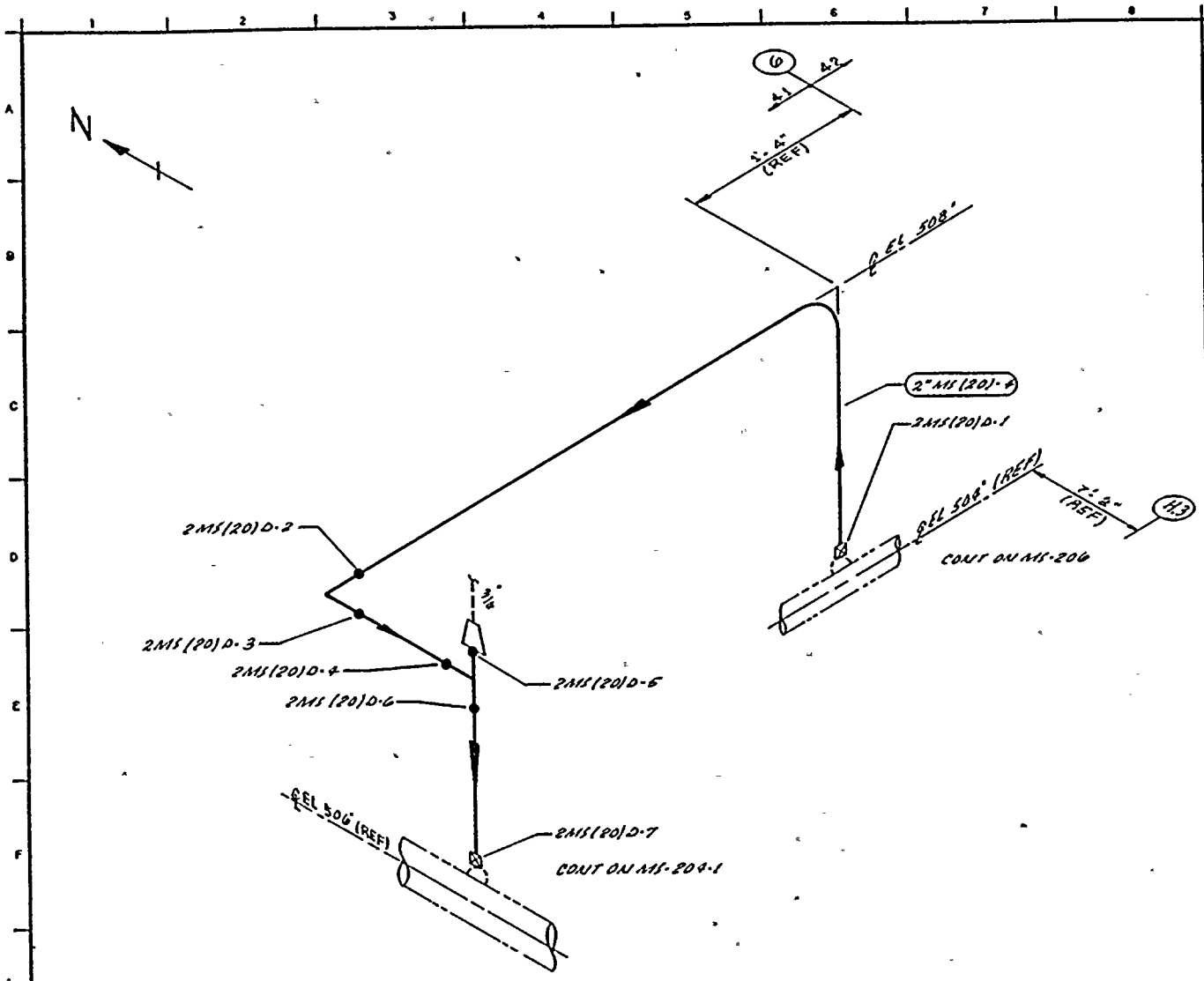

NOTES:

1. For branch piping, 1" or less (conn. shown in dashed lines), extend visual leakage exam through the outermost normally closed nuclear class valve, or until transition to instrument tubing, unless otherwise noted.
2. THIS DWG IDENTIFIES PIPING WELDS THAT REQUIRE AUGMENTED ISI.

REFERENCES:

BOYEE CRAIL ISOMETRIC
MS-1292-2 REV 1

THIS DRAWING IS INTENDED FOR USE IN PRESERVICE AND INSERVICE INSPECTION PROGRAMS ONLY.

PIPING SYSTEM	NOM DIA (IN)	SCH	NOM WALL THK	MATERIAL SPECIFICATION	MATL TYPE	CAL BLOCK NO
2"MS(20)-4	2	160	0.433	SA 106 GR B	CS	NA

NO	DATE	REVISION	BY	CHKD	APPVD
0	12/1/11	ISSUED FOR USE	[illegible]	RR	TFK

QUALITY CLASS: 1 | ASME CODE CLASS: 2

ENGR: [illegible] | DRAWN: [illegible] | DATE: 12/1/11

WASHINGTON PUBLIC POWER SUPPLY SYSTEM
RICHLAND, WASHINGTON 99352

WNP-2
WELD & COMPONENT IDENTIFICATION DIAGRAM

TITLE: MAIN STEAM PRESSURE STABILIZATION LINE

DWG NO: MS-204-5 | REV 0

WNP-02
INTERVAL: PSI
PERIOD: NA
OUTAGE:
DRAWING NO. MS-203

WASHINGTON PUBLIC POWER SUPPLY SYSTEM
PROGRAM PLAN AND SCHEDULE
SYSTEM OR COMPONENT: 2MS(20)-4
DESCRIPTION: MS PRESS STAR. LINE

DATE 12/14/84

IDENT. NO.	DESCRIPTION	SECT. XI EXAM.	EXAM MTH.	PROCEDURE	CAL. BLOCK	INSERVICE REQ.	INSERVICE SCHEDULED OUTAGE	NOTES
2MS(20)C-1								
	SOL TO PIPE	N/A	SUR	PTP-1				AUGMT
2MS(20)C-2								
	PIPE TO EL	N/A	SUR	PTP-1				AUGMT
2MS(20)C-3								
	EL TO PIPE	N/A	SUR	PTP-1				AUGMT
2MS(20)C-4								
	PIPE TO EL	N/A	SUR	PTP-1				AUGMT
2MS(20)C-5								
	EL TO PIPE	N/A	SUR	PTP-1				AUGMT
2MS(20)C-6								
	PIPE TO TEE	N/A	SUR	PTP-1				AUGMT
2MS(20)C-7								
	TEE TO RED	N/A	SUR	PTP-1				AUGMT
2MS(20)C-8								
	TEE TO PIPE	N/A	SUR	PTP-1				AUGMT
2MS(20)C-9								
	PIPE TO SOL	N/A	SUR	PTP-1				AUGMT

WNP-02
INTERVAL: PSI
PERIOD: NA
OUTAGE:
DRAWING NO. MS-203

WASHINGTON PUBLIC POWER SUPPLY SYSTEM
PROGRAM PLAN AND SCHEDULE
SYSTEM OR COMPONENT: MS(1)-4
DESCRIPTION: MAIN STEAM LINE C

DATE 12/14/84

IDENT. NO.	DESCRIPTION	SECT. XI EXAM.	EXAM MTH.	PROCEDURE	CAL. BLOCK	INSERVICE REQ.	SCHEDULED OUTAGE	NOTES
MS-PB-203	MS PRESS BNDRY	N/A	VT-2	N/A				IWC-2510, SEE NOTES #6 & #7.

WNP-02
INTERVAL: PSI
PERIOD: NA
OUTAGE:
DRAWING NO. MS-203

WASHINGTON PUBLIC POWER SUPPLY SYSTEM
PROGRAM PLAN AND SCHEDULE
SYSTEM OR COMPONENT: MS(1)-4
DESCRIPTION: MAIN STEAM LINE C

IDENT. NO.	DESCRIPTION	SECT. XI EXAM.	EXAM MTH.	PROCEDURE	CAL. BLOCK	INSERVICE REQ.	SCHEDULED OUTAGE	NOTES
30MS(1)C-24LU	PIPE LONG SEAM	C-F	VOL	UTP-10	UT-1			
			SUR	PTP-1				
30MS(1)C-24	PIPE TO EL	C-F	VOL	UTP-10	UT-1			
			SUR	OCT 3-3				
30MS(1)C-24LDO	EL SEAM	C-F	VOL	UTP-10	UT-1			
			SUR	PTP-1				
30MS(1)C-25LUO	EL SEAM	C-F	VOL	UTP-10	UT-1			
			SUR	PTP-1				
30MS(1)C-25	EL TO PIPE	C-F	VOL	UTP-10	UT-1			
			SUR	PTP-1				
30MS(1)C-25LD	PIPE LONG SEAM	C-F	VOL	UTP-10	UT-1			
			SUR	PTP-1				
30MS(1)C-26LU	PIPE LONG SEAM	C-F	VOL	UTP-10	UT-1			
			SUR	PTP-1				
30MS(1)C-26	PIPE TO REDUCER	C-F	VOL	UTP-10	UT-1			
			SUR	PTP-1				
28MS(1)C-1	REDUCER TO PIPE	C-F	VOL	UTP-10	UT-2			
			SUR	PTP-1				

WNP-02
INTERVAL: PSI
PERIOD: NA
OUTAGE:
DRAWING NO. MS-203

WASHINGTON PUBLIC POWER SUPPLY SYSTEM
PROGRAM PLAN AND SCHEDULE
SYSTEM OR COMPONENT: MS(1)-4
DESCRIPTION: MAIN STEAM LINE C

IDENT. NO.	DESCRIPTION	SECT. XI EXAM.	EXAM MTH.	PROCEDURE	CAL. BLOCK	INSERVICE REQ.	INSERVICE SCHEDULED OUTAGE	NOTES
6MS(1)C-2/3/4V-119C	INSTR CONN	N/A	VT-2	N/A				IWC-2510. SEE NOTES #6 & #7.
30MS(1)C-22LU	PIPE LONG SEAM	C-F	VOL	UTP-10	UT-1			
			SUR	PTP-1				
30MS(1)C-22	PIPE TO EL	C-F	VOL	UTP-10	UT-1			
			SUR	PTP-1				
30MS(1)C-22LDI	EL SEAM	C-F	VOL	UTP-10	UT-1			
			SUR	PTP-1				
30MS(1)C-22LDO	EL SEAM	C-F	VOL	UTP-10	UT-1			
			SUR	PTP-1				
30MS(1)C-23LUI	EL SEAM	C-F	VOL	UTP-10	UT-1			
			SUR	PTP-1				
30MS(1)C-23LUO	EL SEAM	C-F	VOL	UTP-10	UT-1			
			SUR	PTP-1				
30MS(1)C-23	EL TO PIPE	C-F	VOL	OCI 6-13	UT-1			
			SUR	OCI 3-3				
30MS(1)C-23LD	PIPE LONG SEAM	C-F	VOL	UTP-10	UT-1			
			SUR	PTP-1				

WNP-02
INTERVAL: PSI
PERIOD: NA
OUTAGE:
DRAWING NO. MS-203

WASHINGTON PUBLIC POWER SUPPLY SYSTEM
PROGRAM PLAN AND SCHEDULE
SYSTEM OR COMPONENT: MS(1)-4
DESCRIPTION: MAIN STEAM LINE C

DATE 12/14/84

IDENT. NO.	DESCRIPTION	SECT. XI EXAM.	EXAM MTH.	PROCEDURE	CAL. BLOCK	INSERVICE REQ.	SCHEDULED OUTAGE	NOTES
30MS(1)C-21/1TX-1C								
	INSTR CONN	N/A	VT-2	N/A				IWC-2510, SEE NOTES #6 & #7.
MS-141								
	SPRING	C-E-2	VT-3	303/8.2.17				
			VT-4	303/8.2.17				
30MS(1)C-21/1TE-1C								
	INSTR CONN	N/A	VT-2	N/A				IWC-2510, SEE NOTES #6 & #7.
MS-24								
	SPRING	C-E-2	VT-3	303/8.2.17				
			VT-4	303/8.2.17				
30MS(1)C-21/6MS(1)-4								
	WOL TO PIPE	C-F	SUR	PTP-1				
6MS(1)C-1								
	PIPE TO WOL	C-F	SUR	PTP-1				
MS-1015S								
	PSA-1/4 SNUBBER	C-E-2	VT-3	303/8.2.17				S/N 386, LOCATED ON LS-24C.
			VT-4	303/8.2.17				S/N 386, LOCATED ON LS-24C.
6MS(1)C-1/2LS-24CD								
	INSTR CONN	N/A	VT-2	N/A				IWC-2510, SEE NOTES #6 & #7.
6MS(1)C-2/2LS-24CU								
	INSTR CONN	N/A	VT-2	N/A				IWC-2510, SEE NOTES #6 & #7.
6MS(1)C-1/2MD(1)-2								
	DRAIN CONN	N/A	VT-2	N/A				IWC-2510, SEE NOTES #6 & #7.
6MS(1)C-2								
	CAP TO PIPE	C-F	SUR	PTP-1				

WNP-02
INTERVAL: PSI
PERIOD: NA
OUTAGE:
DRAWING NO. MS-203

WASHINGTON PUBLIC POWER SUPPLY SYSTEM
PROGRAM PLAN AND SCHEDULE
SYSTEM OR COMPONENT: MS(1)-4
DESCRIPTION: MAIN STEAM LINE C

IDENT. NO.	DESCRIPTION	SECT. XI EXAM.	EXAM MTH.	PROCEDURE	CAL. BLOCK	INSERVICE REQ.	SCHEDULED OUTAGE	NOTES
30MS(1)C-19LD								
	PIPE LONG SEAM	C-F	VOL	UTP-10	UT-1			
			SUR	PTP-1				
MS-26(W)								
	8 WELDED LUGS	C-E-1	SUR	MTP-1				
MS-26								
	STRUT	C-E-2	VT-3	303/8.2.17				
30MS(1)C-20LU								
	PIPE LONG SEAM	C-F	VOL	UTP-10	UT-1			
			SUR	PTP-1				
30MS(1)C-20								
	PIPE TO EL	C-F	VOL	UTP-10	UT-1			
			SUR	PTP-1				
30MS(1)C-20LDO								
	EL SEAM	C-F	VOL	UTP-10	UT-1			
			SUR	PTP-1				
30MS(1)C-21LUO								
	EL SEAM	C-F	VOL	UTP-10	UT-1			
			SUR	PTP-1				
30MS(1)C-21								
	EL TO PIPE	C-F	VOL	UTP-10	UT-1			
			SUR	PTP-1				
30MS(1)C-21LD								
	PIPE LONG SEAM	C-F	VOL	UTP-10	UT-1			
			SUR	PTP-1				
30MS(1)C-21/3/4V-707C								
	INSTR CONN	N/A	VT-2	N/A				IWC-2510, SEE NOTES #6 & #7.

WNP-02
INTERVAL: PSI
PERIOD: NA
OUTAGE:
DRAWING NO. MS-203

WASHINGTON PUBLIC POWER SUPPLY SYSTEM
PROGRAM PLAN AND SCHEDULE
SYSTEM OR COMPONENT: MS(1)-4
DESCRIPTION: MAIN STEAM LINE C

IDENT. NO.	DESCRIPTION	SECT. XI EXAM.	EXAM MTH.	PROCEDURE	CAL. BLOCK	INSERVICE REQ.	SCHEDULED OUTAGE	NOTES
			SUR	PTP-1				
30MS(1)C-17LD	PIPE LONG SEAM	C-F	VOL	UTP-10	UT-1			
			SUR	PTP-1				
MS-28	SPRING	C-E-2	VT-3	303/8.2.17				
			VT-4	303/8.2.17				
30MS(1)C-17/1V-706C	INSTR CONN	N/A	VT-2	N/A				SEE NOTES #6 & #7.
MS-27	PSA-10 SN(2)	C-E-2	VT-3	303/8.2.17				S/N T121/B124
			VT-4	303/8.2.17				S/N T121/B124
30MS(1)C-18LU	PIPE LONG SEAM	C-F	VOL	UTP-10	UT-1			
			SUR	PTP-1				
30MS(1)C-18	PIPE TO EL	C-F	VOL	UTP-10	UT-1			
			SUR	PTP-1				
30MS(1)C-18LDO	EL SEAM	C-F	VOL	UTP-10	UT-1			
			SUR	PTP-1				
30MS(1)C-19LUO	EL SEAM	C-F	VOL	UTP-10	UT-1			
			SUR	PTP-1				
30MS(1)C-19	EL TO PIPE	C-F	VOL	UTP-10	UT-1			
			SUR	PTP-1				

WNP-02
INTERVAL: PSI
PERIOD: NA
OUTAGE:
DRAWING NO. MS-203

WASHINGTON PUBLIC POWER SUPPLY SYSTEM
PROGRAM PLAN AND SCHEDULE
SYSTEM OR COMPONENT: MS(1)-4
DESCRIPTION: MAIN STEAM LINE C

DATE 12/14/84

IDENT. NO.	DESCRIPTION	SECT. XI EXAM.	EXAM MTH.	PROCEDURE	CAL. BLOCK	INSERVICE REQ.	INSERVICE SCHEDULED OUTAGE	NOTES
18MS(1)C-7								
	EL TO PIPE	C-F	VOL	UTP-10	UT-12			
			SUR	PTP-1				
18MS(1)C-8								
	PIPE TO EL	C-F	VOL	UTP-10	UT-12			
			SUR	PTP-1				
18MS(1)C-9								
	EL TO PIPE	C-F	VOL	UTP-10	UT-12			
			SUR	PTP-1				
18MS(1)C-10								
	PIPE TO WOL	C-F	VOL	UTP-10	UT-12			
			SUR	PTP-1				
30MS(1)C-16LU								
	PIPE SEAM	C-F	VOL	UTP-10	UT-1			
			SUR	PTP-1				
30MS(1)C-16								
	PIPE TO PIPE	C-F	VOL	UTP-10	UT-1			
			SUR	PTP-1				
30MS(1)C-16LD								
	PIPE LONG SEAM	C-F	VOL	UTP-10	UT-1			
			SUR	PTP-1				
MS-994N								
	BOX	C-E-2	VT-3	303/8.2.17				
30MS(1)C-17LU								
	PIPE LONG SEAM	C-F	VOL	UTP-10	UT-1			
			SUR	PTP-1				
30MS(1)C-17								
	PIPE TO PIPE	C-F	VOL	UTP-10	UT-1			

WNP-02
INTERVAL: PSI
PERIOD: NA
OUTAGE:
DRAWING NO. MS-203

WASHINGTON PUBLIC POWER SUPPLY SYSTEM
PROGRAM PLAN AND SCHEDULE
SYSTEM OR COMPONENT: MS(1)-4
DESCRIPTION: MAIN STEAM LINE C

IDENT. NO.	DESCRIPTION	SECT. XI EXAM.	EXAM MTH.	PROCEDURE	CAL. BLOCK	INSERVICE REQ.	SCHEDULED OUTAGE	NOTES
MS-30(S)								
	1 WELDED SADDLE	C-E-1	SUR	OCI 4-3				
30MS(1)C-14/18MS(1)-4								
	PIPE TO WOL	C-F	SUR	PTP-1				
18MS(1)C-1								
	WOL TO PIPE	C-F	VOL	UTP-10	UT-12			
			SUR	PTP-1				
18MS(1)C-2								
	PIPE TO EL	C-F	VOL	UTP-10	UT-12			
			SUR	PTP-1				
18MS(1)C-3								
	EL TO PIPE	C-F	VOL	UTP-10	UT-12			
			SUR	PTP-1				
18MS(1)C-4								
	PIPE TO EL	C-F	VOL	UTP-10	UT-12			
			SUR	PTP-1				
18MS(1)C-5								
	EL TO PIPE	C-F	VOL	UTP-10	UT-12			
			SUR	PTP-1				
MS-48								
	PSA-3 SNUBBER	C-E-2	VT-3	303/8.2.17				S/N 296
			VT-4	303/8.2.17				S/N 296
MS-49								
	SPRING	C-E-2	VT-3	303/8.2.17				
			VT-4	303/8.2.17				
18MS(1)C-6								
	PIPE TO EL	C-F	VOL	UTP-10	UT-12			
			SUR	PTP-1				

WNP-02
INTERVAL: PSI
PERIOD: NA
OUTAGE:
DRAWING NO. MS-203

WASHINGTON PUBLIC POWER SUPPLY SYSTEM
PROGRAM PLAN AND SCHEDULE
SYSTEM OR COMPONENT: MS(1)-4
DESCRIPTION: MAIN STEAM LINE C

IDENT. NO.	DESCRIPTION	SECT. XI EXAM.	EXAM MTH.	PROCEDURE	CAL. BLOCK	INSERVICE REQ.	INSERVICE SCHEDULED OUTAGE	NOTES
30MS(1)C-13LU	PIPE LONG SEAM	C-F	VOL	UTP-10	UT-1			
			SUR	PTP-1				
30MS(1)C-13	PIPE TO EL	C-F	VOL	UTP-10	UT-1			
			SUR	PTP-1				
30MS(1)C-13LDO	EL SEAM	C-F	VOL	UTP-10	UT-1			
			SUR	PTP-1				
30MS(1)C-14LUO	EL SEAM	C-F	VOL	UTP-10	UT-1			
			SUR	PTP-1				
30MS(1)C-14	EL TO PIPE	C-F	VOL	UTP-10	UT-1			
			SUR	PTP-1				
30MS(1)C-14LD	PIPE LONG SEAM	C-F	VOL	UTP-10	UT-1			
			SUR	PTP-1				
MS-31	PSA-3 SN(2)	C-E-2	VT-3	303/8.2.17				S/N 4417/2587
			VT-4	303/8.2.17				S/N 4417/2587
MS-999N	PSA-10 SNUBBER	C-E-2	VT-3	303/8.2.17				S/N 328
			VT-4	303/8.2.17				S/N 328
MS-30	SPRING (2)	C-E-2	VT-3	303/8.2.17				
			VT-4	303/8.2.17				

WNP-02
INTERVAL: PSI
PERIOD: NA
OUTAGE:
DRAWING NO. MS-203

WASHINGTON PUBLIC POWER SUPPLY SYSTEM
PROGRAM PLAN AND SCHEDULE
SYSTEM OR COMPONENT: MS(1)-4
DESCRIPTION: MAIN STEAM LINE C

DATE 12/14/84

IDENT. NO.	DESCRIPTION	SECT. XI EXAM.	EXAM MTH.	PROCEDURE	CAL. BLOCK	INSERVICE REQ.	SCHEDULED OUTAGE	NOTES
			SUR	PTP-1				
30MS(1)C-11	EL TO PIPE	C-F	VOL	UTP-10	UT-1			
			SUR	PTP-1				
30MS(1)C-11LD	PIPE LONG SEAM	C-F	VOL	UTP-10	UT-1			
			SUR	PTP-1				
MS-1001N	PSA-35 SNUBBER	C-E-2	VT-3	303/8.2.17				S/N 8686
			VT-4	303/8.2.17				S/N 8686
MS-36	STRUT	C-E-2	VT-3	303/8.2.17				
MS-1000N	BOX	C-E-2	VT-3	303/8.2.17				
30MS(1)C-12LU	PIPE LONG SEAM	C-F	VOL	UTP-10	UT-1			
			SUR	PTP-1				
30MS(1)C-12	PIPE TO PIPE	C-F	VOL	UTP-10	UT-1			
			SUR	PTP-1				
30MS(1)C-12LD	PIPE LONG SEAM	C-F	VOL	UTP-10	UT-1			
			SUR	PTP-1				
MS-34	STRUT	C-E-2	VT-3	303/8.2.17				
MS-33	SPRING (2)	C-E-2	VT-3	303/8.2.17				
			VT-4	303/8.2.17				

WNP-02
INTERVAL: PSI
PERIOD: NA
OUTAGE:
DRAWING NO. MS-203

WASHINGTON PUBLIC POWER SUPPLY SYSTEM
PROGRAM PLAN AND SCHEDULE
SYSTEM OR COMPONENT: MS(1)-4
DESCRIPTION: MAIN STEAM LINE C

DATE 12/14/84

IDENT. NO.	DESCRIPTION	SECT. XI EXAM.	EXAM MTH.	PROCEDURE	CAL. BLOCK	INSERVICE REQ.	INSERVICE SCHEDULED OUTAGE	NOTES
30MS(1)C-9LU								
	PIPE LONG SEAM	C-F	VOL	UTP-10	UT-1			
			SUR	PTP-1				
30MS(1)C-9								
	PIPE TO PIPE	C-F	VOL	UTP-10	UT-1			
			SUR	PTP-1				
30MS(1)C-9LO								
	PIPE LONG SEAM	C-F	VOL	UTP-10	UT-1			
			SUR	PTP-1				
MS-921N								
	STRUT	C-E-2	VT-3	303/8.2.17				
MS-38								
	PSA-10 SN(2)	C-E-2	VT-3	303/8.2.17				S/N 117/127
			VT-4	303/8.2.17				S/N 117/127
MS-37								
	SPRING (2)	C-E-2	VT-3	303/8.2.17				
			VT-4	303/8.2.17				
30MS(1)C-10LU								
	PIPE LONG SEAM	C-F	VOL	UTP-10	UT-1			
			SUR	PTP-1				
30MS(1)C-10								
	PIPE TO EL	C-F	VOL	UTP-10	UT-1			
			SUR	PTP-1				
30MS(1)C-10LDO								
	EL SEAM	C-F	VOL	UTP-10	UT-1			
			SUR	PTP-1				
30MS(1)C-11LUO								
	EL SEAM	C-F	VOL	UTP-10	UT-1			

WNP-02
INTERVAL: PSI
PERIOD: NA
OUTAGE:
DRAWING NO. MS-203

WASHINGTON PUBLIC POWER SUPPLY SYSTEM
PROGRAM PLAN AND SCHEDULE
SYSTEM OR COMPONENT: MS(1)-4
DESCRIPTION: MAIN STEAM LINE C

DATE 12/14/84

IDENT. NO.	DESCRIPTION	SECT. XI EXAM.	EXAM MTH.	PROCEDURE	CAL. BLOCK	INSERVICE REQ.	SCHEDULED OUTAGE	NOTES
			SUR	PTP-1				
MS-1602N								
	PSA-10 SN(2)	C-E-2	VT-3	303/8.2.17				S/N 9900/9960
			VT-4	303/8.2.17				S/N 9900/9960
MS-40								
	STRUT	C-E-2	VT-3	303/8.2.17				
30MS(1)C-7LU								
	PIPE LONG SEAM	C-F	VOL	UTP-10	UT-1			
			SUR	PTP-1				
30MS(1)C-7								
	PIPE TO EL	C-F	VOL	UTP-10	UT-1			
			SUR	PTP-1				
30MS(1)C-7LDO								
	EL SEAM	C-F	VOL	UTP-10	UT-1			
			SUR	PTP-1				
30MS(1)C-8LUO								
	EL SEAM	C-F	VOL	UTP-10	UT-1			
			SUR	PTP-1				
30MS(1)C-8								
	EL TO PIPE	C-F	VOL	UTP-10	UT-1			
			SUR	PTP-1				
30MS(1)C-8LD								
	PIPE LONG SEAM	C-F	VOL	UTP-10	UT-1			
			SUR	PTP-1				
MS-39								
	STRUT	C-E-2	VT-3	303/8.2.17				
MS-39(S)								
	1 WELDED SADDLE	C-E-1	SUR	OCI 4-3				

WNP-02
INTERVAL: PSI
PERIOD: NA
OUTAGE:
DRAWING NO. MS-203

WASHINGTON PUBLIC POWER SUPPLY SYSTEM
PROGRAM PLAN AND SCHEDULE
SYSTEM OR COMPONENT: MS(1)-4
DESCRIPTION: MAIN STEAM LINE C

DATE 12/14/84

IDENT. NO.	DESCRIPTION	SECT. XI EXAM.	EXAM MTH.	PROCEDURE	CAL. BLOCK	INSERVICE REQ.	SCHEDULED OUTAGE	NOTES
			SUR	PTP-1				
30MS(1)C-4	PIPE TO EL	C-F	VOL	UTP-10	UT-1			
			SUR	PTP-1				
30MS(1)C-4LDO	EL SEAM	C-F	VOL	UTP-10	UT-1			
			SUR	PTP-1				
30MS(1)C-5LUO	EL SEAM	C-F	VOL	UTP-10	UT-1			
			SUR	PTP-1				
30MS(1)C-5	EL TO PIPE	C-F	VOL	UTP-10	UT-1			
			SUR	PTP-1				
30MS(1)C-5LD	PIPE LONG SEAM	C-F	VOL	UTP-10	UT-1			
			SUR	PTP-1				
MS-42	SPRING (2)	C-E-2	VT-3	303/8.2.17				
			VT-4	303/8.2.17				
30MS(1)C-6LU	PIPE LONG SEAM	C-F	VOL	UTP-10	UT-1			
			SUR	PTP-1				
30MS(1)C-6	PIPE TO PIPE	C-F	VOL	UTP-10	UT-1			
			SUR	PTP-1				
30MS(1)C-6LD	PIPE LONG SEAM	C-F	VOL	UTP-10	UT-1			

WNP-02
INTERVAL: PSI
PERIOD: NA
OUTAGE:
DRAWING NO. MS-203

WASHINGTON PUBLIC POWER SUPPLY SYSTEM
PROGRAM PLAN AND SCHEDULE
SYSTEM OR COMPONENT: MS(1)-4
DESCRIPTION: MAIN STEAM LINE C

DATE 12/14/84

IDENT. NO.	DESCRIPTION	SECT. XI EXAM.	EXAM MTH.	PROCEDURE	CAL. BLOCK	INSERVICE REQ.	INSERVICE SCHEDULED OUTAGE	NOTES
30MS(1)C-2LDO								
	EL SEAM	C-F	VOL	UTP-10	UT-1			
			SUR	PTP-1				
30MS(1)C-3LUO								
	EL SEAM	C-F	VOL	UTP-10	UT-1			
			SUR	PTP-1				
30MS(1)C-3								
	EL TO PIPE	C-F	VOL	UTP-10	UT-1			
			SUR	PTP-1				
30MS(1)C-3LD								
	PIPE LONG SEAM	C-F	VOL	UTP-10	UT-1			
			SUR	PTP-1				
30MS(1)C-3/3MD(16)-4								
	DRAIN CONN	N/A	VT-2	N/A				IWC-2510, SEE NOTES #6 & #7.
MS-1003N								
	PSA-10 SN(2)	C-E-2	VT-3	303/8.2.17				S/N 689/322
			VT-4	303/8.2.17				S/N 689/322
MS-1003N(S)								
	1 WELDED SADDLE	C-E-1	SUR	QCI 4-3				
30MS(1)C-3/3/4V-703								
	INSTR CONN	N/A	VT-2	N/A				IWC-2510, SEE NOTES #6 & #7.
30MS(1)C-3/3/4V-704								
	INSTR CONN	N/A	VT-2	N/A				IWC-2510, SEE NOTES #6 & #7.
PWS-315-9								
	PIPE WHIP	N/A	N/A	N/A				
30MS(1)C-4LU								
	PIPE LONG SEAM	C-F	VOL	UTP-10	UT-1			

WNP-02
INTERVAL: PSI
PERIOD: NA
OUTAGE:
DRAWING NO. MS-203

WASHINGTON PUBLIC POWER SUPPLY SYSTEM
PROGRAM PLAN AND SCHEDULE
SYSTEM OR COMPONENT: MS(1)-4
DESCRIPTION: MAIN STEAM LINE C

DATE 12/14/84

IDENT. NO.	DESCRIPTION	SECT. XI EXAM.	EXAM MTH.	PROCEDURE	CAL. BLOCK	INSERVICE REQ.	INSERVICE SCHEDULED OUTAGE	NOTES
			SUR	PTP-1				
26MS(1)C-22	EL TO PIPE	C-F	VOL	UTP-10	UT-3			
			SUR	PTP-1				
26MS(1)C-22LD	PIPE LONG SEAM	C-F	VOL	UTP-10	UT-3			
			SUR	PTP-1				
26MS(1)C-23LU	PIPE LONG SEAM	C-F	VOL	UTP-10	UT-3			
			SUR	PTP-1				
26MS(1)C-23	PIPE TO REDUCER	C-F	VOL	UTP-10	UT-3			
			SUR	PTP-1				
30MS(1)C-1	REDUCER TO PIPE	C-F	VOL	UTP-10	UT-1			
			SUR	PTP-1				
30MS(1)C-1LD	PIPE LONG SEAM	C-F	VOL	UTP-10	UT-1			
			SUR	PTP-1				
PWS-315-7	PIPE WHIP	N/A	N/A	N/A				
30MS(1)C-2LU	PIPE LONG SEAM	C-F	VOL	UTP-10	UT-1			
			SUR	PTP-1				
30MS(1)C-2	PIPE TO EL	C-F	VOL	UTP-10	UT-1			
			SUR	PTP-1				

WNP-02
INTERVAL: PSI
PERIOD: NA
OUTAGE:
DRAWING NO. MS-203

WASHINGTON PUBLIC POWER SUPPLY SYSTEM
PROGRAM PLAN AND SCHEDULE
SYSTEM OR COMPONENT: MS(1)-4
DESCRIPTION: MAIN STEAM LINE C

DATE 12/14/84

IDENT. NO.	DESCRIPTION	SECT. XI EXAM.	EXAM MTH.	PROCEDURE	CAL. BLOCK	INSERVICE REQ.	INSERVICE SCHEDULED OUTAGE	NOTES
26MS(1)C-20/3/4V-744C								
	INSTR CONN	N/A	VT-2	N/A				IWC-2510, SEE NOTES #6 & #7.
MS-44								
	SPRING	C-E-2	VT-3	303/8.2.17				
			VT-4	303/8.2.17				
MS-45								
	PSA-35 SNUBBER	C-E-2	VT-3	303/8.2.17				S/N 8689
			VT-4	303/8.2.17				S/N 8689
PWS-315-3								
	PIPE WHIP	N/A	N/A	N/A				
26MS(1)C-21LU								
	PIPE LONG SEAM	C-F	VOL	UTP-10	UT-3			
			SUR	PTP-1				
26MS(1)C-21								
	PIPE TO EL	C-F	VOL	UTP-10	UT-3			
			SUR	PTP-1				
26MS(1)C-21LDI								
	EL SEAM	C-F	VOL	UTP-10	UT-3			
			SUR	PTP-1				
26MS(1)C-21LDO								
	EL SEAM	C-F	VOL	UTP-10	UT-3			
			SUR	PTP-1				
26MS(1)C-22LUI								
	EL SEAM	C-F	VOL	UTP-10	UT-3			
			SUR	PTP-1				
26MS(1)C-22LUO								
	EL SEAM	C-F	VOL	UTP-10	UT-3			

WNP-02
INTERVAL: PSI
PERIOD: NA
OUTAGE:
DRAWING NO. MS-203

WASHINGTON PUBLIC POWER SUPPLY SYSTEM
PROGRAM PLAN AND SCHEDULE
SYSTEM OR COMPONENT: MS(1)-4
DESCRIPTION: MAIN STEAM LINE C

DATE 12/14/84

IDENT. NO.	DESCRIPTION	SECT. XI EXAM.	EXAM MTH.	PROCEDURE	CAL. BLOCK	INSERVICE REQ.	INSERVICE SCHEDULED OUTAGE	NOTES
26MS(1)C-19								
	VALVE TO PIPE	C-F	VOL	UTP-10	UT-3			AUGMT
			SUR	PTP-1				AUGMT
26MS(1)C-19LD								
	PIPE LONG SEAM	C-F	VOL	UTP-10	UT-3			
			SUR	PTP-1				
26MS(1)C-19/3/4CAP								
	CAPPED CONN	N/A	VT-2	N/A				IWC-2510, SEE NOTE #6 & #7.
26MS(1)C-19/3/4V-45								
	TEST CONN	N/A	VT-2	N/A				IWC-2510, SEE NOTES #6 & #7.
26MS(1)C-19/1-1/2PLUG								
	PLUG CONN	N/A	VT-2	N/A				IWC-2510, SEE NOTES #6 & #7.
MS-47								
	SPRING	C-E-2	VT-3	303/8.2.17				
			VT-4	303/8.2.17				
26MS(1)C-20LU								
	PIPE LONG SEAM	C-F	VOL	UTP-10	UT-3			
			SUR	PTP-1				
26MS(1)C-20								
	PIPE TO PIPE	C-F	VOL	UTP-10	UT-3			AUGMT
			SUR	PTP-1				AUGMT
26MS(1)C-20LD								
	PIPE LONG SEAM	C-F	VOL	UTP-10	UT-3			
			SUR	PTP-1				
26MS(1)C-20/3V-20								
	DRAIN CONN	N/A	SUR	PTP-1				IWC-2510, AUGMT.

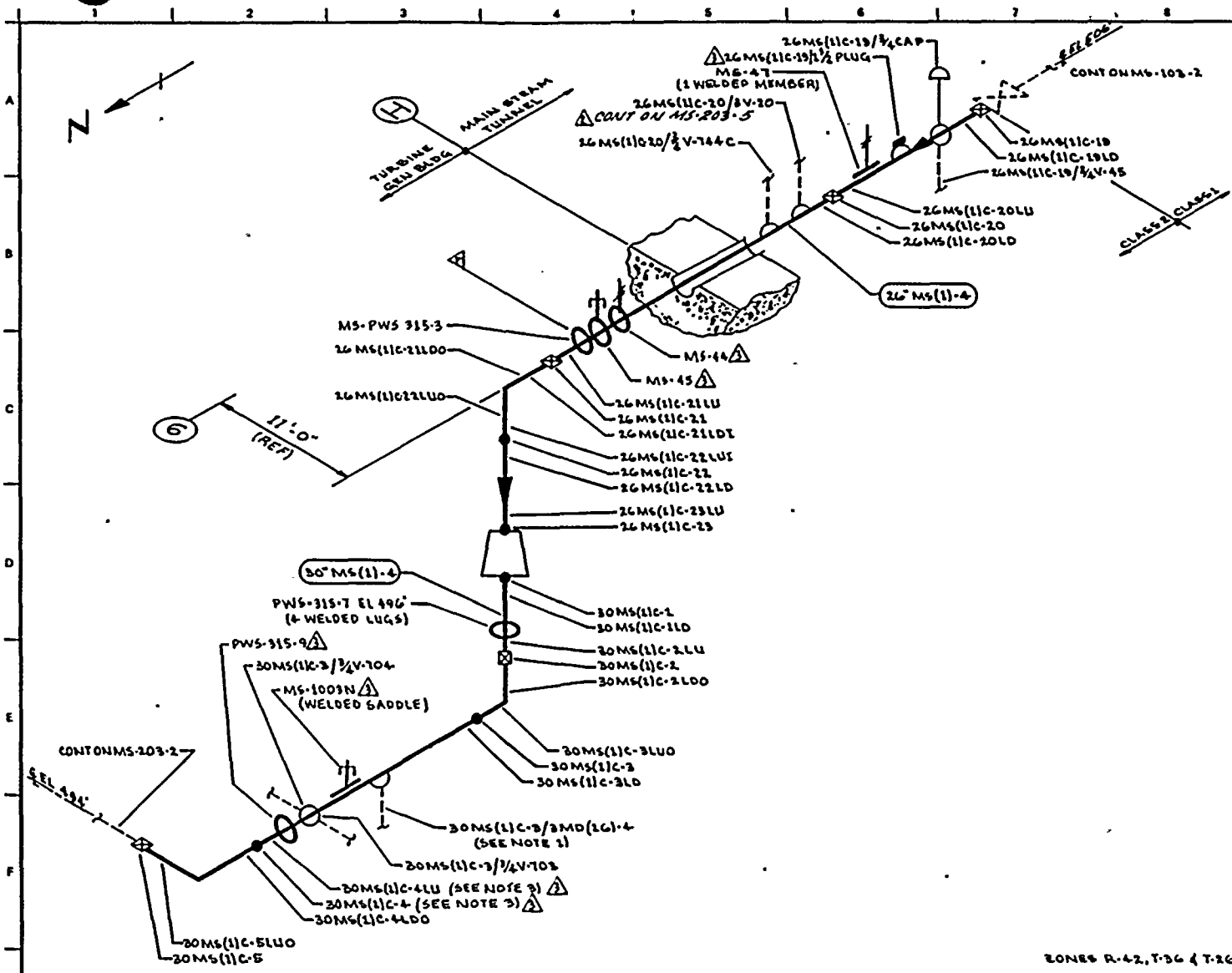

NOTES:

1. EXTEND LEAKAGE EXAM THROUGH DRAINAGE SYSTEM TO VALVES MS-V-12 & MS-V-73.
2. SCAFFOLDING IS REQUIRED.
3. ACCESS TO WELDS 30MS(1)C-4LU & 30MS(1)C-4 REQUIRES REMOVAL OF PWS-315-9.

REFERENCES:

BOVEE & CRAIL ISOMETRIC
MS-B30-1.3 REV 9

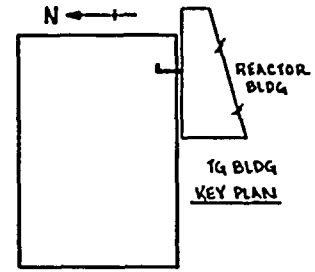

THIS DRAWING IS INTENDED FOR USE IN PRESERVICE AND INSERVICE INSPECTION PROGRAMS ONLY.

QUALITY CLASS: 1	ASME CODE CLASS: 2
ENGR: D TIMMING	DRAWN: K. McA. / DATE: 2-3-78

WASHINGTON PUBLIC POWER SUPPLY SYSTEM
RICHLAND, WASHINGTON 99352

NO	DATE	REVISION	BY	CHKD	APPVD
3	4-26-83	REVISED AS NOTED	K.McA	[illegible]	TFH
2	12-2-81	REVISED AS NOTED, AUGMENTED ISI ADDED	K.McA	...	TFH
1	11-5-80	DELETED WELDS 2LDI, 3LUI, 4LDI & 5LUI.	K.McA	TFH	DHP
0	3-9-79	ISSUED FOR USE	K.McA	[illegible]	[illegible]
A	4-26-78	ISSUED FOR INFORMATION ONLY	K.McA	DCJ	[illegible]

PIPING SYSTEM	NOM DIA (IN)	SCH	NOM WALL THK	MATERIAL SPECIFICATION	MATL TYPE	CAL BLOCK NO
26" MS(1)-4	26	XXX	1.125	SA 155 CL1 KCF 70	C6	UT-3
30" MS(1)-4	30"	XXX	1.25	SA 155 CL1 KCF 70	C6	UT-1

WNP-2
WELD & COMPONENT IDENTIFICATION DIAGRAM

TITLE: MAIN STEAM LINE C

DWG NO: MS-203-2 REV 3

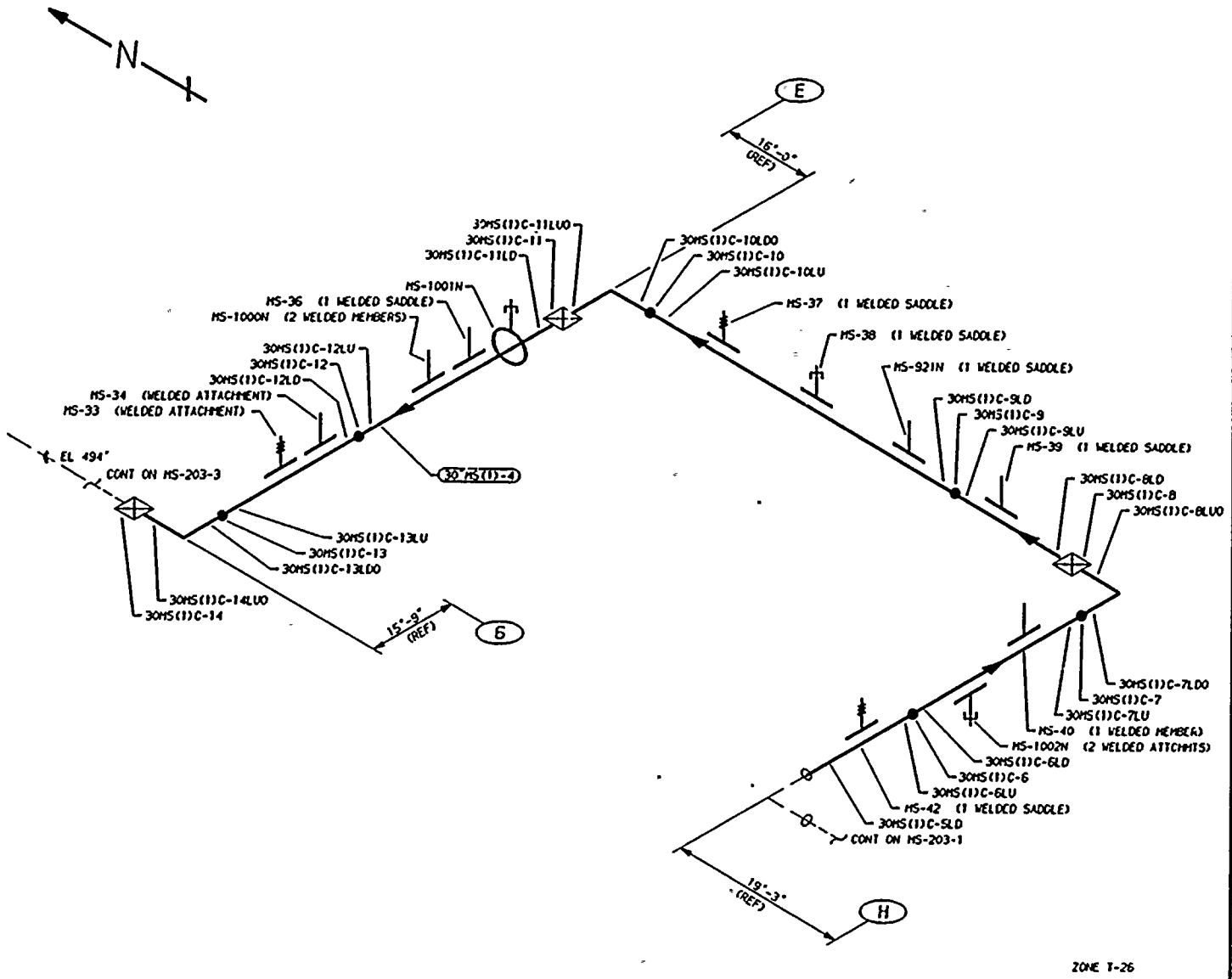

ZONE T-26

THIS DRAWING IS INTENDED FOR USE IN PRESERVICE AND INSERVICE INSPECTIONS PROGRAMS ONLY.

NOTES:

1. SCAFFOLDING IS REQUIRED.

REFERENCES:

BOVEE AND CRAIL ISOMETIC
HS-530-4.6 REV 5

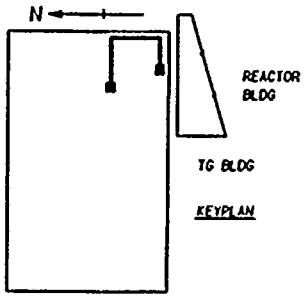

KEYPLAN

QUALITY CLASS: 1	ASME CODE CLASS: 2	
ENGR: D TIMMINS	DRAWN: K-McA	DATE: 2-6-78

WASHINGTON PUBLIC POWER
SUPPLY SYSTEM
RICHLAND, WASHINGTON 99352

WNP-2
WELD & COMPONENT
IDENTIFICATION DIAGRAM

TITLE:
MAIN STEAM LINE C

DWG NO: HS-203-2 REV 3

NO	DATE	REVISION	BY	CHKD	APVD
3	12-13-88	REVISED HANGERS REDRAWN	K-McA	DPR	TFH
2	12-2-81	REVISED AS NOTED	K-McA	DPR	TFH
1	11-5-80	DELETED WELDS 7LDI, 8LDI, 10LDI, 11LDI, 11LUI, 12LDI & 14LUI. CHANGED WELD 12LD TO 12LU. AS NOTED	K-McA	TFH	DWP
0	1-9-79	ISSUED FOR USE	K-McA	TFH / DWP	DWP / LFB
A	4-20-78	ISSUED FOR INFORMATION ONLY	K-McA	NCH / DCI	DWP

PIPING SYSTEM	NOM DIA (IN)	SCH	NOM WALL THK	MATERIAL SPECIFICATION	MATL TYPE	CAL BLOCK NO
30"HS(1)-4	30	XXX	1.25	SA 155 CL 1 KCF 70	CS	UT-1

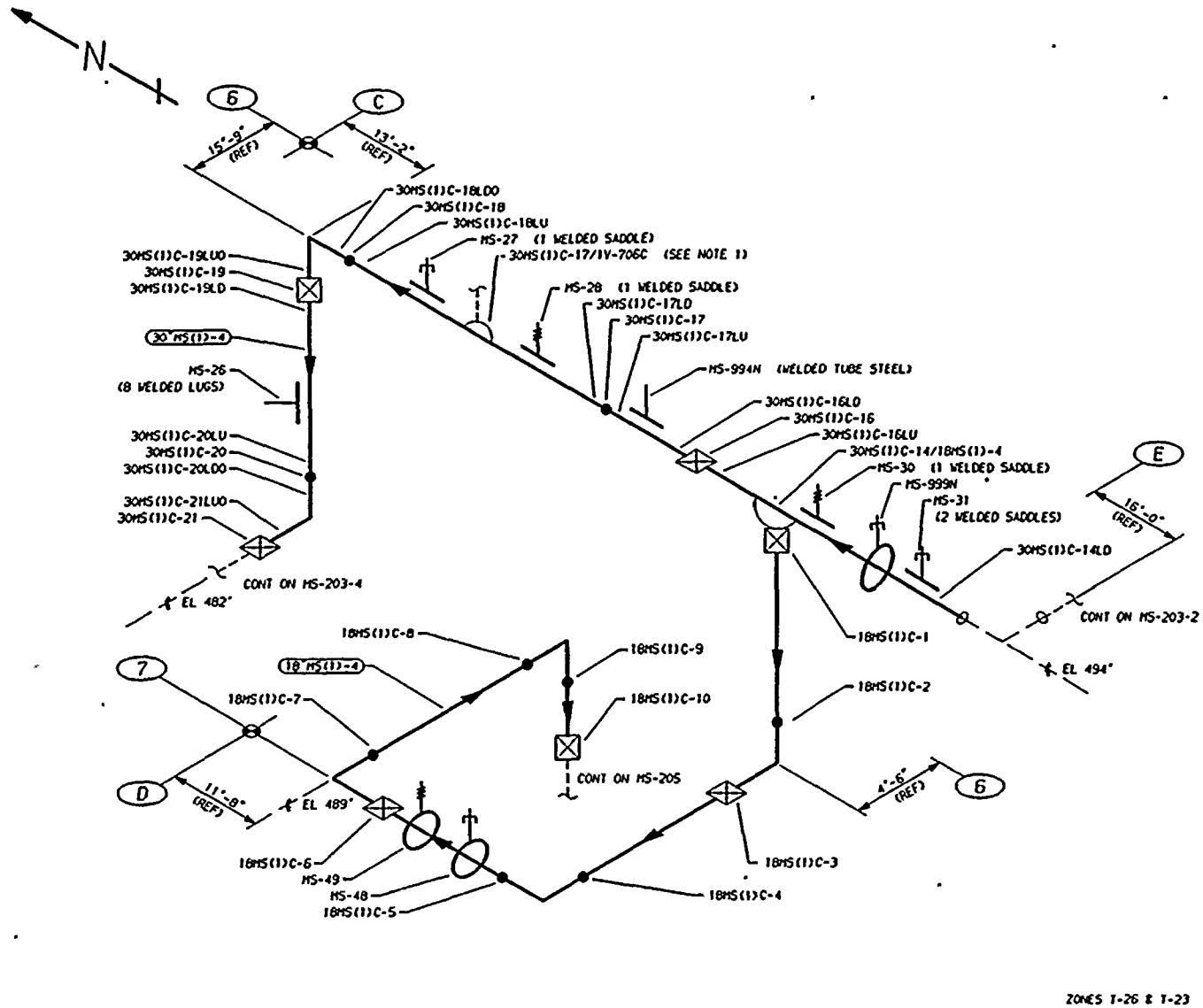

ZONES T-26 & T-23

THIS DRAWING IS INTENDED FOR USE IN PRESERVICE AND INSERVICE INSPECTIONS PROGRAMS ONLY.

NOTES

1. EXTEND LEAKAGE EXAM THROUGH VALVE HS-V-706C TO MAIN STEAM PRESSURE AVERAGING MANIFOLD.

REFERENCES:

BOVEE AND CRAIL ISOMETIC HS-530-7.10 REV 6

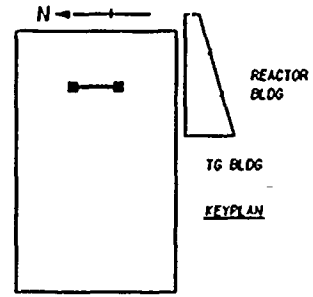

KEYPLAN

QUALITY CLASS: 1	ASME CODE CLASS: 2
ENGR: D TIMMINS	DRAWN: K-McA	DATE: 2-6-78

WASHINGTON PUBLIC POWER SUPPLY SYSTEM
RICHLAND, WASHINGTON 99352

WNP-2
WELD & COMPONENT
IDENTIFICATION DIAGRAM

TITLE: MAIN STEAM LINE C

DWG NO: HS-203-3 | REV 4

NO	DATE	REVISION	BY	CHKD	APVD
4	12-2-83	REVISED HANGERS REDRAWN	K-McA	DPR	TFH
3	12-2-81	REVISED AS NOTED	K-McA	DPR	TFH
2	11-5-80	DELETED WELDS 18LDI, 19LUI, 20LDI & 21LUI & AS NOTED	K-McA	TFH	DWP
1	9-13-79	DELETED TEE AND CORRESPONDING WELDS. ADDED WOL 2N C-S	K-McA	TFH / DWP	DWP / LEO
0	1-9-79	ISSUED FOR USE	K-McA	TFH / DWP	DWP / LEO
A	4-20-78	ISSUED FOR INFORMATION ONLY	K-McA	WCH / OCI	DWP

PIPING SYSTEM	NOM DIA (IN)	SCH	NOM WALL THK	MATERIAL SPECIFICATION	MATL TYPE	CAL BLOCK NO
30"HS(1)-4	30	XXX	1.25	SA 155 CL 1 KCF 70	CS	UT-1
18"HS(1)-4	18	80	0.938	SA 106 GR B	CS	UT-12

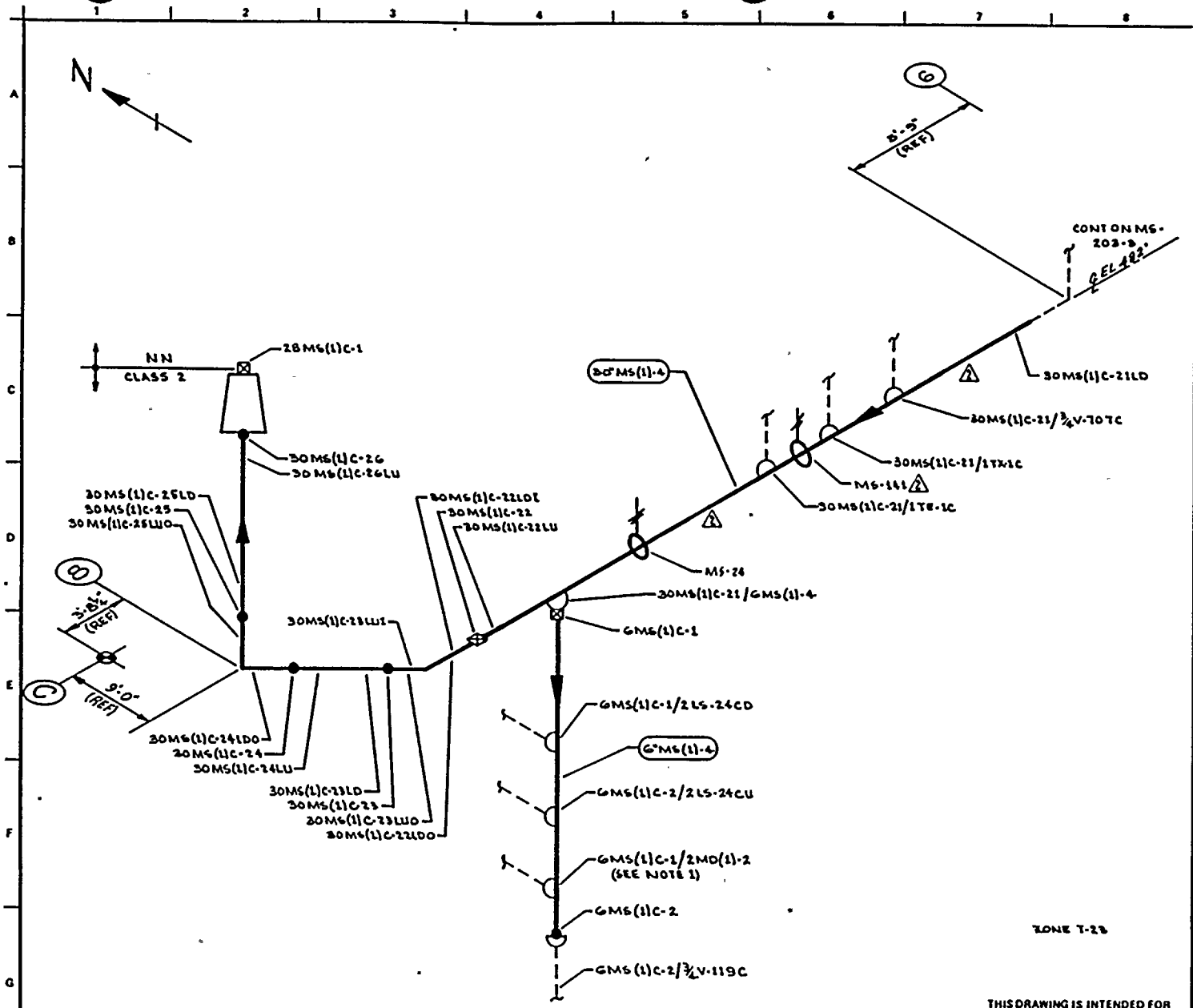

NOTES:

1. EXTEND LEAKAGE EXAM THROUGH VALVES MD-V-120C & MD-V-117C.
2. SCAFFOLDING IS REQUIRED.

REFERENCES:

BOVEE & CRAIL ISOMETRICS

MS-530-11 REV 6
MS-530-12 REV 7

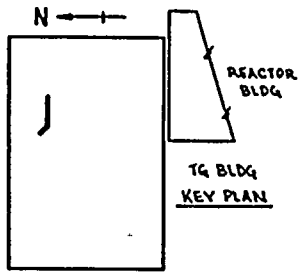

KEY PLAN

THIS DRAWING IS INTENDED FOR USE IN PRESERVICE AND INSERVICE INSPECTION PROGRAMS ONLY.

PIPING SYSTEM	NOM DIA (IN)	SCH	NOM WALL THK	MATERIAL SPECIFICATION	MATL TYPE	CAL BLOCK NO
30" MS (1)-4	30	XXX	1.25	SA 155 CL1 KCF 70	CS	UT-1
6" MS(1)-4	6	80	0.432	SA 106 GR B	CS	NA
28" MS (1)-4	28	XXX	1.420	SA 155 CL1 KCF 70	CS	UT-2

NO	DATE	REVISION	BY	CHKD	APPVD
2	9-22-83	REVISED AS NOTED	K.M.A		
1	11-5-80	DELETED WELDS 24LDI & 26LUI & AS NOTED	K.M.A		
0	1-9-79	ISSUED FOR USE	K.M.A		
A	4-24-78	ISSUED FOR INFORMATION ONLY	K.M.A	DCJ	

QUALITY CLASS: 1 | ASME CODE CLASS: 2

ENGR: D TIMMING | DRAWN: K.M.A | DATE: 2-7-78

WASHINGTON PUBLIC POWER SUPPLY SYSTEM

RICHLAND WASHINGTON 99352

WNP-2
WELD & COMPONENT IDENTIFICATION DIAGRAM

TITLE: MAIN STEAM LINE C

DWG NO: MS-203-4 | REV 2

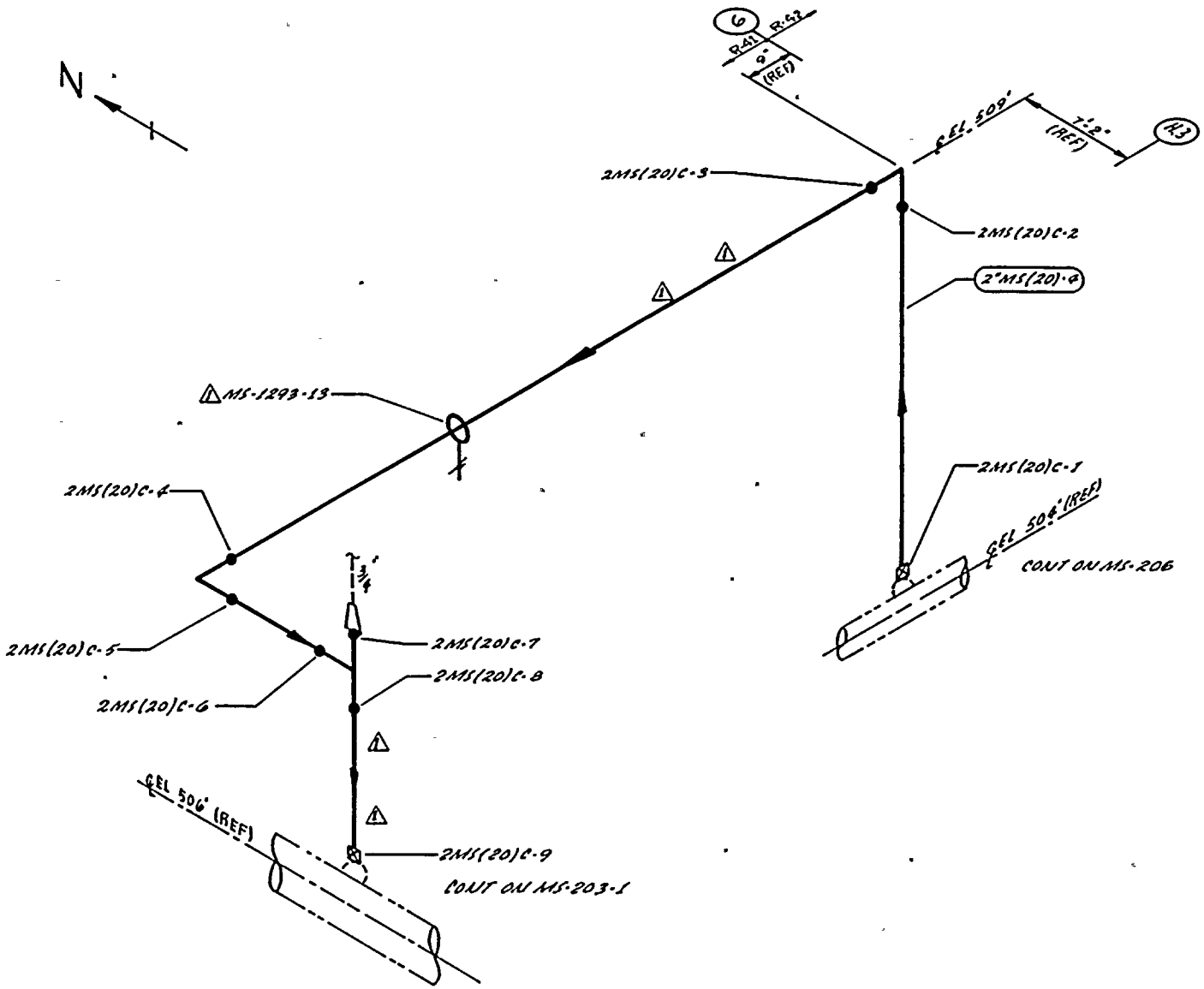

NOTES:

1. For branch piping, 1" or less (conn. shown in dashed lines), extend visual leakage exam through the outermost normally closed nuclear class valve, or until transition to instrument tubing, unless otherwise noted.
2. THIS DWG. IDENTIFIES PIPING WELDS THAT REQUIRE AUGMENTED ISI.
3. SCAFFOLDING IS REQUIRED.

REFERENCE

BOVEE CRAIL ISOMETRIC
MS-1293-1 REV 6

QUALITY CLASS: 1	ASME CODE CLASS: 2	
ENGR: T.L. ANDERSON	DRAWN: S.A.A.	DATE: 12-7-81

WASHINGTON PUBLIC POWER SUPPLY SYSTEM
RICHLAND, WASHINGTON 99352

THIS DRAWING IS INTENDED FOR USE IN PRESERVICE AND INSERVICE INSPECTION PROGRAMS ONLY.

PIPING SYSTEM	NOM DIA (IN)	SCH	NOM WALL THK	MATERIAL SPECIFICATION	MATL TYPE	CAL BLOCK NO
2"MS(20)-4	2	160	0.344	SA 106 GR B	CS	NA

WNP-2
WELD & COMPONENT IDENTIFICATION DIAGRAM

TITLE: MAIN STEAM PRESSURE STABILIZATION LINE

DWG NO: MS-203-5 REV 1

NO	DATE	REVISION	BY	CHKD	APPVD
1	9-28-83	REVISED AS NOTED	S.A.A.	DPE	TFH
0	12-8-81	ISSUED FOR USE	S.A.A.	DPE	TFH

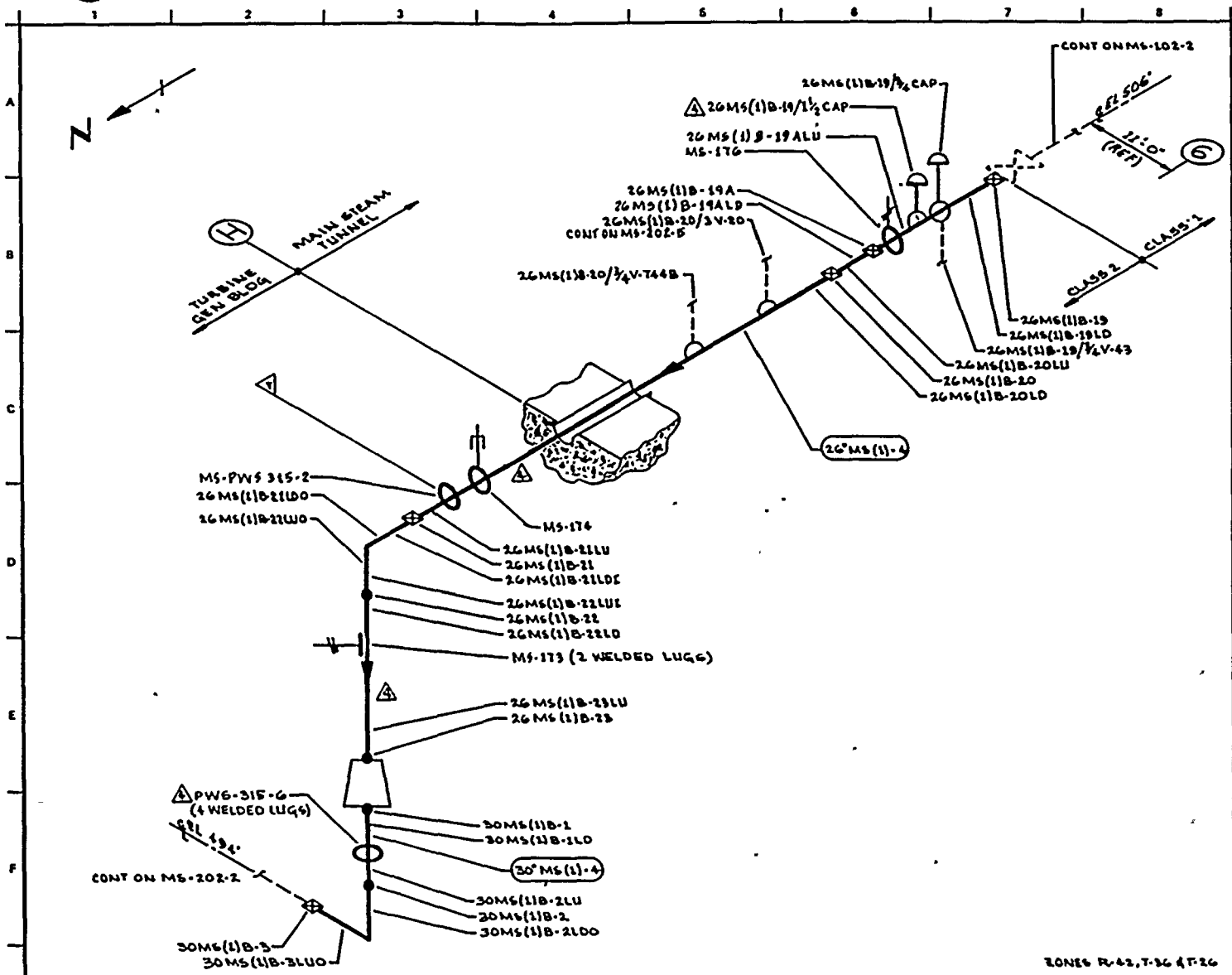

ZONES R-42, T-36 & T-26

THIS DRAWING IS INTENDED FOR USE IN PRESERVICE AND INSERVICE INSPECTION PROGRAMS ONLY.

NOTES:

1. SCAFFOLDING IS REQUIRED.

REFERENCES:

BOVEE & CRAIL ISOMETRIC MS-B29-1-B REV B

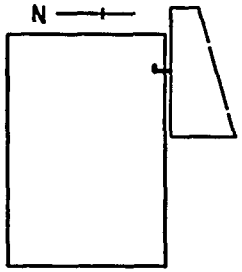

QUALITY CLASS: 1	ASME CODE CLASS: 2	
ENGR: D TIMMINS	DRAWN: K. M. A.	DATE: 2-2-78

WASHINGTON PUBLIC POWER SUPPLY SYSTEM

RICHLAND, WASHINGTON 99352

WNP-2
WELD & COMPONENT IDENTIFICATION DIAGRAM

TITLE: MAIN STEAM LINE B

DWG NO: MS-202-1 REV 4

PIPING SYSTEM	NOM DIA (IN)	SCH	NOM WALL THK	MATERIAL SPECIFICATION	MATL TYPE	CAL BLOCK NO
26"MS(1)-4	26	XXX	1.125	SA 155 CL I KCF 70	CS	UT-3
30"MS(1)-4	30	XXX	1.25	SA 155 CL I KCF 70	CS	UT-1

NO	DATE	REVISION	BY	CHKD	APPVD
4	9-26-83	REVISED AS NOTED	K.M.A.	[illegible]	[illegible]
3	12-2-81	REVISED AS NOTED, AUGMENTED ISI ADDED	K.M.A.	[illegible]	[illegible]
2	11-5-80	ADDED WELDS 19ALU & 19ALD. DELETED WELDS 21DE & 21UE	K.M.A.	[illegible]	[illegible]
1	8-30-79	ADDED FIELD WELD 26MS(1)B-19A IN B-6.	K.M.A.	[illegible]	[illegible]
0	1-9-79	ISSUED FOR USE	K.M.A.	[illegible]	[illegible]
A	4-24-78	ISSUED FOR INFORMATION ONLY	K.M.A.	[illegible]	[illegible]

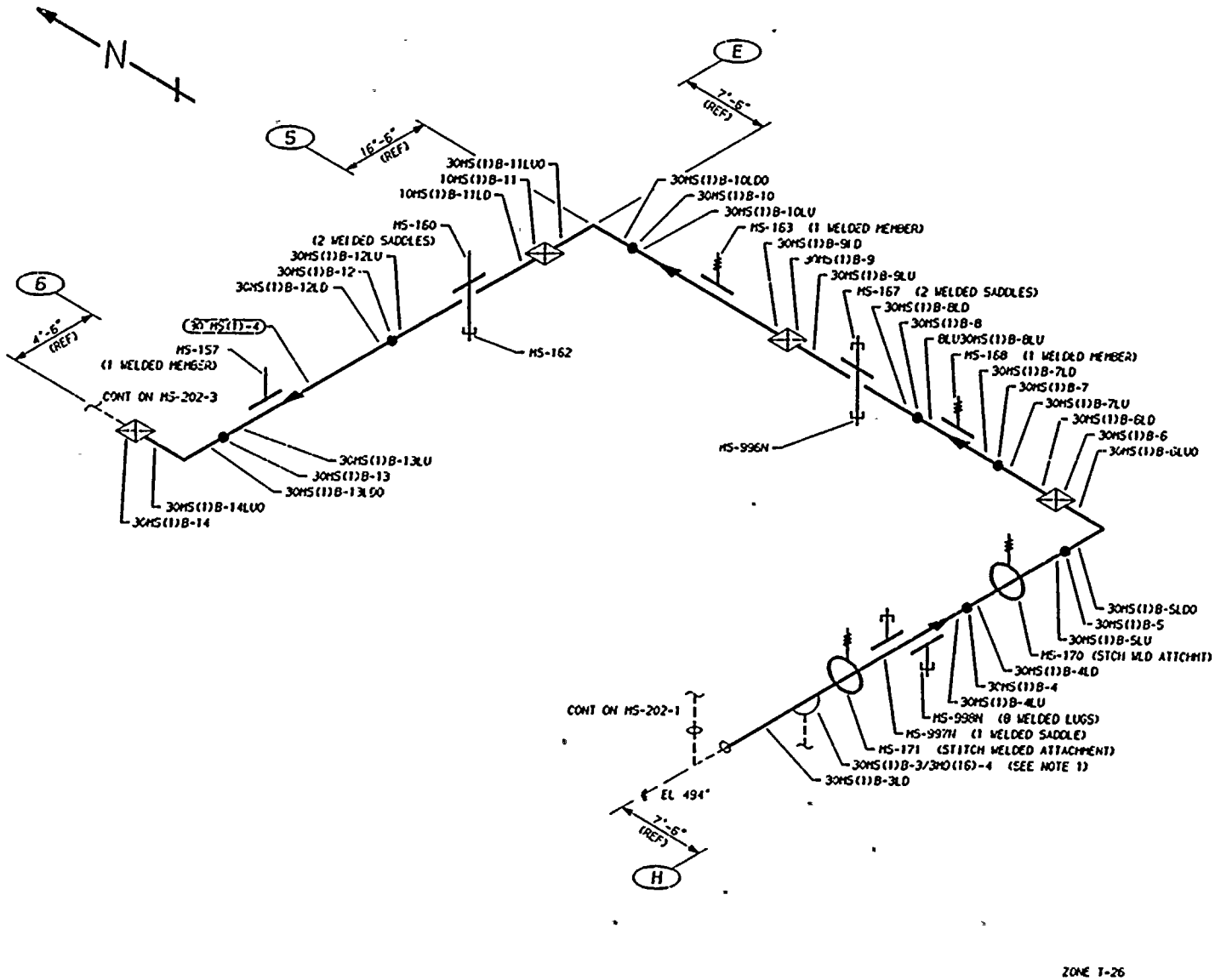

ZONE T-26

THIS DRAWING IS INTENDED FOR USE IN PRESERVICE AND INSERVICE INSPECTIONS PROGRAMS ONLY.

NOTES

1. EXTEND LEAKAGE EXAM THROUGH DRAINAGE SYSTEM TO VALVES MS-V-72 & MS-V-73.
2. SCAFFOLDING IS REQUIRED.

REFERENCES:

BOYCE AND CRAIL ISOMETIC MS-529-4.7 REV 5

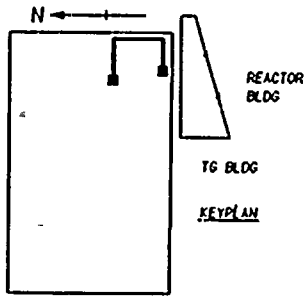

KEYPLAN

QUALITY CLASS: 1	ASME CODE CLASS: 2	
ENGR: D TIMMINS	DRAWN: K-McA	DATE: 2-2-78

WASHINGTON PUBLIC POWER
SUPPLY SYSTEM
RICHLAND, WASHINGTON 99352

PIPING SYSTEM	NOM DIA (IN)	SCH	NOM WALL THK	MATERIAL SPECIFICATION	MATL TYPE	CAL BLOCK NO
30"MS(1)-4	30	XXX	1.25	SA 155 CL 1 KCF.70	CS	UT-1

NO	DATE	REVISION	BY	CHKD	APVD
3	10-13-83	REVISED HANGERS REDRAWN	KLK	DPR	TFH
2	12-2-81	REVISED AS NOTED	K-McA	DPR	TFH
1	11-5-80	DELETED WELDS 5LDI, 6LUI, 7LDI, 11LUI, 13LDI & 14LUI	K-McA	TFH	DWP
0	1-9-79	ISSUED FOR USE	K-McA	TFH / DWP	DWP / LEB
A	4-20-78	ISSUED FOR INFORMATION ONLY	K-McA	WCH / DCI	DWP

WNP-2
WELD & COMPONENT
IDENTIFICATION DIAGRAM

TITLE: MAIN STEAM LINE B

DWG NO: MS-202-2 REV 3

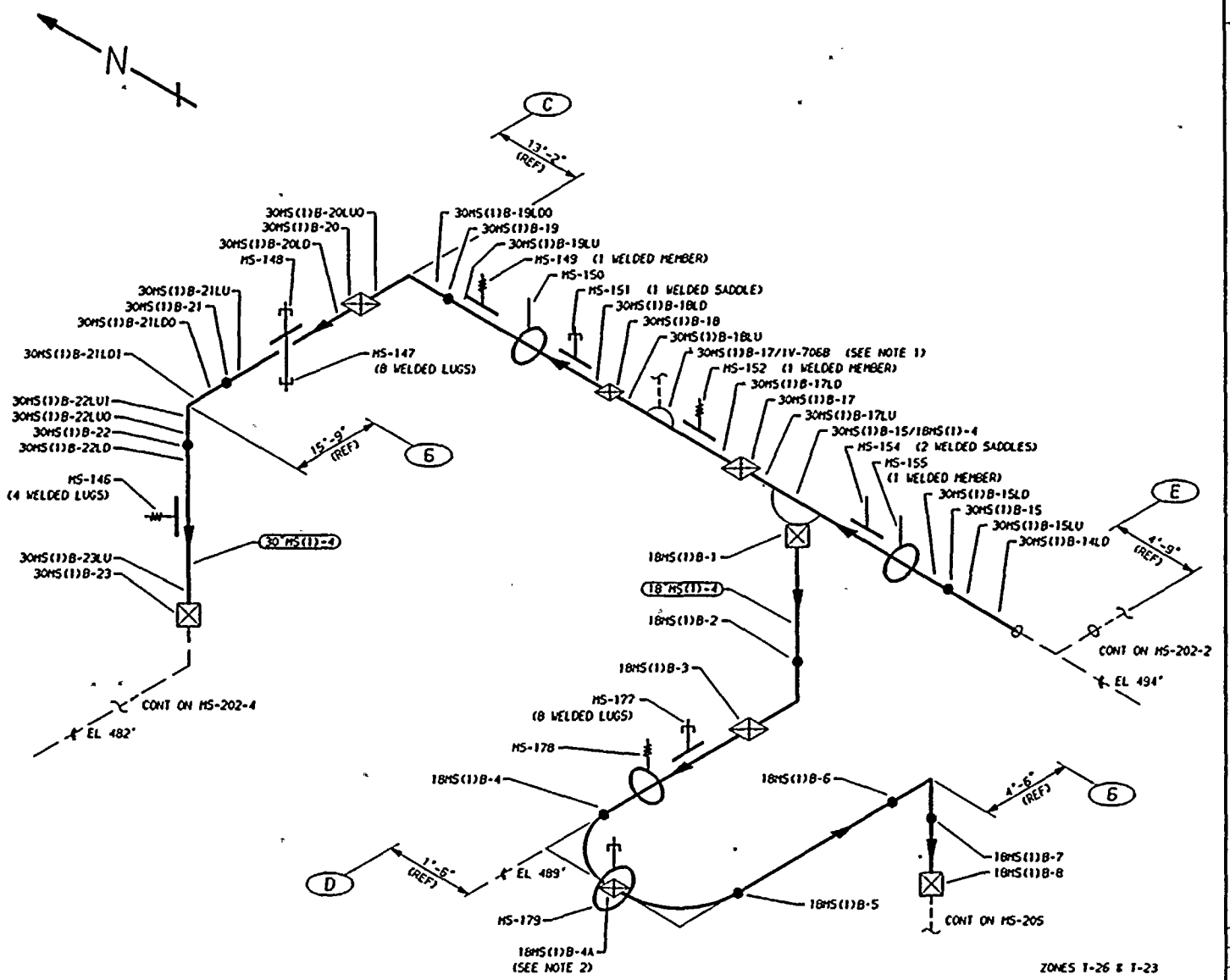

THIS DRAWING IS INTENDED FOR USE IN PRESERVICE AND INSERVICE INSPECTIONS PROGRAMS ONLY.

NOTES

1. EXTEND LEAKAGE EXAM THROUGH VALVE MS-V-706B TO MAIN STEAM PRESSURER AVERAGING MANIFOLD.
2. WELD 18MS(1)B-4A IS FITTING TO FITTING. MS-179 IS 1 1/2" FROM WELD 18MS(1)B-4A CENTERLINE.

REFERENCES:

BOYEE AND CRAIL ISOMETIC MS-529-8.11 REV 7

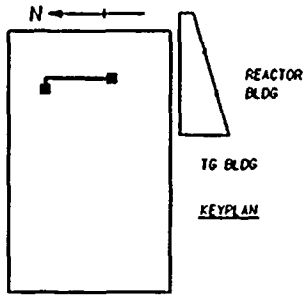

QUALITY CLASS: 1	ASME CODE CLASS: 2
ENGR: D TIMMINS	DRAWN: K-McA	DATE: 2-3-78

WASHINGTON PUBLIC POWER SUPPLY SYSTEM
RICHLAND, WASHINGTON 99352

WNP-2
WELD & COMPONENT
IDENTIFICATION DIAGRAM

TITLE: MAIN STEAM LINE B

DWG NO: MS-202-3 | REV 4

NO	DATE	REVISION	BY	CHKD	APVD
4	12-2-83	REVISED HANGERS REDRAWN	K-McA	DPR	TFH
3	12-2-81	REVISED AS NOTED	K-McA	DPR	TFH
2	11-5-80	ADDED FIELD WELD 18MS(1)B-4A & AS NOTED	K-McA	TFH	DWP
1	7-17-79	DEL TEE & CORRESPONDING WELDS, ADDED WOL 2H D-5 & REV 2H 6-6	K-McA	TFH / DWP	LFB
0	1-9-79	ISSUED FOR USE	K-McA	TFH / DWP	DWP / LFB
A	4-20-78	ISSUED FOR INFORMATION ONLY	K-McA	MCH / DCI	DWP

PIPING SYSTEM	NOM DIA (IN)	SCH	NOM WALL THK	MATERIAL SPECIFICATION	MATL TYPE	CAL BLOCK NO
30"MS(1)-4	30	XXX	1.25	SA 155 CL 1 KCF 70	CS	UT-1
18"MS(1)-4	18	80	0.938	SA 106 GR B	CS	UT-12

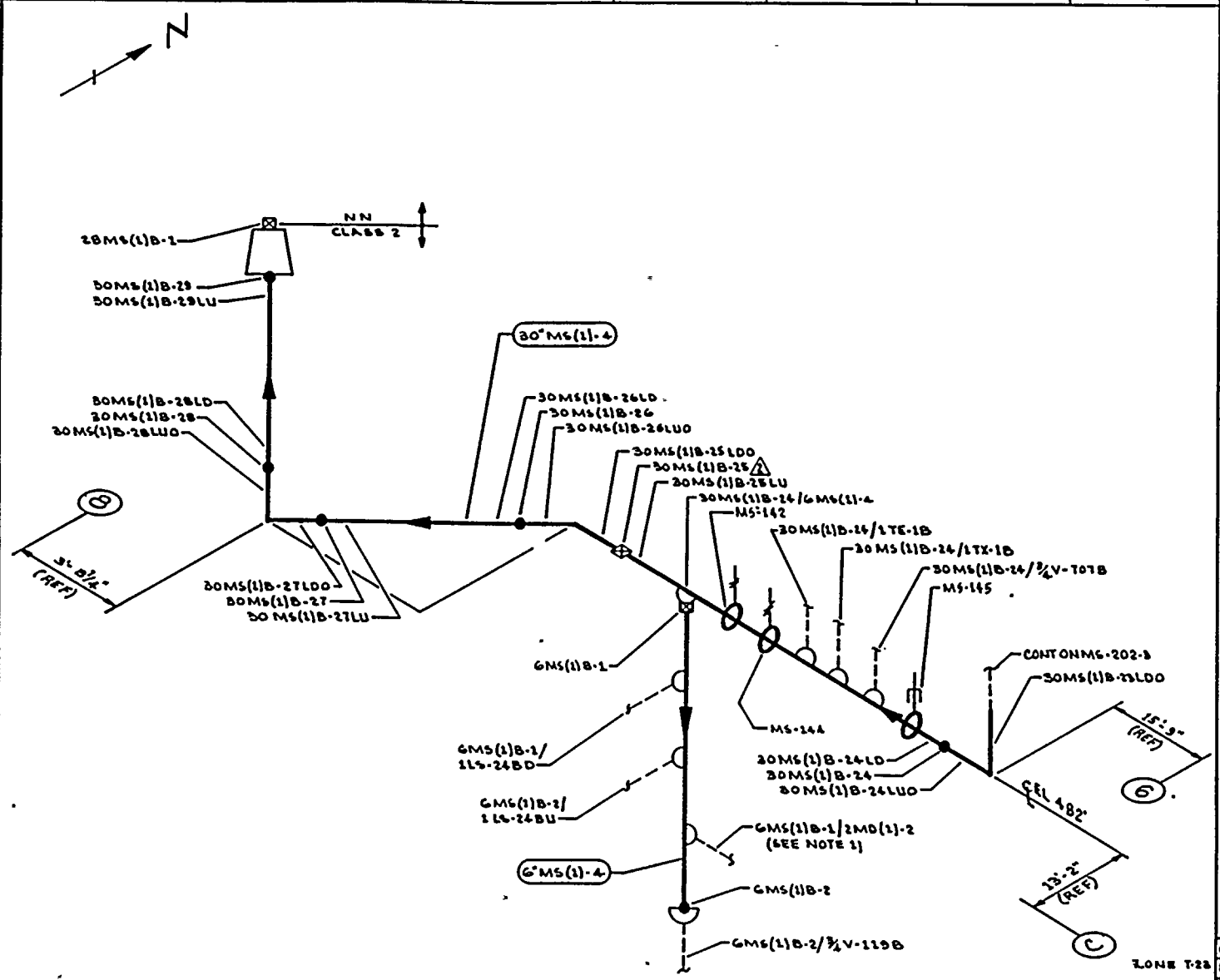

NOTES:

1. EXTEND LEAKAGE EXAM THROUGH VALVES MD-V-120B & MD-V-117B.
2. SCAFFOLDING IS REQUIRED.

REFERENCES:

BOVEE & CRAIL ISOMETRICS

MS-528-12 REV 6
MS-529-13 REV 7

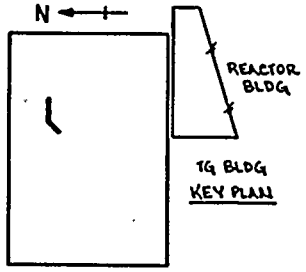

KEY PLAN

THIS DRAWING IS INTENDED FOR USE IN PRESERVICE AND INSERVICE INSPECTION PROGRAMS ONLY.

PIPING SYSTEM	NOM DIA (IN)	SCH	NOM WALL THK	MATERIAL SPECIFICATION	MATL TYPE	CAL BLOCK NO
30" MS(1)-4	30	XXX	1.25	SA 155 CL I KCF 70	CS	UT-1
6" MS(1)-4	6	80	0.432	SA 106 GR B	CS	NA
28" MS(1)-4	28	XXX	1.420	SA 155 CL I KCF 70	CS	UT-2

NO	DATE	REVISION	BY	CHKD	APPVD
2	4-26-88	REVISED AS NOTED	KMcA	[illegible]	[illegible]
1	11-5-80	DELETED WELDS 23LDI, 24LUI, 25LDI, 26LUI, 27LDI & 28LUI	KMcA	[illegible]	[illegible]
0	1-9-79	ISSUED FOR USE	KMcA	[illegible]	[illegible]
A	4-20-78	ISSUED FOR INFORMATION ONLY	KMcA	[illegible]	[illegible]

QUALITY CLASS: 1 | ASME CODE CLASS: 2

ENGR: D TIMMINS | DRAWN: K. McA | DATE: 1-30-78

WASHINGTON PUBLIC POWER SUPPLY SYSTEM

RICHLAND, WASHINGTON 99352

WNP-2
WELD & COMPONENT IDENTIFICATION DIAGRAM

TITLE: MAIN STEAM LINE B

DWG NO: MS-202-4 REV 2

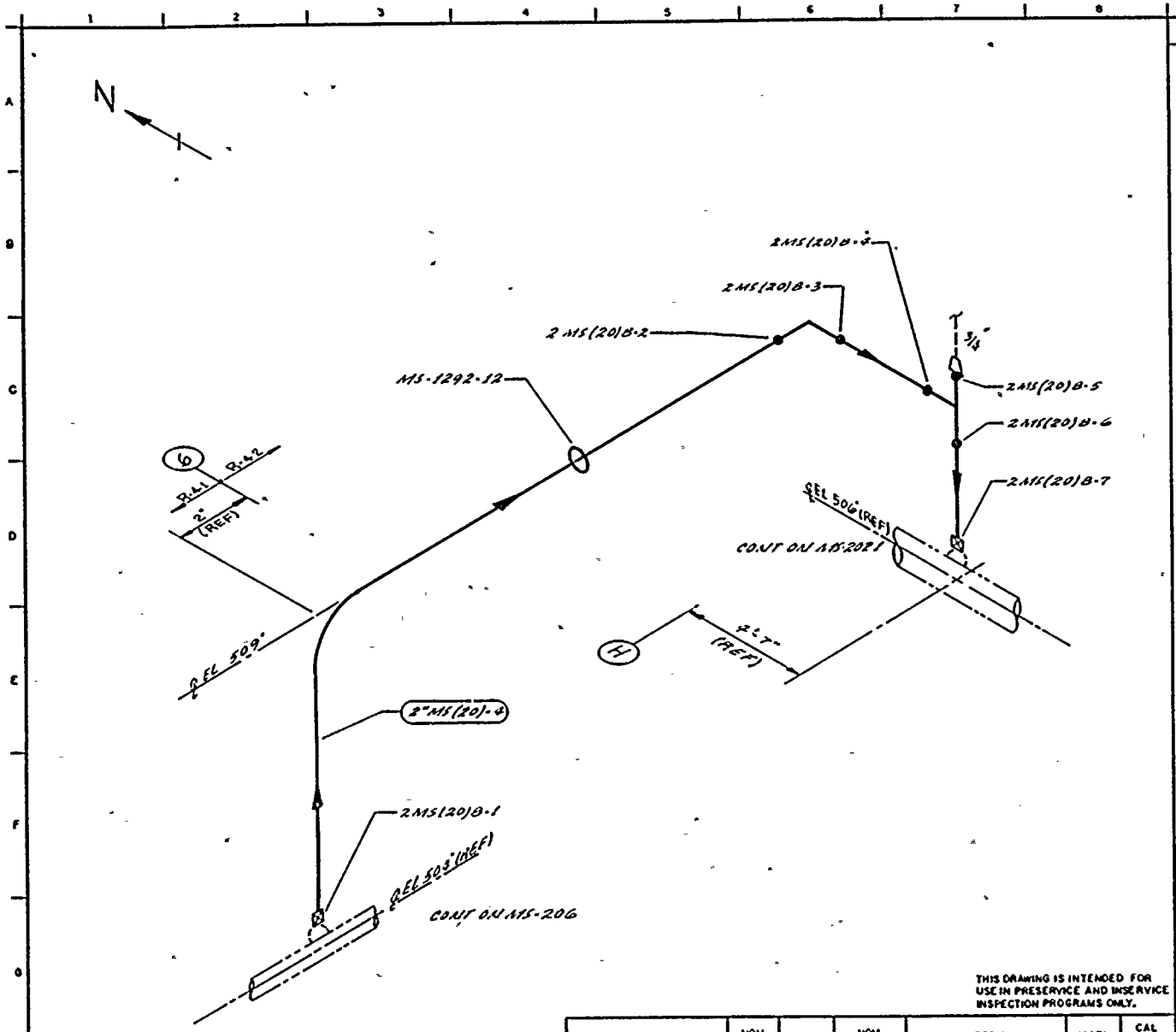

NOTES:

1. For branch piping, 1" or less (conn. shown in dashed lines), extend visual leakage exam through the outermost normally closed nuclear class valve, or until transition to instrument tubing, unless otherwise noted.
2. THIS DWG. IDENTIFIES PIPING WELDS THAT REQUIRE AUGMENTED ISI.

REFERENCE:

BOVEE CRAIL ISOMETRIC
MS-1292-1 REV 5

THIS DRAWING IS INTENDED FOR USE IN PRESERVICE AND INSERVICE INSPECTION PROGRAMS ONLY.

PIPING SYSTEM	NOM DIA (IN)	SCH	NOM WALL THK	MATERIAL SPECIFICATION	MATL TYPE	CAL BLOCK NO
2"MS(20)-4	2	160	0.344	SA 106 GR B	CS	NA

NO	DATE	REVISION	BY	CHKD	APPVD
0	[illegible]	ISSUED FOR USE	[illegible]	[illegible]	[illegible]

QUALITY CLASS: 1 | ASME CODE CLASS: 2

ENGR: [illegible] | DRAWN: [illegible] | DATE: 12-8-81

WASHINGTON PUBLIC POWER SUPPLY SYSTEM
RICHLAND, WASHINGTON 99352

WNP-2
WELD & COMPONENT
IDENTIFICATION DIAGRAM

TITLE: MAIN STEAM PRESSURE STABILIZATION LINE

DWG NO: MS-202-5 | REV 0

WNP-02
INTERVAL: PSI
PERIOD: NA
OUTAGE:
DRAWING NO. MS-202

WASHINGTON PUBLIC POWER SUPPLY SYSTEM
PROGRAM PLAN AND SCHEDULE
SYSTEM OR COMPONENT: MS(1)-4
DESCRIPTION: MAIN STEAM LINE B

DATE 12/14/84

IDENT. NO.	DESCRIPTION	SECT. XI EXAM.	EXAM MTH.	PROCEDURE	CAL. BLOCK	INSERVICE REQ.	INSERVICE SCHEDULED OUTAGE	NOTES
26MS(1)B-19								
	VALVE TO PIPE	C-F	VOL	UTP-10	UT-3			AUGMT
			SUR	PTP-1				AUGMT
26MS(1)B-19LD								
	PIPE LONG SEAM	C-F	VOL	UTP-10	UT-3			
			SUR	PTP-1				
26MS(1)B-19/3/4CAP								
	CAPPED CONN	N/A	VT-2	N/A				IWC-2510, SEE NOTES #6 & #7.
26MS(1)B-19/3/4V-43								
	TEST CONN	N/A	VT-2	N/A				IWC-2510, SEE NOTES #6 & #7.
26MS(1)B-19/1-1/2CAP								
	CAPPED CONN	N/A	VT-2	N/A				IWC-2510, SEE NOTES #6 & #7.
26MS(1)B-19ALU								
	PIPE LONG SEAM	C-F	VOL	UTP-10	UT-3			
			SUR	PTP-1				
MS-176								
	SPRING	C-E-2	VT-3	303/8.2.17				
			VT-4	303/8.2.17				
26MS(1)B-19A								
	PIPE TO PIPE	C-F	VOL	UTP-10	UT-3			AUGMT
			SUR	PTP-1				AUGMT
26MS(1)B-19ALD								
	PIPE LONG SEAM	C-F	VOL	UTP-10	UT-3			
			SUR	PTP-1				
26MS(1)B-20LU								
	PIPE LONG SEAM	C-F	VOL	UTP-10	UT-3			

WNP-02
INTERVAL: PSI
PERIOD: NA
OUTAGE:
DRAWING NO. MS-202

WASHINGTON PUBLIC POWER SUPPLY SYSTEM
PROGRAM PLAN AND SCHEDULE
SYSTEM OR COMPONENT: MS(1)-4
DESCRIPTION: MAIN STEAM LINE B

DATE 12/14/84

IDENT. NO.	DESCRIPTION	SECT. XI EXAM.	EXAM MTH.	PROCEDURE	CAL. BLOCK	INSERVICE REQ.	INSERVICE SCHEDULED OUTAGE	NOTES
			SUR	PTP-1				
26MS(1)B-20	PIPE TO PIPE	C-F	VOL	UTP-10	UT-3			AUGMT
			SUR	PTP-1				AUGMT
26MS(1)B-20LD	PIPE LONG SEAM	C-F	VOL	UTP-10	UT-3			
			SUR	PTP-1				
26MS(1)B-20/3V-20	DRAIN CONN	N/A	SUR	PTP-1				IWC-2510, AUGMT.
26MS(1)B-20/3/4V-744B	INSTR CONN	N/A	VT-2	N/A				IWC-2510, SEE NOTES #6 & #7.
MS-174	PSA-35 SNUBBER	C-E-2	VT-3	303/8.2.17				S/N 8688
			VT-4	303/8.2.17				S/N 8688
FWS-315-2	PIPE WHIP	N/A	N/A	N/A				SEE NOTE #1
26MS(1)B-21LU	PIPE LONG SEAM	C-F	VOL	UTP-10	UT-3			
			SUR	PTP-1				
26MS(1)B-21	PIPE TO EL	C-F	VOL	UTP-10	UT-3			
			SUR	PTP-1				
26MS(1)B-21LDI	EL SEAM	C-F	VOL	UTP-10	UT-3			
			SUR	PTP-1				
26MS(1)B-21LDO	EL SEAM	C-F	VOL	UTP-10	UT-3			

WNP-02
INTERVAL: PSI
PERIOD: NA
OUTAGE:
DRAWING NO. MS-202

WASHINGTON PUBLIC POWER SUPPLY SYSTEM
PROGRAM PLAN AND SCHEDULE
SYSTEM OR COMPONENT: MS(1)-4
DESCRIPTION: MAIN STEAM LINE B

DATE 12/14/84

IDENT. NO.	DESCRIPTION	SECT. XI EXAM.	EXAM MTH.	PROCEDURE	CAL. BLOCK	INSERVICE REQ.	SCHEDULED OUTAGE	NOTES
			SUR	PTP-1				
26MS(1)B-22LUI	EL SEAM	C-F	VOL	UTP-10	UT-3			
			SUR	PTP-1				
26MS(1)B-22LUO	EL SEAM	C-F	VOL	UTP-10	UT-3			
			SUR	PTP-1				
26MS(1)B-22	EL TO PIPE	C-F	VOL	UTP-10	UT-3			
			SUR	PTP-1				
26MS(1)B-22LD	PIPE LONG SEAM	C-F	VOL	UTP-10	UT-3			
			SUR	PTP-1				
MS-173(W)	2 WELDED LUGS	C-E-1	SUR	MTP-1				
MS-173	SPRING	C-E-2	VT-3	303/8.2.17				
			VT-4	303/8.2.17				
26MS(1)B-23LU	PIPE LONG SEAM	C-F	VOL	UTP-10	UT-3			
			SUR	PTP-1				
26MS(1)B-23	PIPE TO REDUCER	C-F	VOL	UTP-10	UT-3			
			SUR	PTP-1				
30MS(1)B-1	REDUCER TO PIPE	C-F	VOL	UTP-10	UT-1			
			SUR	PTP-1				

WNP-02
INTERVAL: PSI
PERIOD: NA
OUTAGE:
DRAWING NO. MS-202

WASHINGTON PUBLIC POWER SUPPLY SYSTEM
PROGRAM PLAN AND SCHEDULE

SYSTEM OR COMPONENT: MS(1)-4
DESCRIPTION: MAIN STEAM LINE B

DATE 12/14/84

IDENT. NO.	DESCRIPTION	SECT. XI EXAM.	EXAM MTH.	PROCEDURE	CAL. BLOCK	INSERVICE REQ.	SCHEDULED OUTAGE	NOTES
30MS(1)B-1LD								
	PIPE LONG SEAM	C-F	VOL	UTP-10	UT-1			
			SUR	PTP-1				
PWS-315-6								
	PIPE WHIP	N/A	N/A	N/A				
30MS(1)B-2LU								
	PIPE LONG SEAM	C-F	VOL	UTP-10	UT-1			
			SUR	PTP-1				
30MS(1)B-2								
	PIPE TO EL	C-F	VOL	UTP-10	UT-1			
			SUR	PTP-1				
30MS(1)B-2LDO								
	EL SEAM	C-F	VOL	UTP-10	UT-1			
			SUR	PTP-1				
30MS(1)B-3LUO								
	EL SEAM	C-F	VOL	UTP-10	UT-1			
			SUR	PTP-1				
30MS(1)B-3								
	EL TO PIPE	C-F	VOL	UTP-10	UT-1			
			SUR	PTP-1				
30MS(1)B-3LD								
	PIPE LONG SEAM	C-F	VOL	UTP-10	UT-1			
			SUR	PTP-1				
30MS(1)B-3/3MD(16)-4								
	DRAIN CONN	N/A	VT-2	N/A.				INC-2510, SEE NOTES #6 & #7.
MS-171								
	SPRING	C-E-2	VT-3	303/8.2.17				

WNP-02
INTERVAL: PSI
PERIOD: NA
OUTAGE:
DRAWING NO. MS-202

WASHINGTON PUBLIC POWER SUPPLY SYSTEM
PROGRAM PLAN AND SCHEDULE
SYSTEM OR COMPONENT: MS(1)-4
DESCRIPTION: MAIN STEAM LINE B

DATE 12/14/84

IDENT. NO.	DESCRIPTION	SECT. XI EXAM.	EXAM MTH.	PROCEDURE	CAL. BLOCK	INSERVICE REQ.	INSERVICE SCHEDULED OUTAGE	NOTES
			VT-4	303/8.2.17				
MS-997N								
	PSA-10 SN(2)	C-E-2	VT-3	303/8.2.17				S/N 1456/1468
			VT-4	303/8.2.17				S/N 1456/1468
MS-998N(W)								
	8 WELDED LUGS	C-E-1	SUR	MTP-1				
MS-998N								
	PSA-10 SN(2)	C-E-2	VT-3	303/8.2.17				S/N 710/718
			VT-4	303/8.2.17				S/N 710/718
30MS(1)B-4LU								
	PIPE LONG SEAM	C-F	VOL	UTP-10	UT-1			
			SUR	PTP-1				
30MS(1)B-4								
	PIPE TO PIPE	C-F	VOL	UTP-10	UT-1			
			SUR	PTP-1				
30MS(1)B-4LD								
	PIPE LONG SEAM	C-F	VOL	UTP-10	UT-1			
			SUR	PTP-1				
MS-170								
	SPRING (2)	C-E-2	VT-3	303/8.2.17				
			VT-4	303/8.2.17				
30MS(1)B-5LU								
	PIPE LONG SEAM	C-F	VOL	UTP-10	UT-1			
			SUR	PTP-1				
30MS(1)B-5								
	PIPE TO EL	C-F	VOL	UTP-10	UT-1			
			SUR	PTP-1				

WNP-02
INTERVAL: PSI
PERIOD: NA
OUTAGE:
DRAWING NO. MS-202

WASHINGTON PUBLIC POWER SUPPLY SYSTEM
PROGRAM PLAN AND SCHEDULE
SYSTEM OR COMPONENT: MS(1)-A
DESCRIPTION: MAIN STEAM LINE B

DATE 12/14/84

IDENT. NO.	DESCRIPTION	SECT. XI EXAM.	EXAM MTH.	PROCEDURE	CAL. BLOCK	INSERVICE REQ.	INSERVICE SCHEDULED OUTAGE	NOTES
30MS(1)B-5LDO								
	EL SEAM	C-F	VOL	UTP-10	UT-1			
			SUR	PTP-1				
30MS(1)B-6LUO								
	EL SEAM	C-F	VOL	UTP-10	UT-1			
			SUR	PTP-1				
30MS(1)B-6								
	EL TO PIPE	C-F	VOL	UTP-10	UT-1			
			SUR	PTP-1				
30MS(1)B-6LD								
	PIPE LONG SEAM	C-F	VOL	UTP-10	UT-1			
			SUR	PTP-1				
30MS(1)B-7LU								
	PIPE LONG SEAM	C-F	VOL	UTP-10	UT-1			
			SUR	PTP-1				
30MS(1)B-7								
	PIPE TO PIPE	C-F	VOL	UTP-10	UT-1			
			SUR	PTP-1				
30MS(1)B-7LD								
	PIPE LONG SEAM	C-F	VOL	UTP-10	UT-1			
			SUR	PTP-1				
MS-168								
	STRUT	C-E-2	VT-3	303/8.2.17				
30MS(1)B-8LU								
	PIPE LONG SEAM	C-F	VOL	UTP-10	UT-1			
			SUR	PTP-1				
30MS(1)B-8								
	PIPE TO PIPE	C-F	VOL	UTP-10	UT-1			

WNP-02
INTERVAL: PSI
PERIOD: NA
OUTAGE:
DRAWING NO. MS-202

WASHINGTON PUBLIC POWER SUPPLY SYSTEM
PROGRAM PLAN AND SCHEDULE
SYSTEM OR COMPONENT: MS(1)-4
DESCRIPTION: MAIN STEAM LINE B

DATE 12/14/84

IDENT. NO.	DESCRIPTION	SECT. XI EXAM.	EXAM MTH.	PROCEDURE	CAL. BLOCK	INSERVICE REQ.	INSERVICE SCHEDULED OUTAGE	NOTES
			SUR	PTP-1				
30MS(1)B-8LD	PIPE LONG SEAM	C-F	VOL	UTP-10	UT-1			
			SUR	PTP-1				
MS-167	PSA-10 SN(2)	C-E-2	VT-3	303/8.2.17				S/N 9950/9895
			VT-4	303/8.2.17				S/N 9950/9895
MS-996N	PSA-10 SN(2)	C-E-2	VT-3	303/8.2.17				S/N 9961/9955
			VT-4	303/8.2.17				S/N 9961/9955
30MS(1)B-9LU	PIPE LONG SEAM	C-F	VOL	UTP-10	UT-1			
			SUR	PTP-1				
30MS(1)B-9	PIPE TO PIPE	C-F	VOL	UTP-10	UT-1			
			SUR	PTP-1				
30MS(1)B-9LD	PIPE LONG SEAM	C-F	VOL	UTP-10	UT-1			
			SUR	PTP-1				
MS-163	SPRING (2)	C-E-2	VT-3	303/8.2.17				
			VT-4	303/8.2.17				
30MS(1)B-10LU	PIPE LONG SEAM	C-F	VOL	UTP-10	UT-1			
			SUR	PTP-1				
30MS(1)B-10	PIPE TO EL	C-F	VOL	UTP-10	UT-1			

WNP-02
INTERVAL: PSI
PERIOD: NA
OUTAGE:
DRAWING NO. MS-202

WASHINGTON PUBLIC POWER SUPPLY SYSTEM
PROGRAM PLAN AND SCHEDULE
SYSTEM OR COMPONENT: MS(1)-4
DESCRIPTION: MAIN STEAM LINE B

DATE 12/14/84

IDENT. NO.	DESCRIPTION	SECT. XI EXAM.	EXAM MTH.	PROCEDURE	CAL. BLOCK	INSERVICE REQ.	SCHEDULED OUTAGE	NOTES
			SUR	PTP-1				
30MS(1)B-10LDO	EL SEAM	C-F	VOL	UTP-10	UT-1			
			SUR	PTP-1				
30MS(1)B-11LUO	EL SEAM	C-F	VOL	UTP-10	UT-1			
			SUR	PTP-1				
30MS(1)B-11	EL TO PIPE	C-F	VOL	UTP-10	UT-1			
			SUR	PTP-1				
30MS(1)B-11LD	PIPE LONG SEAM	C-F	VOL	UTP-10	UT-1			
			SUR	PTP-1				
MS-160	STRUT	C-E-2	VT-3	303/8.2.17				
MS-162	PSA-10 SN(2)	C-E-2	VT-3	303/8.2.17				S/N 315/325
			VT-4	303/8.2.17				S/N 315/325
30MS(1)B-12LU	PIPE LONG SEAM	C-F	VOL	UTP-10	UT-1			
			SUR	PTP-1				
30MS(1)B-12	PIPE TO PIPE	C-F	VOL	UTP-10	UT-1			
			SUR	PTP-1				
30MS(1)B-12LD	PIPE LONG SEAM	C-F	VOL	UTP-10	UT-1			
			SUR	PTP-1				

WNP-02
INTERVAL: PSI
PERIOD: NA
OUTAGE:
DRAWING NO. MS-202

WASHINGTON PUBLIC POWER SUPPLY SYSTEM
PROGRAM PLAN AND SCHEDULE
SYSTEM OR COMPONENT: MS(1)-4
DESCRIPTION: MAIN STEAM LINE B

DATE 12/14/84

IDENT. NO.	DESCRIPTION	SECT. XI EXAM.	EXAM MTH.	PROCEDURE	CAL. BLOCK	INSERVICE REQ.	INSERVICE SCHEDULED OUTAGE	NOTES
MS-157								
	STRUT	C-E-2	VT-3	303/8.2.17				
30MS(1)B-13LU								
	PIPE LONG SEAM	C-F	VOL	UTP-10	UT-1			
			SUR	PTP-1				
30MS(1)B-13								
	PIPE TO EL	C-F	VOL	UTP-10	UT-1			
			SUR	PTP-1				
30MS(1)B-13LDO								
	EL SEAM	C-F	VOL	UTP-10	UT-1			
			SUR	PTP-1				
30MS(1)B-14LUO								
	EL SEAM	C-F	VOL	UTP-10	UT-1			
			SUR	PTP-1				
30MS(1)B-14								
	EL TO PIPE	C-F	VOL	UTP-10	UT-1			
			SUR	PTP-1				
30MS(1)B-14LD								
	PIPE LONG SEAM	C-F	VOL	UTP-10	UT-1			
			SUR	PTP-1				
30MS(1)B-15LU								
	PIPE LONG SEAM	C-F	VOL	UTP-10	UT-1			
			SUR	PTP-1				
30MS(1)B-15								
	PIPE TO PIPE	C-F	VOL	UTP-10	UT-1			
			SUR	PTP-1				
30MS(1)B-15LD								
	PIPE LONG SEAM	C-F	VOL	UTP-10	UT-1			

WNP-02
INTERVAL: PSI
PERIOD: NA
OUTAGE:
DRAWING NO. MS-202

WASHINGTON PUBLIC POWER SUPPLY SYSTEM
PROGRAM PLAN AND SCHEDULE
SYSTEM OR COMPONENT: MS(1)-4
DESCRIPTION: MAIN STEAM LINE B

DATE 12/14/84

IDENT. NO.	DESCRIPTION	SECT. XI EXAM.	EXAM MTH.	PROCEDURE	CAL. BLOCK	INSERVICE REQ.	INSERVICE SCHEDULED OUTAGE	NOTES
			SUR	PTP-1				
MS-155								
	STRUT	C-E-2	VT-3	303/8.2.17				
MS-154								
	RIGID	C-E-2	VT-3	303/8.2.17				
30MS(1)B-15/18MS(1)-4								
	PIPE TO WOL	C-F	SUR	PTP-1				
18MS(1)B-1								
	WOL TO PIPE	C-F	VOL	UTP-10	UT-12			
			SUR	PTP-1				
18MS(1)B-2								
	PIPE TO EL	C-F	VOL	UTP-10	UT-12			
			SUR	PTP-1				
18MS(1)B-3								
	EL TO PIPE	C-F	VOL	UTP-10	UT-12			
			SUR	PTP-1				
MS-177								
	PSA-35 SN(2)	C-E-2	VT-3	303/8.2.17				S/N 299/1071
			VT-4	303/8.2.17				S/N 299/1071
MS-178								
	SPRING	C-E-2	VT-3	303/8.2.17				
			VT-4	303/8.2.17				
18MS(1)B-4								
	PIPE TO EL	C-F	VOL	UTP-10	UT-12			
			SUR	PTP-1				
18MS(1)B-4A								
	EL TO EL	C-F	VOL	UTP-10	UT-12			
			SUR	PTP-1				

WNP-02
INTERVAL: PSI
PERIOD: NA
OUTAGE:
DRAWING NO. MS-202

WASHINGTON PUBLIC POWER SUPPLY SYSTEM
PROGRAM PLAN AND SCHEDULE
SYSTEM OR COMPONENT: MS(1)-4
DESCRIPTION: MAIN STEAM LINE B

DATE 12/14/84

IDENT. NO.	DESCRIPTION	SECT. XI EXAM.	EXAM MTH.	PROCEDURE	CAL. BLOCK	INSERVICE REQ.	INSERVICE SCHEDULED OUTAGE	NOTES
MS-179								
	PSA-1 SN(2)	C-E-2	VT-3	303/8.2.17				S/N 336/340
			VT-4	303/8.2.17				S/N 336/340
18MS(1)B-5								
	EL TO PIPE	C-F	VOL	UTP-10	UT-12			
			SUR	PTP-1				
18MS(1)B-6								
	PIPE TO EL	C-F	VOL	UTP-10	UT-12			
			SUR	PTP-1				
18MS(1)B-7								
	EL TO PIPE	C-F	VOL	UTP-10	UT-12			
			SUR	PTP-1				
18MS(1)B-8								
	PIPE TO VOL	C-F	VOL	UTP-10	UT-12			
			SUR	PTP-1				
30MS(1)B-17LU								
	PIPE SEAM	C-F	VOL	UTP-10	UT-1			
			SUR	PTP-1				
30MS(1)B-17								
	PIPE TO PIPE	C-F	VOL	UTP-10	UT-1			
			SUR	PTP-1				
30MS(1)B-17LD								
	PIPE LONG SEAM	C-F	VOL	UTP-10	UT-1			
			SUR	PTP-1				
MS-152								
	SPRING (2)	C-E-2	VT-3	303/8.2.17				
			VT-4	303/8.2.17				

WNP-32
INTERVAL: PSI
PERIOD: NA
OUTAGE:
DRAWING NO. MS-202

WASHINGTON PUBLIC POWER SUPPLY SYSTEM
PROGRAM PLAN AND SCHEDULE
SYSTEM OR COMPONENT: MS(1)-4
DESCRIPTION: MAIN STEAM LINE B

IDENT. NO.	DESCRIPTION	SECT. XI EXAM.	EXAM MTH.	PROCEDURE	CAL. BLOCK	INSERVICE REQ.	INSERVICE SCHEDULED OUTAGE	NOTES
30MS(1)B-17/1V-706B								
	INSTR CONN	N/A	VT-2	N/A				SEE NOTES #6 & #7.
30MS(1)B-18LU								
	PIPE LONG SEAM	C-F	VOL	UTP-10	UT-1			
			SUR	PTP-1				
30MS(1)B-18								
	PIPE TO PIPE	C-F	VOL	UTP-10	UT-1			
			SUR	PTP-1				
30MS(1)B-18LD								
	PIPE LONG SEAM	C-F	VOL	UTP-10	UT-1			
			SUR	PTP-1				
MS-151								
	PSA-3 SN(2)	C-E-2	VT-3	303/8.2.17				S/N 221/2567
			VT-4	303/8.2.17				S/N 221/2567
MS-150								
	STRUT	C-E-2	VT-3	303/8.2.17				
MS-149								
	SPRING (2)	C-E-2	VT-3	303/8.2.17				
			VT-4	303/8.2.17				
30MS(1)B-19LU								
	PIPE LONG SEAM	C-F	VOL	UTP-10	UT-1			
			SUR	PTP-1				
30MS(1)B-19								
	PIPE TO EL	C-F	VOL	UTP-10	UT-1			
			SUR	PTP-1				
30MS(1)B-19LDO								
	EL SEAM	C-F	VOL	UTP-10	UT-1			
			SUR	PTP-1				

WNP-02
INTERVAL: PSI
PERIOD: NA
OUTAGE:
DRAWING NO. MS-202

WASHINGTON PUBLIC POWER SUPPLY SYSTEM
PROGRAM PLAN AND SCHEDULE
SYSTEM OR COMPONENT: MS(1)-4
DESCRIPTION: MAIN STEAM LINE B

DATE 12/14/84

IDENT. NO.	DESCRIPTION	SECT. XI EXAM.	EXAM MTH.	PROCEDURE	CAL. BLOCK	INSERVICE REQ.	SCHEDULED OUTAGE	NOTES
30MS(1)B-20LUO	EL SEAM	C-F	VOL	UTP-10	UT-1			
			SUR	PTP-1				
30MS(1)B-20	EL TO PIPE	C-F	VOL	UTP-10	UT-1			
			SUR	PTP-1				
30MS(1)B-20LD	PIPE LONG SEAM	C-F	VOL	UTP-10	UT-1			
			SUR	PTP-1				
MS-147(W)	8 WELDED LUGS	C-E-1	SUR	QCI 4-3				
MS-147	PSA-10 SN(2)	C-E-2	VT-3	303/8.2.17				S/N 688/70
			VT-4	303/8.2.17				S/N 688/70
MS-148	PSA-10 SNUBBER	C-E-2	VT-3	303/8.2.17				S/N 318
			VT-4	303/8.2.17				S/N 318
30MS(1)B-21LU	PIPE LONG SEAM	C-F	VOL	UTP-10	UT-1			
			SUR	PTP-1				
30MS(1)B-21	PIPE TO EL	C-F	VOL	UTP-10	UT-1			
			SUR	PTP-1				
30MS(1)B-21LDI	EL SEAM	C-F	VOL	UTP-10	UT-1			
			SUR	PTP-1				
30MS(1)B-21LDO	EL SEAM	C-F	VOL	UTP-10	UT-1			

WNP-02
INTERVAL: PSI
PERIOD: NA
OUTAGE:
DRAWING NO. MS-202

WASHINGTON PUBLIC POWER SUPPLY SYSTEM
PROGRAM PLAN AND SCHEDULE
SYSTEM OR COMPONENT: MS(1)-4
DESCRIPTION: MAIN STEAM LINE B

IDENT. NO.	DESCRIPTION	SECT. XI EXAM.	EXAM MTH.	PROCEDURE	CAL. BLOCK	INSERVICE REQ.	INSERVICE SCHEDULED OUTAGE	NOTES
30MS(1)B-22LUI			SUR	PTP-1				
	EL SEAM	C-F	VOL	UTP-10	UT-1			
30MS(1)B-22LUO			SUR	PTP-1				
	EL SEAM	C-F	VOL	UTP-10	UT-1			
30MS(1)B-22			SUR	PTP-1				
	EL TO PIPE	C-F	VOL	UTP-10	UT-1			
30MS(1)B-22LD			SUR	PTP-1				
	PIPE LONG SEAM	C-F	VOL	UTP-10	UT-1			
MS-146			SUR	PTP-1				
	SPRING (2)	C-E-2	VT-3	303/8.2.17				
			VT-4	303/8.2.17				
30MS(1)B-23LU								
	PIPE LONG SEAM	C-F	VOL	UTP-10	UT-1			
30MS(1)B-23			SUR	PTP-1				
	PIPE TO EL	C-F	VOL	UTP-10	UT-1			
30MS(1)B-23LDO			SUR	PTP-1				
	EL SEAM	C-F	VOL	UTP-10	UT-1			
30MS(1)B-24LUO			SUR	PTP-1				
	EL SEAM	C-F	VOL	UTP-10	UT-1			

WNP-02
INTERVAL: PSI
PERIOD: NA
OUTAGE:
DRAWING NO. MS-202

WASHINGTON PUBLIC POWER SUPPLY SYSTEM
PROGRAM PLAN AND SCHEDULE
SYSTEM OR COMPONENT: MS(1)-4
DESCRIPTION: MAIN STEAM LINE B

DATE 12/14/84

IDENT. NO.	DESCRIPTION	SECT. XI EXAM.	EXAM MTH.	PROCEDURE	CAL. BLOCK	INSERVICE REQ.	SCHEDULED OUTAGE	NOTES
30MS(1)B-24			SUR	PTP-1				
	EL TO PIPE	C-F	VOL	UTP-10	UT-1			
30MS(1)B-24LD			SUR	PTP-1				
	PIPE LONG SEAM	C-F	VOL	UTP-10	UT-1			
MS-145			SUR	PTP-1				
	PSA-10 SNUBBER	C-E-2	VT-3	303/8.2.17				S/N 580
			VT-4	303/8.2.17				S/N 580
30MS(1)B-24/3/4V-707B								
	INSTR CONN	N/A	VT-2	N/A				IWC-2510, SEE NOTES #6 & #7.
30MS(1)B-24/1TX-1B								
	INSTR CONN	N/A	VT-2	N/A				IWC-2510, SEE NOTES #6 & #7.
30MS(1)B-24/1TE-1B								
	INSTR CONN	N/A	VT-2	N/A				IWC-2510, SEE NOTES #6 & #7.
MS-144								
	SPRING	C-E-2	VT-3	303/8.2.17				
			VT-4	303/8.2.17				
MS-142								
	SPRING	C-E-2	VT-3	303/8.2.17				
			VT-4	303/8.2.17				
30MS(1)B-24/6MS(1)-4								
	WOL TO PIPE	C-F	SUR	PTP-1				
6MS(1)B-1								
	PIPE TO WOL	C-F	SUR	PTP-1				

WASHINGTON PUBLIC POWER SUPPLY SYSTEM
PROGRAM PLAN AND SCHEDULE
SYSTEM OR COMPONENT: MS(1)-4
DESCRIPTION: MAIN STEAM LINE B

IDENT. NO.	DESCRIPTION	SECT. XI EXAM.	EXAM MTH.	PROCEDURE	CAL. BLOCK	INSERVICE REQ.	INSERVICE SCHEDULED OUTAGE	NOTES
MS-1016S								
	PSA-1/4 SNUBBER	C-E-2	VT-3	303/8.2.17				S/N 428, LOCATED ON LS-24B.
			VT-4	303/8.2.17				S/N 428, LOCATED ON LS-24B.
6MS(1)B-1/1LS-24BD								
	INSTR CONN	N/A	VT-2	N/A				IWC-2510, SEE NOTES #6 & #7.
6MS(1)P-2/1LS-24BU								
	INSTR CONN	N/A	VT-2	N/A				IWC-2510, SEE NOTES #6 & #7.
6MS(1)B-1/2MD(1)-2								
	DRAIN CONN	N/A	VT-2	N/A				IWC-2510, SEE NOTES #6 & #7.
6MS(1)B-2								
	CAP TO PIPE	C-F	SUR	PTP-1				
6MS(1)B-2/3/4V-119B								
	DRAIN CONN	N/A	VT-2	N/A				IWC-2510, SEE NOTES #6 & #7.
30MS(1)P-25LU								
	PIPE LONG SEAM	C-F	VOL	UTP-10	UT-1			
			SUR	PTP-1				
30MS(1)B-25								
	PIPE TO EL	C-F	VOL	UTP-10	UT-1			
			SUR	PTP-1				
30MS(1)B-25LDO								
	EL SEAM	C-F	VOL	UTP-10	UT-1			
			SUR	PTP-1				
30MS(1)B-26LUO								
	EL SEAM	C-F	VOL	UTP-10	UT-1			
			SUR	PTP-1				

WNP-02
INTERVAL: PSI
PERIOD: NA
OUTAGE:
DRAWING NO. MS-202

WASHINGTON PUBLIC POWER SUPPLY SYSTEM
PROGRAM PLAN AND SCHEDULE
SYSTEM OR COMPONENT: MS(1)-4
DESCRIPTION: MAIN STEAM LINE B

IDENT. NO.	DESCRIPTION	SECT. XI EXAM.	EXAM MTH.	PROCEDURE	CAL. BLOCK	INSERVICE REQ.	SCHEDULED OUTAGE	NOTES
30MS(1)B-26	EL TO PIPE	C-F	VOL	UTP-10	UT-1			
			SUR	PTP-1				
30MS(1)B-26LD	PIPE LONG SEAM	C-F	VOL	UTP-10	UT-1			
			SUR	PTP-1				
30MS(1)B-27LU	PIPE LONG SEAM	C-F	VOL	UTP-10	UT-1			
			SUR	PTP-1				
30MS(1)B-27	PIPE TO EL	C-F	VOL	UTP-10	UT-1			
			SUR	PTP-1				
30MS(1)B-27LDO	EL SEAM	C-F	VOL	UTP-10	UT-1			
			SUR	PTP-1				
30MS(1)B-28LUO	EL SEAM	C-F	VOL	UTP-10	UT-1			
			SUR	PTP-1				
30MS(1)B-28	EL TO PIPE	C-F	VOL	UTP-10	UT-1			
			SUR	PTP-1				
30MS(1)B-28LD	PIPE LONG SEAM	C-F	VOL	UTP-10	UT-1			
			SUR	PTP-1				
30MS(1)B-29LU	PIPE LONG SEAM	C-F	VOL	UTP-10	UT-1			
			SUR	PTP-1				

WNP-02
INTERVAL: PSI
PERIOD: NA
OUTAGE:
DRAWING NO. MS-202

WASHINGTON PUBLIC POWER SUPPLY SYSTEM
PROGRAM PLAN AND SCHEDULE
SYSTEM OR COMPONENT: MS(1)-4
DESCRIPTION: MAIN STEAM LINE B

DATE 12/14/84

IDENT. NO.	DESCRIPTION	SECT. XI EXAM.	EXAM MTH.	PROCEDURE	CAL. BLOCK	INSERVICE REQ.	INSERVICE SCHEDULED OUTAGE	NOTES
30MS(1)B-29								
	PIPE TO REDUCER	C-F	VOL	UTP-10	UT-1			
			SUR	PTP-1				
28MS(1)B-1								
	REDUCER TO PIPE	C-F	VOL	UTP-10	UT-2			
			SUR	PTP-1				
MS-PB-202								
	MS PRESS BNDRY	N/A	VT-2	N/A				IWC-2510, SEE NOTES #6 & #7.

WNP-02
INTERVAL: PSI
PERIOD: NA
OUTAGE:
DRAWING NO. MS-202

WASHINGTON PUBLIC POWER SUPPLY SYSTEM
PROGRAM PLAN AND SCHEDULE
SYSTEM OR COMPONENT: 2MS(20)-4
DESCRIPTION: MS PRESS STAB. LINE

IDENT. NO.	DESCRIPTION	SECT. XI EXAM.	EXAM MTH.	PROCEDURE	CAL. BLOCK	INSERVICE REQ.	INSERVICE SCHEDULED OUTAGE	NOTES
2MS(20)B-1	SOL TO PIPE	N/A	SUR	PTP-1				AUGMT
2MS(20)B-2	PIPE TO EL	N/A	SUR	PTP-1				AUGMT
2MS(20)B-3	EL TO PIPE	N/A	SUR	PTP-1				AUGMT
2MS(20)B-4	PIPE TO TEE	N/A	SUR	PTP-1				AUGMT
2MS(20)B-5	TEE TO RED	N/A	SUR	PTP-1				AUGMT
2MS(20)B-6	TEE TO PIPE	N/A	SUR	PTP-1				AUGMT
2MS(20)B-7	PIPE TO SOL	N/A	SUR	PTP-1				AUGMT

WNP-02
INTERVAL: PSI
PERIOD: NA
OUTAGE:
DRAWING NO. MS-201

WASHINGTON PUBLIC POWER SUPPLY SYSTEM
PROGRAM PLAN AND SCHEDULE
SYSTEM OR COMPONENT: MS(1)-4
DESCRIPTION: MAIN STEAM LINE A

DATE 12/14/84

IDENT. NO.	DESCRIPTION	SECT. XI EXAM.	EXAM MTH.	PROCEDURE	CAL. BLOCK	INSERVICE REQ.	INSERVICE SCHEDULED OUTAGE	NOTES
26MS(1)A-18								
	VALVE TO PIPE	C-F	VOL	UTP-10	UT-3			AUGMT
			SUR	PTP-1				AUGMT
26MS(1)A-18LD								
	PIPE LONG SEAM	C-F	VOL	UTP-10	UT-3			
			SUR	PTP-1				
26MS(1)A-18/3/4CAP								
	CAPPED CONN	N/A	VT-2	N/A				IWC-2510, SEE NOTES #6 & #7.
26MS(1)A-18/3/4V-41								
	TEST CONN	N/A	VT-2	N/A				IWC-2510, SEE NOTES #6 & #7.
26MS(1)A-18/5/4TE-N040								
	INSTR CONN	N/A	VT-2	N/A				IWC-2510, SEE NOTES #6 & #7.
MS-137								
	SPRING	C-E-2	VT-3	303/8.2.17				
			VT-4	303/8.2.17				
26MS(1)A-19LU								
	PIPE LONG SEAM	C-F	VOL	UTP-10	UT-3			
			SUR	PTP-1				
26MS(1)A-19								
	PIPE TO PIPE	C-F	VOL	UTP-10	UT-3			AUGMT
			SUR	PTP-1				AUGMT
26MS(1)A-19LD								
	PIPE LONG SEAM	C-F	VOL	UTP-10	UT-3			
			SUR	PTP-1				
26MS(1)A-19/3V-20								
	DRAIN CONN	N/A	SUR	PTP-1				IWC-2510, AUGMT.

WNP-02
INTERVAL: PSI
PERIOD: NA
OUTAGE:
DRAWING NO. MS-201

WASHINGTON PUBLIC POWER SUPPLY SYSTEM
PROGRAM PLAN AND SCHEDULE
SYSTEM OR COMPONENT: MS(1)-4
DESCRIPTION: MAIN STEAM LINE A

DATE 12/14/84

IDENT. NO.	DESCRIPTION	SECT. XI EXAM.	EXAM MTH.	PROCEDURE	CAL. BLOCK	INSERVICE REQ.	INSERVICE SCHEDULED OUTAGE	NOTES
26MS(1)A-19/3/4V-744A								
	INSTR CONN	N/A	VT-2	N/A				IWC-2510, SEE NOTES #6 & #7.
MS-135								
	PSA-35 SNUBBER	C-E-2	VT-3	303/8.2.17				S/N 7033
			VT-4	303/8.2.17				S/N 7033
PWS-315-1								
	PIPE WHIP	N/A	N/A	N/A				
26MS(1)A-20LU								
	PIPE LONG SEAM	C-F	VOL	UTP-10	UT-3			
			SUR	PTP-1				
26MS(1)A-20								
	PIPE TO EL	C-F	VOL	UTP-10	UT-3			
			SUR	PTP-1				
26MS(1)A-20LDI								
	EL SEAM	C-F	VOL	UTP-10	UT-3			
			SUR	PTP-1				
26MS(1)A-20LDO								
	EL SEAM	C-F	VOL	UTP-10	UT-3			
			SUR	PTP-1				
26MS(1)A-21LUI								
	EL SEAM	C-F	VOL	UTP-10	UT-3			
			SUR	PTP-1				
26MS(1)A-21LUO								
	EL SEAM	C-F	VOL	UTP-10	UT-3			
			SUR	PTP-1				
26MS(1)A-21								
	EL TO PIPE	C-F	VOL	UTP-10	UT-3			

WNP-02
INTERVAL: PSI
PERIOD: NA
OUTAGE:
DRAWING NO. MS-201

WASHINGTON PUBLIC POWER SUPPLY SYSTEM
PROGRAM PLAN AND SCHEDULE
SYSTEM OR COMPONENT: MS(1)-4
DESCRIPTION: MAIN STEAM LINE A

IDENT. NO.	DESCRIPTION	SECT. XI EXAM.	EXAM MTH.	PROCEDURE	CAL. BLOCK	INSERVICE REQ.	INSERVICE SCHEDULED OUTAGE	NOTES
			SUR	PTP-1				
26MS(1)A-21LD	PIPE LONG SEAM	C-F	VOL	UTP-10	UT-3			
			SUR	PTP-1				
26MS(1)A-22LU	PIPE LONG SEAM	C-F	VOL	UTP-10	UT-3			
			SUR	PTP-1				
26MS(1)A-22	PIPE TO REDUCER	C-F	VOL	UTP-10	UT-3			
			SUR	PTP-1				
30MS(1)A-1	REDUCER TO PIPE	C-F	VOL	UTP-10	UT-1			
			SUR	PTP-1				
30MS(1)A-1LD	PIPE LONG SEAM	C-F	VOL	UTP-10	UT-1			
			SUR	PTP-1				
PWS-315-5	PIPE WHIP	N/A	N/A	N/A				
30MS(1)A-2LU	PIPE LONG SEAM	C-F	VOL	UTP-10	UT-1			
			SUR	PTP-1				
30MS(1)A-2	PIPE TO EL	C-F	VOL	UTP-10	UT-1			
			SUR	PTP-1				
30MS(1)A-2LDO	EL SEAM	C-F	VOL	UTP-10	UT-1			
			SUR	PTP-1				

WNP-02
INTERVAL: PSI
PERIOD: NA
OUTAGE:
DRAWING NO. MS-201

WASHINGTON PUBLIC POWER SUPPLY SYSTEM
PROGRAM PLAN AND SCHEDULE
SYSTEM OR COMPONENT: MS(1)-4
DESCRIPTION: MAIN STEAM LINE A

DATE 12/14/84

IDENT. NO.	DESCRIPTION	SECT. XI EXAM.	EXAM MTH.	PROCEDURE	CAL. BLOCK	INSERVICE REQ.	INSERVICE SCHEDULED OUTAGE	NOTES
30MS(1)A-3LUO	EL SEAM	C-F	VOL	UTP-10	UT-1			
			SUR	PTP-1				
30MS(1)A-3	EL TO PIPE	C-F	VOL	UTP-10	UT-1			
			SUR	PTP-1				
30MS(1)A-3LD	PIPE LONG SEAM	C-F	VOL	UTP-10	UT-1			
			SUR	PTP-1				
30MS(1)A-4LU	PIPE LONG SEAM	C-F	VOL	UTP-10	UT-1			
			SUR	PTP-1				
30MS(1)A-4	PIPE TO EL	C-F	VOL	UTP-10	UT-1			
			SUR	PTP-1				
30MS(1)A-4LDO	EL SEAM	C-F	VOL	UTP-10	UT-1			
			SUR	PTP-1				
30MS(1)A-5LUO	EL SEAM	C-F	VOL	UTP-10	UT-1			
			SUR	PTP-1				
30MS(1)A-5	EL TO PIPE	C-F	VOL	UTP-10	UT-1			
			SUR	PTP-1				
30MS(1)A-5LD	PIPE LONG SEAM	C-F	VOL	UTP-10	UT-1			
			SUR	PTP-1				

WNP-02
INTERVAL: PSI
PERIOD: NA
OUTAGE:
DRAWING NO. MS-201

WASHINGTON PUBLIC POWER SUPPLY SYSTEM
PROGRAM PLAN AND SCHEDULE
SYSTEM OR COMPONENT: MS(1)-4
DESCRIPTION: MAIN STEAM LINE A

DATE 12/14/84

IDENT. NO.	DESCRIPTION	SECT. XI EXAM.	EXAM MTH.	PROCEDURE	CAL. BLOCK	INSERVICE REQ.	INSERVICE SCHEDULED OUTAGE	NOTES
30MS(1)A-5/3MD(16)-4								
	DRAIN CONN	N/A	VT-2	OCI 7-1				IWC-2510
30MS(1)A-5/3/4V-701								
	INSTR CONN	N/A	VT-2	N/A				IWC-2510, SEE NOTES #6 & #7.
30MS(1)A-5/3/4V-702								
	INSTR CONN	N/A	VT-2	N/A				IWC-2510, SEE NOTES #6 & #7.
MS-123								
	STRUT	C-E-2	VT-3	303/8.2.17				
30MS(1)A-6LU								
	PIPE LONG SEAM	C-F	VOL	UTP-10	UT-1			
			SUR	PTP-1				
30MS(1)A-6								
	PIPE TO PIPE	C-F	VOL	UTP-10	UT-1			
			SUR	PTP-1				
30MS(1)A-6LD								
	PIPE LONG SEAM	C-F	VOL	UTP-10	UT-1			
			SUR	PTP-1				
MS-121								
	SPRING (2)	C-E-2	VT-3	303/8.2.17				
			VT-4	303/8.2.17				
30MS(1)A-7LU								
	PIPE LONG SEAM	C-F	VOL	UTP-10	UT-1			
			SUR	PTP-1				
30MS(1)A-7								
	PIPE TO EL	C-F	VOL	UTP-10	UT-1			
			SUR	PTP-1				
30MS(1)A-7LDI								
	EL SEAM	C-F	VOL	UTP-10	UT-1			

WNP-02
INTERVAL: PSI
PERIOD: NA
OUTAGE:
DRAWING NO. MS-201

WASHINGTON PUBLIC POWER SUPPLY SYSTEM
PROGRAM PLAN AND SCHEDULE
SYSTEM OR COMPONENT: MS(1)-4
DESCRIPTION: MAIN STEAM LINE A

DATE 12/14/84

IDENT. NO.	DESCRIPTION	SECT. XI EXAM.	EXAM MTH.	PROCEDURE	CAL. BLOCK	INSERVICE REQ.	INSERVICE SCHEDULED OUTAGE	NOTES
			SUR	PTP-1				
30MS(1)A-7LDO	EL SEAM	C-F	VOL	UTP-10	UT-1			
			SUR	PTP-1				
30MS(1)A-8LUI	EL SEAM	C-F	VOL	UTP-10	UT-1			
			SUR	PTP-1				
30MS(1)A-8LUO	EL SEAM	C-F	VOL	UTP-10	UT-1			
			SUR	PTP-1				
30MS(1)A-8	EL TO PIPE	C-F	VOL	UTP-10	UT-1			
			SUR	PTP-1				
30MS(1)A-8LD	PIPE LONG SEAM	C-F	VOL	UTP-10	UT-1			
			SUR	PTP-1				
MS-993N	PSA-10 SN(2)	C-E-2	VT-3	303/8.2.17				S/N T102/B686
			VT-4	303/8.2.17				S/N T102/B686
MS-120	SPRING (2)	C-E-2	VT-3	303/8.2.17				
			VT-4	303/8.2.17				
30MS(1)A-9LU	PIPE LONG SEAM	C-F	VOL	UTP-10	UT-1			
			SUR	PTP-1				
30MS(1)A-9	PIPE TO PIPE	C-F	VOL	UTP-10	UT-1			

WNP-02
INTERVAL: PSI
PERIOD: NA
OUTAGE:
DRAWING NO. MS-201

WASHINGTON PUBLIC POWER SUPPLY SYSTEM
PROGRAM PLAN AND SCHEDULE
SYSTEM OR COMPONENT: MS(1)-4
DESCRIPTION: MAIN STEAM LINE A

DATE 12/14/84

IDENT. NO.	DESCRIPTION	SECT. XI EXAM.	EXAM MTH.	PROCEDURE	CAL. BLOCK	INSERVICE REQ.	INSERVICE SCHEDULED OUTAGE	NOTES
			SUR	PTP-1				
30MS(1)A-9LD	PIPE LONG SEAM	C-F	VOL	UTP-10	UT-1			
			SUR	PTP-1				
MS-119	STRUT	C-E-2	VT-3	303/8.2.17				
30MS(1)A-10LU	PIPE LONG SEAM	C-F	VOL	UTP-10	UT-1			
			SUR	PTP-1				
30MS(1)A-10	PIPE TO PIPE	C-F	VOL	UTP-10	UT-1			
			SUR	PTP-1				
30MS(1)A-10LD	PIPE LONG SEAM	C-F	VOL	UTP-10	UT-1			
			SUR	PTP-1				
MS-118	PSA-10 SN(2)	C-E-2	VT-3	303/8.2.17				S/N 112/129
			VT-4	303/8.2.17				S/N 112/129
MS-117	SPRING (2)	C-E-2	VT-3	303/8.2.17				
			VT-4	303/8.2.17				
MS-117(S)	1 WELDED SADDLE	C-E-1	SUR	MTP-1				
30MS(1)A-11LU	PIPE LONG SEAM	C-F	VOL	UTP-10	UT-1			
			SUR	PTP-1				
30MS(1)A-11	PIPE TO PIPE	C-F	VOL	UTP-10	UT-1			

WNP-02
INTERVAL: PSI
PERIOD: NA
OUTAGE:
DRAWING NO. MS-201

WASHINGTON PUBLIC POWER SUPPLY SYSTEM
PROGRAM PLAN AND SCHEDULE
SYSTEM OR COMPONENT: MS(1)-4
DESCRIPTION: MAIN STEAM LINE A

DATE 12/14/84

IDENT. NO.	DESCRIPTION	SECT. XI EXAM.	EXAM MTH.	PROCEDURE	CAL. BLOCK	INSERVICE REQ.	SCHEDULED OUTAGE	NOTES
			SUR	PTP-1				
30MS(1)A-11LD	PIPE LONG SEAM	C-F	VOL	UTP-10	UT-1			
			SUR	PTP-1				
MS-115	SPRING (2)	C-E-2	VT-3	303/8.2.17				
			VT-4	303/8.2.17				
30MS(1)A-12LU	PIPE LONG SEAM	C-F	VOL	UTP-10	UT-1			
			SUR	PTP-1				
30MS(1)A-12	PIPE TO EL	C-F	VOL	UTP-10	UT-1			
			SUR	PTP-1				
30MS(1)A-12LDO	EL SEAM	C-F	VOL	UTP-10	UT-1			
			SUR	PTP-1				
30MS(1)A-13LUO	EL SEAM	C-F	VOL	UTP-10	UT-1			
			SUR	PTP-1				
30MS(1)A-13	EL TO PIPE	C-F	VOL	UTP-10	UT-1			
			SUR	PTP-1				
30MS(1)A-13LD	PIPE LONG SEAM	C-F	VOL	UTP-10	UT-1			
			SUR	PTP-1				
MS-114(W)	8 WELDED LUGS	C-E-1	SUR	MTP-1				

WNP-02
INTERVAL: PSI
PERIOD: NA
OUTAGE:
DRAWING NO. MS-201

WASHINGTON PUBLIC POWER SUPPLY SYSTEM
PROGRAM PLAN AND SCHEDULE
SYSTEM OR COMPONENT: MS(1)-4
DESCRIPTION: MAIN STEAM LINE A

DATE 12/14/84

IDENT. NO.	DESCRIPTION	SECT. XI EXAM.	EXAM MTH.	PROCEDURE	CAL. BLOCK	INSERVICE REQ.	INSERVICE SCHEDULED OUTAGE	NOTES
MS-114								
	PSA-10 SN(2)	C-E-2	VT-3	303/8.2.17				S/N 275/285
			VT-4	303/8.2.17				S/N 275/285
MS-103								
	BOX	C-E-2	VT-3	303/8.2.17				
30MS(1)A-14LU								
	PIPE LONG SEAM	C-F	VOL	UTP-10	UT-1			
			SUR	PTP-1				
30MS(1)A-14								
	PIPE TO PIPE	C-F	VOL	UTP-10	UT-1			
			SUR	PTP-1				
30MS(1)A-14LD								
	PIPE LONG SEAM	C-F	VOL	UTP-10	UT-1			
			SUR	PTP-1				
MS-101								
	SPRING (2)	C-E-2	VT-3	303/8.2.17				
			VT-4	303/8.2.17				
30MS(1)A-15LU								
	PIPE LONG SEAM	C-F	VOL	UTP-10	UT-1			
			SUR	PTP-1				
30MS(1)A-15								
	PIPE TO EL	C-F	VOL	UTP-10	UT-1			
			SUR	PTP-1				
30MS(1)A-15LDO								
	EL SEAM	C-F	VOL	UTP-10	UT-1			
			SUR	PTP-1				
30MS(1)A-16LUO								
	EL SEAM	C-F	VOL	UTP-10	UT-1			

WNP-02
INTERVAL: PSI
PERIOD: NA
OUTAGE:
DRAWING NO. MS-201

WASHINGTON PUBLIC POWER SUPPLY SYSTEM
PROGRAM PLAN AND SCHEDULE
SYSTEM OR COMPONENT: MS(1)-4
DESCRIPTION: MAIN STEAM LINE A

DATE 12/14/84

IDENT. NO.	DESCRIPTION	SECT. XI EXAM.	EXAM MTH.	PROCEDURE	CAL. BLOCK	INSERVICE REQ.	SCHEDULED OUTAGE	NOTES
			SUR	PTP-1				
30MS(1)A-16	EL TO PIPE	C-F	VOL	UTP-10	UT-1			
			SUR	PTP-1				
30MS(1)A-16LD	PIPE LONG SEAM	C-F	VOL	UTP-10	UT-1			
			SUR	PTP-1				
MS-100	STRUT	C-E-2	VT-3	303/8.2.17				
MS-992N	BOX	C-E-2	VT-3	303/8.2.17				
30MS(1)A-17LU	PIPE LONG SEAM	C-F	VOL	UTP-10	UT-1			
			SUR	PTP-1				
30MS(1)A-17	PIPE TO PIPE	C-F	VOL	UTP-10	UT-1			
			SUR	PTP-1				
30MS(1)A-17LD	PIPE LONG SEAM	C-F	VOL	UTP-10	UT-1			
			SUR	PTP-1				
MS-98	STRUT	C-E-2	VT-3	303/8.2.17				
MS-97	SPRING (2)	C-E-2	VT-3	303/8.2.17				
			VT-4	303/8.2.17				
30MS(1)A-17/18MS(1)-4	PIPE TO WOL	C-F	SUR	PTP-1				
18MS(1)A-1	WOL TO PIPE	C-F	VOL	UTP-10	UT-12			

WNP-02
INTERVAL: PSI
PERIOD: NA
OUTAGE:
DRAWING NO. MS-201

WASHINGTON PUBLIC POWER SUPPLY SYSTEM
PROGRAM PLAN AND SCHEDULE
SYSTEM OR COMPONENT: MS(1)-4
DESCRIPTION: MAIN STEAM LINE A

IDENT. NO.	DESCRIPTION	SECT. XI EXAM.	EXAM MTH.	PROCEDURE	CAL. BLOCK	INSERVICE REQ.	SCHEDULED OUTAGE	NOTES
			SUR	PTP-1				
18MS(1)A-2	PIPE TO EL	C-F	VOL	UTP-10	UT-12			
			SUR	PTP-1				
18MS(1)A-3	EL TO PIPE	C-F	VOL	UTP-10	UT-12			
			SUR	PTP-1				
18MS(1)A-4	PIPE TO EL	C-F	VOL	UTP-10	UT-12			
			SUR	PTP-1				
18MS(1)A-5	EL TO PIPE	C-F	VOL	UTP-10	UT-12			
			SUR	PTP-1				
MS-139	SPRING	C-E-2	VT-3	303/8.2.17				
			VT-4	303/8.2.17				
MS-140	PSA-3 SNUBBER	C-E-2	VT-3	303/8.2.17				S/N 2343
			VT-4	303/8.2.17				S/N 2343
18MS(1)A-6	PIPE TO EL	C-F	VOL	UTP-10	UT-12			
			SUR	PTP-1				
18MS(1)A-7	EL TO PIPE	C-F	VOL	UTP-10	UT-12			
			SUR	PTP-1				
18MS(1)A-8	PIPE TO EL	C-F	VOL	UTP-10	UT-12			

WNP-02
INTERVAL: PSI
PERIOD: NA
OUTAGE:
DRAWING NO. MS-201

WASHINGTON PUBLIC POWER SUPPLY SYSTEM
PROGRAM PLAN AND SCHEDULE
SYSTEM OR COMPONENT: MS(1)-4
DESCRIPTION: MAIN STEAM LINE A

IDENT. NO.	DESCRIPTION	SECT. XI EXAM.	EXAM MTH.	PROCEDURE	CAL. BLOCK	INSERVICE REQ.	INSERVICE SCHEDULED OUTAGE	NOTES
18MS(1)A-9			SUR	PTP-1				
	EL TO PIPE	C-F	VOL	UTP-10	UT-12			
18MS(1)A-10			SUR	PTP-1				
	PIPE TO WOL	C-F	VOL	UTP-10	UT-12			
30MS(1)A-19LU			SUR	PTP-1				
	PIPE SEAM	C-F	VOL	UTP-10	UT-1			
30MS(1)A-19			SUR	PTP-1				
	PIPE TO PIPE	C-F	VOL	UTP-10	UT-1			
30MS(1)A-19LD			SUR	PTP-1				
	PIPE LONG SEAM	C-F	VOL	UTP-10	UT-1			
MS-94			SUR	PTP-1				
	BOX	C-E-2	VT-3	303/8.2.17				
MS-95								
	STRUT	C-F-2	VT-3	303/8.2.17				
MS-96								
	PSA-10 SN(2)	C-E-2	VT-3	303/8.2.17				S/N 772/286
			VT-4	303/8.2.17				S/N 772/286
30MS(1)A-20LU								
	PIPE LONG SEAM	C-F	VOL	UTP-10	UT-1			
30MS(1)A-20			SUR	PTP-1				
	PIPE TO PIPE	C-F	VOL	UTP-10	UT-1			

WNP-02
INTERVAL: PSI
PERIOD: NA
OUTAGE:
DRAWING NO. MS-201

WASHINGTON PUBLIC POWER SUPPLY SYSTEM
PROGRAM PLAN AND SCHEDULE
SYSTEM OR COMPONENT: MS(1)-4
DESCRIPTION: MAIN STEAM LINE A

IDENT. NO.	DESCRIPTION	SECT. XI EXAM.	EXAM MTH.	PROCEDURE	CAL. BLOCK	INSERVICE REQ.	INSERVICE SCHEDULED OUTAGE	NOTES
			SUR	PTP-1				
30MS(1)A-20LD	PIPE LONG SEAM	C-F	VOL	UTP-10	UT-1			
			SUR	PTP-1				
30MS(1)A-20/1V-706A	INSTR CONN	N/A	VT-2	N/A				IWC-2510, SEE NOTES #6 & #7.
MS-93	SPRING (2)	C-E-2	VT-3	303/8.2.17				
			VT-4	303/8.2.17				
MS-924N	SPRING	C-E-2	VT-3	303/8.2.17				
			VT-4	303/8.2.17				
MS-91	PSA-3 SN(2)	C-E-2	VT-3	303/8.2.17				S/N 2883/2793
			VT-4	303/8.2.17				S/N 2883/2793
30MS(1)A-21LU	PIPE LONG SEAM	C-F	VOL	UTP-10	UT-1			
			SUR	PTP-1				
30MS(1)A-21	PIPE TO EL	C-F	VOL	UTP-10	UT-1			
			SUR	PTP-1				
30MS(1)A-21LDO	EL SEAM	C-F	VOL	UTP-10	UT-1			
			SUR	PTP-1				
30MS(1)A-22LUO	EL SEAM	C-F	VOL	UTP-10	UT-1			

WNP-02
INTERVAL: PSI
PERIOD: NA
OUTAGE:
DRAWING NO. MS-201

WASHINGTON PUBLIC POWER SUPPLY SYSTEM
PROGRAM PLAN AND SCHEDULE
SYSTEM OR COMPONENT: MS(1)-4
DESCRIPTION: MAIN STEAM LINE A

IDENT. NO.	DESCRIPTION	SECT. XI EXAM.	EXAM MTH.	PROCEDURE	CAL. BLOCK	INSERVICE REQ.	SCHEDULED OUTAGE	NOTES
30MS(1)A-22			SUR	PTP-1				
	EL TO PIPE	C-F	VOL	UTP-10	UT-1			
30MS(1)A-22LD			SUR	PTP-1				
	PIPE LONG SEAM	C-F	VOL	UTP-10	UT-1			
30MS(1)A-23LU			SUR	PTP-1				
	PIPE LONG SEAM	C-F	VOL	UTP-10	UT-1			
30MS(1)A-23			SUR	PTP-1				
	PIPE TO EL	C-F	VOL	UTP-10	UT-1			
30MS(1)A-23LDI			SUR	PTP-1				
	EL SEAM	C-F	VOL	UTP-10	UT-1			
30MS(1)A-23LDO			SUR	PTP-1				
	EL SEAM	C-F	VOL	UTP-10	UT-1			
30MS(1)A-24LUI			SUR	PTP-1				
	EL SEAM	C-F	VOL	UTP-10	UT-1			
30MS(1)A-24LUO			SUR	PTP-1				
	EL SEAM	C-F	VOL	UTP-10	UT-1			
30MS(1)A-24			SUR	PTP-1				
	EL TO PIPE	C-F	VOL	UTP-10	UT-1			

WNP-02
INTERVAL: PSI
PERIOD: NA
OUTAGE:
DRAWING NO. MS-201

WASHINGTON PUBLIC POWER SUPPLY SYSTEM
PROGRAM PLAN AND SCHEDULE
SYSTEM OR COMPONENT: MS(1)-4
DESCRIPTION: MAIN STEAM LINE A

IDENT. NO.	DESCRIPTION	SECT. XI EXAM.	EXAM MTH.	PROCEDURE	CAL. BLOCK	INSERVICE REQ.	SCHEDULED OUTAGE	NOTES
			SUR	PTP-1				
30MS(1)A-24LD	PIPE LONG SEAM	C-F	VOL	UTP-10	UT-1			
			SUR	PTP-1				
MS-89(W)	4 WELDED LUGS	C-E-1	SUR	MTP-1				
MS-89	SPRING (2)	C-E-2	VT-3	303/8.2.17				
			VT-4	303/8.2.17				
30MS(1)A-25LU	PIPE LONG SEAM	C-F	VOL	UTP-10	UT-1			
			SUR	PTP-1				
30MS(1)A-25	PIPE TO EL	C-F	VOL	UTP-10	UT-1			
			SUR	PTP-1				
30MS(1)A-25LDO	EL SEAM	C-F	VOL	UTP-10	UT-1			
			SUR	PTP-1				
30MS(1)A-26LUO	EL SEAM	C-F	VOL	UTP-10	UT-1			
			SUR	PTP-1				
30MS(1)A-26	EL TO PIPE	C-F	VOL	UTP-10	UT-1			
			SUR	PTP-1				
30MS(1)A-26LD	PIPE LONG SEAM	C-F	VOL	UTP-10	UT-1			
			SUR	PTP-1				

WNP-02
INTERVAL: PSI
PERIOD: NA
OUTAGE:
DRAWING NO. MS-201

WASHINGTON PUBLIC POWER SUPPLY SYSTEM
PROGRAM PLAN AND SCHEDULE
SYSTEM OR COMPONENT: MS(1)-4
DESCRIPTION: MAIN STEAM LINE A

DATE 12/14/84

IDENT. NO.	DESCRIPTION	SECT. XI EXAM.	EXAM MTH.	PROCEDURE	CAL. BLOCK	INSERVICE REQ.	INSERVICE SCHEDULED OUTAGE	NOTES
30MS(1)A-26/3/4V-707A								
	INSTR CONN	N/A	VT-2	N/A				IWC-2510, SEE NOTES #6 & #7.
30MS(1)A-26/1TX-1A								
	INSTR CONN	N/A	VT-2	N/A				IWC-2510, SEE NOTES #6 & #7.
30MS(1)A-26/1TE-1A								
	INSTR CONN	N/A	VT-2	N/A				IWC-2510, SEE NOTES #6 & #7.
MS-88								
	SPRING	C-E-2	VT-3	303/8.2.17				
			VT-4	303/8.2.17				
30MS(1)A-26/6MS(1)-4								
	PIPE TO WOL	C-F	SUR	PTP-1				
6MS(1)A-1								
	WOL TO PIPE	C-F	SUR	PTP-1				
MS-1013S								
	PSA-1/4 SNUBBER	N/A	VT-3	N/A				S/N 304, LOCATED ON LS-24A.
			VT-4	N/A				S/N 304, LOCATED ON LS-24A.
6MS(1)A-1/1LS-24AD								
	INSTR CONN	N/A	VT-2	N/A				IWC-2510, SEE NOTES #6 & #7.
6MS(1)A-2/1LS-24AU								
	INSTR CONN	N/A	VT-2	N/A				IWC-2510, SEE NOTES #6 & #7.
6MS(1)A-1/2MD(1)-2								
	DRAIN CONN	N/A	VT-2	N/A				IWC-2510, SEE NOTES #6 & #7.
6MS(1)A-2								
	PIPE TO CAP	C-F	SUR	PTP-1				

WNP-02
INTERVAL: PSI
PERIOD: NA
OUTAGE:
DRAWING NO. MS-201

WASHINGTON PUBLIC POWER SUPPLY SYSTEM
PROGRAM PLAN AND SCHEDULE
SYSTEM OR COMPONENT: MS(1)-4
DESCRIPTION: MAIN STEAM LINE A

DATE 12/14/84

IDENT. NO.	DESCRIPTION	SECT. XI EXAM.	EXAM MTH.	PROCEDURE	CAL. BLOCK	INSERVICE REQ.	INSERVICE SCHEDULED OUTAGE	NOTES
MS-1014S								
	PSA-1/4 SNUBBER	N/A	VT-3	N/A				S/N 421,LOCATED NEAR MS-V-119A.
			VT-4	N/A				S/N 421,LOCATED NEAR MS-V-119A.
6MS(1)A-2/3/4V-119A								
	DRAIN CONN	N/A	VT-2	N/A				IWC-2510, SEE NOTES #6 & #7.
30MS(1)A-27LU								
	PIPE LONG SEAM	C-F	VOL	UTP-10	UT-1			
			SUR	PTP-1				
30MS(1)A-27								
	PIPE TO EL	C-F	VOL	UTP-10	UT-1			
			SUR	PTP-1				
30MS(1)A-27LDO								
	EL SEAM	C-F	VOL	UTP-10	UT-1			
			SUR	PTP-1				
30MS(1)A-28LUO								
	EL SEAM	C-F	VOL	UTP-10	UT-1			
			SUR	PTP-1				
30MS(1)A-28								
	EL TO PIPE	C-F	VOL	UTP-10	UT-1			
			SUR	PTP-1				
30MS(1)A-28LD								
	PIPE LONG SEAM	C-F	VOL	UTP-10	UT-1			
			SUR	PTP-1				
30MS(1)A-29LU								
	PIPE LONG SEAM	C-F	VOL	UTP-10	UT-1			

WNP-02
INTERVAL: PSI
PERIOD: NA
OUTAGE:
DRAWING NO. MS-201

WASHINGTON PUBLIC POWER SUPPLY SYSTEM
PROGRAM PLAN AND SCHEDULE
SYSTEM OR COMPONENT: MS(1)-4
DESCRIPTION: MAIN STEAM LINE A

IDENT. NO.	DESCRIPTION	SECT. XI EXAM.	EXAM MTH.	PROCEDURE	CAL. BLOCK	INSERVICE REQ.	INSERVICE SCHEDULED OUTAGE	NOTES
30MS(1)A-29			SUR	PTP-1				
	PIPE TO REDUCER	C-F	VOL	UTP-10	UT-1			
28MS(1)A-1			SUR	PTP-1				
	REDUCER TO PIPE	C-F	VOL	UTP-10	UT-2			
MS-PB-201			SUR	PTP-1				
	MS PRES BNDRY	N/A	VT-2	N/A				IWC-2510, SEE NOTES #6 & #7.

WNP-02
INTERVAL: PSI
PERIOD: NA
OUTAGE:
DRAWING NO. MS-201

WASHINGTON PUBLIC POWER SUPPLY SYSTEM
PROGRAM PLAN AND SCHEDULE
SYSTEM OR COMPONENT: 2MS(20)-4
DESCRIPTION: MS PRESS STAB. LINE

IDENT. NO.	DESCRIPTION	SECT. XI EXAM.	EXAM MTH.	PROCEDURE	CAL. BLOCK	INSERVICE REQ.	INSERVICE SCHEDULED OUTAGE	NOTES
2MS(20)A-1								
	SOL TO PIPE	N/A	SUR	PTP-1				AUGMT
2MS(20)A-2								
	PIPE TO EL	N/A	SUR	PTP-1				AUGMT
2MS(20)A-3								
	EL TO PIPE	N/A	SUR	PTP-1				AUGMT
2MS(20)A-4								
	PIPE TO TEE	N/A	SUR	PTP-1				AUGMT
2MS(20)A-5								
	TEE TO RED	N/A	SUR	PTP-1				AUGMT
2MS(20)A-6								
	TEE TO PIPE	N/A	SUR	PTP-1				AUGMT
2MS(20)A-7								
	PIPE TO SOL	N/A	SUR	PTP-1				AUGMT

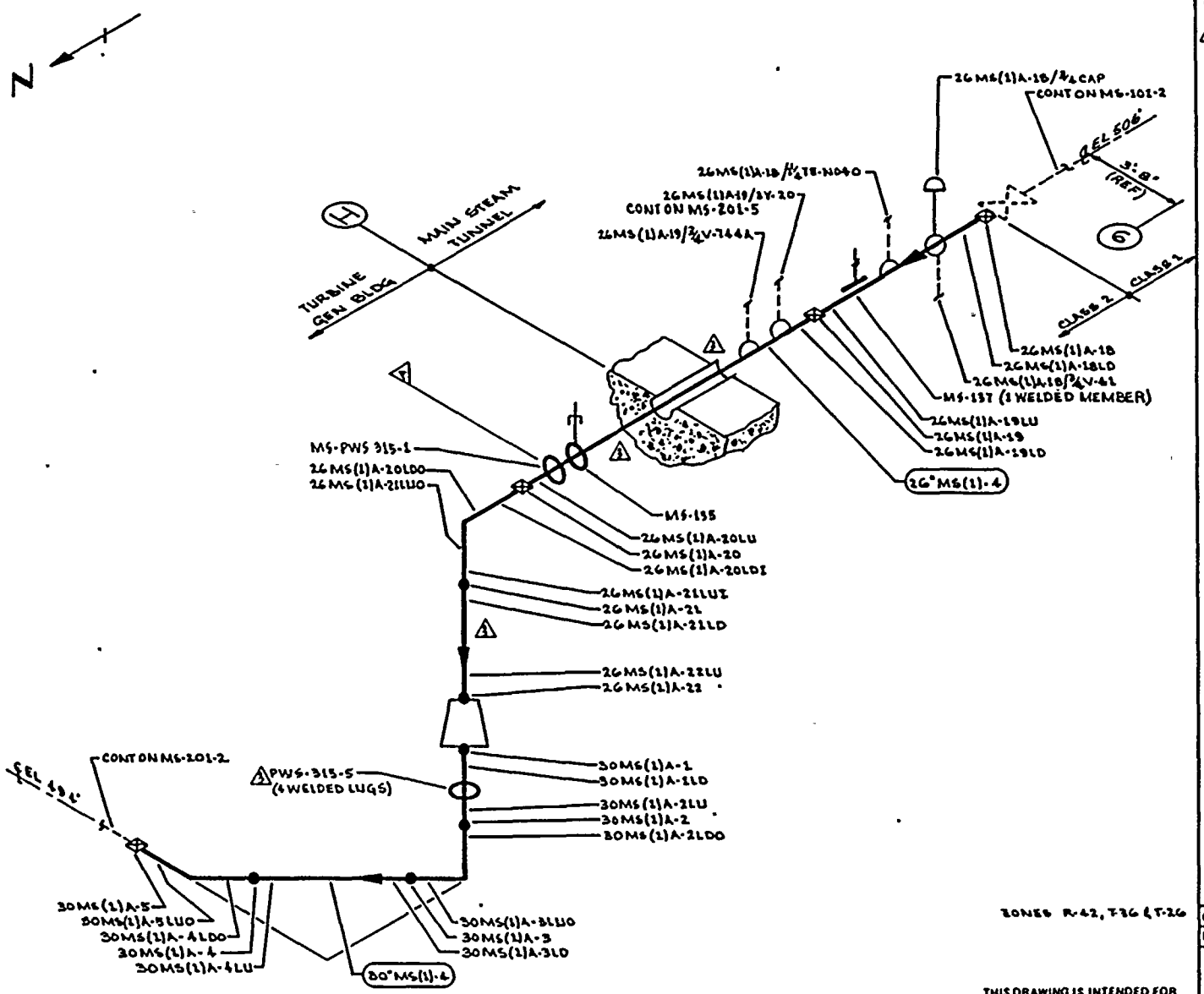

NOTES:

1. SCAFFOLDING IS REQUIRED.

REFERENCES:

BOVEE & CRAIL ISOMETRIC MS-528-1.2 REV 9

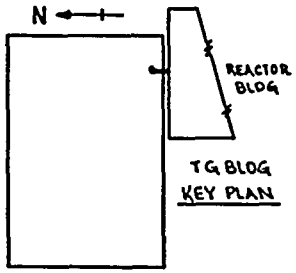

KEY PLAN

THIS DRAWING IS INTENDED FOR USE IN PRESERVICE AND INSERVICE INSPECTION PROGRAMS ONLY.

QUALITY CLASS: 1	ASME CODE CLASS: 2	
ENGR: D TIMMINS	DRAWN: K. M. A.	DATE: 2-1-78

WASHINGTON PUBLIC POWER SUPPLY SYSTEM
RICHLAND, WASHINGTON 99352

WNP-2
WELD & COMPONENT IDENTIFICATION DIAGRAM

TITLE: MAIN STEAM LINE A

DWG NO: MS-201-2 REV 3

NO	DATE	REVISION	BY	CHKD	APPVD	PIPING SYSTEM	NOM DIA (IN)	SCH	NOM WALL THK	MATERIAL SPECIFICATION	MATL TYPE	CAL BLOCK NO
3	9-26-83	REVISED AS NOTED				26"MS(1)-4	26	XXX	1.125	SA 155 CL1 KCF 70	C6	UT-3
2	12-2-81	REVISED AS NOTED, AUGMENTED ISI ADDED				30"MS(1)-4	30	XXX	1.25	SA 155 CL1 KCF 70	C6	UT-1
1	11-6-80	DELETED WELDS 30MS(1)A-2LDI, 3LUI, 4LDI, 5LUI ENCLOSED										
0	1-9-79	ISSUED FOR USE										
A	2-26-78	ISSUED FOR INFORMATION ONLY										

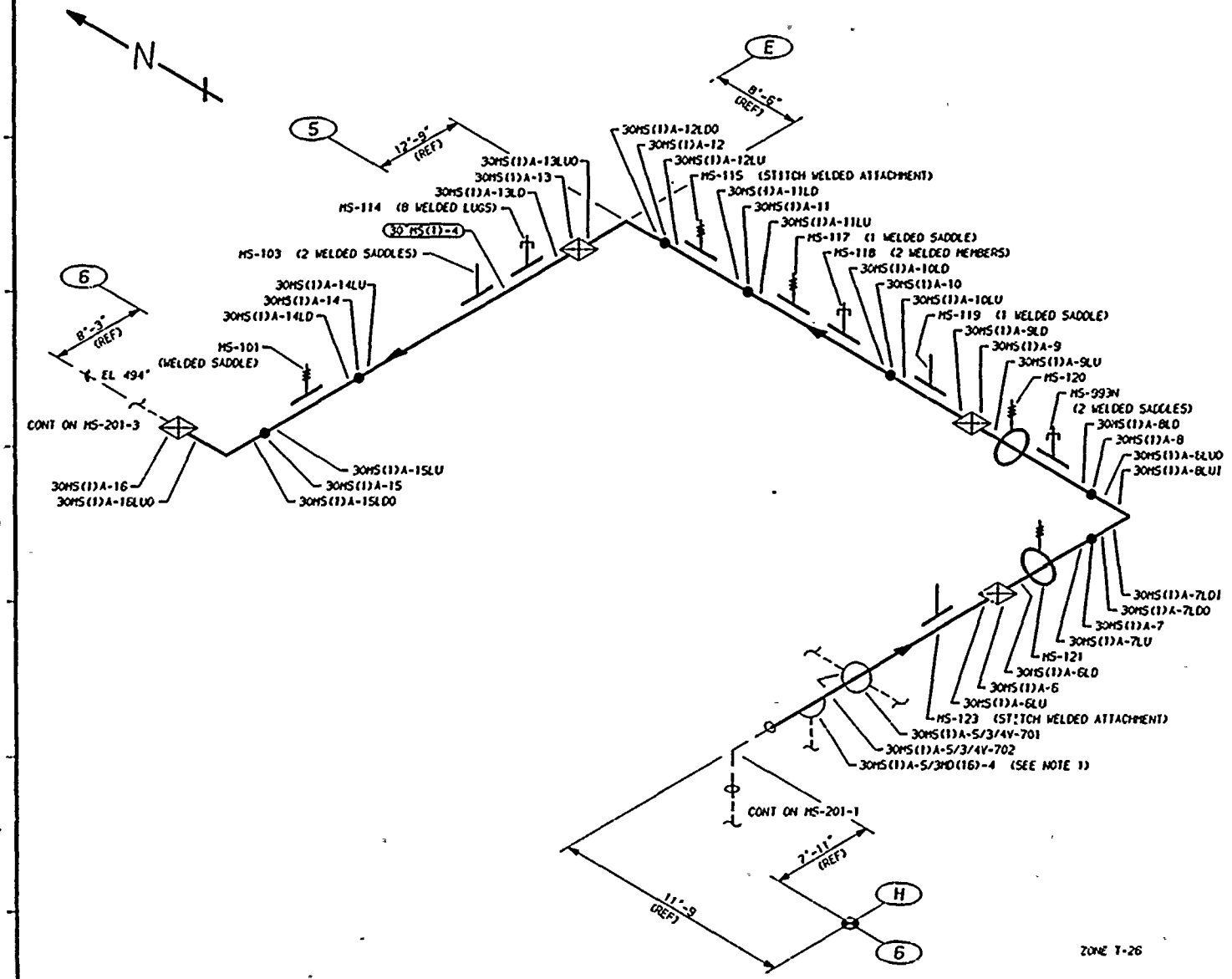

THIS DRAWING IS INTENDED FOR USE IN PRESERVICE AND INSERVICE INSPECTIONS PROGRAMS ONLY.

NOTES

1. EXTEND LEAKAGE EXAM THROUGH DRAINAGE SYSTEM TO VALVES MS-V-72 AND MS-V-73.
2. SCAFFOLDING IS REQUIRED.

REFERENCES:

BOYEE AND CRAIL ISOMETIC
MS-528-4.6 REV 7

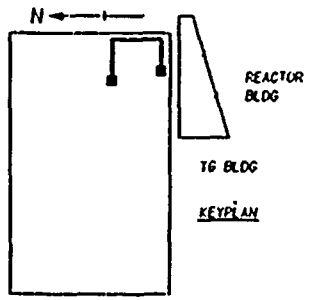

KEYPLAN

QUALITY CLASS: 1	ASME CODE CLASS: 2
ENGR: D TIMMINS	DRAWN: K-McA	DATE: 2-1-78

WASHINGTON PUBLIC POWER
SUPPLY SYSTEM
RICHLAND, WASHINGTON 99352

NO	DATE	REVISION	BY	CHKD	APVD
3	10-13-83	REVISED HANGERS, REDRAWN	K-McA	DPR	TFH
2	12-2-81	REVISED AS NOTED	K-McA	DPR	TFH
1	11-5-80	REVISED AS NOTED	K-McA	TFH	DWP
0	1-9-79	ISSUED FOR USE	K-McA	TFH / DWP	DWP / LEB
A	4-20-78	ISSUED FOR INFORMATION ONLY	K-McA	MOH / DCI	DWP

PIPING SYSTEM	NOM DIA (IN)	SCH	NOM WALL THK	MATERIAL SPECIFICATION	MATL TYPE	CAL BLOCK NO
30"MS(1)-4	30	XXX	1.25	SA 155 CL 1 KCF 70	CS	UT-1

WNP-2
WELD & COMPONENT
IDENTIFICATION DIAGRAM

TITLE:
MAIN STEAM LINE A

DWG NO: MS-201-2 | REV 3.

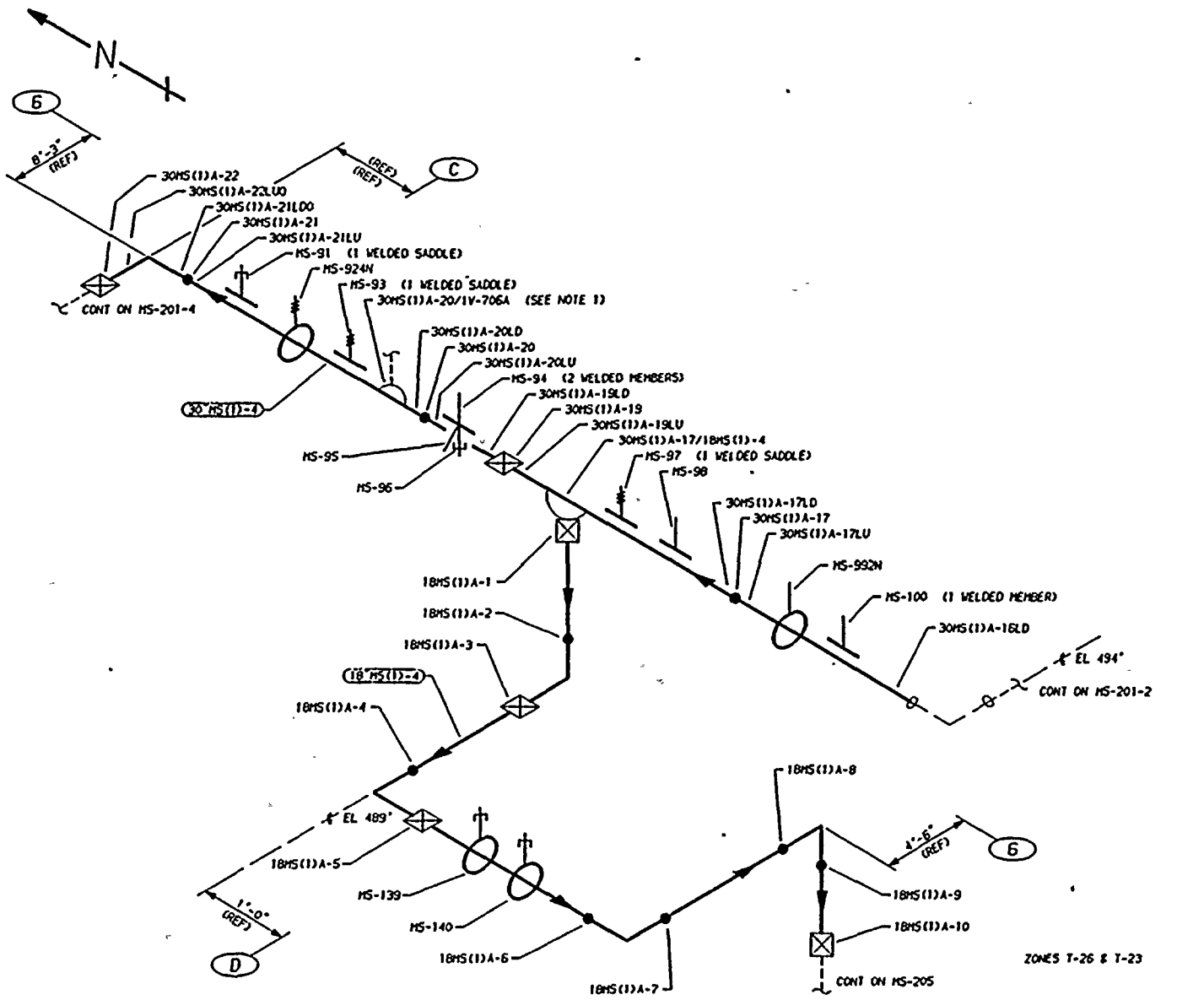

THIS DRAWING IS INTENDED FOR USE IN PRESERVICE AND INSERVICE INSPECTIONS PROGRAMS ONLY.

NOTES

1. EXTEND LEAKAGE EXAM THROUGH VALVE HS-V-706A TO MAIN STEAM PRESSURE AVERAGING MANIFOLD.

REFERENCES:

BOYEE AND CRAIL ISOMETIC
HS-528-7,10 REV 6

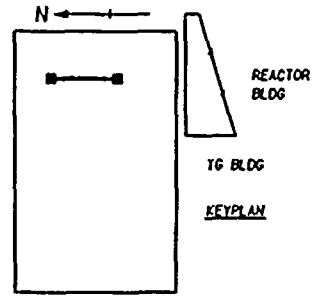

KEYPLAN

QUALITY CLASS: 1	ASME CODE CLASS: 2
ENGR: D TIMMINS	DRAWN: K-McA	DATE: 2-1-78

WASHINGTON PUBLIC POWER SUPPLY SYSTEM
RICHLAND, WASHINGTON 99352

WNP-2
WELD & COMPONENT
IDENTIFICATION DIAGRAM

TITLE: MAIN STEAM LINE A

DWG NO: HS-201-3 REV 4

NO	DATE	REVISION	BY	CHKD	APVD
4	[illegible]	REVISED HANGERS REDRAWN	[illegible]	[illegible]	[illegible]
3	12-2-81	REVISED HANGERS	K-McA	DPR	TFH
2	11-5-80	DELETED WELDS 21LDI & 22LDI, AND AS NOTED	K-McA	TFH	DWP
1	9-13-79	DELETED TEE & CORRESPONDING WELDS, ADDED WOL IN D-4	K-McA	TFH / DWP	DWP / LEG
0	1-9-79	ISSUED FOR USE	K-McA	TFH / DWP	DWP / LEG
A	4-20-78	ISSUED FOR INFORMATION ONLY	K-McA	NCH / (CC)	DWP

PIPING SYSTEM	NOM DIA (IN)	SCH	NOM WALL THK	MATERIAL SPECIFICATION	MATL TYPE	CAL BLOCK NO
30"HS(1)-4	30	XXX	1.25	SA 155 CL 1 KCF 70	CS	UT-1
18"HS(1)-4	18	80	0.938	SA 106 GR B	CS	UT-12

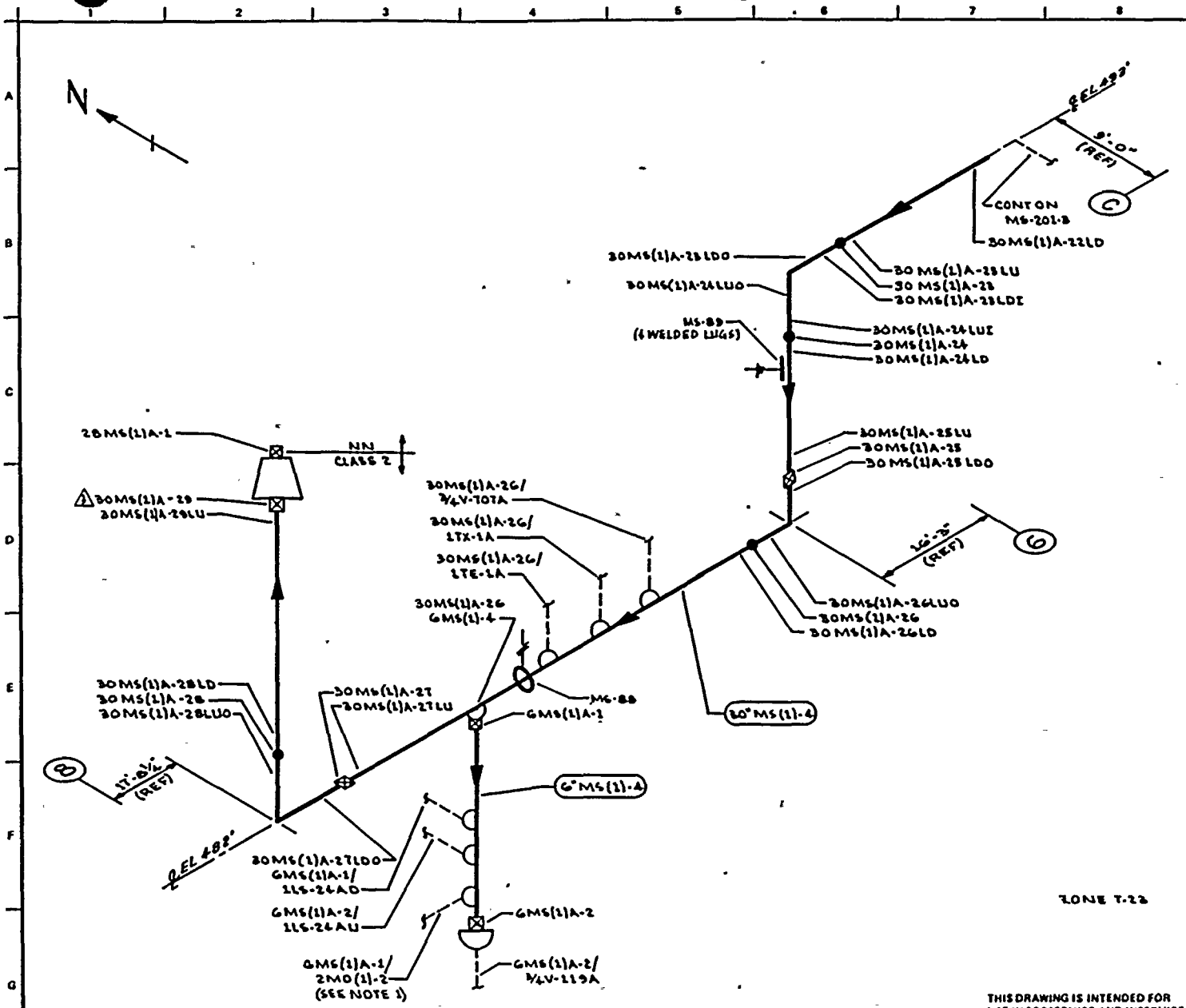

NOTES:

1. EXTEND LEAKAGE EXAM THROUGH VALVES MD-V-120A & MD-V-117A.
2. SCAFFOLDING IS REQUIRED.

REFERENCES:

BOVEE & CRAIL ISOMETRICS

MS-528-7.10	REV 6
MS-528-11.12	REV 5
MS-528-13	REV 8

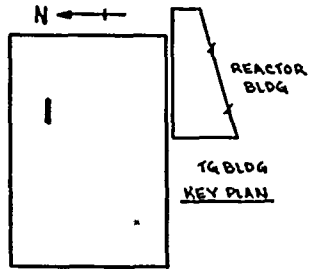

THIS DRAWING IS INTENDED FOR USE IN PRESERVICE AND INSERVICE INSPECTION PROGRAMS ONLY.

QUALITY CLASS: 1 | ASME CODE CLASS: 2

ENGR: D TIMMINS | DRAWN: K-McA | DATE: 1-25-78

WASHINGTON PUBLIC POWER SUPPLY SYSTEM
RICHLAND, WASHINGTON 99352

WNP-2
WELD & COMPONENT IDENTIFICATION DIAGRAM

TITLE: MAIN STEAM LINE A

DWG NO: MS-201-4 | REV 3

NO	DATE	REVISION	BY	CHKD	APPVD
3	9-21-83	REVISED AS NOTED			
2	12-2-81	REVISED AS NOTED			
1	11-5-80	DELETED WELDS 25LDI, 26LUI, 27LDI & 28LUI & NOTED			
0	1-9-79	ISSUED FOR USE			
A	4-20-78	ISSUED FOR INFORMATION ONLY			

PIPING SYSTEM	NOM DIA (IN)	SCH	NOM WALL THK	MATERIAL SPECIFICATION	MATL TYPE	CAL BLOCK NO
30" MS(1)-4	30	XXX	1.25	SA 155 CL1 KCF 70	CS	UT-1
6" MS(1)-4	6	80	0.432	SA 106 GR B	CS	NA
28" MS(1)-4	28	XXX	1.420	SA 155 CL1 KCF 70	CS	UT-2

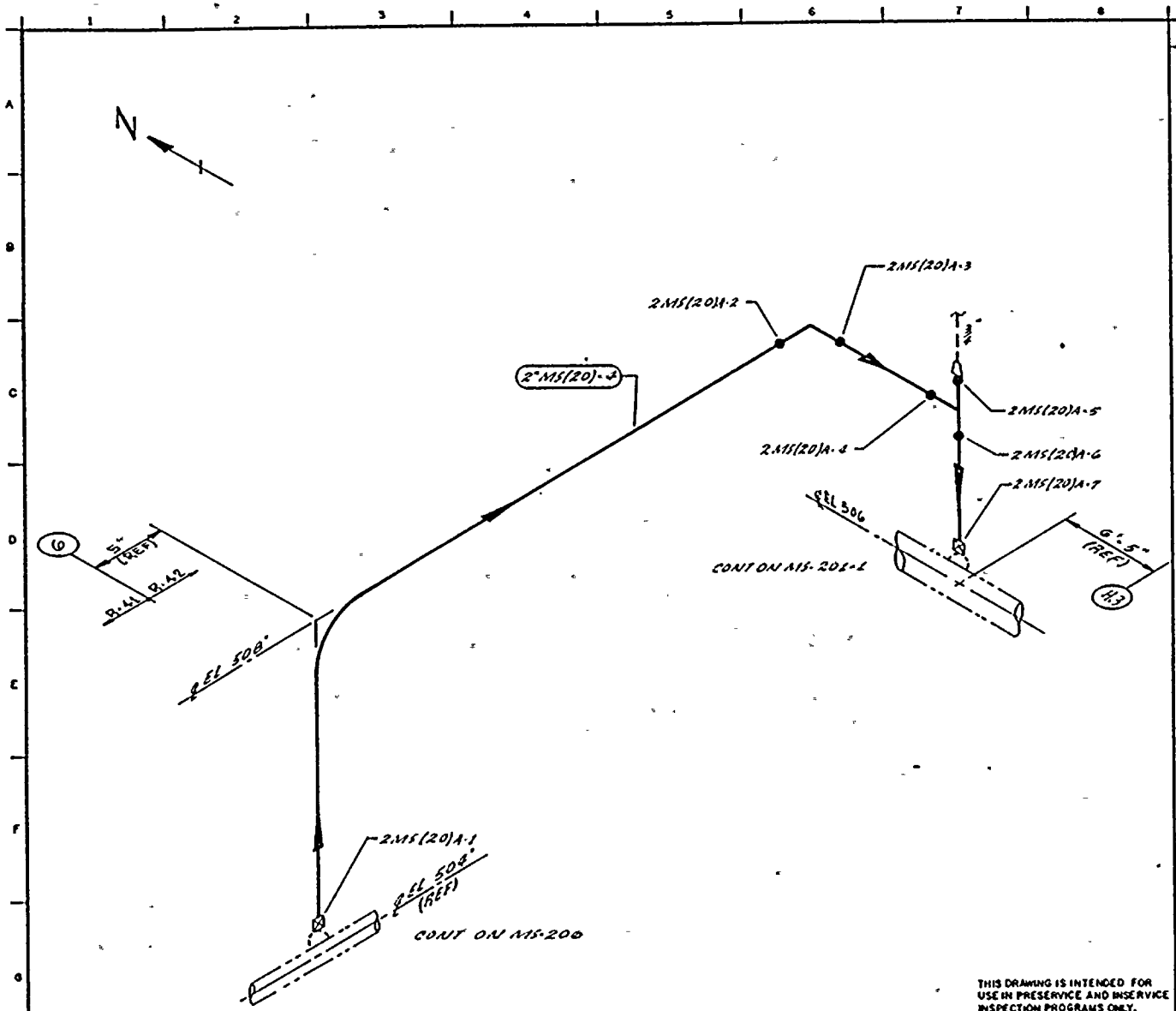

NOTES:

1. For branch piping, 1" or less (conn. shown in dashed lines), extend visual leakage exam through the outermost normally closed nuclear class valve, or until transition to instrument tubing, unless otherwise noted.
2. THIS DWG IDENTIFIES PIPING WELDS THAT REQUIRE AUGMENTED ESI.

REFERENCE:
BOVEE CRAIL ISOMETRIC
MS-1291-1 REV 1

THIS DRAWING IS INTENDED FOR USE IN PRESERVICE AND INSERVICE INSPECTION PROGRAMS ONLY.

PIPING SYSTEM	NOM DIA (IN)	SCH	NOM WALL THK	MATERIAL SPECIFICATION	MATL TYPE	CAL BLOCK NO
2"MS(20)-4	2	160	0.344	SA 106 GR B	CS	N/A

NO	DATE	REVISION	BY	CHKD	APPVD
0		ISSUED FOR USE		JR	JB

QUALITY CLASS: 1 | ASME CODE CLASS: 2

ENGR: [illegible] | DRAWN: [illegible] | DATE: 12-1-81

WASHINGTON PUBLIC POWER SUPPLY SYSTEM
RICHLAND, WASHINGTON 99352

WNP-2
WELD & COMPONENT IDENTIFICATION DIAGRAM

TITLE: MAIN STEAM PRESSURE STABILIZATION LINE

DWG NO: MS-201-5 | REV 0

WNP-02
INTERVAL: PSI
PERIOD: NA
OUTAGE:
DRAWING NO. MS-106

WASHINGTON PUBLIC POWER SUPPLY SYSTEM
PROGRAM PLAN AND SCHEDULE
SYSTEM OR COMPONENT: MS(12)-4
DESCRIPTION: MS RX VES HEAD VENT

DATE 12/14/84

IDENT. NO.	DESCRIPTION	SECT. XI EXAM.	EXAM MTH.	PROCEDURE	CAL. BLOCK	INSERVICE REQ.	INSERVICE SCHEDULED OUTAGE	NOTES
			VT-4	303/8.2.17				
MS-2619-321								
	PSA-1/4 SNUBBER	B-K-2	VT-3	303/8.2.17				S/N 19878
			VT-4	303/8.2.17				S/N 19878
MS-2619-322								
	PSA-1/2 SNUBBER	N/A	VT-3	303/8.2.17				S/N 4041
			VT-4	303/8.2.17				S/N 4041
MS-2619-46								
	PSA-1/2 SNUBBER	B-K-2	VT-3	303/8.2.17				S/N 4005
			VT-4	303/8.2.17				S/N 4005
MS-2619-45								
	PSA-1/4 SNUBBER	B-K-2	VT-3	303/8.2.17				S/N 28450
			VT-4	303/8.2.17				S/N 28450
MS-2619-42B								
	PSA-1/2 SNUBBER	B-K-2	VT-3	303/8.2.17				S/N 22363
			VT-4	303/8.2.17				S/N 22363
MS-2619-42A								
	PSA-1/4 SNUBBER	B-K-2	VT-3	303/8.2.17				S/N 28432
			VT-4	303/8.2.17				S/N 28432
MS-2619-42C								
	PSA-1/4 SNUBBER	B-K-2	VT-3	303/8.2.17				S/N
			VT-4	303/8.2.17				S/N
MS-PB-106								
	MS PRES BNDRY	B-P	VT-2	N/A				SEE NOTES #6 & #7.

WNP-02
INTERVAL: PSI
PERIOD: NA
OUTAGE:
DRAWING NO. MS-106

WASHINGTON PUBLIC POWER SUPPLY SYSTEM
PROGRAM PLAN AND SCHEDULE
SYSTEM OR COMPONENT: MS(12)-4
DESCRIPTION: MS RX VES HEAD VENT

DATE 12/14/84

IDENT. NO.	DESCRIPTION	SECT. XI EXAM.	EXAM MTH.	PROCEDURE	CAL. BLOCK	INSERVICE REQ.	INSERVICE SCHEDULED OUTAGE	NOTES
MS-2619-312			VT-4	303/8.2.17				S/N 105
	PSA-1/2 SNUBBER	B-K-2	VT-3	303/8.2.17				S/N 22338
MS-2619-311			VT-4	303/8.2.17				S/N 22338
	PSA-1/2 SNUBBER	B-K-2	VT-3	303/8.2.17				S/N 2524
MS-2619-313			VT-4	303/8.2.17				S/N 2524
	PSA-1/2 SNUBBER	B-K-2	VT-3	303/8.2.17				S/N 2469
MS-2619-314			VT-4	303/8.2.17				S/N 2469
	PSA-1/4 SNUBBER	B-K-2	VT-3	303/8.2.17				S/N 19884
MS-2619-316			VT-4	303/8.2.17				S/N 19884
	PSA-1/4 SNUBBER	B-K-2	VT-3	303/8.2.17				S/N 28428
MS-2619-317			VT-4	303/8.2.17				S/N 28428
	PSA-1/4 SNUBBER	B-K-2	VT-3	303/8.2.17				S/N 19881
MS-2619-319			VT-4	303/8.2.17				S/N 19881
	PSA-1/2 SNUBBER	B-K-2	VT-3	303/8.2.17				S/N 2536
MS-2619-318			VT-4	303/8.2.17				S/N 2536
	PSA-1/4 SNUBBER	B-K-2	VT-3	303/8.2.17				S/N 280
MS-2619-320			VT-4	303/8.2.17				S/N 280
	SPRING	B-K-2	VT-3	303/8.2.17				

WNP-02
INTERVAL: PSI
PERIOD: NA
OUTAGE:
DRAWING NO. MS-106

WASHINGTON PUBLIC POWER SUPPLY SYSTEM
PROGRAM PLAN AND SCHEDULE
SYSTEM OR COMPONENT: MS(12)-4
DESCRIPTION: MS RX VES HEAD VENT

DATE 12/14/84

IDENT. NO.	DESCRIPTION	SECT. XI EXAM.	EXAM MTH.	PROCEDURE	CAL. BLOCK	INSERVICE REQ.	INSERVICE SCHEDULED OUTAGE	NOTES
MS-2619-15			VT-4	303/8.2.17				S/N 362
	PSA-3 SNUBBER	B-K-2	VT-3	303/8.2.17				S/N 635
			VT-4	303/8.2.17				S/N 635
PWS-52-8	PIPE WHIP	N/A	N/A	N/A				SEE NOTE #1
PWS-52-7	PIPE WHIP	N/A	N/A	N/A				SEE NOTE #1
MS-2619-21	PSA-1 SNUBBER	B-K-2	VT-3	303/8.2.17				S/N 22346
			VT-4	303/8.2.17				S/N 22346
MS-2619-23	PSA-3 SNUBBER	B-K-2	VT-3	303/8.2.17				S/N 2597
			VT-4	303/8.2.17				S/N 2597
MS-2619-24	RIGID	B-K-2	VT-3	303/8.2.17				
MS-2619-213	SPRING	B-K-2	VT-3	303/8.2.17				
			VT-4	303/8.2.17				
MS-2619-210	PSA-1 SNUBBER	B-K-2	VT-3	303/8.2.17				S/N 2592
			VT-4	303/8.2.17				S/N 2592
MS-2619-26	PSA-1 SNUBBER	B-K-2	VT-3	303/8.2.17				S/N 22352
			VT-4	303/8.2.17				S/N 22352
MS-2619-310	PSA-1 SNUBBER	B-K-2	VT-3	303/8.2.17				S/N 105

WNP-02
INTERVAL: PSI
PERIOD: NA
OUTAGE:
DRAWING NO. MS-106

WASHINGTON PUBLIC POWER SUPPLY SYSTEM
PROGRAM PLAN AND SCHEDULE
SYSTEM OR COMPONENT: MS(12)-4
DESCRIPTION: MS RX VES HEAD VENT

DATE 12/14/84

IDENT. NO.	DESCRIPTION	SECT. XI EXAM.	EXAM MTH.	PROCEDURE	CAL. BLOCK	INSERVICE REQ.	INSERVICE SCHEDULED OUTAGE	NOTES
4MS(12)-1								
	NOZ TO FLANGE	B-J	VOL	UTP-10	UT-108			
			SUR	PTP-1				
4MS(12)-1BD								
	FLANGE BOLTING	B-G-2	VT-1	OCI 7-1				
4MS(12)-2								
	FLANGE/REDUCER	B-J	VOL	UTP-10	UT-30			
			SUR	PTP-1				
PWS-52-11								
	PIPE WHIP	N/A	N/A	N/A				SEE NOTE #1
MS-2619-11								
	PSA-1/4 SNUBBER	N/A	VT-3	N/A				S/N 398,LOCATED ON CONDENSING CHAMBER.
			VT-4	N/A				S/N 398,LOCATED ON CONDENSING CHAMBER.
MS-2619-12								
	PSA-1/4 SNUBBER	N/A	VT-3	N/A				S/N 6226
			VT-4	N/A				S/N 6226
MS-2619-14								
	PSA-1/2 SNUBBER	B-K-2	VT-3	303/8.2.17				S/N 4021
			VT-4	303/8.2.17				S/N 4021
MS-2619-13								
	PSA-1 SNUBBER	B-K-2	VT-3	303/8.2.17				S/N 625
			VT-4	303/8.2.17				S/N 625
PWS-52-9								
	PIPE WHIP	N/A	N/A	N/A				SEE NOTE #1
MS-2619-16								
	PSA-3 SNUBBER	B-K-2	VT-3	303/8.2.17				S/N 362

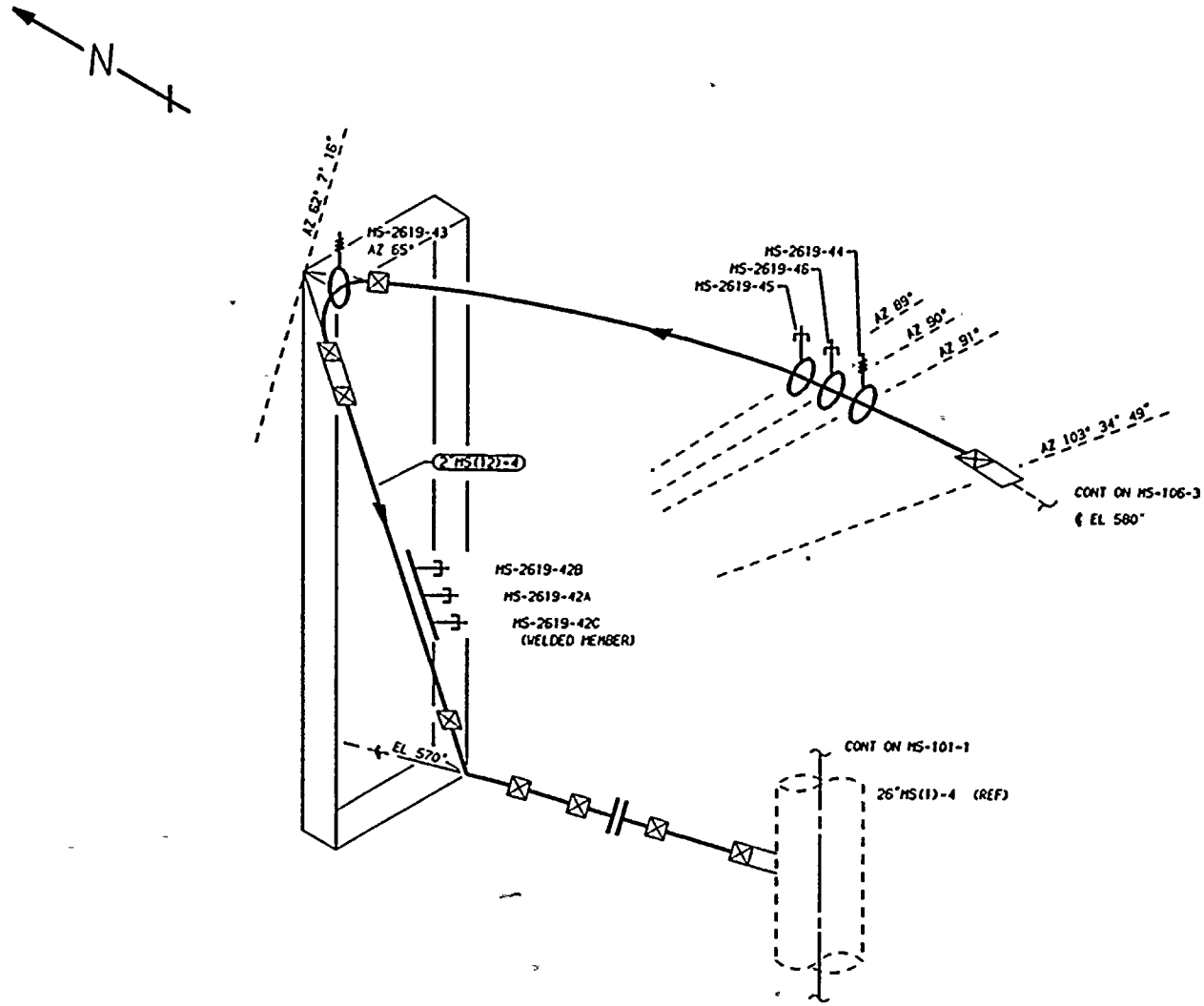

ZONE R-74

THIS DRAWING IS INTENDED FOR USE IN PRESERVICE AND INSERVICE INSPECTIONS PROGRAMS ONLY.

PIPING SYSTEM	NOM DIA (IN)	SCH	NOM WALL THK	* MATERIAL SPECIFICATION	MATL TYPE	CAL BLOCK NO
2"MS(12)-4	2	160	0.344	SA 106 GR B	CS	NA

NO	DATE	REVISION	BY	CHKD	APVD
1	12-2-83	GENERAL UPDATE, SPLIT DWG REDRAWN	[illegible]	TFH / DWP	TFH
0	12-22-78	ISSUED FOR USE (REDRAWN)	K-McA	DWP / DI	LFB
A	5-18-78	ISSUED FOR INFORMATION ONLY	K-McA		DWP

NOTES:

1. THIS DRAWING IDENTIFIES PIPING AND COMPONENTS SUBJECT TO A VISUAL EXAM FOR EVIDENCE OF LEAKAGE DURING SYSTEM HYDRO OR OPERABILITY TESTS. TESTS ARE TO BE CONDUCTED PER THE REQUIREMENTS OF ASME SECTION XI, PARAGRAPH IWA-5000.

REFERENCES:

ISI - 229

BURNS & ROE DRAWING
M200 SH 52 REV 3

WSH/BOCON/GERI
MS-2619-4 REV 9
MS-2619-5 REV 5

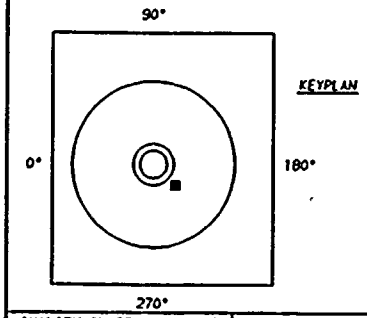

KEYPLAN

QUALITY CLASS: 1	ASME CODE CLASS: 1	
ENGR: D TIMMINS	DRAWN: K-McA	DATE: 4-13-78

WASHINGTON PUBLIC POWER
SUPPLY SYSTEM
RICHLAND, WASHINGTON 99352

WNP-2
WELD & COMPONENT
IDENTIFICATION DIAGRAM

TITLE:
MAIN STEAM REACTOR VESSEL HEAD VENT

DWG NO: MS-106-4 REV 1

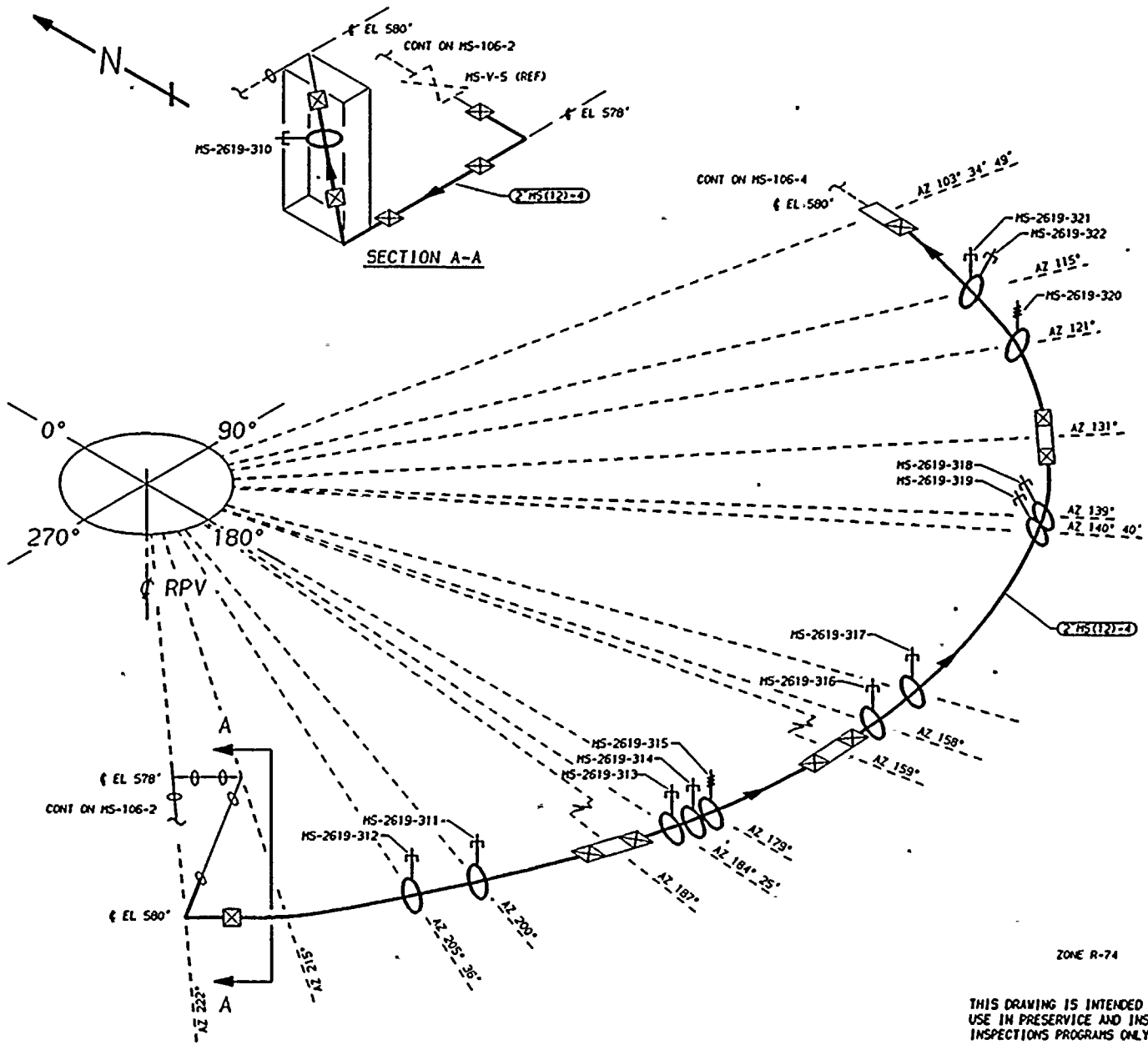

NOTES:

1. THIS DRAWING IDENTIFIES PIPING AND COMPONENTS SUBJECT TO A VISUAL EXAM FOR EVIDENCE OF LEAKAGE DURING SYSTEM HYDRO OR OPERABILITY TESTS. TESTS ARE TO BE CONDUCTED PER THE REQUIREMENTS OF ASME SECTION XI, PARAGRAPH IWA-5000.

REFERENCES:

151 - 229

BURNS & ROE DRAWING
M200 SH 52 REV 3

WSH/BOCON/GERI
MS-2619-3 REV 9

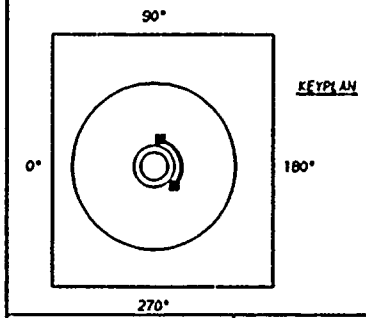

QUALITY CLASS: 1	ASME CODE CLASS: 1	
ENGR: D TIMMINS	DRAWN: K-McA	DATE: 4-13-78

THIS DRAWING IS INTENDED FOR USE IN PRESERVICE AND INSERVICE INSPECTIONS PROGRAMS ONLY.

WASHINGTON PUBLIC POWER
SUPPLY SYSTEM
RICHLAND, WASHINGTON 99352

PIPING SYSTEM	NOM DIA (IN)	SCH	NOM WALL THK	MATERIAL SPECIFICATION	MATL TYPE	CAL BLOCK NO
2"MS(12)-4	2	160	0.344	SA 106 GR B	CS	NA

NO	DATE	REVISION	BY	CHKD	APVD
1	12-8-83	GENERAL UPDATE, SPLIT DWG REDRAWN	[illegible]	DWP TFH	LCX
0	12-22-78	ISSUED FOR USE (REDRAWN)	K-McA	TFH DWP	LFB
A	5-18-78	ISSUED FOR INFORMATION ONLY	K-McA	DWP DCI	DWP

WNP-2
WELD & COMPONENT
IDENTIFICATION DIAGRAM

TITLE:
MAIN STEAM REACTOR VESSEL HEAD VENT

DWG NO: MS-106-3 REV 1

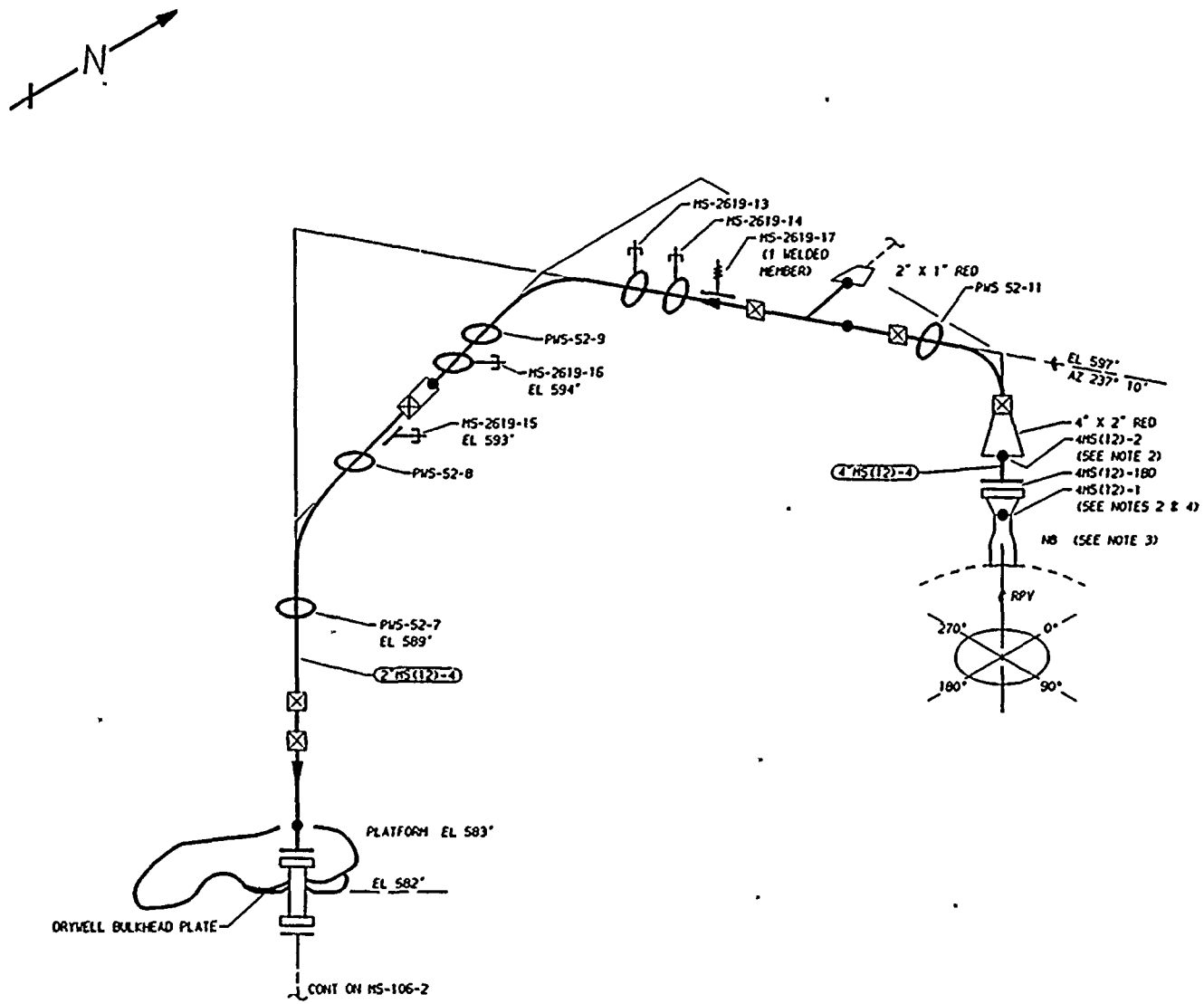

ZONE R-74

THIS DRAWING IS INTENDED FOR USE IN PRESERVICE AND INSERVICE INSPECTIONS PROGRAMS ONLY.

NOTES:

1. THIS DRAWING IDENTIFIES PIPING AND COMPONENTS SUBJECT TO A VISUAL EXAM FOR EVIDENCE OF LEAKAGE DURING SYSTEM HYDRO OR OPERABILITY TESTS. TESTS ARE TO BE CONDUCTED PER THE REQUIREMENTS OF ASME SECTION XI, PARAGRAPH IWA-5000.
2. WELDS 4MS(12)-1 & 4MS(12)-2 ARE FITTING TO FITTING. THEY SHOULD BE GROUND FLUSH AND ULTRASONICALLY EXAMINED WITH SHALL (1/4") TRANSDUCERS.
3. FOR NOZZLE ASSEMBLY DETAILS SEE RPV-112.
4. WELD 4MS(12)-1 UTILIZES CAL BLOCK UT-108.

REFERENCES:

ISI - 229

BURNS & ROE DRAWING
M200 SH 52 REV 3

CBI NUCLEAR CO.
71, REV 9 NB VENT

WSH/BOCON/GERI
MS-2619-1 REV B

KEYPLAN

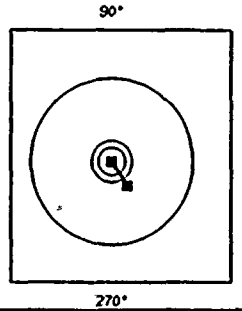

QUALITY CLASS: I	ASME CODE CLASS: I	
ENGR: D TIMMINS	DRAWN: K-McA	DATE: 4-12-78

WASHINGTON PUBLIC POWER SUPPLY SYSTEM
RICHLAND, WASHINGTON 99352

PIPING SYSTEM	NOM DIA (IN)	SCH	NOM WALL THK	MATERIAL SPECIFICATION	MATL TYPE	CAL BLOCK NO
2"MS(12)-4	2	160	0.344	SA 106 GR B	CS	NA
4"MS(12)-4	4	80	0.337	SA 105 GR II	CS	UT-30

NO	DATE	REVISION	BY	CHKD	APVD
2	12-2-83	GENERAL UP-DATE REDRAWN	K-McA	TFH	DWP
1	11-5-80	ADDED NOTES 3 & 4.	K-McA	TFH	DWP
0	12-22-78	ISSUED FOR USE (REDRAWN)	K-McA	TFH	LFB
A	5-18-78	ISSUED FOR INFORMATION ONLY	K-McA	DWP	LFB

WNP-2
WELD & COMPONENT
IDENTIFICATION DIAGRAM

TITLE:
MAIN STEAM REACTOR VESSEL HEAD VENT

DWG NO: MS-106-1 REV 2

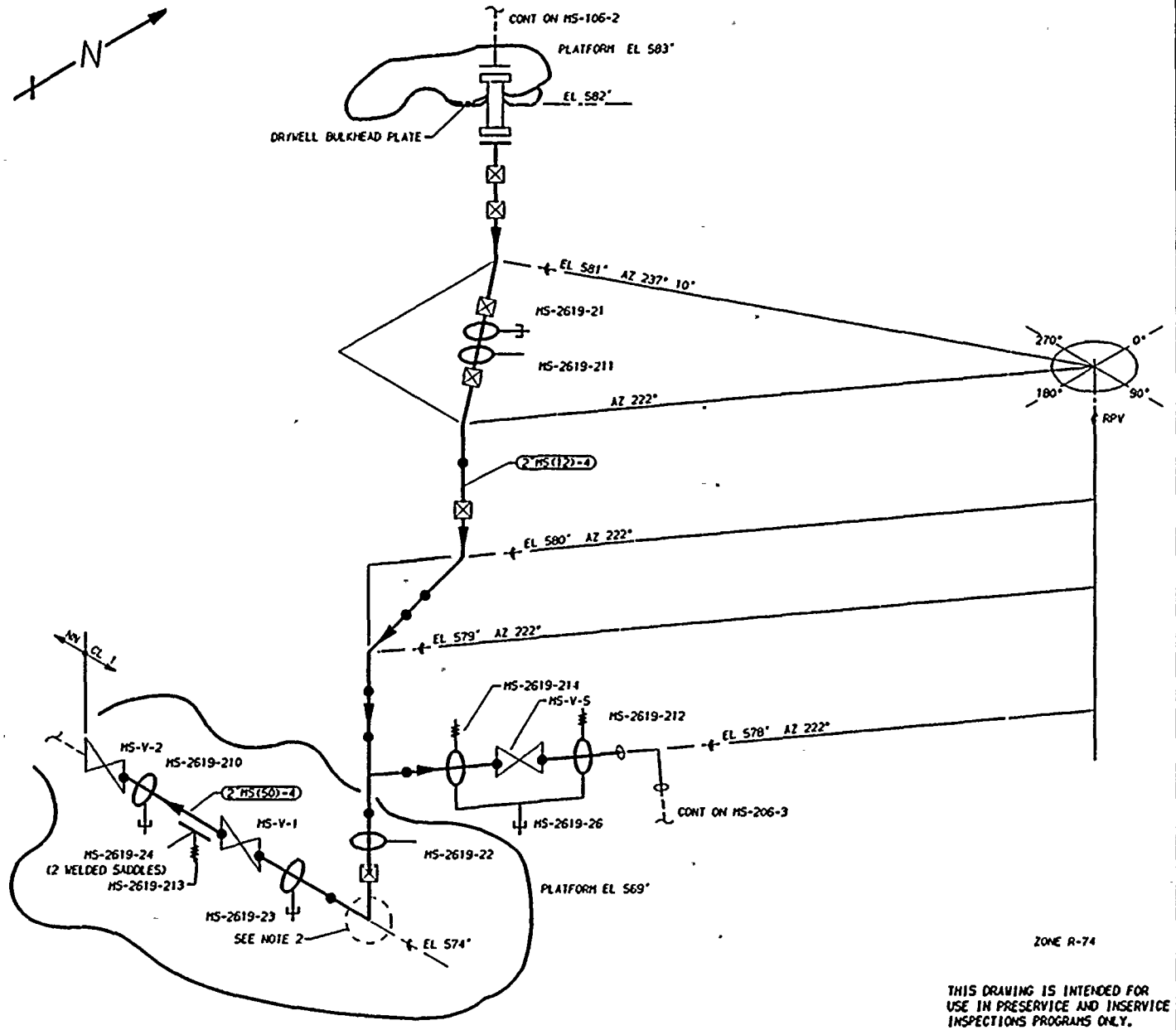

NOTES:

1. THIS DRAWING IDENTIFIES PIPING AND COMPONENTS SUBJECT TO A VISUAL EXAM FOR EVIDENCE OF LEAKAGE DURING SYSTEM HYDRO OR OPERABILITY TESTS. TESTS ARE TO BE CONDUCTED PER THE REQUIREMENTS OF ASME SECTION XI, PARAGRAPH IWA-5000.
2. LEG AT EL 574' HAS BEEN ROTATED FOR CLARITY.

REFERENCES:

ISI - 229

BURNS & ROE DRAWING
M200 SH 52 REV 3

WSH/BOCON/GERI
MS-2619-1 REV 8

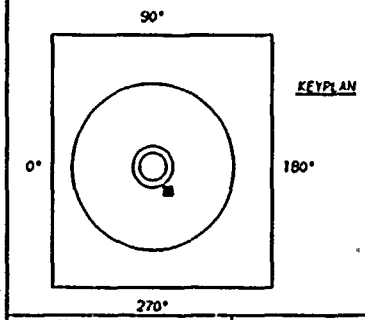

QUALITY CLASS: 1	ASME CODE CLASS: 1	
ENGR: D TIMMINS	DRAWN: K-McA	DATE: 4-13-78

THIS DRAWING IS INTENDED FOR USE IN PRESERVICE AND INSERVICE INSPECTIONS PROGRAMS ONLY.

WASHINGTON PUBLIC POWER
SUPPLY SYSTEM
RICHLAND, WASHINGTON 99352

PIPING SYSTEM	NOM DIA (IN)	SCH	NOM WALL THK	MATERIAL SPECIFICATION	MATL TYPE	CAL BLOCK NO
2"MS(12)-4	2	160	0.344	SA 106 GR B	CS	NA
2"MS(50)-4	2	160	0.344	SA 106 GR B	CS	NA

NO	DATE	REVISION	BY	CHKD	APVD
1	12-2-83	GENERAL UP-DATE REDRAWN	K-McA	DMP TFH	LFB
0	12-22-78	ISSUED FOR USE (REDRAWN)	K-McA	DMP	LFB
A	5-18-78	ISSUED FOR INFORMATION ONLY	K-McA	DMP (DC)	DMP

WNP-2
WELD & COMPONENT
IDENTIFICATION DIAGRAM

TITLE:
MAIN STEAM REACTOR VESSEL HEAD VENT

DWG NO. MS-106-2 REV 1

WNP-02
INTERVAL: PSI
PERIOD: NA
OUTAGE:
DRAWING NO. MS-105

WASHINGTON PUBLIC POWER SUPPLY SYSTEM
PROGRAM PLAN AND SCHEDULE
SYSTEM OR COMPONENT: MS(9)-4
DESCRIPTION: MS VALVE DRAINS

DATE 12/14/84

IDENT. NO.	DESCRIPTION	SECT. XI EXAM.	EXAM MTH.	PROCEDURE	CAL. BLOCK	INSERVICE REQ.	INSERVICE SCHEDULED OUTAGE	NOTES
MS-1369-13								
	PSA-1/2 SNUBBER	B-K-2	VT-3	303/8.2.17				S/N 2582
			VT-4	303/8.2.17				S/N 2582
MS-1369-12								
	PSA-1/2 SNUBBER	B-K-2	VT-3	303/8.2.17				S/N 2154
			VT-4	303/8.2.17				S/N 2154
PWS-53-13								
	PIPE WHIP	N/A	N/A	N/A				SEE NOTE #1
PWS-53-3								
	PIPE WHIP	N/A	N/A	N/A				SEE NOTE #1
PWS-53-2								
	PIPE WHIP	N/A	N/A	N/A				SEE NOTE #1
PWS-53-1								
	PIPE WHIP	N/A	N/A	N/A				SEE NOTE #1
MS-PB-105								
	MS PRES BNDRY	B-P	VT-2	N/A				SEE NOTES #6 & #7.

WNP-02
INTERVAL: PSI
PERIOD: NA
OUTAGE:
DRAWING NO. MS-105

WASHINGTON PUBLIC POWER SUPPLY SYSTEM
PROGRAM PLAN AND SCHEDULE
SYSTEM OR COMPONENT: MS(9)-4
DESCRIPTION: MS VALVE DRAINS

DATE 12/14/84

IDENT. NO.	DESCRIPTION	SECT. XI EXAM.	EXAM MTH.	PROCEDURE	CAL. BLOCK	INSERVICE REQ.	SCHEDULED OUTAGE	NOTES
PWS-53-18	PIPE WHIP	N/A	N/A	N/A				SEE NOTE #1
PWS-53-19	PIPE WHIP	N/A	N/A	N/A				SEE NOTE #1
MS-53-15	PIPE WHIP	N/A	N/A	N/A				SEE NOTE #1
PWS-53-8	PIPE WHIP	N/A	N/A	N/A				SEE NOTE #1
PWS-53-9	PIPE WHIP	N/A	N/A	N/A				SEE NOTE #1
PWS-53-17	PIPE WHIP	N/A	N/A	N/A				SEE NOTE #1
MS-1368-13	PSA-1/2 SNUBBER	B-K-2	VT-3	303/8.2.17				S/N 2145
			VT-4	303/8.2.17				S/N 2145
MS-1368-12	PSA-1/2 SNUBBER	B-K-2	VT-3	303/8.2.17				S/N 2537
			VT-4	303/8.2.17				S/N 2537
PWS-53-16	PIPE WHIP	N/A	N/A	N/A				SEE NOTE #1
PWS-53-12	PIPE WHIP	N/A	N/A	N/A				SEE NOTE #1
PWS-53-11	PIPE WHIP	N/A	N/A	N/A				SEE NOTE #1
PWS-53-10	PIPE WHIP	N/A	N/A	N/A				SEE NOTE #1
PWS-53-5	PIPE WHIP	N/A	N/A	N/A				SEE NOTE #1
PWS-53-6	PIPE WHIP	N/A	N/A	N/A				SEE NOTE #1
PWS-53-14	PIPE WHIP	N/A	N/A	N/A				SEE NOTE #1

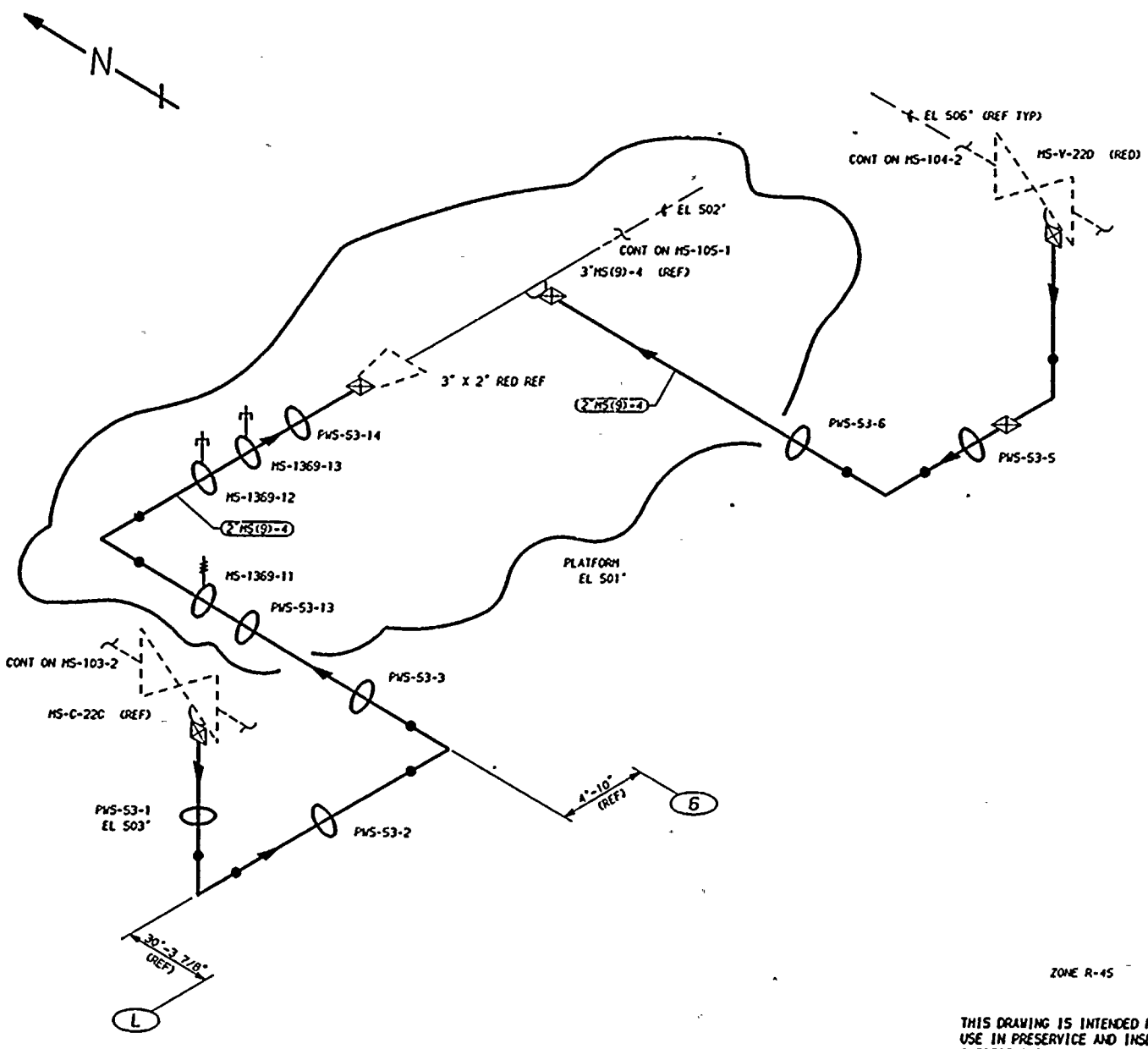

NOTES:

1. THIS DRAWING IDENTIFIES PIPING AND COMPONENTS SUBJECT TO A VISUAL EXAM FOR EVIDENCE OF LEAKAGE DURING SYSTEM HYDRO OR OPERABILITY TESTS. TESTS ARE TO BE CONDUCTED PER THE REQUIREMENTS OF ASME SECTION XI, PARAGRAPH IWA-5000.

REFERENCES:

ISI - 229

BOVEE & CRAIL ISOMETRICS
MS-1369-1 REV 7
MS-1370-1 REV 7

KEYPLAN

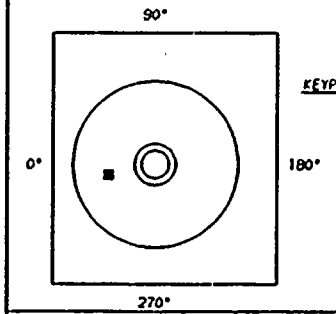

THIS DRAWING IS INTENDED FOR USE IN PRESERVICE AND INSERVICE INSPECTIONS PROGRAMS ONLY.

PIPING SYSTEM	NOM DIA (IN)	SCH	NOM WALL THK	MATERIAL SPECIFICATION	MATL TYPE	CAL BLOCK NO
2"MS(9)-4	2	160	0.344	SA 106 GR B	CS	NA

NO	DATE	REVISION	BY	CHK'D	APVD
1	12-2-83	GENERAL UP-DATE REDRAWN	K-McA	DPR	TFH
1	12-2-81	REVISED AS NOTED	K-McA	DPR	TFH
0	12-22-78	ISSUED FOR USE (REDRAWN)	K-McA	TFH	LFB
A	5-18-78	ISSUED FOR INFORMATION ONLY	K-McA	DMP DCJ	LFB

QUALITY CLASS: 1 | ASME CODE CLASS: 1

ENGR: D TIMMINS | DRAWN: K-McA | DATE: 4-11-78

WASHINGTON PUBLIC POWER
SUPPLY SYSTEM
RICHLAND, WASHINGTON 99352

WNP-2
WELD & COMPONENT
IDENTIFICATION DIAGRAM

TITLE:

MAIN STEAM VALVE DRAINS

DWG NO: MS-105-3 | REV 2

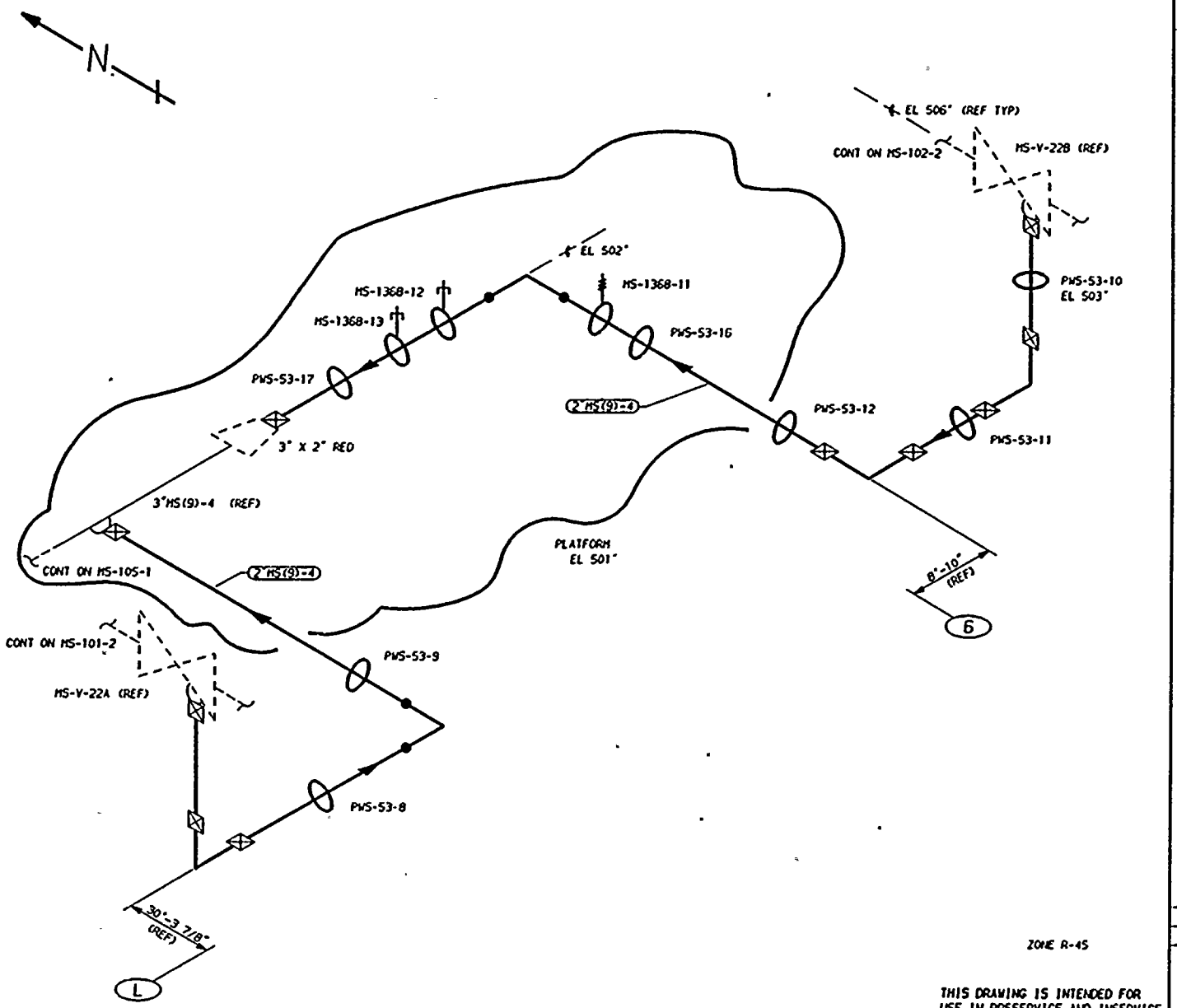

ZONE R-45

THIS DRAWING IS INTENDED FOR USE IN PRESERVICE AND INSERVICE INSPECTIONS PROGRAMS ONLY.

NOTES:

1. THIS DRAWING IDENTIFIES PIPING AND COMPONENTS SUBJECT TO A VISUAL EXAM FOR EVIDENCE OF LEAKAGE DURING SYSTEM HYDRO OR OPERABILITY TESTS. TESTS ARE TO BE CONDUCTED PER THE REQUIREMENTS OF ASME SECTION XI, PARAGRAPH IWA-5000.

REFERENCES:

151 - 229

BOYEE & CRAIL ISOMETRICS
MS-1367-1 REV 9
MS-1368-1 REV 7

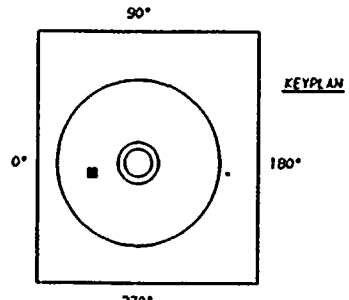

1	12-2-83	GENERAL UP-DATE REDRAWN	K-McA	DPR	TFH
1	12-2-81	REVISED AS NOTED	K-McA	DPR	TFH
0	12-22-78	ISSUED FOR USE (REDRAWN)	K-McA	TFH	LFB
A	5-18-78	ISSUED FOR INFORMATION ONLY	K-McA	DCI	LFB
NO	DATE	REVISION	BY	CHKD	APVD

PIPING SYSTEM	NOM DIA (IN)	SCH	NOM WALL THK	MATERIAL SPECIFICATION	MATL TYPE	CAL BLOCK NO
2"MS(9)-4	2	160	0.344	SA 106 GR B	CS	NA

QUALITY CLASS: 1	ASME CODE CLASS: 1
ENGR: D TIMMINS	DRAWN: K-McA / DATE: 4-11-78

WASHINGTON PUBLIC POWER SUPPLY SYSTEM
RICHLAND, WASHINGTON 99352

WNP-2
WELD & COMPONENT
IDENTIFICATION DIAGRAM

TITLE:
MAIN STEAM VALVE DRAINS

DWG NO: MS-105-2 REV 2

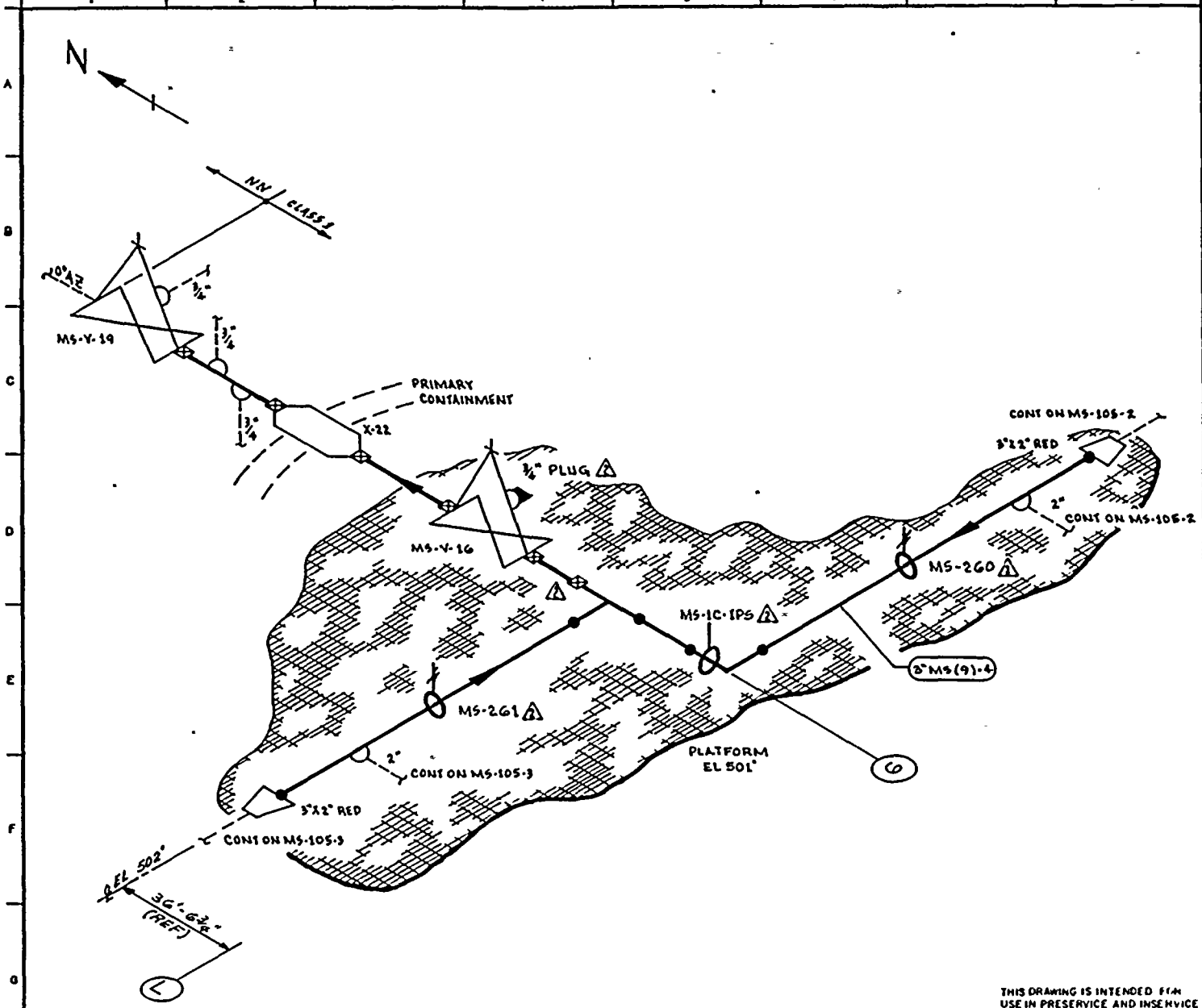

NOTES:

1. THIS DRAWING IDENTIFIES PIPING & COMPONENTS SUBJECT TO A VISUAL EXAM FOR EVIDENCE OF LEAKAGE DURING SYSTEM HYDRO OR OPERABILITY TESTS. TESTS ARE TO CONDUCTED PER THE REQUIREMENTS OF ASME SECTION XI, PARAGRAPH IWA-5000.
2. FOR BRANCH PIPING (CONN SHOWN IN DASHED LINES) EXTEND VISUAL LEAKAGE EXAM THROUGH THE OUTERMOST NORMALLY CLOSED NUCLEAR CLASS VALVE OR UNTIL TRANSITION TO INSTRUMENT TUBING, UNLESS OTHERWISE NOTED.
3. AT LOCATIONS WHERE LEAKAGE IS NORMALLY EXPECTED (E.G. VALVE STEM & PUMP SEAL LEAKOFF CONNECTIONS) VERIFY LEAKAGE COLLECTION SYSTEM OPERABILITY ONLY. NO HYDRO TEST OF COLLECTION SYSTEM IS REQUIRED.

REFERENCES:

BOVEE & CRAIL ISOMETRICS

MS-582-1.2 REV 7
MS-582-1.4 REV 11

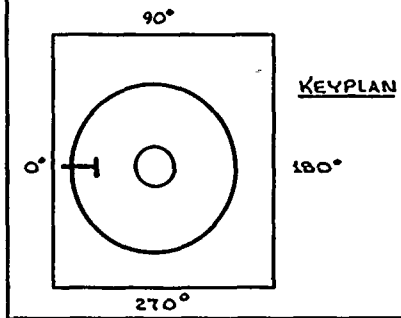

QUALITY CLASS: I	ASME CODE CLASS: I	
ENGR D TIMMINS	DRAWN: K.M.A	DATE: 4-10-78

THIS DRAWING IS INTENDED FOR USE IN PRESERVICE AND INSERVICE INSPECTION PROGRAMS ONLY.

WASHINGTON PUBLIC POWER SUPPLY SYSTEM
RICHLAND WASHINGTON 99352

WNP-2
WELD & COMPONENT IDENTIFICATION DIAGRAM

PIPING SYSTEM	NOM DIA (IN)	SCH	NOM WALL THK	MATERIAL SPECIFICATION	MATL TYPE	CAL BLOCK NO
3" MS(9)-4	3	160	0.438	SA 106 GR B	CS	NA

NO	DATE	REVISION	BY	CHKD	APPVD
2	12-2-83	REVISED AS NOTED ADDED KEYPLAN	K.M.A		TFH
1	12-2-81	REVISED AS NOTED	K.M.A		TFH
0	11-11-78	ISSUED FOR USE (REDRAWN)	K.M.A		
A	5-18-78	ISSUED FOR INFORMATION ONLY	K.M.A		

TITLE: MAIN STEAM VALVE DRAINS

DWG NO: MS-105-1 REV 2

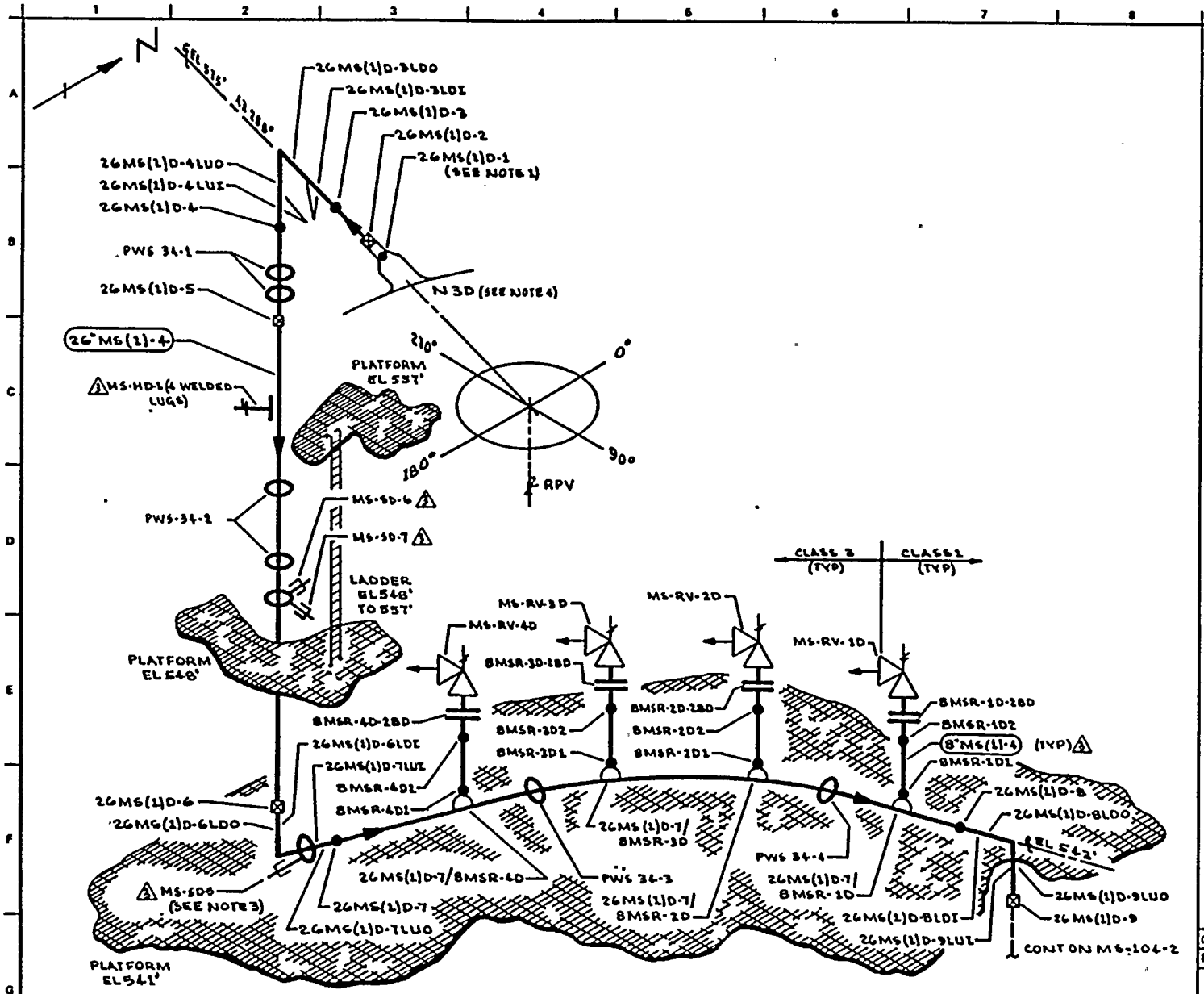

NOTES:

1. WELD 26MS(1)D-1 UTILIZES CAL BLOCK UT-104.
2. ACCESS TO WELDS 26MS(1)D-1 THRU 26MS(1)D-5 REQUIRES TEMPORARY SCAFFOLDING.
3. ACCESS TO WELD 26MS(1)D-7 REQUIRES REMOVAL OF 26MS(1)D-6PR.
4. FOR NOZZLE ASSEMBLY DETAILS SEE RPV-107.

REFERENCES:

GENERAL ELECTRIC DRAWINGS

761 E 992	131 C 8048
131 C 7734	131 C 8030
131 C 8403	131 C 8031
131 C 8501	

CBI NUCLEAR CO

85, REV 3, N3-NOZZLE

BOVEE CRAIL/GERI

BC/G-214 REV 6

KEYPLAN

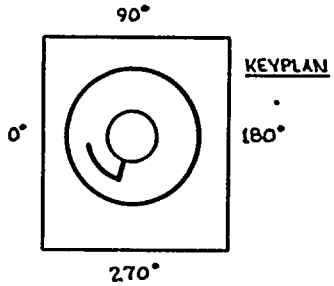

QUALITY CLASS: 1 | ASME CODE CLASS: 1

ENGR: D TIMMINS | DRAWN: K.M.C.A | DATE: 1-19-78

WASHINGTON PUBLIC POWER SUPPLY SYSTEM

RICHLAND, WASHINGTON 99352

THIS DRAWING IS INTENDED FOR USE IN PRESERVICE AND INSERVICE INSPECTION PROGRAMS ONLY.

NO	DATE	REVISION	BY	CHKD	APPVD
3	9-26-83	ADDED UT-46, LUGS & AS NOTED ADDED KEYPLAN	KMA	EPK	TRK
2	11-5-80	ADDED NOTE # 4. REVISED AS NOTED	KMA	KMA	DWP
1	1-10-78	CAL BLOCK REFERENCE CHANGED (FOR 8" PIPING)	KMA	KMA	DJP
0	11-27-78	ISSUED FOR USE	KMA	DWP	
A	4-21-78	ISSUED FOR INFORMATION ONLY	KMA	DCJ	DWP

PIPING SYSTEM	NOM DIA (IN)	SCH	NOM WALL THK	MATERIAL SPECIFICATION	MATL TYPE	CAL BLOCK NO
26"MS(1)-4	26	XXX	1.125	SA 106 GR B	CS	UT-4
8"MS(1)-4	8	160	0.906	SA 106 GR B	CS	UT-24
LUGS	NA	NA	NA	SA 515 GR 70	CS	UT-46

WNP-2

WELD & COMPONENT IDENTIFICATION DIAGRAM

TITLE: MAIN STEAM LINE D

DWG NO: MS-104-1 | REV 3

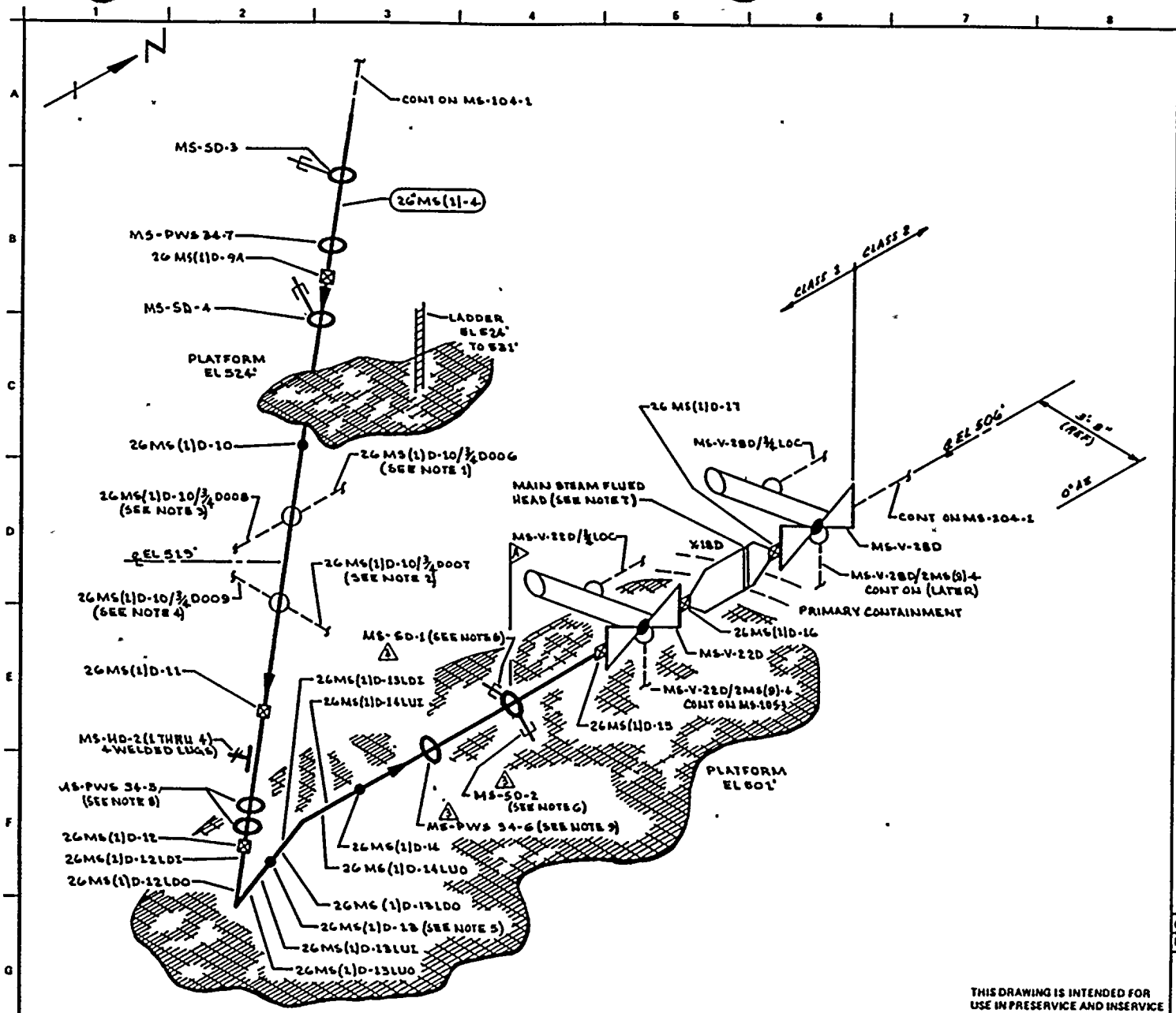

NOTES:

1. EXTEND LEAKAGE EXAM THROUGH CONTAINMENT (X-41a) THROUGH EXCESS FLOW CHECK VALVE TO INSTRUMENT TUBING CONNECTION.
2. EXTEND LEAKAGE EXAM THROUGH CONTAINMENT (X-41b) THROUGH EXCESS FLOW CHECK VALVE TO INSTRUMENT TUBING CONNECTION.
3. EXTEND LEAKAGE EXAM THROUGH CONTAINMENT (X-70c) THROUGH EXCESS FLOW CHECK VALVE TO INSTRUMENT TUBING CONNECTION.
4. EXTEND LEAKAGE EXAM THROUGH CONTAINMENT (X-70a) THROUGH EXCESS FLOW CHECK VALVE TO INSTRUMENT TUBING CONNECTION.
5. WELD 26MS(1)D-13 TO FITTING TO FITTING.
6. ACCESS TO WELD 26MS(1)D-13 REQUIRES REMOVAL OF MS-SD1 & MS-SD2.
7. FOR EXAM OF MAIN STEAM FLUED HEAD SEE DWG MS-101-3.
8. ACCESS TO WELD 26MS(1)D-12 IS RESTRICTED BY PWS 34-5.

REFERENCES:

GENERAL ELECTRIC DRAWINGS

761 E 992	131 C 8048
131 C 7734	131 C 8030
131 C 8403	131 C 8031
131 C 8501	

BOVEE CRAIL/GER1
BC/G-214 REV 6

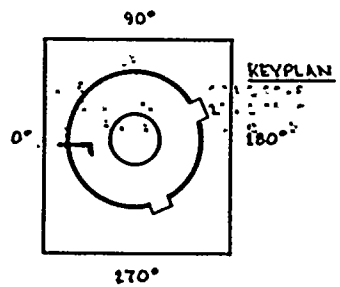

QUALITY CLASS: 1	ASME CODE CLASS: 1	
ENGR: D TIMMINS	DRAWN: K. McA	DATE: 1-23-78

WASHINGTON PUBLIC POWER SUPPLY SYSTEM
RICHLAND, WASHINGTON 99352

THIS DRAWING IS INTENDED FOR USE IN PRESERVICE AND INSERVICE INSPECTION PROGRAMS ONLY.

NO	DATE	REVISION	BY	CHKD	APPVD
3	9-26-83	REVISED AS NOTED ADDED KEYPLAN	KMcA	DPS	TTH
2	12-28-81	REVISED AS NOTED, AUGMENTED ISI ADDED	KMcA	DPS	TTH
1	8-30-79	ADDED FIELD WELD 26MS(1)D-9A IN B-2	KMcA	[illegible]	[illegible]
0	11-27-78	ISSUED FOR USE	KMcA	[illegible]	[illegible]
A	1-23-78	ISSUED FOR INFORMATION ONLY	KMcA	DCS	RWP

PIPING SYSTEM	NOM DIA (IN)	SCH	NOM WALL THK	MATERIAL SPECIFICATION	MATL TYPE	CAL BLOCK NO
26"MS(1)-4	26	XXX	1.125	SA 106 GR B	CS	UT-4
LUGS	NA	NA	NA	SA 515 GR 70	CS	UT-46

WNP-2
WELD & COMPONENT IDENTIFICATION DIAGRAM

TITLE: MAIN STEAM LINE D

DWG NO: MS-104-2 REV 3

WNP-02
INTERVAL: PSI
PERIOD: NA
OUTAGE:
DRAWING NO. MS-104

WASHINGTON PUBLIC POWER SUPPLY SYSTEM
PROGRAM PLAN AND SCHEDULE
SYSTEM OR COMPONENT: MS(1)-4
DESCRIPTION: MAIN STEAM LINE D

DATE 12/14/84

IDENT. NO.	DESCRIPTION	SECT. XI EXAM.	EXAM MTH.	PROCEDURE	CAL. BLOCK	INSERVICE REQ.	SCHEDULED OUTAGE	NOTES
26MS(1)D-1								
	NZ / TRANSITION	B-J	VOL	UTP-10	UT-104			
			SUR	PTP-1				
26MS(1)D-2								
	TRANSITION/PIPE	B-J	VOL	UTP-10	UT-4			
			SUR	PTP-1				
26MS(1)D-3								
	PIPE TO EL	B-J	VOL	UTP-10	UT-4			
			SUR	PTP-1				
26MS(1)D-3LDI								
	EL SEAM	B-J	VOL	UTP-10	UT-4			
			SUR	PTP-1				
26MS(1)D-3LDO								
	EL SEAM	B-J	VOL	UTP-10	UT-4			
			SUR	PTP-1				
26MS(1)D-4LUI								
	EL SEAM	B-J	VOL	UTP-10	UT-4			
			SUR	PTP-1				
26MS(1)D-4LUO								
	EL SEAM	B-J	VOL	UTP-10	UT-4			
			SUR	PTP-1				
26MS(1)D-4								
	EL SEAM	B-J	VOL	UTP-10	UT-4			
			SUR	PTP-1				
PWS-34-1								
	PIPE WHIP	N/A	N/A	N/A				SEE NOTE #1
26MS(1)D-5								
	PIPE TO SEAM	B-J	VOL	UTP-10	UT-4			

WNP-02
INTERVAL: PSI
PERIOD: NA
OUTAGE:
DRAWING NO. MS-104

WASHINGTON PUBLIC POWER SUPPLY SYSTEM
PROGRAM PLAN AND SCHEDULE
SYSTEM OR COMPONENT: MS(1)-4
DESCRIPTION: MAIN STEAM LINE D

DATE 12/14/84

IDENT. NO.	DESCRIPTION	SECT. XI EXAM.	EXAM MTH.	PROCEDURE	CAL. BLOCK	INSERVICE REQ.	INSERVICE SCHEDULED OUTAGE	NOTES
			SUR	PTP-1				
MS-HD-1(W)	4 WELDED LUGS	B-K-1	VOL	UTP-26	UT-4			
MS-HD-1	SPRING	B-K-2	VT-3	303/8.2.17				
			VT-4	303/8.2.17				
PWS-34-2	PIPE WHIP	N/A	N/A	N/A				SEE NOTE #1
MS-SD-6	PSA-35 SNUBBER	B-K-2	VT-3	303/8.2.17				S/N 4208
			VT-4	303/8.2.17				S/N 4208
MS-SD-7	PSA-35 SNUBBER	B-K-2	VT-3	303/8.2.17				S/N 4212
			VT-4	303/8.2.17				S/N 4212
26MS(1)D-6	PIPE TO EL	B-J	VOL	UTP-10	UT-4			
			SUR	PTP-1				
26MS(1)D-6LDI	EL SEAM	B-J	VOL	UTP-10	UT-4			
			SUR	PTP-1				
26MS(1)D-6LDO	EL SEAM	B-J	VOL	UTP-10	UT-4			
			SUR	PTP-1				
26MS(1)D-7LUI	EL SEAM	B-J	VOL	UTP-10	UT-4			
			SUR	PTP-1				
26MS(1)D-7LUO	EL SEAM	B-J	VOL	UTP-10	UT-4			

WNP-02
INTERVAL: PSI
PERIOD: NA
OUTAGE:
DRAWING NO. MS-104

WASHINGTON PUBLIC POWER SUPPLY SYSTEM
PROGRAM PLAN AND SCHEDULE
SYSTEM OR COMPONENT: MS(1)-4
DESCRIPTION: MAIN STEAM LINE D

DATE 12/14/84

IDENT. NO.	DESCRIPTION	SECT. XI. EXAM.	EXAM MTH.	PROCEDURE	CAL. BLOCK	INSERVICE REQ.	INSERVICE SCHEDULED OUTAGE	NOTES
			SUR	PTP-1				
MS-SD-5	PSA-35 SNUBBER	B-K-2	VT-3	303/8.2.17				S/N 4140
			VT-4	303/8.2.17				S/N 4140
26MS(1)D-7	EL TO PIPE	B-J	VOL	UTP-10	UT-4			
			SUR	PTP-1				
26MS(1)D-7/8MSR-4D	PIPE TO SWL	B-J	VOL	UTP-10	UT-4			
			SUR	PTP-1				
8MSR-4D1	SWL TO PIPE	B-J	VOL	UTP-10	UT-24			
			SUR	PTP-1				
8MSR-4D2	PIPE TO FLANGE	B-J	VOL	UTP-10	UT-24			
			SUR	PTP-1				
8MSR-4D-2BD	FLANGE BOLTING	B-G-2	VT-1	QCI 7-1				
MS-RV-4D-BLT	VALVE BOLTING	B-G-2	VT-1	QCI 7-1				
MS-RV-4D-BDY	VALVE BODY	B-M-2	VT-1	QCI 7-1				
PWS-34-3	PIPE WHIP	N/A	N/A	N/A				SEE NOTE #1
26MS(1)D-7/8MSR-3D	PIPE TO SWL	B-J	VOL	UTP-10	UT-4			
			SUR	PTP-1				
8MSR-3D1	SWL TO PIPE	B-J	VOL	UTP-10	UT-24			

WNP-02
INTERVAL: PSI
PERIOD: NA
OUTAGE:
DRAWING NO. MS-104

WASHINGTON PUBLIC POWER SUPPLY SYSTEM
PROGRAM PLAN AND SCHEDULE
SYSTEM OR COMPONENT: MS(1)-4
DESCRIPTION: MAIN STEAM LINE D

IDENT. NO.	DESCRIPTION	SECT. XI EXAM.	EXAM. MTH.	PROCEDURE	CAL. BLOCK	INSERVICE REQ.	SCHEDULED OUTAGE	NOTES
			SUR	PTP-1				
8MSR-3D2								
	SWL TO PIPE	B-J	VOL	UTP-10	UT-24			
			SUR	PTP-1				
8MSR-3D-2BD								
	FLANGE BOLTING	B-G-2	VT-1	QCI 7-1				
MS-RV-3D-BLT								
	VALVE BOLTING	B-G-2	VT-1	QCI 7-1				
MS-RV-3D-BDY								
	VALVE BODY	B-M-2	VT-1	QCI 7-1				
MS-SD-9								
	PSA-35 SNUBBER	B-K-2	VT-3	303/8.2.17				S/N 4142
			VT-4	303/8.2.17				S/N 4142
MS-SD-10								
	PSA-35 SNUBBER	B-K-2	VT-3	303/8.2.17				S/N 4144
			VT-4	303/8.2.17				S/N 4144
26MS(1)D-7/8MSR-2D								
	PIPE TO SWL	B-J	VOL	UTP-10	UT-4			
			SUR	PTP-1				
8MSR-2D1								
	SWL TO PIPE	B-J	VOL	UTP-10	UT-24			
			SUR	PTP-1				
8MSR-2D2								
	PIPE TO FLANGE	B-J	VOL	UTP-10	UT-24			
			SUR	PTP-1				
8MSR-2D-2BD								
	FLANGE BOLTING	B-G-2	VT-1	QCI 7-1				
MS-RV-2D-BLT								
	VALVE BOLTING	B-G-2	VT-1	QCI 7-1				

WNP-02
INTERVAL: PSI
PERIOD: NA
OUTAGE:
DRAWING NO. MS-104

WASHINGTON PUBLIC POWER SUPPLY SYSTEM
PROGRAM PLAN AND SCHEDULE
SYSTEM OR COMPONENT: MS(1)-4
DESCRIPTION: MAIN STEAM LINE D

DATE 12/14/84

IDENT. NO.	DESCRIPTION	SECT. XI EXAM.	EXAM MTH.	PROCEDURE	CAL. BLOCK	INSERVICE REQ.	INSERVICE SCHEDULED OUTAGE	NOTES
MS-RV-2D-BDY								
	VALVE BODY	B-M-2	VT-1	QCI 7-1				
PWS-34-4								
	PIPE WHIP	N/A	N/A	N/A				SEE NOTE #1
26MS(1)D-7/8MSR-1D								
	PIPE TO SWL	B-J	VOL	UTP-10	UT-4			
			SUR	PTP-1				
8MSR-1D1								
	SWL TO PIPE	B-J	VOL	UTP-10	UT-24			
			SUR	PTP-1				
8MSR-1D2								
	PIPE TO FLANGE	B-J	VOL	UTP-10	UT-24			
			SUR	PTP-1				
8MSR-1D-2BD								
	FLANGE BOLTING	B-G-2	VT-1	QCI 7-1				
MS-RV-1D-BLT								
	VALVE BOLTING	B-G-2	VT-1	QCI 7-1				
MS-RV-1D-BDY								
	VALVE BODY	B-M-2	VT-1	QCI 7-1				
26MS(1)D-8								
	PIPE TO EL	B-J	VOL	UTP-10	UT-4			
			SUR	PTP-1				
26MS(1)D-8LDI								
	EL SEAM	B-J	VOL	UTP-10	UT-4			
			SUR	PTP-1				
26MS(1)D-8LDO								
	EL SEAM	B-J	VOL	UTP-10	UT-4			
			SUR	PTP-1				
26MS(1)D-9LUI								
	EL SEAM	B-J	VOL	UTP-10	UT-4			

WNP-02
INTERVAL: PSI
PERIOD: NA
OUTAGE:
DRAWING NO. MS-104

WASHINGTON PUBLIC POWER SUPPLY SYSTEM
PROGRAM PLAN AND SCHEDULE
SYSTEM OR COMPONENT: MS(1)-4
DESCRIPTION: MAIN STEAM LINE D

IDENT. NO.	DESCRIPTION	SECT. XI EXAM.	EXAM MTH.	PROCEDURE	CAL. BLOCK	INSERVICE REQ.	SCHEDULED OUTAGE	NOTES
			SUR	PTP-1				
26MS(1)D-9LUO	EL SEAM	B-J	VOL	UTP-10	UT-4			
			SUR	PTP-1				
26MS(1)D-9	EL TO PIPE	B-J	VOL	UTP-10	UT-4			
			SUR	PTP-1				
MS-SD-3	PSA-35 SNUBBER	B-K-2	VT-3	303/8.2.17				S/N 4146
			VT-4	303/8.2.17				S/N 4146
PWS-34-7	PIPE WHIP	N/A	N/A	N/A				SEE NOTE #1
26MS(1)D-9A	PIPE TO PIPE	B-J	VOL	UTP-10	UT-4			
			SUR	PTP-1				
MS-SD-4	PSA-35 SNUBBER	B-K-2	VT-3	303/8.2.17				S/N 4148
			VT-4	303/8.2.17				S/N 4148
26MS(1)D-10	PIPE TO PIPE	B-J	VOL	UTP-10	UT-4			
			SUR	PTP-1				
26MS(1)D-10/3/4D006	INSTR CONN	B-P	VT-2	N/A				SEE NOTES #6 & #7.
26MS(1)D-10/3/4D008	INSTR CONN	B-P	VT-2	N/A				SEE NOTES #6 & #7.
26MS(1)D-10/3/4D007	INSTR CONN	B-P	VT-2	N/A				SEE NOTES #6 & #7.

WNP-02
INTERVAL: PSI
PERIOD: NA
OUTAGE:
DRAWING NO. MS-104

WASHINGTON PUBLIC POWER SUPPLY SYSTEM
PROGRAM PLAN AND SCHEDULE
SYSTEM OR COMPONENT: MS(1)-4
DESCRIPTION: MAIN STEAM LINE D

IDENT. NO.	DESCRIPTION	SECT. XI EXAM.	EXAM MTH.	PROCEDURE	CAL. BLOCK	INSERVICE REQ.	INSERVICE SCHEDULED OUTAGE	NOTES
26MS(1)D-10/3/4D009								
	INSTR CONN	B-P	VT-2	N/A				SEE NOTES #6 & #7.
26MS(1)D-11								
	PIPE TO PIPE	B-J	VOL	UTP-10	UT-4			
			SUR	PTP-1				
MS-HD-2(V)								
	4 WELDED LUGS	B-K-1	VOL	UTP-26	UT-4			
MS-HD-2								
	SPRING (2)	B-K-2	VT-3	303/8.2.17				
			VT-4	303/8.2.17				
PWS-34-5								
	PIPE WHIP	N/A	N/A	N/A				SEE NOTE #1
26MS(1)D-12								
	PIPE TO EL	B-J	VOL	UTP-10	UT-4			
			SUR	PTP-1				
26MS(1)D-12LDI								
	EL SEAM	B-J	VOL	UTP-10	UT-4			
			SUR	PTP-1				
26MS(1)D-12LDO								
	EL SEAM	B-J	VOL	UTP-10	UT-4			
			SUR	PTP-1				
26MS(1)D-13LUI								
	EL SEAM	B-J	VOL	UTP-10	UT-4			
			SUR	PTP-1				
26MS(1)D-13LUO								
	EL SEAM	B-J	VOL	UTP-10	UT-4			
			SUR	PTP-1				
26MS(1)D-13								
	EL TO EL	B-J	VOL	UTP-10	UT-4			

WNP-02
INTERVAL: PSI
PERIOD: NA
OUTAGE:
DRAWING NO. MS-104

WASHINGTON PUBLIC POWER SUPPLY SYSTEM
PROGRAM PLAN AND SCHEDULE
SYSTEM OR COMPONENT: MS(1)-4
DESCRIPTION: MAIN STEAM LINE D

DATE 12/14/84

IDENT. NO.	DESCRIPTION	SECT. XI EXAM.	EXAM MTH.	PROCEDURE	CAL. BLOCK	INSERVICE REQ.	SCHEDULED OUTAGE	NOTES
			SUR	PTP-1				
26MS(1)D-13LDI	EL SEAM	B-J	VOL	UTP-10	UT-4			
			SUR	PTP-1				
26MS(1)D-13LDO	EL SEAM	B-J	VOL	UTP-10	UT-4			
			SUR	PTP-1				
26MS(1)D-14LUI	EL SEAM	B-J	VOL	UTP-10	UT-4			
			SUR	PTP-1				
26MS(1)D-14LUO	EL SEAM	B-J	VOL	UTP-10	UT-4			
			SUR	PTP-1				
26MS(1)D-14	EL TO PIPE	B-J	VOL	UTP-10	UT-4			
			SUR	PTP-1				
PWS-34-6	PIPE WHIP	N/A	N/A	N/A				SEE NOTE #1
MS-SD-1	PSA-100 SNUBBER	B-K-2	VT-3	303/8.2.17				S/N 609
			VT-4	303/8.2.17				S/N 609
MS-SD-2	PSA-100 SNUBBER	B-K-2	VT-3	303/8.2.17				S/N 611
			VT-4	303/8.2.17				S/N 611
26MS(1)D-15	PIPE TO VALVE	B-J	VOL	UTP-10	UT-4			AUGMT

WNP-02
INTERVAL: PSI
PERIOD: NA
OUTAGE:
DRAWING NO. MS-104

WASHINGTON PUBLIC POWER SUPPLY SYSTEM
PROGRAM PLAN AND SCHEDULE
SYSTEM OR COMPONENT: MS(1)-4
DESCRIPTION: MAIN STEAM LINE D

DATE 12/14/84

IDENT. NO.	DESCRIPTION	SECT. XI EXAM.	EXAM MTH.	PROCEDURE	CAL. BLOCK	INSERVICE REQ.	SCHEDULED OUTAGE	NOTES
			SUR	PTP-1				AUGMT
MS-V-22D/2MS(9)-4								
	DRAIN CONN	B-J	SUR	PTP-1				
MS-V-22D-BLT								
	VALVE BOLTING	B-G-2	VT-1	QCI 7-1				
MS-V-22D-BDY								
	VALVE BODY	B-M-2	VT-1	QCI 7-1				
MS-V-22D/3/4CAP								
	LEAKOFF CAPPED	B-P	VT-2	N/A				
26MS(1)D-16								
	VALVE TO PENE	B-J	VOL	UTP-10	UT-4			AUGMT
			SUR	PTP-1				AUGMT
MS FLUED HEAD D								
	FLUED HEAD WELD	B-K-1	VOL	UTP-10	UT-40			SEE DWG. #MS-101-3, AUGMT.
			SUR	MTP-1				SEE DWG. #MS-101-3, AUGMT.
26MS(1)D-17								
	PENE TO PIPE	B-J	VOL	UTP-10	UT-4			AUGMT
			SUR	PTP-1				AUGMT
MS-V-28D/2MS(9)-4								
	DRAIN CONN	B-J	SUR	PTP-1				AUGMT
MS-V-28D-BLT								
	VALVE BOLTING	B-G-2	VT-1	QCI 7-1				
MS-V-28D-BDY								
	VALVE BODY	B-M-2	VT-1	QCI 7-1				
MS-V-28D/3/4CAP								
	LEAKOFF CAPPED	B-P	VT-2	N/A				
MS-PB-104								
	MS PRESS BNDRY	B-P	VT-2	N/A				

WNP-02
INTERVAL: PSI
PERIOD: NA
OUTAGE:
DRAWING NO. MS-103

WASHINGTON PUBLIC POWER SUPPLY SYSTEM
PROGRAM PLAN AND SCHEDULE
SYSTEM OR COMPONENT: MS(1)-4
DESCRIPTION: MAIN STEAM LINE C

DATE 12/14/84

IDENT. NO.	DESCRIPTION	SECT. XI EXAM.	EXAM MTH.	PROCEDURE	CAL. BLOCK	INSERVICE REQ.	INSERVICE SCHEDULED OUTAGE	NOTES
MS-V-22C-BDY								
	VALVE BODY	B-M-2	VT-1	QCI 7-1				
MS-V-22C/3/4CAP								
	LEAKOFF CAPPED	B-P	VT-2	N/A				
26MS(1)C-17								
	VALVE TO PENE	B-J	VOL	UTP-10	UT-4			AUGMT
			SUR	PTP-1				AUGMT
MS FLUED HEAD C								
	FLUED HEAD WELD	B-K-1	VOL	UTP-10	UT-40			SEE DWG. #MS-101-3, AUGMT.
			SUR	MTP-1				SEE DWG. #MS-101-3, AUGMT.
26MS(1)C-18								
	PENE TO VALVE	B-J	VOL	UTP-10	UT-4			AUGMT
			SUR	PTP-1				AUGMT
MS-V-28C/2MS(9)-4								
	DRAIN CONN	B-J	SUR	PTP-1				AUGMT
MS-V-28C-BLT								
	VALVE BOLTING	B-G-2	VT-1	QCI 7-1				
MS-V-28C-BDY								
	VALVE BODY	B-M-2	VT-1	QCI 7-1				
MS-V-28C/3/4CAP								
	LEAKOFF CAPPED	B-P	VT-2	N/A				
MS-PB-103								
	MS PRESS BNDRY	B-P	VT-2	N/A				SEE NOTES #6 & #7.

WNP-02
INTERVAL: PSI
PERIOD: NA
OUTAGE:
DRAWING NO. MS-103

WASHINGTON PUBLIC POWER SUPPLY SYSTEM
PROGRAM PLAN AND SCHEDULE
SYSTEM OR COMPONENT: MS(1)-4
DESCRIPTION: MAIN STEAM LINE C

IDENT. NO.	DESCRIPTION	SECT. XI EXAM.	EXAM MTH.	PROCEDURE	CAL. BLOCK	INSERVICE REQ.	INSERVICE SCHEDULED OUTAGE	NOTES
			SUR	PTP-1				
26MS(1)C-14LDO	EL SEAM	B-J	VOL	UTP-10	UT-4			
			SUR	PTP-1				
26MS(1)C-15LUI	EL SEAM	B-J	VOL	UTP-10	UT-4			
			SUR	PTP-1				
26MS(1)C-15LUO	EL SEAM	B-J	VOL	UTP-10	UT-4			
			SUR	PTP-1				
26MS(1)C-15	EL TO PIPE	B-J	VOL	UTP-10	UT-4			
			SUR	PTP-1				
MS-SC-1	PSA-100 SNUBBER	B-K-2	VT-3	303/8.2.17				S/N 605
			VT-4	303/8.2.17				S/N 605
MS-SC-2	PSA-100 SNUBBER	B-K-2	VT-3	303/8.2.17				S/N 607
			VT-4	303/8.2.17				S/N 607
PWS-33-6	PIPE WHIP	N/A	N/A	N/A				SEE NOTE #1
26MS(1)C-16	PIPE TO VALVE	B-J	VOL	UTP-10	UT-4			AUGMT
			SUR	PTP-1				AUGMT
MS-V-22C/2MS(9)-4	DRAIN CONN	B-J	SUR	PTP-1				
MS-V-22C-BLT	VALVE BOLTING	B-G-2	VT-1	QCI 7-1				

WNP-02
INTERVAL: PSI
PERIOD: NA
OUTAGE:
DRAWING NO. MS-103

WASHINGTON PUBLIC POWER SUPPLY SYSTEM
PROGRAM PLAN AND SCHEDULE
SYSTEM OR COMPONENT: MS(1)-4
DESCRIPTION: MAIN STEAM LINE C

DATE 12/14/84

IDENT. NO.	DESCRIPTION	SECT. XI EXAM.	EXAM MTH.	PROCEDURE	CAL. BLOCK	INSERVICE REQ.	INSERVICE SCHEDULED OUTAGE	NOTES
PWS-33-7								
	PIPE WHIP	N/A	N/A	N/A				SEE NOTE #1
MS-SC-4								
	PSA-35 SNUBBER	B-K-2	VT-3	303/8.2.17				S/N 4154
			VT-4	303/8.2.17				S/N 4154
26MS(1)C-12								
	PIPE TO PIPE	B-J	VOL	UTP-10	UT-4			
			SUR	PTP-1				
26MS(1)C-12/3/4-D006								
	INSTR CONN	B-P	VT-2	N/A				SEE NOTES #6 & #7.
26MS(1)C-12/3/4-D008								
	INSTR CONN	B-P	VT-2	N/A				SEE NOTES #6 & #7.
26MS(1)C-12/3/4-D007								
	INSTR CONN	B-P	VT-2	N/A				SEE NOTES #6 & #7.
26MS(1)C-12/3/4-D009								
	INSTR CONN	B-P	VT-2	N/A				SEE NOTES #6 & #7.
26MS(1)C-13								
	PIPE TO PIPE	B-J	VOL	UTP-10	UT-4			
			SUR	PTP-1				
MS-HC-3(W)								
	4 WELDED LUGS	B-K-1	VOL	UTP-26	UT-4			
MS-HC-3								
	SPRING (2)	B-K-2	VT-3	303/8.2.17				
			VT-4	303/8.2.17				
PWS-33-5								
	PIPE WHIP	N/A	N/A	N/A				SEE NOTE #1
26MS(1)C-14								
	PIPE TO EL	B-J	VOL	UTP-10	UT-4			
			SUR	PTP-1				
26MS(1)C-14LDI								
	EL SEAM	B-J	VOL	UTP-10	UT-4			

WNP-02
INTERVAL: PSI
PERIOD: NA
OUTAGE:
DRAWING NO. MS-103

WASHINGTON PUBLIC POWER SUPPLY SYSTEM
PROGRAM PLAN AND SCHEDULE
SYSTEM OR COMPONENT: MS(1)-4
DESCRIPTION: MAIN STEAM LINE C

IDENT. NO.	DESCRIPTION	SECT. XI EXAM.	EXAM MTH.	PROCEDURE	CAL. BLOCK	INSERVICE REQ.	INSERVICE SCHEDULED OUTAGE	NOTES
MS-SC-9								
	PSA-35 SNUBBER	B-K-2	VT-3	303/8.2.17				S/N 4204
			VT-4	303/8.2.17				S/N 4204
PWS-33-4								
	PIPE WHIP	N/A	N/A	N/A				SEE NOTE #1
26MS(1)C-10								
	PIPE TO EL	B-J	VOL	UTP-10	UT-4			
			SUR	PTP-1				
26MS(1)C-10LDI								
	EL SEAM	B-J	VOL	UTP-10	UT-4			
			SUR	PTP-1				
26MS(1)C-10LDO								
	EL SEAM	B-J	VOL	UTP-10	UT-4			
			SUR	PTP-1				
26MS(1)C-11LUI								
	EL SEAM	B-J	VOL	UTP-10	UT-4			
			SUR	PTP-1				
26MS(1)C-11LUO								
	EL SEAM	B-J	VOL	UTP-10	UT-4			
			SUR	PTP-1				
26MS(1)C-11								
	EL TO PIPE	B-J	VOL	UTP-10	UT-4			
			SUR	PTP-1				
MS-SC-3								
	PSA-35 SNUBBER	B-K-2	VT-3	303/8.2.17				S/N 4156
			VT-4	303/8.2.17				S/N 4156

WNP-02
INTERVAL: PSI
PERIOD: NA
OUTAGE:
DRAWING NO. MS-103

WASHINGTON PUBLIC POWER SUPPLY SYSTEM
PROGRAM PLAN AND SCHEDULE
SYSTEM OR COMPONENT: MS(1)-4
DESCRIPTION: MAIN STEAM LINE C

DATE 12/14/84

IDENT. NO.	DESCRIPTION	SECT. XI EXAM.	EXAM MTH.	PROCEDURE	CAL. BLOCK	INSERVICE REQ.	SCHEDULED OUTAGE	NOTES
8MSR-2C1			SUR	PTP-1				
	SWL TO PIPE	B-J	VOL	UTP-10	UT-24			
8MSR-2C2			SUR	PTP-1				
	PIPE TO FLANGE	B-J	VOL	UTP-10	UT-23			
8MSR-2C-2BD			SUR	PTP-1				
	FLANGE BOLTING	B-G-2	VT-1	QCI 7-1				
MS-RV-2C-BLT								
	VALVE BOLTING	B-G-2	VT-1	QCI 7-1				
MS-RV-2C-BDY								
	VALVE BODY	B-M-2	VT-1	QCI 7-1				
26MS(1)C-9/8MSR-1C								
	PIPE TO SWL	B-J	VOL	UTP-10	UT-4			
8MSR-1C1			SUR	PTP-1				
	SWL TO PIPE	B-J	VOL	UTP-10	UT-4			
8MSR-1C2			SUR	PTP-1				
	PIPE TO FLANGE	B-J	VOL	UTP-10	UT-24			
8MSR-1C-2BD			SUR	PTP-1				
	FLANGE BOLTING	B-G-2	VT-1	QCI 7-1				
MS-RV-1C-BLT								
	VALVE BOLTING	B-G-2	VT-1	QCI 7-1				
MS-RV-1C-BDY								
	VALVE BODY	B-M-2	VT-1	QCI 7-1				

WNP-02
INTERVAL: PSI
PERIOD: NA
OUTAGE:
DRAWING NO. MS-103

WASHINGTON PUBLIC POWER SUPPLY SYSTEM
PROGRAM PLAN AND SCHEDULE
SYSTEM OR COMPONENT: MS(1)-4
DESCRIPTION: MAIN STEAM LINE C

IDENT. NO.	DESCRIPTION	SECT. XI EXAM.	EXAM MTH.	PROCEDURE	CAL. BLOCK	INSERVICE REQ.	INSERVICE SCHEDULED OUTAGE	NOTES
			SUR	PTP-1				
8MSR-4C-2BD								
	FLANGE BOLTING	B-G-2	VT-1	QCI 7-1				
MS-RV-4C-BLT								
	VALVE BOLTING	B-G-2	VT-1	QCI 7-1				
MS-RV-4C-BDY								
	VALVE BODY	B-M-2	VT-1	QCI 7-1				
26MS(1)C-9/8MSR-3C								
	PIPE TO SWL	B-J	VOL	UTP-10	UT-4			
			SUR	PTP-1				
8MSR-3C1								
	SWL TO PIPE	B-J	VOL	UTP-10	UT-24			
			SUR	PTP-1				
8MSR-3C2								
	PIPE TO FLANGE	B-J	VOL	UTP-10	UT-24			
			SUR	PTP-1				
8MSR-3C-2BD								
	FLANGE BOLTING	B-G-2	VT-1	QCI 7-1				
MS-RV-3C-BLT								
	VALVE BOLTING	B-G-2	VT-1	QCI 7-1				
MS-RV-3C-BDY								
	VALVE BODY	B-M-2	VT-1	QCI 7-1				
MS-HC-2								
	SPRING	B-K-2	VT-3	303/8.2.17				
			VT-4	303/8.2.17				
MS-SC-10								
	PSA-35 SNUBBER	B-K-2	VT-3	303/8.2.17				S/N 4202
			VT-4	303/8.2.17				S/N 4202
26MS(1)C-9/8MSR-2C								
	PIPE TO SWL	B-J	VOL	UTP-10	UT-4			

WNP-02
INTERVAL: PSI
PERIOD: NA
OUTAGE:
DRAWING NO. MS-103

WASHINGTON PUBLIC POWER SUPPLY SYSTEM
PROGRAM PLAN AND SCHEDULE
SYSTEM OR COMPONENT: MS(1)-4
DESCRIPTION: MAIN STEAM LINE C

IDENT. NO.	DESCRIPTION	SECT. XI EXAM.	EXAM MTH.	PROCEDURE	CAL. BLOCK	INSERVICE REQ.	INSERVICE SCHEDULED OUTAGE	NOTES
MS-SC-5								
	PSA-35 SNUBBER	B-K-2	VT-3	303/8.2.17				S/N 4150
			VT-4	303/8.2.17				S/N 4150
MS-SC-8								
	PSA-35 SNUBBER	B-K-2	VT-3	303/8.2.17				S/N 4151
			VT-4	303/8.2.17				S/N 4151
26MS(1)C-9/8MSR-5C								
	PIPE TO SWL	B-J	VOL	UTP-10	UT-4			
			SUR	PTP-1				
8MSR-5C1								
	SWL TO PIPE	B-J	VOL	UTP-10	UT-24			
			SUR	PTP-1				
8MSR-5C2								
	PIPE TO FLANGE	B-J	VOL	UTP-10	UT-24			
			SUR	PTP-1				
8MSR-5C-2BD								
	FLANGE BOLTING	B-G-2	VT-1	QCI 7-1				
MS-RV-5C-BLT								
	VALVE BOLTING	B-G-2	VT-1	QCI 7-1				
MS-RV-5C-BDY								
	VALVE BODY	B-M-2	VT-1	QCI 7-1				
26MS(1)C-9/8MSR-4C								
	PIPE TO SWL	B-J	VOL	UTP-10	UT-4			
			SUR	PTP-1				
8MSR-4C1								
	SWL TO PIPE	B-J	VOL	UTP-10	UT-24			
			SUR	PTP-1				
8MSR-4C2								
	PIPE TO FLANGE	B-J	VOL	UTP-10	UT-24			

WNP-02
INTERVAL: PSI
PERIOD: NA
OUTAGE:
DRAWING NO. MS-103

WASHINGTON PUBLIC POWER SUPPLY SYSTEM
PROGRAM PLAN AND SCHEDULE
SYSTEM OR COMPONENT: MS(1)-4
DESCRIPTION: MAIN STEAM LINE C

IDENT. NO.	DESCRIPTION	SECT. XI EXAM.	EXAM MTH.	PROCEDURE	CAL. BLOCK	INSERVICE REQ.	SCHEDULED OUTAGE	NOTES
26MS(1)C-7LUO	EL SEAM	B-J	VOL	UTP-10	UT-4			
			SUR	PTP-1				
26MS(1)C-7	EL TO PIPE	B-J	VOL	UTP-10	UT-4			
			SUR	PTP-1				
26MS(1)C-8	PIPE TO EL	B-J	VOL	UTP-10	UT-4			
			SUR	PTP-1				
26MS(1)C-8LDI	EL SEAM	B-J	VOL	UTP-10	UT-4			
			SUR	PTP-1				
26MS(1)C-8LDO	EL SEAM	B-J	VOL	UTP-10	UT-4			
			SUR	PTP-1				
26MS(1)C-9LUI	EL SEAM	B-J	VOL	UTP-10	UT-4			
			SUR	PTP-1				
26MS(1)C-9LUO	EL SEAM	B-J	VOL	UTP-10	UT-4			
			SUR	PTP-1				
26MS(1)C-9	EL TO PIPE	B-J	VOL	UTP-10	UT-4			
			SUR	PTP-1				
PWS-33-3	PIPE WHIP	N/A	N/A	N/A				SEE NOTE #1

WNP-02
INTERVAL: PSI
PERIOD: NA
OUTAGE:
DRAWING NO. MS-103

WASHINGTON PUBLIC POWER SUPPLY SYSTEM
PROGRAM PLAN AND SCHEDULE
SYSTEM OR COMPONENT: MS(1)-4
DESCRIPTION: MAIN STEAM LINE C

DATE 12/14/84

IDENT. NO.	DESCRIPTION	SECT. XI EXAM.	EXAM MTH.	PROCEDURE	CAL. BLOCK	INSERVICE REQ.	INSERVICE SCHEDULED OUTAGE	NOTES
			SUR	PTP-1				
MS-HC-1(W)	4 WELDED LUGS	B-K-1	VOL	UTP-26	UT-4			2 1/2"W x 2 1/4"H x 2 1/2"L.
MS-HC-1	SPRING (2)	B-K-2	VT-3	303/8.2.17				
			VT-4	303/8.2.17				
MS-SC-6	PSA-35 SNUBBER	B-K-2	VT-3	303/8.2.17				S/N 4207
			VT-4	303/8.2.17				S/N 4207
MS-SC-7	PSA-35 SNUBBER	B-K-2	VT-3	303/8.2.17				S/N 4211
			VT-4	303/8.2.17				S/N 4211
PWS-33-2	PIPE WHIP	N/A	N/A	N/A				SEE NOTE #1
26MS(1)C-6	PIPE TO EL	B-J	VOL	UTP-10	UT-4			
			SUR	PTP-1				
26MS(1)C-6LDI	EL SEAM	B-J	VOL	UTP-10	UT-4			
			SUR	PTP-1				
26MS(1)C-6LDO	EL SEAM	B-J	VOL	UTP-10	UT-4			
			SUR	PTP-1				
26MS(1)C-7LUI	EL SEAM	B-J	VOL	UTP-10	UT-4			
			SUR	PTP-1				

WNP-02
INTERVAL: PSI
PERIOD: NA
OUTAGE:
DRAWING NO. MS-103

WASHINGTON PUBLIC POWER SUPPLY SYSTEM
PROGRAM PLAN AND SCHEDULE
SYSTEM OR COMPONENT: MS(1)-4
DESCRIPTION: MAIN STEAM LINE C

DATE 12/14/84

IDENT. NO.	DESCRIPTION	SECT. XI EXAM.	EXAM MTH.	PROCEDURE	CAL. BLOCK	INSERVICE REQ.	SCHEDULED OUTAGE	NOTES
26MS(1)C-1								
	NZ / TRANSITION	B-J	VOL	UTP-10	UT-104			
			SUR	PTP-1				
26MS(1)C-2								
	TRANSITION/PIPE	B-J	VOL	UTP-10	UT-4			
			SUR	PTP-1				
26MS(1)C-3								
	PIPE TO EL	B-J	VOL	UTP-10	UT-4			
			SUR	PTP-1				
26MS(1)C-3LDI								
	EL SEAM	B-J	VOL	UTP-10	UT-4			
			SUR	PTP-1				
26MS(1)C-3LDO								
	EL SEAM	B-J	VOL	UTP-10	UT-4			
			SUR	PTP-1				
26MS(1)C-4LUI								
	EL SEAM	B-J	VOL	UTP-10	UT-4			
			SUR	PTP-1				
26MS(1)C-4LUO								
	EL SEAM	B-J	VOL	UTP-10	UT-4			
			SUR	PTP-1				
26MS(1)C-4								
	EL TO PIPE	B-J	VOL	UTP-10	UT-4			
			SUR	PTP-1				
PWS-33-1								
	PIPE WHIP	N/A	N/A	N/A				SEE NOTE #1
26MS(1)C-5								
	PIPE TO PIPE	B-J	VOL	UTP-10	UT-4			

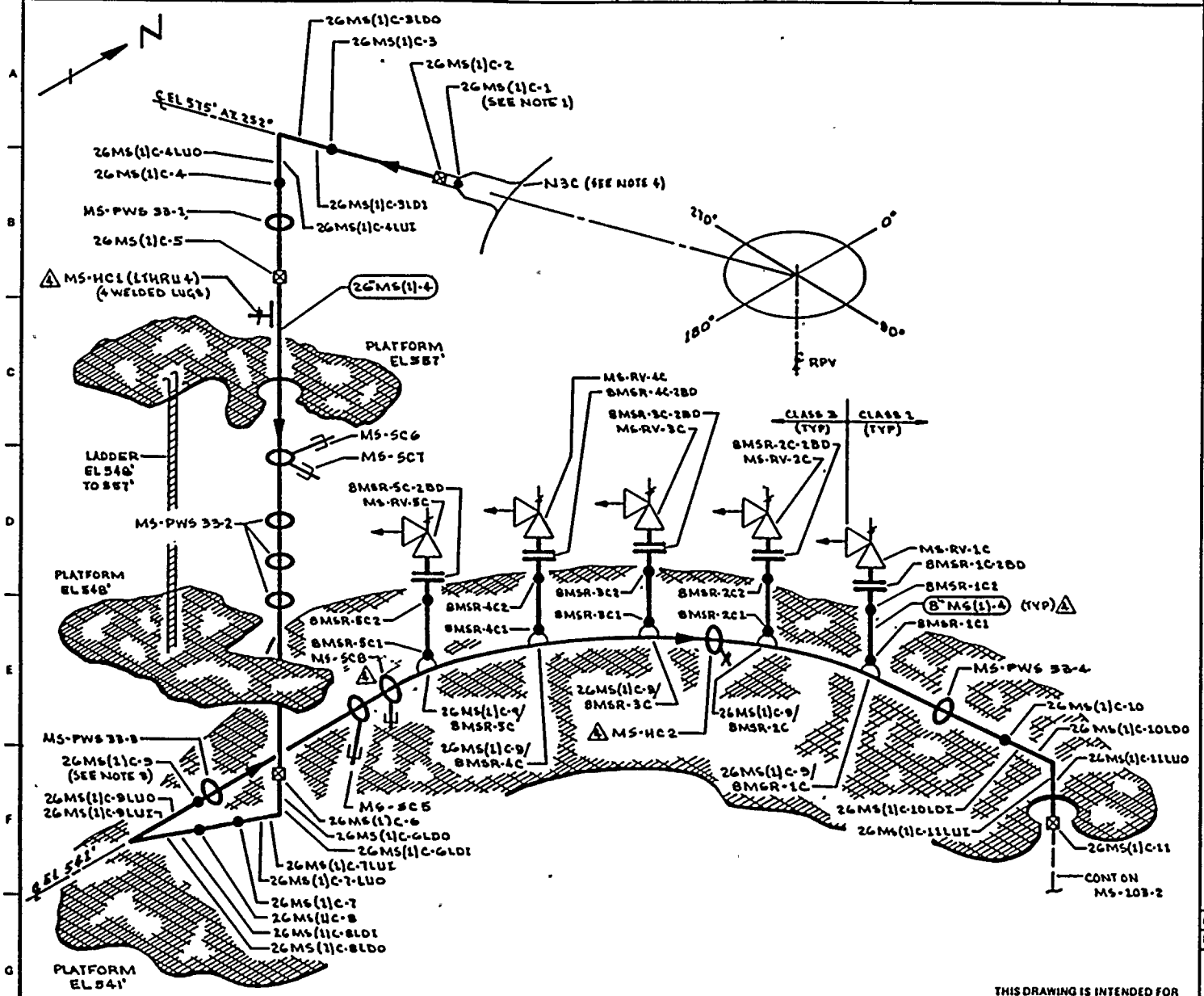

NOTES:

1. WELD 26MS(1)C-1 UTILIZES CAL BLOCK UT-104.
2. ACCESS TO WELDS 26MS(1)C-1 THRU 26MS(1)C-8 REQUIRES TEMPORARY SCAFFOLDING.
3. ACCESS TO WELD 26MS(1)C-9 REQUIRES REMOVAL OF MS-PWS 33-3.
4. FOR NOZZLE ASSEMBLY DETAILS SEE RPV-107.

REFERENCES:

GENERAL ELECTRIC DRAWINGS:

761 E 592	131 C 8403
131 C 7733	131 C 8028
131 C 8047	131 C 8029
131 C 8501	131 C 8030

CBI NUCLEAR CO.

85, REV 3, N3 NOZZLE

BOVEE CRAIL / GERI

BC/Q-213 REV 7

THIS DRAWING IS INTENDED FOR USE IN PRESERVICE AND INSERVICE INSPECTION PROGRAMS ONLY.

NO	DATE	REVISION	BY	CHKD	APPVD
4	9-26-83	REVISED AS NOTED, ADDED KEYPLAN & LUGS	KMcA		
3	11-2-81	REVISED AS NOTED	KMcA		
2	8-30-79	ADDED NOTE 4	KMcA		
1	5-10-79	CAL BLOCK REFERENCE CHANGED (FOR 8" PIPING)	KMcA		
0	11-27-78	ISSUED FOR USE	KMcA		
A	6-21-78	ISSUED FOR INFORMATION ONLY	KMcA	DCJ	

PIPING SYSTEM	NOM DIA (IN)	SCH	NOM WALL THK	MATERIAL SPECIFICATION	MATL TYPE	CAL BLOCK NO
26"MS(1)-4	26	XXX	1.125	SA 106 GR B	CS	UT-4
8"MS(1)-4	8	160	0.906	SA 106 GR B	CS	UT-24
LUGS	NA	NA	NA	SA 516 GR 70	CS	UT-46

QUALITY CLASS: 1 | ASME CODE CLASS: 1

ENGR: D TIMMINS | DRAWN: K. McA. | DATE: 1-18-78

WASHINGTON PUBLIC POWER SUPPLY SYSTEM

RICHLAND, WASHINGTON 99352

WNP-2

WELD & COMPONENT IDENTIFICATION DIAGRAM

TITLE: MAIN STEAM LINE C

DWG NO: MS-103-1 | REV 4

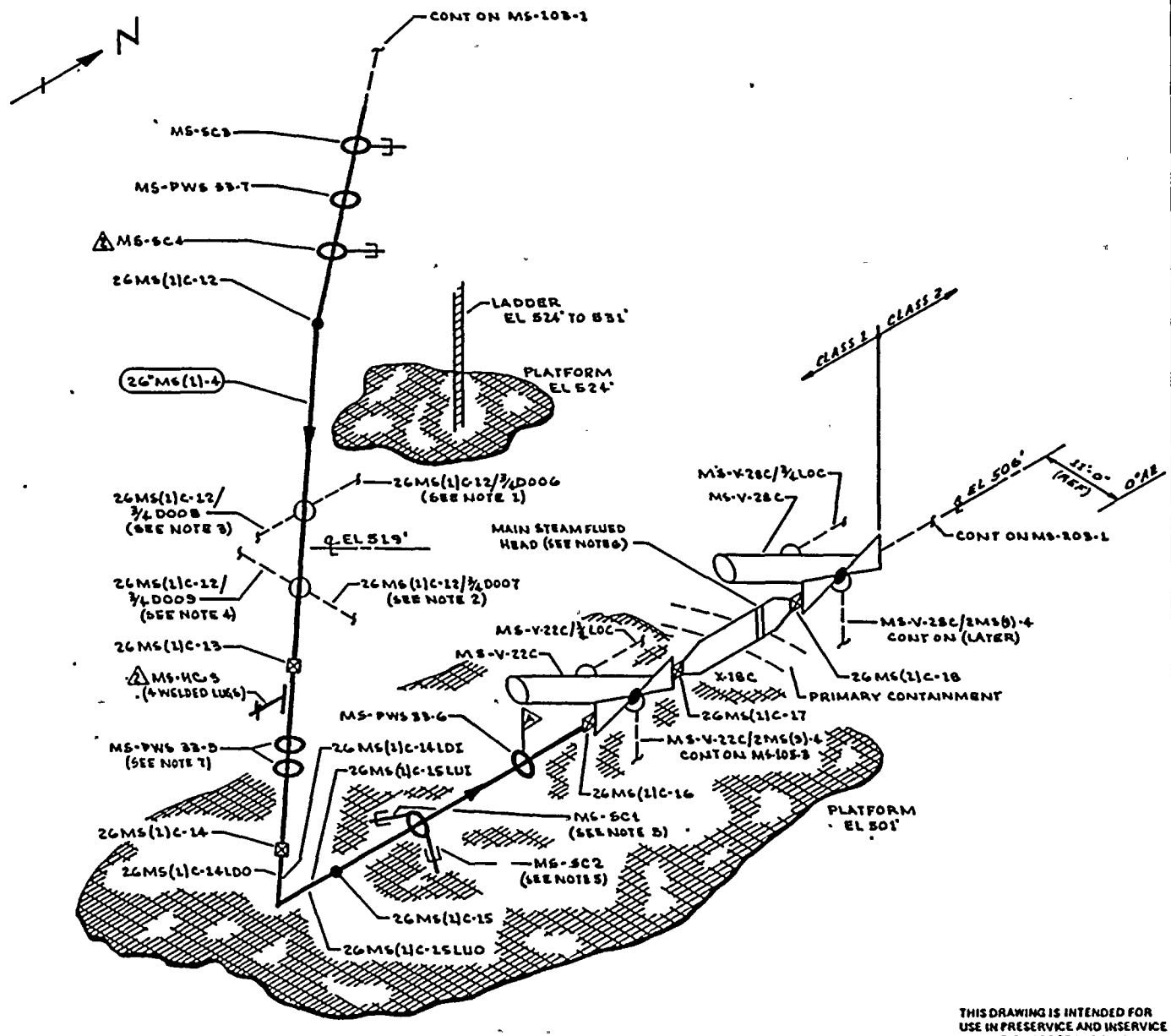

NOTES:

1. EXTEND LEAKAGE EXAM THROUGH CONTAINMENT (X-71a) THROUGH EXCESS FLOW CHECK VALVE TO INSTRUMENT TUBING CONNECTION.
2. EXTEND LEAKAGE EXAM THROUGH CONTAINMENT (X-71b) THROUGH EXCESS FLOW CHECK VALVE TO INSTRUMENT TUBING CONNECTION.
3. EXTEND LEAKAGE EXAM THROUGH CONTAINMENT (X-70a) THROUGH EXCESS FLOW CHECK VALVE TO INSTRUMENT TUBING CONNECTION.
4. EXTEND LEAKAGE EXAM THROUGH CONTAINMENT (X-70b) THROUGH EXCESS FLOW CHECK VALVE TO INSTRUMENT TUBING CONNECTION.
5. ACCESS TO WELD 26MS(1)C-15 REQUIRES REMOVAL OF MS-SC1 & MS-SC2.
6. FOR EXAM OF MAIN STEAM FLUED HEAD SEE DWG MS-101-3.
7. ACCESS TO WELD 26MS(1)C-14 IS RESTRICTED BY PWS 33-5.

REFERENCES:

GENERAL ELECTRIC DRAWINGS

761 E 992	131 C 8403
131 C 7733	131 C 8028
131 C 8047	131 C 8029
131 C 8501	131 C 8030

BOVEE CRAIL/GERI

BC/G-213 REV 7

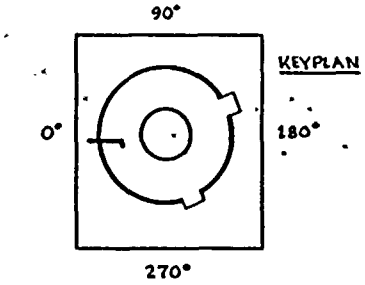

QUALITY CLASS: 1	ASME CODE CLASS: 1	
ENGR: D TIMMINS	DRAWN: K.M.A	DATE: 1-19-78

THIS DRAWING IS INTENDED FOR USE IN PRESERVICE AND INSERVICE INSPECTION PROGRAMS ONLY.

WASHINGTON PUBLIC POWER SUPPLY SYSTEM
RICHLAND, WASHINGTON 99352

NO	DATE	REVISION	BY	CHKD	APPVD
2	9-26-88	REVISED AS NOTED ADDED KEYPLAN & LUGS	KMA		
1	12-2-81	REVISED AS NOTED, AUGMENTED ISI ADDED	KMA		
0	11-27-78	ISSUED FOR USE	KMA		
A	4-21-78	ISSUED FOR INFORMATION ONLY	KMA	DCJ	

PIPING SYSTEM	NOM DIA (IN)	SCH	NOM WALL THK	MATERIAL SPECIFICATION	MATL TYPE	CAL BLOCK NO
26"MS(1)-4	26	XXX	1.125	SA 106 GRB	CS	UT-4
LUGS	NA	NA	NA	SA 516 GR70	CS	UT-46

WNP-2
WELD & COMPONENT IDENTIFICATION DIAGRAM

TITLE: MAIN STEAM LINE C

DWG NO: MS-103-2 REV 2

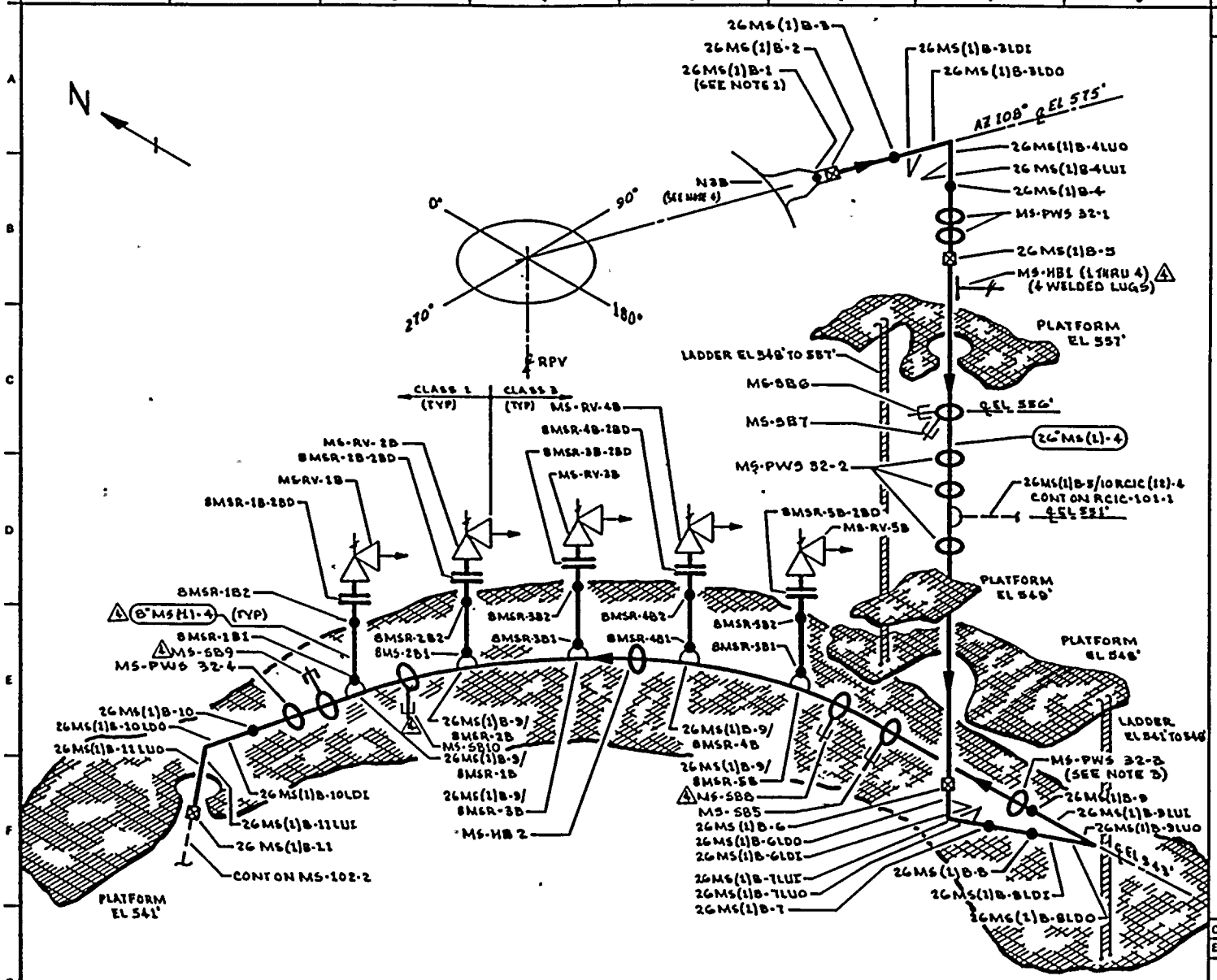

NOTES:

1. WELD 26MS(1)B-1 UTILIZES CAL BLOCK UT-104.
2. ACCESS TO WELDS 26MS(1)B-1 THRU 26MS(1)B-5 REQUIRES TEMPORARY SCAFFOLDING.
3. ACCESS TO WELD 26MS(1)B-9 REQUIRES REMOVAL OF MS-PWS 32-3
4. FOR NOZZLE ASSEMBLY DETAILS SEE RPV-107.

REFERENCES:

GENERAL ELECTRIC DRAWINGS:

761 E 992	131 C 8028
131 C 7732	131C 8029
131 C 8403	131C 8030
131 C 8501	131 C 8047

CBI NUCLEAR CO.
55, REV 3, N3 NOZZLE

BOVEE CRAIL/GERI
BC/G-212 REV 6

KEYPLAN

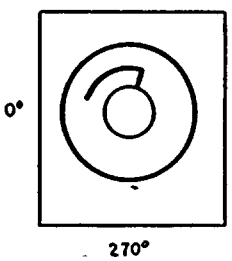

THIS DRAWING IS INTENDED FOR USE IN PRESERVICE AND INSERVICE INSPECTION PROGRAMS ONLY.

NO	DATE	REVISION	BY	CHKD	APPVD
4	9-26-83	ADDED UT-46, LUGS & AS NOTED. ADDED KEYPLAN	KMcA	DR	TBR
3	7-2-81	REVISED AS NOTED	KMcA	DR	TBR
2	8-30-79	ADDED NOTE 4.	KMcA	[illegible]	[illegible]
1	1-10-79	CAL BLOCK REFERENCE CHANGED (FOR 8" PIPING)	KMcA	[illegible]	[illegible]
0	11-27-78	ISSUED FOR USE	KMcA	DR	[illegible]
A	4-21-78	ISSUED FOR INFORMATION ONLY	KMcA	[illegible]	TBR

PIPING SYSTEM	NOM DIA (IN)	SCH	NOM WALL THK	MATERIAL SPECIFICATION	MATL TYPE	CAL BLOCK NO
26"MS(1)-4	26	XXX	1.125	SA 106 GR B	CS	UT-4
8"MS(1)-4	8	160	0.906	SA 106 GR B	CS	UT-24
LUGS	NA	NA	NA	SA 515 GR 70	CS	UT-46

QUALITY CLASS: 1 | ASME CODE CLASS: 1

ENGR: D TIMMINS | DRAWN: K. McA | DATE: 1-16-78

WASHINGTON PUBLIC POWER SUPPLY SYSTEM
RICHLAND, WASHINGTON 99352

WNP-2
WELD & COMPONENT IDENTIFICATION DIAGRAM

TITLE:
MAIN STEAM LINE B

DWG NO: MS-102-1 | REV 4

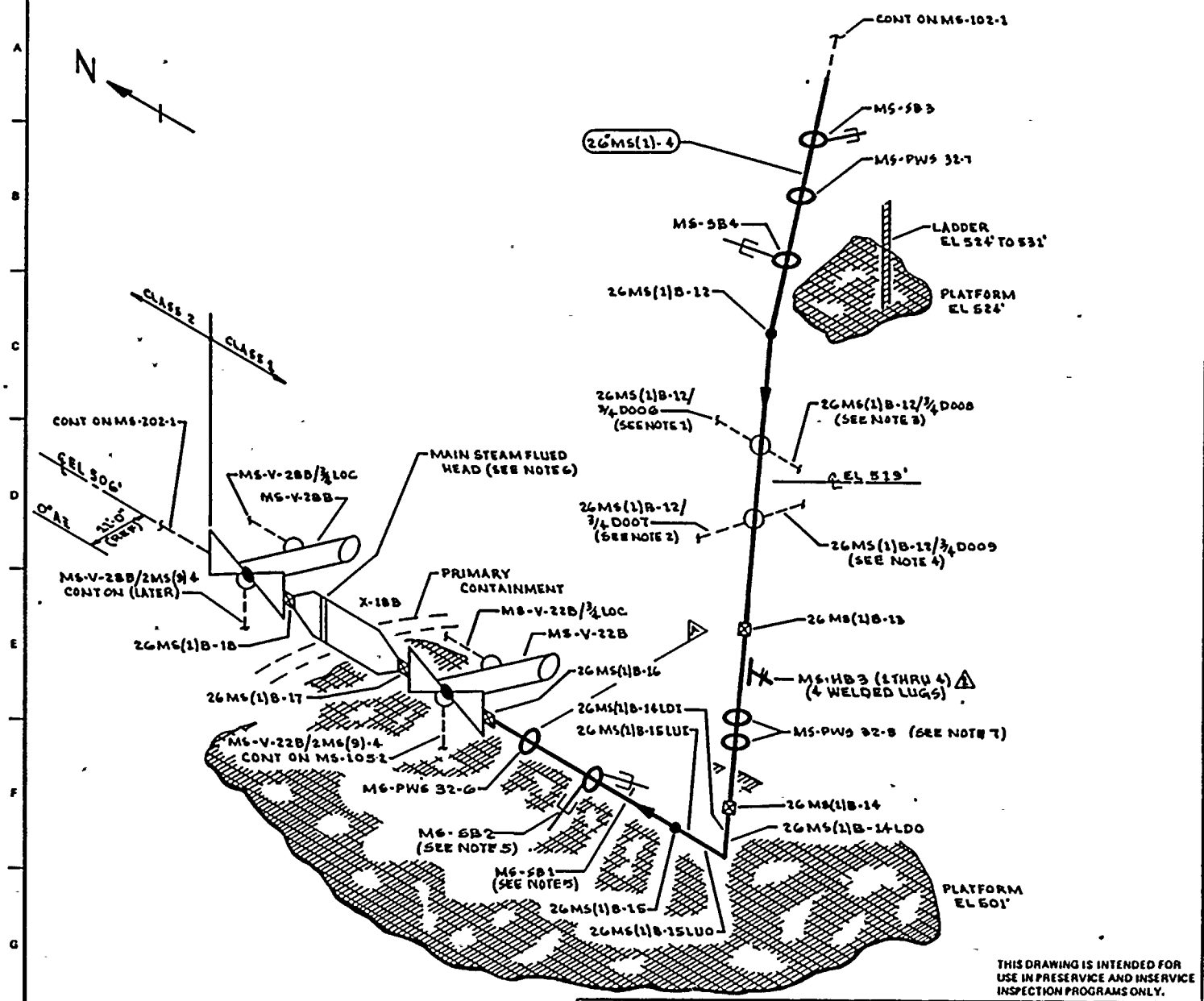

THIS DRAWING IS INTENDED FOR USE IN PRESERVICE AND INSERVICE INSPECTION PROGRAMS ONLY.

NOTES:

1. EXTEND LEAKAGE EXAM THROUGH CONTAINMENT (X-39a) THROUGH EXCESS FLOW CHECK VALVE TO INSTRUMENT TUBING CONNECTION.
2. EXTEND LEAKAGE EXAM THROUGH CONTAINMENT (X-39b) THROUGH EXCESS FLOW CHECK VALVE TO INSTRUMENT TUBING CONNECTION.
3. EXTEND LEAKAGE EXAM THROUGH CONTAINMENT (X-38a) THROUGH EXCESS FLOW CHECK VALVE TO INSTRUMENT TUBING CONNECTION.
4. EXTEND LEAKAGE EXAM THROUGH CONTAINMENT (X-38b) THROUGH EXCESS FLOW CHECK VALVE TO INSTRUMENT TUBING CONNECTION.
5. ACCESS TO WELD 26MS(1)B-15 REQUIRES REMOVAL OF COLLAR FOR MS-SB1 & MS-SB2.
6. FOR EXAM OF MAIN STEAM FLUED HEAD SEE DWG MS-101-2.
7. ACCESS TO WELD 26MS(1)B-16 IS RESTRICTED BY PWS 32-5.

REFERENCES:

GENERAL ELECTRIC DRAWINGS

761 E 992	131 C 8403
131 C 7732	131 C 8028
131 C 8047	131 C 8029
131 C 8501	131 C 8030

BOVEE CRAIL/GERI

BC/G-212 REV 6

KEYPLAN

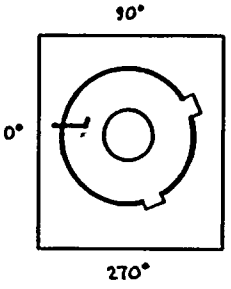

QUALITY CLASS: 1	ASME CODE CLASS: 1
ENGR: D TIMMING	DRAWN: K.M.A. DATE: 1-17-78

WASHINGTON PUBLIC POWER SUPPLY SYSTEM

RICHLAND, WASHINGTON 99352

PIPING SYSTEM	NOM DIA (IN)	SCH	NOM WALL THK	MATERIAL SPECIFICATION	MATL TYPE	CAL BLOCK NO
26"MS(1)-4	26	XXX	1.125	SA 106 GR B	CS	UT-4
LUGS	NA	NA	NA	SA 515 GR 70	CS	UT-4G

NO	DATE	REVISION	BY	CHKD	APPVD
2	9-26-83	ADDED UT-4G, LUGS & AS NOTED, & KEYPLAN	K.M.A.	DMR	TFH
1	12-2-81	REVISED AS NOTED, AUGMENTED ISI ADDED	K.M.A.	DM	TFH
0	11-27-78	ISSUED FOR USE	K.M.A.	TMR	[illegible]
A	1-17-78	ISSUED FOR INFORMATION ONLY	K.M.A.	DCJ	[illegible]

WNP-2
WELD & COMPONENT IDENTIFICATION DIAGRAM

TITLE: MAIN STEAM LINE B

DWG NO: MS-102-2 REV 2

WNF-02
INTERVAL: PSI
PERIOD: NA
OUTAGE:
DRAWING NO. MS-102

WASHINGTON PUBLIC POWER SUPPLY SYSTEM
PROGRAM PLAN AND SCHEDULE
SYSTEM OR COMPONENT: MS(1)-4
DESCRIPTION: MAIN STEAM LINE B

DATE 12/14/84

IDENT. NO.	DESCRIPTION	SECT. XI EXAM.	EXAM MTH.	PROCEDURE	CAL. BLOCK	INSERVICE REQ.	INSERVICE SCHEDULED OUTAGE	NOTES
26MS(1)B-1								
	NZ/TRANSITION	B-J	VOL	UTP-10	UT-104			
			SUR	PTP-1				
26MS(1)B-2								
	TRANSITION/PIPE	B-J	VOL	UTP-10	UT-4			
			SUR	PTP-1				
26MS(1)B-3								
	PIPE TO EL	B-J	VOL	UTP-10	UT-4			
			SUR	PTP-1				
26MS(1)B-3LDT								
	EL SEAM	B-J	VOL	UTP-10	UT-4			
			SUR	PTP-1				
26MS(1)B-3LDO								
	EL SEAM	B-J	VOL	UTP-10	UT-4			
			SUR	PTP-1				
26MS(1)B-4LUT								
	EL SEAM	B-J	VOL	UTP-10	UT-4			
			SUR	PTP-1				
26MS(1)B-4LUO								
	EL SEAM	B-J	VOL	UTP-10	UT-4			
			SUR	PTP-1				
26MS(1)B-4								
	EL TO PIPE	B-J	VOL	UTP-10	UT-4			
			SUR	PTP-1				
PWS-32-1								
	PIPE WHIP	N/A	N/A	N/A				SEE NOTE #1
26MS(1)B-5								
	PIPE TO PIPE	B-J	VOL	UTP-10	UT-4			

WNP-02
INTERVAL: PSI
PERIOD: NA
OUTAGE:
DRAWING NO. MS-102

WASHINGTON PUBLIC POWER SUPPLY SYSTEM
PROGRAM PLAN AND SCHEDULE
SYSTEM OR COMPONENT: MS(1)-4
DESCRIPTION: MAIN STEAM LINE B

DATE 12/14/84

IDENT. NO.	DESCRIPTION	SECT. XI EXAM.	EXAM MTH.	PROCEDURE	CAL. BLOCK	INSERVICE REQ.	INSERVICE SCHEDULED OUTAGE	NOTES
			SUR	PTP-1				
MS-HB-1(W)	4 WELDED LUGS	B-K-1	VOL	UTP-26	UT-4			
MS-HB-1	SPRING (2)	B-K-2	VT-3	303/8.2.17				
			VT-4	303/8.2.17				
MS-SB-6	PSA-35 SNUBBER	B-K-2	VT-3	303/8.2.17				S/N 4206
			VT-4	303/8.2.17				S/N 4206
MS-SB-7	PSA-35 SNUBBER	B-K-2	VT-3	303/8.2.17				S/N 4210
			VT-4	303/8.2.17				S/N 4210
PWS-32-2	PIPE WHIP	N/A	N/A	N/A				SEE NOTE #1
26MS(1)B-5/10RCIC(12)-4	PIPE TO SWL	B-J	VOL	UTP-10	UT-4			
			SUR	PTP-1				
26MS(1)B-6	PIPE TO EL	B-J	VOL	UTP-10	UT-4			
			SUR	PTP-1				
26MS(1)B-6LDI	EL SEAM	B-J	VOL	UTP-10	UT-4			
			SUR	PTP-1				
26MS(1)B-6LDO	EL SEAM	B-J	VOL	UTP-10	UT-4			
			SUR	PTP-1				
26MS(1)B-7LUI	EL SEAM	B-J	VOL	UTP-10	UT-4			

WNP-02
INTERVAL: PSI
PERIOD: NA
OUTAGE:
DRAWING NO. MS-102

WASHINGTON PUBLIC POWER SUPPLY SYSTEM
PROGRAM PLAN AND SCHEDULE
SYSTEM OR COMPONENT: MS(1)-4
DESCRIPTION: MAIN STEAM LINE B

IDENT. NO.	DESCRIPTION	SECT. XI EXAM.	EXAM MTH.	PROCEDURE	CAL. BLOCK	INSERVICE REQ.	SCHEDULED OUTAGE	NOTES
26MS(1)B-7LUO			SUR	PTP-1				
	EL SEAM	B-J	VOL	UTP-10	UT-4			
26MS(1)B-7			SUR	PTP-1				
	EL TO PIPE	B-J	VOL	UTP-10	UT-4			
26MS(1)B-8			SUR	PTP-1				
	PIPE TO EL	B-J	VOL	UTP-10	UT-4			
26MS(1)B-8LDI			SUR	PTP-1				
	EL SEAM	B-J	VOL	UTP-10	UT-4			
26MS(1)B-8LDO			SUR	PTP-1				
	EL SEAM	B-J	VOL	UTP-10	UT-4			
26MS(1)B-9LUI			SUR	PTP-1				
	EL SEAM	B-J	VOL	UTP-10	UT-4			
26MS(1)B-9LUO			SUR	PTP-1				
	EL SEAM	B-J	VOL	UTP-10	UT-4			
26MS(1)B-9			SUR	PTP-1				
	EL TO PIPE	B-J	VOL	UTP-10	UT-4			
			SUR	PTP-1				

WNP-02
INTERVAL: PSI
PERIOD: NA
OUTAGE:
DRAWING NO. MS-102

WASHINGTON PUBLIC POWER SUPPLY SYSTEM
PROGRAM PLAN AND SCHEDULE
SYSTEM OR COMPONENT: MS(1)-4
DESCRIPTION: MAIN STEAM LINE B

IDENT. NO.	DESCRIPTION	SECT. XI EXAM.	EXAM MTH.	PROCEDURE	CAL. BLOCK	INSERVICE REQ.	INSERVICE SCHEDULED OUTAGE	NOTES
PWS-32-3								
	PIPE WHIP	N/A	N/A	N/A				SEE NOTE #1
MS-SB-5								
	PSA-35 SNUBBER	B-K-2	VT-3	303/8.2.17				S/N 4149
			VT-4	303/8.2.17				S/N 4149
MS-SB-8								
	PSA-35 SNUBBER	B-K-2	VT-3	303/8.2.17				S/N 4152
			VT-4	303/8.2.17				S/N 4152
26MS(1)B-9/8MSR-5B								
	PIPE TO SWL	B-J	VOL	UTP-10	UT-4			
			SUR	PTP-1				
8MSR-5B1								
	SWL TO PIPE	B-J	VOL	UTP-10	UT-4			
			SUR	PTP-1				
8MSR-5B2								
	PIPE TO FLANGE	B-J	VOL	UTP-10	UT-4			
			SUR	PTP-1				
8MSR-5B-2BD								
	FLANGE BOLTING	B-G-2	VT-1	QCI 7-1				
MS-RV-5B-BLT								
	VALVE BOLTING	B-G-2	VT-1	QCI 7-1				
MS-RV-5B-BDY								
	VALVE BODY	B-M-2	VT-1	QCI 7-1				
26MS(1)B-9/8MSR-4B								
	PIPE TO SWL	B-J	VOL	UTP-10	UT-4			
			SUR	PTP-1				
8MSR-4B1								
	SWL TO PIPE	B-J	VOL	UTP-10	UT-24			
			SUR	PTP-1				

WNP-02
INTERVAL: PSI
PERIOD: NA
OUTAGE:
DRAWING NO. MS-102

WASHINGTON PUBLIC POWER SUPPLY SYSTEM
PROGRAM PLAN AND SCHEDULE
SYSTEM OR COMPONENT: MS(1)-4
DESCRIPTION: MAIN STEAM LINE B

DATE 12/14/84

IDENT. NO.	DESCRIPTION	SECT. XI EXAM.	EXAM MTH.	PROCEDURE	CAL. BLOCK	INSERVICE REQ.	SCHEDULED OUTAGE	NOTES
8MSR-4B2								
	SWL TO PIPE	B-J	VOL	UTP-10	UT-24			
			SUR	PTP-1				
8MSR-4B-2BD								
	FLANGE BOLTING	B-G-2	VT-1	QCI 7-1				
MS-RV-4B-BLT								
	VALVE BOLTING	B-G-2	VT-1	QCI 7-1				
MS-RV-4B-BDY								
	VALVE BODY	B-M-2	VT-1	QCI 7-1				
MS-HB-2								
	SPRING	B-K-2	VT-3	303/8.2.17				
			VT-4	303/8.2.17				
26MS(1)B-9/8MSR-3B								
	PIPE TO SWL	B-J	VOL	UTP-10	UT-4			
			SUR	PTP-1				
8MSR-3P1								
	SWL TO PIPE	B-J	VOL	UTP-10	UT-24			
			SUR	PTP-1				
8MSR-3B2								
	PIPE TO FLANGE	B-J	VOL	UTP-10	UT-24			
			SUR	PTP-1				
8MSR-3B-2BD								
	FLANGE BOLTING	B-G-2	VT-1	QCI 7-1				
MS-RV-3B-BLT								
	VALVE BOLTING	B-G-2	VT-1	QCI 7-1				
MS-RV-3B-BDY								
	VALVE BODY	B-M-2	VT-1	QCI 7-1				
26MS(1)B-9/8MSR-2B								
	PIPE TO SWL	B-J	VOL	UTP-10	UT-4			
			SUR	PTP-1				

WNP-02
INTERVAL: ESI
PERIOD: NA
OUTAGE:
DRAWING NO. MS-102

WASHINGTON PUBLIC POWER SUPPLY SYSTEM
PROGRAM PLAN AND SCHEDULE
SYSTEM OR COMPONENT: MS(1)-4
DESCRIPTION: MAIN STEAM LINE B

IDENT. NO.	DESCRIPTION	SECT. XI EXAM.	EXAM MTH.	PROCEDURE	CAL. BLOCK	INSERVICE REQ.	INSERVICE SCHEDULED OUTAGE	NOTES
8MSR-2B1								
	SWL TO PIPE	B-J	VOL	UTP-10	UT-24			
			SUR	PTP-1				
8MSR-2B2								
	PIPE TO FLANGE	B-J	VOL	UTP-10	UT-24			
			SUR	PTP-1				
8MSR-2B-2BD								
	FLANGE BOLTING	B-G-2	VT-1	QCI 7-1				
MS-RV-2B-BLT								
	VALVE BOLTING	B-G-2	VT-1	QCI 7-1				
MS-RV-2B-BDY								
	VALVE BODY	B-M-2	VT-1	QCI 7-1				
MS-SB-10								
	PSA-35 SNUBBER	B-K-2	VT-3	303/8.2.17				S/N 4201
			VT-4	303/8.2.17				S/N 4201
26MS(1)B-9/8MSR-1B								
	PIPE TO SWL	B-J	VOL	UTP-10	UT-4			
			SUR	PTP-1				
8MSR-1B1								
	SWL TO PIPE	B-J	VOL	UTP-10	UT-24			
			SUR	PTP-1				
8MSR-1B2								
	PIPE TO FLANGE	B-J	VOL	UTP-10	UT-24			
			SUR	PTP-1				
8MSR-1B-2BD								
	FLANGE BOLTING	B-G-2	VT-1	QCI 7-1				
MS-RV-1B-BLT								
	VALVE BOLTING	B-G-2	VT-1	QCI 7-1				
MS-RV-1B-BDY								
	VALVE BODY	B-M-2	VT-1	QCI 7-1				

WNP-02
INTERVAL: PSI
PERIOD: NA
OUTAGE:
DRAWING NO. MS-102

WASHINGTON PUBLIC POWER SUPPLY SYSTEM
PROGRAM PLAN AND SCHEDULE
SYSTEM OR COMPONENT: MS(1)-4
DESCRIPTION: MAIN STEAM LINE B

DATE 12/14/84

IDENT. NO.	DESCRIPTION	SECT. XI EXAM.	EXAM MTH.	PROCEDURE	CAL. BLOCK	INSERVICE REQ.	INSERVICE SCHEDULED OUTAGE	NOTES
MS-SB-9								
	PSA-35 SNUBBER	B-K-2	VT-3	303/8.2.17				S/N 4203
			VT-4	303/8.2.17				S/N 4203
PWS-32-4								
	PIPE WHIP	N/A	N/A	N/A				SEE NOTE #1
26MS(1)B-10								
	PIPE TO EL	B-J	VOL	UTP-10	UT-4			
			SUR	PTP-1				
26MS(1)B-10LDI								
	EL SEAM	B-J	VOL	UTP-10	UT-4			
			SUR	PTP-1				
26MS(1)B-10LDO								
	EL SEAM	B-J	VOL	UTP-10	UT-4			
			SUR	PTP-1				
26MS(1)B-11LUI								
	EL SEAM	B-J	VOL	UTP-10	UT-4			
			SUR	PTP-1				
26MS(1)B-11LUO								
	EL SEAM	B-J	VOL	UTP-10	UT-4			
			SUR	PTP-1				
26MS(1)B-11								
	EL TO PIPE	B-J	VOL	UTP-10	UT-4			
			SUR	PTP-1				
MS-SB-3								
	PSA-35 SNUBBER	B-K-2	VT-3	303/8.2.17				S/N 4155
			VT-4	303/8.2.17				S/N 4155

WNP-02
INTERVAL: PSI
PERIOD: NA
OUTAGE:
DRAWING NO. MS-102

WASHINGTON PUBLIC POWER SUPPLY SYSTEM
PROGRAM PLAN AND SCHEDULE
SYSTEM OR COMPONENT: MS(1)-4
DESCRIPTION: MAIN STEAM LINE B

DATE 12/14/84

IDENT. NO.	DESCRIPTION	SECT. XI EXAM.	EXAM MTH.	PROCEDURE	CAL. BLOCK	INSERVICE REQ.	INSERVICE SCHEDULED OUTAGE	NOTES
PWS-32-7								
	PIPE WHIP	N/A	N/A	N/A				SEE NOTE #1
MS-SB-4								
	PSA-35 SNUBBER	B-K-2	VT-3	303/8.2.17				S/N 4153
			VT-4	303/8.2.17				S/N 4153
26MS(1)B-12								
	PIPE TO PIPE	B-J	VOL	UTP-10	UT-4			
			SUR	PTP-1				
26MS(1)B-12/3/4-D006								
	INSTR CONN	B-P	VT-2	N/A				SEE NOTES #6 & #7.
26MS(1)B-12/3/4-D008								
	INSTR CONN	B-P	VT-2	N/A				SEE NOTES #6 & #7.
26MS(1)B-12/3/4-DC07								
	INSTR CONN	B-P	VT-2	N/A				SEE NOTES #6 & #7.
26MS(1)B-12/3/4-D009								
	INSTR CONN	B-P	VT-2	N/A				SEE NOTES #6 & #7.
26MS(1)B-13								
	PIPE TO PIPE	B-J	VOL	UTP-10	UT-4			
			SUR	PTP-1				
MS-HB-3(W)								
	4 WELDED LUGS	B-K-1	VOL	UTP-26	UT-4			
MS-HB-3								
	SPRING (2)	B-K-2	VT-3	303/8.2.17				
			VT-4	303/8.2.17				
PWS-32-5								
	PIPE WHIP	N/A	N/A	N/A				SEE NOTE #1
26MS(1)B-14								
	PIPE TO EL	B-J	VOL	UTP-10	UT-4			
			SUR	PTP-1				
26MS(1)B-14LDI								
	EL SEAM	B-J	VOL	UTP-10	UT-4			

WNP-02
INTERVAL: PSI
PERIOD: NA
OUTAGE:
DRAWING NO. MS-102

WASHINGTON PUBLIC POWER SUPPLY SYSTEM
PROGRAM PLAN AND SCHEDULE
SYSTEM OR COMPONENT: MS(1)-4
DESCRIPTION: MAIN STEAM LINE B

IDENT. NO.	DESCRIPTION	SECT. XI EXAM.	EXAM MTH.	PROCEDURE	CAL. BLOCK	INSERVICE REQ.	INSERVICE SCHEDULED OUTAGE	NOTES
26MS(1)B-14LDO			SUR	PTP-1				
	EL SEAM	B-J	VOL	UTP-10	UT-4			
26MS(1)B-15LUI			SUR	PTP-1				
	EL SEAM	B-J	VOL	UTP-10	UT-4			
26MS(1)B-15LUO			SUR	PTP-1				
	EL SEAM	B-J	VOL	UTP-10	UT-4			
26MS(1)B-15			SUR	PTP-1				
	EL TO PIPE	B-J	VOL	UTP-10	UT-4			
MS-SB-1			SUR	PTP-1				
	PSA-100 SNUBBER	B-K-2	VT-3	303/8.2.17				S/N 604
			VT-4	303/8.2.17				S/N 604
MS-SB-2								
	PSA-100 SNUBBER	B-K-2	VT-3	303/8.2.17				S/N 606
			VT-4	303/8.2.17				S/N 606
PWS-32-6								
	PIPE WHIP	N/A	N/A	N/A				SEE NOTE #1
26MS(1)B-16								
	PIPE TO VALVE	B-J	VOL	UTP-10	UT-4			AUGMT
			SUR	PTP-1				AUGMT
MS-V-22B/2MS(9)-4								
	DRAIN CONN	B-J	SUR	PTP-1				
MS-V-22B-BLT								
	VALVE BOLTING	B-G-2	VT-1	OCI 7-1				

WNP-02
INTERVAL: PSI
PERIOD: NA
OUTAGE:
DRAWING NO. MS-102

WASHINGTON PUBLIC POWER SUPPLY SYSTEM
PROGRAM PLAN AND SCHEDULE
SYSTEM OR COMPONENT: MS(1)-4
DESCRIPTION: MAIN STEAM LINE B

DATE 12/14/84

IDENT. NO.	DESCRIPTION	SECT. XI EXAM.	EXAM MTH.	PROCEDURE	CAL. BLOCK	INSERVICE REQ.	INSERVICE SCHEDULED OUTAGE	NOTES
MS-V-22B-BDY								
	VALVE BODY	B-M-2	VT-1	QCI 7-1				
MS-V-22B/3/4CAP								
	LEAKOFF CAPPED	B-P	VT-2	N/A				
26MS(1)B-17								
	VALVE TO PENE	B-J	VOL	UTP-10	UT-4			AUGMT
			SUR	PTP-1				AUGMT
MS FLUED HEAD B								
	FLUED HEAD WELD	B-K-1	VOL	UTP-10	UT-40			SEE DWG. #MS-101-3, AUGMT.
			SUR	MTP-1				SEE DWG. #MS-101-3, AUGMT.
26MS(1)B-18								
	PENE TO VALVE	B-J	VOL	UTP-10	UT-4			AUGMT
			SUR	PTP-1				AUGMT
MS-V-28B/2MS(9)-4								
	DRAIN CONN	B-J	SUR	PTP-1				AUGMT
MS-V-28B-BLT								
	VALVE BOLTING	B-G-2	VT-1	QCI 7-1				
MS-V-28B-BDY								
	VALVE BODY	B-M-2	VT-1	QCI 7-1				
MS-V-28B/3/4CAP								
	LEAKOFF CAPPED	B-P	VT-2	N/A				
MS-PB-102								
	MS PRESS BNDRY	B-P	VT-2	N/A				SEE NOTES #6 & #7.

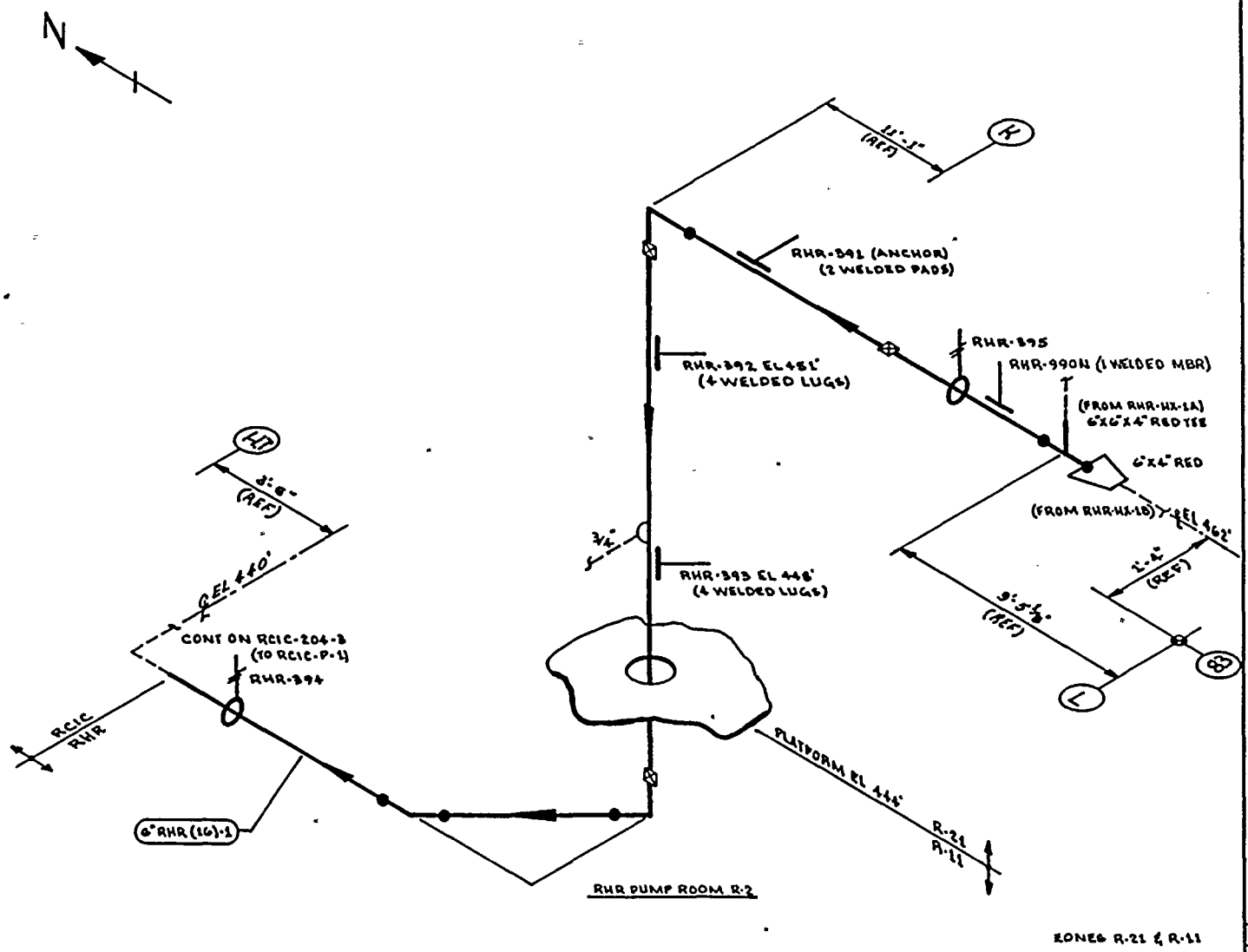

NOTES:

1. THIS DRAWING IDENTIFIES PIPING & COMPONENTS SUBJECT TO A VISUAL EXAM FOR EVIDENCE OF LEAKAGE DURING SYSTEM HYDRO OR OPERABILITY TESTS. TESTS ARE TO BE CONDUCTED PER THE REQUIREMENTS OF ASME SECTION XI, PARAGRAPH IWA-5000.
2. FOR BRANCH PIPING 4" DIA OR LESS (CONN SHOWN IN DASHED LINES) EXTEND VISUAL LEAKAGE EXAM THROUGH THE OUTERMOST NORMALLY CLOSED NUCLEAR VALVE OR UNTIL TRANSITION TO INSTRUMENT TUBING, UNLESS OTHERWISE NOTED.

REFERENCES:

DOUGE & CRAIL ISOMETRICS

RHR-667-16.19 REV 11
RHR-667-20.21 REV 5

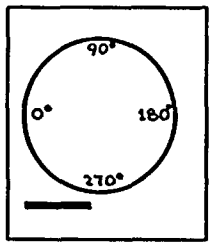

KEY PLAN

QUALITY CLASS: 1 | ASME CODE CLASS: 2

ENGR: G.A. KUGLER | DRAWN: K.McA | DATE: 7-21-78

THIS DRAWING IS INTENDED FOR USE IN PRESERVICE AND INSERVICE INSPECTION PROGRAMS ONLY.

WASHINGTON PUBLIC POWER SUPPLY SYSTEM
RICHLAND, WASHINGTON 99352

PIPING SYSTEM	NOM DIA (IN)	SCH	NOM WALL THK	MATERIAL SPECIFICATION	MATL TYPE	CAL BLOCK NO
6" RHR (16)-1	6	40	0.280	SA 106 GR B	CS	NA

WNP-2
WELD & COMPONENT IDENTIFICATION DIAGRAM

TITLE: RHR CONDENSING MODE SUPPLY TO RCIC-P-1

DWG NO: RHR-212 | REV 1

NO	DATE	REVISION	BY	CHKD	APPVD
1	12-14-83	ADDED RHR-990N	K.McA	DR	TRH
0	11-22-78	ISSUED FOR USE	K.McA	[illegible]	
A	10-3-78	ISSUED FOR INFORMATION ONLY	K.McA	[illegible]	[illegible]

WNP-02
INTERVAL: PSI
PERIOD: NA
OUTAGE:
DRAWING NO. RHR-212

WASHINGTON PUBLIC POWER SUPPLY SYSTEM
PROGRAM PLAN AND SCHEDULE
SYSTEM OR COMPONENT: RHR(16)-1
DESCRIPTION: COND MODE SUPPLY

DATE 12/14/84

IDENT. NO.	DESCRIPTION	SECT. XI EXAM.	EXAM MTH.	PROCEDURE	CAL. BLOCK	INSERVICE REQ.	SCHEDULED OUTAGE	NOTES
RHR-990N								
	BOX	C-E-2	VT-3	303/8.2.17				
RHR-395								
	SPRING	C-E-2	VT-3	303/8.2.17				
			VT-4	303/8.2.17				
RHR-391								
	ANCHOR	C-E-2	VT-3	303/8.2.17				
RHR-392								
	BOX	C-E-2	VT-3	303/8.2.17				
RHR-393								
	BOX	C-E-2	VT-3	303/8.2.17				
RHR-394								
	SPRING	C-E-2	VT-3	303/8.2.17				
			VT-4	303/8.2.17				
RHR-PB-212								
	RHR PRES BNDRY	N/A	VT-2	N/A				

WNP-02
INTERVAL: PSI
PERIOD: NA
OUTAGE:
DRAWING NO. RHR-211

WASHINGTON PUBLIC POWER SUPPLY SYSTEM
PROGRAM PLAN AND SCHEDULE
SYSTEM OR COMPONENT: RHR(3)-1
DESCRIPTION: RHR-P-2C SUCTION

DATE 12/14/84

IDENT. NO.	DESCRIPTION	SECT. XI EXAM.	EXAM MTH.	PROCEDURE	CAL. BLOCK	INSERVICE REQ.	SCHEDULED OUTAGE	NOTES
RHR-50								
	PSA-3 SN(2)	C-E-2	VT-3	303/8.2.17				S/N 511/479
			VT-4	303/8.2.17				S/N 511/479
RHR-42								
	PSA-3 SNUBBER	C-E-2	VT-3	303/8.2.17				S/N 3911
			VT-4	303/8.2.17				S/N 3911
RHR-43								
	SPRING	C-E-2	VT-3	303/8.2.17				
			VT-4	303/8.2.17				
RHR-PB-211								
	RHR-PB-211	N/A	VT-2	N/A				SEE NOTES #6 & #7.

WNP-02
INTERVAL: PSI
PERIOD: NA
OUTAGE:
DRAWING NO. RHR-211

WASHINGTON PUBLIC POWER SUPPLY SYSTEM
PROGRAM PLAN AND SCHEDULE
SYSTEM OR COMPONENT: RHR(3)-1
DESCRIPTION: RHR-P-2C SUCTION

DATE 12/14/84

IDENT. NO.	DESCRIPTION	SECT. XI EXAM.	EXAM MTH.	PROCEDURE	CAL. BLOCK	INSERVICE REQ.	INSERVICE SCHEDULED OUTAGE	NOTES
RHR-905N	STRUT	C-E-2	VT-3	303/8.2.17				
RHR-900N	STRUT	C-E-2	VT-3	303/8.2.17				
RHR-47	STRUT	C-E-2	VT-3	303/8.2.17				
RHR-46	BOX	C-E-2	VT-3	303/8.2.17				
RHR-966N	ANCHOR	C-E-2	VT-3	303/8.2.17				
RHR-41	BOX	C-E-2	VT-3	303/8.2.17				
RHR-139	SPRING	C-E-2	VT-3	303/8.2.17				
			VT-4	303/8.2.17				
RHR-40	STRUT	C-E-2	VT-3	303/8.2.17				
RHR-39	PSA-1 SN(2)	C-E-2	VT-3	303/8.2.17				S/N 2348
			VT-4	303/8.2.17				S/N 2348
RHR-35	SPRING	C-E-2	VT-3	303/8.2.17				
			VT-4	303/8.2.17				
RHR-37	BOX	C-E-2	VT-3	303/8.2.17				
RHR-140	SPRING	C-E-2	VT-3	303/8.2.17				
			VT-4	303/8.2.17				
RHR-49	STRUT	C-E-2	VT-3	303/8.2.17				
RHR-51	STRUT	C-E-2	VT-3	303/8.2.17				

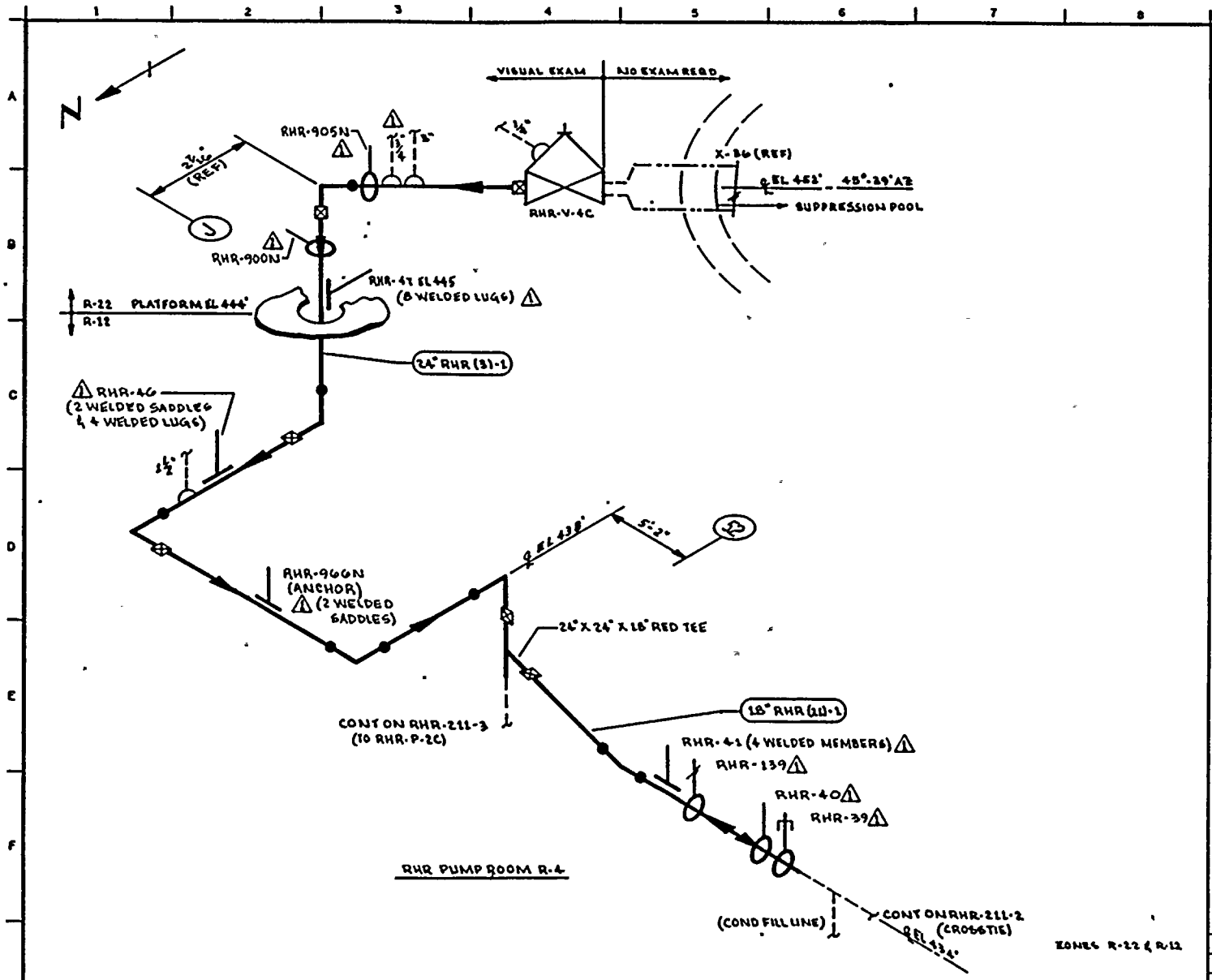

NOTES:

1. THIS DRAWING IDENTIFIES PIPING & COMPONENTS SUBJECT TO A VISUAL EXAM FOR EVIDENCE OF LEAKAGE DURING SYSTEM HYDRO OR OPERABILITY TESTS. TESTS ARE TO BE CONDUCTED PER THE REQUIREMENTS OF ASME SECTION XI, PARAGRAPH IWA-5000.
2. FOR BRANCH PIPING 4" DIA OR LESS (CONN SHOWN IN DASHED LINES) EXTEND VISUAL LEAKAGE EXAM THROUGH THE OUTERMOST NORMALLY CLOSED NUCLEAR CLASS VALVE OR UNTIL TRANSITION TO INSTRUMENT TUBING, UNLESS OTHERWISE NOTED.
3. AT LOCATIONS WHERE LEAKAGE IS NORMALLY EXPECTED (EG. VALVE STEM & PUMP SEAL LEAKOFF CONN) VERIFY LEAKAGE COLLECTION SYSTEM OPERABILITY ONLY. NO HYDRO TEST OF COLLECTION SYSTEM IS REQUIRED.

REFERENCES:

BOVEE & CRAIL ISOMETRICS

RHR-882-1.4 REV B
RHR-880-1.6 REV 6

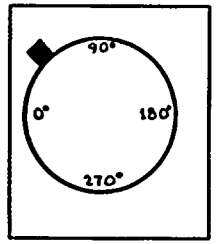

KEY PLAN

THIS DRAWING IS INTENDED FOR USE IN PRESERVICE AND INSERVICE INSPECTION PROGRAMS ONLY.

PIPING SYSTEM	NOM DIA (IN)	SCH	NOM WALL THK	MATERIAL SPECIFICATION	MATL TYPE	CAL BLOCK NO
24" RHR (3)-1	24	STD	0.375	SA 106 GR B	CS	NA
18" RHR (211)-1	18	STD	0.375	SA 106 GR B	CS	NA

NO	DATE	REVISION	BY	CHKD	APPVD
1	9-24-83	REVISED AS NOTED	KMcA	LPR	TPK
0	12-11-78	ISSUED FOR USE	KMcA	[illegible]	[illegible]
A	9-12-78	ISSUED FOR INFORMATION ONLY	KMcA	BAK	[illegible]

QUALITY CLASS: 1 | ASME CODE CLASS: 2

ENGR: GA KUGLER | DRAWN: K.McA | DATE: 6-20-78

WASHINGTON PUBLIC POWER SUPPLY SYSTEM
RICHLAND, WASHINGTON 99352

WNP-2
WELD & COMPONENT IDENTIFICATION DIAGRAM

TITLE:
RHR LOOP C
SUPPRESSION POOL SUCTION & CROSSTIE

DWG NO: RHR-211-1 | REV 1

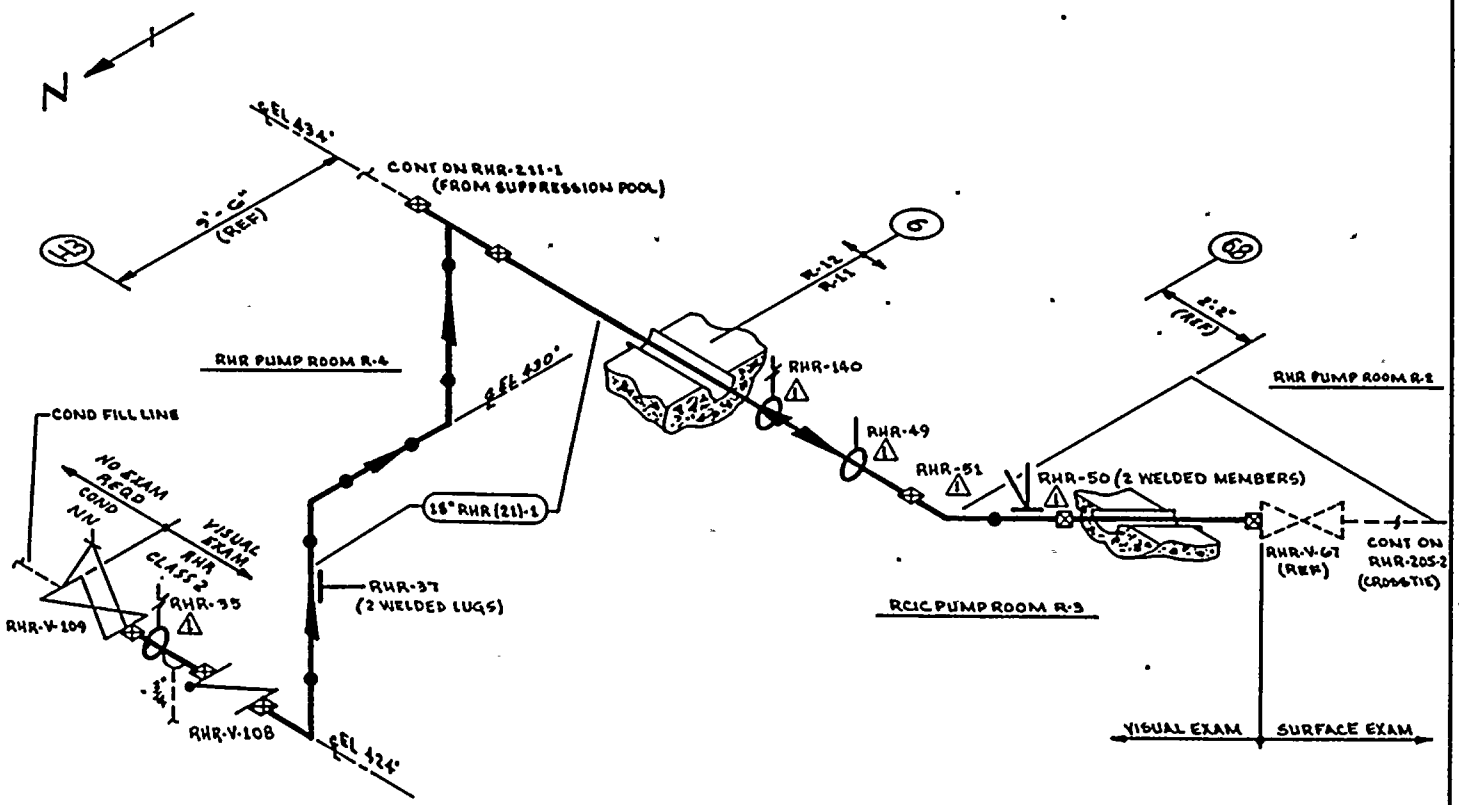

NOTES:

1. THIS DRAWING IDENTIFIES PIPING & COMPONENTS SUBJECT TO A VISUAL EXAM FOR EVIDENCE OF LEAKAGE DURING SYSTEM HYDRO OR OPERABILITY TESTS. TESTS ARE TO BE CONDUCTED PER THE REQUIREMENTS OF ASME SECTION XI, PARAGRAPH IWA-5000.
2. FOR BRANCH PIPING 4" DIA OR LESS (CONN SHOWN IN DASHED LINES) EXTEND VISUAL LEAKAGE EXAM THROUGH THE OUTERMOST NORMALLY CLOSED NUCLEAR CLASS VALVE OR UNTIL TRANSITION TO INSTRUMENT TUBING, UNLESS OTHERWISE NOTED.

REFERENCES

DOVEE & CRAIL ISOMETRIC
RHR-880-L6 REV 6

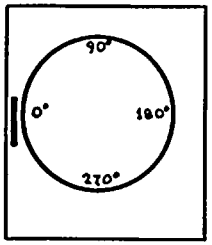

KEY PLAN

ZONES R-11 & R-12

THIS DRAWING IS INTENDED FOR USE IN PRESERVICE AND INSERVICE INSPECTION PROGRAMS ONLY.

QUALITY CLASS: 1	ASME CODE CLASS: 2	
ENGR: G.A. KLIGLER	DRAWN: K.McA	DATE: 6-21-78

WASHINGTON PUBLIC POWER SUPPLY SYSTEM
RICHLAND, WASHINGTON 99352

PIPING SYSTEM	NOM DIA (IN)	SCH	NOM WALL THK	MATERIAL SPECIFICATION	MATL TYPE	CAL BLOCK NO
18" RHR (21)-1	18	STD	0.375	SA 106 GR B	CS	NA

WNP-2
WELD & COMPONENT IDENTIFICATION DIAGRAM

TITLE: RHR LOOP C
CROSSTIE & COND FILL LINE

DWG NO: RHR-211-2 REV 1

NO	DATE	REVISION	BY	CHKD	APPVD
1	9-26-83	REVISED AS NOTED	K.M.A		
0	12-13-78	ISSUED FOR USE	K.M.A		
A	9-12-78	ISSUED FOR INFORMATION ONLY	K.M.A		

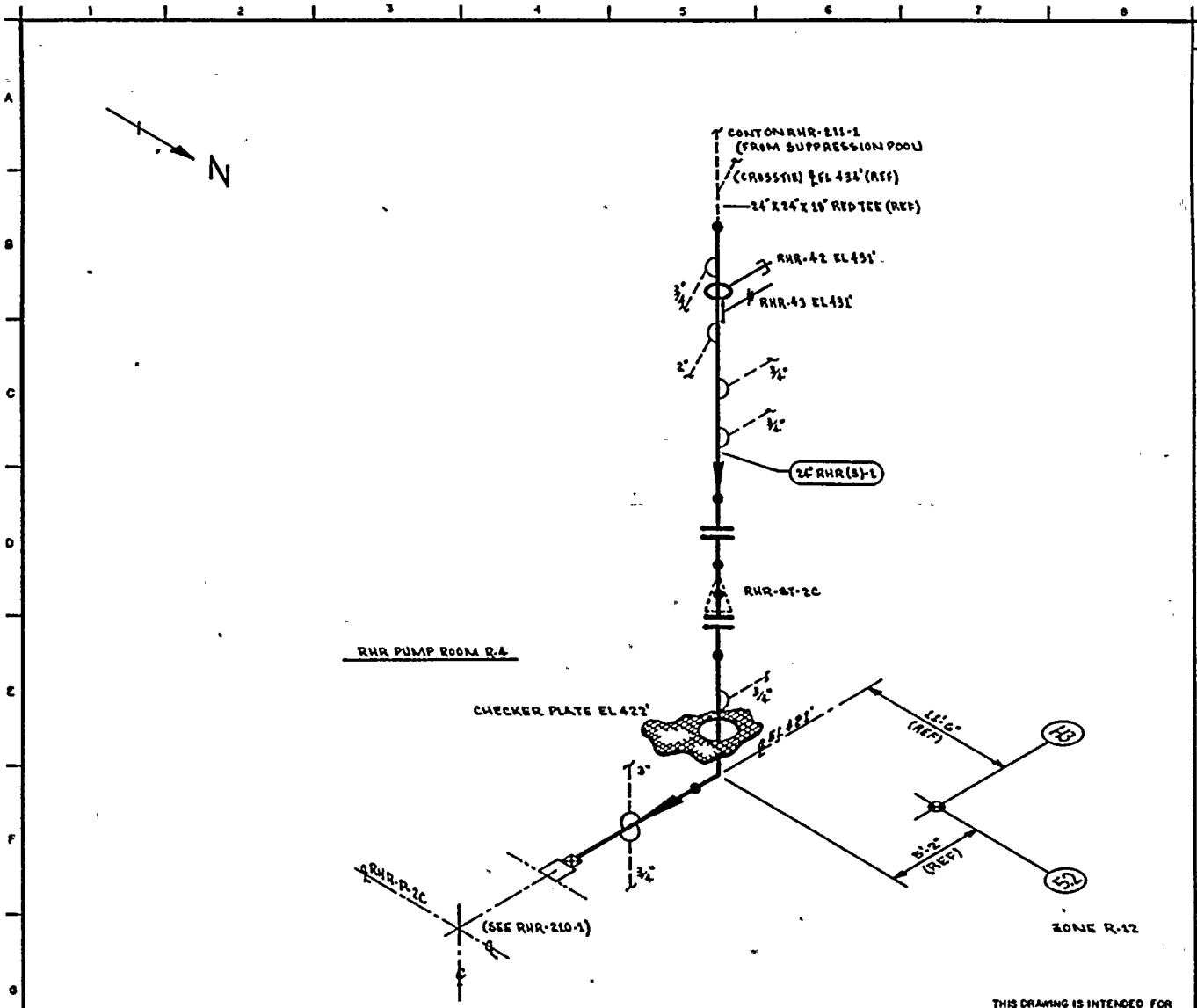

NOTES:

1. THIS DRAWING IDENTIFIES PIPING & COMPONENTS SUBJECT TO A VISUAL EXAM FOR EVIDENCE OF LEAKAGE DURING SYSTEM HYDRO OR OPERABILITY TESTS. TESTS ARE TO BE CONDUCTED PER THE REQUIREMENTS OF ASME SECTION XI, PARAGRAPH IWA-5000.
2. FOR BRANCH PIPING 4" DIA OR LESS (CONN SHOWN IN DASHED LINES) EXTEND VISUAL LEAKAGE EXAM THROUGH THE OUTERMOST NORMALLY CLOSED NUCLEAR CLASS VALVE OR UNTIL TRANSITION TO INSTRUMENT TUBING, UNLESS OTHERWISE NOTED.

REFERENCES:

BOVEE & CRAIL ISOMETRICS

RHR-882-5	REV 3
RHR-882-6.7	REV 1
RHR-882-5H	REV 1
RHR-882-6.7H	REV 0

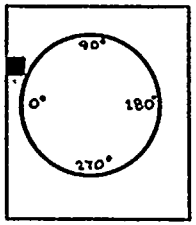

KEY PLAN

THIS DRAWING IS INTENDED FOR USE IN PRESERVICE AND INSERVICE INSPECTION PROGRAMS ONLY.

PIPING SYSTEM	NOM DIA (IN)	SCH	NOM WALL THK	MATERIAL SPECIFICATION	MATL TYPE	CAL BLOCK NO
24" RHR (3)-1	24	STD	0.375	SA 106 GR B	CS	NA

NO	DATE	REVISION	BY	CHKD	APPVD
0	12 12 78	ISSUED FOR USE	KMLA	[illegible]	[illegible]
A	9 12 78	ISSUED FOR INFORMATION ONLY	KMLA	[illegible]	[illegible]

QUALITY CLASS: 1 | ASME CODE CLASS: 2

ENGR: G.A. KUGLER | DRAWN: K.M.L.A. | DATE: 6-21-78

WASHINGTON PUBLIC POWER SUPPLY SYSTEM
RICHLAND, WASHINGTON 99352

WNP-2
WELD & COMPONENT IDENTIFICATION DIAGRAM

TITLE:
RHR LOOP C
RHR-PUMP-2C SUCTION

DWG NO: RHR-211-B | REV 0

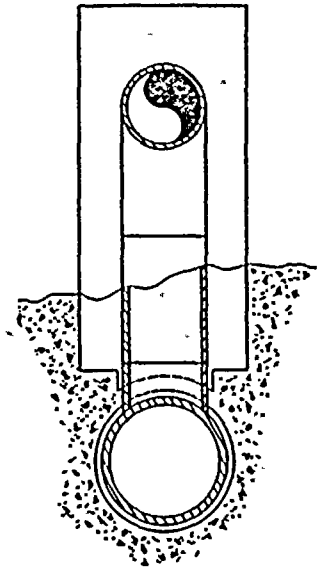

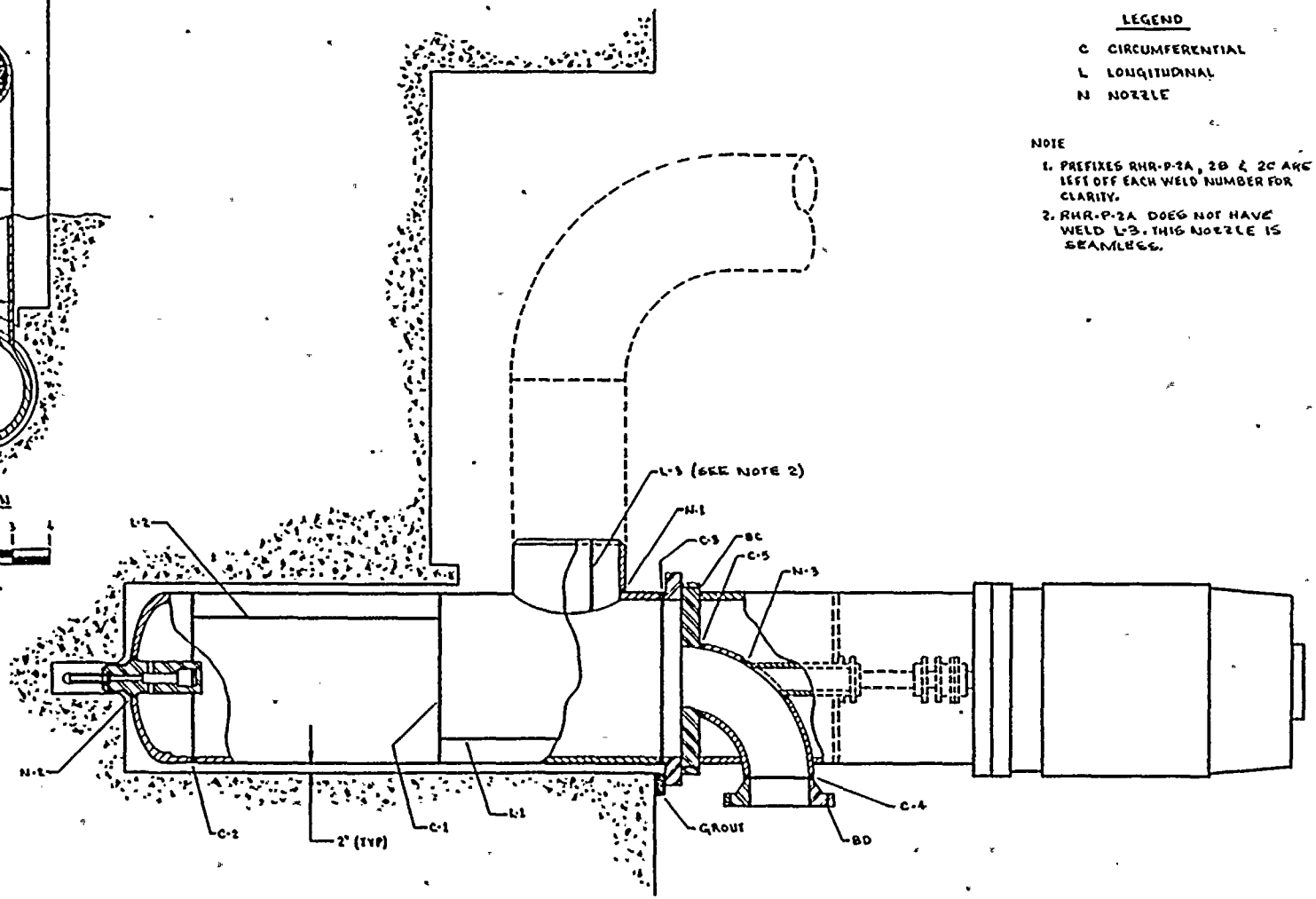

TYPICAL FOR RHR-P-2A, 2B & 2C

SCALE
3/4" = 1'-0"

LEGEND

C CIRCUMFERENTIAL
L LONGITUDINAL
N NOZZLE

NOTE

1. PREFIXES RHR-P-2A, 2B & 2C ARE LEFT OFF EACH WELD NUMBER FOR CLARITY.
2. RHR-P-2A DOES NOT HAVE WELD L-3. THIS NOZZLE IS SEAMLESS.

THIS DRAWING IS INTENDED FOR USE IN PRESERVICE AND INSERVICE INSPECTION PROGRAMS ONLY

WASHINGTON PUBLIC POWER SUPPLY SYSTEM
RICHLAND, WASHINGTON 99352

WNP-2

WELD & COMPONENT IDENTIFICATION DIAGRAM
RHR-P-2A, 2B & 2C WELDS

ENGINEER T. HOYLE
DRAWN K. ALEXANDREW
DATE 10-26-78

DWG NO RHR-213 REV 2

NO	DATE	REVISION	BY	CHKD	APPVD
2	12 2 81	REVISED TO INCLUDE RHR-P-2C & NOTE 2	K.H.A		
1	5 11 79	REDRAWN			
0	11-2-78	ISSUED FOR USE			

WNP-02
INTERVAL: PSI
PERIOD: NA
OUTAGE:
DRAWING NO. RHR-213

WASHINGTON PUBLIC POWER SUPPLY SYSTEM
PROGRAM PLAN AND SCHEDULE
SYSTEM OR COMPONENT: RHR-P-2A
DESCRIPTION: RHR PUMP 2A,2B,2C

IDENT. NO.	DESCRIPTION	SECT. XI EXAM.	EXAM MTH.	PROCEDURE	CAL. BLOCK	INSERVICE REQ.	INSERVICE SCHEDULED OUTAGE	NOTES
RHR-P-2AC-1	PMP CAS/CIR WLD	C-F	SUR	MTP-1				SEE NOTE 4.
RHR-P-2AC-2	PMP CAS/CIR WLD	C-F	SUR	MTP-1				SEE NOTE 4.
RHR-P-2AC-3	PMP CAS/CIR WLD	C-F	SUR	MTP-1				SEE NOTE 4.
RHR-P-2AC-4	PMP CAS/CIR WLD	C-F	SUR	MTP-1				SEE NOTE 4.
RHR-P-2AC-5	PMP CAS/CIR WLD	C-F	SUR	MTP-1				SEE NOTE 4.
RHR-P-2AN-1	PMP NOZZLE WELD	C-F	SUR	MTP-1				SEE NOTE 4.
RHR-P-2AN-2	PMP NOZZLE WELD	C-F	SUR	MTP-1				SEE NOTE 4.
RHR-P-2AN-3	PMP NOZZLE WELD	C-F	SUR	MTP-1				SEE NOTE 4.
RHR-P-2AL-1	PMPCAS/LONG.WLD	C-F	SUR	MTP-1				SEE NOTE 4.
RHR-P-2AL-2	PMPCAS/LONG.WLD	C-F	SUR	MTP-1				SEE NOTE 4.
RHR-P-2AL-3	PMPCAS/LONG.WLD	C-F	SUR	MTP-1				SEE NOTE 4.
RHR-P-2BC-1	PMP CAS/CIR WLD	C-F	SUR	MTP-1				SEE NOTE 4.
RHR-P-2BC-2	PMP CAS/CIR WLD	C-F	SUR	MTP-1				SEE NOTE 4.
RHR-P-2BC-3	PMP CAS/CIR WLD	C-F	SUR	MTP-1				SEE NOTE 4.
RHR-P-2BC-4	PMP CAS/CIR WLD	C-F	SUR	MTP-1				SEE NOTE 4.
RHR-P-2BC-5	PMP CAS/CIR WLD	C-F	SUR	MTP-1				SEE NOTE 4.
RHR-P-2BN-1	PMP NOZZLE WELD	C-F	SUR	MTP-1				SEE NOTE 4.

WNP-02
INTERVAL: PSI
PERIOD: NA
OUTAGE:
DRAWING NO. RHR-213

WASHINGTON PUBLIC POWER SUPPLY SYSTEM
PROGRAM PLAN AND SCHEDULE
SYSTEM OR COMPONENT: RHR-P-2B
DESCRIPTION: RHR PUMP 2A,2B,2C

DATE 12/14/84

IDENT. NO.	DESCRIPTION	SECT. XI EXAM.	EXAM MTH.	PROCEDURE	CAL. BLOCK	INSERVICE REQ.	INSERVICE SCHEDULED OUTAGE	NOTES
RHR-P-2BN-2	PMP NOZZLE WELD	C-F	SUR	MTP-1				SEE NOTE 4.
RHR-P-2BN-3	PMP NOZZLE WELD	C-F	SUR	MTP-1				SEE NOTE 4.
RHR-P-2BL-1	PMPCAS/LONG.WLD	C-F	SUR	MTP-1				SEE NOTE 4.
RHR-P-2BL-2	PMPCAS/LONG.WLD	C-F	SUR	MTP-1				SEE NOTE 4.
RHR-P-2BL-3	PMPCAS/LONG.WLD	C-F	SUR	MTP-1				SEE NOTE 4.
RHR-PB-213	RHR PRESS BNDRY	N/A	VT-2	N/A				IWC-2510, SEE NOTES #6 & #7.

NOTES:

1. WELDS C-2, C-3, L-1, L-2 & L-3 ARE NOT GROSS STRUCTURAL DISCONTINUITIES & DO NOT REQUIRE EXAMINATION.
2. WELD S-2 DOES NOT REQUIRE SURFACE EXAM. IT IS NOT A COMPONENT SUPPORT DURING NORMAL OPERATION.

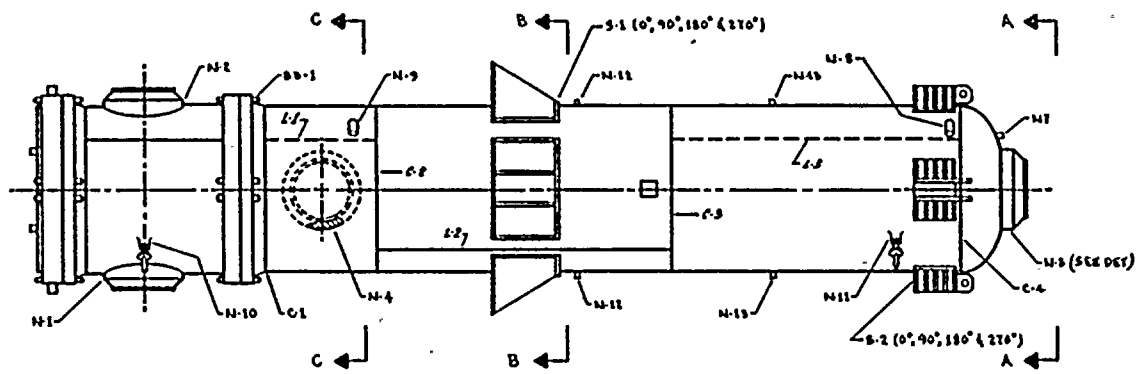

LEGEND

C CIRCUMFERENTIAL

L LONGITUDINAL

S INTERGALLY WELDED SUPPORT

BD BOLTING

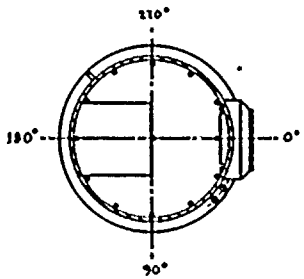

SECTION C-C

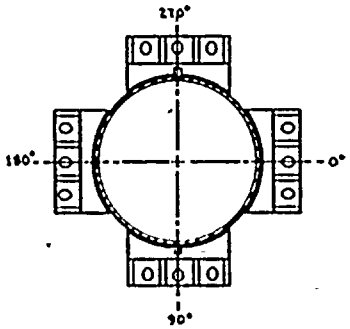

SECTION B-B

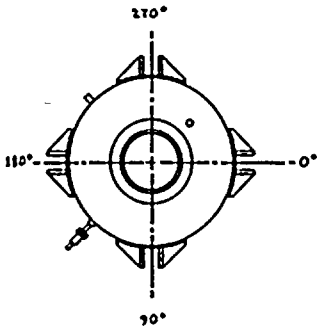

SECTION A-A

	NOM DIA	NOM WALL THK	MATERIAL SPECIFICATION	CAL BLOCK NO
SHELL	58"	1.0	SA 516 GR 70	UT-42
NOZZLE	20"	3.75	SA 105 GR II	UT-42

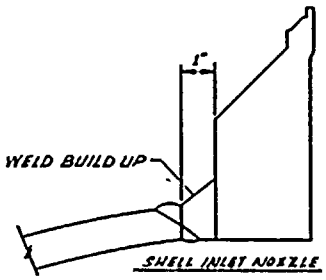

SHELL INLET NOZZLE

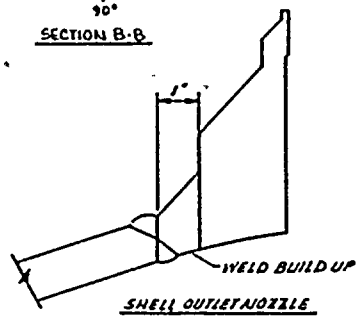

SHELL OUTLET NOZZLE

SCALE
2" = 5'-0"

THIS DRAWING IS INTENDED FOR USE IN PRESERVICE AND INSERVICE INSPECTION PROGRAMS ONLY

WASHINGTON PUBLIC POWER SUPPLY SYSTEM
RICHLAND, WASHINGTON 99352
WNP-2

ENGINEER T. HOYLE
DRAWN K. McANDREW
DATE 1-8-79

WELD & COMPONENT IDENTIFICATION DIAGRAM
RHR HEAT EXCHANGER

DWG NO RHR-214 REV 1

NO	DATE	REVISION	BY	CHKD	APPVD
1	[illegible]	ADDED SHELL INLET & OUTLET NOZZLE DETAIL	[illegible]	[illegible]	[illegible]
0	1/8/79	ISSUED FOR USE	KMA	[illegible]	[illegible]

WNP-02
INTERVAL: PSI
PERIOD: NA
OUTAGE:
DRAWING NO. RHR-214

WASHINGTON PUBLIC POWER SUPPLY SYSTEM
PROGRAM PLAN AND SCHEDULE
SYSTEM OR COMPONENT: RHR-HX-1A
DESCRIPTION: RHR HEAT EXCHANGE 1A

DATE 12/14/84

IDENT. NO.	DESCRIPTION	SECT. XI EXAM.	EXAM MTH.	PROCEDURE	CAL. BLOCK	INSERVICE REQ.	INSERVICE SCHEDULED OUTAGE	NOTES
AC-1								
	FLG/SHEL CIRWLD	C-A	VOL	UTP-17	UT-42			
AC-4								
	SHEL/HD CIR WLD	C-A	VOL	UTP-17	UT-42			
AN-3								
	INLET NZ/SHELWD	C-B	VOL	UTP-17	UT-43			
			SUR	MTP-1				
AN-4								
	OUT NZ/SHEL WLD	C-B	VOL	UTP-17	UT-43			
			SUR	MTP-1				
AS-1								
	HEATXCHG SUP WD	C-C	SUR	MTP-1				4 WELDED SUPPORTS 0,90,180,270 DEG.
BC-1								
	FLG/SHEL CIR WD	C-A	VOL	UTP-17	UT-42			
BC-4								
	SHEL/HD CIR WLD	C-A	VOL	UTP-17	UT-42			
BN-3								
	INLT NZ/SHEL WD	C-B	VOL	UTP-17	UT-43			
			SUR	MTP-1				
BN-4								
	OUT NZ/SHEL WLD	C-B	VOL	UTP-17	UT-43			
			SUR	MTP-1				
BS-1								
	HEATXCHG SUP WD	C-C	SUR	MTP-1				4 WELDED SUPPORTS, 0,90,180,270 DEG.
RHR-PB-214								
	RHR PRESS BNDRY	N/A	VT-2	N/A				IWC-2510, SEE NOTES #6 & #7.

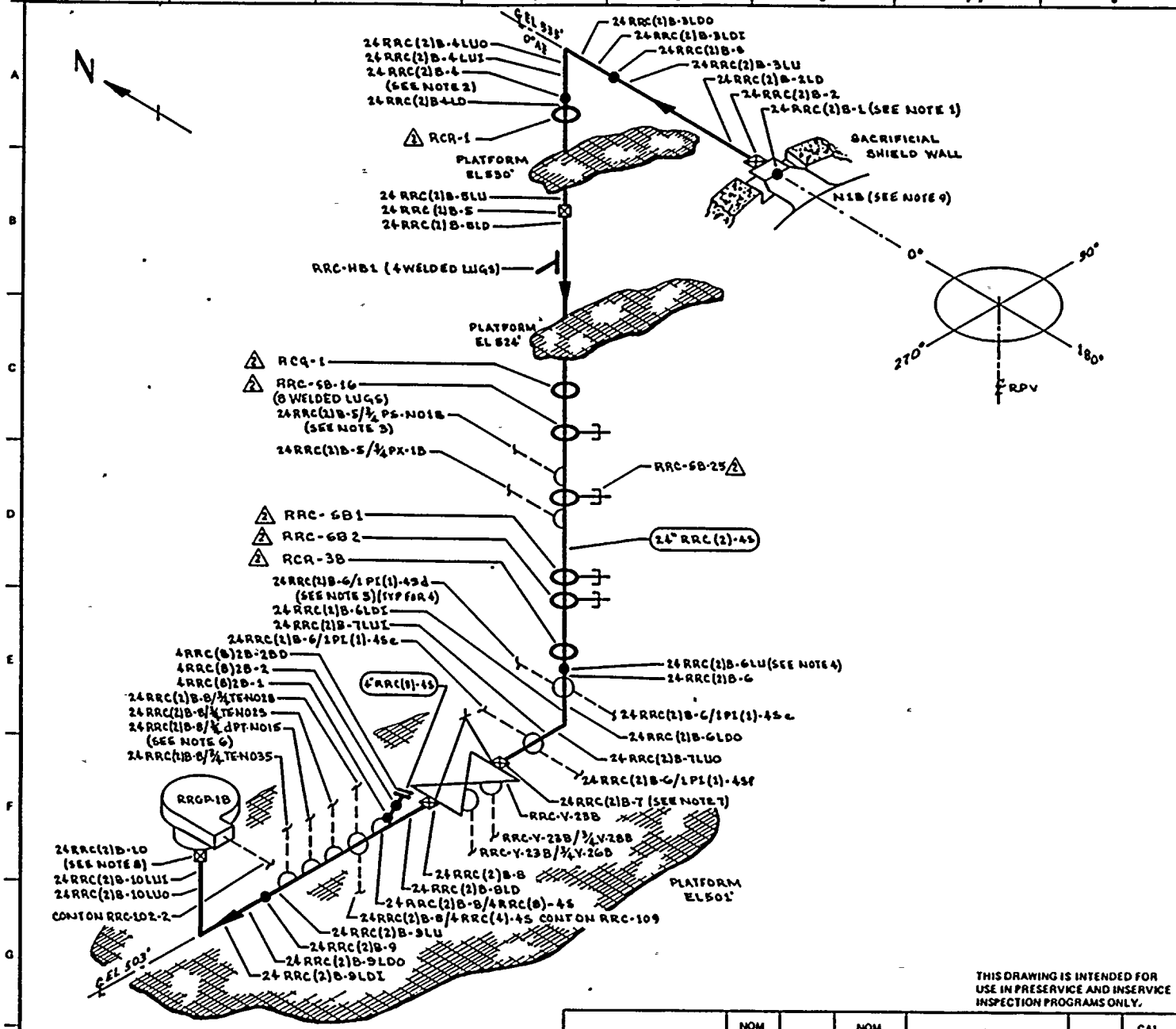

NOTES:

1. WELD 24RRC(2)B-1 UTILIZES CAL BLOCK UT-101
2. ACCESS TO WELD 24RRC(2)B-4 REQUIRES REMOVAL OF RCR-1.
3. EXTEND LEAKAGE EXAM THROUGH PENETRATION (X-62a) THROUGH EXCESS FLOW CHECK VALVE TO INSTRUMENT TUBING CONNECTION.
4. ACCESS TO WELD 24 RRC(2)B-6 REQUIRES REMOVAL OF RRC-3B.
5. EXTEND LEAKAGE EXAM THROUGH CONTAINMENT PENETRATION (X-76c, X-76d, X-76e & X-76f) THROUGH EXCESS FLOW CHECK VALVES TO INSTRUMENT TUBING CONNECTIONS.
6. EXTEND LEAKAGE EXAM THROUGH CONTAINMENT PENETRATION (X-41c) THROUGH EXCESS FLOW CHECK VALVE TO INSTRUMENT TUBING CONNECTION.
7. WELD 24RRC(1)B-7 IS FITTING TO FITTING.
8. WELD 24RRC(1)B-10 IS FITTING TO FITTING.
9. FOR NOZZLE ASSY. DET. SEE RPV-105.
10. PIPING PURCHASED TO MIN. WALL SPEC — 0.910"

REFERENCES:

GENERAL ELECTRIC DRAWINGS

761 E 424	REV 2
762 E 538 SH 1	REV 3
762 E 538 SH 2	REV 3
761 E 786	REV 6
131 C 7586	REV 4
131 C 7587	REV 3

CBI NUCLEAR CO.

48, REV 4 N1 NOZZLE ASSEMBLY

BOVEE CRAIL/GERI

BC/G-217 REV 7

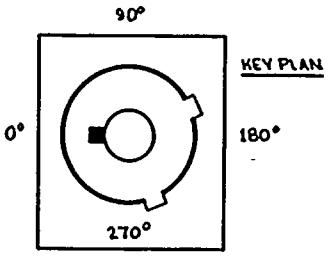

THIS DRAWING IS INTENDED FOR USE IN PRESERVICE AND INSERVICE INSPECTION PROGRAMS ONLY.

PIPING SYSTEM	NOM DIA (IN)	SCH	NOM WALL THK	MATERIAL SPECIFICATION	MATL TYPE	CAL BLOCK NO
24" RRC(2)-43	24	XXX	SEE NOTE 10	SA 358 GR 304 CL 1	SS	UT-7
4" RRC(8)-43	4	80	0.237	SA 376 Tp 304	SS	UT-31
LUGS	NA	NA	NA	SA 240 TP 304	SS	UT-47

NO	DATE	REVISION	BY	CHKD	APPVD
2	11-14-83	REVISED AS NOTED ADDED KEYPLAN & LUGS	KMA	LDC	TTK
1	11-5-80	ADDED NOTE 9	KMA	[illegible]	[illegible]
0	12-27-78	ISSUED FOR USE	KMA	DCJ	[illegible]
A	5-19-78	ISSUED FOR INFORMATION ONLY	KMA	DCJ	[illegible]

QUALITY CLASS: 1 | ASME CODE CLASS: 1

ENGR: D TIMMINS | DRAWN: K. McA | DATE: 3-29-78

WASHINGTON PUBLIC POWER SUPPLY SYSTEM

RICHLAND, WASHINGTON 99352

WNP-2
WELD & COMPONENT IDENTIFICATION DIAGRAM

TITLE: REACTOR RECIRCULATION LOOP B

DWG NO: RRC-102-1 | REV 2

NOTES:

10. PIPING FROM PUMP DISCHARGE TO RRC-V-67B IS MIN WALL 1.218. PIPING FROM RRC-V-67B TO WELD 24RRC(1)B-19 IS MIN WALL 1.140.

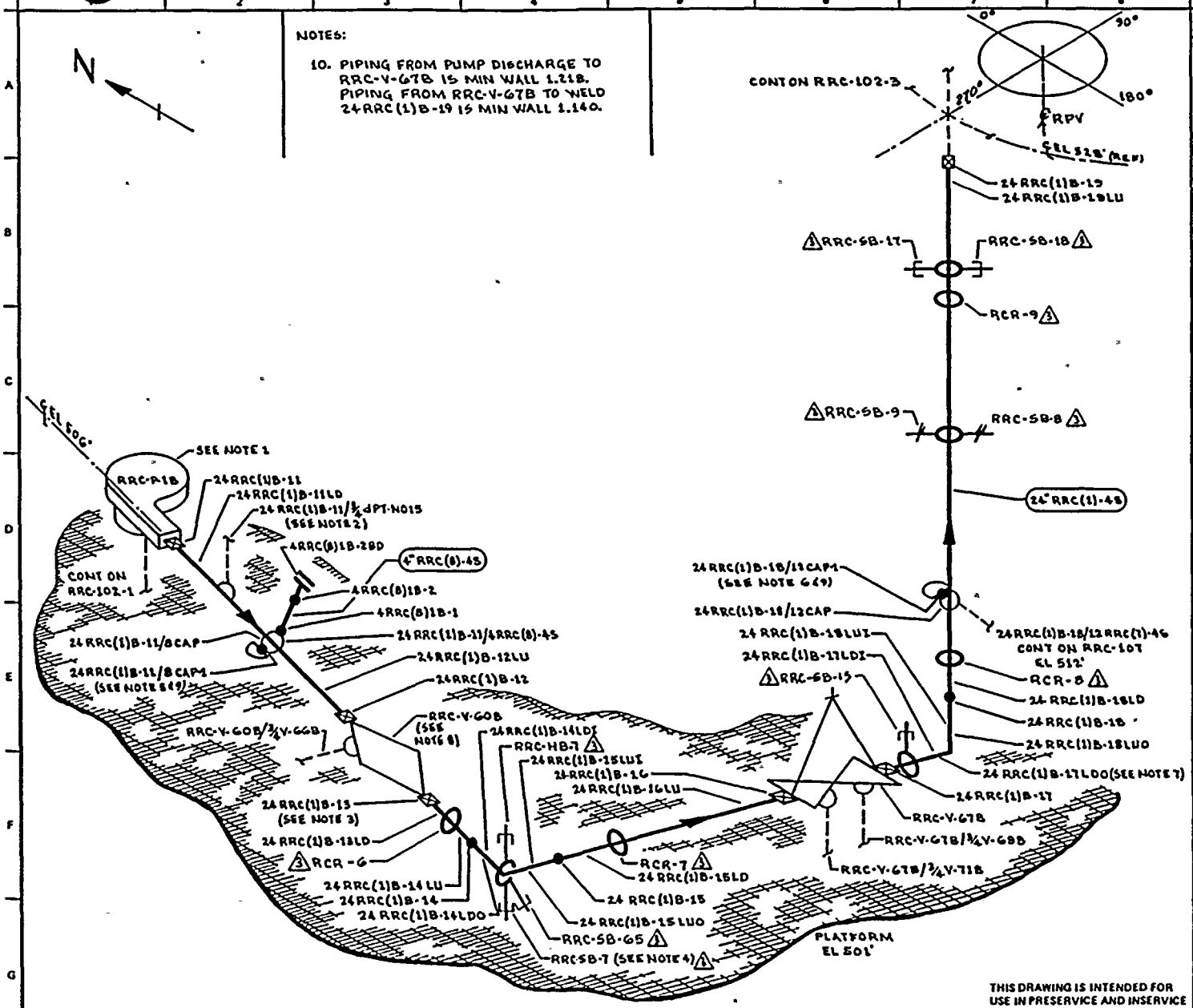

THIS DRAWING IS INTENDED FOR USE IN PRESERVICE AND INSERVICE INSPECTION PROGRAMS ONLY.

NOTES:

1. SEE RRC-P-1B DETAIL DWG RRC-108 FOR PUMP SUPPORT DETAILS.
2. EXTEND LEAKAGE EXAM THROUGH CONTAINMENT PENETRATION (X-41d) THROUGH EXCESS FLOW CHECK VALVE TO INSTRUMENT TUBING CONNECTION.
3. ACCESS TO WELD 24RRC(1)B-13 REQUIRES REMOVAL OF RCR-6.
4. SPECIAL CLAMP WITH HB-7 & SB-7 ATTACHMENTS.
5. WELD 24 RRC(1)B-11/8CAP1 IS FITTING TO FITTING.
6. WELD 24 RRC(1)B-18/12CAP1 IS FITTING TO FITTING.
7. WELD 24 RRC(1)B-17 IS FITTING TO FITTING.
8. RRC-V-60B HAS TWELVE (12) 2¾" X 15" BODY TO BONNET STUDS.
9. CAP TO NOZZLE WELDS ARE CLAD ON THE ID IN THE WELD AREAS. SEE REF. DWGS 131 C 7588 & 131 C 7589.

REFERENCES:

GENERAL ELECTRIC DRAWINGS

761 E 424	REV 2
762 B 538 SH 1	REV 3
762 E 538 SH 2	REV 3
761 E 735	REV 6
131 C 7588	REV 3
131 C 7589	REV 5
131 C 7592	REV 3

BOVEE CRAIL/GERI

BC/G-218 REV 7

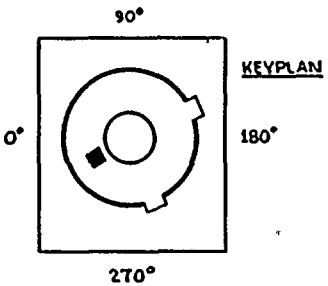

QUALITY CLASS: 1	ASME CODE CLASS: 1	
ENGR: D TIMMING	DRAWN: K.M.C.A.	DATE: 2-20-78

WASHINGTON PUBLIC POWER SUPPLY SYSTEM

RICHLAND, WASHINGTON 99352

NO	DATE	REVISION	BY	CHKD	APPVD
3	4-13-83	REVISED AS NOTED ADDED KEYPLAN	KMCA	JHP	TFH
2	11-5-80	REVISED AS NOTED	KMCA	TCF	DJV
1	7-27-79	RELOCATED AZIMUTH ORIENTATION FOR CLARITY, IN A-7	KMCA	JHP	JHP
0	11-27-78	ISSUED FOR USE	KMCA	DCJ	
A	5-19-78	ISSUED FOR INFORMATION ONLY	KMCA	DCJ	

PIPING SYSTEM	NOM DIA (IN)	SCH	NOM WALL THK	MATERIAL SPECIFICATION	MATL TYPE	CAL BLOCK NO
24" RRC(1)-48	24	XXX	SEE NOTE 10	SA 358 GR 304 CL 1	66	UT-7
4" RRC(8)-48	4	40	0.237	SA 376 TP 304	55	UT-21
CAP	12	80	0.688	SA 403 GR WP 304	65	UT-19
CAP	8	"	0.500	" " " " "	65	UT-26

WNP-2
WELD & COMPONENT IDENTIFICATION DIAGRAM

TITLE: REACTOR RECIRCULATION LOOP B

DWG NO: RRC-102-2 REV B

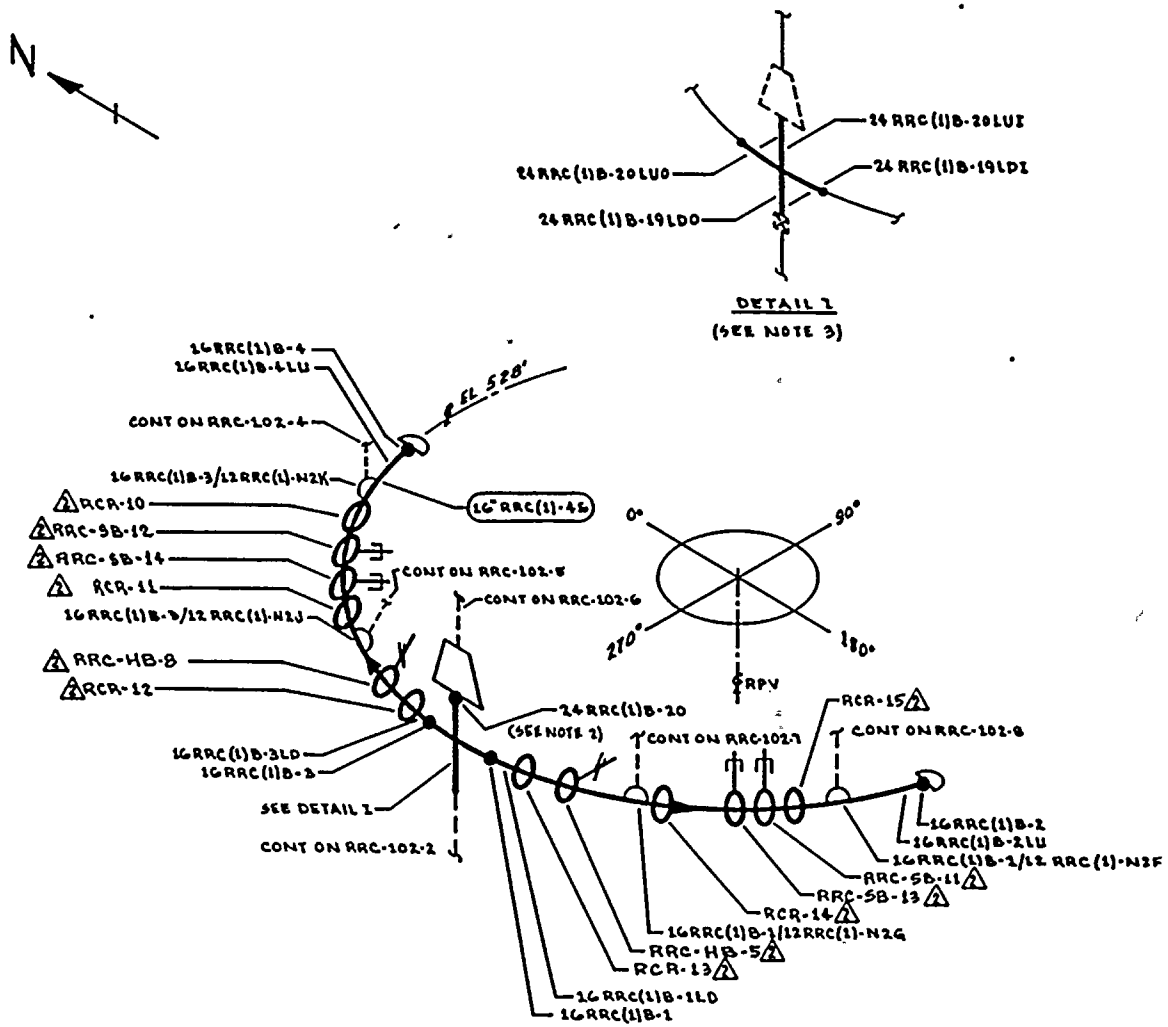

NOTES:

1. ACCESS TO WELDS 16RRC(1)B-1 THRU 4 & 24RRC(1)B-20 REQUIRES TEMPORARY SCAFFOLDING.
2. WELD 24RRC(1)B-20 IS FITTING TO FITTING.
3. LONGITUDINAL WELDS ON CROSS LOCATED INBOARD & OUTBOARD, IN RESPECT TO THE RPV, ARE 90° FROM HEADER CONNECTIONS.

REFERENCES:

GENERAL ELECTRIC DRAWINGS

761 E 424		REV 2
762 E 538	SH 1	REV 3
762 E 538	SH 2	REV 3
761 E 735		REV 6
131 C 7590		REV 1

BOYES CRAIL/GERC

BC/Q-218 REV 8

KEYPLAN

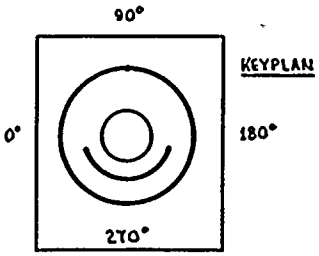

QUALITY CLASS: 1 | ASME CODE CLASS: 1

ENGR: D TIMMINS | DRAWN: K. McA. | DATE: 3-30-78

WASHINGTON PUBLIC POWER SUPPLY SYSTEM
RICHLAND, WASHINGTON 99352

THIS DRAWING IS INTENDED FOR USE IN PRESERVICE AND INSERVICE INSPECTION PROGRAMS ONLY.

PIPING SYSTEM	NOM DIA (IN)	SCH	NOM WALL THK	MATERIAL SPECIFICATION	MATL TYPE	CAL BLOCK NO
24" RRC(1)-4S	24	XXX	1.140	SA 358 GR 304 CL1	SS	UT-7
16" RRC(1)-4S	16	XXX	0.758	SA 358 GR 304 CL1	SS	UT-13

NO	DATE	REVISION	BY	CHKD	APPVD
2	4-16-83	REVISED AS NOTED ADDED KEYPLAN	KMcA	TFH	TFH
1	7-17-79	REVISED MISER LETTERING TO REFLECT AS BUILT, REVISED CROSS TO WELDED CROSS, ADDED DETAIL FOR CLARITY	KMcA	[illegible]	[illegible]
0	11-27-78	ISSUED FOR USE	KMcA	[illegible]	[illegible]
A	5-19-78	ISSUED FOR INFORMATION ONLY	KMcA	[illegible]	[illegible]

WNP-2
WELD & COMPONENT IDENTIFICATION DIAGRAM

TITLE: REACTOR RECIRCULATION LOOP B

DWG NO: RRC-102-3 | REV 2

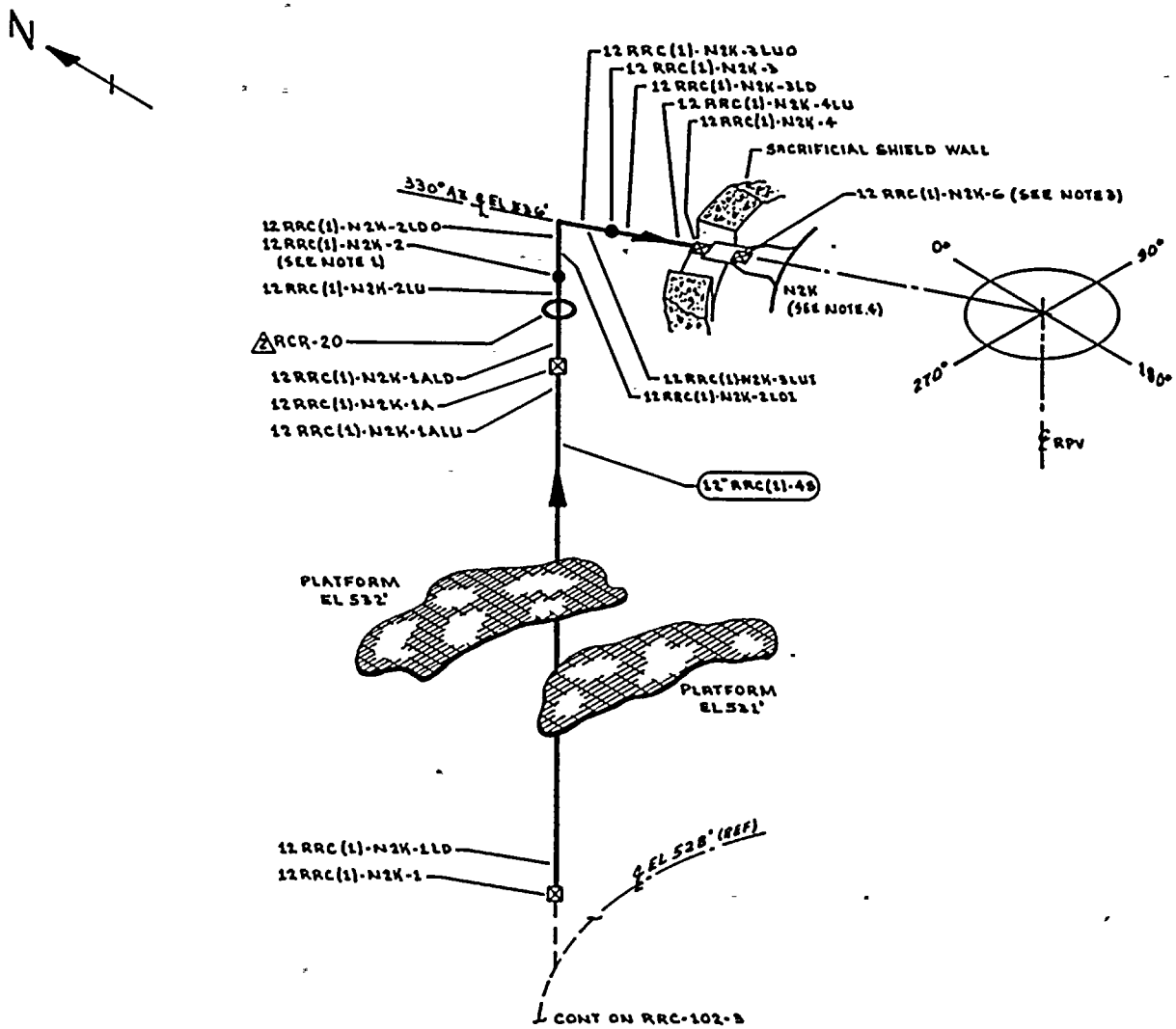

NOTES:

1. ACCESS TO WELD 12 RRC(1)-N2K-2 REQUIRES REMOVAL OF RCR-20.
2. DELETED
3. WELD 12 RRC(1)-N2K-6 UTILIZES CAL BLOCK UT-111.
4. FOR NOZZLE ASSEMBLY DETAILS SEE RPV-106.
5. PIPING PURCHASED TO MIN WALL SPECIFICATION. MIN WALL 0.604".

REFERENCES:

GENERAL ELECTRIC DRAWINGS

761 E 424		REV 2
761 E 538	SH 1	REV 3
761 E 538	SH 2	REV 3
761 E 735		REV 6

CBI NUCLEAR CO.

B2, REV 10, N2 NOZZLE ASSEMBLY

BOVEE CRAIL/GERI

BC/G-218 REV 7

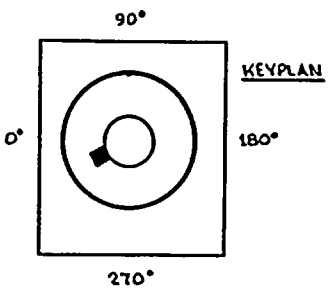

QUALITY CLASS: 1	ASME CODE CLASS: 1	
ENGR: D TIMMINS	DRAWN: V. M. C. A.	DATE: 3-31-78

WASHINGTON PUBLIC POWER SUPPLY SYSTEM
RICHLAND, WASHINGTON 99352

THIS DRAWING IS INTENDED FOR USE IN PRESERVICE AND INSERVICE INSPECTION PROGRAMS ONLY.

PIPING SYSTEM	NOM DIA (IN)	SCH	NOM WALL THK	MATERIAL SPECIFICATION	MATL TYPE	CAL BLOCK NO
12" RRC (1)-4S	12	XXX	SEE NOTE 5	SA 358 GR 304 CL I	SS	UT-19

NO	DATE	REVISION	BY	CHKD	APPVD
2	10-13-83	REVISED AS NOTED ADDED KEYPLAN	KMCA		
1	7-17-79	REVISED RISER LETTERING FROM F TO K, DELETED NOTE #2 & WELD #3, ADDED F.W. SA & WELDS 1ALU & 1ALD, PER AS BUILT.	KMCA		
0	11-27-78	ISSUED FOR USE	KMCA		
A	5-19-78	ISSUED FOR INFORMATION ONLY	KMCA		

WNP-2
WELD & COMPONENT IDENTIFICATION DIAGRAM

TITLE:
REACTOR RECIRCULATION LOOP B

DWG NO: RRC-102-4 REV 2

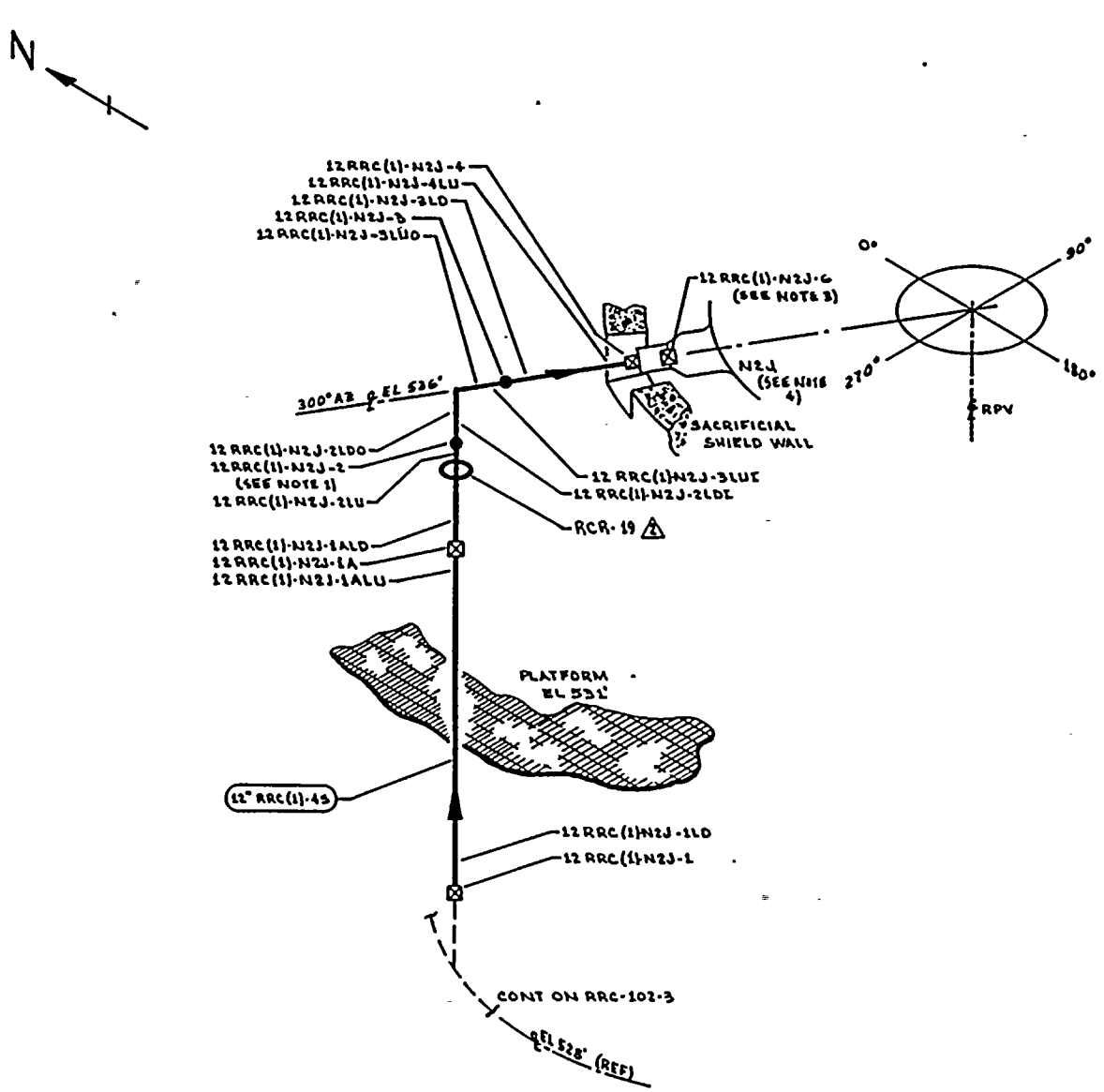

NOTES:

1. ACCESS TO WELD 12 RRC(1)-N2J-2 REQUIRES REMOVAL OF RCR-19. ⚠1
2. DELETED
3. WELD 12 RRC(1)-N2J-6 UTILIZES CAL BLOCK UT-111.
4. FOR NOZZLE ASSEMBLY DETAILS SEE RPV-106.
5. PIPING PURCHASED TO MIN WALL SPECIFICATION. MIN WALL 0.604". ⚠1

REFERENCED:

GENERAL ELECTRIC DRAWINGS

761 E 424		REV 2
762 E 538	SH 1	REV 3
762 E 538	SH 2	REV 3
761 E 795		REV 6

CBI NUCLEAR CO.

52, REV 10, N2 NOZZLE ASSEMBLY

BOVEE CRAIL / GERL

BC/G-218 REV 7

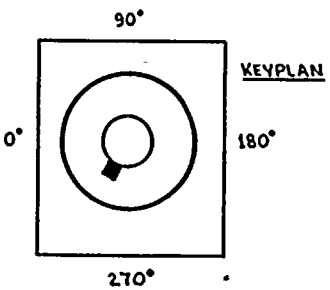

KEYPLAN

QUALITY CLASS: 1	ASME CODE CLASS: 1	
ENGR: D TIMMINS	DRAWN: K. McA	DATE: 3-31-78

WASHINGTON PUBLIC POWER SUPPLY SYSTEM
RICHLAND, WASHINGTON 99352

THIS DRAWING IS INTENDED FOR USE IN PRESERVICE AND INSERVICE INSPECTION PROGRAMS ONLY.

PIPING SYSTEM	NOM DIA (IN)	SCH	NOM WALL THK	MATERIAL SPECIFICATION	MATL TYPE	CAL BLOCK NO
12" RRC(1)-45	12	XXX	SEE NOTE 5	SA 358 GR 304 CL 1	SS	UT-19

WNP-2
WELD & COMPONENT IDENTIFICATION DIAGRAM

TITLE: REACTOR RECIRCULATION LOOP B

DWG NO: RRC-102-5 REV 2

NO	DATE	REVISION	BY	CHKD	APPVD
2	4-26-83	REVISED AS NOTED ADDED KEYPLAN	K. McA	EDR	TFH
1	1-27-79	REVISED RISER LETTERING FROM G TO J, DELETED NOTE #2 & WELD #5, ADDED FW 1A & WELDS 1ALU & 1ALD FOR IN SERVICE	K. McA	RJB	TFH
0	11-27-78	ISSUED FOR USE	K. McA	LR	[illegible]
A	5-19-78	ISSUED FOR INFORMATION ONLY	K. McA	RCA DCJ	DLP

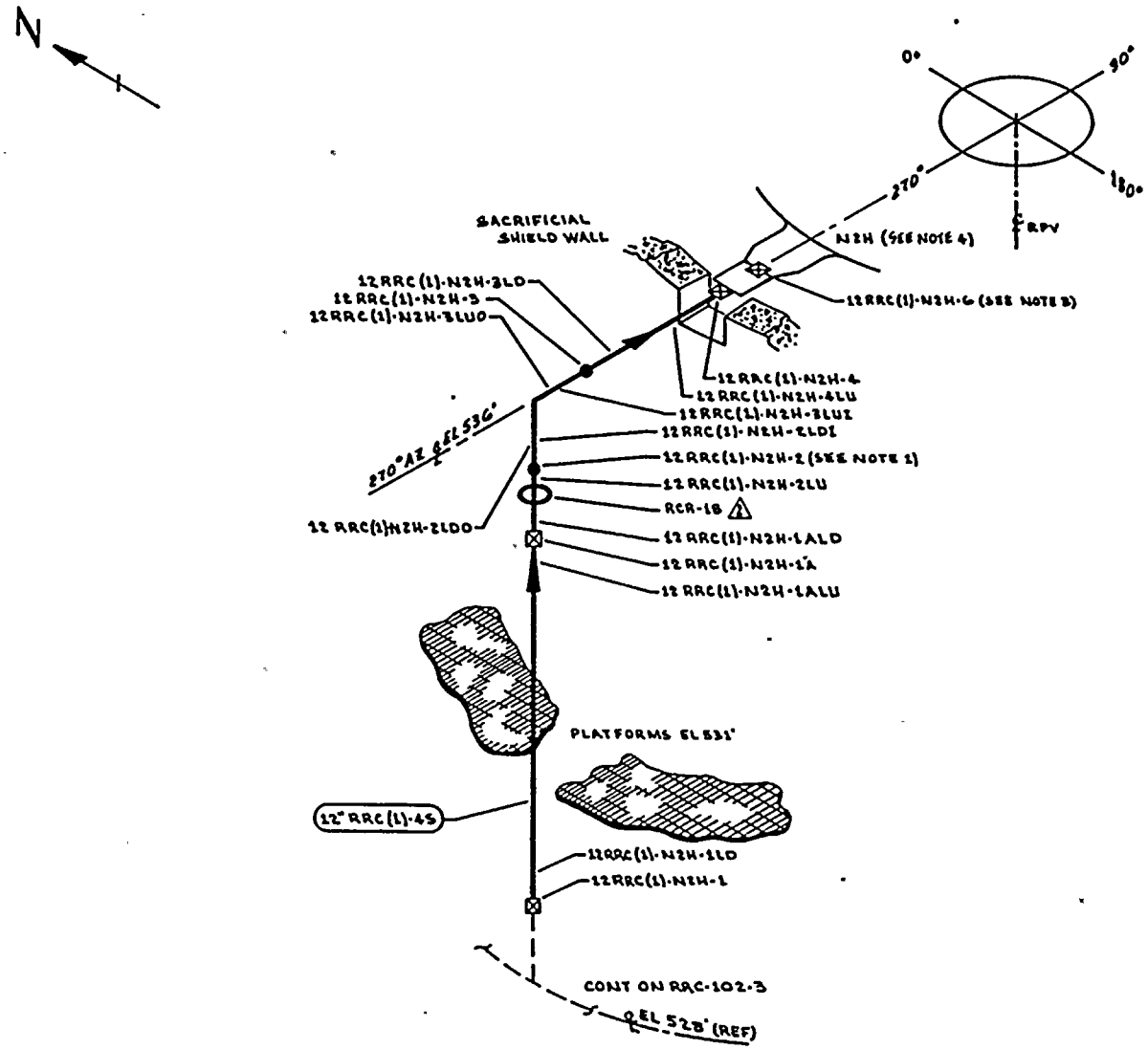

NOTES:

1. ACCESS TO WELD 12RRC(1)-N2H-2 REQUIRES REMOVAL OF RCR-18.
2. DELETED
3. WELD 12RRC(1)-N2H-6 UTILIZES CAL BLOCK UT-111.
4. FOR NOZZLE ASSEMBLY DETAILS SEE RPV-106.
5. PIPING PURCHASED TO MIN WALL SPECIFICATION. MIN WALL 0.604".

REFERENCES:

GENERAL ELECTRIC DRAWINGS

761 E 424		REV 2
762 E 538	SH 1	REV 3
762 E 538	SH 2	REV 3
761 E 738		REV 6

CBI NUCLEAR CO.

52, REV 10, N2 NOZZLE ASSEMBLY

BOVEE CRAIL/GERI

BC/G-218 REV 7

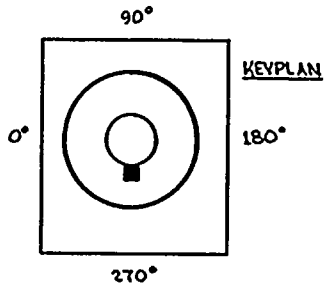

QUALITY CLASS: 1	ASME CODE CLASS: 1	
ENGR: D TIMMINS	DRAWN: K McA	DATE: 3-31-78

WASHINGTON PUBLIC POWER SUPPLY SYSTEM
RICHLAND, WASHINGTON 98352

THIS DRAWING IS INTENDED FOR USE IN PRESERVICE AND INSERVICE INSPECTION PROGRAMS ONLY.

PIPING SYSTEM	NOM DIA (IN)	SCH	NOM WALL THK	MATERIAL SPECIFICATION	MATL TYPE	CAL BLOCK NO
12" RRC (1)-4S	12	XXX	SEE NOTE 5	SA 358 GR 304 CL 1	SS	UT-19

WNP-2
WELD & COMPONENT IDENTIFICATION DIAGRAM

TITLE:
REACTOR RECIRCULATION LOOP B

DWG NO: RRC-102-6 REV 2

NO	DATE	REVISION	BY	CHKD	APPVD
2	9-26-83	REVISED AS NOTED ADDED KEYPLAN	KMcA	LAR	TRW
1	7-17-79	DELETED NOTE #2 & WELD #5. ADDED FWI & CAL WELDS 3ALU & 3ALD. PER AS BUILT. ADDED NOTE 4.	KMcA	[illegible]	[illegible]
0	11-22-78	ISSUED FOR USE	KMcA	[illegible]	[illegible]
A	5-19-78	ISSUED FOR INFORMATION ONLY	KMcA	DCJ	[illegible]

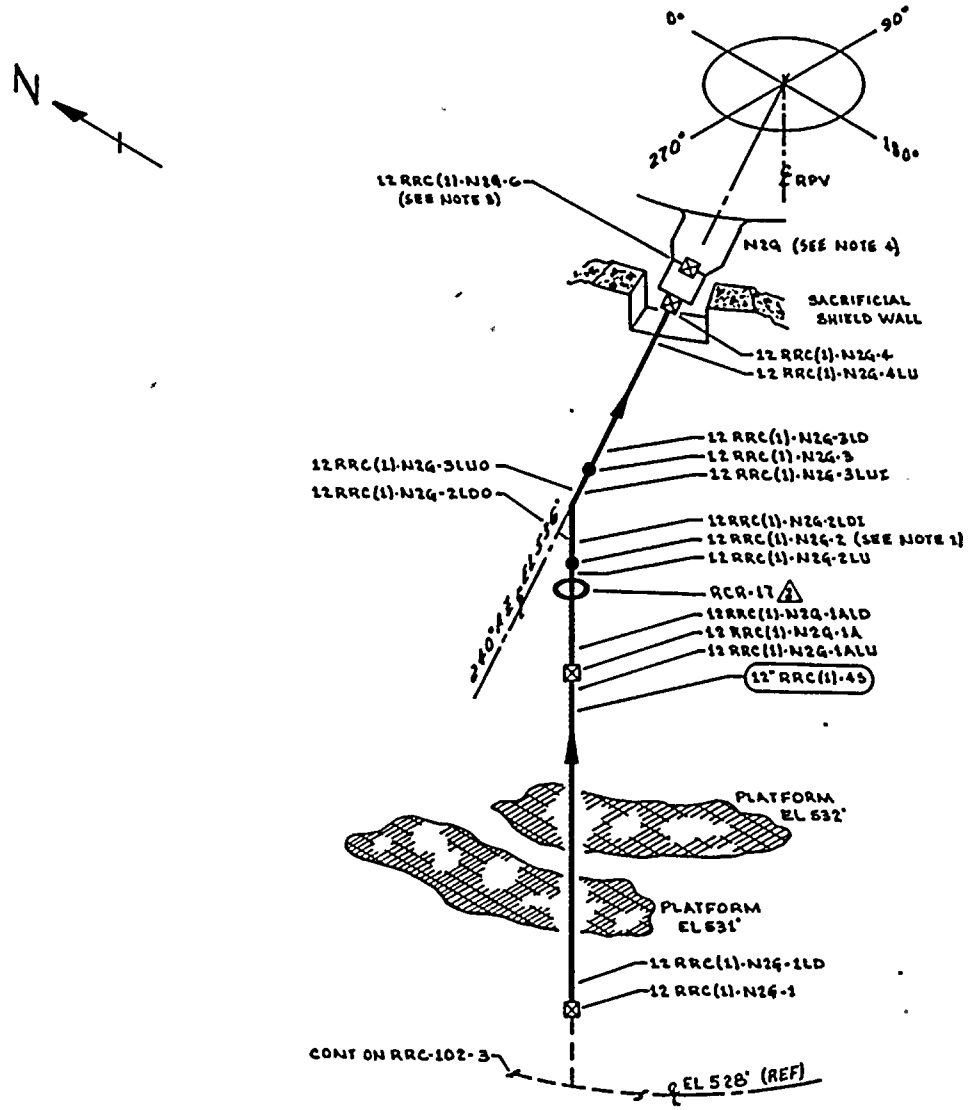

NOTES:

1. ACCESS TO WELD 12RRC(1)-N24-2 REQUIRES REMOVAL OF RCR-17.
2. DELETED
3. WELD 12RRC(1)-N24-6 UTILIZES CAL BLOCK UT-111.
4. FOR NOZZLE ASSEMBLY DETAILS SEE RPV-106.
5. PIPING PURCHASED TO MIN WALL SPECIFICATION. MIN WALL 0.604".

REFERENCES:

GENERAL ELECTRIC DRAWINGS

761 E 424		REV 2
762 E 538	SH 1	REV 3
762 E 538	SH 2	REV 3
761 E 786		REV 6

CBI NUCLEAR CO.

52, REV 10, N2 NOZZLE ASSEMBLY

BOVEE CRAIL/GERE

BC/G-218 REV 7

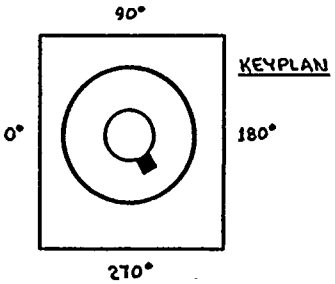

QUALITY CLASS: 1	ASME CODE CLASS: 1	
ENGR: D TIMMINS	DRAWN: K. McA.	DATE: 3-31-78

WASHINGTON PUBLIC POWER SUPPLY SYSTEM
RICHLAND, WASHINGTON 99352

THIS DRAWING IS INTENDED FOR USE IN PRESERVICE AND INSERVICE INSPECTION PROGRAMS ONLY.

PIPING SYSTEM	NOM DIA (IN)	SCH	NOM WALL THK	MATERIAL SPECIFICATION	MATL TYPE	CAL BLOCK NO
12" RRC(1)-48	12	XXX	SEE NOTES	SA 358 GR 304 CL 1	SS	UT-19

NO	DATE	REVISION	BY	CHKD	APPVD
2	9-26-83	REVISED AS NOTED ADDED KEYPLAN	K.McA	DPR	TFH
1	7-27-79	REVISED RISER LETTERING FROM 1 TO 6, DELETED WELD #5, & NOTE #5. ADDED TWO 1A & WELDS 1ALD & 1ALU & SHIELD PER AS BUILT.	K.McA	[illegible]	[illegible]
0	11-27-78	ISSUED FOR USE	K.McA	[illegible]	[illegible]
A	5-19-78	ISSUED FOR INFORMATION ONLY	K.McA	[illegible]	[illegible]

WNP-2
WELD & COMPONENT IDENTIFICATION DIAGRAM

TITLE:

REACTOR RECIRCULATION LOOP B

DWG NO: RRC-102-2 REV 2

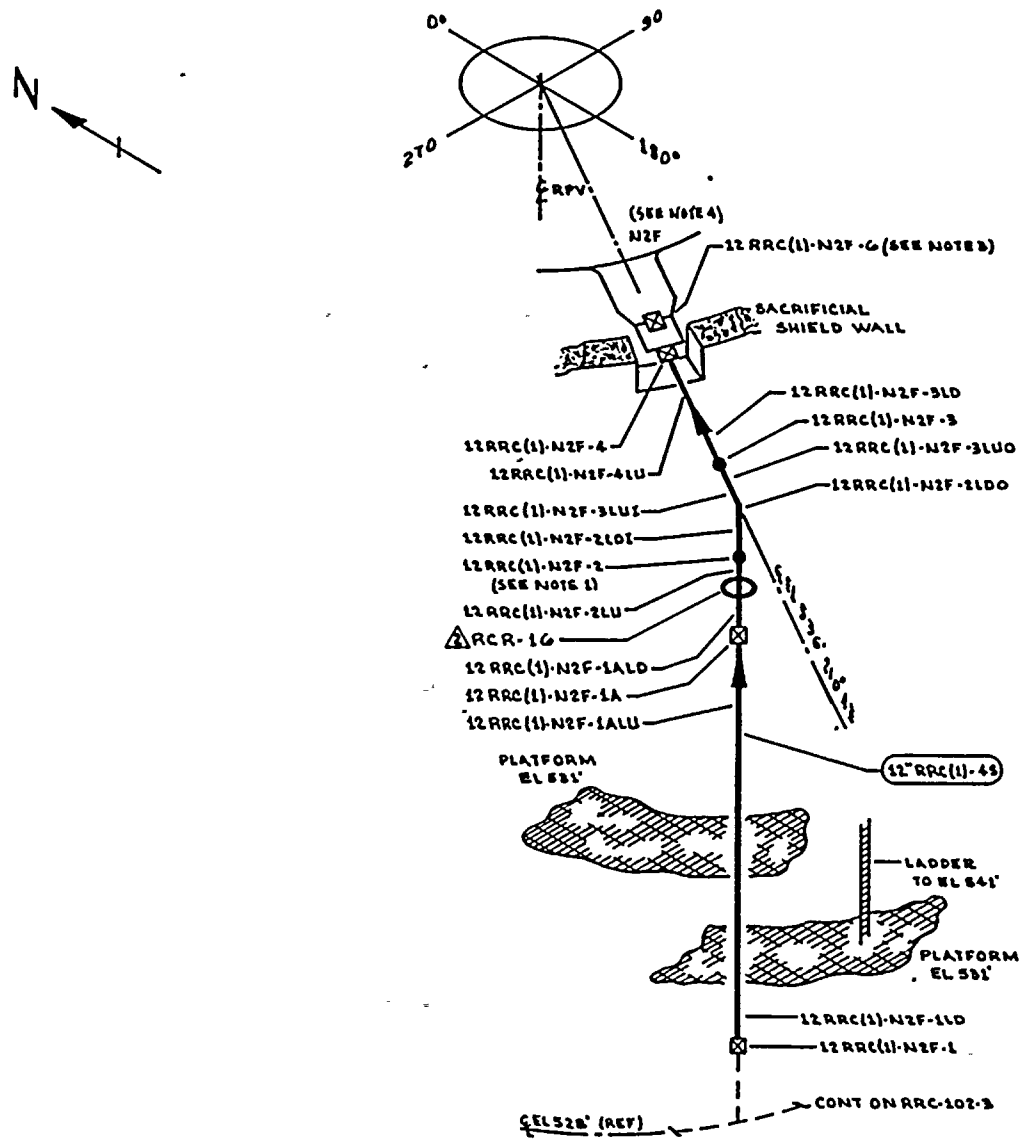

NOTES:

1. ACCESS TO WELD 12RRC(1)-N2F-2 REQUIRES REMOVAL OF RCR-16.
2. DELETED
3. WELD 12RRC(1)-N2F-6 UTILIZES CAL BLOCK UT-111.
4. FOR NOZZLE ASSEMBLY DETAILS SEE RPV-106.
5. PIPING PURCHASED TO MIN WALL SPECIFICATION. MIN WALL 0.604".

REFERENCES:

GENERAL ELECTRIC DRAWINGS

761 E 424		REV 2
762 E 538	SH 1	REV 3
762 E 538	SH 2	REV 3
761 E 735		REV 6

CBI NUCLEAR CO.

52, REV 10, N2 NOZZLE ASSEMBLY

BOVEE CRAIL/GERI

BC/G-218 REV 7

KEYPLAN

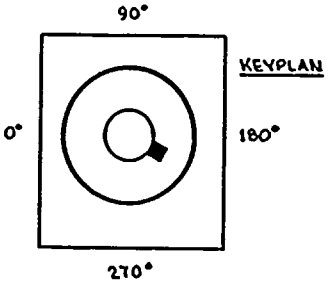

QUALITY CLASS: 1 | ASME CODE CLASS: 1

ENGR: D TIMMINS | DRAWN: K. McA | DATE: 4-3-78

WASHINGTON PUBLIC POWER SUPPLY SYSTEM
RICHLAND, WASHINGTON 99352

THIS DRAWING IS INTENDED FOR USE IN PRESERVICE AND INSERVICE INSPECTION PROGRAMS ONLY.

PIPING SYSTEM	NOM DIA (IN)	SCH	NOM WALL THK	MATERIAL SPECIFICATION	MATL TYPE	CAL BLOCK NO
12" RRC (1)-4S	12	XXX	SEE NOTE 5	SA 358 GR 304 CL 1	SS	UT-19

WNP-2
WELD & COMPONENT IDENTIFICATION DIAGRAM

TITLE:

REACTOR RECIRCULATION LOOP B

DWG NO: RRC-102-B | REV 2

NO	DATE	REVISION	BY	CHKD	APPVD
2	4-16-88	REVISED AS NOTED ADDED KEYPLAN	KMcA	DK	TFH
1	7-17-79	REVISED RISER LETTERING FROM K & F, DELETED WELD # 5 (NOTE 2), ADDED FW # 1A, WELDS 1ALU & 1ALD PER AS BUILT.	KMcA		
0	11-27-78	ISSUED FOR USE	KMcA		
A	5-19-78	ISSUED FOR INFORMATION ONLY	KMcA	DCS	DHP

WNP-02
INTERVAL: PSI
PERIOD: NA
OUTAGE:
DRAWING NO. RRC-102

WASHINGTON PUBLIC POWER SUPPLY SYSTEM
PROGRAM PLAN AND SCHEDULE
SYSTEM OR COMPONENT: RRC(2)-4S
DESCRIPTION: REACTOR RECIR LOOP B

DATE 12/14/84

IDENT. NO.	DESCRIPTION	SECT. XI EXAM.	EXAM MTH.	PROCEDURE	CAL. BLOCK	INSERVICE REQ.	SCHEDULED OUTAGE	NOTES
24RRC(2)B-1	NOZ TO SE	B-F	VOL	UTP-10	UT-101			
			SUR	PTP-1				
24RRC(2)B-2	SE TO PIPE	B-J	VOL	UTP-10	UT-7			
			SUR	PTP-1				
24RRC(2)B-2LD	PIPE SEAM	B-J	VOL	UTP-10	UT-7			
			SUR	PTP-1				
24RRC(2)B-3LU	PIPE SEAM	B-J	VOL	UTP-10	UT-7			
			SUR	PTP-1				
24RRC(2)B-3	PIPE TO EL	B-J	VOL	UTP-10	UT-7			
			SUR	PTP-1				
24RRC(2)B-3LDO	EL SEAM	B-J	VOL	UTP-10	UT-7			
			SUR	PTP-1				
24RRC(2)B-3LDI	EL SEAM	B-J	VOL	UTP-10	UT-7			
			SUR	PTP-1				
24RRC(2)B-4LUI	EL SEAM	B-J	VOL	UTP-10	UT-7			
			SUR	PTP-1				
24RRC(2)B-4LUO	EL SEAM	B-J	VOL	UTP-10	UT-7			
			SUR	PTP-1				

WNP-02
INTERVAL: PSI
PERIOD: NA
OUTAGE:
DRAWING NO. RRC-102

WASHINGTON PUBLIC POWER SUPPLY SYSTEM
PROGRAM PLAN AND SCHEDULE
SYSTEM OR COMPONENT: RRC(2)-4S
DESCRIPTION: REACTOR RECIR LOOP-B

DATE 12/14/84

IDENT. NO.	DESCRIPTION	SECT. XI EXAM.	EXAM MTH.	PROCEDURE	CAL. BLOCK	INSERVICE REQ.	SCHEDULED OUTAGE	NOTES
24RRC(2)B-4								
	EL TO PIPE	B-J	VOL	UTP-10	UT-7			
			SUR	PTP-1				
24RRC(2)B-4LD								
	PIPE SEAM	B-J	VOL	UTP-10	UT-7			
			SUR	PTP-1				
RCR-1B								
	PIPE WHIP	N/A	N/A	N/A				SEE NOTE #1
24RRC(2)B-5LU								
	PIPE SEAM	B-J	VOL	UTP-10	UT-7			
			SUR	PTP-1				
24RRC(2)B-5								
	PIPE TO PIPE	B-J	VOL	UTP-10	UT-7			
			SUR	PTP-1				
24RRC(2)B-5LD								
	PIPE SEAM	B-J	VOL	UTP-10	UT-7			
			SUR	PTP-1				
RRC-HB-1(W)								
	4 WELDED LUGS	B-K-1	VOL	UTP-26	UT-7			
RRC-HB-1								
	SPRING (2)	B-K-2	VT-3	303/8.2.17				
			VT-4	303/8.2.17				
RCG-1								
	PIPE WHIP	N/A	N/A	N/A				SEE NOTE #1
RRC-SB-16(W)								
	8 WELDED LUGS	B-K-1	VOL	UTP-26	UT-7			
RRC-SB-16								
	PSA-35 SN(2)	B-K-2	VT-3	303/8.2.17				S/N E4222/W422

WNP-02
INTERVAL: PSI
PERIOD: NA
OUTAGE:
DRAWING NO. RRC-102

WASHINGTON PUBLIC POWER SUPPLY SYSTEM
PROGRAM PLAN AND SCHEDULE
SYSTEM OR COMPONENT: RRC(2)-4S
DESCRIPTION: REACTOR RECIR LOOP B

DATE 12/14/84

IDENT. NO.	DESCRIPTION	SECT. XI EXAM.	EXAM MTH.	PROCEDURE	CAL. BLOCK	INSERVICE REQ.	INSERVICE SCHEDULED OUTAGE	NOTES
			VT-4	303/8.2.17				S/N E4222/W422
24RRC(2)B-5/3/4PS-N018								
	INSTR CONN	B-P	VT-2	N/A				SEE NOTES #6 & #7.
RRC-SB-25								
	PSA-35 SNUBBER	B-K-2	VT-3	303/8.2.17				S/N 4158
			VT-4	303/8.2.17				S/N 4158
24RRC(2)B-5/3/4PX-1B								
	INSTR CONN	B-P	VT-2	N/A				SEE NOTES #6 & #7.
RRC-SB-1								
	PSA-35 SNUBBER	B-K-2	VT-3	303/8.2.17				S/N 4161
			VT-4	303/8.2.17				S/N 4161
RRC-SB-2								
	PSA-35 SNUBBER	B-K-2	VT-3	303/8.2.17				S/N 4162
			VT-4	303/8.2.17				S/N 4162
RCR-3B								
	PIPE WHIP	N/A	N/A	N/A				SEE NOTE #1
24RRC(2)B-6LU								
	PIPE SEAM	B-J	VOL	UTP-10	UT-7			
			SUR	PTP-1				
24RRC(2)B-6								
	PIPE TO PIPE	B-J	VOL	UTP-10	UT-7			
			SUR	PTP-1				
24RRC(2)B-6LDO								
	EL SEAM	B-J	VOL	UTP-10	UT-7			
			SUR	PTP-1				
24RRC(2)B-6LDI								
	EL SEAM	B-J	VOL	UTP-10	UT-7			
			SUR	PTP-1				

WNP-02
INTERVAL: PSI
PERIOD: NA
OUTAGE:
DRAWING NO. RRC-102

WASHINGTON PUBLIC POWER SUPPLY SYSTEM
PROGRAM PLAN AND SCHEDULE
SYSTEM OR COMPONENT: RRC(2)-4S
DESCRIPTION: REACTOR RECIR LOOP B

DATE 12/14/84

IDENT. NO.	DESCRIPTION	SECT. XI EXAM.	EXAM MTH.	PROCEDURE	CAL. BLOCK	INSERVICE REQ.	INSERVICE SCHEDULED OUTAGE	NOTES
24RRC(2)B-6/1PI(1)-4SC	INSTR CONN	B-P	VT-2	N/A				SEE NOTES #6 & #7.
24RRC(2)B-6/1PI(1)-4SD	INSTR CONN	B-P	VT-2	N/A				SEE NOTES #6 & #7.
24RRC(2)B-6/1PI(1)-4SE	INSTR CONN	B-P	VT-2	N/A				SEE NOTES #6 & #7.
24RRC(2)B-6/1PI(1)-4SF	INSTR CONN	B-P	VT-2	N/A				SEE NOTES #6 & #7.
24RRC(2)B-7LUO	EL SEAM	B-J	VOL	UTP-10	UT-7			
			SUR	PTP-1				
24RRC(2)B-7LUI	EL SEAM	B-J	VOL	UTP-10	UT-7			
			SUR	PTP-1				
24RRC(2)B-7	EL TO VALVE	B-J	VOL	UTP-10	UT-7			
			SUR	PTP-1				
RRC-V-23B/3/4V-28B	VALVE DRAIN	B-P	VT-2	N/A				SEE NOTES #6 & #7.
RRC-V-23B/3/4V-26B	VALVE DRAIN	B-P	VT-2	N/A				SEE NOTES #6 & #7.
RRC-V-23B-BDY	VALVE BODY	B-M-2	VT-1	OCI 7-1				
RRC-V-23B-BLT	VALVE BOLTING	B-G-2	VT-1	OCI 7-1				
24RRC(2)B-8	VALVE TO PIPE	B-J	VOL	UTP-10	UT-7			
			SUR	PTP-1				
24RRC(2)B-8LD	PIPE SEAM	B-J	VOL	UTP-10	UT-7			
			SUR	PTP-1				

WNP-02
INTERVAL: PSI
PERIOD: NA
OUTAGE:
DRAWING NO. RRC-102

WASHINGTON PUBLIC POWER SUPPLY SYSTEM
PROGRAM PLAN AND SCHEDULE
SYSTEM OR COMPONENT: RRC(2)-4S
DESCRIPTION: REACTOR RECIR LOOP B

DATE 12/14/84

IDENT. NO.	DESCRIPTION	SECT. XI EXAM.	EXAM MTH.	PROCEDURE	CAL. BLOCK	INSERVICE REQ.	INSERVICE SCHEDULED OUTAGE	NOTES
24RRC(2)B-8/4RRC(8)-4S								
	PIPE TO SWL	B-J	SUR	PTP-1				
4RRC(8)2B-1								
	SWL TO PIPE	B-J	VOL	UTP-10	UT-31			
			SUR	PTP-1				
4RRC(8)2B-2								
	PIPE TO FLANGE	B-J	VOL	UTP-10	UT-31			
			SUR	PTP-1				
4RRC(8)2B-2BO								
	FLANGE BOLTING	B-G-2	VT-1	QCI 7-1				
24RRC(2)B-8/3/4TE-N028								
	INSTR CONN	B-P	VT-2	N/A				SEE NOTES #6 & #7.
24RRC(2)B-8/4RRC(4)-4S								
	PIPE TO SWL	B-J	SUR	PTP-1				
24RRC(2)B-8/3/4TE-N023								
	INSTR CONN	B-P	VT-2	N/A				SEE NOTES #6 & #7.
24RRC(2)B-8/3/4DPT-N015								
	INSTR CONN	B-P	VT-2	N/A				SEE NOTES #6 & #7.
24RRC(2)B-8/3/4TE-N035								
	INSTR CONN	B-P	VT-2	QCI 7-1				
24RRC(2)B-9LU								
	PIPE SEAM	B-J	VOL	UTP-10	UT-7			
			SUR	PTP-1				
24RRC(2)B-9								
	PIPE TO EL	B-J	VOL	UTP-10	UT-7			
			SUR	PTP-1				
24RRC(2)B-9LDO								
	EL SEAM	B-J	VOL	UTP-10	UT-7			
			SUR	PTP-1				
24RRC(2)B-9LDI								
	EL SEAM	B-J	VOL	UTP-10	UT-7			

WNP-02
INTERVAL: PSI
PERIOD: NA
OUTAGE:
DRAWING NO. RRC-102

WASHINGTON PUBLIC POWER SUPPLY SYSTEM
PROGRAM PLAN AND SCHEDULE
SYSTEM OR COMPONENT: RRC(2)-4S
DESCRIPTION: REACTOR RECIR LOOP B

DATE 12/14/84

IDENT. NO.	DESCRIPTION	SECT. XI EXAM.	EXAM MTH.	PROCEDURE	CAL. BLOCK	INSERVICE REQ.	INSERVICE SCHEDULED OUTAGE	NOTES
			SUR	PTP-1				
24RRC(2)B-10LUO	EL SEAM	B-J	VOL	UTP-10	UT-7			
			SUR	PTP-1				
24RRC(2)B-10LUI	EL SEAM	B-J	VOL	UTP-10	UT-7			
			SUR	PTP-1				
24RRC(2)B-10	EL TO PUMP	B-J	VOL	UTP-10	UT-7			
			SUR	PTP-1				
24RRC(1)B-11	PUMP TO PIPE	B-J	VOL	UTP-10	UT-7			
			SUR	PTP-1				
24RRC(1)B-11LD	PIPE SEAM	B-J	VOL	UTP-10	UT-7			
			SUR	PTP-1				
24RRC(1)B-11/3/4DPT-N015	INSTR CONN	B-P	VT-2	N/A				SEE NOTES #6 & #7.
24RRC(1)B-11/8CAP	PIPE TO SWL	B-J	VOL	UTP-10	UT-7			
			SUR	PTP-1				
24RRC(1)B-11/8CAP-1	SWL TO CAP	B-J	VOL	UTP-10	UT-26			FITTING TO FITTING
			SUR	PTP-1				FITTING TO FITTING
24RRC(1)B-11/4REC(8)-4S	PIPE TO SWL	B-J	SUR	PTP-1				
4RRC(8)1B-1	SWL TO PIPE	B-J	VOL	UTP-10	UT-31			

WNF-02
INTERVAL: PSI
PERIOD: NA
OUTAGE:
DRAWING NO. RRC-102

WASHINGTON PUBLIC POWER SUPPLY SYSTEM
PROGRAM PLAN AND SCHEDULE
SYSTEM OR COMPONENT: RRC(2)-4S
DESCRIPTION: REACTOR RECIR LOOP B

DATE 12/14/84

IDENT. NO.	DESCRIPTION	SECT. XI EXAM.	EXAM MTH.	PROCEDURE	CAL. BLOCK	INSERVICE REQ.	INSERVICE SCHEDULED OUTAGE	NOTES
4RRC(8)1B-2			SUR	PTP-1				
	PIPE TO FLANGE	B-J	VOL	UTP-10	UT-31			
4RRC(8)1B-2BD			SUR	PTP-1				
	FLANGE BOLTING	B-G-2	VT-1	QCI 7-1				
RRC-SB-66								
	PSA-35 SNUBBER	B-K-2	VT-3	303/8.2.17				S/N 4168
			VT-4	303/8.2.17				S/N 4168
24RRC(1)B-12LU								
	PIPE SEAM	B-J	VOL	UTP-10	UT-7			
24RRC(1)B-12			SUR	PTP-1				
	PIPE TO VALVE	B-J	VOL	UTP-10	UT-7			
RRC-V-60B-BDY			SUR	PTP-1				
	VALVE BODY	B-M-2	VT-1	QCI 7-1				
RRC-V-60B-BLT								
	VALVE BOLTING	B-G-1	VOL	UTP-34	UT-43			STUDS: UT WHEN IN PLACE. PT & UT WHEN REMOVED.
			SUR	PTP-1				STUDS: UT WHEN IN PLACE. PT & UT WHEN REMOVED
			VT-1	QCI 7-1				STUDS: UT WHEN IN PLACE. PT & UT WHEN REMOVED

WNP-02
INTERVAL: PSI
PERIOD: NA
OUTAGE:
DRAWING NO. RRC-102

WASHINGTON PUBLIC POWER SUPPLY SYSTEM
PROGRAM PLAN AND SCHEDULE
SYSTEM OR COMPONENT: RRC(2)-4S
DESCRIPTION: REACTOR RECIR LOOP B

DATE 12/14/84

IDENT. NO.	DESCRIPTION	SECT. XI EXAM.	EXAM MTH.	PROCEDURE	CAL. BLOCK	INSERVICE REQ.	SCHEDULED OUTAGE	NOTES
RRC-V-60B/3/4LOC	STEM LEAKOFF	B-P	VT-2	QCI 7-1				SEE NOTES #5 & #6.
24RRC(1)B-13	VALVE TO PIPE	B-J	VOL	UTP-10	UT-7			
			SUR	PTP-1				
24RRC(1)B-13LD	PIPE SEAM	B-J	VOL	UTP-10	UT-7			
			SUR	PTP-1				
RCR-6B	PIPE WHIP	N/A	N/A	N/A				SEE NOTE #1
24RRC(1)B-14LU	PIPE SEAM	B-J	VOL	UTP-10	UT-7			
			SUR	PTP-1				
24RRC(1)B-14	PIPE TO EL	B-J	VOL	UTP-10	UT-7			
			SUR	PTP-1				
24RRC(1)B-14LDO	EL SEAM	B-J	VOL	UTP-10	UT-7			
			SUR	PTP-1				
24RRC(1)B-14LDI	EL SEAM	B-J	VOL	UTP-10	UT-7			
			SUR	PTP-1				
RRC-HB-7	SPRING	B-K-2	VT-3	303/8.2.17				
			VT-4	303/8.2.17				
RRC-SB-7	PSA-35 SNUBBER	B-K-2	VT-3	303/8.2.17				S/N 4191

WNP-02
INTERVAL: PSI
PERIOD: NA
OUTAGE:
DRAWING NO. RRC-102

WASHINGTON PUBLIC POWER SUPPLY SYSTEM
PROGRAM PLAN AND SCHEDULE
SYSTEM OR COMPONENT: RRC(2)-4S
DESCRIPTION: REACTOR RECIP LOOP B

DATE 12/14/84

IDENT. NO.	DESCRIPTION	SECT. XI EXAM.	EXAM MTH.	PROCEDURE	CAL. BLOCK	INSERVICE REQ.	SCHEDULED OUTAGE	NOTES
			VT-4	303/8.2.17				S/N 4191
RRC-SB-65								
	PSA-35 SNUBBER	B-K-2	VT-3	303/8.2.17				S/N 4160
			VT-4	303/8.2.17				S/N 4160
24RRC(1)B-15LUO								
	EL SEAM	B-J	VOL	UTP-10	UT-7			
			SUR	PTP-1				
24RRC(1)B-15LUI								
	EL SEAM	B-J	VOL	UTP-10	UT-7			
			SUR	PTP-1				
24RRC(1)B-15								
	EL TO PIPE	B-J	VOL	UTP-10	UT-7			
			SUR	PTP-1				
24RRC(1)B-15LD								
	PIPE SEAM	B-J	VOL	UTP-10	UT-7			
			SUR	PTP-1				
RCR-7B								
	PIPE WHIP	N/A	N/A	N/A				SEE NOTE #1
24RRC(1)B-16LU								
	PIPE SEAM	B-J	VOL	UTP-10	UT-7			
			SUR	PTP-1				
24RRC(1)B-16								
	PIPE TO VALVE	B-J	VOL	UTP-10	UT-7			
			SUR	PTP-1				
RRC-V-67B/3/4V-71B								
	VALVE DRAIN	B-P	VT-2	N/A				SEE NOTES #6 & #7.
RRC-V-67B-BDY								
	VALVE BODY	B-M-2	VT-1	GCI 7-1				

WNP-02
INTERVAL: PSI
PERIOD: NA
OUTAGE:
DRAWING NO. RRC-102

WASHINGTON PUBLIC POWER SUPPLY SYSTEM
PROGRAM PLAN AND SCHEDULE
SYSTEM OR COMPONENT: RRC(2)-4S
DESCRIPTION: REACTOR RECIR LOOP B

IDENT. NO.	DESCRIPTION	SECT. XI EXAM.	EXAM MTH.	PROCEDURE	CAL. BLOCK	INSERVICE REQ.	SCHEDULED OUTAGE	NOTES
RRC-V-67B-BLT								
	VALVE BOLTING	B-G-2	VT-1	OCI 7-1				
RRC-V-67B/3/4V-6?B								
	VALVE VENT	B-P	VT-2	N/A				SEE NOTES #6 & #7.
24RRC(1)B-17								
	VALVE TO EL	B-J	VOL	UTP-10	UT-7			FITTING TO FITTING
			SUR	PTP-1				FITTING TO FITTING
24RRC(1)B-17LDO								
	EL SEAM	B-J	VOL	UTP-10	UT-7			
			SUR	PTP-1				
24RRC(1)B-17LDI								
	EL SEAM	B-J	VOL	UTP-10	UT-7			
			SUR	PTP-1				
RRC-SB-15								
	PSA-35 SNUBBER	B-K-2	VT-3	303/8.2.17				S/N 4170
			VT-4	303/8.2.17				S/N 4170
24RRC(1)B-18LUO								
	EL SEAM	B-J	VOL	UTP-10	UT-7			
			SUR	PTP-1				
24RRC(1)B-18LUI								
	EL SEAM	B-J	VOL	UTP-10	UT-7			
			SUR	PTP-1				
24RRC(1)B-18								
	EL SEAM	B-J	VOL	UTP-10	UT-7			
			SUR	PTP-1				
24RRC(1)B-18LD								
	PIPE SEAM	B-J	VOL	UTP-10	UT-7			
			SUR	PTP-1				

WNP-02
INTERVAL: PSI
PERIOD: NA
OUTAGE:
DRAWING NO. RRC-102

WASHINGTON PUBLIC POWER SUPPLY SYSTEM
PROGRAM PLAN AND SCHEDULE
SYSTEM OR COMPONENT: RRC(2)-4S
DESCRIPTION: REACTOR RECIR LOOP B

IDENT. NO.	DESCRIPTION	SECT. XI EXAM.	EXAM MTH.	PROCEDURE	CAL. BLOCK	INSERVICE REQ.	INSERVICE SCHEDULED OUTAGE	NOTES
RCR-8B	PIPE WHIP	N/A	N/A	N/A				SEE NOTE #1
24RRC(1)B-18/12RRC(7)-4S	PIPE TO SWL	B-J	VOL	UTP-10	UT-7			
			SUR	PTP-1				
24RRC(1)B-18/12CAP	PIPE TO SWL	B-J	VOL	UTP-10	UT-7			
			SUR	PTP-1				
24RRC(1)B-18/12CAP-1	SWL TO PIPE	B-J	VOL	UTP-10	UT-19			FITTING TO FITTING
			SUR	PTP-1				FITTING TO FITTING
RRC-SB-8	PSA-35 SNUBBER	B-K-2	VT-3	303/8.2.17				S/N 4164
			VT-4	303/8.2.17				S/N 4164
RRC-SB-9	PSA-35 SNUBBER	B-K-2	VT-3	303/8.2.17				S/N 4166
			VT-4	303/8.2.17				S/N 4166
RCR-9B	PIPE WHIP	N/A	N/A	N/A				SEE NOTE #1
RRC-SB-17	PSA-35 SNUBBER	B-K-2	VT-3	303/8.2.17				S/N 4218
			VT-4	303/8.2.17				S/N 4218
RRC-SB-18	PSA-35 SNUBBER	B-K-2	VT-3	303/8.2.17				S/N 4220
			VT-4	303/8.2.17				S/N 4220
24RRC(1)B-19LU	PIPE SEAM	B-J	VOL	UTP-10	UT-7			
			SUR	PTP-1				

WNP-02
INTERVAL: PSI
PERIOD: NA
OUTAGE:
DRAWING NO. RRC-102

WASHINGTON PUBLIC POWER SUPPLY SYSTEM
PROGRAM PLAN AND SCHEDULE
SYSTEM OR COMPONENT: RRC(2)-4S
DESCRIPTION: REACTOR RECIR LOOP B

DATE 12/14/84

IDENT. NO.	DESCRIPTION	SECT. XI EXAM.	EXAM MTH.	PROCEDURE	CAL. BLOCK	INSERVICE REQ.	SCHEDULED OUTAGE	NOTES
24RRC(1)B-19								
	PIPE TO CROSS	B-J	VOL	UTP-10	UT-7			
			SUR	PTP-1				
24RRC(1)B-19LDI								
	CROSS SEAM	B-J	VOL	UTP-10	UT-7			
			SUR	PTP-1				
24RRC(1)B-19LDO								
	CROSS SEAM	B-J	VOL	UTP-10	UT-7			
			SUR	PTP-1				
24RRC(1)B-20LUI								
	CROSS SEAM	B-J	VOL	UTP-10	UT-7			
			SUR	PTP-1				
24RRC(1)B-20LUO								
	CROSS SEAM	B-J	VOL	UTP-10	UT-7			
			SUR	PTP-1				
24RRC(1)B-20								
	CROSS-REDUCER	B-J	VOL	UTP-10	UT-7			FITTING TO FITTING
			SUR	PTP-1				FITTING TO FITTING
16RRC(1)B-1								
	CROSS TO PIPE	B-J	VOL	UTP-10	UT-13			
			SUR	PTP-1				
16RRC(1)B-1LD								
	PIPE SEAM	B-J	VOL	UTP-10	UT-13			
			SUR	PTP-1				
RCR-13B								
	PIPE WHIP	N/A	N/A	N/A				SEE NOTE #1
RRC-HB-9								
	SPRING	B-K-2	VT-3	303/8.2.17				

WNP-02
INTERVAL: PSI
PERIOD: NA
OUTAGE:
DRAWING NO. RRC-102

WASHINGTON PUBLIC POWER SUPPLY SYSTEM
PROGRAM PLAN AND SCHEDULE
SYSTEM OR COMPONENT: RRC(2)-4S
DESCRIPTION: REACTOR RECIR LOOP B

IDENT. NO.	DESCRIPTION	SECT. XI EXAM.	EXAM MTH.	PROCEDURE	CAL. BLOCK	INSERVICE REQ.	SCHEDULED OUTAGE	NOTES
			VT-4	303/8.2.17				
16RRC(1)B-1/12RRC(1)-N2G	PIPE TO SWL	B-J	VOL	UTP-10	UT-13			
			SUR	PTP-1				
RCR-14B	PIPE WHIP	N/A	N/A	N/A				SEE NOTE #1
RRC-SB-13	PSA-35 SNUBBER	B-K-2	VT-3	303/8.2.17				S/N 4194
			VT-4	303/8.2.17				S/N 4194
RRC-SB-11	PSA-35 SNUBBER	B-K-2	VT-3	303/8.2.17				S/N 4199
			VT-4	303/8.2.17				S/N 4199
RCR-15B	PIPE WHIP	N/A	N/A	N/A				SEE NOTE #1
16RRC(1)B-1/12RRC(1)-N2F	PIPE TO SWL	B-J	VOL	UTP-10	UT-13			
			SUR	PTP-1				
16RRC(1)B-2LU	PIPE SEAM	B-J	VOL	UTP-10	UT-13			
			SUR	PTP-1				
16RRC(1)B-2	PIPE TO CAP	B-J	VOL	UTP-10	UT-13			
			SUR	PTP-1				
16RRC(1)B-3	CROSS TO PIPE	B-J	VOL	UTP-10	UT-13			
			SUR	PTP-1				
16RRC(1)B-3LD	PIPE SEAM	B-J	VOL	UTP-10	UT-13			

WNP-02
INTERVAL: PSI
PERIOD: NA
OUTAGE:
DRAWING NO. RRC-102

WASHINGTON PUBLIC POWER SUPPLY SYSTEM
PROGRAM PLAN AND SCHEDULE
SYSTEM OR COMPONENT: RRC(2)-4S
DESCRIPTION: REACTOR RECIR LOOP B

IDENT. NO.	DESCRIPTION	SECT. XI EXAM.	EXAM MTH.	PROCEDURE	CAL. BLOCK	INSERVICE REQ.	SCHEDULED OUTAGE	NOTES
			SUR	PTP-1				
RCR-12B								
	PIPE WHIP	N/A	N/A	N/A				SEE NOTE #1
RRC-HB-8								
	SPRING	B-K-2	VT-3	303/8.2.17				
			VT-4	303/8.2.17				
16RRC(1)B-3/12RRC(1)-N2J								
	PIPE TO SWL	B-J	VOL	UTP-10	UT-13			
			SUR	PTP-1				
RCR-11B								
	PIPE WHIP	N/A	N/A	N/A				SEE NOTE #1
RRC-SB-14								
	PSA-35 SNUBBER	B-K-2	VT-3	303/8.2.17				S/N 4196
			VT-4	303/8.2.17				S/N 4196
RRC-SB-12								
	PSA-35 SNUBBER	B-K-2	VT-3	303/8.2.17				S/N 4221
			VT-4	303/8.2.17				S/N 4221
RCR-10B								
	PIPE WHIP	N/A	N/A	N/A				SEE NOTE #1
16RRC(1)B-3/12RRC(1)-N2K								
	PIPE TO SWL	B-J	VOL	UTP-10	UT-13			
			SUR	PTP-1				
16RRC(1)B-4LU								
	PIPE SEAM	B-J	VOL	UTP-10	UT-13			
			SUR	PTP-1				
16RRC(1)B-4								
	PIPE TO CAP	B-J	VOL	UTP-10	UT-13			
			SUR	PTP-1				

WNP-02
INTERVAL: PSI
PERIOD: NA
OUTAGE:
DRAWING NO. RRC-102

WASHINGTON PUBLIC POWER SUPPLY SYSTEM
PROGRAM PLAN AND SCHEDULE
SYSTEM OR COMPONENT: RRC(2)-4S
DESCRIPTION: REACTOR RECIR LOOP B

IDENT. NO.	DESCRIPTION	SECT. XI EXAM.	EXAM MTH.	PROCEDURE	CAL. BLOCK	INSERVICE REQ.	INSERVICE SCHEDULED OUTAGE	NOTES
12RRC(1)-N2F-1	SWL TO PIPE	B-J	VOL	UTP-10	UT-19			
			SUR	PTP-1				
12RRC(1)-N2F-1LD	PIPE SEAM	B-J	VOL	UTP-10	UT-19			
			SUR	PTP-1				
12RRC(1)-N2F-1ALU	PIPE SEAM	B-J	VOL	UTP-10	UT-19			
			SUR	PTP-1				
12RRC(1)-N2F-1A	PIPE TO PIPE	B-J	VOL	UTP-10	UT-19			
			SUR	PTP-1				
12RRC(1)-N2F-1ALD	PIPE SEAM	B-J	VOL	UTP-10	UT-19			
			SUR	PTP-1				
RCR-168	PIPE WHIP	N/A	N/A	N/A				SEE NOTE #1
12RRC(1)-N2F-2LU	PIPE SEAM	B-J	VOL	UTP-10	UT-19			
			SUR	PTP-1				
12RRC(1)-N2F-2	PIPE TO EL	B-J	VOL	UTP-10	UT-19			
			SUR	PTP-1				
12RRC(1)-N2F-2LDO	EL SEAM	B-J	VOL	UTP-10	UT-19			
			SUR	PTP-1				
12RRC(1)-N2F-2LDI	EL SEAM	B-J	VOL	UTP-10	UT-19			

WNP-02
INTERVAL: PSI
PERIOD: NA
OUTAGE:
DRAWING NO. RRC-102

WASHINGTON PUBLIC POWER SUPPLY SYSTEM
PROGRAM PLAN AND SCHEDULE
SYSTEM OR COMPONENT: RRC(2)-4S
DESCRIPTION: REACTOR RECIR LOOP B

DATE 12/14/84

IDENT. NO.	DESCRIPTION	SECT. XI EXAM.	EXAM MTH.	PROCEDURE	CAL. BLOCK	INSERVICE REQ.	SCHEDULED OUTAGE	NOTES
12RRC(1)-N2F-3LUO	EL SEAM	B-J	SUR	PTP-1				
			VOL	UTP-10	UT-19			
12RRC(1)-N2F-3LUI	EL SEAM	B-J	SUR	PTP-1				
			VOL	UTP-10	UT-19			
12RRC(1)-N2F-3	EL TO PIPE	B-J	SUR	PTP-1				
			VOL	UTP-10	UT-19			
12RRC(1)-N2F-3LD	PIPE SEAM	B-J	SUR	PTP-1				
			VOL	UTP-10	UT-19			
12RRC(1)-N2F-4LU	PIPE SEAM	B-J	SUR	PTP-1				
			VOL	UTP-10	UT-19			
12RRC(1)-N2F-4	PIPE TO SE EXT	B-J	SUR	PTP-1				
			VOL	UTP-10	UT-19			
12RRC(1)-N2F-6	SE TO NOZ	B-F	SUR	PTP-1				
			VOL	UTP-10	UT-111			
12RRC(1)-N2G-1	SWL TO PIPE	B-J	SUR	PTP-1				
			VOL	UTP-10	UT-19			
12RRC(1)-N2G-1LD	PIPE SEAM	B-J	SUR	PTP-1				
			VOL	UTP-10	UT-19			

WNP-02
INTERVAL: PSI
PERIOD: NA
OUTAGE:
DRAWING NO. RRC-102

WASHINGTON PUBLIC POWER SUPPLY SYSTEM
PROGRAM PLAN AND SCHEDULE
SYSTEM OR COMPONENT: RRC(2)-4S
DESCRIPTION: REACTOR RECIR LOOP B

DATE 12/14/84

IDENT. NO.	DESCRIPTION	SECT. XI EXAM.	EXAM. MTH.	PROCEDURE	CAL. BLOCK	INSERVICE REQ.	SCHEDULED OUTAGE	NOTES
			SUR	PTP-1				
12RRC(1)-N2G-1ALU	PIPE SEAM	B-J	VOL	UTP-10	UT-19			
			SUR	PTP-1				
12RRC(1)-N2G-1A	PIPE TO PIPE	B-J	VOL	UTP-10	UT-19			
			SUR	PTP-1				
12RRC(1)-N2G-1ALD	PIPE SEAM	B-J	VOL	UTP-10	UT-19			
			SUR	PTP-1				
RCR-17B	PIPE WHIP	N/A	N/A	N/A				SEE NOTE #1
12RRC(1)-N2G-2LU	PIPE SEAM	B-J	VOL	UTP-10	UT-19			
			SUR	PTP-1				
12RRC(1)-N2G-2	PIPE TO EL	B-J	VOL	UTP-10	UT-19			
			SUR	PTP-1				
12RRC(1)-N2G-2LDO	EL SEAM	B-J	VOL	UTP-10	UT-19			
			SUR	PTP-1				
12RRC(1)-N2G-2LDI	EL SEAM	B-J	VOL	UTP-10	UT-19			
			SUR	PTP-1				
12RRC(1)-N2G-3LUO	EL SEAM	B-J	VOL	UTP-10	UT-19			
			SUR	PTP-1				

WNP-02
INTERVAL: PSI
PERIOD: NA
OUTAGE:
DRAWING NO. RRC-102

WASHINGTON PUBLIC POWER SUPPLY SYSTEM
PROGRAM PLAN AND SCHEDULE
SYSTEM OR COMPONENT: RRC(2)-4S
DESCRIPTION: REACTOR RECIR LOOP B

DATE 12/14/84

IDENT. NO.	DESCRIPTION	SECT. XI EXAM.	EXAM MTH.	PROCEDURE	CAL. BLOCK	INSERVICE REQ.	SCHEDULED OUTAGE	NOTES
12RRC(1)-N2G-3LUI	EL SEAM	B-J	VOL	UTP-10	UT-19			
			SUR	PTP-1				
12RRC(1)-N2G-3	EL TO PIPE	B-J	VOL	UTP-10	UT-19			
			SUR	PTP-1				
12RRC(1)-N2G-3LD	PIPE SEAM	B-J	VOL	UTP-10	UT-19			
			SUR	PTP-1				
12RRC(1)-N2G-4LU	PIPE SEAM	B-J	VOL	UTP-10	UT-19			
			SUR	PTP-1				
12RRC(1)-N2G-4	PIPE TO SE EXT	B-J	VOL	UTP-10	UT-19			
			SUR	PTP-1				
12RRC(1)-N2G-6	SE TO NOZ	B-F	VOL	UTP-10	UT-111			
			SUR	PTP-1				
12RRC(1)-N2H-1	REDUCER TO PIPE	B-J	VOL	UTP-10	UT-19			
			SUR	PTP-1				
12RRC(1)-N2H-1LD	PIPE SEAM	B-J	VOL	UTP-10	UT-19			
			SUR	PTP-1				
12RRC(1)-N2H-1ALU	PIPE SEAM	B-J	VOL	UTP-10	UT-19			
			SUR	PTP-1				

WNP-02
INTERVAL: PSI
PERIOD: NA
OUTAGE:
DRAWING NO. RRC-102

WASHINGTON PUBLIC POWER SUPPLY SYSTEM
PROGRAM PLAN AND SCHEDULE
SYSTEM OR COMPONENT: RRC(2)-4S
DESCRIPTION: REACTOR RECIR LOOP B

IDENT. NO.	DESCRIPTION	SECT. XI EXAM.	EXAM MTH.	PROCEDURE	CAL. BLOCK	INSERVICE REQ.	INSERVICE SCHEDULED OUTAGE	NOTES
12RRC(1)-N2H-1A	PIPE TO PIPE	B-J	VOL	UTP-10	UT-19			
			SUR	PTP-1				
12RRC(1)-N2H-1ALD	PIPE SEAM	B-J	VOL	UTP-10	UT-19			
			SUR	PTP-1				
RCR-18B	PIPE WHIP	N/A	N/A	N/A				SEE NOTE #1
12RRC(1)-N2H-2LU	PIPE SEAM	B-J	VOL	UTP-10	UT-19			
			SUR	PTP-1				
12RRC(1)-N2H-2	PIPE TO EL	B-J	VOL	UTP-10	UT-19			
			SUR	PTP-1				
12RRC(1)-N2H-2LDO	EL SEAM	B-J	VOL	UTP-10	UT-19			
			SUR	PTP-1				
12RRC(1)-N2H-2LDI	EL SEAM	B-J	VOL	UTP-10	UT-19			
			SUR	PTP-1				
12RRC(1)-N2H-3LUO	EL SEAM	B-J	VOL	UTP-10	UT-19			
			SUR	PTP-1				
12RRC(1)-N2H-3LUI	EL SEAM	B-J	VOL	UTP-10	UT-19			
			SUR	PTP-1				
12RRC(1)-N2H-3	EL SEAM	B-J	VOL	UTP-10	UT-19			

WNP-02
INTERVAL: PSI
PERIOD: NA
OUTAGE:
DRAWING NO. RRC-102

WASHINGTON PUBLIC POWER SUPPLY SYSTEM
PROGRAM PLAN AND SCHEDULE
SYSTEM OR COMPONENT: RRC(2)-4S
DESCRIPTION: REACTOR RECIR LOOP B

DATE 12/14/84

IDENT. NO.	DESCRIPTION	SECT. XI EXAM.	EXAM MTH.	PROCEDURE	CAL. BLOCK	INSERVICE REQ.	SCHEDULED OUTAGE	NOTES
12RRC(1)-N2H-3LD	PIPE SEAM	B-J	SUR	PTP-1				
			VOL	UTP-10	UT-19			
12RRC(1)-N2H-4LU	PIPE SEAM	B-J	SUR	PTP-1				
			VOL	UTP-10	UT-19			
12RRC(1)-N2H-4	PIPE TO SE	B-J	SUR	PTP-1				
			VOL	UTP-10	UT-19			
12RRC(1)-N2H-6	SE TO NOZ	B-F	SUR	PTP-1				
			VOL	UTP-10	UT-111			
12RRC(1)-N2J-1	SWL TO PIPE	B-J	SUR	PTP-1				
			VOL	UTP-10	UT-19			
12RRC(1)-N2J-1LD	PIPE SEAM	B-J	SUR	PTP-1				
			VOL	UTP-10	UT-19			
12RRC(1)-N2J-1ALU	PIPE SEAM	B-J	SUR	PTP-1				
			VOL	UTP-10	UT-19			
12RRC(1)-N2J-1A	PIPE TO PIPE	B-J	SUR	PTP-1				
			VOL	UTP-10	UT-19			
12RRC(1)-N2J-1ALD	PIPE SEAM	B-J	SUR	PTP-1				
			VOL	UTP-10	UT-19			

WNP-02
INTERVAL: PSI
PERIOD: NA
OUTAGE:
DRAWING NO. RRC-102

WASHINGTON PUBLIC POWER SUPPLY SYSTEM
PROGRAM PLAN AND SCHEDULE
SYSTEM OR COMPONENT: RRC(2)-4S
DESCRIPTION: REACTOR RECIR LOOP B

IDENT. NO.	DESCRIPTION	SECT. XI EXAM.	EXAM MTH.	PROCEDURE	CAL. BLOCK	INSERVICE REQ.	INSERVICE SCHEDULED OUTAGE	NOTES
			SUR	PTP-1				
RCR-19B	PIPE WHIP	N/A	N/A	N/A				SEE NOTE #1
12RRC(1)-N2J-2LU	PIPE SEAM	B-J	VOL	UTP-10	UT-19			
			SUR	PTP-1				
12RRC(1)-N2J-2	PIPE TO EL	B-J	VOL	UTP-10	UT-19			
			SUR	PTP-1				
12RRC(1)-N2J-2LDI	EL SEAM	B-J	VOL	UTP-10	UT-19			
			SUR	PTP-1				
12RRC(1)-N2J-2LDO	EL SEAM	B-J	VOL	UTP-10	UT-19			
			SUR	PTP-1				
12RRC(1)-N2J-3LUO	EL SEAM	B-J	VOL	UTP-10	UT-19			
			SUR	PTP-1				
12RRC(1)-N2J-3LUI	EL SEAM	B-J	VOL	UTP-10	UT-19			
			SUR	PTP-1				
12RRC(1)-N2J-3	EL TO PIPE	B-J	VOL	UTP-10	UT-19			
			SUR	PTP-1				
12RRC(1)-N2J-3LD	PIPE SEAM	B-J	VOL	UTP-10	UT-19			
			SUR	PTP-1				

WNP-02
INTERVAL: PSI
PERIOD: NA
OUTAGE:
DRAWING NO. RRC-102

WASHINGTON PUBLIC POWER SUPPLY SYSTEM
PROGRAM PLAN AND SCHEDULE
SYSTEM OR COMPONENT: RRC(2)-4S
DESCRIPTION: REACTOR RECIR LOOP B

DATE 12/14/84

IDENT. NO.	DESCRIPTION	SECT. XI EXAM.	EXAM MTH.	PROCEDURE	CAL. BLOCK	INSERVICE REQ.	SCHEDULED OUTAGE	NOTES
12RRC(1)-N2J-4LU	PIPE SEAM	B-J	VOL	UTP-10	UT-19			
			SUR	PTP-1				
12RRC(1)-N2J-4	PIPE TO SE EXT	B-J	VOL	UTP-10	UT-19			
			SUR	PTP-1				
12RRC(1)-N2J-6	SE TO NOZ	B-F	VOL	UTP-10	UT-111			
			SUR	PTP-1				
12RRC(1)-N2K-1	SWL TO PIPE	B-J	VOL	UTP-10	UT-19			
			SUR	PTP-1				
12RRC(1)-N2K-1LD	PIPE SEAM	B-J	VOL	UTP-10	UT-19			
			SUR	PTP-1				
12RRC(1)-N2K-1ALU	PIPE SEAM	B-J	VOL	UTP-10	UT-19			
			SUR	PTP-1				
12RRC(1)-N2K-1A	PIPE TO PIPE	B-J	VOL	UTP-10	UT-19			
			SUR	PTP-1				
12RRC(1)-N2K-1ALD	PIPE SEAM	B-J	VOL	UTP-10	UT-19			
			SUR	PTP-1				
RCR-20B	PIPE WHIP	N/A	N/A	N/A				SEE NOTE #1
12RRC(1)-N2K-2LU	PIPE SEAM	B-J	VOL	UTP-10	UT-19			

WNP-02
INTERVAL: PSI
PERIOD: NA
OUTAGE:
DRAWING NO. RRC-102

WASHINGTON PUBLIC POWER SUPPLY SYSTEM
PROGRAM PLAN AND SCHEDULE
SYSTEM OR COMPONENT: RRC(2)-4S
DESCRIPTION: REACTOR RECIR LOOP B

IDENT. NO.	DESCRIPTION	SECT. XI EXAM.	EXAM MTH.	PROCEDURE	CAL. BLOCK	INSERVICE REQ.	INSERVICE SCHEDULED OUTAGE	NOTES
12RRC(1)-N2K-2	PIPE TO EL	B-J	SUR	PTP-1				
			VOL	UTP-10	UT-19			
12RRC(1)-N2K-2LDO	EL SEAM	B-J	SUR	PTP-1				
			VOL	UTP-10	UT-19			
12RRC(1)-N2K-2LDI	EL SEAM	B-J	SUR	PTP-1				
			VOL	UTP-10	UT-19			
12RRC(1)-N2K-3LUO	EL SEAM	B-J	SUR	PTP-1				
			VOL	UTP-10	UT-19			
12RRC(1)-N2K-3LUI	EL SEAM	B-J	SUR	PTP-1				
			VOL	UTP-10	UT-19			
12RRC(1)-N2K-3	EL TO PIPE	B-J	SUR	PTP-1				
			VOL	UTP-10	UT-19			
12RRC(1)-N2K-3LD	PIPE SEAM	B-J	SUR	PTP-1				
			VOL	UTP-10	UT-19			
12RRC(1)-N2K-4LU	PIPE SEAM	B-J	SUR	PTP-1				
			VOL	UTP-10	UT-19			
12RRC(1)-N2K-4	PIPE TO SE	B-J	SUR	PTP-1				
			VOL	UTP-10	UT-19			

WNP-02
INTERVAL: PSI
PERIOD: NA
OUTAGE:
DRAWING NO. RRC-102

WASHINGTON PUBLIC POWER SUPPLY SYSTEM
PROGRAM PLAN AND SCHEDULE
SYSTEM OR COMPONENT: RRC(2)-4S
DESCRIPTION: REACTOR RECIR LOOP B

IDENT. NO.	DESCRIPTION	SECT. XI EXAM.	EXAM MTH.	PROCEDURE	CAL. BLOCK	INSERVICE REQ.	INSERVICE SCHEDULED OUTAGE	NOTES
			SUR	PTP-1				
12RRC(1)-N2K-6								
	SE TO NOZ	B-F	VOL	UTP-10	UT-111			
			SUR	PTP-1				
RRC-PB-102								
	RRC PRES BNDRY	B-P	VT-2	N/A				SEE NOTE #6 & #7.

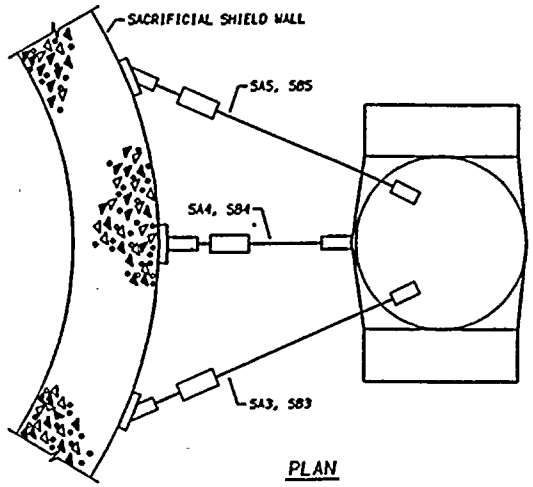

PLAN

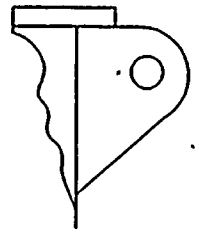

DEATIL

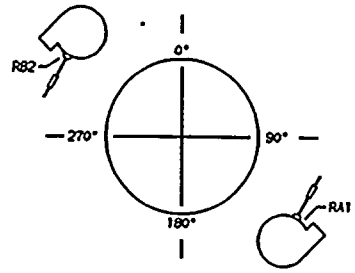

RA1, RB1 LUGS

LUG ORIENTATION

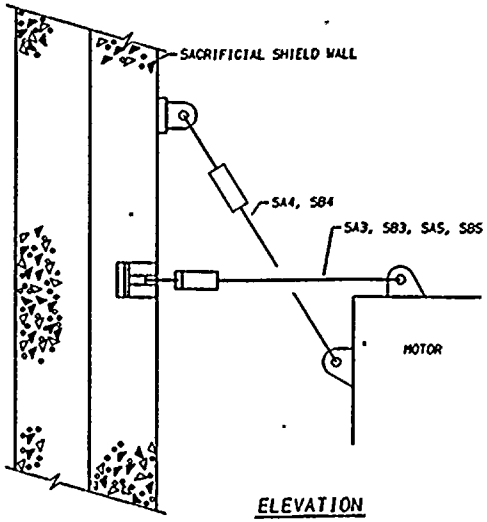

ELEVATION

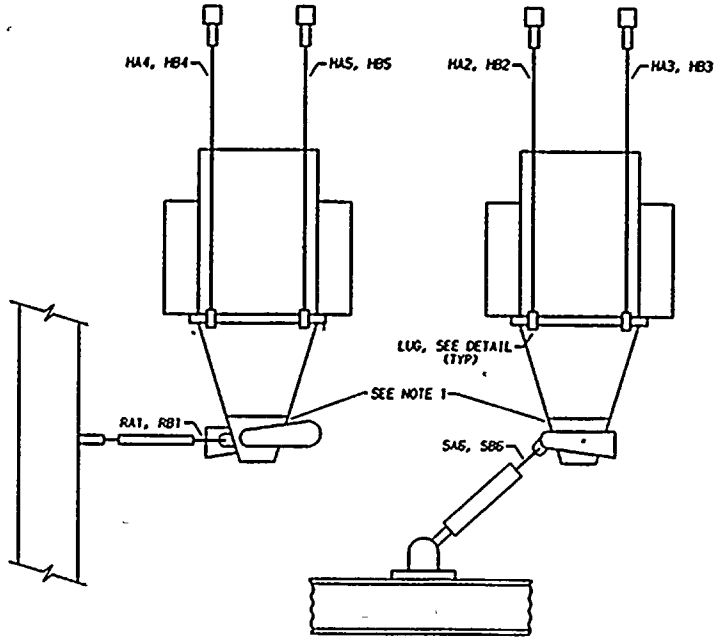

RRC-P-1A OR RRC-P-1B

THIS DRAWING IS INTENDED FOR USE IN PRESERVICE AND INSERVICE INSPECTIONS PROGRAMS ONLY.

PIPING SYSTEM	NOM DIA (IN)	SCH	NOM WALL THK	MATERIAL SPECIFICATION	MATL TYPE	CAL BLOCK NO
RRC PUMPS	3 1/4	-	-	SA 193 GR B-7	CS	UT-41

NO	DATE	REVISION	BY	CHKD	APVD
1	1-24-85	ADDED LUG ORIENTATION DETAIL	K-HcA	TEK	TEK
0	11-27-78	ISSUED FOR USE	K-HcA	DVP	LFB
A	9-12-78	ISSUED FOR INFORMATION ONLY	K-HcA	DT	DWP

NOTES

1 EACH PUMP HAS SIXTEEN (16) 3 1/4" X 23 5/8" BOLTS CONNECTING THE CASING TO SEAL AREAS.

2 OBSERVE RRC PUMP SEAL SUPPLY LINES DURING HYDRO.

REFERENCES:

GENERAL ELECTRIC DRAWINGS

731 E 724
731 E 724F
762 E 538

QUALITY CLASS: I	ASME CODE CLASS: I
ENGR: D TIMMINS	DRAWN: K-HcA	DATE: 7-13--78

WASHINGTON PUBLIC POWER SUPPLY SYSTEM
RICHLAND, WASHINGTON 99352

WNP-2
WELD & COMPONENT
IDENTIFICATION DIAGRAM

TITLE:
RRC-P-1A & RRC-P-1B SUPPORTS

DWG NO: RRC-103 | REV 1

WNP-02
INTERVAL: PSI
PERIOD: NA
OUTAGE:
DRAWING NO. RRC-103

WASHINGTON PUBLIC POWER SUPPLY SYSTEM
PROGRAM PLAN AND SCHEDULE
SYSTEM OR COMPONENT: RRC-P-1A
DESCRIPTION: RRC LOOP A PUMP

DATE 12/14/84

IDENT. NO.	DESCRIPTION	SECT. XI EXAM.	EXAM MTH.	PROCEDURE	CAL. BLOCK	INSERVICE REQ.	SCHEDULED OUTAGE	NOTES
RRC-HA-2								
	SPRING	B-K-2	VT-3	303/8.2.17				
			VT-4	303/8.2.17				
RRC-HA-3								
	SPRING	B-K-2	VT-3	303/8.2.17				
			VT-4	303/8.2.17				
RRC-HA-4								
	SPRING	B-K-2	VT-3	303/8.2.17				
			VT-4	303/8.2.17				
RRC-HA-5								
	SPRING	B-K-2	VT-3	303/8.2.17				
			VT-4	303/8.2.17				
RRC-SA-3								
	PSA-100 SNUBBER	B-K-2	VT-3	303/8.2.17				S/N 614
			VT-4	303/8.2.17				S/N 614
RRC-SA-4								
	PSA-100 SNUBBER	B-K-2	VT-3	303/8.2.17				S/N 618
			VT-4	303/8.2.17				S/N 618
RRC-SA-5								
	PSA-100 SNUBBER	B-K-2	VT-3	303/8.2.17				S/N 615
			VT-4	303/8.2.17				S/N 615
RRC-900N								
	STRUT	B-K-2	VT-3	303/8.2.17				
RRC-SA-6								
	PSA-100 SNUBBER	B-K-2	VT-3	303/8.2.17				S/N 620
			VT-4	303/8.2.17				S/N 620
RRC-RA-1(W)								
	1 WELDED LUG	B-K-1	SUR	PTP-1				

WNP-02
INTERVAL: PSI
PERIOD: NA
OUTAGE:
DRAWING NO. RRC-103

WASHINGTON PUBLIC POWER SUPPLY SYSTEM
PROGRAM PLAN AND SCHEDULE
SYSTEM OR COMPONENT: RRC-P-1A
DESCRIPTION: RRC LOOP A PUMP

DATE 12/14/84

IDENT. NO.	DESCRIPTION	SECT. XI EXAM.	EXAM MTH.	PROCEDURE	CAL. BLOCK	INSERVICE REQ.	SCHEDULED OUTAGE	NOTES
RRC-RA-1								
	STRUT	B-K-2	VT-3	303/8.2.17				
RRC-P-1A-BLT								
	PUMP BOLTING	B-G-1	VOL	UTP-34	UT-41			STUDS: UT WHEN IN PLACE. UT & PT WHEN REMOVED.
			SUR	PTP-1				STUDS: UT WHEN IN PLACE. UT & PT WHEN REMOVED
			VT-1	QCI 7-1				STUDS: UT WHEN IN PLACE. UT & PT WHEN REMOVED
RRC-P-1A-BDY								
	PUMP BODY	B-M-2	VT-1	QCI 7-1				
RRC-HB-2								
	SPRING	B-K-2	VT-3	303/8.2.17				
			VT-4	303/8.2.17				
RRC-HB-3								
	SPRING	B-K-2	VT-3	303/8.2.17				
			VT-4	303/8.2.17				
RRC-HB-4								
	SPRING	B-K-2	VT-3	303/8.2.17				
			VT-4	303/8.2.17				
RRC-HB-5								
	SPRING	B-K-2	VT-3	303/8.2.17				
			VT-4	303/8.2.17				
RRC-SB-3								
	PSA-100 SNUBBER	B-K-2	VT-3	303/8.2.17				S/N 617

WNP-02
INTERVAL: PSI
PERIOD: NA
OUTAGE:
DRAWING NO. RRC-103

WASHINGTON PUBLIC POWER SUPPLY SYSTEM
PROGRAM PLAN AND SCHEDULE
SYSTEM OR COMPONENT: RRC-P-1A
DESCRIPTION: RRC LOOP A PUMP

DATE 12/14/84

IDENT. NO.	DESCRIPTION	SECT. XI EXAM.	EXAM MTH.	PROCEDURE	CAL. BLOCK	INSERVICE REQ.	INSERVICE SCHEDULED OUTAGE	NOTES
			VT-4	303/8.2.17				S/N 617
RRC-SB-4								
	PSA-100 SNUBBER	B-K-2	VT-3	303/8.2.17				S/N 619
			VT-4	303/8.2.17				S/N 619
RRC-SB-5								
	PSA-100 SNUBBER	B-K-2	VT-3	303/8.2.17				S/N 616
			VT-4	303/8.2.17				S/N 616
RRC-SB-6								
	PSA-100 SNUBBER	B-K-2	VT-3	303/8.2.17				S/N 621
			VT-4	303/8.2.17				S/N 621
RRC-RB-1(W)								
	1 WELDED LUG	B-K-1	SUP	PTP-1				
RRC-RB-1								
	STRUT	B-K-2	VT-3	303/8.2.17				
RRC-901N								
	STRUT	B-K-2	VT-3	303/8.2.17				
RRC-P-1B-BLT								
	PUMP BOLTING	B-G-1	VOL	UTP-34	UT-41			STUDS: UT WHEN IN PLACE. UT & PT WHEN REMOVED.
			SUR	PTP-1				STUDS: UT WHEN IN PLACE. UT & PT WHEN REMOVED
			VT-1	QCI 7-1				STUDS: UT WHEN IN PLACE. UT & PT WHEN REMOVED
RRC-P-1B-BDY								
	PUMP BODY	B-M-2	VT-1	QCI 7-1				

WNP-02
INTERVAL: PSI
PERIOD: NA
OUTAGE:
DRAWING NO. RRC-103

WASHINGTON PUBLIC POWER SUPPLY SYSTEM
PROGRAM PLAN AND SCHEDULE
SYSTEM OR COMPONENT: RRC-P-1A
DESCRIPTION: RRC LOOP A PUMP

DATE 12/14/84

IDENT. NO.	DESCRIPTION	SECT. XI EXAM.	EXAM MTH.	PROCEDURE	CAL. BLOCK	INSERVICE REQ.	INSERVICE SCHEDULED OUTAGE	NOTES
RRC-PB-103	RRC PRES BNDRY	B-P	VT-2	N/A				SEE NOTES #6 & #7.

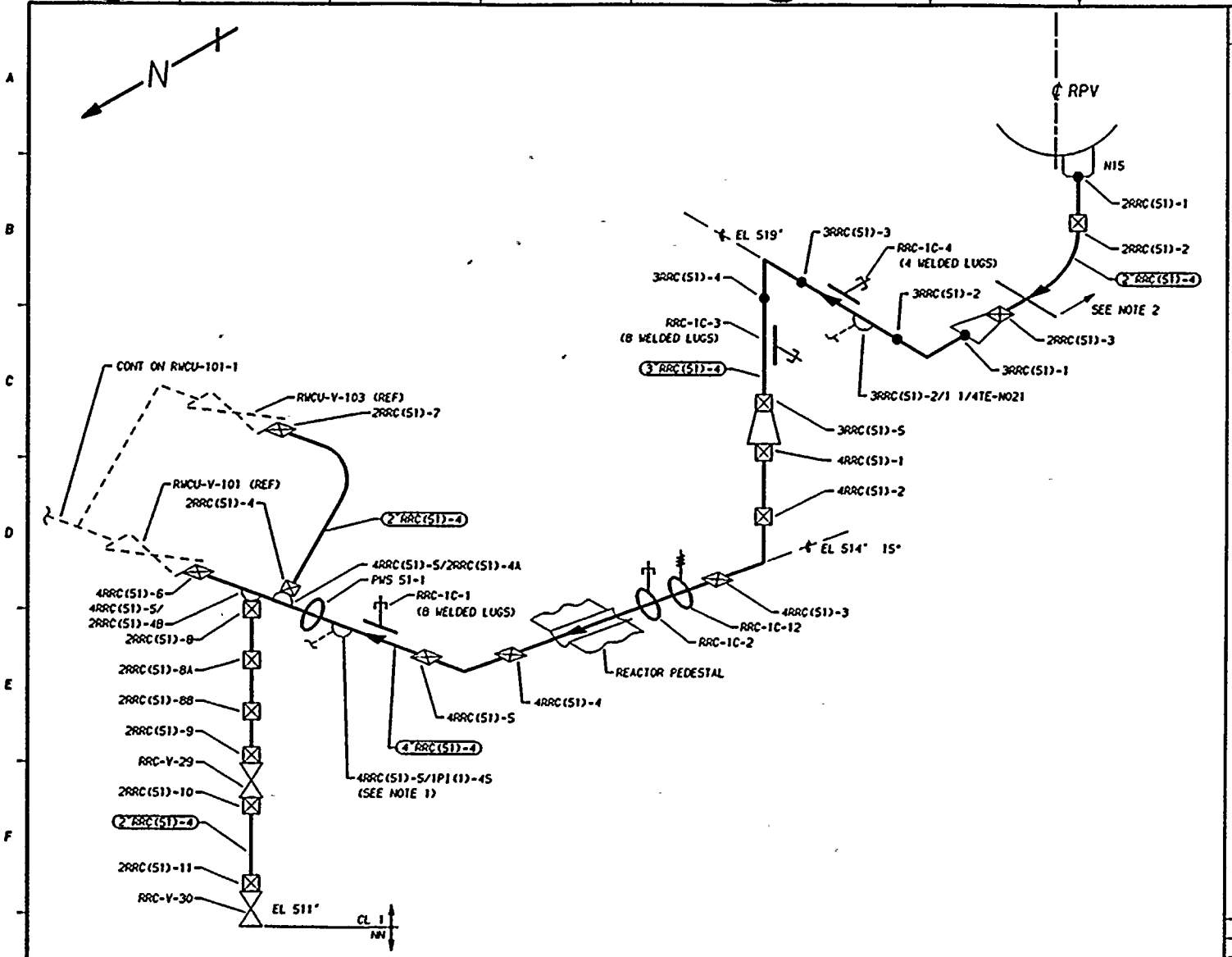

NOTES

1. EXTEND LEAKAGE EXAM THROUGH CONTAINMENT PENETRATION (X-78c) THROUGH EXCESS FLOW CHECK VALVE TO INSTRUMENT TUBING CONNECTION.
2. INACCESSABLE DUE TO CRD HOUSINGS.

REFERENCES:

ISI - 230

BOVEE & CRAIL ISOMETRICS
RRC-564-1.3 REV 13
RRC-1819-2 REV 2
RRC-3083-1 REV 6

CBI NUCLEAR CO
87, REV 6 N15 DRAIN NOZZLE

KEYPLAN

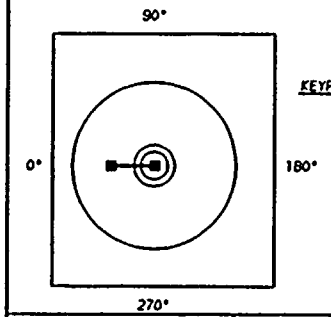

QUALITY CLASS: 1	ASME CODE CLASS: 1	
ENGR: D TIMMINS	DRAWN: K-McA	DATE: 6-22-78

THIS DRAWING IS INTENDED FOR USE IN PRESERVICE AND INSERVICE INSPECTIONS PROGRAMS ONLY.

WASHINGTON PUBLIC POWER
SUPPLY SYSTEM
RICHLAND, WASHINGTON 99352

WNP-2
WELD & COMPONENT
IDENTIFICATION DIAGRAM

TITLE:
RPV DRAIN TO RWCU & DRYWELL SUMP

DWG NO: RRC-104 REV 2

PIPING SYSTEM	NOM DIA (IN)	SCH	NOM WALL THK	MATERIAL SPECIFICATION	MATL TYPE	CAL BLOCK NO
2"RRC(51)-4	2	160	0.343	SA 106 GR B	CS	NA
3"RRC(51)-4	3	160	0.438	SA 106 GR B	CS	NA
4"RRC(51)-4	4	80	0.337	SA 106 GR B	CS	UT-30

NO	DATE	REVISION	BY	CHKD	APVD
2	12-8-85	GENERAL UP-DATE REDRAWN	[illegible]	JPK	TCB
1	11-5-80	REVISED AS NOTED	K-McA	TFH	DWP
0	12-22-78	ISSUED FOR USE	K-McA	TFH/DWP	LFB
A	9-19-78	ISSUED FOR INFORMATION ONLY	K-McA	DT	DWP

WNP-02
INTERVAL: PSI
PERIOD: NA
OUTAGE:
DRAWING NO. RRC-104

WASHINGTON PUBLIC POWER SUPPLY SYSTEM
PROGRAM PLAN AND SCHEDULE
SYSTEM OR COMPONENT: RRC(51)-4
DESCRIPTION: RPV DRAIN

DATE 12/14/84

IDENT. NO.	DESCRIPTION	SECT. XI EXAM.	EXAM MTH.	PROCEDURE	CAL. BLOCK	INSERVICE REQ.	INSERVICE SCHEDULED OUTAGE	NOTES
2RRC(51)-1								
	NOZ TO FORG.	B-J	SUR	N/A				INACCESSABLE DUE TO CRD HOUSINGS.
2RRC(51)-2								
	FORG. TO PIPE	B-J	SUR	N/A				INACCESSABLE DUE TO CRD HOUSINGS.
2RRC(51)-3								
	PIPE TO REDUCER	B-J	SUR	PTP-1				
3RRC(51)-1								
	REDUCER TO EL	B-J	SUR	PTP-1				
3RRC(51)-2								
	EL TO PIPE	B-J	SUR	PTP-1				
3RRC(51)-2/1-1/4TE-N021								
	PIPE TO SOL	B-J	SUR	PTP-1				
RRC-1C-4								
	PSA-1/2 SN(2)	B-K-2	VT-3	303/8.2.17				S/N N2099/S212
			VT-4	303/8.2.17				S/N N2099/S212
3RRC(51)-3								
	PIPE TO EL	B-J	SUR	PTP-1				
3RRC(51)-4								
	EL TO PIPE	B-J	SUR	PTP-1				
RRC-1C-3								
	PSA-1 SNUBBER	B-K-2	VT-3	303/8.2.17				S/N 135
			VT-4	303/8.2.17				S/N 135
3RRC(51)-5								
	PIPE TO REDUCER	B-J	SUR	PTP-1				
4RRC(51)-1								
	REDUCER TO PIPE	B-J	VOL	UTP-10	UT-30			
			SUR	PTP-1				
4RRC(51)-2								
	PIPE TO EL	B-J	VOL	UTP-10	UT-30			
			SUR	PTP-1				

WNP-02
INTERVAL: PSI
PERIOD: NA
OUTAGE:
DRAWING NO. RRC-104

WASHINGTON PUBLIC POWER SUPPLY SYSTEM
PROGRAM PLAN AND SCHEDULE
SYSTEM OR COMPONENT: RRC(51)-4
DESCRIPTION: RPV DRAIN

IDENT. NO.	DESCRIPTION	SECT. XI EXAM.	EXAM MTH.	PROCEDURE	CAL. BLOCK	INSERVICE REQ.	INSERVICE SCHEDULED OUTAGE	NOTES
4RRC(51)-3								
	EL TO PIPE	B-J	VOL	UTP-10	UT-30			
			SUR	PTP-1				
RRC-12								
	SPRING	B-K-2	VT-3	303/8.2.17				
			VT-4	303/8.2.17				
RRC-1C-2								
	PSA-1 SNUBBER	B-K-2	VT-3	303/8.2.17				S/N 22357
			VT-4	303/8.2.17				S/N 22357
4RRC(51)-4								
	PIPE TO EL	B-J	VOL	UTP-10	UT-30			
			SUR	PTP-1				
4RRC(51)-5								
	EL TO PIPE	B-J	VOL	UTP-10	UT-30			
			SUR	PTP-1				
RRC-1C-1(W)								
	8 WELDED LUGS	B-K-1	VOL	UTP-26	UT-30			
RRC-1C-1								
	PSA-1 SN(2)	B-K-2	VT-3	303/8.2.17				S/N 348/353
			VT-4	303/8.2.17				S/N 348/353
4RRC(51)-5/1PI(1)-4S								
	INSTR CONN	B-P	VT-2	N/A				SEE NOTES #6 & #7.
PWS-51-1								
	PIPE WHIP	N/A	N/A	N/A				SEE NOTE #1
4RRC(51)-5/2RRC(51)-4A								
	PIPE TO WOL	B-J	SUR	PTP-1				
2RRC(51)-4								
	WOL TO PIPE	B-J	SUR	PTP-1				
2RRC(51)-7								
	PIPE TO VALVE	B-J	SUR	PTP-1				

WNP-02
INTERVAL: PSI
PERIOD: NA
OUTAGE:
DRAWING NO. RRC-104

WASHINGTON PUBLIC POWER SUPPLY SYSTEM
PROGRAM PLAN AND SCHEDULE
SYSTEM OR COMPONENT: RRC(51)-4
DESCRIPTION: RPV DRAIN

IDENT. NO.	DESCRIPTION	SECT. XI EXAM.	EXAM MTH.	PROCEDURE	CAL. BLOCK	INSERVICE REQ.	SCHEDULED OUTAGE	NOTES
4RRC(51)-5/2RRC(51)-4B								
	PIPE TO SOL	B-J	SUR	PTP-1				
4RRC(51)-6								
	PIPE TO VALVE	B-J	SUR	PTP-1				
RRC-1C-900N								
	PSA-1 SN(2)	B-K-2	VT-3	303/8.2.17				S/N 583/617
			VT-4	303/8.2.17				S/N 583/617
2RRC(51)-8								
	SOL TO PIPE	B-J	SUR	PTP-1				
2RRC(51)-8A								
	PIPE TO PIPE	B-J	SUR	PTP-1				
2RRC(51)-8B								
	PIPE TO PIPE	B-J	SUR	PTP-1				
2RRC(51)-9								
	PIPE TO VALVE	B-J	SUR	PTP-1				
2RRC(51)-10								
	VALVE TO PIPE	B-J	SUR	PTP-1				
2RRC(51)-11								
	PIPE TO VALVE	B-J	SUR	PTP-1				
RRC-PB-104								
	RRC PRES BNDRY	B-P	VT-2	N/A				SEE NOTES #6 & #7.

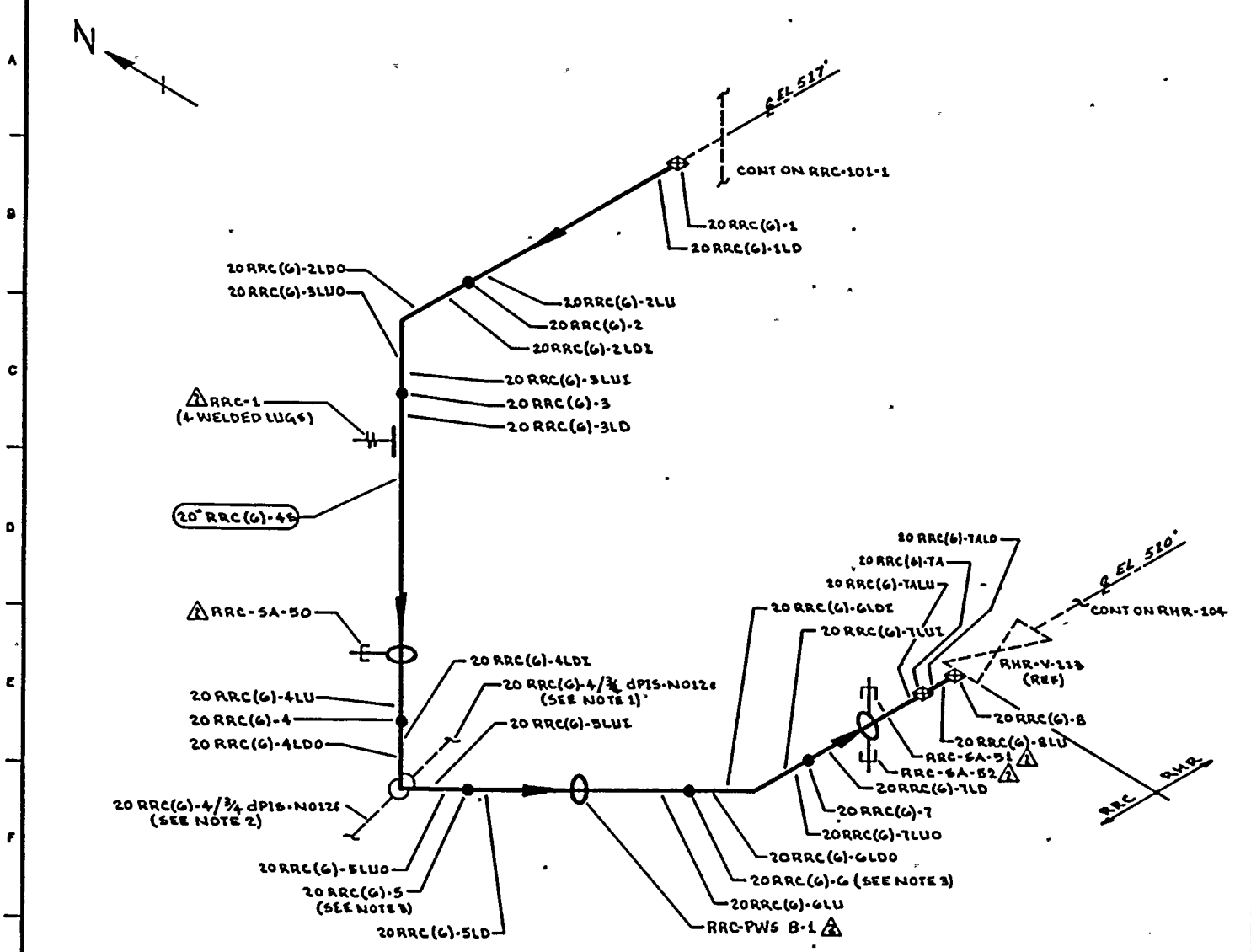

NOTES:

1. EXTEND LEAKAGE EXAM THROUGH CONTAINMENT PENETRATION (X-74a) THROUGH EXCESS FLOW CHECK VALVE TO INSTRUMENT TUBING CONNECTION.
2. EXTEND LEAKAGE EXAM THROUGH CONTAINMENT PENETRATION (X-74c) THROUGH EXCESS FLOW CHECK VALVE TO INSTRUMENT TUBING CONNECTION.
3. ACCESS TO WELDS 20 RRC(G)-5 & 20 RRC(G)-6 REQUIRES REMOVAL OF RRC-PWS 8-1 (4)

REFERENCES:

BOVEE & CRAIL ISOMETRIC
RRC-SGS-1 REV 12

KEYPLAN

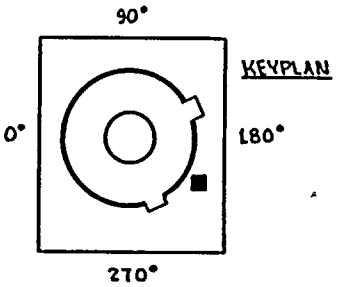

THIS DRAWING IS INTENDED FOR USE IN PRESERVICE AND INSERVICE INSPECTION PROGRAMS ONLY.

PIPING SYSTEM	NOM DIA (IN)	SCH	NOM WALL THK	MATERIAL SPECIFICATION	MATL TYPE	CAL BLOCK NO
20" RRC (G)-4S	20	80	1.031	SA 358 GR 304	SS	9

NO	DATE	REVISION	BY	CHKD	APPVD
2	10-13-83	REVISED AS NOTED ADDED KEYPLAN	KMcA		
1	7-17-79	ADDED FIELD WELD 20 RRC(G)-7A, PER AS BUILT, 2 IN 87	KMcA		
0	11-27-78	ISSUED FOR USE	KMcA		
A	9-12-78	ISSUED FOR INFORMATION ONLY	KMcA		

QUALITY CLASS: 1 | ASME CODE CLASS: 1
ENGR: D TIMMINS | DRAWN: K.McA | DATE: 7-14-78

WASHINGTON PUBLIC POWER SUPPLY SYSTEM
RICHLAND, WASHINGTON 99352

WNP-2
WELD & COMPONENT IDENTIFICATION DIAGRAM

TITLE: RHR SHUTDOWN COOLING SUCTION INTERTIE WITH RRC LOOP A

DWG NO: RRC-105 | REV 2

WNP-02
INTERVAL: PSI
PERIOD: NA
OUTAGE:
DRAWING NO. RRC-105

WASHINGTON PUBLIC POWER SUPPLY SYSTEM
PROGRAM PLAN AND SCHEDULE
SYSTEM OR COMPONENT: RRC(6)-4S
DESCRIPTION: RHR SHUTDN COOL SUCT

DATE 12/14/84

IDENT. NO.	DESCRIPTION	SECT. XI EXAM.	EXAM MTH.	PROCEDURE	CAL. BLOCK	INSERVICE REQ.	INSERVICE SCHEDULED OUTAGE	NOTES
20RRC(6)-1								
	PIPE/REDUCE TEE	B-J	VOL	UTP-10	UT-9			
			SUR	PTP-1				
20RRC(6)-1LD								
	PIPE SEAM	B-J	VOL	UTP-10	UT-9			
			SUR	PTP-1				
20RRC(6)-2LU								
	PIPE SEAM	B-J	VOL	UTP-10	UT-9			
			SUR	PTP-1				
20RRC(6)-2								
	PIPE TO EL	B-J	VOL	UTP-10	UT-9			
			SUR	PTP-1				
20RRC(6)-2LDI								
	EL SEAM	B-J	VOL	UTP-10	UT-9			
			SUR	PTP-1				
20RRC(6)-2LDO								
	EL SEAM	B-J	VOL	UTP-10	UT-9			
			SUR	PTP-1				
20RRC(6)-3LUI								
	EL SEAM	B-J	VOL	UTP-10	UT-9			
			SUR	PTP-1				
20RRC(6)-3LUO								
	EL SEAM	B-J	VOL	UTP-10	UT-9			
			SUR	PTP-1				
20RRC(6)-3								
	EL TO PIPE	B-J	VOL	UTP-10	UT-9			
			SUR	PTP-1				

WNP-02
INTERVAL: PSI
PERIOD: NA
OUTAGE:
DRAWING NO. RRC-105

WASHINGTON PUBLIC POWER SUPPLY SYSTEM
PROGRAM PLAN AND SCHEDULE
SYSTEM OR COMPONENT: RRC(6)-4S
DESCRIPTION: RHR SHUTDN COOL SUCT

DATE 12/14/84

IDENT. NO.	DESCRIPTION	SECT. XI EXAM.	EXAM MTH.	PROCEDURE	CAL. BLOCK	INSERVICE REQ.	SCHEDULED OUTAGE	NOTES
20RRC(6)-3LD								
	PIPE SEAM	B-J	VOL	UTP-10	UT-9			
			SUR	PTP-1				
RRC-1								
	SPRING	B-K-2	VT-3	303/8.2.17				
			VT-4	303/8.2.17				
RRC-SA-50								
	PSA-35 SNUBBER	B-K-2	VT-3	303/8.2.17				S/N 6093
			VT-4	303/8.2.17				S/N 6093
20RRC(6)-4LU								
	PIPE SEAM	B-J	VOL	UTP-10	UT-9			
			SUR	PTP-1				
20RRC(6)-4								
	PIPE SEAM	B-J	VOL	UTP-10	UT-9			
			SUR	PTP-1				
20RRC(6)-4LDI								
	EL SEAM	B-J	VOL	UTP-10	UT-9			
			SUR	PTP-1				
20RRC(6)-4LDO								
	EL SEAM	B-J	VOL	UTP-10	UT-9			
			SUR	PTP-1				
20RRC(6)-4/3/4DPIS-N012E								
	INSTR CONN	B-P	VT-2	N/A				SEE NOTES #6 & #7.
20RRC(6)-4/3/4DPIS-N012F								
	INSTR CONN	B-P	VT-2	N/A				SEE NOTES #6 & #7.
20RRC(6)-5LUI								
	EL SEAM	B-J	VOL	UTP-10	UT-9			
			SUR	PTP-1				

WNP-02
INTERVAL: PSI
PERIOD: NA
OUTAGE:
DRAWING NO. RRC-105

WASHINGTON PUBLIC POWER SUPPLY SYSTEM
PROGRAM PLAN AND SCHEDULE
SYSTEM OR COMPONENT: RRC(6)-4S
DESCRIPTION: RHR SHUTDN COOL SUCT

DATE 12/14/84

IDENT. NO.	DESCRIPTION	SECT. XI EXAM.	EXAM MTH.	PROCEDURE	CAL. BLOCK	INSERVICE REQ.	INSERVICE SCHEDULED OUTAGE	NOTES
20RRC(6)-5LUO								
	EL SEAM	B-J	VOL	UTP-10	UT-9			
			SUR	PTP-1				
20RRC(6)-5								
	EL TO PIPE	B-J	VOL	UTP-10	UT-9			
			SUR	PTP-1				
20RRC(6)-5LD								
	PIPE SEAM	B-J	VOL	UTP-10	UT-9			
			SUR	PTP-1				
PWS-8-1								
	PIPE WHIP	N/A	N/A	N/A				SEE NOTE #1
20RRC(6)-6LU								
	PIPE SEAM	B-J	VOL	UTP-10	UT-9			
			SUR	PTP-1				
20RRC(6)-6								
	PIPE TO EL	B-J	VOL	UTP-10	UT-9			
			SUR	PTP-1				
20RRC(6)-6LDI								
	EL SEAM	B-J	VOL	UTP-10	UT-9			
			SUR	PTP-1				
20RRC(6)-6LDO								
	EL SEAM	B-J	VOL	UTP-10	UT-9			
			SUR	PTP-1				
20RRC(6)-7LUI								
	EL SEAM	B-J	VOL	UTP-10	UT-9			
			SUR	PTP-1				
20RRC(6)-7LUO								
	EL SEAM	B-J	VOL	UTP-10	UT-9			

WNP-02
INTERVAL: PSI
PERIOD: NA
OUTAGE:
DRAWING NO. RRC-105

WASHINGTON PUBLIC POWER SUPPLY SYSTEM
PROGRAM PLAN AND SCHEDULE
SYSTEM OR COMPONENT: RRC(6)-4S
DESCRIPTION: RHR SHUTDN COOL SUCT

DATE 12/14/84

IDENT. NO.	DESCRIPTION	SECT. XI EXAM.	EXAM MTH.	PROCEDURE	CAL. BLOCK	INSERVICE REQ.	SCHEDULED OUTAGE	NOTES
			SUR	PTP-1				
20RRC(6)-7	EL TO PIPE	B-J	VOL	UTP-10	UT-9			
			SUR	PTP-1				
20RRC(6)-7LD	PIPE SEAM	B-J	VOL	UTP-10	UT-9			
			SUR	PTP-1				
RRC-SA-51	PSA-35 SNUBBER	B-K-2	VT-3	303/8.2.17				S/N 6162
			VT-4	303/8.2.17				S/N 6162
RRC-SA-52	PSA-10 SNUBBER	B-K-2	VT-3	303/8.2.17				S/N 11801
			VT-4	303/8.2.17				S/N 11801
20RRC(6)-7ALU	PIPE SEAM	B-J	VOL	UTP-10	UT-9			
			SUR	PTP-1				
20RRC(6)-7A	PIPE TO PIPE	B-J	VOL	UTP-10	UT-9			
			SUR	PTP-1				
20RRC(6)-7ALD	PIPE SEAM	B-J	VOL	UTP-10	UT-9			
			SUR	PTP-1				
20RRC(6)-8LU	PIPE SEAM	B-J	VOL	UTP-10	UT-9			
			SUR	PTP-1				
20RRC(6)-8	PIPE TO VALVE	B-J	VOL	UTP-10	UT-9			

WNP-02
INTERVAL: PSI
PERIOD: NA
OUTAGE:
DRAWING NO. RRC-105

WASHINGTON PUBLIC POWER SUPPLY SYSTEM
PROGRAM PLAN AND SCHEDULE
SYSTEM OR COMPONENT: RRC(6)-4S
DESCRIPTION: RHR SHUTDN COOL SUCT

IDENT. NO.	DESCRIPTION	SECT. XI EXAM.	EXAM MTH.	PROCEDURE	CAL. BLOCK	INSERVICE REQ.	SCHEDULED OUTAGE	NOTES
			SUR	PTP-1				
RRC-PB-105								
	RRC PRES BNDRY	B-P	VT-2	N/A				SEE NOTES #6 & #7.

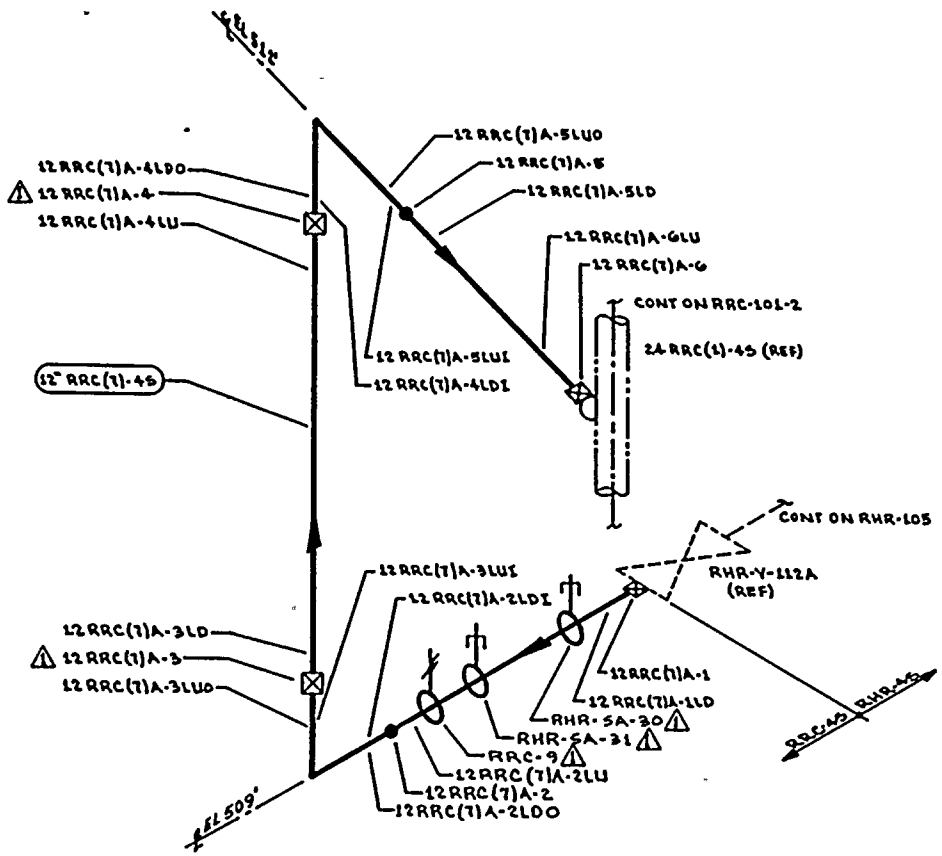

REFERENCES:

BOVEE & CRAIL ISOMETRIC

RRC-567-1 REV 9

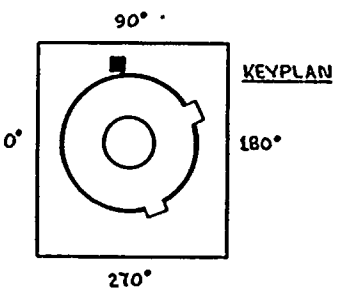

QUALITY CLASS: 1	ASME CODE CLASS 1	
ENGR: D TIMMINS	DRAWN: K.M.A.	DATE 9-15-78

WASHINGTON PUBLIC POWER SUPPLY SYSTEM

RICHLAND WASHINGTON

THIS DRAWING IS INTENDED FOR USE IN PRESERVICE AND INSERVICE INSPECTION PROGRAMS ONLY.

PIPING SYSTEM	NOM DIA (IN)	SCH	NOM WALL THK	MATERIAL SPECIFICATION	MATL TYPE	CAL BLOCK NO
12" RRC(7)-45	12	80	0.687	SA 358 GR 304	SS	UT-19

WNP-2

WELD & COMPONENT IDENTIFICATION DIAGRAM

TITLE: RHR SHUTDOWN COOLING RETURN TO RRC LOOP A

DWG NO: RRC-106 REV 1

NO	DATE	REVISION	BY	CHKD	APPVD
1	10-13-83	REVISED AS NOTED	KMA	JSC	TFK
0	11-28-78	ISSUED FOR USE	KMA	DJB	JLS
A	10-26-78	ISSUED FOR INFORMATION ONLY	KMA	DJB	TFK

WNP-02
INTERVAL: PSI
PERIOD: NA
OUTAGE:
DRAWING NO. RRC-106

WASHINGTON PUBLIC POWER SUPPLY SYSTEM
PROGRAM PLAN AND SCHEDULE
SYSTEM OR COMPONENT: RRC(7)-4S
DESCRIPTION: SHUTDN COOL RETURN A

DATE 12/14/84

IDENT. NO.	DESCRIPTION	SECT. XI EXAM.	EXAM MTH.	PROCEDURE	CAL. BLOCK	INSERVICE REQ.	INSERVICE SCHEDULED OUTAGE	NOTES
12RRC(7)A-1								
	VALVE TO PIPE	B-J	VOL	UTP-10	UT-19			
			SUR	PTP-1				
RHR-SA-30								
	PSA-10 SN(2)	B-K-2	VT-3	303/8.2.17				S/N 576/1447
			VT-4	303/8.2.17				S/N 576/1447
RHR-SA-31								
	PSA-10 SNUBBER	B-K-2	VT-3	303/8.2.17				S/N 9938
			VT-4	303/8.2.17				S/N 9938
12RRC(7)A-1LD								
	PIPE SEAM	B-J	VOL	UTP-10	UT-19			
			SUR	PTP-1				
RRC-9								
	SPRING	B-K-2	VT-3	303/8.2.17				
			VT-4	303/8.2.17				
12RRC(7)A-2LU								
	PIPE SEAM	B-J	VOL	UTP-10	UT-19			
			SUR	PTP-1				
12RRC(7)A-2								
	PIPE TO EL	B-J	VOL	UTP-10	UT-19			
			SUR	PTP-1				
12RRC(7)A-2LDI								
	EL SEAM	B-J	VOL	UTP-10	UT-19			
			SUR	PTP-1				
12RRC(7)A-2LDO								
	EL SEAM	B-J	VOL	UTP-10	UT-19			
			SUR	PTP-1				

WNP-02
INTERVAL: PSI
PERIOD: NA
OUTAGE:
DRAWING NO. RRC-106

WASHINGTON PUBLIC POWER SUPPLY SYSTEM
PROGRAM PLAN AND SCHEDULE
SYSTEM OR COMPONENT: RRC(7)-4S
DESCRIPTION: SHUTDN COOL RETURN A

DATE 12/14/84

IDENT. NO.	DESCRIPTION	SECT. XI EXAM.	EXAM MTH.	PROCEDURE	CAL. BLOCK	INSERVICE REQ.	SCHEDULED OUTAGE	NOTES
12RRC(7)A-3LUI								
	EL SEAM	B-J	VOL	UTP-10	UT-19			
			SUR	PTP-1				
12RRC(7)A-3LUO								
	EL SEAM	B-J	VOL	UTP-10	UT-19			
			SUR	PTP-1				
12RRC(7)A-3								
	EL TO PIPE	B-J	VOL	UTP-10	UT-19			
			SUR	PTP-1				
12RRC(7)A-3LD								
	PIPE SEAM	B-J	VOL	UTP-10	UT-19			
			SUR	PTP-1				
12RRC(7)A-4LU								
	PIPE SEAM	B-J	VOL	UTP-10	UT-19			
			SUR	PTP-1				
12RRC(7)A-4								
	PIPE TO EL	B-J	VOL	UTP-10	UT-19			
			SUR	PTP-1				
12RRC(7)A-4LDI								
	EL SEAM	B-J	VOL	UTP-10	UT-19			
			SUR	PTP-1				
12RRC(7)A-4LDO								
	EL SEAM	B-J	VOL	UTP-10	UT-19			
			SUR	PTP-1				
12RRC(7)A-5LUI								
	EL SEAM	B-J	VOL	UTP-10	UT-19			
			SUR	PTP-1				

WNP-02
INTERVAL: PSI
PERIOD: NA
OUTAGE:
DRAWING NO. RRC-106

WASHINGTON PUBLIC POWER SUPPLY SYSTEM
PROGRAM PLAN AND SCHEDULE
SYSTEM OR COMPONENT: RRC(7)-4S
DESCRIPTION: SHUTDN COOL RETURN A

DATE 12/14/84

IDENT. NO.	DESCRIPTION	SECT. XI EXAM.	EXAM MTH.	PROCEDURE	CAL. BLOCK	INSERVICE REQ.	INSERVICE SCHEDULED OUTAGE	NOTES
12RRC(7)A-5LUO	EL SEAM	B-J	VOL	UTP-10	UT-19			
			SUR	PTP-1				
12RRC(7)A-5	EL TO PIPE	B-J	VOL	UTP-10	UT-19			
			SUR	PTP-1				
12RRC(7)A-5LD	PIPE SEAM	B-J	VOL	UTP-10	UT-19			
			SUR	PTP-1				
12RRC(7)A-6LU	PIPE SEAM	B-J	VOL	UTP-10	UT-19			
			SUR	PTP-1				
12RRC(7)A-6	PIPE TO SWL	B-J	VOL	UTP-10	UT-19			
			SUR	PTP-1				
RRC-PB-106	RRC PRES BNDRY	B-P	VT-2	N/A				SEE NOTES #6 & #7.

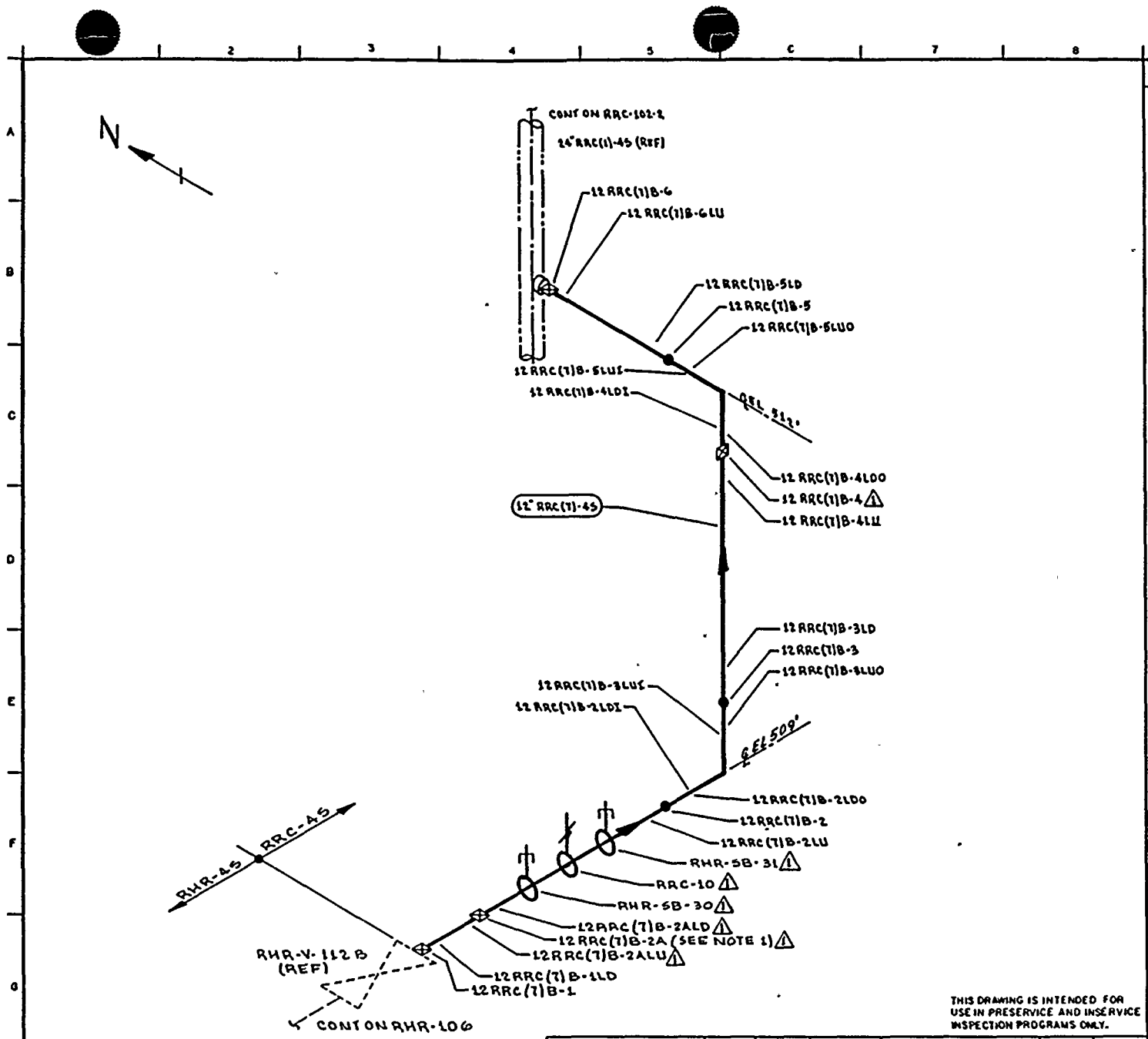

NOTES:

1. ACCESS TO WELD 12 RRC(7)B-2A ⚠ REQUIRES REMOVAL OF RHR-5B-30.

REFERENCES:

BOVEE & CRAIL ISOMETRIC RRC-86B-1 REV 9

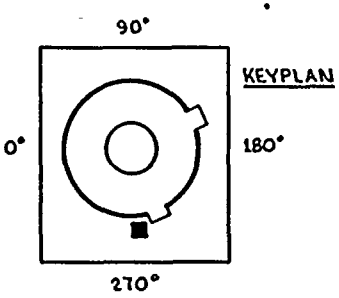

QUALITY CLASS: 1	ASME CODE CLASS 1
ENGR D FRAMING / DRAWN V.M.L	DATE: 9-15-78

WASHINGTON PUBLIC POWER SUPPLY SYSTEM
RICHLAND WASHINGTON 99352

THIS DRAWING IS INTENDED FOR USE IN PRESERVICE AND INSERVICE INSPECTION PROGRAMS ONLY.

PIPING SYSTEM	NOM DIA (IN)	SCH	NOM WALL THK	MATERIAL SPECIFICATION	MATL TYPE	CAL BLOCK NO
12 RRC (7)-45	12	80	0.687	SA 358 GR 304	SS	U1-19

WNP-2
WELD & COMPONENT IDENTIFICATION DIAGRAM

TITLE: RHR SHUTDOWN COOLING RETURN TO RRC LOOP B

DWG NO: RRC-107 REV 1

NO	DATE	REVISION	BY	CHKD	APPVD
1	10-15-83	REVISED AS NOTED ADDED KEYPLAN	V.M.L	DMC	TPA
0	11-15-78	ISSUED FOR USE	V.M.L	RWB	
A	10-23-78	ISSUED FOR INFORMATION ONLY	V.M.L	RWB	RWB

WNP-02
INTERVAL: PSI
PERIOD: NA
OUTAGE:
DRAWING NO. RRC-107

WASHINGTON PUBLIC POWER SUPPLY SYSTEM
PROGRAM PLAN AND SCHEDULE
SYSTEM OR COMPONENT: RRC(7)-4S
DESCRIPTION: SHUTDN COOL RETURN B

DATE 12/14/84

IDENT. NO.	DESCRIPTION	SECT. XI EXAM.	EXAM MTH.	PROCEDURE	CAL. BLOCK	INSERVICE REQ.	INSERVICE SCHEDULED OUTAGE	NOTES
12RRC(7)B-1								
	VALVE TO PIPE	B-J	VOL	UTP-10	UT-19			
			SUR	PTP-1				
12RRC(7)B-1LD								
	PIPE SEAM	B-J	VOL	UTP-10	UT-19			
			SUR	PTP-1				
12RRC(7)B-2ALU								
	PIPE SEAM	B-J	VOL	QCI 6-13	UT-19			
			SUR	QCI 3-3				
12RRC(7)B-2A								
	PIPE TO PIPE	B-J	VOL	QCI 6-13	UT-19			
			SUR	QCI 3-3				
12RRC(7)B-2ALD								
	PIPE SEAM	B-J	VOL	UTP-10	UT-19			
			SUR	PTP-1				
RHR-SB-30								
	PSA-10 SNUBBER	B-K-2	VT-3	303/8.2.17				S/N 9936
			VT-4	303/8.2.17				S/N 9936
FRC-10								
	SPRING	B-K-2	VT-3	303/8.2.17				
			VT-4	303/8.2.17				
RHR-SB-31								
	PSA-10 SNUBBER	B-K-2	VT-3	303/8.2.17				S/N 9916
			VT-4	303/8.2.17				S/N 9916
12RRC(7)B-2LU								
	PIPE SEAM	B-J	VOL	UTP-10	UT-19			
			SUR	PTP-1				

WNP-02
INTERVAL: PSI
PERIOD: NA
OUTAGE:
DRAWING NO. RRC-107

WASHINGTON PUBLIC POWER SUPPLY SYSTEM
PROGRAM PLAN AND SCHEDULE
SYSTEM OR COMPONENT: RRC(7)-4S
DESCRIPTION: SHUTDN COOL RETURN B

IDENT. NO.	DESCRIPTION	SECT. XI EXAM.	EXAM MTH.	PROCEDURE	CAL. BLOCK	INSERVICE REQ.	SCHEDULED OUTAGE	NOTES
12RRC(7)B-2	PIPE TO EL	B-J	VOL	UTP-10	UT-19			
			SUR	OCI 3-3				
12RRC(7)B-2LDI	EL SEAM	B-J	VOL	UTP-10	UT-19			
			SUR	PTP-1				
12RRC(7)B-2LDO	EL SEAM	B-J	VOL	UTP-10	UT-19			
			SUR	PTP-1				
12RRC(7)B-3LUI	EL SEAM	B-J	VOL	UTP-10	UT-19			
			SUR	PTP-1				
12RRC(7)B-3LUO	EL SEAM	B-J	VOL	UTP-10	UT-19			
			SUR	PTP-1				
12RRC(7)B-3	EL TO PIPE	B-J	VOL	UTP-10	UT-19			
			SUR	OCI 3-3				
12RRC(7)B-3LD	PIPE SEAM	B-J	VOL	UTP-10	UT-19			
			SUR	PTP-1				
12RRC(7)B-4LU	PIPE SEAM	B-J	VOL	UTP-10	UT-19			
			SUR	PTP-1				
12RRC(7)B-4	PIPE TO EL	B-J	VOL	UTP-10	UT-19			
			SUR	PTP-1				

WNP-02
INTERVAL: PSI
PERIOD: NA
OUTAGE:
DRAWING NO. RRC-107

WASHINGTON PUBLIC POWER SUPPLY SYSTEM
PROGRAM PLAN AND SCHEDULE
SYSTEM OR COMPONENT: RRC(7)-4S
DESCRIPTION: SHUTDN COOL RETURN B

IDENT. NO.	DESCRIPTION	SECT. XI EXAM.	EXAM MTH.	PROCEDURE	CAL. BLOCK	INSERVICE REQ.	INSERVICE SCHEDULED OUTAGE	NOTES
12RRC(7)B-4LDI								
	EL SEAM	B-J	VOL	UTP-10	UT-19			
			SUR	PTP-1				
12RRC(7)B-4LDO								
	EL SEAM	B-J	VOL	UTP-10	UT-19			
			SUR	PTP-1				
12RRC(7)B-5LUI								
	EL SEAM	B-J	VOL	UTP-10	UT-19			
			SUR	PTP-1				
12RRC(7)B-5LUO								
	EL SEAM	B-J	VOL	UTP-10	UT-19			
			SUR	PTP-1				
12RRC(7)B-5								
	EL TO PIPE	B-J	VOL	UTP-10	UT-19			
			SUR	PTP-1				
12RRC(7)B-5LD								
	PIPE SEAM	B-J	VOL	UTP-10	UT-19			
			SUR	PTP-1				
12RRC(7)B-6LU								
	PIPE SEAM	B-J	VOL	UTP-10	UT-19			
			SUR	PTP-1				
12RRC(7)B-6								
	PIPE TO SWL	B-J	VOL	UTP-10	UT-19			
			SUR	PTP-1				
RRC-PB-107								
	RRC PRES BNDRY	B-P	VT-2	N/A				SEE NOTES #6 & #7.

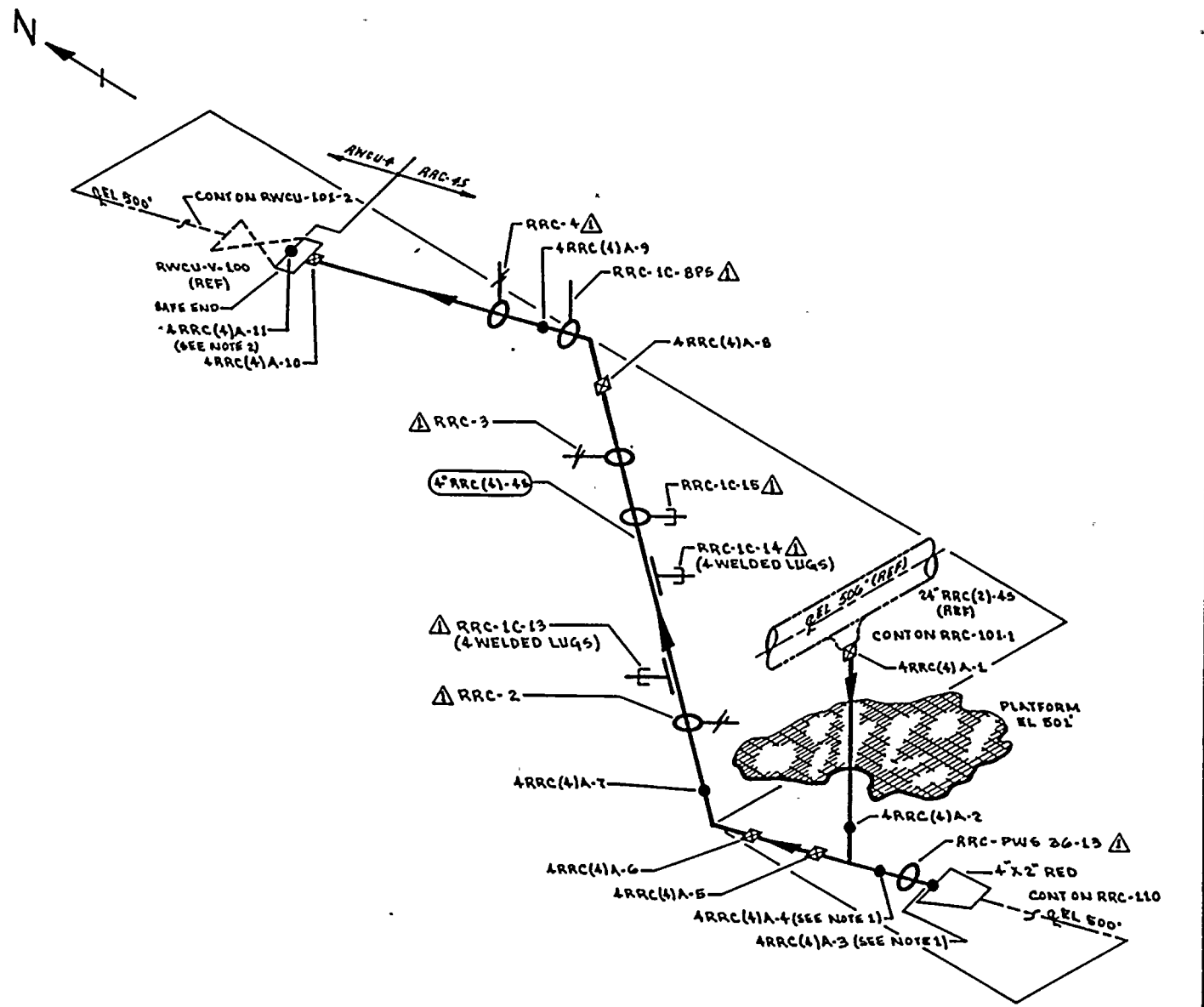

THIS DRAWING IS INTENDED FOR USE IN PRESERVICE AND INSERVICE INSPECTION PROGRAMS ONLY.

NOTES:

1. ACCESS TO WELDS 4RRC(4)A-3 & 4RRC(4)A-4 REQUIRED REMOVAL OF RRC-PWS 36-13
2. DISSIMILAR METAL WELD, CS TO SS, USE CAL BLOCK UT-29.

REFERENCES:

BOVEE & CRAIL ISOMETRIC
RRC-566-1 REV 8

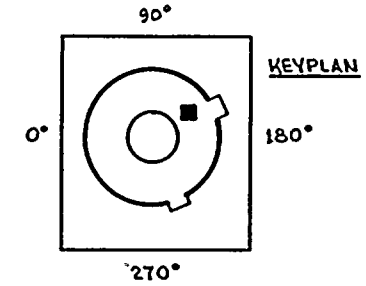

PIPING SYSTEM	NOM DIA (IN)	SCH	NOM WALL THK	MATERIAL SPECIFICATION	MATL TYPE	CAL BLOCK NO
4" RRC(4)-45	4	80S	0.337	SA 312 TP 304	SS	UT-29
LUGS	NA	NA	NA	SA 240 TP 304	SS	UT-47

NO	DATE	REVISION	BY	CHKD	APPVD
1	4-13-83	REVISED AS NOTED ADDED LUGS & KEYPLAN	KMcA	JVP	TJH
0	11-11-78	ISSUED FOR USE	KMcA	[illegible]	[illegible]
A	9-12-78	ISSUED FOR INFORMATION ONLY	KMcA	DJ	DLP

QUALITY CLASS: 1 | ASME CODE CLASS: 1

ENGR: D TIMMINS | DRAWN: K. McA | DATE: 7-31-78

WASHINGTON PUBLIC POWER SUPPLY SYSTEM
RICHLAND, WASHINGTON 99352

WNP-2
WELD & COMPONENT IDENTIFICATION DIAGRAM

TITLE: RWCU INTERTIE TO RRC LOOP A

DWG NO: RRC-108 | REV 1

WNP-02
INTERVAL: PSI
PERIOD: NA
OUTAGE:
DRAWING NO. RRC-108

WASHINGTON PUBLIC POWER SUPPLY SYSTEM
PROGRAM PLAN AND SCHEDULE
SYSTEM OR COMPONENT: RRC(4)-4S
DESCRIPTION: RWCU INTERTIE RRC A

DATE 12/14/84

IDENT. NO.	DESCRIPTION	SECT. XI EXAM.	EXAM MTH.	PROCEDURE	CAL. BLOCK	INSERVICE REQ.	INSERVICE SCHEDULED OUTAGE	NOTES
4RRC(4)A-1								
	SOL TO PIPE	B-J	VOL	UTP-10	UT-29			
			SUR	PTP-1				
4RRG(4)A-2								
	PIPE TO TEE	B-J	VOL	UTP-10	UT-29			
			SUR	PTP-1				
4RRC(4)A-3								
	PIPE TO REDUCER	B-J	VOL	UTP-10	UT-29			
			SUR	PTP-1				
PWS-36-13								
	PIPE WHIP	N/A	N/A	N/A				SEE NOTE #1
4RRC(4)A-4								
	PIPE TO TEE	B-J	VOL	UTP-10	UT-29			
			SUR	PTP-1				
4RRC(4)A-5								
	TEE TO PIPE	B-J	VOL	UTP-10	UT-29			
			SUR	PTP-1				
4RRC(4)A-6								
	PIPE TO EL	B-J	VOL	UTP-10	UT-29			
			SUR	PTP-1				
4RRC(4)A-7								
	EL TO PIPE	B-J	VOL	UTP-10	UT-29			
			SUR	PTP-1				
PWS-36-12								
	PIPE WHIP	N/A	N/A	N/A				
RRC-2								
	SPRING	B-K-2	VT-3	303/8.2.17				
			VT-4	303/8.2.17				

WNP-02
INTERVAL: PSI
PERIOD: NA
OUTAGE:
DRAWING NO. RRC-108

WASHINGTON PUBLIC POWER SUPPLY SYSTEM
PROGRAM PLAN AND SCHEDULE
SYSTEM OR COMPONENT: RRC(4)-4S
DESCRIPTION: RWCU INTERTIE RRC A

DATE 12/14/84

IDENT. NO.	DESCRIPTION	SECT. XI EXAM.	EXAM MTH.	PROCEDURE	CAL. BLOCK	INSERVICE REQ.	INSERVICE SCHEDULED OUTAGE	NOTES
RRC-1C-13(W)								
	4 WELDED LUGS	B-K-1	VOL	UTP-26	UT-29			
RRC-1C-13								
	PSA-1 SNUBBER	B-K-2	VT-3	303/8.2.17				S/N 357
			VT-4	303/8.2.17				S/N 357
RRC-1C-14(W)								
	4 WELDED LUGS	B-K-1	VOL	UTP-26	UT-29			
RRC-1C-14								
	PSA-1 SN(2)	B-K-2	VT-3	303/8.2.17				S/N 646/112
			VT-4	303/8.2.17				S/N 646/112
RRC-1C-15								
	PSA-1 SNUBBER	B-K-2	VT-3	303/8.2.17				S/N 333
			VT-4	303/8.2.17				S/N 333
RRC-3								
	SPRING	B-K-2	VT-3	303/8.2.17				
			VT-4	303/8.2.17				
PWS-36-11								
	PIPE WHIP	N/A	N/A	N/A				
4RRC(4)A-8								
	PIPE TO EL	B-J	VOL	UTP-10	UT-29			
			SUR	PTP-1				
PWS-36-10								
	PIPE WHIP	N/A	N/A	N/A				
RRC-1C-8PS								
	STRUT	B-K-2	VT-3	303/8.2.17				
4RRC(4)A-9								
	EL TO PIPE	B-J	VOL	UTP-10	UT-29			
			SUR	PTP-1				
RRC-4								
	SPRING	B-K-2	VT-3	303/8.2.17				

WNP-02
INTERVAL: PSI
PERIOD: NA
OUTAGE:
DRAWING NO. RRC-108

WASHINGTON PUBLIC POWER SUPPLY SYSTEM
PROGRAM PLAN AND SCHEDULE
SYSTEM OR COMPONENT: RRC(4)-4S
DESCRIPTION: RWCU INTERTIF RRC A

DATE 12/14/84

IDENT. NO.	DESCRIPTION	SECT. XI EXAM.	EXAM MTH.	PROCEDURE	CAL. BLOCK	INSERVICE REQ.	INSERVICE SCHEDULED OUTAGE	NOTES
			VT-4	303/8.2.17				
4RRC(4)A-10								
	PIPE - VALVE SE	B-J	VOL	UTP-10	UT-29			
			SUR	PTP-1				
4RRC(4)A-11								
	SE TO VALVE	B-F	VOL	UTP-10	UT-29			DISSIMILAR METAL (SS-CS)
			SUR	PTP-1				DISSIMILAR METAL (SS-CS)
RRC-PB-108								
	RRC PRES BNDRY	B-P	VT-2	N/A				SEE NOTES #6 & #7.

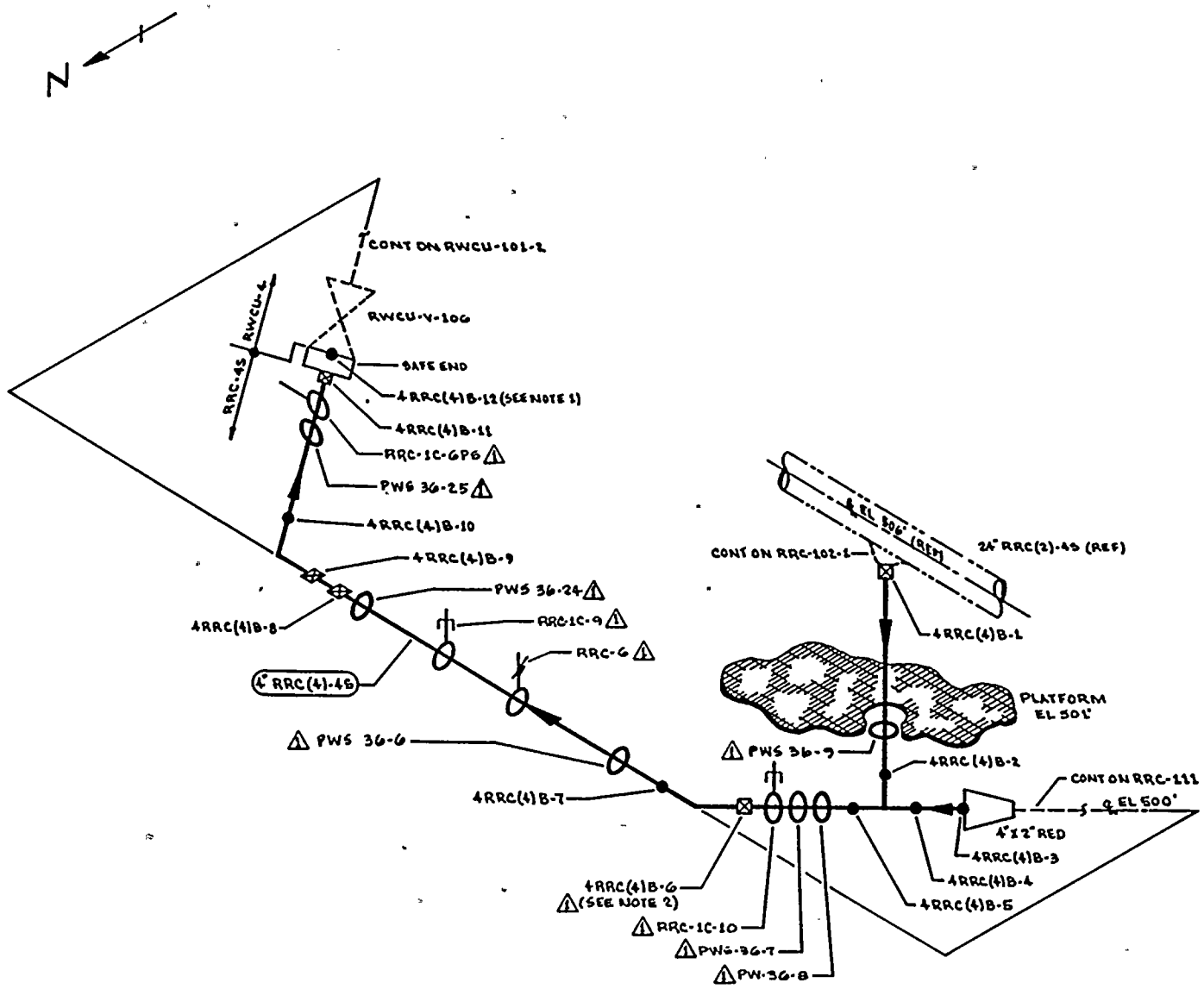

NOTES:

1. DISSIMILAR METAL WELD, CS TO SS, USE CAL BLOCK UT-29.
2. ACCESS TO WELD 4RRC(4)B-6 REQUIRES REMOVAL OF RRC-1C-10.

REFERENCES:

BOVEE & CRAIL ISOMETRIC
RRC-569-1.2 REV B

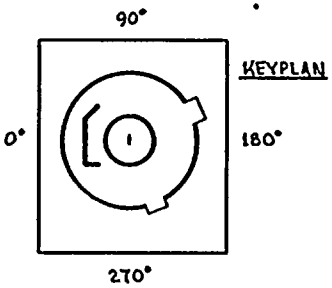

THIS DRAWING IS INTENDED FOR USE IN PRESERVICE AND INSERVICE INSPECTION PROGRAMS ONLY.

PIPING SYSTEM	NOM DIA (IN)	SCH	NOM WALL THK	MATERIAL SPECIFICATION	MATL TYPE	CAL BLOCK NO
4" RRC (4)-45	4	80S	0.337	SA 312 TP 304	SS	UT-29

NO	DATE	REVISION	BY	CHKD	APPVD
1	10-23-81	REVISED AS NOTED ADDED KEYPLAN	KMcA	BPK	TFH
0	11-27-78	ISSUED FOR USE	KMcA	[illegible]	[illegible]
A	9-22-78	ISSUED FOR INFORMATION ONLY	KMcA	[illegible]	[illegible]

QUALITY CLASS: 1 | ASME CODE CLASS 1
ENGR: D TIMMINS | DRAWN: KMcA | DATE 7-31-78

WASHINGTON PUBLIC POWER SUPPLY SYSTEM
RICHLAND WASHINGTON 99352

WNP-2
WELD & COMPONENT IDENTIFICATION DIAGRAM

TITLE:
RWCU INTERTIE TO RRC LOOP B

DWG NO: RRC-109 | REV 1

WNP-02
INTERVAL: PSI
PERIOD: NA
OUTAGE:
DRAWING NO. RRC-109

WASHINGTON PUBLIC POWER SUPPLY SYSTEM
PROGRAM PLAN AND SCHEDULE
SYSTEM OR COMPONENT: RRC(4)-4S
DESCRIPTION: RWCU INTERTIE RRC B

DATE 12/14/84

IDENT. NO.	DESCRIPTION	SECT. XI EXAM.	EXAM MTH.	PROCEDURE	CAL. BLOCK	INSERVICE REQ.	INSERVICE SCHEDULED OUTAGE	NOTES
4RRC(4)B-1								
	SWL TO PIPE	B-J	VOL	UTP-10	UT-29			
			SUR	PTP-1				
PWS-36-9								
	PIPE WHIP	N/A	N/A	N/A				SEE NOTE #1
4RRC(4)B-2								
	PIPE TO TEE	B-J	VOL	UTP-10	UT-29			
			SUR	PTP-1				
4RRC(4)B-3								
	PIPE TO REDUCER	B-J	VOL	UTP-10	UT-29			
			SUR	PTP-1				
4RRC(4)B-4								
	PIPE TO TEE	B-J	VOL	UTP-10	UT-29			
			SUR	PTP-1				
4RRC(4)B-5								
	TEE TO PIPE	B-J	VOL	UTP-10	UT-29			
			SUR	PTP-1				
PWS-36-8								
	PIPE WHIP	N/A	N/A	N/A				SEE NOTE #1
PWS-36-7								
	PIPE WHIP	N/A	N/A	N/A				SEE NOTE #1
RRC-1C-10								
	PSA-1 SNUBBER	B-K-2	VT-3	303/8.2.17				S/N 22372
			VT-4	303/8.2.17				S/N 22372
4RRC(4)B-6								
	PIPE TO EL	B-J	VOL	UTP-10	UT-29			
			SUR	PTP-1				
4RRC(4)B-7								
	EL TO PIPE	B-J	VOL	UTP-10	UT-29			

WNP-02
INTERVAL: PSI
PERIOD: NA
OUTAGE:
DRAWING NO. RRC-109

WASHINGTON PUBLIC POWER SUPPLY SYSTEM
PROGRAM PLAN AND SCHEDULE
SYSTEM OR COMPONENT: RRC(4)-4S
DESCRIPTION: RWCU INTERTIE RRC B

DATE 12/14/84

IDENT. NO.	DESCRIPTION	SECT. XI EXAM.	EXAM MTH.	PROCEDURE	CAL. BLOCK	INSERVICE REQ.	INSERVICE SCHEDULED OUTAGE	NOTES
			SUR	PTP-1				
PWS-36-6	PIPE WHIP	N/A	N/A	N/A				SEE NOTE #1
RRC-6	SPRING	B-K-2	VT-3	303/8.2.17				
			VT-4	303/8.2.17				
RRC-1C-9	PSA-1 SNUBBER	B-K-2	VT-3	303/8.2.17				S/N 612
			VT-4	303/8.2.17				S/N 612
PWS-36-24	PIPE WHIP	N/A	N/A	N/A				SEE NOTE #1
4RRC(4)B-8	PIPE TO PIPE	B-J	VOL	UTP-10	UT-29			
			SUR	PTP-1				
4RRC(4)B-9	PIPE TO EL	B-J	VOL	UTP-10	UT-29			
			SUR	PTP-1				
4RRC(4)B-10	EL TO PIPE	B-J	VOL	UTP-10	UT-29			
			SUR	PTP-1				
PWS-36-25	PIPE WHIP	N/A	N/A	N/A				SEE NOTE #1
RRC-1C-6PS	STRUT	B-K-2	VT-3	303/8.2.17				
4RRC(4)B-11	PIPE - VALVE SE	B-J	VOL	UTP-10	UT-29			
			SUR	PTP-1				

WNP-02
INTERVAL: PSI
PERIOD: NA
OUTAGE:
DRAWING NO. RRC-109

WASHINGTON PUBLIC POWER SUPPLY SYSTEM
PROGRAM PLAN AND SCHEDULE
SYSTEM OR COMPONENT: RRC(4)-4S
DESCRIPTION: RWCU INTERTIE RRC B

DATE 12/14/84

IDENT. NO.	DESCRIPTION	SECT. XI EXAM.	EXAM MTH.	PROCEDURE	CAL. BLOCK	INSERVICE REQ.	INSERVICE SCHEDULED OUTAGE	NOTES
4RRC(4)B-12								
	SE TO VALVE	B-J	VOL	UTP-10	UT-29			DISSIMILAR METAL (SS-CS)
			SUR	PTP-1				DISSIMILAR METAL (SS-CS)
RRC-PB-109								
	RRC PRES BNDRY	B-P	VT-2	N/A				SEE NOTES #6 & #7.

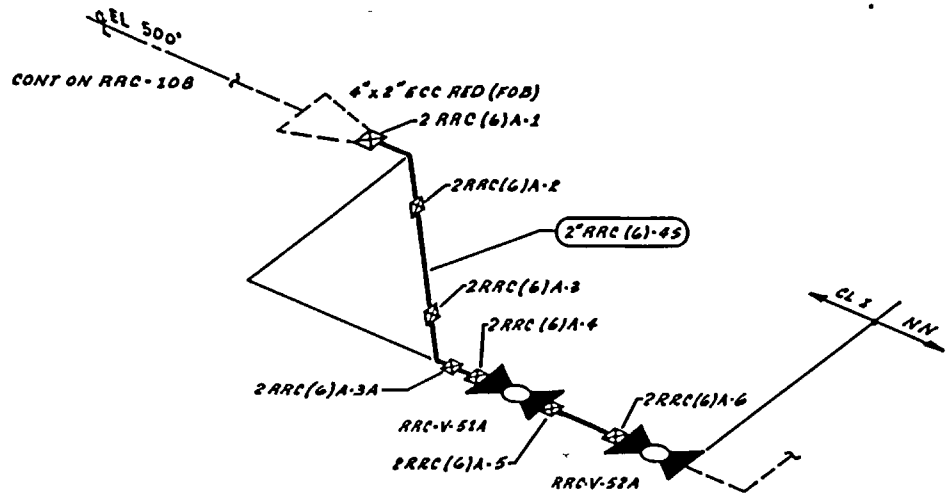

REFERENCES:
WSH/BOCON/QERE ISOMETRIC
RRC-194G-1 REV 7

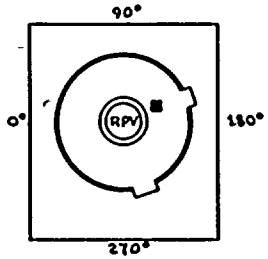

KEY PLAN

QUALITY CLASS: 1	ASME CODE CLASS: 1
ENGR: D TIMMINS	DRAWN: K McA / DATE: 8-27-79

WASHINGTON PUBLIC POWER SUPPLY SYSTEM
RICHLAND, WASHINGTON 99352

THIS DRAWING IS INTENDED FOR USE IN PRESERVICE AND INSERVICE INSPECTION PROGRAMS ONLY.

PIPING SYSTEM	NOM DIA (IN)	SCH	NOM WALL THK	MATERIAL SPECIFICATION	MATL TYPE	CAL BLOCK NO
2"RRC (6)-45	2	80S	0.218	SA 312 TP 304	SS	NA

WNP-2
WELD & COMPONENT IDENTIFICATION DIAGRAM

TITLE: RRC LOOP A DRAIN

DWG NO: RRC-110 REV 2

NO	DATE	REVISION	BY	CHKD	APPVD
2	11-8-80	DELETED HANGER	KMcA	JPR	JPR
1	11-5-80	ADDED FW 2RRC(6)A-3A	KMcA	JPR	JPR
0	7-31-79	ISSUED FOR USE	KMcA	JPR	JB

DUPLICATE REPRODUCTIONS TO 3/7

WNP-02
INTERVAL: PSI
PERIOD: NA
OUTAGE:
DRAWING NO. RRC-110

WASHINGTON PUBLIC POWER SUPPLY SYSTEM
PROGRAM PLAN AND SCHEDULE
SYSTEM OR COMPONENT: RRC(6)-4S
DESCRIPTION: RRC LOOP A DRAIN

DATE 12/14/84

IDENT. NO.	DESCRIPTION	SECT. XI EXAM.	EXAM MTH.	PROCEDURE	CAL. BLOCK	INSERVICE REQ.	INSERVICE SCHEDULED OUTAGE	NOTES
2RRC(6)A-1	REDUCER TO EL	B-J	SUR	PTP-1				
2RRC(6)A-2	EL TO PIPE	B-J	SUR	PTP-1				
2RRC(6)A-3	PIPE TO EL	B-J	SUR	PTP-1				
2RRC(6)A-3A	EL TO PIPE	B-J	SUR	PTP-1				
2RRC(6)A-4	PIPE TO EL	B-J	SUR	PTP-1				
2RRC(6)A-5	VALVE TO PIPE	B-J	SUR	PTP-1				
2RRC(6)A-6	PIPE TO VALVE	B-J	SUR	PTP-1				
RRC-PB-110	RRC PRES BNDRY	B-P	VT-2	N/A				SEE NOTES #6 & #7.

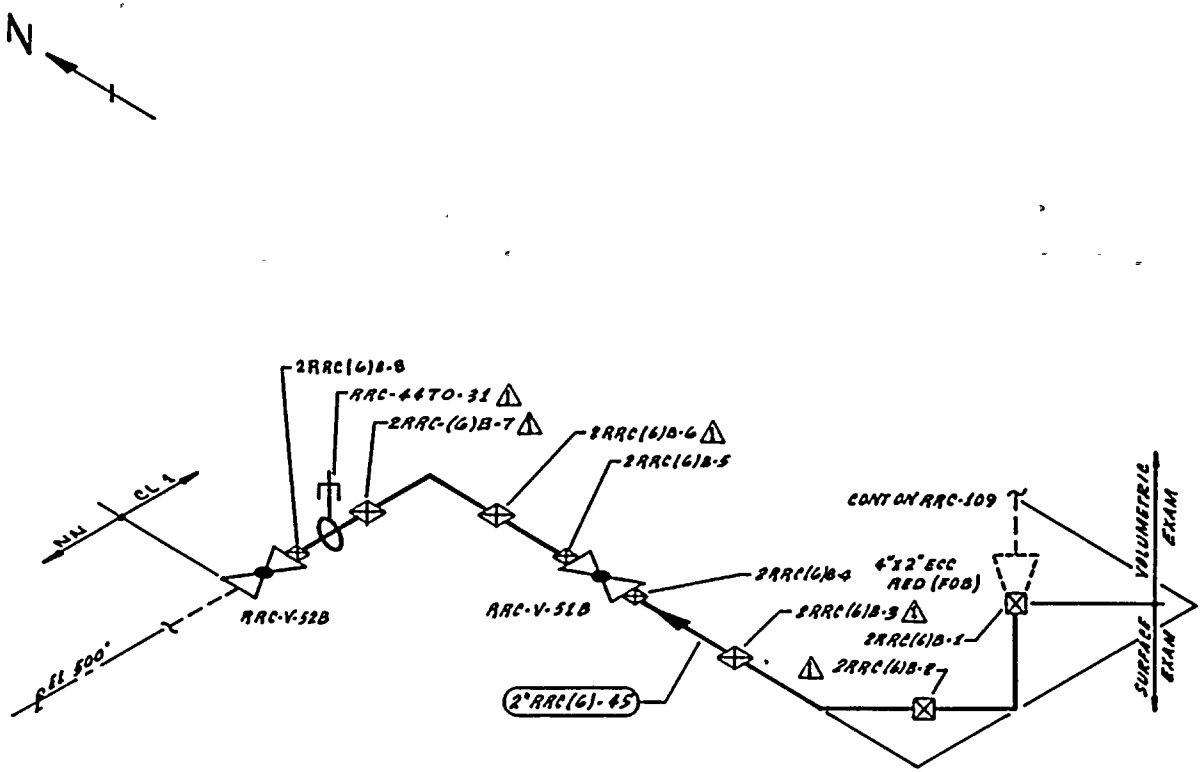

REFERENCES:
WSH/BOCON/GERI ISOMETRIC
RRC-44TO-3 REV 6

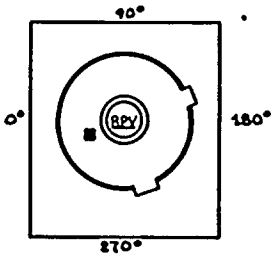

KEY PLAN

THIS DRAWING IS INTENDED FOR USE IN PRESERVICE AND INSERVICE INSPECTION PROGRAMS ONLY.

PIPING SYSTEM	NOM DIA (IN)	SCH	NOM WALL THK	MATERIAL SPECIFICATION	MATL TYPE	CAL BLOCK NO
2"RRC(6)-45	2	80S	0.218	SA 312 TP 304	SS	NA

NO	DATE	REVISION	BY	CHKD	APPVD
1	10-13-83	REVISED AS NOTED			
0	7-31-79	ISSUED FOR USE			

QUALITY CLASS: CL 1 | ASME CODE CLASS: CL 1
ENGR: D TIMMONS | DRAWN: | DATE: 8-27-79

WASHINGTON PUBLIC POWER SUPPLY SYSTEM
RICHLAND, WASHINGTON 99352

WNP-2
WELD & COMPONENT IDENTIFICATION DIAGRAM

TITLE: RRC LOOP B DRAIN

DWG NO: RRC-111 | REV 1

WNP-02
INTERVAL: PSI
PERIOD: NA
OUTAGE:
DRAWING NO. RRC-111

WASHINGTON PUBLIC POWER SUPPLY SYSTEM
PROGRAM PLAN AND SCHEDULE
SYSTEM OR COMPONENT: RRC(6)-4S
DESCRIPTION: RRC LOOP B DRAIN

DATE 12/14/84

IDENT. NO.	DESCRIPTION	SECT. XI EXAM.	EXAM MTH.	PROCEDURE	CAL. BLOCK	INSERVICE REQ.	INSERVICE SCHEDULED OUTAGE	NOTES
2RRC(6)B-1								
	REDUCER TO EL	B-J	SUR	PTP-1				
2RRC(6)B-2								
	EL TO EL	B-J	SUR	PTP-1				
2RRC(6)B-3								
	EL TO PIPE	B-J	SUR	PTP-1				
2RRC(6)B-4								
	PIPE TO VALVE	B-J	SUR	PTP-1				
2RRC(6)B-5								
	VALVE TO PIPE	B-J	SUR	PTP-1				
2RRC(6)B-6								
	PIPE TO EL	B-J	SUR	PTP-1				
2RRC(6)B-7								
	EL TO PIPE	B-J	SUR	PTP-1				
RRC-4470-31								
	PSA-1 SNUBBER	B-K-2	VT-3	303/8.2.17				S/N 356
			VT-4	303/8.2.17				S/N 356
2RRC(6)B-8								
	PIPE TO VALVE	B-J	SUR	PTP-1				
RRC-PB-111								
	RRC PRES BNDRY	B-P	VT-2	N/A				SEE NOTES #6 & #7.

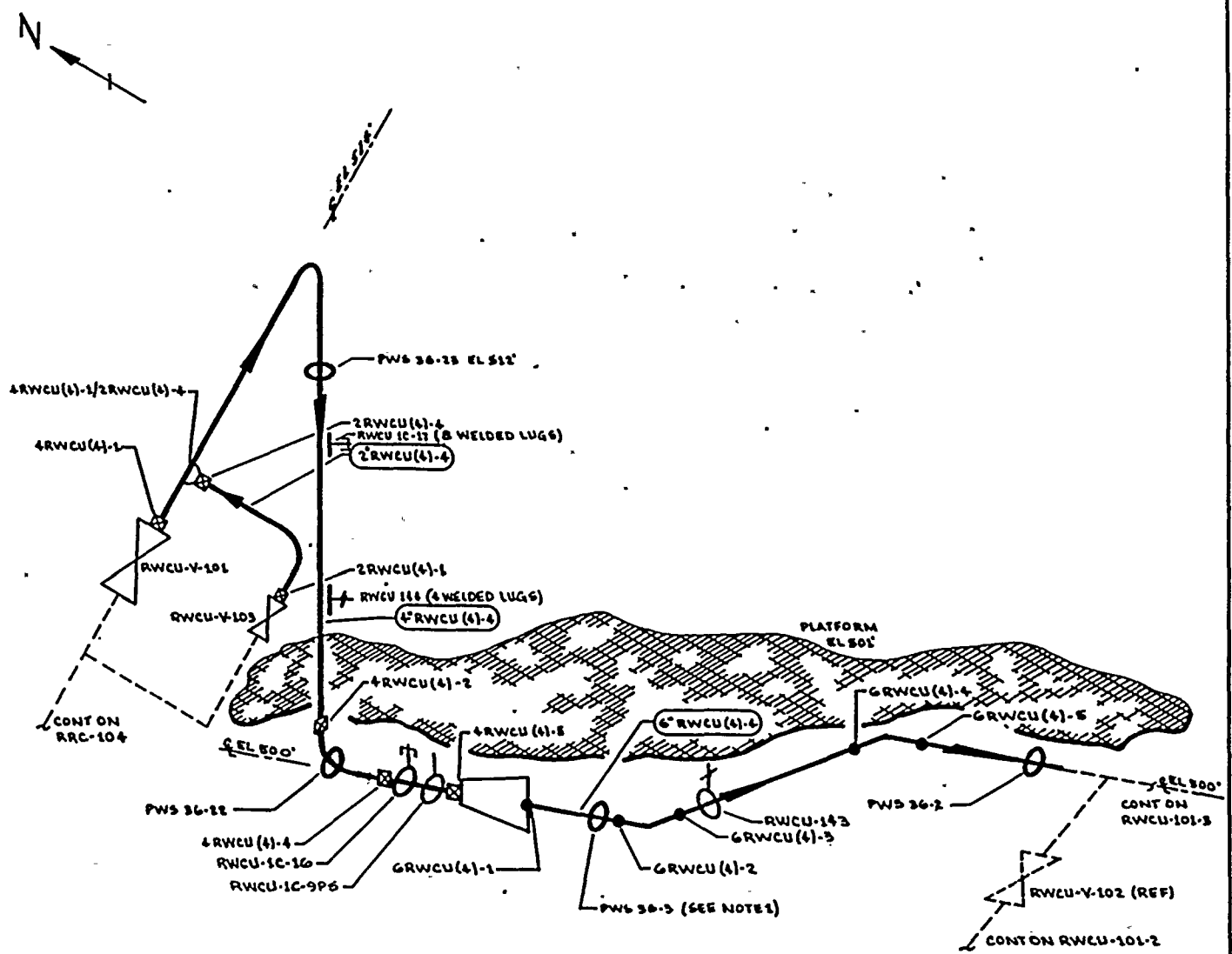

NOTES:

1. ACCESS TO WELD 6RWCU(4)-2 REQUIRES REMOVAL OF 6RWCU(4)-1 PR.

REFERENCES

BOVEE & CRAIL ISOMETRIC

RWCU-B11-1,2 REV 6

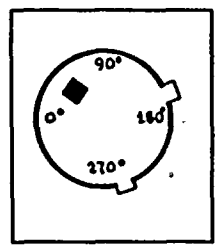

KEY PLAN

THIS DRAWING IS INTENDED FOR USE IN PRESERVICE AND INSERVICE INSPECTION PROGRAMS ONLY.

NO	DATE	REVISION	BY	CHKD	APPVD
3	10-13-83	ADDED RWCU-1C6, 1C-9P6 & LUGS. CHANGED RWCU 1C4-10 & 17. DELETED WELDS 2RWCU(4)-2 & 3.	KMcA	DK	TFH
2	11-5-80	DELETED FW 3 & REVISED AS NOTED	KMcA	TFH	DLO
1	7-17-79	REVISED CAL BLOCK REF TO UT-28,30	KMcA	TFH	DLO
0	11-21-78	ISSUED FOR USE	KMcA	TFH	DLO
A	9-12-78	ISSUED FOR INFORMATION ONLY	KMcA	DJ	DLP

PIPING SYSTEM	NOM DIA (IN)	SCH	NOM WALL THK	MATERIAL SPECIFICATION	MATL TYPE	CAL BLOCK NO
4"RWCU(4)-4	4	80	0.337	SA 106 GR B	CS	UT-30
6"RWCU(4)-4	6	80	0.432	SA 106 GR B	CS	UT-28
2"RWCU(4)-4	2	160	0.343	SA 106 GR B	CS	NA
LUGS	NA	NA	NA	SA 515 GR 70	CS	UT-46

WNP-2
WELD & COMPONENT
IDENTIFICATION DIAGRAM

TITLE:

RPV DRAIN TO RWCU

DWG NO: RWCU-101-1 REV 3

QUALITY CLASS: 1 | ASME CODE CLASS: 1

ENGR: D TIMMING | DRAWN: K McA | DATE: 6-23-78

WASHINGTON PUBLIC POWER SUPPLY SYSTEM

RICHLAND, WASHINGTON 99352

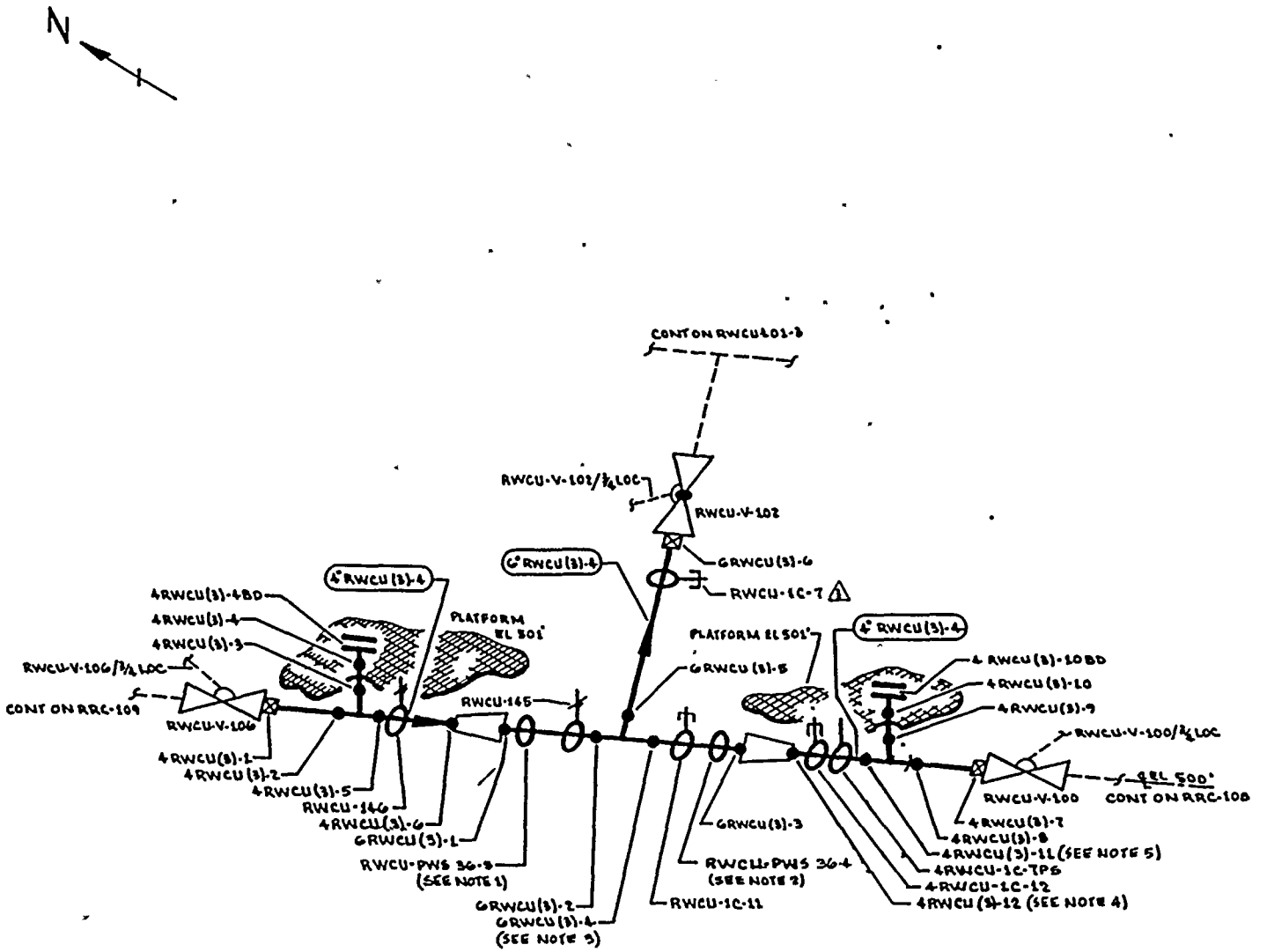

NOTES:

1. ACCESS TO WELD 6RWCU(3)-1 REQUIRES REMOVAL OF RWCU-PWS 36-5.
2. ACCESS TO WELD 6RWCU(3)-3 REQUIRES REMOVAL OF RWCU-PWS 36-4.
3. ACCESS TO WELD 6RWCU(3)-4 REQUIRES REMOVAL OF RWCU-1C-11.
4. ACCESS TO WELD 4RWCU(3)-12 REQUIRES REMOVAL OF RWCU-1C-12.
5. ACCESS TO WELD 4RWCU(3)-11 REQUIRES REMOVAL OF RWCU-1C-TPS.

REFERENCES:

BOWEN & CRAIL ISOMETRIC
RWCU-812-1 REV 8

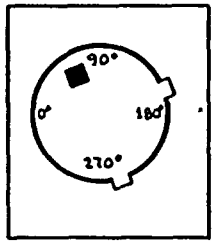

KEY PLAN

QUALITY CLASS: 1	ASME CODE CLASS: 1	
ENGR: GA KUGLER	DRAWN: K. McA	DATE: 6-23-78

WASHINGTON PUBLIC POWER SUPPLY SYSTEM
RICHLAND, WASHINGTON 99352

THIS DRAWING IS INTENDED FOR USE IN PRESERVICE AND INSERVICE INSPECTION PROGRAMS ONLY.

NO	DATE	REVISION	BY	CHKD	APPVD
3	9-26-83	ADDED RWCU-1C-11, 12, TPS, RWCU-115, 116 NOTES 3-5	K.McA	[illegible]	TFK
2	12-2-81	REVISED AS NOTED	K.McA	[illegible]	TFK
1	7-17-79	REVISED CAL BLOCK REF TO UT-28,30	K.McA	[illegible]	[illegible]
0	11-22-78	ISSUED FOR USE	K.McA	[illegible]	[illegible]
A	9-22-78	ISSUED FOR INFORMATION ONLY	K.McA	DJ	[illegible]

PIPING SYSTEM	NOM DIA (IN)	SCH	NOM WALL THK	MATERIAL SPECIFICATION	MATL TYPE	CAL BLOCK NO
4" RWCU(3)-4	4	80	0.337	SA 106 GR B	CS	UT-30
6" RWCU(3)-4	6	80	0.432	SA 106 GR B	CS	UT-28

WNP-2
WELD & COMPONENT IDENTIFICATION DIAGRAM

TITLE: RRC LOOP SUPPLIES TO RWCU

DWG NO: RWCU-101-2 REV 3

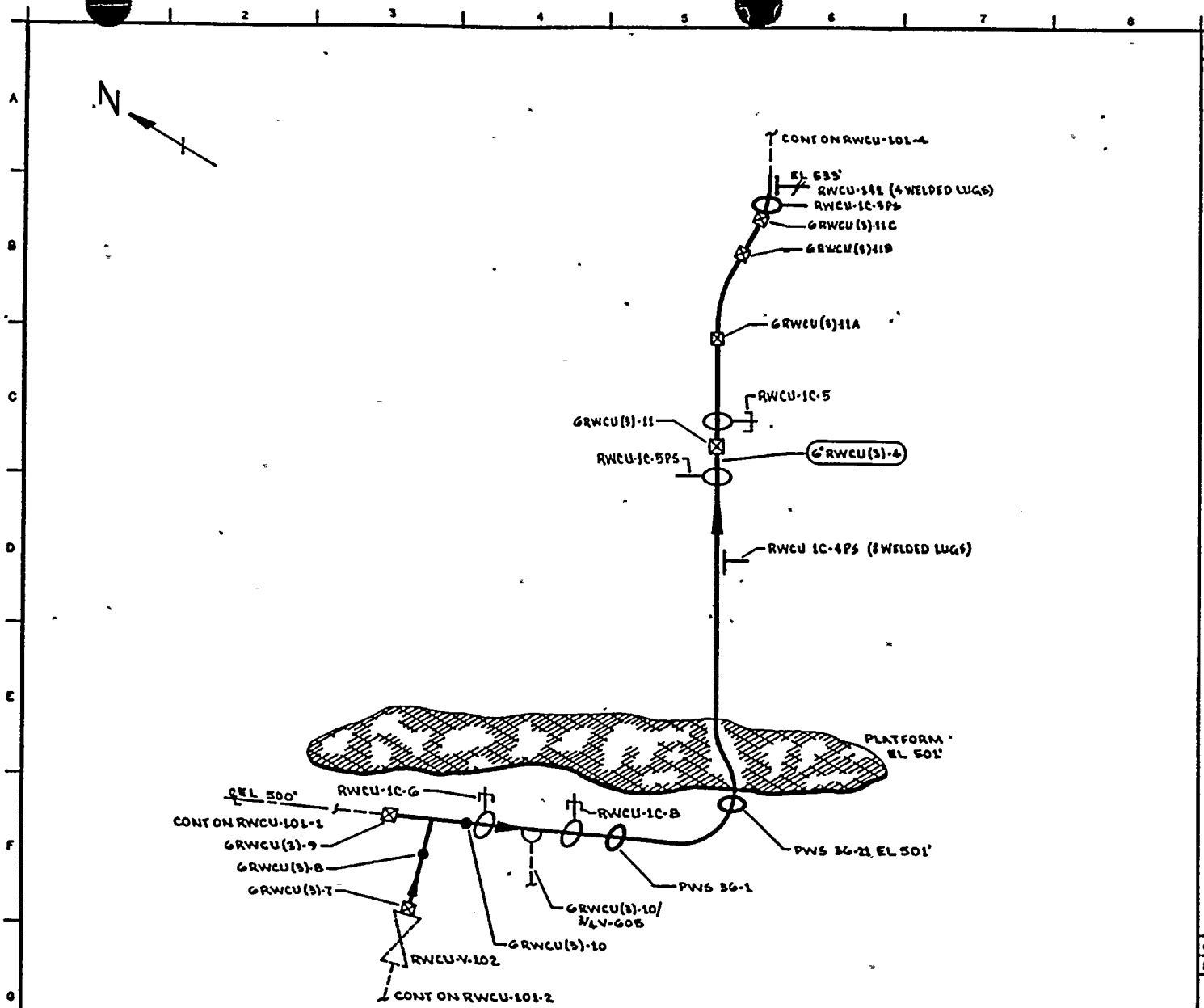

NOTES:

REFERENCES:
BOVEE & CRAIL ISOMETRIC
RWCU-B12-2 REV 8

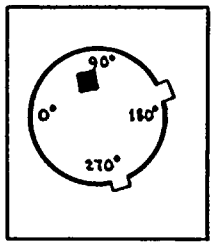

KEY PLAN

THIS DRAWING IS INTENDED FOR USE IN PRESERVICE AND INSERVICE INSPECTION PROGRAMS ONLY.

						PIPING SYSTEM	NOM DIA (IN)	SCH	NOM WALL THK	MATERIAL SPECIFICATION	MATL TYPE	CAL BLOCK NO
3	10-11-85	ADDED RWCU-1C-6, 8, 5, 5PS, 3PS & RWCU-1-4-2	KMcA	DJ	TFH	6" RWCU(3)-4	6	80	0.432	SA 106 GR B	CS	UT-28
2	11-5-80	REVISED AS NOTED	KMcA	TFH	DJ							
1	7-17-79	REVISED CAL BLOCK REF TO UT-28	KMcA	TFH	DJ							
0	12-29-78	ISSUED FOR USE	KMcA	TFH	DJ							
A	9-22-78	ISSUED FOR INFORMATION ONLY	KMcA	DJ	RCB							
NO	DATE	REVISION	BY	CHKD	APPVD							

QUALITY CLASS: 1 | ASME CODE CLASS: 1

ENGR: D TIMMINS | DRAWN: K. McA | DATE: 6-23-78

WASHINGTON PUBLIC POWER SUPPLY SYSTEM
RICHLAND, WASHINGTON 99352

WNP-2
WELD & COMPONENT IDENTIFICATION DIAGRAM

TITLE:
RWCU MAIN HEADER FROM RRC

DWG NO: RWCU-101-3 | REV 3

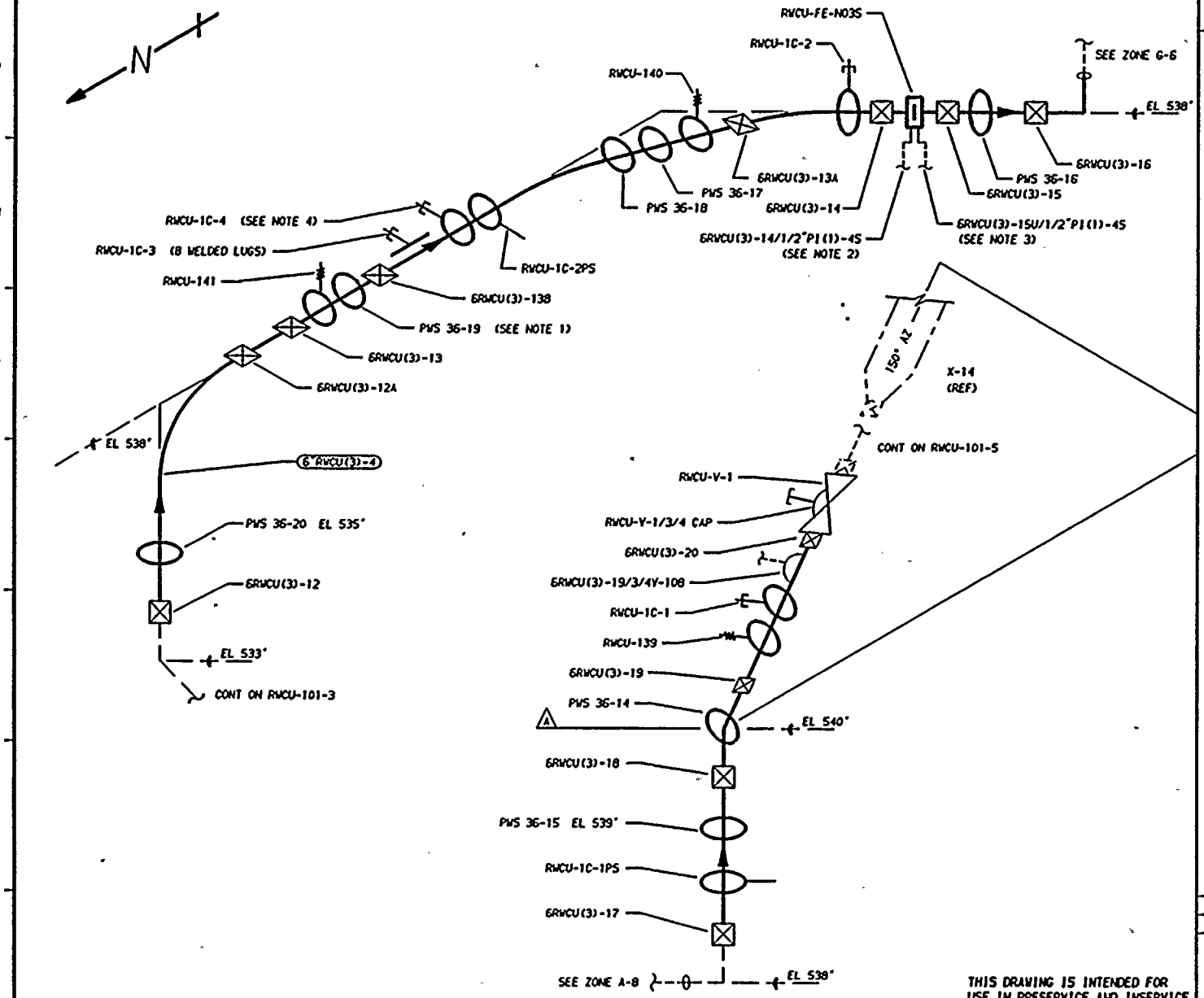

THIS DRAWING IS INTENDED FOR USE IN PRESERVICE AND INSERVICE INSPECTIONS PROGRAMS ONLY.

NOTES

1. ACCESS TO WELD 6RWCU(3)-13 REQUIRES REMOVAL OF 6RWCU(3)-13PR1.
2. EXTEND LEAKAGE EXAM THROUGH CONTAINMENT PENETRATION (X-79a) THROUGH EXCESS FLOW CHECK VALVE TO INSTRUMENT TUBING CONNECTION.
3. EXTEND LEAKAGE EXAM THROUGH CONTAINMENT PENETRATION (X-79b) THROUGH EXCESS FLOW CHECK VALVE TO INSTRUMENT TUBING CONNECTION.
4. FOUR LUGS WERE LEFT NEAR RWCU-1C-4. TWO WERE GROUND 1/8" FROM PIPE AND TWO WERE LEFT AS IS. NO EXAMINATION IS REQUIRED.
5. ACCESS TO WELD 6RWCU(6)-13 REQUIRES REMOVAL OF PWS-36-15.

REFERENCES:

151 - 223

BOVEE & CRAIL ISOMETRIC
RWCU-812-3.6 REV 6

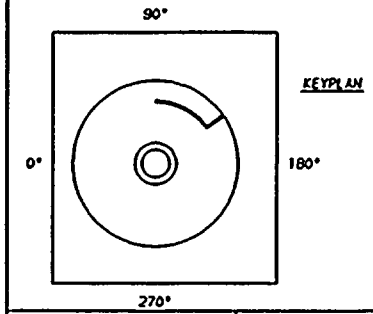

4	12-2-83	ADDED SUPPORTS, CHANGED FE-N0-2S TO NON-WELDED, DELETED 6RWCU(3)-14PD. ADDED NOTES 4 AND 5. (REF 4)(W)	K-McA	DPR	TFH	PIPING SYSTEM	NOM DIA (IN)	SCH	NOM WALL THK	MATERIAL SPECIFICATION	MATL TYPE	CAL BLOCK NO
3	12-2-81	AUGMENTED 151 ADDED	K-McA	DPR	TFH	6"RWCU(3)-4	6	80	0.432	SA 106 GR B	CS	UT-28
2	11-5-80	ADDED FIELD WELD 13B AND AS NOTED	K-McA	TFH / DWP	DWP							
1	7-17-79	CHANGED CAL BLOCK FROM UT-27 TO UT-28. WELDS 16, 17, 18 & 19 TO FIELD WELDS. ADDED FIELD WELDS 12A & 13A.	K-McA	TFH / DWP	LFB							
0	12-22-78	ISSUED FOR USE	K-McA	TFH / DWP	LFB							
A	9-12-78	ISSUED FOR INFORMATION ONLY	K-McA	DT	DWP							
NO	DATE	REVISION	BY	CHKD	APVD							

QUALITY CLASS: 1 | ASME CODE CLASS: 1

ENGR: D TIMMINS | DRAWN: K-McA | DATE: 6-26-78

WASHINGTON PUBLIC POWER
SUPPLY SYSTEM
RICHLAND, WASHINGTON 99352

WNP-2
WELD & COMPONENT
IDENTIFICATION DIAGRAM

TITLE:
RWCU MAIN HEADER FROM RRC

DWG NO: RWCU-101-4 | REV 4

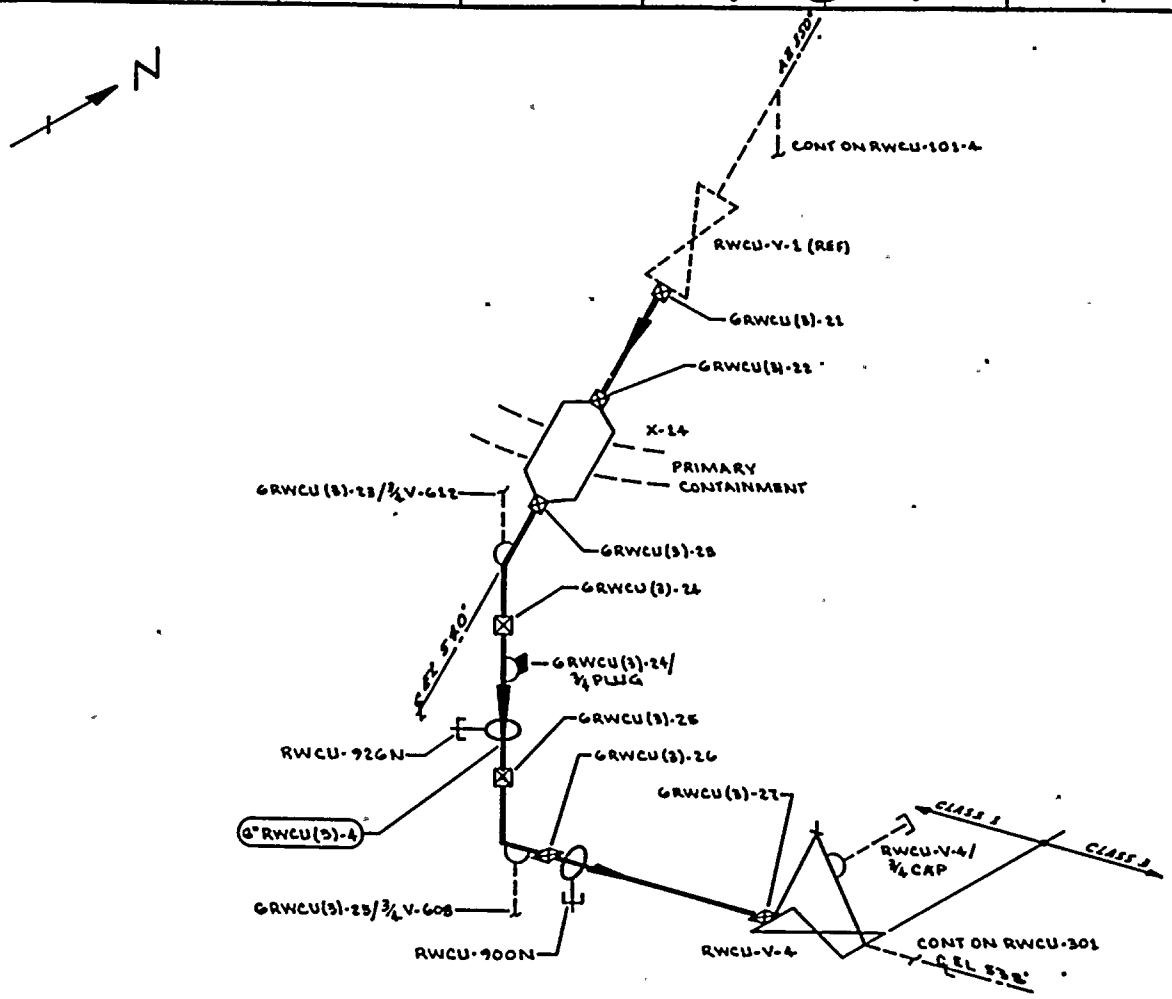

NOTES:

1. ALL CIRCUMFERENTIAL BUTT WELDS GREATER THAN 1 INCH REQUIRE AUGMENTED ISI.
2. AUGMENTED ISI CONTINUES ON RWCU-301.
3. ACCESS TO WELD GRWCU(3)-26 REQUIRES REMOVAL OF RWCU-900N.
4. ACCESS TO WELDS GRWCU(3)-24 & GRWCU(3)-25 REQUIRES REMOVAL OF RWCU-926N.

REFERENCES:

BOVEE & CRAIL ISOMETRIC
RWCU-B12-B.13 REV 6

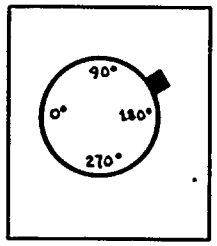

KEY PLAN

QUALITY CLASS: 1 | ASME CODE CLASS: 1

ENGR: D TIMMINS | DRAWN: K.M.L. | DATE: 6-26-78

WASHINGTON PUBLIC POWER SUPPLY SYSTEM
RICHLAND, WASHINGTON 99352

THIS DRAWING IS INTENDED FOR USE IN PRESERVICE AND INSERVICE INSPECTION PROGRAMS ONLY.

PIPING SYSTEM	NOM DIA (IN)	SCH	NOM WALL THK	MATERIAL SPECIFICATION	MATL TYPE	CAL BLOCK NO
6"RWCU (3)-4	6	80	0.432	SA 106 GR B	CS	UT-28

NO	DATE	REVISION	BY	CHKD	APPVD
3	9-26-83	ADDED RWCU-900N, 926N, ¾ PLUG & NOTES 3 & 4	K.M.L.	[illegible]	TFN
2	12-2-81	ADDED NOTES & CONT. CLG. ZN F-6	K.M.L.	[illegible]	TFN
1	7-17-79	REVISED CAL BLOCK REF TO UT-28	K.M.L.	[illegible]	[illegible]
0	11-22-78	ISSUED FOR USE	K.M.L.	[illegible]	[illegible]
A	9-13-78	ISSUED FOR INFORMATION ONLY	K.M.L.	DJ	RWP

WNP-2
WELD & COMPONENT IDENTIFICATION DIAGRAM

TITLE: RWCU MAIN HEADER FROM RRC

DWG NO: RWCU-101-5 | REV 3

WNP-02
INTERVAL: PSI
PERIOD: NA
OUTAGE:
DRAWING NO. RWCU-101

WASHINGTON PUBLIC POWER SUPPLY SYSTEM
PROGRAM PLAN AND SCHEDULE
SYSTEM OR COMPONENT: RWCU(4)-4
DESCRIPTION: RPV DRAIN TO RWCU

DATE 12/14/84

IDENT. NO.	DESCRIPTION	SECT. XI EXAM.	EXAM MTH.	PROCEDURE	CAL. BLOCK	INSERVICE REQ.	SCHEDULED OUTAGE	NOTES
RWCU-V-101-BLT								
	VALVE BOLTING	B-G-2	VT-1	OCI 7-1				
4RWCU(4)-1								
	VALVE TO PIPE	B-J	VOL	UTP-10	UT-30			
			SUR	PTP-1				
4RWCU(4)-1/2RWCU(4)-4								
	PIPE TO WOL	B-J	SUR	PTP-1				
2RWCU(4)-1								
	VALVE TO PIPE	B-J	SUR	OCI 3-3				
2RWCU(4)-4								
	PIPE TO WOL	B-J	SUR	OCI 3-3				
PWS-36-23								
	PIPE WHIP	N/A	N/A	N/A				SEE NOTE #1
RWCU-1C-17(W)								
	8 WELDED LUGS	B-K-1	VOL	UTP-26	UT-28			3/4"W x 1 1/8"H x 1"L.
RWCU-1C-17								
	PSA-1 SN(2)	B-K-2	VT-3	303/8.2.17				S/N 590/592
			VT-4	303/8.2.17				S/N 590/592
RWCU-144								
	SPRING	B-K-2	VT-3	303/8.2.17				4 WELDED LUGS, 1/2"W x 1 1/8"H x 1L.
			VT-4	303/8.2.17				4 WELDED LUGS, 1/2"W x 1 1/8"H x 1L.
4RWCU(4)-2								
	PIPE TO PIPE	B-J	VOL	UTP-10	UT-30			
			SUR	PTP-1				
PWS-36-22								
	PIPE WHIP	N/A	N/A	N/A				SEE NOTE #1
4RWCU(4)-4								
	PIPE TO PIPE	B-J	VOL	UTP-10	UT-30			

WNP-02
INTERVAL: PSI
PERIOD: NA
OUTAGE:
DRAWING NO. RWCU-101

WASHINGTON PUBLIC POWER SUPPLY SYSTEM
PROGRAM PLAN AND SCHEDULE
SYSTEM OR COMPONENT: RWCU(4)-4
DESCRIPTION: RPV DRAIN TO RWCU

DATE 12/14/84

IDENT. NO.	DESCRIPTION	SECT. XI EXAM.	EXAM MTH.	PROCEDURE	CAL. BLOCK	INSERVICE REQ.	INSERVICE SCHEDULED OUTAGE	NOTES
			SUR	PTP-1				
RWCU-1C-16								
	PSA-1 SNUBBER	B-K-2	VT-3	303/8.2.17				S/N 22344
			VT-4	303/8.2.17				S/N 22344
RWCU-1C-9PS								
	STRUT	B-K-2	VT-3	303/8.2.17				
4RWCU(4)-5								
	PIPE TO REDUCER	B-J	VOL	UTP-10	UT-30			
			SUR	PTP-1				
6RWCU(4)-1								
	REDUCER TO PIPE	B-J	VOL	UTP-10	UT-28			
			SUR	PTP-1				
PWS-36-3								
	PIPE WHIP	N/A	N/A	N/A				SEE NOTE #1
6RWCU(4)-2								
	PIPE TO EL	B-J	VOL	UTP-10	UT-28			
			SUR	PTP-1				
6RWCU(4)-3								
	EL TO PIPE	B-J	VOL	UTP-10	UT-28			
			SUR	PTP-1				
RWCU-143								
	SPRING	B-K-2	VT-3	303/8.2.17				
			VT-4	303/8.2.17				
6RWCU(4)-4								
	PIPE TO EL	B-J	VOL	UTP-10	UT-28			
			SUR	PTP-1				
6RWCU(4)-5								
	EL TO PIPE	B-J	VOL	UTP-10	UT-28			

WNP-02
INTERVAL: PSI
PERIOD: NA
OUTAGE:
DRAWING NO. RWCU-101

WASHINGTON PUBLIC POWER SUPPLY SYSTEM
PROGRAM PLAN AND SCHEDULE
SYSTEM OR COMPONENT: RWCU(4)-4
DESCRIPTION: RPV DRAIN TO RWCU

IDENT. NO.	DESCRIPTION	SECT. XI EXAM.	EXAM MTH.	PROCEDURE	CAL. BLOCK	INSERVICE REQ.	SCHEDULED OUTAGE	NOTES
			SUR	PTP-1				
PWS-36-2.	PIPE WHIP	N/A	N/A	N/A				SEE NOTE #1
RWCU-V-106-BLT	VALVE BOLTING	B-G-2	VT-1	OCI 7-1				
RWCU-V-106/3/4CAP	LEAKOFF CAPPED	B-P	VT-2	N/A				SEE NOTES #6 & #7.
4RWCU(3)-1	VALVE TO PIPE	B-J	VOL	UTP-10	UT-30			
			SUR	PTP-1				
4RWCU(3)-2	PIPE TO TEE	B-J	VOL	UTP-10	UT-30			
			SUR	PTP-1				
4RWCU(3)-3	TEE TO PIPE	B-J	VOL	UTP-10	UT-30			
			SUR	PTP-1				
4RWCU(3)-4	PIPE TO FLANGE	B-J	VOL	UTP-10	UT-30			
			SUR	PTP-1				
4RWCU(3)-4BD	FLANGE BOLTING	B-G-2	VT-1	OCI 7-1				
4RWCU(3)-5	TEE TO PIPE	B-J	VOL	UTP-10	UT-30			
			SUR	PTP-1				
RWCU-146	SPRING	B-K-2	VT-3	303/8.2.17				
			VT-4	303/8.2.17				
4RWCU(3)-6	PIPE TO REDUCER	B-J	VOL	UTP-10	UT-30			

WNP-02
INTERVAL: PSI
PERIOD: NA
OUTAGE:
DRAWING NO. RWCU-101

WASHINGTON PUBLIC POWER SUPPLY SYSTEM
PROGRAM PLAN AND SCHEDULE
SYSTEM OR COMPONENT: RWCU(4)-4.
DESCRIPTION: RPV DRAIN TO RWCU

DATE 12/14/84

IDENT. NO.	DESCRIPTION	SECT. XI EXAM.	EXAM MTH.	PROCEDURE	CAL. BLOCK	INSERVICE REQ.	SCHEDULED OUTAGE	NOTES
			SUR	PTP-1				
RWCU-V-100-BLT	VALVE BOLTING	B-G-2	VT-1	QCI 7-1				
RWCU-V-100/3/4CAP	LEAKOFF CAPPED	B-P	VT-2	N/A				SEE NOTES #6 & #7.
4RWCU(3)-7	VALVE TO PIPE	B-J	VOL	UTP-10	UT-30			
			SUR	PTP-1				
4RWCU(3)-8	PIPE TO TEE	B-J	VOL	UTP-10	UT-30			
			SUR	PTP-1				
4RWCU(3)-9	TEE TO PIPE	B-J	VOL	UTP-10	UT-30			
			SUR	PTP-1				
4RWCU(3)-10	PIPE TO FLANGE	B-J	VOL	UTP-10	UT-30			
			SUR	PTP-1				
4RWCU(3)-10BD	FLANGE BOLTING	B-G-2	VT-1	QCI 7-1				
4RWCU(3)-11	TEE TO PIPE	B-J	VOL	UTP-10	UT-30			
			SUR	PTP-1				
RWCU-1C-7PS	STRUT	B-K-2	VT-3	303/8.2.17				
RWCU-1C-12	PSA-3 SNUBBER	B-K-2	VT-3	303/8.2.17				S/N 2372
			VT-4	303/8.2.17				S/N 2372
4RWCU(3)-12	PIPE TO REDUCER	B-J	VOL	UTP-10	UT-30			

WNP-02
INTERVAL: PSI
PERIOD: NA
OUTAGE:
DRAWING NO. RWCU-101

WASHINGTON PUBLIC POWER SUPPLY SYSTEM
PROGRAM PLAN AND SCHEDULE
SYSTEM OR COMPONENT: RWCU(4)-4
DESCRIPTION: RPV DRAIN TO RWCU

DATE 12/14/84

IDENT. NO.	DESCRIPTION	SECT. XI EXAM.	EXAM MTH.	PROCEDURE	CAL. BLOCK	INSERVICE REQ.	SCHEDULED OUTAGE	NOTES
			SUR	PTP-1				
6RWCU(3)-1	REDUCER TO PIPE	B-J	VOL	UTP-10	UT-28			
			SUR	PTP-1				
PWS-36-5	PIPE WHIP	N/A	N/A	N/A				SEE NOTE #1
RWCU-145	SPRING	B-K-2	VT-3	303/8.2.17				
			VT-4	303/8.2.17				
6RWCU(3)-2	PIPE TO TEE	B-J	VOL	UTP-10	UT-28			
			SUR	PTP-1				
6RWCU(3)-3	REDUCER TO PIPE	B-J	VOL	UTP-10	UT-28			
			SUR	PTP-1				
PWS-36-4	PIPE WHIP	N/A	N/A	N/A				SEE NOTE #1
RWCU-1C-11	PSA-3 SNUBBER	B-K-2	VT-3	303/8.2.17				S/N 2359
			VT-4	303/8.2.17				S/N 2359
6RWCU(3)-4	PIPE TO TEE	B-J	VOL	UTP-10	UT-28			
			SUR	PTP-1				
6RWCU(3)-5	TEE TO PIPE	B-J	VOL	UTP-10	UT-28			
			SUR	PTP-1				

WNP-02
INTERVAL: PSI
PERIOD: NA
OUTAGE:
DRAWING NO. RWCU-101

WASHINGTON PUBLIC POWER SUPPLY SYSTEM
PROGRAM PLAN AND SCHEDULE
SYSTEM OR COMPONENT: RWCU(4)-4
DESCRIPTION: RPV DRAIN TO RWCU

DATE 12/14/84

IDENT. NO.	DESCRIPTION	SECT. XI EXAM.	EXAM MTH.	PROCEDURE	CAL. BLOCK	INSERVICE REQ.	SCHEDULED OUTAGE	NOTES
RWCU-1C-7								
	PSA-3 SNUBBER	B-K-2	VT-3	303/8.2.17				S/N 2595
			VT-4	303/8.2.17				S/N 2595
6RWCU(3)-6								
	PIPE TO VALVE	B-J	VOL	UTP-10	UT-28			
			SUR	PTP-1				
RWCU-V-102-BDY								
	VALVE BODY	B-M-2	VT-1	QCI 7-1				
RWCU-V-102/3/4CAP								
	LEAKOFF CAPPED	B-P	VT-2	N/A				SEE NOTES #6 & #7.
6RWCU(3)-7								
	VALVE TO PIPE	B-J	VOL	UTP-10	UT-28			
			SUR	PTP-1				
6RWCU(3)-8								
	PIPE TO TEE	B-J	VOL	UTP-10	UT-28			
			SUR	PTP-1				
6RWCU(3)-9								
	PIPE TO TEE	B-J	VOL	UTP-10	UT-28			
			SUR	PTP-1				
6RWCU(3)-10								
	TEE TO PIPE	B-J	VOL	UTP-10	UT-28			
			SUR	PTP-1				
RWCU-1C-6								
	PSA-3 SNUBBER	B-K-2	VT-3	303/8.2.17				S/N 2569
			VT-4	303/8.2.17				S/N 2569
6RWCU(3)-10/3/4V-605								
	DRAIN CONN	B-P	VT-2	N/A				SEE NOTES #6 & #7.

WNP-02
INTERVAL: PSI
PERIOD: NA
OUTAGE:
DRAWING NO. RWCU-101

WASHINGTON PUBLIC POWER SUPPLY SYSTEM
PROGRAM PLAN AND SCHEDULE
SYSTEM OR COMPONENT: RWCU(4)-4
DESCRIPTION: RPV DRAIN TO RWCU

IDENT. NO.	DESCRIPTION	SECT. XI EXAM.	EXAM MTH.	PROCEDURE	CAL. BLOCK	INSERVICE REQ.	INSERVICE SCHEDULED OUTAGE	NOTES
RWCU-1C-8								
	PSA-3 SNUBBER	B-K-2	VT-3	303/8.2.17				S/N 2587
			VT-4	303/8.2.17				S/N 2587
PWS-36-1								
	PIPE WHIP	N/A	N/A	N/A				SEE NOTE #1
PWS-36-21								
	PIPE WHIP	N/A	N/A	N/A				SEE NOTE #1
RWCU-1C-4PS(W)								
	8 WELDED LUGS	B-K-1	VOL	OCI 6-15	UT-28			3/4"W x 1 3/8"H x 3"L.
RWCU-1C-4PS								
	STRUT	B-K-2	VT-3	303/8.2.17				
RWCU-1C-5PS								
	STRUT	B-K-2	VT-3	303/8.2.17				
6RWCU(3)-11								
	PIPE TO PIPE	B-J	VOL	UTP-10	UT-28			
			SUR.	PTP-1				
RWCU-1C-5								
	PSA-3 SNUBBER	B-K-2	VT-3	303/8.2.17				S/N 4439
			VT-4	303/8.2.17				S/N 4439
6RWCU(3)-11A								
	PIPE TO PIPE	B-J	VOL	UTP-10	UT-28			
			SUR	PTP-1				
6RWCU(3)-11B								
	PIPE TO PIPE	B-J	VOL	UTP-10	UT-28			
			SUR	PTP-1				
6RWCU(3)-11C								
	PIPE TO PIPE	B-J	VOL	UTP-10	UT-28			
			SUR	PTP-1				

WNP-02
INTERVAL: PSI
PERIOD: NA
OUTAGE:
DRAWING NO. RWCU-101

WASHINGTON PUBLIC POWER SUPPLY SYSTEM
PROGRAM PLAN AND SCHEDULE
SYSTEM OR COMPONENT: RWCU(4)-4
DESCRIPTION: RPV DRAIN TO RWCU

DATE 12/14/84

IDENT. NO.	DESCRIPTION	SECT. XI EXAM.	EXAM MTH.	PROCEDURE	CAL. BLOCK	INSERVICE REQ.	INSERVICE SCHEDULED OUTAGE	NOTES
RWCU-1C-3PS								
	STRUT	B-K-2	VT-3	303/8.2.17				
RWCU-142								
	SPRING	B-K-2	VT-3	303/8.2.17				4 WELDED LUGS, 1/2"W x 1 1/2"H x 2 1/2"L.
			VT-4	303/8.2.17				4 WELDED LUGS, 1/2"W x 1 1/2"H x 2 1/2"L.
6RWCU(3)-12								
	PIPE TO PIPE	B-J	VOL	UTP-10	UT-28			
			SUR	PTP-1				
RWS-36-20								
	PIPE WHIP	N/A	N/A	N/A				SEE NOTE #1
6RWCU(3)-12A								
	PIPE TO PIPE	B-J	VOL	UTP-10	UT-28			
			SUR	PTP-1				
6RWCU(3)-13								
	PIPE TO PIPE	B-J	VOL	UTP-10	UT-28			
			SUR	PTP-1				
RWCU-141								
	SPRING	B-K-2	VT-3	303/8.2.17				
			VT-4	303/8.2.17				
RWS-36-19								
	PIPE WHIP	N/A	N/A	N/A				SEE NOTE #1
6RWCU(3)-13B								
	PIPE TO PIPE	B-J	VOL	UTP-10	UT-28			
			SUR	PTP-1				
RWCU-1C-3(W)								
	8 WELDED LUGS	B-K-1	VOL	OCI 6-15	UT-28			3/4"Wx 1"Hx 2 7/8"L.

WNP-02
INTERVAL: PSI
PERIOD: NA
OUTAGE:
DRAWING NO. RWCU-101

WASHINGTON PUBLIC POWER SUPPLY SYSTEM
PROGRAM PLAN AND SCHEDULE
SYSTEM OR COMPONENT: RWCU(4)-4
DESCRIPTION: RPV DRAIN TO RWCU

IDENT. NO.	DESCRIPTION	SECT. XI EXAM.	EXAM MTH.	PROCEDURE	CAL. BLOCK	INSERVICE REQ.	SCHEDULED OUTAGE	NOTES
RWCU-1C-3								
	PSA-3 SN(2)	B-K-2	VT-3	303/8.2.17				S/N 3946/3938
			VT-4	303/8.2.17				S/N 3946/3938
RWCU-1C-4								
	PSA-3 SNUBBER	B-K-2	VT-3	303/8.2.17				S/N 314
			VT-4	303/8.2.17				S/N 314
RWCU-1C-2PS								
	STRUT	B-K-2	VT-3	303/8.2.17				
PWS-36-18								
	PIPE WHIP	N/A	N/A	N/A				SEE NOTE #1
RWCU-140								
	SPRING	B-K-2	VT-3	303/8.2.17				
			VT-4	303/8.2.17				
PWS-36-17								
	PIPE WHIP	N/A	N/A	N/A				SEE NOTE #1
6RWCU(3)-13A								
	PIPE TO PIPE	B-J	VOL	UTP-10	UT-28			
			SUR	PTP-1				
RWCU-1C-2								
	PSA-1 SNUBBER	B-K-2	VT-3	303/8.2.17				S/N 387
			VT-4	303/8.2.17				S/N 387
6RWCU(3)-14								
	PIPE TO FLANGE	B-J	VOL	OCI 6-13	UT-28			
			SUR	OCI 3-3				
6RWCU(3)-14/1/2PI(1)-4S								
	PRESSURE TAP	B-P	VT-2	N/A				SEE NOTES #6 & #7.
6RWCU(3)-15/1/2PI(1)-4S								
	PRESSURE TAP	B-P	VT-2	N/A				SEE NOTES #6 & #7.
6RWCU(3)-15								
	FLANGE TO PIPE	B-J	VOL	OCI 6-13	UT-28			

WNP-02
INTERVAL: PSI
PERIOD: NA
OUTAGE:
DRAWING NO. RWCU-101

WASHINGTON PUBLIC POWER SUPPLY SYSTEM
PROGRAM PLAN AND SCHEDULE
SYSTEM OR COMPONENT: RWCU(4)-4
DESCRIPTION: RPV DRAIN TO RWCU

DATE 12/14/84

IDENT. NO.	DESCRIPTION	SECT. XI EXAM.	EXAM MTH.	PROCEDURE	CAL. BLOCK	INSERVICE REQ.	INSERVICE SCHEDULED OUTAGE	NOTES
			SUR	QCI 3-3				
PWS-36-16	PIPE WHIP	N/A	N/A	N/A				SEE NOTE #1
6RWCU(3)-16	PIPE TO EL	B-J	VOL	UTP-10	UT-28			
			SUR	PTP-1				
6RWCU(3)-17	EL TO PIPE	B-J	VOL	UTP-10	UT-28			
			SUR	PTP-1				
RWCU-1C-1PS	PIPE STOP	B-K-2	VT-3	303/8.2.17				
PWS-36-15	PIPE WHIP	N/A	N/A	N/A				SEE NOTE #1
6RWCU(3)-18	PIPE TO EL	B-J	VOL	UTP-10	UT-28			
			SUR	PTP-1				
PWS-36-14	PIPE WHIP	N/A	N/A	N/A				SEE NOTE #1
6RWCU(3)-19	EL TO PIPE	B-J	VOL	UTP-10	UT-28			
			SUR	PTP-1				
RWCU-139	SPRING	B-K-2	VT-3	303/8.2.17				
			VT-4	303/8.2.17				
RWCU-1C-1	PSA-3 SNUBBER	B-K-2	VT-3	303/8.2.17				S/N 4445
			VT-4	303/8.2.17				S/N 4445

WNP-02
INTERVAL: PSI
PERIOD: NA
OUTAGE:
DRAWING NO. RWCU-101

WASHINGTON PUBLIC POWER SUPPLY SYSTEM
PROGRAM PLAN AND SCHEDULE
SYSTEM OR COMPONENT: RWCU(4)-4
DESCRIPTION: RPV DRAIN TO RWCU

DATE 12/14/84

IDENT. NO.	DESCRIPTION	SECT. XI EXAM.	EXAM MTH.	PROCEDURE	CAL. BLOCK	INSERVICE REQ.	INSERVICE SCHEDULED OUTAGE	NOTES
6RWCU(3)-19/3/4V-108								
	TEST CONN	B-P	VT-2	N/A				SEE NOTES #6 & #7.
6RWCU(3)-20								
	PIPE TO VALVE	B-J	VOL	UTP-10	UT-28			AUGMT
			SUR	PTP-1				AUGMT
RWCU-V-1-BDY								
	VALVE BODY	B-M-2	VT-1	QCI 7-1				
RWCU-V-1-BLT								
	VALVE BOLTING	B-G-2	VT-1	QCI 7-1				
RWCU-V-1/3/4CAP								
	LEAKOFF CAPPED	B-P	VT-2	N/A				SEE NOTES #6 & #7.
6RWCU(3)-21								
	VALVE TO PIPE	B-J	VOL	UTP-10	UT-28			AUGMT
			SUR	PTP-1				AUGMT
6RWCU(3)-22								
	PIPE TO PENE	B-J	VOL	UTP-10	UT-28			AUGMT
			SUR	PTP-1				AUGMT
6RWCU(3)-23								
	PENE TO EL	B-J	VOL	UTP-10	UT-28			AUGMT
			SUR	PTP-1				AUGMT
6RWCU(3)-23/3/4V-612								
	VENT CONN	B-P	VT-2	N/A				SEE NOTES #6 & #7.
6RWCU(3)-24								
	EL TO PIPE	B-J	VOL	UTP-10	UT-28			AUGMT
			SUR	PTP-1				AUGMT
6RWCU(3)-24/3/4PLUG								
	PLUG TEST CONN	B-P	VT-2	N/A				SEE NOTES #6 & #7.
RWCU-926N								
	PSA-35 SNUBBER	B-K-2	VT-3	303/8.2.17				S/N 7505

WNP-02
INTERVAL: PSI
PERIOD: NA
OUTAGE:
DRAWING NO. RWCU-101

WASHINGTON PUBLIC POWER SUPPLY SYSTEM
PROGRAM PLAN AND SCHEDULE
SYSTEM OR COMPONENT: 6WCU(4)-4
DESCRIPTION: RPV DRAIN TO RWCU

IDENT. NO.	DESCRIPTION	SECT. XI EXAM.	EXAM MTH.	PROCEDURE	CAL. BLOCK	INSERVICE REQ.	INSERVICE SCHEDULED OUTAGE	NOTES
			VT-4	303/8.2.17				S/N 7505
6RWCU(3)-25	PIPE TO EL	B-J	VOL	UTP-10	UT-28			AUGMT
			SUR	PTP-1				AUGMT
6RWCU(3)-25/3/4V-608	DRAIN CONN	B-P	VT-2	N/A				SEE NOTES #6 & #7.
6RWCU(3)-26	EL TO PIPE	B-J	VOL	UTP-10	UT-28			AUGMT
			SUR	PTP-1				AUGMT
RWCU-900N	PSA-3 SN(2)	B-K-2	VT-3	303/8.2.17				S/N 3943/3878
			VT-4	303/8.2.17				S/N 3943/3878
6RWCU(3)-27	PIPE TO VALVE	B-J	VOL	UTP-10	UT-28			AUGMT
			SUR	PTP-1				AUGMT
RWCU-V-4-BDY	VALVE BODY	B-M-2	VT-1	QCI 7-1				
RWCU-V-4-BLT	VALVE BOLTING	B-G-2	VT-1	QCI 7-1				
RWCU-V-4/3/4CAP	LEAKOFF CAPPED	B-P	VT-2	N/A				SEE NOTE #6 & #7.
RWCU-PB-101	RWCU PRES BNDRY	B-P	VT-2	N/A				SEE NOTES #6 & #7.

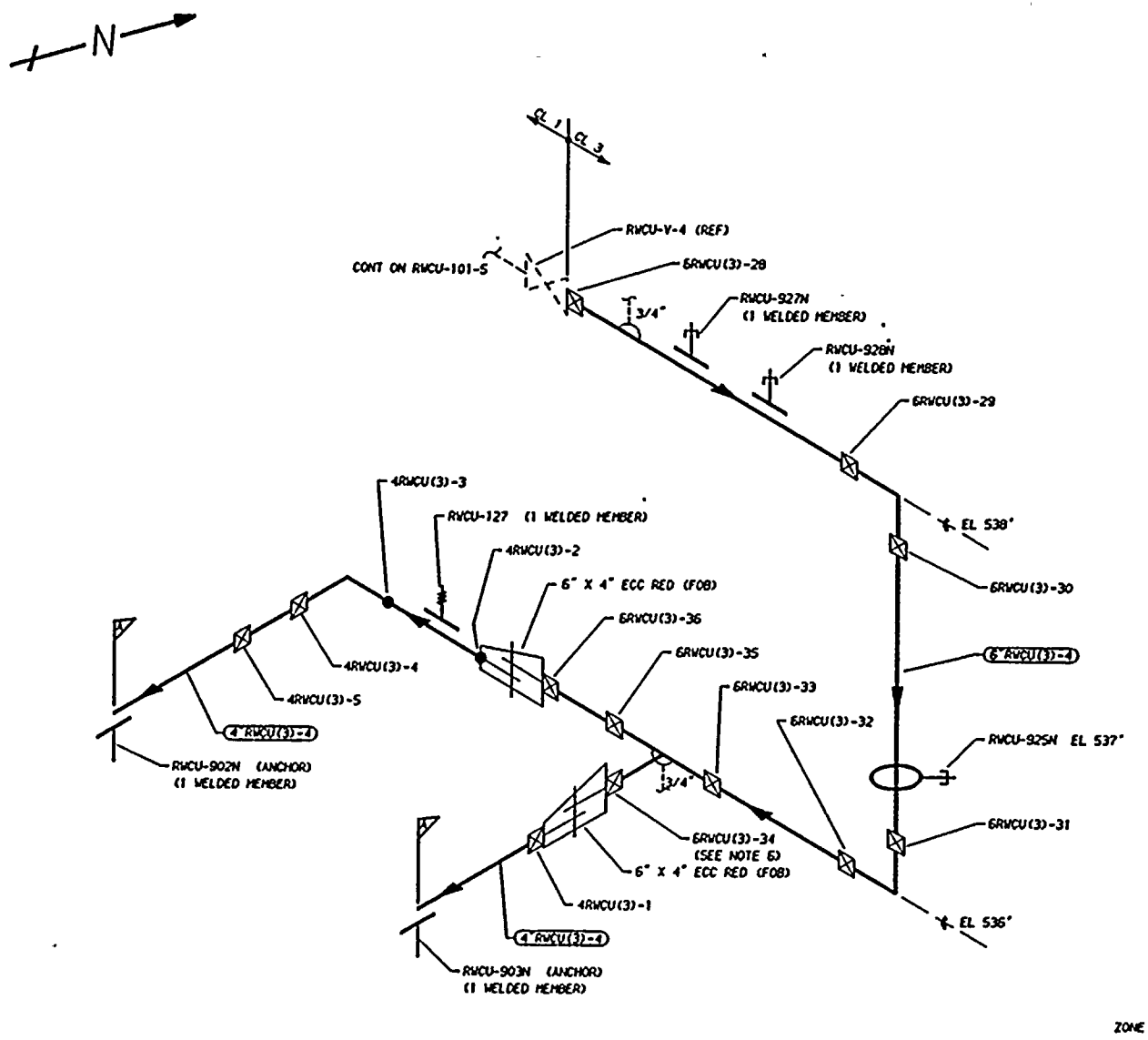

THIS DRAWING IS INTENDED FOR USE IN PRESERVICE AND INSERVICE INSPECTIONS PROGRAMS ONLY.

PIPING SYSTEM	NOM DIA (IN)	SCH	NOM WALL THK	MATERIAL SPECIFICATION	MATL TYPE	CAL BLOCK NO
6"RWCU(3)-4	6	80	0.432	SA 106 GR B	CS	UT-28
4"RWCU(3)-4	4	80	0.337	SA 106 GR B	CS	UT-30

NO	DATE	REVISION	BY	CHKD	APVD
1	12-2-83	GENERAL UP-DATE REDRAWN	[illegible]	DPR	TFH
0	12-8-81	ISSUED FOR USE	K-McA	DPR	TFH

NOTES

1. DELETED
2. DELETED
3. DELETED
4. THIS DRAWING IDENTIFIES PIPING AND COMPONENTS SUBJECT ONLY TO A VISUAL EXAM FOR (1) EVIDENCE OF LEAKAGE DURING SYSTEM PRESSURE OR OPERABILITY TESTS, (2) PRESSURE DECAY TESTS OF BURIED PIPING, AND (3) LOSS OF SUPPORT CAPABILITY OR INADEQUATE RESTRAINT FOR SUPPORTS AND HANGERS ON PIPING EXCEEDING 4" NOM. TESTS SHALL BE CONDUCTED PER ASME SECTION XI, ARTICLES IWA-5000 AND IWD-2000.
5. ALL CIRCUMFERENTIAL BUTT WELDS GREATER THAN 1 INCH REQUIRE AUGMENTED ISI.
6. WELD 6RWCU(3)-34 IS FITTING TO FITTING.

REFERENCES:

ISI - 223

BOVEE & CRAIL ISOMETRICS
RWCU-812-8.13 REV 10

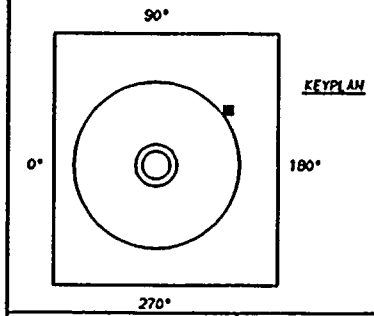

QUALITY CLASS: 1 | ASME CODE CLASS: 3

ENGR: K-McANDREW | DRAWN: K-McA | DATE: 5-7-79

WASHINGTON PUBLIC POWER
SUPPLY SYSTEM
RICHLAND, WASHINGTON 99352

WNP-2
WELD & COMPONENT
IDENTIFICATION DIAGRAM

TITLE:

RWCU-P-1A & 1B SUCTION

DWG NO: RWCU-301 REV 1

WNP-02
INTERVAL: PSI
PERIOD: NA
OUTAGE:
DRAWING NO. RWCU-301

WASHINGTON PUBLIC POWER SUPPLY SYSTEM
PROGRAM PLAN AND SCHEDULE
SYSTEM OR COMPONENT: RWCU(3)-4
DESCRIPTION: RWCU PUMP SUCTION

DATE 12/14/84

IDENT. NO.	DESCRIPTION	SECT. XI EXAM.	EXAM MTH.	PROCEDURE	CAL. BLOCK	INSERVICE REQ.	INSERVICE SCHEDULED OUTAGE	NOTES
6RWCU(3)-28								
	VLV TO PIPE	AUGMT	VOL	QCI 6-13	UT-28			
RWCU-927N								
	PSA-35 SNUBBER	N/A	VT-3	303/8.2.17				S/N 7038
			VT-4	303/8.2.17				S/N 7038
RWCU-928N								
	PSA-10 SNUBBER	N/A	VT-3	303/8.2.17				S/N 134
			VT-4	303/8.2.17				S/N 134
6RWCU(3)-29								
	PIPE TO ELL	AUGMT	VOL	QCI 6-13	UT-28			
6RWCU(3)-30								
	ELL TO PIPE	AUGMT	VOL	QCI 6-13	UT-28			
RWCU-925N								
	PSA-1/4 SNUBBER	N/A	VT-3	303/8.2.17				S/N 624
			VT-4	303/8.2.17				S/N 624
6RWCU(3)-31								
	PIPE TO ELL	AUGMT	VOL	QCI 6-13	UT-28			
6RWCU(3)-32								
	ELL TO PIPE	AUGMT	VOL	QCI 6-13	UT-28			
6RWCU(3)-33								
	PIPE TO TEE	AUGMT	VOL	QCI 6-13	UT-28			
6RWCU(3)-34								
	TEE TO REDUCER	AUGMT	VOL	QCI 6-13	UT-28			FITTING TO FITTING
4RWCU(3)-1A								
	REDUCER TO PIPE	AUGMT	VOL	QCI 6-13	UT-30			
6RWCU(3)-35								
	TEE TO PIPE	AUGMT	VOL	QCI 6-13	UT-28			
6RWCU(3)-36								
	PIPE TO REDUCER	AUGMT	VOL	QCI 6-13	UT-28			
4RWCU(3)-2A								
	REDUCER TO PIPE	AUGMT	VOL	QCI 6-13	UT-30			
4RWCU(3)-3A								
	PIPE TO ELL	AUGMT	VOL	QCI 6-13	UT-30			

WNP-02
INTERVAL: PSI
PERIOD: NA
OUTAGE:
DRAWING NO. RWCU-301

WASHINGTON PUBLIC POWER SUPPLY SYSTEM
PROGRAM PLAN AND SCHEDULE
SYSTEM OR COMPONENT: RWCU(3)-4
DESCRIPTION: RWCU PUMP SUCTION

DATE 12/14/84

IDENT. NO.	DESCRIPTION	SECT. XI EXAM.	EXAM MTH.	PROCEDURE	CAL. BLOCK	INSERVICE REQ.	INSERVICE SCHEDULED OUTAGE	NOTES
4RWCU(3)-4A	ELL TO PIPE	AUGMT	VOL	QCI 6-13	UT-30			
4RWCU(3)-5A	PIPE TO PIPE	AUGMT	VOL	QCI 6-13	UT-30			
RWCU-PB-301	RWCU PRES BNDRY	N/A	VT-2	N/A				SEE NOTES #6 & #7.

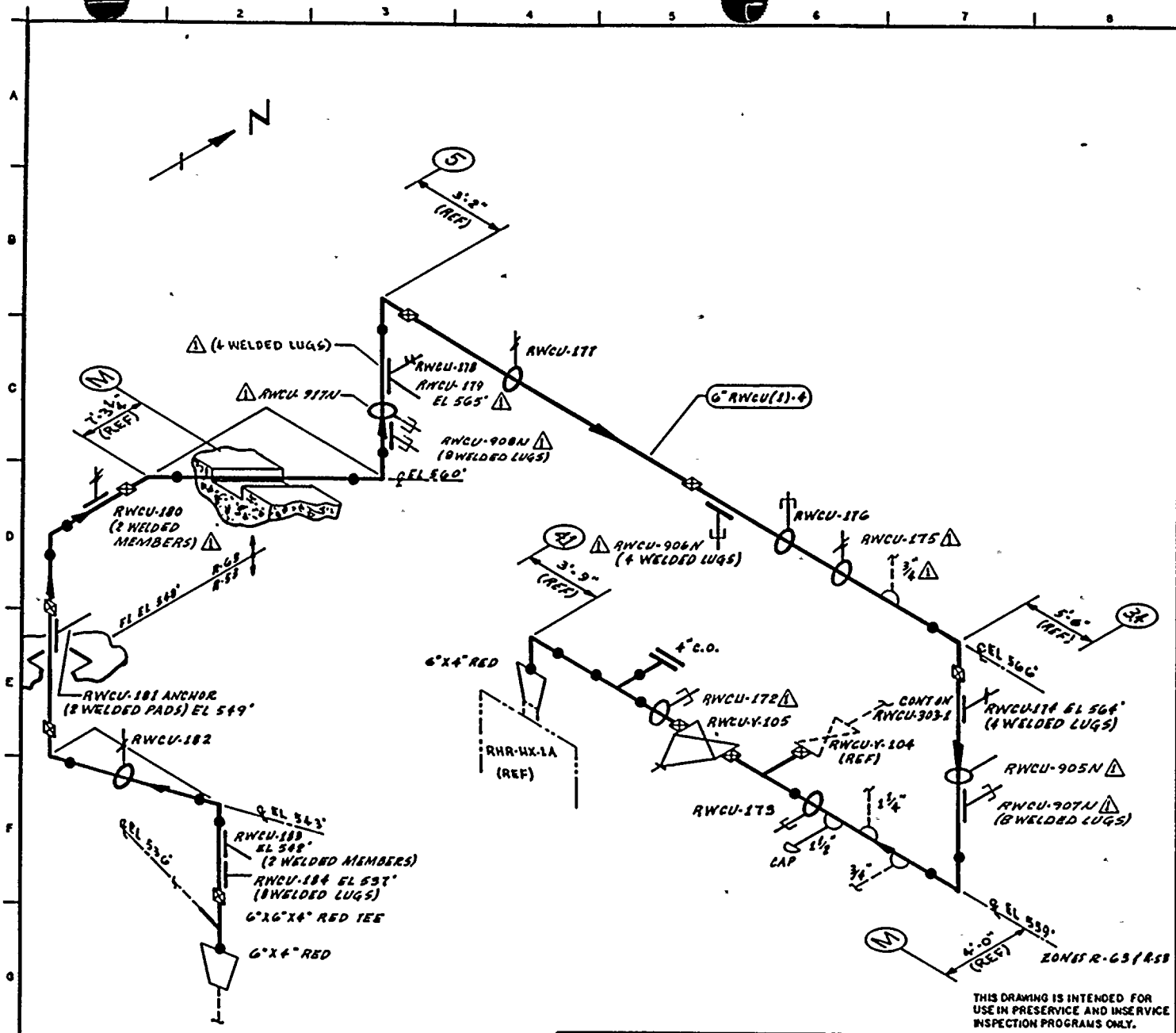

THIS DRAWING IS INTENDED FOR USE IN PRESERVICE AND INSERVICE INSPECTION PROGRAMS ONLY.

NOTES:

1. THIS DRAWING IDENTIFIES PIPING & COMPONENTS SUBJECT ONLY TO A VISUAL EXAM FOR (1) EVIDENCE OF LEAKAGE DURING SYSTEM PRESSURE OR OPERABILITY TESTS; (2) PRESSURE DECAY TESTS FOR BURIED PIPING; & (3) LOSS OF SUPPORT CAPABILITY OR INADEQUATE RESTRAINT FOR SUPPORTS & HANGERS ON PIPING EXCEEDING 4" NOM. TESTS SHALL BE CONDUCTED PER ASME SECTION XI, ARTICLES IWA-5000 & IWD-2000.
2. FOR BRANCH PIPING 4" DIA OR LESS (CONN SHOWN IN DASHED LINES) EXTEND VISUAL LEAKAGE EXAM THROUGH THE OUTERMOST NORMALLY CLOSED NUCLEAR CLASS VALVE OR UNTIL TRANSITION TO INSTRUMENT TUBING, UNLESS OTHERWISE NOTED.

REFERENCES:

BOYES & CRAIL ISOMETRICS

RWCU-894-1.18 REV 2
RWCU-894-14.21 REV 6

KEYPLAN

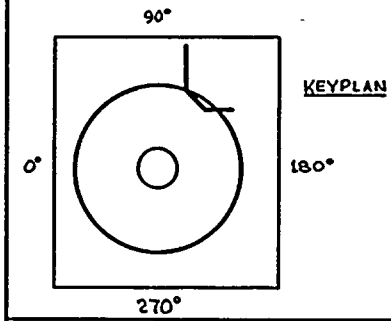

QUALITY CLASS: 2	ASME CODE CLASS: 3
ENGR: [illegible]	DRAWN: K. McA. DATE: 5-7-79

WASHINGTON PUBLIC POWER SUPPLY SYSTEM
RICHLAND, WASHINGTON 99352

PIPING SYSTEM	NOM DIA (IN)	SCH	NOM WALL THK	MATERIAL SPECIFICATION	MATL TYPE	CAL BLOCK NO
6"RWCU(1)-4	6	80	0.432	SA 106 GR B	CS	NA

WNP-2
WELD & COMPONENT IDENTIFICATION DIAGRAM

TITLE: RWCU-P-1A & 1B DISCHARGE TO RHR-HX-1A

DWG NO: RWCU-302 REV 1

NO	DATE	REVISION	BY	CHKD	APPVD
1	12-18-85	REVISED AS NOTED ADDED KEYPLAN	[illegible]	LKR	TFH
0	12-2-81	ISSUED FOR USE	[illegible]	LKR	TFH

WNP-02
INTERVAL: PSI
PERIOD: NA
OUTAGE:
DRAWING NO. RWCU-302

WASHINGTON PUBLIC POWER SUPPLY SYSTEM
PROGRAM PLAN AND SCHEDULE
SYSTEM OR COMPONENT: RWCU(1)-4
DESCRIPTION: RWCU PUMP DISCHARGE

DATE 12/14/84

IDENT. NO.	DESCRIPTION	SECT. XI EXAM.	EXAM MTH.	PROCEDURE	CAL. BLOCK	INSERVICE REQ.	INSERVICE SCHEDULED OUTAGE	NOTES
RWCU-908N								
	PSA-1/4 SN(2)	N/A	VT-3	303/8.2.17				S/N N2531/S256
			VT-4	303/8.2.17				S/N N2531/S256
RWCU-917N								
	PSA-3 SNUBBER	N/A	VT-3	303/8.2.17				S/N 2392
			VT-4	303/8.2.17				S/N 2392
RWCU-906N								
	PSA-1/4 SNUBBER	N/A	VT-3	303/8.2.17				S/N 2468
			VT-4	303/8.2.17				S/N 2468
RWCU-907N								
	PSA-1/4 SN(2)	N/A	VT-3	303/8.2.17				S/N N2089/S214
			VT-4	303/8.2.17				S/N N2089/S214
RWCU-173								
	PSA-1 SNUBBER	N/A	VT-3	303/8.2.17				S/N 382
			VT-4	303/8.2.17				S/N 382
RWCU-PB-302								
	RWCU PRES BNDRY	N/A	VT-2	N/A				SEE NOTES #6 & #7.

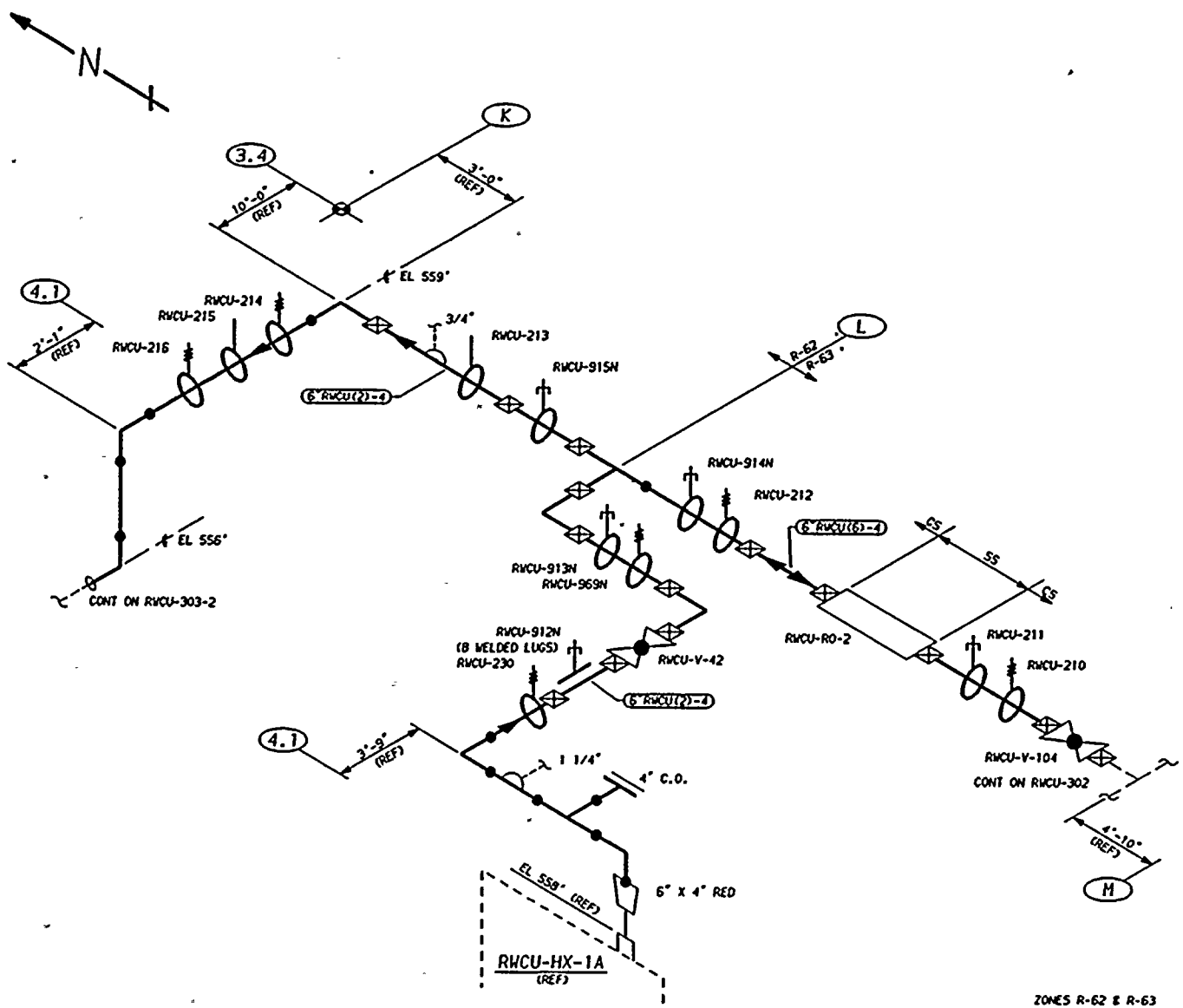

ZONES R-62 & R-63

THIS DRAWING IS INTENDED FOR USE IN PRESERVICE AND INSERVICE INSPECTIONS PROGRAMS ONLY.

NOTES:

1. THIS DRAWING IDENTIFIES PIPING AND COMPONENTS SUBJECT ONLY TO A VISUAL EXAM FOR (1) EVIDENCE OF LEAKAGE DURING SYSTEM PRESSURE OR OPERABILITY TESTS, (2) PRESSURE DECAY TESTS OF BURIED PIPING, AND (3) LOSS OF SUPPORT CAPABILITY OR INADEQUATE RESTRAINT FOR SUPPORTS AND HANGERS ON PIPING EXCEEDING 4" NOM. TESTS SHALL BE CONDUCTED PER ASME SECTION XI, ARTICLES IWA-5000 AND IWD-2000.

2. FOR BRANCH PIPING 4" NOM. OR LESS (CONNECTION SHOWN IN DASHED LINES) EXTEND VISUAL LEAKAGE EXAM THROUGH THE OUTERMOST NORMALLY CLOSED NUCLEAR CLASS VALVE, OR UNTIL TRANSITION TO INSTRUMENT TUBING, UNLESS OTHERWISE NOTED.

REFERENCES:

151 - 229

BOYEE & CRAIL ISOMETRIC
RWCU-895-1.7 REV 6

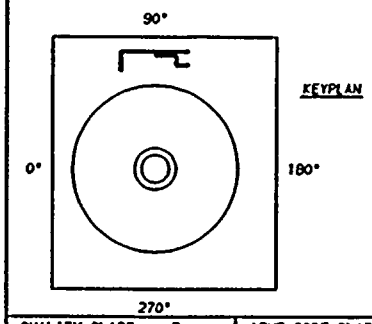

QUALITY CLASS: 2	ASME CODE CLASS: 3
ENGR: K-McANDREW	DRAWN: K-McA	DATE: 6-25-79

WASHINGTON PUBLIC POWER
SUPPLY SYSTEM
RICHLAND, WASHINGTON 99352

PIPING SYSTEM	NOM DIA (IN)	SCH	NOM WALL THK	MATERIAL SPECIFICATION	MATL TYPE	CAL BLOCK NO
6"RWCU(6)-4	6	80	0.432	SA 106 GR B	CS	NA
6"RWCU(2)-4	6	80	0.432	SA 106 GR B	CS	NA

WNP-2
WELD & COMPONENT
IDENTIFICATION DIAGRAM

TITLE:
RWCU-HX-1A RETURN TO RFW

DWG NO: RWCU-303-1 | REV 1

NO	DATE	REVISION	BY	CHKD	APVD
1	1-21-81	GENERAL UPDATE REDRAWN	KMcA	DPR	TFH
0	12-2-81	ISSUED FOR USE	K-McA	DPR	TFH

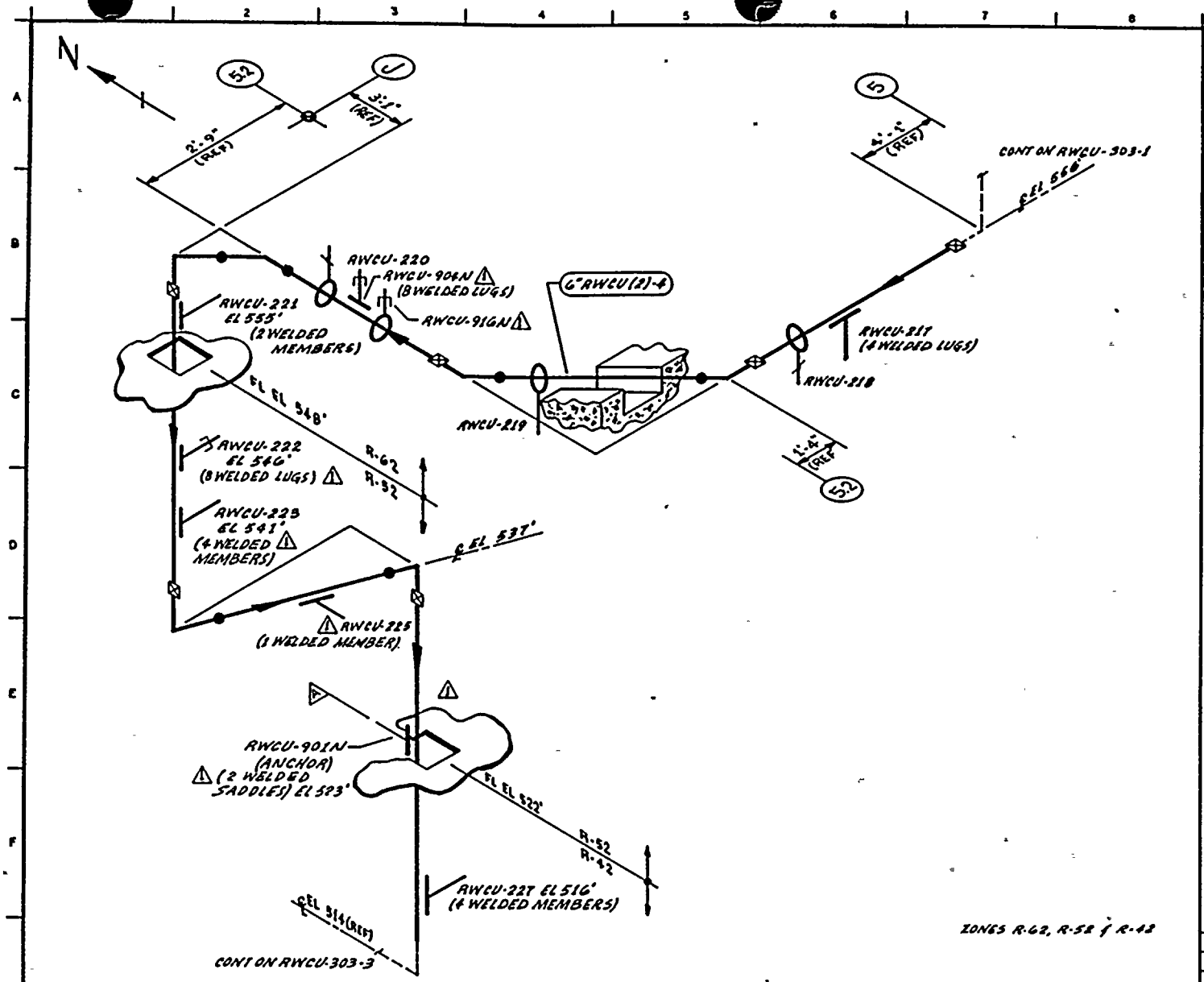

NOTES:

1. THIS DRAWING IDENTIFIES PIPING & COMPONENTS SUBJECT ONLY TO A VISUAL EXAM FOR (1) EVIDENCE OF LEAKAGE DURING SYSTEM PRESSURE OR OPERABILITY TESTS; (2) PRESSURE DECAY TESTS OF BURIED PIPING; & (3) LOSS OF SUPPORT CAPABILITY OR INADEQUATE RESTRAINT FOR SUPPORTS & HANGERS ON PIPING EXCEEDING 4" NOM. TESTS SHALL BE CONDUCTED PER ASME SECTION XI, ARTICLES IWA-5000 & IWD-2000.

REFERENCES:

BOVEE & CRAIL ISOMETRICS

RWCU-895-1.7 REV 6
RWCU-895-8.12 REV 9

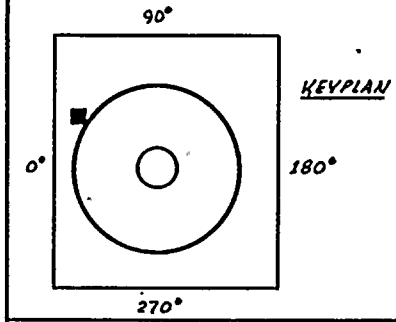

QUALITY CLASS: 2	ASME CODE CLASS: 3	
ENGR: K.M. Andersen	DRAWN: K.M.A.	DATE: 6-28-78

WASHINGTON PUBLIC POWER SUPPLY SYSTEM
RICHLAND, WASHINGTON 99352

THIS DRAWING IS INTENDED FOR USE IN PRESERVICE AND INSERVICE INSPECTION PROGRAMS ONLY.

PIPING SYSTEM	NOM DIA (IN)	SCH	NOM WALL THK	MATERIAL SPECIFICATION	MATL TYPE	CAL BLOCK NO
6"RWCU(2)-4	6	80	0.432	SA 106 GR B	CS	N/A

WNP-2
WELD & COMPONENT IDENTIFICATION DIAGRAM

TITLE: RWCU-HX-1A RETURN TO RFW

DWG NO: RWCU-303-2 REV 1

NO	DATE	REVISION	BY	CHKD	APPVD
1	1-24-84	REVISED AS NOTED ADDED KEYPLAN	KMA	LR	TW
0	12-2-81	ISSUED FOR USE	KMA	LR	TW

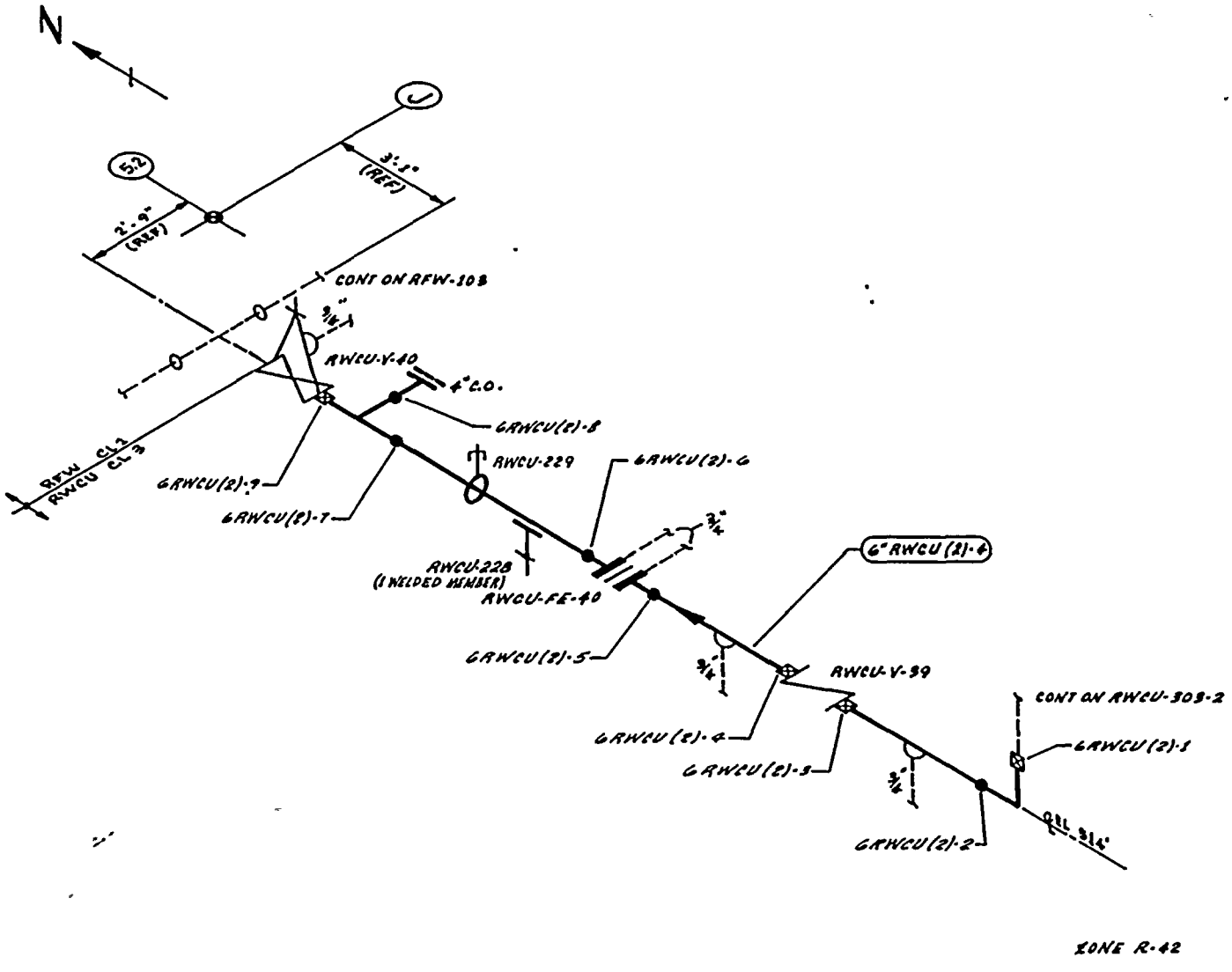

NOTES:

1. WELDS 6RWCU(2)-8 & 6RWCU(2)-9 ARE FITTING TO FITTING.
2. ALL CIRCUMFERENTIAL BUTT WELDS GREATER THAN 1 INCH REQUIRE AUGMENTED ISI.
3. FOR BRANCH PIPING 4" NOM OR LESS (CONN SHOWN IN DASHED LINES) EXTEND VISUAL LEAKAGE EXAM THROUGH THE OUTERMOST NORMALLY CLOSED NUCLEAR CLASS VALVE, OR UNTIL TRANSITION TO INSTRUMENT TUBING, UNLESS OTHERWISE NOTED.
4. AT LOCATIONS WHERE LEAKAGE IS NORMALLY EXPECTED, (E.G., VALVE STEM OR PUMP SEAL LEAKOFF CONN) VERIFY LEAKAGE COLLECTION SYSTEM OPERABILITY ONLY. NO HYDRO TEST OF COLLECTION SYSTEM IS REQUIRED.

REFERENCES:

BOVEE & CRAIL ISOMETRICS
RWCU-895-8.12 REV 9

KEYPLAN

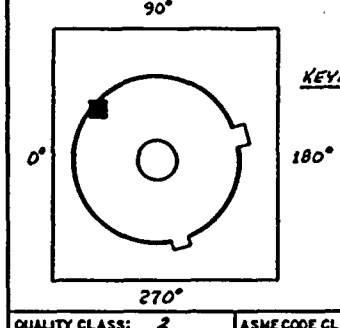

QUALITY CLASS: 2	ASME CODE CLASS: 3
ENGR: K.M. ANDREW	DRAWN: K. McA.	DATE: 6-28-79

THIS DRAWING IS INTENDED FOR USE IN PRESERVICE AND INSERVICE INSPECTION PROGRAMS ONLY.

WASHINGTON PUBLIC POWER SUPPLY SYSTEM
RICHLAND, WASHINGTON 99352

PIPING SYSTEM	NOM DIA (IN)	SCH	NOM WALL THK	MATERIAL SPECIFICATION	MATL TYPE	CAL BLOCK NO
6" RWCU(2)-4	6	80	0.432	SA 106 GR B	CS	UT-88

WNP-2
WELD & COMPONENT IDENTIFICATION DIAGRAM

TITLE: RWCU-HX-1A RETURN TO RFW

DWG NO: RWCU-303-3 REV 1

NO	DATE	REVISION	BY	CHKD	APPVD
1	12-2-83	REVISED RWCU-228 ADDED RWCU-229 & KEYPLAN			
0	1-8-81	ISSUED FOR USE			

WNP-02
INTERVAL: PSI
PERIOD: NA
OUTAGE:
DRAWING NO. RWCU-303

WASHINGTON PUBLIC POWER SUPPLY SYSTEM
PROGRAM PLAN AND SCHEDULE
SYSTEM OR COMPONENT: RWCU(2)-4
DESCRIPTION: RWCU HX RTN TO RFW

DATE 12/14/84

IDENT. NO.	DESCRIPTION	SECT. XI EXAM.	EXAM MTH.	PROCEDURE	CAL. BLOCK	INSERVICE REQ.	INSERVICE SCHEDULED OUTAGE	NOTES
RWCU-211								
	PSA-1/2 SNUBBER	N/A	VT-3	303/8.2.17				S/N 377
			VT-4	303/8.2.17				S/N 377
RWCU-914N								
	PSA-1 SNUBBER	N/A	VT-3	303/8.2.17				S/N 22336
			VT-4	303/8.2.17				S/N 22336
RWCU-912N								
	PSA-1/4 SN(3)	N/A	VT-3	303/8.2.17				S/N N2583/W246
			VT-4	303/8.2.17				S/N N2583/W246
RWCU-913N								
	PSA-1 SNUBBER	N/A	VT-3	303/8.2.17				S/N 108
			VT-4	303/8.2.17				S/N 108
RWCU-915N								
	PSA-1/2 SNUBBER	N/A	VT-3	303/8.2.17				S/N 2157
			VT-4	303/8.2.17				S/N 2157
RWCU-916N								
	PSA-1/2 SN(2)	N/A	VT-3	303/8.2.17				S/N T2567/B247
			VT-4	303/8.2.17				S/N T2567/B247
RWCU-904N								
	PSA-1/2 SN(2)	N/A	VT-3	303/8.2.17				S/N T2525/B257
			VT-4	303/8.2.17				S/N T2525/B257
RWCU-222								
	PSA-1/4 SN(2)	N/A	VT-3	303/8.2.17				S/N W435/E2093
			VT-4	303/8.2.17				S/N W435/E2093
6RWCU(2)-1								
	PIPE TO ELL	AUGMT	VOL	QCI 6-13	UT-28			
6RWCU(2)-2								
	ELL TO PIPE	AUGMT	VOL	QCI 6-13	UT-28			

WNP-02
INTERVAL: PSI
PERIOD: NA
OUTAGE:
DRAWING NO. RWCU-303

WASHINGTON PUBLIC POWER SUPPLY SYSTEM
PROGRAM PLAN AND SCHEDULE
SYSTEM OR COMPONENT: RWCU(2)-4
DESCRIPTION: RWCU HX RTN TO RFW

DATE 12/14/84

IDENT. NO.	DESCRIPTION	SECT. XI EXAM.	EXAM MTH.	PROCEDURE	CAL. BLOCK	INSERVICE REQ.	INSERVICE SCHEDULED OUTAGE	NOTES
6RWCU(2)-3								
	PIPE TO VLV	AUGMT	VOL	QCI 6-13	UT-28			
6RWCU(2)-4								
	VLV TO PIPE	AUGMT	VOL	QCI 6-13	UT-28			
6RWCU(2)-5								
	PIPE TO FE	AUGMT	VOL	QCI 6-13	UT-28			
6RWCU(2)-6								
	FE TO PIPE	AUGMT	VOL	QCI 6-13	UT-28			
RWCU-229								
	PSA-3 SNUBBER	N/A	VT-3	303/8.2.17				S/N 2374
			VT-4	303/8.2.17				S/N 2374
6RWCU(2)-7								
	PIPE TO TEE	AUGMT	VOL	QCI 6-13	UT-28			
4RWCU(2)-8								
	RED TEE TO FLG	AUGMT	SUR	QCI 3-3				UT NOT POSSIBLE.
6RWCU(2)-9								
	TEE TO VLV	AUGMT	VOL	QCI 6-13	UT-28			FITTING TO FITTING
RWCU-PB-303								
	RWCU PRES BNDRY	N/A	VT-2	N/A				SEE NOTES #6 & #7.

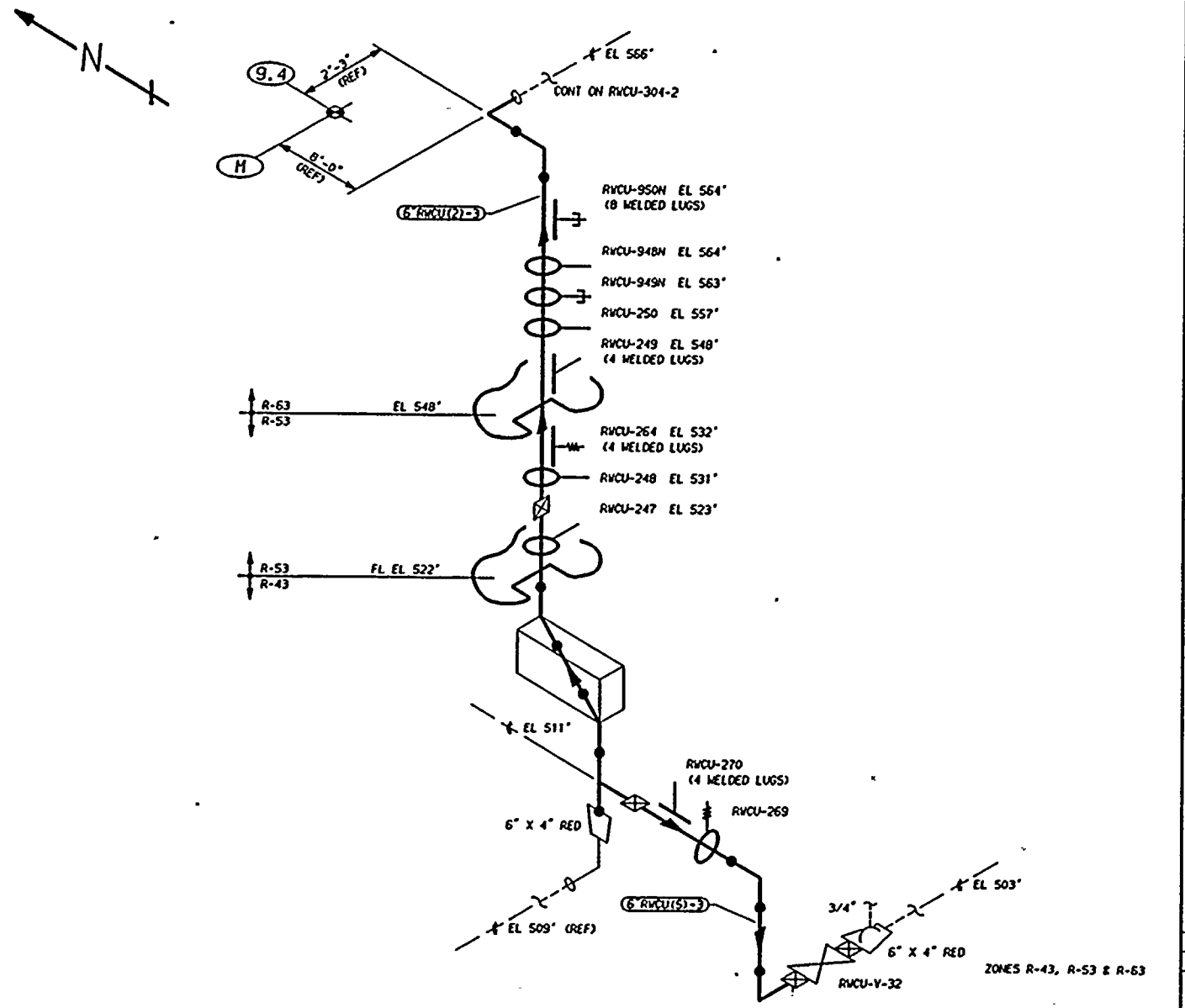

THIS DRAWING IS INTENDED FOR USE IN PRESERVICE AND INSERVICE INSPECTIONS PROGRAMS ONLY.

NOTES:

1. THIS DRAWING IDENTIFIES PIPING AND COMPONENTS SUBJECT ONLY TO A VISUAL EXAM FOR (1) EVIDENCE OF LEAKAGE DURING SYSTEM PRESSURE OR OPERABILITY TESTS, (2) PRESSURE DECAY TESTS OF BURIED PIPING, AND (3) LOSS OF SUPPORT CAPABILITY OR INADEQUATE RESTRAINT FOR SUPPORTS AND HANGERS ON PIPING EXCEEDING 4" NOM. TESTS SHALL BE CONDUCTED PER ASME SECTION XI, ARTICLES IWA-5000 AND IWD-2000.

2. FOR BRANCH PIPING 4" NOM. OR LESS (CONNECTION SHOWN IN DASHED LINES) EXTEND VISUAL LEAKAGE EXAM THROUGH THE OUTERMOST NORMALLY CLOSED NUCLEAR CLASS VALVE, OR UNTIL TRANSITION TO INSTRUMENT TUBING, UNLESS OTHERWISE NOTED.

REFERENCES:

ISI - 229

BOYEE & CRAIL ISOMETRICS
RWCU-699- 1.4 REV 6
RWCU-278-22.24 REV 6

KEYPLAN

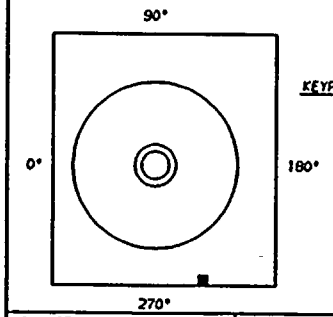

QUALITY CLASS: 2	ASME CODE CLASS: 3	
ENGR: K-McANDREW	DRAWN: K-McA	DATE: 6-28-79

WASHINGTON PUBLIC POWER
SUPPLY SYSTEM
RICHLAND, WASHINGTON 99352

WNP-2
WELD & COMPONENT
IDENTIFICATION DIAGRAM

TITLE:
RWCU DISCHARGE FROM RWCU-DH-1A & 1B

DWG NO: RWCU-304-1 REV 1

PIPING SYSTEM	NOM DIA (IN)	SCH	NOM WALL THK	MATERIAL SPECIFICATION	MATL TYPE	CAL BLOCK NO
6"RWCU(5)-3	6	80	0.432	SA 106 GR B	CS	NA
6"RWCU(2)-3	6	80	0.432	SA 106 GR B	CS	NA

NO	DATE	REVISION	BY	CHKD	APVD
1	1-28-84	GENERAL UPDATE REDRAWN	K-McA	DPR	TFH
0	12-2-81	ISSUED FOR USE	K-McA	DPR	TFH

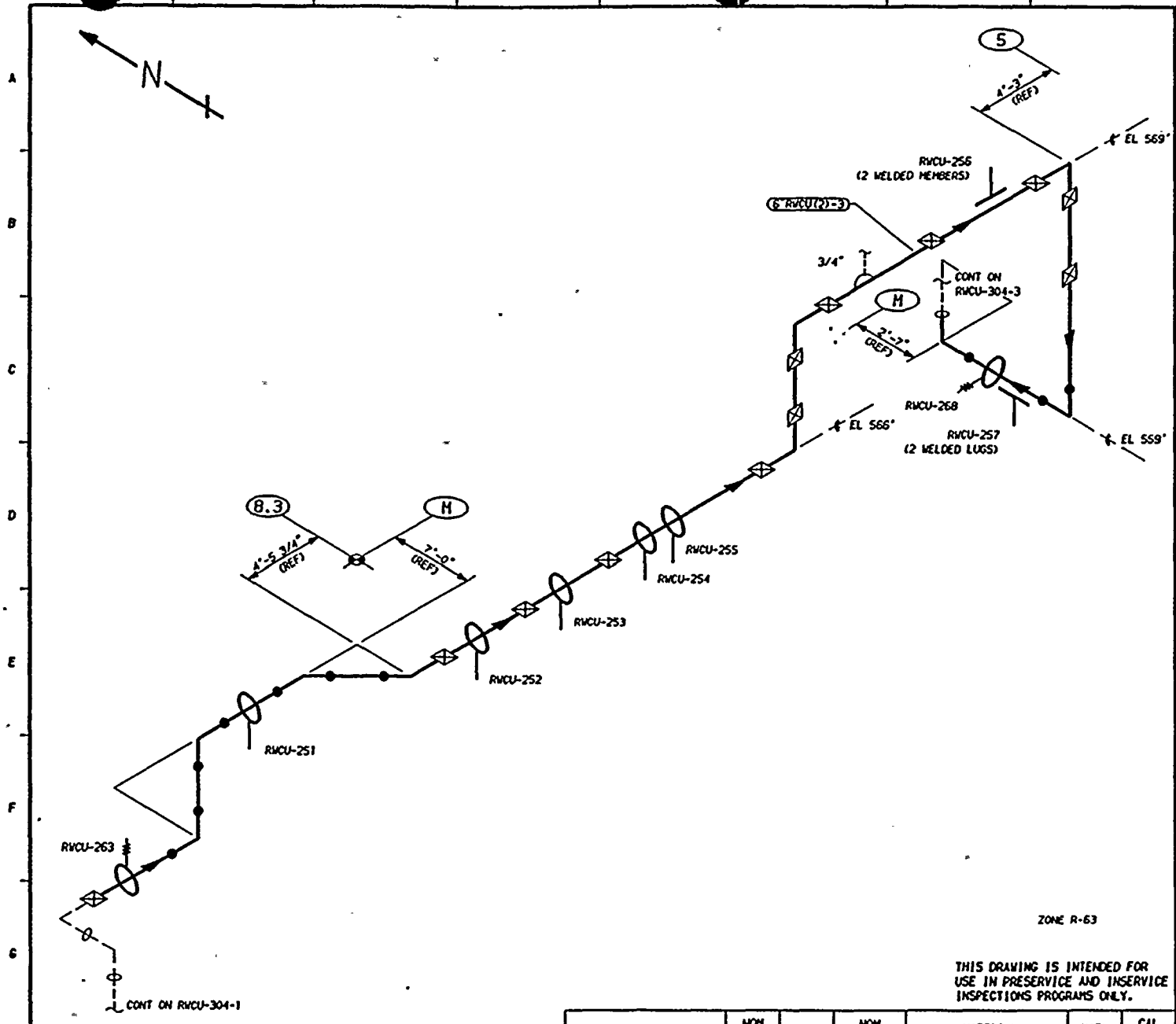

ZONE R-63

THIS DRAWING IS INTENDED FOR USE IN PRESERVICE AND INSERVICE INSPECTIONS PROGRAMS ONLY.

NOTES:

1. THIS DRAWING IDENTIFIES PIPING AND COMPONENTS SUBJECT ONLY TO A VISUAL EXAM FOR (1) EVIDENCE OF LEAKAGE DURING SYSTEM PRESSURE OR OPERABILITY TESTS, (2) PRESSURE DECAY TESTS OF BURIED PIPING, AND (3) LOSS OF SUPPORT CAPABILITY OR INADEQUATE RESTRAINT FOR SUPPORTS AND HANGERS ON PIPING EXCEEDING 4" NOM. TESTS SHALL BE CONDUCTED PER ASME SECTION XI, ARTICLES IWA-5000 AND IWD-2000.

2. FOR BRANCH PIPING 4" NOM. OR LESS (CONNECTION SHOWN IN DASHED LINES) EXTEND VISUAL LEAKAGE EXAM THROUGH THE OUTERMOST NORMALLY CLOSED NUCLEAR CLASS VALVE, OR UNTIL TRANSITION TO INSTRUMENT TUBING, UNLESS OTHERWISE NOTED.

REFERENCES:

ISI - 229

BOYEE & CRAIL ISOMETRICS
RWCU-278-25.29 REV 6
RWCU-278-30.35 REV 6

KEYPLAN

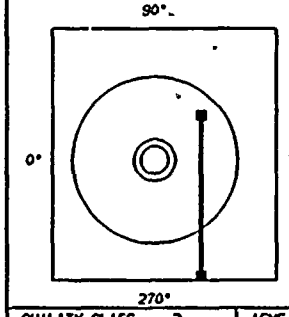

QUALITY CLASS: 2	ASME CODE CLASS: 3
ENGR: K-McANDREW	DRAWN: K-McA	DATE: 6-28-79

WASHINGTON PUBLIC POWER
SUPPLY SYSTEM
RICHLAND, WASHINGTON 99352

PIPING SYSTEM	NOM DIA (IN)	SCH	NOM WALL THK	MATERIAL SPECIFICATION	MATL TYPE	CAL BLOCK NO
6"RWCU(2)-3	6	80	0.432	SA 106 GR B	CS	NA

WNP-2
WELD & COMPONENT
IDENTIFICATION DIAGRAM

TITLE:
RWCU-DM-1A & B TO RWCU-HX-1C

DWG NO: RWCU-304-2 REV 1

NO	DATE	REVISION	BY	CHKD	APVD
1	1-28-82	GENERAL UPDATE REDRAWN		DPR	TFH
0	12-2-81	ISSUED FOR USE	K-McA	DPR	TFH

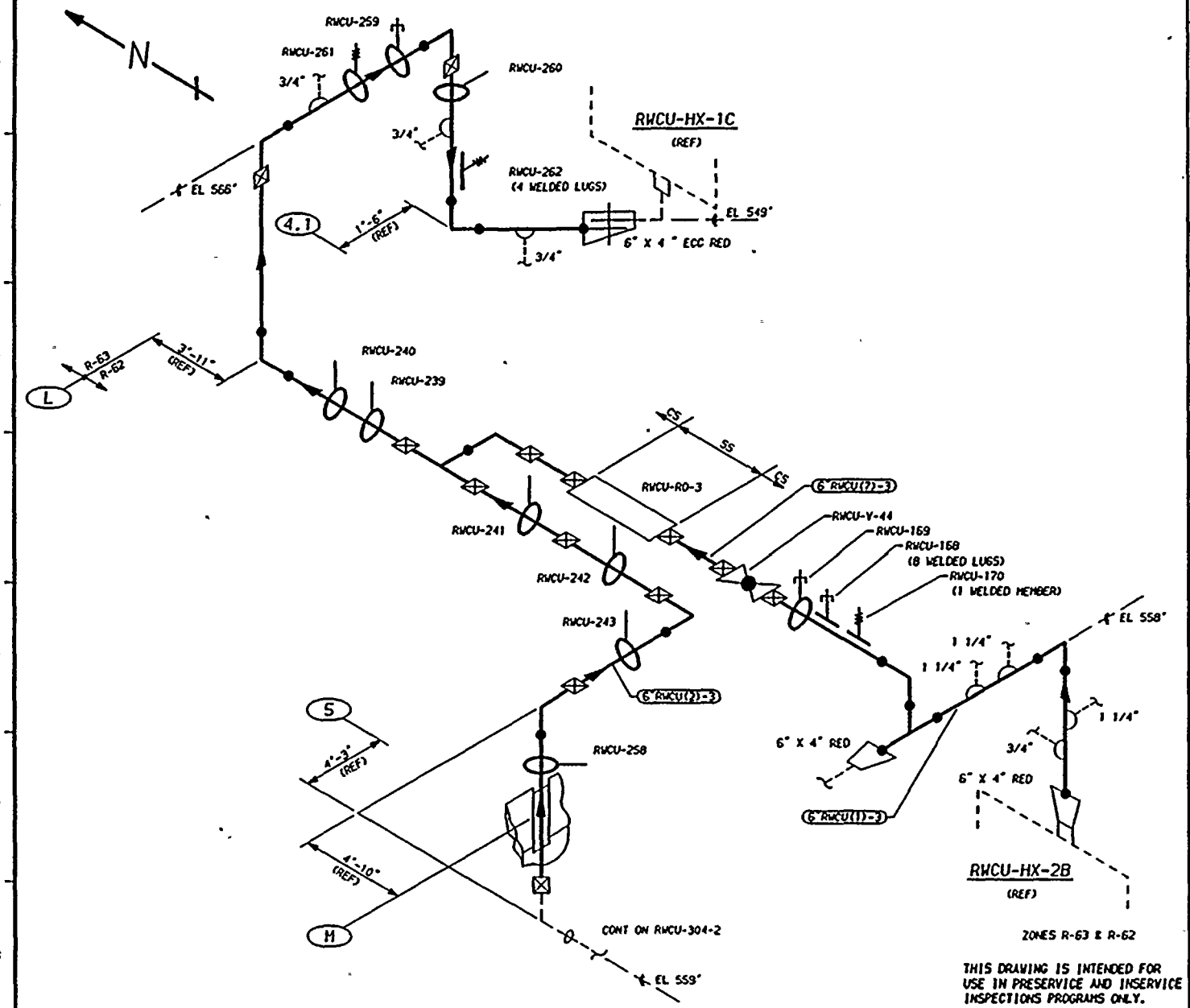

THIS DRAWING IS INTENDED FOR USE IN PRESERVICE AND INSERVICE INSPECTIONS PROGRAMS ONLY.

NOTES:

1. THIS DRAWING IDENTIFIES PIPING AND COMPONENTS SUBJECT ONLY TO A VISUAL EXAM FOR (1) EVIDENCE OF LEAKAGE DURING SYSTEM PRESSURE OR OPERABILITY TESTS, (2) PRESSURE DECAY TESTS OF BURIED PIPING, AND (3) LOSS OF SUPPORT CAPABILITY OR INADEQUATE RESTRAINT FOR SUPPORTS AND HANGERS ON PIPING EXCEEDING 4" NOM. TESTS SHALL BE CONDUCTED PER ASME SECTION XI, ARTICLES IWA-5000 AND IWD-2000.

2. FOR BRANCH PIPING 4" NOM. OR LESS (CONNECTION SHOWN IN DASHED LINES) EXTEND VISUAL LEAKAGE EXAM THROUGH THE OUTERMOST NORMALLY CLOSED NUCLEAR CLASS VALVE, OR UNTIL TRANSITION TO INSTRUMENT TUBING, UNLESS OTHERWISE NOTED.

REFERENCES:

151 - 229

BOVEE & CRAIL ISOMETRICS
RWCU-278-30.3S REV 6
RWCU-278- 1.3 REV 5

KEYPLAN

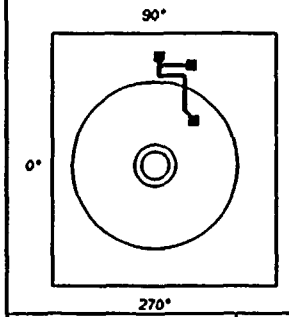

QUALITY CLASS: 2	ASME CODE CLASS: 3	
ENGR: K-McANDREW	DRAWN: K-McA	DATE: 7-2-79

WASHINGTON PUBLIC POWER
SUPPLY SYSTEM
RICHLAND, WASHINGTON 99352

PIPING SYSTEM	NOM DIA (IN)	SCH	NOM WALL THK	MATERIAL SPECIFICATION	MATL TYPE	CAL BLOCK NO
6"RWCU(2)-3	6	80	0.432	SA 106 GR B	CS	NA
6"RWCU(7)-3	6	80	0.432	SA 106 GR B	CS	NA
6"RWCU(1)-3	6	80	0.432	SA 106 GR B	CS	NA

NO	DATE	REVISION	BY	CHKD	APVD
1	1-27-84	GENERAL UPDATE REDRAWN	K-McA	DPR	TFH
0	12-2-81	ISSUED FOR USE	K-McA	DPR	TFH

WNP-2
WELD & COMPONENT
IDENTIFICATION DIAGRAM

TITLE:
RWCU-DM-1A & B AND
RWCU-HX-2B TO RWCU-HX-1C

DWG NO: RWCU-304-3 REV 1

WNP-02
INTERVAL: PSI
PERIOD: NA
OUTAGE:
DRAWING NO. RWCU-304

WASHINGTON PUBLIC POWER SUPPLY SYSTEM
PROGRAM PLAN AND SCHEDULE
SYSTEM OR COMPONENT: RWCU(2)-3
DESCRIPTION: DISCHARGE FROM DM-1A

DATE 12/14/84

IDENT. NO.	DESCRIPTION	SECT. XI EXAM.	EXAM MTH.	PROCEDURE	CAL. BLOCK	INSERVICE REQ.	INSERVICE SCHEDULED OUTAGE	NOTES
RWCU-168								
	PSA-1/4 SN(2)	N/A	VT-3	303/8.2.17				S/N
			VT-4	303/8.2.17				S/N
RWCU-169								
	PSA-1/2 SNUBBER	N/A	VT-3	303/8.2.17				S/N
			VT-4	303/8.2.17				S/N
RWCU-259								
	PSA-1/2 SNUBBER	N/A	VT-3	303/8.2.17				S/N
			VT-4	303/8.2.17				S/N
RWCU-PB-304								
	RWCU PRES BNDRY	N/A	VT-2	N/A				SEE NOTES #6 & #7.

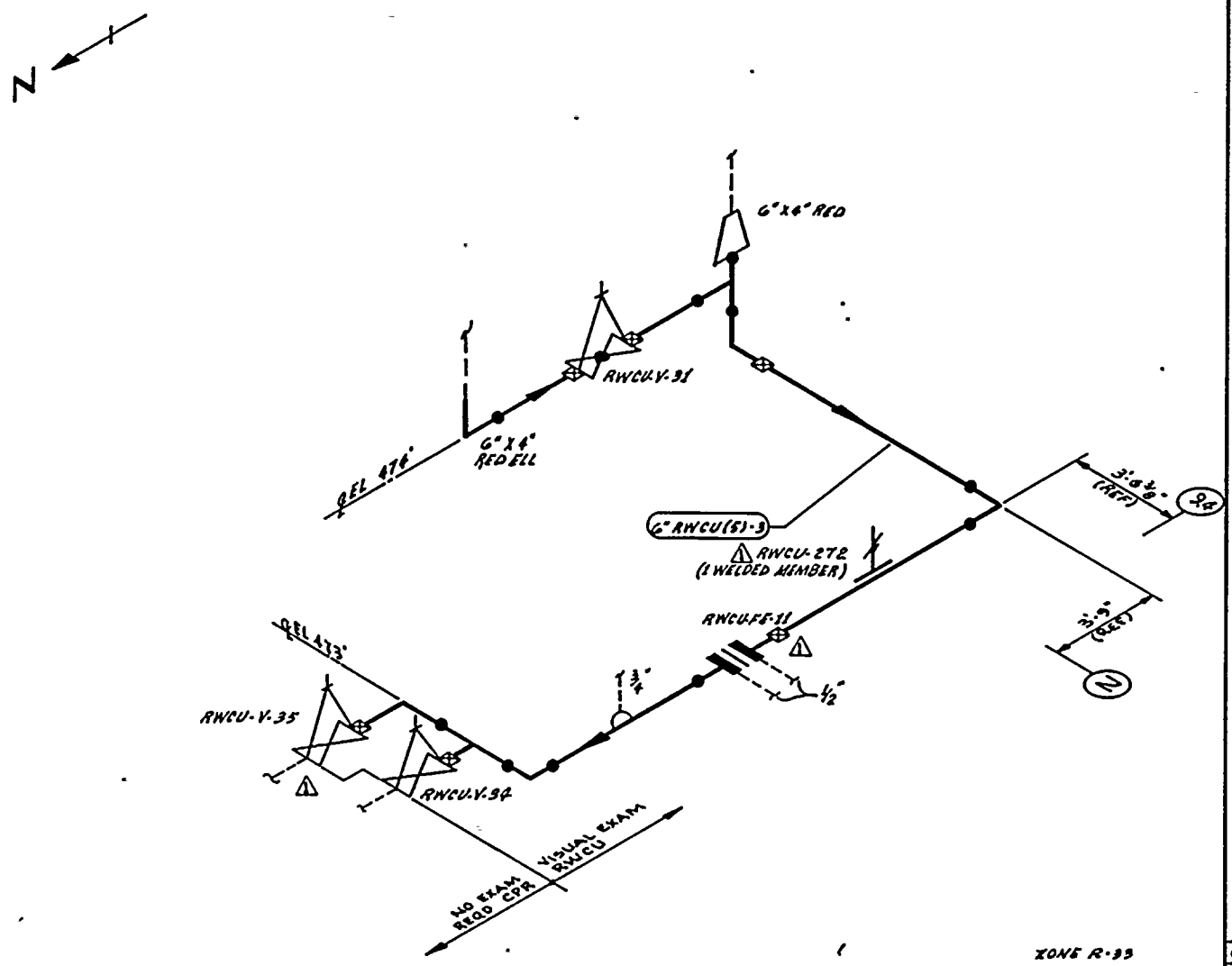

NOTES:

1. THIS DRAWING IDENTIFIES PIPING & COMPONENTS SUBJECT ONLY TO A VISUAL EXAM FOR (1) EVIDENCE OF LEAKAGE DURING SYSTEM PRESSURE OR OPERABILITY TESTS; (2) PRESSURE DECAY TESTS OF BURIED PIPING; & (3) LOSS OF SUPPORT CAPABILITY OR INADEQUATE RESTRAINT FOR SUPPORTS & HANGERS ON PIPING EXCEEDING 4" NOM. TESTS SHALL BE CONDUCTED PER ASME SECTION XI, ARTICLES IWA-5000 & IWD-2000.
2. FOR BRANCH PIPING 4" NOM OR LESS (CONN SHOWN IN DASHED LINES) EXTEND VISUAL LEAKAGE EXAM THROUGH THE OUTERMOST NORMALLY CLOSED NUCLEAR CLASS VALVE, OR UNTIL TRANSITION TO INSTRUMENT TUBING, UNLESS OTHERWISE NOTED.

REFERENCES:

BOVEE & CRAIL ISOMETRICS
RWCU-699-5.7 REV B

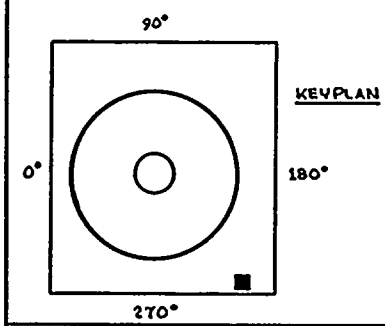

QUALITY CLASS: 2	ASME CODE CLASS: 3
ENGR: [illegible] DRAWN: [illegible]	DATE: 7-2-79

WASHINGTON PUBLIC POWER SUPPLY SYSTEM
RICHLAND, WASHINGTON 99352

THIS DRAWING IS INTENDED FOR USE IN PRESERVICE AND INSERVICE INSPECTION PROGRAMS ONLY.

PIPING SYSTEM	NOM DIA (IN)	SCH	NOM WALL THK	MATERIAL SPECIFICATION	MATL TYPE	CAL BLOCK NO
6"RWCU(5)-3	6	80	0.432	SA 106 GR B	CS	NA

WNP- 2
WELD & COMPONENT IDENTIFICATION DIAGRAM

TITLE: RWCU DISCHARGE TO RADWASTE

DWG NO: RWCU-305 REV 1

NO	DATE	REVISION	BY	CHKD	APPVD
1	12-8-83	REVISED AS NOTED ADDED KEYPLAN	[illegible]	[illegible]	TFH
0	12-7-81	ISSUED FOR USE	[illegible]	[illegible]	TFH

WNP-02
INTERVAL: PSI
PERIOD: NA
OUTAGE:
DRAWING NO. RWCU-305

WASHINGTON PUBLIC POWER SUPPLY SYSTEM
PROGRAM PLAN AND SCHEDULE
SYSTEM OR COMPONENT: RWCU(5)-3
DESCRIPTION: DISCHARGE - RADWASTE

DATE 12/14/84

IDENT. NO.	DESCRIPTION	SECT. XI EXAM.	EXAM MTH.	PROCEDURE	CAL. BLOCK	INSERVICE REQ.	INSERVICE SCHEDULED OUTAGE	NOTES
RWCU-PB-305	RWCU PRES BNDRY	N/A	VT-2	N/A				SEE NOTES #6 & #7.

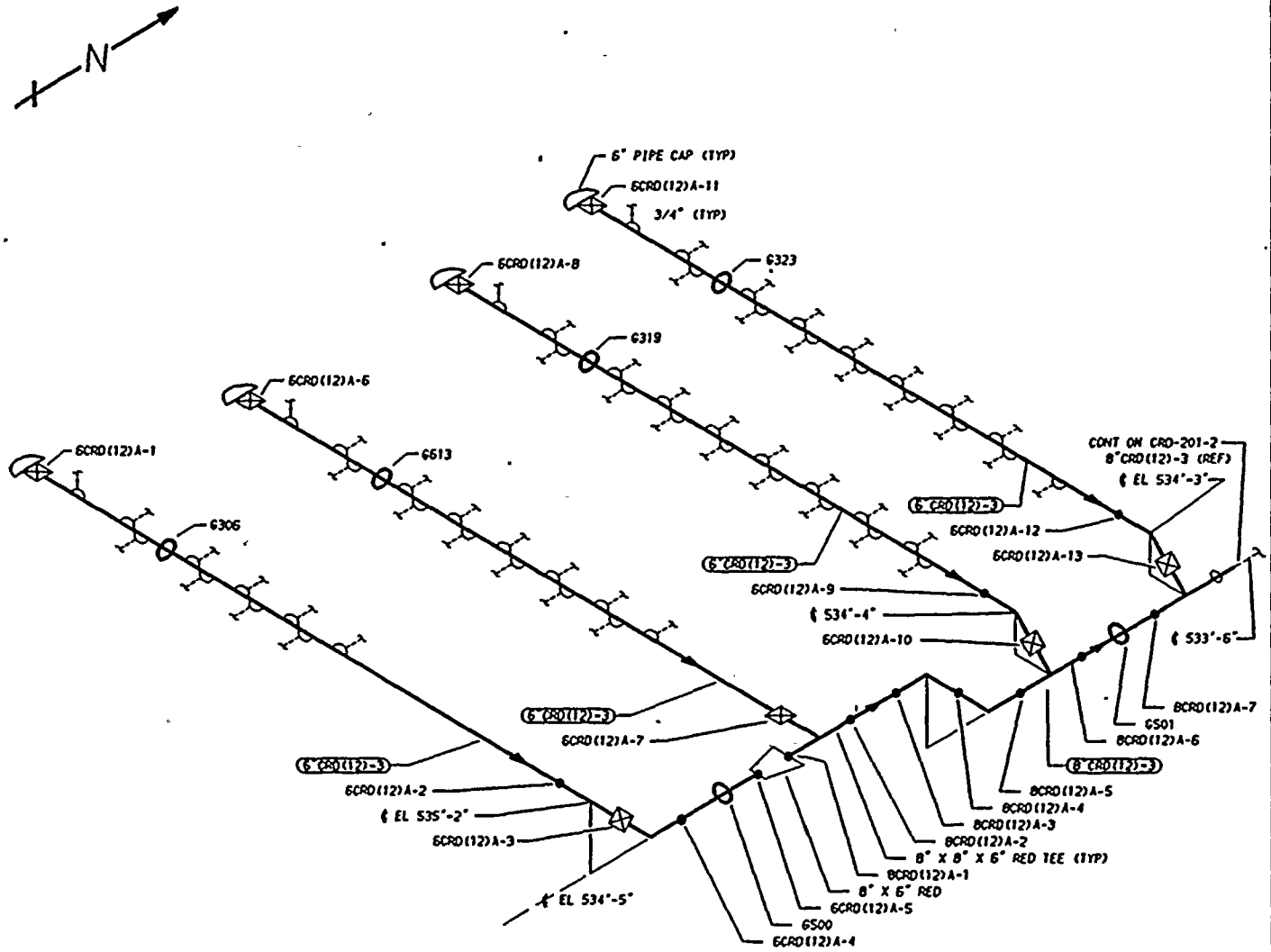

NOTES:

1. THIS DRAWING IDENTIFIES PIPING AND COMPONENTS SUBJECT TO A VISUAL EXAM FOR EVIDENCE OF LEAKAGE DURING SYSTEM HYDRO OR OPERABILITY TESTS. TESTS ARE TO BE CONDUCTED PER THE REQUIREMENTS OF ASME SECTION XI, PARAGRAPH IWA-5000.

2. FOR BRANCH PIPING 4" NOM. OR LESS (CONNECTION SHOWN IN DASHED LINES) EXTEND VISUAL LEAKAGE EXAM THROUGH THE OUTERMOST NORMALLY CLOSED NUCLEAR CLASS VALVE, OR UNTIL TRANSITION TO INSTRUMENT TUBING, UNLESS OTHERWISE NOTED.

REFERENCES:

ISI - 228

GENERAL ELECTRIC DWGS

SK-X01-75C-02 SH 22 REV 0
SK-X01-75C-02 SH 29 REV 0
SK-X01-75C-02 SH 30 REV 0
SK-X01-75C-02 SH 31 REV 0
SK-X01-75C-02 SH 32 REV 0

QUALITY CLASS: 1	ASME CODE CLASS: 2
ENGR: K-McANDREW	DRAWN: K-McA	DATE: 12-23-82

THIS DRAWING IS INTENDED FOR USE IN PRESERVICE AND INSERVICE INSPECTIONS PROGRAMS ONLY.

PIPING SYSTEM	NOM DIA (IN)	SCH	NOM WALL THK	MATERIAL SPECIFICATION	MATL TYPE	CAL BLOCK NO
8"CRD(12)-3	8	80	0.500	SA 106 GR B	CS	XXXX
6"CRD(12)-3	6	80	0.432	SA 106 GR B	CS	XXXX

NO	DATE	REVISION	BY	CHKD	APVD
0	4/2/83	ISSUED FOR USE	[illegible]	[illegible]	[illegible]

WASHINGTON PUBLIC POWER
SUPPLY SYSTEM
RICHLAND, WASHINGTON 99352

WNP-2
WELD & COMPONENT
IDENTIFICATION DRAWING

TITLE:
CONTROL ROD DRIVE SYSTEM
SCRAM DISCHARGE HEADER A

DWG NO: CRD-201-1 REV 0

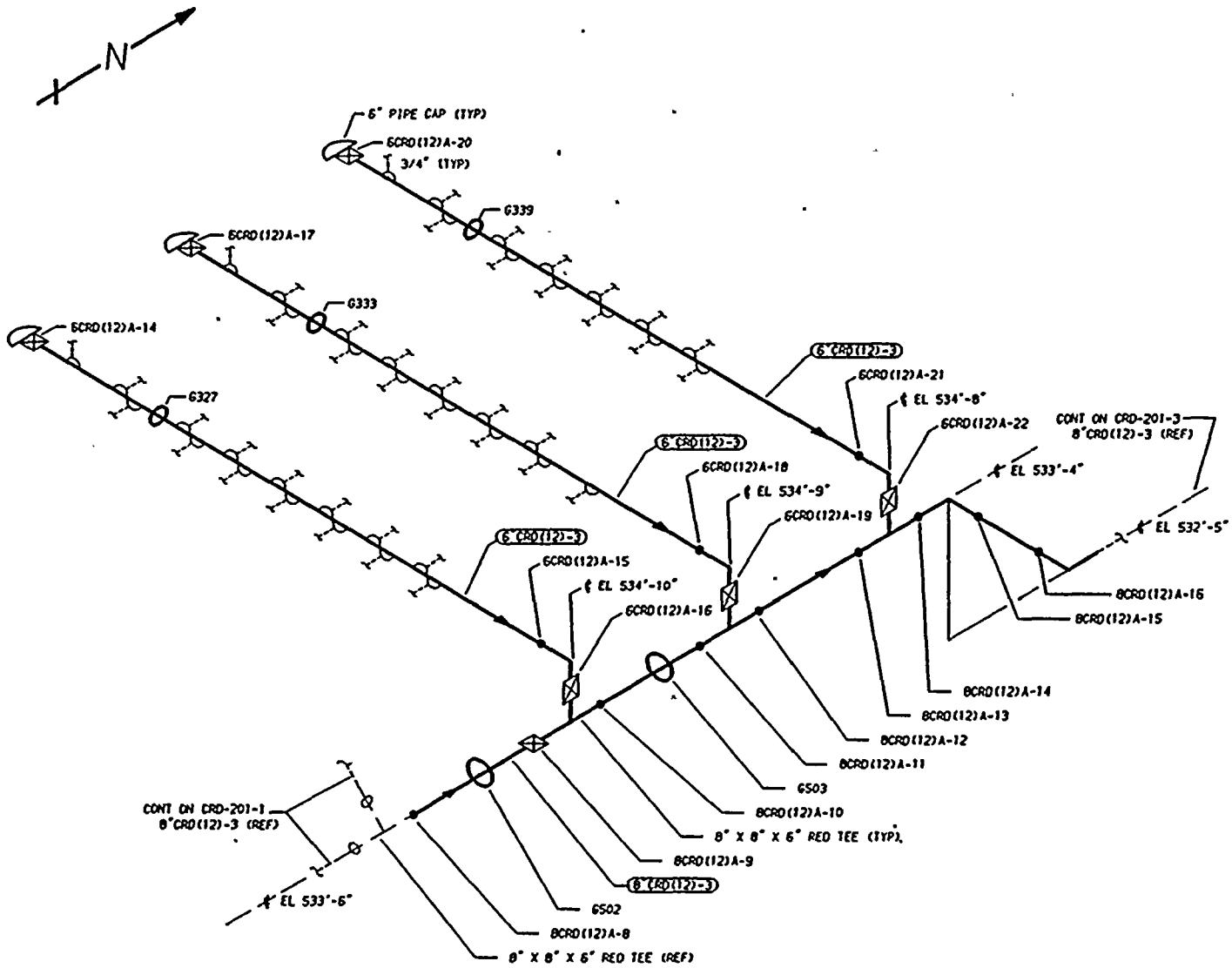

NOTES:

1. THIS DRAWING IDENTIFIES PIPING AND COMPONENTS SUBJECT TO A VISUAL EXAM FOR EVIDENCE OF LEAKAGE DURING SYSTEM HYDRO OR OPERABILITY TESTS. TESTS ARE TO BE CONDUCTED PER THE REQUIREMENTS OF ASME SECTION XI, PARAGRAPH IWA-5000.
2. FOR BRANCH PIPING 4" NOM. OR LESS (CONNECTION SHOWN IN DASHED LINES) EXTEND VISUAL LEAKAGE EXAM THROUGH THE OUTERMOST NORMALLY CLOSED NUCLEAR CLASS VALVE, OR UNTIL TRANSITION TO INSTRUMENT TUBING, UNLESS OTHERWISE NOTED.

REFERENCES:

ISI - 220

GENERAL ELECTRIC DWGS
SK-X01-75C-02 SH 22 REV 0
SK-X01-75C-02 SH 23 REV 0
SK-X01-75C-02 SH 33 REV 0
SK-X01-75C-02 SH 34 REV 0
SK-X01-75C-02 SH 35 REV 0

THIS DRAWING IS INTENDED FOR USE IN PRESERVICE AND INSERVICE INSPECTIONS PROGRAMS ONLY.

PIPING SYSTEM	NOM DIA (IN)	SCH	NOM WALL THK	MATERIAL SPECIFICATION	MATL TYPE	CAL BLOCK NO
8"CRD(12)-3	8	80	0.500	SA 106 GR B	CS	XXXX
6"CRD(12)-3	6	80	0.432	SA 106 GR B	CS	XXXX

NO	DATE	REVISION	BY	CHKD	APVD
0	1-17-83	ISSUED FOR USE	[illegible]	[illegible]	[illegible]

QUALITY CLASS: 1 | ASME CODE CLASS: 2

ENGR: K-McANDREW | DRAWN: K-McA | DATE: 12-23-82

WASHINGTON PUBLIC POWER
SUPPLY SYSTEM
RICHLAND, WASHINGTON 99352

WNP-2
WELD & COMPONENT
IDENTIFICATION DRAWING

TITLE:
CONTROL ROD DRIVE SYSTEM
SCRAM DISCHARGE HEADER A

DWG NO: CRD-201-2 | REV 0

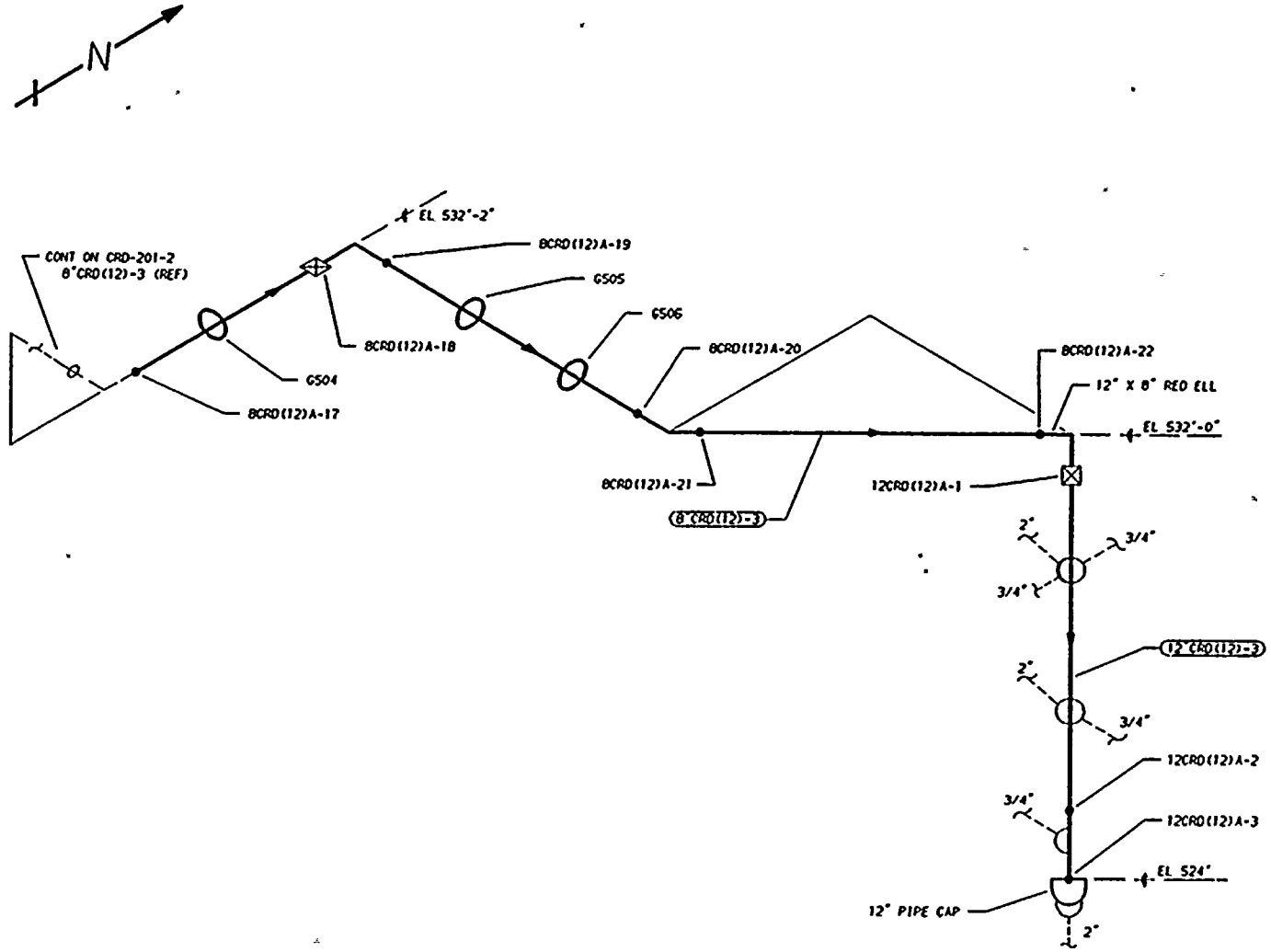

NOTES:

1. THIS DRAWING IDENTIFIES PIPING AND COMPONENTS SUBJECT TO A VISUAL EXAM FOR EVIDENCE OF LEAKAGE DURING SYSTEM HYDRO OR OPERABILITY TESTS. TESTS ARE TO BE CONDUCTED PER THE REQUIREMENTS OF ASME SECTION XI, PARAGRAPH IWA-5000.

2. FOR BRANCH PIPING 4" NOM. OR LESS (CONNECTION SHOWN IN DASHED LINES) EXTEND VISUAL LEAKAGE EXAM THROUGH THE OUTERMOST NORMALLY CLOSED NUCLEAR CLASS VALVE, OR UNTIL TRANSITION TO INSTRUMENT TUBING, UNLESS OTHERWISE NOTED.

REFERENCES:

ISI - 228

GENERAL ELECTRIC DWGS
SK-X01-75C-02 SH 23 REV 0
SK-X01-75C-02 SH 24 REV 0

BURNS AND ROE DWGS
CRD-1000-1 REV 0
CRD-1002-1 REV 0

QUALITY CLASS: 1	ASME CODE CLASS: 2
ENGR: K-McANDREW / DRAWN: K-McA	DATE: 12-26-82

THIS DRAWING IS INTENDED FOR USE IN PRESERVICE AND INSERVICE INSPECTIONS PROGRAMS ONLY.

PIPING SYSTEM	NOM DIA (IN)	SCH	NOM WALL THK	MATERIAL SPECIFICATION	MATL TYPE	CAL BLOCK NO
8"CRD(12)-3	8	80	0.500	SA 106 GR B	CS	NA
12"CRD(12)-3	12	80	0.688	SA 333 GR 6	CS	NA

NO	DATE	REVISION	BY	CHKD	APVD
0		ISSUED FOR USE			

WASHINGTON PUBLIC POWER
SUPPLY SYSTEM
RICHLAND, WASHINGTON 99352

WNP-2
WELD & COMPONENT
IDENTIFICATION DRAWING

TITLE:
CONTROL ROD DRIVE SYSTEM
SCRAM DISCHARGE HEADER A

DWG NO: CRD-201-3 REV 0

WNP-02
INTERVAL: PSI
PERIOD: NA
OUTAGE:
DRAWING NO. CRD-201

WASHINGTON PUBLIC POWER SUPPLY SYSTEM
PROGRAM PLAN AND SCHEDULE
SYSTEM OR COMPONENT: CRD(12)-3
DESCRIPTION: CRD SCRAM DISCHARGE

DATE 12/14/84

IDENT. NO.	DESCRIPTION	SECT. XI EXAM.	EXAM MTH.	PROCEDURE	CAL. BLOCK	INSERVICE REQ.	INSERVICE SCHEDULED OUTAGE	NOTES
6CRD(12)A-3	PIPE TO ELL	N/A	VOL	QCI 6-13	UT-36			SCRAM DISCHARGE VOLUME - 10% SAMPLE.
6CRD(12)A-4	ELL TO PIPE	N/A	VOL	QCI 6-13	UT-36			SCRAM DISCHARGE VOLUME - 10% SAMPLE.
6CRD(12)A-7	PIPE TO TEE	N/A	VOL	QCI 6-13	UT-36			SCRAM DISCHARGE VOLUME - 10% SAMPLE.
6CRD(12)A-12	PIPE TO ELL	N/A	VOL	QCI 6-13	UT-36			SCRAM DISCHARGE VOLUME - 10% SAMPLE.
6CRD(12)A-18	PIPE TO ELL	N/A	VOL	QCI 6-13	UT-36			SCRAM DISCHARGE VOLUME - 10% SAMPLE.
8CRD(12)A-3	ELL TO ELL	N/A	VOL	QCI 6-13	UT-35			SCRAM DISCHARGE VOLUMF - 10% SAMPLE.
8CRD(12)A-13	PIPE TO TEE	N/A	VOL	QCI 6-13	UT-35			SCRAM DISCHARGE VOLUME - 10% SAMPLE.
8CRD(12)A-15	ELL TO PIPE	N/A	VOL	QCI 6-13	UT-35			SCRAM DISCHARGE VOLUME - 10% SAMPLE.
8CRD(12)A-19	ELL TO PIPE	N/A	VOL	QCI 6-13	UT-35			SCRAM DISCHARGE VOLUME - 10% SAMPLE.
12CRD(12)A-3	PIPE TO CAP	N/A	VOL	QCI 6-13	UT-34			SCRAM DISCHARGE VOLUME - 10% SAMPLE.
CRD-PB-201	CRD PRES BNDRY	N/A	VT-2	N/A				SEE NOTES #6 & #7.

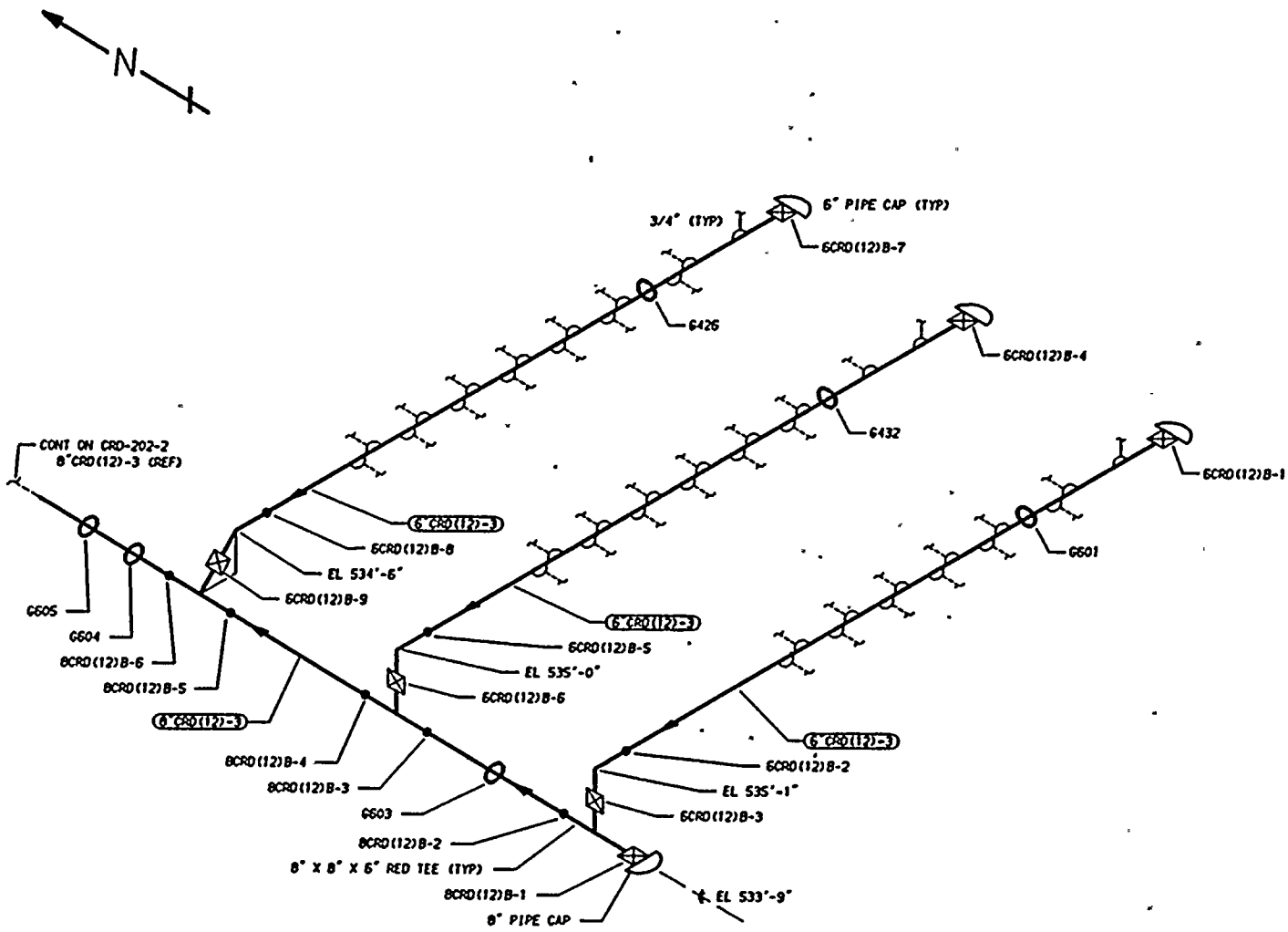

NOTES:

1. THIS DRAWING IDENTIFIES PIPING AND COMPONENTS SUBJECT TO A VISUAL EXAM FOR EVIDENCE OF LEAKAGE DURING SYSTEM HYDRO OR OPERABILITY TESTS. TESTS ARE TO BE CONDUCTED PER THE REQUIREMENTS OF ASME SECTION XI, PARAGRAPH IWA-5000.
2. FOR BRANCH PIPING 4" NOM. OR LESS (CONNECTION SHOWN IN DASHED LINES) EXTEND VISUAL LEAKAGE EXAM THROUGH THE OUTERMOST NORMALLY CLOSED NUCLEAR CLASS VALVE, OR UNTIL TRANSITION TO INSTRUMENT TUBING, UNLESS OTHERWISE NOTED.

REFERENCES:

151 - 220

GENERAL ELECTRIC DWGS
SK-X01-75C-02 SH 28 REV 0
SK-X01-75C-02 SH 42 REV 0
SK-X01-75C-02 SH 41 REV 0
SK-X01-75C-02 SH 40 REV 0

QUALITY CLASS: 1	ASME CODE CLASS: 2	
ENGR: K-McANDREW	DRAWN: K-McA	DATE: 12-26-82

THIS DRAWING IS INTENDED FOR USE IN PRESERVICE AND INSERVICE INSPECTIONS PROGRAMS ONLY.

WASHINGTON PUBLIC POWER
SUPPLY SYSTEM
RICHLAND, WASHINGTON 99352

PIPING SYSTEM	NOM DIA (IN)	SCH	NOM WALL THK	MATERIAL SPECIFICATION	MATL TYPE	CAL BLOCK NO
8"CRD(12)-3	8	80	0.500	SA 106 GR B	CS	XXXX
6"CRD(12)-3	6	80	0.432	SA 106 GR B	CS	XXXX

WNP-2
WELD & COMPONENT
IDENTIFICATION DRAWING

TITLE:
CONTROL ROD DRIVE SYSTEM
SCRAM DISCHARGE HEADER B

DWG NO: CRD-202-1 REV 0

NO	DATE	REVISION	BY	CHKD	APVD
0	1-12-83	ISSUED FOR USE			

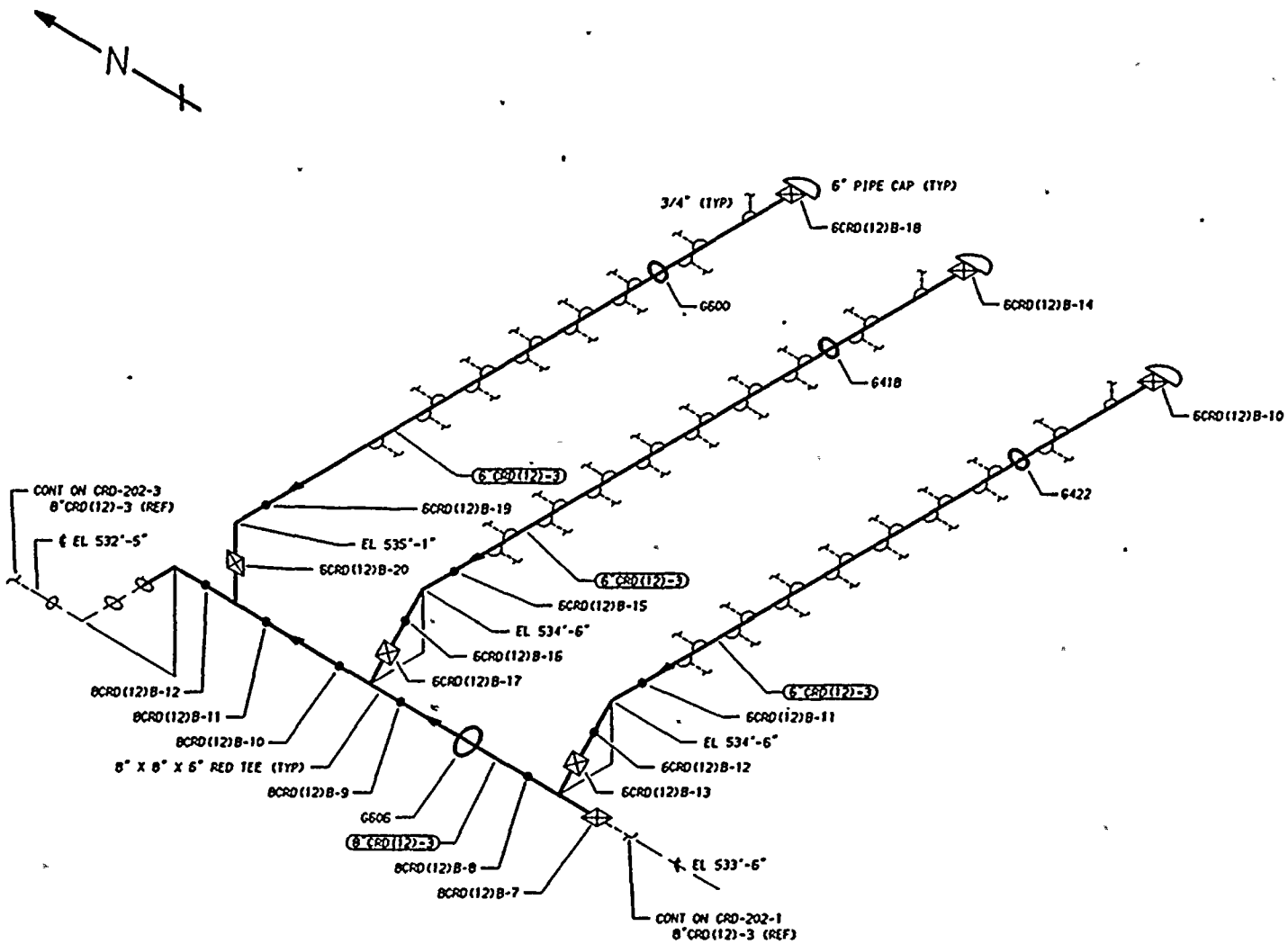

NOTES:

1. THIS DRAWING IDENTIFIES PIPING AND COMPONENTS SUBJECT TO A VISUAL EXAM FOR EVIDENCE OF LEAKAGE DURING SYSTEM HYDRO OR OPERABILITY TESTS. TESTS ARE TO BE CONDUCTED PER THE REQUIREMENTS OF ASME SECTION XI, PARAGRAPH IWA-5000.

2. FOR BRANCH PIPING 4" NOM. OR LESS (CONNECTION SHOWN IN DASHED LINES) EXTEND VISUAL LEAKAGE EXAM THROUGH THE OUTERMOST NORMALLY CLOSED NUCLEAR CLASS VALVE, OR UNTIL TRANSITION TO INSTRUMENT TUBING, UNLESS OTHERWISE NOTED.

REFERENCES:

ISI - 228

GENERAL ELECTRIC DWGS
SK-X01-75C-02 SH 27 REV 0
SK-X01-75C-02 SH 39 REV 0
SK-X01-75C-02 SH 38 REV 0
SK-X01-75C-02 SH 37 REV 0

QUALITY CLASS: 1	ASME CODE CLASS: 2
ENGR: K-McANDREW	DRAWN: K-McA	DATE: 12-26-82

THIS DRAWING IS INTENDED FOR USE IN PRESERVICE AND INSERVICE INSPECTIONS PROGRAMS ONLY.

WASHINGTON PUBLIC POWER
SUPPLY SYSTEM
RICHLAND, WASHINGTON 99352

PIPING SYSTEM	NOM DIA (IN)	SCH	NOM WALL THK	MATERIAL SPECIFICATION	MATL TYPE	CAL BLOCK NO
8"CRD(12)-3	8	80	0.500	SA 106 GR B	CS	XXXX
6"CRD(12)-3	6	80	0.432	SA 106 GR B	CS	XXXX

WNP-2
WELD & COMPONENT
IDENTIFICATION DRAWING

TITLE:
CONTROL ROD DRIVE SYSTEM
SCRAM DISCHARGE HEADER B

DWG NO: CRD-202-2 REV 0

NO	DATE	REVISION	BY	CHKD	APVD
0	1/7/83	ISSUED FOR USE			

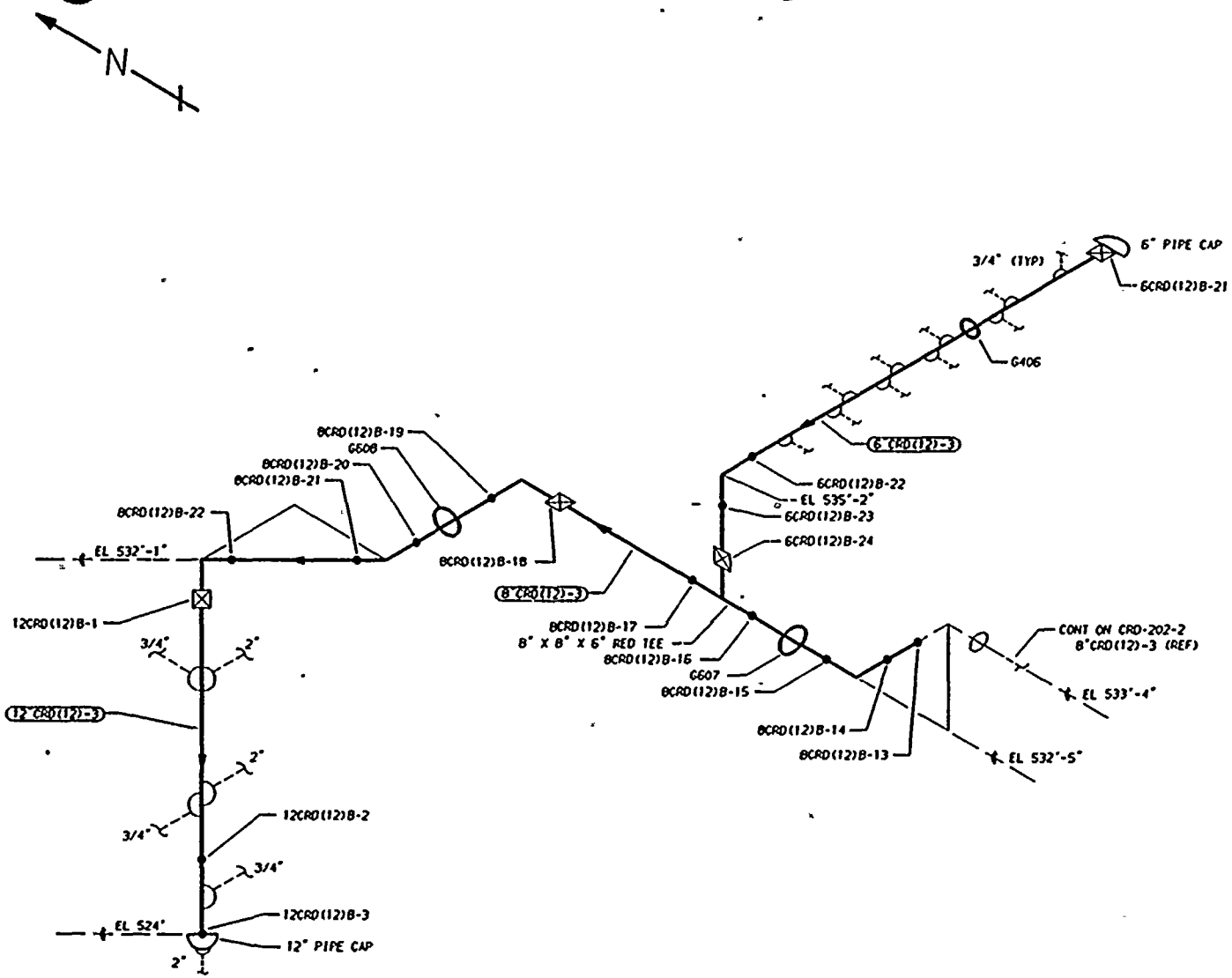

NOTES:

1. THIS DRAWING IDENTIFIES PIPING AND COMPONENTS SUBJECT TO A VISUAL EXAM FOR EVIDENCE OF LEAKAGE DURING SYSTEM HYDRO OR OPERABILITY TESTS. TESTS ARE TO BE CONDUCTED PER THE REQUIREMENTS OF ASME SECTION XI, PARAGRAPH IWA-5000.
2. FOR BRANCH PIPING 4" NOM. OR LESS (CONNECTION SHOWN IN DASHED LINES) EXTEND VISUAL LEAKAGE EXAM THROUGH THE OUTERMOST NORMALLY CLOSED NUCLEAR CLASS VALVE, OR UNTIL TRANSITION TO INSTRUMENT TUBING, UNLESS OTHERWISE NOTED.

REFERENCES:

151 - 228

GENERAL ELECTRIC DWGS
SK-X01-7SC-02 SH 27 REV 0
SK-X01-7SC-02 SH 36 REV 0
SK-X01-7SC-02 SH 26 REV 0
SK-X01-7SC-02 SH 25 REV 0

BURNS AND ROE DWGS
CRD-1001-1 REV 0
CRD-1002-1 REV 0

THIS DRAWING IS INTENDED FOR USE IN PRESERVICE AND INSERVICE INSPECTIONS PROGRAMS ONLY.

PIPING SYSTEM	NOM DIA (IN)	SCH	NOM WALL THK	MATERIAL SPECIFICATION	MATL TYPE	CAL BLOCK NO
8"CRD(12)-3	8	80	0.500	SA 106 GR B	CS	NA
6"CRD(12)-3	6	80	0.432	SA 106 GR B	CS	NA
12"CRD(12)-3	12	80	0.688	SA 333 GR 6	CS	NA

NO	DATE	REVISION	BY	CHKD	APVD
0	1-21-83	ISSUED FOR USE	[illegible]	[illegible]	[illegible]

QUALITY CLASS: 1 | ASME CODE CLASS: 2

ENGR: K-McANDREW | DRAWN: K-McA | DATE: 12-26-82

WASHINGTON PUBLIC POWER
SUPPLY SYSTEM
RICHLAND, WASHINGTON 99352

WNP-2
WELD & COMPONENT
IDENTIFICATION DRAWING

TITLE:
CONTROL ROD DRIVE SYSTEM
SCRAM DISCHARGE HEADER B

DWG NO: CRD-202-3 | REV 0

WNP-02
INTERVAL: PSI
PERIOD: NA
OUTAGE:
DRAWING NO. CRD-202

WASHINGTON PUBLIC POWER SUPPLY SYSTEM
PROGRAM PLAN AND SCHEDULE
SYSTEM OR COMPONENT: CRD(12)-3
DESCRIPTION: CRD SCRAM DISCHARGE

DATE 12/14/84

IDENT. NO.	DESCRIPTION	SECT. XI EXAM.	EXAM MTH.	PROCEDURE	CAL. BLOCK	INSERVICE REQ.	INSERVICE SCHEDULED OUTAGE	NOTES
CRD-PB-202	CRD PRES BNDRY	N/A	VT-2	N/A				SEE NOTES #6 & #7.

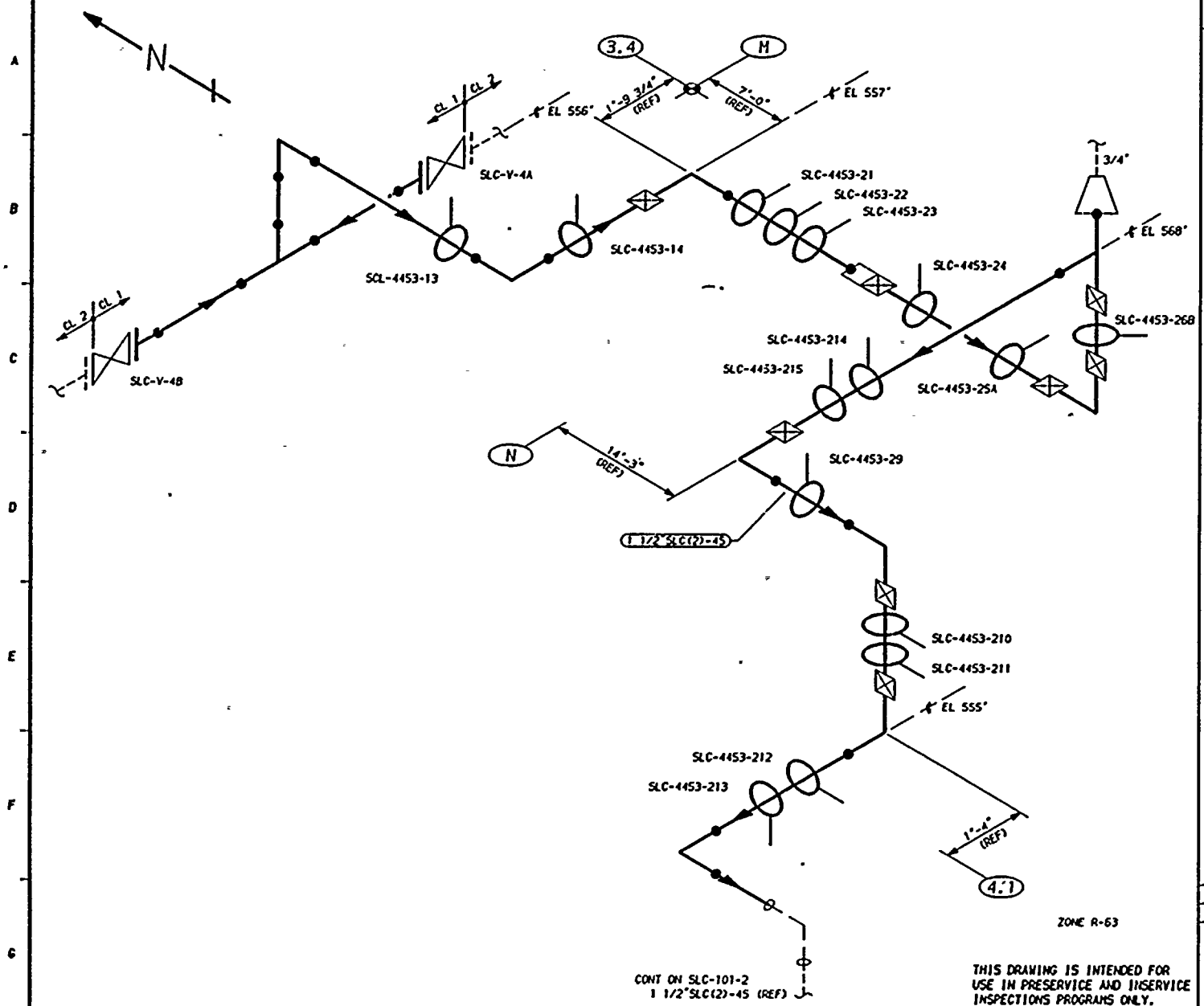

THIS DRAWING IS INTENDED FOR USE IN PRESERVICE AND INSERVICE INSPECTIONS PROGRAMS ONLY.

REFERENCES:

ISI - 222

WSH/BOCON/GERI DWG
SLC-4453-1 REV 6
SLC-4453-2 REV 8

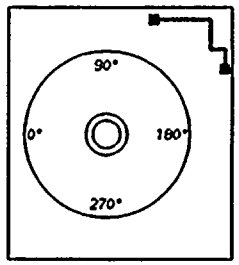

KEYPLAN

QUALITY CLASS: 1	ASME CODE CLASS: 1
ENGR: K-McANDREW	DRAWN: K-McA	DATE: 8-11-83

WASHINGTON PUBLIC POWER
SUPPLY SYSTEM
RICHLAND, WASHINGTON 99352

PIPING SYSTEM	NOM DIA (IN)	SCH	NOM WALL THK	MATERIAL SPECIFICATION	MATL TYPE	CAL BLOCK NO
1 1/2"SLC(2)-4S	1 1/2	80S	0.200	SA 312 TP 304	SS	NA

WNP-2
WELD & COMPONENT
IDENTIFICATION DIAGRAM

TITLE:
SCL-PUMP-1A & 1B DISCHARGE
THROUGH PENETRATION 13 TO RPV N11

DWG NO: SLC-101-1 REV 0

NO	DATE	REVISION	BY	CHKD	APVD
0	[illegible]	ISSUED FOR USE	[illegible]	[illegible]	[illegible]

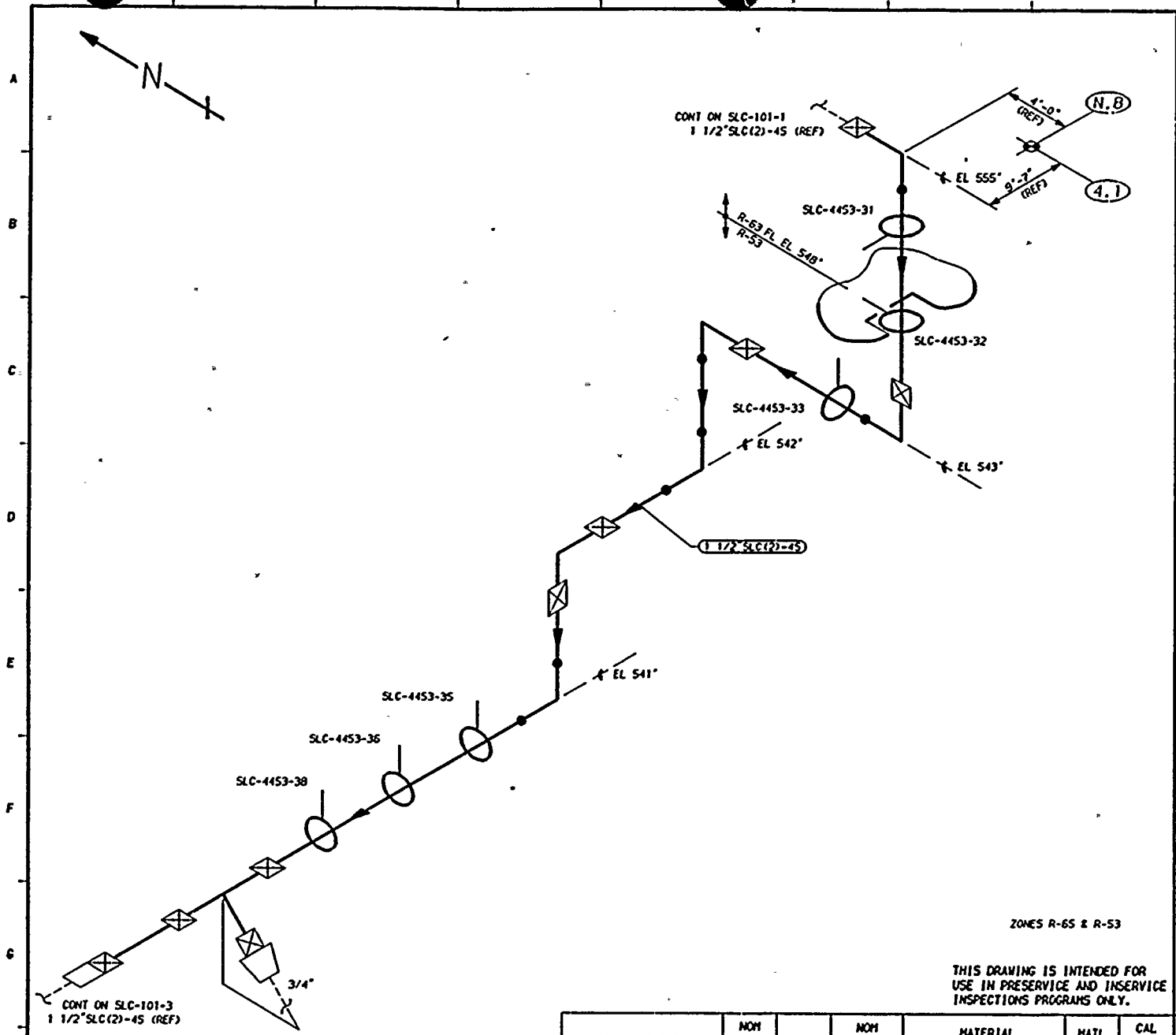

ZONES R-65 & R-53

THIS DRAWING IS INTENDED FOR USE IN PRESERVICE AND INSERVICE INSPECTIONS PROGRAMS ONLY.

REFERENCES:

151 - 222

WSH/BOCON/GERI DWG
SLC-4453-3 REV 9

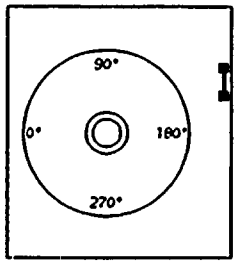

KEYPLAN

QUALITY CLASS: 1	ASME CODE CLASS: 1
ENGR: K-McANDREW	DRAWN: K-McA	DATE: 8-12-83

WASHINGTON PUBLIC POWER
SUPPLY SYSTEM
RICHLAND, WASHINGTON 99352

PIPING SYSTEM	NOM DIA (IN)	SCH	NOM WALL THK	MATERIAL SPECIFICATION	MATL TYPE	CAL BLOCK NO
1 1/2"SLC(2)-45	1 1/2	80S	0.200	SA 312 TP 304	SS	NA

WNP-2
WELD & COMPONENT
IDENTIFICATION DIAGRAM

TITLE:
SCL-PUMP-1A & 1B DISCHARGE
THROUGH PENETRATION 13 TO RPV N11

DWG NO: SLC-101-2 REV 0

NO	DATE	REVISION	BY	CHKD	APVD
0	12-8-83	ISSUED FOR USE	KMcA	DJP	TLB

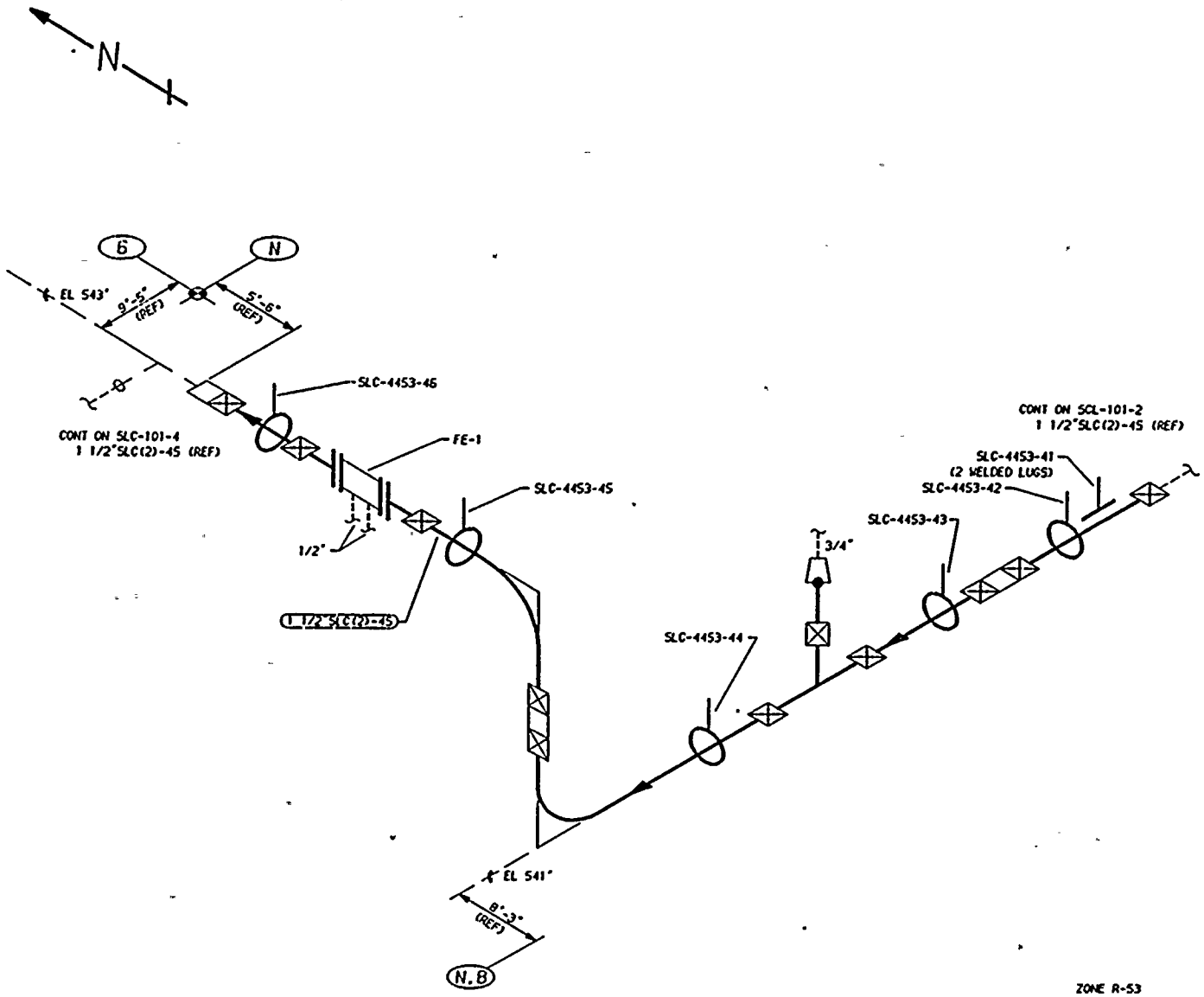

ZONE R-53

THIS DRAWING IS INTENDED FOR USE IN PRESERVICE AND INSERVICE INSPECTIONS PROGRAMS ONLY.

PIPING SYSTEM	NOM DIA (IN)	SCH	NOM WALL THK	MATERIAL SPECIFICATION	MATL TYPE	CAL BLOCK NO
1 1/2"SLC(2)-4S	1 1/2	80S	0.200	SA 312 TP 304	SS	NA

NO	DATE	REVISION	BY	CHKD	APVD
0	18.7.83	ISSUED FOR USE	[illegible]	DPC	THH

REFERENCES:

151 - 222

WSH/BOCON/GERI DWG SLC-4453-4 REV 9

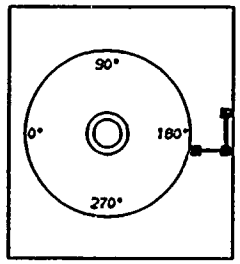

KEYPLAN

QUALITY CLASS: 1 | ASME CODE CLASS: 1

ENGR: K-McANDREW | DRAWN: K-McA | DATE: 8-15-83

WASHINGTON PUBLIC POWER
SUPPLY SYSTEM
RICHLAND, WASHINGTON 99352

WNP-2
WELD & COMPONENT
IDENTIFICATION DIAGRAM

TITLE:
SCL-PUMP-1A & 1B DISCHARGE
THROUGH PENETRATION 13 TO RPV N11

DWG NO: SLC-101-3 REV 0

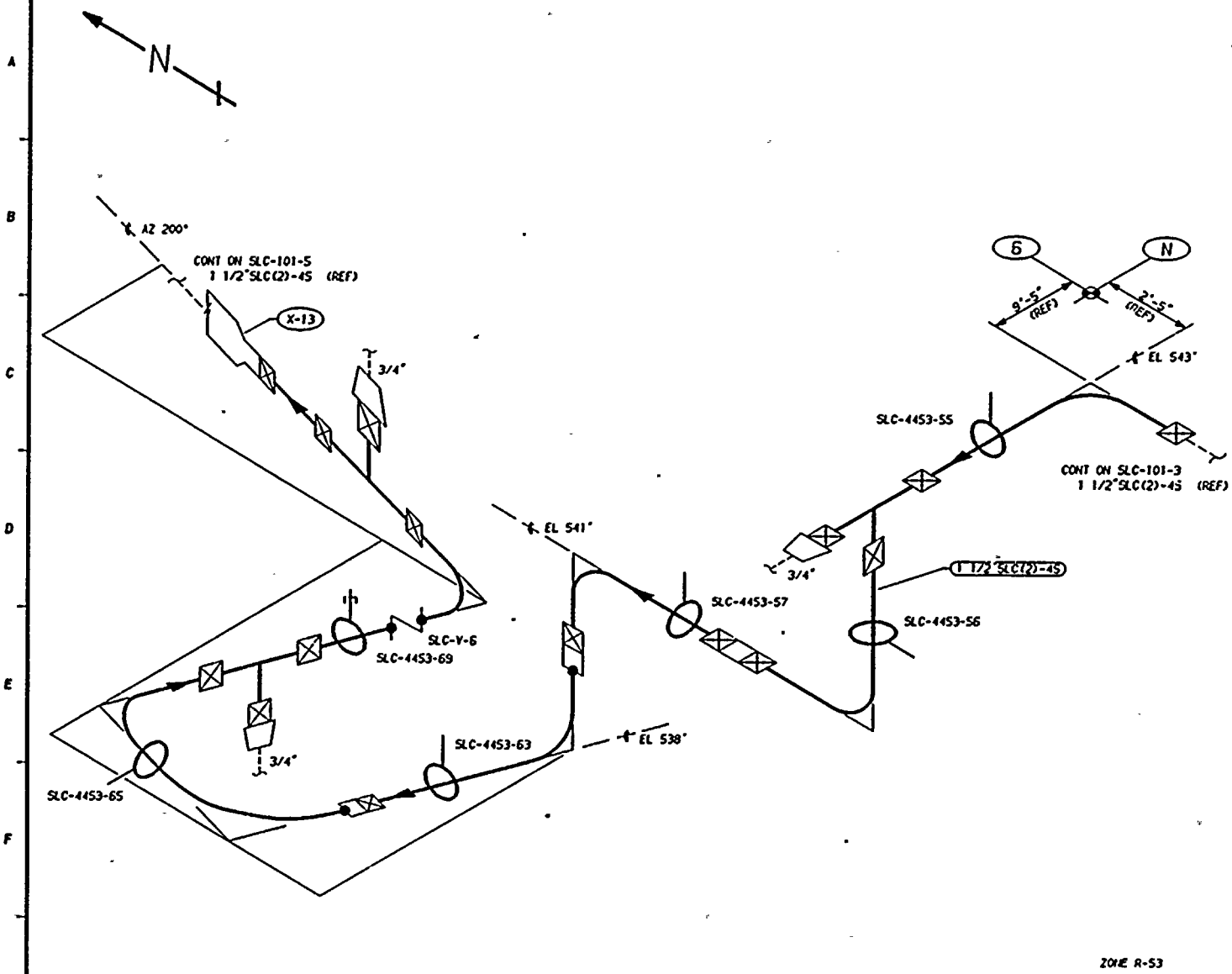

ZONE R-53

THIS DRAWING IS INTENDED FOR USE IN PRESERVICE AND INSERVICE INSPECTIONS PROGRAMS ONLY.

PIPING SYSTEM	NOM DIA (IN)	SCH	NOM WALL THK	MATERIAL SPECIFICATION	MATL TYPE	CAL BLOCK NO
1 1/2"SLC(2)-45	1 1/2	80S	0.200	SA 312 TP 304	SS	NA

NO	DATE	REVISION	BY	CHKD	APVD
0	12-7-83	ISSUED FOR USE		DPR	TFB

REFERENCES:

151 - 222

WSH/BOCON/GERI DWG
SLC-4453-5 REV 7
SLC-4453-6 REV 8

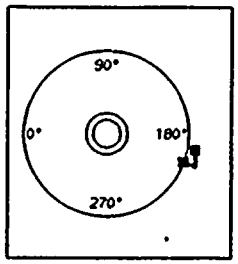

KEYPLAN

QUALITY CLASS: 1	ASME CODE CLASS: 1	
ENGR: K-McANDREW	DRAWN: K-McA	DATE: 8-15-83

WASHINGTON PUBLIC POWER
SUPPLY SYSTEM
RICHLAND, WASHINGTON 99352

WNP-2
WELD & COMPONENT
IDENTIFICATION DIAGRAM

TITLE:
SCL-PUMP-1A & 1B DISCHARGE
THROUGH PENETRATION 13 TO RPV N11

DWG NO: SLC-101-4 REV 0

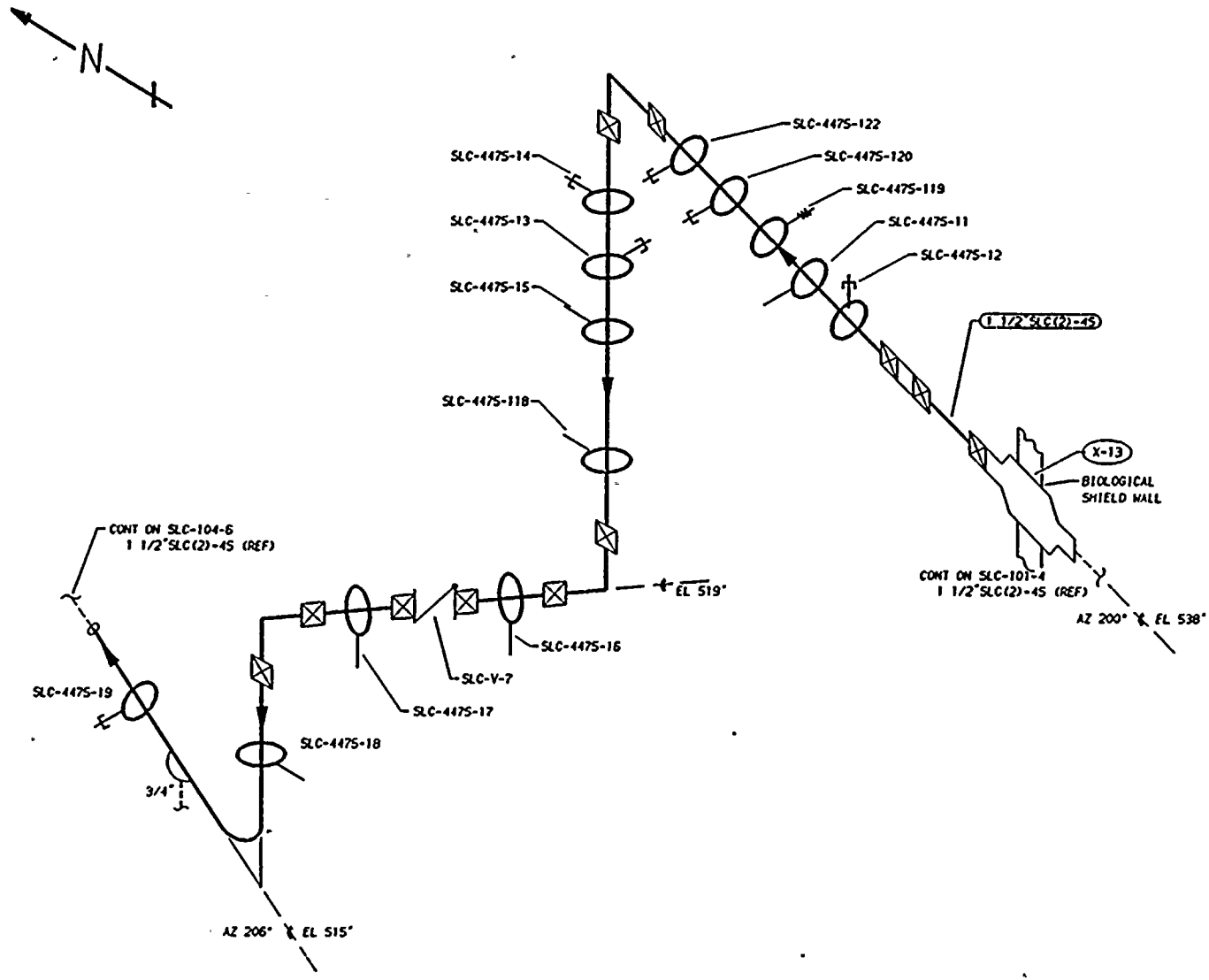

ZONE R-46

THIS DRAWING IS INTENDED FOR USE IN PRESERVICE AND INSERVICE INSPECTIONS PROGRAMS ONLY.

PIPING SYSTEM	NOM DIA (IND	SCH	NOM WALL THK	MATERIAL SPECIFICATION	MATL TYPE	CAL BLOCK NO
1 1/2"SLC(2)-45	1 1/2	80S	0.200	SA 312 TP 304	SS	NA

NO	DATE	REVISION	BY	CHKD	APVD
0	11-8-83	ISSUED FOR USE			

REFERENCES:

151 - 222

WSH/BOCON/GERI DWG SLC-4475-1 REV 13

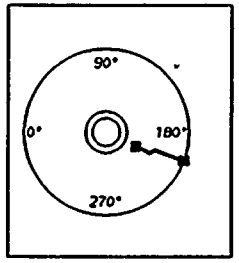

KEYPLAN

QUALITY CLASS: 1 | ASME CODE CLASS: 1

ENGR: K-McANDREW | DRAWN: K-McA | DATE: 8-16-83

WASHINGTON PUBLIC POWER SUPPLY SYSTEM
RICHLAND, WASHINGTON 99352

WNP-2
WELD & COMPONENT
IDENTIFICATION DIAGRAM

TITLE:
SCL-PUMP-1A & 1B DISCHARGE THROUGH PENETRATION 13 TO RPV N11

DWG NO: SLC-101-5 | REV 0

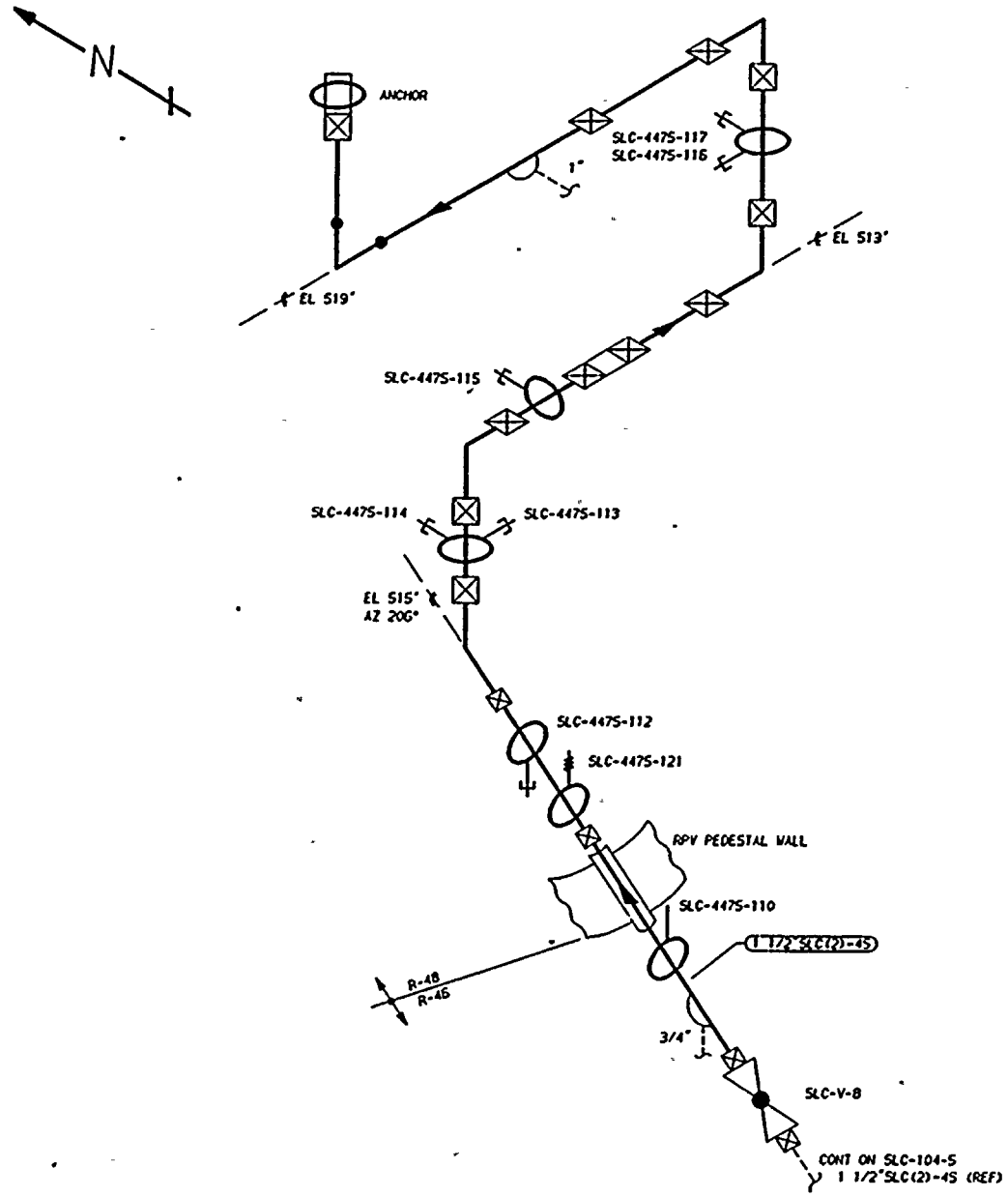

ZONES R-46 & R-48

THIS DRAWING IS INTENDED FOR USE IN PRESERVICE AND INSERVICE INSPECTIONS PROGRAMS ONLY.

REFERENCES:

ISI - 222

WSH/BOCON/GERI DWG
SLC-4475-1 REV 13

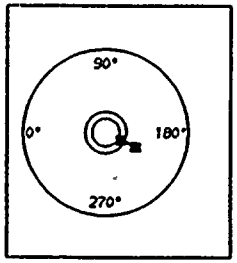

KEYPLAN

QUALITY CLASS: 1	ASME CODE CLASS: 1	
ENGR: K-McANDREW	DRAWN: K-McA	DATE: 8-16-83

WASHINGTON PUBLIC POWER
SUPPLY SYSTEM
RICHLAND, WASHINGTON 99352

WNP-2
WELD & COMPONENT
IDENTIFICATION DIAGRAM

TITLE:
SCL-PUMP-1A & 1B DISCHARGE
THROUGH PENETRATION 13 TO RPV N11

DWG NO: SLC-101-6 REV 0

PIPING SYSTEM	NOM DIA (IN)	SCH	NOM WALL THK	MATERIAL SPECIFICATION	MATL TYPE	CAL BLOCK NO
1 1/2"SLC(2)-4S	1 1/2	80S	0.200	SA 312 TP 304	SS	NA

NO	DATE	REVISION	BY	CHKD	APVD
0	11-2-83	ISSUED FOR USE	KLLA	DOR	TRB

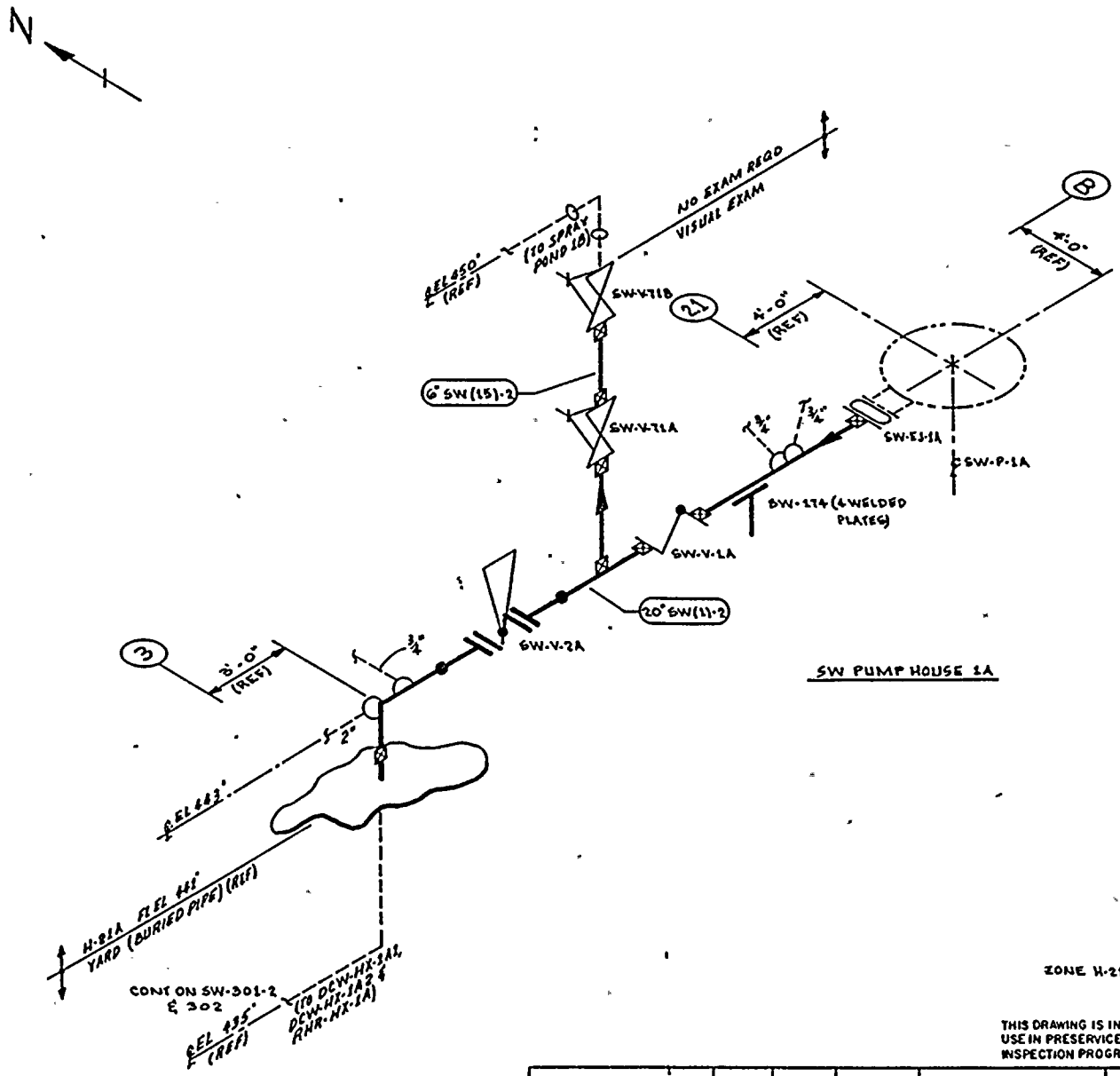

THIS DRAWING IS INTENDED FOR USE IN PRESERVICE AND INSERVICE INSPECTION PROGRAMS ONLY.

NOTES:

1. THIS DRAWING IDENTIFIES PIPING & COMPONENTS SUBJECT ONLY TO A VISUAL EXAM FOR (1) EVIDENCE OF LEAKAGE DURING SYSTEM PRESSURE OR OPERABILITY TESTS; (2) PRESSURE DECAY TESTS OF BURIED PIPING; & (3) LOSS OF SUPPORT CAPABILITY OR INADEQUATE RESTRAINT FOR SUPPORTS & HANGERS ON PIPING EXCEEDING 4" NOM. TESTS SHALL BE CONDUCTED PER ASME SECTION XI, ARTICLES IWA-5000 & IWD-2000.
2. FOR BRANCH PIPING 4" NOM OR LESS (CONN SHOWN IN DASHED LINES) EXTEND VISUAL LEAKAGE EXAM THROUGH THE OUTERMOST NORMALLY CLOSED NUCLEAR CLASS VALVE, OR UNTIL TRANSITION TO INSTRUMENT TUBING, UNLESS OTHERWISE NOTED.

REFERENCES:

BOVEE & CRAIL ISOMETRICS.

SW-250-1.3	REV 6
SW-291-1.6	REV 2
SW-250-1.3H	REV 0
SW-291-1.6H	REV 0

PIPING SYSTEM	NOM DIA (IN)	SCH	NOM WALL THK	MATERIAL SPECIFICATION	MATL TYPE	CAL BLOCK NO
20" SW(1)-2	20	STD	0.375	SA 106 GR B	CS	NA
6" SW(15)-2	6	STD	0.280	SA 106 GR B	CS	NA
6" SW(15)-2	6	160	0.719	SA 106 GR B	CS	NA

NO	DATE	REVISION	BY	CHKD	APPVD
0	11-5-80	ISSUED FOR USE	[illegible]	[illegible]	[illegible]

QUALITY CLASS: 1 | ASME CODE CLASS: 3

ENGR: G.A. KUGLER | DRAWN: [illegible] | DATE: 10-20-78

WASHINGTON PUBLIC POWER SUPPLY SYSTEM
RICHLAND WASHINGTON 99352

WNP-2
WELD & COMPONENT IDENTIFICATION DIAGRAM

TITLE: SW LOOP A SUPPLY
SW-P-1A DISCHARGE TO RHR-HX-1A

DWG NO: SW-301-1 | REV 0

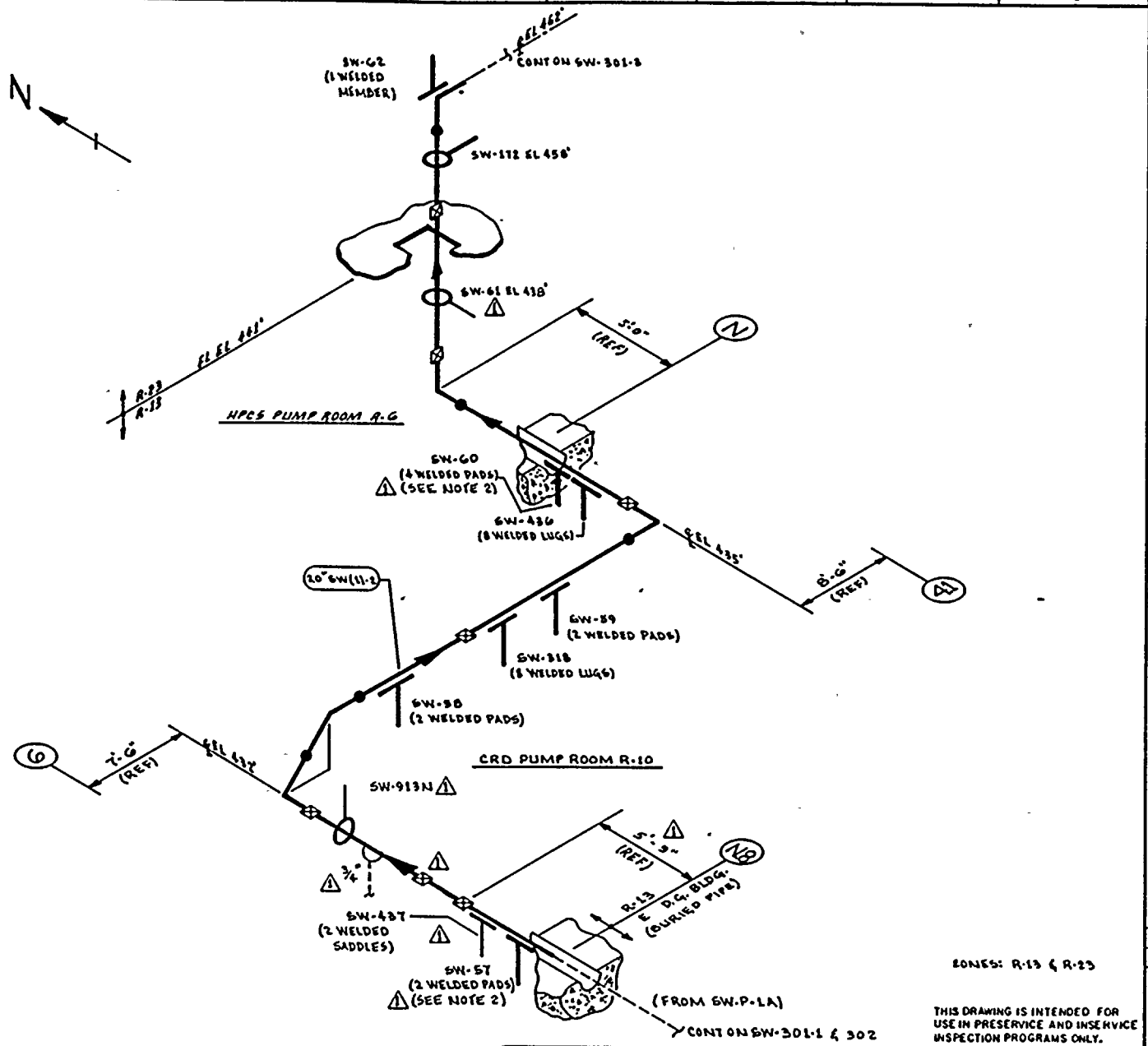

ZONES: R-13 & R-23

THIS DRAWING IS INTENDED FOR USE IN PRESERVICE AND INSERVICE INSPECTION PROGRAMS ONLY.

NOTES:

1. THIS DRAWING IDENTIFIES PIPING & COMPONENTS SUBJECT ONLY TO A VISUAL EXAM FOR. (1) EVIDENCE OF LEAKAGE DURING SYSTEM PRESSURE OR OPERABILITY TESTS; (2) PRESSURE DECAY TESTS OF BURIED PIPING; & (3) LOSS OF SUPPORT CAPABILITY OR INADEQUATE RESTRAINT FOR SUPPORTS & HANGERS ON PIPING EXCEEDING 4" NOM. TESTS SHALL BE CONDUCTED PER ASME SECTION XI, ARTICLES IWA-5000 & IWD-2000.
2. COMPONENT SUPPORT IS INACCESSIBLE DUE TO FOAM FILLED WATER TIGHT BOOT.

REFERENCES:

BOVEE & CRAIL ISOMETRICS

SW-250-25.30 REV 7
SW-250-21.26 REV 9

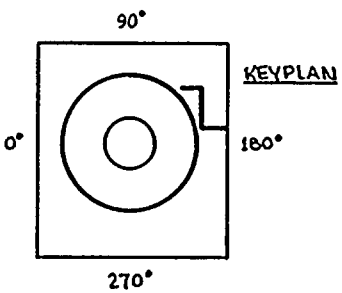

QUALITY CLASS: I	ASME CODE CLASS: 3	
ENGR GA KUGLER	DRAWN K.M.A.	DATE: 10-24-78

WASHINGTON PUBLIC POWER SUPPLY SYSTEM
RICHLAND WASHINGTON 99352

PIPING SYSTEM	NOM DIA (IN)	SCH	NOM WALL THK	MATERIAL SPECIFICATION	MATL TYPE	CAL BLOCK NO
20" SW(11-2	20	STD	0.375	SA 106 GR B	CS	NA

WNP-2
WELD & COMPONENT IDENTIFICATION DIAGRAM

TITLE:
SW LOOP A SUPPLY TO RHR-HX-1A

DWG NO: SW-301-2 REV 1

NO	DATE	REVISION	BY	CHKD	APPVD
1	1-27-84	REVISED AS NOTED ADDED KEYPLAN	K.M.A.	MAR	TTH
0	11-5-80	ISSUED FOR USE	K.M.A.	RAK	[illegible]

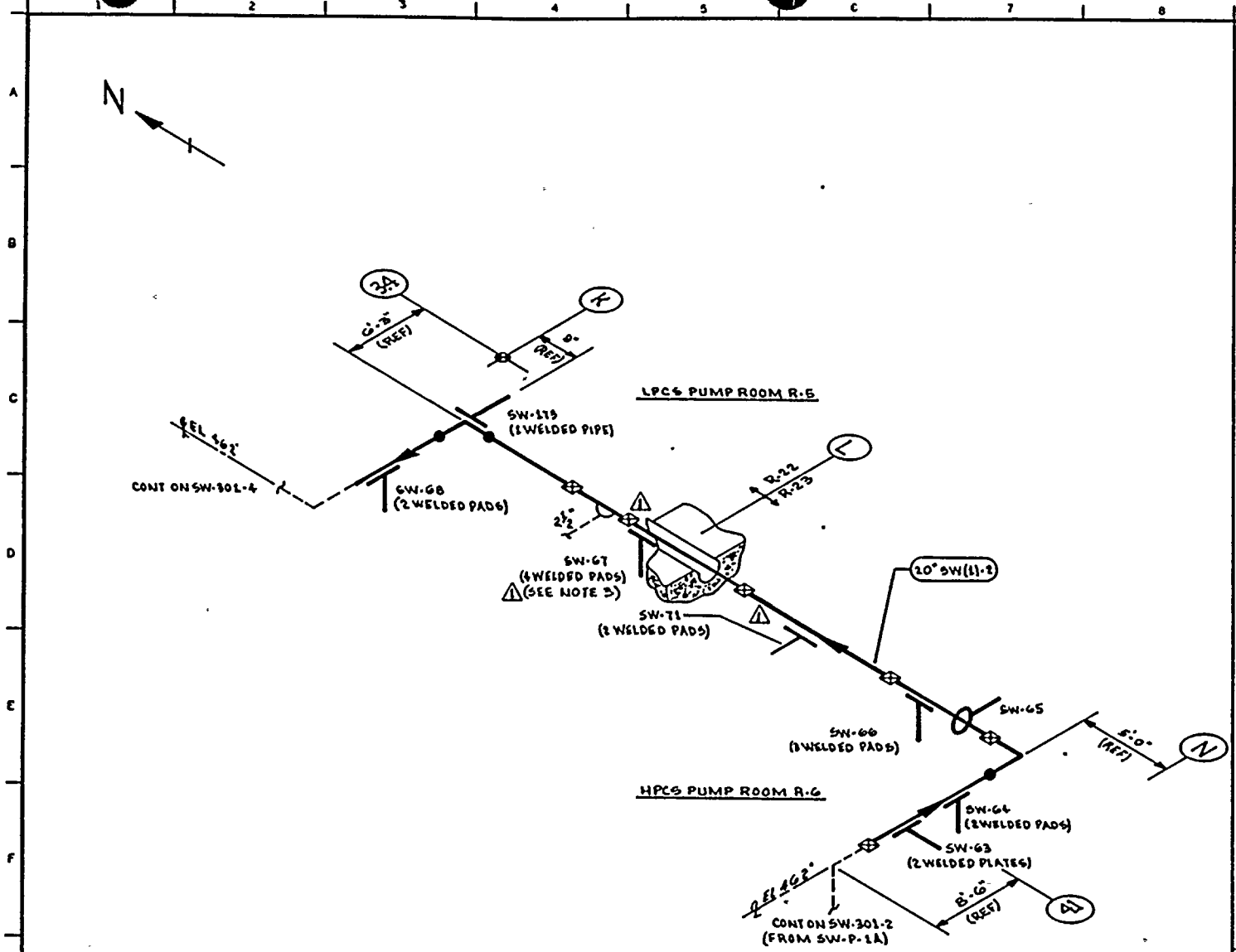

NOTES:

1. THIS DRAWING IDENTIFIES PIPING & COMPONENTS SUBJECT ONLY TO A VISUAL EXAM FOR (1) EVIDENCE OF LEAKAGE DURING SYSTEM PRESSURE OR OPERABILITY TESTS; (2) PRESSURE DECAY TESTS OF BURIED PIPING; & (3) LOSS OF SUPPORT CAPABILITY OR INADEQUATE RESTRAINT FOR SUPPORTS & HANGERS ON PIPING EXCEEDING 4" NOM. TESTS SHALL BE CONDUCTED PER ASME SECTION XI, ARTICLES IWA-5000 & IWD-2000.
2. FOR BRANCH PIPING 4" NOM OR LESS (CONN SHOWN IN DASHED LINES) EXTEND VISUAL LEAKAGE EXAM THROUGH THE OUTERMOST NORMALLY CLOSED NUCLEAR CLASS VALVE, OR UNTIL TRANSITION TO INSTRUMENT TUBING, UNLESS OTHERWISE NOTED.
3. COMPONENT SUPPORT IS INACCESSIBLE DUE TO FOAM FILLED WATER TIGHT BOOT.

REFERENCES:

BOVEE & CRAIL ISOMETRICS
SW-250-31.40 REV 10

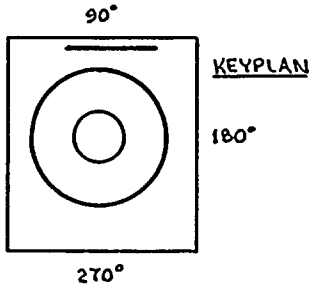

QUALITY CLASS: 1 | ASME CODE CLASS 3

ENGR: G.A. KUGLER | DRAWN: K.M.C.A. | DATE: 10-27-78

WASHINGTON PUBLIC POWER SUPPLY SYSTEM
RICHLAND WASHINGTON 99352

THIS DRAWING IS INTENDED FOR USE IN PRESERVICE AND INSERVICE INSPECTION PROGRAMS ONLY.

PIPING SYSTEM	NOM DIA (IN)	SCH	NOM WALL THK	MATERIAL SPECIFICATION	MATL TYPE	CAL BLOCK NO
20" SW(1)-2	20	STD	0.375	SA 106 GR B	CS	NA

WNP-2
WELD & COMPONENT
IDENTIFICATION DIAGRAM

TITLE: SW LOOP A SUPPLY TO RHR-HX-1A

DWG NO: SW-301-3 | REV 1

NO	DATE	REVISION	BY	CHKD	APPVD
1	5-27-86	REVISED AS NOTED ADDED KEYPLAN	K.M.C.A.	RAK	TEK
0	11-5-80	ISSUED FOR USE	GAK	RAK	TEK

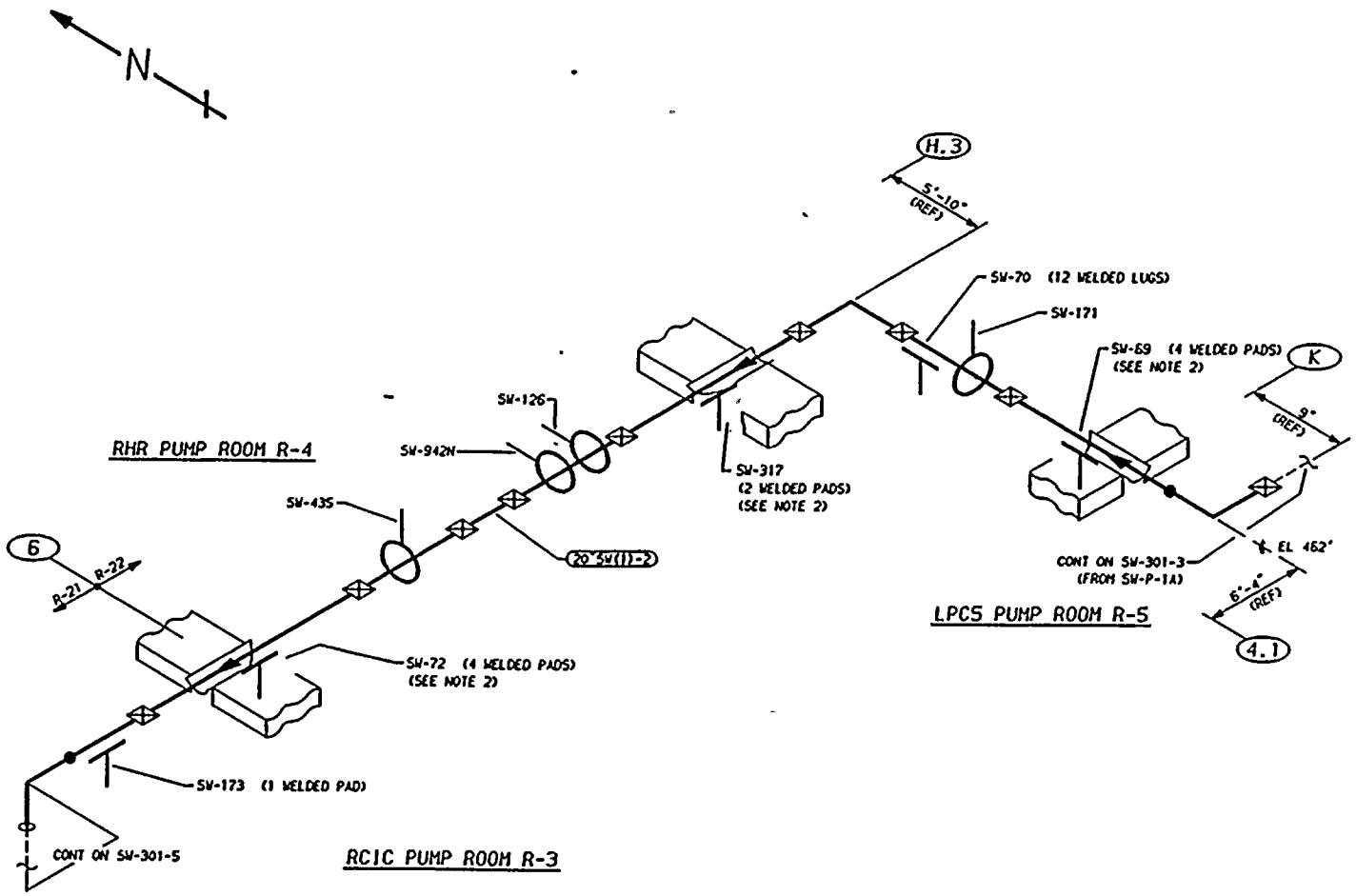

ZONES R-21 & R-22

THIS DRAWING IS INTENDED FOR USE IN PRESERVICE AND INSERVICE INSPECTIONS PROGRAMS ONLY.

NOTES:

1. THIS DRAWING IDENTIFIES PIPING AND COMPONENTS SUBJECT ONLY TO A VISUAL EXAM FOR (1) EVIDENCE OF LEAKAGE DURING SYSTEM PRESSURE OR OPERABILITY TESTS, (2) PRESSURE DECAY TESTS OF BURIED PIPING, AND (3) LOSS OF SUPPORT CAPABILITY OR INADEQUATE RESTRAINT FOR SUPPORTS AND HANGERS ON PIPING EXCEEDING 4" NOM. TESTS SHALL BE CONDUCTED PER ASME SECTION XI, ARTICLES IWA-5000 AND IWD-2000.

2 COMPONENT SUPPORT IS UNACCESSIBLE DUE TO FOAM FILLED WATER TIGHT BOOT.

REFERENCES:

151 - 224

BOVEE & CRAIL ISOMETRICS
SW-250-31.40 REV 10
SW-250-41.50 REV 9

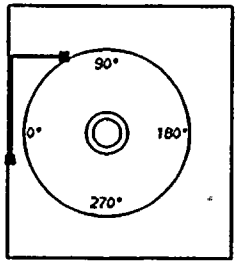

KEYPLAN

PIPING SYSTEM	NOM DIA (IN)	SCH	NOM WALL THK	MATERIAL SPECIFICATION	MATL TYPE	CAL BLOCK NO
20"SW(1)-2	20	STD	0.375	SA 106 GR B	CS	NA

NO	DATE	REVISION	BY	CHKD	APVD
1	1-21-84	GENERAL UP-DATE REDRAWN	[illegible]	DPR	TFH
0	11-5-80	ISSUED FOR USE	K-McA	GAK	TFH

QUALITY CLASS: 1	ASME CODE CLASS: 3	
ENGR: GA KUGLER	DRAWN: K-McA	DATE: 10-30-78

WASHINGTON PUBLIC POWER
SUPPLY SYSTEM
RICHLAND, WASHINGTON 99352

WNP-2
WELD & COMPONENT
IDENTIFICATION DIAGRAM

TITLE:
SW LOOP A SUPPLY TO RHR-HX-1A

DWG NO: SW-301-4 REV 1

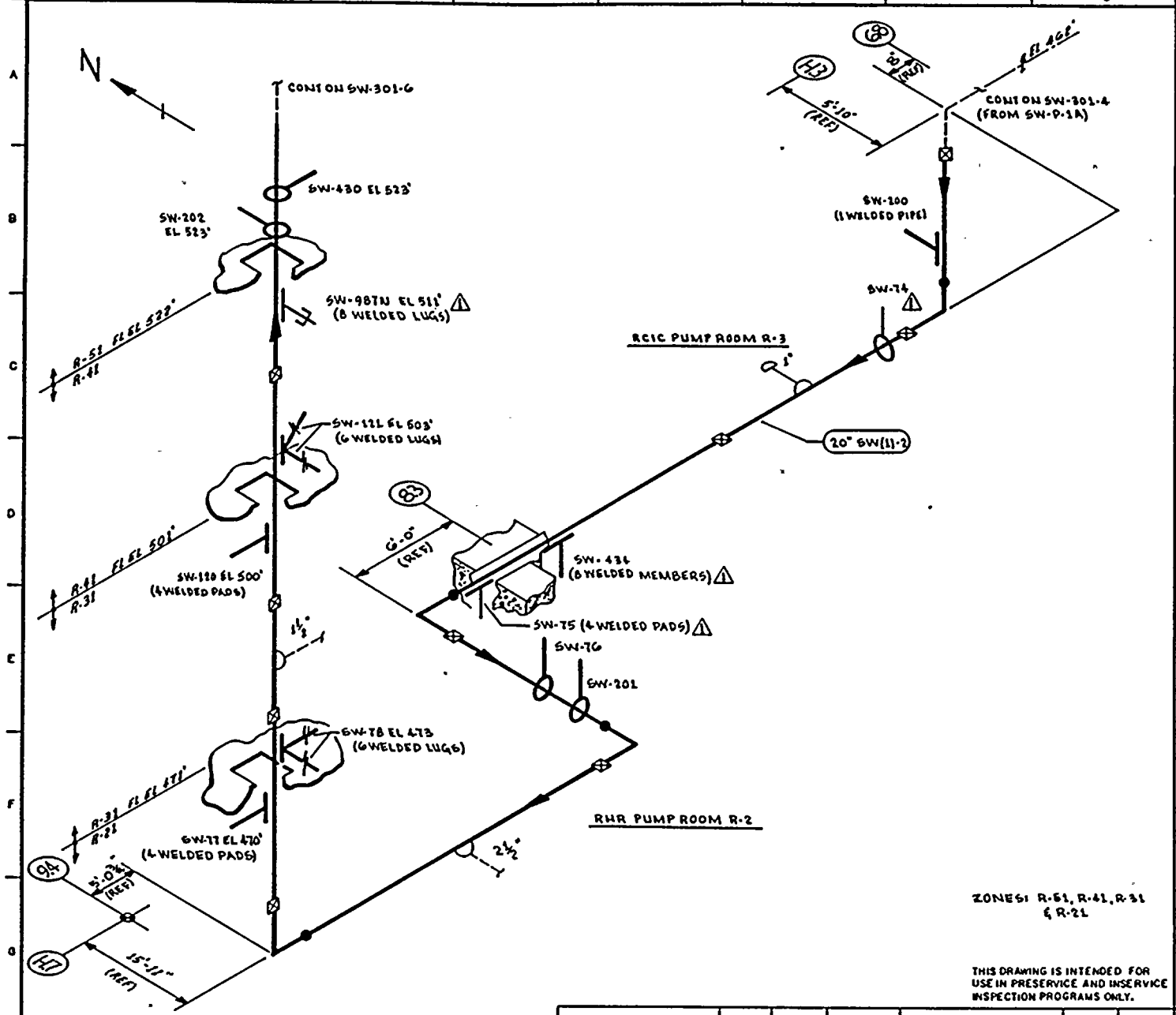

NOTES:

1. THIS DRAWING IDENTIFIES PIPING & COMPONENTS SUBJECT TO A VISUAL EXAM FOR (1) EVIDENCE OF LEAKAGE DURING SYSTEM PRESSURE OR OPERABILITY TESTS; (2) PRESSURE DECAY TESTS OF BURIED PIPING; & (3) LOSS OF SUPPORT CAPABILITY OR INADEQUATE RESTRAINT FOR SUPPORTS & HANGERS ON PIPING EXCEEDING 4" NOM. TESTS SHALL BE CONDUCTED PER ASME SECTION XI, ARTICLES IWA-5000 & IWD-2000.
2. FOR BRANCH PIPING 4" NOM OR LESS (CONN SHOWN IN DASHED LINES) EXTEND VISUAL LEAKAGE EXAM THROUGH THE OUTERMOST NORMALLY CLOSED NUCLEAR CLASS VALVE, OR UNTIL TRANSITION TO INSTRUMENT TUBING, UNLESS OTHERWISE NOTED.

REFERENCES:

BOVEE & CRAIL ISOMETRICS

SW-250-41.50 REV 9

KEYPLAN

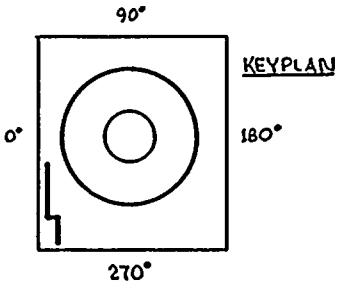

ZONES: R-51, R-41, R-31 & R-21

THIS DRAWING IS INTENDED FOR USE IN PRESERVICE AND INSERVICE INSPECTION PROGRAMS ONLY.

PIPING SYSTEM	NOM DIA (IN)	SCH	NOM WALL THK	MATERIAL SPECIFICATION	MATL TYPE	CAL BLOCK NO
20" SW(1)-2	20	STD	0.375	SA 106 GR B	CS	NA

NO	DATE	REVISION	BY	CHKD	APPVD
1	12-2-83	REVISED AS NOTED ADDED KEYPLAN	KLCA	[illegible]	TFA
0	11-5-80	ISSUED FOR USE	KMCA	BAK	[illegible]

QUALITY CLASS: 1 | ASME CODE CLASS: B

ENGR GA KUGLER | DRAWN: K.M.C.A. | DATE: 11-2-78

WASHINGTON PUBLIC POWER SUPPLY SYSTEM

RICHLAND WASHINGTON 99352

WNP-2

WELD & COMPONENT IDENTIFICATION DIAGRAM

TITLE:

SW LOOP A SUPPLY TO RHR-HX-1A

DWG NO: SW-301-5 | REV 1

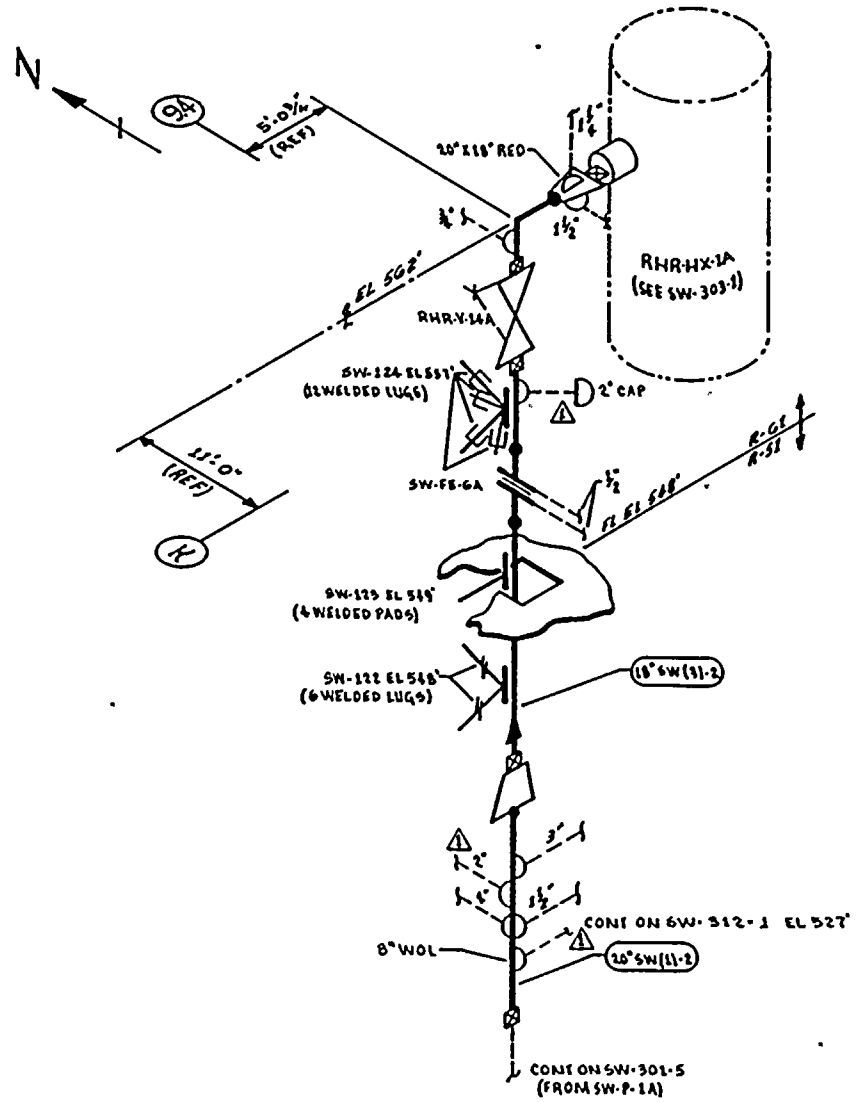

RHR-HX ROOM 1A

ZONES R-61 & R-51

THIS DRAWING IS INTENDED FOR USE IN PRESERVICE AND INSERVICE INSPECTION PROGRAMS ONLY.

NOTES:

1. THIS DRAWING IDENTIFIES PIPING & COMPONENTS SUBJECT ONLY TO A VISUAL EXAM FOR (1) EVIDENCE OF LEAKAGE DURING SYSTEM PRESSURE OR OPERABILTY TESTS; (2) PRESSURE DECAY TESTS OF BURIED PIPING; & (3) LOSS OF SUPPORT CAPABILITY OR INADEQUATE RESTRAINT FOR SUPPORTS & HANGERS ON PIPING EXCEEDING 4" NOM. TESTS SHALL BE CONDUCTED PER ASME SECTION XI, ARTICLES IWA-5000 & IWD-2000.
2. FOR BRANCH PIPING 4" NOM. OR LESS (CONN SHOWN IN DASHED LINES) EXTEND VISUAL LEAKAGE EXAM THROUGH THE OUTERMOST NORMALLY CLOSED NUCLEAR CLASS VALVE, OR UNTIL TRANSITION TO INSTRUMENT TUBING, UNLESS OTHERWISE NOTED.

REFERENCES:

BOVEE & CRAIL ISOMETRICS

SW-250-81 REV 9
SW-250-52.54 REV 8

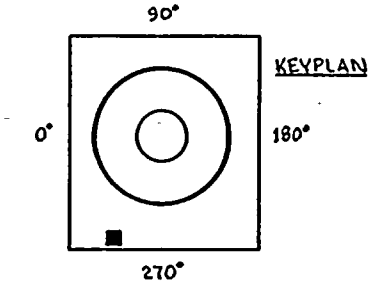

PIPING SYSTEM	NOM DIA (IN)	SCH	* NOM WALL THK	MATERIAL SPECIFICATION	MATL TYPE	CAL BLOCK NO
20" SW(1)-2	20	STD	0.375	SA 106 GR B	CS	NA
18" SW(3)-2	18	STD	0.375	SA 106 GR B	CS	NA

NO	DATE	REVISION	BY	CHKD	APPVD
1	12-6-84	REVISED AS NOTED ADDED KEYPLAN	KMcA	DR	TGK
0	11-5-80	ISSUED FOR USE	KMcA	UAK	TGK

QUALITY CLASS: 1 | ASME CODE CLASS: 3

ENGR GA KUGLER | DRAWN: K. McA | DATE: 11-3-78

WASHINGTON PUBLIC POWER SUPPLY SYSTEM
RICHLAND WASHINGTON 99352

WNP-2
WELD & COMPONENT IDENTIFICATION DIAGRAM

TITLE: SW LOOP A SUPPLY TO RHR-HX-1A

DWG NO: SW-302-6 | REV 1

WNP-02
INTERVAL: PSI
PERIOD: NA
OUTAGE:
DRAWING NO. SW-301

WASHINGTON PUBLIC POWER SUPPLY SYSTEM
PROGRAM PLAN AND SCHEDULE
SYSTEM OR COMPONENT: SW(1)-2
DESCRIPTION: SW LOOP A SUPPLY

DATE 12/14/84

IDENT. NO.	DESCRIPTION	SECT. XI EXAM.	EXAM MTH.	PROCEDURE	CAL. BLOCK	INSERVICE REQ.	INSERVICE SCHEDULED OUTAGE	NOTES
SW-174	BOX	N/A	VT-3	303/8.2.17				
SW-57	RIGID	N/A	VT-3	303/8.2.17				
SW-437	STRUT	N/A	VT-3	303/8.2.17				
SW-913N	STRUT	N/A	VT-3	303/8.2.17				
SW-58	BOX	N/A	VT-3	303/8.2.17				
SW-318	STRUT	N/A	VT-3	303/8.2.17				
SW-59	BOX	N/A	VT-3	303/8.2.17				
SW-436	STRUT	N/A	VT-3	303/8.2.17				
SW-60	RIGID	N/A	VT-3	303/8.2.17				
SW-61	STRUT	N/A	VT-3	303/8.2.17				
SW-172	STRUT	N/A	VT-3	303/8.2.17				
SW-62	STRUT	N/A	VT-3	303/8.2.17				
SW-63	BOX	N/A	VT-3	303/8.2.17				
SW-64	BOX	N/A	VT-3	303/8.2.17				
SW-65	STRUT	N/A	VT-3	303/8.2.17				
SW-66	BOX	N/A	VT-3	303/8.2.17				
SW-71	STRUT	N/A	VT-3	303/8.2.17				
SW-67	RIGID	N/A	VT-3	303/8.2.17				

WNP-02
INTERVAL: PSI
PERIOD: NA
OUTAGE:
DRAWING NO. SW-301

WASHINGTON PUBLIC POWER SUPPLY SYSTEM
PROGRAM PLAN AND SCHEDULE
SYSTEM OR COMPONENT: SW(1)-2
DESCRIPTION: SW LOOP A SUPPLY

DATE 12/14/84

IDENT. NO.	DESCRIPTION	SECT. XI EXAM.	EXAM MTH.	PROCEDURE	CAL. BLOCK	INSERVICE REQ.	SCHEDULED OUTAGE	NOTES
SW-173	STRUT	N/A	VT-3	303/8.2.17				
SW-68	BOX	N/A	VT-3	303/8.2.17				
SW-69	RIGID	N/A	VT-3	303/8.2.17				
SW-171	STRUT	N/A	VT-3	303/8.2.17				
SW-70	STRUT	N/A	VT-3	303/8.2.17				
SW-317	RIGID	N/A	VT-3	303/8.2.17				
SW-126	STRUT	N/A	VT-3	303/8.2.17				
SW-942N	STRUT	N/A	VT-3	303/8.2.17				
SW-435	BOX	N/A	VT-3	303/8.2.17				
SW-72	RIGID	N/A	VT-3	303/8.2.17				
SW-73	STRUT	N/A	VT-3	303/8.2.17				
SW-200	STRUT	N/A	VT-3	303/8.2.17				
SW-74	STRUT	N/A	VT-3	303/8.2.17				
SW-434	BOX	N/A	VT-3	303/8.2.17				
SW-75	RIGID	N/A	VT-3	303/8.2.17				
SW-76	STRUT	N/A	VT-3	303/8.2.17				
SW-201	STRUT	N/A	VT-3	303/8.2.17				
SW-77	BOX	N/A	VT-3	303/8.2.17				

WNP-02
INTERVAL: PSI
PERIOD: NA
OUTAGE:
DRAWING NO. SW-301

WASHINGTON PUBLIC POWER SUPPLY SYSTEM
PROGRAM PLAN AND SCHEDULE
SYSTEM OR COMPONENT: SW(1)-2
DESCRIPTION: SW LOOP A SUPPLY

DATE 12/14/84

IDENT. NO.	DESCRIPTION	SECT. XI EXAM.	EXAM MTH.	PROCEDURE	CAL. BLOCK	INSERVICE REQ.	INSERVICE SCHEDULED OUTAGE	NOTES
SW-78								
	SPRING (2)	N/A	VT-3	303/8.2.17				
			VT-4	303/8.2.17				
SW-120								
	BOX	N/A	VT-3	303/8.2.17				
SW-121								
	SPRING (2)	N/A	VT-3	303/8.2.17				
			VT-4	303/8.2.17				
SW-987N								
	PSA-3 SN(2)	N/A	VT-3	303/8.2.17				
			VT-4	303/8.2.17				
SW-202								
	STRUT	N/A	VT-3	303/8.2.17				
SW-430								
	STRUT	N/A	VT-3	303/8.2.17				
SW-122								
	SPRING (2)	N/A	VT-3	303/8.2.17				
			VT-4	303/8.2.17				
SW-123								
	RIGID	N/A	VT-3	303/8.2.17				
SW-124								
	PSA-35 SN(4)	N/A	VT-3	303/8.2.17				S/N
			VT-4	303/8.2.17				S/N
SW-PB-301								
	SW PRES BNDRY	N/A	VT-2	N/A				SEE NOTES #6 & #7.

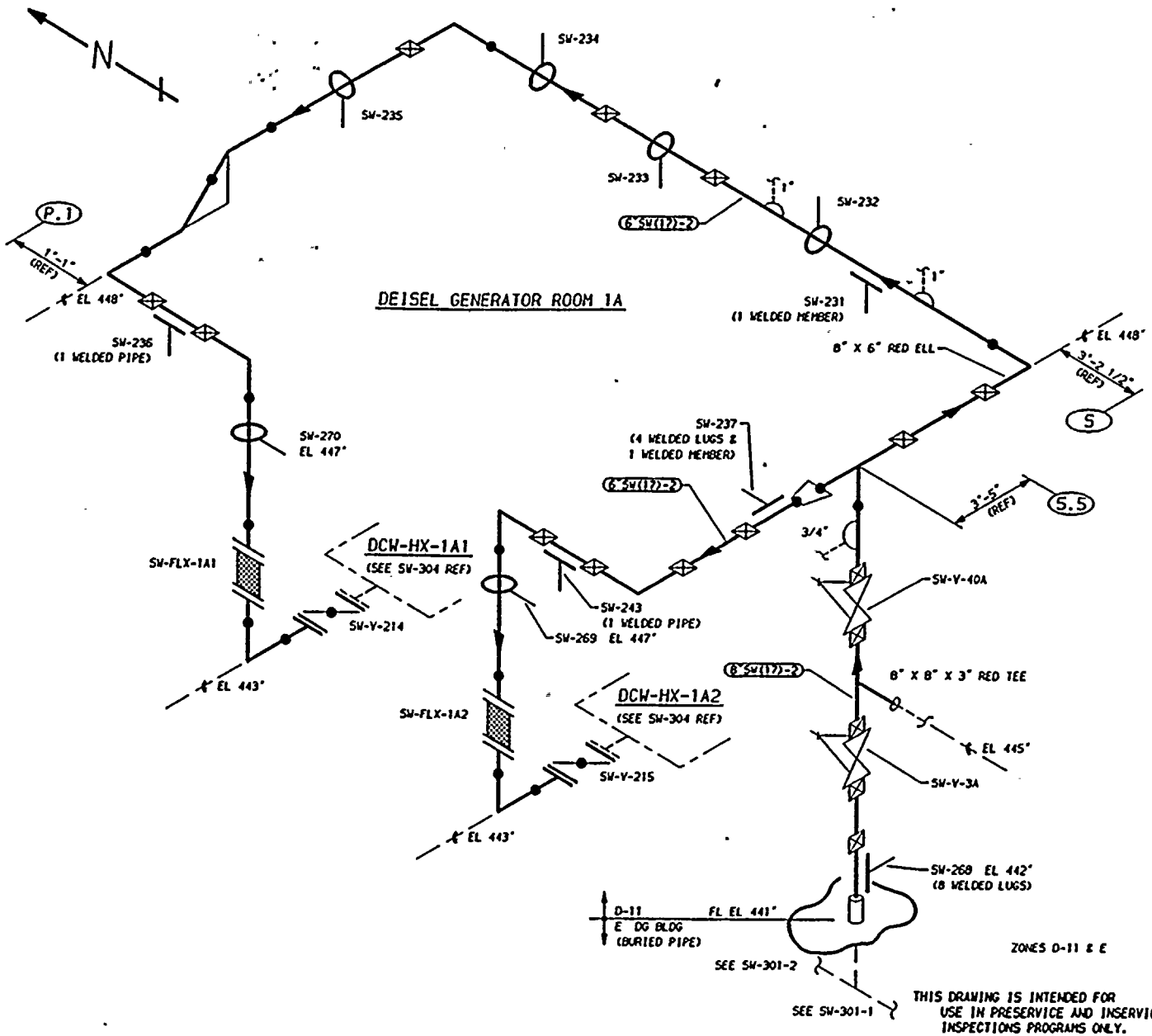

THIS DRAWING IS INTENDED FOR USE IN PRESERVICE AND INSERVICE INSPECTIONS PROGRAMS ONLY.

NOTES:

1. THIS DRAWING IDENTIFIES PIPING AND COMPONENTS SUBJECT ONLY TO A VISUAL EXAM FOR (1) EVIDENCE OF LEAKAGE DURING SYSTEM PRESSURE OR OPERABILITY TESTS; (2) PRESSURE DECAY TESTS OF BURIED PIPING; AND (3) LOSS OF SUPPORT CAPABILITY OR INADEQUATE RESTRAINT FOR SUPPORTS AND HANGERS ON PIPING EXCEEDING 4" NOM. TESTS SHALL BE CONDUCTED PER ASME SECTION XI, ARTICLES IWA-5000 AND IWD-2000.

2. FOR BRANCH PIPING 4" NOM. OR LESS (CONNECTION SHOWN IN DASHED LINES) EXTEND VISUAL LEAKAGE EXAM THROUGH THE OUTERMOST NORMALLY CLOSED NUCLEAR CLASS VALVE, OR UNTIL TRANSITION TO INSTRUMENT TUBING, UNLESS OTHERWISE NOTED.

REFERENCES:

ISI - 224

BOVEE & CRAIL ISOMETRICS
SW-250-21.24 REV 9
SW-300-1.3 REV 6
SW-300-4.9 REV 9

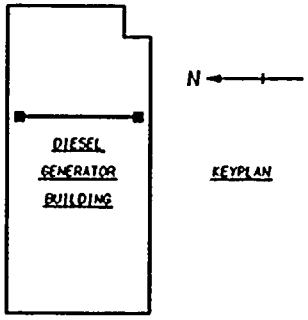

QUALITY CLASS: 1	ASME CODE CLASS: 3
ENGR: GA KUGLER	DRAWN: K-McA / DATE: 11-9-78

WASHINGTON PUBLIC POWER
SUPPLY SYSTEM
RICHLAND, WASHINGTON 99352

PIPING SYSTEM	NOM DIA (IN)	SCH	NOM WALL THK	MATERIAL SPECIFICATION	MATL TYPE	CAL BLOCK NO
8"SW(17)-2	8	STD	0.322	SA 106 GR B	CS	NA
6"SW(17)-2	6	STD	0.280	SA 106 GR B	CS	NA

NO	DATE	REVISION	BY	CHKD	APVD
1	1-27-84	GENERAL UP-DATE REDRAWN	K-McA	DPR	TPH
0	11-5-80	ISSUED FOR USE	K-McA	GAK	TPH

WNP-2
WELD & COMPONENT
IDENTIFICATION DIAGRAM

TITLE:
SW LOOP A SUPPLY TO DCW-HX-1A1 & 1A2

DWG NO: SW-302 REV 1

WNP-02
INTERVAL: PSI
PERIOD: NA
OUTAGE:
DRAWING NO. SW-302

WASHINGTON PUBLIC POWER SUPPLY SYSTEM
PROGRAM PLAN AND SCHEDULE
SYSTEM OR COMPONENT: SW(17)-2
DESCRIPTION: SW LOOP A SUPPLY

DATE 12/14/84

IDENT. NO.	DESCRIPTION	SECT. XI EXAM.	EXAM MTH.	PROCEDURE	CAL. BLOCK	INSERVICE REQ.	INSERVICE SCHEDULED OUTAGE	NOTES
SW-268	BOX	N/A	VT-3	303/8.2.17				
SW-231	BOX	N/A	VT-3	303/8.2.17				
SW-232	BOX	N/A	VT-3	303/8.2.17				
SW-233	BOX	N/A	VT-3	303/8.2.17				
SW-234	BOX	N/A	VT-3	303/8.2.17				
SW-235	BOX	N/A	VT-3	303/8.2.17				
SW-236	BOX	N/A	VT-3	303/8.2.17				
SW-270	BOX	N/A	VT-3	303/8.2.17				
SW-237	BOX	N/A	VT-3	303/8.2.17				
SW-243	RIGID	N/A	VT-3	303/8.2.17				
SW-269	BOX	N/A	VT-3	303/8.2.17				
SW-PB-302	SW PRES BNDRY	N/A	VT-2	N/A				SEE NOTES #6 & #7.

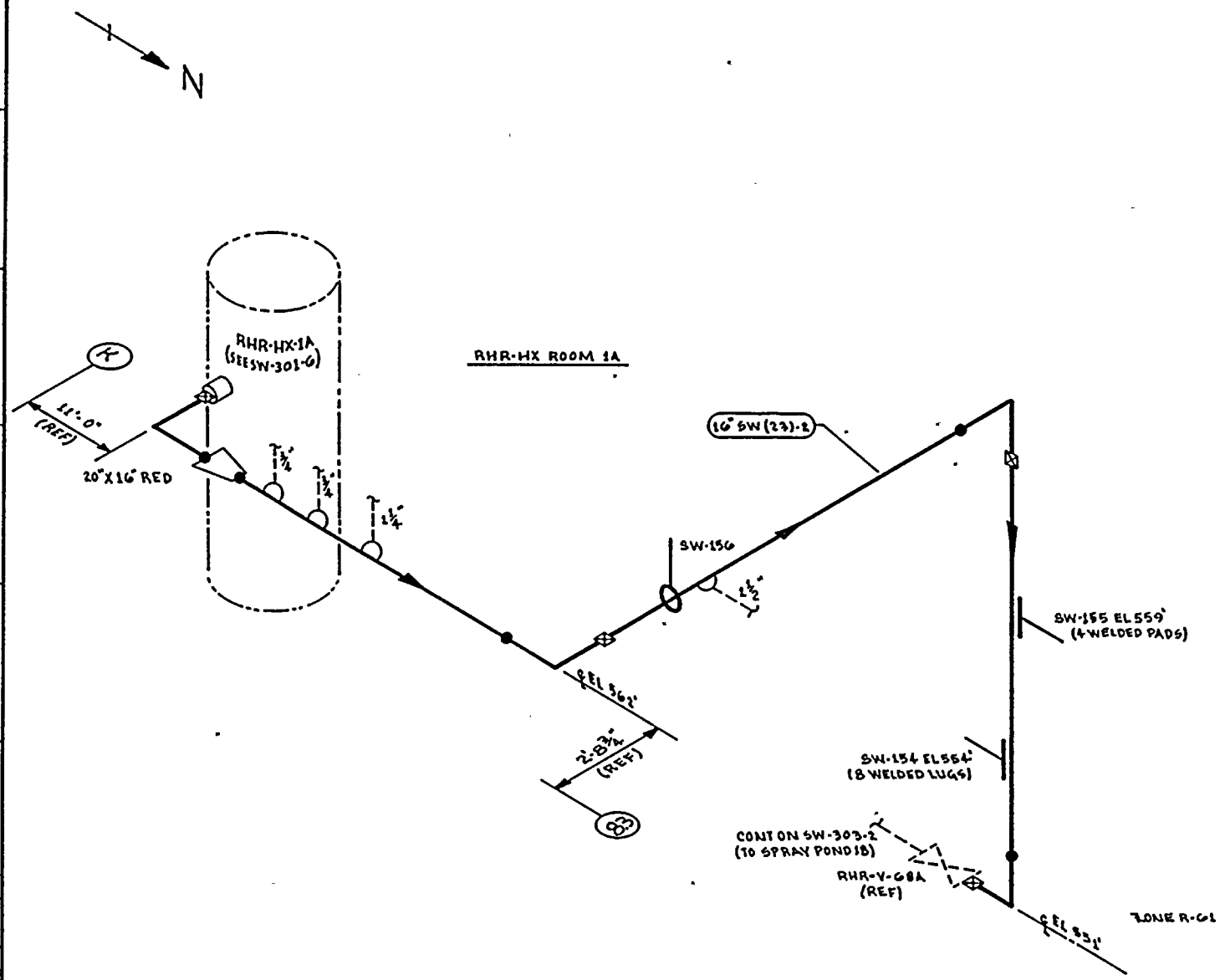

NOTES:

1. THIS DRAWING IDENTIFIES PIPING & COMPONENTS SUBJECT ONLY TO A VISUAL EXAM FOR (1) EVIDENCE OF LEAKAGE DURING SYSTEM PRESSURE OR OPERABILITY TESTS; (2) PRESSURE DECAY TESTS OF BURIED PIPING; & (3) LOSS OF SUPPORT CAPABILITY OR INADEQUATE RESTRAINT FOR SUPPORTS & HANGERS ON PIPING EXCEEDING 4" NOM. TESTS SHALL BE CONDUCTED PER ASME SECTION XI, ARTICLES SWA-5000 & IWD-2000.
2. FOR BRANCH PIPING 4" NOM OR LESS (CONN SHOWN IN DASHED LINES) EXTEND VISUAL LEAKAGE EXAM THROUGH THE OUTERMOST NORMALLY CLOSED NUCLEAR CLASS VALVE, OR UNTIL TRANSITION TO INSTRUMENT TUBING, UNESS OTHERWISE NOTED.

*REFERENCES:

BOVEE & CRAIL ISOMETRICS

SW-296-1.5 REV 4

SW-296-1.5H REV 0

THIS DRAWING IS INTENDED FOR USE IN PRESERVICE AND INSERVICE INSPECTION PROGRAMS ONLY.

PIPING SYSTEM	NOM DIA (IN)	SCH	NOM WALL THK	MATERIAL SPECIFICATION	MATL TYPE	CAL BLOCK NO
16" SW (23)-2	16	STD	0.375	SA 106 GR B	CS	NA

NO	DATE	REVISION	BY	CHKD	APPVD
0	11-5-80	ISSUED FOR USE			

QUALITY CLASS: 1 | ASME CODE CLASS: 3

ENGR: GA Kugler | DRAWN: K. McL | DATE: 11-8-78

WASHINGTON PUBLIC POWER SUPPLY SYSTEM

RICHLAND, WASHINGTON 99352

WNP-2

WELD & COMPONENT IDENTIFICATION DIAGRAM

TITLE: SW LOOP A RETURN RHR-HX-1A DISCHARGE

DWG NO: SW-303-1 | REV 0

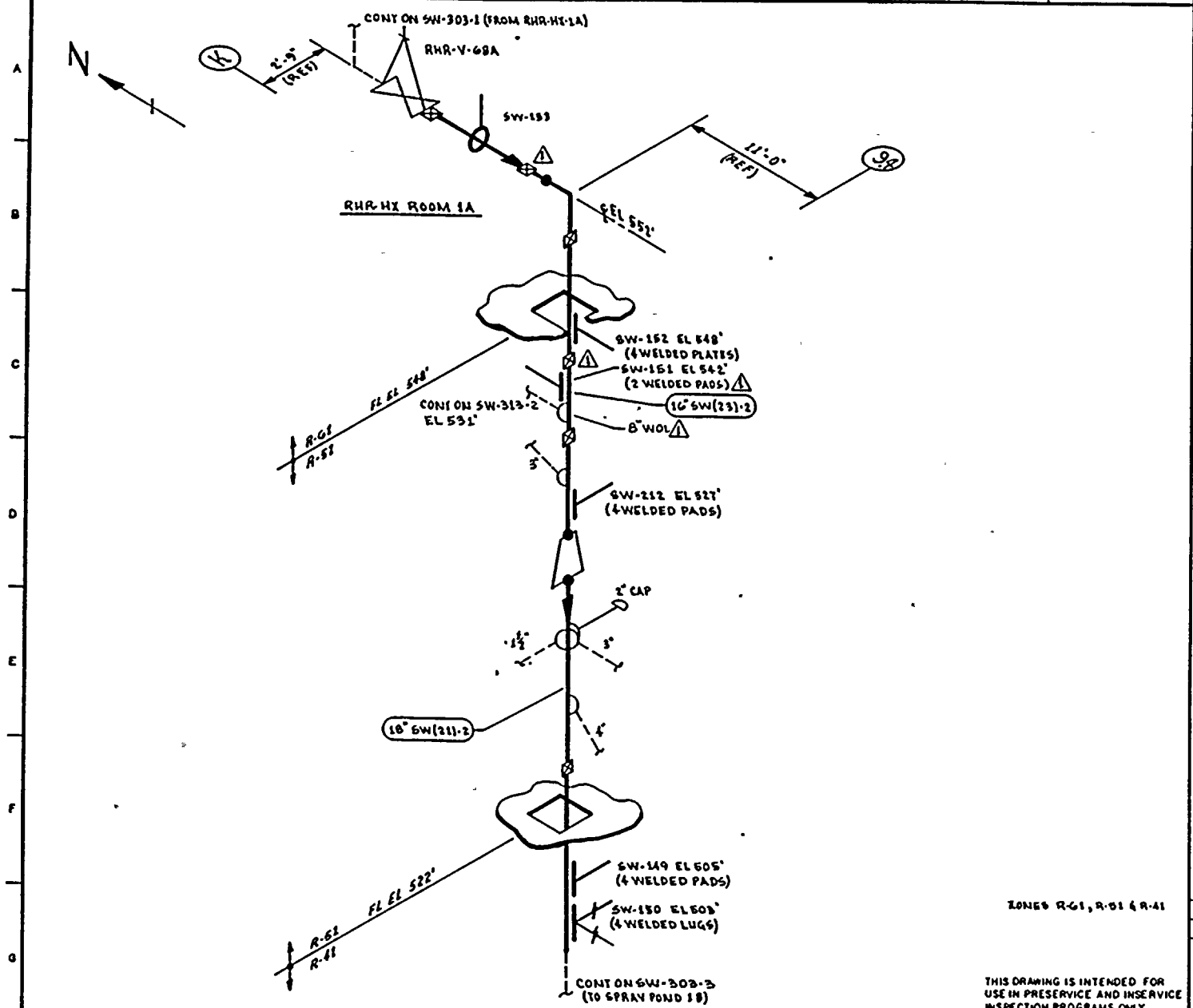

ZONES R-61, R-51 & R-41

THIS DRAWING IS INTENDED FOR USE IN PRESERVICE AND INSERVICE INSPECTION PROGRAMS ONLY.

NOTES:

1. THIS DRAWING IDENTIFIES PIPING & COMPONENTS SUBJECT ONLY TO A VISUAL EXAM FOR (1) EVIDENCE OF LEAKAGE DURING SYSTEM PRESSURE OR OPERABILITY TESTS; (2) PRESSURE DECAY TESTS OF BURIED PIPING; & (3) LOSS OF SUPPORT CAPABILITY OR INADEQUATE RESTRAINT FOR SUPPORTS & HANGERS ON PIPING EXCEEDING 4" NOM. TESTS SHALL BE CONDUCTED PER ASME SECTION XI, ARTICLES IWA-5000 & IWD-2000.
2. FOR BRANCH PIPING 4" NOM OR LESS (CONN SHOWN IN DASHED LINES) EXTEND VISUAL LEAKAGE EXAM THROUGH OUTERMOST NORMALLY CLOSED NUCLEAR CLASS VALVE, OR UNTIL TRANSITION TO INSTRUMENT TUBING, UNLESS OTHERWISE NOTED.

REFERENCES:

DOVER & CRAIL ISOMETRICS

SW-296-1.5	REV 12
SW-296-6	REV 18
SW-296-7.16	REV 9

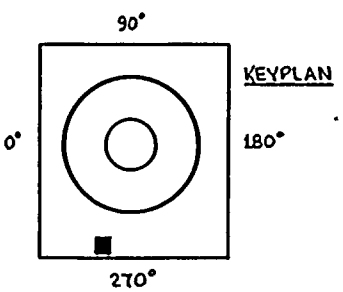

QUALITY CLASS: 1	ASME CODE CLASS: 3	
ENGR: GA KUGLER	DRAWN: K. McA.	DATE: 11-10-78

WASHINGTON PUBLIC POWER SUPPLY SYSTEM
RICHLAND WASHINGTON 99352

PIPING SYSTEM	NOM DIA (IN)	SCH	NOM WALL THK	MATERIAL SPECIFICATION	MATL TYPE	CAL BLOCK NO
16" SW(23)-2	16	STD	0.375	SA 106 GR B	CS	NA
18" SW(21)-2	18	STD	0.375	SA 106 GR B	CS	NA

WNP-2
WELD & COMPONENT IDENTIFICATION DIAGRAM

TITLE: SW LOOP A RETURN TO SPRAY POND 1B

DWG NO: SW-303-2 REV 1

NO	DATE	REVISION	BY	CHKD	APPVD
1	1-24-84	REVISED AS NOTED ADDED KEYPLAN	[illegible]	EAR	TFH
0	11-5-80	ISSUED FOR USE	[illegible]	[illegible]	[illegible]

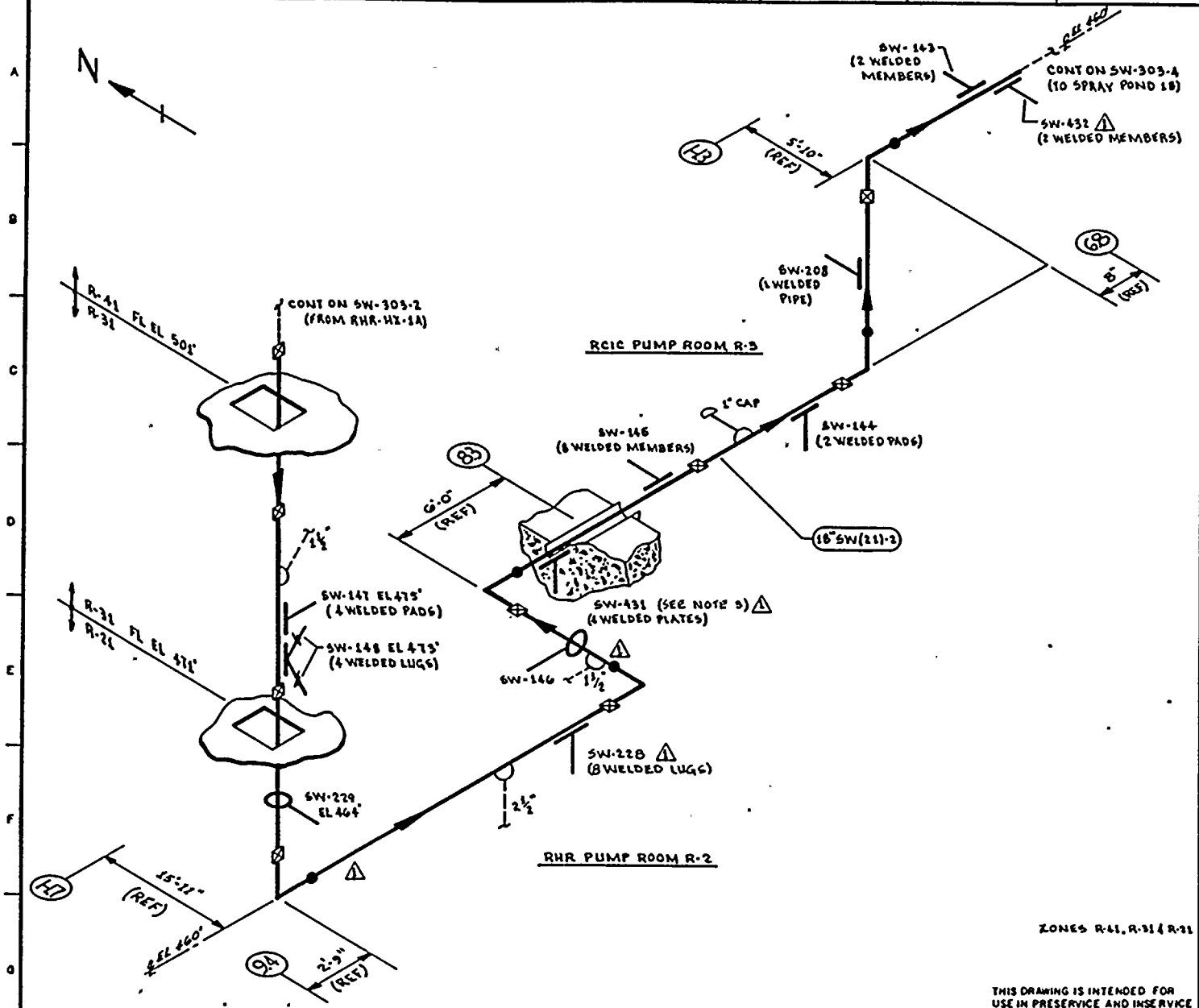

NOTES:

1. THIS DRAWING IDENTIFIES PIPING & COMPONENTS SUBJECT ONLY TO A VISUAL EXAM FOR (1) EVIDENCE OF LEAKAGE DURING SYSTEM PRESSURE OR OPERABILITY TESTS; (2) PRESSURE DECAY TESTS OF BURIED PIPING; & (3) LOSS OF SUPPORT CAPABILITY OR INADEQUATE RESTRAINT FOR SUPPORTS & HANGERS ON PIPING EXCEEDING 4" NOM. TESTS SHALL BE CONDUCTED PER ASME SECTION XI, ARTICLES IWA-5000 & IWD-2000.
2. FOR BRANCH PIPING 4" NOM OR LESS (CONN SHOWN IN DASHED LINES) EXTEND VISUAL LEAKAGE EXAM THROUGH THE OUTERMOST NORMALLY CLOSED NUCLEAR CLASS VALVE, OR UNTIL TRANSITION TO INSTRUMENT TUBING, UNLESS OTHERWISE NOTED.
3. ⚠ COMPONENT SUPPORT IS INACCESSIBLE DUE TO FOAM FILLED WATER TIGHT BOOT.

REFERENCES:

BOVEE & CRAIL ISOMETRIC
SW-296-7.16 REV 9

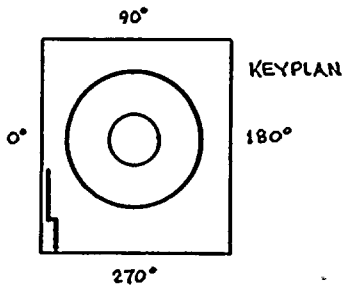

ZONES R-41, R-31 & R-21

THIS DRAWING IS INTENDED FOR USE IN PRESERVICE AND INSERVICE INSPECTION PROGRAMS ONLY.

PIPING SYSTEM	NOM DIA (IN)	SCH	NOM WALL THK	MATERIAL SPECIFICATION	MATL TYPE	CAL BLOCK NO
18" SW(211)-2	18	STD	0.375	SA 106 GR B	CS	NA

NO	DATE	REVISION	BY	CHKD	APPVD
1	12-6-84	REVISED AS NOTED ADDED KEYPLAN			
0	11-5-80	ISSUED FOR USE			

QUALITY CLASS: 1 | ASME CODE CLASS: 3
ENGR: G.A. KUGLER | DRAWN: K.M.C.A. | DATE: 11-15-78

WASHINGTON PUBLIC POWER SUPPLY SYSTEM
RICHLAND WASHINGTON 99352

WNP-2
WELD & COMPONENT IDENTIFICATION DIAGRAM

TITLE: SW LOOP A RETURN TO SPRAY POND 1B

DWG NO: SW-303-3 | REV 1

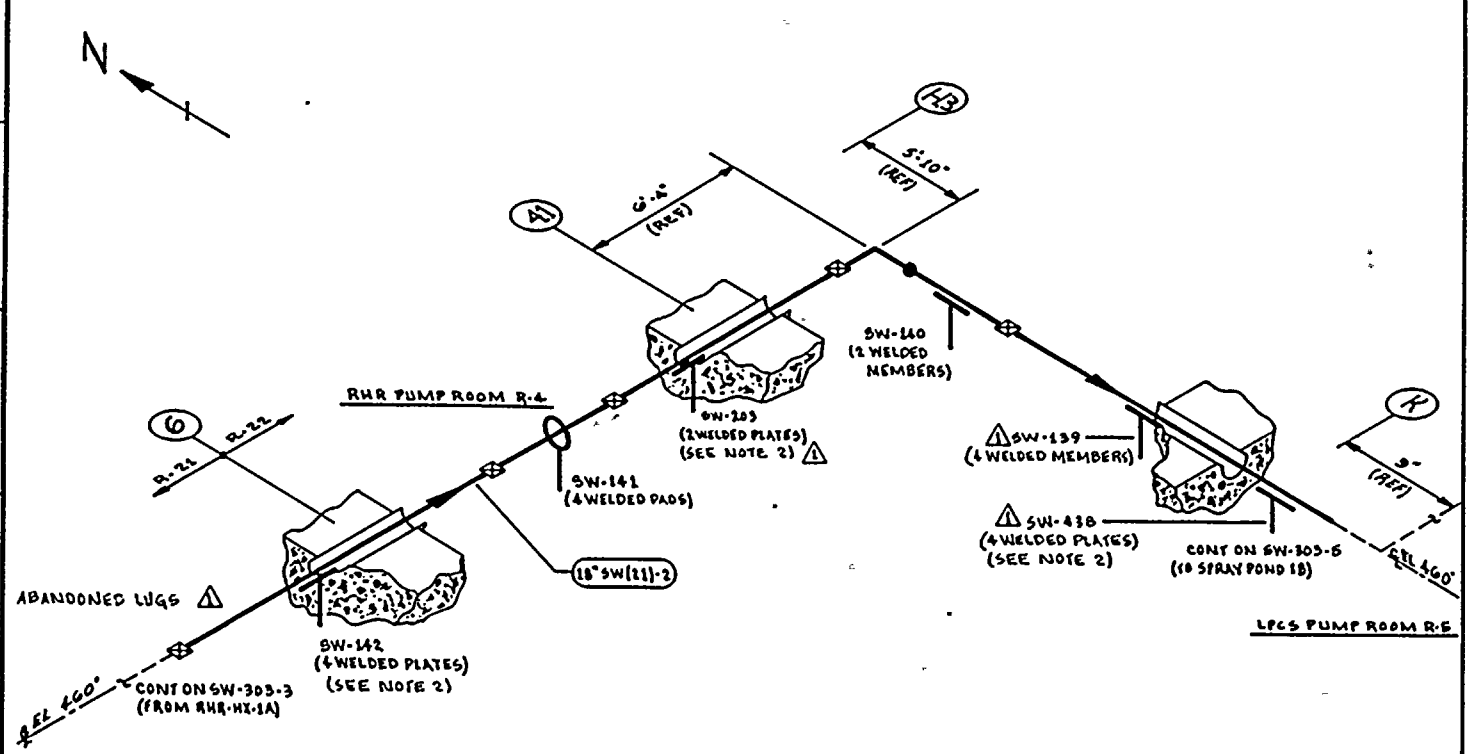

ZONES R-21 & R-22

NOTES:

1. THIS DRAWING IDENTIFIES PIPING & COMPONENTS SUBJECT ONLY TO A VISUAL EXAM FOR (1) EVIDENCE OF LEAKAGE DURING SYSTEM PRESSURE OR OPERABILITY TESTS; (2) PRESSURE DECAY TEST OF BURIED PIPING; & (3) LOSS OF SUPPORT CAPABILITY OR INADEQUATE RESTRAINT FOR SUPPORTS & HANGERS ON PIPING EXCEEDING 4" NOM. TESTS SHALL BE CONDUCTED PER ASME SECTION XI, ARTICLES IWA-5000 & IWD-2000.
2. ⚠ COMPONENT SUPPORT IS INACCESSIBLE DUE TO FOAM FILLED WATER TIGHT BOOT.

REFERENCES:

BOVEE & CRAIL ISOMETRIC

SW-296-17.26 REV 3

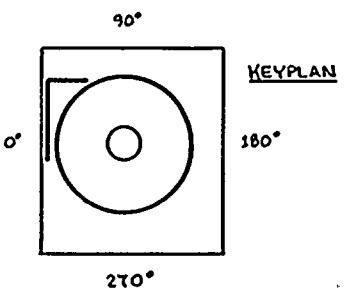

THIS DRAWING IS INTENDED FOR USE IN PRESERVICE AND INSERVICE INSPECTION PROGRAMS ONLY.

PIPING SYSTEM	NOM DIA (IN)	SCH	NOM WALL THK	MATERIAL SPECIFICATION	MATL TYPE	CAL BLOCK NO
18"SW(21)-2	18	STD	0.375	SA 106 GR B	CS	NA

NO	DATE	REVISION	BY	CHKD	APPVD
1	1.27.84	REVISED AS NOTED ADDED KEYPLAN	KMcA	JK	TFH
0	11.5.80	ISSUED FOR USE	KMcA	JLM	[illegible]

QUALITY CLASS: 1 | ASME CODE CLASS: 3

ENGR: G.A. KUGLER | DRAWN: K.McA | DATE: 11.20.78

WASHINGTON PUBLIC POWER SUPPLY SYSTEM

RICHLAND, WASHINGTON 99352

WNP-2

WELD & COMPONENT IDENTIFICATION DIAGRAM

TITLE: SW LOOP A RETURN TO SPRAY POND 1B

DWG NO: SW-303-4 | REV 1

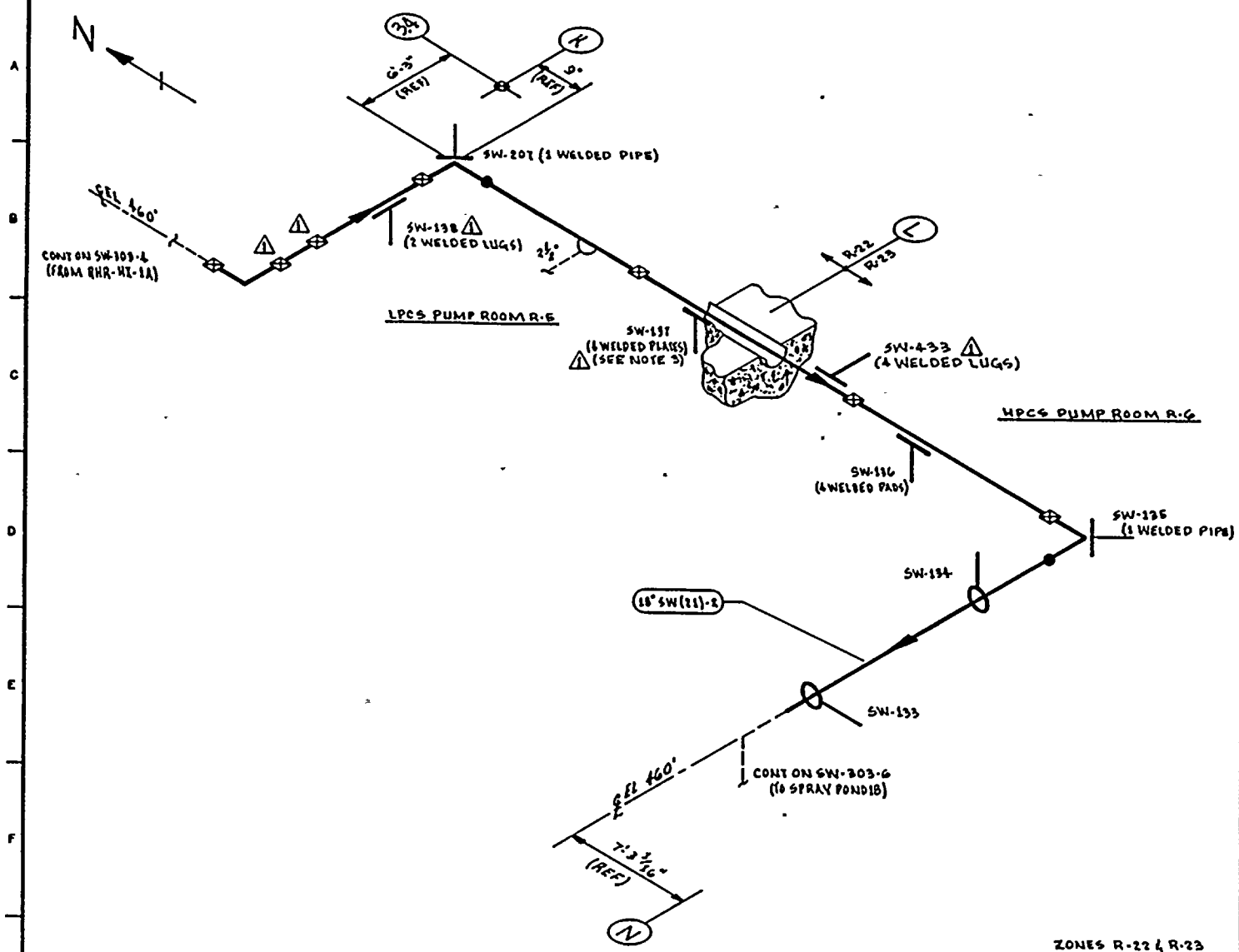

NOTES:

1. THIS DRAWING IDENTIFIES PIPING & COMPONENTS SUBJECT ONLY TO A VISUAL EXAM FOR (1) EVIDENCE OF LEAKAGE DURING SYSTEM PRESSURE OR OPERABILITY TESTS; (2) PRESSURE DECAY TESTS OF BURIED PIPING; & (3) LOSS OF SUPPORT CAPABILITY OR INADEQUATE RESTRAINTS FOR SUPPORTS & HANGERS ON PIPING EXCEEDING 4" NOM. TESTS SHALL BE CONDUCTED PER ASME SECTION XI, ARTICLES IWA-5000 & IWD-2000.
2. FOR BRANCH PIPING 4" NOM OR LESS (CONN SHOWN IN DASHED LINES) EXTEND VISUAL LEAKAGE EXAM THROUGH THE OUTERMOST NORMALLY CLOSED NUCLEAR CLASS VALVE, OR UNTIL TRANSITION TO INSTRUMENT TUBING, UNLESS OTHERWISE NOTED.
3. COMPONENT SUPPORT IS INACCESSIBLE DUE TO FOAM FILLED WATERTIGHT BOOT.

REFERENCES:

BOVEE & ERAIL ISOMETRICS
SW-296-12.26 REV 9

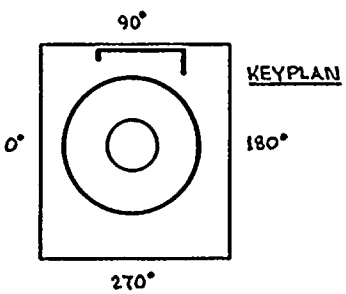

QUALITY CLASS: I	ASME CODE CLASS: 3	
ENGR: GA KUGLER	DRAWN: K.McL	DATE: 11-20-78

WASHINGTON PUBLIC POWER SUPPLY SYSTEM
RICHLAND, WASHINGTON 98352

THIS DRAWING IS INTENDED FOR USE IN PRESERVICE AND INSERVICE INSPECTION PROGRAMS ONLY.

PIPING SYSTEM	NOM DIA (IN)	SCH	NOM WALL THK	MATERIAL SPECIFICATION	MATL TYPE	CAL BLOCK NO
18" SW(21)-2	18	STD	0.375	SA 106 GR B	CS	NA

WNP-2
WELD & COMPONENT IDENTIFICATION DIAGRAM

TITLE: SW LOOP A RETURN TO SPRAY POND 1B

DWG NO: SW-303-5 REV 1

NO	DATE	REVISION	BY	CHKD	APPVD
1	1-27-84	REVISED AS NOTED ADDED KEYPLAN	KMcL	[illegible]	[illegible]
0	11-5-80	ISSUED FOR USE	KMcL	[illegible]	[illegible]

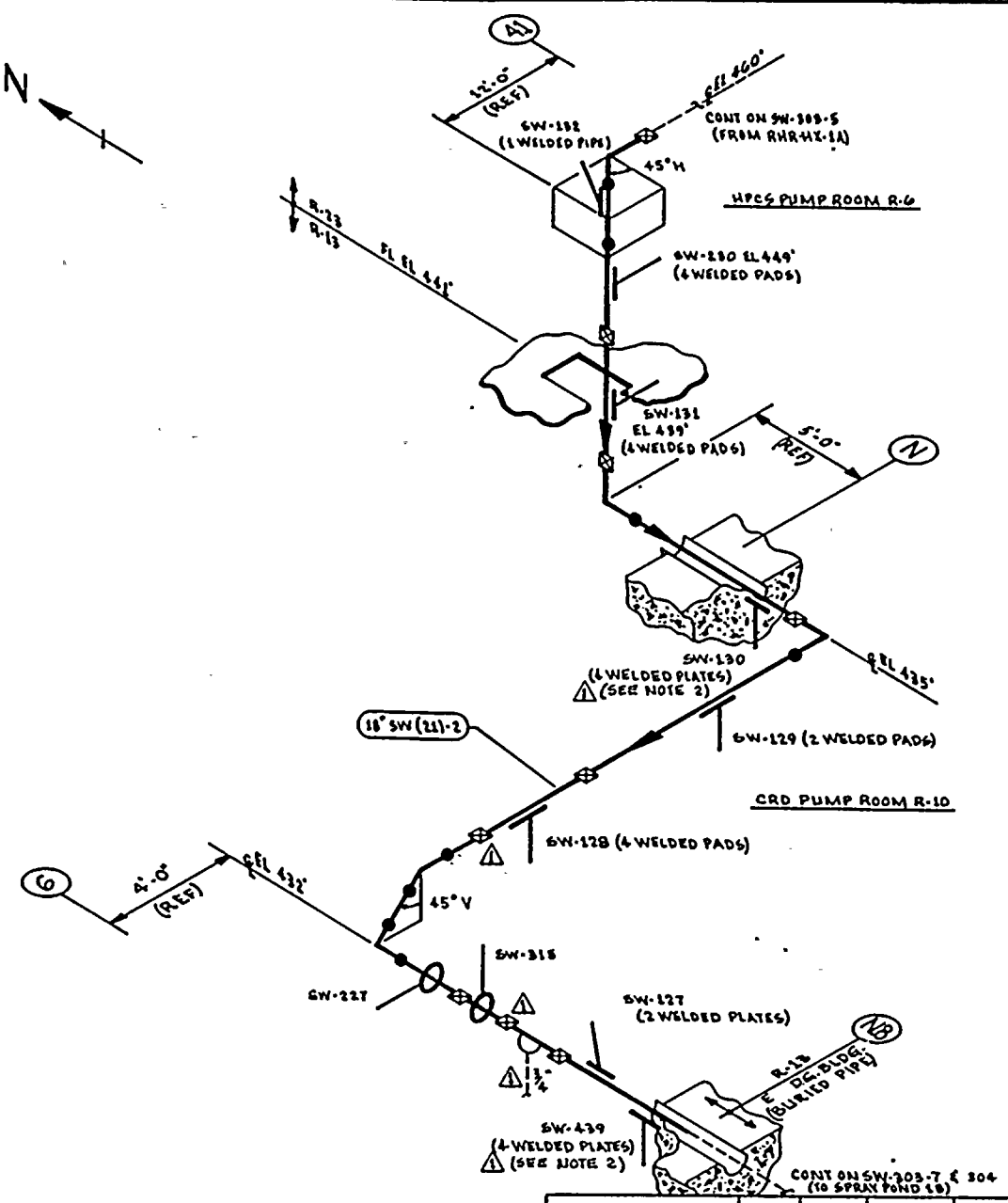

ZONES R-23 & R-13

THIS DRAWING IS INTENDED FOR USE IN PRESERVICE AND INSERVICE INSPECTION PROGRAMS ONLY.

NOTES:

1. THIS DRAWING IDENTIFIES PIPING & COMPONENTS SUBJECT ONLY TO A VISUAL EXAM FOR (1) EVIDENCE OF LEAKAGE DURING SYSTEM PRESSURE OR OPERABILITY TESTS; (2) PRESSURE DECAY TESTS OF BURIED PIPING; & (3) LOSS OF SUPPORT CAPABILITY OR INADEQUATE RESTRAINT FOR SUPPORTS & HANGERS ON PIPING EXCEEDING 4" NOM. TESTS SHALL BE CONDUCTED PER ASME SECTION XI, ARTICLES IWA-5000 & IWD-2000.
2. COMPONENT SUPPORT IS UNACCESSIBLE ⚠1 DUE TO FOAM FILLED WATERTIGHT BOOT.

REFERENCES:

BOVEE & CRAIL ISOMETRICS

SW-296-27.32 REV 10
SW-296-33.36 REV 6

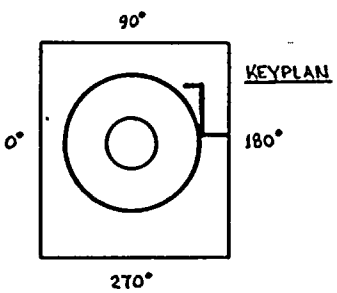

PIPING SYSTEM	NOM DIA (IN)	SCH	NOM WALL THK	MATERIAL SPECIFICATION	MATL TYPE	CAL BLOCK NO
18" SW (221)-2	18	STD	0.375	SA 106 GRB	C6	NA

NO	DATE	REVISION	BY	CHKD	APPVD
1	1-26-81	REVISED AS NOTED ADDED KEYPLAN	KMcA	ccc	TFH
0	11-5-80	ISSUED FOR USE	KMcA	NHK	[illegible]

QUALITY CLASS: 1 | ASME CODE CLASS: 3

ENGR G.A. KUGLER | DRAWN: K. McA | DATE: 11-27-78

WASHINGTON PUBLIC POWER SUPPLY SYSTEM
RICHLAND, WASHINGTON 99352

WNP-2
WELD & COMPONENT IDENTIFICATION DIAGRAM

TITLE: SW LOOP A RETURN TO SPRAY POND 1B

DWG NO: SW-303-6 | REV 1

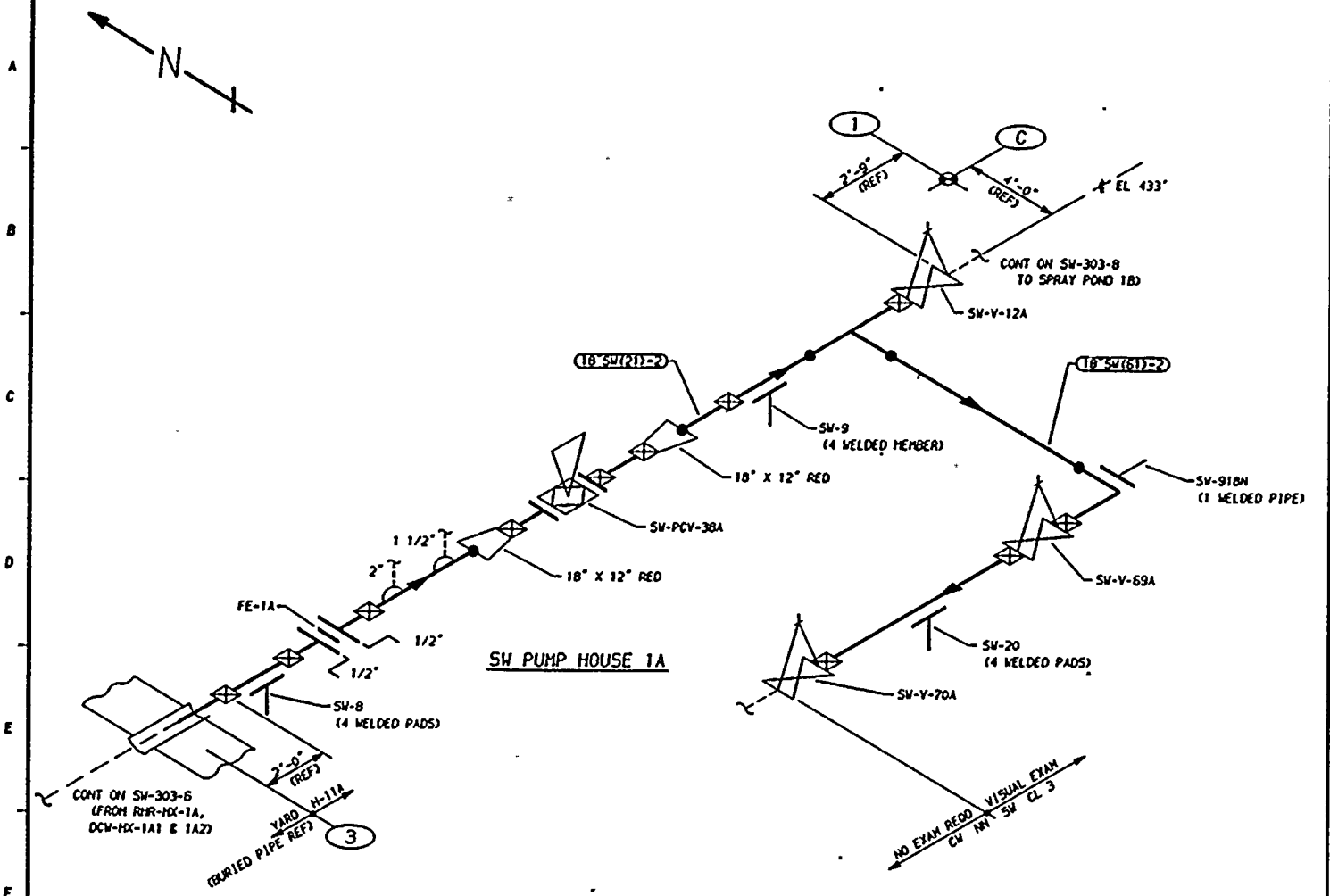

ZONE H-11A

THIS DRAWING IS INTENDED FOR USE IN PRESERVICE AND INSERVICE INSPECTIONS PROGRAMS ONLY.

NOTES:

1. THIS DRAWING IDENTIFIES PIPING AND COMPONENTS SUBJECT ONLY TO A VISUAL EXAM FOR (1) EVIDENCE OF LEAKAGE DURING SYSTEM PRESSURE OR OPERABILITY TESTS, (2) PRESSURE DECAY TESTS OF BURIED PIPING, AND (3) LOSS OF SUPPORT CAPABILITY OR INADEQUATE RESTRAINT FOR SUPPORTS AND HANGERS ON PIPING EXCEEDING 4" NOM. TESTS SHALL BE CONDUCTED PER ASME SECTION XI, ARTICLES IWA-5000 AND IWD-2000.

2. FOR BRANCH PIPING 4" NOM. OR LESS (CONNECTION SHOWN IN DASHED LINES) EXTEND VISUAL LEAKAGE EXAM THROUGH THE OUTERMOST NORMALLY CLOSED NUCLEAR CLASS VALVE, OR UNTIL TRANSITION TO INSTRUMENT TUBING, UNLESS OTHERWISE NOTED.

REFERENCES:

ISI - 224

BOVEE & CRAIL ISOMETRICS
SW-296-47.53 REV 7
SW-296-54.57 REV 14

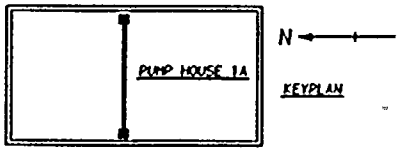

KEYPLAN

QUALITY CLASS: 1	ASME CODE CLASS: 3
ENGR: GA KUGLER	DRAWN: K-McA / DATE: 11-29-78

WASHINGTON PUBLIC POWER
SUPPLY SYSTEM
RICHLAND, WASHINGTON 99352

WNP-2
WELD & COMPONENT
IDENTIFICATION DIAGRAM

TITLE:
SW LOOP A RETURN TO SPRAY POND 1B

DWG NO: SW-303-7 REV 1

PIPING SYSTEM	NOM DIA (IN)	SCH	NOM WALL THK	MATERIAL SPECIFICATION	MATL TYPE	CAL BLOCK NO
18"SW(21)-2	18	STD	0.375	SA 106 GR B	CS	NA
18"SW(61)-2	18	STD	0.375	SA 106 GR B	CS	NA

NO	DATE	REVISION	BY	CHKD	APVD
1	1-27-84	GENERAL UP-DATE REDRAWN	K-McA	GAK	TFH / DWP
0	11-5-80	ISSUED FOR USE			

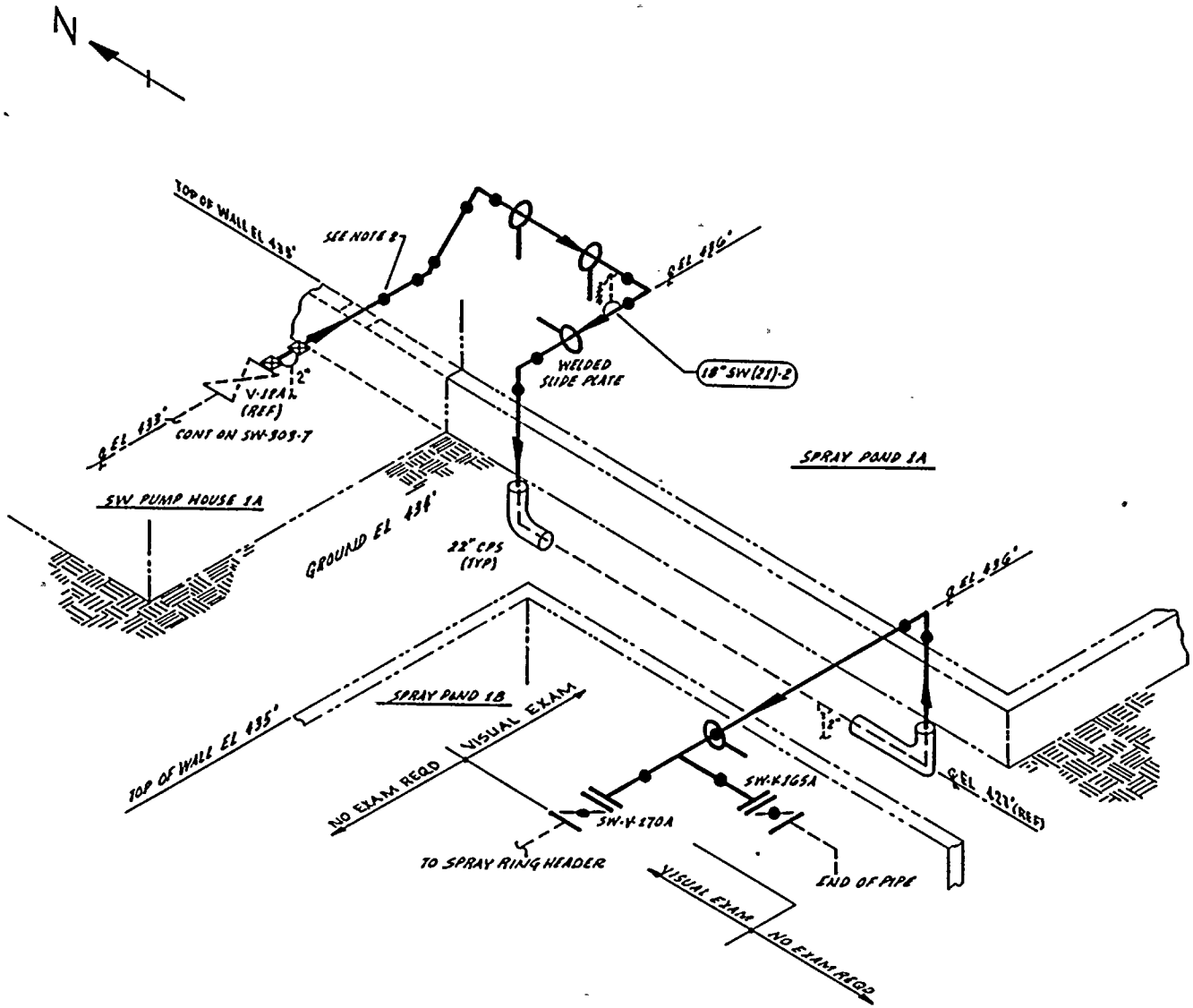

ZONE 6

THIS DRAWING IS INTENDED FOR USE IN PRESERVICE AND INSERVICE INSPECTION PROGRAMS ONLY.

NOTES:

1. THIS DRAWING IDENTIFIES PIPING & COMPONENTS SUBJECT ONLY TO A VISUAL EXAM FOR (1) EVIDENCE OF LEAKAGE DURING SYSTEM PRESSURE OR OPERABILITY TESTS; (2) PRESSURE DECAY TESTS OF BURIED PIPING; & (3) LOSS OF SUPPORT CAPABILITY OR INADEQUATE RESTRAINT FOR SUPPORTS & HANGERS ON PIPING EXCEEDING 4" NOM. TESTS SHALL BE CONDUCTED PER ASME SECTION XI, ARTICLES IWA-5000 & IWD-2000.
2. NO ATTEMPT HAS BEEN MADE TO DIFFERENTIATE BETWEEN SHOP & FIELD WELDS SINCE REF. DWGS. GAVE NO WELD TYPE INDICATION.

REFERENCES:

BURNS & ROE DWGS.

M528 SH2 REV 41
M782 REV 4
S533 REV A
S534 REV A
S535 REV A
M200-708 REV 0
SW-296-54-57 REV 14

QUALITY CLASS: 1	ASME CODE CLASS: 3
ENGR: GA KUGLER	DRAWN: K. McL	DATE: 11-7-79

WASHINGTON PUBLIC POWER SUPPLY SYSTEM
RICHLAND, WASHINGTON 99352

PIPING SYSTEM	NOM DIA (IN)	SCH	NOM WALL THK	MATERIAL SPECIFICATION	MATL TYPE	CAL BLOCK NO
18" SW(21)-2	18	STD	0.375	SA 106 GR B	CS	NA

WNP-2
WELD & COMPONENT IDENTIFICATION DIAGRAM

TITLE: SW LOOP A RETURN TO SPRAY POND 1B

DWG NO: SW-303-8 REV 1

NO	DATE	REVISION	BY	CHKD	APPVD
1	1-29-83	ADDED 2" CONN ZN C-2	[illegible]	WR	TFX
0	12-7-81	ISSUED FOR USE	[illegible]	[illegible]	[illegible]

SUPERIOR REPROGRAPHICS TO 30"

WNP-02
INTERVAL: PSI
PERIOD: NA
OUTAGE:
DRAWING NO. SW-303

WASHINGTON PUBLIC POWER SUPPLY SYSTEM
PROGRAM PLAN AND SCHEDULE
SYSTEM OR COMPONENT: SW(23)-2
DESCRIPTION: RETURN RHR-HX-1A

DATE 12/14/84

IDENT. NO.	DESCRIPTION	SECT. XI EXAM.	EXAM MTH.	PROCEDURE	CAL. BLOCK	INSERVICE REQ.	INSERVICE SCHEDULED OUTAGE	NOTES
SW-156								
	STRUT	N/A	VT-3	303/8.2.17				
SW-155								
	BOX	N/A	VT-3	303/8.2.17				
SW-154								
	STRUT	N/A	VT-3	303/8.2.17				
SW-153								
	BOX	N/A	VT-3	303/8.2.17				
SW-152								
	RIGID	N/A	VT-3	303/8.2.17				
SW-151								
	STRUT	N/A	VT-3	303/8.2.17				
SW-212								
	BOX	N/A	VT-3	303/8.2.17				
SW-149								
	BOX	N/A	VT-3	303/8.2.17				
SW-150								
	SPRING (2)	N/A	VT-3	303/8.2.17				
			VT-4	303/8.2.17				
SW-147								
	BOX	N/A	VT-3	303/8.2.17				
SW-148								
	SPRING (2)	N/A	VT-3	303/8.2.17				
			VT-4	303/8.2.17				
SW-229								
	STRUT	N/A	VT-3	303/8.2.17				
SW-228								
	STRUT	N/A	VT-3	303/8.2.17				
SW-146								
	STRUT	N/A	VT-3	303/8.2.17				
SW-431								
	RIGID	N/A	VT-3	303/8.2.17				
SW-145								
	BOX	N/A	VT-3	303/8.2.17				

WNP-02
INTERVAL: PSI
PERIOD: NA
OUTAGE:
DRAWING NO. SW-303

WASHINGTON PUBLIC POWER SUPPLY SYSTEM
PROGRAM PLAN AND SCHEDULE
SYSTEM OR COMPONENT: SW(23)-2
DESCRIPTION: RETURN RHR-HX-1A

IDENT. NO.	DESCRIPTION	SECT. XI EXAM.	EXAM MTH.	PROCEDURE	CAL. BLOCK	INSERVICE REQ.	SCHEDULED OUTAGE	NOTES
SW-144	BOX	N/A	VT-3	303/8.2.17				
SW-208	STRUT	N/A	VT-3	303/8.2.17				
SW-143	STRUT	N/A	VT-3	303/8.2.17				
SW-432	STRUT	N/A	VT-3	303/8.2.17				
SW-142	RIGID	N/A	VT-3	303/8.2.17				
SW-141	STRUT	N/A	VT-3	303/8.2.17				
SW-203	RIGID	N/A	VT-3	303/8.2.17				
SW-140	BOX	N/A	VT-3	303/8.2.17				
SW-139	STRUT	N/A	VT-3	303/8.2.17				
SW-438	RIGID	N/A	VT-3	303/8.2.17				
SW-138	BOX	N/A	VT-3	303/8.2.17				
SW-207	STRUT	N/A	VT-3	303/8.2.17				
SW-137	RIGID	N/A	VT-3	303/8.2.17				
SW-433	BOX	N/A	VT-3	303/8.2.17				
SW-136	BOX	N/A	VT-3	303/8.2.17				
SW-135	STRUT	N/A	VT-3	303/8.2.17				
SW-134	STRUT	N/A	VT-3	303/8.2.17				
SW-133	STRUT	N/A	VT-3	303/8.2.17				

WNP-02
INTERVAL: PSI
PERIOD: NA
OUTAGE:
DRAWING NO. SW-303

WASHINGTON PUBLIC POWER SUPPLY SYSTEM
PROGRAM PLAN AND SCHEDULE
SYSTEM OR COMPONENT: SW(23)-2
DESCRIPTION: RETURN RHR-HX-1A

DATE 12/14/84

IDENT. NO.	DESCRIPTION	SECT. XI EXAM.	EXAM MTH.	PROCEDURE	CAL. BLOCK	INSERVICE REQ.	INSERVICE SCHEDULED OUTAGE	NOTES
SW-132	STRUT	N/A	VT-3	303/8.2.17				
SW-230	BOX	N/A	VT-3	303/8.2.17				
SW-131	BOX	N/A	VT-3	303/8.2.17				
SW-130	RIGID	N/A	VT-3	303/8.2.17				
SW-129	BOX	N/A	VT-3	303/8.2.17				
SW-128	BOX	N/A	VT-3	303/8.2.17				
SW-227	STRUT	N/A	VT-3	303/8.2.17				
SW-315	STRUT	N/A	VT-3	303/8.2.17				
SW-127	STRUT	N/A	VT-3	303/8.2.17				
SW-439	RIGID	N/A	VT-3	303/8.2.17				
SW-8	BOX	N/A	VT-3	303/8.2.17				
SW-9	BOX	N/A	VT-3	303/8.2.17				
SW-918N	STRUT	N/A	VT-3	303/8.2.17				
SW-20	BOX	N/A	VT-3	303/8.2.17				
SW-PB-303	SW PRES BNDRY	N/A	VT-2	N/A				SEE NOTES #6 & #7.

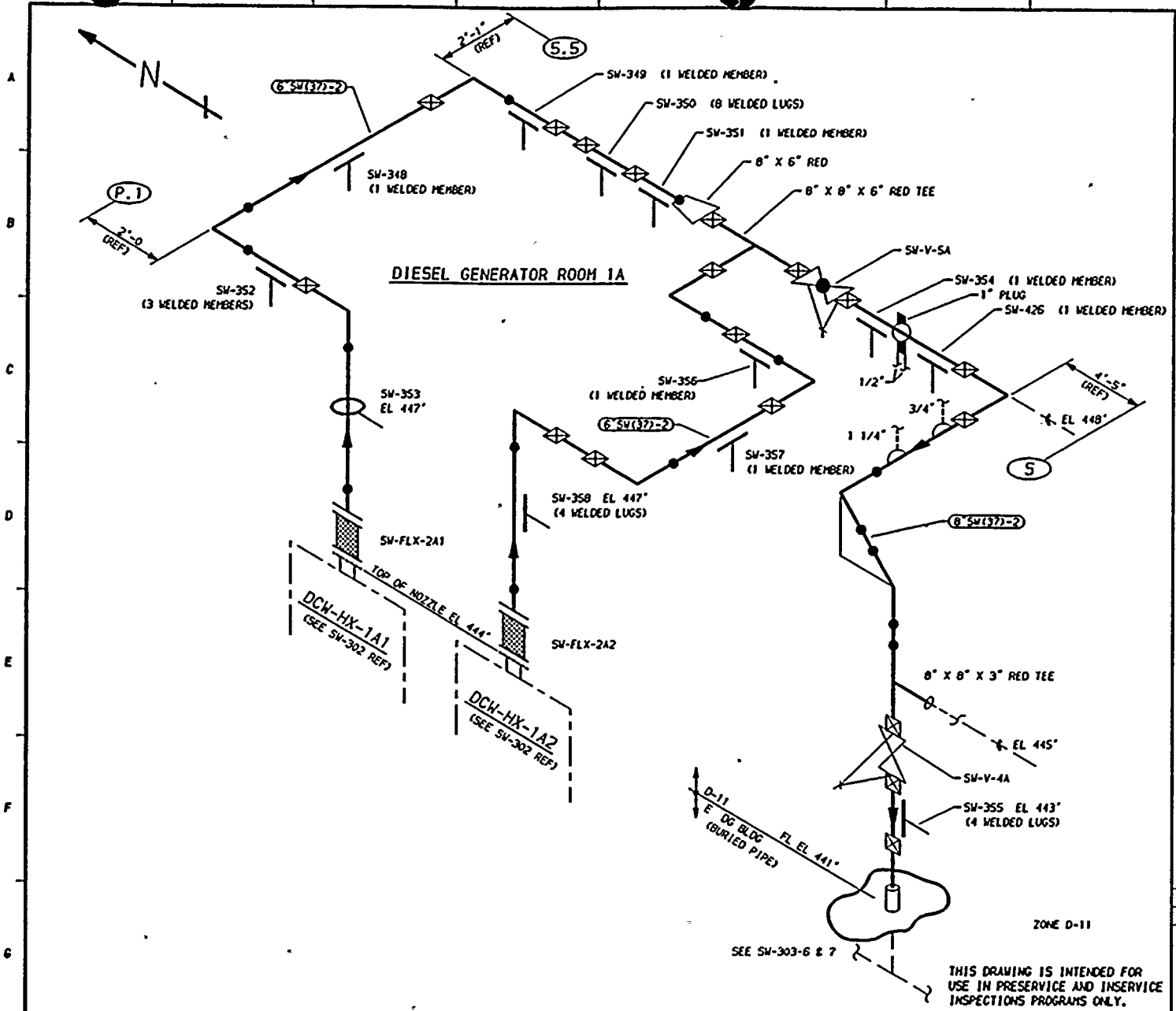

THIS DRAWING IS INTENDED FOR USE IN PRESERVICE AND INSERVICE INSPECTIONS PROGRAMS ONLY.

NOTES:

1. THIS DRAWING IDENTIFIES PIPING AND COMPONENTS SUBJECT ONLY TO A VISUAL EXAM FOR (1) EVIDENCE OF LEAKAGE DURING SYSTEM PRESSURE OR OPERABILITY TESTS, (2) PRESSURE DECAY TESTS OF BURIED PIPING, AND (3) LOSS OF SUPPORT CAPABILITY OR INADEQUATE RESTRAINT FOR SUPPORTS AND HANGERS ON PIPING EXCEEDING 4" NOM. TESTS SHALL BE CONDUCTED PER ASME SECTION XI, ARTICLES IWA-5000 AND IWD-2000.

2. FOR BRANCH PIPING 4" NOM. OR LESS (CONNECTION SHOWN IN DASHED LINES) EXTEND VISUAL LEAKAGE EXAM THROUGH THE OUTERMOST NORMALLY CLOSED NUCLEAR CLASS VALVE, OR UNTIL TRANSITION TO INSTRUMENT TUBING, UNLESS OTHERWISE NOTED.

REFERENCES:

ISI - 224

BOYEE & CRAIL ISOMETRICS
SW-296-33.36 REV 6
SW-304-1.5 REV 9
SW-304-6 REV 5

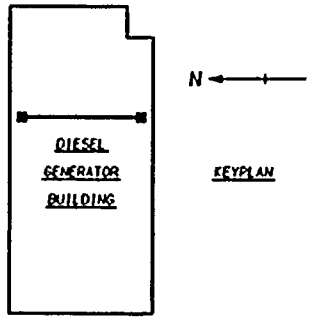

PIPING SYSTEM	NOM DIA (IND	SCH	NOM WALL THK	MATERIAL SPECIFICATION	MATL TYPE	CAL BLOCK NO
6"SW(37)-2	6	STD	0.280	SA 106 GR B	CS	NA
8"SW(37)-2	8	STD	0.322	SA 106 GR B	CS	NA

NO	DATE	REVISION	BY	CHKD	APVD
1	1-22-88	GENERAL UP-DATE REDRAWN	K-McA	GAK	TFH
0	11-5-80	ISSUED FOR USE	K-McA	GAK	TFH DWE

QUALITY CLASS: 1		ASME CODE CLASS: 3
ENGR: GA KUGLER	DRAWN: K-McA	DATE: 11-30-78

WASHINGTON PUBLIC POWER
SUPPLY SYSTEM
RICHLAND, WASHINGTON 99352

WNP-2
WELD & COMPONENT
IDENTIFICATION DIAGRAM

TITLE:
SW LOOP A RETURN FROM DCW-HX-1A1 & 1A2

DWG NO: SW-304 REV 1

WNP-02
INTERVAL: PSI
PERIOD: NA
OUTAGE:
DRAWING NO. SW-304

WASHINGTON PUBLIC POWER SUPPLY SYSTEM
PROGRAM PLAN AND SCHEDULE
SYSTEM OR COMPONENT: SW(37)-2
DESCRIPTION: RETURN DCW-HX-1A1&A2

DATE 12/14/84

IDENT. NO.	DESCRIPTION	SECT. XI EXAM.	EXAM MTH.	PROCEDURE	CAL. BLOCK	INSERVICE REQ.	INSERVICE SCHEDULED OUTAGE	NOTES
SW-353	BOX	N/A	VT-3	303/8.2.17				
SW-352	BOX	N/A	VT-3	303/8.2.17				
SW-348	BOX	N/A	VT-3	303/8.2.17				
SW-349	BOX	N/A	VT-3	303/8.2.17				
SW-350	BOX	N/A	VT-3	303/8.2.17				
SW-351	BOX	N/A	VT-3	303/8.2.17				
SW-358	BOX	N/A	VT-3	303/8.2.17				
SW-357	BOX	N/A	VT-3	303/8.2.17				
SW-356	BOX	N/A	VT-3	303/8.2.17				
SW-354	BOX	N/A	VT-3	303/8.2.17				
SW-426	BOX	N/A	VT-3	303/8.2.17				
SW-355	BOX	N/A	VT-3	303/8.2.17				
SW-PB-304	SW PRES BNDRY	N/A	VT-2	N/A				SEE NOTES #6 & #7.

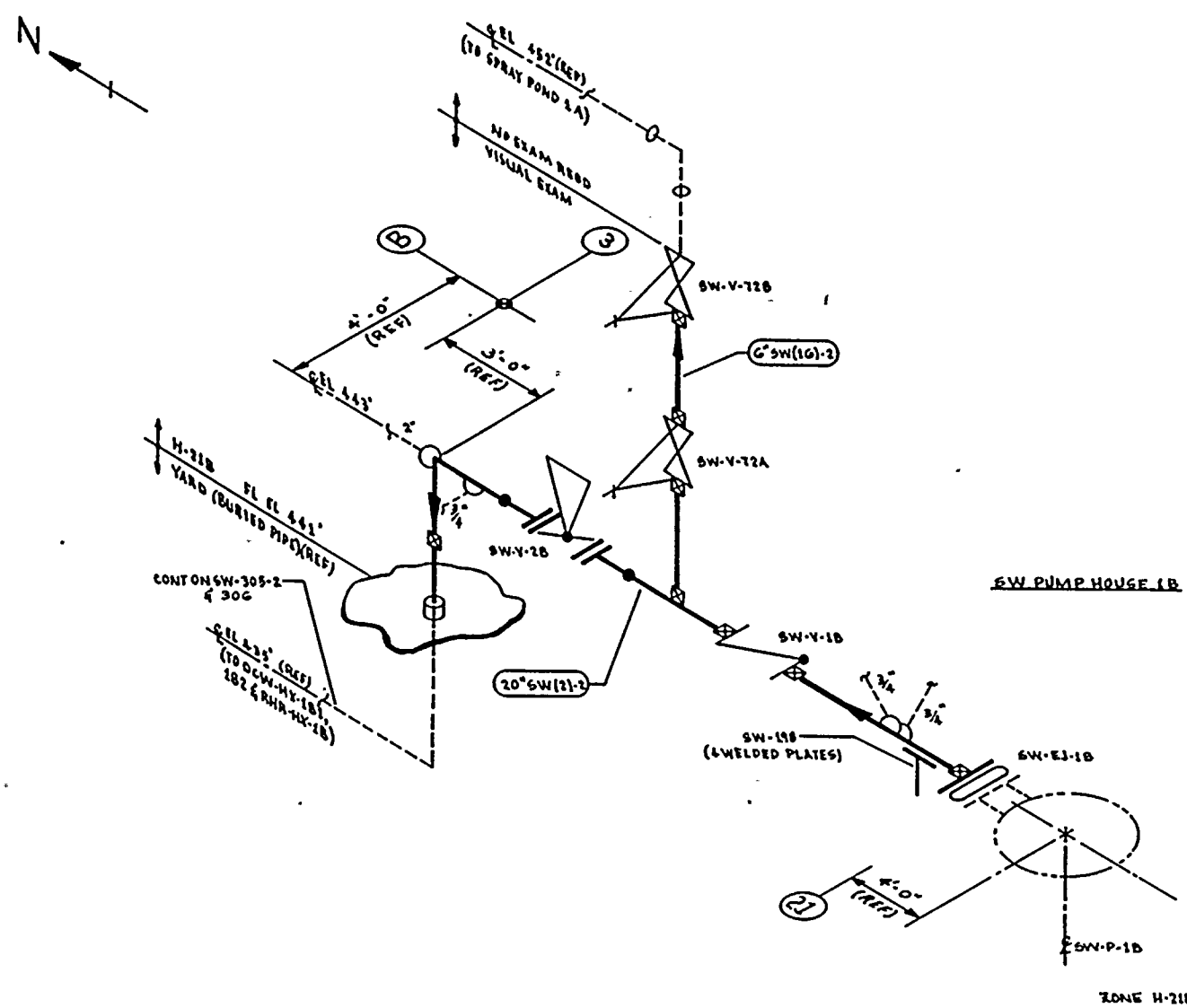

NOTES:

1. THIS DRAWING IDENTIFIES PIPING & COMPONENTS SUBJECT ONLY TO A VISUAL EXAM FOR (1) EVIDENCE OF LEAKAGE DURING SYSTEM PRESSURE OR OPERABILITY TESTS; (2) PRESSURE DECAY TESTS OF BURIED PIPING & (3) LOSS OF SUPPORT CAPABILITY OR INADEQUATE RESTRAINT FOR SUPPORTS & HANGERS ON PIPING EXCEEDING 4" NOM. TESTS SHALL BE CONDUCTED PER ASME SECTION XI, ARTICLES IWA-5000 & IWD-2000.
2. FOR BRANCH PIPING 4" NOM OR LESS (CONN SHOWN IN DASHED) EXTEND VISUAL LEAKAGE EXAM THROUGH THE OUTERMOST NORMALLY CLOSED NUCLEAR CLASS VALVE, OR UNTIL TRANSITION TO INSTRUMENT TUBING, UNLESS OTHERWISE NOTED.

REFERENCES:

BOVEE & CRAIL ISOMETRICS

SW-251-1.3 REV 11
SW-292-1.5 REV 8

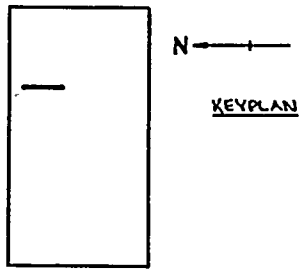

THIS DRAWING IS INTENDED FOR USE IN PRESERVICE AND INSERVICE INSPECTION PROGRAMS ONLY.

PIPING SYSTEM	NOM DIA (IN)	SCH	NOM WALL THK	MATERIAL SPECIFICATION	MATL TYPE	CAL BLOCK NO
20" SW(2)-2	20	STD	0.375	SA 106 GR B	CS	NA
6" SW(16)-2	6	STD	0.280	SA 106 GR B	CS	NA
6" SW(16)-2	6	160	0.719	SA 106 GR B	CS	NA

NO	DATE	REVISION	BY	CHKD	APPVD
1	12-2-86	RELOCATED SW-198 ADDED KEYPLAN	KGA	DMC	TFH
0	11-5-80	ISSUED FOR USE	KGA	DMC	TFH

QUALITY CLASS: 1 | ASME CODE CLASS: 3

ENGR: G.A. KUGLER | DRAWN: K. McA | DATE: 12-5-78

WASHINGTON PUBLIC POWER SUPPLY SYSTEM
RICHLAND WASHINGTON 99352

WNP-2
WELD & COMPONENT IDENTIFICATION DIAGRAM

TITLE:
SW LOOP B SUPPLY SW-P-1B DISCHARGE

DWG NO: SW-305-1 | REV 1

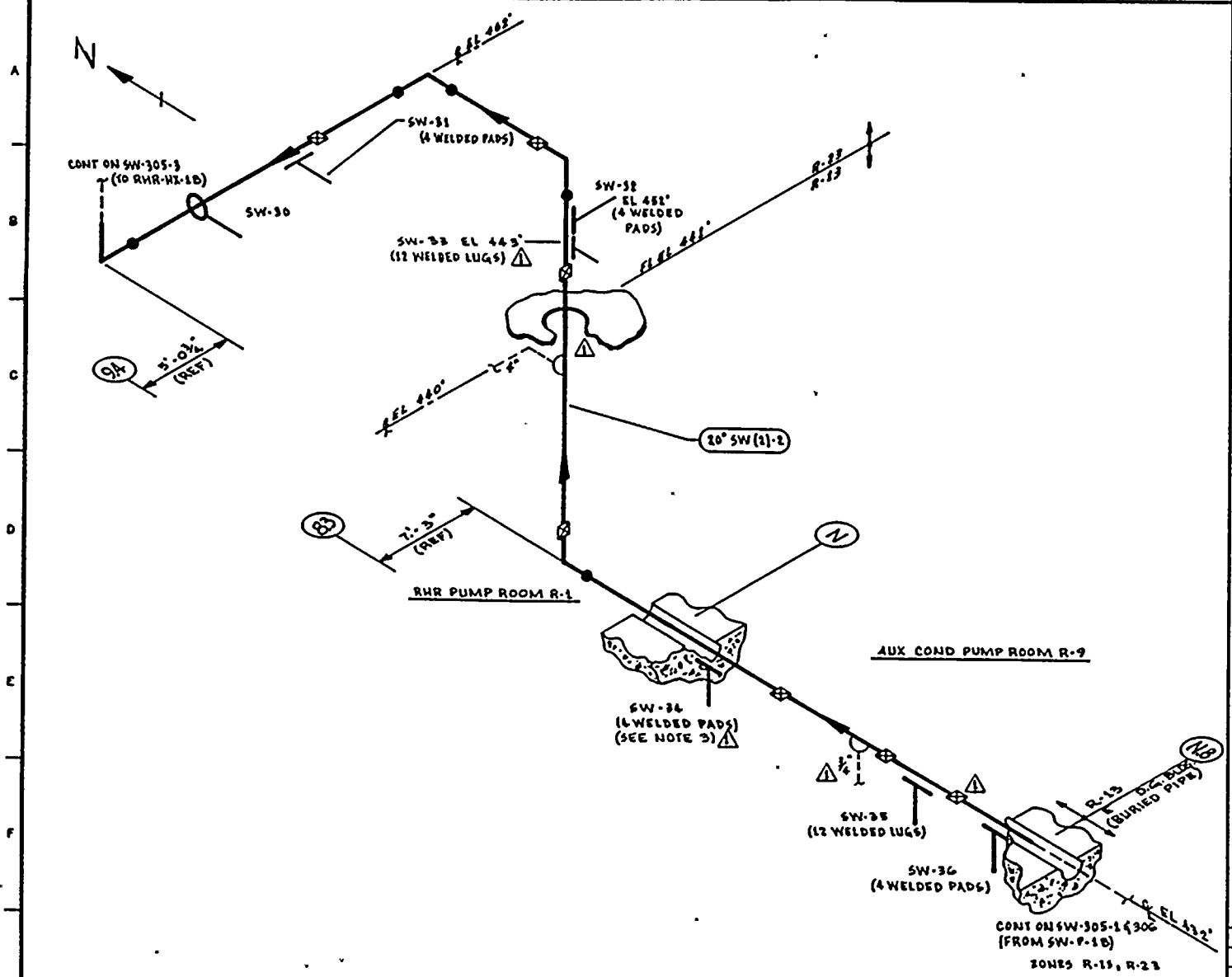

NOTES:

1. THIS DRAWING IDENTIFIES PIPING & COMPONENTS SUBJECT ONLY TO A VISUAL EXAM FOR (1) EVIDENCE OF LEAKAGE DURING SYSTEM PRESSURE OR OPERABILITY TESTS; (2) PRESSURE DECAY TESTS OF BURIED PIPING; & (3) LOSS OF SUPPORT. CAPABILITY OR INADEQUATE RESTRAINT FOR SUPPORTS & HANGERS ON PIPING EXCEEDING 4" NOM. TESTS SHALL BE CONDUCTED PER ASME SECTION XI, ARTICLES IWA-5000 & IWD-2000.
2. FOR BRANCH PIPING 4" NOM & LESS (CONN SHOWN IN DASHED LINES) EXTEND VISUAL LEAKAGE EXAM THROUGH THE OUTERMOST NORMALLY CLOSED NUCLEAR CLASS VALVE OR UNTIL TRANSITION TO INSTRUMENT TUBING, UNLESS OTHERWISE NOTED.
3. ⚠ COMPONENT SUPPORT IS INACCESSIBLE DUE TO FOAM FILLED WATER TIGHT BOOT.

REFERENCES:

BOVEE & CRAIL ISOMETRICS

SW-251-19.22	REV 8
SW-251-25.29	REV 10
SW-251-30.33	REV 8

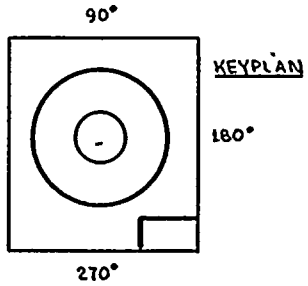

QUALITY CLASS: 1		ASME CODE CLASS: 3	
ENGR: GA KUGLER	DRAWN: K. McA	DATE: 1-11-79	

WASHINGTON PUBLIC POWER SUPPLY SYSTEM
RICHLAND, WASHINGTON 99352

THIS DRAWING IS INTENDED FOR USE IN PRESERVICE AND INSERVICE INSPECTION PROGRAMS ONLY.

PIPING SYSTEM	NOM DIA (IN)	SCH	NOM WALL THK	MATERIAL SPECIFICATION	MATL TYPE	CAL BLOCK NO
20" SW(2)-2	20	STD	0.375	SA 106 GR B	CS	NA

WNP-2
WELD & COMPONENT IDENTIFICATION DIAGRAM

TITLE: SW LOOP B SUPPLY TO RHR-HX-1B

DWG NO: SW-305-2 REV 1

NO	DATE	REVISION	BY	CHKD	APPVD
1	1-27-84	REVISED AS NOTED ADDED KEYPLAN	K.McA	GAK	TFK
0	11-5-80	ISSUED FOR USE	K.McA	GAK	TFK

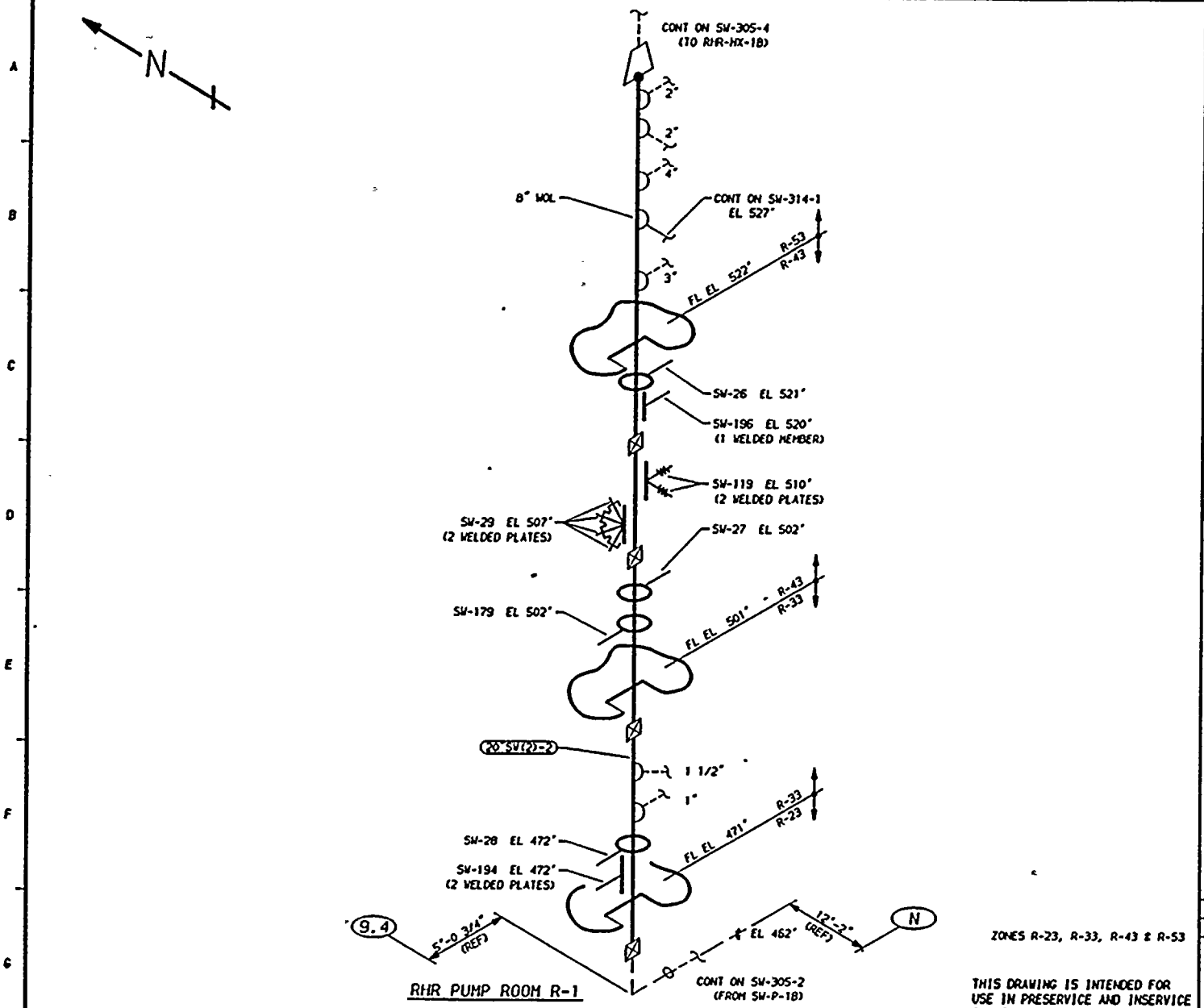

ZONES R-23, R-33, R-43 & R-53

THIS DRAWING IS INTENDED FOR USE IN PRESERVICE AND INSERVICE INSPECTIONS PROGRAMS ONLY.

NOTES:

1. THIS DRAWING IDENTIFIES PIPING AND COMPONENTS SUBJECT ONLY TO A VISUAL EXAM FOR (1) EVIDENCE OF LEAKAGE DURING SYSTEM PRESSURE OR OPERABILITY TESTS, (2) PRESSURE DECAY TESTS OF BURIED PIPING, AND (3) LOSS OF SUPPORT CAPABILITY OR INADEQUATE RESTRAINT FOR SUPPORTS AND HANGERS ON PIPING EXCEEDING 4" NOM. TESTS SHALL BE CONDUCTED PER ASME SECTION XI, ARTICLES IWA-5000 AND IWD-2000.

2. FOR BRANCH PIPING 4" NOM. OR LESS (CONNECTION SHOWN IN DASHED LINES) EXTEND VISUAL LEAKAGE EXAM THROUGH THE OUTERMOST NORMALLY CLOSED NUCLEAR CLASS VALVE, OR UNTIL TRANSITION TO INSTRUMENT TUBING, UNLESS OTHERWISE NOTED.

REFERENCES:

ISI - 224

BOVEE & CRAIL ISOMETRICS
SW-2S1-30.33 REV 8
SW-2S1-34.3S REV 11

KEYPLAN

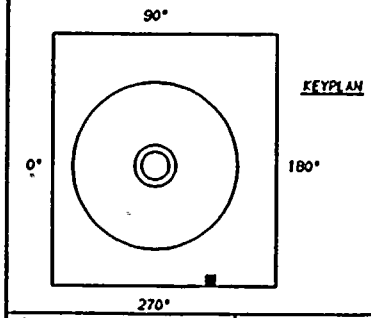

QUALITY CLASS: 1	ASME CODE CLASS: 3
ENGR: GA KUGLER	DRAWN: K-McA	DATE: 2-28-79

WASHINGTON PUBLIC POWER
SUPPLY SYSTEM
RICHLAND, WASHINGTON 99352

PIPING SYSTEM	NOM DIA (IN)	SCH	NOM WALL THK	MATERIAL SPECIFICATION	MATL TYPE	CAL BLOCK NO
20"SW(2)-2	20	STD	0.375	SA 106 GR B	CS	NA

WNP-2
WELD & COMPONENT
IDENTIFICATION DIAGRAM

TITLE:
SW LOOP B SUPPLY TO RHR-HX-1B

DWG NO: SW-305-3 | REV 1

NO	DATE	REVISION	BY	CHKD	APVD
1	2-28-79	GENERAL UP-DATE REDRAWN	K-McA	GAK	TPH
0	11-5-80	ISSUED FOR USE	K-McA	GAK	TPH

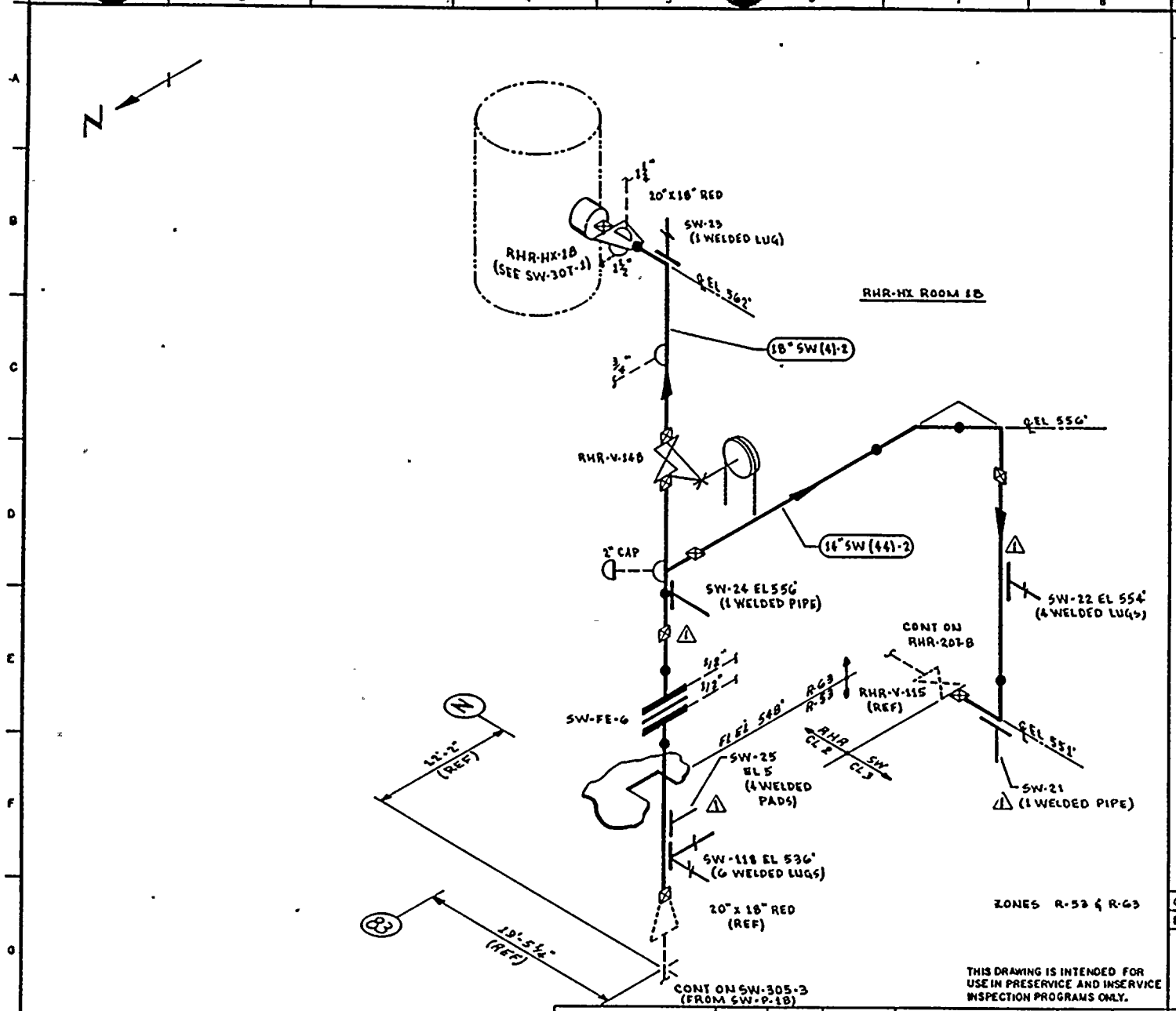

NOTES:

1. THIS DRAWING IDENTIFIES PIPING & COMPONENTS SUBJECT ONLY TO A VISUAL EXAM FOR (1) EVIDENCE OF LEAKAGE DURING SYSTEM PRESSURE OR OPERABILITY TESTS; (2) PRESSURE DECAY TESTS OF BURIED PIPING; & (3) LOSS OF SUPPORT CAPABILITY OR INADEQUATE RESTRAINT FOR SUPPORTS & HANGERS ON PIPING EXCEEDING 4" NOM. TESTS SHALL BE CONDUCTED PER ASME SECTION XI, ARTICLES IWA-5000 & IWD-2000.
2. FOR BRANCH PIPING 4" NOM. OR LESS (CONN SHOWN IN DASHED LINES) EXTEND VISUAL LEAKAGE EXAM THROUGH THE OUTERMOST NORMALLY CLOSED NUCLEAR CLASS VALVE, OR UNTIL TRANSITION TO INSTRUMENT TUBING, UNLESS OTHERWISE NOTED.

REFERENCES:

BOVEE & CRAIL ISOMETRICS

SW-251-34.35	REV 11
SW-251-36.37	REV 8
SW-322-1.2	REV 6

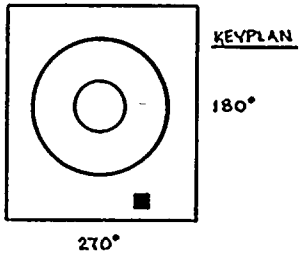

QUALITY CLASS: 1	ASME CODE CLASS: 3		
ENGR: GA KUGLER	DRAWN: K. McL	DATE: 3-2-79	

WASHINGTON PUBLIC POWER SUPPLY SYSTEM
RICHLAND, WASHINGTON 99352

THIS DRAWING IS INTENDED FOR USE IN PRESERVICE AND INSERVICE INSPECTION PROGRAMS ONLY.

PIPING SYSTEM	NOM DIA (IN)	SCH	NOM WALL THK	MATERIAL SPECIFICATION	MATL TYPE	CAL BLOCK NO
18" SW (4)-2	18	STD	0.375	SA 106 GR B	CS	NA
14" SW (44)-2	14	STD	0.375	SA 106 GR B	CS	NA

WNP-2
WELD & COMPONENT IDENTIFICATION DIAGRAM

TITLE: SW LOOP B SUPPLY TO RHR-HX-1B

DWG NO: SW-305-4 REV 1

NO	DATE	REVISION	BY	CHKD	APPVD
1	12-7-84	REVISED AS NOTED ADDED KEYPLAN	K McL	[illegible]	[illegible]
0	11-6-80	ISSUED FOR USE	K McL	[illegible]	[illegible]

WNP-02
INTERVAL: PSI
PERIOD: NA
OUTAGE:
DRAWING NO. SW-305

WASHINGTON PUBLIC POWER SUPPLY SYSTEM
PROGRAM PLAN AND SCHEDULE
SYSTEM OR COMPONENT: SW(2)-2
DESCRIPTION: SW LOOP B SUPPLY

DATE 12/14/84

IDENT. NO.	DESCRIPTION	SECT. XI EXAM.	EXAM MTH.	PROCEDURE	CAL. BLOCK	INSERVICE REQ.	SCHEDULED OUTAGE	NOTES
SW-198	BOX	N/A	VT-3	303/8.2.17				
SW-36	RIGID	N/A	VT-3	303/8.2.17				
SW-35	STRUT	N/A	VT-3	303/8.2.17				
SW-34	RIGID	N/A	VT-3	303/8.2.17				
SW-33	BOX	N/A	VT-3	303/8.2.17				
SW-32	BOX	N/A	VT-3	303/8.2.17				
SW-31	BOX	N/A	VT-3	303/8.2.17				
SW-30	STRUT	N/A	VT-3	303/8.2.17				
SW-194	STRUT	N/A	VT-3	303/8.2.17				
SW-28	STRUT	N/A	VT-3	303/8.2.17				
SW-179	STRUT	N/A	VT-3	303/8.2.17				
SW-27	STRUT	N/A	VT-3	303/8.2.17				
SW-29	PSA-10 SN(4)	N/A	VT-3	303/8.2.17				S/N
			VT-4	303/8.2.17				S/N
SW-119	SPRING (2)	N/A	VT-3	303/8.2.17				
SW-196	STRUT	N/A	VT-3	303/8.2.17				
SW-26	BOX	N/A	VT-3	303/8.2.17				
SW-118	SPRING	N/A	VT-3	303/8.2.17				

WNP-02
INTERVAL: PSI
PERIOD: NA
OUTAGE:
DRAWING NO. SW-305

WASHINGTON PUBLIC POWER SUPPLY SYSTEM
PROGRAM PLAN AND SCHEDULE
SYSTEM OR COMPONENT: SW(2)-2
DESCRIPTION: SW LOOP B SUPPLY

DATE 12/14/84

IDENT. NO.	DESCRIPTION	SECT. XI EXAM.	EXAM MTH.	PROCEDURE	CAL. BLOCK	INSERVICE REQ.	SCHEDULED OUTAGE	NOTES
			VT-4	303/8.2.17				
SW-25								
	RIGID	N/A	VT-3	303/8.2.17				
SW-24								
	RIGID	N/A	VT-3	303/8.2.17				
SW-23								
	SPRING	N/A	VT-3	303/8.2.17				
			VT-4	303/8.2.17				
SW-22								
	SPRING	N/A	VT-3	303/8.2.17				
			VT-4	303/8.2.17				
SW-21								
	PSA-3 SNUBBER	N/A	VT-3	303/8.2.17				
			VT-4	303/8.2.17				
SW-PB-305								
	SW PRES BNDRY	N/A	VT-2	N/A				SEE NOTES #6 & #7.

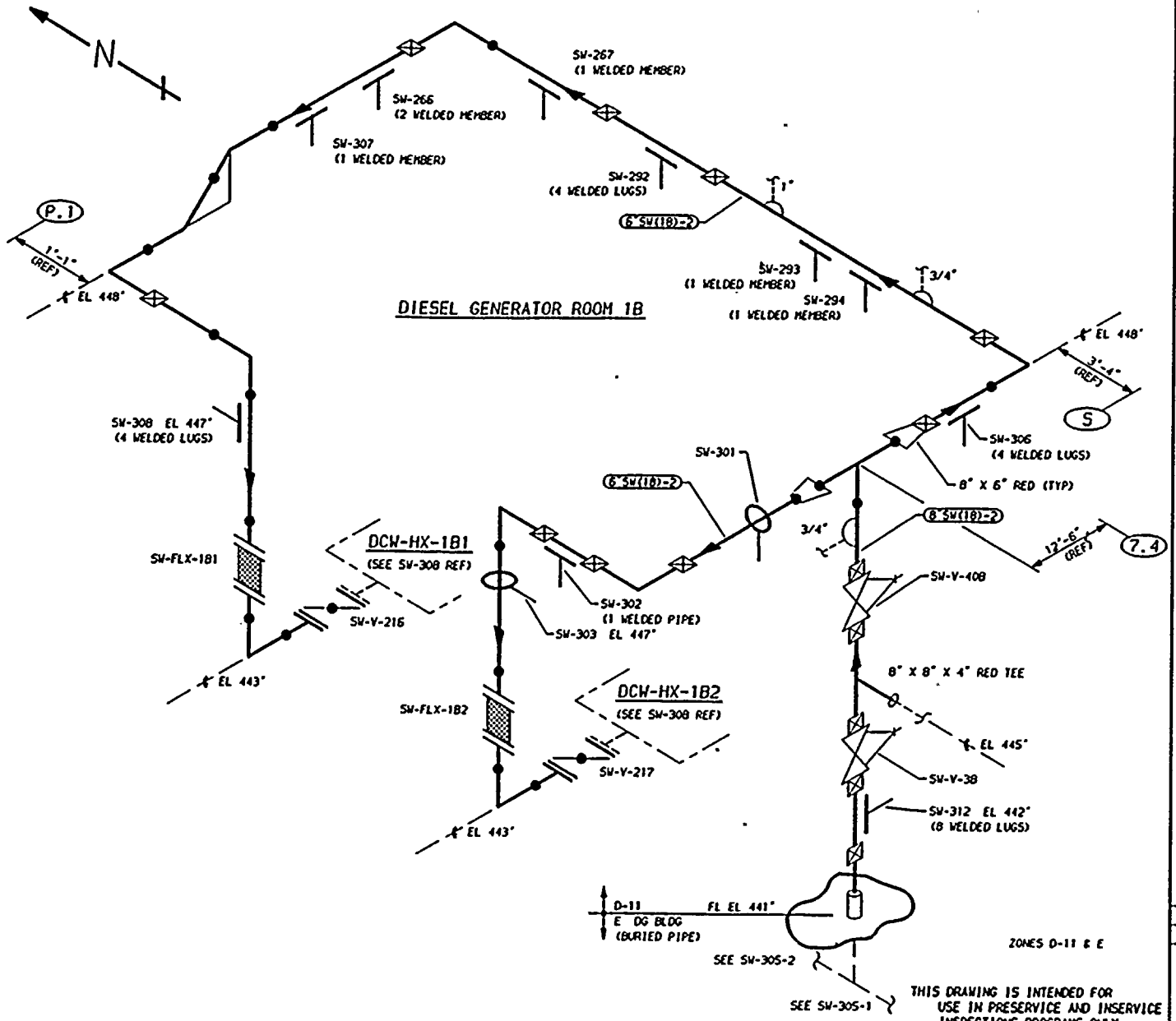

THIS DRAWING IS INTENDED FOR USE IN PRESERVICE AND INSERVICE INSPECTIONS PROGRAMS ONLY.

NOTES:

1. THIS DRAWING IDENTIFIES PIPING AND COMPONENTS SUBJECT ONLY TO A VISUAL EXAM FOR (1) EVIDENCE OF LEAKAGE DURING SYSTEM PRESSURE OR OPERABILITY TESTS, (2) PRESSURE DECAY TESTS OF BURIED PIPING, AND (3) LOSS OF SUPPORT CAPABILITY OR INADEQUATE RESTRAINT FOR SUPPORTS AND HANGERS ON PIPING EXCEEDING 4" NOM. TESTS SHALL BE CONDUCTED PER ASME SECTION XI, ARTICLES IWA-5000 AND IWD-2000.

2. FOR BRANCH PIPING 4" NOM. OR LESS (CONNECTION SHOWN IN DASHED LINES) EXTEND VISUAL LEAKAGE EXAM THROUGH THE OUTERMOST NORMALLY CLOSED NUCLEAR CLASS VALVE, OR UNTIL TRANSITION TO INSTRUMENT TUBING, UNLESS OTHERWISE NOTED.

REFERENCES:

151 - 224

BOYEE & CRAIL ISOMETRICS
SW-251-19-22 REV 8
SW-293-1.2 REV 6
SW-293-3.8 REV 8

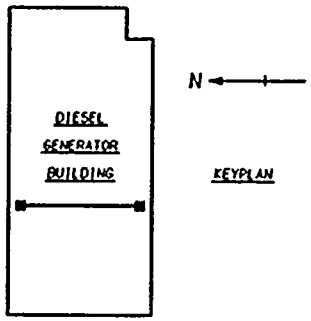

QUALITY CLASS: 1	ASME CODE CLASS: 3
ENGR: GA KUGLER	DRAWN: K-McA / DATE: 3-9-79

WASHINGTON PUBLIC POWER
SUPPLY SYSTEM
RICHLAND, WASHINGTON 99352

WNP-2
WELD & COMPONENT
IDENTIFICATION DIAGRAM

TITLE:
SW LOOP B SUPPLY TO DCW-HX-1B1 & 1B2

DWG NO: SW-306 REV 1

PIPING SYSTEM	NOM DIA (IN)	SCH	NOM WALL THK	MATERIAL SPECIFICATION	MATL TYPE	CAL BLOCK NO
8"SW(1B)-2	8	STD	0.322	SA 106 GR B	CS	NA
6"SW(1B)-2	6	STD	0.280	SA 106 GR B	CS	NA

NO	DATE	REVISION	BY	CHKD	APVD
1	1-22-86	GENERAL UP-DATE REDRAWN	K-McA	GAK	TFH
0	11-5-80	ISSUED FOR USE			

WNP-02
INTERVAL: PSI
PERIOD: NA
OUTAGE:
DRAWING NO. SW-306

WASHINGTON PUBLIC POWER SUPPLY SYSTEM
PROGRAM PLAN AND SCHEDULE
SYSTEM OR COMPONENT: SW(18)-2
DESCRIPTION: SW LOOP B SUPPLY

DATE 12/14/84

IDENT. NO.	DESCRIPTION	SECT. XI EXAM.	EXAM MTH.	PROCEDURE	CAL. BLOCK	INSERVICE REQ.	INSERVICE SCHEDULED OUTAGE	NOTES
SW-308	BOX	N/A	VT-3	303/8.2.17				
SW-307	BOX	N/A	VT-3	303/8.2.17				
SW-266	BOX	N/A	VT-3	303/8.2.17				
SW-267	BOX	N/A	VT-3	303/8.2.17				
SW-292	BOX	N/A	VT-3	303/8.2.17				
SW-293	BOX	N/A	VT-3	303/8.2.17				
SW-294	BOX	N/A	VT-3	303/8.2.17				
SW-306	BOX	N/A	VT-3	303/8.2.17				
SW-303	BOX	N/A	VT-3	303/8.2.17				
SW-302	BOX	N/A	VT-3	303/8.2.17				
SW-301	BOX	N/A	VT-3	303/8.2.17				
SW-312	BOX	N/A	VT-3	303/8.2.17				
SW-PB-306	SW PRES BNDRY	N/A	VT-2	N/A				SEE NOTES #6 & #7.

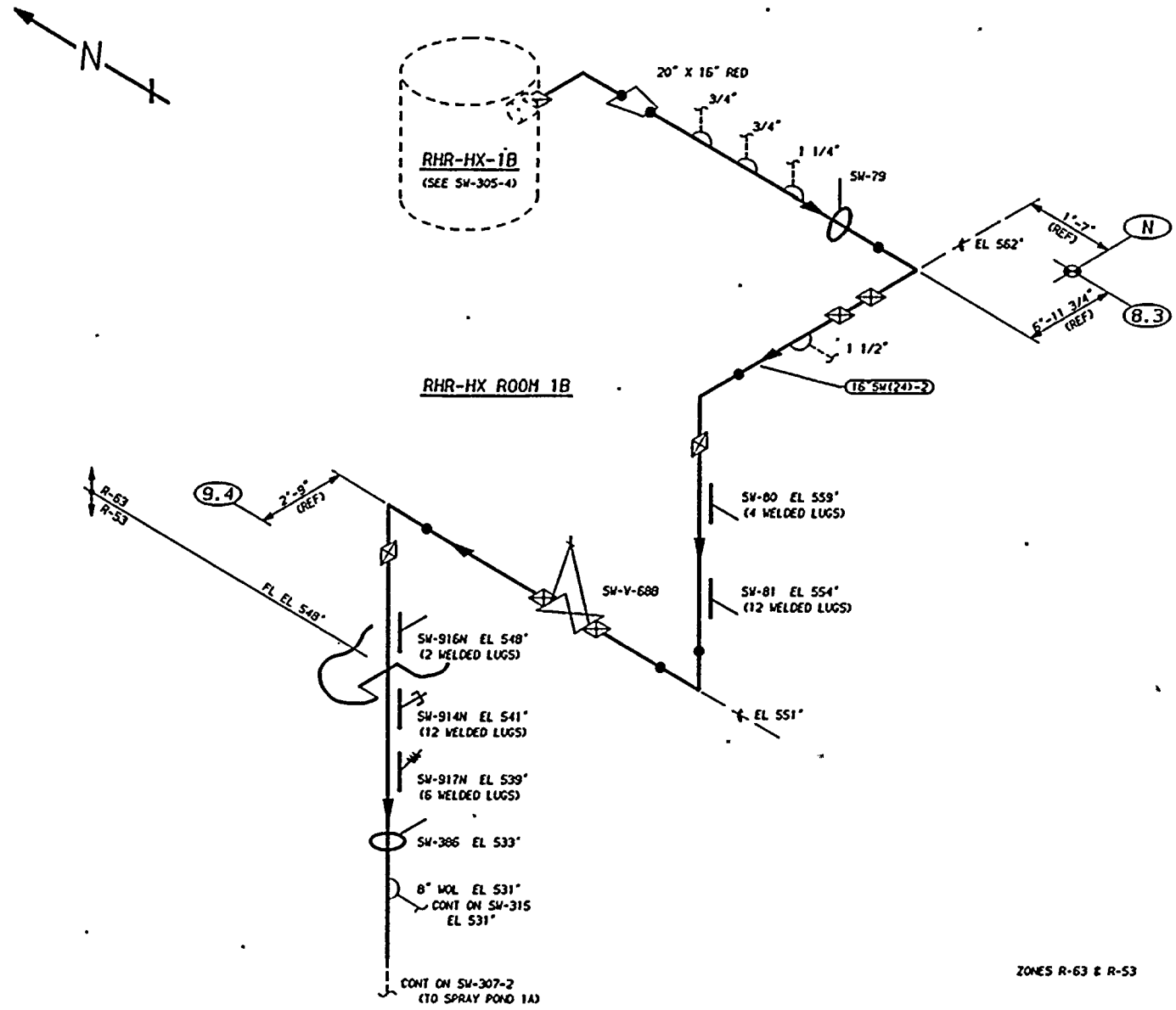

ZONES R-63 & R-53

THIS DRAWING IS INTENDED FOR USE IN PRESERVICE AND INSERVICE INSPECTIONS PROGRAMS ONLY.

NOTES:

1. THIS DRAWING IDENTIFIES PIPING AND COMPONENTS SUBJECT ONLY TO A VISUAL EXAM FOR (1) EVIDENCE OF LEAKAGE DURING SYSTEM PRESSURE OR OPERABILITY TESTS, (2) PRESSURE DECAY TESTS OF BURIED PIPING, AND (3) LOSS OF SUPPORT CAPABILITY OR INADEQUATE RESTRAINT FOR SUPPORTS AND HANGERS ON PIPING EXCEEDING 4" NOM. TESTS SHALL BE CONDUCTED PER ASME SECTION XI, ARTICLES IWA-5000 AND IWD-2000.

2. FOR BRANCH PIPING 4" NOM. OR LESS (CONNECTION SHOWN IN DASHED LINES) EXTEND VISUAL LEAKAGE EXAM THROUGH THE OUTERMOST NORMALLY CLOSED NUCLEAR CLASS VALVE, OR UNTIL TRANSITION TO INSTRUMENT TUBING, UNLESS OTHERWISE NOTED.

REFERENCES:

ISI - 224

BOVEE & CRAIL ISOMETRICS
SW-295-1.3 REV 10
SW-295-4.6 REV 13

KEYPLAN

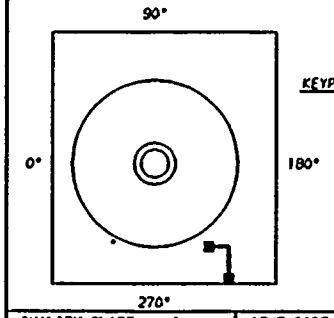

PIPING SYSTEM	NOM DIA (IN)	SCH	NOM WALL THK	MATERIAL SPECIFICATION	MATL TYPE	CAL BLOCK NO
16"SW(24)-2	16	STD	0.375	SA 106 GR B	CS	NA

NO	DATE	REVISION	BY	CHKD	APVD
1	1-21-86	GENERAL UP-DATE REDRAWN	K-McA	GAK	TFH
0	11-5-80	ISSUED FOR USE	K-McA	GAK	TFH

QUALITY CLASS: 1 | ASME CODE CLASS: 3

ENGR: GA KUGLER | DRAWN: K-McA | DATE: 3-7-79

WASHINGTON PUBLIC POWER
SUPPLY SYSTEM
RICHLAND, WASHINGTON 99352

WNP-2
WELD & COMPONENT
IDENTIFICATION DIAGRAM

TITLE:
SW LOOP A SUPPLY TO RHR-HX-1A

DWG NO: SW-307-1 | REV 1

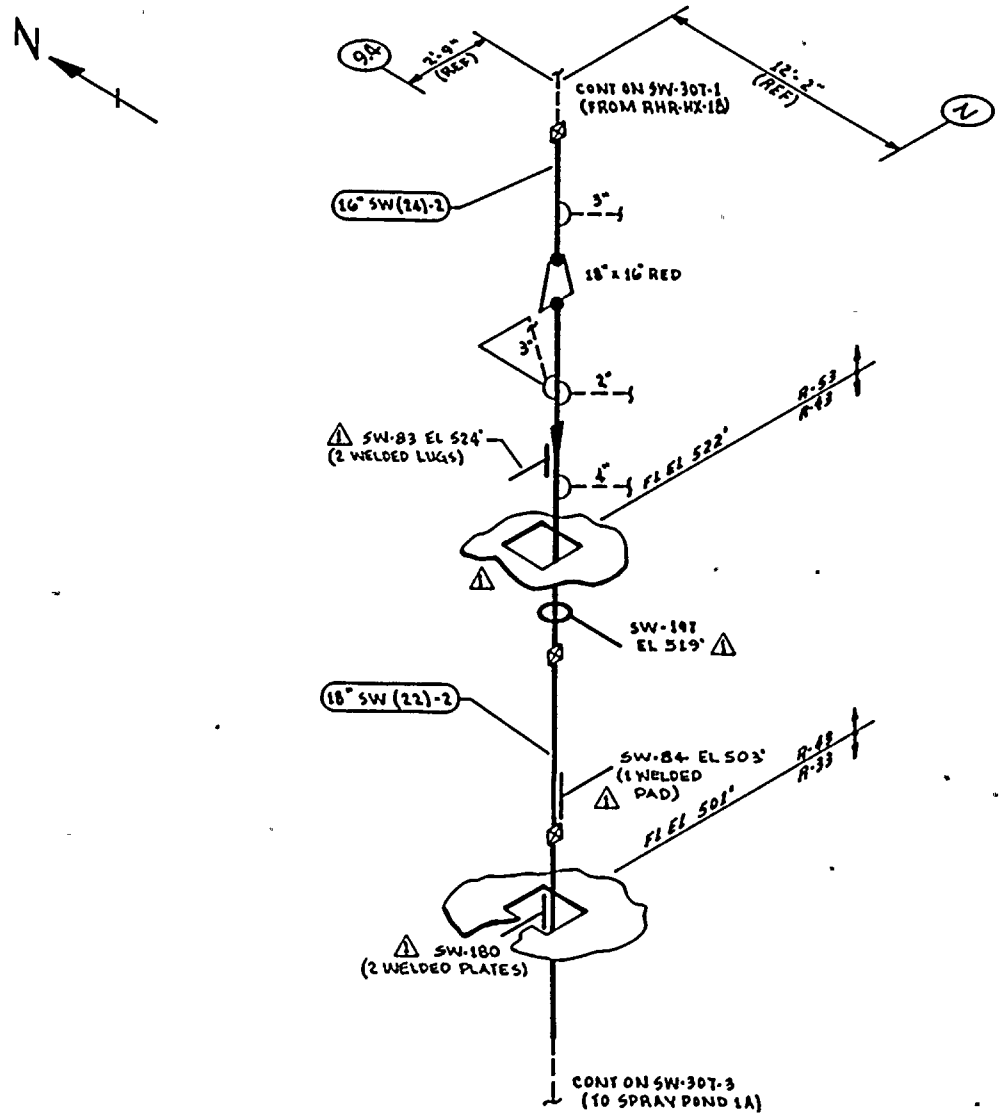

ZONES R-53, R-43 & R-33

NOTES:

1. THIS DRAWING IDENTIFIES PIPING & COMPONENTS SUBJECT ONLY TO A VISUAL EXAM FOR (1) EVIDENCE OF LEAKAGE DURING SYSTEM PRESSURE OR OPERABILITY TESTS; (2) PRESSURE DECAY TESTS OF BURIED PIPING; & (3) LOSS OF SUPPORT CAPABILITY OR INADEQUATE RESTRAINT FOR SUPPORTS & HANGERS ON PIPING EXCEEDING 4" NOM. TESTS SHALL BE CONDUCTED PER ASME SECTION XI, ARTICLES IWA-5000 & IWD-2000.
2. FOR BRANCH PIPING 4" NOM OR LESS (CONN SHOWN IN DASHED LINES) EXTEND VISUAL LEAKAGE EXAM THROUGH THE OUTERMOST NORMALLY CLOSED NUCLEAR CLASS VALVE, OR UNTIL TRANSITION TO INSTRUMENT TUBING, UNLESS OTHERWISE NOTED.

REFERENCES:

BOVEE & CRAIL ISOMETRICS

SW-295-4.6 REV 15
SW-295-7.11 REV 10

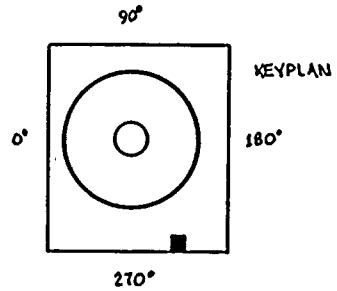

THIS DRAWING IS INTENDED FOR USE IN PRESERVICE AND INSERVICE INSPECTION PROGRAMS ONLY.

PIPING SYSTEM	NOM DIA (IN)	SCH	NOM WALL THK	MATERIAL SPECIFICATION	MATL TYPE	CAL BLOCK NO
16" SW(24)-2	16"	STD	0.375	SA 106	CG	NA
18" SW(22)-2	18"	STD	0.375	SA 106	CG	NA

NO	DATE	REVISION	BY	CHKD	APPVD
1	1-27-84	REVISED AS NOTED ADDED KEYPLAN	KMcA	DHR	TFW
0	11-5-80	ISSUED FOR USE	KMcA	DHR	RSB

QUALITY CLASS: 1 | ASME CODE CLASS: 3

ENGR: G.A. KUGLER | DRAWN: K. McA. | DATE: 3-8-79

WASHINGTON PUBLIC POWER SUPPLY SYSTEM
RICHLAND, WASHINGTON 99352

WNP-2
WELD & COMPONENT IDENTIFICATION DIAGRAM

TITLE: SW LOOP RETURN TO SPRAY POND 1A

DWG NO: SW-307-2 | REV 1

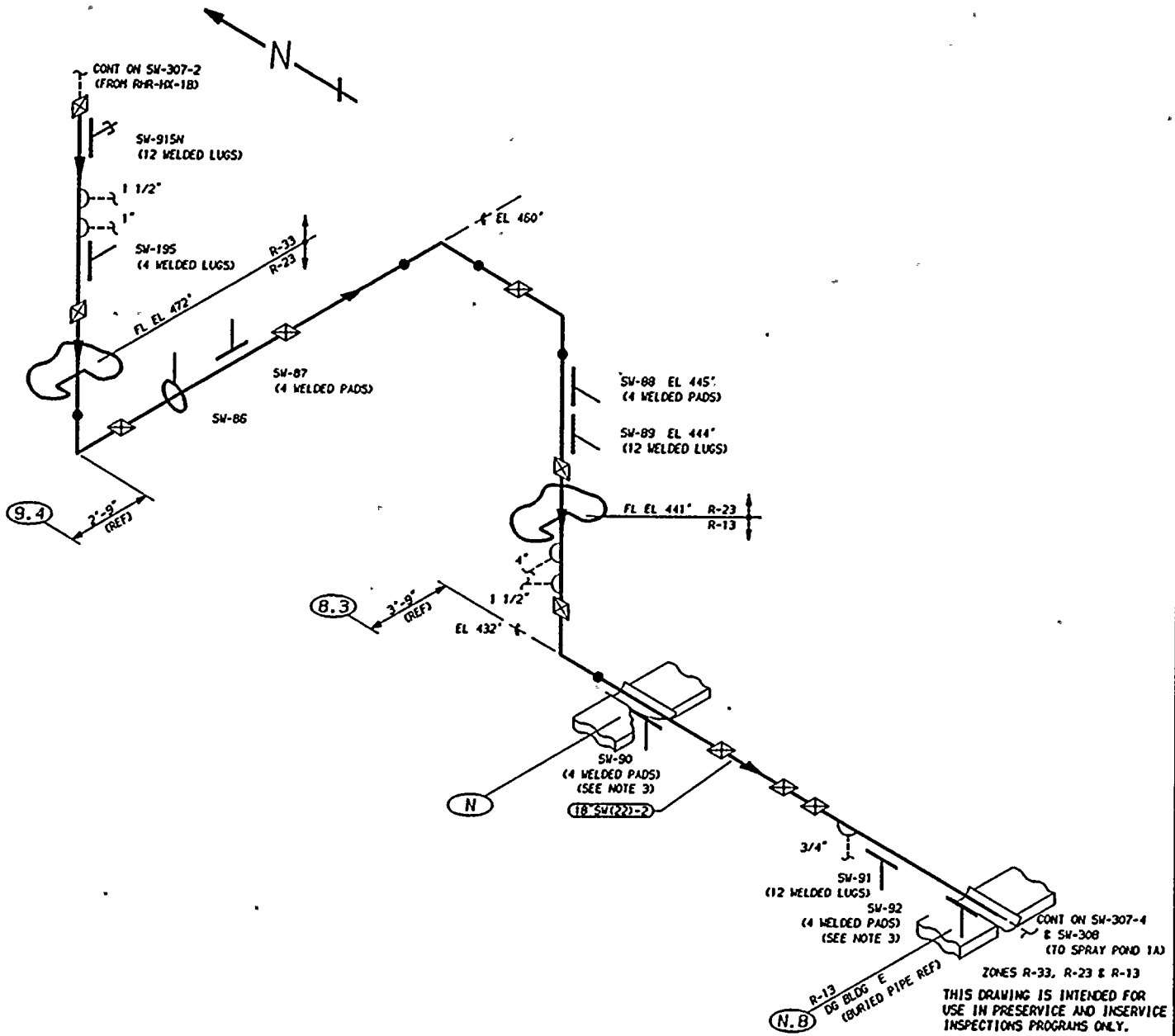

ZONES R-33, R-23 & R-13

THIS DRAWING IS INTENDED FOR USE IN PRESERVICE AND INSERVICE INSPECTIONS PROGRAMS ONLY.

NOTES:

1. THIS DRAWING IDENTIFIES PIPING AND COMPONENTS SUBJECT ONLY TO A VISUAL EXAM FOR (1) EVIDENCE OF LEAKAGE DURING SYSTEM PRESSURE OR OPERABILITY TESTS, (2) PRESSURE DECAY TESTS OF BURIED PIPING, AND (3) LOSS OF SUPPORT CAPABILITY OR INADEQUATE RESTRAINT FOR SUPPORTS AND HANGERS ON PIPING EXCEEDING 4" NOM. TESTS SHALL BE CONDUCTED PER ASME SECTION XI, ARTICLES IWA-5000 AND IWD-2000.
2. FOR BRANCH PIPING 4" NOM. OR LESS (CONNECTION SHOWN IN DASHED LINES) EXTEND VISUAL LEAKAGE EXAM THROUGH THE OUTERMOST NORMALLY CLOSED NUCLEAR CLASS VALVE, OR UNTIL TRANSITION TO INSTRUMENT TUBING, UNLESS OTHERWISE NOTED.
3. COMPONENT SUPPORT IS UNACCESSIBLE DUE TO FOAM FILLED WATER TIGHT BOOT.

REFERENCES:

- ISI - 224
- BOYEE & CRAIL ISOMETRICS
  - SW-29S- 7.11 REV 10
  - SW-29S-12.18 REV 11
  - SW-29S-19.22 REV 9

KEYPLAN

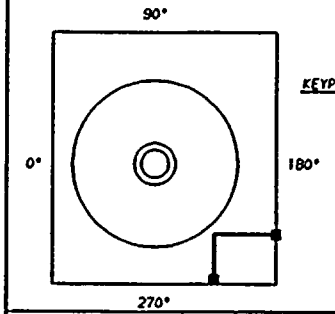

PIPING SYSTEM	NOM DIA (IN)	SCH	NOM WALL THK	MATERIAL SPECIFICATION	MATL TYPE	CAL BLOCK NO
18"SW(22)-2	18	STD	0.375	SA 106 GR B	CS	NA

NO	DATE	REVISION	BY	CHKD	APVD
1	1-14-86	GENERAL UP-DATE REDRAWN	K-McA	DFR	TH
0	11-5-80	ISSUED FOR USE	K-McA	GAK	TH

QUALITY CLASS: 1 | ASME CODE CLASS: 3

ENGR: GA KUGLER | DRAWN: K-McA | DATE: 3-8-79

WASHINGTON PUBLIC POWER
SUPPLY SYSTEM
RICHLAND, WASHINGTON 99352

WNP-2
WELD & COMPONENT
IDENTIFICATION DIAGRAM

TITLE:
SW LOOP B RETURN TO SPRAY POND 1A

DWG NO: SW-307-3 | REV 1

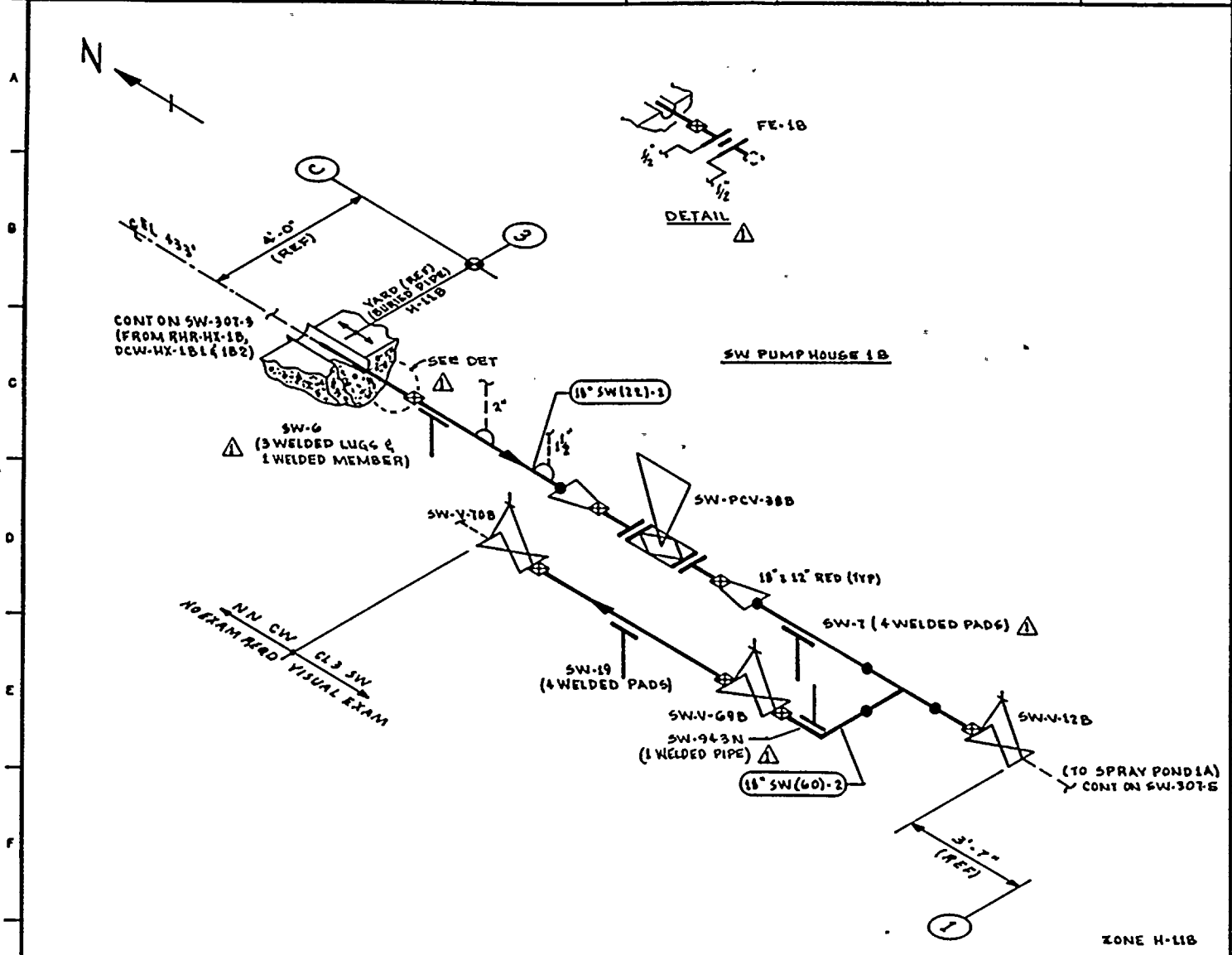

NOTES:

1. THIS DRAWING IDENTIFIES PIPING & COMPONENTS SUBJECT ONLY TO A VISUAL EXAM FOR (1) EVIDENCE OF LEAKAGE DURING SYSTEM PRESSURE OR OPERABILITY TESTS; (2) PRESSURE DECAY TESTS OF BURIED PIPING; & (3) LOSS OF SUPPORT CAPABILITY OR INADEQUATE RESTRAINT FOR SUPPORTS & HANGERS ON PIPING 4" NOM. TESTS SHALL BE CONDUCTED PER ASME SECTION XI, ARTICLES IWA-5000 & IWD 2000.
2. FOR BRANCH PIPING 4" NOM OR LESS (CONN SHOWN IN DASHED LINES) EXTEND VISUAL LEAKAGE EXAM THROUGH THE OUTERMOST NORMALLY CLOSED NUCLEAR CLASS VALVE, OR UNTIL TRANSITION TO INSTRUMENT TUBING, UNLESS OTHERWISE NOTED.

REFERENCES:

BOVEE & CRAIL ISOMETRICS

SW-295-33.38 REV 12
SW-295-39.42 REV 13

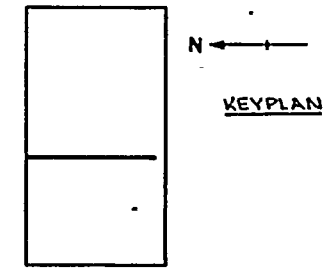

THIS DRAWING IS INTENDED FOR USE IN PRESERVICE AND INSERVICE INSPECTION PROGRAMS ONLY.

PIPING SYSTEM	NOM DIA (IN)	SCH	NOM WALL THK	MATERIAL SPECIFICATION	MATL TYPE	CAL BLOCK NO
18" SW (22)-2	18"	STD	0.375	SA 106 GR B	CS	NA
18" SW (60)-2	18	STD	0.375	SA 106 GR B	CS	NA

NO	DATE	REVISION	BY	CHKD	APPVD
1	1-28-84	REVISED AS NOTED ADDED KEYPLAN	KMcA	LPR	TFK
0	11-5-80	ISSUED FOR USE	KMcA	--	[illegible]

QUALITY CLASS: 1 | ASME CODE CLASS: 3
ENGR: G.A. KUGLER | DRAWN: K-McA | DATE: 3-9-79

WASHINGTON PUBLIC POWER SUPPLY SYSTEM
RICHLAND, WASHINGTON 99352

WNP-2
WELD & COMPONENT IDENTIFICATION DIAGRAM

TITLE: SW LOOP B RETURN TO SPRAY POND 1A

DWG NO: SW-307-4 | REV 1

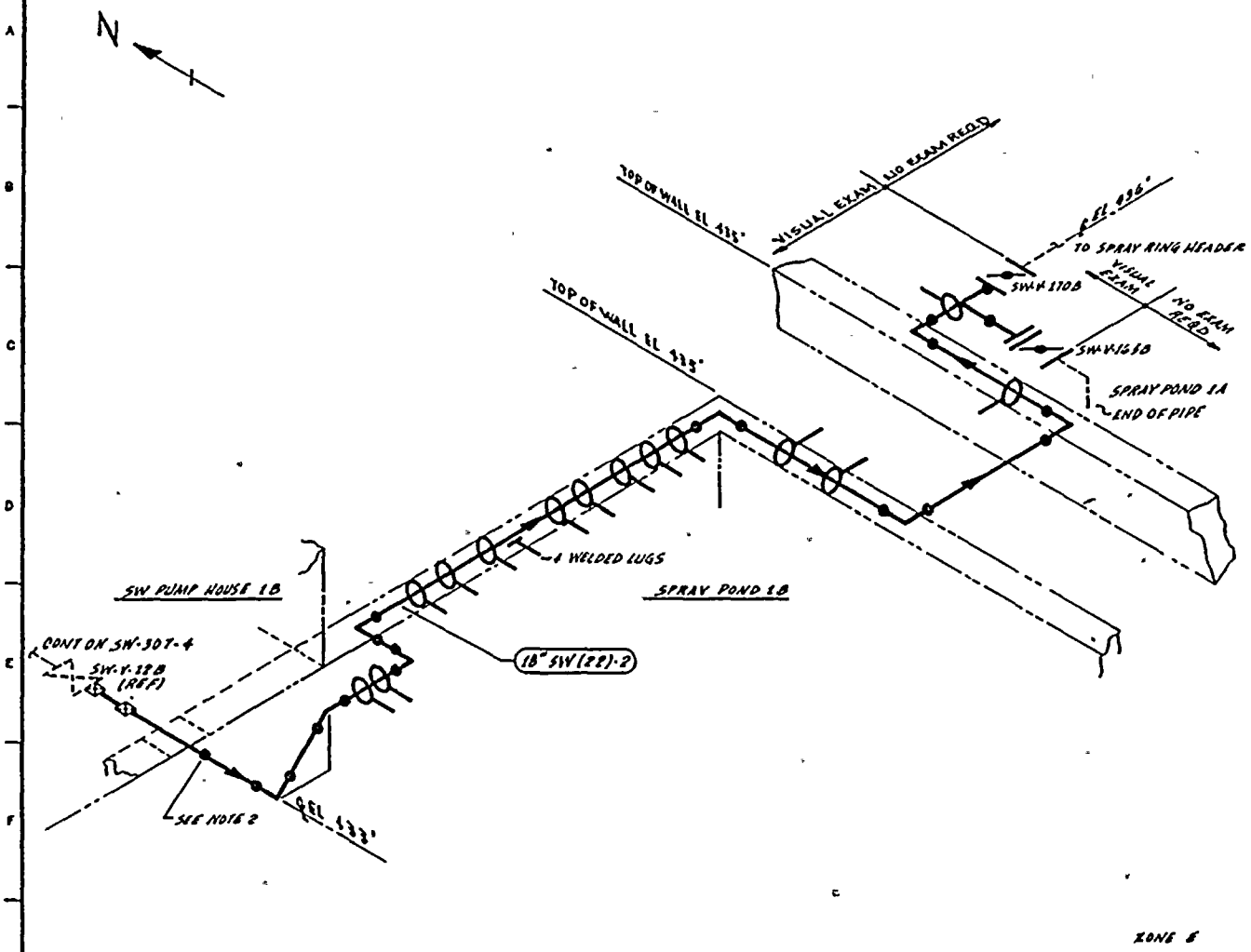

ZONE E

THIS DRAWING IS INTENDED FOR USE IN PRESERVICE AND INSERVICE INSPECTION PROGRAMS ONLY.

NOTES:

1. THIS DRAWING IDENTIFIES PIPING & COMPONENTS SUBJECT ONLY TO A VISUAL EXAM FOR (1) EVIDENCE OF LEAKAGE DURING SYSTEM PRESSURE OR OPERABILITY TESTS; (2) PRESSURE DECAY TESTS OF BURIED PIPING & (3) LOSS OF SUPPORT CAPABILITY OR INADEQUATE RESTRAINT FOR SUPPORTS & HANGERS ON PIPING EXCEEDING 4" NOM. TESTS SHALL BE CONDUCTED PER ASME SECTION XI, ARTICLES IWA-5000 & IWD-2000.
2. NO ATTEMPT HAS BEEN MADE TO DIFFERENTIATE BETWEEN SHOP & FIELD WELDS SINCE REF. DWGS. GAVE NO WELD TYPE INDICATION.

REFERENCES:

BURNS & ROE DWGS.

M526	REV 12
M782	REV 4
S534	REV A
S535	REV A
M200-207	REV 0

PIPING SYSTEM	NOM DIA (IN)	SCH	NOM WALL THK	MATERIAL SPECIFICATION	MATL TYPE	CAL BLOCK NO
18" SW (22)-2	18	STD	0.375	SA 106 GR B	CS	NA

NO	DATE	REVISION	BY	CHKD	APPVD
0	12/8/81	ISSUED FOR USE	KJA	TEN	RWP

QUALITY CLASS: I | ASME CODE CLASS: 3

ENGR: QA Kuglee | DRAWN: K.M.A | DATE: 11-7-79

WASHINGTON PUBLIC POWER SUPPLY SYSTEM
RICHLAND, WASHINGTON 99352

WNP-2
WELD & COMPONENT IDENTIFICATION DIAGRAM

TITLE: SW LOOP B RETURN TO SPRAY POND 1A

DWG NO: SW-307-5 | REV 0

WNP-02
INTERVAL: PSI
PERIOD: NA
OUTAGE:
DRAWING NO. SW-307

WASHINGTON PUBLIC POWER SUPPLY SYSTEM
PROGRAM PLAN AND SCHEDULE
SYSTEM OR COMPONENT: SW(24)-2
DESCRIPTION: SW LOOP B RETURN

DATE 12/14/84

IDENT. NO.	DESCRIPTION	SECT. XI EXAM.	EXAM MTH.	PROCEDURE	CAL. BLOCK	INSERVICE REQ.	INSERVICE SCHEDULED OUTAGE	NOTES
SW-79	STRUT	N/A	VT-3	303/8.2.17				
SW-80	BOX	N/A	VT-3	303/8.2.17				
SW-81	BOX	N/A	VT-3	303/8.2.17				
SW-916N	RIGID	N/A	VT-3	303/8.2.17				
SW-914N	PSA-10 SN(2)	N/A	VT-3	303/8.2.17				S/N
			VT-4	303/8.2.17				S/N
SW-917N	SPRING	N/A	VT-3	303/8.2.17				
			VT-4	303/8.2.17				
SW-386	STRUT	N/A	VT-3	303/8.2.17				
SW-83	STRUT	N/A	VT-3	303/8.2.17				
SW-197	BOX	N/A	VT-3	303/8.2.17				
SW-84	STRUT	N/A	VT-3	303/8.2.17				
SW-180	STRUT	N/A	VT-3	303/8.2.17				
SW-915N	PSA-10 SN(2)	N/A	VT-3	303/8.2.17				S/N
			VT-4	303/8.2.17				S/N
SW-195	BOX	N/A	VT-3	303/8.2.17				
SW-86	STRUT	N/A	VT-3	303/8.2.17				
SW-87	BOX	N/A	VT-3	303/8.2.17				

WNP-02
INTERVAL: PSI
PERIOD: NA
OUTAGE:
DRAWING NO. SW-307

WASHINGTON PUBLIC POWER SUPPLY SYSTEM
PROGRAM PLAN AND SCHEDULE
SYSTEM OR COMPONENT: SW(24)-2
DESCRIPTION: SW LOOP B RETURN

DATE 12/14/84

IDENT. NO.	DESCRIPTION	SECT. XI EXAM.	EXAM MTH.	PROCEDURE	CAL. BLOCK	INSERVICE REQ.	INSERVICE SCHEDULED OUTAGE	NOTES
SW-88	BOX	N/A	VT-3	303/8.2.17				
SW-89	BOX	N/A	VT-3	303/8.2.17				
SW-90	RIGID	N/A	VT-3	303/8.2.17				
SW-91	STRUT	N/A	VT-3	303/8.2.17				
SW-92	RIGID	N/A	VT-3	303/8.2.17				
SW-6	BOX	N/A	VT-3	303/8.2.17				
SW-7	BOX	N/A	VT-3	303/8.2.17				
SW-943N	STRUT	N/A	VT-3	303/8.2.17				
SW-19	BOX	N/A	VT-3	303/8.2.17				
SW-PB-307	SW PRES BNDRY	N/A	VT-2	N/A				SEE NOTES #6 & #7.

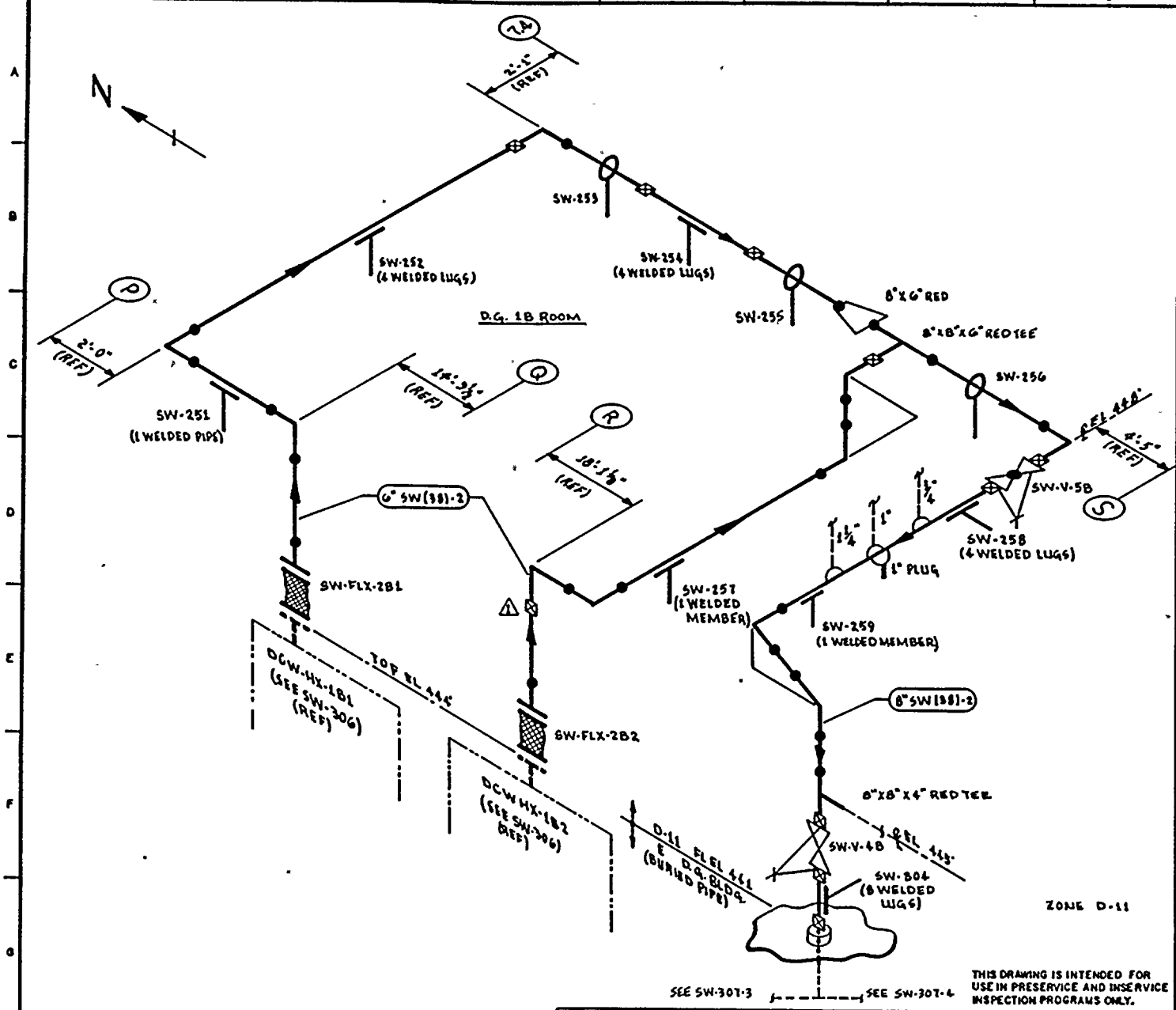

NOTES:

1. THIS DRAWING IDENTIFIES PIPING & COMPONENTS SUBJECT ONLY TO A VISUAL EXAM FOR (1) EVIDENCE OF LEAKAGE DURING SYSTEM PRESSURE OR OPERABILITY TESTS; (2) PRESSURE DECAY TESTS OF BURIED PIPING; & (3) LOSS OF SUPPORT CAPABILITY OR INADEQUATE RESTRAINT FOR SUPPORTS & HANGERS ON PIPING EXCEEDING 4" NOM. TESTS SHALL BE CONDUCTED PER ASME SECTION XI, ARTICLES IWA-5000 & IWD-2000.
2. FOR BRANCH PIPING 4" NOM OR LESS (CONN SHOWN IN DASHED LINES) EXTEND VISUAL LEAKAGE EXAM THROUGH THE OUTERMOST NORMALLY CLOSED NUCLEAR CLASS VALVE, OR UNTIL TRANSITION TO INSTRUMENT TUBING, UNLESS OTHERWISE NOTED.

REFERENCES:

BOVEE & CRAIL ISOMETRICS

SW-295-19.22	REV 9
SW-283-1.5	REV 6
SW-283-6	REV 7

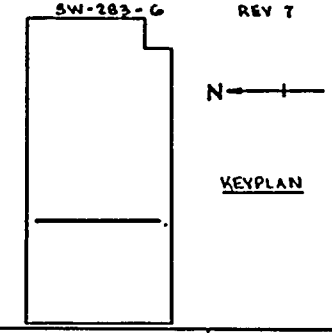

KEYPLAN

THIS DRAWING IS INTENDED FOR USE IN PRESERVICE AND INSERVICE INSPECTION PROGRAMS ONLY.

PIPING SYSTEM	NOM DIA (IN)	SCH	NOM WALL THK	MATERIAL SPECIFICATION	MATL TYPE	CAL BLOCK NO
6" SW(38)-2	6	STD	0.280	SA 106 GRB	CS	NA
8" SW(38)-2	8	STD	0.322	SA 106 GRB	CS	NA

NO	DATE	REVISION	BY	CHKD	APPVD
1	12-6-84	ADDED FW ZN G-6 ADDED KEYPLAN	KMcA		TFH
0	11-5-80	ISSUED FOR USE	KMcA	GAK	

QUALITY CLASS: 1 | ASME CODE CLASS: 3

ENGR: G.A. KUGLER | DRAWN: K.McA | DATE: 3-9-79

WASHINGTON PUBLIC POWER SUPPLY SYSTEM
RICHLAND, WASHINGTON 99352

WNP-2
WELD & COMPONENT IDENTIFICATION DIAGRAM

TITLE: SW LOOP B RETURN FROM DCW-HX-1B1 & 1B2

DWG NO: SW-308 | REV 1

WNP-02
INTERVAL: PSI
PERIOD: NA
OUTAGE:
DRAWING NO. SW-308

WASHINGTON PUBLIC POWER SUPPLY SYSTEM
PROGRAM PLAN AND SCHEDULE
SYSTEM OR COMPONENT: SW(38)-2
DESCRIPTION: SW LOOP B RETURN

DATE 12/14/84

IDENT. NO.	DESCRIPTION	SECT. XI EXAM.	EXAM MTH.	PROCEDURE	CAL. BLOCK	INSERVICE REQ.	INSERVICE SCHEDULED OUTAGE	NOTES
SW-251	BOX	N/A	VT-3	303/8.2.17				
SW-252	BOX	N/A	VT-3	303/8.2.17				
SW-253	BOX	N/A	VT-3	303/8.2.17				
SW-254	BOX	N/A	VT-3	303/8.2.17				
SW-255	BOX	N/A	VT-3	303/8.2.17				
SW-256	BOX	N/A	VT-3	303/8.2.17				
SW-257	BOX	N/A	VT-3	303/8.2.17				
SW-258	BOX	N/A	VT-3	303/8.2.17				
SW-259	BOX	N/A	VT-3	303/8.2.17				
SW-304	BOX	N/A	VT-3	303/8.2.17				
SW-PB-308	SW PRES BNDRY	N/A	VT-2	N/A				SEE NOTES #6 & #7.

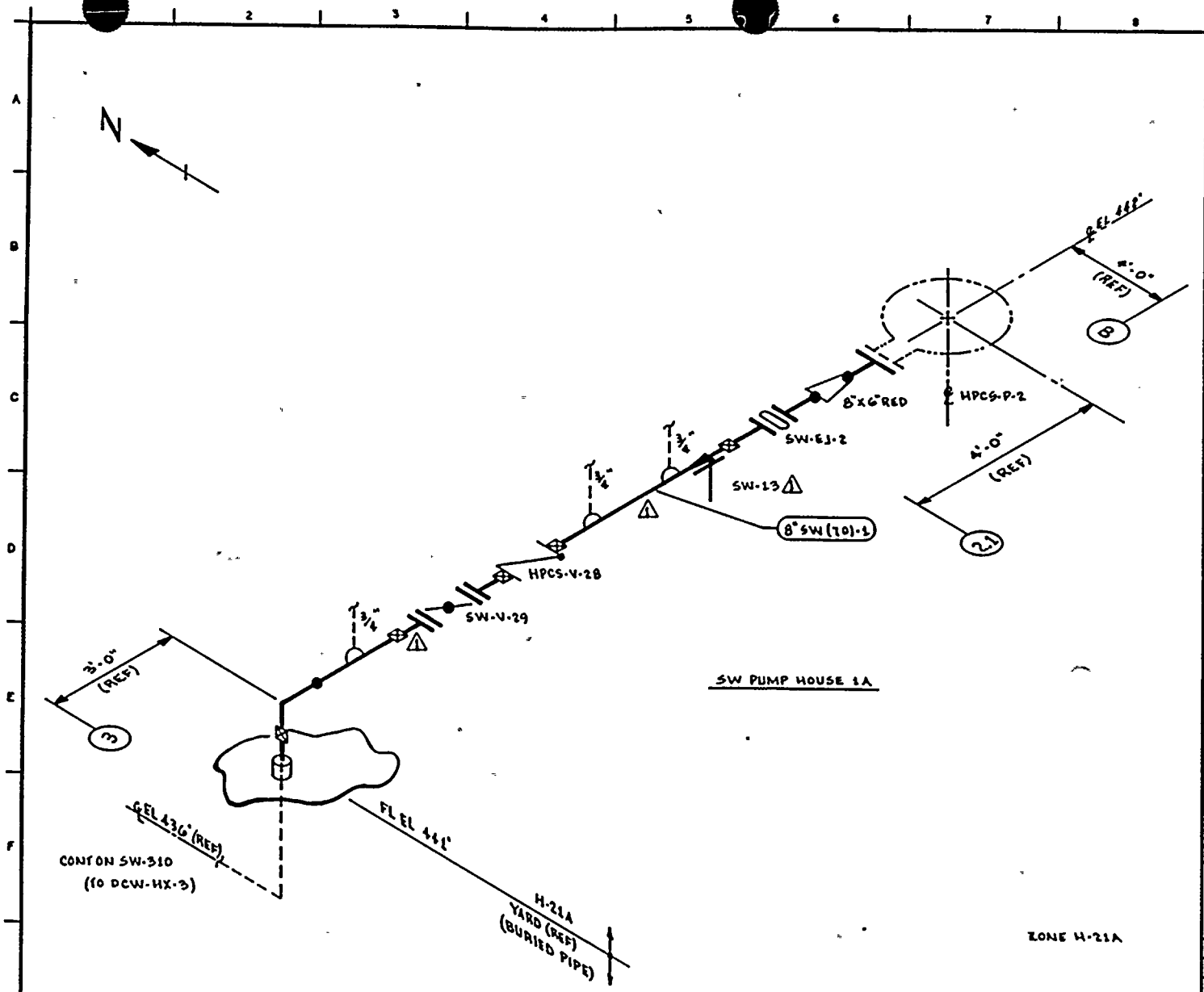

NOTES:

1. THIS DRAWING IDENTIFIES PIPING & COMPONENTS SUBJECT ONLY TO A VISUAL EXAM FOR (1) EVIDENCE OF LEAKAGE DURING SYSTEM PRESSURE OR OPERABILITY TESTS; (2) PRESSURE DECAY TESTS OF BURIED PIPING; & (3) LOSS OF SUPPORT CAPABILITY OR INADEQUATE RESTRAINT FOR SUPPORTS & HANGERS ON PIPING EXCEEDING 4" NOM. TESTS SHALL BE CONDUCTED PER ASME SECTION XI, ARTICLES IWA-5000 & IWD-2000.
2. FOR BRANCH PIPING 4" NOM OR LESS (CONN SHOWN IN DASHED LINES) EXTEND VISUAL LEAKAGE EXAM THROUGH THE OUTERMOST NORMALLY CLOSED NUCLEAR CLASS VALVE, OR UNTIL TRANSITION TO INSTRUMENT TUBING, UNLESS OTHERWISE NOTED.

REFERENCES:

BOVEE & CRAIL ISOMETRICS
SW-290-1.3 REV 11

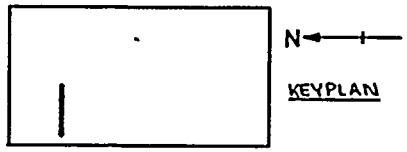

KEYPLAN

QUALITY CLASS: 1	ASME CODE CLASS: 3	
ENGR: GA KUGLER	DRAWN: K. McA	DATE: 3-12-79

THIS DRAWING IS INTENDED FOR USE IN PRESERVICE AND INSERVICE INSPECTION PROGRAMS ONLY.

WASHINGTON PUBLIC POWER SUPPLY SYSTEM
RICHLAND, WASHINGTON 99352

PIPING SYSTEM	NOM DIA (IN)	SCH	NOM WALL THK	MATERIAL SPECIFICATION	MATL TYPE	CAL BLOCK NO
8" SW (70)-1	8	STD	0.322	SA 106 GR B	CS	NA

WNP-2
WELD & COMPONENT
IDENTIFICATION DIAGRAM

TITLE:
SW SUPPLY HPCS LOOP

DWG NO: SW-309 REV 1

NO	DATE	REVISION	BY	CHKD	APPVD
1	1-24-84	REVISED AS NOTED ADDED KEYPLAN	K. McA		
0	11-5-80	ISSUED FOR USE	K. McA		

WNP-02
INTERVAL: PSI
PERIOD: NA
OUTAGE:
DRAWING NO: SW-309

WASHINGTON PUBLIC POWER SUPPLY SYSTEM
PROGRAM PLAN AND SCHEDULE
SYSTEM OR COMPONENT: SW(70)-1
DESCRIPTION: SW SUPPLY HPCS LOOP

DATE 12/14/84

IDENT. NO.	DESCRIPTION	SECT. XI EXAM.	EXAM MTH.	PROCEDURE	CAL. BLOCK	INSERVICE REQ.	SCHEDULED OUTAGE	NOTES
SW-13								
	BOX	N/A	VT-3	303/8.2.17				
SW-PB-309								
	SW PRES BNDRY	N/A	VT-2	N/A				SEE NOTES #6 & #7.

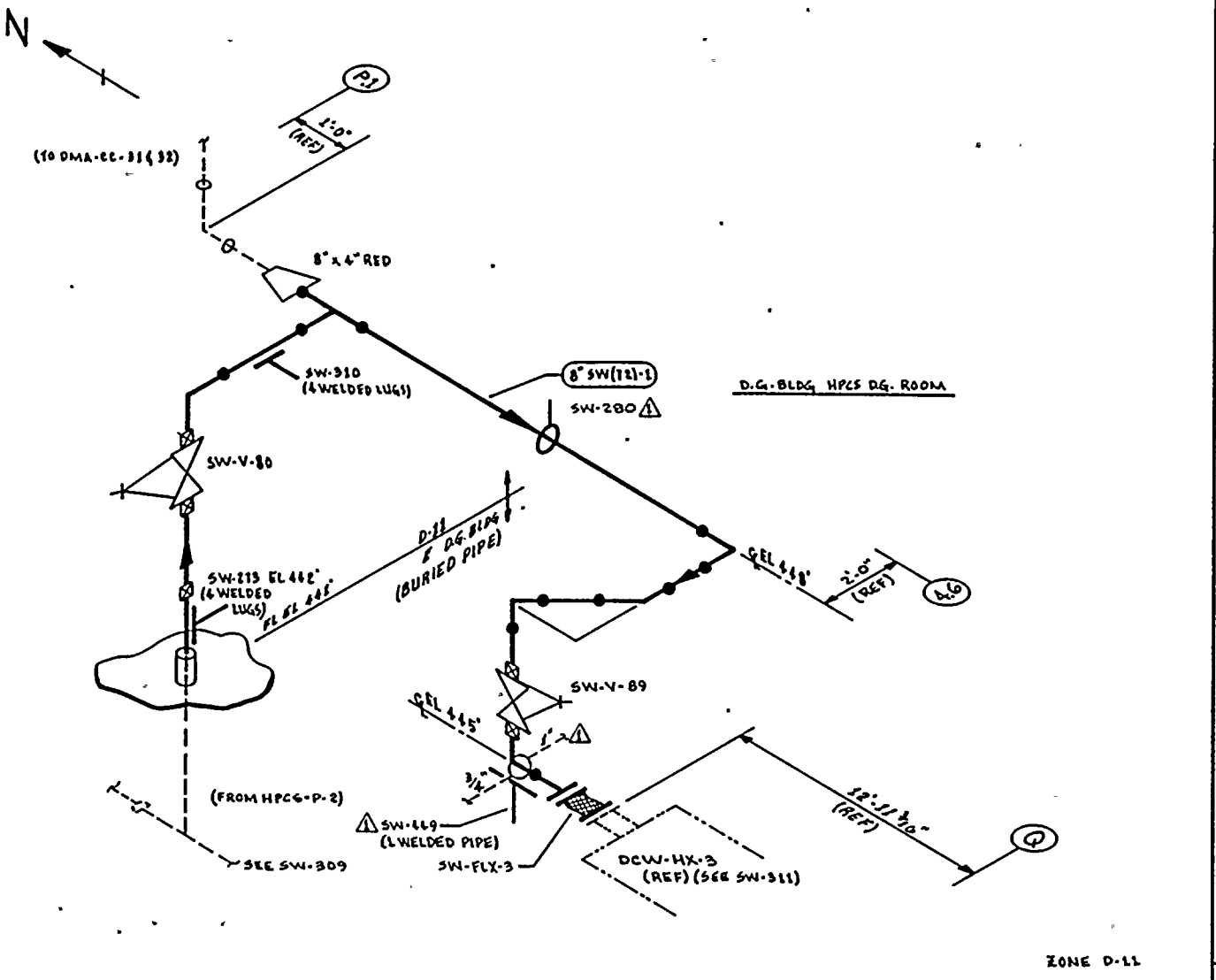

NOTES:

1. THIS DRAWING IDENTIFIES PIPING & COMPONENTS SUBJECT ONLY TO A VISUAL EXAM FOR (1) EVIDENCE OF LEAKAGE DURING SYSTEM PRESSURE OR OPERABILITY TESTS; (2) PRESSURE DECAY TESTS OF BURIED PIPING; & (3) LOSS OF SUPPORT CAPABILITY OR INADEQUATE RESTRAINT FOR SUPPORTS & HANGERS ON PIPING EXCEEDING 4" NOM. TESTS SHALL BE CONDUCTED PER ASME SECTION XI, ARTICLES IWA-5000 & IWD-2000.
2. FOR BRANCH PIPING 4" NOM OR LESS (CONN SHOWN IN DASHED LINES) EXTEND VISUAL LEAKAGE EXAM THROUGH THE OUTERMOST NORMALLY CLOSED NUCLEAR CLASS VALVE, OR UNTIL TRANSITION TO INSTRUMENT TUBING, UNLESS OTHERWISE NOTED.

REFERENCES:

BOVEE & CRAIL ISOMETRICS

SW-290-21.23 REV 6
SW-290-24.29 REV 10

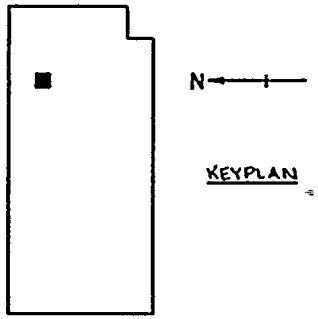

KEYPLAN

THIS DRAWING IS INTENDED FOR USE IN PRESERVICE AND INSERVICE INSPECTION PROGRAMS ONLY.

PIPING SYSTEM	NOM DIA (IN)	SCH	NOM WALL THK	MATERIAL SPECIFICATION	MATL TYPE	CAL BLOCK NO
8" SW(T2)-1	8	STD	0.322	SA 106 GR B	CS	NA

NO	DATE	REVISION	BY	CHKD	APPVD
1	1-24-84	REVISED AS NOTED ADDED KEYPLAN	KMcA	CGR	TFH
0	11-8-80	ISSUED FOR USE	KMcA	[illegible]	[illegible]

QUALITY CLASS: 1 | ASME CODE CLASS: 3

ENGR: GA KUGLER | DRAWN: K. McA | DATE: 3-12-79

WASHINGTON PUBLIC POWER SUPPLY SYSTEM
RICHLAND, WASHINGTON 99352

WNP-2
WELD & COMPONENT IDENTIFICATION DIAGRAM

TITLE:
SW HPCS LOOP SUPPLY TO DCW-HX-3

DWG NO: SW-310 | REV 1

WNP-02
INTERVAL: PSI
PERIOD: NA
OUTAGE:
DRAWING NO. SW-310

WASHINGTON PUBLIC POWER SUPPLY SYSTEM
PROGRAM PLAN AND SCHEDULE
SYSTEM OR COMPONENT: SW(72)-1
DESCRIPTION: SW HPCS LOOP SUPPLY

DATE 12/14/84

IDENT. NO.	DESCRIPTION	SECT. XI EXAM.	EXAM MTH.	PROCEDURE	CAL. BLOCK	INSERVICE REQ.	SCHEDULED OUTAGE	NOTES
SW-273	BOX	N/A	VT-3	303/8.2.17				
SW-310	BOX	N/A	VT-3	303/8.2.17				
SW-280	STRUT	N/A	VT-3	303/8.2.17				
SW-449	RIGID	N/A	VT-3	303/8.2.17				
SW-PB-310	SW PRES BNDRY	N/A	VT-2	N/A				SEE NOTES #6 & #7.

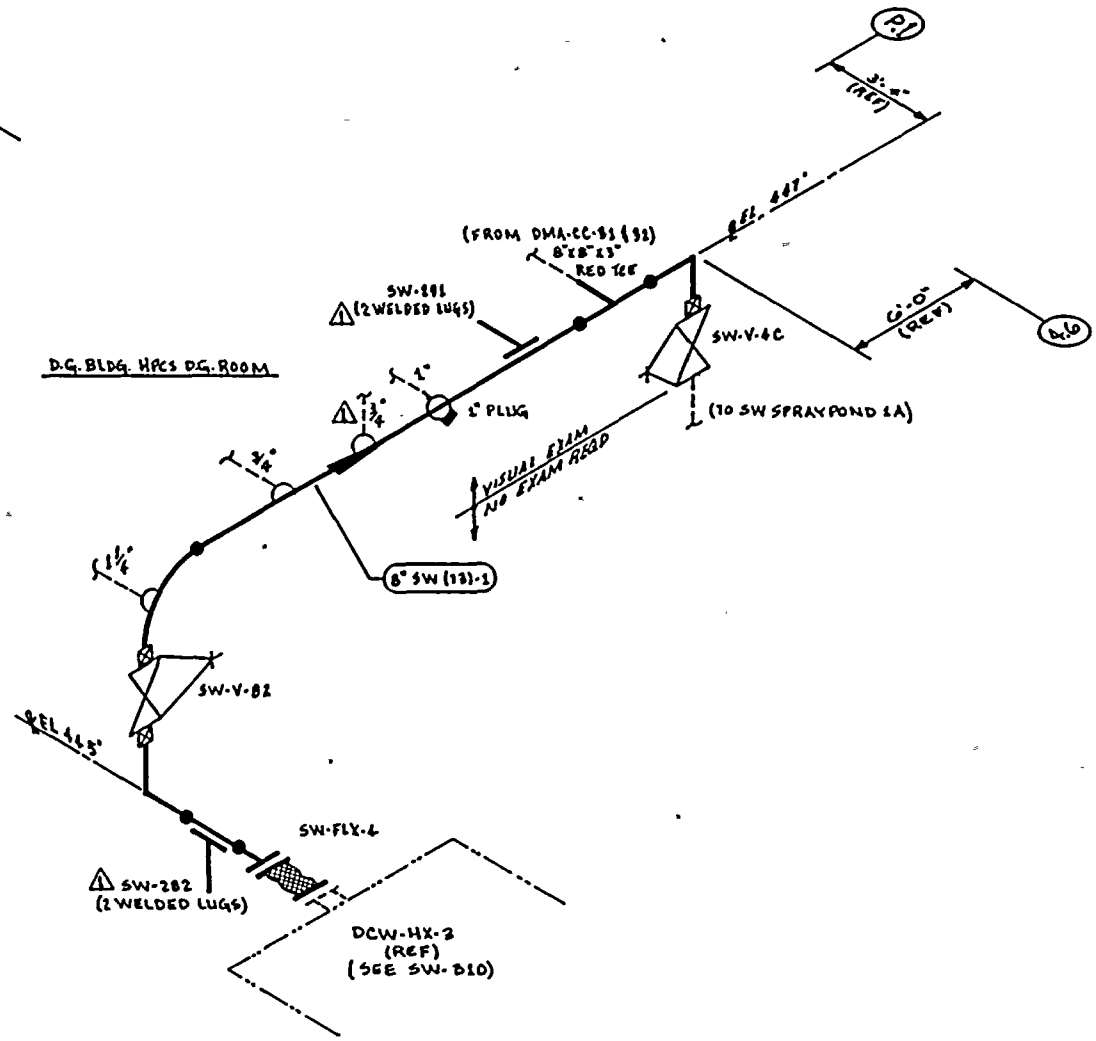

ZONE D-11

NOTES:

1. THIS DRAWING IDENTIFIES PIPING & COMPONENTS SUBJECT ONLY TO A VISUAL EXAM FOR (1) EVIDENCE OF LEAKAGE DURING SYSTEM PRESSURE OR OPERABILITY TESTS; (2) PRESSURE DECAY OF BURIED PIPING; & (3) LOSS OF SUPPORT CAPABILITY OR INADEQUATE RESTRAINT FOR SUPPORTS & HANGERS ON PIPING EXCEEDING 4" NOM. TESTS SHALL BE CONDUCTED PER ASME SECTION XI, ARTICLES IWA-5000 & IWD-2000.
2. FOR BRANCH PIPING 4" NOM OR LESS (CONN SHOWN IN DASHED LINES) EXTEND VISUAL LEAKAGE EXAM THROUGH THE OUTERMOST NORMALLY CLOSED NUCLEAR CLASS VALVE, OR UNTIL TRANSITION TO INSTRUMENT TUBING, UNESS OTHERWISE NOTED.

REFERENCES:

BOVEE & CRAIL ISOMETRICS
SW-112-7.9 REV 9

QUALITY CLASS: 1	ASME CODE CLASS: 3
ENGR: G.A. KUGLER	DRAWN: K.M.&A. / DATE: 8-13-79

WASHINGTON PUBLIC POWER SUPPLY SYSTEM
RICHLAND, WASHINGTON 99352

THIS DRAWING IS INTENDED FOR USE IN PRESERVICE AND INSERVICE INSPECTION PROGRAMS ONLY.

PIPING SYSTEM	NOM DIA (IN)	SCH	NOM WALL THK	MATERIAL SPECIFICATION	MATL TYPE	CAL BLOCK NO
8" SW (13)-1	8	STD	0.322	SA 106 GR B	CS	NA

WNP-2
WELD & COMPONENT IDENTIFICATION DIAGRAM

TITLE: SW HPCS LOOP RETURN FROM DCW-HX-3

DWG NO: SW-311 REV 1

NO	DATE	REVISION	BY	CHKD	APPVD
1	1-24-84	REVISED AS NOTED	K.M.&A.	EWZ	TFH
0	11-5-80	ISSUED FOR USE	K.M.&A.		

WNP-02
INTERVAL: PSI
PERIOD: NA
OUTAGE:
DRAWING NO. SW-311

WASHINGTON PUBLIC POWER SUPPLY SYSTEM
PROGRAM PLAN AND SCHEDULE
SYSTEM OR COMPONENT: SW(73)-1
DESCRIPTION: SW HPCS LOOP RETURN

DATE 12/14/84

IDENT. NO.	DESCRIPTION	SECT. XI EXAM.	EXAM MTH.	PROCEDURE	CAL. BLOCK	INSERVICE REQ.	SCHEDULED OUTAGE	NOTES
SW-282	BOX	N/A	VT-3	303/8.2.17				
SW-291	BOX	N/A	VT-3	303/8.2.17				
SW-PB-311	SW PRES BNDRY	N/A	VT-2	N/A				SEE NOTES #6 & #7.

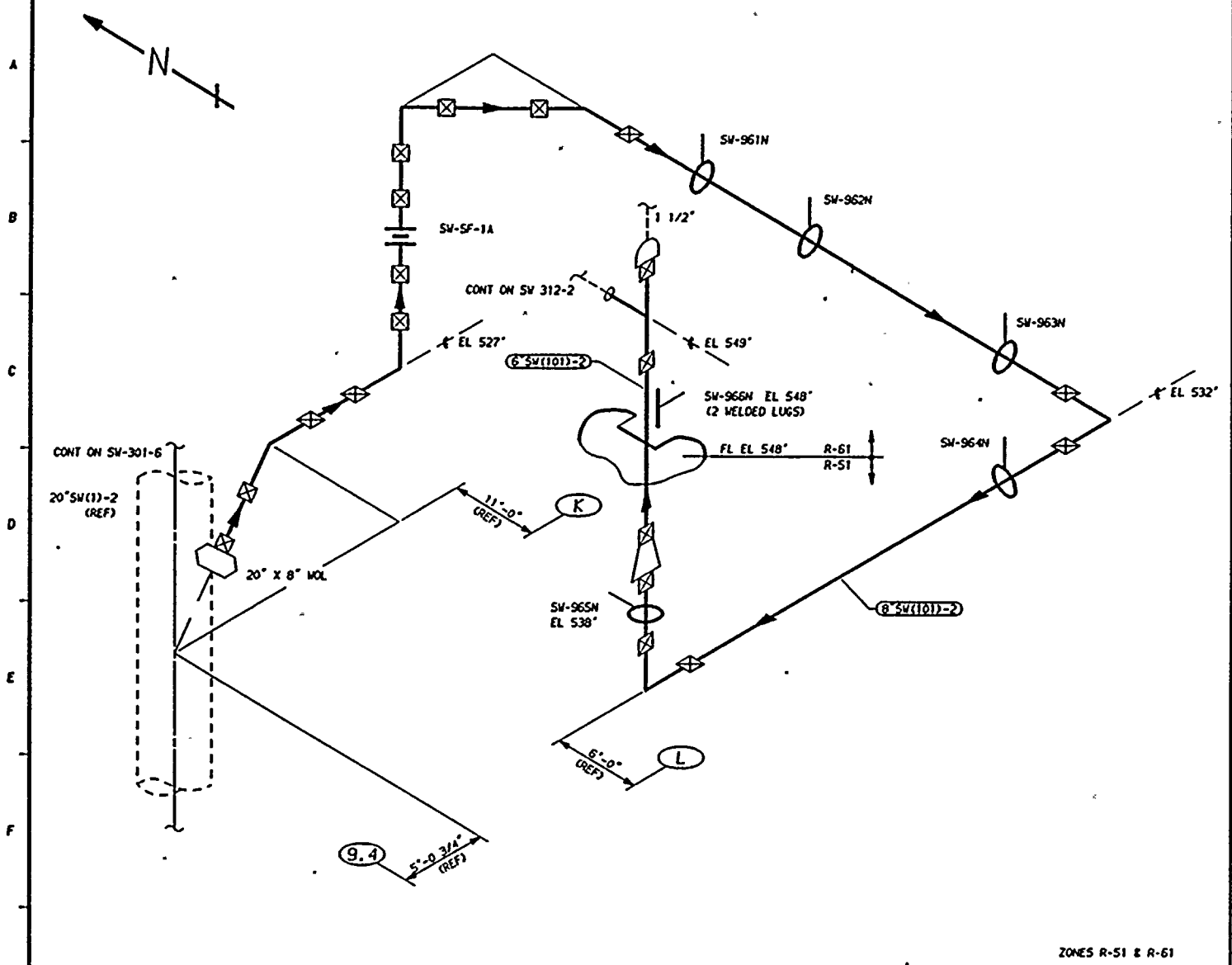

ZONES R-51 & R-61

THIS DRAWING IS INTENDED FOR USE IN PRESERVICE AND INSERVICE INSPECTIONS PROGRAMS ONLY.

NOTES:

1. THIS DRAWING IDENTIFIES PIPING AND COMPONENTS SUBJECT ONLY TO A VISUAL EXAM FOR (1) EVIDENCE OF LEAKAGE DURING SYSTEM PRESSURE OR OPERABILITY TESTS, (2) PRESSURE DECAY TESTS OF BURIED PIPING, AND (3) LOSS OF SUPPORT CAPABILITY OR INADEQUATE RESTRAINT FOR SUPPORTS AND HANGERS ON PIPING EXCEEDING 4" NOM. TESTS SHALL BE CONDUCTED PER ASME SECTION XI, ARTICLES IWA-5000 AND IWD-2000.

2. FOR BRANCH PIPING 4" NOM. OR LESS (CONNECTION SHOWN IN DASHED LINES) EXTEND VISUAL LEAKAGE EXAM THROUGH THE OUTERMOST NORMALLY CLOSED NUCLEAR CLASS VALVE, OR UNTIL TRANSITION TO INSTRUMENT TUBING, UNLESS OTHERWISE NOTED.

REFERENCES:

ISI - 224

BOVEE & CRAIL ISOMETRIC
SW-250-55.75 REV 7

KEYPLAN

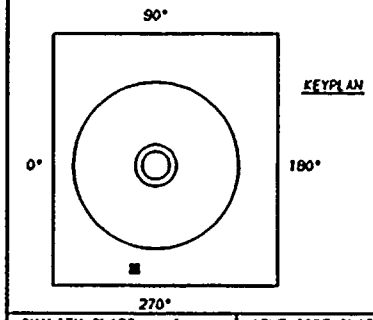

QUALITY CLASS: 1	ASME CODE CLASS: 3
ENGR: K-McANDREW	DRAWN: K-McA	DATE: 11-15-83

WASHINGTON PUBLIC POWER
SUPPLY SYSTEM
RICHLAND, WASHINGTON 99352

WNP-2
WELD & COMPONENT
IDENTIFICATION DIAGRAM

TITLE:
SW LOOP A SUPPLY TO FPC-HX-1A

DWG NO: SW-312-1 | REV 0

PIPING SYSTEM	NOM DIA (IN)	SCH	NOM WALL THK	MATERIAL SPECIFICATION	MATL TYPE	CAL BLOCK NO
8"SW(101)-2	8	STD	0.322	SA 106 GR B	CS	NA
6"SW(101)-2	6	STD	0.280	SA 106 GR B	CS	NA

NO	DATE	REVISION	BY	CHKD	APVD
0	11-21-84	ISSUED FOR USE			

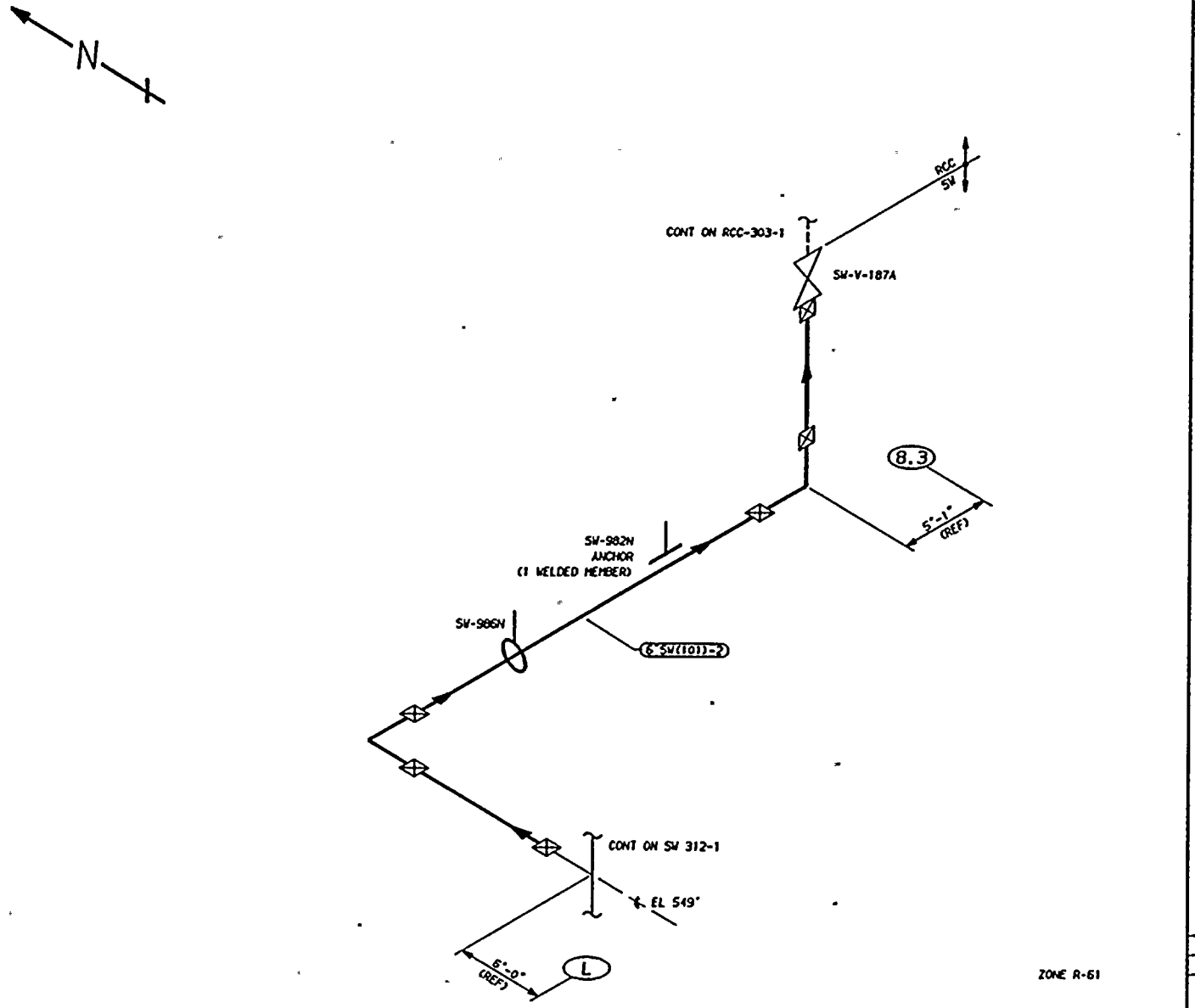

ZONE R-61

THIS DRAWING IS INTENDED FOR USE IN PRESERVICE AND INSERVICE INSPECTIONS PROGRAMS ONLY.

NOTES:

1. THIS DRAWING IDENTIFIES PIPING AND COMPONENTS SUBJECT ONLY TO A VISUAL EXAM FOR (1) EVIDENCE OF LEAKAGE DURING SYSTEM PRESSURE OR OPERABILITY TESTS; (2) PRESSURE DECAY TESTS OF BURIED PIPING; AND (3) LOSS OF SUPPORT CAPABILITY OR INADEQUATE RESTRAINT FOR SUPPORTS AND HANGERS ON PIPING EXCEEDING 4" NOM. TESTS SHALL BE CONDUCTED PER ASME SECTION XI, ARTICLES IWA-5000 AND IWD-2000.

REFERENCES:

ISI - 224

BOVEE & CRAIL ISOMETRIC
SW-500-1.5 REV 3

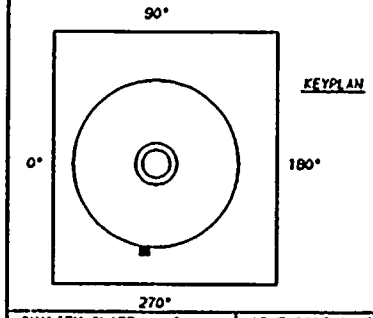

KEYPLAN

QUALITY CLASS: 1	ASME CODE CLASS: 3	
ENGR: K-McANDREW	DRAWN: K-McA	DATE: 11-15-83

WASHINGTON PUBLIC POWER
SUPPLY SYSTEM
RICHLAND, WASHINGTON 99352

PIPING SYSTEM	NOM DIA (IN)	SCH	NOM WALL THK	MATERIAL SPECIFICATION	MATL TYPE	CAL BLOCK NO
6"SW(101)-2	6	STD	0.280	SA 106 GR B	CS	NA

NO	DATE	REVISION	BY	CHKD	APVD
0	12-21-84	ISSUED FOR USE	[illegible]	JPK	[illegible]

WNP-2
WELD & COMPONENT
IDENTIFICATION DIAGRAM

TITLE:
SW LOOP A SUPPLY TO FPR-HX-1A

DWG NO: SW-312-2 REV 0

WNP-02
INTERVAL: PSI
PERIOD: NA
OUTAGE:
DRAWING NO. SW-312

WASHINGTON PUBLIC POWER SUPPLY SYSTEM
PROGRAM PLAN AND SCHEDULE
SYSTEM OR COMPONENT: SW(10)-2
DESCRIPTION: SUPPLY TO EPC-HX-1A

DATE 12/14/84

IDENT. NO.	DESCRIPTION	SECT. XI EXAM.	EXAM MTH.	PROCEDURE	CAL. BLOCK	INSERVICE REQ.	INSERVICE SCHEDULED OUTAGE	NOTES
SW-961N	RIGID	N/A	VT-3	303/8.2.17				
SW-962N	RIGID	N/A	VT-3	303/8.2.17				
SW-963N	RIGID	N/A	VT-3	303/8.2.17				
SW-964N	RIGID	N/A	VT-3	303/8.2.17				
SW-965N	RIGID	N/A	VT-3	303/8.2.17				
SW-966N	RIGID	N/A	VT-3	303/8.2.17				
SW-986N	RIGID	N/A	VT-3	303/8.2.17				
SW-982N	ANCHOR	N/A	VT-3	303/8.2.17				
SW-PB-312	SW PRES BNDRY	N/A	VT-2	N/A				SEE NOTES #6 & #7.

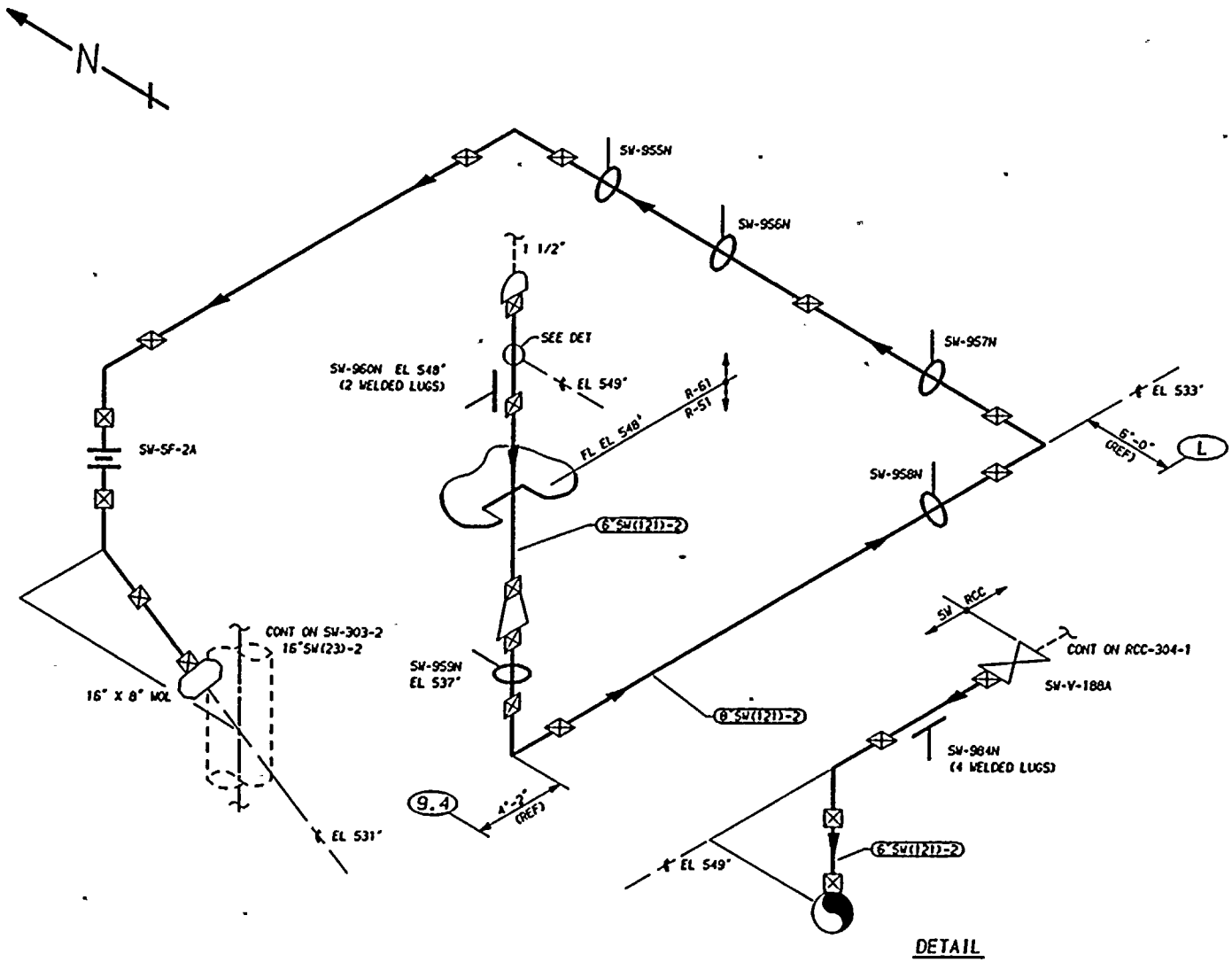

ZONES R-51 & R-61

THIS DRAWING IS INTENDED FOR USE IN PRESERVICE AND INSERVICE INSPECTIONS PROGRAMS ONLY.

NOTES:

1. THIS DRAWING IDENTIFIES PIPING AND COMPONENTS SUBJECT ONLY TO A VISUAL EXAM FOR (1) EVIDENCE OF LEAKAGE DURING SYSTEM PRESSURE OR OPERABILITY TESTS, (2) PRESSURE DECAY TESTS OF BURIED PIPING, AND (3) LOSS OF SUPPORT CAPABILITY OR INADEQUATE RESTRAINT FOR SUPPORTS AND HANGERS ON PIPING EXCEEDING 4" NOM. TESTS SHALL BE CONDUCTED PER ASME SECTION XI, ARTICLES IWA-5000 AND IWD-2000.

2. FOR BRANCH PIPING 4" NOM. OR LESS (CONNECTION SHOWN IN DASHED LINES) EXTEND VISUAL LEAKAGE EXAM THROUGH THE OUTERMOST NORMALLY CLOSED NUCLEAR CLASS VALVE, OR UNTIL TRANSITION TO INSTRUMENT TUBING, UNLESS OTHERWISE NOTED.

REFERENCES:

151 - 224

BOYEE & CRAIL ISOMETRICS
SW-502- 1.3 REV 1
SW-296-58.77 REV 9

KEYPLAN

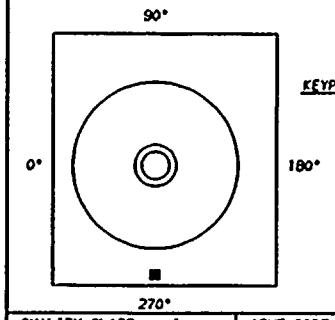

QUALITY CLASS: 1	ASME CODE CLASS: 3
ENGR: K-McANDREW	DRAWN: K-McA	DATE: 11-15-83

WASHINGTON PUBLIC POWER
SUPPLY SYSTEM
RICHLAND, WASHINGTON 99352

WNP-2
WELD & COMPONENT
IDENTIFICATION DIAGRAM

TITLE:
SW LOOP A RETURN TO RHR-HX-1A

DWG NO: SW-313 REV 0

PIPING SYSTEM	NOM DIA (IN)	SCH	NOM WALL THK	MATERIAL SPECIFICATION	MATL TYPE	CAL BLOCK NO
8"SW(121)-2	8	STD	0.322	SA 106 GR B	CS	NA
6"SW(121)-2	6	STD	0.280	SA 106 GR B	CS	NA

NO	DATE	REVISION	BY	CHKD	APVD
0	1-27-84	ISSUED FOR USE			

WNP-02
INTERVAL: PSI
PERIOD: NA
OUTAGE:
DRAWING NO. SW-313

WASHINGTON PUBLIC POWER SUPPLY SYSTEM
PROGRAM PLAN AND SCHEDULE
SYSTEM OR COMPONENT: SW(12)-2
DESCRIPTION: RETURN TO RHR-HX-1A

DATE 12/14/84

IDENT. NO.	DESCRIPTION	SECT. XI EXAM.	EXAM MTH.	PROCEDURE	CAL. BLOCK	INSERVICE REQ.	INSERVICE SCHEDULED OUTAGE	NOTES
SW-960N	RIGID	N/A	VT-3	303/8.2.17				
SW-959N	RIGID	N/A	VT-3	303/8.2.17				
SW-958N	RIGID	N/A	VT-3	303/8.2.17				
SW-957N	RIGID	N/A	VT-3	303/8.2.17				
SW-956N	RIGID	N/A	VT-3	303/8.2.17				
SW-955N	RIGID	N/A	VT-3	303/8.2.17				
SW-984N	RIGID	N/A	VT-3	303/8.2.17				
SW-PB-313	SW PRES BNDRY	N/A	VT-2	N/A				SEE NOTES #6 & #7.

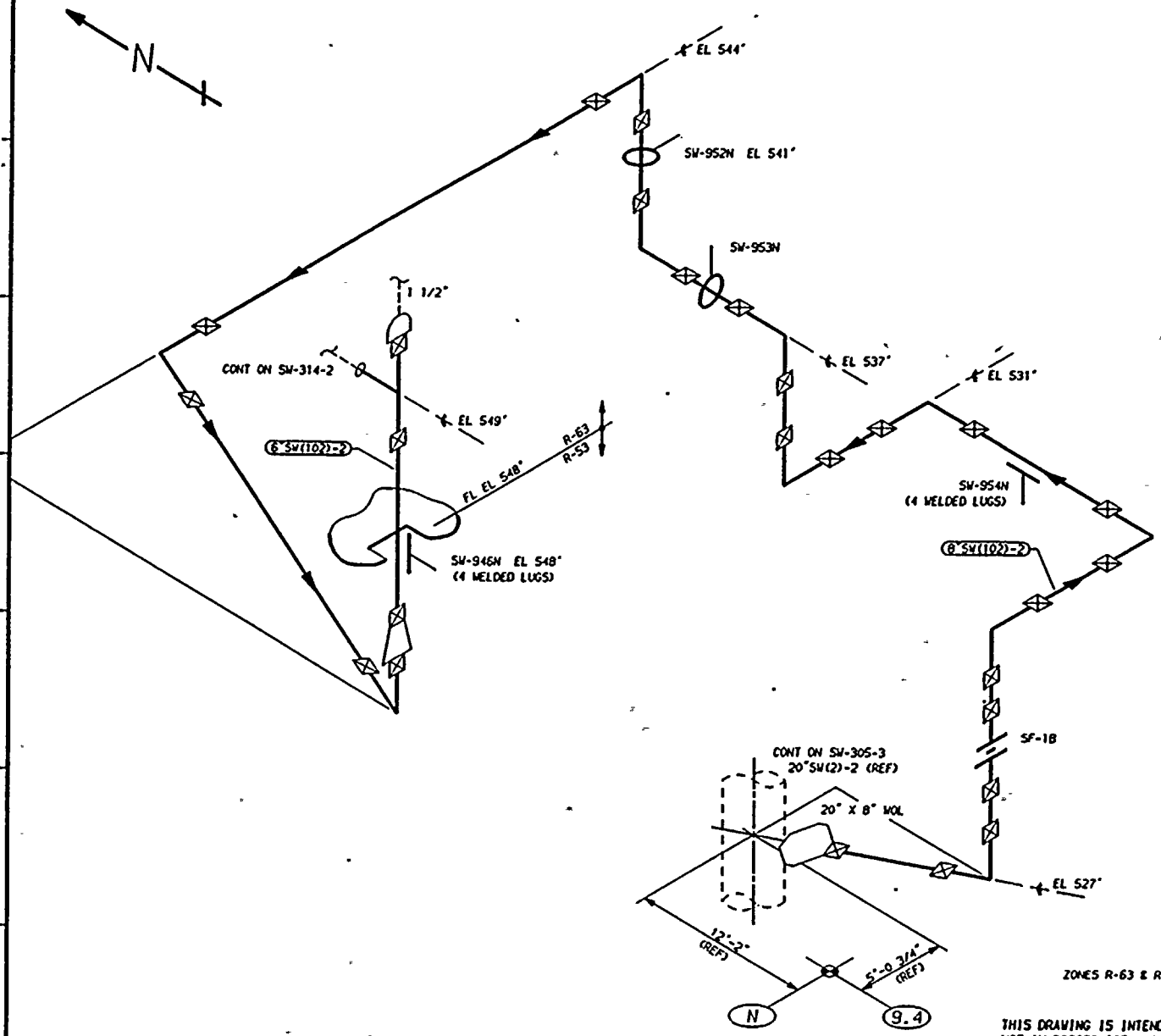

ZONES R-63 & R-53

THIS DRAWING IS INTENDED FOR USE IN PRESERVICE AND INSERVICE INSPECTIONS PROGRAMS ONLY.

NOTES:

1. THIS DRAWING IDENTIFIES PIPING AND COMPONENTS SUBJECT ONLY TO A VISUAL EXAM FOR (1) EVIDENCE OF LEAKAGE DURING SYSTEM PRESSURE OR OPERABILITY TESTS; (2) PRESSURE DECAY TESTS OF BURIED PIPING; AND (3) LOSS OF SUPPORT CAPABILITY OR INADEQUATE RESTRAINT FOR SUPPORTS AND HANGERS ON PIPING EXCEEDING 4" NOM. TESTS SHALL BE CONDUCTED PER ASME SECTION XI, ARTICLES IWA-5000 AND IWD-2000.

2. FOR BRANCH PIPING 4" NOM. OR LESS (CONNECTION SHOWN IN DASHED LINES) EXTEND VISUAL LEAKAGE EXAM THROUGH THE OUTERMOST NORMALLY CLOSED NUCLEAR CLASS VALVE, OR UNTIL TRANSITION TO INSTRUMENT TUBING, UNLESS OTHERWISE NOTED.

REFERENCES:

ISI - 224

BOVEE & CRAIL ISOMETRICS
SW-251-38.64 REV 9

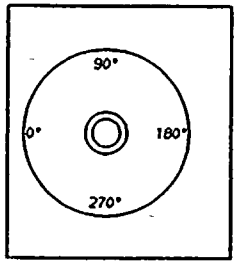

KEYPLAN

QUALITY CLASS: 1	ASME CODE CLASS: 3
ENGR: K-McANDREW	DRAWN: K-McA	DATE: 11-2-83

WASHINGTON PUBLIC POWER
SUPPLY SYSTEM
RICHLAND, WASHINGTON 99352

WNP-2
WELD & COMPONENT
IDENTIFICATION DIAGRAM

TITLE:
SW LOOP B SUPPLY TO FPC-HX-1B

DWG NO: SW-314-1 REV 0

PIPING SYSTEM	NOM DIA (IN)	SCH	NOM WALL THK	MATERIAL SPECIFICATION	MATL TYPE	CAL BLOCK NO
8"SW(102)-2	8	STD	0.322	SA 106 GR B	CS	NA
6"SW(102)-2	6	STD	0.280	SA 106 GR B	CS	NA

NO	DATE	REVISION	BY	CHKD	APVD
0	1-24-84	ISSUED FOR USE			

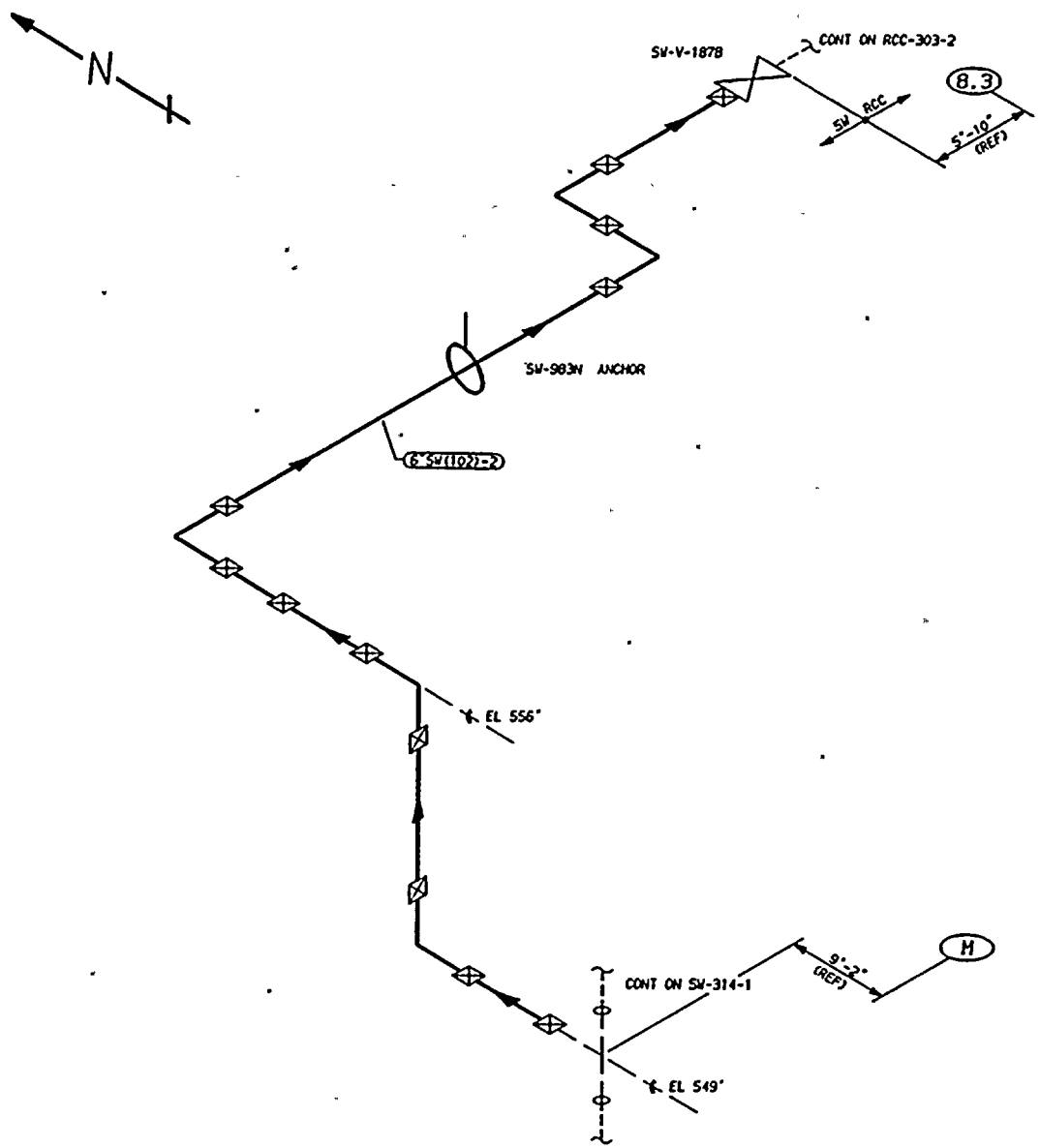

ZONE R-63

THIS DRAWING IS INTENDED FOR USE IN PRESERVICE AND INSERVICE INSPECTIONS PROGRAMS ONLY.

NOTES:

1. THIS DRAWING IDENTIFIES PIPING AND COMPONENTS SUBJECT ONLY TO A VISUAL EXAM FOR (1) EVIDENCE OF LEAKAGE DURING SYSTEM PRESSURE OR OPERABILITY TESTS, (2) PRESSURE DECAY TESTS OF BURIED PIPING, AND (3) LOSS OF SUPPORT CAPABILITY OR INADEQUATE RESTRAINT FOR SUPPORTS AND HANGERS ON PIPING EXCEEDING 4" NOM. TESTS SHALL BE CONDUCTED PER ASME SECTION XI, ARTICLES IWA-5000 AND IWD-2000.

REFERENCES:

151 - 224

BOYEE & CRAIL ISOMETRICS
SW-501-1.10 REV 2

KEYPLAN

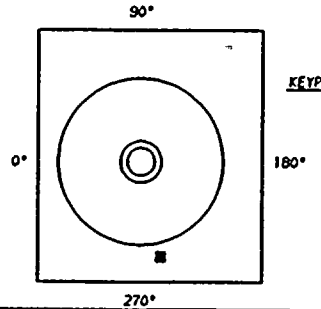

QUALITY CLASS: 1	ASME CODE CLASS: 3
ENGR: K-McANDREW	DRAWN: K-McA	DATE: 11-2-83

WASHINGTON PUBLIC POWER
SUPPLY SYSTEM
RICHLAND, WASHINGTON 99352

WNP-2
WELD & COMPONENT
IDENTIFICATION DIAGRAM

TITLE: SW LOOP B SUPPLY TO FPC-HX-1B.

DWG NO: SW-314-2 REV 0

PIPING SYSTEM	NOM DIA (IND	SCH	NOM WALL THK	MATERIAL SPECIFICATION	MATL TYPE	CAL BLOCK NO
6"SW(102)-2	6	STD	0.280	SA 106 GR B	CS	NA

NO	DATE	REVISION	BY	CHKD	APVD
0	1.28.84	ISSUED FOR USE	KAKA	DPR	TEH

WNP-02
INTERVAL: PSI
PERIOD: NA
OUTAGE:
DRAWING NO. SW-314

WASHINGTON PUBLIC POWER SUPPLY SYSTEM
PROGRAM PLAN AND SCHEDULE
SYSTEM OR COMPONENT: SW(102)-2
DESCRIPTION: SUPPLY TO FPC-HX-1B

DATE 12/14/84

IDENT. NO.	DESCRIPTION	SECT. XI EXAM.	EXAM MTH.	PROCEDURE	CAL. BLOCK	INSERVICE REQ.	INSERVICE SCHEDULED OUTAGE	NOTES
SW-954N	RIGID	N/A	VT-3	303/8.2.17				
SW-953N	RIGID	N/A	VT-3	303/8.2.17				
SW-946N	RIGID	N/A	VT-3	303/8.2.17				
SW-PB-314	SW PRES BNDRY	N/A	VT-2	N/A				SEE NOTES #6 & #7.

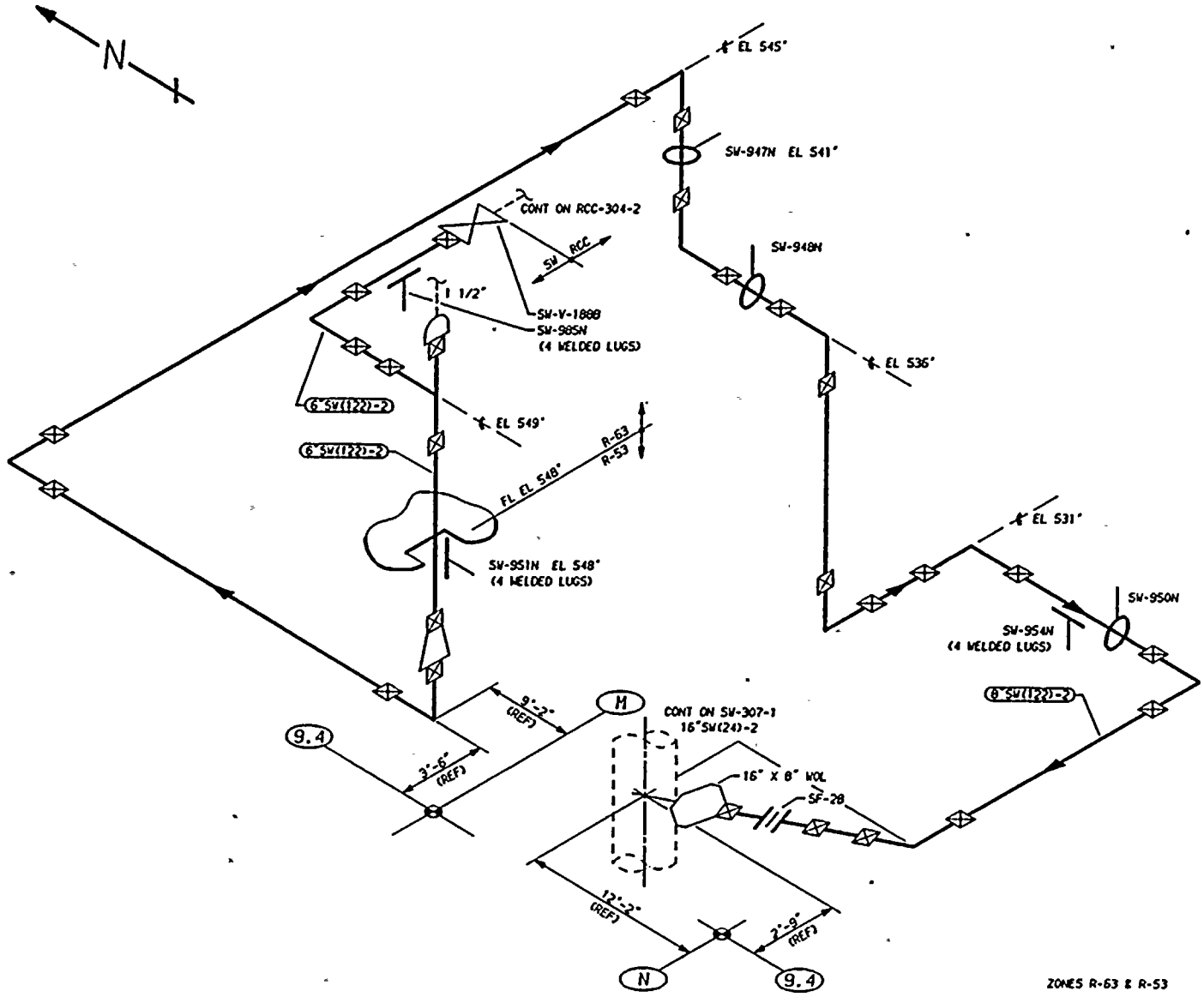

ZONES R-63 & R-53

THIS DRAWING IS INTENDED FOR USE IN PRESERVICE AND INSERVICE INSPECTIONS PROGRAMS ONLY.

NOTES:

1. THIS DRAWING IDENTIFIES PIPING AND COMPONENTS SUBJECT ONLY TO A VISUAL EXAM FOR (1) EVIDENCE OF LEAKAGE DURING SYSTEM PRESSURE OR OPERABILITY TESTS, (2) PRESSURE DECAY TESTS OF BURIED PIPING, AND (3) LOSS OF SUPPORT CAPABILITY OR INADEQUATE RESTRAINT FOR SUPPORTS AND HANGERS ON PIPING EXCEEDING 4" NOM. TESTS SHALL BE CONDUCTED PER ASME SECTION XI, ARTICLES IWA-5000 AND IWD-2000.

2. FOR BRANCH PIPING 4" NOM. OR LESS (CONNECTION SHOWN IN DASHED LINES) EXTEND VISUAL LEAKAGE EXAM THROUGH THE OUTERMOST NORMALLY CLOSED NUCLEAR CLASS VALVE, OR UNTIL TRANSITION TO INSTRUMENT TUBING, UNLESS OTHERWISE NOTED.

REFERENCES:

ISI - 224

BOYEE & CRAIL ISOMETRICS
SW-295-43.68 REV 9
SW-503- 1.3 REV 2

KEYPLAN

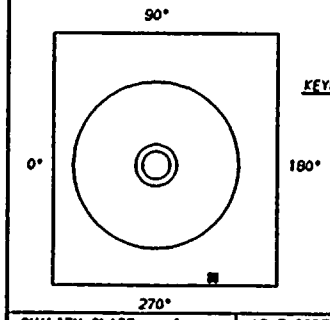

PIPING SYSTEM	NOM DIA (IN)	SCH	NOM WALL THK	MATERIAL SPECIFICATION	MATL TYPE	CAL BLOCK NO
8"SW(122)-2	8	STD	0.322	SA 106 GR B	CS	NA
6"SW(122)-2	6	STD	0.280	SA 106 GR B	CS	NA

NO	DATE	REVISION	BY	CHKD	APVD
0	1-21-84	ISSUED FOR USE	[illegible]	DPR	TKS

QUALITY CLASS: 1 | ASME CODE CLASS: 3

ENGR: K-McANDREW | DRAWN: K-McA | DATE: 11-2-83

WASHINGTON PUBLIC POWER
SUPPLY SYSTEM
RICHLAND, WASHINGTON 99352

WNP-2
WELD & COMPONENT
IDENTIFICATION DIAGRAM

TITLE:
SW LOOP RETURN FROM FPC-HX-1B

DWG NO: SW-315 REV 0

WNP-02
INTERVAL: PSI
PERIOD: NA
OUTAGE:
DRAWING NO. SW-315

WASHINGTON PUBLIC POWER SUPPLY SYSTEM
PROGRAM PLAN AND SCHEDULE
SYSTEM OR COMPONENT: SW(122)-2
DESCRIPTION: RET FROM FPC-HX-1B

DATE 12/14/84

IDENT. NO.	DESCRIPTION	SECT. XI EXAM.	EXAM MTH.	PROCEDURE	CAL. BLOCK	INSERVICE REQ.	INSERVICE SCHEDULED OUTAGE	NOTES
SW-951N	RIGID	N/A	VT-3	303/8.2.17				
SW-947N	RIGID	N/A	VT-3	303/8.2.17				
SW-948N	RIGID	N/A	VT-3	303/8.2.17				
SW-950N	RIGID	N/A	VT-3	303/8.2.17				
SW-985N	RIGID	N/A	VT-3	303/8.2.17				
SW-PB-315	SW PRES BNDRY	N/A	VT-2	N/A				SEE NOTES #6 & #7.

WNP-02
INTERVAL: PSI
PERIOD: NA
OUTAGE:
DRAWING NO. FPC-201

WASHINGTON PUBLIC POWER SUPPLY SYSTEM
PROGRAM PLAN AND SCHEDULE
SYSTEM OR COMPONENT: FPC(7)-1
DESCRIPTION: RET TO SUPPR POOL

DATE 12/14/84

IDENT. NO.	DESCRIPTION	SECT. XI EXAM.	EXAM MTH.	PROCEDURE	CAL. BLOCK	INSERVICE REQ.	INSERVICE SCHEDULED OUTAGE	NOTES
FPC-903N	ANCHOR	C-E-2	VT-3	303/8.2.17				
FPC-170	BOX	C-E-2	VT-3	303/8.2.17				
FPC-172	BOX	C-E-2	VT-3	303/8.2.17				
FPC-237	BOX	C-E-2	VT-3	303/8.2.17				
FPC-238	BOX	C-E-2	VT-3	303/8.2.17				
FPC-239	BOX	C-E-2	VT-3	303/8.2.17				
FPC-PB-201	FPC PRESS BNDRY	N/A	VT-2	N/A				SEE NOTES #6 & #7.

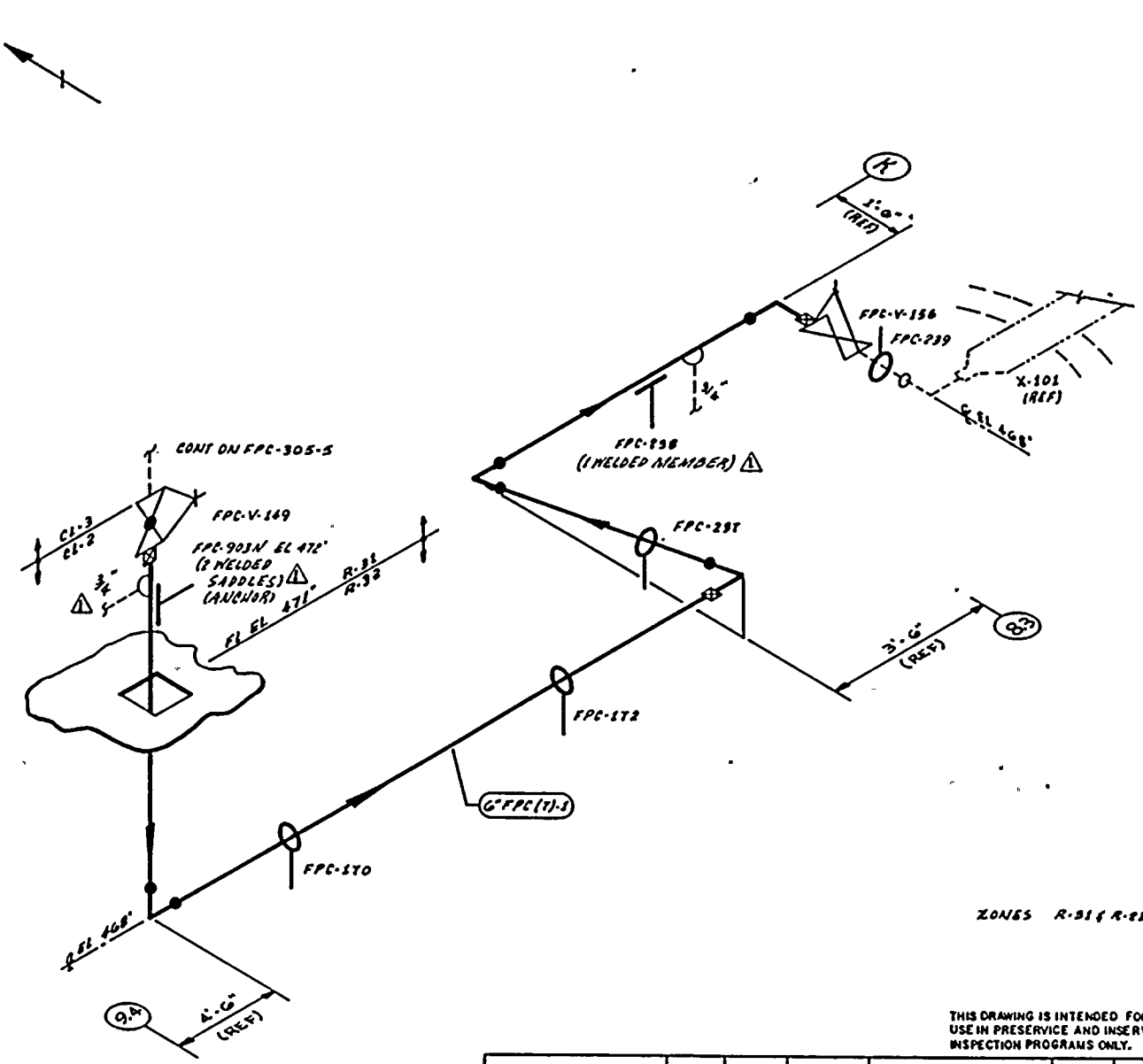

NOTES:

1. THIS DRAWING IDENTIFIES PIPING & COMPONENTS SUBJECT TO A VISUAL EXAM FOR EVIDENCE OF LEAKAGE DURING SYSTEM HYDRO OR OPERABILITY TESTS. TESTS ARE TO BE CONDUCTED PER THE REQUIREMENTS OF ASME SECTION XI, PARAGRAPH IWA-5000.
2. FOR BRANCH PIPING 4" DIA OR LESS (IF ANY) SHOWN IN DASHED LINES) EXTEND VISUAL LEAKAGE EXAM THROUGH THE OUTERMOST NORMALLY CLOSED NUCLEAR CLASS VALVE OR UNTIL TRANSITION TO INSTRUMENT TUBING, UNLESS OTHERWISE NOTED.

REFERENCES:

BOVEE & CRAIL ISOMETRICS
FPC-640-10.18 REV 9

KEYPLAN

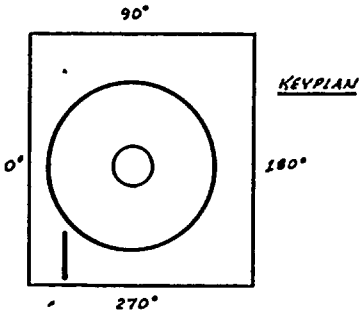

QUALITY CLASS: 1	ASME CODE CLASS: 2
ENGR: [illegible] / DRAWN: [illegible]	DATE: 4-25-79

WASHINGTON PUBLIC POWER SUPPLY SYSTEM
RICHLAND, WASHINGTON 99352

THIS DRAWING IS INTENDED FOR USE IN PRESERVICE AND INSERVICE INSPECTION PROGRAMS ONLY.

PIPING SYSTEM	NOM DIA (IN)	SCH	NOM WALL THK	MATERIAL SPECIFICATION	MATL TYPE	CAL BLOCK NO
6" FPC (7)-1	6	STD	0.280	SA 106 GR B	CS	NA

WNP-2
WELD & COMPONENT IDENTIFICATION DIAGRAM

TITLE: FPC RETURN TO SUPPRESSION POOL

DWG NO: FPC-201 REV 1

NO	DATE	REVISION	BY	CHKD	APPVD
1	12/18/82	REVISED AS NOTED ADDED KEYPLAN	[illegible]	[illegible]	TKW
0	12-8-81	ISSUED FOR USE	[illegible]	[illegible]	TKW

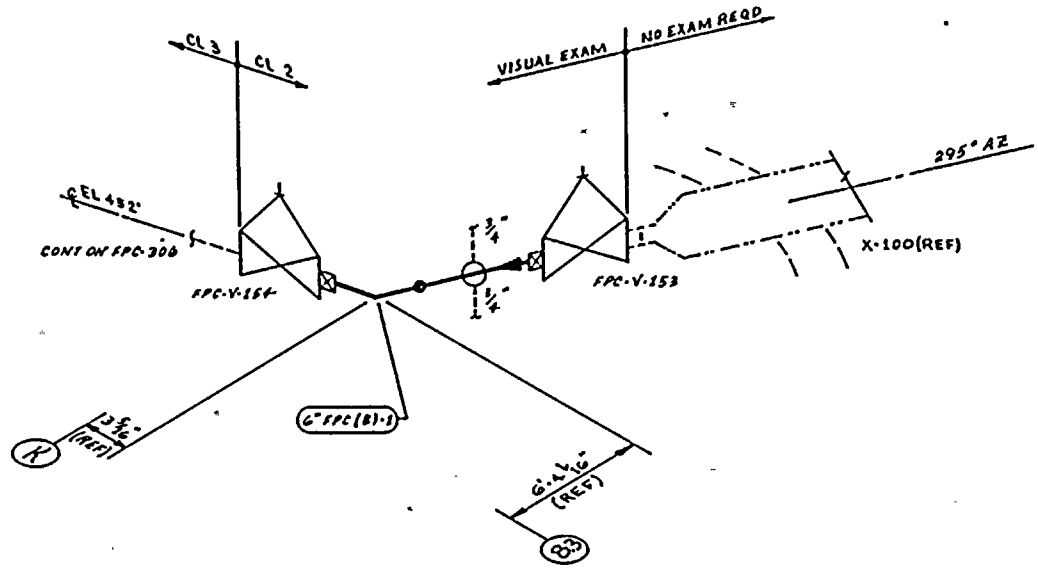

ZONE R-11

THIS DRAWING IS INTENDED FOR USE IN PRESERVICE AND INSERVICE INSPECTION PROGRAMS ONLY.

PIPING SYSTEM	NOM DIA (IN)	SCH	NOM WALL THK	MATERIAL SPECIFICATION	MATL TYPE	CAL BLOCK NO
6" FPC(B)-1	6	STD	0.280	SA 106 GR B	CS	NA

NO	DATE	REVISION	BY	CHKD	APPVD
0	12-2-83	ISSUED FOR USE			

NOTES:

1. THIS DRAWING IDENTIFIES PIPING & COMPONENTS SUBJECT TO A VISUAL EXAM FOR EVIDENCE OF LEAKAGE DURING SYSTEM HYDRO OR OPERABILITY TESTS. TESTS ARE TO BE CONDUCTED PER THE REQUIREMENTS OF ASME SECTION XI, PARAGRAPH IWA-5000.
2. FOR BRANCH PIPING 4" DIA OR LESS (CONN SHOWN IN DASHED LINES) EXTEND VISUAL LEAKAGE EXAM THROUGH THE OUTERMOST NORMALLY CLOSED NUCLEAR CLASS VALVE, OR UNTIL TRANSITION TO INSTRUMENT TUBING, UNLESS OTHERWISE NOTED.

REFERENCES:

BOVEE & CRAIL ISOMETRICS
FPC-369-1.2. REV 2
FPC-369-1.2.H REV 0

QUALITY CLASS: 1 | ASME CODE CLASS: 2
ENGR: R.N. ALDREW | DRAWN: R.N.A. | DATE: 4-27-79

WASHINGTON PUBLIC POWER SUPPLY SYSTEM
RICHLAND, WASHINGTON 99352

WNP-2
WELD & COMPONENT IDENTIFICATION DIAGRAM

TITLE: SUPPRESSION POOL TO FPC-P-3 SUCTION

DWG NO: FPC-202 | REV 0

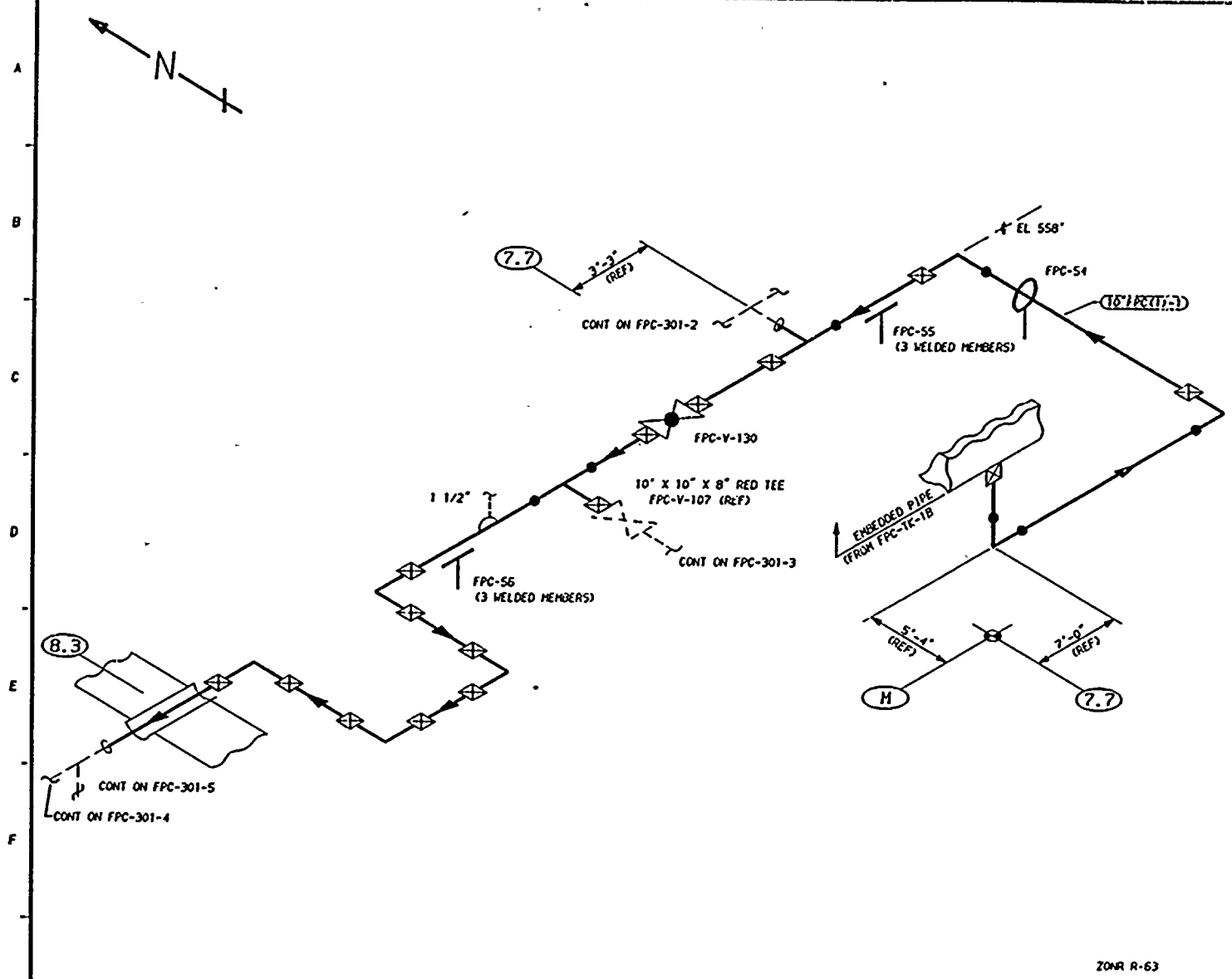

NOTES:

1. THIS DRAWING IDENTIFIES PIPING AND COMPONENTS SUBJECT ONLY TO A VISUAL EXAM FOR (1) EVIDENCE OF LEAKAGE DURING SYSTEM PRESSURE OR OPERABILITY TESTS, (2) PRESSURE DECAY TESTS OF BURIED PIPING, AND (3) LOSS OF SUPPORT CAPABILITY OR INADEQUATE RESTRAINT FOR SUPPORTS AND HANGERS ON PIPING EXCEEDING 4" NOM. TESTS SHALL BE CONDUCTED PER ASME SECTION XI, ARTICLES IWA-5000 AND IWD-2000.

REFERENCES:

ISI - 226

BOVEE & CRAIL ISOMETRIC
FPC-604-4.6 REV 6

KEYPLAN

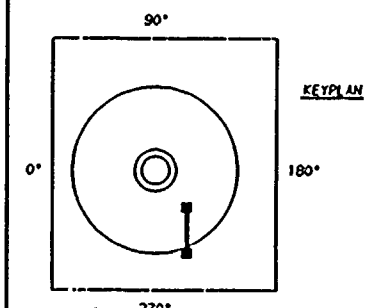

QUALITY CLASS: 2	ASME CODE CLASS: 3
ENGR: K-McANDREW	DRAWN: K-McA	DATE: 3-21-79

THIS DRAWING IS INTENDED FOR USE IN PRESERVICE AND INSERVICE INSPECTIONS PROGRAMS ONLY.

PIPING SYSTEM	NOM DIA (IN)	SCH	NOM WALL THK	MATERIAL SPECIFICATION	MATL TYPE	CAL BLOCK NO
10"FPC(1)-1	10	STD	0.365	SA 106 GR B	CS	NA

NO	DATE	REVISION	BY	CHKD	APVD
1	1-28-82	GENERAL UPDATE REDRAWN	K-McA	DPR	TFH
0	12-2-81	ISSUED FOR USE	K-McA	DPR	TFH

WASHINGTON PUBLIC POWER
SUPPLY SYSTEM
RICHLAND, WASHINGTON 99352

WNP-2
WELD & COMPONENT
IDENTIFICATION DIAGRAM

TITLE:
FUEL POOL CIRCULATION FROM FPC-TK-1B

DWG NO: FPC-301-1 | REV 1

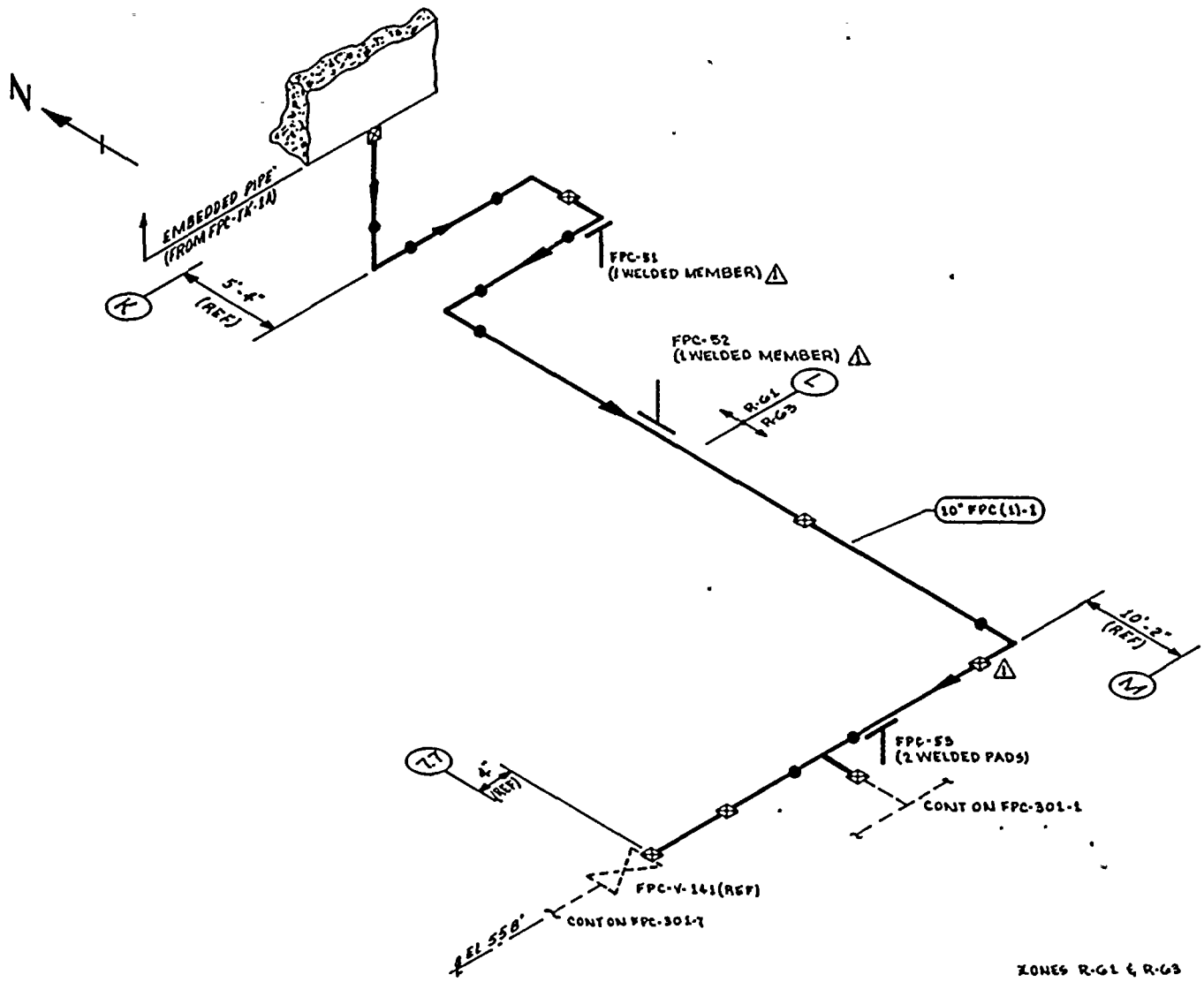

NOTES:

1. THIS DRAWING IDENTIFIES PIPING & COMPONENTS SUBJECT ONLY TO A VISUAL EXAM FOR (1) EVIDENCE OF LEAKAGE DURING SYSTEM PRESSURE OR OPERABILITY TESTS; (2) PRESSURE DECAY TESTS OF BURIED PIPING; & (3) LOSS OF SUPPORT CAPABILITY OR INADEQUATE RESTRAINT FOR SUPPORTS & HANGERS ON PIPING EXCEEDING 4" NOM. TESTS SHALL BE CONDUCTED PER ASME SECTION XI, ARTICLES IWA-5000 & IWD-2000.

REFERENCES:

BOVEE & CRAIL ISOMETRICS
FPC-604-1.3 REV 5

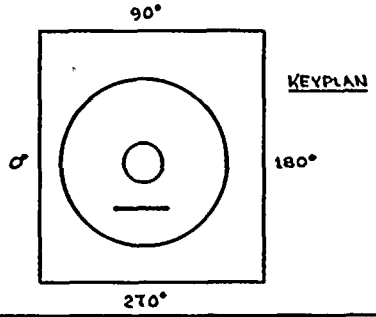

QUALITY CLASS: 2	ASME CODE CLASS: 3	
ENGR: K. Mc Andrew	DRAWN: K. McA	DATE: 3-22-79

WASHINGTON PUBLIC POWER SUPPLY SYSTEM
RICHLAND, WASHINGTON 99352

THIS DRAWING IS INTENDED FOR USE IN PRESERVICE AND INSERVICE INSPECTION PROGRAMS ONLY.

PIPING SYSTEM	NOM DIA (IN)	SCH	NOM WALL THK	MATERIAL SPECIFICATION	MATL TYPE	CAL BLOCK NO
10" FPC(1)-1	10	STD	0.365	SA 106 GR B	CS	NA

WNP-2
WELD & COMPONENT IDENTIFICATION DIAGRAM

TITLE:
FUEL POOL CIRCULATION FROM FPC-TK-1A

DWG NO: FPC-301-2 REV 1

NO	DATE	REVISION	BY	CHKD	APPVD
1	1-28-81	REVISED AS NOTED ADDED KEYPLAN	KMA	DR	TFW
0	12-28-81	ISSUED FOR USE	KMA	DR	TFW

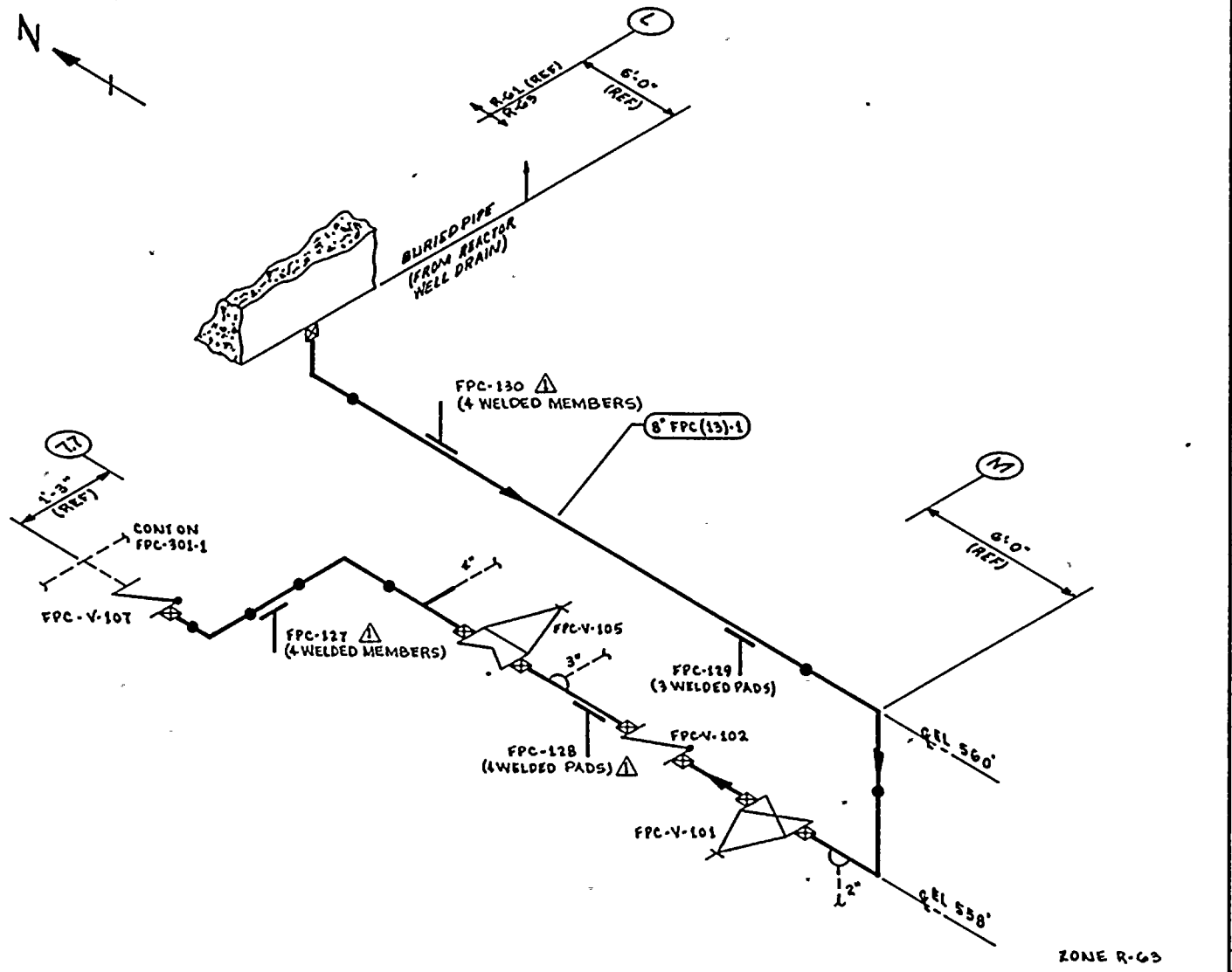

NOTES:

1. THIS DRAWING IDENTIFIES PIPING & COMPONENTS SUBJECT ONLY TO A VISUAL EXAM FOR (1) EVIDENCE OF LEAKAGE DURING SYSTEM PRESSURE OR OPERABILITY TESTS; (2) PRESSURE DECAY TESTS OF BURIED PIPING; & (3) LOSS OF SUPPORT CAPABILITY OR INADEQUATE RESTRAINT FOR SUPPORTS & HANGERS ON PIPING EXCEEDING 4" NOM. TESTS SHALL BE CONDUCTED PER ASME SECTION XI, ARTICLES IWA-5000 & IWD-2000.
2. FOR BRANCH PIPING 4" NOM OR LESS (CONN SHOWN IN DASHED LINES) EXTEND VISUAL LEAKAGE EXAM THROUGH THE OUTERMOST NORMALLY CLOSED NUCLEAR CLASS VALVE OR UNTIL TRANSITION TO INSTRUMENT TUBING, UNLESS OTHERWISE NOTED.

REFERENCES:

BOVEE & CRAIL ISOMETRIC
FPC-608-1.4 REV 5

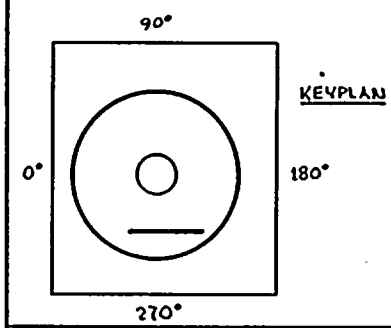

QUALITY CLASS: 2	ASME CODE CLASS: 3	
ENGR: K.M. McANDREW	DRAWN: K.M.&L.	DATE: 3-22-79

THIS DRAWING IS INTENDED FOR USE IN PRESERVICE AND INSERVICE INSPECTION PROGRAMS ONLY.

WASHINGTON PUBLIC POWER SUPPLY SYSTEM
RICHLAND, WASHINGTON 99352

PIPING SYSTEM	NOM DIA (IN)	SCH	NOM WALL THK	MATERIAL SPECIFICATION	MATL TYPE	CAL BLOCK NO
8" FPC (13)-1	8	STD	0.322	SA 106 GR B	CS	NA

WNP-2
WELD & COMPONENT IDENTIFICATION DIAGRAM

TITLE:
FUEL POOL CIRCULATION FROM REACTOR WELL DRAIN

DWG NO: FPC-301-3 REV 1

NO	DATE	REVISION	BY	CHKD	APPVD
1	5-21-81	REVISED AS NOTED ADDED KEYPLAN	KMA	BR	TFH
0	12-7-81	ISSUED FOR USE	KLK	BR	TFH

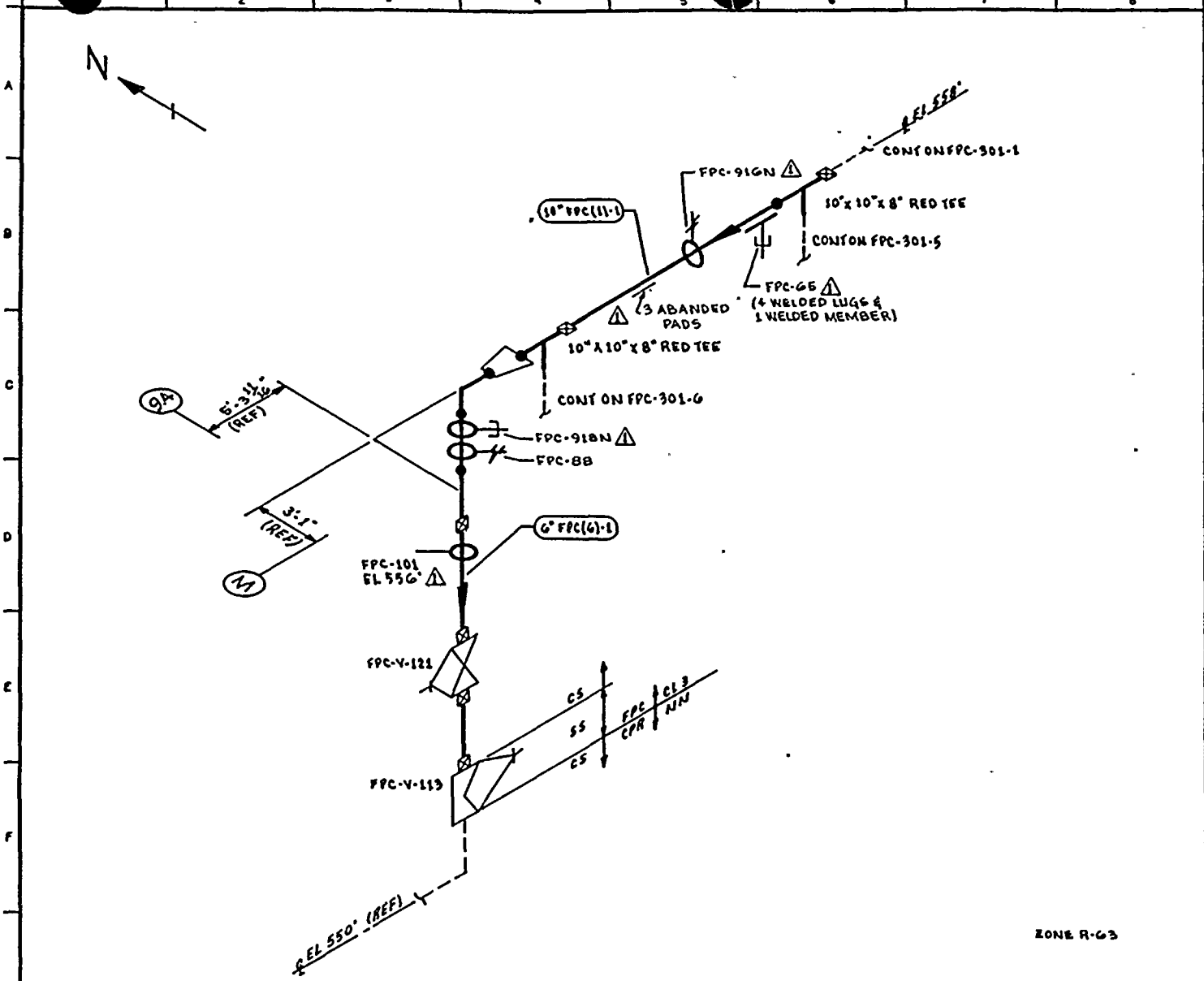

ZONE R-63

THIS DRAWING IS INTENDED FOR USE IN PRESERVICE AND INSERVICE INSPECTION PROGRAMS ONLY.

NOTES:

1. THIS DRAWING IDENTIFIES PIPING & COMPONENTS SUBJECT ONLY TO A VISUAL EXAM FOR (1) EVIDENCE OF LEAKAGE DURING SYSTEM PRESSURE OR OPERABILITY TESTS; (2) PRESSURE DECAY TESTS OF BURIED PIPING; & (3) LOSS OF SUPPORT CAPABILITY OR INADEQUATE RESTRAINT FOR SUPPORTS & HANGERS ON PIPING EXCEEDING 4" NOM. TESTS SHALL BE CONDUCTED PER ASEM SECTION XI, ARTICLES IWA-5000 & IWD-2000.

REFERENCES:

BOVEE & CRAIL ISOMETRICS

FPC-604-7.9 REV 7

KEYPLAN

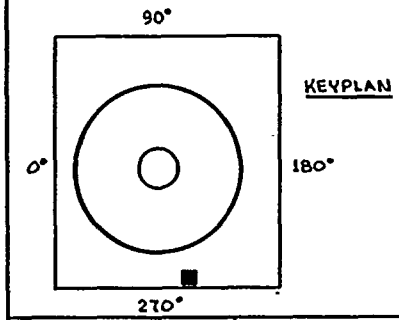

QUALITY CLASS: 2	ASME CODE CLASS: 3	
ENGR: H.M. ANDREWS	DRAWN: K. McA	DATE: 3-22-79

WASHINGTON PUBLIC POWER SUPPLY SYSTEM
RICHLAND, WASHINGTON 99352

PIPING SYSTEM	NOM DIA (IN)	SCH	NOM WALL THK	MATERIAL SPECIFICATION	MATL TYPE	CAL BLOCK NO
10" FPC(11)-1	10	STD	0.365	SA 106 GR B	CS	NA
6" FPC(6)-1	6	STD	0.280	SA 106 GR B	CS	NA

NO	DATE	REVISION	BY	CHKD	APPVD
1	12-28-81	REVISED AS NOTED ADDED KEYPLAN	[illegible]	[illegible]	TTK
0	12-22-81	ISSUED FOR USE	[illegible]	[illegible]	TTK

WNP-2
WELD & COMPONENT IDENTIFICATION DIAGRAM

TITLE: FUEL POOL CIRCULATION TO FPC-P-1A & 1B

DWG NO: FPC-301-4 REV 1

SUPERIOR REPROGRAPHICS 10 3/7

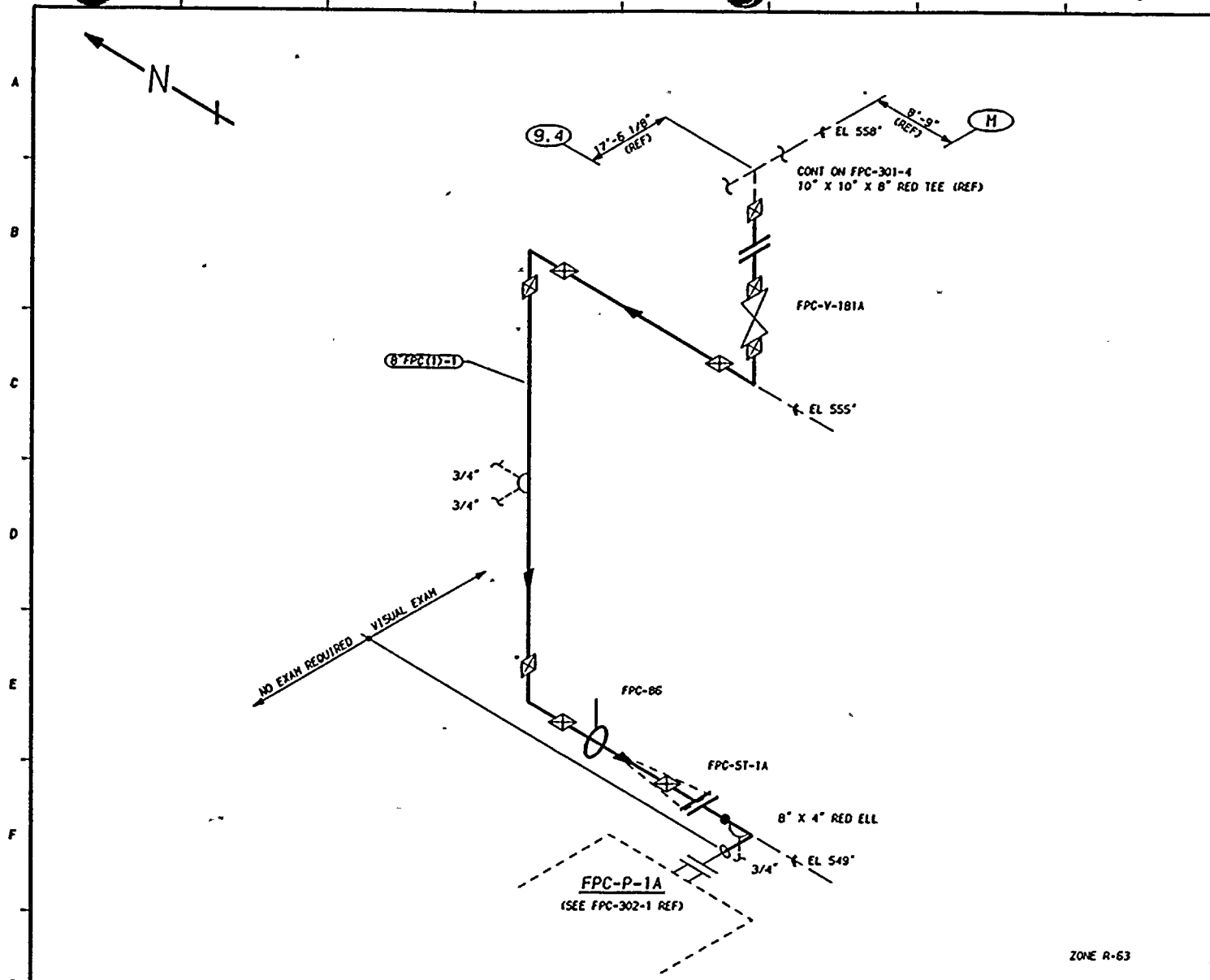

ZONE R-63

THIS DRAWING IS INTENDED FOR USE IN PRESERVICE AND INSERVICE INSPECTIONS PROGRAMS ONLY.

NOTES:

1. THIS DRAWING IDENTIFIES PIPING AND COMPONENTS SUBJECT ONLY TO A VISUAL EXAM FOR (1) EVIDENCE OF LEAKAGE DURING SYSTEM PRESSURE OR OPERABILITY TESTS; (2) PRESSURE DECAY TESTS OF BURIED PIPING; AND (3) LOSS OF SUPPORT CAPABILITY OR INADEQUATE RESTRAINT FOR SUPPORTS AND HANGERS ON PIPING EXCEEDING 4" NOM. TESTS SHALL BE CONDUCTED PER ASME SECTION XI, ARTICLES IWA-5000 AND IWD-2000.
2. FOR BRANCH PIPING 4" NOM. OR LESS (CONNECTION SHOWN IN DASHED LINES) EXTEND VISUAL LEAKAGE EXAM THROUGH THE OUTERMOST NORMALLY CLOSED NUCLEAR CLASS VALVE, OR UNTIL TRANSITION TO INSTRUMENT TUBING, UNLESS OTHERWISE NOTED.
3. EXTEND VISUAL LEAKAGE EXAM THROUGH FPC-P-1A DRAIN PIPING TO FPC-V-150A.

REFERENCES:

151 - 226

BOYEE & CRAIL ISOMETRIC
FPC-604-10.12 REV 9

KEYPLAN

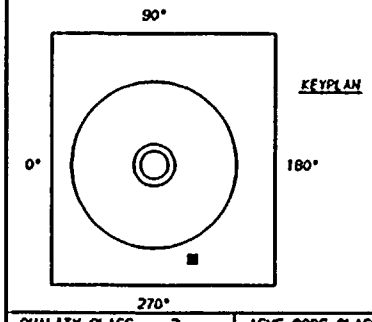

QUALITY CLASS: 2	ASME CODE CLASS: 3
ENGR: K-McANDREW	DRAWN: K-McA	DATE: 3-23-79

WASHINGTON PUBLIC POWER
SUPPLY SYSTEM
RICHLAND, WASHINGTON 99352

WNP-2
WELD & COMPONENT
IDENTIFICATION DIAGRAM

TITLE:
FPC-P-1A SUCTION
FROM FPC-TK-1A & 1B, REACTOR WELL DRAIN

DWG NO: FPC-301-5 REV 1

PIPING SYSTEM	NOM DIA (IN)	SCH	NOM WALL THK	MATERIAL SPECIFICATION	MATL TYPE	CAL BLOCK NO
8"FPC(1)-1	8	STD	0.322	SA 106 GR B	CS	NA

NO	DATE	REVISION	BY	CHKD	APVD
1	[illegible]	GENERAL UPDATE REDRAWN	KMcA	DPR	TFH
0	12-2-81	ISSUED FOR USE	K-McA	DPR	TFH

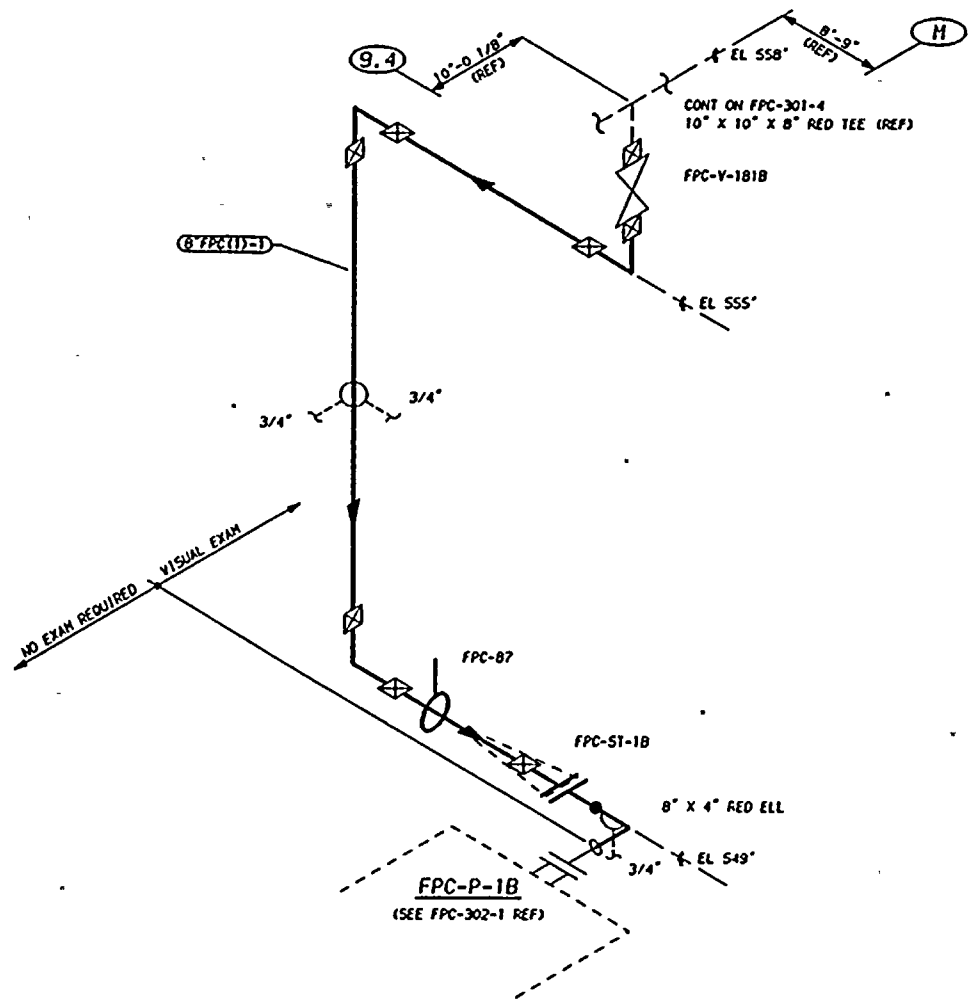

ZONE R-63

THIS DRAWING IS INTENDED FOR USE IN PRESERVICE AND INSERVICE INSPECTIONS PROGRAMS ONLY.

NOTES:

1. THIS DRAWING IDENTIFIES PIPING AND COMPONENTS SUBJECT ONLY TO A VISUAL EXAM FOR (1) EVIDENCE OF LEAKAGE DURING SYSTEM PRESSURE OR OPERABILITY TESTS; (2) PRESSURE DECAY TESTS OF BURIED PIPING; AND (3) LOSS OF SUPPORT CAPABILITY OR INADEQUATE RESTRAINT FOR SUPPORTS AND HANGERS ON PIPING EXCEEDING 4" NOM. TESTS SHALL BE CONDUCTED PER ASME SECTION XI, ARTICLES IWA-5000 AND IWD-2000.
2. FOR BRANCH PIPING 4" NOM. OR LESS (CONNECTION SHOWN IN DASHED LINES) EXTEND VISUAL LEAKAGE EXAM THROUGH THE OUTERMOST NORMALLY CLOSED NUCLEAR CLASS VALVE, OR UNTIL TRANSITION TO INSTRUMENT TUBING, UNLESS OTHERWISE NOTED.
3. EXTEND VISUAL LEAKAGE EXAM THROUGH FPC-P-1B DRAIN PIPING TO FPC-V-150B.

REFERENCES:

151 - 226

BOYEE & CRAIL ISOMETRIC
FPC-604-14.17 REV 11

KEYPLAN

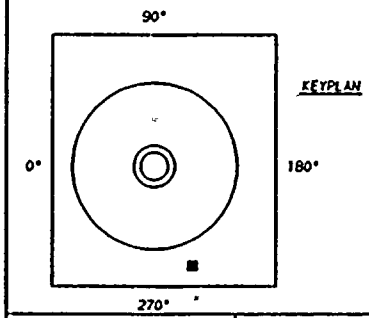

PIPING SYSTEM	NOM DIA (IND	SCH	NOM WALL THK	MATERIAL SPECIFICATION	MATL TYPE	CAL BLOCK NO
8"FPC(1)-1	8	STD	0.322	SA 106 GR B	CS	NA

NO	DATE	REVISION	BY	CHKD	APVD
1	1-27-84	GENERAL UPDATE REDRAWN	[illegible]	DPR	TFH
0	12-2-81	ISSUED FOR USE	K-McA	DPR	TFH

QUALITY CLASS: 2 | ASME CODE CLASS: 3

ENGR: K-McANDREW | DRAWN: K-McA | DATE: 3-23-79

WASHINGTON PUBLIC POWER
SUPPLY SYSTEM
RICHLAND, WASHINGTON 99352

WNP-2
WELD & COMPONENT
IDENTIFICATION DIAGRAM

TITLE:
FPC-P-1B SUCTION
FROM FPC-TK-1A & 1B, REACTOR WELL DRAIN

DWG NO: FPC-301-6 | REV 1

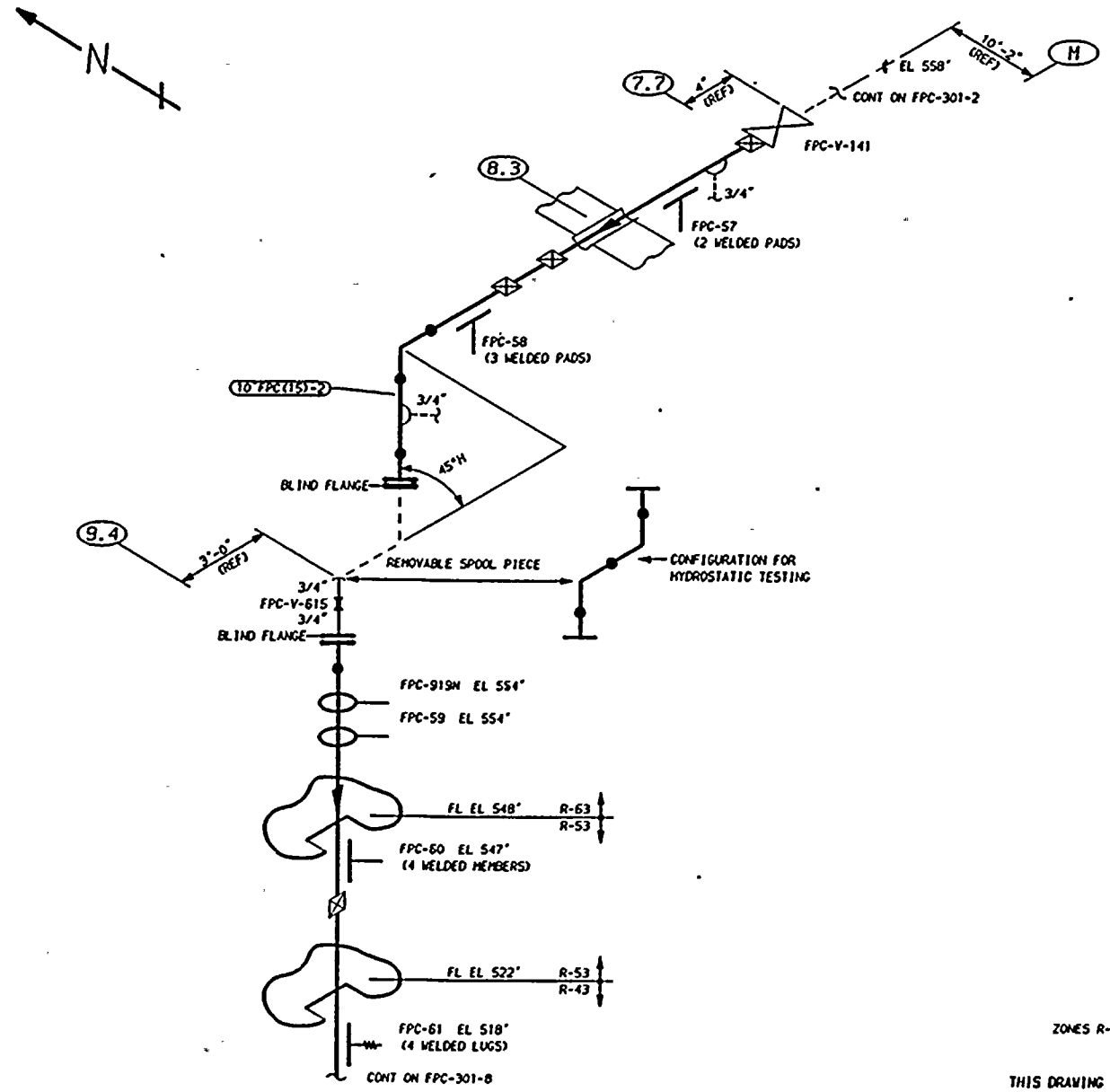

ZONES R-63, R-53 & R-43

THIS DRAWING IS INTENDED FOR USE IN PRESERVICE AND INSERVICE INSPECTIONS PROGRAMS ONLY.

NOTES:

1. THIS DRAWING IDENTIFIES PIPING AND COMPONENTS SUBJECT ONLY TO A VISUAL EXAM FOR (1) EVIDENCE OF LEAKAGE DURING SYSTEM PRESSURE OR OPERABILITY TESTS, (2) PRESSURE DECAY TESTS OF BURIED PIPING, AND (3) LOSS OF SUPPORT CAPABILITY OR INADEQUATE RESTRAINT FOR SUPPORTS AND HANGERS ON PIPING EXCEEDING 4" NOM. TESTS SHALL BE CONDUCTED PER ASME SECTION XI, ARTICLES IWA-5000 AND IWD-2000.

REFERENCES:

ISI - 226

BOYEE & CRAIL ISOMETRICS
FPC-605-1.4 REV 7
FPC-605-5.9 REV 5

KEYPLAN

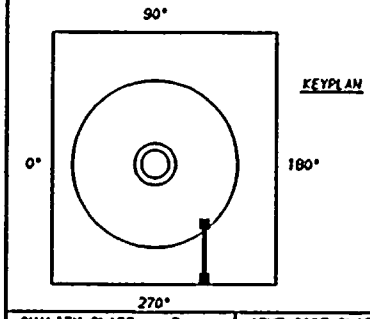

QUALITY CLASS: 2	ASME CODE CLASS: 3
ENGR: K-McANDREW	DRAWN: K-McA	DATE: 4-5-79

WASHINGTON PUBLIC POWER
SUPPLY SYSTEM
RICHLAND, WASHINGTON 99352

PIPING SYSTEM	NOM DIA (IN)	SCH	NOM WALL THK	MATERIAL SPECIFICATION	MATL TYPE	CAL BLOCK NO
10"FPC(15)-2	10	STD	0.365	SA 106 GR B	CS	NA

NO	DATE	REVISION	BY	CHKD	APVD
1	1-27-84	GENERAL UPDATE REDRAWN	K-McA	DPR	TFH
0	12-2-81	ISSUED FOR USE	K-McA	DPR	TFH

WNP-2
WELD & COMPONENT
IDENTIFICATION DIAGRAM

TITLE:
FPC INTERTIE RHR-P-2A SUCTION

DWG NO: FPC-301-7 | REV 1

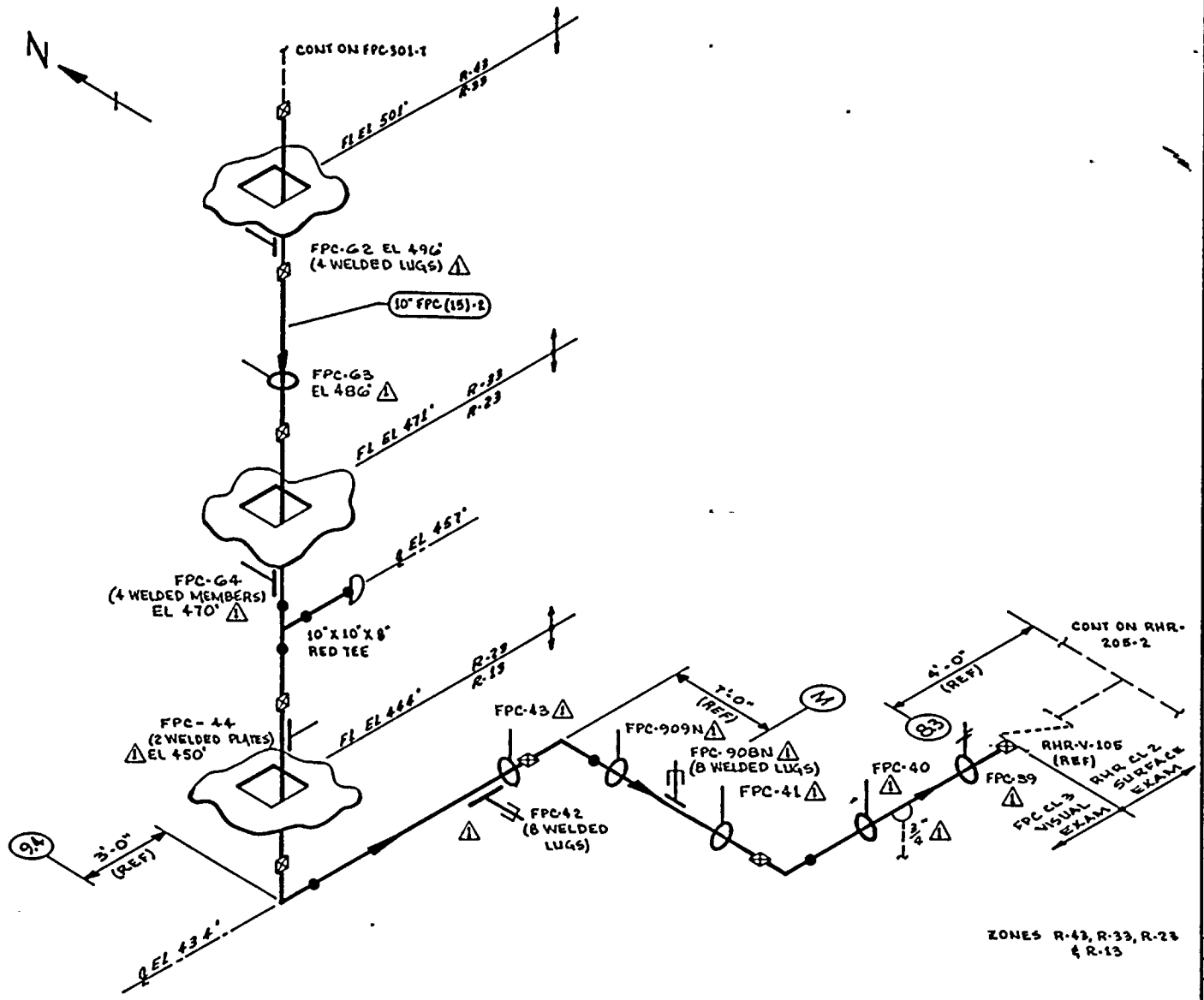

ZONES R-43, R-33, R-23 & R-13

THIS DRAWING IS INTENDED FOR USE IN PRESERVICE AND INSERVICE INSPECTION PROGRAMS ONLY.

NOTES:

1. THIS DRAWING IDENTIFIES PIPING & COMPONENTS SUBJECT ONLY TO A VISUAL EXAM FOR (1) EVIDENCE OF LEAKAGE DURING SYSTEM PRESSURE OR OPERABILITY TESTS; (2) PRESSURE DECAY TESTS OF BURIED PIPING; & (3) LOSS OF SUPPORT CAPABILITY OR INADEQUATE RESTRAINT FOR SUPPORTS & HANGERS ON PIPING EXCEEDING 4" NOM. TESTS SHALL BE CONDUCTED PER ASME SECTION XI, ARTICLES IWA-5000 & IWD-2000.

REFERENCES:

BOVEE & CRAIL ISOMETRICS

FPC-605-5.9	REV 5
FPC-605-10.12	REV 6

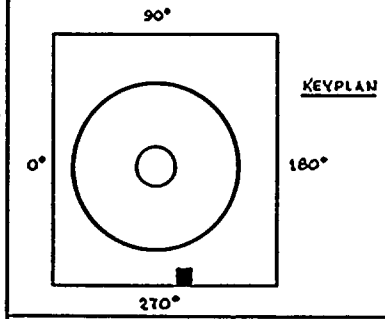

QUALITY CLASS: 2		ASME CODE CLASS: 3	
ENGR: K. McANDREW	DRAWN: K. McA	DATE: 4-6-79	

WASHINGTON PUBLIC POWER SUPPLY SYSTEM
RICHLAND, WASHINGTON 99352

PIPING SYSTEM	NOM DIA (IN)	SCH	NOM WALL THK	MATERIAL SPECIFICATION	MATL TYPE	CAL BLOCK NO
10" FPC(15)-2	10	STD	0.365	SA 106 GR B	CS	NA

WNP-2
WELD & COMPONENT
IDENTIFICATION DIAGRAM

TITLE:

FPC INTERTIE RHR-P-2A SUCTION

DWG NO: FPC-301-8 REV 1

NO	DATE	REVISION	BY	CHKD	APPVD
1	4-26-88	REVISED AS NOTED ADDED KEYPLAN	KMcA	JRR	TFH
0	12-2-81	ISSUED FOR USE	KMcA	JRR	TFH

WNP-02
INTERVAL: PSI
PERIOD: NA
OUTAGE:
DRAWING NO. FPC-301

WASHINGTON PUBLIC POWER SUPPLY SYSTEM
PROGRAM PLAN AND SCHEDULE
SYSTEM OR COMPONENT: FPC(1)-1
DESCRIPTION: FUEL POOL CIRC/TK-1B

DATE 12/14/84

IDENT. NO.	DESCRIPTION	SECT. XI EXAM.	EXAM MTH.	PROCEDURE	CAL. BLOCK	INSERVICE REQ.	INSERVICE SCHEDULED OUTAGE	NOTES
FPC-54	BOX	N/A	VT-3	303/8.2.17				
FPC-55	BOX	N/A	VT-3	303/8.2.17				
FPC-56	BOX	N/A	VT-3	303/8.2.17				
FPC-51	BOX	N/A	VT-3	303/8.2.17				
FPC-52	BOX	N/A	VT-3	303/8.2.17				
FPC-53	BOX	N/A	VT-3	303/8.2.17				
FPC-130	BOX	N/A	VT-3	303/8.2.17				
FPC-129	BOX	N/A	VT-3	303/8.2.17				
FPC-128	BOX	N/A	VT-3	303/8.2.17				
FPC-127	BOX	N/A	VT-3	303/8.2.17				
FPC-65	PSA-1 SNUBBER	N/A	VT-3	303/8.2.17				
			VT-4	303/8.2.17				
FPC-916N	SPRING	N/A	VT-3	303/8.2.17				
			VT-4	303/8.2.17				
FPC-918N	PSA-1/2 SNUBBER	N/A	VT-3	303/8.2.17				
			VT-4	303/8.2.17				
FPC-88	SPRING	N/A	VT-3	303/8.2.17				
			VT-4	303/8.2.17				

WNP-02
INTERVAL: PSI
PERIOD: NA
OUTAGE:
DRAWING NO. FPC-301

WASHINGTON PUBLIC POWER SUPPLY SYSTEM
PROGRAM PLAN AND SCHEDULE
SYSTEM OR COMPONENT: FPC(1)-1
DESCRIPTION: FUEL POOL CIRC/TK-1R

IDENT. NO.	DESCRIPTION	SECT. XI EXAM.	EXAM MTH.	PROCEDURE	CAL. BLOCK	INSERVICE REQ.	SCHEDULED OUTAGE	NOTES
FPC-101								
	RIGID	N/A	VT-3	303/8.2.17				
FPC-86								
	SPRING	N/A	VT-3	303/8.2.17				
			VT-4	303/8.2.17				
FPC-87								
	SPRING	N/A	VT-3	303/8.2.17				
			VT-4	303/8.2.17				
FPC-57								
	BOX	N/A	VT-3	303/8.2.17				
FPC-58								
	BOX	N/A	VT-3	303/8.2.17				
FPC-919N								
	RIGID	N/A	VT-3	303/8.2.17				
FPC-59								
	BOX	N/A	VT-3	303/8.2.17				
FPC-60								
	BOX	N/A	VT-3	303/8.2.17				
FPC-61								
	SPRING	N/A	VT-3	303/8.2.17				
			VT-4	303/8.2.17				
FPC-62								
	BOX	N/A	VT-3	303/8.2.17				
FPC-63								
	BOX	N/A	VT-3	303/8.2.17				
FPC-64								
	BOX	N/A	VT-3	303/8.2.17				
FPC-44								
	ANCHOR	N/A	VT-3	303/8.2.17				
FPC-42								
	STRUT	N/A	VT-3	303/8.2.17				

WNP-02
INTERVAL: PSI
PERIOD: NA
OUTAGE:
DRAWING NO. FPC-301

WASHINGTON PUBLIC POWER SUPPLY SYSTEM
PROGRAM PLAN AND SCHEDULE
SYSTEM OR COMPONENT: FPC(1)-1
DESCRIPTION: FUEL POOL CIRC/TK-1B

DATE 12/14/84

IDENT. NO.	DESCRIPTION	SECT. XI EXAM.	EXAM MTH.	PROCEDURE	CAL. BLOCK	INSERVICE REQ.	INSERVICE SCHEDULED OUTAGE	NOTES
FPC-43								
	PSA-1 SNUBBER	N/A	VT-3	303/8.2.17				S/N
			VT-4	303/8.2.17				S/N
FPC-909N								
	RIGID	N/A	VT-3	303/8.2.17				
FPC-908N								
	PSA-1 SN(2)	N/A	VT-3	303/8.2.17				S/N
			VT-4	303/8.2.17				S/N
FPC-41								
	SPRING	N/A	VT-3	303/8.2.17				
			VT-4	303/8.2.17				
FPC-40								
	STRUT	N/A	VT-3	303/8.2.17				
FPC-39								
	SPRING	N/A	VT-3	303/8.2.17				
			VT-4	303/8.2.17				
FPC-PB-301								
	FPC PRESS BNDRY	N/A	VT-2	N/A				SEE NOTES #6 & #7.

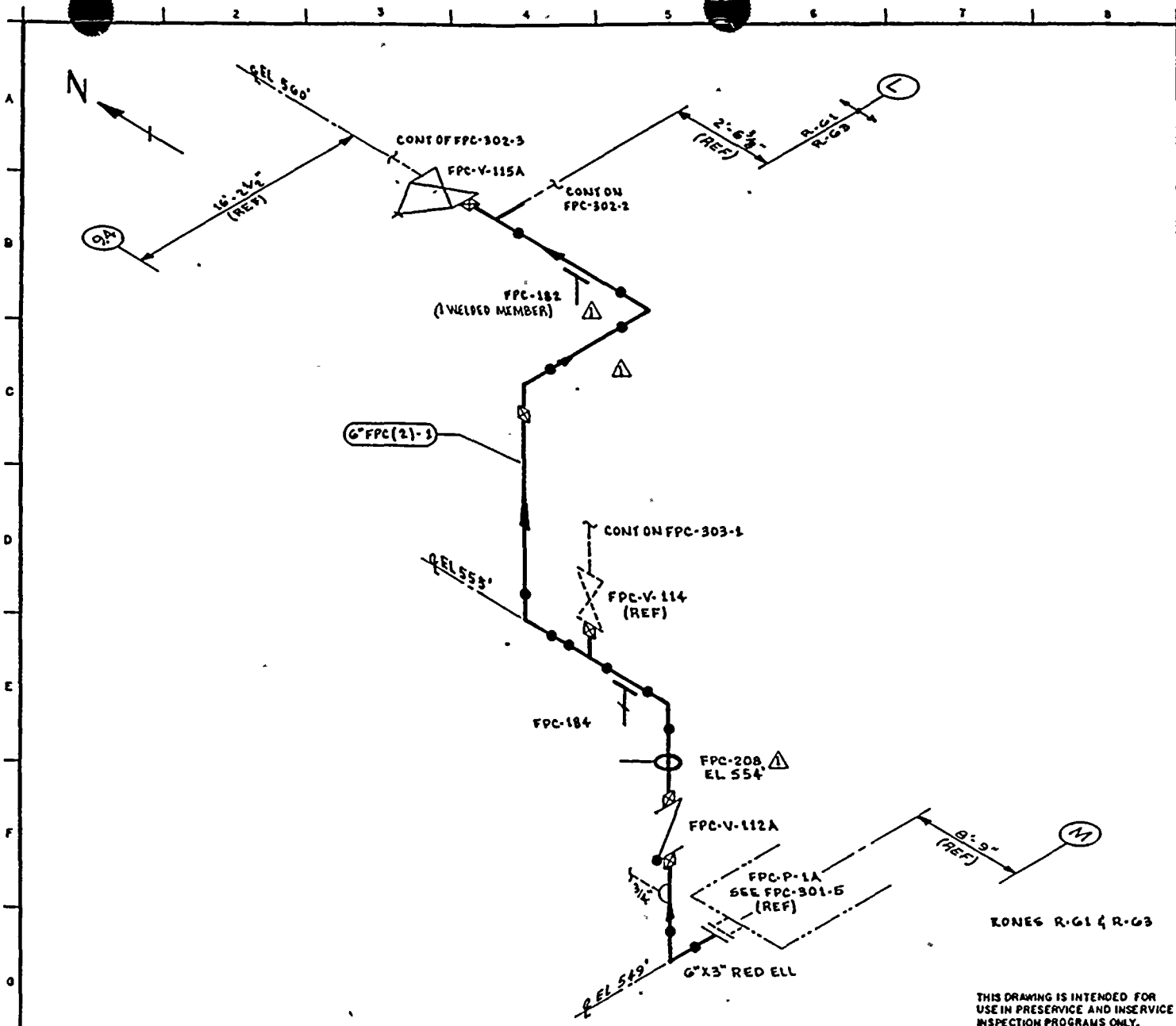

THIS DRAWING IS INTENDED FOR USE IN PRESERVICE AND INSERVICE INSPECTION PROGRAMS ONLY.

NOTES:

1. THIS DRAWING IDENTIFIES PIPING & COMPONENTS SUBJECT ONLY TO A VISUAL EXAM FOR (1) EVIDENCE OF LEAKAGE DURING SYSTEM PRESSURE OR OPERABILITY TESTS; (2) PRESSURE DECAY TESTS OF BURIED PIPING; (3) LOSS OF SUPPORT CAPABILITY OR INADEQUATE RESTRAINT FOR SUPPORTS & HANGERS ON PIPING EXCEEDING 4" NOM. TESTS SHALL BE CONDUCTED PER ASME SECTION XI, ARTICLES IWA-5000 & IWD-2000.
2. FOR BRANCH PIPING 4" NOM OR LESS (CONN SHOWN IN DASHED LINES) EXTEND VISUAL LEAKAGE EXAM THROUGH THE OUTERMOST NORMALLY CLOSED NUCLEAR CLASS VALVE, OR UNTIL TRANSITION TO INSTRUMENT TUBING, UNLESS OTHERWISE NOTED.

REFERENCES:

BOVEE & CRAIL ISOMETRICS
FPC-636-1.3 REV 7

KEYPLAN

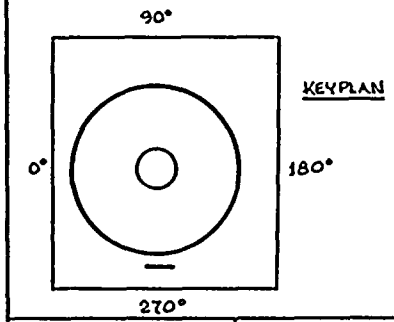

QUALITY CLASS: 2	ASME CODE CLASS: 3
ENGR: [illegible] DRAWN: [illegible]	DATE: 4-6-79

WASHINGTON PUBLIC POWER SUPPLY SYSTEM
RICHLAND, WASHINGTON 99352

PIPING SYSTEM	NOM DIA (IN)	SCH	NOM WALL THK	MATERIAL SPECIFICATION	MATL TYPE	CAL BLOCK NO
6" FPC(2)-1	6	STD	0.280	SA 106 GR B	CS	NA

WNP-2
WELD & COMPONENT IDENTIFICATION DIAGRAM

TITLE: FPC-P-1A TO FPC-DM-1A & 1B

DWG NO: FPC-302-1 REV 1

NO	DATE	REVISION	BY	CHKD	APPVD
1	1-27-81	REVISED AS NOTED ADDED KEYPLAN	[illegible]	LHR	TFH
0	12-2-81	ISSUED FOR USE	[illegible]	[illegible]	TFH

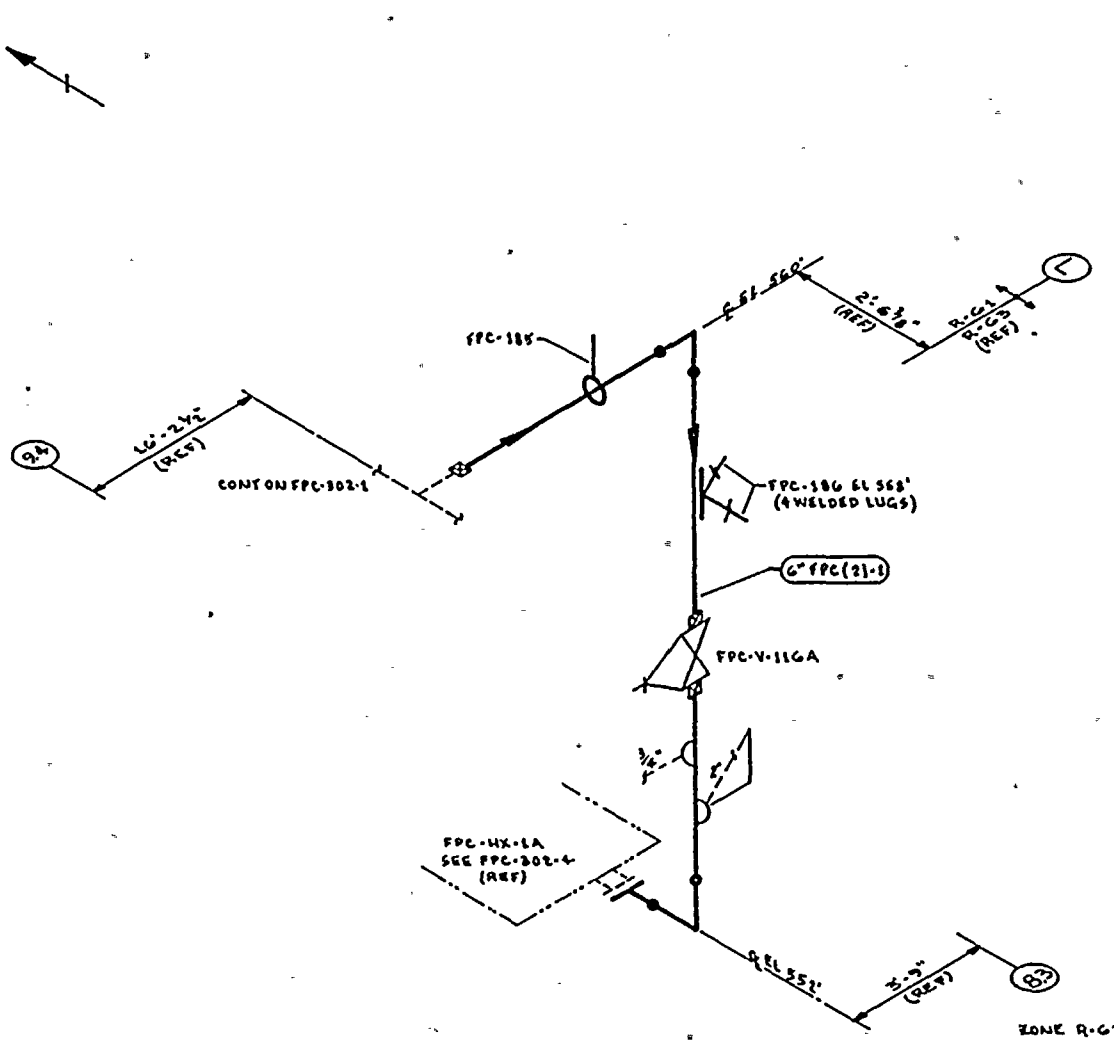

THIS DRAWING IS INTENDED FOR USE IN PRESERVICE AND INSERVICE INSPECTION PROGRAMS ONLY.

PIPING SYSTEM	NOM DIA (IN)	SCH	NOM WALL THK	MATERIAL SPECIFICATION	MATL TYPE	CAL BLOCK NO
6" FPC(2)-1	6	STD	0.280	SA 106 GR B	CS	NA

NO	DATE	REVISION	BY	CHKD	APPVD
0	12-2-81	ISSUED FOR USE	KMcA	JR	TFK

NOTES:

1. THIS DRAWING IDENTIFIES PIPING & COMPONENTS SUBJECT ONLY TO A VISUAL EXAM FOR (1) EVIDENCE OF LEAKAGE DURING SYSTEM PRESSURE OR OPERABILITY TESTS; (2) PRESSURE DECAY TESTS OF BURIED PIPING; & (3) LOSS OF SUPPORT CAPABILITY OR INADEQUATE RESTRAINT FOR SUPPORTS & HANGERS ON PIPING EXCEEDING 4" NOM. TESTS SHALL BE CONDUCTED PER ASME SECTION XI, ARTICLES IWA-5000 & IWD-2000.
2. FOR BRANCH PIPING 4" NOM OR LESS (CONN SHOWN IN DASHED LINES) EXTEND VISUALL EXAM THROUGH THE OUTERMOST NORMALL CLOSED NUCLEAR CLASS VALVE OR UNTIL TRANSITION TO INSTRUMENT TUBING, UNLESS OTHERWISE NOTED.

REFERENCES:

BOVEE & CRAIL ISOMETRICS:
FPC-636-6.7
FPC-636-6.7H

QUALITY CLASS: 2 | ASME CODE CLASS: 3
ENGR: K.E. McANDREW | DRAWN: K.McA | DATE: 4-9-79

WASHINGTON PUBLIC POWER SUPPLY SYSTEM
RICHLAND, WASHINGTON 99352

WNP- 2
WELD & COMPONENT IDENTIFICATION DIAGRAM

TITLE:
FPC-P-1A DISCHARGE TO FPC-HX-1A

DWG NO: FPC-302-2 | REV 0

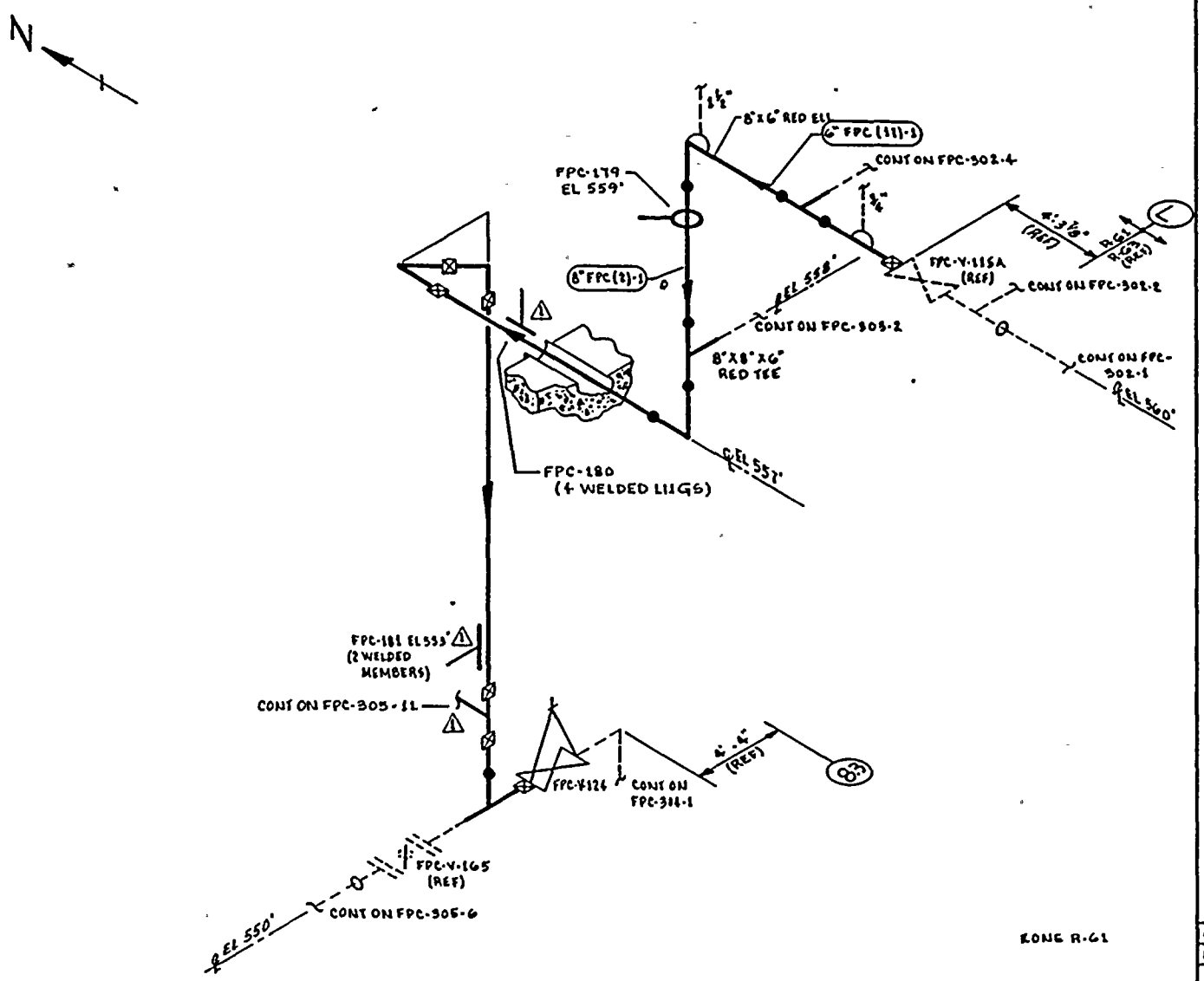

NOTES:

1. THIS DRAWING IDENTIFIES PIPING & COMPONENTS SUBJECT ONLY TO A VISUAL EXAM FOR (1) EVIDENCE OF LEAKAGE DURING SYSTEM PRESSURE OR OPERABILITY TESTS; (2) PRESSURE DECAY TESTS OF BURIED PIPING; & (3) LOSS OF SUPPORT CAPABILITY OR INADEQUATE RESTRAINT FOR SUPPORTS & HANGERS ON PIPING EXCEEDING 4" NOM. TESTS SHALL BE CONDUCTED PER ASME SECTION XI, ARTICLES IWA-5000 & IWD-2000.
2. FOR BRANCH PIPING 4" NOM OR LESS (CONN) SHOWN IN DASHED LINES) EXTEND VISUAL LEAKAGE EXAM THROUGH THE OUTERMOST NORMALLY CLOSED NUCLEAR CLASS VALVE, OR UNTIL TRANSITION TO INSTRUMENT TUBING, UNLESS OTHERWISE NOTED.

REFERENCES:

BOYER & CRAIL ISOMETRICS
FPC-636-4.5 REV 7

KEYPLAN

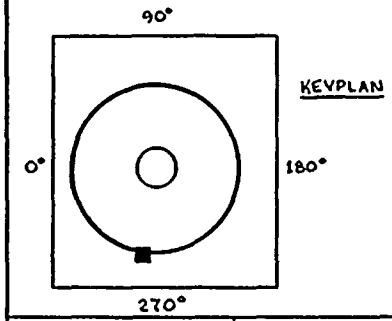

QUALITY CLASS: 2	ASME CODE CLASS: 3	
ENGR: K. McAndrew	DRAWN: K. McA	DATE: 4-11-77

THIS DRAWING IS INTENDED FOR USE IN PRESERVICE AND INSERVICE INSPECTION PROGRAMS ONLY.

WASHINGTON PUBLIC POWER SUPPLY SYSTEM
RICHLAND, WASHINGTON 99352

PIPING SYSTEM	NOM DIA (IN)	SCH	NOM WALL THK	MATERIAL SPECIFICATION	MATL TYPE	CAL BLOCK NO
6" FPC (11)-1	6	STD	0.280	SA 106 GR B	CS	NA
8" FPC (2)-2	8	STD	0.322	SA 106 GR B	CS	NA

WNP-2
WELD & COMPONENT
IDENTIFICATION DIAGRAM

TITLE:
FPC-P-1A DISCHARGE TO FPC-DM-1A & 1B

DWG NO: FPC-302-3 REV 1

NO	DATE	REVISION	BY	CHKD	APPVD
1	1-24-81	REVISED AS NOTED ADDED KEYPLAN	KMcA	JPR	TFH
0	12-2-81	ISSUED FOR USE	KMcA	JPR	TFH

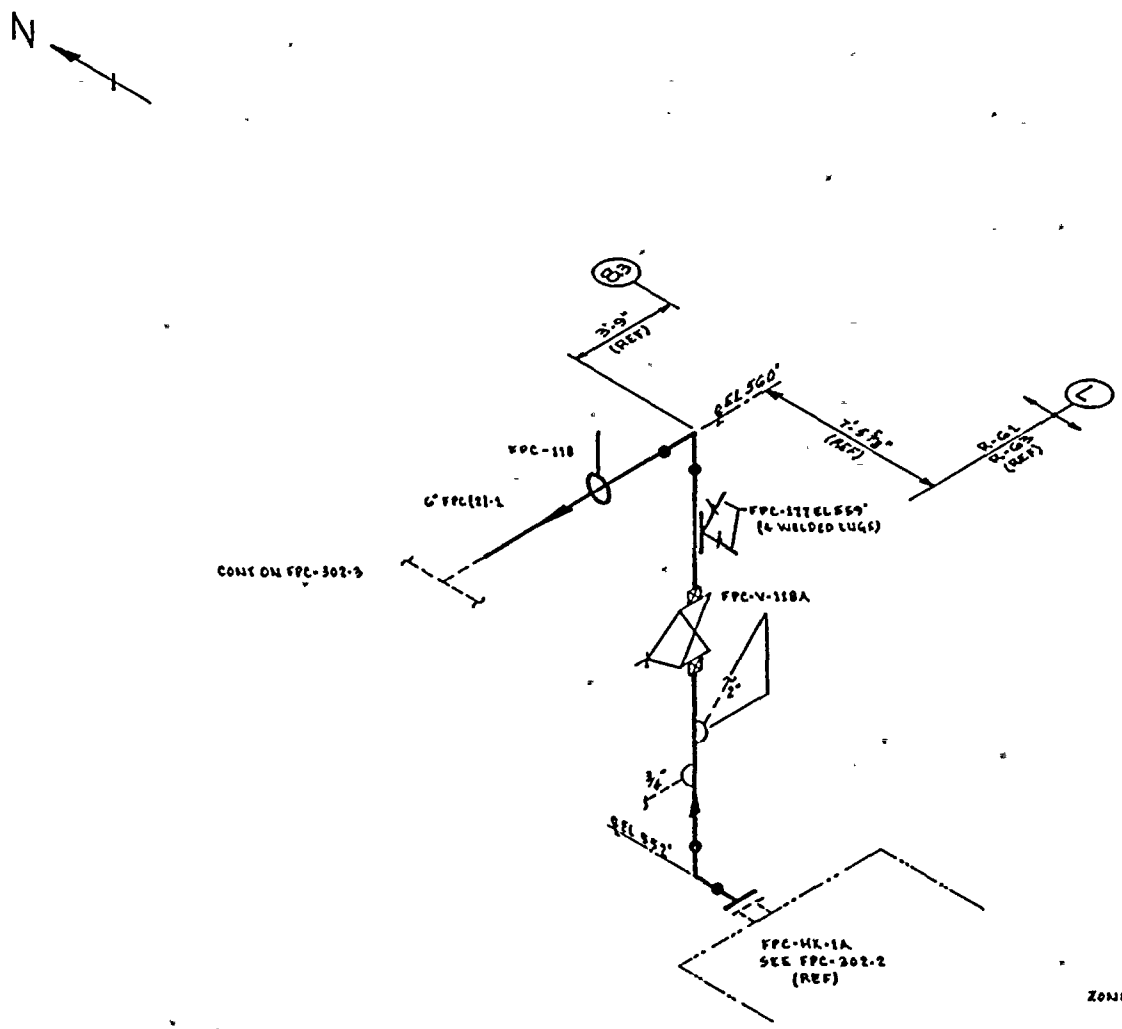

THIS DRAWING IS INTENDED FOR USE IN PRESERVICE AND INSERVICE INSPECTION PROGRAMS ONLY.

NOTES:

1. THIS DRAWING IDENTIFIES PIPING & COMPONENTS SUBJECT ONLY TO A VISUAL EXAM FOR (1) EVIDENCE OF LEAKAGE DURING SYSTEM PRESSURE OR OPERABILITY TESTS; (2) PRESSURE DECAY TESTS OF BURIED PIPING; (3) LOSS OF SUPPORT CAPABILITY OR INADEQUATE RESTRAINT FOR SUPPORTS & HANGERS ON PIPING EXCEEDING 6" NOM. TESTS SHALL BE CONDUCTED PER ASME SECTION XI, ARTICLES IWA-5000 & IWD-2000.
2. FOR BRANCH PIPING 6" NOM. OR LESS (CONN SHOWN IN DASHED LINES) EXTEND VISUAL LEAKAGE EXAM THROUGH THE OUTERMOST NORMALLY CLOSED NUCLEAR CLASS VALVE, OR UNTIL TRANSITION TO INSTRUMENT TUBING, UNLESS OTHERWISE NOTED.

REFERENCES:

BOYCE & CRAIL ISOMETRICS
FPC-G36-8.9 REV 2
FPC-G36-8.9H REV 0

QUALITY CLASS: 2	ASME CODE CLASS: 3	
ENGR: K.M. ANDREW	DRAWN: K.H.E.A	DATE: 6-11-19

WASHINGTON PUBLIC POWER SUPPLY SYSTEM
RICHLAND, WASHINGTON 99352

WNP-2
WELD & COMPONENT IDENTIFICATION DIAGRAM

TITLE: FPC-HX-1A TO FPC-DM-1A & 1B

DWG NO: FPC-302-4 REV 0

PIPING SYSTEM	NOM DIA (IN)	SCH	NOM WALL THK	MATERIAL SPECIFICATION	MATL TYPE	CAL BLOCK NO
6" FPC(2)-1	6	STD	0.280	SA 106 GR B	CS	NA

NO	DATE	REVISION	BY	CHKD	APPVD
0	12 2 81	ISSUED FOR USE	KHA		

WNP-02
INTERVAL: PSI
PERIOD: NA
OUTAGE:
DRAWING NO. FPC-302

WASHINGTON PUBLIC POWER SUPPLY SYSTEM
PROGRAM PLAN AND SCHEDULE
SYSTEM OR COMPONENT: FPC(2)-1
DESCRIPTION: FPC-P-1A TO DM-1A&1B

DATE 12/14/84

IDENT. NO.	DESCRIPTION	SECT. XI EXAM.	EXAM MTH.	PROCEDURE	CAL. BLOCK	INSERVICE REQ.	INSERVICE SCHEDULED OUTAGE	NOTES
FPC-208								
	BOX	N/A	VT-3	303/8.2.17				
FPC-184								
	SPRING	N/A	VT-3	303/8.2.17				
			VT-4	303/8.2.17				
FPC-182								
	BOX	N/A	VT-3	303/8.2.17				
FPC-185								
	BOX	N/A	VT-3	303/8.2.17				
FPC-186								
	SPRING	N/A	VT-3	303/8.2.17				
			VT-4	303/8.2.17				
FPC-179								
	BOX	N/A	VT-3	303/8.2.17				
FPC-180								
	BOX	N/A	VT-3	303/8.2.17				
FPC-181								
	BOX	N/A	VT-3	303/8.2.17				
FPC-177								
	SPRING	N/A	VT-3	303/8.2.17				
			VT-4	303/8.2.17				
FPC-178								
	BOX	N/A	VT-3	303/8.2.17				
FPC-PB-302								
	FPC PRESS BNDRY	N/A	VT-2	N/A				SEE NOTES #6 & #7.

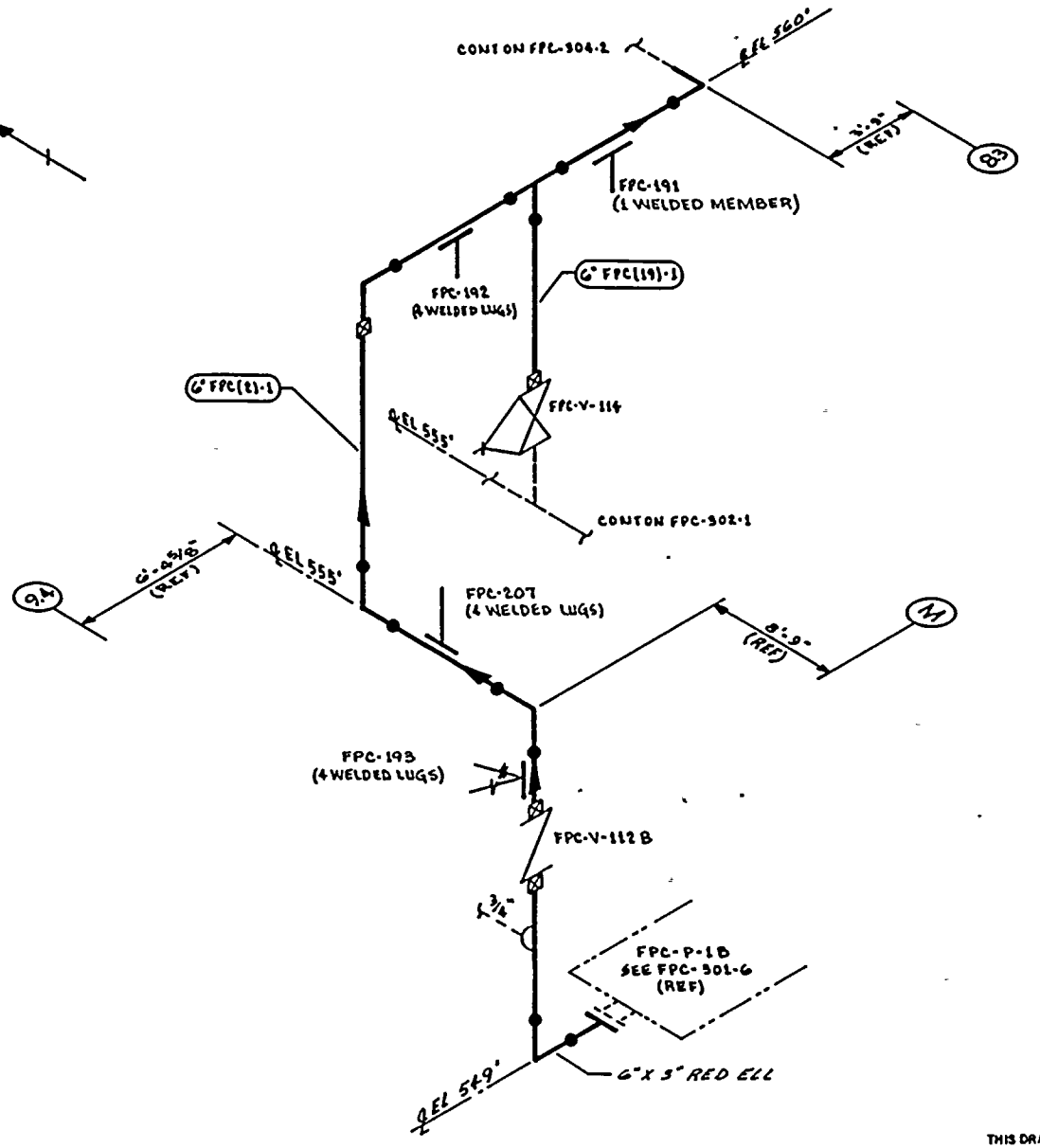

ZONE R-63

NOTES:

1. THIS DRAWING IDENTIFIES PIPING & COMPONENTS SUBJECT ONLY TO A VISUAL EXAM FOR (1) EVIDENCE OF LEAKAGE DURING SYSTEM PRESSURE OR OPERABILITY TESTS; (2) PRESSURE DECAY TESTS OF BURIED PIPING; & (3) LOSS OF SUPPORT CAPABILITY OR INADEQUATE RESTRAINT FOR SUPPORTS & HANGERS ON PIPING EXCEEDING 4" NOM. TESTS SHALL BE CONDUCTED PER ASME SECTION XI, ARTICLES IWA-5000 & IWD-2000.
2. FOR BRANCH PIPING 4" NOM OR LESS (CONN SHOWN IN DASHED LINES) EXTEND VISUAL LEAKAGE EXAM THROUGH THE OUTERMOST NORMALLY CLOSED NUCLEAR CLASS VALVE, OR UNTILL TRANSITION TO INSTRUMENT TUBING, UNLESS OTHERWISE NOTED.

REFERENCES

BOVEE & CRAIL ISOMETRICS

FPC-637-1.4 REV 4

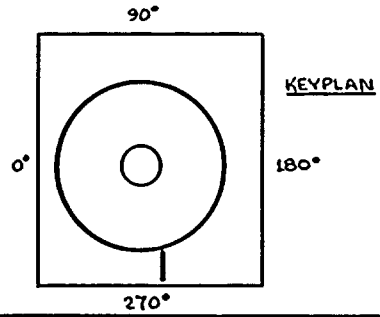

KEYPLAN

QUALITY CLASS: 2	ASME CODE CLASS: 3	
ENGR: K McAndrew	DRAWN: K McA	DATE: 4-6-79

WASHINGTON PUBLIC POWER SUPPLY SYSTEM

RICHLAND, WASHINGTON 99352

THIS DRAWING IS INTENDED FOR USE IN PRESERVICE AND INSERVICE INSPECTION PROGRAMS ONLY.

PIPING SYSTEM	NOM DIA (IN)	SCH	NOM WALL THK	MATERIAL SPECIFICATION	MATL TYPE	CAL BLOCK NO
6" FPC(2)-1	6	STD	0.280	SA 106 GR B	CS	NA
6" FPC(19)-1	6	STD	0.280	SA 106 GR B	CS	NA

NO	DATE	REVISION	BY	CHKD	APPVD
1	1-28-80	CHGD FPC-191 & 207 TO WELDED ADDED KEYPLAN	K.M.A.	DK	TFH
0	12-28-81	ISSUED FOR USE	K.M.A.	DK	TFH

WNP-2
WELD & COMPONENT IDENTIFICATION DIAGRAM

TITLE: FPC-P-1B TO FPC-DM-1A & 1B

DWG NO: FPC-303-1 REV 1

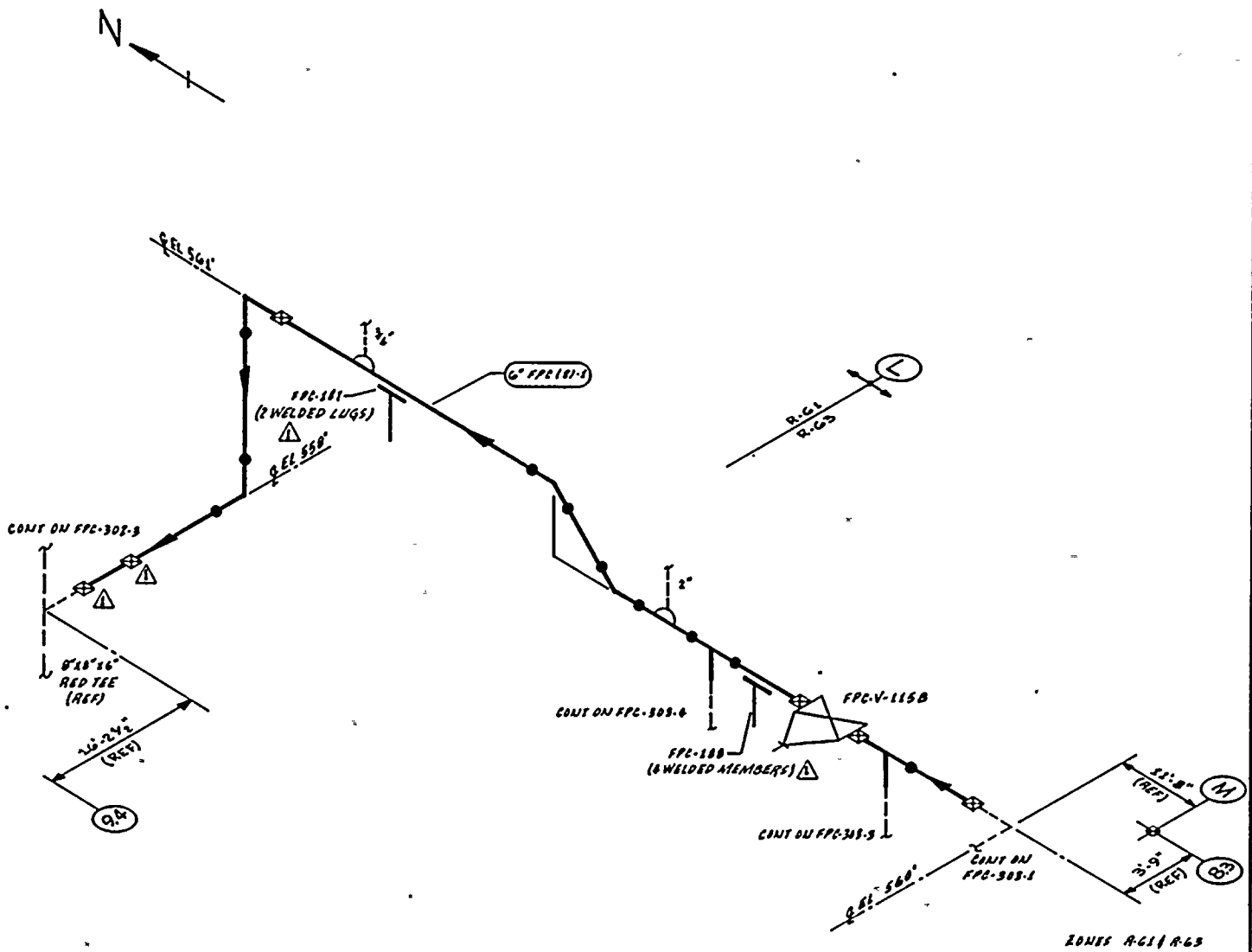

THIS DRAWING IS INTENDED FOR USE IN PRESERVICE AND INSERVICE INSPECTION PROGRAMS ONLY.

NOTES:

1. THIS DRAWING IDENTIFIES PIPING & COMPONENTS SUBJECT ONLY TO A VISUAL EXAM FOR (1) EVIDENCE OF LEAKAGE DURING SYSTEM PRESSURE OR OPERABILITY TESTS; (2) PRESSURE DECAY TESTS OF BURIED PIPING; & (3) LOSS OF SUPPORT CAPABILITY OR SNUBBER/LATE RESTRAINT FOR SUPPORTS & HANGERS ON PIPING EXCEEDING 4" NOM. TESTS SHALL BE CONDUCTED PER ASME SECTION XI, ARTICLES IWA-5000 & IWD-2000.
2. FOR BRANCH PIPING 4" NOM OR LESS (CONN SHOWN IN DASHED LINES) EXTEND VISUAL LEAKAGE EXAM THROUGH THE OUTERMOST NORMALLY CLOSED NUCLEAR CLASS VALVE, OR UNTIL TRANSITION TO INSTRUMENT TUBING, UNLESS OTHERWISE NOTED.

REFERENCES:

BOYER & ORAIL ISOMETRICS
FPC-G37-5.7 REV 5

KEYPLAN

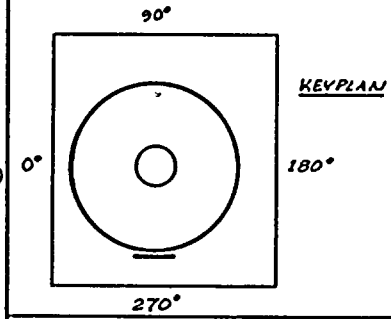

QUALITY CLASS: 2	ASME CODE CLASS: 3	
ENGR: K. McANDREW	DRAWN: K. McA	DATE: 4-11-79

WASHINGTON PUBLIC POWER SUPPLY SYSTEM
RICHLAND, WASHINGTON 99352

PIPING SYSTEM	NOM DIA (IN)	SCH	NOM WALL THK	MATERIAL SPECIFICATION	MATL TYPE	CAL BLOCK NO
6" FPC 121-1	6	STD	0.280	SA 106 GR B		

WNP-2
WELD & COMPONENT
IDENTIFICATION DIAGRAM

TITLE:
FPC-P-1B DISCHARGE TO FPC-DM-1A & 1B

DWG NO: FPC-303-2 REV 1

NO	DATE	REVISION	BY	CHKD	APPVD
1	1-24-84	REVISED AS NOTED ADDED KEYPLAN	KMA	DRX	TFH
0	12-2-81	ISSUED FOR USE	KMA	DRX	TFH

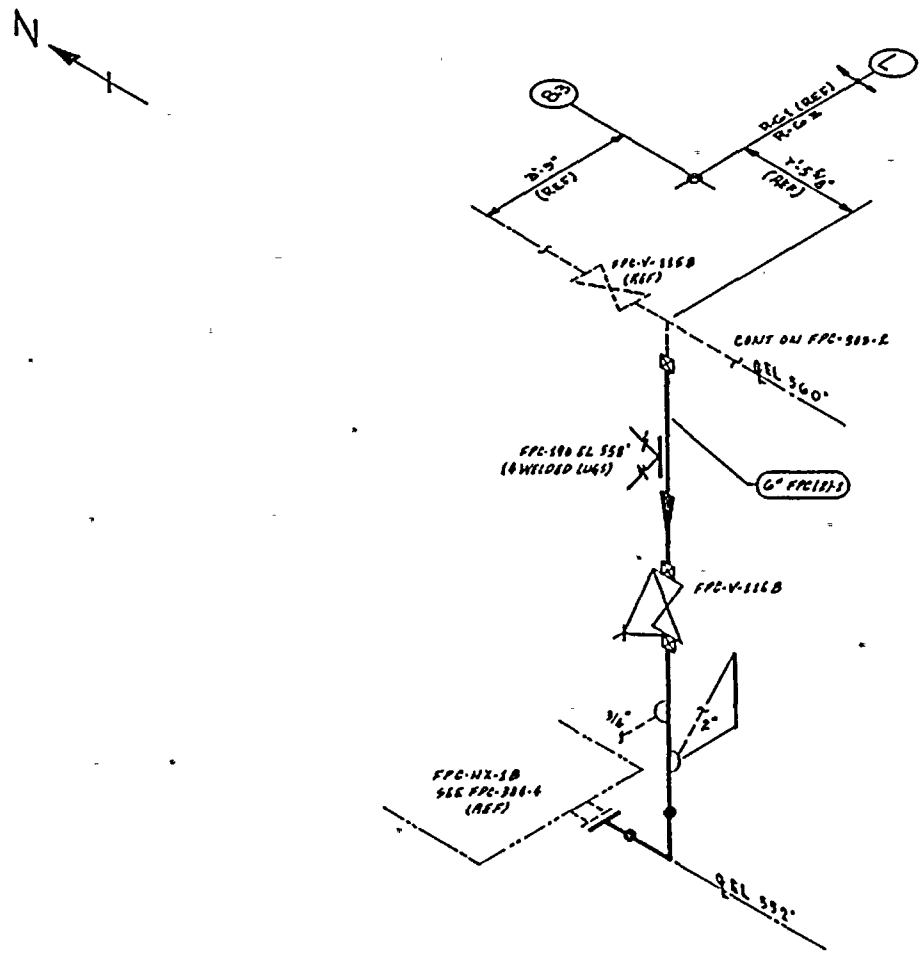

ZONE A-C1

THIS DRAWING IS INTENDED FOR USE IN PRESERVICE AND INSERVICE INSPECTION PROGRAMS ONLY.

NOTES:

1. THIS DRAWING IDENTIFIES PIPING & COMPONENTS SUBJECT ONLY TO A VISUAL EXAM FOR (1) EVIDENCE OF LEAKAGE DURING SYSTEM PRESSURE OR OPERABILITY TESTS; (2) PRESSURE DECAY TESTS OF BURIED PIPING; & (3) LOSS OF SUPPORT CAPABILITY OR INADEQUATE RESTRAINT FOR SUPPORTS & HANGERS ON PIPING EXCEEDING 6" NOM. TESTS SHALL BE CONDUCTED PER ASME SECTION XI, ARTICLES IWA-5000 & IWD-2000.
2. FOR BRANCH PIPING 4" NOM. OR LESS (CONN SHOWN IN DASHED LINES EXTEND VISUAL LEAKAGE EXAM THROUGH THE OUTERMOST NORMALLY CLOSED NUCLEAR CLASS VALVE, OR UNTIL TRANSITION TO INSTRUMENT TUBING, UNLESS OTHERWISE NOTED.

REFERENCES:

BOVEE & CRAIL ISOMETRICS
FPC-637-8.9 REV 2
FPC-637-8.9H REV 0

PIPING SYSTEM	NOM DIA (IN)	SCH	NOM WALL THK	MATERIAL SPECIFICATION	MATL TYPE	CAL BLOCK NO
6" FPC (2)-1	6	STD	0.280	SA 106 GR B	CS	NA

NO	DATE	REVISION	BY	CHKD	APPVD
0	12281	ISSUED FOR USE	KAA	ZAR	TEF

QUALITY CLASS: 2 | ASME CODE CLASS: 3
ENGR: [illegible] | DRAWN: [illegible] | DATE: 6-11-79

WASHINGTON PUBLIC POWER SUPPLY SYSTEM
RICHLAND WASHINGTON 99352

WNP-2
WELD & COMPONENT IDENTIFICATION DIAGRAM

TITLE: FPC-HX-1B TO FPC-DM-1A & 1B

DWG NO: FPC-303-3 | REV 0

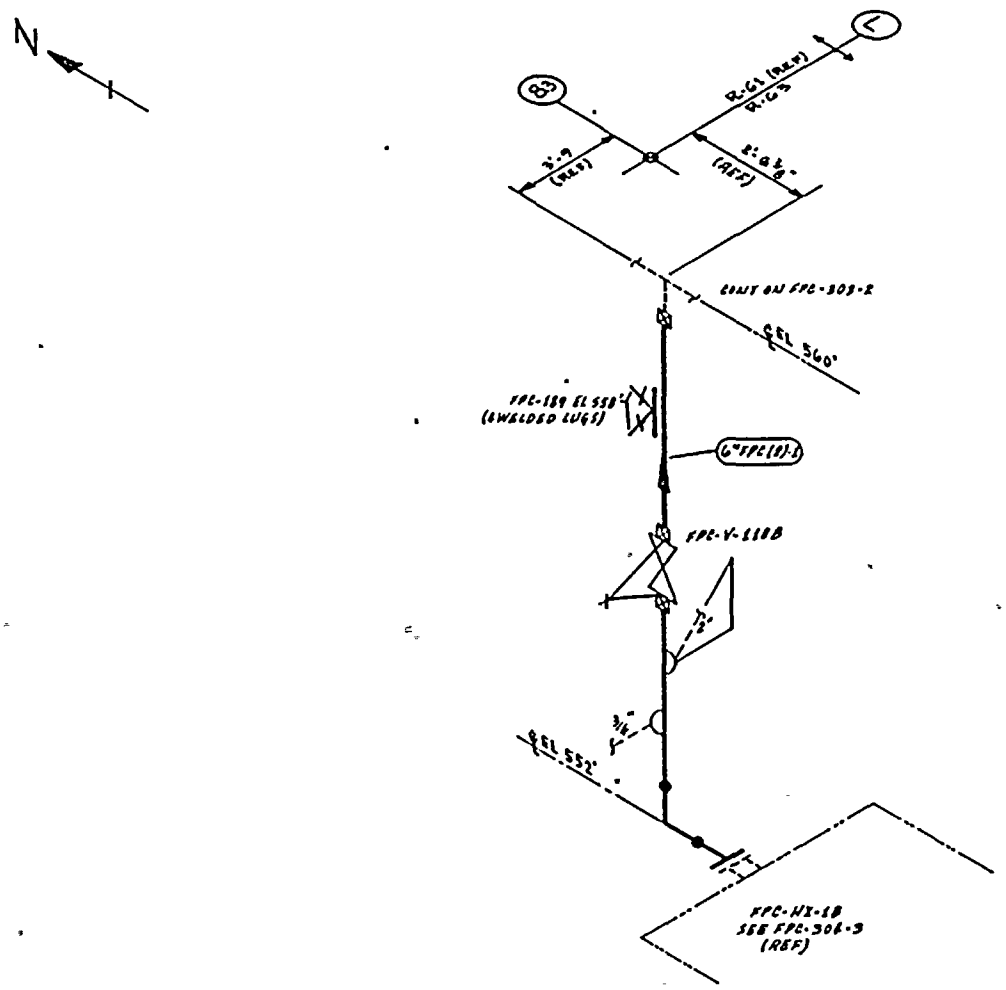

NOTES:

1. THIS DRAWING IDENTIFIES PIPING & COMPONENTS SUBJECT ONLY TO A VISUAL EXAM FOR (1) EVIDENCE OF LEAKAGE DURING SYSTEM PRESSURE OR OPERABILITY TESTS; (2) PRESSURE DECAY TESTS OF BURIED PIPING; & (3) LOSS OF SUPPORT CAPABILITY OR INADEQUATE RESTRAINT FOR SUPPORTS & HANGERS ON PIPING EXCEEDING 4" NOM. TESTS SHALL BE CONDUCTED PER ASME SECTION XI, ARTICLES IWA-5000 & IWD-2000.
2. FOR BRANCH PIPING 4" NOM OR LESS (COUN SHOWN IN DASHED LINES) EXTEND VISUAL LEAKAGE EXAM THROUGH THE OUTERMOST NORMALLY CLOSED NUCLEAR CLASS VALVE, OR UNTIL TRANSITION TO INSTRUMENT TUBING, UNLESS OTHERWISE NOTED.

REFERENCES:

BUVGG & CRAIL ISOMETRICS

FPC-637-10.11 REV 2
FPC-637-10.11N REV 0

THIS DRAWING IS INTENDED FOR USE IN PRESERVICE AND INSERVICE INSPECTION PROGRAMS ONLY.

PIPING SYSTEM	NOM DIA (IN)	SCH	NOM WALL THK	MATERIAL SPECIFICATION	MATL TYPE	CAL BLOCK NO
6" FPC (2)-1	6	STD	0.280	SA 106 GR B	CS	NA

NO.	DATE	REVISION	BY	CHKD	APPVD
0	12-2-81	ISSUED FOR USE			TKW

QUALITY CLASS: 2 | ASME CODE CLASS: 3
ENGR: [illegible] | DRAWN: [illegible] | DATE: 4-11-79

WASHINGTON PUBLIC POWER SUPPLY SYSTEM
RICHLAND, WASHINGTON 99352

WNP-2
WELD & COMPONENT IDENTIFICATION DIAGRAM

TITLE:
FPC-HX-1B TO FPC-DM-1A & 1B

DWG NO: FPC-303-4 REV 0

WNP-02
INTERVAL: PSI
PERIOD: NA
OUTAGE:
DRAWING NO. FPC-303

WASHINGTON PUBLIC POWER SUPPLY SYSTEM
PROGRAM PLAN AND SCHEDULE
SYSTEM OR COMPONENT: FPC(2)-1
DESCRIPTION: FPC-P-1B TO DM-1A&1B

DATE 12/14/84

IDENT. NO.	DESCRIPTION	SECT. XI EXAM.	EXAM MTH.	PROCEDURE	CAL. BLOCK	INSERVICE REQ.	SCHEDULED OUTAGE	NOTES
FPC-193								
	SPRING	N/A	VT-3	303/8.2.17				
			VT-4	303/8.2.17				
FPC-207								
	BOX	N/A	VT-3	303/8.2.17				
FPC-192								
	BOX	N/A	VT-3	303/8.2.17				
FPC-191								
	BOX	N/A	VT-3	303/8.2.17				
FPC-188								
	BOX	N/A	VT-3	303/8.2.17				
FPC-187								
	BOX	N/A	VT-3	303/8.2.17				
FPC-190								
	SPRING	N/A	VT-3	303/8.2.17				
			VT-4	303/8.2.17				
FPC-189								
	SPRING	N/A	VT-3	303/8.2.17				
			VT-4	303/8.2.17				
FPC-PB-303								
	FPC PRESS BNDRY	N/A	VT-2	N/A				SEE NOTES #6 & #7.

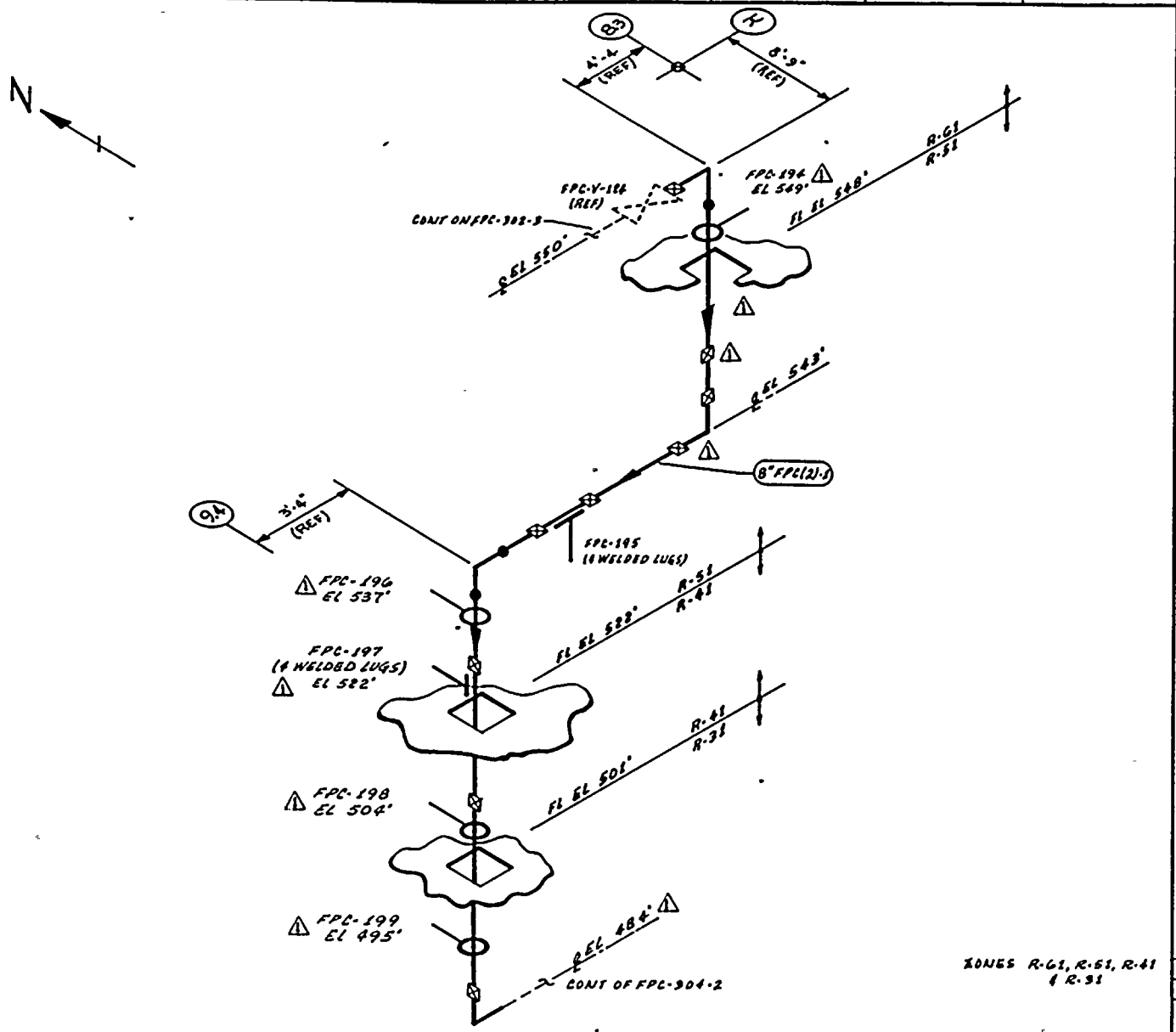

ZONES R-61, R-51, R-41 & R-31

THIS DRAWING IS INTENDED FOR USE IN PRESERVICE AND INSERVICE INSPECTION PROGRAMS ONLY.

NOTES:

1. THIS DRAWING IDENTIFIES PIPING & COMPONENTS SUBJECT ONLY TO A VISUAL EXAM FOR (1) EVIDENCE OF LEAKAGE DURING SYSTEM PRESSURE OR OPERABILITY TESTS; (2) PRESSURE DECAY TESTS OF BURIED PIPING; & (3) LOSS OF SUPPORT CAPABILITY OR INADEQUATE RESTRAINT FOR SUPPORTS & HANGERS ON PIPING EXCEEDING 2" NOM. TESTS SHALL BE CONDUCTED PER ASME SECTION XI, ARTICLES IWA-5000 & IWD-2000.

REFERENCES:

BOVEE & CRAIL ISOMETRICS
FPC-636-10.13 REV 7

KEYPLAN

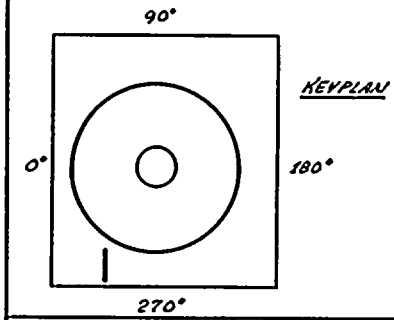

QUALITY CLASS: 2	ASME CODE CLASS: 3	
ENGR: K. M. HUDSON	DRAWN: K. McA	DATE: 6-12-79

WASHINGTON PUBLIC POWER SUPPLY SYSTEM
RICHLAND, WASHINGTON 99352

PIPING SYSTEM	NOM DIA (IN)	SCH	NOM WALL THK	MATERIAL SPECIFICATION	MATL TYPE	CAL BLOCK NO
8" FPC (2)-1	8	5S0	0.322	SA 106 GR B	CS	NA

WNP-2
WELD & COMPONENT IDENTIFICATION DIAGRAM

TITLE: FPC-P-1A & 1B DISCHARGE TO FPC-DM-1A & 1B

DWG NO: FPC-304-1 REV 1

NO	DATE	REVISION	BY	CHKD	APPVD
1	5-21-84	REVISED AS NOTED ADDED KEYPLAN			
0	12-2-81	ISSUED FOR USE			

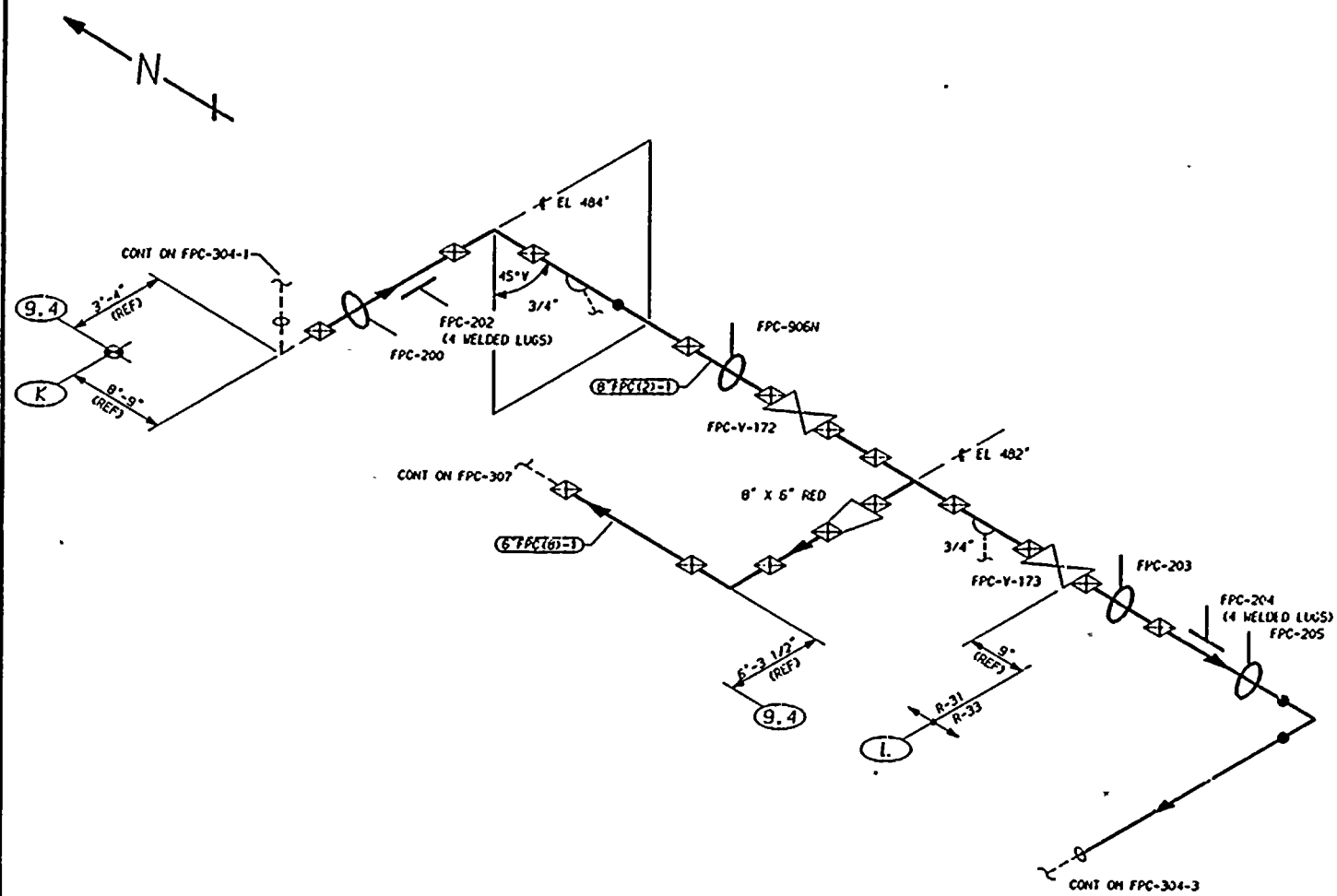

ZONES R-31 & R-33

THIS DRAWING IS INTENDED FOR USE IN PRESERVICE AND INSERVICE INSPECTIONS PROGRAMS ONLY.

NOTES:

1. THIS DRAWING IDENTIFIES PIPING AND COMPONENTS SUBJECT ONLY TO A VISUAL EXAM FOR (1) EVIDENCE OF LEAKAGE DURING SYSTEM PRESSURE OR OPERABILITY TESTS, (2) PRESSURE DECAY TESTS OF BURIED PIPING, AND (3) LOSS OF SUPPORT CAPABILITY OR INADEQUATE RESTRAINT FOR SUPPORTS AND HANGERS ON PIPING EXCEEDING 4" NOM. TESTS SHALL BE CONDUCTED PER ASME SECTION XI, ARTICLES IWA-5000 AND IWD-2000.

2. FOR BRANCH PIPING 4" NOM. OR LESS (CONNECTION SHOWN IN DASHED LINES) EXTEND VISUAL LEAKAGE EXAM THROUGH THE OUTERMOST NORMALLY CLOSED NUCLEAR CLASS VALVE, OR UNTIL TRANSITION TO INSTRUMENT TUBING, UNLESS OTHERWISE NOTED.

REFERENCES:

151 - 226

DOYEE & CRAIL ISOMETRIC FPC-636-14.15 REV 11

KEYPLAN

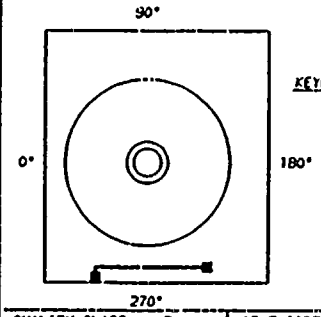

QUALITY CLASS: 2	ASME CODE CLASS: 3
ENGR: K-McANDREW	DRAWN: K-McA	DATE: 4-12-79

WASHINGTON PUBLIC POWER
SUPPLY SYSTEM
RICHLAND, WASHINGTON 99352

WNP-2
WELD & COMPONENT
IDENTIFICATION DIAGRAM

TITLE: FPC-P-1A & 1B DISCHARGE TO FPC-DM-1A & 1B

DWG NO. FPC-304-2 REV 1

PIPING SYSTEM	NOM DIA (IN)	SCH	NOM WALL THK	MATERIAL SPECIFICATION	MATL TYPE	CAL BLOCK NO
6"FPC(8)-1	6	STD	0.260	SA 106 GR B	CS	NA
8"FPC(2)-1	8	STD	0.322	SA 106 GR B	CS	NA

NO	DATE	REVISION	BY	CHKD	APVD
1	4-24-84	GENERAL UPDATE REDRAWN	K-McA	DPR	TFH
0	12-2-81	ISSUED FOR USE	K-McA	DPR	TFH

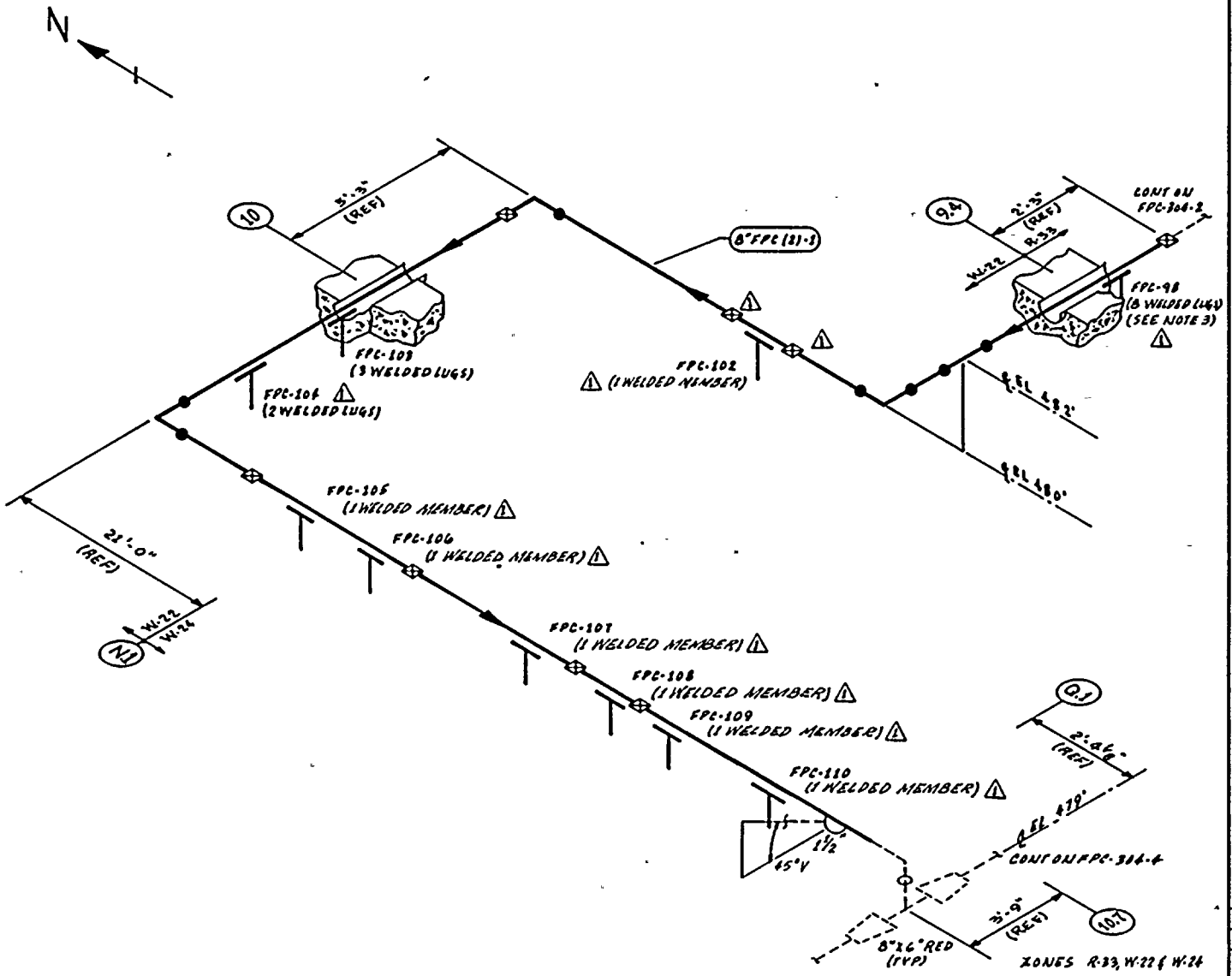

NOTES:

1. THIS DRAWING IDENTIFIES PIPING & COMPONENTS SUBJECT ONLY TO A VISUAL EXAM FOR (1) EVIDENCE OF LEAKAGE DURING SYSTEM PRESSURE OR OPERABILITY TESTS; (2) PRESSURE DECAY TESTS OF BURIED PIPING; & (3) LOSS OF SUPPORT CAPABILITY OR INADEQUATE RESTRAINT FOR SUPPORTS & HANGERS ON PIPING EXCEEDING 4" NOM. TESTS SHALL BE CONDUCTED PER ASME SECTION XI, ARTICLES IWA-5000 & IWD-2000.
2. FOR BRANCH PIPING 4" NOM. OR LESS (CONN SHOWN IN DASHED LINES) EXTEND VISUAL LEAKAGE EXAM THROUGH THE OUTERMOST NORMALLY CLOSED NUCLEAR CLASS VALVE, OR UNTIL TRANSITION TO INSTRUMENT TUBING, UNLESS OTHERWISE NOTED.
3. COMPONENT SUPPORT IS INACCESSIBLE △1 DUE TO FOAM FILLED WATER TIGHT BOOT.

REFERENCES:

BOVEE & CRAIL ISOMETRICS
FPC-636-16.21 REV 6

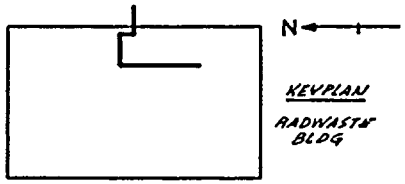

QUALITY CLASS: 2	ASME CODE CLASS: 3	
ENGR: [illegible]	DRAWN: K. McA	DATE: 4-12-79

THIS DRAWING IS INTENDED FOR USE IN PRESERVICE AND INSERVICE INSPECTION PROGRAMS ONLY.

WASHINGTON PUBLIC POWER SUPPLY SYSTEM
RICHLAND, WASHINGTON 99352

PIPING SYSTEM	NOM DIA (IN)	SCH	NOM WALL THK	MATERIAL SPECIFICATION	MATL TYPE	CAL BLOCK NO
8" FPC (2)-1	8	SCH	0.322	SA 106 GR B	CS	NA

NO	DATE	REVISION	BY	CHKD	APPVD
1	1-24-81	REVISED AS NOTED ADDED KEYPLAN	[illegible]	MR	TFH
0	12-28-81	ISSUED FOR USE	[illegible]	[illegible]	TFH

WNP-2
WELD & COMPONENT IDENTIFICATION DIAGRAM

TITLE: FPC-P-1A & 1B DISCHARGE TO FPC-DM-1A & 1B

DWG NO: FPC-304-3 REV 1

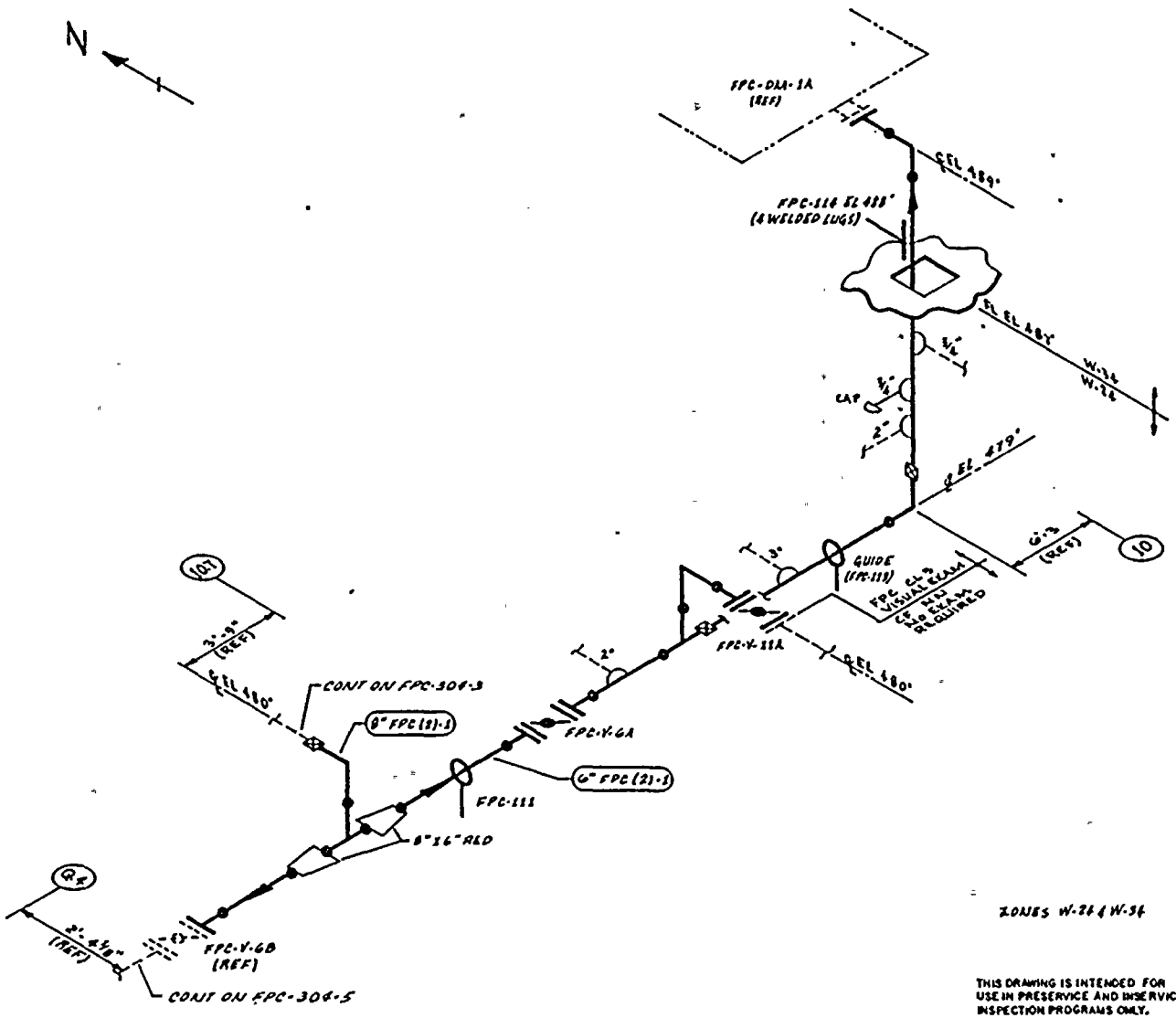

THIS DRAWING IS INTENDED FOR USE IN PRESERVICE AND INSERVICE INSPECTION PROGRAMS ONLY.

NOTES:

1. THIS DRAWING IDENTIFIES PIPING & COMPONENTS SUBJECT ONLY TO A VISUAL EXAM FOR (1) EVIDENCE OF LEAKAGE DURING SYSTEM PRESSURE OR OPERABILITY TESTS; (2) PRESSURE DECAY TESTS OF BURIED PIPING; & (3) LOSS OF SUPPORT CAPABILITY OR INADEQUATE RESTRAINT FOR SUPPORTS & HANGERS ON PIPING EXCEEDING 4" NOM. TESTS SHALL BE CONDUCTED PER ASME SECTION XI, ARTICLES IWA-5000 & IWD-5000.
2. FOR BRANCH PIPING 4" NOM OR LESS (CAP) SHOWN IN DASHED LINES) EXTEND VISUAL LEAKAGE EXAM THROUGH THE OUTERMOST NORMALLY CLOSED NUCLEAR CLASS VALVE, OR UNTIL TRANSITION TO INSTRUMENT TUBING, UNLESS OTHERWISE NOTED.

REFERENCES:

BOYER & CRAIL ISOMETRICS

FPC-636-22.24 REV 0
FPC-636-26.26 REV 0

FPC-636-22.24H REV 1
FPC-636-26.26H REV 0

PIPING SYSTEM	NOM DIA (IN)	SCH	NOM WALL THK	MATERIAL SPECIFICATION	MATL TYPE	CAL BLOCK NO
8" FPC (2)-1	8"	STD	0.322	SA 106 GR B	CS	NA
6" FPC (2)-1	6"	STD	0.280	SA 106 GR B	CS	NA

NO	DATE	REVISION	BY	CHKD	APPVD
0	12-2-81	ISSUED FOR USE			

QUALITY CLASS: 2 | ASME CODE CLASS: 3
ENGR: [illegible] | DRAWN: [illegible] | DATE: 6-12-79

WASHINGTON PUBLIC POWER SUPPLY SYSTEM
RICHLAND, WASHINGTON 99352

WNP-2
WELD & COMPONENT IDENTIFICATION DIAGRAM

TITLE: FPC-P-1A & 1B DISCHARGE TO FPC-DM-1A & 1B

DWG NO: FPC-304-4 REV 0

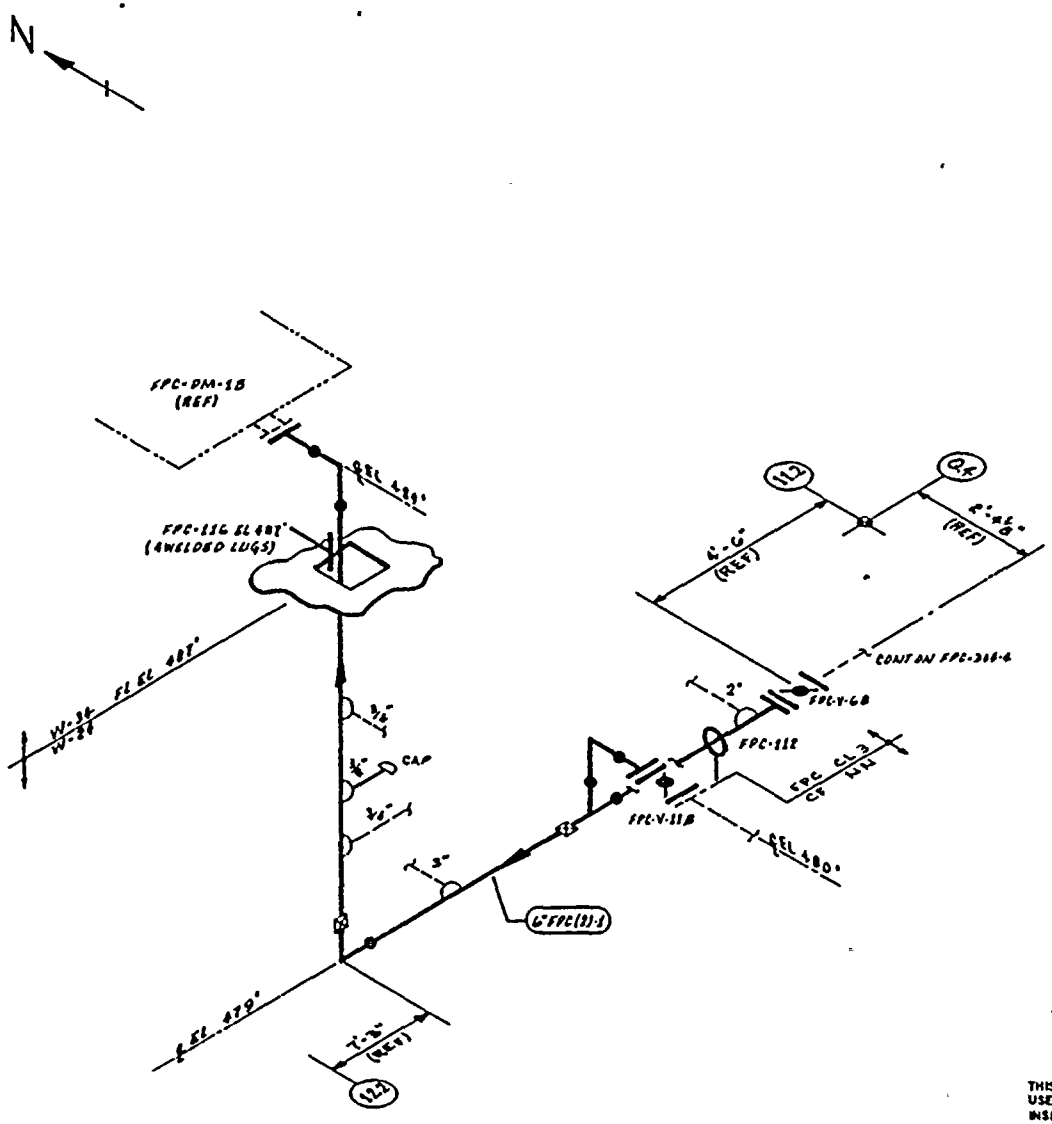

THIS DRAWING IS INTENDED FOR USE IN PRESERVICE AND INSERVICE INSPECTION PROGRAMS ONLY.

NOTES:

1. THIS DRAWING IDENTIFIES PIPING & COMPONENTS SUBJECT ONLY TO A VISUAL EXAM FOR (1) EVIDENCE OF LEAKAGE DURING SYSTEM PRESSURE OR OPERABILITY TESTS; (2) PRESSURE DECAY TESTS OF BURIED PIPING; & (3) LOSS OF SUPPORT CAPABILITY OR INADEQUATE RESTRAINT FOR SUPPORTS & HANGERS ON PIPING EXCEEDING 4" NOM. TESTS SHALL BE CONDUCTED PER ASME SECTION XI, ARTICLES IWA-5000 & IWD-2000.
2. FOR BRANCH PIPING 4" NOM. OR LESS (CONN SHOWN IN DASHED LINES) EXTEND VISUAL LEAKAGE EXAM THROUGH THE OUTERMOST NORMALLY CLOSED NUCLEAR CLASS VALVE OR UNTIL TRANSITION TO INSTRUMENT TUBING, UNLESS OTHERWISE NOTED.

REFERENCES:

BOYCE & CRAIL ISOMETRICS

FPC-636-27.26	REV 0
FPC-636-27.28	REV 0
FPC-636-27.26H	REV 1
FPC-636-27.28H	REV 0

PIPING SYSTEM	NOM DIA (IN)	SCH	NOM WALL THK	MATERIAL SPECIFICATION	MATL TYPE	CAL BLOCK NO
6" FPC (2)-1	6	STD	0.280	SA 106 GR B	CS	NA

NO	DATE	REVISION	BY	CHKD	APPVD
0	12-1-81	ISSUED FOR USE			

QUALITY CLASS: 2 | ASME CODE CLASS: 3

ENGR: | DRAWN: | DATE: 4-17-79

WASHINGTON PUBLIC POWER SUPPLY SYSTEM
RICHLAND, WASHINGTON 99352

WNP-2
WELD & COMPONENT IDENTIFICATION DIAGRAM

TITLE: FPC-P-1A & 1B TO FPC-DM-1B

DWG NO: FPC-306-5 REV 0

WNP-02
INTERVAL: PSI
PERIOD: NA
OUTAGE:
DRAWING NO. FPC-304

WASHINGTON PUBLIC POWER SUPPLY SYSTEM
PROGRAM PLAN AND SCHEDULE
SYSTEM OR COMPONENT: FPC(2)-1
DESCRIPTION: FPC-1A&1B DISCHARGE

DATE 12/14/84

IDENT. NO.	DESCRIPTION	SECT. XI EXAM.	EXAM MTH.	PROCEDURE	CAL. BLOCK	INSERVICE REQ.	INSERVICE SCHEDULED OUTAGE	NOTES
FPC-194	BOX	N/A	VT-3	303/8.2.17				
FPC-195	BOX	N/A	VT-3	303/8.2.17				
FPC-196	BOX	N/A	VT-3	303/8.2.17				
FPC-197	BOX	N/A	VT-3	303/8.2.17				
FPC-198	BOX	N/A	VT-3	303/8.2.17				
FPC-199	BOX	N/A	VT-3	303/8.2.17				
FPC-200	BOX	N/A	VT-3	303/8.2.17				
FPC-202	BOX	N/A	VT-3	303/8.2.17				
FPC-906N	BOX	N/A	VT-3	303/8.2.17				
FPC-203	BOX	N/A	VT-3	303/8.2.17				
FPC-204	BOX	N/A	VT-3	303/8.2.17				
FPC-205	RIGID	N/A	VT-3	303/8.2.17				
FPC-98	RIGID	N/A	VT-3	303/8.2.17				
FPC-102	RIGID	N/A	VT-3	303/8.2.17				
FPC-103	RIGID	N/A	VT-3	303/8.2.17				
FPC-104	RIGID	N/A	VT-3	303/8.2.17				
FPC-105	RIGID	N/A	VT-3	303/8.2.17				
FPC-106	RIGID	N/A	VT-3	303/8.2.17				

WNP-02
INTERVAL: PSI
PERIOD: NA
OUTAGE:
DRAWING NO. FPC-304

WASHINGTON PUBLIC POWER SUPPLY SYSTEM
PROGRAM PLAN AND SCHEDULE
SYSTEM OR COMPONENT: FPC(2)-1
DESCRIPTION: FPC-1A&1B DISCHARGE

DATE 12/14/84

IDENT. NO.	DESCRIPTION	SECT. XI EXAM.	EXAM MTH.	PROCEDURE	CAL. BLOCK	INSERVICE REQ.	SCHEDULED OUTAGE	NOTES
FPC-107	RIGID	N/A	VT-3	303/8.2.17				
FPC-108	RIGID	N/A	VT-3	303/8.2.17				
FPC-109	RIGID	N/A	VT-3	303/8.2.17				
FPC-110	RIGID	N/A	VT-3	303/8.2.17				
FPC-111	BOX	N/A	VT-3	303/8.2.17				
FPC-113	BOX	N/A	VT-3	303/8.2.17				
FPC-114	RIGID	N/A	VT-3	303/8.2.17				
FPC-112	STRUT	N/A	VT-3	303/8.2.17				
FPC-116	RIGID	N/A	VT-3	303/8.2.17				
FPC-PB-304	FPC PRESS BNDRY	N/A	VT-2	N/A				

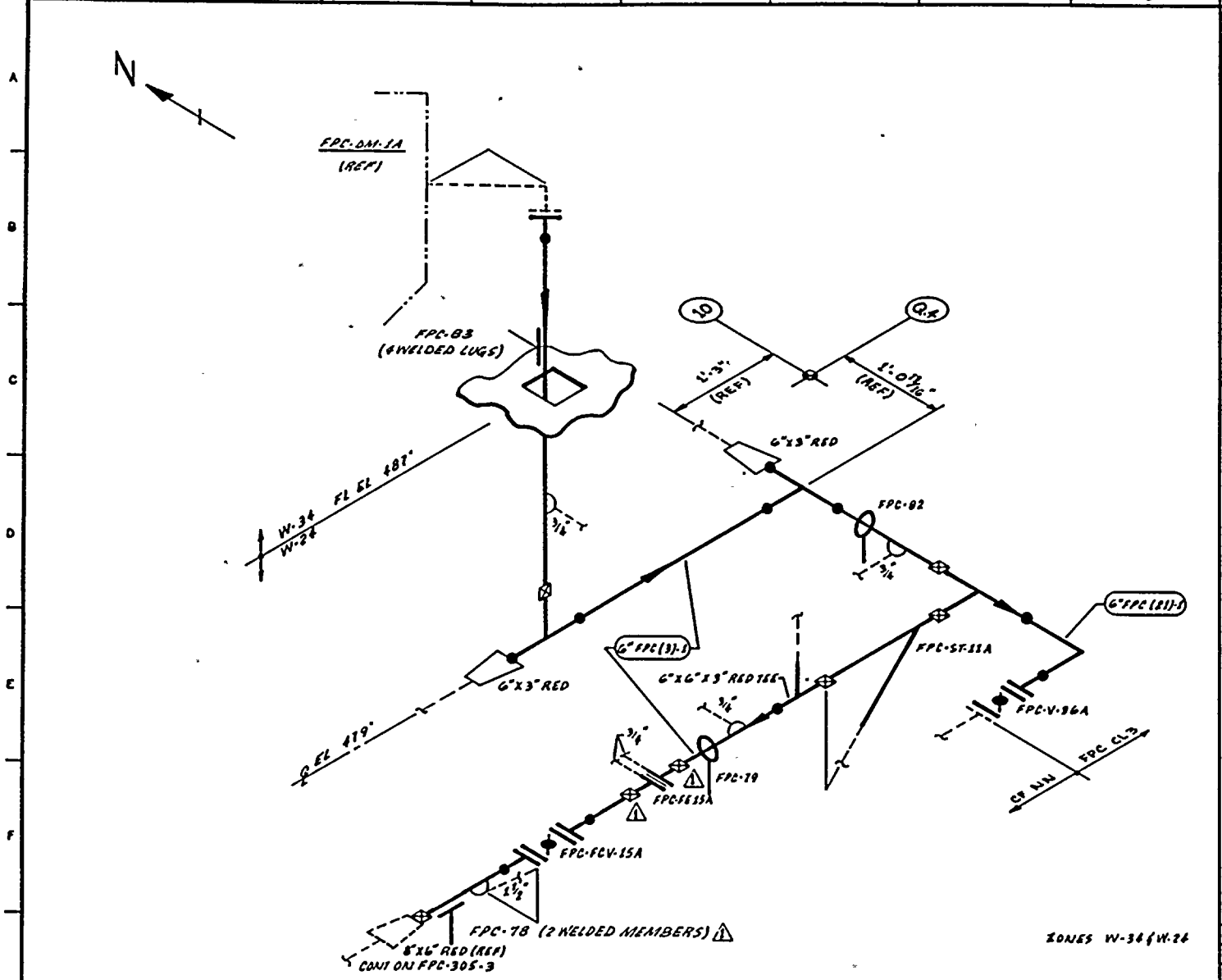

NOTES:

1. THIS DRAWING IDENTIFIES PIPING & COMPONENTS SUBJECT ONLY TO A VISUAL EXAM FOR (1) EVIDENCE OF LEAKAGE DURING SYSTEM PRESSURE OR OPERABILITY TESTS; (2) PRESSURE DECAY TESTS OF BURIED PIPING; & (3) LOSS OF SUPPORT CAPABILITY OR INADEQUATE RESTRAINT FOR SUPPORTS & HANGERS ON PIPING EXCEEDING 4" NOM. TESTS SHALL BE CONDUCTED PER ASME SECTION XI, ARTICLES IWA-5000 & IWD-2000.
2. FOR BRANCH PIPING 4" NOM OR LESS (CONN SHOWN IN DASHED LINES) EXTEND VISUAL LEAKAGE EXAM THROUGH THE OUTERMOST NORMALLY CLOSED NUCLEAR CLASS VALVE, OR UNTIL TRANSITION TO INSTRUMENT TUBING, UNLESS OTHERWISE NOTED.

REFERENCES:

BOYCE & CRAIL ISOMETRICS

FPC-640-24.85 REV 2
FPC-640-20.23 REV 5

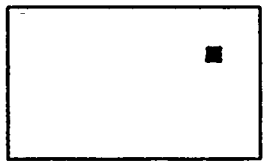

KEYPLAN

RADWASTE BLDG

THIS DRAWING IS INTENDED FOR USE IN PRESERVICE AND INSERVICE INSPECTION PROGRAMS ONLY.

PIPING SYSTEM	NOM DIA (IN)	SCH	NOM WALL THK	MATERIAL SPECIFICATION	MATL TYPE	CAL BLOCK NO
6" FPC (3)-1	6	STD	0.280	SA 106 GR B	CS	NA
6" FPC (21)-1	6	STD	0.280	SA 106 GR B	CS	NA

NO	DATE	REVISION	BY	CHKD	APPVD
1	1-7-83	REVISED AS NOTED ADDED KEYPLAN	[illegible]	[illegible]	[illegible]
0	12-7-81	ISSUED FOR USE	[illegible]	[illegible]	[illegible]

QUALITY CLASS: 2 | ASME CODE CLASS: 3

ENGR: [illegible] | DRAWN: [illegible] | DATE: 4-17-79

WASHINGTON PUBLIC POWER SUPPLY SYSTEM
RICHLAND, WASHINGTON 99352

WNP-2
WELD & COMPONENT IDENTIFICATION DIAGRAM

TITLE: FPC-DM-1A RETURN

DWG NO: FPC-305-1 | REV 1

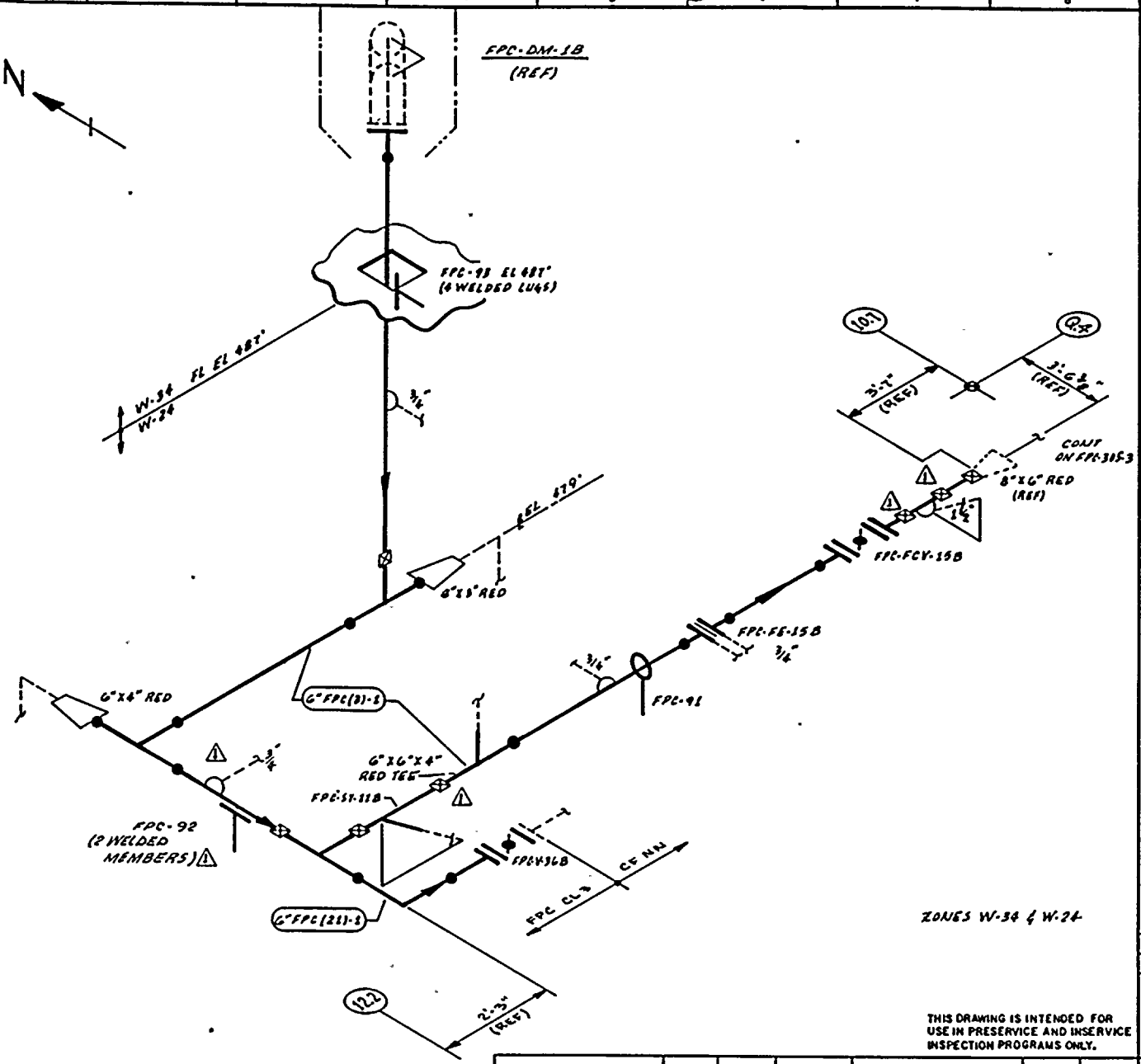

THIS DRAWING IS INTENDED FOR USE IN PRESERVICE AND INSERVICE INSPECTION PROGRAMS ONLY.

NOTES:

1. THIS DRAWING IDENTIFIES PIPING & COMPONENTS SUBJECT ONLY TO A VISUAL EXAM FOR (1) EVIDENCE OF LEAKAGE DURING SYSTEM PRESSURE OR OPERABILITY TESTS; (2) PRESSURE DECAY TESTS OF BURIED PIPING; & (3) LOSS OF SUPPORT CAPABILITY OR INADEQUATE RESTRAINT FOR SUPPORTS & HANGERS ON PIPING EXCEEDING 4" NOM. TESTS SHALL BE CONDUCTED PER ASME SECTION XI, ARTICLES IWA-5000 & IWD-5000.
2. FOR BRANCH PIPING 4" NOM OR LESS (CONN SHOWN IN DASHED LINES) EXTEND VISUAL LEAKAGE EXAM THROUGH THE OUTERMOST NORMALLY CLOSED NUCLEAR CLASS VALVE, OR UNTIL TRANSITION TO INSTRUMENT TUBING, UNLESS OTHERWISE NOTED.

REFERENCES:

BOVEE & CRAIL ISOMETRICS

FPC-640-29.30 REV 3
FPC-640-26.28 REV 6

N

KEYPLAN

RADWASTE BLDG

QUALITY CLASS: 2	ASME CODE CLASS: 3	
ENGR: [illegible]	DRAWN: K. McA	DATE: 4-18-79

WASHINGTON PUBLIC POWER SUPPLY SYSTEM
RICHLAND, WASHINGTON 99352

PIPING SYSTEM	NOM DIA (IN)	SCH	NOM WALL THK	MATERIAL SPECIFICATION	MATL TYPE	CAL BLOCK NO
6" FPC(3)-1	6	STD	0.280	SA 106 GR B	CS	NA
6" FPC(21)-1	6	STD	0.280	SA 106 GR B	CS	NA

NO	DATE	REVISION	BY	CHKD	APPVD
1	7-26-84	REVISED AS NOTED ADDED KEYPLAN	[illegible]	[illegible]	[illegible]
0	12-7-81	ISSUED FOR USE	[illegible]	[illegible]	[illegible]

WNP-2
WELD & COMPONENT IDENTIFICATION DIAGRAM

TITLE: FPC-DM-1B RETURN

DWG NO: FPC-305-2 REV 1

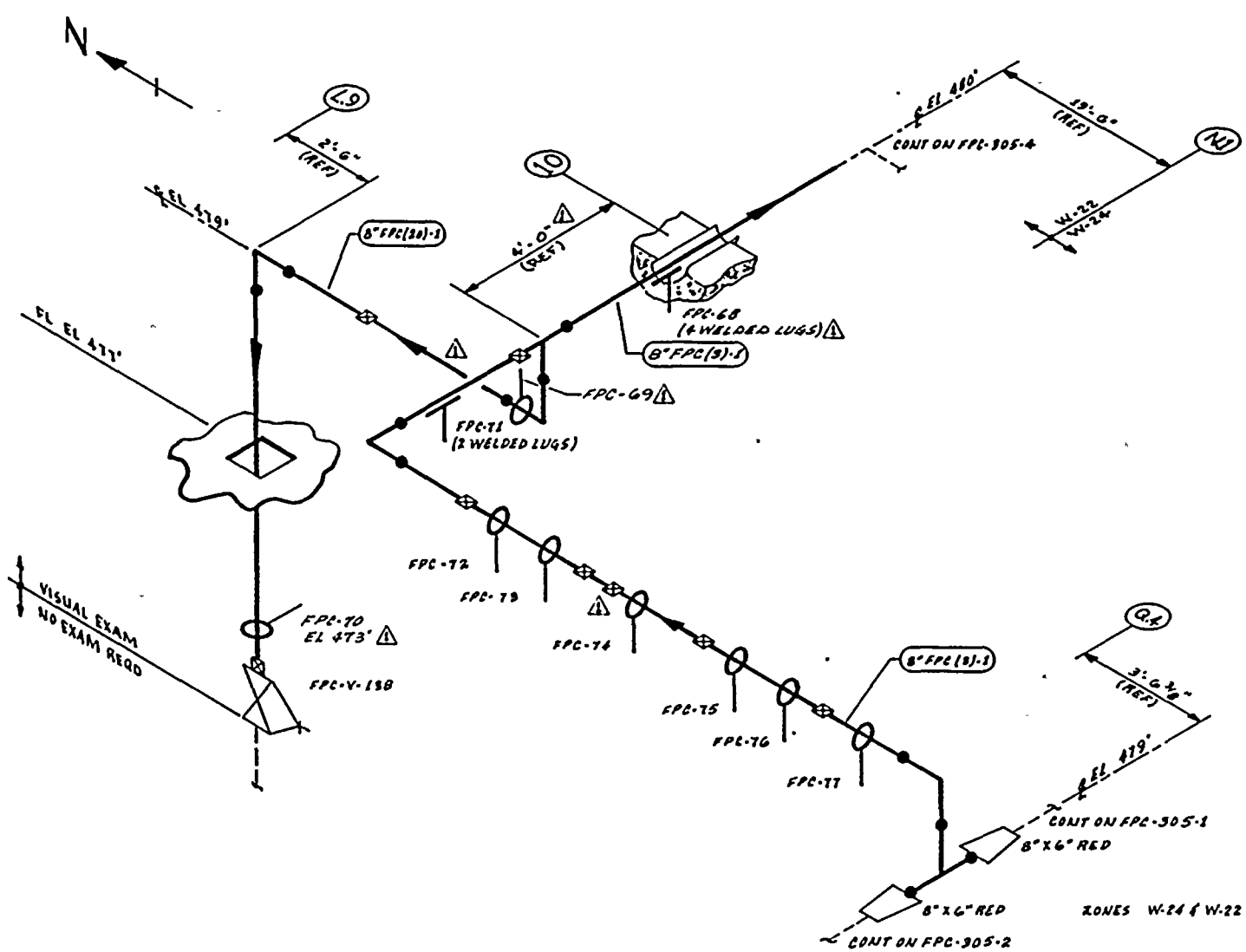

NOTES:

1. THIS DRAWING IDENTIFIES PIPING & COMPONENTS SUBJECT ONLY TO A VISUAL EXAM FOR (1) EVIDENCE OF LEAKAGE DRUING SYSTEM PRESSURE OR OPERABILITY TESTS; (2) PRESSURE DECAY TESTS OF BURIED PIPING & (3) LOSS OF SUPPORT CAPABILITY OR INADEQUATE RESTRAINT FOR SUPPORTS & HANGERS ON PIPING EXCEEDING 4" NOM. TESTS SHALL BE CONDUCTED PER ASME SECTION XI, ARTICLES IWA-5000 & IWD-2000.
2. FOR BRANCH PIPING 4" NOM OR LESS (CONN SHOWN IN DASHED LINES) EXTEND VISUAL LEAKAGE EXAM THROUGH THE OUTERMOST NORMALLY CLOSED NUCLEAR CLASS VALVE, OR UNTIL TRANSITION TO INSTRUMENT TUBING, UNLESS OTHERWISE NOTED.

REFERENCES:

BOVEE & CRAIL ISOMETRICS

FPC-640-17.19 REV 7
FPC-640-15.16 REV 9

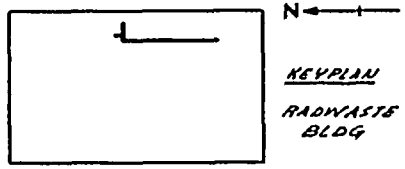

QUALITY CLASS: 2	ASME CODE CLASS: 3	
ENGR: K.W. Hudson	DRAWN: K.McA	DATE: 4-18-79

WASHINGTON PUBLIC POWER SUPPLY SYSTEM
RICHLAND, WASHINGTON 99352

THIS DRAWING IS INTENDED FOR USE IN PRESERVICE AND INSERVICE INSPECTION PROGRAMS ONLY.

PIPING SYSTEM	NOM DIA (IN)	SCH	NOM WALL THK	MATERIAL SPECIFICATION	MATL TYPE	CAL BLOCK NO
8" FPC (20)-1	8	STD	0.322	SA 106 GR B	CS	NA
8" FPC (3)-1	8	STD	0.322	SA 106 GR B	CS	NA

WNP-2
WELD & COMPONENT IDENTIFICATION DIAGRAM

TITLE: FPC-DM-1A & 1B RETURN

OWG NO: FPC-305-3 REV 1

NO	DATE	REVISION	BY	CHKD	APPVD
1	12-29-81	REVISED AS NOTED ADDED KEYPLAN			
0	12-7-81	ISSUED FOR USE			

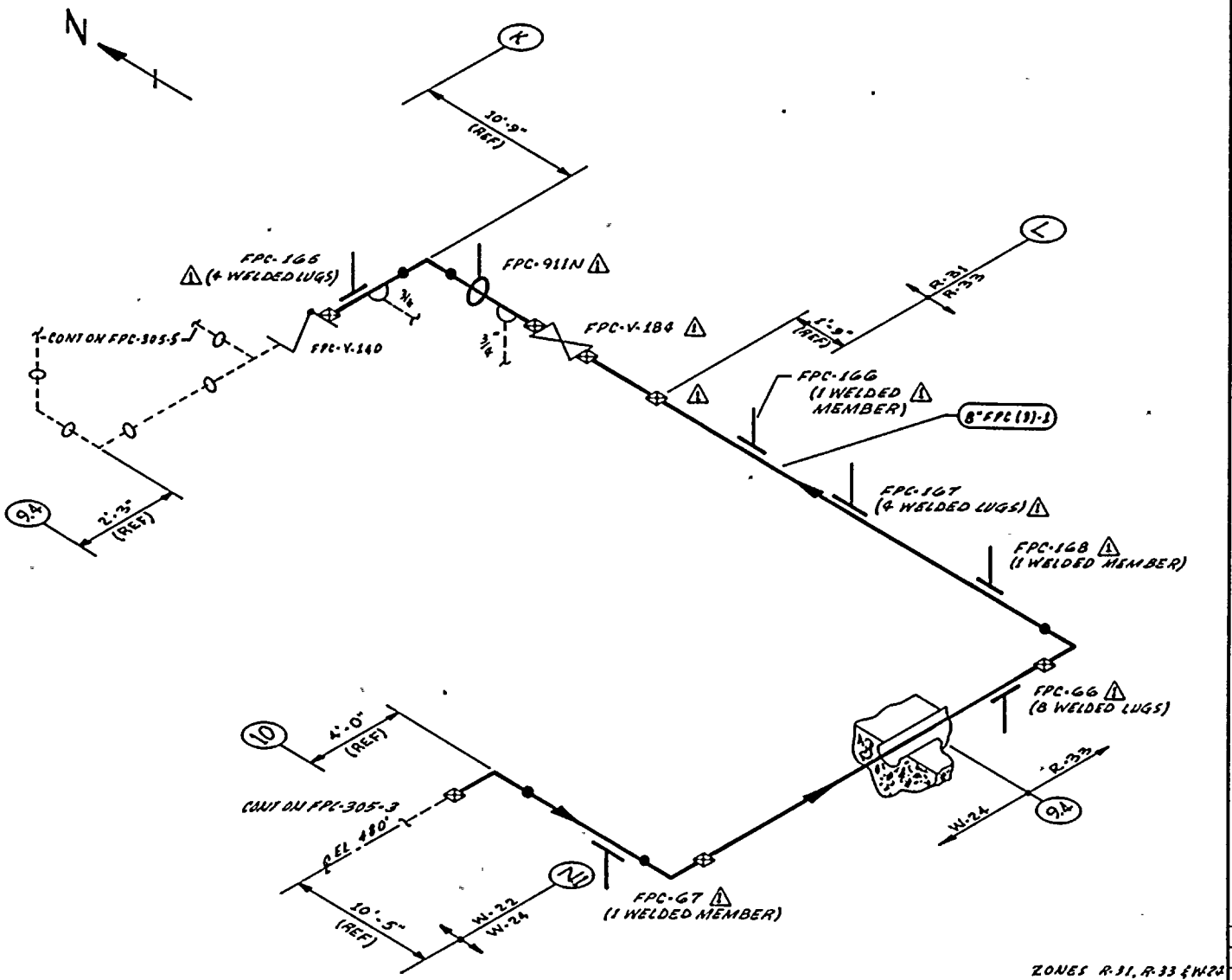

ZONES R-31, R-33 & W-24

THIS DRAWING IS INTENDED FOR USE IN PRESERVICE AND INSERVICE INSPECTION PROGRAMS ONLY.

NOTES:

1. THIS DRAWING IDENTIFIES PIPING & COMPONENTS SUBJECT ONLY TO A VISUAL EXAM FOR (1) EVIDENCE OF LEAKAGE DURING SYSTEM PRESSURE OR OPERABILITY TESTS; (2) PRESSURE DECAY TESTS OF BURIED PIPING; & (3) LOSS OF SUPPORT CAPABILITY OR INADEQUATE RESTRAINT FOR SUPPORTS & HANGERS ON PIPING EXCEEDING 4" NOM. TESTS SHALL BE CONDUCTED PER ASME SECTION XI, ARTICLES IWA-5000 & IWD-2000.
2. FOR BRANCH PIPING 4" NOM. OR LESS (CONN SHOWN IN DASHED LINES) EXTEND VISUAL LEAKAGE EXAM THROUGH THE OUTERMOST NORMALLY CLOSED NUCLEAR CLASS VALVE OR UNTIL TRANSITION TO INSTRUMENT TUBING UNLESS OTHERWISE NOTED.

REFERENCES:

BOYER & CRAIL ISOMETRICS

FPC-640-13.16 REV 9
FPC-640-7.9 REV 12

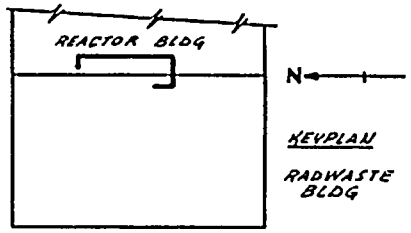

QUALITY CLASS: 2	ASME CODE CLASS: 3	
ENGR: K.W. Hudson	DRAWN: K.McA	DATE: 4-19-79

WASHINGTON PUBLIC POWER SUPPLY SYSTEM
RICHLAND, WASHINGTON 99352

PIPING SYSTEM	NOM DIA (IN)	SCH	NOM WALL THK	MATERIAL SPECIFICATION	MATL TYPE	CAL BLOCK NO
8"FPC(3)-1	8	STD	0.322	SA 106 GR B	CS	NA

WNP-2
WELD & COMPONENT IDENTIFICATION DIAGRAM

TITLE: FPC-DM-1A & 1B RETURN

DWG NO: FPC-305-4 REV 1

NO	DATE	REVISION	BY	CHKD	APPVD
1	1-28-85	REVISED AS NOTED ADDED KEYPLAN	K.McA	LRK	TFH
0	12-29-81	ISSUED FOR USE	K.McA	LRK	TFH

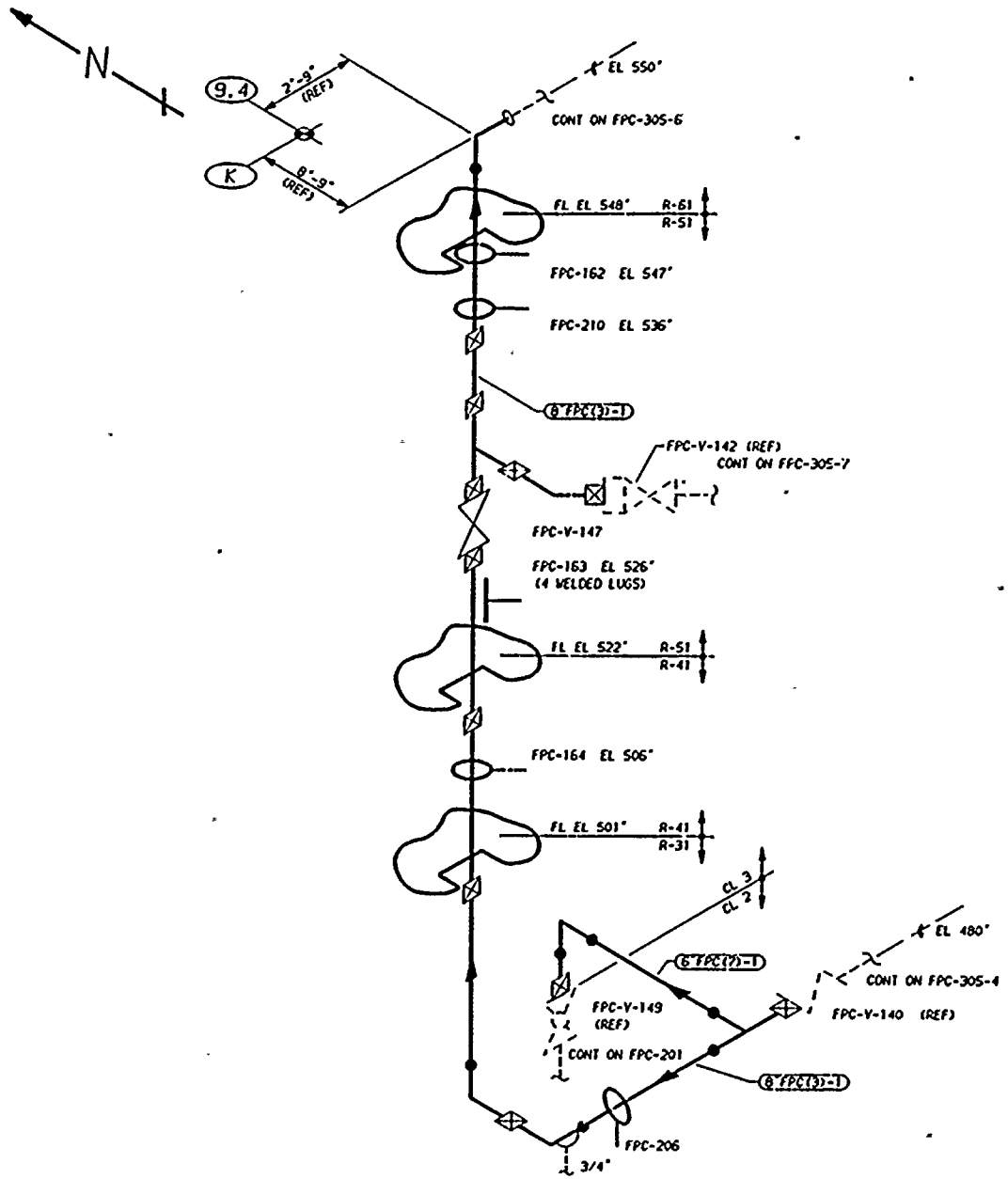

ZONES R-31, R-42, R-51 & R-61

THIS DRAWING IS INTENDED FOR USE IN PRESERVICE AND INSERVICE INSPECTIONS PROGRAMS ONLY.

NOTES:

1. THIS DRAWING IDENTIFIES PIPING AND COMPONENTS SUBJECT ONLY TO A VISUAL EXAM FOR (1) EVIDENCE OF LEAKAGE DURING SYSTEM PRESSURE OR OPERABILITY TESTS, (2) PRESSURE DECAY TESTS OF BURIED PIPING, AND (3) LOSS OF SUPPORT CAPABILITY OR INADEQUATE RESTRAINT FOR SUPPORTS AND HANGERS ON PIPING EXCEEDING 4" NOM. TESTS SHALL BE CONDUCTED PER ASME SECTION XI, ARTICLES IWA-5000 AND IWD-2000.

2. FOR BRANCH PIPING 4" NOM. OR LESS (CONNECTION SHOWN IN DASHED LINES) EXTEND VISUAL LEAKAGE EXAM THROUGH THE OUTERMOST NORMALLY CLOSED NUCLEAR CLASS VALVE, OR UNTIL TRANSITION TO INSTRUMENT TUBING, UNLESS OTHERWISE NOTED.

REFERENCES:

151 - 226

BOYEE & CRAIL ISOMETRICS
FPC-640-1.6 REV 8
FPC-640-7.9 REV 12

KEYPLAN

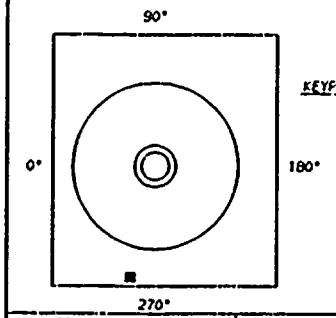

QUALITY CLASS: 2	ASME CODE CLASS: 3
ENGR: K-McANDREW	DRAWN: K-McA	DATE: 4-19-79

WASHINGTON PUBLIC POWER
SUPPLY SYSTEM
RICHLAND, WASHINGTON 99352

WNP-2
WELD & COMPONENT
IDENTIFICATION DIAGRAM

TITLE:

FPC-DH-1A & 1B RETURN

DWG NO: FPC-305-5 REV 1

PIPING SYSTEM	NOM DIA (IN)	SCH	NOM WALL THK	MATERIAL SPECIFICATION	MATL TYPE	CAL BLOCK NO
8"FPC(3)-1	8	STD	0.322	SA 106 GR B	CS	NA
6"FPC(7)-1	6	STD	0.280	SA 106 GR B	CS	NA

NO	DATE	REVISION	BY	CHKD	APVD
1	4-19-86	GENERAL UPDATE REDRAWN	K-McA	DPR	TFH
0	12-2-81	ISSUED FOR USE	K-McA	DPR	TFH

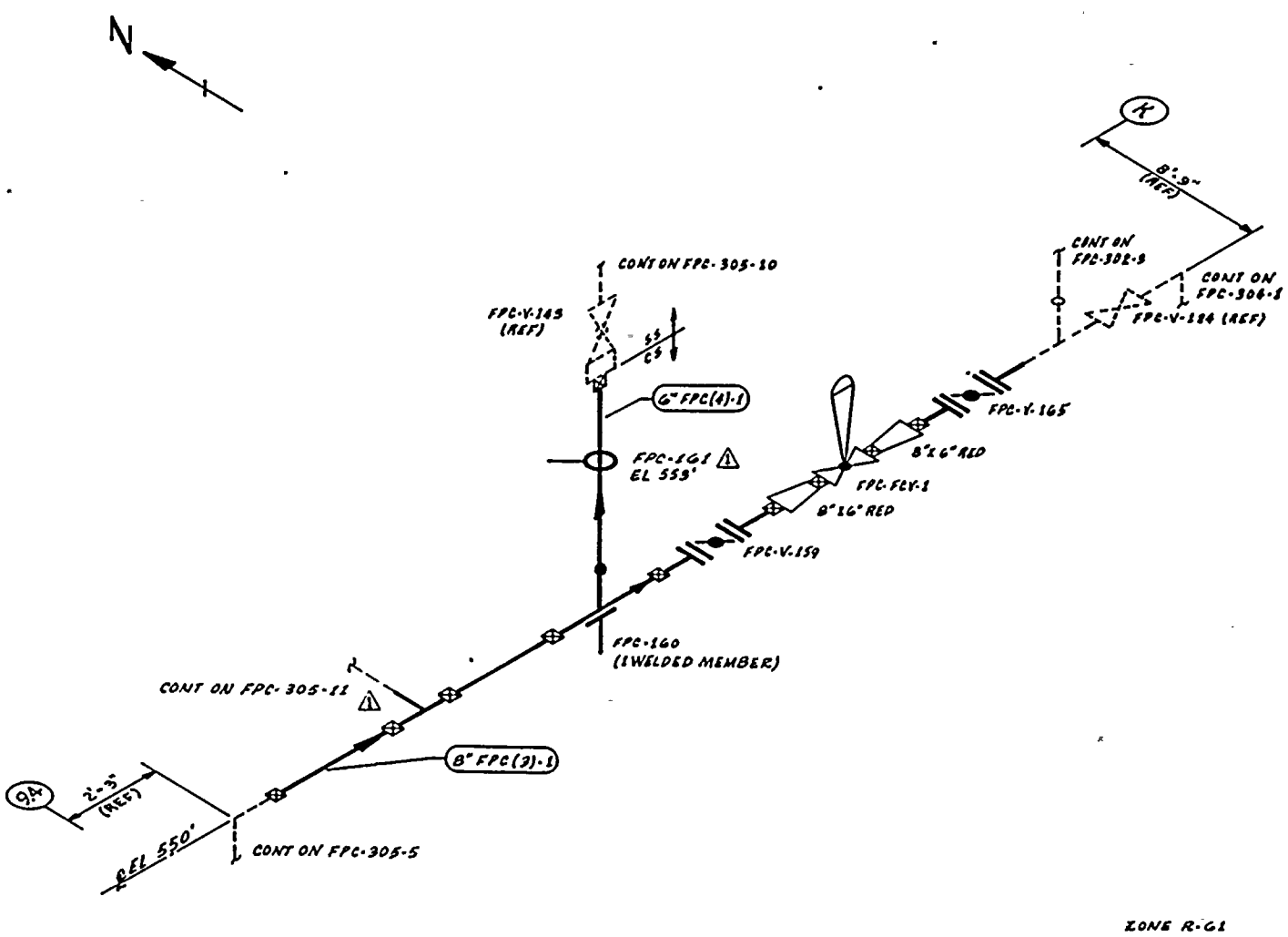

ZONE R-G1

NOTES:

1. THIS DRAWING IDENTIFIES PIPING & COMPONENTS SUBJECT ONLY TO A VISUAL EXAM FOR (1) EVIDENCE OF LEAKAGE DURING SYSTEM PRESSURE OR OPERABILITY TESTS; (2) PRESSURE DECAY TESTS OF BURIED PIPING; & (3) LOSS OF SUPPORT CAPABILITY OR INADEQUATE RESTRAINT FOR SUPPORTS & HANGERS ON PIPING EXCEEDING 4" NOM. TESTS SHALL BE CONDUCTED PER ASME SECTION XI, ARTICLES IWA-5000 & IWD-2000.
2. FOR BRANCH PIPING 4" NOM OR LESS (CONN SHOWN IN DASHED LINES) EXTEND VISUAL LEAKAGE EXAM THROUGH THE OUTERMOST NORMALLY CLOSED NUCLEAR CLASS VALVE, OR UNTIL TRANSITION TO INSTRUMENT TUBING, UNLESS OTHERWISE NOTED.

REFERENCES:

BOVEE & CRAIL ISOMETRICS

FPC-G40-1.6 REV 8

KEYPLAN

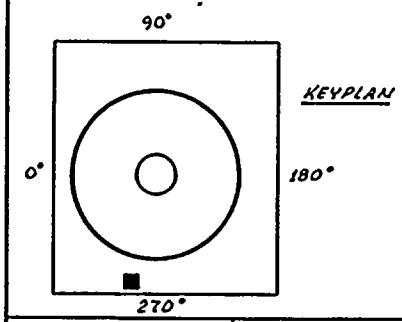

QUALITY CLASS: 2	ASME CODE CLASS: 3	
ENGR: [illegible]	DRAWN: [illegible]	DATE: 4-23-79

THIS DRAWING IS INTENDED FOR USE IN PRESERVICE AND INSERVICE INSPECTION PROGRAMS ONLY.

WASHINGTON PUBLIC POWER SUPPLY SYSTEM
RICHLAND, WASHINGTON 99352

PIPING SYSTEM	NOM DIA (IN)	SCH	NOM WALL THK	MATERIAL SPECIFICATION	MATL TYPE	CAL BLOCK NO
8" FPC (3)-1	8	STD	0.322	SA 106 GR B	CS	NA
6" FPC(4)-1	6	STD	0.280	SA 106 GR B	CS	NA

NO	DATE	REVISION	BY	CHKD	APPVD
1	1-24-82	REVISED AS NOTED ADDED KEYPLAN	[illegible]	[illegible]	[illegible]
0	12-2-81	ISSUED FOR USE	[illegible]	[illegible]	[illegible]

WNP-2
WELD & COMPONENT IDENTIFICATION DIAGRAM

TITLE: FPC-DM-1A & 1B RETURN

DWG NO: FPC-305-6 REV 1

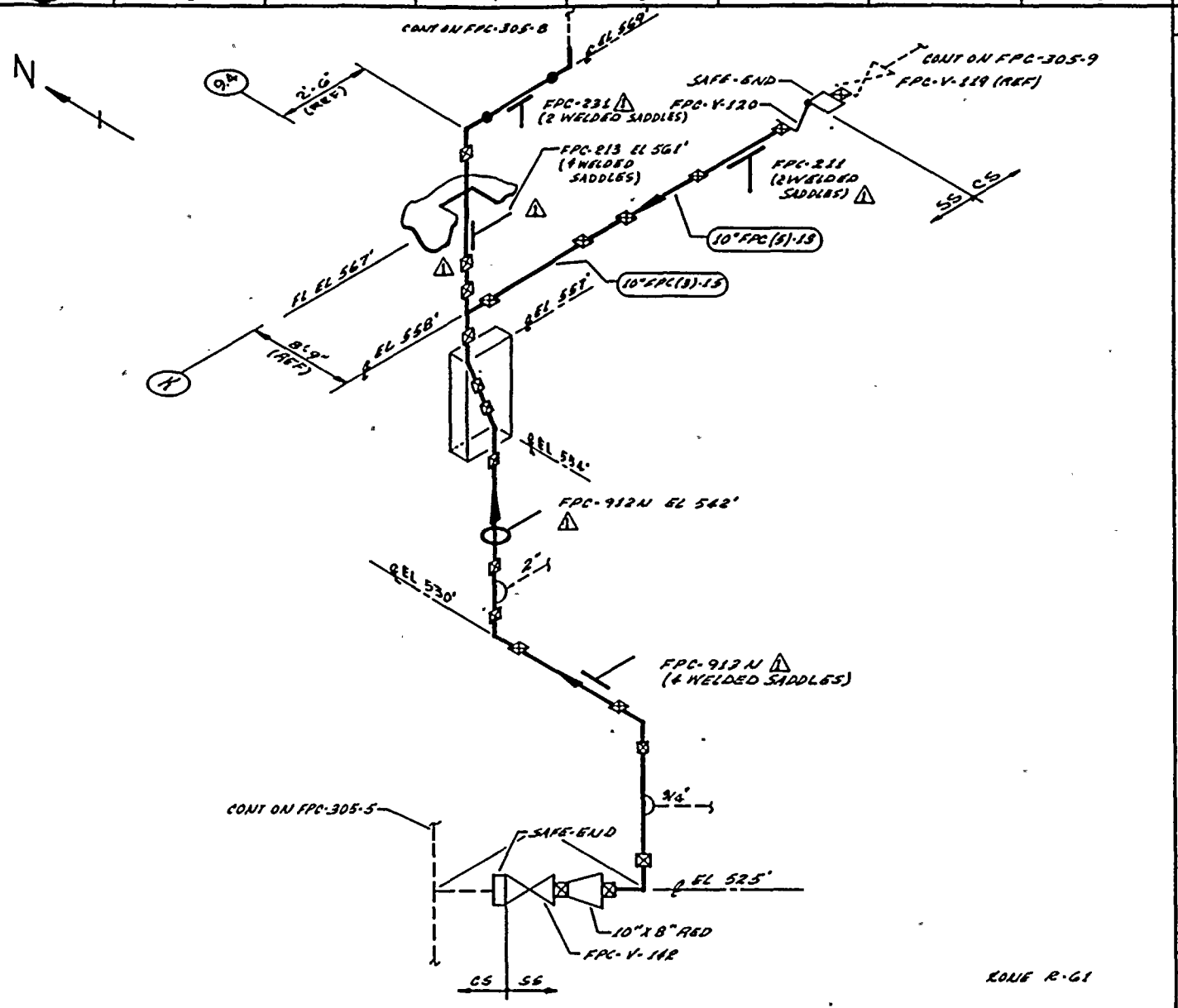

ZONE R-G1

THIS DRAWING IS INTENDED FOR USE IN PRESERVICE AND INSERVICE INSPECTION PROGRAMS ONLY.

NOTES:

1. THIS DRAWING IDENTIFIES PIPING & COMPONENTS SUBJECT ONLY TO A VISUAL EXAM FOR (1) EVIDENCE OF LEAKAGE DURING SYSTEM PRESSURE OR OPERABILITY TESTS; (2) PRESSURE DECAY TESTS OF BURIED PIPING & (3) LOSS OF SUPPORT CAPABILITY OR INADEQUATE RESTRAINT FOR SUPPORTS & HANGERS ON PIPING EXCEEDING 4" NOM. TESTS SHALL BE CONDUCTED PER ASME SECTION XI, ARTICLES IWA-5000 & IWD-2000.
2. FOR BRANCH PIPING 4" NOM OR LESS (CONN SHOWN IN DASHED LINES) EXTEND VISUAL LEAKAGE EXAM THROUGH THE OUTERMOST NORMALLY CLOSED NUCLEAR CLASS VALVE, OR UNTIL TRANSITION TO INSTRUMENT TUBING, UNLESS OTHERWISE NOTED.

REFERENCES:

BOVEE & CRAIL ISOMETRICS

FPC-670-1.2 REV 10
FPC-049-1.13 REV 7

KEYPLAN

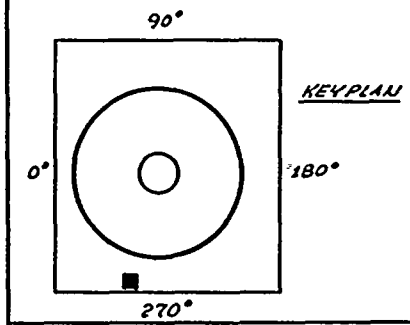

QUALITY CLASS: 2 | ASME CODE CLASS: 3

ENGR: [illegible] | DRAWN: [illegible] | DATE: 7-24-81

WASHINGTON PUBLIC POWER SUPPLY SYSTEM
RICHLAND, WASHINGTON 99352

PIPING SYSTEM	NOM DIA (IN)	SCH	NOM WALL THK	MATERIAL SPECIFICATION	MATL TYPE	CAL BLOCK NO
10"FPC (S)-15	10	10S	0.165	SA 312 TP 304	SS	NA
10"FPC (S)-15	"	"	"	" " " "	"	"

WNP-2
WELD & COMPONENT IDENTIFICATION DIAGRAM

TITLE: FPC-DM-1A & 1B RETURN & RHR STEAM INLET

DWG NO: FPC-305-7 | REV 1

NO	DATE	REVISION	BY	CHKD	APPVD
1	1-26-84	REVISED AS NOTED ADDED KEYPLAN	[illegible]	[illegible]	TFH
0	12-7-81	ISSUED FOR USE	[illegible]	[illegible]	TFH

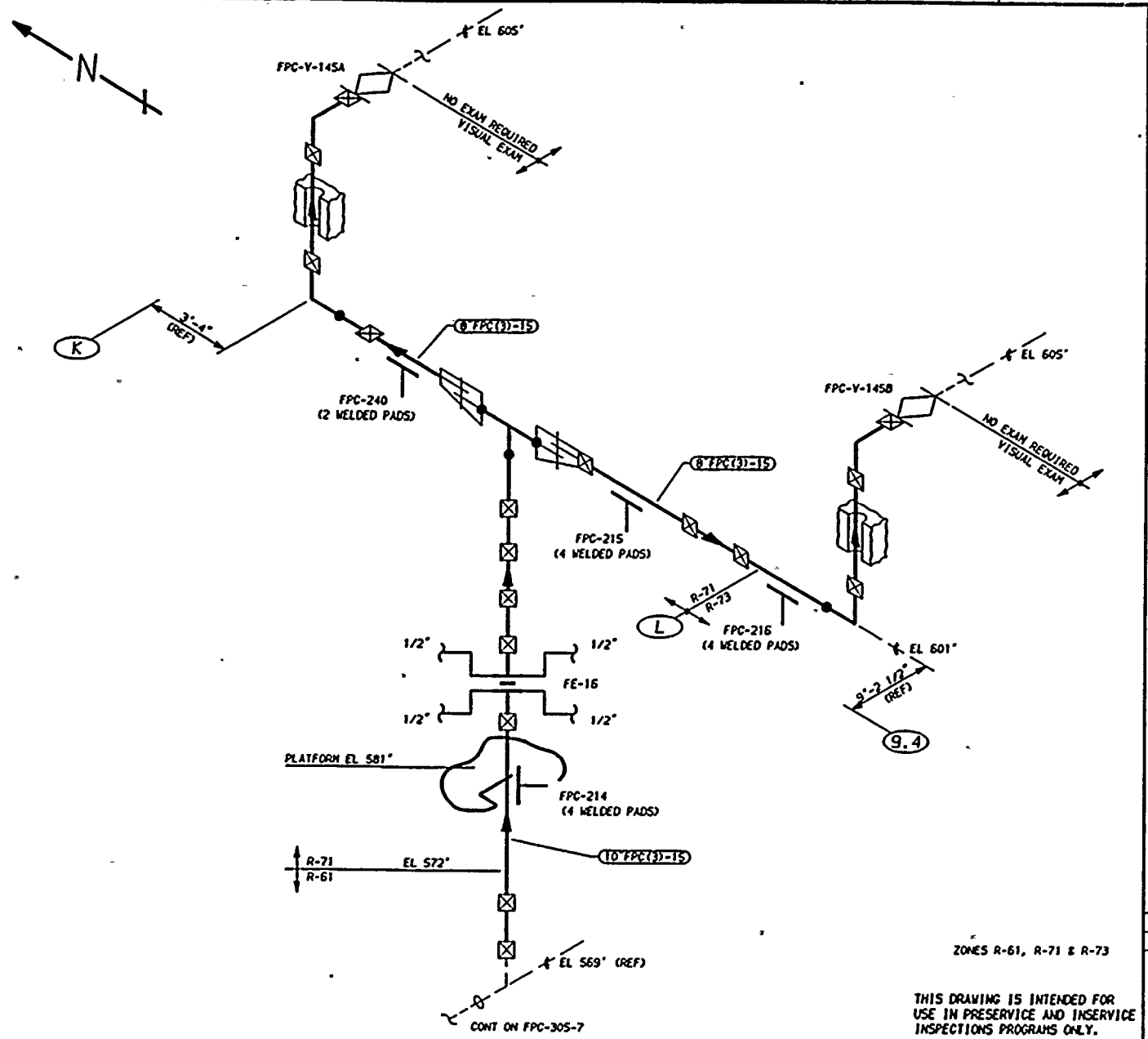

ZONES R-61, R-71 & R-73

THIS DRAWING IS INTENDED FOR USE IN PRESERVICE AND INSERVICE INSPECTIONS PROGRAMS ONLY.

NOTES:

1. THIS DRAWING IDENTIFIES PIPING AND COMPONENTS SUBJECT ONLY TO A VISUAL EXAM FOR (1) EVIDENCE OF LEAKAGE DURING SYSTEM PRESSURE OR OPERABILITY TESTS, (2) PRESSURE DECAY TESTS OF BURIED PIPING, AND (3) LOSS OF SUPPORT CAPABILITY OR INADEQUATE RESTRAINT FOR SUPPORTS AND HANGERS ON PIPING EXCEEDING 4" NOM. TESTS SHALL BE CONDUCTED PER ASME SECTION XI, ARTICLES IWA-5000 AND IWD-2000.

2. FOR BRANCH PIPING 4" NOM. OR LESS (CONNECTION SHOWN IN DASHED LINES) EXTEND VISUAL LEAKAGE EXAM THROUGH THE OUTERMOST NORMALLY CLOSED NUCLEAR CLASS VALVE, OR UNTIL TRANSITION TO INSTRUMENT TUBING, UNLESS OTHERWISE NOTED.

REFERENCES:

151 - 226

BOYEE & CRAIL ISOMETRICS
FPC-670- 3.6 REV 8
FPC-670- 7-11 REV 9
FPC-670-12.16 REV 7

KEYPLAN

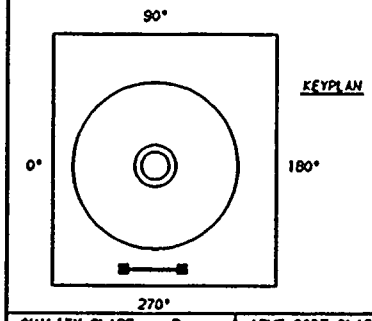

PIPING SYSTEM	NOM DIA (IN)	SCH	NOM WALL THK	MATERIAL SPECIFICATION	MATL TYPE	CAL BLOCK NO
10"FPC(3)-15	10	STD	0.365	SA 106 GR B	CS	NA
8"FPC(3)-15	8	STD	0.322	SA 106 GR B	CS	NA

NO	DATE	REVISION	BY	CHKD	APVD
1	12-21-84	GENERAL UPDATE REDRAWN	K-McA	DPR	TFH
0	12-2-81	ISSUED FOR USE	K-McA	DPR	TFH

QUALITY CLASS: 2 | ASME CODE CLASS: 3

ENGR: K-McANDREW | DRAWN: K-McA | DATE: 4-24-79

WASHINGTON PUBLIC POWER
SUPPLY SYSTEM
RICHLAND, WASHINGTON 99352

WNP-2
WELD & COMPONENT
IDENTIFICATION DIAGRAM

TITLE:
FPC-DH-1A & 1B TO DIFFUSERS

DWG NO: FPC-305-8 | REV 1

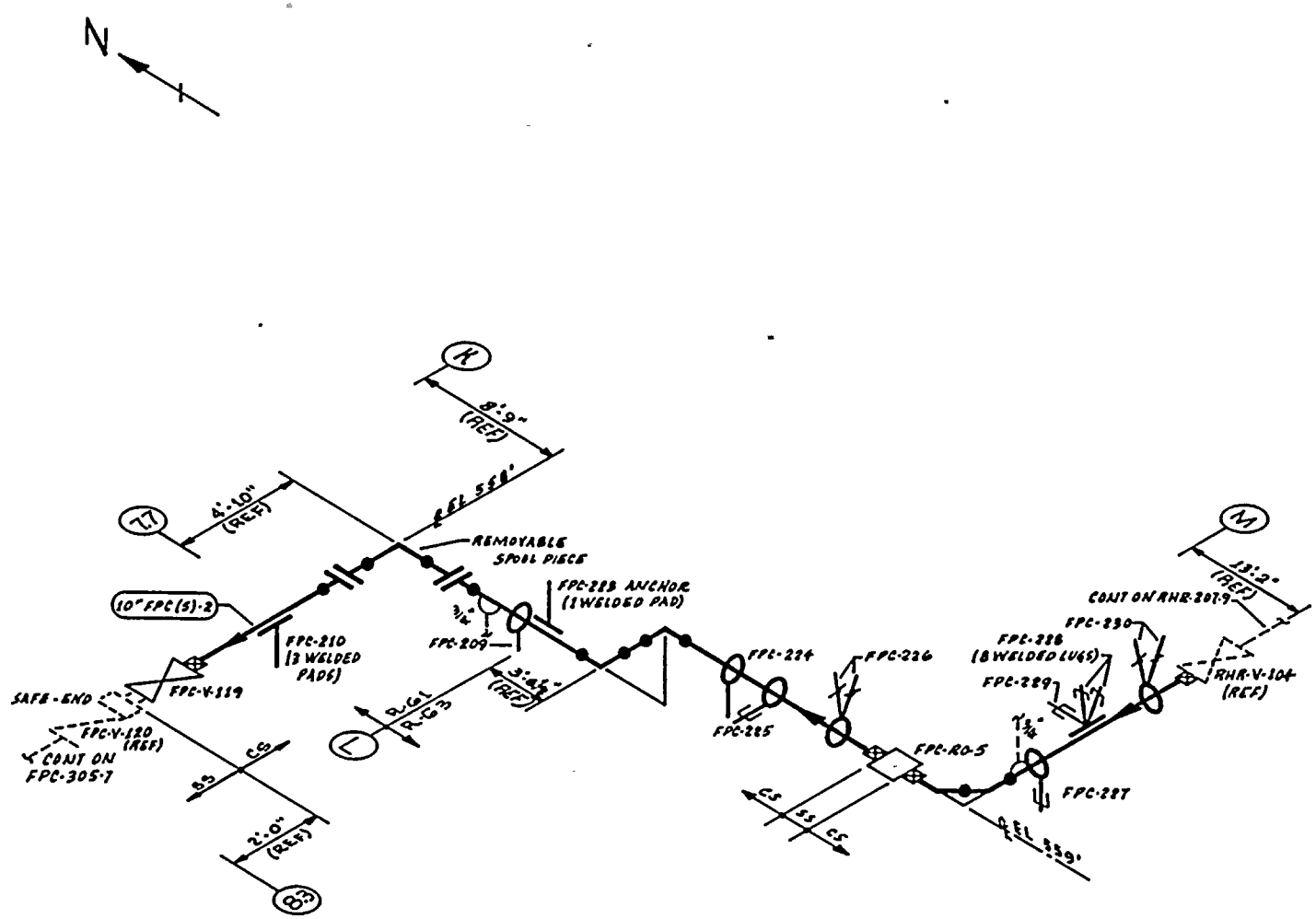

ZONES R-G1 & R-G3

NOTES:

1. THIS DRAWING IDENTIFIES PIPING & COMPONENTS SUBJECT ONLY TO A VISUAL EXAM FOR (1) EVIDENCE OF LEAKAGE DURING SYSTEM PRESSURE OR OPERABILITY TESTS; (2) PRESSURE DECAY TESTS OF BURIED PIPING; & (3) LOSS OF SUPPORT CAPABILITY OR INADEQUATE RESTRAINT FOR SUPPORTS & HANGERS ON PIPING EXCEEDING 4" NOM. TESTS SHALL BE CONDUCTED PER ASME SECTION XI, ARTICLES IWA-5000 & IWD-2000.

REFERENCES:

BOVEE & CRAIL ISOMETRICS
FPC-GT1-1.4 REV 11

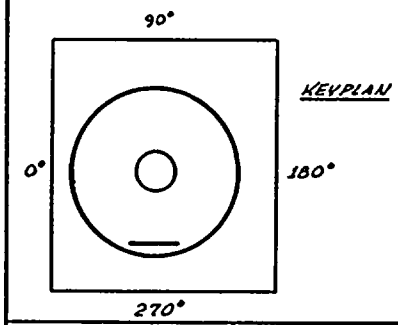

QUALITY CLASS: 2	ASME CODE CLASS: 3
ENGR: K.A. ANDREW	DRAWN: K. McA	DATE: 4-26-79

THIS DRAWING IS INTENDED FOR USE IN PRESERVICE AND INSERVICE INSPECTION PROGRAMS ONLY.

WASHINGTON PUBLIC POWER SUPPLY SYSTEM
RICHLAND, WASHINGTON 99352

PIPING SYSTEM	NOM DIA (IN)	SCH	NOM WALL THK	MATERIAL SPECIFICATION	MATL TYPE	CAL BLOCK NO
10" FPC(S)-2	10	STD	0.365	SA 106 GR B	CS	NA

NO	DATE	REVISION	BY	CHKD	APPVD
1	1-24-84	ADDED 3/4" CONN IN D-4 ADDED KEYPLAN	K.McA	WR	TTH
0	12-7-81	ISSUED FOR USE	K.McA	WR	TTH

WNP- 2
WELD & COMPONENT IDENTIFICATION DIAGRAM

TITLE: FPC - RHR INTERTIE INLET

DWG NO: FPC-305-9 REV 1

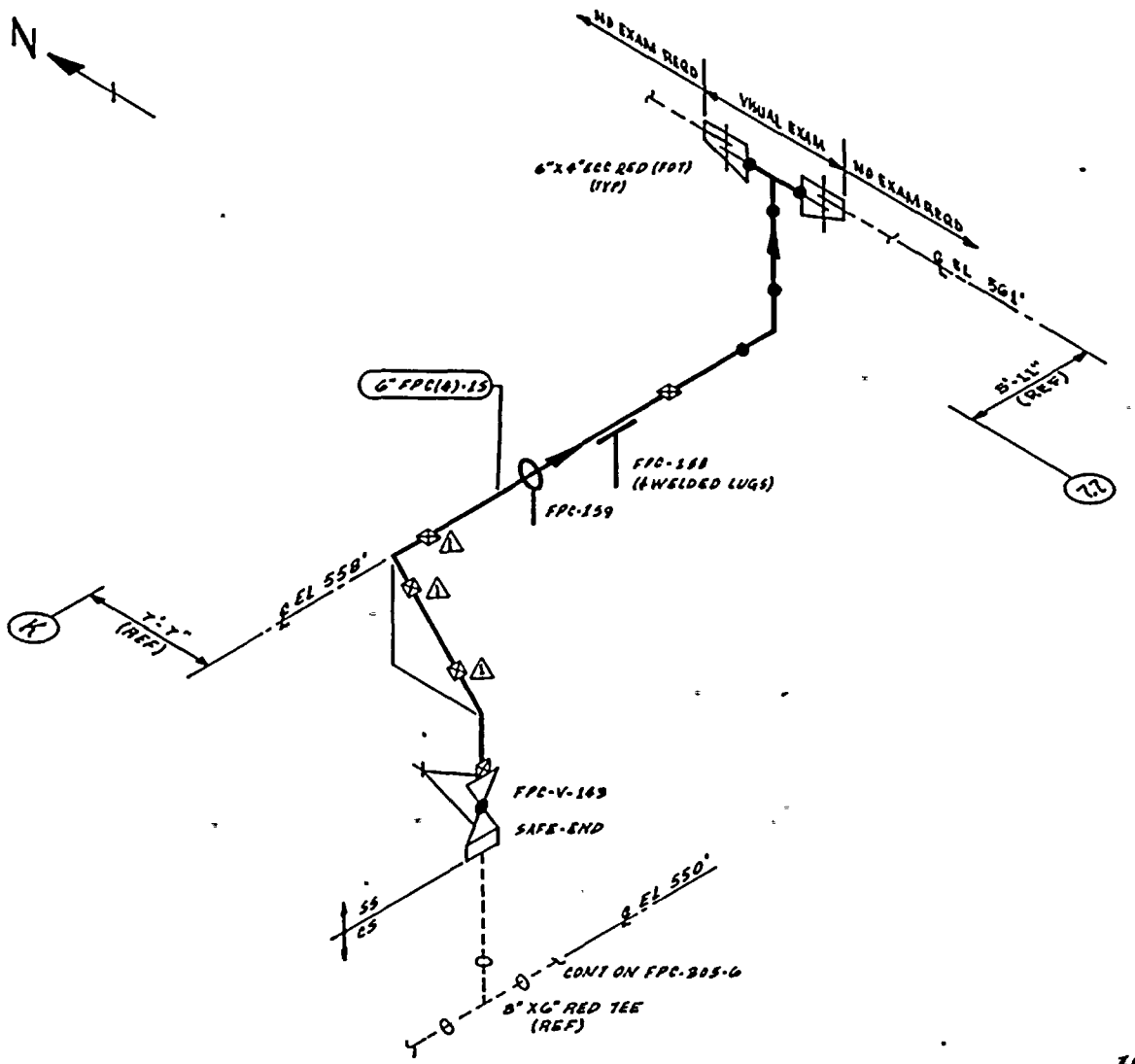

ZONE R-61

THIS DRAWING IS INTENDED FOR USE IN PRESERVICE AND INSERVICE INSPECTION PROGRAMS ONLY.

NOTES:

1. THIS DRAWING IDENTIFIES PIPING & COMPONENTS SUBJECT ONLY TO A VISUAL EXAM FOR (1) EVIDENCE OF LEAKAGE DURING SYSTEM PRESSURE OR OPERABILITY TESTS; (2) PRESSURE DECAY TESTS OF BURIED PIPING; & (3) LOSS OF SUPPORT CAPABILITY OR INADEQUATE RESTRAINT FOR SUPPORTS & HANGERS ON PIPING EXCEEDING 4" NOM. TESTS SHALL BE CONDUCTED PER ASME SECTION XI, ARTICLES IWA-5000 & IWD-2000.

REFERENCES:

BOVEE & CRAIL ISOMETRICS
FPC-669-1.7, REV 5

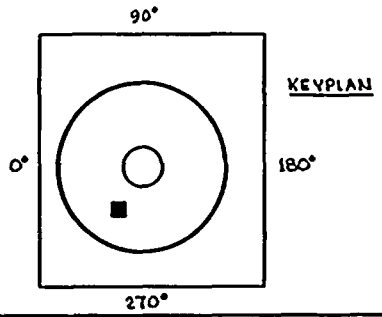

QUALITY CLASS: 2	ASME CODE CLASS: 3
ENGR: [illegible] DRAWN: [illegible]	DATE: 4-25-79

WASHINGTON PUBLIC POWER SUPPLY SYSTEM
RICHLAND, WASHINGTON 99352

PIPING SYSTEM	NOM DIA (IN)	SCH	NOM WALL THK	MATERIAL SPECIFICATION	MATL TYPE	CAL BLOCK NO
6" FPC(4)-16	6	105	0.134	SA 312 TP 304	SS	NA

WNP-2
WELD & COMPONENT IDENTIFICATION DIAGRAM

TITLE: FPC-DM-1A & 1B TO DIFFUSERS

DWG NO: FPC-305-10 REV 1

NO	DATE	REVISION	BY	CHKD	APPVD
1	11-1-83	REVISED AS NOTED ADDED KEYPLAN	[illegible]	[illegible]	TAK
0	12-7-81	ISSUED FOR USE	[illegible]	[illegible]	TAK

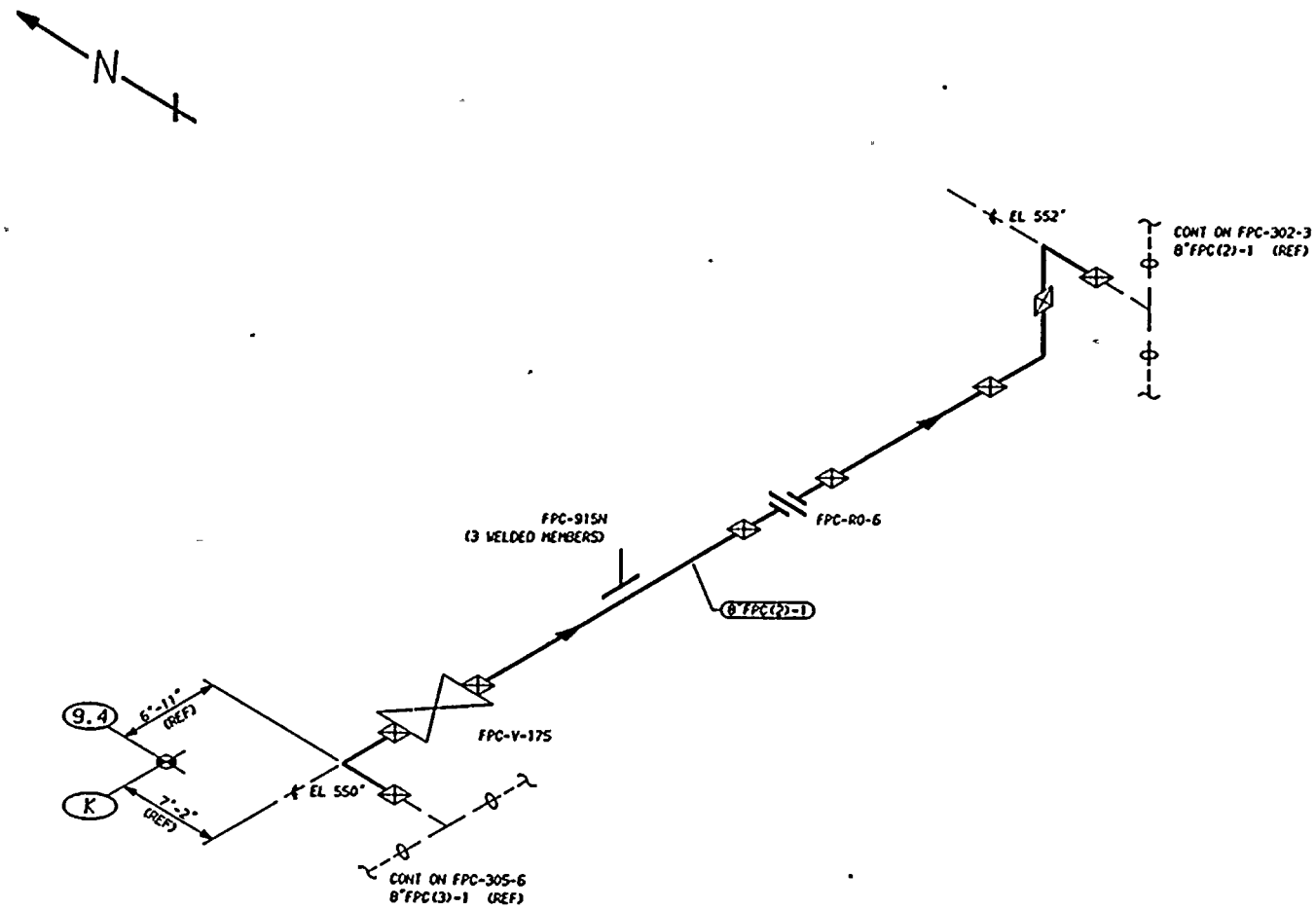

NOTES:

1. THIS DRAWING IDENTIFIES PIPING AND COMPONENTS SUBJECT ONLY TO A VISUAL EXAM FOR (1) EVIDENCE OF LEAKAGE DURING SYSTEM PRESSURE OR OPERABILITY TESTS, (2) PRESSURE DECAY TESTS OF BURIED PIPING, AND (3) LOSS OF SUPPORT CAPABILITY OR INADEQUATE RESTRAINT FOR SUPPORTS AND HANGERS ON PIPING EXCEEDING 4" NOM. TESTS SHALL BE CONDUCTED PER ASME SECTION XI, ARTICLES IWA-5000 AND IWD-2000.

REFERENCES:

151 - 226

BOVEE & CRAIL ISOMETRIC
FPC-640-31.40 REV S

KEYPLAN

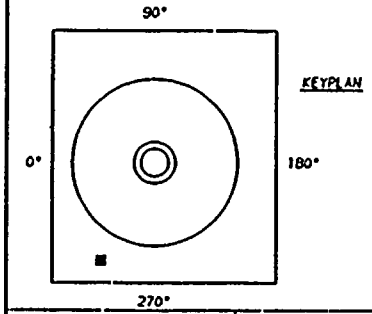

R-61

THIS DRAWING IS INTENDED FOR USE IN PRESERVICE AND INSERVICE INSPECTIONS PROGRAMS ONLY.

PIPING SYSTEM	NOM DIA (IN)	SCH	NOM WALL THK	MATERIAL SPECIFICATION	MATL TYPE	CAL BLOCK NO
8"FPC(2)-1	8	STD	0.322	SA 106 GR B	CS	NA

NO	DATE	REVISION	BY	CHKD	APVD
0	1-21-84	ISSUED FOR USE	[illegible]	DPR	[illegible]

QUALITY CLASS: 2	ASME CODE CLASS: 3	
ENGR: K-McANDREW	DRAWN: K-McA	DATE: 1-5-84

WASHINGTON PUBLIC POWER
SUPPLY SYSTEM
RICHLAND, WASHINGTON 99352

WNP-2
WELD & COMPONENT
IDENTIFICATION DIAGRAM

TITLE:
BY-PASS BETWEEN INFULENT & EFFULENT TO REACTOR

DWG NO. FPC-305-11 REV 0

WNP-02
INTERVAL: PSI
PERIOD: NA
OUTAGE:
DRAWING NO. FPC-305

WASHINGTON PUBLIC POWER SUPPLY SYSTEM
PROGRAM PLAN AND SCHEDULE
SYSTEM OR COMPONENT: FPC(3)-1
DESCRIPTION: FPC-DM-1A RETURN

DATE 12/14/84

IDENT. NO.	DESCRIPTION	SECT. XI EXAM.	EXAM MTH.	PROCEDURE	CAL. BLOCK	INSERVICE REQ.	INSERVICE SCHEDULED OUTAGE	NOTES
FPC-83	RIGID	N/A	VT-3	303/8.2.17				
FPC-82	RIGID	N/A	VT-3	303/8.2.17				
FPC-79	RIGID	N/A	VT-3	303/8.2.17				
FPC-78	BOX	N/A	VT-3	303/8.2.17				
FPC-93	RIGID	N/A	VT-3	303/8.2.17				
FPC-92	RIGID	N/A	VT-3	303/8.2.17				
FPC-91	STRUT	N/A	VT-3	303/8.2.17				
FPC-77	RIGID	N/A	VT-3	303/8.2.17				
FPC-76	BOX	N/A	VT-3	303/8.2.17				
FPC-75	RIGID	N/A	VT-3	303/8.2.17				
FPC-74	RIGID	N/A	VT-3	303/8.2.17				
FPC-73	BOX	N/A	VT-3	303/8.2.17				
FPC-72	RIGID	N/A	VT-3	303/8.2.17				
FPC-71	BOX	N/A	VT-3	303/8.2.17				
FPC-68	RIGID	N/A	VT-3	303/8.2.17				
FPC-69	RIGID	N/A	VT-3	303/8.2.17				
FPC-70	RIGID	N/A	VT-3	303/8.2.17				
FPC-67	RIGID	N/A	VT-3	303/8.2.17				

WNP-02
INTERVAL: PSI
PERIOD: NA
OUTAGE:
DRAWING NO. FPC-305

WASHINGTON PUBLIC POWER SUPPLY SYSTEM
PROGRAM PLAN AND SCHEDULE
SYSTEM OR COMPONENT: FPC(3)-1
DESCRIPTION: FPC-DM-1A RETURN

DATE 12/14/84

IDENT. NO.	DESCRIPTION	SECT. XI EXAM.	EXAM MTH.	PROCEDURE	CAL. BLOCK	INSERVICE REQ.	INSERVICE SCHEDULED OUTAGE	NOTES
FPC-66	RIGID	N/A	VT-3	303/8.2.17				
FPC-168	BOX	N/A	VT-3	303/8.2.17				
FPC-167	BOX	N/A	VT-3	303/8.2.17				
FPC-166	BOX	N/A	VT-3	303/8.2.17				
FPC-911N	BOX	N/A	VT-3	303/8.2.17				
FPC-165	BOX	N/A	VT-3	303/8.2.17				
FPC-206	BOX	N/A	VT-3	303/8.2.17				
FPC-164	BOX	N/A	VT-3	303/8.2.17				
FPC-163	BOX	N/A	VT-3	303/8.2.17				
FPC-201	RIGID	N/A	VT-3	303/8.2.17				
FPC-162	BOX	N/A	VT-3	303/8.2.17				
FPC-160	RIGID	N/A	VT-3	303/8.2.17				
FPC-161	BOX	N/A	VT-3	303/8.2.17				
FPC-913N	BOX	N/A	VT-3	303/8.2.17				
FPC-912N	BOX	N/A	VT-3	303/8.2.17				
FPC-211	STRUT	N/A	VT-3	303/8.2.17				
FPC-213	BOX	N/A	VT-3	303/8.2.17				
FPC-231	BOX	N/A	VT-3	303/8.2.17				

WNP-02
INTERVAL: PSI
PERIOD: NA
OUTAGE:
DRAWING NO. FPC-305

WASHINGTON PUBLIC POWER SUPPLY SYSTEM
PROGRAM PLAN AND SCHEDULE
SYSTEM OR COMPONENT: FPC(3)-1
DESCRIPTION: FPC-DM-1A RETURN

DATE 12/14/84

IDENT. NO.	DESCRIPTION	SECT. XI EXAM.	EXAM MTH.	PROCEDURE	CAL. BLOCK	INSERVICE REQ.	INSERVICE SCHEDULED OUTAGE	NOTES
FPC-214								
	BOX	N/A	VT-3	303/8.2.17				
FPC-215								
	BOX	N/A	VT-3	303/8.2.17				
FPC-216								
	BOX	N/A	VT-3	303/8.2.17				
FPC-240								
	BOX	N/A	VT-3	303/8.2.17				
FPC-230								
	SPRING	N/A	VT-3	303/8.2.17				
			VT-4	303/8.2.17				
FPC-229								
	PSA-3 SNUBBER	N/A	VT-3	303/8.2.17				S/N
			VT-4	303/8.2.17				S/N
FPC-228								
	PSA-1/2 SN(2)	N/A	VT-3	303/8.2.17				S/N
			VT-4	303/8.2.17				S/N
FPC-227								
	PSA-1 SNUBBER	N/A	VT-3	303/8.2.17				S/N
			VT-4	303/8.2.17				S/N
FPC-226								
	SPRING	N/A	VT-3	303/8.2.17				
			VT-4	303/8.2.17				
FPC-225								
	PSA-1 SNUBBER	N/A	VT-3	303/8.2.17				S/N
			VT-4	303/8.2.17				S/N
FPC-224								
	BOX	N/A	VT-3	303/8.2.17				
FPC-223								
	ANCHOR	N/A	VT-3	303/8.2.17				

WNP-02
INTERVAL: PSI
PERIOD: NA
OUTAGE:
DRAWING NO. FPC-305

WASHINGTON PUBLIC POWER SUPPLY SYSTEM
PROGRAM PLAN AND SCHEDULE
SYSTEM OR COMPONENT: FPC(3)-1
DESCRIPTION: FPC-DM-1A RETURN

DATE 12/14/84

IDENT. NO.	DESCRIPTION	SECT. XI EXAM.	EXAM MTH.	PROCEDURE	CAL. BLOCK	INSERVICE REQ.	SCHEDULED OUTAGE	NOTES
FPC-209	BOX	N/A	VT-3	303/8.2.17				
FPC-210	BOX	N/A	VT-3	303/8.2.17				
FPC-159	BOX	N/A	VT-3	303/8.2.17				
FPC-158	BOX	N/A	VT-3	303/8.2.17				
FPC-PB-305	FPC PRES BNDRY	N/A	VT-2	N/A				SEE NOTES #6 & #7.

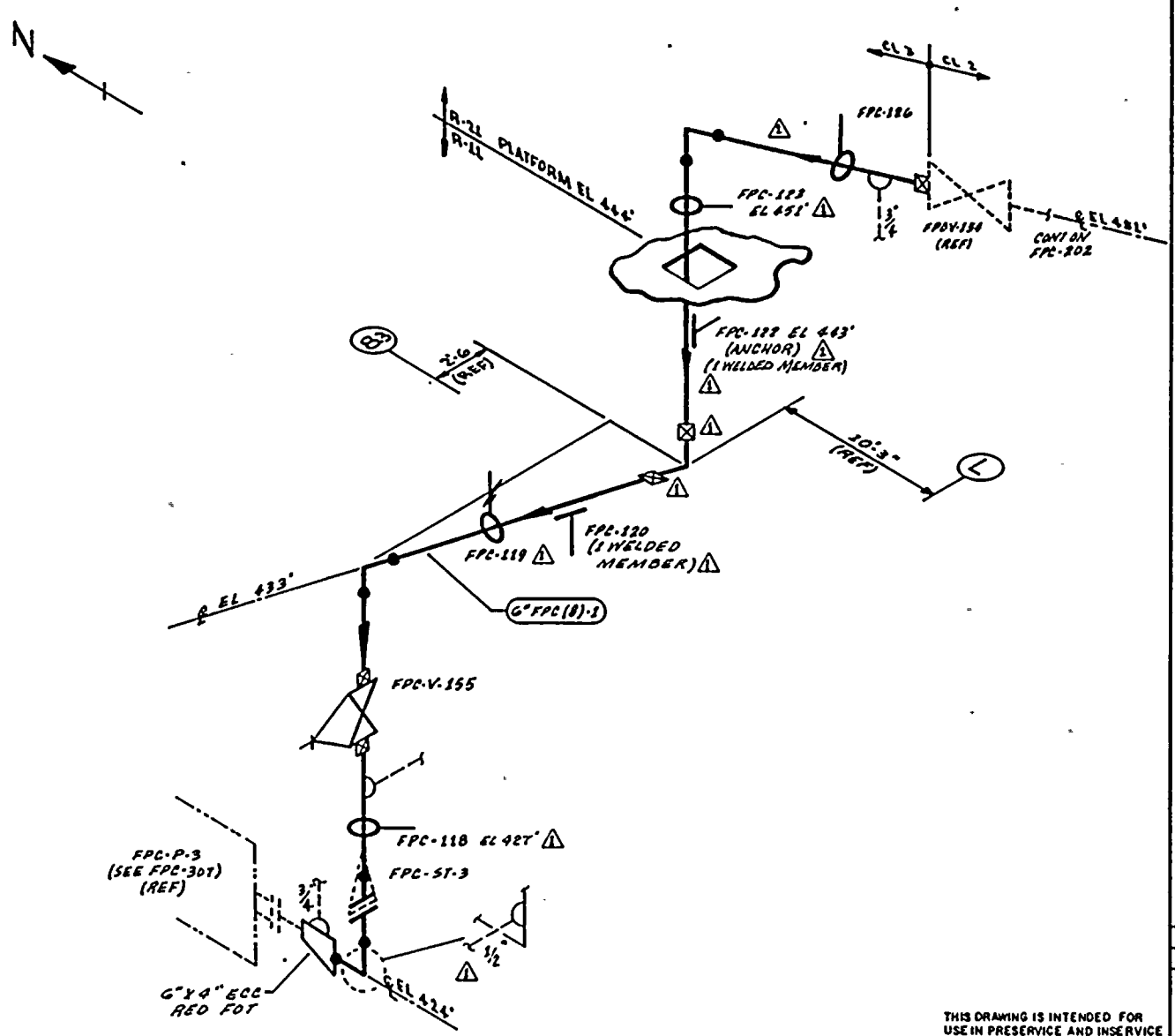

NOTES

1. THIS DRAWING IDENTIFIES PIPING & COMPONENTS SUBJECT ONLY TO A VISUAL EXAM FOR (1) EVIDENCE OF LEAKAGE DURING SYSTEM PRESSURE OR OPERABILITY TESTS; (2) PRESSURE DECAY TESTS OF BURIED PIPING; & (3) LOSS OF SUPPORT CAPABILITY OR INADEQUATE RESTRAINT FOR SUPPORTS & HANGERS ON PIPING EXCEEDING 4" NOM. TESTS SHALL BE CONDUCTED PER ASME SECTION XI, ARTICLES IWA-5000 & IWD-2000.
2. FOR BRANCH PIPING 4" NOM. OR LESS (CONN SHOWN IN DASHED LINES) EXTEND VISUAL LEAKAGE EXAM THROUGH THE OUTERMOST NORMALLY CLOSED NUCLEAR CLASS VALVE, OR UNTIL TRANSITION TO INSTRUMENT TUBING, UNLESS OTHERWISE NOTED.

REFERENCES:

BOVEE & CRAIL ISOMETRICS

FPC-639-1.2' REV 10
FPC-639-3.5 REV 9

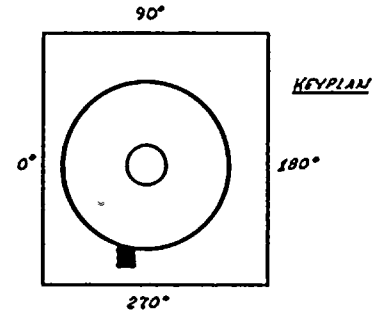

QUALITY CLASS: 2	ASME CODE CLASS: 3	
ENGR: K.H. ANDERSON	DRAWN: K.M.E.A.	DATE: 4-27-79

THIS DRAWING IS INTENDED FOR USE IN PRESERVICE AND INSERVICE INSPECTION PROGRAMS ONLY.

WASHINGTON PUBLIC POWER SUPPLY SYSTEM
RICHLAND, WASHINGTON 99352

PIPING SYSTEM	NOM DIA (IN)	SCH	NOM WALL THK	MATERIAL SPECIFICATION	MATL TYPE	CAL BLOCK NO
6" FPC(B)-1	6	STD	0.280	SA 106 GR B	CS	NA

WNP-2
WELD & COMPONENT
IDENTIFICATION DIAGRAM

TITLE: SUPPRESSION POOL TO FPC-P-3 SUCTION

DWG NO: FPC-306 REV 1

NO	DATE	REVISION	BY	CHKD	APPVD
1	1-29-80	REVISED AS NOTED ADDED KEYPLAN	KMA	DWR	TFH
0	12-7-79	ISSUED FOR USE	KMA	DWR	TFH

WNP-02
INTERVAL: PSI
PERIOD: NA
OUTAGE:
DRAWING NO. FPC-306

WASHINGTON PUBLIC POWER SUPPLY SYSTEM
PROGRAM PLAN AND SCHEDULE
SYSTEM OR COMPONENT: FPC(8)-1
DESCRIPTION: SUPPR POOL TO SUCT

DATE 12/14/84

IDENT. NO.	DESCRIPTION	SECT. XI EXAM.	EXAM MTH.	PROCEDURE	CAL. BLOCK	INSERVICE REQ.	INSERVICE SCHEDULED OUTAGE	NOTES
FPC-126	STRUT	N/A	VT-3	303/8.2.17				
FPC-123	BOX	N/A	VT-3	303/8.2.17				
FPC-122	ANCHOR	N/A	VT-3	303/8.2.17				
FPC-120	BOX	N/A	VT-3	303/8.2.17				
FPC-119	SPRING	N/A	VT-3	303/8.2.17				
			VT-4	303/8.2.17				
FPC-118	RIGID	N/A	VT-3	303/8.2.17				
FPC-PB-306	FPC PRES BNDRY	N/A	VT-2	N/A				SEE NOTES #6 & #7.

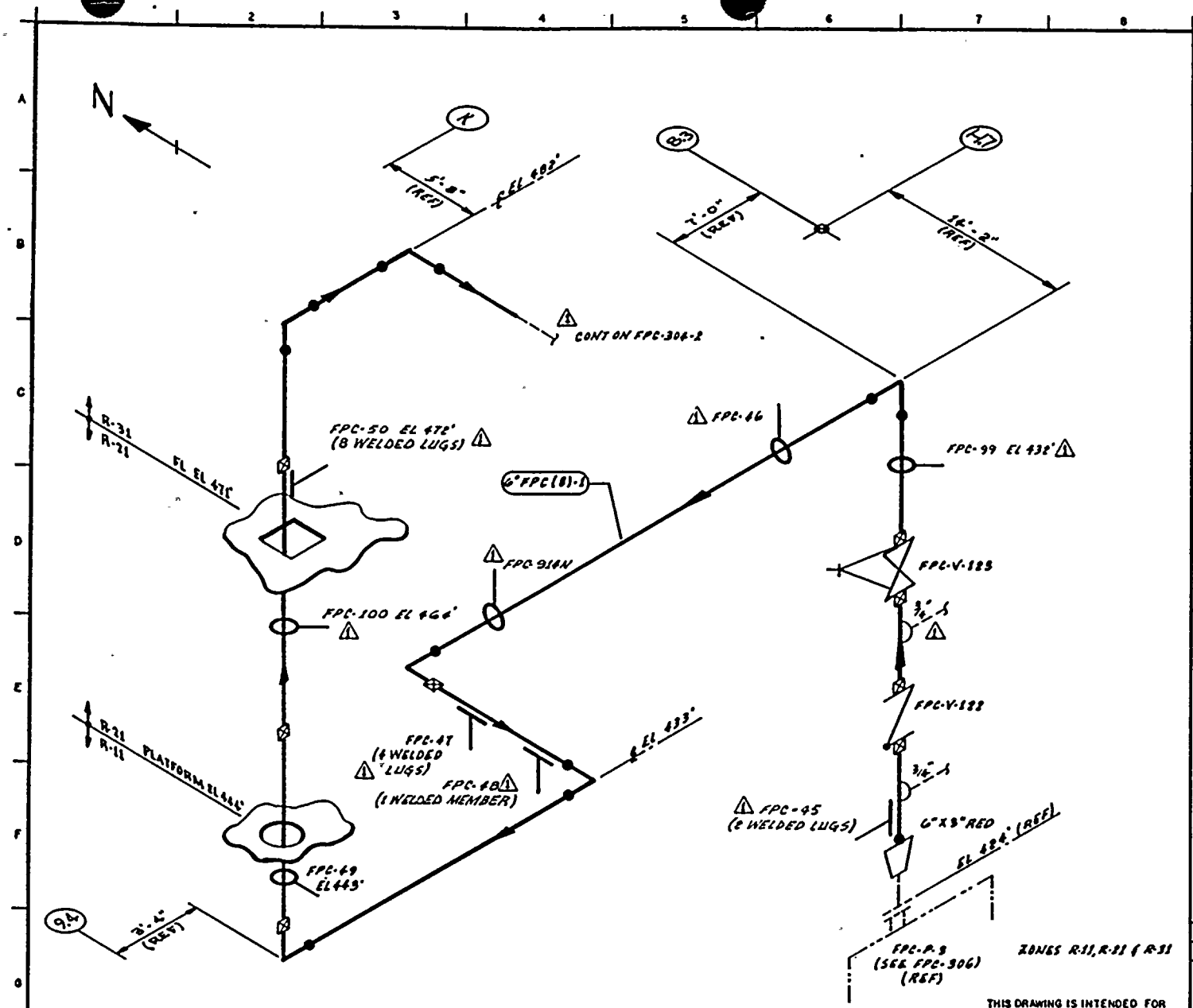

THIS DRAWING IS INTENDED FOR USE IN PRESERVICE AND INSERVICE INSPECTION PROGRAMS ONLY.

NOTES:

1. THIS DRAWING IDENTIFIES PIPING & COMPONENTS SUBJECT ONLY TO A VISUAL EXAM FOR (1) EVIDENCE OF LEAKAGE DURING SYSTEM PRESSURE OR OPERABILITY TESTS; (2) PRESSURE DECAY TESTS OF BURIED PIPING; & (3) LOSS OF SUPPORT CAPABILITY OR INADEQUATE RESTRAINT FOR SUPPORTS & HANGERS ON PIPING EXCEEDING 4" NOM. TESTS SHALL BE CONDUCTED PER ASME SECTION XI, ARTICLES IWA-5000 & IWD-2000.
2. FOR BRANCH PIPING 4" NOM OR LESS (CONN SHOWN IN DASHED LINES) EXTEND VISUAL LEAKAGE EXAM THROUGH THE OUTERMOST NORMALLY CLOSED NUCLEAR CLASS VALVE, OR UNTIL TRANSITION TO INSTRUMENT TUBING, UNLESS OTHERWISE NOTED.

REFERENCES:

BOVEE & CRAIL ISOMETRICS

FPC-638-1.3 REV 8
FPC-638-4.7 REV 7

KEYPLAN

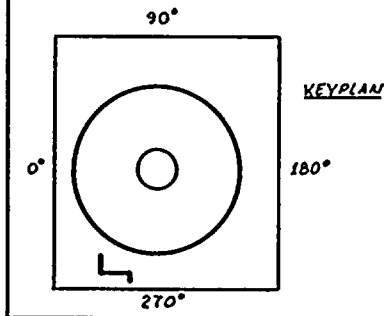

QUALITY CLASS: 2	ASME CODE CLASS: 3
ENGR: [illegible]	DRAWN: [illegible] DATE: 4-30-79

WASHINGTON PUBLIC POWER SUPPLY SYSTEM
RICHLAND, WASHINGTON 99352

PIPING SYSTEM	NOM DIA (IN)	SCH	NOM WALL THK	MATERIAL SPECIFICATION	MATL TYPE	CAL BLOCK NO
6"FPC(8)-1	6	STD	0.280	SA 106 GR B	CS	NA

NO	DATE	REVISION	BY	CHKD	APPVD
1	12-21-83	REVISED AS NOTED ADDED KEYPLAN	[illegible]	WR	TFH
0	12-3-81	ISSUED FOR USE	[illegible]	SR	TFH

WNP-2
WELD & COMPONENT IDENTIFICATION DIAGRAM

TITLE: FPC-P-3 DISCHARGE

DWG NO: FPC-307 REV 1

WNP-02
INTERVAL: PSI
PERIOD: NA
OUTAGE:
DRAWING NO. FPC-307

WASHINGTON PUBLIC POWER SUPPLY SYSTEM
PROGRAM PLAN AND SCHEDULE
SYSTEM OR COMPONENT: FPC(8)-1
DESCRIPTION: FPC-P-3 DISCHARGE

DATE 12/14/84

IDENT. NO.	DESCRIPTION	SECT. XI EXAM.	EXAM MTH.	PROCEDURE	CAL. BLOCK	INSERVICE REQ.	SCHEDULED OUTAGE	NOTES
FPC-45	BOX	N/A	VT-3	303/8.2.17				
FPC-99	BOX	N/A	VT-3	303/8.2.17				
FPC-47	BOX	N/A	VT-3	303/8.2.17				
FPC-48	BOX	N/A	VT-3	303/8.2.17				
FPC-49	BOX	N/A	VT-3	303/8.2.17				
FPC-100	BOX	N/A	VT-3	303/8.2.17				
FPC-50	BOX	N/A	VT-3	303/8.2.17				
FPC-PB-307	FPC PRES BNDRY	N/A	VT-2	N/A				SEE NOTES #6 & #7.

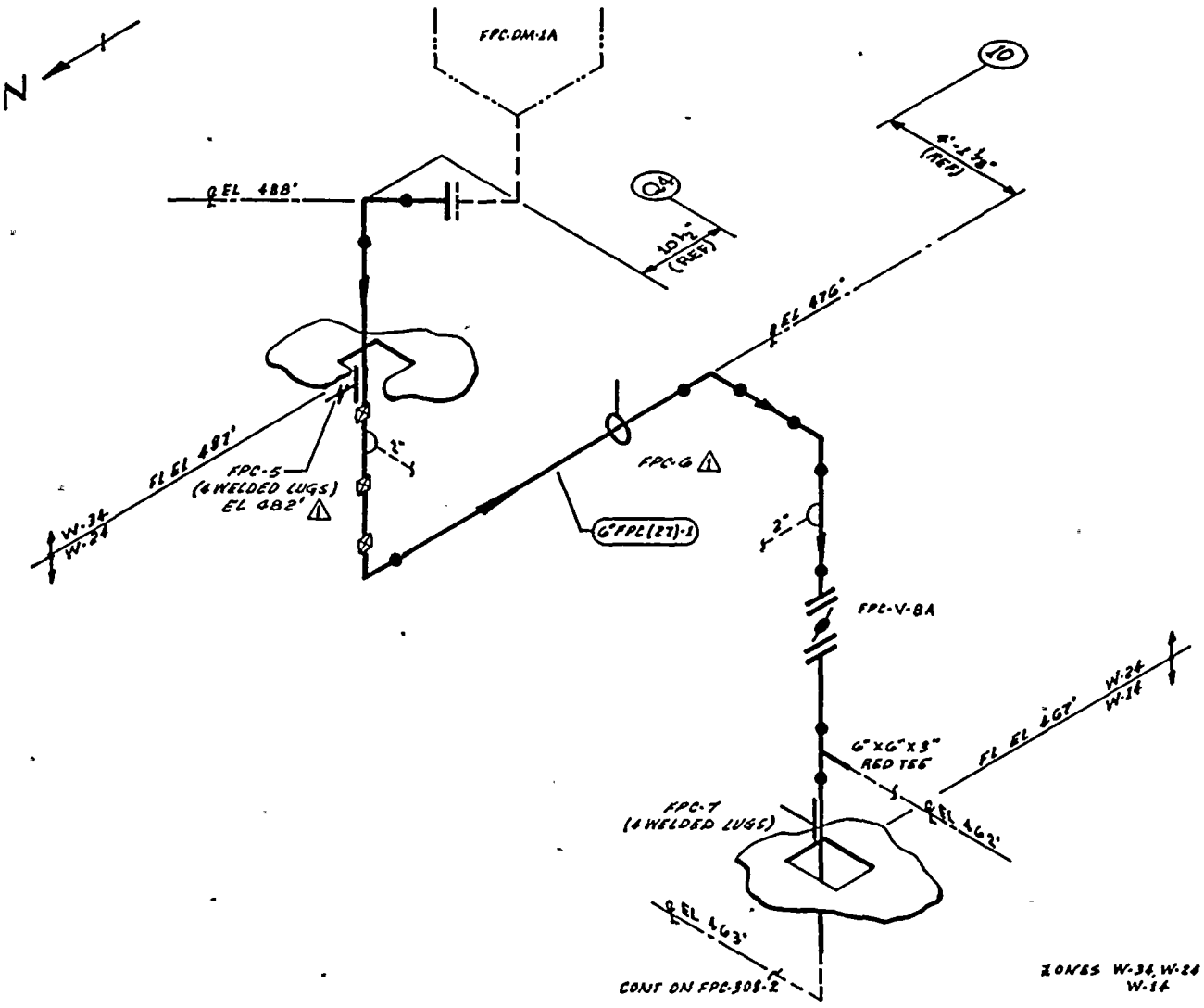

THIS DRAWING IS INTENDED FOR USE IN PRESERVICE AND INSERVICE INSPECTION PROGRAMS ONLY.

NOTES:

1. THIS DRAWING IDENTIFIES PIPING & COMPONENTS SUBJECT ONLY TO A VISUAL EXAM FOR (1) EVIDENCE OF LEAKAGE DURING SYSTEM PRESSURE OR OPERABILITY TESTS; (2) PRESSURE DECAY TESTS OF BURIED PIPING; & (3) LOSS OF SUPPORT CAPABILITY OR INADEQUATE RESTRAINT FOR SUPPORTS & HANGERS ON PIPING EXCEEDING 4" NOM. TESTS SHALL BE CONDUCTED PER ASME SECTION XI, ARTICLES IWA-5000 & IWD-2000.
2. FOR BRANCH PIPING 4" NOM OR LESS (CONN SHOWN IN DASHED LINES) EXTEND VISUAL LEAKAGE EXAM THROUGH THE OUTERMOST NORMALLY CLOSED NUCLEAR CLASS VALVE, OR UNTIL TRANSITION TO INSTRUMENT TUBING, UNLESS OTHERWISE NOTED.

REFERENCES:

BOVEE & CRAIL ISOMETRIC
FPC-778-1.5 REV 2

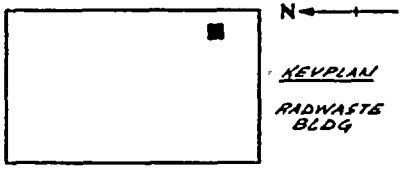

QUALITY CLASS: 2	ASME CODE CLASS: 3
ENGR: [illegible] DRAWN: [illegible]	DATE: 4-30-79

WASHINGTON PUBLIC POWER SUPPLY SYSTEM
RICHLAND, WASHINGTON 99352

WNP-2
WELD & COMPONENT
IDENTIFICATION DIAGRAM

TITLE:
FPC-DM-1A TO FDR-TK-22

DWG NO: FPC-308-1 REV 1

PIPING SYSTEM	NOM DIA (IN)	SCH	NOM WALL THK	MATERIAL SPECIFICATION	MATL TYPE	CAL BLOCK NO
6"FPC(27)-1	6	STD	0.280	SA 106 GRB	CS	NA

NO	DATE	REVISION	BY	CHKD	APPVD
1	1-23-80	REVISED AS NOTED ADDED KEYPLAN	[illegible]	[illegible]	TFH
0	12-28-79	ISSUED FOR USE	[illegible]	[illegible]	TFH

SUPERSEDES REPRODUCIBLES TO JOY

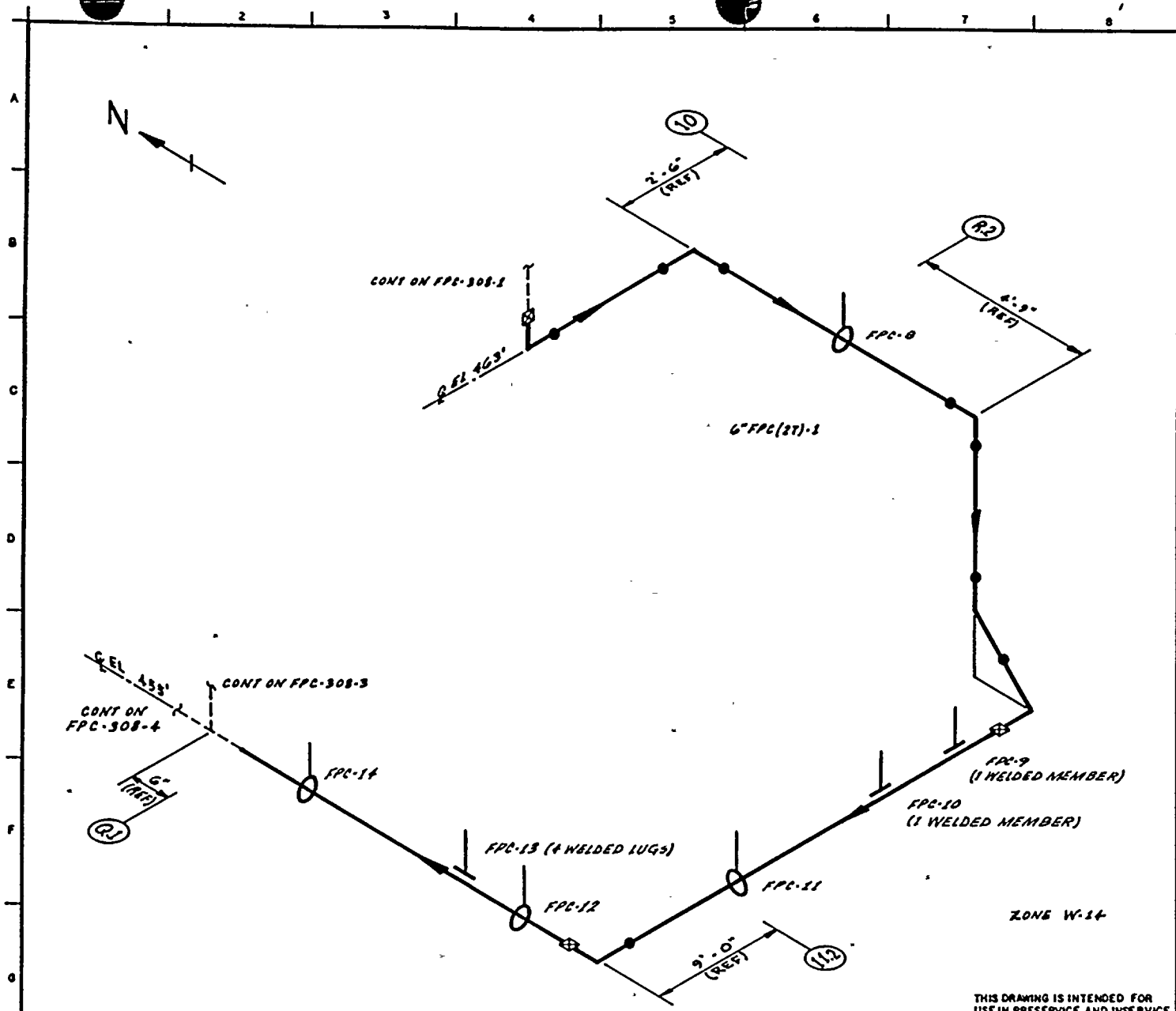

THIS DRAWING IS INTENDED FOR USE IN PRESERVICE AND INSERVICE INSPECTION PROGRAMS ONLY.

NOTES:

1. THIS DRAWING IDENTIFIES PIPING & COMPONENTS SUBJECT ONLY TO A VISUAL EXAM FOR (1) EVIDENCE OF LEAKAGE DURING SYSTEM PRESSURE OR OPERABILITY TESTS; (2) PRESSURE DECAY TESTS OF BURIED PIPING; & (3) LOSS OF SUPPORT CAPABILITY OR INADEQUATE RESTRAINT FOR SUPPORTS & HANGERS ON PIPING EXCEEDING 4" NOM. TESTS SHALL BE CONDUCTED PER ASME SECTION XI, ARTICLES IWA-5000 & IWD-2000.

REFERENCES:

BOVEE & CRAIL ISOMETRIC
FPC-778-4.6 REV 4

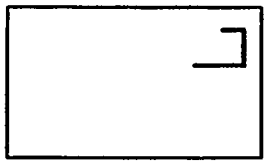

KEYPLAN
RADWASTE BLDG

QUALITY CLASS: 2	ASME CODE CLASS: 3	
ENGR: [illegible]	DRAWN: [illegible]	DATE: 5-1-79

WASHINGTON PUBLIC POWER SUPPLY SYSTEM
RICHLAND, WASHINGTON 99352

PIPING SYSTEM	NOM DIA (IN)	SCH	NOM WALL THK	MATERIAL SPECIFICATION	MATL TYPE	CAL BLOCK NO
6"FPC(2T)-1	6	STD	0.280	SA 106 GR B	CS	NA

WNP- 2
WELD & COMPONENT IDENTIFICATION DIAGRAM

TITLE: FPC-DM-1A TO FDR-TK-22

DWG NO: FPC-308-2 REV 1

NO	DATE	REVISION	BY	CHKD	APPVD
1	12-28-86	REVISED ALL HANGERS ADDED KEYPLAN	[illegible]	[illegible]	[illegible]
0	12-28-81	ISSUED FOR USE	[illegible]	[illegible]	[illegible]

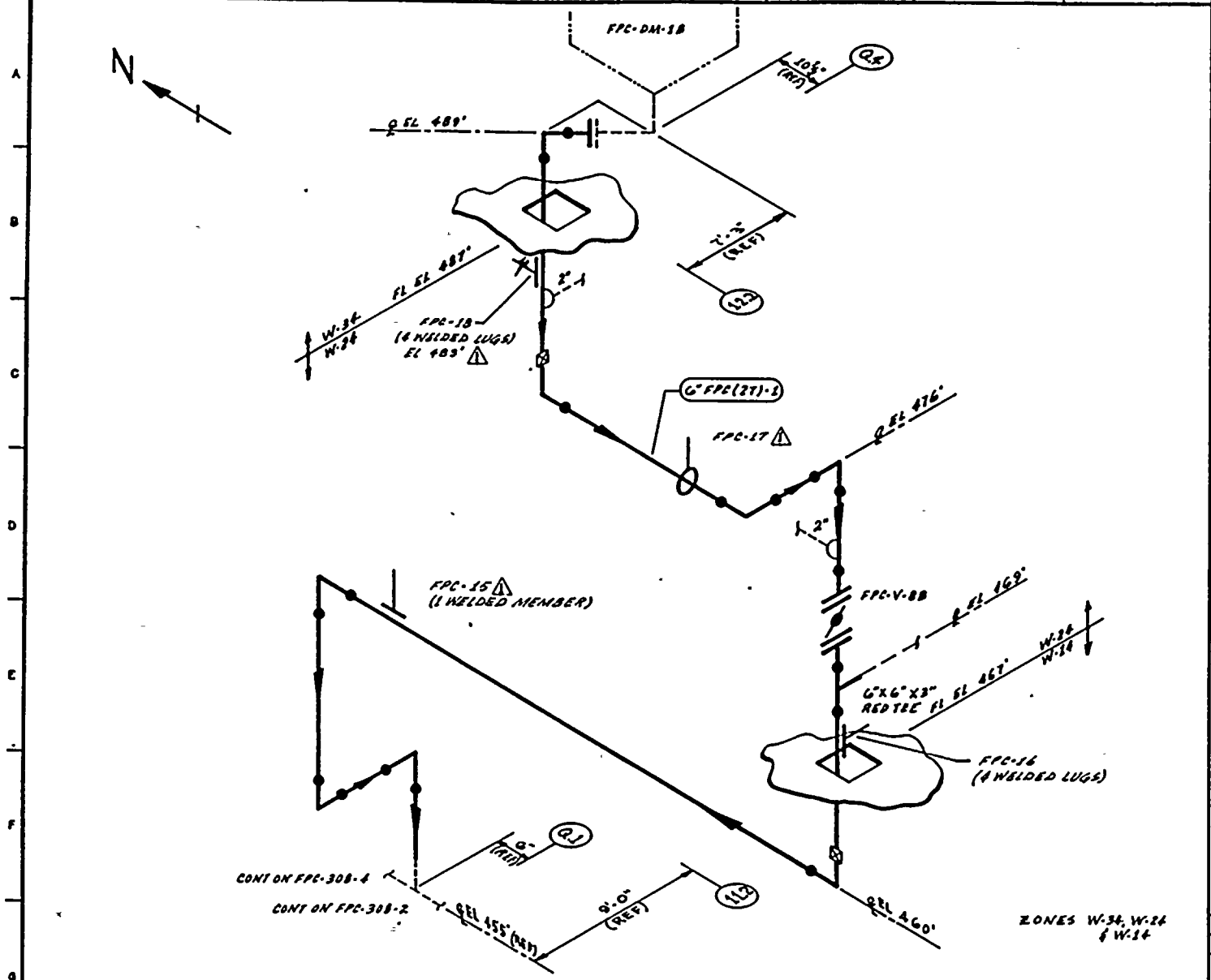

THIS DRAWING IS INTENDED FOR USE IN PRESERVICE AND INSERVICE INSPECTION PROGRAMS ONLY.

NOTES:

1. THIS DRAWING IDENTIFIES PIPING & COMPONENTS SUBJECT ONLY TO A VISUAL EXAM FOR (1) EVIDENCE OF LEAKAGE DURING SYSTEM PRESSURE OR OPERABILITY TESTS; (2) PRESSURE DECAY TESTS OF BURIED PIPING; & (3) LOSS OF SUPPORT CAPABILITY OR INADEQUATE RESTRAINT FOR SUPPORTS & HANGERS ON PIPING EXCEEDING 4" NOM. TESTS SHALL BE CONDUCTED PER ASME SECTION XI, ARTICLES IWA-5000 & IWD-2000.
2. FOR BRANCH PIPING 4" NOM OR LESS (CONN SHOWN IN DASHED LINES) EXTEND VISUAL LEAKAGE EXAM THROUGH THE OUTERMOST NORMALLY CLOSED NUCLEAR CLASS VALVE, OR UNTIL TRANSITION TO INSTRUMENT TUBING, UNLESS OTHERWISE NOTED.

REFERENCES:

BOYEE & CRAIL ISOMETRIC
FPC-778-10.13 REV 1

KEYPLAN

RADWASTE BLDG

QUALITY CLASS: 2	ASME CODE CLASS: 3
ENGR: [illegible]	DRAWN: [illegible] DATE: 5-1-79

WASHINGTON PUBLIC POWER SUPPLY SYSTEM
RICHLAND, WASHINGTON 99352

PIPING SYSTEM	NOM DIA (IN)	SCH	NOM WALL THK	MATERIAL SPECIFICATION	MATL TYPE	CAL BLOCK NO
6" FPC(27)-1	6	STD	0.280	SA 106 GR B	CN	NA

WNP-2
WELD & COMPONENT IDENTIFICATION DIAGRAM

TITLE: FPC-DM-1B TO FDR-TK-22

DWG NO: FPC-308-3 REV 1

NO	DATE	REVISION	BY	CHKD	APPVD
1	1-24-84	REVISED AS NOTED ADDED KEYPLAN	[illegible]	[illegible]	[illegible]
0	12-3-81	ISSUED FOR USE	[illegible]	[illegible]	[illegible]

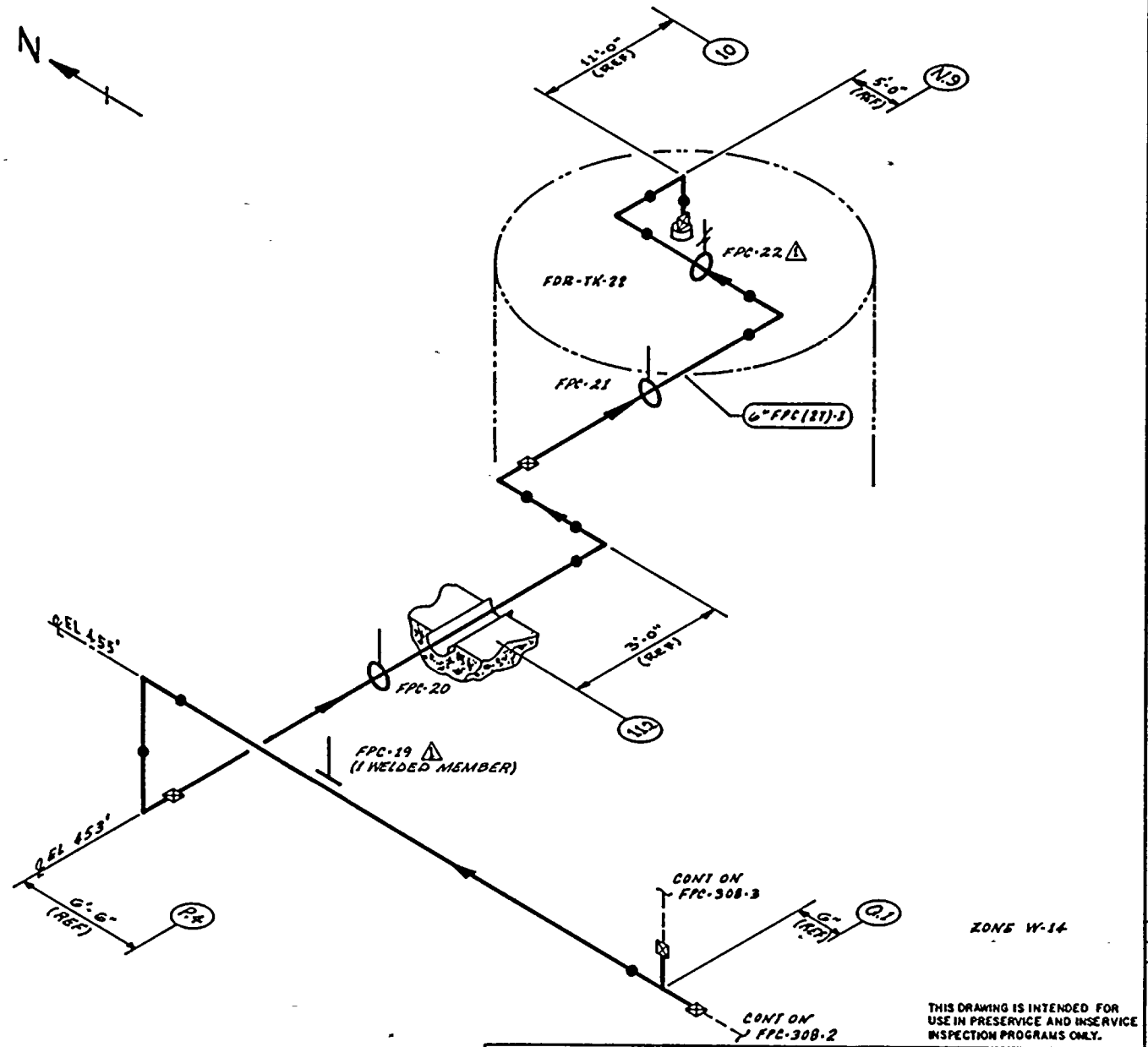

THIS DRAWING IS INTENDED FOR USE IN PRESERVICE AND INSERVICE INSPECTION PROGRAMS ONLY.

NOTES:

1. THIS DRAWING IDENTIFIES PIPING & COMPONENTS SUBJECT ONLY TO A VISUAL EXAM FOR (1) EVIDENCE OF LEAKAGE DURING SYSTEM PRESSURE OR OPERABILITY TESTS; (2) PRESSURE DECAY TESTS OF BURIED PIPING; & (3) LOSS OF SUPPORT CAPABILITY OR INADEQUATE RESTRAINT FOR SUPPORTS & HANGERS ON PIPING EXCEEDING 4" NOM. TESTS SHALL BE CONDUCTED PER ASME SECTION XI, ARTICLES IWA-5000 & IWD-2000.

REFERENCES:

BOYES & CRAIL ISOMETRIC
FPC-778-T.9 REV 3

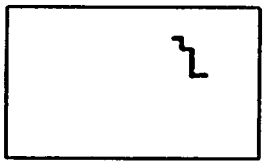

N

KEYPLAN

RADWASTE BLDG

PIPING SYSTEM	NOM DIA (IN)	SCH	NOM WALL THK	MATERIAL SPECIFICATION	MATL TYPE	CAL BLOCK NO
6"FPC(27)-1	6	STD	0.280	SA 106 GR B	CS	NA

NO	DATE	REVISION	BY	CHKD	APPVD
1	5-1-79	REVISED AS NOTED ADDED KEYPLAN	K.McA		TFN
0	12-28-78	ISSUED FOR USE			TFN

QUALITY CLASS: 2 | ASME CODE CLASS: 3

ENGR: | DRAWN: K. McA | DATE: 5-1-79

WASHINGTON PUBLIC POWER SUPPLY SYSTEM
RICHLAND, WASHINGTON 99352

WNP-2
WELD & COMPONENT IDENTIFICATION DIAGRAM

TITLE: FPC-DM-1A & 1B TO FDR-TK-22

DWG NO: FPC-308-4 REV 1

WNP-02
INTERVAL: PSI
PERIOD: NA
OUTAGE:
DRAWING NO. FPC-308

WASHINGTON PUBLIC POWER SUPPLY SYSTEM
PROGRAM PLAN AND SCHEDULE
SYSTEM OR COMPONENT: FPC(27)-1
DESCRIPTION: FPC-DM-1A/B TO TK-22

DATE 12/14/84

IDENT. NO.	DESCRIPTION	SECT. XI EXAM.	EXAM MTH.	PROCEDURE	CAL. BLOCK	INSERVICE REQ.	SCHEDULED OUTAGE	NOTES
FPC-5								
	SPRING	N/A	VT-3	303/8.2.17				
			VT-4	303/8.2.17				
FPC-6								
	STRUT	N/A	VT-3	303/8.2.17				
FPC-7								
	RIGID	N/A	VT-3	303/8.2.17				
FPC-8								
	STRUT	N/A	VT-3	303/8.2.17				
FPC-9								
	BOX	N/A	VT-3	303/8.2.17				
FPC-10								
	BOX	N/A	VT-3	303/8.2.17				
FPC-11								
	BOX	N/A	VT-3	303/8.2.17				
FPC-12								
	STRUT	N/A	VT-3	303/8.2.17				
FPC-13								
	BOX	N/A	VT-3	303/8.2.17				
FPC-14								
	STRUT	N/A	VT-3	303/8.2.17				
FPC-15								
	RIGID	N/A	VT-3	303/8.2.17				
FPC-16								
	RIGID	N/A	VT-3	303/8.2.17				
FPC-17								
	STRUT	N/A	VT-3	303/8.2.17				
FPC-18								
	SPRING	N/A	VT-3	303/8.2.17				
			VT-4	303/8.2.17				
FPC-19								
	BOX	N/A	VT-3	303/8.2.17				
FPC-20								
	STRUT	N/A	VT-3	303/8.2.17				

WNP-02
INTERVAL: PSI
PERIOD: NA
OUTAGE:
DRAWING NO. FPC-308

WASHINGTON PUBLIC POWER SUPPLY SYSTEM
PROGRAM PLAN AND SCHEDULE
SYSTEM OR COMPONENT: FPC(27)-1
DESCRIPTION: FPC-DM-1A/B TO TK-22

DATE 12/14/84

IDENT. NO.	DESCRIPTION	SECT. XI EXAM.	EXAM MTH.	PROCEDURE	CAL. BLOCK	INSERVICE REQ.	INSERVICE SCHEDULED OUTAGE	NOTES
FPC-21								
	STRUT	N/A	VT-3	303/8.2.17				
FPC-22								
	SPRING	N/A	VT-3	303/8.2.17				
			VT-4	303/8.2.17				
FPC-PB-308								
	FPC PRES BNDRY	N/A	VT-2	N/A				SEE NOTES #6 & #7.

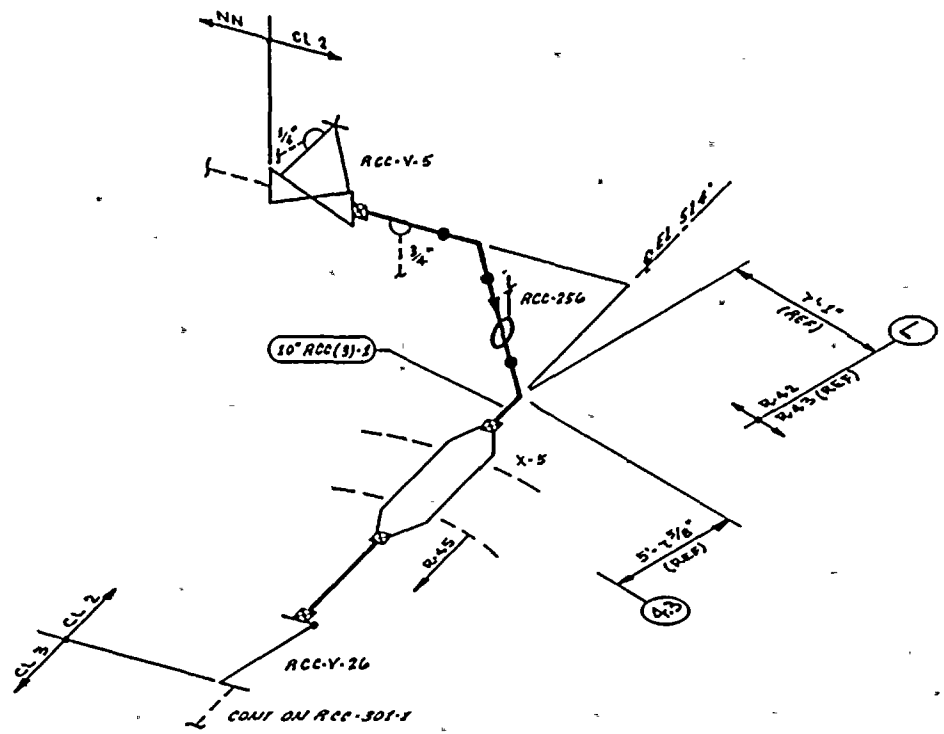

ZONE R-42 & R-45

THIS DRAWING IS INTENDED FOR USE IN PRESERVICE AND INSERVICE INSPECTION PROGRAMS ONLY.

PIPING SYSTEM	NOM DIA (IN)	SCH	NOM WALL THK	MATERIAL SPECIFICATION	MATL TYPE	CAL BLOCK NO
10" RCC(3)-1	10	STD	0.365	SA 106 GR B	CS	NA

NO	DATE	REVISION	BY	CHKD	APPVD
0	12-28-	ISSUED FOR USE	KAA		TRT

NOTES:

1. THIS DRAWING IDENTIFIES PIPING & COMPONENTS SUBJECT TO A VISUAL EXAM FOR EVIDENCE OF LEAKAGE DURING SYSTEM HYDRO OR OPERABILITY TESTS. TESTS SHALL BE CONDUCTED PER THE REQUIREMENTS OF ASME SECTION XI, PARAGRAPH IWA-5000.
2. FOR BRANCH PIPING 4" DIA OR LESS (CONN SHOWN IN DASHED LINES) EXTEND VISUAL EXAM THROUGH THE OUTERMOST NORMALLY CLOSED NUCLEAR CLASS VALVE, OR UNTIL TRANSITION TO INSTRUMENT TUBING, UNLESS OTHERWISE NOTED.
3. AT LOCATIONS WHERE LEAKAGE IS NORMALLY EXPECTED (E.G. VALVE STEM & PUMP SEAL LEAKOFF CONNECTIONS) VERIFY LEAKAGE COLLECTION SYSTEM OPERABILITY ONLY. NO HYDRO TEST OF COLLECTION SYSTEM IS REQUIRED.

REFERENCES:

BOVEE & CRAIL ISOMETRICS

RCC-949-10.12	REV 4
RCC-831-1.2	REV 3
RCC-949-10.12H	REV 3
RCC-831-1.2H	REV 0

QUALITY CLASS: 1 | ASME CODE CLASS: 2

ENGR: [illegible] | DRAWN: [illegible] | DATE: 5-2-79

WASHINGTON PUBLIC POWER SUPPLY SYSTEM
RICHLAND, WASHINGTON 99352

WNP-2
WELD & COMPONENT IDENTIFICATION DIAGRAM

TITLE:

DWG NO: RCC-201 | REV 0

WNP-02
INTERVAL: PSI
PERIOD: NA
OUTAGE:
DRAWING NO. RCC-201

WASHINGTON PUBLIC POWER SUPPLY SYSTEM
PROGRAM PLAN AND SCHEDULE
SYSTEM OR COMPONENT: RCC(3)-1
DESCRIPTION: RCC SUPPLY

IDENT. NO.	DESCRIPTION	SECT. XI EXAM.	EXAM MTH.	PROCEDURE	CAL. BLOCK	INSERVICE REQ.	INSERVICE SCHEDULED OUTAGE	NOTES
RCC-256								
	SPRING	N/A	VT-3	303/8.2.17				
			VT-4	303/8.2.17				
RCC-PB-201								
	RCC PRES BNDRY	N/A	VT-2	N/A				SEE NOTES #6 & #7.

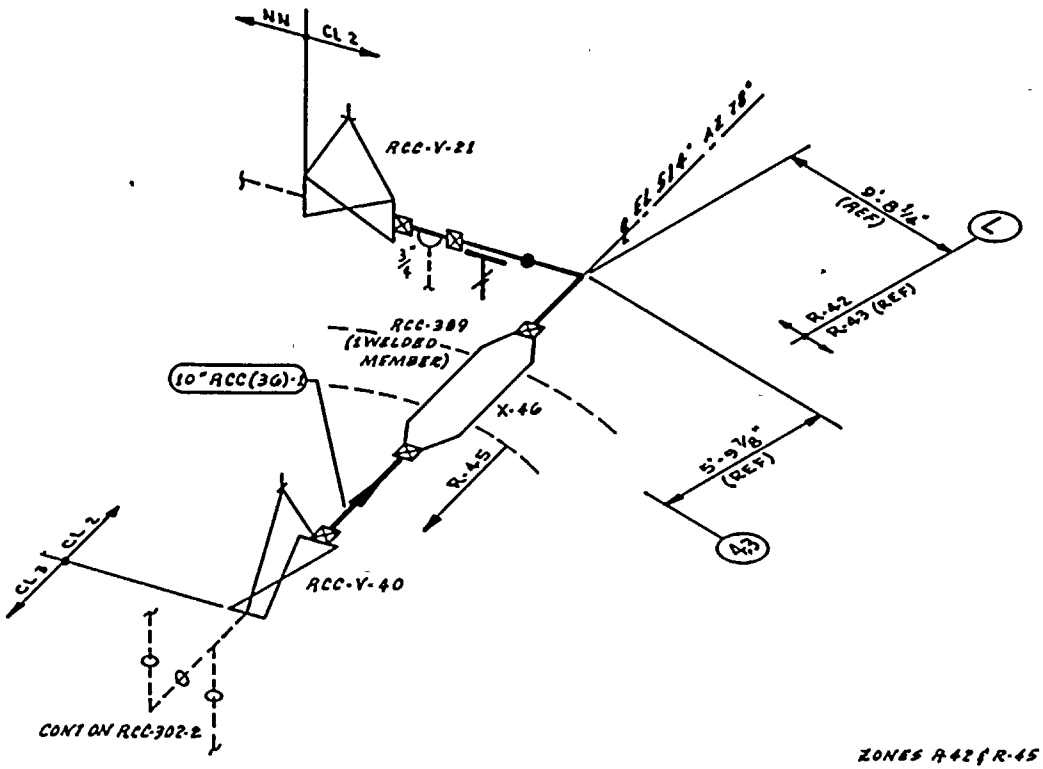

ZONES A-42 & R-45

NOTES:

1. THIS DRAWING IDENTIFIES PIPING & COMPONENTS SUBJECT TO A VISUAL EXAM FOR EVIDENCE OF LEAKAGE DURING SYSTEM HYDRO OR OPERABILITY TESTS. TESTS ARE TO BE CONDUCTED PER THE REQUIREMENTS OF ASME SECTION XI, PARAGRAPH IWA-5000.
2. FOR BRANCH PIPING 4" DIA OR LESS (CONN SHOWN IN DASHED LINES) EXTEND VISUAL LEAKAGE EXAM THROUGH THE OUTERMOST NORMALLY CLOSED NUCLEAR CLASS VALVE, OR UNTIL TRANSITION TO INSTRUMENT TUBING, UNLESS OTHERWISE NOTED.

REFERENCES:

BOVEE & CRAIL ISOMETRICS

RCC-830-30.32 REV 11
RCC-948-1.3 REV 10

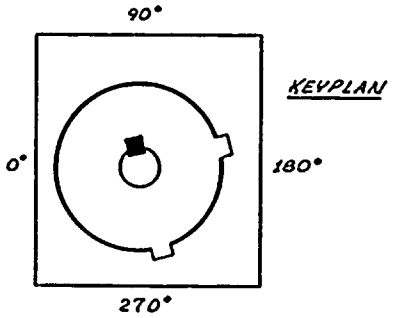

QUALITY CLASS: 1 | ASME CODE CLASS: 2
ENGR: [illegible] | DRAWN: K. McA | DATE: 5-2-79

THIS DRAWING IS INTENDED FOR USE IN PRESERVICE AND INSERVICE INSPECTION PROGRAMS ONLY.

WASHINGTON PUBLIC POWER SUPPLY SYSTEM
RICHLAND, WASHINGTON 99352

PIPING SYSTEM	NOM DIA (IN)	SCH	NOM WALL THK	MATERIAL SPECIFICATION	MATL TYPE	CAL BLOCK NO
10" RCC (3G)-1	10	STD	0.366	SA 106 GR B	CS	NA

WNP-2
WELD & COMPONENT IDENTIFICATION DIAGRAM

TITLE: RCC RETURN

DWG NO: RCC-202 REV 1

NO	DATE	REVISION	BY	CHKD	APPVD
1	1-24-8[illegible]	REVISED AS NOTED ADDED KEYPLAN	[illegible]	[illegible]	TFH
0	12-2-81	ISSUED FOR USE	[illegible]	[illegible]	TFH

WNP-02
INTERVAL: PSI
PERIOD: NA
OUTAGE:
DRAWING NO. RCC-202

WASHINGTON PUBLIC POWER SUPPLY SYSTEM
PROGRAM PLAN AND SCHEDULE
SYSTEM OR COMPONENT: RCC(36)-1
DESCRIPTION: RCC RETURN

DATE 12/14/84

IDENT. NO.	DESCRIPTION	SECT. XI EXAM.	EXAM MTH.	PROCEDURE	CAL. BLOCK	INSERVICE REQ.	SCHEDULED OUTAGE	NOTES
RCC-389								
	SPRING	N/A	VT-3	303/8.2.17				
			VT-4	303/8.2.17				
RCC-PB-202								
	RCC PRES BNDRY	N/A	VT-2	N/A				SEE NOTES #6 & #7.

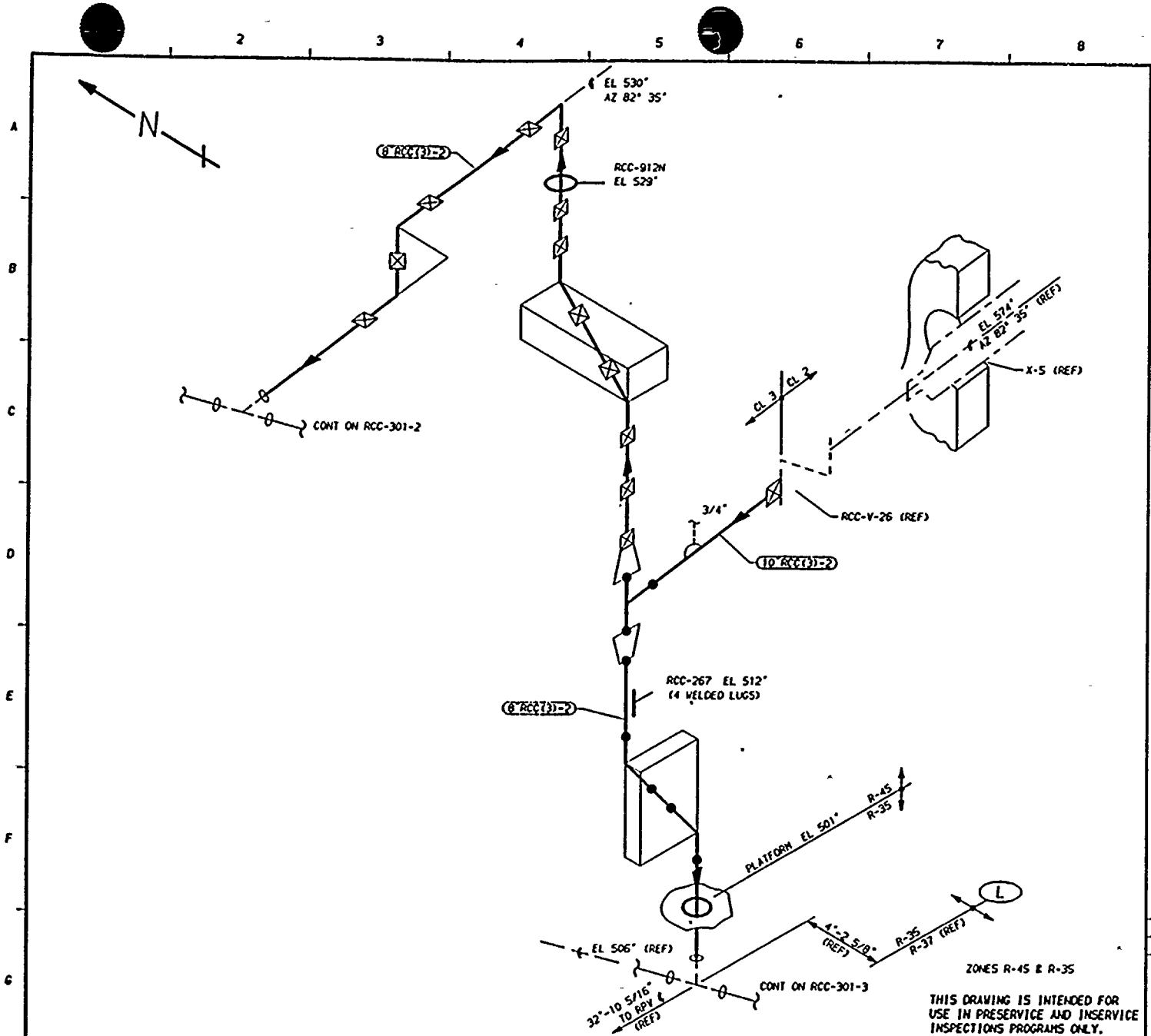

THIS DRAWING IS INTENDED FOR USE IN PRESERVICE AND INSERVICE INSPECTIONS PROGRAMS ONLY.

NOTES:

1. THIS DRAWING IDENTIFIES PIPING AND COMPONENTS SUBJECT ONLY TO A VISUAL EXAM FOR (1) EVIDENCE OF LEAKAGE DURING SYSTEM PRESSURE OR OPERABILITY TESTS, (2) PRESSURE DECAY TESTS OF BURIED PIPING, AND (3) LOSS OF SUPPORT CAPABILITY OR INADEQUATE RESTRAINT FOR SUPPORTS AND HANGERS ON PIPING EXCEEDING 4" NOM. TESTS SHALL BE CONDUCTED PER ASME SECTION XI, ARTICLES IWA-5000 AND IWD-2000.

2. FOR BRANCH PIPING 4" NOM. OR LESS (CONNECTION SHOWN IN DASHED LINES) EXTEND VISUAL LEAKAGE EXAM THROUGH THE OUTERMOST NORMALLY CLOSED NUCLEAR CLASS VALVE, OR UNTIL TRANSITION TO INSTRUMENT TUBING, UNLESS OTHERWISE NOTED.

REFERENCES:

151 - 225

BOVEE & CRAIL ISOMETRICS
RCC-831- 1.2 REV 9
RCC-831-23.26 REV 8

KEYPLAN

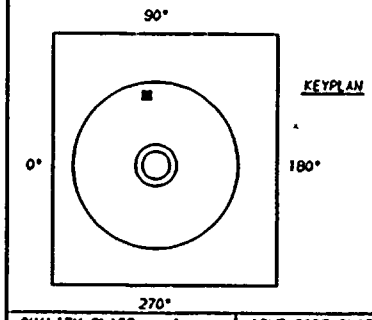

QUALITY CLASS: 1	ASME CODE CLASS: 3
ENGR: K-McANDREW	DRAWN: K-McA	DATE: 5-2-79

WASHINGTON PUBLIC POWER
SUPPLY SYSTEM
RICHLAND, WASHINGTON 99352

WNP-2
WELD & COMPONENT
IDENTIFICATION DIAGRAM

TITLE:
RCC SUPPLY TO RCC-P-1A

DWG NO: RCC-301-1 REV 1

PIPING SYSTEM	NOM DIA (IN)	SCH	NOM WALL THK	MATERIAL SPECIFICATION	MATL TYPE	CAL BLOCK NO
10"RCC(3)-2	10	STD	0.365	SA 106 GR B	CS	NA
8"RCC(3)-2	8	STD	0.322	SA 106 GR B	CS	NA

NO	DATE	REVISION	BY	CHKD	APVD
1	12-11-82	GENERAL UPDATE REDRAW	K-McA	DPR	TFH
0	12-2-81	ISSUED FOR USE	K-McA	DPR	TFH

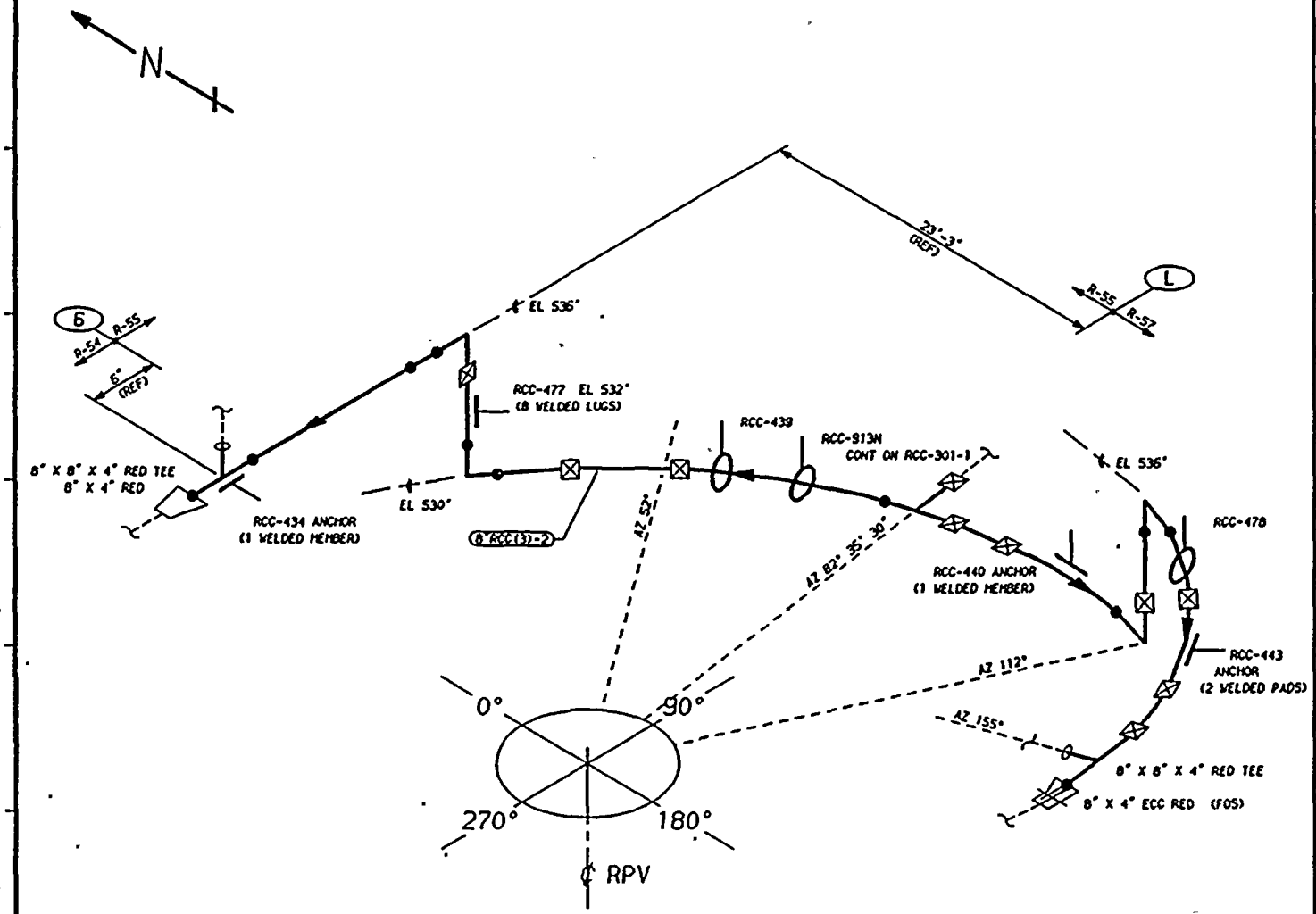

NOTES:

1. THIS DRAWING IDENTIFIES PIPING AND COMPONENTS SUBJECT ONLY TO A VISUAL EXAM FOR (1) EVIDENCE OF LEAKAGE DURING SYSTEM PRESSURE OR OPERABILITY TESTS, (2) PRESSURE DECAY TESTS OF BURIED PIPING, AND (3) LOSS OF SUPPORT CAPABILITY OR INADEQUATE RESTRAINT FOR SUPPORTS AND HANGERS ON PIPING EXCEEDING 4" NOM. TESTS SHALL BE CONDUCTED PER ASME SECTION XI, ARTICLES IWA-5000 AND IWD-2000.

2. FOR BRANCH PIPING 4" NOM. OR LESS (CONNECTION SHOWN IN DASHED LINES) EXTEND VISUAL LEAKAGE EXAM THROUGH THE OUTERMOST NORMALLY CLOSED NUCLEAR CLASS VALVE, OR UNTIL TRANSITION TO INSTRUMENT TUBING, UNLESS OTHERWISE NOTED.

REFERENCES:

ISI - 225

BOYEE & CRAIL ISOMETRICS
RCC-831-23.26 REV 8
RCC-831-38.40 REV 6

KEYPLAN

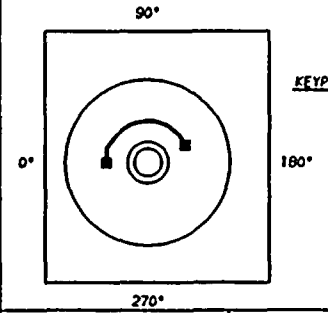

QUALITY CLASS: 1	ASME CODE CLASS: 3	
ENGR: K-McANDREW	DRAWN: K-McA	DATE: 5-3-79

ZONES R-54, R-55 & R-57

THIS DRAWING IS INTENDED FOR USE IN PRESERVICE AND INSERVICE INSPECTIONS PROGRAMS ONLY.

WASHINGTON PUBLIC POWER
SUPPLY SYSTEM
RICHLAND, WASHINGTON 99352

PIPING SYSTEM	NOM DIA (IN)	SCH	NOM WALL THK	MATERIAL SPECIFICATION	MATL TYPE	CAL BLOCK NO
8"RCC(3)-2	8	STD	0.322	SA 106 GR B	CS	NA

WNP-2
WELD & COMPONENT
IDENTIFICATION DIAGRAM

TITLE:
RCC SUPPLY TO RCC-P-1B

DWG NO: RCC-301-2 REV 1

NO	DATE	REVISION	BY	CHKD	APVD
1	1-28-84	GENERAL UPDATE REDRAWN	K-McA	DPR	TFH
0	12-2-81	ISSUED FOR USE	K-McA	DPR	TFH

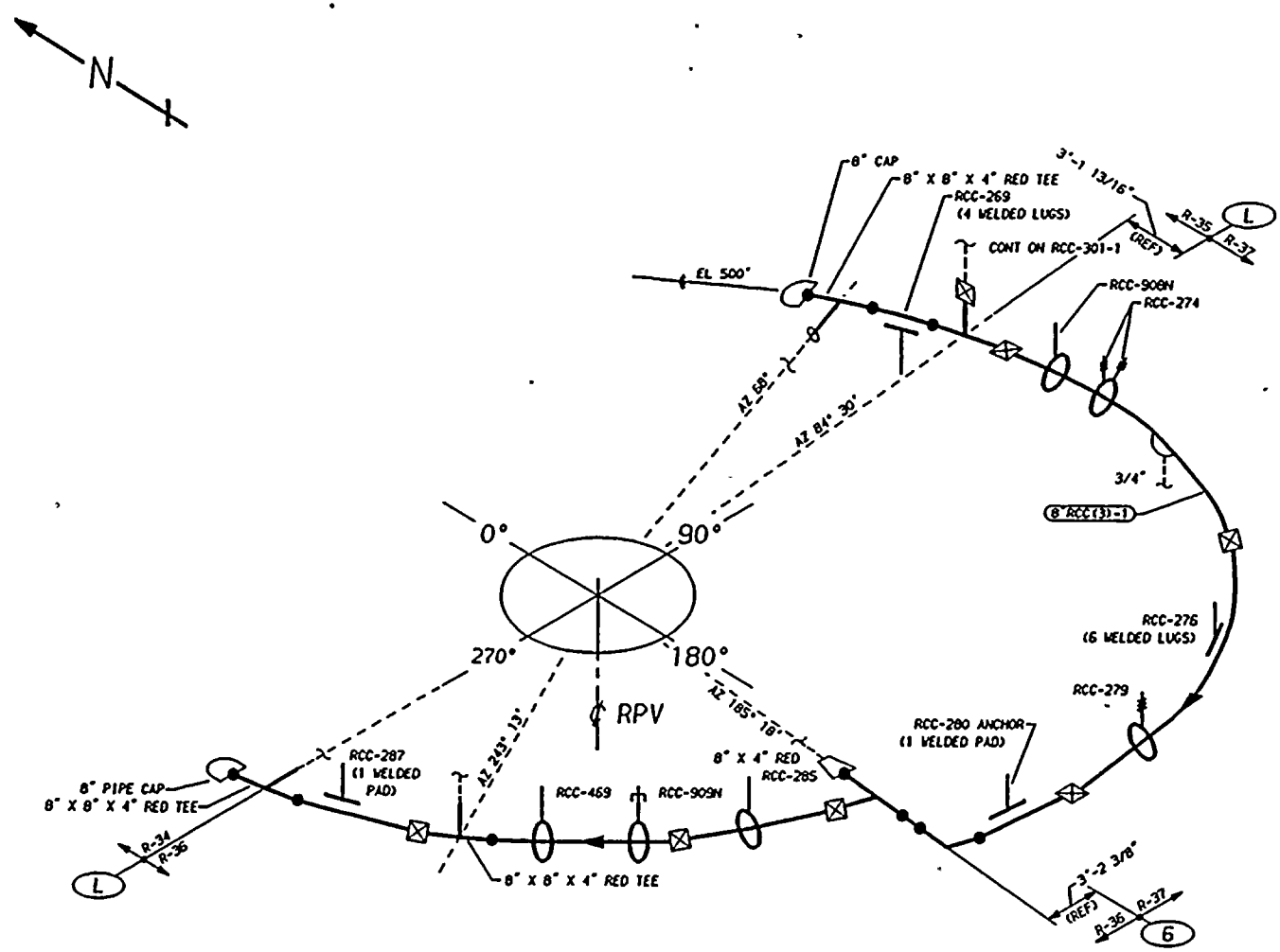

NOTES:

1. THIS DRAWING IDENTIFIES PIPING AND COMPONENTS SUBJECT ONLY TO A VISUAL EXAM FOR (1) EVIDENCE OF LEAKAGE DURING SYSTEM PRESSURE OR OPERABILITY TESTS, (2) PRESSURE DECAY TESTS OF BURIED PIPING, AND (3) LOSS OF SUPPORT CAPABILITY OR INADEQUATE RESTRAINT FOR SUPPORTS AND HANGERS ON PIPING EXCEEDING 4" NOM. TESTS SHALL BE CONDUCTED PER ASME SECTION XI, ARTICLES IWA-5000 AND IWD-2000.

2. FOR BRANCH PIPING 4" NOM. OR LESS (CONNECTION SHOWN IN DASHED LINES) EXTEND VISUAL LEAKAGE EXAM THROUGH THE OUTERMOST NORMALLY CLOSED NUCLEAR CLASS VALVE, OR UNTIL TRANSITION TO INSTRUMENT TUBING, UNLESS OTHERWISE NOTED.

REFERENCES:

ISI - 225

BOVEE & CRAIL ISOMETRICS
RCC-831- 3.5 REV 7
RCC-831- 6.10 REV 7
RCC-831-11.15 REV 6

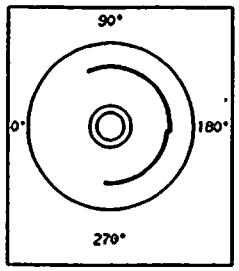

KEYPLAN

ZONES R-34, R-35, R-36 & R-37

THIS DRAWING IS INTENDED FOR USE IN PRESERVICE AND INSERVICE INSPECTIONS PROGRAMS ONLY.

QUALITY CLASS: 1	ASME CODE CLASS: 3	
ENGR: K-McANDREW	DRAWN: K-McA	DATE: 5-3-79

WASHINGTON PUBLIC POWER
SUPPLY SYSTEM
RICHLAND, WASHINGTON 99352

PIPING SYSTEM	NOM DIA (IN)	SCH	NOM WALL THK	MATERIAL SPECIFICATION	MATL TYPE	CAL BLOCK NO
8"RCC(3)-1	8	STD	0.322	SA 106 GR B	CS	NA

WNP-2
WELD & COMPONENT
IDENTIFICATION DIAGRAM

TITLE:
RCC SUPPLY INSIDE CONTAINMENT

DWG NO: RCC-301-3 REV 1

NO	DATE	REVISION	BY	CHKD	APVD
1	1-22-81	GENERAL UP-DATE REDRAWN	K-McA	DPR	TFH
0	12-2-81	ISSUED FOR USE	K-McA	DPR	TFH

WNP-02
INTERVAL: PSI
PERIOD: NA
OUTAGE:
DRAWING NO. RCC-301

WASHINGTON PUBLIC POWER SUPPLY SYSTEM
PROGRAM PLAN AND SCHEDULE
SYSTEM OR COMPONENT: RCC(3)-2
DESCRIPTION: RCC SUPPLY TO P-1A/B

IDENT. NO.	DESCRIPTION	SECT. XI EXAM.	EXAM MTH.	PROCEDURE	CAL. BLOCK	INSERVICE REQ.	INSERVICE SCHEDULED OUTAGE	NOTES
RCC-912N								
	STRUT	N/A	VT-3	303/8.2.17				
RCC-267								
	SPRING	N/A	VT-3	303/8.2.17				
			VT-4	303/8.2.17				
RCC-913N								
	STRUT	N/A	VT-3	303/8.2.17				
RCC-439								
	STRUT	N/A	VT-3	303/8.2.17				
RCC-477								
	STRUT	N/A	VT-3	303/8.2.17				
RCC-434								
	ANCHOR	N/A	VT-3	303/8.2.17				
RCC-440								
	ANCHOR	N/A	VT-3	303/8.2.17				
RCC-478								
	STRUT	N/A	VT-3	303/8.2.17				
RCC-443								
	ANCHOR	N/A	VT-3	303/8.2.17				
RCC-269								
	BOX	N/A	VT-3	303/8.2.17				
RCC-908N								
	BOX	N/A	VT-3	303/8.2.17				
RCC-274								
	SPRING	N/A	VT-3	303/8.2.17				
			VT-4	303/8.2.17				
RCC-276								
	BOX	N/A	VT-3	303/8.2.17				
RCC-279								
	SPRING	N/A	VT-3	303/8.2.17				
			VT-4	303/8.2.17				
RCC-280								
	ANCHOR	N/A	VT-3	303/8.2.17				

WNP-02
INTERVAL: PSI
PERIOD: NA
OUTAGE:
DRAWING NO. RCC-301

WASHINGTON PUBLIC POWER SUPPLY SYSTEM
PROGRAM PLAN AND SCHEDULE
SYSTEM OR COMPONENT: RCC(3)-2
DESCRIPTION: RCC SUPPLY TO P-1A/B

DATE 12/14/84

IDENT. NO.	DESCRIPTION	SECT. XI EXAM.	EXAM MTH.	PROCEDURE	CAL. BLOCK	INSERVICE REQ.	INSERVICE SCHEDULED OUTAGE	NOTES
RCC-285								
	STRUT	N/A	VT-3	303/8.2.17				
RCC-909N								
	PSA-3 SNUBBER	N/A	VT-3	303/8.2.17				S/N
			VT-4	303/8.2.17				S/N
RCC-469								
	STRUT	N/A	VT-3	303/8.2.17				
RCC-287								
	ANCHOR	N/A	VT-3	303/8.2.17				
			VT-4	303/8.2.17				

WNP-02
INTERVAL: PSI
PERIOD: NA
OUTAGE:
DRAWING NO. RCC-301

WASHINGTON PUBLIC POWER SUPPLY SYSTEM
PROGRAM PLAN AND SCHEDULE
SYSTEM OR COMPONENT: +QC I SN
DESCRIPTION: MISC SNUBBERS

DATE 12/14/84

IDENT. NO.	DESCRIPTION	SECT. XI EXAM.	EXAM MTH.	PROCEDURE	CAL. BLOCK	INSERVICE REQ.	INSERVICE SCHEDULED OUTAGE	NOTES
RCC-911N	PSA-1 SNUBBER	N/A	VT-3	303/8.2.17				S/N 22369
			VT-4	303/8.2.17				S/N 22369

WNP-02
INTERVAL: PSI
PERIOD: NA
OUTAGE:
DRAWING NO. RCC-301

WASHINGTON PUBLIC POWER SUPPLY SYSTEM
PROGRAM PLAN AND SCHEDULE
SYSTEM OR COMPONENT: RCC(3)-2
DESCRIPTION: RCC SUPPLY TO P-1A/B

DATE 12/14/84

IDENT. NO.	DESCRIPTION	SECT. XI EXAM.	EXAM MTH.	PROCEDURE	CAL. BLOCK	INSERVICE REQ.	SCHEDULED OUTAGE	NOTES
RCC-PB-301	RCC PRES BNDRY	N/A	VT-2	N/A				SEE NOTES #6 & #7.

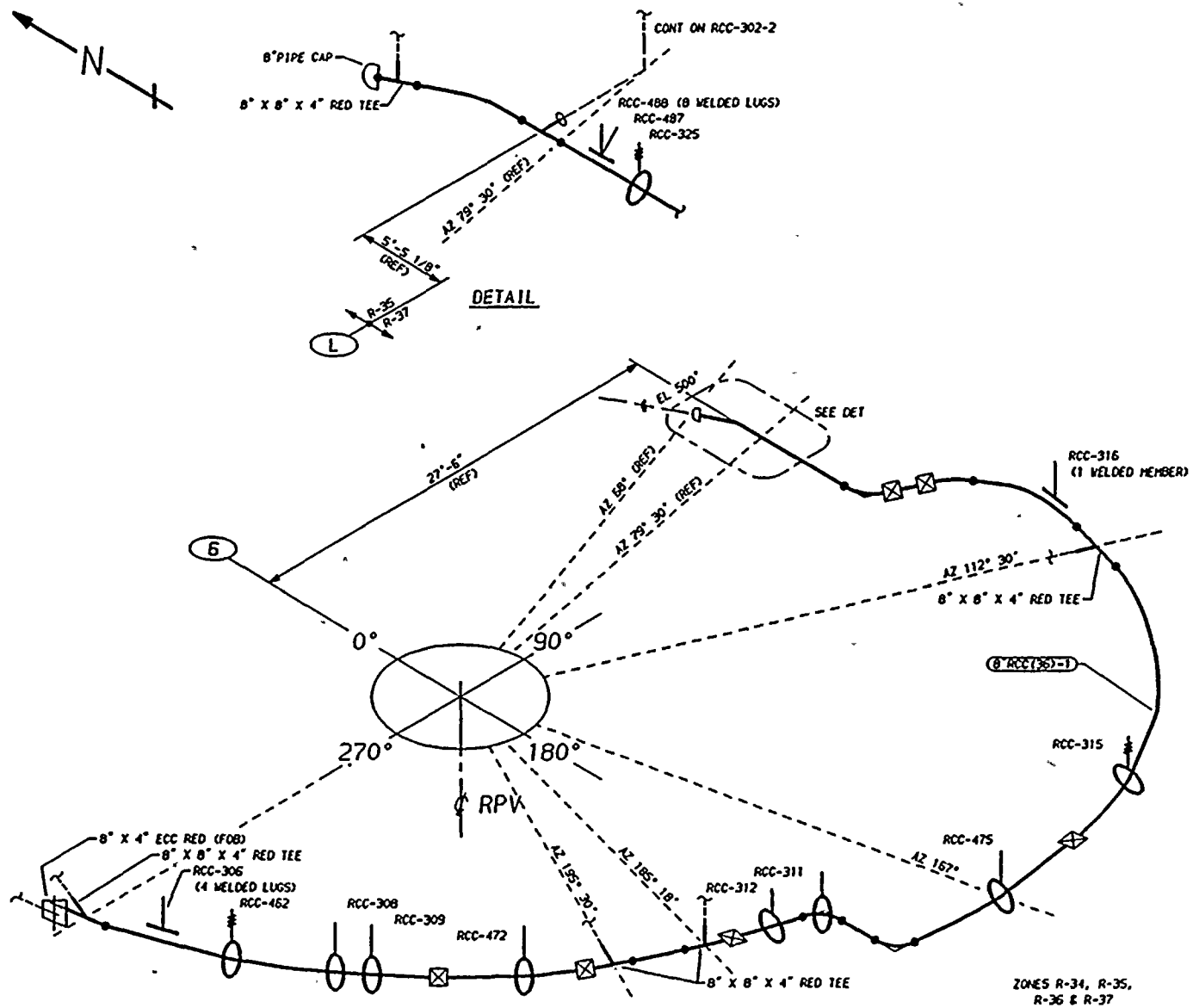

ZONES R-34, R-35, R-36 & R-37

THIS DRAWING IS INTENDED FOR USE IN PRESERVICE AND INSERVICE INSPECTIONS PROGRAMS ONLY.

NOTES:

1. THIS DRAWING IDENTIFIES PIPING AND COMPONENTS SUBJECT ONLY TO A VISUAL EXAM FOR (1) EVIDENCE OF LEAKAGE DURING SYSTEM PRESSURE OR OPERABILITY TESTS, (2) PRESSURE DECAY TESTS OF BURIED PIPING, AND (3) LOSS OF SUPPORT CAPABILITY OR INADEQUATE RESTRAINT FOR SUPPORTS AND HANGERS ON PIPING EXCEEDING 4" NOM. TESTS SHALL BE CONDUCTED PER ASME SECTION XI, ARTICLES IWA-5000 AND IWD-2000.

2. FOR BRANCH PIPING 4" NOM. OR LESS (CONNECTION SHOWN IN DASHED LINES) EXTEND VISUAL LEAKAGE EXAM THROUGH THE OUTERMOST NORMALLY CLOSED NUCLEAR CLASS VALVE, OR UNTIL TRANSITION TO INSTRUMENT TUBING, UNLESS OTHERWISE NOTED.

REFERENCES:

151 - 225

BOVEE & CRAIL ISOMETRICS
RCC-830-12.13 REV 5
RCC-830-20.21 REV 7

KEYPLAN

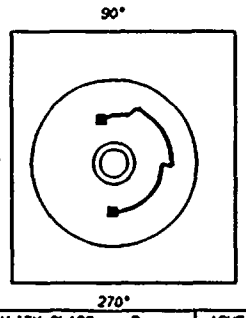

QUALITY CLASS: 2	ASME CODE CLASS: 3	
ENGR: K-McANDREW	DRAWN: K-McA	DATE: 5-4-79

WASHINGTON PUBLIC POWER
SUPPLY SYSTEM
RICHLAND, WASHINGTON 99352

WNP-2
WELD & COMPONENT
IDENTIFICATION DIAGRAM

TITLE:
RCC RETURN HEADER INSIDE CONTAINMENT

DWG NO: RCC-302-1 REV 1

PIPING SYSTEM	NOM DIA (IN)	SCH	NOM WALL THK	MATERIAL SPECIFICATION	MATL TYPE	CAL BLOCK NO
8"RCC(36)-1	8	STD	0.322	SA 106 GR B	CS	NA

NO	DATE	REVISION	BY	CHKD	APVD
1	1-24-84	GENERAL UPDATE REDRAWN	K-McA	DPR	TFH
0	12-2-81	ISSUED FOR USE	K-McA	DPR	TFH

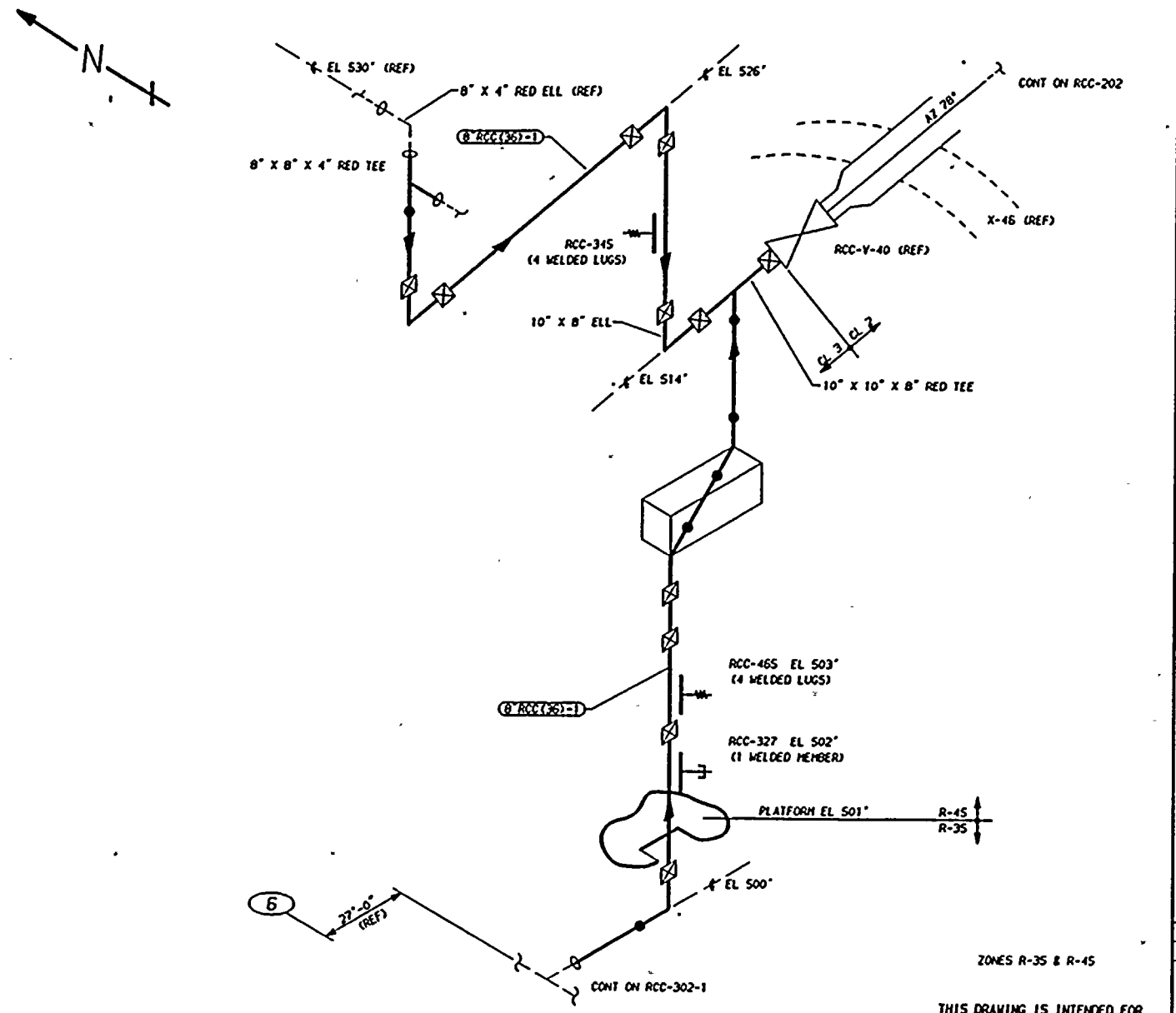

ZONES R-35 & R-45

THIS DRAWING IS INTENDED FOR USE IN PRESERVICE AND INSERVICE INSPECTIONS PROGRAMS ONLY.

NOTES:

1. THIS DRAWING IDENTIFIES PIPING AND COMPONENTS SUBJECT ONLY TO A VISUAL EXAM FOR (1) EVIDENCE OF LEAKAGE DURING SYSTEM PRESSURE OR OPERABILITY TESTS, (2) PRESSURE DECAY TESTS OF BURIED PIPING, AND (3) LOSS OF SUPPORT CAPABILITY OR INADEQUATE RESTRAINT FOR SUPPORTS AND HANGERS ON PIPING EXCEEDING 4" NOM. TESTS SHALL BE CONDUCTED PER ASME SECTION XI, ARTICLES IWA-5000 AND IWD-2000.

2. FOR BRANCH PIPING 4" NOM. OR LESS (CONNECTION SHOWN IN DASHED LINES) EXTEND VISUAL LEAKAGE EXAM THROUGH THE OUTERMOST NORMALLY CLOSED NUCLEAR CLASS VALVE, OR UNTIL TRANSITION TO INSTRUMENT TUBING, UNLESS OTHERWISE NOTED.

REFERENCES:

ISI - 225

BOYEE & CRAIL ISOMETRICS
RCC-830-30.32 REV 11
RCC-830-37.39 REV 9

KEYPLAN

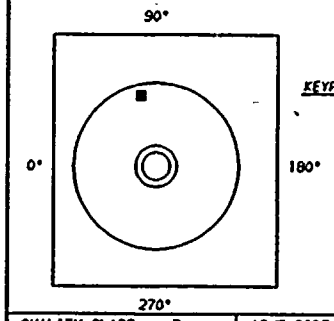

QUALITY CLASS: 2	ASME CODE CLASS: 3	
ENGR: K-McANDREW	DRAWN: K-McA	DATE: 5-4-79

WASHINGTON PUBLIC POWER
SUPPLY SYSTEM
RICHLAND, WASHINGTON 99352

WNP-2
WELD & COMPONENT
IDENTIFICATION DIAGRAM

TITLE:
RCC RETURN INSIDE CONTAINMENT

DWG NO: RCC-302-2 REV 1

PIPING SYSTEM	NOM DIA (IN)	SCH	NOM WALL THK	MATERIAL SPECIFICATION	MATL TYPE	CAL BLOCK NO
8"RCC(36)-1	8	STD	0.322	SA 106 GR B	CS	NA

NO	DATE	REVISION	BY	CHKD	APVD
1	1-27-86	GENERAL UPDATE REDRAWN	KJS	BKR	TFH
0	12-2-81	ISSUED FOR USE	K-McA	DPR	TFH

WNP-02
INTERVAL: PSI
PERIOD: NA
OUTAGE:
DRAWING NO. RCC-302

WASHINGTON PUBLIC POWER SUPPLY SYSTEM
PROGRAM PLAN AND SCHEDULE
SYSTEM OR COMPONENT: RCC(36)-1
DESCRIPTION: RCC RETURN HEADER

DATE 12/14/84

IDENT. NO.	DESCRIPTION	SECT. XI EXAM.	EXAM MTH.	PROCEDURE	CAL. BLOCK	INSERVICE REQ.	INSERVICE SCHEDULED OUTAGE	NOTES
RCC-306								
	BOX	N/A	VT-3	303/8.2.17				
RCC-462								
	SPRING	N/A	VT-3	303/8.2.17				
			VT-4	303/8.2.17				
RCC-308								
	STRUT	N/A	VT-3	303/8.2.17				
RCC-309								
	STRUT	N/A	VT-3	303/8.2.17				
RCC-472								
	STRUT	N/A	VT-3	303/8.2.17				
RCC-312								
	STRUT	N/A	VT-3	303/8.2.17				
RCC-311								
	STRUT	N/A	VT-3	303/8.2.17				
RCC-475								
	STRUT	N/A	VT-3	303/8.2.17				
RCC-315								
	SPRING	N/A	VT-3	303/8.2.17				
			VT-4	303/8.2.17				
RCC-316								
	ANCHOR	N/A	VT-3	303/8.2.17				
RCC-325								
	SPRING	N/A	VT-3	303/8.2.17				
			VT-4	303/8.2.17				
RCC-487								
	STRUT	N/A	VT-3	303/8.2.17				
RCC-488								
	BOX	N/A	VT-3	303/8.2.17				
RCC-345								
	SPRING	N/A	VT-3	303/8.2.17				
			VT-4	303/8.2.17				

WNP-02
INTERVAL: PSI
PERIOD: NA
OUTAGE:
DRAWING NO. RCC-302

WASHINGTON PUBLIC POWER SUPPLY SYSTEM
PROGRAM PLAN AND SCHEDULE
SYSTEM OR COMPONENT: RCC(36)-1
DESCRIPTION: RCC RETURN HEADER

DATE 12/14/84

IDENT. NO.	DESCRIPTION	SECT. XI EXAM.	EXAM MTH.	PROCEDURE	CAL. BLOCK	INSERVICE REQ.	SCHEDULED OUTAGE	NOTES
RCC-465								
	SPRING	N/A	VT-3	303/8.2.17				
			VT-4	303/8.2.17				
RCC-327								
	SPRING	N/A	VT-3	303/8.2.17				
			VT-4	303/8.2.17				
RCC-PB-302								
	RCC PRES BNDRY	N/A	VT-2	N/A				SEE NOTES #6 & #7.

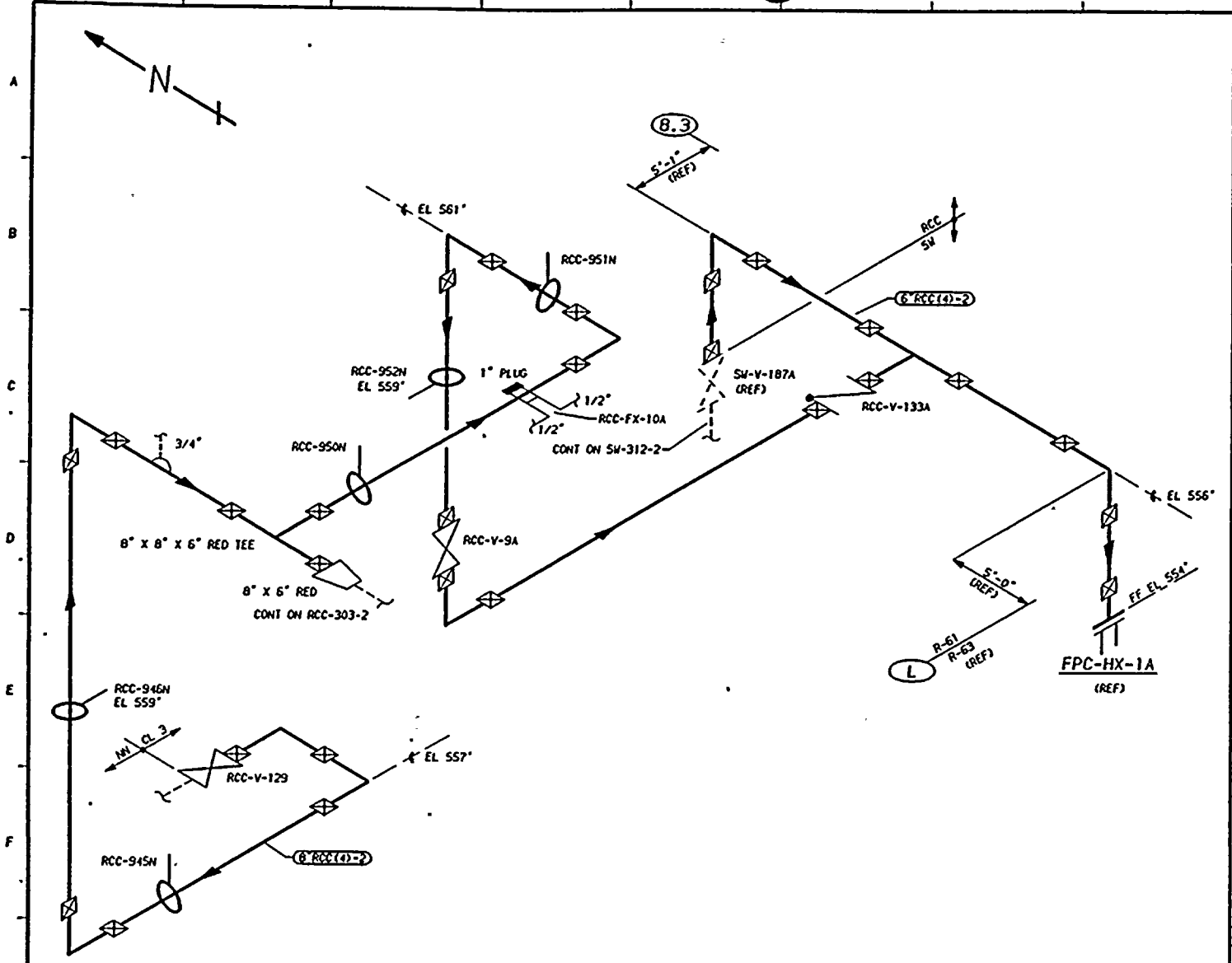

NOTES:

1. THIS DRAWING IDENTIFIES PIPING AND COMPONENTS SUBJECT ONLY TO A VISUAL EXAM FOR (1) EVIDENCE OF LEAKAGE DURING SYSTEM PRESSURE OR OPERABILITY TESTS, (2) PRESSURE DECAY TESTS OF BURIED PIPING, AND (3) LOSS OF SUPPORT CAPABILITY OR INADEQUATE RESTRAINT FOR SUPPORTS AND HANGERS ON PIPING EXCEEDING 4" NOM. TESTS SHALL BE CONDUCTED PER ASME SECTION XI, ARTICLES IWA-5000 AND IWD-2000.

2. FOR BRANCH PIPING 4" NOM. OR LESS (CONNECTION SHOWN IN DASHED LINES) EXTEND VISUAL LEAKAGE EXAM THROUGH THE OUTERMOST NORMALLY CLOSED NUCLEAR CLASS VALVE, OR UNTIL TRANSITION TO INSTRUMENT TUBING, UNLESS OTHERWISE NOTED.

REFERENCES:

ISI - 225

BOVEE & CRAIL ISOMETRIC
RCC-950-8.10 REV 14

KEYPLAN

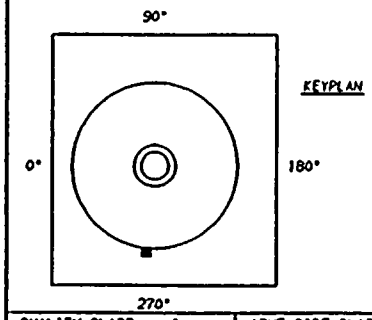

QUALITY CLASS: 1	ASME CODE CLASS: 3
ENGR: K-McANDREW	DRAWN: K-McA	DATE: 11-18-83

ZONE R-61

THIS DRAWING IS INTENDED FOR USE IN PRESERVICE AND INSERVICE INSPECTIONS PROGRAMS ONLY.

WASHINGTON PUBLIC POWER
SUPPLY SYSTEM
RICHLAND, WASHINGTON 99352

WNP-2
WELD & COMPONENT
IDENTIFICATION DIAGRAM

TITLE:
RCC SUPPLY TO FPC-HX-1A

DWG NO: RCC-303-1 REV 0

PIPING SYSTEM	NOM DIA (IN)	SCH	NOM WALL THK	MATERIAL SPECIFICATION	MATL TYPE	CAL BLOCK NO
6"RCC(4)-2	6	STD	0.280	SA 106 GR B	CS	NA
8"RCC(4)-2	8	STD	0.322	SA 106 GR B	CS	NA

NO	DATE	REVISION	BY	CHKD	APVD
0	11-18-83	ISSUED FOR USE			

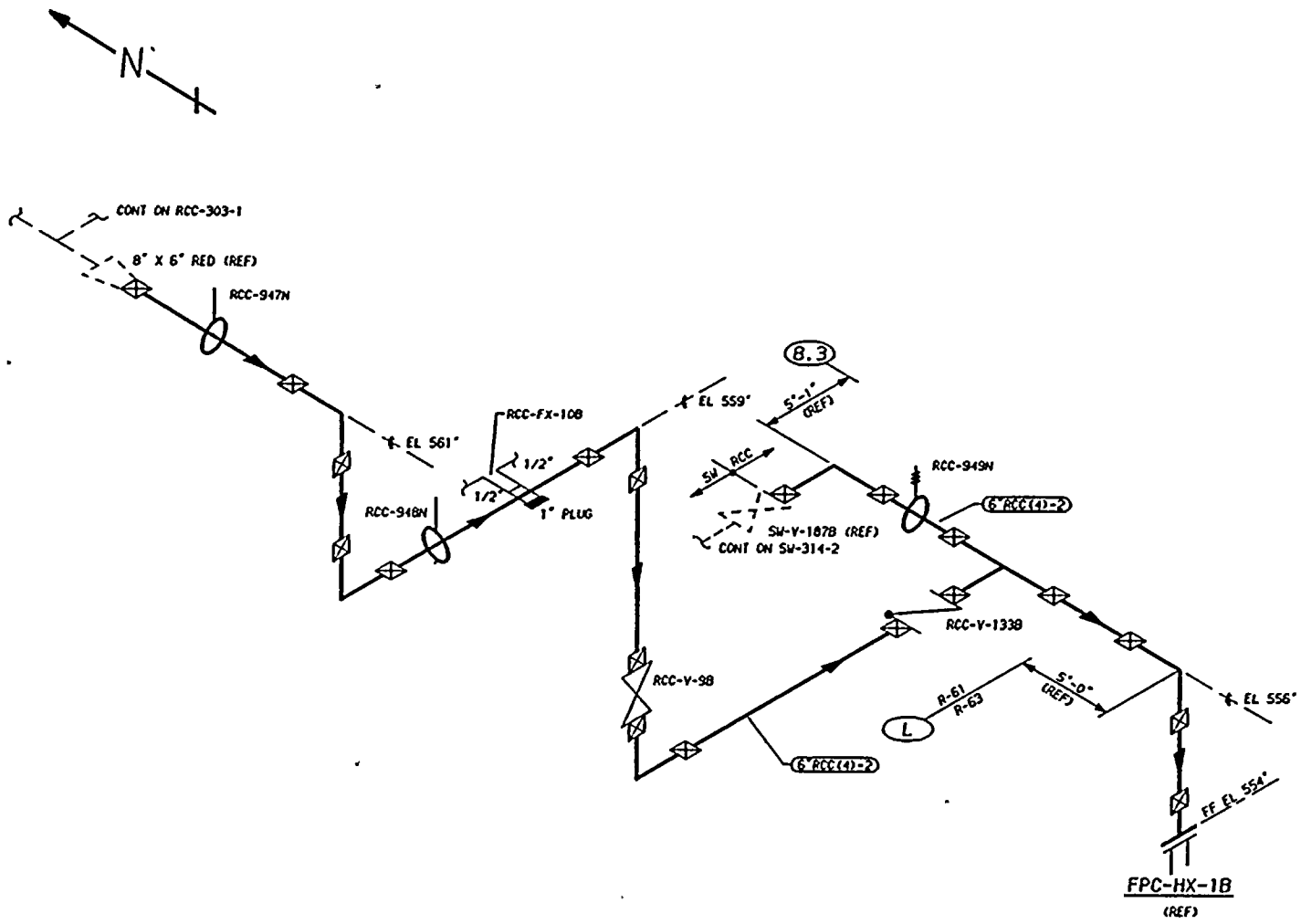

NOTES:

1. THIS DRAWING IDENTIFIES PIPING AND COMPONENTS SUBJECT ONLY TO A VISUAL EXAM FOR (1) EVIDENCE OF LEAKAGE DURING SYSTEM PRESSURE OR OPERABILITY TESTS; (2) PRESSURE DECAY TESTS OF BURIED PIPING; AND (3) LOSS OF SUPPORT CAPABILITY OR INADEQUATE RESTRAINT FOR SUPPORTS AND HANGERS ON PIPING EXCEEDING 4" NOM. TESTS SHALL BE CONDUCTED PER ASME SECTION XI, ARTICLES IWA-5000 AND IWD-2000.

2. FOR BRANCH PIPING 4" NOM. OR LESS (CONNECTION SHOWN IN DASHED LINES) EXTEND VISUAL LEAKAGE EXAM THROUGH THE OUTERMOST NORMALLY CLOSED NUCLEAR CLASS VALVE, OR UNTIL TRANSITION TO INSTRUMENT TUBING, UNLESS OTHERWISE NOTED.

REFERENCES:

ISI - 225

BOVEE & CRAIL ISOMETRIC
RCC-950-8,10 REV 14

KEYPLAN

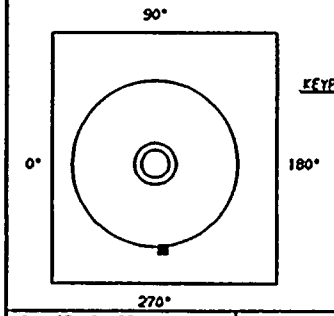

QUALITY CLASS: 1	ASME CODE CLASS: 3
ENGR: K-McANDREW	DRAWN: K-McA	DATE: 11-18-83

ZONES R-61 & R-63

THIS DRAWING IS INTENDED FOR USE IN PRESERVICE AND INSERVICE INSPECTIONS PROGRAMS ONLY.

WASHINGTON PUBLIC POWER
SUPPLY SYSTEM
RICHLAND, WASHINGTON 99352

WNP-2
WELD & COMPONENT
IDENTIFICATION DIAGRAM

TITLE:
RCC SUPPLY TO FPC-HX-1B

DWG NO: RCC-303-2 | REV 0

PIPING SYSTEM	NOM DIA (IND)	SCH	NOM WALL THK	MATERIAL SPECIFICATION	MATL TYPE	CAL BLOCK NO
6"RCC(4)-2	6	STD	0.280	SA 106 GR B	CS	NA

NO	DATE	REVISION	BY	CHKD	APVD
0	12/14/83	ISSUED FOR USE	[illegible]	DCR	TFK

WNP-02
INTERVAL: PSI
PERIOD: NA
OUTAGE:
DRAWING NO. RCC-303

WASHINGTON PUBLIC POWER SUPPLY SYSTEM
PROGRAM PLAN AND SCHEDULE
SYSTEM OR COMPONENT: RCC(4)-2
DESCRIPTION: RCC SUPPLY-FPC-HX-1A

DATE 12/14/84

IDENT. NO.	DESCRIPTION	SECT. XI EXAM.	EXAM MTH.	PROCEDURE	CAL. BLOCK	INSERVICE REQ.	INSERVICE SCHEDULED OUTAGE	NOTES
RCC-945N	RIGID	N/A	VT-3	303/8.2.17				
RCC-946N	RIGID	N/A	VT-3	303/8.2.17				
RCC-950N	RIGID	N/A	VT-3	303/8.2.17				
RCC-951N	RIGID	N/A	VT-3	303/8.2.17				
RCC-952N	RIGID	N/A	VT-3	303/8.2.17				
RCC-947N	RIGID	N/A	VT-3	303/8.2.17				
RCC-948N	RIGID	N/A	VT-3	303/8.2.17				
RCC-949N	SPRING	N/A	VT-3	303/8.2.17				
			VT-4	303/8.2.17				
RCC-PB-303	RCC PRES BNDRY	N/A	VT-2	N/A				SEE NOTES #6 & #7.

WNP-02
INTERVAL: PSI
PERIOD: NA
OUTAGE:
DRAWING NO. RCC-304

WASHINGTON PUBLIC POWER SUPPLY SYSTEM
PROGRAM PLAN AND SCHEDULE
SYSTEM OR COMPONENT: RRC(4)-2
DESCRIPTION: RCC RTN FROM HX-1A

DATE 12/14/84

IDENT. NO.	DESCRIPTION	SECT. XI EXAM.	EXAM MTH.	PROCEDURE	CAL. BLOCK	INSERVICE REQ.	INSERVICE SCHEDULED OUTAGE	NOTES
RCC-941N								
	RIGID	N/A	VT-3	303/8.2.17				
RCC-PB-304								
	RCC PRES BNDRY	N/A	VT-2	N/A				SEE NOTES #6 & #7.

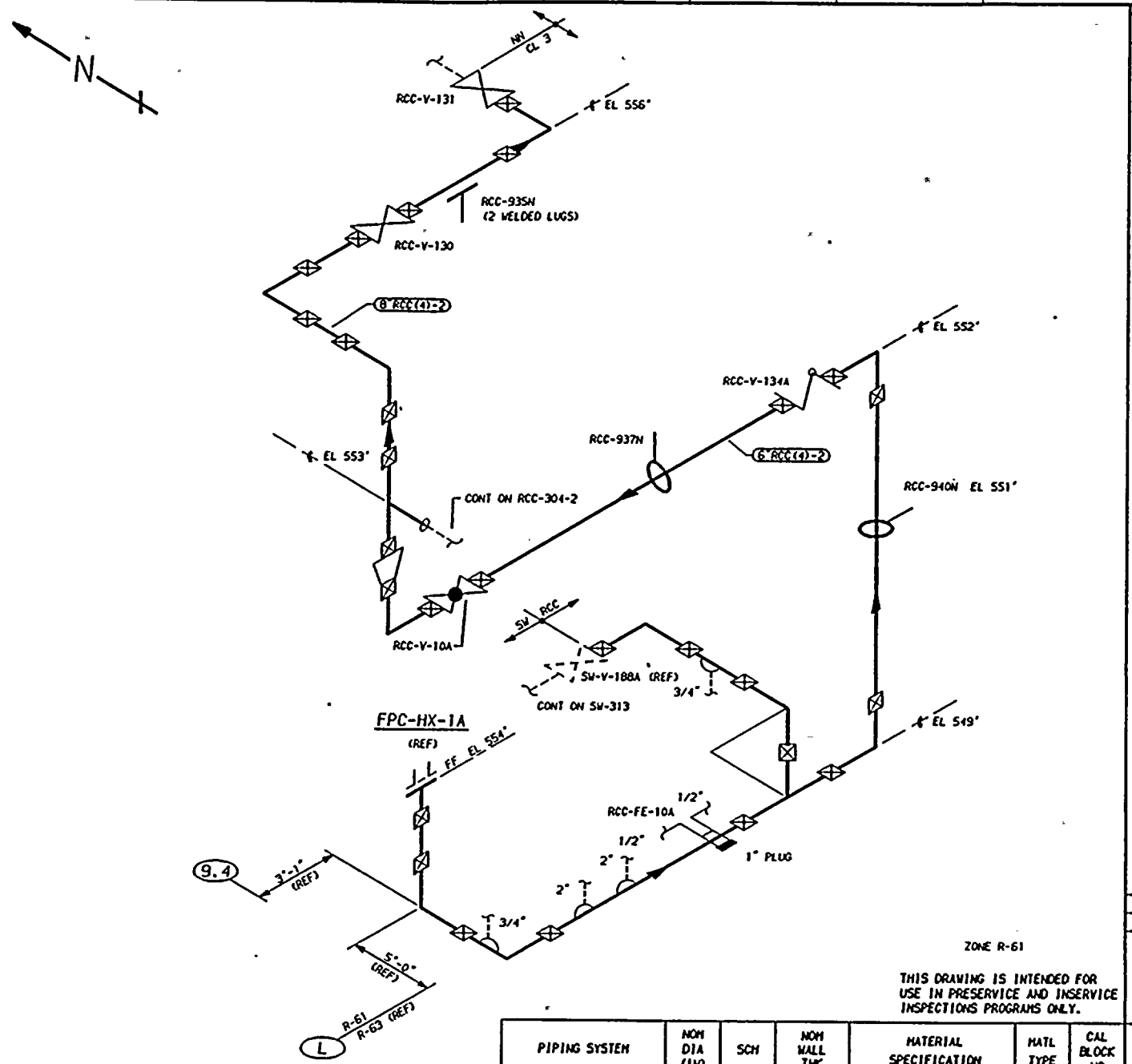

ZONE R-61

THIS DRAWING IS INTENDED FOR USE IN PRESERVICE AND INSERVICE INSPECTIONS PROGRAMS ONLY.

NOTES:

1. THIS DRAWING IDENTIFIES PIPING AND COMPONENTS SUBJECT ONLY TO A VISUAL EXAM FOR (1) EVIDENCE OF LEAKAGE DURING SYSTEM PRESSURE OR OPERABILITY TESTS; (2) PRESSURE DECAY TESTS OF BURIED PIPING; AND (3) LOSS OF SUPPORT CAPABILITY OR INADEQUATE RESTRAINT FOR SUPPORTS AND HANGERS ON PIPING EXCEEDING 4" NOM. TESTS SHALL BE CONDUCTED PER ASME SECTION XI, ARTICLES IWA-5000 AND IWD-2000.

2. FOR BRANCH PIPING 4" NOM. OR LESS (CONNECTION SHOWN IN DASHED LINES) EXTEND VISUAL LEAKAGE EXAM THROUGH THE OUTERMOST NORMALLY CLOSED NUCLEAR CLASS VALVE, OR UNTIL TRANSITION TO INSTRUMENT TUBING, UNLESS OTHERWISE NOTED.

REFERENCES:

151 - 225

BOYEE & CRAIL ISOMETRIC
RCC-825-19.21 REV 13

KEYPLAN

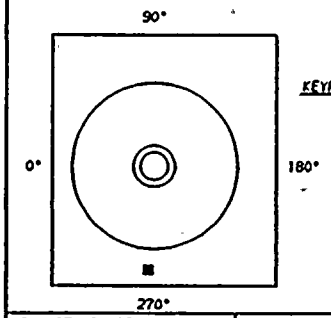

QUALITY CLASS: 1	ASME CODE CLASS: 3	
ENGR: K-McANDREW	DRAWN: K-McA	DATE: 11-18-83

WASHINGTON PUBLIC POWER
SUPPLY SYSTEM
RICHLAND, WASHINGTON 99352

WNP-2
WELD & COMPONENT
IDENTIFICATION DIAGRAM

TITLE:
RCC RETURN FROM FPC-HX-1A

DWG NO: RCC-304-1 REV 0

PIPING SYSTEM	NOM DIA (IN)	SCH	NOM WALL THK	MATERIAL SPECIFICATION	MATL TYPE	CAL BLOCK NO
6"RCC(4)-2	6	STD	0.280	SA 106 GR B	CS	NA
8"RCC(4)-2	8	STD	0.322	SA 106 GR B	CS	NA

NO	DATE	REVISION	BY	CHKD	APVD
0	12-14-83	ISSUED FOR USE	KLA	[illegible]	TFIS

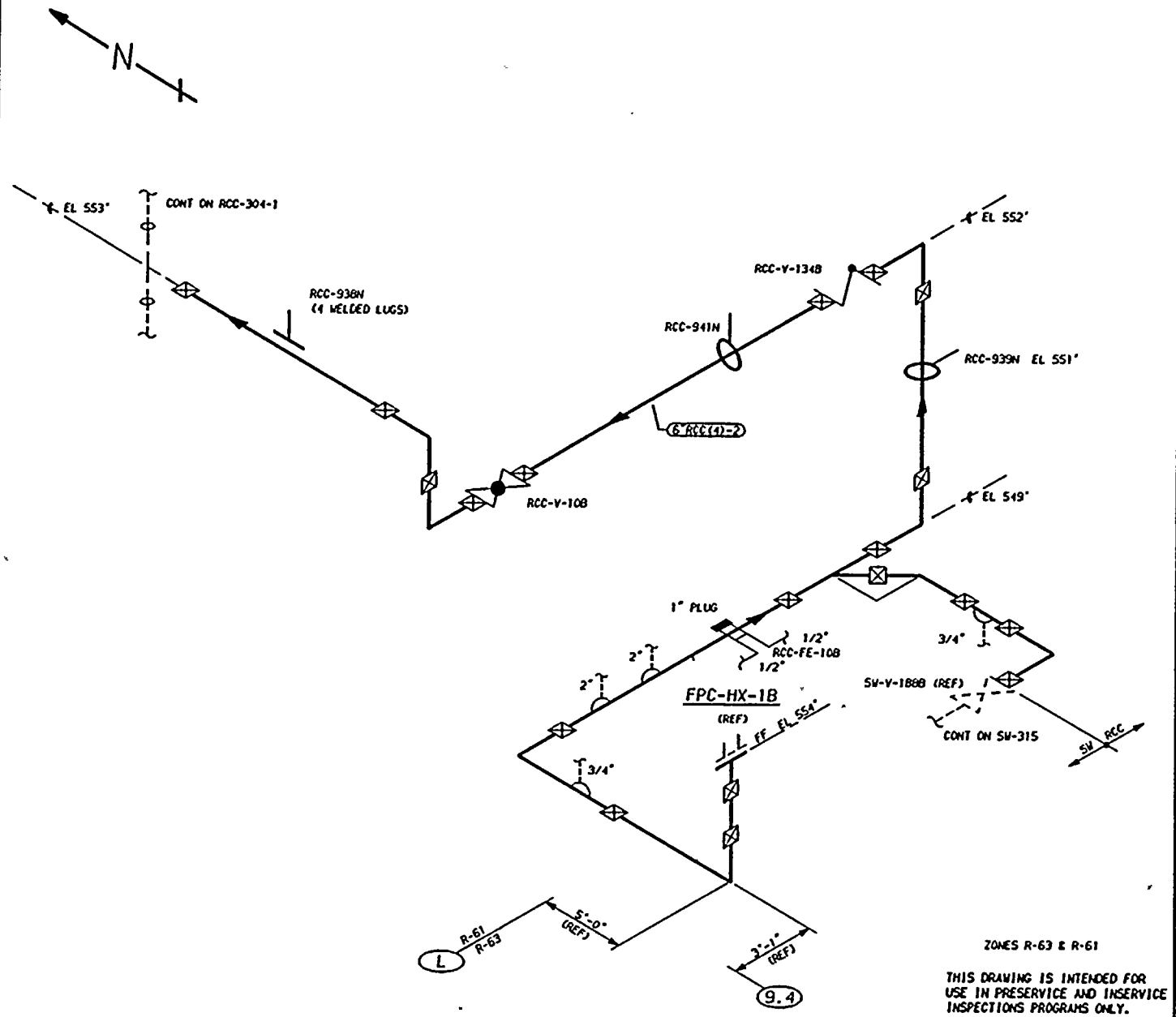

ZONES R-63 & R-61

THIS DRAWING IS INTENDED FOR USE IN PRESERVICE AND INSERVICE INSPECTIONS PROGRAMS ONLY.

NOTES:

1. THIS DRAWING IDENTIFIES PIPING AND COMPONENTS SUBJECT ONLY TO A VISUAL EXAM FOR (1) EVIDENCE OF LEAKAGE DURING SYSTEM PRESSURE OR OPERABILITY TESTS, (2) PRESSURE DECAY TESTS OF BURIED PIPING, AND (3) LOSS OF SUPPORT CAPABILITY OR INADEQUATE RESTRAINT FOR SUPPORTS AND HANGERS ON PIPING EXCEEDING 4" NOM. TESTS SHALL BE CONDUCTED PER ASME SECTION XI, ARTICLES IWA-5000 AND IWD-2000.

2. FOR BRANCH PIPING 4" NOM. OR LESS (CONNECTION SHOWN IN DASHED LINES) EXTEND VISUAL LEAKAGE EXAM THROUGH THE OUTERMOST NORMALLY CLOSED NUCLEAR CLASS VALVE, OR UNTIL TRANSITION TO INSTRUMENT TUBING, UNLESS OTHERWISE NOTED.

REFERENCES:

ISI - 225

BOVEE & CRAIL ISOMETRIC
RCC-825-19.21 REV 13

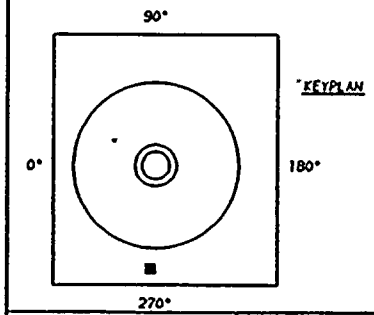

QUALITY CLASS: 1	ASME CODE CLASS: 3
ENGR: K-McANDREW	DRAWN: K-McA	DATE: 11-29-83

WASHINGTON PUBLIC POWER
SUPPLY SYSTEM
RICHLAND, WASHINGTON 99352

PIPING SYSTEM	NOM DIA (IN)	SCH	NOM WALL THK	MATERIAL SPECIFICATION	MATL TYPE	CAL BLOCK NO
6"RCC(4)-2	6	STD	0.280	SA 106 GR B	CS	NA

WNP-2
WELD & COMPONENT
IDENTIFICATION DIAGRAM

TITLE:
RCC RETURN FROM FPC-HX-1B

DWG NO: RCC-304-2 | REV 0

NO	DATE	REVISION	BY	CHKD	APVD
0	12/14/83	ISSUED FOR USE	[illegible]	DPR	TPH

Date 1/8/79

Revision 0

WNP-2 PSI PROGRAM PLAN

WELD AND COMPONENT
IDENTIFICATION DIAGRAM

DEMINERALIZED WATER (DW)

L A T E R

NOTE: This system is subject only to a visual examination for evidence of leakage. Isometric drawings will be provided at a later date. See Section 7.0 for ISI Boundary Diagram for this system.

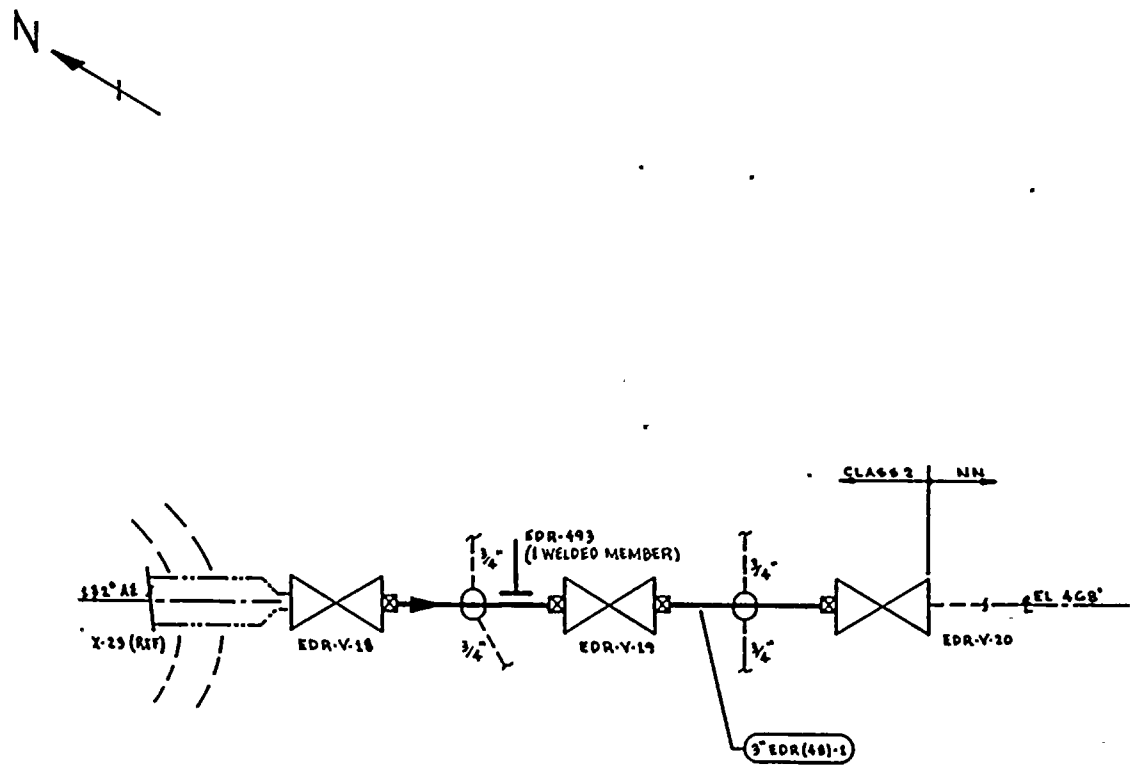

ZONE R-23

NOTES:

1. THIS DRAWING IDENTIFIES PIPING & COMPONENTS SUBJECT TO A VISUAL EXAM FOR EVIDENCE OF LEAKAGE DURING SYSTEM HYDRO OR OPERABILITY TESTS. TESTS ARE TO BE CONDUCTED PER THE REQUIREMENTS OF ASME SECTION XI, PARAGRAPH IWA-5000.
2. FOR BRANCH PIPING 4" DIA OR LESS (CONN SHOWN IN DASHED LINES) EXTEND VISUAL LEAKAGE EXAM THROUGH THE OUTERMOST NORMALLY CLOSED NUCLEAR CLASS VALVE OR UNTIL TRANSITION TO INSTRUMENT TUBING, UNLESS OTHERWISE NOTED.

REFERENCES:

BOVEE & CRAIL ISOMETRICS
EDR-526-7.9 REV 9

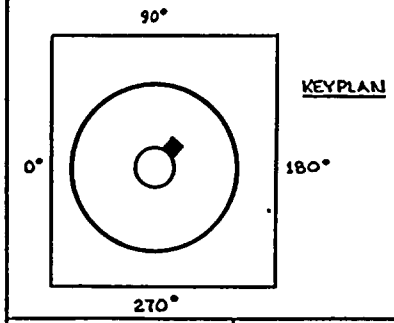

THIS DRAWING IS INTENDED FOR USE IN PRESERVICE AND INSERVICE INSPECTION PROGRAMS ONLY.

PIPING SYSTEM	NOM DIA (IN)	SCH	NOM WALL THK	MATERIAL SPECIFICATION	MATL TYPE	CAL BLOCK NO
3" EDR(48)-1	3	40	0.216	SA 106 GR B	CS	NA

NO	DATE	REVISION	BY	CHKD	APPVD
1	12/8/84	CHG EDR-493 TO WELDED ADDED KEYPLAN	KRCA	DK	TFH
0	1/11/79	ISSUED FOR USE	KRCA	[illegible]	[illegible]

QUALITY CLASS: 1 | ASME CODE CLASS: 2
ENGR'D TIMMINS | DRAWN: K. McA. | DATE: 3-13-79

WASHINGTON PUBLIC POWER SUPPLY SYSTEM
RICHLAND WASHINGTON 99352

WNP-2
WELD & COMPONENT
IDENTIFICATION DIAGRAM

TITLE:
DRYWELL TO EQUIPMENT DRAIN SUMP

DWG NO: EDR-201 | REV 1

Date 1/8/79
Revision 0

WNP-2 PSI PROGRAM PLAN

WELD AND COMPONENT
IDENTIFICATION DIAGRAM

MAIN STEAM LEAKAGE CONTROL (MSLC)

L A T E R

WNP-02
INTERVAL: PSI
PERIOD: NA
OUTAGE:
DRAWING NO. MS-301

WASHINGTON PUBLIC POWER SUPPLY SYSTEM
PROGRAM PLAN AND SCHEDULE
SYSTEM OR COMPONENT: MS(1B)-2-1
DESCRIPTION: MS-RV-1A DISCHARGE

DATE 12/14/84

IDENT. NO.	DESCRIPTION	SECT. XI EXAM.	EXAM MTH.	PROCEDURE	CAL. BLOCK	INSERVICE REQ.	SCHEDULED OUTAGE	NOTES
MSRV-1A-1								
	PSA-10 SNUBBER	N/A	VT-3	303/8.2.17				S/N 9902
			VT-4	303/8.2.17				S/N 9902
MSRV-1A-3								
	PSA-10 SNUBBER	N/A	VT-3	303/8.2.17				S/N 11857
			VT-4	303/8.2.17				S/N 11857
MSRV-1A-4								
	PSA-10 SNUBBER	N/A	VT-3	303/8.2.17				S/N 9925
			VT-4	303/8.2.17				S/N 9925
MSRV-1A-2								
	PSA-10 SNUBBER	N/A	VT-3	303/8.2.17				S/N 9901
			VT-4	303/8.2.17				S/N 9901
MSRV-1A-5								
	PSA-10 SNUBBER	N/A	VT-3	303/8.2.17				S/N 682
			VT-4	303/8.2.17				S/N 682
MSRV-1A-6								
	PSA-10 SNUBBER	N/A	VT-3	303/8.2.17				S/N 302
			VT-4	303/8.2.17				S/N 302

WNP-02
INTERVAL: PSI
PERIOD: NA
OUTAGE:
DRAWING NO. MS-302

WASHINGTON PUBLIC POWER SUPPLY SYSTEM
PROGRAM PLAN AND SCHEDULE
SYSTEM OR COMPONENT: MS(18)-2-2
DESCRIPTION: MS-RV-2A DISCHARGE

DATE 12/14/84

IDENT. NO.	DESCRIPTION	SECT. XI EXAM.	EXAM MTH.	PROCEDURE	CAL. BLOCK	INSERVICE REQ.	INSERVICE SCHEDULED OUTAGE	NOTES
MSRV-2A-2								
	PSA-10 SNUBBER	N/A	VT-3	303/8.2.17				S/N 702
			VT-4	303/8.2.17				S/N 702
MSRV-2A-3								
	PSA-35 SNUBBER	N/A	VT-3	303/8.2.17				S/N 10585
			VT-4	303/8.2.17				S/N 10585
MSRV-2A-1								
	PSA-10 SNUBBER	N/A	VT-3	303/8.2.17				S/N 317
			VT-4	303/8.2.17				S/N 317
MSRV-2A-5								
	PSA-10 SNUBBER	N/A	VT-3	303/8.2.17				S/N 11846
			VT-4	303/8.2.17				S/N 11846
MSRV-2A-4								
	PSA-10 SNUBBER	N/A	VT-3	303/8.2.17				S/N 11853
			VT-4	303/8.2.17				S/N 11853

WNP-02
INTERVAL: PSI
PERIOD: NA
OUTAGE:
DRAWING NO. MS-303

WASHINGTON PUBLIC POWER SUPPLY SYSTEM
PROGRAM PLAN AND SCHEDULE
SYSTEM OR COMPONENT: MS(1B)-2-3
DESCRIPTION: MS-RV-3A DISCHARGE

DATE 12/14/84

IDENT. NO.	DESCRIPTION	SECT. XI EXAM.	EXAM MTH.	PROCEDURE	CAL. BLOCK	INSERVICE REQ.	SCHEDULED OUTAGE	NOTES
MSRV-3A-2	PSA-10 SNUBBER	N/A	VT-3	303/8.2.17				S/N 703
			VT-4	303/8.2.17				S/N 703
MSRV-3A-3	PSA-10 SNUBBER	N/A	VT-3	303/8.2.17				S/N 13041
			VT-4	303/8.2.17				S/N 13041
MSRV-3A-1	PSA-10 SNUBBER	N/A	VT-3	303/8.2.17				S/N 11852
			VT-4	303/8.2.17				S/N 11852
MSRV-3A-4	PSA-10 SNUBBER	N/A	VT-3	303/8.2.17				S/N 4858
			VT-4	303/8.2.17				S/N 4858
MSRV-3A-5	PSA-10 SNUBBER	N/A	VT-3	303/8.2.17				S/N 701
			VT-4	303/8.2.17				S/N 701
MSRV-3A-6	PSA-10 SNUBBER	N/A	VT-3	303/8.2.17				S/N 321
			VT-4	303/8.2.17				S/N 321

WNF-02
INTERVAL: PSI
PERIOD: NA
OUTAGE:
DRAWING NO. MS-304

WASHINGTON PUBLIC POWER SUPPLY SYSTEM
PROGRAM PLAN AND SCHEDULE
SYSTEM OR COMPONENT: MS(18)-2-4
DESCRIPTION: MS-RV-4A DISCHARGE

DATE 12/14/84

IDENT. NO.	DESCRIPTION	SECT. XI EXAM.	EXAM MTH.	PROCEDURE	CAL. BLOCK	INSERVICE REQ.	INSERVICE SCHEDULED OUTAGE	NOTES
MSRV-4A-2								
	PSA-10 SNUBBER	N/A	VT-3	303/8.2.17				S/N 694
			VT-4	303/8.2.17				S/N 694
MSRV-4A-3								
	PSA-10 SNUBBER	N/A	VT-3	303/8.2.17				S/N 13049
			VT-4	303/8.2.17				S/N 13049
MSRV-4A-1								
	PSA-10 SNUBBER	N/A	VT-3	303/8.2.17				S/N 1457
			VT-4	303/8.2.17				S/N 1457
MSRV-4A-4								
	PSA-10 SNUBBER	N/A	VT-3	303/8.2.17				S/N 13039
			VT-4	303/8.2.17				S/N 13039
MSRV-4A-5								
	PSA-10 SNUBBER	N/A	VT-3	303/8.2.17				S/N 13042
			VT-4	303/8.2.17				S/N 13042
MSRV-4A-8								
	PSA-10 SNUBBER	N/A	VT-3	303/8.2.17				S/N 3064
			VT-4	303/8.2.17				S/N 3064
MSRV-4A-10								
	PSA-10 SNUBBER	N/A	VT-3	303/8.2.17				S/N 13038
			VT-4	303/8.2.17				S/N 13038
MSRV-4A-9								
	PSA-10 SNUBBER	N/A	VT-3	303/8.2.17				S/N 13055
			VT-4	303/8.2.17				S/N 13055
MSRV-4A-6								
	PSA-10 SNUBBER	N/A	VT-3	303/8.2.17				S/N 11865

WNP-02
INTERVAL: PSI
PERIOD: NA
OUTAGE:
DRAWING NO. MS-304

WASHINGTON PUBLIC POWER SUPPLY SYSTEM
PROGRAM PLAN AND SCHEDULE
SYSTEM OR COMPONENT: MS(18)-2-4
DESCRIPTION: MS-RV-4A DISCHARGE

DATE 12/14/84

IDENT. NO.	DESCRIPTION	SECT. XI EXAM.	EXAM MTH.	PROCEDURE	CAL. BLOCK	INSERVICE REQ.	SCHEDULED OUTAGE	NOTES
			VT-4	303/8.2.17				S/N 11865
MSRV-4A-7								
	PSA-10 SNUBBER	N/A	VT-3	303/8.2.17				S/N 1461
			VT-4	303/8.2.17				S/N 1461

WNP-02
INTERVAL: PSI
PERIOD: NA
OUTAGE:
DRAWING NO. MS-305

WASHINGTON PUBLIC POWER SUPPLY SYSTEM
PROGRAM PLAN AND SCHEDULE
SYSTEM OR COMPONENT: MS(18)2-10
DESCRIPTION: MS-RV-1B DISCHARGE

DATE 12/14/84

IDENT. NO.	DESCRIPTION	SECT. XI EXAM.	EXAM MTH.	PROCEDURE	CAL. BLOCK	INSERVICE REQ.	INSERVICE SCHEDULED OUTAGE	NOTES
MSRV-1B-2	PSA-10 SNUBBER	N/A	VT-3	303/8.2.17				S/N 13035
			VT-4	303/8.2.17				S/N 13035
MSRV-1B-3	PSA-10 SNUBBER	N/A	VT-3	303/8.2.17				S/N 4864
			VT-4	303/8.2.17				S/N 4864
MSRV-1B-1	PSA-10 SNUBBER	N/A	VT-3	303/8.2.17				S/N 13681
			VT-4	303/8.2.17				S/N 13681
MSRV-1B-5	PSA-10 SNUBBER	N/A	VT-3	303/8.2.17				S/N 295
			VT-4	303/8.2.17				S/N 295
MSRV-1B-4	PSA-10 SNUBBER	N/A	VT-3	303/8.2.17				S/N 690
			VT-4	303/8.2.17				S/N 690

WNP-02
INTERVAL: PSI
PERIOD: NA
OUTAGE:
DRAWING NO. MS-306

WASHINGTON PUBLIC POWER SUPPLY SYSTEM
PROGRAM PLAN AND SCHEDULE
SYSTEM OR COMPONENT: MS(1B)2-11
DESCRIPTION: MS-RV-2B DISCHARGE

DATE 12/14/84

IDENT. NO.	DESCRIPTION	SECT. XI EXAM.	EXAM MTH.	PROCEDURE	CAL. BLOCK	INSERVICE REQ.	SCHEDULED OUTAGE	NOTES
MSRV-2B-3	PSA-10 SNUBBER	N/A	VT-3	303/8.2.17				S/N 10729
			VT-4	303/8.2.17				S/N 10729
MSRV-2B-1	PSA-10 SNUBBER	N/A	VT-3	303/8.2.17				S/N 13063
			VT-4	303/8.2.17				S/N 13063
MSRV-2B-4	PSA-10 SNUBBER	N/A	VT-3	303/8.2.17				S/N 13037
			VT-4	303/8.2.17				S/N 13037
MSRV-2B-2	PSA-10 SNUBBER	N/A	VT-3	303/8.2.17				S/N 13047
			VT-4	303/8.2.17				S/N 13047
MSRV-2B-6	PSA-10 SNUBBER	N/A	VT-3	303/8.2.17				S/N 9910
			VT-4	303/8.2.17				S/N 9910
MSRV-2B-5	PSA-10 SNUBBER	N/A	VT-3	303/8.2.17				S/N 271
			VT-4	303/8.2.17				S/N 271
MSRV-2B-7	PSA-10 SNUBBER	N/A	VT-3	303/8.2.17				S/N 13040
			VT-4	303/8.2.17				S/N 13040
MSRV-2B-8	PSA-10 SNUBBER	N/A	VT-3	303/8.2.17				S/N 13045
			VT-4	303/8.2.17				S/N 13045

WNP-02
INTERVAL: PSI
PERIOD: NA
OUTAGE:
DRAWING NO. MS-307

WASHINGTON PUBLIC POWER SUPPLY SYSTEM
PROGRAM PLAN AND SCHEDULE
SYSTEM OR COMPONENT: MS(18)2-12
DESCRIPTION: MS-RV-3B DISCHARGE

DATE 12/14/84

IDENT. NO.	DESCRIPTION	SECT. XI EXAM.	EXAM MTH.	PROCEDURE	CAL. BLOCK	INSERVICE REQ.	INSERVICE SCHEDULED OUTAGE	NOTES
MSRV-3B-2								
	PSA-10 SNUBBER	N/A	VT-3	303/8.2.17				S/N 316
			VT-4	303/8.2.17				S/N 316
MSRV-3B-3								
	PSA-10 SNUBBER	N/A	VT-3	303/8.2.17				S/N 13050
			VT-4	303/8.2.17				S/N 13050
MSRV-3B-1								
	PSA-10 SNUBBER	N/A	VT-3	303/8.2.17				S/N 13048
			VT-4	303/8.2.17				S/N 13048
MSRV-3B-5								
	PSA-10 SNUBBER	N/A	VT-3	303/8.2.17				S/N 4862
			VT-4	303/8.2.17				S/N 4862
MSRV-3B-4								
	PSA-10 SNUBBER	N/A	VT-3	303/8.2.17				S/N 274
			VT-4	303/8.2.17				S/N 274
MSRV-3B-6								
	PSA-10 SNUBBER	N/A	VT-3	303/8.2.17				S/N 13056
			VT-4	303/8.2.17				S/N 13056
MSRV-3B-7								
	PSA-10 SNUBBER	N/A	VT-3	303/8.2.17				S/N 13062
			VT-4	303/8.2.17				S/N 13062

WNP-02
INTERVAL: PSI
PERIOD: NA
OUTAGE:
DRAWING NO. MS-308

WASHINGTON PUBLIC POWER SUPPLY SYSTEM
PROGRAM PLAN AND SCHEDULE
SYSTEM OR COMPONENT: MS(18)2-13
DESCRIPTION: MS-RV-4B DISCHARGE

DATE 12/14/84

IDENT. NO.	DESCRIPTION	SECT. XI EXAM.	EXAM MTH.	PROCEDURE	CAL. BLOCK	INSERVICE REQ.	INSERVICE SCHEDULED OUTAGE	NOTES
MSRV-4B-3	PSA-10 SNUBBER	N/A	VT-3	303/8.2.17				S/N 11863
			VT-4	303/8.2.17				S/N 11863
MSRV-4B-4	PSA-10 SNUBBER	N/A	VT-3	303/8.2.17				S/N 13027
			VT-4	303/8.2.17				S/N 13027
MSRV-4B-2	PSA-10 SNUBBER	N/A	VT-3	303/8.2.17				S/N 9953
			VT-4	303/8.2.17				S/N 9953
MSRV-4B-5	PSA-10 SNUBBER	N/A	VT-3	303/8.2.17				S/N 6202
			VT-4	303/8.2.17				S/N 6202
MSRV-4B-6	PSA-10 SNUBBER	N/A	VT-3	303/8.2.17				S/N 13032
			VT-4	303/8.2.17				S/N 13032
MSRV-4B-7	PSA-10 SNUBBER	N/A	VT-3	303/8.2.17				S/N 106
			VT-4	303/8.2.17				S/N 106
MSRV-4B-10	PSA-10 SNUBBER	N/A	VT-3	303/8.2.17				S/N 6119
			VT-4	303/8.2.17				S/N 6119
MSRV-4B-8	PSA-10 SNUBBER	N/A	VT-3	303/8.2.17				S/N 294
			VT-4	303/8.2.17				S/N 294
MSRV-4B-9	PSA-10 SNUBBER	N/A	VT-3	303/8.2.17				S/N 13052

WNP-02
INTERVAL: PSI
PERIOD: NA
OUTAGE:
DRAWING NO. MS-308

WASHINGTON PUBLIC POWER SUPPLY SYSTEM
PROGRAM PLAN AND SCHEDULE
SYSTEM OR COMPONENT: MS(18)2-13
DESCRIPTION: MS-RV-4R DISCHARGE

DATE 12/14/84

IDENT. NO.	DESCRIPTION	SECT. XI EXAM.	EXAM MTH.	PROCEDURE	CAL. BLOCK	INSERVICE REQ.	SCHEDULED OUTAGE	NOTES
			VT-4	303/8.2.17				S/N 13052

WNP-02
INTERVAL: PSI
PERIOD: NA
OUTAGE:
DRAWING NO. MS-309

WASHINGTON PUBLIC POWER SUPPLY SYSTEM
PROGRAM PLAN AND SCHEDULE
SYSTEM OR COMPONENT: MS(18)2-14
DESCRIPTION: MS-RV-5B DISCHARGE

DATE 12/14/84

IDENT. NO.	DESCRIPTION	SECT. XI EXAM.	EXAM MTH.	PROCEDURE	CAL. BLOCK	INSERVICE REQ.	SCHEDULED OUTAGE	NOTES
MSRV-5B-2								
	PSA-10 SNUBBER	N/A	VT-3	303/8.2.17				S/N 6205
			VT-4	303/8.2.17				S/N 6205
MSRV-5B-1								
	PSA-10 SN(2)	N/A	VT-3	303/8.2.17				S/N 3904/3948
			VT-4	303/8.2.17				S/N 3904/3948
MSRV-5B-3								
	PSA-10 SNUBBER	N/A	VT-3	303/8.2.17				S/N 291
			VT-4	303/8.2.17				S/N 291
MSRV-5B-5								
	PSA-10 SNUBBER	N/A	VT-3	303/8.2.17				S/N 684
			VT-4	303/8.2.17				S/N 684
MSRV-5B-4								
	PSA-10 SNUBBER	N/A	VT-3	303/8.2.17				S/N 13054
			VT-4	303/8.2.17				S/N 13054
MSRV-5B-6								
	PSA-10 SNUBBER	N/A	VT-3	303/8.2.17				S/N 11866
			VT-4	303/8.2.17				S/N 11866
MSRV-5B-7								
	PSA-10 SNUBBER	N/A	VT-3	303/8.2.17				S/N 13051
			VT-4	303/8.2.17				S/N 13051
MSRV-5B-8								
	PSA-10 SNUBBER	N/A	VT-3	303/8.2.17				S/N 578
			VT-4	303/8.2.17				S/N 578
MSRV-5B-9								
	PSA-10 SNUBBER	N/A	VT-3	303/8.2.17				S/N 11854

WNP-02
INTERVAL: PSI
PERIOD: NA
OUTAGE:
DRAWING NO. MS-309

WASHINGTON PUBLIC POWER SUPPLY SYSTEM
PROGRAM PLAN AND SCHEDULE
SYSTEM OR COMPONENT: MS(18)2-14
DESCRIPTION: MS-RV-5B DISCHARGE

DATE 12/14/84

IDENT. NO.	DESCRIPTION	SECT. XI EXAM.	EXAM MTH.	PROCEDURE	CAL. BLOCK	INSERVICE REQ.	SCHEDULED OUTAGE	NOTES
			VT-4	303/8.2.17				S/N 11854

WNP-02
INTERVAL: PSI
PERIOD: NA
OUTAGE:
DRAWING NO. MS-310

WASHINGTON PUBLIC POWER SUPPLY SYSTEM
PROGRAM PLAN AND SCHEDULE
SYSTEM OR COMPONENT: MS(18)-2-9
DESCRIPTION: MS-RV-1C DISCHARGE

DATE 12/14/84

IDENT. NO.	DESCRIPTION	SECT. XI EXAM.	EXAM MTH.	PROCEDURE	CAL. BLOCK	INSERVICE REQ.	SCHEDULED OUTAGE	NOTES
MSRV-1C-2								
	PSA-10 SNUBBER	N/A	VT-3	303/8.2.17				S/N 10566
			VT-4	303/8.2.17				S/N 10566
MSRV-1C-3								
	PSA-10 SNUBBER	N/A	VT-3	303/8.2.17				S/N 10731
			VT-4	303/8.2.17				S/N 10731
MSRV-1C-1								
	PSA-10 SNUBBER	N/A	VT-3	303/8.2.17				S/N 4870
			VT-4	303/8.2.17				S/N 4870
MSRV-1C-7								
	PSA-10 SNUBBER	N/A	VT-3	303/8.2.17				S/N 681
			VT-4	303/8.2.17				S/N 681
MSRV-1C-4								
	PSA-10 SNUBBER	N/A	VT-3	303/8.2.17				S/N 9943
			VT-4	303/8.2.17				S/N 9943
MSRV-1C-5								
	PSA-10 SNUBBER	N/A	VT-3	303/8.2.17				S/N 9908
			VT-4	303/8.2.17				S/N 9908

WNP-02
INTERVAL: PSI
PERIOD: NA
OUTAGE:
DRAWING NO. MS-311

WASHINGTON PUBLIC POWER SUPPLY SYSTEM
PROGRAM PLAN AND SCHEDULE
SYSTEM OR COMPONENT: MS(18)-2-8
DESCRIPTION: MS-RV-2C DISCHARGE

DATE 12/14/84

IDENT. NO.	DESCRIPTION	SECT. XI EXAM.	EXAM MTH.	PROCEDURE	CAL. BLOCK	INSERVICE REQ.	INSERVICE SCHEDULED OUTAGE	NOTES
MSRV-2C-2	PSA-10 SNUBBER	N/A	VT-3	303/8.2.17				S/N 4867
			VT-4	303/8.2.17				S/N 4867
MSRV-2C-1	PSA-10 SNUBBER	N/A	VT-3	303/8.2.17				S/N 685
			VT-4	303/8.2.17				S/N 685
MSRV-2C-3	PSA-10 SNUBBER	N/A	VT-3	303/8.2.17				S/N 4871
			VT-4	303/8.2.17				S/N 4871
MSRV-2C-8	PSA-10 SNUBBER	N/A	VT-3	303/8.2.17				S/N 9905
			VT-4	303/8.2.17				S/N 9905
MSRV-2C-9	PSA-10 SNUBBER	N/A	VT-3	303/8.2.17				S/N 9954
			VT-4	303/8.2.17				S/N 9954
MSRV-2C-5	PSA-10 SNUBBER	N/A	VT-3	303/8.2.17				S/N 9921
			VT-4	303/8.2.17				S/N 9921
MSRV-2C-4	PSA-10 SNUBBER	N/A	VT-3	303/8.2.17				S/N 9917
			VT-4	303/8.2.17				S/N 9917
MSRV-2C-6	PSA-10 SNUBBER	N/A	VT-3	303/8.2.17				S/N 9947
			VT-4	303/8.2.17				S/N 9947
MSRV-2C-7	PSA-10 SNUBBER	N/A	VT-3	303/8.2.17				S/N 9926

WNP-02
INTERVAL: PSI
PERIOD: NA
OUTAGE:
DRAWING NO. MS-311

WASHINGTON PUBLIC POWER SUPPLY SYSTEM
PROGRAM PLAN AND SCHEDULE
SYSTEM OR COMPONENT: MS(18)-2-8
DESCRIPTION: MS-RV-2C DISCHARGE

DATE 12/14/84

IDENT. NO.	DESCRIPTION	SECT. XI EXAM.	EXAM MTH.	PROCEDURE	CAL. BLOCK	INSERVICE REQ.	INSERVICE SCHEDULED OUTAGE	NOTES
			VT-4	303/8.2.17				S/N 9926

WNP-02
INTERVAL: PSI
PERIOD: NA
OUTAGE:
DRAWING NO. MS-312

WASHINGTON PUBLIC POWER SUPPLY SYSTEM
PROGRAM PLAN AND SCHEDULE
SYSTEM OR COMPONENT: MS(18)-2-7
DESCRIPTION: MS-RV-3C DISCHARGE

DATE 12/14/84

IDENT. NO.	DESCRIPTION	SECT. XI EXAM.	EXAM MTH.	PROCEDURE	CAL. BLOCK	INSERVICE REQ.	INSERVICE SCHEDULED OUTAGE	NOTES
MSRV-3C-2								
	PSA-10 SNUBBER	N/A	VT-3	303/8.2.17				S/N 4865
			VT-4	303/8.2.17				S/N 4865
MSRV-3C-1								
	PSA-10 SNUBBER	N/A	VT-3	303/8.2.17				S/N 9262
			VT-4	303/8.2.17				S/N 9262
MSRV-3C-3								
	PSA-10 SNUBBER	N/A	VT-3	303/8.2.17				S/N 4866
			VT-4	303/8.2.17				S/N 4866
MSRV-3C-8								
	PSA-10 SNUBBER	N/A	VT-3	303/8.2.17				S/N 14554
			VT-4	303/8.2.17				S/N 14554
MSRV-3C-4								
	PSA-10 SNUBBER	N/A	VT-3	303/8.2.17				S/N 4874
			VT-4	303/8.2.17				S/N 4874
MSRV-3C-6								
	PSA-10 SNUBBER	N/A	VT-3	303/8.2.17				S/N 319
			VT-4	303/8.2.17				S/N 319
MSRV-3C-5								
	PSA-10 SNUBBER	N/A	VT-3	303/8.2.17				S/N 313
			VT-4	303/8.2.17				S/N 313
MSRV-3C-7								
	PSA-10 SNUBBER	N/A	VT-3	303/8.2.17				S/N 9897
			VT-4	303/8.2.17				S/N 9897
MSRV-3C-10								
	PSA-3 SN(2)	N/A	VT-3	303/8.2.17				S/N E9912/W991

WNP-02
INTERVAL: PSI
PERIOD: NA
OUTAGE:
DRAWING NO. MS-312

WASHINGTON PUBLIC POWER SUPPLY SYSTEM
PROGRAM PLAN AND SCHEDULE
SYSTEM OR COMPONENT: MS(18)-2-7
DESCRIPTION: MS-RV-3C DISCHARGE

DATE 12/14/84

IDENT. NO.	DESCRIPTION	SECT. XI EXAM.	EXAM MTH.	PROCEDURE	CAL. BLOCK	INSERVICE REQ.	INSERVICE SCHEDULED OUTAGE	NOTES
			VT-4	303/8.2.17				S/N E9912/W991

WNP-02
INTERVAL: PSI
PERIOD: NA
OUTAGE:
DRAWING NO. MS-313

WASHINGTON PUBLIC POWER SUPPLY SYSTEM
PROGRAM PLAN AND SCHEDULE
SYSTEM OR COMPONENT: MS(18)-2-6
DESCRIPTION: MS-RV-4C DISCHARGE

DATE 12/14/84

IDENT. NO.	DESCRIPTION	SECT. XI EXAM.	EXAM MTH.	PROCEDURE	CAL. BLOCK	INSERVICE REQ.	INSERVICE SCHEDULED OUTAGE	NOTES
MSRV-4C-2	PSA-10 SNUBBER	N/A	VT-3	303/8.2.17				S/N 282
			VT-4	303/8.2.17				S/N 282
MSRV-4C-3	PSA-10 SNUBBER	N/A	VT-3	303/8.2.17				S/N 9932
			VT-4	303/8.2.17				S/N 9932
MSRV-4C-1	PSA-10 SNUBBER	N/A	VT-3	303/8.2.17				S/N 712
			VT-4	303/8.2.17				S/N 712
MSRV-4C-5	PSA-10 SNUBBER	N/A	VT-3	303/8.2.17				S/N 9946
			VT-4	303/8.2.17				S/N 9946
MSRV-4C-6	PSA-10 SNUBBER	N/A	VT-3	303/8.2.17				S/N 116
			VT-4	303/8.2.17				S/N 116
MSRV-4C-4	PSA-10 SNUBBER	N/A	VT-3	303/8.2.17				S/N 9911
			VT-4	303/8.2.17				S/N 9911
MSRV-4C-8	PSA-10 SNUBBER	N/A	VT-3	303/8.2.17				S/N 10736
			VT-4	303/8.2.17				S/N 10736
MSRV-4C-7	PSA-10 SNUBBER	N/A	VT-3	303/8.2.17				S/N 277
			VT-4	303/8.2.17				S/N 277
MSRV-4C-9	PSA-10 SN(2)	N/A	VT-3	303/8.2.17				S/N E4502/W446

WNP-02
INTERVAL: PSI
PERIOD: NA
OUTAGE:
DRAWING NO. MS-313

WASHINGTON PUBLIC POWER SUPPLY SYSTEM
PROGRAM PLAN AND SCHEDULE
SYSTEM OR COMPONENT: MS(18)-2-6
DESCRIPTION: MS-RV-4C DISCHARGE

DATE 12/14/84

IDENT. NO.	DESCRIPTION	SECT. XI EXAM.	EXAM MTH.	PROCEDURE	CAL. BLOCK	INSERVICE REQ.	SCHEDULED OUTAGE	NOTES
			VT-4	303/8.2.17				S/N E4502/W446

WNP-02
INTERVAL: PSI
PERIOD: NA
OUTAGE:
DRAWING NO. MS-314

WASHINGTON PUBLIC POWER SUPPLY SYSTEM
PROGRAM PLAN AND SCHEDULE
SYSTEM OR COMPONENT: MS(18)-2-5
DESCRIPTION: MS-RV-5C DISCHARGE

DATE 12/14/84

IDENT. NO.	DESCRIPTION	SECT. XI EXAM.	EXAM MTH.	PROCEDURE	CAL. BLOCK	INSERVICE REQ.	SCHEDULED OUTAGE	NOTES
MSRV-5C-3								
	PSA-10 SNUBBER	N/A	VT-3	303/8.2.17				S/N 9263
			VT-4	303/8.2.17				S/N 9263
MSRV-5C-2								
	PSA-10 SNUBBER	N/A	VT-3	303/8.2.17				S/N 4872
			VT-4	303/8.2.17				S/N 4872
MSRV-5C-1								
	PSA-10 SNUBBER	N/A	VT-3	303/8.2.17				S/N 13058
			VT-4	303/8.2.17				S/N 13058
MSRV-5C-6								
	PSA-10 SNUBBER	N/A	VT-3	303/8.2.17				S/N 11858
			VT-4	303/8.2.17				S/N 11858
MSRV-5C-4								
	PSA-10 SNUBBER	N/A	VT-3	303/8.2.17				S/N 10737
			VT-4	303/8.2.17				S/N 10737
MSRV-5C-5								
	PSA-10 SNUBBER	N/A	VT-3	303/8.2.17				S/N 9903
			VT-4	303/8.2.17				S/N 9903
MSRV-5C-7								
	PSA-10 SNUBBER	N/A	VT-3	303/8.2.17				S/N 273
			VT-4	303/8.2.17				S/N 273
MSRV-5C-8								
	PSA-35 SNUBBER	N/A	VT-3	303/8.2.17				S/N 10740
			VT-4	303/8.2.17				S/N 10740
MSRV-5C-9								
	PSA-10 SNUBBER	N/A	VT-3	303/8.2.17				S/N 9963

WNP-02
INTERVAL: PSI
PERIOD: NA
OUTAGE:
DRAWING NO. MS-314

WASHINGTON PUBLIC POWER SUPPLY SYSTEM
PROGRAM PLAN AND SCHEDULE
SYSTEM OR COMPONENT: MS(18)-2-5
DESCRIPTION: MS-RV-5C DISCHARGE

DATE 12/14/84

IDENT. NO.	DESCRIPTION	SECT. XI EXAM.	EXAM MTH.	PROCEDURE	CAL. BLOCK	INSERVICE REQ.	INSERVICE SCHEDULED OUTAGE	NOTES
			VT-4	303/8.2.17				S/N 9963

WNP-02
INTERVAL: PSI
PERIOD: NA
OUTAGE:
DRAWING NO. MS-315

WASHINGTON PUBLIC POWER SUPPLY SYSTEM
PROGRAM PLAN AND SCHEDULE
SYSTEM OR COMPONENT: MS(18)2-18
DESCRIPTION: MS-RV-1D DISCHARGE

DATE 12/14/84

IDENT. NO.	DESCRIPTION	SECT. XI EXAM.	EXAM MTH.	PROCEDURE	CAL. BLOCK	INSERVICE REQ.	INSERVICE SCHEDULED OUTAGE	NOTES
MSRV-1D-1								
	PSA-10 SNUBBER	N/A	VT-3	303/8.2.17				S/N 9914
			VT-4	303/8.2.17				S/N 9914
MSRV-1D-3								
	PSA-10 SNUBBER	N/A	VT-3	303/8.2.17				S/N 9930
			VT-4	303/8.2.17				S/N 9930
MSRV-1D-4								
	PSA-10 SNUBBER	N/A	VT-3	303/8.2.17				S/N 9904
			VT-4	303/8.2.17				S/N 9904
MSRV-1D-2								
	PSA-10 SNUBBER	N/A	VT-3	303/8.2.17				S/N 9928
			VT-4	303/8.2.17				S/N 9928
MSRV-1D-6								
	PSA-10 SNUBBER	N/A	VT-3	303/8.2.17				S/N 9962
			VT-4	303/8.2.17				S/N 9962
MSRV-1D-5								
	PSA-10 SNUBBER	N/A	VT-3	303/8.2.17				S/N 9956
			VT-4	303/8.2.17				S/N 9956
MSRV-1D-7								
	PSA-10 SN(2)	N/A	VT-3	303/8.2.17				S/N E9927/W996
			VT-4	303/8.2.17				S/N E9927/W996

WNP-02
INTERVAL: PSI
PERIOD: NA
OUTAGE:
DRAWING NO. MS-316

WASHINGTON PUBLIC POWER SUPPLY SYSTEM
PROGRAM PLAN AND SCHEDULE
SYSTEM OR COMPONENT: MS(18)2-17
DESCRIPTION: MS-RV-2D DISCHARGE

DATE 12/14/84

IDENT. NO.	DESCRIPTION	SECT. XI EXAM.	EXAM MTH.	PROCEDURE	CAL. BLOCK	INSERVICE REQ.	INSERVICE SCHEDULED OUTAGE	NOTES
MSRV-2D-2								
	PSA-10 SNUBBER	N/A	VT-3	303/8.2.17				S/N 326
			VT-4	303/8.2.17				S/N 326
MSRV-2D-3								
	PSA-10 SNUBBER	N/A	VT-3	303/8.2.17				S/N 9957
			VT-4	303/8.2.17				S/N 9957
MSRV-2D-1								
	PSA-10 SNUBBER	N/A	VT-3	303/8.2.17				S/N 287
			VT-4	303/8.2.17				S/N 287
MSRV-2D-5								
	PSA-10 SNUBBER	N/A	VT-3	303/8.2.17				S/N 9898
			VT-4	303/8.2.17				S/N 9898
MSRV-2D-4								
	PSA-10 SNUBBER	N/A	VT-3	303/8.2.17				S/N 9909
			VT-4	303/8.2.17				S/N 9909

WNP-02
INTERVAL: PSI
PERIOD: NA
OUTAGE:
DRAWING NO. MS-317

WASHINGTON PUBLIC POWER SUPPLY SYSTEM
PROGRAM PLAN AND SCHEDULE
SYSTEM OR COMPONENT: MS(18)2-16
DESCRIPTION: MS-RV-3D DISCHARGE

DATE 12/14/84

IDENT. NO.	DESCRIPTION	SECT. XI EXAM.	EXAM MTH.	PROCEDURE	CAL. BLOCK	INSERVICE REQ.	INSERVICE SCHEDULED OUTAGE	NOTES
MSRV-3D-4	PSA-10 SNUBBER	N/A	VT-3	303/8.2.17				S/N 9929
			VT-4	303/8.2.17				S/N 9929
MSRV-3D-2	PSA-10 SNUBBER	N/A	VT-3	303/8.2.17				S/N 9923
			VT-4	303/8.2.17				S/N 9923
MSRV-3D-1	PSA-10 SNUBBER	N/A	VT-3	303/8.2.17				S/N 9948
			VT-4	303/8.2.17				S/N 9948
MSRV-3D-5	PSA-10 SNUBBER	N/A	VT-3	303/8.2.17				S/N 1472
			VT-4	303/8.2.17				S/N 1472
MSRV-3D-3	PSA-10 SNUBBER	N/A	VT-3	303/8.2.17				S/N 9919
			VT-4	303/8.2.17				S/N 9919
MSRV-3D-7	PSA-10 SNUBBER	N/A	VT-3	303/8.2.17				S/N 9945
			VT-4	303/8.2.17				S/N 9945
MSRV-3D-6	PSA-10 SNUBBER	N/A	VT-3	303/8.2.17				S/N 323
			VT-4	303/8.2.17				S/N 323

WNP-02
INTERVAL: PSI
PERIOD: NA
OUTAGE:
DRAWING NO. MS-318

WASHINGTON PUBLIC POWER SUPPLY SYSTEM
PROGRAM PLAN AND SCHEDULE
SYSTEM OR COMPONENT: MS(18)2-15
DESCRIPTION: MS-RV-4D DISCHARGE

DATE 12/14/84

IDENT. NO.	DESCRIPTION	SECT. XI EXAM.	EXAM MTH.	PROCEDURE	CAL. BLOCK	INSERVICE REQ.	INSERVICE SCHEDULED OUTAGE	NOTES
MSRV-4D-2								
	PSA-10 SNUBBER	N/A	VT-3	303/8.2.17				S/N 9933
			VT-4	303/8.2.17				S/N 9933
MSRV-4D-3								
	PSA-10 SNUBBER	N/A	VT-3	303/8.2.17				S/N 697
			VT-4	303/8.2.17				S/N 697
MSRV-4D-1								
	PSA-10 SNUBBER	N/A	VT-3	303/8.2.17				S/N 9952
			VT-4	303/8.2.17				S/N 9952
MSRV-4D-6								
	PSA-10 SNUBBER	N/A	VT-3	303/8.2.17				S/N 9940
			VT-4	303/8.2.17				S/N 9940
MSRV-4D-4								
	PSA-10 SNUBBER	N/A	VT-3	303/8.2.17				S/N 9941
			VT-4	303/8.2.17				S/N 9941
MSRV-4D-5								
	PSA-10 SNUBBER	N/A	VT-3	303/8.2.17				S/N 9920
			VT-4	303/8.2.17				S/N 9920

WNP-02
INTERVAL: PSI
PERIOD: NA
OUTAGE:
DRAWING NO. +QC I SN

WASHINGTON PUBLIC POWER SUPPLY SYSTEM
PROGRAM PLAN AND SCHEDULE
SYSTEM OR COMPONENT: +QC I SN
DESCRIPTION: MISC SNUBBERS

DATE 12/14/84

IDENT. NO.	DESCRIPTION	SECT. XI EXAM.	EXAM MTH.	PROCEDURE	CAL. BLOCK	INSERVICE REQ.	INSERVICE SCHEDULED OUTAGE	NOTES
AS-129								
	PSA-3 SNUBBER	N/A	VT-3	303/8.2.17				
			VT-4	303/8.2.17				
AS-131								
	PSA-1/2 SNUBBER	N/A	VT-3	303/8.2.17				
			VT-4	303/8.2.17				
AS-139								
	PSA-1/2 SN(2)	N/A	VT-3	303/8.2.17				S/N 122 S/N 389
			VT-4	303/8.2.17				S/N 122 S/N 389
AS-157								
	PSA-1 SNUBBER	N/A	VT-3	303/8.2.17				S/N 368
			VT-4	303/8.2.17				S/N 368
AS-180								
	PSA-1/2 SNUBBER	N/A	VT-3	303/8.2.17				S/N 399
			VT-4	303/8.2.17				S/N 399

WNP-02
INTERVAL: PSI
PERIOD: NA
OUTAGE:
DRAWING NO. +QC I SN

WASHINGTON PUBLIC POWER SUPPLY SYSTEM
PROGRAM PLAN AND SCHEDULE
SYSTEM OR COMPONENT: +QC I SN
DESCRIPTION: MISC. SNUBBERS

IDENT. NO.	DESCRIPTION	SECT. XI EXAM.	EXAM MTH.	PROCEDURE	CAL. BLOCK	INSERVICE REQ.	INSERVICE SCHEDULED OUTAGE	NOTES
CEP-905S	PSA-1/2 SNUBBER	N/A	VT-3	303/8.2.17				S/N
			VT-4	303/8.2.17				S/N
CEP-908N	PSA-3 SNUBBER	N/A	VT-3	303/8.2.17				S/N
			VT-4	303/8.2.17				S/N
COND-862	PSA-1/2 SN(2)	N/A	VT-3	303/8.2.17				S/N 418 S/N 114
			VT-4	303/8.2.17				S/N 418 S/N 114
COND-863	PSA-1 SNUBBER	N/A	VT-3	303/8.2.17				S/N 613
			VT-4	303/8.2.17				S/N 613
COND-880	PSA-3 SN(2)	N/A	VT-3	303/8.2.17				S/N 847 S/N 358
			VT-4	303/8.2.17				S/N 847 S/N 358
COND-957N	PSA-1 SNUBBER	N/A	VT-3	303/8.2.17				S/N 367
			VT-4	303/8.2.17				S/N 367

WNP-C2
INTERVAL: PSI
PERIOD: NA
OUTAGE:
DRAWING NO. +QC I SN

WASHINGTON PUBLIC POWER SUPPLY SYSTEM
PROGRAM PLAN AND SCHEDULE
SYSTEM OR COMPONENT: +QC I SN
DESCRIPTION: MISC SNUBBERS

DATE 12/14/84

IDENT. NO.	DESCRIPTION	SECT. XI EXAM.	EXAM MTH.	PROCEDURE	CAL. BLOCK	INSERVICE REQ.	INSERVICE SCHEDULED OUTAGE	NOTES
DE-2	PSA-3 SNUBBER	N/A	VT-3	303/8.2.17				S/N 3934
			VT-4	303/8.2.17				S/N 3934
DE-3	PSA-3 SN(2)	N/A	VT-3	303/8.2.17				S/N 3929/
			VT-4	303/8.2.17				S/N 3929/
DE-23	PSA-3 SNUBBER	N/A	VT-3	303/8.2.17				S/N 2381
			VT-4	303/8.2.17				S/N 2381
DE-49	PSA-3 SNUBBER	N/A	VT-3	303/8.2.17				S/N 2354
			VT-4	303/8.2.17				S/N 2354
DE-57	PSA-3 SNUBBER	N/A	VT-3	303/8.2.17				S/N 2355
			VT-4	303/8.2.17				S/N 2355
DE-59	PSA-3 SNUBBER	N/A	VT-3	303/8.2.17				S/N 2380
			VT-4	303/8.2.17				S/N 2380
DE-902N	PSA-1 SN(2)	N/A	VT-3	303/8.2.17				S/N 614/
			VT-4	303/8.2.17				S/N 614/
DE-2836-15	PSA-1/2 SNUBBER	N/A	VT-3	303/8.2.17				S/N
			VT-4	303/8.2.17				S/N
DE-2837-17	PSA-1/4 SNUBBER	N/A	VT-3	303/8.2.17				S/N 6214

WNP-02
INTERVAL: PSI
PERIOD: NA
OUTAGE:
DRAWING NO. +QC I SN

WASHINGTON PUBLIC POWER SUPPLY SYSTEM
PROGRAM PLAN AND SCHEDULE
SYSTEM OR COMPONENT: +QC I SN
DESCRIPTION: MISC SNUBBERS

DATE 12/14/84

IDENT. NO.	DESCRIPTION	SECT. XI EXAM.	EXAM MTH.	PROCEDURE	CAL. BLOCK	INSERVICE REQ.	INSERVICE SCHEDULED OUTAGE	NOTES
			VT-4	303/8.2.17				S/N 6214
DE-2838-18								
	PSA-1/4 SNUBBER	N/A	VT-3	303/8.2.17				S/N 434
			VT-4	303/8.2.17				S/N 434
DE-2839-14B								
	PSA-1/4 SNUBBER	N/A	VT-3	303/8.2.17				S/N 399
			VT-4	303/8.2.17				S/N 399
EDR-903N								
	PSA-1/4 SNUBBER	N/A	VT-3	303/8.2.17				S/N
			VT-4	303/8.2.17				S/N
EDR-904N								
	PSA-1/4 SNUBBER	N/A	VT-3	303/8.2.17				S/N
			VT-4	303/8.2.17				S/N
EDR-905N								
	PSA-1/4 SNUBBER	N/A	VT-3	303/8.2.17				S/N
			VT-4	303/8.2.17				S/N
EDR-906N								
	PSA-1/4 SNUBBER	N/A	VT-3	303/8.2.17				S/N
			VT-4	303/8.2.17				S/N
FDR-900N								
	PSA-1 SNUBBER	N/A	VT-3	303/8.2.17				S/N
			VT-4	303/8.2.17				S/N
FDR-901N								
	PSA-1/4 SNUBBER	N/A	VT-3	303/8.2.17				S/N
			VT-4	303/8.2.17				S/N

WNP-02
INTERVAL: PSI
PERIOD: NA
OUTAGE:
DRAWING NO. +QC I SN

WASHINGTON PUBLIC POWER SUPPLY SYSTEM
PROGRAM PLAN AND SCHEDULE
SYSTEM OR COMPONENT: +QC I SN
DESCRIPTION: MISC SNUBBERS

DATE 12/14/84

IDENT. NO.	DESCRIPTION	SECT. XI EXAM.	EXAM MTH.	PROCEDURE	CAL. BLOCK	INSERVICE REQ.	INSERVICE SCHEDULED OUTAGE	NOTES
FDR-902N	PSA-1 SNUBBER	N/A	VT-3	303/8.2.17				S/N
			VT-4	303/8.2.17				S/N
FDR-903N	PSA-3 SN(2)	N/A	VT-3	303/8.2.17				S/N 4429/4489
			VT-4	303/8.2.17				S/N 4429/4489
HY-4235-110	PSA-1/4 SNUBBER	N/A	VT-3	303/8.2.17				S/N 28429
			VT-4	303/8.2.17				S/N 28429
HY-4236-110	PSA-1/4 SNUBBER	N/A	VT-3	303/8.2.17				S/N 28430
			VT-4	303/8.2.17				S/N 28430
HY-4237-110	PSA-1/4 SNUBBER	N/A	VT-3	303/8.2.17				S/N 28434
			VT-4	303/8.2.17				S/N 28434
MD-74	PSA-1/2 SNUBBER	N/A	VT-3	303/8.2.17				S/N
			VT-4	303/8.2.17				S/N
MD-1285-11B	PSA-1/4 SNUBBER	N/A	VT-3	303/8.2.17				S/N
			VT-4	303/8.2.17				S/N
MD-1285-14A	PSA-1/4 SNUBBER	N/A	VT-3	303/8.2.17				S/N
			VT-4	303/8.2.17				S/N
MD-1285-14D	PSA-1/2 SNUBBER	N/A	VT-3	303/8.2.17				S/N

WNP-02
INTERVAL: PSI
PERIOD: NA
OUTAGE:
DRAWING NO. +OC I SN

WASHINGTON PUBLIC POWER SUPPLY SYSTEM
PROGRAM PLAN AND SCHEDULE
SYSTEM OR COMPONENT: +OC I SN
DESCRIPTION: MISC SNUBBERS

DATE 12/14/84

IDENT. NO.	DESCRIPTION	SECT. XI EXAM.	EXAM MTH.	PROCEDURE	CAL. BLOCK	INSERVICE REQ.	INSERVICE SCHEDULED OUTAGE	NOTES
			VT-4	303/8.2.17				S/N
MD-1285-14C	PSA-1/4 SNUBBER	N/A	VT-3	303/8.2.17				S/N
			VT-4	303/8.2.17				S/N
MD-1287-11	PSA-1/4 SNUBBER	N/A	VT-3	303/8.2.17				S/N
			VT-4	303/8.2.17				S/N
MD-1287-15	PSA-1 SNUBBER	N/A	VT-3	303/8.2.17				S/N
			VT-4	303/8.2.17				S/N
MD-1288-17	PSA-1/2 SNUBBER	N/A	VT-3	303/8.2.17				S/N
			VT-4	303/8.2.17				S/N
MD-1290-11B	PSA-1/4 SNUBBER	N/A	VT-3	303/8.2.17				S/N
			VT-4	303/8.2.17				S/N
MS-249	PSA-1 SNUBBER	N/A	VT-3	303/8.2.17				S/N 341
			VT-4	303/8.2.17				S/N 341
MS-255	PSA-1 SNUBBER	N/A	VT-3	303/8.2.17				S/N 363
			VT-4	303/8.2.17				S/N 363
MS-256	PSA-3 SN(2)	N/A	VT-3	303/8.2.17				S/N 4444/
			VT-4	303/8.2.17				S/N 4444/

WNP-02
INTERVAL: PSI
PERIOD: NA
OUTAGE:
DRAWING NO. +QC I SN

WASHINGTON PUBLIC POWER SUPPLY SYSTEM
PROGRAM PLAN AND SCHEDULE
SYSTEM OR COMPONENT: +QC I SN
DESCRIPTION: MISC SNUBBERS

DATE 12/14/84

IDENT. NO.	DESCRIPTION	SECT. XI EXAM.	EXAM MTH.	PROCEDURE	CAL. BLOCK	INSERVICE REQ.	INSERVICE SCHEDULED OUTAGE	NOTES
MS-953N	PSA-3 SNUBBER	N/A	VT-3	303/8.2.17				S/N 2568
			VT-4	303/8.2.17				S/N 2568
MS-954N	PSA-3 SNUBBER	N/A	VT-3	303/8.2.17				S/N 2366
			VT-4	303/8.2.17				S/N 2366
MS-2618-12A	PSA-1/4 SNUBBER	N/A	VT-3	303/8.2.17				S/N 19879
			VT-4	303/8.2.17				S/N 19879
MS-2618-12B	PSA-1/2 SNUBBER	N/A	VT-3	303/8.2.17				S/N 2554
			VT-4	303/8.2.17				S/N 2554
MS-2618-13A	PSA-1/4 SNUBBER	N/A	VT-3	303/8.2.17				S/N 315
			VT-4	303/8.2.17				S/N 315
MS-2618-13B	PSA-1/4 SNUBBER	N/A	VT-3	303/8.2.17				S/N 28462
			VT-4	303/8.2.17				S/N 28462
MS-2618-11	PSA-1/2 SNUBBER.	N/A	VT-3	303/8.2.17				S/N 2094
			VT-4	303/8.2.17				S/N 2094
MS-4448-12	PSA-1/4 SNUBBER	N/A	VT-3	303/8.2.17				S/N 291
			VT-4	303/8.2.17				S/N 291
MS-4448-46	PSA-1/4 SNUBBER	N/A	VT-3	303/8.2.17				S/N 433

WNP-02
INTERVAL: PSI
PERIOD: NA
OUTAGE:
DRAWING NO. +QC I SN

WASHINGTON PUBLIC POWER SUPPLY SYSTEM
PROGRAM PLAN AND SCHEDULE
SYSTEM OR COMPONENT: +QC I SN
DESCRIPTION: MISC SNUBBERS

DATE 12/14/84

IDENT. NO.	DESCRIPTION	SECT. XI EXAM.	EXAM MTH.	PROCEDURE	CAL. BLOCK	INSERVICE REQ.	INSERVICE SCHEDULED OUTAGE	NOTES
			VT-4	303/8.2.17				S/N 433
MS-4448-411								
	PSA-1/4 SNUBBER	N/A	VT-3	303/8.2.17				S/N
			VT-4	303/8.2.17				S/N
MS-4448-413								
	PSA-1/4 SNUBBER	N/A	VT-3	303/8.2.17				S/N 318
			VT-4	303/8.2.17				S/N 318
MS-4448-64								
	PSA-1/4 SNUBBER	N/A	VT-3	303/8.2.17				S/N 316
			VT-4	303/8.2.17				S/N 316
MS-4448-66								
	PSA-1/4 SNUBBER	N/A	VT-3	303/8.2.17				S/N 309
			VT-4	303/8.2.17				S/N 309
MS-4448-68								
	PSA-1/4 SNUBBER	N/A	VT-3	303/8.2.17				S/N 295
			VT-4	303/8.2.17				S/N 295
MS-4448-72								
	PSA-1/4 SNUBBER	N/A	VT-3	303/8.2.17				S/N 422
			VT-4	303/8.2.17				S/N 422
MS-4448-75								
	PSA-1/4 SNUBBER	N/A	VT-3	303/8.2.17				S/N 19882
			VT-4	303/8.2.17				S/N 19882
MSLC-2821-12								
	PSA-1/2 SN(2)	N/A	VT-3	303/8.2.17				S/N
			VT-4	303/8.2.17				S/N

WNP-02
INTERVAL: PSI
PERIOD: NA
OUTAGE:
DRAWING NO. +QC I SN

WASHINGTON PUBLIC POWER SUPPLY SYSTEM
PROGRAM PLAN AND SCHEDULE
SYSTEM OR COMPONENT: +QC I SN
DESCRIPTION: MISC SNUBBERS

IDENT. NO.	DESCRIPTION	SECT. XI EXAM.	EXAM MTH.	PROCEDURE	CAL. BLOCK	INSERVICE REQ.	INSERVICE SCHEDULED OUTAGE	NOTES
MSLC-2821-22								
	PSA-1 SNUBBER	N/A	VT-3	303/8.2.17				S/N 581
			VT-4	303/8.2.17				S/N 581
MSLC-2822-12								
	PSA-1/2 SNUBBER	N/A	VT-3	303/8.2.17				S/N
			VT-4	303/8.2.17				S/N
MSLC-2822-31								
	PSA-1/4 SNUBBER	N/A	VT-3	303/8.2.17				S/N
			VT-4	303/8.2.17				S/N
RCC-146								
	PSA-1 SN (2)	N/A	VT-3	303/8.2.17				S/N 369 S/N 370
			VT-4	303/8.2.17				S/N 369S/N 370
RCC-148								
	PSA-3 SNUBERS	N/A	VT-3	303/8.2.17				S/N 4494
			VT-4	303/8.2.17				S/N 4494
RCC-150								
	PSA-1/2 SN	N/A	VT-3	303/8.2.17				S/N 2110
			VT-4	303/8.2.17				S/N 2110
RCC-151								
	PSA-1/2 SN (2)	N/A	VT-3	303/8.2.17				S/N 2110
			VT-4	303/8.2.17				S/N 2110
RCC-161								
	PSA-1/2 SNUBBER	N/A	VT-3	303/8.2.17				S/N 2153
			VT-4	303/8.2.17				S/N 2153
RCC-163								
	PSA-1/4 SNUBBER	N/A	VT-3	303/8.2.17				S/N 6228

WNP-02
INTERVAL: PSI
PERIOD: NA
OUTAGE:
DRAWING NO. +QC I SN

WASHINGTON PUBLIC POWER SUPPLY SYSTEM
PROGRAM PLAN AND SCHEDULE
SYSTEM OR COMPONENT: +QC I SN
DESCRIPTION: MISC SNUBBERS

DATE 12/14/84

IDENT. NO.	DESCRIPTION	SECT. XI EXAM.	EXAM MTH.	PROCEDURE	CAL. BLOCK	INSERVICE REQ.	INSERVICE SCHEDULED OUTAGE	NOTES
RCC-165			VT-4	303/8.2.17				S/N 6228
	PSA-1 SNUBBER	N/A	VT-3	303/8.2.17				S/N 584
RCC-166			VT-4	303/8.2.17				S/N 584
	PSA-1 SNUBBER	N/A	VT-3	303/8.2.17				S/N 351
RCC-167			VT-4	303/8.2.17				S/N 351
	PSA-1/4 SN (2)	N/A	VT-3	303/8.2.17				S/N 301S/N 313
RCC-177			VT-4	303/8.2.17				S/N 301S/N 313
	PSA-3 SNUBBER	N/A	VT-3	303/8.2.17				S/N 472
RCC-334			VT-3	303/8.2.17				S/N 472
			VT-4	303/8.2.17				S/N 472
	PSA-1/2 SN (2)	N/A	VT-3	303/8.2.17				S/N 1479S/N 2466
RCC-337			VT-4	303/8.2.17				S/N 1479S/N 2466
	PSA-3 SNUBBER	N/A	VT-3	303/8.2.17				S/N 2356
RCC-341			VT-4	303/8.2.17				S/N 2356
	PSA-1/2 SNUBBER	N/A	VT-3	303/8.2.17				S/N 2485
RCC-344			VT-4	303/8.2.17				S/N 2485
	PSA-1/4 SN (2)	N/A	VT-3	303/8.2.17				S/N 6213S/N 6220

WNP-02
INTERVAL: PSI
PERIOD: NA
OUTAGE:
DRAWING NO. +QC I SN

WASHINGTON PUBLIC POWER SUPPLY SYSTEM
PROGRAM PLAN AND SCHEDULE
SYSTEM OR COMPONENT: +QC I SN
DESCRIPTION: MISC SNUBBERS

DATE 12/14/84

IDENT. NO.	DESCRIPTION	SECT. XI EXAM.	EXAM MTH.	PROCEDURE	CAL. BLOCK	INSERVICE REQ.	INSERVICE SCHEDULED OUTAGE	NOTES
RCC-371			VT-4	303/8.2.17				S/N 6213S/N 6220
	PSA-1/2 SNUBBER	N/A	VT-3	303/8.2.17				S/N 2569
			VT-4	303/8.2.17				S/N 2569
RCC-375								
	PSA-1 SNUBBER	N/A	VT-3	303/8.2.17				S/N 350
			VT-4	303/8.2.17				S/N 350
RCC-376								
	PSA-1/2 SNUBBER	N/A	VT-3	303/8.2.17				S/N 4002
			VT-4	303/8.2.17				S/N 4002
RCC-379								
	PSA-1 SNUBBER	N/A	VT-3	303/8.2.17				S/N 128
			VT-4	303/8.2.17				S/N 128
RCC-430								
	PSA-1/4 SN (2)	N/A	VT-3	303/8.2.17				S/N 19887 S/N 19883
			VT-4	303/8.2.17				S/N 19887 S/N 19883
RCC-474								
	PSA-1/4 SN (2)	N/A	VT-3	303/8.2.17				S/N 19880 S/N 19885
			VT-4	303/8.2.17				S/N 19880 S/N 19885
RCC-481								
	PSA-1 SNUBBER	N/A	VT-3	303/8.2.17				S/N 22341
			VT-4	303/8.2.17				S/N 22341

WNP-02
INTERVAL: PSI
PERIOD: NA
OUTAGE:
DRAWING NO. +QC I SN

WASHINGTON PUBLIC POWER SUPPLY SYSTEM
PROGRAM PLAN AND SCHEDULE
SYSTEM OR COMPONENT: +QC I SN
DESCRIPTION: MISC SNUBBERS

DATE 12/14/84

IDENT. NO.	DESCRIPTION	SECT. XI EXAM.	EXAM MTH.	PROCEDURE	CAL. BLOCK	INSERVICE REQ.	INSERVICE SCHEDULED OUTAGE	NOTES
RCC-482								
	PSA-1 SNUBBER	N/A	VT-3	303/8.2.17				S/N 386
			VT-4	303/8.2.17				S/N 386
RCC-484								
	PSA-1/4 SNUBBER	N/A	VT-3	303/8.2.17				S/N 2106
			VT-4	303/8.2.17				S/N 2106
RCC-485								
	PSA-1/4 SNUBBER	N/A	VT-3	303/8.2.17				S/N 310
			VT-4	303/8.2.17				S/N 310
RCC-902N								
	PSA-1/4 SNUBBER	N/A	VT-3	303/8.2.17				S/N 19891
			VT-4	303/8.2.17				S/N 19891
RCC-904N								
	PSA-1 SNUBBER	N/A	VT-3	303/8.2.17				S/N 343
			VT-4	303/8.2.17				S/N 343
RCC-905N								
	PSA-1 SN (2)	N/A	VT-3	303/8.2.17				S/N 22354 S/N 22343
			VT-4	303/8.2.17				S/N 22354 S/N 22343
RCC-907N								
	PSA-1/4 SNUBBER	N/A	VT-3	303/8.2.17				S/N 306
			VT-4	303/8.2.17				S/N 306
RCC-915N								
	PSA-1 SNUBBER	N/A	VT-3	303/8.2.17				S/N 588
			VT-4	303/8.2.17				S/N 588

WNP-02
INTERVAL: PSI
PERIOD: NA
OUTAGE:
DRAWING NO. +QC I SN

WASHINGTON PUBLIC POWER SUPPLY SYSTEM
PROGRAM PLAN AND SCHEDULE
SYSTEM OR COMPONENT: +QC I SN
DESCRIPTION: MISC SNUBBERS

DATE 12/14/84

IDENT. NO.	DESCRIPTION	SECT. XI EXAM.	EXAM MTH.	PROCEDURE	CAL. BLOCK	INSERVICE REQ.	INSERVICE SCHEDULED OUTAGE	NOTES
RCC-926N								
	PSA-1/2 SNUBBER	N/A	VT-3	303/8.2.17				S/N 4042
			VT-4	303/8.2.17				S/N 4042
RCC-927N								
	PSA-3 SNUBBER	N/A	VT-3	303/8.2.17				S/N 1067
			VT-4	303/8.2.17				S/N 1067
RCC-954N								
	PSA-1/2 SNUBBER	N/A	VT-3	303/8.2.17				S/N 2557
			VT-4	303/8.2.17				S/N 2557
RCC-963N								
	PSA-1 SNUBBER	N/A	VT-3	303/8.2.17				S/N 226
			VT-4	303/8.2.17				S/N 226
RCC-2035-11								
	PSA-1/4 SNUBBER	N/A	VT-3	303/8.2.17				S/N 28445
			VT-4	303/8.2.17				S/N 28445
RCC-2035-14								
	PSA-1/4 SNUBBER	N/A	VT-3	303/8.2.17				S/N 28446
			VT-4	303/8.2.17				S/N 28446
RCC-2035-15								
	PSA-1/2 SNUBBER	N/A	VT-3	303/8.2.17				S/N 2123
			VT-4	303/8.2.17				S/N 2123
RCC-2035-16								
	PSA-1/2 SNUBBER	N/A	VT-3	303/8.2.17				S/N 4044
			VT-4	303/8.2.17				S/N 4044
RCIC-1490-13								
	PSA-1/2 SNUBBER	N/A	VT-3	303/8.2.17				S/N

WNP-02
INTERVAL: PSI
PERIOD: NA
OUTAGE:
DRAWING NO. +QC I SN

WASHINGTON PUBLIC POWER SUPPLY SYSTEM
PROGRAM PLAN AND SCHEDULE
SYSTEM OR COMPONENT: +QC I SN
DESCRIPTION: MISC SNUBBERS

IDENT. NO.	DESCRIPTION	SECT. XI EXAM.	EXAM MTH.	PROCEDURE	CAL. BLOCK	INSERVICE REQ.	INSERVICE SCHEDULED OUTAGE	NOTES
RHR-9			VT-4	303/8.2.17				S/N
	PSA-1/2 SNUBBER	N/A	VT-3	303/8.2.17				S/N
RHR-20			VT-4	303/8.2.17				S/N
	PSA-1/2 SNUBBER	N/A	VT-3	303/8.2.17				S/N
RHR-23			VT-4	303/8.2.17				S/N
	PSA-1/4 SN(2)	N/A	VT-3	303/8.2.17				S/N
RHR-183			VT-4	303/8.2.17				S/N
	PSA-10 SN(2)	N/A	VT-3	303/8.2.17				S/N 122/281
RHR-200			VT-4	303/8.2.17				S/N 122/281
	PSA-1/2 SNUBBER	N/A	VT-3	303/8.2.17				S/N
RHR-206			VT-4	303/8.2.17				S/N
	PSA-1/2 SNUBBER	N/A	VT-3	303/8.2.17				S/N 610
RHR-210			VT-4	303/8.2.17				S/N 610
	PSA-1/2 SNUBBER	N/A	VT-3	303/8.2.17				S/N 111
RHR-214			VT-4	303/8.2.17				S/N 111
	PSA-1/2 SNUBBER	N/A	VT-3	303/8.2.17				S/N 2104
			VT-4	303/8.2.17				S/N 2104

WNP-02
INTERVAL: PSI
PERIOD: NA
OUTAGE:
DRAWING NO. +QC I SN

WASHINGTON PUBLIC POWER SUPPLY SYSTEM
PROGRAM PLAN AND SCHEDULE
SYSTEM OR COMPONENT: +QC I SN
DESCRIPTION: MISC SNUBBERS

DATE 12/14/84

IDENT. NO.	DESCRIPTION	SECT. XI EXAM.	EXAM MTH.	PROCEDURE	CAL. BLOCK	INSERVICE REQ.	INSERVICE SCHEDULED OUTAGE	NOTES
RHR-325								
	PSA-1/2 SNUBBER	N/A	VT-3	303/8.2.17				S/N
			VT-4	303/8.2.17				S/N
RHR-326								
	PSA-1/4 SN(2)	N/A	VT-3	303/8.2.17				S/N
			VT-4	303/8.2.17				S/N
RHR-332								
	PSA-1 SNUBBER	N/A	VT-3	303/8.2.17				S/N
			VT-4	303/8.2.17				S/N
RHR-333								
	PSA-1 SNUBBER	N/A	VT-3	303/8.2.17				S/N
			VT-4	303/8.2.17				S/N
RHR-334								
	PSA-1/4 SNUBBER	N/A	VT-3	303/8.2.17				S/N
			VT-4	303/8.2.17				S/N
RHR-290								
	PSA-1/2 SNUBBER	N/A	VT-3	303/8.2.17				S/N
			VT-4	303/8.2.17				S/N
RHR-373								
	PSA-1 SNUBBER	N/A	VT-3	303/8.2.17				S/N
			VT-4	303/8.2.17				S/N
RHR-400								
	PSA-1/2 SNUBBER*	N/A	VT-3	303/8.2.17				S/N
			VT-4	303/8.2.17				S/N
RHR-401								
	PSA-1/2 SNUBBER	N/A	VT-3	303/8.2.17				S/N

WNP-02
INTERVAL: PSI
PERIOD: NA
OUTAGE:
DRAWING NO. +QC I SN

WASHINGTON PUBLIC POWER SUPPLY SYSTEM
PROGRAM PLAN AND SCHEDULE
SYSTEM OR COMPONENT: +QC I SN
DESCRIPTION: MISC SNUBBERS

DATE 12/14/84

IDENT. NO.	DESCRIPTION	SECT. XI EXAM.	EXAM MTH.	PROCEDURE	CAL. BLOCK	INSERVICE REQ.	INSERVICE SCHEDULED OUTAGE	NOTES
			VT-4	303/8.2.17				S/N
RHR-403	PSA-1 SNUBBER	N/A	VT-3	303/8.2.17				S/N
			VT-4	303/8.2.17				S/N
RHR-441	PSA-1/2 SNUBBER	N/A	VT-3	303/8.2.17				S/N
			VT-4	303/8.2.17				S/N
RHR-442	PSA-1/2 SNUBBER	N/A	VT-3	303/8.2.17				S/N
			VT-4	303/8.2.17				S/N
RHR-443	PSA-1/2 SNUBBER	N/A	VT-3	303/8.2.17				S/N
			VT-4	303/8.2.17				S/N
RHR-448	PSA-1/2 SNUBBER	N/A	VT-3	303/8.2.17				S/N
			VT-4	303/8.2.17				S/N
RHR-449	PSA-1/4 SN(2)	N/A	VT-3	303/8.2.17				S/N
			VT-4	303/8.2.17				S/N
RHR-453	PSA-1/4 SNUBBER	N/A	VT-3	303/8.2.17				S/N
			VT-4	303/8.2.17				S/N
RHR-454	PSA-1/2 SNUBBER	N/A	VT-3	303/8.2.17				S/N
			VT-4	303/8.2.17				S/N

WNP-02
INTERVAL: PSI
PERIOD: NA
OUTAGE:
DRAWING NO. +QC I SN

WASHINGTON PUBLIC POWER SUPPLY SYSTEM
PROGRAM PLAN AND SCHEDULE
SYSTEM OR COMPONENT: +QC I SN
DESCRIPTION: MISC SNUBBERS

DATE 12/14/84

IDENT. NO.	DESCRIPTION	SECT. XI EXAM.	EXAM MTH.	PROCEDURE	CAL. BLOCK	INSERVICE REQ.	INSERVICE SCHEDULED OUTAGE	NOTES
RHR-903N								
	PSA-3 SNUBBER	N/A	VT-3	303/8.2.17				S/N 3926
			VT-4	303/8.2.17				S/N 3926
RHR-906N								
	PSA-3 SN(2)	N/A	VT-3	303/8.2.17				S/N
			VT-4	303/8.2.17				S/N
RHR-913N								
	PSA-3 SNUBBER	N/A	VT-3	303/8.2.17				S/N 4430
			VT-4	303/8.2.17				S/N 4430
RHR-914N								
	PSA-10 SNUBBER	N/A	VT-3	303/8.2.17				S/N
			VT-4	303/8.2.17				S/N
RHR-940N								
	PSA-1 SN(2)	N/A	VT-3	303/8.2.17				S/N
			VT-4	303/8.2.17				S/N
RHR-946N								
	PSA-3 SNUBBER	N/A	VT-3	303/8.2.17				S/N 4438
			VT-4	303/8.2.17				S/N 4438
RHR-952N								
	PSA-3 SNUBBER	N/A	VT-3	303/8.2.17				S/N 657 STM SUPP MODE DEACT
			VT-4	303/8.2.17				S/N 657 STM SUPP MODE DEACT
RHR-954N								
	PSA-1 SN (2)	N/A	VT-3	303/8.2.17				S/N 125 S/N 126 STM SUPP MODE DEACT

WNP-02
INTERVAL: PSI
PERIOD: NA
OUTAGE:
DRAWING NO. +OC I SN

WASHINGTON PUBLIC POWER SUPPLY SYSTEM
PROGRAM PLAN AND SCHEDULE
SYSTEM OR COMPONENT: +OC I SN
DESCRIPTION: MISC SNUBBERS

DATE 12/14/84

IDENT. NO.	DESCRIPTION	SECT. XI EXAM.	EXAM MTH.	PROCEDURE	CAL. BLOCK	INSERVICE REQ.	INSERVICE SCHEDULED OUTAGE	NOTES
			VT-4	303/8.2.17				S/N 125 S/N 126 STM SUPP MODE DEACT
RHR-959N								
	PSA-1 SN(2)	N/A	VT-3	303/8.2.17				S/N
			VT-4	303/8.2.17				S/N
RHR-962N								
	PSA-3 SNUBBER	N/A	VT-3	303/8.2.17				S/N
			VT-4	303/8.2.17				S/N
RHR-974N								
	PSA-3 SNUBBER	N/A	VT-3	303/8.2.17				S/N 4457
			VT-4	303/8.2.17				S/N 4457
RHR-977N								
	PSA-3 SN (2)	N/A	VT-3	303/8.2.17				S/N 250 S/N 264
			VT-4	303/8.2.17				S/N 250 S/N 264
RHR-986N								
	PSA-1 SNUBBER	N/A	VT-3	303/8.2.17				S/N 122 STM SUPP MODE DEACT
			VT-4	303/8.2.17				S/N 122 STM SUPP MODE DEACT
RHR-993N								
	PSA-1 SNUBBER	N/A	VT-3	303/8.2.17				S/N
			VT-4	303/8.2.17				S/N
RHR-2264-11								
	PSA-1/4 SNUBBER	N/A	VT-3	303/8.2.17				S/N 28454

WNP-02
INTERVAL: PSI
PERIOD: NA
OUTAGE:
DRAWING NO. +QC I SN

WASHINGTON PUBLIC POWER SUPPLY SYSTEM
PROGRAM PLAN AND SCHEDULE
SYSTEM OR COMPONENT: +QC I SN
DESCRIPTION: MISC SNUBBERS

DATE 12/14/84

IDENT. NO.	DESCRIPTION	SECT. XI EXAM.	EXAM MTH.	PROCEDURE	CAL. BLOCK	INSERVICE REQ.	INSERVICE SCHEDULED OUTAGE	NOTES
			VT-4	303/8.2.17				S/N 28454
RHR-2264-21								
	PSA-1/4 SNUBBER	N/A	VT-3	303/8.2.17				S/N 19887
			VT-4	303/8.2.17				S/N 19887
RHR-2264-22								
	PSA-1 SNUBBER	N/A	VT-3	303/8.2.17				S/N 352
			VT-4	303/8.2.17				S/N 352
RHR-4605-41A								
	PSA-1/4 SNUBBER	N/A	VT-3	303/8.2.17				S/N 419
			VT-4	303/8.2.17				S/N 419
RHR-983N								
	PSA-1/4 SNUBBER	N/A	VT-3	303/8.2.17				S/N
			VT-4	303/8.2.17				S/N
RRC-1549-62								
	PSA-1/4 SNUBBER	N/A	VT-3	303/8.2.17				S/N
			VT-4	303/8.2.17				S/N
RRC-1552-12								
	PSA-1/4 SNUBBER	N/A	VT-3	303/8.2.17				S/N
			VT-4	303/8.2.17				S/N
RRC-1946-2A1								
	PSA-1/2 SNUBBER	N/A	VT-3	303/8.2.17				S/N 4018
			VT-4	303/8.2.17				S/N 4018
RRC-1946-2A3								
	PSA-1/4 SNUBBER	N/A	VT-3	303/8.2.17				S/N 28426
			VT-4	303/8.2.17				S/N 28426

WNP-02
INTERVAL: PSI
PERIOD: NA
OUTAGE:
DRAWING NO. +QC I SN

WASHINGTON PUBLIC POWER SUPPLY SYSTEM
PROGRAM PLAN AND SCHEDULE
SYSTEM OR COMPONENT: +QC I SN
DESCRIPTION: MISC SNUBBERS

DATE 12/14/84

IDENT. NO.	DESCRIPTION	SECT. XI EXAM.	EXAM MTH.	PROCEDURE	CAL. BLOCK	INSERVICE REQ.	INSERVICE SCHEDULED OUTAGE	NOTES
RRC-1946-2A5								
	PSA-1/4 SNUBBER	N/A	VT-3	303/8.2.17				S/N 33296
			VT-4	303/8.2.17				S/N 33296
RRC-1946-2A8								
	PSA-1/4 SNUBBER	N/A	VT-3	303/8.2.17				S/N 6215
			VT-4	303/8.2.17				S/N 6215
RRC-1946-2A9								
	PSA-1/2 SNUBBER*	N/A	VT-3	303/8.2.17				S/N 4016
			VT-4	303/8.2.17				S/N 4016
RRC-4470-2A1								
	PSA-1/4 SNUBBER	N/A	VT-3	303/8.2.17				S/N 28421
			VT-4	303/8.2.17				S/N 28421
RRC-4470-2A2								
	PSA-1/4 SNUBBER	N/A	VT-3	303/8.2.17				S/N 28445
			VT-4	303/8.2.17				S/N 28445
RRC-4470-2A3								
	PSA-1/4 SNUBBER	N/A	VT-3	303/8.2.17				S/N 28424 S/N 28443
			VT-4	303/8.2.17				S/N 28424 S/N 28443
RRC-4470-2A4								
	PSA-1/4 SNUBBER	N/A	VT-3	303/8.2.17				S/N 2568
			VT-4	303/8.2.17				S/N 2568
RRC-4470-2B1								
	PSA-1/4 SNUBBER	N/A	VT-3	303/8.2.17				S/N 28464
			VT-4	303/8.2.17				S/N 28464

WNP-02
INTERVAL: PSI
PERIOD: NA
OUTAGE:
DRAWING NO. +QC I SN

WASHINGTON PUBLIC POWER SUPPLY SYSTEM
PROGRAM PLAN AND SCHEDULE
SYSTEM OR COMPONENT: +QC I SN
DESCRIPTION: MISC SNUBBERS

DATE 12/14/84

IDENT. NO.	DESCRIPTION	SECT. XI EXAM.	EXAM MTH.	PROCEDURE	CAL. BLOCK	INSERVICE REQ.	INSERVICE SCHEDULED OUTAGE	NOTES
RRC-1946-31								
	PSA-1/4 SNUBBER	N/A	VT-3	303/8.2.17				S/N 623
			VT-4	303/8.2.17				S/N 623
RRC-1946-32								
	PSA-1/4 SNUBBER	N/A	VT-3	303/8.2.17				S/N
			VT-4	303/8.2.17				S/N
RWCU-166								
	PSA-3 SN (2)	N/A	VT-3	303/8.2.17				S/N 3955 S/N 2582
			VT-4	303/8.2.17				S/N 3955 S/N. 2582
RWCU-185								
	PSA-1/2 SN (2)	N/A	VT-3	303/8.2.17				S/N 2539 S/N 2516
			VT-4	303/8.2.17				S/N 2539 S/N 2516
RWCU-186								
	PSA-1/2 SNUBBER	N/A	VT-3	303/8.2.17				S/N 108
			VT-4	303/8.2.17				S/N 108
RWCU-188								
	PSA-1/2 SNUBBER	N/A	VT-3	303/8.2.17				S/N 2522
			VT-4	303/8.2.17				S/N 2522
RWCU-189								
	PSA-1 SNUBBER	N/A	VT-3	303/8.2.17				S/N 634
			VT-4	303/8.2.17				S/N 634
RWCU-191								
	PSA-1/2 SNUBBER	N/A	VT-3	303/8.2.17				S/N 112

WNP-02
INTERVAL: PSI
PERIOD: NA
OUTAGE:
DRAWING NO. +QC I SN

WASHINGTON PUBLIC POWER SUPPLY SYSTEM
PROGRAM PLAN AND SCHEDULE
SYSTEM OR COMPONENT: +QC I SN
DESCRIPTION: MISC SNUBBERS

DATE 12/14/84

IDENT. NO.	DESCRIPTION	SECT. XI EXAM.	EXAM MTH.	PROCEDURE	CAL. BLOCK	INSERVICE REQ.	INSERVICE SCHEDULED OUTAGE	NOTES
			VT-4	303/8.2.17				S/N 112
RWCU-198								
	PSA-1/2 SNUBBER	N/A	VT-3	303/8.2.17				S/N 110
			VT-4	303/8.2.17				S/N 110
RWCU-206								
	PSA-1/2 SNUBBER	N/A	VT-3	303/8.2.17				S/N 380
			VT-4	303/8.2.17				S/N 380
RWCU-208								
	PSA-1/2 SN (2)	N/A	VT-3	303/8.2.17				S/N 101
			VT-4	303/8.2.17				S/N 101
RWCU-236								
	PSA-3 SNUBBER	N/A	VT-3	303/8.2.17				S/N 2345
			VT-4	303/8.2.17				S/N 2345
RWCU-909N								
	PSA-1/2 SNUBBER	N/A	VT-3	303/8.2.17				S/N 4023
			VT-4	303/8.2.17				S/N 4023
RWCU-910N								
	PSA-1/2 SNUBBER	N/A	VT-3	303/8.2.17				S/N 2580
			VT-4	303/8.2.17				S/N 2580
RWCU-911N								
	PSA-1/4 SNUBBER	N/A	VT-3	303/8.2.17				S/N 2142
			VT-4	303/8.2.17				S/N 2142
RWCU-932N								
	PSA-35 SNUBBER	N/A	VT-3	303/8.2.17				S/N 367
			VT-4	303/8.2.17				S/N 367

WNP-02
INTERVAL: PSI
PERIOD: NA
OUTAGE:
DRAWING NO. +QC I SN

WASHINGTON PUBLIC POWER SUPPLY SYSTEM
PROGRAM PLAN AND SCHEDULE
SYSTEM OR COMPONENT: +QC I SN
DESCRIPTION: MISC SNUBBERS

DATE 12/14/84

IDENT. NO.	DESCRIPTION	SECT. XI EXAM.	EXAM MTH.	PROCEDURE	CAL. BLOCK	INSERVICE REQ.	INSERVICE SCHEDULED OUTAGE	NOTES
RWCU-933N								
	PSA-1/4 SNUBBER	N/A	VT-3	303/8.2.17				S/N 2517
			VT-4	303/8.2.17				S/N 2517
RWCU-934N								
	PSA-1/4 SNUBBER	N/A	VT-3	303/8.2.17				S/N 934
			VT-4	303/8.2.17				S/N 934
RWCU-935N								
	PSA-3 SNUBBER	N/A	VT-3	303/8.2.17				S/N 3923
			VT-4	303/8.2.17				S/N 3923
RWCU-936N								
	PSA-1/4 SNUBBER	N/A	VT-3	303/8.2.17				S/N 2559
			VT-4	303/8.2.17				S/N 2559
RWCU-937N								
	PSA-1 SNUBBER	N/A	VT-3	303/8.2.17				S/N 388
			VT-4	303/8.2.17				S/N 388
RWCU-949N								
	PSA-1 SN (2)	N/A	VT-3	303/8.2.17				S/N 213 S/N 212
			VT-4	303/8.2.17				S/N 213 S/N 212
RWCU-950N								
	PSA-1 SN (2)	N/A	VT-3	303/8.2.17				S/N 593 S/N 574
			VT-4	303/8.2.17				S/N 593 S/N 574
SGT-11								
	PSA-10 SN(2)	N/A	VT-3	303/8.2.17				S/N T324/B778

WNP-02
INTERVAL: PSI
PERIOD: NA
OUTAGE:
DRAWING NO. +QC I SN

WASHINGTON PUBLIC POWER SUPPLY SYSTEM
PROGRAM PLAN AND SCHEDULE
SYSTEM OR COMPONENT: +QC I SN
DESCRIPTION: MISC SNUBBERS

DATE 12/14/84

IDENT. NO.	DESCRIPTION	SECT. XI EXAM.	EXAM MTH.	PROCEDURE	CAL. BLOCK	INSERVICE REQ.	SCHEDULED OUTAGE	NOTES
			VT-4	303/8.2.17				S/N T324/B778
SGT-19								
	PSA-3 SNUBBER	N/A	VT-3	303/8.2.17				
			VT-4	303/8.2.17				
SGT-23								
	PSA-3 SN(2)	N/A	VT-3	303/8.2.17				S/N T4487/B44
			VT-4	303/8.2.17				S/N T4487/B44
VR-3								
	PSA-1/2 SN(2)	N/A	VT-3	303/8.2.17				S/N
			VT-4	303/8.2.17				S/N
VR-6								
	PSA-1 SNUBBER	N/A	VT-3	303/8.2.17				S/N
			VT-4	303/8.2.17				S/N
VR-8								
	PSA-1 SNUBBER	N/A	VT-3	303/8.2.17				S/N
			VT-4	303/8.2.17				S/N
VR-900N								
	PSA-1/2 SNUBBER	N/A	VT-3	303/8.2.17				S/N
			VT-4	303/8.2.17				S/N
VR-901N								
	PSA-1/2 SNUBBER	N/A	VT-3	303/8.2.17				S/N
			VT-4	303/8.2.17				S/N
VR-902N								
	PSA-1/2 SNUBBER	N/A	VT-3	303/8.2.17				S/N
			VT-4	303/8.2.17				S/N

WNP-02
INTERVAL: PSI
PERIOD: NA
OUTAGE:
DRAWING NO. +QC I SN

WASHINGTON PUBLIC POWER SUPPLY SYSTEM
PROGRAM PLAN AND SCHEDULE
SYSTEM OR COMPONENT: +QC I SN
DESCRIPTION: MISC SNUBBERS

IDENT. NO.	DESCRIPTION	SECT. XI EXAM.	EXAM MTH.	PROCEDURE	CAL. BLOCK	INSERVICE REQ.	SCHEDULED OUTAGE	NOTES
SLC-4453-68	PSA-1/4 SNUBBER	N/A	VT-3	303/8.2.17				S/N 6209
			VT-4	303/8.2.17				S/N 6209
SLC-4453-69	PSA-1/4 SNUBBER	N/A	VT-3	303/8.2.17				S/N 294
			VT-4	303/8.2.17				S/N 294
SLC-4475-12	PSA-1/4 SNUBBER	N/A	VT-3	303/8.2.17				S/N 311
			VT-4	303/8.2.17				S/N 311
SLC-4475-13	PSA-1/2 SNUBBER	N/A	VT-3	303/8.2.17				S/N 2155
			VT-4	303/8.2.17				S/N 2155
SLC-4475-14	PSA-1/2 SNUBBER	N/A	VT-3	303/8.2.17				S/N 2138
			VT-4	303/8.2.17				S/N 2138
SLC-4475-19	PSA-1/2 SNUBBER	N/A	VT-3	303/8.2.17				S/N 2480
			VT-4	303/8.2.17				S/N 2480
SLC-4475-112	PSA-1/4 SNUBBER	N/A	VT-3	303/8.2.17				S/N 6224
			VT-4	303/8.2.17				S/N 6224
SLC-4475-113	PSA-1/2 SNUBBER	N/A	VT-3	303/8.2.17				S/N 4056
			VT-4	303/8.2.17				S/N 4056
SLC-4475-114	PSA-1/4 SNUBBER	N/A	VT-3	303/8.2.17				S/N 384

WNP-02
INTERVAL: PSI
PERIOD: NA
OUTAGE:
DRAWING NO. +QC I SN

WASHINGTON PUBLIC POWER SUPPLY SYSTEM
PROGRAM PLAN AND SCHEDULE
SYSTEM OR COMPONENT: +QC I SN
DESCRIPTION: MISC SNUBBERS

IDENT. NO.	DESCRIPTION	SECT. XI EXAM.	EXAM MTH.	PROCEDURE	CAL. BLOCK	INSERVICE REQ.	INSERVICE SCHEDULED OUTAGE	NOTES
SLC-4475-116			VT-4	303/8.2.17				S/N 384
	PSA-1 SNUBBER	N/A	VT-3	303/8.2.17				S/N 366
SLC-4475-117			VT-4	303/8.2.17				S/N 366
	PSA-1/2 SNUBBER	N/A	VT-3	303/8.2.17				S/N 2100
SLC-4475-120			VT-4	303/8.2.17				S/N 2100
	PSA-1 SNUBBER	N/A	VT-3	303/8.2.17				S/N 334
SLC-4475-122			VT-4	303/8.2.17				S/N 334
	PSA-1/4 SNUBBER	N/A	VT-3	303/8.2.17				S/N 424
			VT-4	303/8.2.17				S/N 424

9.0 VISUAL EXAMINATION PROGRAM

9.1 Introduction

The Supply System is committed to ensuring that the requirements for preservice visual examinations of ASME Section III, Class 1, 2, and 3 components found in ASME.Section XI are satisfied. The Preservice Visual Examination Program addressed in this section will be implemented separately from the volumetric and surface nondestructive examination activities being conducted by the NDE contractor, Lambert-McGill-Thomas, Inc. To the extent practical, these preservice visual examination activities will be combined with and/or directly utilize the records of related examinations performed to the requirements of ASME Section III. In any case, personnel and procedures utilized to perform those examinations will satisfy the pertinent ASME Section XI requirements. Records documenting the results of those examinations will be suitable for reference during subsequent inservice inspections.

9.2 Visual Examination Categories

The four visual examination categories describe in ASME Section XI, 1977 Edition and defined below will be used in the visual program:

Method VT-1--Visual examination for commponent mechanical and surface condition to document the presence, if any, of cracks, wear, corrosion, erosion or physical damage. This examination is performed on bolting and pump and valve body interiors.

Method VT-2--Visual examination for evidence of leakage from pressure retaining components during pressure or functional tests. This examination is performed on both exempt and non-exempt pressure retaining components.

Method VT-3--Visual examination to locate mechanical and structural misalignment, loss of integrity of welded or bolted connections, wear or erosion, corrosion, or any visual evidence that indicates equipment degradation. Examinations may include the use of dimensional measuring instruments or torquing devices to confirm visual observations. This examination is performed on essentially all types of component supports and restraints.

Method VT-4--Visual examination to confirm functional adequacy, verification of settings or freedom of motion for components or devices such as mechanical and hydraulic snubbers and spring loaded and constant weight hangers.

9.3 Program Description

The Preservice Visual Examination Program is divided into three major divisions as described below:

1) Visual Examination of Pump and Valve Interiors (VT-1):

These examinations will be performed by WPPSS personnel qualified to VT-1 examination criteria in accordance with the WPPSS visual examination qualification program. Essentially all accessable surfaces on the interior of Class 1 pumps, and Class 1 valves greater than 4 inch nominal pipe size, will be examined. Procedure QCS&I-002, found in Section 10, Tab 23, will be used. The scope of items subject to the VT-1 examination is defined in the Program Plan and Schedule Tables found in Section 8.0.

2) Visual Examination for evidence of leakage during System Hydrostatic Test (VT-2):

It is the Supply System's intent to reference the hydrostatic test report required by Section III of the ASME Code to document the VT-2 preservice examination performance. This is allowed by Paragraph IWA-5210(b) of ASME Section XI. In addition, the Supply System will reconfirm pressure boundary integrity for components whose pressure boundary is disassembled following the Section III hydrostatic test (e.g., RPV head removal, valve rework, etc.). This is required by the normal plant startup and operating procedures. The above satisfies the preservice visual examination requirements for evidence of leakage of ASME Section XI, Sections IWA-, IWB-, IWC-, and IWD-5000. Details regarding the Inservice Inspection program for the VT-2 leakage tests will be provided in the WNP-2 Inservice Inspection Program Plan.

3) Visual Examination of component supports (VT-3 and VT-4):

The Supply System is cognizant of the content of subsection IWF of ASME Section XI which was introduced in the Winter 1978 Addenda. Recognizing that Inservice Inspections of component supports will be subject to the requirements of this subsection, every effort will be made to comply with those requirements. IWF-2200, entitled "PRESERVICE EXAMINATION", requires that all component support visual examinations be performed once prior to service. It also requires that all preservice examinations be performed following the initiation of hot functional tests. It is our understanding that the intent of performing the examinations following initiation of hot functional tests is to ensure that the supports have performed successfully having been subjected to normal loads and displacements to which they will be subject inservice. The Supply System will perform

component support examinations as described in the following paragraphs, in a manner which meets the intent of the Code. However, strict compliance is not possible in that the startup program at WNP-2 does not include hot functional tests per se. A copy of the Preservice Component Support Program Plan is included at the end of this section.

a) Pre-Heatup Examinations

All IWF supports will be examined following installation but prior to system heatup. The VT-3 and VT-4 examinations will be performed in conjunction with the Test and Startup program for verification of proper installation and adjustment of component supports per procedure SLT-S303.0, Section 10.0, Tab 40. That procedure includes requirements to look for signs of abnormal corrosion, strain, galling, or anomalies that might inhibit operability, proper clearances and cold settings per hanger detail drawings, and so on. The Test and Startup personnel performing these examinations will be qualified to VT-3 and VT-4 requirements as stated above. Any anomalies or discrepancies with the hanger detail drawings noted during these examinations will be entered on the data sheet form found at the end of the procedure cited above and corrected as part of the regular Test and Startup Program. For purposes of the Preservice Inspection Report, the data file containing those data sheets and corrective action records, which will be filed by Component Support Tag number, will be referenced as documentation of the "pre-heatup" phase of the Preservice Component Support Visual Examination Program.

b). Post-Heatup Examinations

Following heatup, plant operations personnel, also qualified to VT-3 and VT-4 requirements, will once again examine the IWF component supports. Examiners will use procedure SLT 17 and 33 "Piping System Expansion and Vibration Test" found in Section 10.0, Tab 41. Hot settings and clearances will be verified, and any signs of loss of integrity, structural distress, or loss of operability will be identified on the data sheet found at the end of that procedure. Abnormalitites will be corrected per the routine Plant Operations and Maintenance procedures. These records will, in conjunction with the "pre-heatup" records described above, satisfy the Section XI, subsection IWF-2200 requirements for preservice inspection of component supports.

The scope of IWF component supports subject to VT-3 and VT-4 examinations is defined by Tag number on Weld and Component Identification Diagrams and Program Plan and Schedule Tables found in Section 8.0 for non-exempt Class 1 and 2 piping systems. Exempt Class 2 and all Class 3 component supports subject to preservice inspection are identified by Tag number on Weld and Component Identification Diagrams, also in Section 8.0.

4) Visual Examination of Reactor Pressure Vessel (RPV) Internals (VT-1 and VT-3)

These examinations will be preformed by Supply System personnel qualified to VT-1 and VT-3 examination criteria in accordance with the Supply System visual examination qualification program. These examinations satisfy ASME Section XI Code categories B-I-1, B-N-1 and B-N-2. The following table lists the components that will be examined during the RPV internal visual examination.

Date 1/18/85
Revision 0

TABLE 9-1

RPV INTERNALS
FOR VISUAL EXAMINATIONS

TABLE 9-1
RPV INTERNALS
FOR VISUAL EXAMINATIONS

Date 1/18/85
Revision 0

ITEM NO.	DESCRIPTION	LOCATION Azimuth	LOCATION Elevation	ASME Category	METHOD
	HPCS Sparger - (A), 89° to 271°				
1	HPCS Sparger to Cap Weld	271°	355"	B-N-1	VT-3
2	HPCS Sparger Support Brackets	275°	367"	*	VT-3
3	HPCS Sparger Support Brackets	313°	367"	*	VT-3
4	HPCS Tee to Sparger Circ. Weld	350°	355"	B-N-1	VT-3
5	HPCS Sparger Tee Cover Weld	352°	355"	B-N-1	VT-3
6	HPCS Tee to Sparger Circ Weld	354°	355"	B-N-1	VT-3
7	HPCS Sparger Support Brackets	47°	367"	*	VT-3
8	HPCS Sparger Support Brackets	85°	367"	*	VT-3
9	HPCS Sparger to Cap Weld	89°	355"	B-N-1	VT-3
10	HPCS Sparger (A)	89°-271°	367"	B-N-1	VT-3
11	HPCS Sparger (A) Nozzles	89°-271°	367"	B-N-1	VT-3

TABLE 9-1
RPV INTERNALS
FOR VISUAL EXAMINATIONS

DATE 1/18/85
Revision 0

ITEM NO.	DESCRIPTION	LOCATION Azimuth	LOCATION Elevation	ASME Category	METHOD
	HPCS Sparger, (C), 91° to 269°				
12	HPCS Sparger to Cap Weld	91°	355"	B-N-1	VT-3
13	HPCS Sparger Support Brackets	95°	367"	*	VT-3
14	HPCS Sparger Support Brackets	133°	367"	*	VT-3
15	HPCS Tee to Sparger Circ Weld	186°	355"	B-N-1	VT-3
16	HPCS Sparger Tee Cover Weld	188°	355"	B-N-1	VT-3
17	HPCS Tee to Sparger Circ. Weld	190°	355"	B-N-1	VT-3
18	HPCS Sparger Support Brackets	227°	367"	*	VT-3
19	HPCS Sparger Support Brackets	265°	367"	*	VT-3
20	HPCS Sparger to Cap Weld	269°	355"	B-N-1	VT-3
21	HPCS Sparger (c)	91°-269°	367"	B-N-1	VT-3
22	HPCS Sparger (C) Nozzles	91°-269°	367"	B-N-1	VT-3

TABLE 9-1
RPV INTERNALS
FOR VISUAL EXAMINATIONS

ITEM NO.	DESCRIPTION	LOCATION Azimuth	LOCATION Elevation	ASME Category	METHOD
	HPCS Core Spray Piping (A Loop)				
23	HPCS Elbow Shroud Weld	352°	355"	B-N-1	VT-3
24	HPCS Riser to Elbow Weld	352°	346"	B-N-1*	VT-3
25	HPCS Riser Sleeves (3 Circ. Welds)	352°	341"	B-N-1*	VT-3
26	HPCS Elbow to Riser Weld	352°	267"	B-N-1*	VT-3
27	HPCS Header to Elbow Weld	348°	256"	B-N-1*	VT-3
28	HPCS Header Clamp	345°	256"	B-N-1*	VT-3
29	HPCS Header Clamp Attachment Weld (Lower)	345°	263"	B-N-2*	VT-1
30.	HPCS Header Clamp Bolt/Tack Weld (Lower)	345°	263"	B-N-1*	VT-3
31	HPCS Header Clamp Attachment Weld (Upper)	345°	267"	B-N-2*	VT-1
33	HPCS Header Clamp Bolt/Tack Weld (Upper)	345°	267"	B-N-2*	VT-3
34	HPCS Header Bracket, Seismic, Horizontal	292°	270"	B-N-1*	VT-3
35	HPCS Header Bracket Attachment Weld	292°	270"	B-N-2*	VT-1
36	HPCS Bracket Bolt/Tack Weld	291°	270"	B-N-1*	VT-3
37	HPCS Bracket Bolt/Tack Weld	293°	270"	B-N-1*	VT-3
38	HPCS Bracket Positioning Stud/Tack Weld	291°	271"	B-N-1*	VT-3
39	HPCS Bracket Positioning Stud/Tack Weld	293°	271"	B-N-1*	VT-3

TABLE 9-1
RPV INTERNALS
FOR VISUAL EXAMINATIONS

ITEM NO.	DESCRIPTION	LOCATION Azimuth	LOCATION Elevation	ASME Category	METHOD
40	HPCS Bracket Bolt/Tack Weld	291°	272"	B-N-1*	VT-3
41	HPCS Bracket Bolt/Tack Weld	293°	272"	B-N-1*	VT-3
42	HPCS Header Bracket, Seismic, Vertical	265°	270"	B-N-1*	VT-3
43	HPCS Header Bracket Attachment Weld	265°	270"	B-N-2*	VT-1
44	HPCS Bracket Bolt/Tack Weld	265°	270"	B-N-1*	VT-3
45	HPCS Bracket Bolt/Tack Weld	266°	270"	B-N-1*	VT-3
46	HPCS Bracket Positioning Stud/Tack Weld	264°	271"	B-N-1*	VT-3
47	HPCS Bracket Positioning Stud/Tack Weld	266°	271"	B-N-1*	VT-3
48	HPCS Bracket Bolt/Tack Weld	264°	272"	B-N-1*	VT-3
49	HPCS Bracket Bolt/Tack Weld	266°	272"	B-N-1*	VT-3
50	HPCS Header and Riser Pipe (A Loop)	353°-267°	355"-265"	B-N-1*	VT-3

TABLE 9-1
RPV INTERNALS
FOR VISUAL EXAMINATIONS

ITEM NO.	DESCRIPTION	LOCATION Azimuth	LOCATION Elevation	ASME Category	METHOD
	HPCS Core Spray Piping (C Loop)				
51	HPCS Elbow to Shroud Weld	188°	355"	B-N-1*	VT-3
52	HPCS Riser to Elbow Weld	188°	346"	B-N-1*	VT-3
53	HPCS Riser Sleeves (3 Circ. Welds)	188°	341'	B-N-1*	VT-3
54	HPCS Elbow to Riser Weld	188°	267"	B-N-1*	VT-3
55	HPCS Header to Elbow Weld	192°	265"	B-N-1*	VT-3
56	HPCS Header Clamp	195°	265"	B-N-1*	VT-3
57	HPCS Header Clamp Attachment Weld (Lower)	195°	265"	B-N-2*	VT-1
58	HPCS Header Clamp Bolt/Tack Weld (Lower)	195°	265"	B-N-1*	VT-3
59	HPCS Header Clamp Attachment Weld (Upper)	195°	265"	B-N-1*	VT-3
60	HPCS Header Clamp Bolt/Tack Weld (Upper)	195°	265"	B-N-1*	VT-3
61	HPCS Header and Riser Pipe (C Loop)	187°-268°	355"-265"	B-N-1	VT-3
62	HPCS Cover Plate to Tee Weld	240°	265"	B-N-1*	VT-3
63	HPCS Tee to Header Weld	242°	265"	B-N-1*	VT-3
64	HPCS Tee to Header Weld	238°	265"	B-N-1*	VT-3
65	HPCS Tee to Nozzle Thermal Sleeve Weld (Limited Exam)	240°	265"	B-N-1*	VT-3

TABLE 9-1
RPV INTERNALS
FOR VISUAL EXAMINATIONS

ITEM NO.	DESCRIPTION	LOCATION Azimuth	LOCATION Elevation	ASME Category	METHOD
	LPCS Sparger (B) 271° to 89°				
66	LPCS Sparger to Cap Weld	271°	367"	B-N-1	VT-3
67	LPCS Sparger Support Brackets	275°	367"		VT-3
68	LPCS Sparger Support Brackets	313°	367"		VT-3
69	LPCS Tee to Sparger Circ. Weld	6°	367"	B-N-1	VT-3
70	LPCS Sparger Tee Cover Weld	8°	367"	B-N-1	VT-3
71	LPCS Tee to Sparger Circ. Weld	10°	367"	B-N-1	VT-3
72	LPCS Sparger Support Brackets	47°	367"		VT-3
73	LPCS Sparger Support Brackets	85°	367"		VT-3
74	LPCS Sparger to Cap Weld	89°	367"	B-N-1	VT-3
75	LPCS Sparger (B)	271°-89°	367"	B-N-1	VT-3
76	LPCS Sparger Nozzles (B)	271°-89°	367"	B-N-1	VT-3

TABLE 9-1
RPV INTERNALS
FOR VISUAL EXAMINATIONS

ITEM NO.	DESCRIPTION	LOCATION Azimuth	LOCATION Elevation	ASME Category	METHOD
	LPCS Sparger (D), 91° to 269°				
77	LPCS Sparger to Cap Weld	91°	367"	B-N-1	VT-3
78	LPCS Sparger Support Brackets	95°	367"	*	VT-3
79	LPCS Sparger Support Brackets	133°	367"	*	VT-3
80	LPCS Sparger Tee Cover Weld	172°	367"	B-N-1	VT-3
81	LPCS Tee to Sparger Circ. Weld	174°	367"	B-N-1	VT-3
82	LPCS Tee to Sparger Circ. Weld	176°	367"	B-N-1	VT-3
83	LPCS Sparger Support Brackets	227°	367"	*	VT-3
84	LPCS Sparger Support Brackets	265°	367"	*	VT-3
85	LPCS Sparger to Cap Weld	269°	367"	B-N-1	VT-3
86	LPCS Sparger (D)	91°-269°	367"	B-N-1	VT-3
87	LPCS Nozzles (D)	91°-269°	367"	B-N-1	VT-3

TABLE 9-1
RPV INTERNALS
FOR VISUAL EXAMINATIONS

ITEM NO.	DESCRIPTION	LOCATION Azimuth	LOCATION Elevation	ASME Category	METHOD
	LPCS Core Spray Piping, (B) Loop				
88	LPCS Elbow to Shroud Weld	8^0	367"	B-N-1*	VT-3
89	LPCS Riser to Elbow Weld	8^0	367"	B-N-1*	VT-3
90	LPCS Riser Sleeves (3 Circ. Welds)	8^0	341"	B-N-1*	VT-3
91	LPCS Elbow to Riser Weld	8^0	267"	B-N-1*	VT-3
92	LPCS Header to Elbow Weld	12^0	265"	B-N-1*	VT-3
93	LPCS Header Clamp	15^0	265"	B-N-1*	VT-3
94	LPCS Header Clamp Attachment Weld (Lower)	15^0	263"	B-N-2*	VT-1
95	LPCS Header Clamp Bolt/Tack Weld (Lower)	15^0	263"	B-N-1*	VT-1
96	LPCS Header Clamp Attachment Weld (Upper)	15^0	263"	B-N-2*	VT-1
97	LPCS Header Clam Bolt/Tack Weld (Upper)	15^0	263"	B-N-1*	VT-3
98	LPCS Header Bracket, Seismic, Horizontal	67^0	270"	B-N-1*	VT-3
99	LPCS Header Bracket Attachment Weld	67^0	270"	B-N-2	VT-1
100	LPCS Bracket Bolt/with Tack weld	66^0	270"	B-N-1*	VT-3
101	LPCS Bracket Positioning Stud/with Tack Weld	66^0	271"	B-N-1*	VT-3
102	LPCS Bracket Bolt/with Tack Weld	66^0	272"	B-N-1*	VT-3
103	LPCS Bracket Bolt/with Tack Weld	68^0	270"	B-N-1*	VT-3
104	LPCS Bracket Positioning Stud/with Tack Weld	68^0	271"	B-N-1*	VT-3
105	LPCS Bracket Bolt/with Tack Weld	68^0	272"	B-N-1*	VT-3
106	LPCS Header Bracket, Seismic, Vertical	94^0	270"	B-N-1*	VT-3
107	LPCS Header Bracket Attachment Weld	94^0	270"	B-N-2*	VT-1
	LPCS Bracket Bolt/with Tack Weld	93^0	270"	B-N-1*	VT-3

TABLE 9-1
RPV INTERNALS
FOR VISUAL EXAMINATIONS

Date 1/18/85
Revision 0

ITEM NO.	DESCRIPTION	LOCATION		ASME Category	METHOD
		Azimuth	Elevation		
109	LPCS Bracket Positioning Stud/with Tack Weld	93^0	271"	B-N-1*	VT-3
110	LPCS Bracket Bolt/with Tack Weld	93^0	272"	B-N-1*	VT-3
111	LPCS Bracket Bolt/with Tack Weld	95^0	270"	B-N-1*	VT-3
112	LPCS Bracket Positioning Stud/with Tack Weld	95^0	271"	B-N-1*	VT-3
113	LPCS Bracket Bolt/with Tack Weld	95^0	272"	B-N-1*	VT-3
114	LPCS Header and Riser Pipe	8^0-118^0	367"-265"	B-N-1*	VT-3

TABLE 9-1
RPV INTERNALS
FOR VISUAL EXAMINATIONS

ITEM NO.	DESCRIPTION	LOCATION Azimuth	LOCATION Elevation	ASME Category	METHOD
	LPCS Core Spray Piping (D Loop)				
115	LPCS Elbow to Shroud Weld	172°	367"	B-N-1*	VT-3
116	LPCS Riser to Elbow Weld	172°	361"	B-N-1*	VT-3
117	LPCS Riser Sleeves (3 Circ. Welds)	172°	341"	B-N-1*	VT-3
118	LPCS Elbow to Riser Weld	172°	263"	B-N-1*	VT-3
119	LPCS Header to Elbow Weld	168°	263"	B-N-1*	VT-3
120	LPCS Header Clamp	165°	263"	B-N-2*	VT-3
121	LPCS Header Clamp Attachment Weld (Lower)	165°	263"	B-N-2*	VT-1
122	LPCS Header Clamp Bolt/Tack Weld (Lower)	165°	263"	B-N-2*	VT-3
123	LPCS Header Clamp Attachment Weld (Upper)	165°	263"	B-N-2*	VT-1
124	LPCS Header Clamp Bolt/Tack Weld (Upper)	165°	263"	B-N-1*	VT-3
125	LPCS Header and Riser Pipe	172°-122°	367"	B-N-1*	VT-3
126	LPCS Tee to Nozzle Thermal Sleeve Weld (Limited Exam)	120°	265"	B-N-1*	VT-3
127	LPCS Cover Plate to Tee Weld	120°	263"	B-N-1*	VT-3
128	LPCS Tee to Header Weld	122°	265"	B-N-1*	VT-3
129	LPCS Tee to Header Weld	118°	265"	B-N-1*	VT-3

TABLE 9-1
RPV INTERNALS
FOR VISUAL EXAMINATIONS

ITEM NO.	DESCRIPTION	LOCATION Azimuth	LOCATION Elevation	ASME Category	METHOD
	Feedwater Sparger, No. 1, 5° to 55°				
1	Feedwater Sparger Bracket	5°	252"	B-N-1	VT-3
2	Feedwater Sparter Bracket Attachment Welds	5°	252"	B-N-2	VT-1
3	Feedwater Sparger Bracket Pin	5°	252"	B-N-1	VT-3
4	Feedwater Sparger Bracket to Sparger Flange bolt/Tack Weld	9°	256"	B-N-1	VT-3
5	Feedwater Sparger Bracket to Sparger Flange bolt/Tack Weld	9°	248"	B-N-1	VT-3
6	Feedwater Sparger Flange to Pipe Circ. Weld	9°	252"	B-N-1	VT-3
7	Feedwater Sparger Pipe to Tee Circ. Weld	28°			
8	Feedwater Sparger Tee Long Seam	28°-32°	252"	B-N-1	VT-3
9	Feedwater Sparger Tee to Sparger Pipe Circ. Weld	32°	252"	B-N-1	VT-3
10	Feedwater Sparger Tee to Thermal Sleeve Circ. Weld	30°	252"	B-N-1	VT-3
11	Feedwater Sparger Pipe to Flange Circ. Weld	51°	252"	B-N-1	VT-3
12	Feedwater Sparger Bracket to Sparger Flange bolt/Tack Weld	51°	256"	B-N-1	VT-3
13	Feedwater Sparger Bracket to Sparger Flange bolt/Tack Weld	51°	248"	B-N-1	VT-3
14	Feedwater Sparger Bracket Pin	55°	252"	B-N-1	VT-3
15	Feedwater Sparger Bracket Attachment Welds	55°	252"	B-N-2	VT-1
16	Feedwater Sparger Bracket	55°	252"	B-N-1	VT-3
17	Feedwater Sparger (No. 1)	9°-51°	252"	B-N-1	VT-3

TABLE 9-1
RPV INTERNALS
FOR VISUAL EXAMINATIONS

ITEM NO.	DESCRIPTION	LOCATION Azimuth	LOCATION Elevation	ASME Category	METHOD
	Feedwater Sparger, No. 2, 65° to 125°				
18	Feedwater Sparger Bracket	65°	252"	B-N-1	VT-3
19	Feedwater Sparger Bracket Attachment Welds	65°	252"	B-N-2	VT-1
20	Feedwater Sparger Bracket Pin	65°	252"	B-N-1	VT-3
21	Feedwater Sparger Bracket to Sparger Flange bolt/Tack Weld	69°	256"	B-N-1	VT-3
22	Feedwater Sparger Bracket to Sparger Flange bolt/Tack Weld	69°	248"	B-N-1	VT-3
23	Feedwater Sparger Flange to Pipe Circ. Weld	69°	252"	B-N-1	VT-3
24	Feedwater Sparger Pipe to Tee Circ. Weld	88°	252"	B-N-1	VT-3
25	Feedwater Sparger Tee Long Seam	88°-92°	252"	B-N-1	VT-3
26	Feedwater Sparger Tee to Sparger Pipe Circ. Weld	92°	252"	B-N-1	VT-3
27	Feedwater Sparger Tee to Thermal Sleeve Circ. Weld	90°	252"	B-N-1	VT-3
28	Feedwater Sparger Pipe to Flange Circ. Weld	111°	252"	B-N-1	VT-3
29	Feedwater Sparger Bracket to Sparger Flange bolt/Tack Weld	111°	256"	B-N-1	VT-3
30	Feedwater Sparger Bracket to Sparger Flange bolt/Tack Weld	111°	248"	B-N-1	VT-3
31	Feedwater Sparger Bracket Pin	115°	252"	B-N-1	VT-3
32	Feedwater Sparger Bracket Attachment Welds	115°	252"	B-N-2	VT-1
33	Feedwater Sparger Bracket	115°	252"	B-N-1	VT-3
34	Feedwater Sparger	69°-111°	252"	B-N-1	VT-3

TABLE 9-1
RPV INTERNALS
FOR VISUAL EXAMINATIONS

Date 1/18/85
Revision 0

ITEM NO.	DESCRIPTION	LOCATION Azimuth	LOCATION Elevation	ASME Category	METHOD
	Feedwater Sparger, No. 3, 125° to 175°				
35	Feedwater Sparger Bracket	125°	252"	B-N-1	VT-3
36	Feedwater Sparger Bracket Attachment Welds	125°	252"	B-N-2	VT-1
37	Feedwater Sparger Bracket Pin	125°	252"	B-N-1	VT-3
38	Feedwater Sparger Bracket to Sparger Flange bolt/Tack Weld	129°	256"	B-N-1	VT-3
39	Feedwater Sparger Bracket to Sparger Flange bolt/Tack Weld	129°	248"	B-N-1	VT-3
40	Feedwater Sparger Flange to Pipe Circ. Weld	129°	252"	B-N-1	VT-3
41	Feedwater Sparger Pipe to Tee Circ. Weld	148°	252"	B-N-1	VT-3
42	Feedwater Sparger Tee Long Seam.	148°-150°	252"	B-N-1	VT-3
43	Feedwater Sparger Tee to Sparger Pipe Circ. Weld	152°	252"	B-N-1	VT-3
44	Feedwater Sparger Tee to Thermal Sleeve Circ. Weld	150°	252"	B-N-1	VT-3
45	Feedwater Sparger Pipe to Flange Circ. Weld	171°	252"	B-N-1	VT-3
46	Feedwater Sparger Bracket to Sparger Flange bolt/Tack Weld	171°	256"	B-N-1	VT-3
47	Feedwater Sparger Bracket to Sparger Flange bolt/Tack Weld	171°	248"	B-N-1	VT-3
48	Feedwater Sparger Bracket Pin	175°	252"	B-N-1	VT-3
49	Feedwater Sparger Bracket Attachment Welds	175°	252"	B-N-2	VT-1
50	Feedwater Spaer Bracket	175°	252"	B-N-1	VT-3
51	Feedwater Sparger	129°-171°	252"	B-N-1	VT-3

TABLE 9-1
RPV INTERNALS
FOR VISUAL EXAMINATIONS

ITEM NO.	DESCRIPTION	LOCATION Azimuth	LOCATION Elevation	ASME Category	METHOD
	Feedwater Sparger, No. 4, 185° to 235°				
52	Feedwater Sparger Bracket	185°	252"	B-N-1	VT-3
53	Feedwater Sparger Bracket Attachment Welds	185°	252"	B-N-2	VT-1
54	Feedwater Sparger Bracket Pin	185°	252"	B-N-1	VT-3
55	Feedwater Sparger Bracket to Sparger Flange bolt/Tack Weld	189°	256"	B-N-1	VT-3
56	Feedwater Sparger Bracket to Sparger Flange bolt/Tack Weld	189°	248"	B-N-1	VT-3
57	Feedwater Sparger Flange to Pipe Circ. Weld	189°	252"	B-N-1	VT-3
58	Feedwater Sparger Pipe to Tee Circ. Weld	208°	252"	B-N-1	VT-3
59	Feedwater Sparger Tee Long Seam	208°-212°	252"	B-N-1	VT-3
60	Feedwater Sparger Tee to Sparger Pipe Circ.	212°	252"	B-N-1	VT-3
61	Feedwater Sparger Tee to Thermal Sleeve Circ. Weld	210°	252"	B-N-1	VT-3
62	Feedwater Sparger Pipe to Flange Circ. Weld	231°	252"	B-N-1	VT-3
63	Feedwater Sparger Bracket to Sparger Flange bolt/Tack Weld	231°	256"	B-N-1	VT-3
64	Feedwater Sparger Bracket to Sparger Flange bolt/Tack Weld	231°	248"	B-N-1	VT-3
65	Feedwater Sparger Bracket Pin	235°	252"	B-N-1	VT-3
66	Feedwater Sparger Bracket Attachment Welds	235°	252"	B-N-2	VT-1
67	Feedwater Sparger Bracket	235°	252"	B-N-1	VT-3
68	Feedwater Sparger	189°-231°	252"	B-N-1	VT-3

TABLE 9-1
RPV INTERNALS
FOR VISUAL EXAMINATIONS

Date 1/18/85
Revision

ITEM NO.	DESCRIPTION	LOCATION Azimuth	LOCATION Elevation	ASME Category	METHOD
	Feedwater Sparger, No. 5, 245° to 295°				
69	Feedwater Sparger Bracket	245°	252"	B-N-1	VT-3
70	Feedwater Sparger Bracket Attachment Welds	245°	252"	B-N-2	VT-1
71	Feedwater Sparger Bracket Pin	245°	252"	B-N-1	VT-3
72	Feedwater Sparger Bracket to Sparger Flange bolt/Tack Weld	249°	256"	B-N-1	VT-3
73	Feedwater Sparger Bracket to Sparger Flange bolt/Tack Weld	249°	248"	B-N-1	VT-3
74	Feedwater Sparger Flange to Pipe Circ. Weld	249°	252"	B-N-1	VT-3
75	Feedwater Sparger Pipe to Tee Circ. Weld	268°	252"	B-N-1	VT-3
76	Feedwater Sparger Tee Long Seam	268°-272°	252"	B-N-1	VT-3
77	Feedwater Sparger Tee to Sparger Pipe Circ. Weld	272°	252"	B-N-1	VT-3
78	Feedwater Sparger Tee to Thermal Sleeve Circ. Weld	270°	252"	B-N-1	VT-3
79	Feedwater Sparger Pipe to Flange Circ. Weld	291°	252"	B-N-1	VT-3
80	Feedwater Sparger Bracket to Sparger Flange bolt/Tack Weld	291°	256"	B-N-1	VT-3
81	Feedwater Sparger Bracket to Sparger Flange bolt/Tack Weld	291°	248"	B-N-1	VT-3
82	Feedwater Sparger Bracket Pin	295°	252"	B-N-1	VT-3
83	Feedwater Sparger Bracket Attachment Welds	295°	252"	B-N-2	VT-1
84	Feedwater Sparger Bracket	295°	252"	B-N-1	VT-3
85	Feedwater Sparger	249°-291°	252"	B-N-1	VT-3

TABLE 9-1
RPV INTERNALS
FOR VISUAL EXAMINATIONS

ITEM NO.	DESCRIPTION	LOCATION Azimuth	LOCATION Elevation	ASME Category	METHOD
	Feedwater Sparger, No. 6, 305° to 355°				
86	Feedwater Sparger Bracket	305°	252"	B-N-1	VT-3
87	Feedwater Sparger Bracket Attachment Welds	305°	252"	B-N-2	VT-1
88	Feedwater Sparger Bracket Pin	305°	252"	B-N-1	VT-3
89	Feedwater Sparger Bracket to Sparger Flange bolt/Tack Weld	309°	256"	B-N-1	VT-3
90	Feedwater Sparger Bracket to Sparger Flange bolt/Tack Weld	309°	248"	B-N-1	VT-3
91	Feedwater Sparger Flange to Pipe Circ. Weld	309°	252"	B-N-1	VT-3
92	Feedwater Sparger Pipe to Tee Circ. Weld	328°	252"	B-N-1	VT-3
93	Feedwater Sparger Tee Long Seam	328°-332°	252"	B-N-1	VT-3
94	Feedwater Sparger Tee to Sparger Pipe Circ. Weld	332°	252"	B-N-1	VT-3
95	Feedwater Sparger Tee to Thermal Sleeve Circ. Weld	330°	252"	B-N-1	VT-3
96	Feedwater Sparger Pipe to Flange Circ. Weld	351°	252"	B-N-1	VT-3
97	Feedwater Sparger Bracket to Sparger Flange bolt/Tack Weld	351°	256"	B-N-1	VT-3
98	Feedwater Sparger Bracket to Sparger Flange bolt/Tack Weld	351°	248"	B-N-1	VT-3
99	Feedwater Sparger Bracket Pin	355°	252"	B-N-1	VT-3
100	Feedwater Sparger Bracket Attachment Weld	355°	252"	B-N-2	VT-1
101	Feedwater Sparger Bracket	355°	252"	B-N-1	VT-3
102	Feedwater Sparger	309°-351°	252"	B-N-1	VT-3

TABLE 9-1
RPV INTERNALS
FOR VISUAL EXAMINATIONS

ITEM NO.	DESCRIPTION	LOCATION Azimuth	LOCATION Elevation	ASME Category	METHOD
1	Riser Support Pad for Jet Pump No. 1 and 2	30^0	443"	B-N-2	VT-3
2	Hold Down Beam, Jet Pump No. 1	28^0	467"	B-N-1	VT-1
3	Hold Down Beam, Nut Spot Weld, Jet Pump No. 1	28^0	467"	B-N-1	VT-3
4	Hold Down Beam, Head Bolt Keeper Tack Welds (4 Ea), Jet Pump No. 1	28^0	467"	B-N-1	VT-3
5	Hold Down Beam, Jet Pump No. 2	32^0	467"	B-N-1	VT-1
6	Hold Down Beam, Nut Spot Weld, Jet Pump No. 2	32^0	467"	B-N-1	VT-3
7	Hold Down Beam, Head Bolt Keeper Tack Welds (4 ea) Jet Pump No. 1	32^0	467"	B-N-1	VT-3
8	Riser Support Pad for Jet Pump No. 3 and 4	60^0	443"	B-N-2	VT-3
9	Hold Down Beam, Jet Pump No. 3	58^0	467"	B-N-1	VT-1
10	Hold Down Beam, Nut Spot Weld, Jet Pump No. 3	58^0	467"	B-N-1	VT-3
11	Hold Down Beam, Head Bolt Keeper Tack Welds (4 ea.) Jet Pump No. 3	58^0	467"	B-N-1	VT-3
12	Hold Down Beam, Jet Pump No. 4	62^0	467"	B-N-1	VT-1
13	Hold Down Beam, Nut Spot Weld, Jet Pump No. 4	62^0	467"	B-N-1	VT-3
14	Hold Down Beam, Head Bolt Keeper Tack Welds (4 ea.) Jet Pump No. 4	62^0	467"	B-N-1	VT-3
15	Riser Support Pad for Jet Pump No. 5 and 6	90^0	443"	B-N-2	VT-3
16	Hold Down Beam, Jet Pump No. 5	88^0	467"	B-N-1	VT-1
17	Hold Down Beam, Nut Spot Weld, Jet Pump No. 5	88^0	467"	B-N-1	VT-3

TABLE 9-1
RPV INTERNALS
FOR VISUAL EXAMINATIONS

Date 1/18/85
Revision

ITEM NO.	DESCRIPTION	LOCATION Azimuth	LOCATION Elevation	ASME Category	METHOD
18	Hold Down Beam, Head Bolt Keeper Tackwelds (4 ea.) Jet Pump No. 5	88°	476"	B-N-1	VT-3
19	Hold Down Beam, Jet Pump No. 6	92°	476"	B-N-1	VT-1
20	Hold Down Beam, Nut Spot Weld, Jet Pump No. 6	92°	467"	B-N-1	VT-3
21	Hold Down Beam, Head Bolt Keeper Tack Welds (4 ea.) Jet Pump No. 6	92°	467"	B-N-1	VT-3
22	Riser Suport Pad for Jet Pump No. 7 and 8	120°	443"	B-N-1	VT-1
23	Hold Down Beam, Jet Pump No. 7	118°	476"	B-N-1	VT-1
24	Hold Down Beam, Nut Spot Weld, Jet Pump No. 7	118°	467"	B-N-1	VT-3
25	Hold Down Beam, Head Bolt Keeper Tackwelds (4 ea.) Jet Pump No. 7	118°	467"	B-N-1	VT-3
26	Hold Down Beam, Jet Pump No. 8	122°	467"	B-N-1	VT-1
27	Hold Down Beam, Nut Spot Weld, Jet Pump No. 8	122°	467"	B-N-1	VT-3
28	Hold Down Beam, Head Bolt Keeper Tackwelds (4 ea.) Jet Pump No. 8	122°	467"	B-N-1	VT-3
29	Riser Support Pad for Jet Pump No. 9 and 10	150°	443"	B-N-2	VT-3
30	Hold Down Beam, Jet Pump No. 9	148°	467"	B-N-1	VT-1
31	Hold Down Beam, Nut Spot Weld, Jet Pump No. 9	148°	467"	B-N-1	VT-3
32	Hold Down Beam, Head Bolt Keeper Tack Welds (4 ea.) Jet Pump No. 9	148°	467"	B-N-1	VT-3
33	Hold Down Beam, Jet Pump No. 10	152°	467"	B-N-1	VT-1
34	Hold Down Beam, Nut Spot Weld, Jet Pump No. 10	152°	467"	B-N-1	VT-3
35	Hold Down Beam, Head Bolt Keeper Tackwelds (4 ea.) Jet Pump No. 10	152°	467"	B-N-1	VT-3
36	Riser Support Pad for Jet Pump No. 11 and 12	210°	443"	B-N-2	VT-3
37	Hold Down Beam, Jet Pump No. 11	208°	467"	B-N-1	VT-1
38	Hold Down Beam, Nut Spot Weld, Jet Pump No. 11	208°	467"	B-N-1	VT-3

TABLE 9-1
RPV INTERNALS
FOR VISUAL EXAMINATIONS

ITEM NO.	DESCRIPTION	LOCATION Azimuth	LOCATION Elevation	ASME Category	METHOD
39	Hold Down Beam, Head Bolt Keeper Tackwelds (4 ea.) Jet Pump No. 11	208°	467"	B-N-1	VT-3
40	Hold Down Beam, Jet Pump No. 12	212°	467"	B-N-1	VT-1
41	Hold Down Beam, Nut Spot Weld, Jet Pump No. 12	212°	467"	B-N-1	VT-3
42	Hold Down Beam, Head Bolt Keeper Tack Welds	212°	467"	B-N-1	VT-3
43	Riser Support Pad for Jet Pump No. 13 and 14	240°	443"	B-N-2	VT-3
44	Hold Down Beam, Jet Pump No. 13	238°	467"	B-N-1	VT-1
45	Hold Down Beam, Nut Spot Weld, Jet Pump No. 13	238°	467"	B-N-1	VT-3
46	Hold Down Beam, Head Bolt Keeper Tack Welds (4 ea.) Jet Pump No. 13	238°	467"	B-N-1	VT-3
47	Hold Down Beam Jet Pump No. 14	242°	467"	B-N-1	VT-1
48	Hold Down Beam, Nut Sport Weld, Jet Pump No. 14	242°	467"	B-N-1	VT-3
49	Hold Down Beam, Head Bolt Keeper Tack Welds	242°	467"	B-N-1	VT-3
50	Riser Support Pad for Jet Pump No. 15 and 16	270°	443"	B-N-2	VT-3
51	Hold Down Beam, Jet Pump No. 15	268°	467"	B-N-1	VT-1
52	Hold Down Beam, Nut Spot Weld, Jet Pump No. 15	268°	467"	B-N-1	VT-3
53	Hold Down Beam, Head Bolt Keeper Tack Welds (4 ea.) Jet Pump No. 15	268°	467"	B-N-1	VT-3
54	Hold Down Beam Jet Pump No. 16	272°	467"	B-N-1	VT-1
55	Hold Down Beam, Nut Spot Weld, Jet Pump No. 16	272°	467"	B-N-1	VT-3
56	Hold Down Beam, Head Bolt Keeper Tack Welds	272°	467"	B-N-1	VT-3
57	Riser Support Pad for Jet Pump No. 17 and 18	300°	443"	B-N-2	VT-3
58	Hold Down Beam, Jet Pump No. 17	298°	467"	B-N-1	VT-1
59	Hold Down Beam, Nut Spot Weld, Jet Pump No. 17	298°	467"	B-N-1	VT-3

TABLE 9-1
RPV INTERNALS
FOR VISUAL EXAMINATIONS

Date 1/18/85
Revision 0

ITEM NO.	DESCRIPTION	LOCATION		ASME Category	METHOD
		Azimuth	Elevation		
60	Hold Down Beam, Head Bolt Keeper Tack Welds (4 ea.) Jet Pump No. 17	298°	467"	B-N-1	VT-3
61	Hold Down Beam, Jet Pump No. 18	302°	467"	B-N-1	VT-1
62	Hold Down Beam, Nut Spot Weld, Jet Pump No. 18	302°	467"	B-N-1	VT-3
63	Hold Down Beam, Head Bolt Keeper Tack Welds	302°	467"	B-N-1	VT-3
64	Riser Support Pad for Jet Pump No. 19 and 20	330°	443"	B-N-2	VT-3
65	Hold Down Beam, Jet Pump No. 19	328°	467"	B-N-1	VT-1
66	Hold Down Beam, Nut Spot Weld, Jet Pump No. 19	328°	467"	B-N-1	VT-3
67	Hold Down Beam, Head Bolt Keeper Tack Welds (4 ea.) Jet Pump No. 19	328°	467"	B-N-1	VT-3
68	Hold Down Beam, Jet Pump No. 20	332°	467"	B-N-1	VT-1
69	Hold Down Beam, Nut Spot Weld, Jet Pump No. 20	332°	467"	B-N-1	VT-3
70	Hold Down Beam, Head Bolt Keeper Tack Welds	332°	467"	B-N-1	VT-3

Date 1/18/85
Revision 0

WNP-2
PRESERVICE COMPONENT
SUPPORT
PROGRAM PLAN

WPPSS

NUCLEAR PROJECT

NO. 2

PRESERVICE COMPONENT SUPPORT PROGRAM PLAN.

Washington Public Power

Supply System

Date March 14, 1983
Rev. 0

COMPONENT SUPPORT INSPECTION AND TEST PROGRAM PLAN

FOR THE

SUPPLY SYSTEM NUCLEAR PROJECT NO. 2

Prepared by:	Code Programs	14 March 1983 Date
Plan Approvals:	Supervisor, Code Programs	3/14/83 Date
	WNP-2 Test and Startup Manager	3/28/83 Date
	WNP-2 Plant Technical Manager	5/9/83 Date
	Manager, Systems Design	5-9-83 Date
	Assistant Director System Engineering	5/9/83 Date
Concurrences:	Licensing and Assurance	3-31-83 Date
	Authorized Nuclear Inspector (for ASME Section XI portions)	5/26/83 Date

TABLE OF CONTENTS

1.0 INTRODUCTION

WNP-2 piping system supports were designed, fabricated, installed and certified by numerous different contractors. In addition to the construction quality assurance program certification of proper component support installation, there are several component support examinations and tests required by State and Federal law and plant licensing commitments. It is the purpose of this program to integrate these additional examinations and tests into one overall program under the direction of a Program Manager. This program addresses in detail the various examination and testing requirements for component supports prior to commercial operation and describes where credit is taken for construction activities in meeting these requirements. This program addresses organizations, personnel, schedules, procedures, and documentation required for implementation of these requirements.

Most of the examination requirements and documentation result from WNP-2 Preservice Inspection requirements. Therefore, the Component Support and Test Program is incorporated and will be implemented as part of the WNP-2 PSI Program Plan.

2.0 SCOPE

This program addresses component support related activities prior to commercial operation of WNP-2. This program satisfies the requirements of the ASME Boiler and Pressure Vessel Code Section XI (reference a,) as outlined in Section 9 of the WNP-2 Preservice Inspection Plan and requirements made by licensing commitments as specified in the WNP-2 FSAR and other correspondence (references b through g). Appendix A addresses the basis for this program in detail and shows specifically how each requirement is satisfied.

I.E. Bulletin 79-14, "Seismic Analysis for As-Builting Safety-Related Piping Systems", dated July 2, 1979, which required a field walkdown verification of pipe hanger as-built configuration is not included in the scope of this program. See Attachment 6.4 for the WNP-2 response to this Bulletin.

Component support examination and testing following commercial operation will be addressed separately in the WNP-2 Inservice Inspection (ISI) Program which will be developed in accordance with requirements contained in Subsection IWF.

3.0 PROGRAM EXAMINATION AND TESTING REQUIREMENTS

The consolidated requirements of the Component Support Inspection and Testing Program are those specifically required or committed to in the reference documents. These requirements, summarily stated, are as follows:

1) Perform pre-heatup system visual examination of safety-related snubbers (within the six months prior to system heatup) to check for snubber damage.

2) Perform preservice visual examination of all accessible ASME Section III NF component supports (including snubbers) on systems where normal operating temperature is greater than 250°F during hot system testing. This examination involves at least three separate walkdowns, one at intermediate system temperature, one at operating temperature and one at cold conditions following thermal transients.

3) All safety-related snubbers must be stroked following installation.

4) All safety-related snubbers must be checked to verify as-built conditions following installation.

Additionally, all examiners performing visual examinations on component supports need to be qualified to VT-3 and VT-4 per ASME Section XI. This requires completing a QA approved training program with written and practical examinations.

This program has been developed in accordance with the preservice inspection requirements of the 1977 Edition of ASME Section XI through and including the Winter 1978 Addenda in order to provide a smooth transition from Preservice Inspection (PSI) to Inservice Inspection (ISI). In so doing, this program meets all the preservice visual examination and testing requirements of the 1974 Edition of ASME Section XI through the Summer 1975 Addenda.

Specific examination requirements and tests are outlined by Figure 1, "WNP-2 Plant Component Support Inspection Program", for each portion of the program. See Section 4.6 for a detailed explanation of Figure 1.

4.0 PROGRAM IMPLEMENTATION

The component support program is a large effort and one which involves many organizations. The program interfaces with construction hanger installation and as-builting, the Test and Startup Program concerning system balancing, schedule and manpower, the Power Ascension Test Program concerning schedule, containment access and piping system expansion tests and with plant Technical Specification submittal. Since hangers and snubbers are usually among the last items to be completed on a system, the success of this program depends on adequate scheduling and coordination between the organizations and programs involved.

The appointed Program Manager is responsible for the overall scheduling, budgeting and implementing of this program. The Test and Startup Manager is the Program Manager for the pre-fuel load portion of the program and Plant Technical Manager is Program Manager for the post-fuel portion of the program.

4.1 Organizations Involved

The organizations involved and a breakdown of their responsibilities is as follows:

Test and Startup shall be responsible for:

- o organizing, scheduling, controlling and administering program component support examinations and tests in conjunction with the Test and Startup Program for piping support system balancing,
- o development of examination procedures for the initial cold exams and procedures for snubber stroking (if required),
- o for ensuring sufficient numbers of level I, II or III examiners are trained and certified for VT-3 (H) and VT-4(H) examinations,
- o dispositioning discrepancies found during the initial examination,
- o establishing the working document files.

The Plant Technical organization shall be responsible for:

- o organizing, scheduling, controlling and administering the component support examinations in conjunction with the Power Ascension Test Program and piping system expansion tests,
- o development of examination procedures for the hot examination and post-shakedown cold examinations,
- o dispositioning discrepancies found during these examinations,
- o providing examiners as required.

The Code Programs group shall be responsible for:

- o developing, revising, and coordinating implementation of the component support program,
- o reviewing examination procedures,
- o providing examiners as required,
- o coordinating the filing and retention of the component support examination documentation,
- o assist in dispositioning discrepancies as required,
- o assist in preparation of Section XI Repair Program which may be needed to disposition discrepancies.

The NDE&I organization shall be responsible for:

- o providing examiners as required,
- o assisting in training and certifying examiners as required.

The Supply System QA organization shall be responsible for:

- o reviewing and approving the VT-3, VT-4 training course,
- o certifying the visual examiners.

4.2 Pre-Fuel Load Examinations

Pre-fuel load component support-related activities are governed by Test and Startup procedures SLT-S303.0, "Visual Examination of Component Supports", and SLT-S305.0, "Adjustment and Balancing of Component Supports". The activities covered by these procedures may be conducted concurrently. SLT-S303.0 verifies that safety-related snubbers stroke properly either by stroking the snubber or by reviewing construction records which provide evidence of acceptable snubber stroking. SLT-S303.0 also directs and documents the initial cold condition VT-3 and VT-4 examination of ASME Code Class 1, 2 and 3 piping system hangers. Supports to be examined are listed in Tables 1 and 2. VT-4 examinations will be performed after the piping system supports are balanced. The hanger examinations will be conducted in accordance with SLT-S303.0 which incorporates the specific examination requirements outlined by Figure 1, "WNP-2 Plant Component Support Inspection Program". Cold load setting of snubbers and spring type hangers will be recorded. SLT-S303.0 data serves as a baseline information for subsequent examinations at elevated temperatures and for Inservice Inspection Programs. Discrepancies noted during the pre-fuel load exams will be dispositioned as part of the Test and Startup Program.

4.3 Post-Fuel Load Examinations

Post-fuel load component support examinations are governed by WNP-2 Plant Procedure, "Piping Systems Expansion and Vibration Tests", PPM 8.2.17. This procedure provides for hot and post-shakedown cold component support visual examinations in addition to recording and evaluating piping thermal movement and vibration. Visual component support exams are performed at an intermediate temperature (200-300°F), at normal operating temperature (~545°F) and at cold conditions after at least three full thermal cycles. The performance of these examinations requires personnel access to the drywell during portions of the Power Ascension Test Program. To minimize time required for the exams the examiners will be familiar with their assigned system(s). If the examiner has not performed the SLT-S303.0 exam on his assigned system(s), he/she will walk down the assigned system(s) in the cold condition prior to establishing primary containment integrity for initial reactor startup.

PPM 8.2.17 incorporates the specific examination requirements outlined by Figure 1. Since pipe whip restraints are checked at the same time that the support examinations are performed, PPM 8.2.17 also contains the visual inspection acceptance criteria for pipe whip restraints. Supports examined as part of SLT S303.0 that are on systems whose operating temperature is $\geqslant 250^{o}F$ and are accessible during reactor operation will be examined in accordance with PPM 8.2.17 in the hot and after shakedown cold condition. All supports listed in Tables 1 and 2 will be examined during the post shakedown cold examination to provide assurance that hangers remain operational following cyclic loading and are adequate for continued plant operation. Abnormalities found during these exams will be corrected per the routine Plant Operations and Maintenance procedures. The data collected during these exams provides baseline information for Inservice Inspection Programs.

4.4 Manpower Requirements

Manpower requirements for this program are significant in that numerous examiners are needed (approximately 30) and the examinations are performed during the tightly scheduled Test and Startup Program and Power Ascension Programs. It is beneficial to have as much Supply System personnel involvement performing these exams as possible since these are the people who will be involved in developing and performing the subsequent ISI examinations over the life of the plant. The examiners will be supplied from Test and Startup, Plant Technical, NDE&I and Code Programs. It is the responsibility of Test and Startup to ensure the examiners are trained and certified VT-3 and VT-4. It is intended that the same examiners will be used, to the extent possible, for performance of the pre-fuel load and the post-fuel load exams. A copy of each examiner's certification shall be kept with the program files.

The Program Manager (T/SU or Plant Technical as applicable) is responsible for ensuring that there are adequate numbers of examiners available when the examinations are scheduled to be performed.

4.5 Documentation Requirements

A Component Support Inspection working document file is to be initially established and maintained by the Test and Startup organization. When the SLT-S303.0 initial examinations are complete the working file will be transferred to Code Programs (ISI Engineering) who will maintain the file through completion of the program. The working file shall not be used to store completed original quality documents. Originals of quality documents when completed will be stored in appropriately controlled files in the Operations vault. A microfilm will be permanently kept in the Operations vault as the official record copy.

A summary of documents that comprise the Component Support Program is as follows:

Document	When Document Becomes a Quality Affecting Record
a. Copy of Snubber installation checklist	Filing of PSI Final Report with NRC.
b. Data Sheet SLT S303.0	Filing of PSI Final Report with NRC
c. Data Sheet PPM 8.2.17	Filing of PSI Final Report with NRC
d. Additional calculation and deficiency sheets	Filing of PSI Final Report with NRC
e. Copy of Personnel Qualification sheets	Filing of PSI Final Report with NRC

NOTE: Supply System ANI(I) review is required for the data sheets within SLT-S303.0, PPM 8.2.17 and also for ASME Code related deficiency resolution records.

4.6 Program Outline

Figure (1) is a flowchart representation of the WNP-2 Component Support Inspection and Testing Program. The following explanation describes the installation, testing and examination requirements:

SNUBBER INSTALLATION (Block 1)

The stroking of snubbers installed on safety-related systems (QC-I snubbers) satisfies the requirement of reference (e) to ensure the snubbers are not seized, frozen or jammed. The intent of the requirement is for stroking to be performed within a short time frame (6 months) prior to fuel load. The WNP-2 startup schedule currently supports this. The snubber stroking is documented by the Bechtel Snubber Installation Checklist, a copy of which becomes part of the program documentation. A snubber may also be stroked as part of the visual preservice cold exam (block 3) when the snubber appears to be damaged.

HANGER AS-BUILTING (Block 2)

The construction as-builting of QC-1 snubber installations meets requirements of reference (e) to check that snubber location, orientation, position setting and configuration are according to design drawings and specifications, and to ensure structural connections such as pins, fasteners and other connecting hardware are installed correctly. These as-built drawings become part of the program documentation.

VISUAL PRE-SERVICE (COLD)EXAMS (Block 3)

Preheatup visual exams are conducted by personnel qualified to VT-3 and VT-4, level II or level III. Specific items to be emphasized during these exams are denoted on Figure (1). Additionally, for snubbers, the requirements of reference (e) to visually check for "no visible damage" and "adequate swing clearance" are met. Recording cold settings of snubbers and spring hangers and checking these settings against design drawings satisfies the commitment of reference (b) to ensure Reactor Coolant Pressure Boundary (RCPB) and connected systems hanger elements are correctly adjusted to cold setting and is one step in meeting the requirements of reference (a) to verify support settings of constant and variable type spring hangers and snubbers.

INTERMEDIATE TEMPERATURE (30 PSI) VISUAL EXAMS (Block 4)

Since a BWR has no hot pre-operational test program, visual exams of snubbers during initial system heatup provide one datum point of three in meeting the requirements of reference (e) to verify (1) expected snubber thermal movement and (2) snubber swing clearance at "specified temperature intervals" during the initial system heatup part of the pre-operational test program.

Additionally, this intermediate temperature data for selected component supports provides one datum point in meeting the requirement of reference (c) to verify that piping systems are free and unrestrained in regard to thermal expansion.

HOT (1000 PSI) VISUAL EXAMS (Block 5)

Visual exams of selected component supports at operating temperature provide a second datum point in meeting requirements of references (e) and (c) as previously described. Additionally, recording and evaluating hot snubber and spring hanger settings is a second step in meeting the requirement of reference (a) to verify support settings of constant and variable type spring hangers and snubbers.

For systems that do not reach operating temperature (none are identified at this time) snubber movement must be verified by calculation and/or visual observation as a check that snubber has satisfactory swing clearance and stroke to accommodate expected thermal movement.

The documentation for the intermediate and hot examinations are the PPM data sheets. Additional sheets documenting hanger problems and their resolution and to document calculation/observations to verify snubber accommodation for systems inaccessible at operating temperature will be resolved in PPM 8.2.17.

COLD SHUTDOWN VISUAL EXAM FOLLOWING PLANT SHAKEDOWN (Block 6)

The visual exam following plant shakedown ensures the continued integrity of the piping system supports. This exam provides the final datum point and data whose evaluation fulfills the requirements of (1) reference (a) to verify spring hanger and snubber settings, (2) reference (c) to verify piping systems free and unrestrained in regards to thermal expansion and suspension components are functioning in the specified manner, and (3) reference (f) for verifying snubber expected thermal movement and snubber swing clearances. The criteria for evaluating the performance of the selected component supports against these requirements will be contained within PPM 8.2.17.

4.7 Program Schedule

The schedule for component support examinations and testing is dependent on plant startup schedule and fuel load date. Key issues in the program schedule are 1) all initial cold exams should be complete by fuel load and 2) intermediate and operating temperature hot exams are required to be performed during initial plant heatup. The specific implementing schedule for this program is the responsibility of the Program Manager. Figure 2 is a rough schedule for specific program issues keyed on fuel load date for WNP-2.

5.0 REFERENCES

a) ASME Section XI (1974 Edition through Summer 1975 Addenda).
b) WNP-2 FSAR Section 5.4.14.4 (Amend. 0).
c) WNP-2 FSAR Section 14.2.12.3.17 (Amend. 25).
d) WNP-2 SCN-80-155 Response dated November 9, 1982.
e) Letter, R. L. Tedesco (NRC) to R. L. Ferguson, dated March 6, 1982.
f) Letter, J. W. Shannon (WPPSS) to R. L. Tedesco, dated September 24, 1982.

6.0 ATTACHMENTS

6.1 Figure 1 - WNP-2 Component Support Inspection and Test Program Outline.

6.2 Figure 2 - WNP-2 Component Support Inspection and Test Program Schedule.

6.3 Appendix A - Basis for WNP-2 Component Support Inspection and Test Program.

6.4 WNP-2 Response to I. E. Bulletin 79-14 "Seimsic Analysis for As-Built Safety-Related Piping Systems"

6.5 Table 1 - List of Component Supports Within PSI Boundaries.

6.6 Table 2 - List of Safety Related Snubbers Outside PSI Boundaries.

FUEL LOAD

COMM OP

1 SNUBBER INSTALLATION

SCOPE: INSTALL ALL SNUBBERS

PROCEDURE: SWP/P-R-10

PERFORMER: BECHTEL POWER

SPECIFICS: ①

A- MIN REQUIREMENTS
1. STROKE SAFETY RELATED SNUBBERS

B- ADDITIONAL
1. STROKE ALL SNUBBERS
2. RECORD PIN TO PIN
3. MEASURE OFFSET WITH JIG

2 HANGER AS-BUILTING

SCOPE: PSI PROGRAM DESIGNATED HANGERS

PROCEDURE:

PERFORMER: BECHTEL POWER & BURNS/ROE

SPECIFICS:

A- MIN REQUIREMENTS
1. AS-BUILTING OF SNUBBERS, CHECKING;
- LOCATION
- ORIENTATION
- CONFIGURATION
- ALL LOCKING DEVICES PROPERLY INSTALLED
- NO MISSING PARTS

B- ADDITIONAL ②
1. HAVE PSI HANGER AS-BUILT DRAWINGS COMPLETED PRIOR TO PRESERVICE EXAMS
2. HAVE ALL COMPONENT SUPPORTS AS-BUILTED

BALANCE COMPONENT SUPPORTS

3 VISUAL PRESERVICE EXAMS (COLD)

SCOPE: ALL IWF COMP SUPPT INCLUDE ALL S/R SNUBBERS

PROCEDURE: SLT-5303.0

PERFORMER: T & S/U, NDE & I, ENG & TECH STAFF PERSONNEL QUAL VT3, VT4

SPECIFICS:

A- MIN REQUIREMENTS
1. VT-3
- CHECK FOR DEBRIS, CORROSION ETC.
- NO BENT MEMBERS
- CHECK INTEGRITY OF BOLTED & WELDED CONNECTIONS
- HGR. FOUNDATION ATTACHMENT SATISFACTORY
- LOAD BEARING MEMBERS IN CONTACT
2. VT-4
A. RECORD COLD SETTING
B. SPRING HANGERS -
- NO OBSTRUCTIONS
- NO VISABLE DAMAGE
- SUFFICIENT ROOM FOR THERMAL EXPANSION
C. SNUBBERS
- STROKE SNUBBERS SUSPECTED TO BE DAMAGED
- NO VISABLE DAMAGE
- ADEQUATE SWING CLEARANCE ④

B- ADDITIONAL
1. CHECK HANGER AGAINST AS-BUILT DRAWING

4 30 PSI SYSTEM VISUAL EXAM

SCOPE: SELECTED COMP SUPPORTS, S/R SNUB ON SYS > 250°F ①

PROCEDURE: PPM 8.2.17

PERFORMER: T & S/U, NDE & I ENG & TECH STAF PERSONNEL QUAL VT3, VT4

SPECIFICS:

A- MIN REQUIREMENTS
1. VT-3
- NO BINDING OR BENT MEMBERS
2. VT-4
- SUFFICIENT ROOM FOR THERMAL EXPANSION
- RECORD INTERMEDIATE SETTINGS
- NO VISABLE DAMAGE
- STROKE / TEST OR REPLACE SNUBBERS SUSPECTED OF NOT FUNCTIONING

B- ADDITIONAL
1. CHECK THAT OFFSET & CLEARANCES ARE WITHIN TOLERANCES

5 1000 PSI SYSTEM VISUAL EXAM

SCOPE: SELECTED COMP SUPPORTS, S/R SNUB ON SYS > 250°F ①

PROCEDURE: PPM 8.2.17

PERFORMER: T & S/U, NDE & I, ENG & TECH STAF PERSONNEL QUAL VT3, VT4

SPECIFICS:

A- MIN REQUIREMENTS
1. VT-3
- NO BINDING OR BENT MEMBERS
- OFFSET APPEARS SATISFACTORY
2. VT-4
- RECORD HOT SETTINGS
- NO VISABLE DAMAGE
- FOR SNUBBERS WHOSE TEMP IS NOT AT OPERAT. TEMP. VERIFY SWING CLEARANCE BY CALC OR OBSERVATION

B- ADDITIONAL
1. VISUALLY CHECK THAT SPRINGS AND SNUBBER SETTINGS ARE WITHIN TOLERANCES
2. VISUALLY CHECK THAT OFFSETS AND CLEARANCES ARE WITHIN TOLERANCES

MINIMUM 3 THERMAL CYCLES

6 COLD SHUT DOWN

SCOPE: SELECTED COMP SUPPORTS, S/R SNUB ON SYS > 250°F ①

PROCEDURE: PPM 8.2.17

PERFORMER: T & S/U, NDE & I, ENG & TECH STAF PERSONNEL QUAL VT3, VT4

SPECIFICS:

A- MIN REQUIREMENTS
1. VT-3
- NO BINDING OR BENT MEMBERS
- HGR. FOUNDATION ATTACHMENT SATISFACTORY
- VISUALLY CHECK INTEGRITY OF BOLTED AND WELDED CONNECTIONS
2. VT-4
- SETTINGS APPEAR SATISFACTORY
- NO VISABLE DAMAGE
- RECORD COLD SETTINGS

B- ADDITIONAL
1. CHECK THAT OFFSET & CLEARANCES ARE WITHIN TOLERANCE
2. CHECK HAND TIGHTNESS OF ALL BOLTS

DEVELOP ISI PROGRAM UNDER IWF 2400 & TECH SPECS *

* THIS ACTIVITY MUST BE COMPLETED 6 MONTHS PRIOR TO COMMERCIAL OP.

① MIN. REQMT. TO MEET PLANT COMPONENT SUPPORT PROGRAM PLAN COMMITMENTS
② THIS IS A CONSTRUCTION REQUIREMENT
③ REQUIRED AS PART OF PIPING EXPANSION TESTS (G.E. S/U TEST SPECS)
④ TIME FRAME NOT TO EXCEED 6 MONS. OR RE-EXAM IS REQ'D.

WNP-2
PLANT COMPONENT SUPPORT INSPECTION PROGRAM

REV 1

WNP-2 COMPONENT SUPPORT INSPECTION AND TEST PROGRAM SCHEDULE

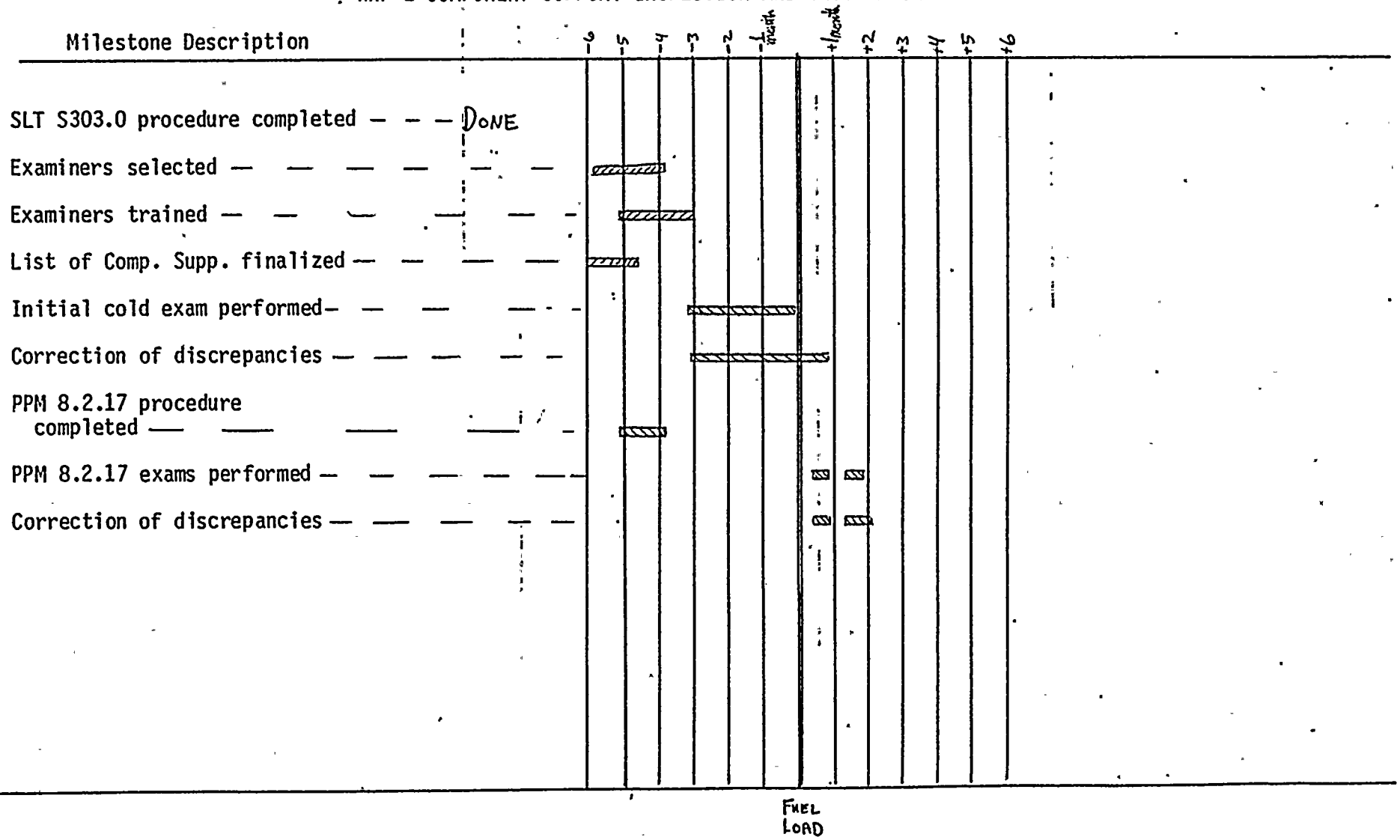

Figure 2

Attachment 6.2

Appendix A

Basis for WNP-2 Component Support Inspection and Test Program

A1.0 Background

Component support examination and testing requirements come from several different sources. In an attempt to satisfy all of these requirements with minimum impact on plant Startup and the Power Ascension Test Program, all of the pre-commercial operation examination and testing requirements have been brought together to form this appendix. Each specific requirement of each reference source is stated and given a commitment number. In several cases separate references contain the same commitment, these situations have been annotated in Table 1 which shows which implementing procedure satisfies a particular requirement.

There are four primary sources that make up the basis for this Program. They are:

1) ASME Section XI (1974 Edition through Summer 1975 Addenda) gives preservice examination requirements for component supports, additionally subsection IWF (Winter 1978) provides guidance which can be used for more detailed interpretations of how the visual exams are performed, i.e., component support examination boundaries.

2) The WNP-2 Preservice Inspection Program Plan states applicable ASME Section XI Edition and Addenda and defines the Visual Examinations (VT) used for the examination of Component Supports. The WNP-2 PSI Program Plan clarifies and implements the requirement of ASME Section XI (see 1) above).

3) The WNP-2 FSAR contains specific commitments on component support inspections.

4) Additional WNP-2 licensing commitments have been made in response to the Tedesco (NRC) letter (reference (g)) and to NRC licensing questions. These commitments are primarily concerned with snubbers.

A2.0 COMPONENT SUPPORT INSPECTION PROGRAM SPECIFIC COMMITMENTS

A2.1 ASME Section XI (1974 Edition through Summer 1975)

IWB-2100 requires all exams of Table IWB-2500 to be done as a Pre-service exam requirement, prior to Plant Startup.

Commitment Number	
2.1-1	B-K-2 requires all component supports to be examined,
2.1-2	B-K-2 requires settings of spring hangers and snubbers to be verified.

IWC-2100 Table IWC-2500--C-E-2 same requirements as IWB.

"Prior to Plant Startup" infers that system hot functional testing will be performed allowing the verification of hot system component support settings prior to Plant Start-up. Since this is not the case with WNP-2 (being a BWR) the verification of hot settings of component supports must be performed during initial plant heatup.

"All component supports" is interpreted to be all component supports in piping systems requiring PSI within the PSI boundaries. Vessel, pump, heat exchanger and valve supports as well as piping supports are included.

NOTE: IWB-1220, IWC-1220, and IWD-2600 specifically exclude from examination some component supports which receive preservice visual exams. These supports will not be examined.

A2.2 WNP-2 PSI PROGRAM COMMITMENTS

Commitment Number	
2.2-1	Perform pre-heat up VT-3 and VT-4 visual examinations of all IWF supports.
2.2-2	Perform post-heat up VT-3 and VT-4 visual examinations of all IWF supports.
2.2-3	Hot settings will be verified.
2.2-4	Examiners qualified to Supply System written practices for VT-3 and VT-4.

A2.3 FSAR COMMITMENTS

A2.3.1 FSAR Section 5.4.14.4 (RCPB and Connected Systems) commits to:

Commitment Number	
2.3-1	Following installation visually inspect all hanger elements to ensure correctly adjusted to cold setting.
2.3-2	Upon system heat up observe thermal growth to ensure spring hangers properly function between hot and cold settings.

A2.3.2 FSAR Section 14.2.12.3.17 (System Expansion Test) commits to:

Commitment Number	
2.3-3	Hanger position of major equipment and piping in the nuclear steam supply system and auxiliary systems will be recorded during initial thermal cycle and after shakedown has taken place.
2.3-4	During initial plant heat up conduct visual exams of component supports at intermediate and rated plant temperature.
2.3-5	For all snubbers on safety related system 250°F operating temperature, verify thermal movement and swing clearance at specified temperature intervals during initial system heatup and cold after system shakedown.
2.3-6	Visual examiners will be qualified to ASME Section XI VT-3 and VT-4, level II or level III (same requirement as 2.2-4).
2.3-7	For systems which are inaccessible at normal operating temperature, verify snubbers can accommodate thermal expansion by alternate method.

A2.4 TEDESCO (NRC) LETTER (e) AND RESPONSE (f)

Commits to all requirements outlined in Tedesco letter

Commitment Number	
	Preservice Exam:
2.4-1	- to be performed on all snubbers in Tech Spec Table, following installation

Commitment Number	
2.4-2	*- Visual exam--no damage
2.4-3	- Installed in accordance with design drawings
2.4-4	- Not seized or frozen (stroke snubber)
2.4-5	*- Adequate swing clearance
2.4-6	- Pins, washers, etc. properly installed

* Reinspect if not performed within 6 months prior to initial system pre-operational tests.

Preoperational Testing:

2.4-7	- To be performed on all snubbers on safety-related systems whose operating temperature is 250°F or greater.
2.4-8	- Inspect during initial system heatup and cooldown at specified temperature to verify expected snubber thermal movement and snubber swing clearance.
2.4-9	- For systems that do not attain operating temperature verify above by observation and/or calculation. This requirement is interpreted to mean in the case of WNP-2 that safety-related snubbers that are not accessible for visual inspection at normal operating temperature, snubber swing clearance will be verified by an alternate method.

Additionally, our response commits to detailing snubber pre-operational testing requirements in Chapter 14 of the FSAR and this was accomplished by SCN 80-155.

Table 1 Listing of Implementing Procedures That Satisfy Specific Commitments

Commitment Number	SLT-S303.0	PPM-8.2.17	Bechtel As-Building Program	SWP/P-R-10	Appropriate Block of Flow Diagram (Figure 1)
2.1-1	X				Block 3 - Scope
2.1-2	1/3	2/3, 3/3			3.A.2.A, 5.A.2 and 6.A.2
2.2-1	X				3.A.1 and 3.A.2
2.2-2		X			Block 6
2.2-3		X			5.A.2
2.2-4	X	X			Blocks 3, 4, 5, 6
2.3-1	X				3.A.2A
2.3-2		X			4.A.2 plus 5.A.2
2.3-3		X			4.A.2, 5.H.2 plus 6.A.2
2.3-4		X			4.A.1, 4.A.2, 5.A.1, 5.A.2
2.3-5		X			4.A.2, 5.A.2, 6.A.2
2.3-6	Same as 2.2-4				
2.3-7		X			5.A.2
2.4-1	X				Block 3 - Scope
2.4-2	X				3.A.2.C
2.4-3			X		2.A.1
2.4-4				X	1.A
2.4-5	X				3.A.2.C
2.4-6			X		2.A.1
2.4-7		X			Block 4 - Scope
2.4-8	Same as 2.3-5				
2.4-9	Same as 2.3-7				

X = requirement completely satisfied by referenced procedure.
1/3 = step part 1 of 3 met by referenced procedure.

Appendix A Table 1

WNP-2 Response to I.E. Bulletin 79-14
"Seismic Analysis for As-Built Safety-Related Piping Systems"

WNP-2 response to this Bulletin is contained in letters G02-79-156, D. L. Renberger to R. H. Engelken, dated September 7, 1979 and G02-82-858, R. G. Matlock to R. H. Engelken, dated October 20, 1982. These letters briefly outline WNP-2 as-builting and component support calculation reconciliation process. Component Support as-builting is performed by Bechtel field engineers and this as-built data is then provided to the designers (BRI, GE, JCI and Teledyne) and the component support design calculations are reconciled with the as-built data.

Additionally in the WNP-2 Reverification Program Supply System Engineering Mechanics engineers are verifying the above process for a random sampling of component supports.

Attachment 6.4

NOTES TO TABLES 1 AND 2

EXAM	EXPLANATION OF EXAM AND NOTES
1	Initial Cold Preservice Examination
4	Initial Cold Preservice Examination, Intermediate Temperature Examination, Full Temperature Hot Examination and Final Cold (Shakedown) Examination.
1.4.M	Initial Cold Preservice Examination and Final Cold Examinations only. This is an exception used on a case by case basis as follows: (1) Main Steam Relief Valve Discharge lines in the drywell. An intermediate temperature exam is not applicable since these lines do not heat up slowly. A hot exam will not be done since MSRV piping is only heated up during valve actuation which represents a potential personnel hazard. (2) Lines in which there is no flow and are not expected to heat up to the same temperature as the main line. This exam is applied to the portion of the branch line connected directly to and within 5 pipe diameters of the main line. (3) Reactor Feedwater lines in the steam tunnel. These lines do not reach operating temperature until high power levels are achieved at which time these lines are inaccessible due to high radiation levels. These lines are directly adjacent to the main steam lines.
N1	Initial Cold Preservice Examination only. This note applies to the RCIC/RHR Steam Condensing mode of RHR which is installed but which has been deactivated at WNP-2 and will not be used.
N2	Reactor Feedwater System inside the drywell. This system will be checked when the reactor vessel is at intermediate and at rated conditions to ensure this piping follows vessel growth. This system cannot be checked at intermediate and hot conditions since the drywell is inaccessible during power operation. The feedwater drywell piping is instrumented with lanyard potentiometers and this piping will be evaluated at 25% and 100% reactor power.
N3	There will be no intermediate temperature examinations on the diesel generator exhaust system safety related snubbers. An intermediate temperature exam is not applicable since these lines do not heat up slowly.

N4 Not used.

N5 There will be no intermediate temperature exams on the RHR piping outside the drywell. When the RHR system is put into service, it comes up to temperature very quickly and then cools depending on plant cooling capacity requirements. There is not a controllable time frame available to walk down the piping for an intermediate temperature examination. Additionally, the concept of an intermediate inspection was adopted for Class I systems in the drywell due to the relatively large differential temperature and component support interference potential. These concerns are not valid for this portion of the RHR system.

N6 Hangers Annotated with N6 have a design temperature 250°F but are not expected to exceed 250°F during power ascention testing or operation. A cold PSI exam has been done on all hangers so annotated. Some examples are:

- RHR connection to SW
- Standby Gas Treatment
- RHR to FPC intertie
- Class I LPCS and RHR/LPCI between the drywell and the Class 1/2 interface valve. (outside containment)
- Class II RHR Full Flow Test Line to the suppression pool
- Class I RCIC (injection) outside containment
- RHR Pump minflow line

N7 An intermediate temperature examination is not performed on RWCU piping outside the drywell. The system does not have provisions for controlling heatup or cooldown such that a time frame exists for a system walkdown. The shakedown examination will adequately verify support system performance. It should also be noted that most of this system is non-safety related.

A Component Support examinations can be included in Primary System heatup.

B Component Support examinations must be done when individual system is heated up.

TABLE 1 -- COMPONENT SUPPORTS WITHIN PSI BOUNDARIES -- 21 JAN 1985

EQUIP PIECE NO	DESCRIPTION	ISOMETRIC DWG NO	ISO DWG NO	EXAMS
FPC-10	BOX	FPC 778-4.6	308	1
FPC-100	BOX	FPC 638-4.7	307	1
FPC-101	RIGID	FPC 604-7.9	301	1
FPC-102	RIGID	FPC 636-16.21	304	1
FPC-103	RIGID	FPC 636-16.21	304	1
FPC-104	RIGID	FPC 636-16.21	304	1
FPC-105	RIGID	FPC 636-16.21	304	1
FPC-106	RIGID	FPC 636-16.21	304	1
FPC-107	RIGID	FPC 636-16.21	304	1
FPC-108	RIGID	FPC 636-16.21	304	1
FPC-109	RIGID	FPC 636-16.21	304	1
FPC-11	BOX	FPC 778-4.6	308	1
FPC-111	BOX	FPC 636-22.24	304	1
FPC-112	U-BOLT	FPC 636-22.24	304	1
FPC-113	BOX	FPC 636-25.26	304	1
FPC-114	OTHER	FPC 636-25.26	304	1
FPC-116	OTHER	FPC 636-27.28	304	1
FPC-118	RIGID	FPC 639-3.5	306	1
FPC-119	SPRING	FPC 639-3.5	306	1
FPC-12	ROD	FPC 778-4.6	308	1
FPC-120	BOX	FPC 639-3.5	306	1
FPC-122	ANCHOR	FPC 639-1.2	306	1
FPC-123	BOX	FPC 639-1.2	306	1
FPC-126	STRUT	FPC 639-1.2	306	1
FPC-127	BOX	FPC 608-1.4	301	1
FPC-128	BOX	FPC 608-1.4	301	1
FPC-129	BOX	FPC 608-1.4	301	1
FPC-13	BOX	FPC 778-4.6	308	1
FPC-130	BOX	FPC 608-1.4	301	1
FPC-14	ROD	FPC 778-4.6	308	1
FPC-15	OTHER	FPC 778-10.13	308	1
FPC-158	BOX	FPC 669-1.7	305	1
FPC-159	BOX	FPC 669-1.7	305	1
FPC-16	OTHER	FPC 778-10.13	308	1
FPC-160	OTHER	FPC 640-1.6	305	1
FPC-161	BOX	FPC 640-1.6	305	1
FPC-162	BOX	FPC 640-1.6	305	1
FPC-163	BOX	FPC 640-1.6	305	1
FPC-164	BOX	FPC 640-1.6	305	1
FPC-165	BOX	FPC 640-7.9	305	1
FPC-166	BOX	FPC 640-7.9	305	1
FPC-167	BOX	FPC 640-7.9	305	1
FPC-168	BOX	FPC 640-7.9	305	1
FPC-17	ROD	FPC 778-10.13	308	1
FPC-170	BOX	FPC 640-10.12	201	1
FPC-172	BOX	FPC 640-10.12	201	1
FPC-177	SPPING	FPC 636-8.9	302	1
FPC-178	BOX	FPC 636-8.9	302	1
FPC-179	BOX	FPC 636-4.5	302	1

TABLE 1 -- COMPONENT SUPPORTS WITHIN PSI BOUNDARIES -- 21 JAN 1985

EQUIP PIECE NO	DESCRIPTION	ISOMETRIC DWG NO		ISO DWG NO	EXAMS
FPC-18	SPRING	FPC	778-10.13	308	1
FPC-180	BOX	FPC	636-4.5	302	1
FPC-181	BOX	FPC	636-4.5	302	1
FPC-182	BOX	FPC	636-1.3	302	1
FPC-184	SPRING	FPC	636-1.3	302	1
FPC-185	BOX	FPC	636-6.7	302	1
FPC-186	SPRING	FPC	636-6.7	302	1
FPC-187	BOX	FPC	637-5.7	303	1
FPC-188	BOX	FPC	637-5.7	303	1
FPC-189	SPRING	FPC	637-10.11	303	1
FPC-19	BOX	FPC	778-7.9	308	1
FPC-190	SPRING	FPC	637-8.9	302	1
FPC-191	BOX	FPC	637-1.4	303	1
FPC-192	BOX	FPC	637-1.4	303	1
FPC-193	SPRING	FPC	637-1.4	303	1
FPC-194	BOX	FPC	636-10.13	304	1
FPC-195	BOX	FPC	636-10.13	304	1
FPC-196	BOX	FPC	636-10.13	304	1
FPC-197	BOX	FPC	636-10.13	304	1
FPC-198	BOX	FPC	636-10.13	304	1
FPC-199	BOX	FPC	636-10.13	304	1
FPC-20	ROD	FPC	778-7.9	308	1
FPC-200	BOX	FPC	636-14.15	304	1
FPC-201	BOX	FPC	640-1.6	305	1
FPC-202	BOX	FPC	636-14.15	304	1
FPC-203	BOX	FPC	636-14.15	304	1
FPC-204	BOX	FPC	636-14.15	304	1
FPC-205	RIGID	FPC	636-14.15	304	1
FPC-206	BOX	FPC	640-7.9	305	1
FPC-207	BOX	FPC	637-1.4	303	1
FPC-208	BOX	FPC	636-1.3	302	1
FPC-209	BOX	FPC	671-1.4	305	1
FPC-21	ROD	FPC	778-7.9	308	1
FPC-210	BOX	FPC	671-1.4	305	1
FPC-211	STRUT	FPC	670-1.2	305	1
FPC-213	BOX	FPC	670-1.2	305	1
FPC-214	BOX	FPC	670-3.6	305	1
FPC-215	BOX	FPC	670-3.6	305	1
FPC-216	BOX	FPC	670-3.6	305	1
FPC-22	SPRING	FPC	778-7.9	308	1
FPC-223	ANCHOR	FPC	671-1.4	305	1
FPC-224	BOX	FPC	671-1.4	305	1
FPC-225	PSA-1 SN	FPC	671-1.4	305	1
FPC-226	SPRING	FPC	671-1.4	305	1
FPC-227	PSA-1 SN	FPC	671-1.4	305	1
FPC-228	PSA-1/2 SN(2)	FPC	671-1.4	305	1
FPC-229	PSA-3 SN	FPC	671-1.4	305	1
FPC-230	SPRING	FPC	671-1.4	305	1
FPC-231	BOX	FPC	670-1.2	305	1

TABLE 1 -- COMPONENT SUPPORTS WITHIN PSI BOUNDARIES -- 21 JAN 1985

EQUIP PIECE NO	DESCRIPTION	ISOMETRIC DWG NO	ISO DWG NO	EXAMS
FPC-237	BOX	FPC 640-10.12	201	1
FPC-238	BOX	FPC 640-10.12	201	1
FPC-239	BOX	FPC 640-10.12	201	1
FPC-240	BOX	FPC 670-3.6	305	1
FPC-243	BOX	FPC 670-12.16	305	1
FPC-244	BOX	FPC 670-12.16	305	1
FPC-245	BOX	FPC 670-12.16	305	1
FPC-246	OTHER	FPC 670-7.11	305	1
FPC-247	BOX	FPC 670-7.11	305	1
FPC-248	OTHER	FPC 670-7.11	305	1
FPC-39	SPRING	FPC 605-10.12	301	1
FPC-40	STRUT	FPC 605-10.12	301	1
FPC-41	SPRING	FPC 605-10.12	301	1
FPC-42	STRUT	FPC 605-10.12	301	1
FPC-43	PSA-1 SN	FPC 605-10.12	301	1
FPC-44	ANCHOR	FPC 605-5.9	301	1
FPC-45	BOX	FPC 638-1.3	307	1
FPC-47	BOX	FPC 638-4.7	307	1
FPC-48	BOX	FPC 638-4.7	307	1
FPC-49	BOX	FPC 638-4.7	307	1
FPC-5	SPRING	FPC 778-1.3	308	1
FPC-50	BOX	FPC 638-4.7	307	1
FPC-51	BOX	FPC 604-1.3	301	1
FPC-52	BOX	FPC 604-1.3	301	1
FPC-53	BOX	FPC 604-1.3	301	1
FPC-54	BOX	FPC 604-4.6	301	1
FPC-55	BOX	FPC 604-4.6	301	1
FPC-56	BOX	FPC 604-4.6	301	1
FPC-57	BOX	FPC 605-1.4	301	1
FPC-58	BOX	FPC 605-1.4	301	1
FPC-59	BOX	FPC 605-1.4	301	1
FPC-6	ROD	FPC 778-1.3	308	1
FPC-60	BOX	FPC 605-1.4	301	1
FPC-61	SPRING	FPC 605-5.9	301	1
FPC-62	BOX	FPC 605-5.9	301	1
FPC-63	BOX	FPC 605-5.9	301	1
FPC-64	BOX	FPC 605-5.9	301	1
FPC-65	PSA-1 SN	FPC 604-7.9	301	1
FPC-66	OTHER	FPC 640-13.16	305	1
FPC-67	RIGID	FPC 640-17.19	305	1
FPC-68	RIGID	FPC 640-17.19	305	1
FPC-69	RIGID	FPC 640-17.19	305	1
FPC-7	OTHER	FPC 778-1.3	308	1
FPC-70	RIGID	FPC 640-17.19	305	1
FPC-71	BOX	FPC 640-17.19	305	1
FPC-72	OTHER	FPC 640-17.19	305	1
FPC-73	BOX	FPC 640-17.19	305	1
FPC-74	OTHER	FPC 640-17.19	305	1
FPC-75	OTHER	FPC 640-17.19	305	1

TABLE 1 -- COMPONENT SUPPORTS WITHIN PSI BOUNDARIES -- 21 JAN 1985

EQUIP PIECE NO	DESCRIPTION	ISOMETRIC DWG NO		ISO DWG NO	EXAMS
FPC-76	BOX	FPC	640-17.19	305	1
FPC-77	OTHER	FPC	640-17.19	305	1
FPC-78	BOX	FPC	640-20.23	305	1
FPC-79	OTHER	FPC	640-20.23	305	1
FPC-8	ROD	FPC	778-4.6	308	1
FPC-82	OTHER	FPC	640-24.25	305	1
FPC-83	OTHER	FPC	640-24.25	305	1
FPC-86	SPRING	FPC	604-10.12	301	1
FPC-87	SPRING	FPC	604-14.17	301	1
FPC-88	STRUT	FPC	604-7.9	301	1
FPC-9	BOX	FPC	778-4.6	308	1
FPC-903N	ANCHOR	FPC	640-10.12	201	1
FPC-906N	BOX	FPC	636-14.15	304	1
FPC-907N	BOX	FPC	636-14.15	304	1
FPC-908N	PSA-1 SN(2)	FPC	605-10.12	301	1
FPC-909N	RIGID	FPC	605-10.12	301	1
FPC-91	U-BOLT	FPC	640-26.28	305	1
FPC-911N	BOX	FPC	640-7.9	305	1
FPC-912N	BOX	FPC	049-1.13	305	1
FPC-913N	BOX	FPC	049-1.13	305	1
FPC-915N				305	1
FPC-916N	SPRING	FPC	604-7.9	301	1
FPC-918N	PSA-1	FPC	604-7.9	301	1
FPC-919N	RIGID	FPC	605-1.4	301	1
FPC-92	OTHER	FPC	640-29.30	305	1
FPC-93	OTHER	FPC	640-26.28	305	1
FPC-98	OTHER	FPC	636-16.21	304	1
FPC-99	BOX	FPC	638-1.3	307	1
HPCS-1	SPRING	HPCS	630-1.4	202	1
HPCS-12	BOX	HPCS	632-1.3	202	1
HPCS-13	ANCHOR	HPCS	630-11.12	202	1
HPCS-15	ANCHOR	HPCS	630-11.12	202	1
HPCS-16	STRUT	HPCS	633-1.2	202	1
HPCS-17	STRUT	HPCS	633-1.2	202	1
HPCS-18	STRUT	HPCS	633-1.2	202	1
HPCS-20	ANCHOR	HPCS	630-7.10	202	1
HPCS-21	STRUT	HPCS	630-7.10	202	1
HPCS-23	SPRING	HPCS	630-7.10	202	1
HPCS-24	STRUT	HPCS	630-7.10	202	1
HPCS-25	SPRING	HPCS	630-13.19	202	1
HPCS-26	STRUT	HPCS	630-13.19	202	1
HPCS-27	STRUT	HPCS	630-13.19	202	1
HPCS-28	BOX	HPCS	630-13.19	202	1
HPCS-31	STRUT	HPCS	630-20.23	202	1
HPCS-32	SPRING	HPCS	630-20.23	202	1
HPCS-33	BOX	HPCS	630-20.23	202	1
HPCS-34	SPRING	HPCS	630-20.23	202	1
HPCS-35	SPRING	HPCS	630-20.23	202	1
HPCS-37	ANCHOR	HPCS	630-20.23	202	1

TABLE 1 -- COMPONENT SUPPORTS WITHIN PSI BOUNDARIES -- 21 JAN 1985

EQUIP PIECE NO	DESCRIPTION	ISOMETRIC DWG NO	ISO DWG NO	EXAMS
HPCS-38	SPRING	HPCS 630-20.23	202	1
HPCS-40	STRUT	HPCS 630-24.25	202	1
HPCS-42	SPRING	HPCS 630-26.28	101.1	1
HPCS-44	SPRING	HPCS 633-1.2	202	1
HPCS-45	SPRING	HPCS 629-5.7	201	1
HPCS-46	SPRING	HPCS 629-5.7	201	1
HPCS-47	PSA-3 SN(2)	HPCS 629-5.7	201	1
HPCS-48	STRUT	HPCS 629-5.7	201	1
HPCS-49	STRUT	HPCS 629-5.7	201	1
HPCS-52	ANCHOR	HPCS 629-1.4	201	1
HPCS-63	PSA-10 SN(2)	HPCS 630-29.30	101.1	4
HPCS-64	BOX	HPCS 630-29.30	101.1	4
HPCS-66	C SPRING	HPCS 630-29.30	101.1	4
HPCS-7	ANCHOR	HPCS 632-1.3	202	1
HPCS-900N	STRUT	HPCS 629-1.4	201	1
HPCS-901N	BOX	HPCS 629-1.4	201	1
HPCS-903N	STRUT	HPCS 630-13.19	202	1
HPCS-904N	SPRING (2)	HPCS 630-29.30	101.1	4
HPCS-905N	PSA-10 SN	HPCS 630-24.25	202	1
HPCS-906N	SPRING	HPCS 630-29.30	101.1	4
HPCS-907N	STRUT	HPCS 630-26.28	101.1	4
HPCS-908N	STRUT	HPCS 630-26.28	101.1	4
HPCS-909N	STRUT	HPCS 630-13.19	202	1
HPCS-910N	PSA-3 SN(2)	HPCS 630-26.28	101.1	4
HPCS-911N	PSA-10 SN	HPCS 630-26.28	101.1	4
HPCS-912N	PSA-3 SN	HPCS 630-29.30	101.1	4
HPCS-915N	STRUT	HPCS 630-13.19	202	1
HPCS-916N	BOX	HPCS 630-20.23	202	1
HPCS-917N	STRUT	HPCS 630-13.19	202	1
HPCS-918N	PSA-10 SN	HPCS 630-31.33	101.1	4
HPCS-919N	PSA-10 SN	HPCS 630-31.33	101.1	4
HPCS-921N	STRUT	HPCS 632-1.3	202	1
HPCS-922N	STRUT	HPCS 632-1.3	202	1
HPCS-924N	PSA-3 SN(2)	HPCS 630-24.25	202	1
HPCS-925N	PSA-3 SN	HPCS 630-24.25	202	1
LPCS-1	OTHER	LPCS 758-3.5	201	1
LPCS-11	SPRING	LPCS 756-1.4	202	1
LPCS-12	BOX	LPCS 756-8.10	202	1
LPCS-13	SPRING	LPCS 756-19.21	101.1	N6
LPCS-14	ANCHOR	LPCS 756-8.10	202	1
LPCS-17	BOX	LPCS 756-8.10	202	1
LPCS-18	SPRING	LPCS 756-11.15	202	1
LPCS-19	ANCHOR	LPCS 756-11.15	202	1
LPCS-2	OTHER	LPCS 758-3.5	201	1
LPCS-20	STRUT	LPCS 756-11.15	202	1
LPCS-21	BOX	LPCS 756-11.15	202	1
LPCS-22	STRUT	LPCS 756-11.15	202	1
LPCS-23	SPRING	LPCS 756-11.15	202	1
LPCS-24	BOX	LPCS 756-11.15	202	1

TABLE 1 -- COMPONENT SUPPORTS WITHIN PSI BOUNDARIES -- 21 JAN 1985

EQUIP PIECE NO	DESCRIPTION	ISOMETRIC DWG NO	ISO DWG NO	EXAMS
LPCS-25	SPRING	LPCS 756-11.15	202	1
LPCS-28	PSA-3 SN	LPCS 756-19.21	101.1	N6
LPCS-3	ANCHOR	LPCS 758-1.2	201	1
LPCS-31	BOX	LPCS 756-5.7	202	1
LPCS-38	BOX	LPCS 756-1.4	202	1
LPCS-39	BOX	LPCS 756-1.4	202	1
LPCS-41	STRUT	LPCS 756-11.15	202	1
LPCS-42	BOX	LPCS 756-11.15	202	1
LPCS-46	BOX	LPCS 756-5.7	202	1
LPCS-57	BOX	LPCS 756-22.24	101.0	4
LPCS-61	PSA-10 SN(2)	LPCS 756-22.24	101.0	4
LPCS-63	C SPRING (2)	LPCS 756-22.24	101.0	4
LPCS-64	SPRING	LPCS 756-22.24	101.0	4
LPCS-9	SPRING	LPCS 756-1.4	202	1
LPCS-900N	BOX	LPCS 758-1.2	201	1
LPCS-901N	ANCHOR	LPCS 759-1	202	1
LPCS-902N	SPRING	LPCS 758-3.5	201	1
LPCS-903N	ANCHOR	LPCS 756-11.15	202	1
LPCS-904N	STRUT	LPCS 756-19.21	101.0	4
LPCS-905N	PSA-3 SN	LPCS 756-22.24	101.0	4
LPCS-906N	SPRING	LPCS 756-22.24	101.0	4
LPCS-907N	STRUT	LPCS 756-19.21	101.0	4
LPCS-908N	PSA-10 SN	LPCS 756-19.21	101.0	4
LPCS-909N	PSA-3 SN(2)	LPCS 756-19.21	101.0	4
MS-100	STRUT	MS 528-7.10	201	4
MS-1000N	BOX	MS 530-4.6	203	4
MS-1001N	PSA-X SN	MS 530-4.6	203	4
MS-1002N	PSA-10 SN(2)	MS 530-4.6	203	4
MS-1003N	PSA-10 SN(2)	MS 530-1.3	203	4
MS-1005N	PSA-35 SN	MS 531-4.6	204	4
MS-1006N	PSA-3 SN(2)	MS 531-4.6	204	4
MS-1007N	PSA-10 SN(2)	MS 531-4.6	204	4
MS-1009N	RIGID	MS 531-4.6	204	4
MS-101	SPRING (2)	MS 528-4.6	201	4
MS-1010N	PSA-10 SN(2)	MS 531-4.6	204	4
MS-103	BOX	MS 528-4.6	201	4
MS-114	PSA-10 SN(2)	MS 528-4.6	201	4
MS-115	SPRING (2)	MS 528-4.6	201	4
MS-117	SPRING (2)	MS 528-4.6	201	4
MS-118	PSA-10 SN(2)	MS 528-4.6	201	4
MS-119	STRUT	MS 528-4.6	201	4
MS-120	SPRING (2)	MS 528-4.6	201	4
MS-121	SPRING (2)	MS 528-4.6	201	4
MS-123	STRUT	MS 528-4.6	201	4
MS-135	PSA-35 SN	MS 528-1.3	201	4
MS-1368-11	V SPRING	MS 1368-1	105.2	4,A
MS-1368-12	PSA-1/2 SN	MS 1368-1	106	4,A
MS-1368-13	PSA-1/2 SN	MS 1368-1	106	4,A
MS-1369-11	V SPRING	MS 1369-1	105.3	4,A

TABLE 1 -- COMPONENT SUPPORTS WITHIN PSI BOUNDARIES -- 21 JAN 1985

EQUIP PIECE NO	DESCRIPTION	ISOMETRIC DWG NO		ISO DWG NO	EXAMS
MS-1369-12	PSA-1/2 SN	MS	1369-1	106	4,A
MS-1369-13	PSA-1/2 SN	MS	1369-1	106	4,A
MS-137	SPRING	MS	528-1.3	201	4
MS-139	SPRING	MS	528-7.10	201	4
MS-140	PSA-3 SN	MS	528-7.10	201	4
MS-141	SPRING	MS	530-11	203	4
MS-142	SPRING	MS	529-12	202	4
MS-144	SPRING	MS	529-12	202	4
MS-145	PSA-10 SN	MS	529-12	202	4
MS-146	SPRING (2)	MS	529-8.11	202	4
MS-147	PSA-10 SN(2)	MS	529-8.11	202	4
MS-148	PSA-10 SN	MS	529-8.11	202	4
MS-149	SPRING (2)	MS	529-8.11	202	4
MS-150	STRUT	MS	529-8.11	202	4
MS-151	PSA-3 SN(2)	MS	529-8.11	202	4
MS-152	SPRING (2)	MS	529-8.11	202	4
MS-154	RIGID	MS	529-8.11	202	4
MS-155	STRUT	MS	529-8.11	202	4
MS-157	STRUT	MS	529-4.7	202	4
MS-160	STRUT	MS	529-4.7	202	4
MS-162	PSA-10 SN(2)	MS	529-4.7	202	4
MS-163	SPRING (2)	MS	529-4.7	202	4
MS-167	PSA-10 SN(2)	MS	529-4.7	202	4
MS-168	STRUT	MS	529-4.7	202	4
MS-170	SPRING (2)	MS	529-4.7	202	4
MS-171	SPRING (2)	MS	529-4.7	202	4
MS-173	SPRING	MS	529-1.3	202	4
MS-174	PSA-35 SN	MS	529-1.3	202	4
MS-176	SPRING	MS	529-1.3	202	4
MS-177	PSA-35 SN(2)	MS	529-8.11	202	4
MS-178	SPRING	MS	529-8.11	202	4
MS-179	PSA-1 SN(2)	MS	529-8.11	202	4
MS-180	ROD	MS	534-1	205	4
MS-181	ROD	MS	534-1	205	4
MS-182	ROD	MS	534-1	205	4
MS-1C-1PS	STRUT	MS	582-1.2	105.2	4,A
MS-24	SPRING	MS	530-11	203	4
MS-26	STRUT	MS	530-7.10	203	4
MS-260	V SPRING	MS	582-1.2	105.1	4,A
MS-261	V SPRING	MS	582-1.2	105.1	4,A
MS-2619-13	PSA-1 SNQ1	MS	2619-1	106.1	4
MS-2619-14	PSA-1/2 SNQ1	MS	2619-1	106.1	4
MS-2619-15	PSA-3 SNQ1	MS	2619-1	106.1	4
MS-2619-16	PSA-3 SNQ1	MS	2619-1	106.1	4
MS-2619-17	V SPRING	MS	2619-1	106.1	4
MS-2619-21	PSA-1 SNQ1	MS	2619-2	106.2	4
MS-2619-210	PSA-1 SNQ1	MS	2619-2	106.2	4
MS-2619-211	V SPRING	MS	2619-2	106.2	4
MS-2619-212	V SPRING	MS	2619-2	106.3	4

TABLE 1 -- COMPONENT SUPPORTS WITHIN PSI BOUNDARIES -- 21 JAN 1985

EQUIP PIECE NO	DESCRIPTION	ISOMETRIC DWG NO	ISO DWG NO	EXAMS
MS-2619-213	V SPRING	MS 2619-2	106.2	4
MS-2619-214	SPRING	MS 2619-2	106.2	4
MS-2619-22	RIGID	MS 2619-2	106.2	4
MS-2619-23	PSA-3 SNG1	MS 2619-2	106.2	4
MS-2619-24	RIGID	MS 2619-2	106.2	4
MS-2619-26	PSA-1 SNG1	MS 2619-2	106.2	4
MS-2619-310	PSA-1 SNG1	MS 2619-3	106.3	4
MS-2619-311	PSA-1/2 SNG1	MS 2619-3	106.3	4
MS-2619-312	PSA-1/2 SNG1	MS 2619-3	106.3	4
MS-2619-313	PSA-1/2 SNG1	MS 2619-3	106.3	4
MS-2619-314	PSA-1/4 SNG1	MS 2619-3	106.3	4
MS-2619-315	V SPRING	MS 2619-2	106.3	4
MS-2619-316	PSA-1/4 SNG1	MS 2619-3	106.3	4
MS-2619-317	PSA-1/4 SN	MS 2619-3	106.3	4
MS-2619-318	PSA-1/4 SNG1	MS 2619-3	106.3	4
MS-2619-319	PSA-1/2 SNG1	MS 2619-3	106.3	4
MS-2619-320	SPRING	MS 2619-2	106.3	4
MS-2619-321	PSA-1/4 SNG1	MS 2619-3	106.3	4
MS-2619-322	PSA-1/2 SNG1	MS 2619-3	106.3	4
MS-2619-42A	PSA-1/4 SNG1	MS 2619-4	106.4	4
MS-2619-42B	PSA-1/2 SNG1	MS 2619-4	106.4	4
MS-2619-42C	PSA-1/4 SNG1	MS 2619-4	106.4	4
MS-2619-43	V SPRING	MS 2619-2	106.4	4
MS-2619-44	V SPRING	MS 2619-2	106.4	4
MS-2619-45	PSA-1/4 SNG1	MS 2619-4	106.4	4
MS-2619-46	PSA-1/2 SNG1	MS 2619-4	106.4	4
MS-266	SPRING	MS 547-1	301	1,4,M
MS-267	SPRING	MS 547-2	301	1,4,M
MS-268	SPRING	MS 547-3	301	1,4,M
MS-269	SPRING	MS 548-1.2	302	1,4,M
MS-27	PSA-10 SN(2)	MS 530-7.10	203	4
MS-270	C SPRING	MS 548-3.4	302	1,4,M
MS-271	SPRING	MS 548-5	302	1,4,M
MS-272	SPRING	MS 549-1	303	1,4,M
MS-273	SPRING	MS 549-2.3	303	1,4,M
MS-274	C SPRING	MS 549-4.5	303	1,4,M
MS-275	SPRING	MS 549-4.5	303	1,4,M
MS-276	SPRING	MS 550-1.2	304	1,4,M
MS-277	SPRING	MS 550-3.4	304	1,4,M
MS-278	SPRING	MS 550-3.4	304	1,4,M
MS-279	SPRING (2)	MS 550-5.6	304	1,4,M
MS-28	SPRING	MS 530-7.10	203	4
MS-280	SPRING	MS 538-1	305	1,4,M
MS-281	C SPRING (2)	MS 538-2.3	305	1,4,M
MS-282	SPRING	MS 538-4	305	1,4,M
MS-283	SPRING	MS 540-1	307	1,4,M
MS-284	SPRING	MS 540-2.4	307	1,4,M
MS-285	V SPRING	MS 540-2.4	307	1,4,M
MS-286	SPRING	MS 540-5.6	307	1,4,M

TABLE 1 -- COMPONENT SUPPORTS WITHIN PSI BOUNDARIES -- 21 JAN 1985

EQUIP PIECE NO	DESCRIPTION	ISOMETRIC DWG NO		ISO DWG NO	EXAMS
MS-287	SPRING	MS	541-1.2	308	1,4,M
MS-288	SPRING	MS	541-1.2	308	1,4,M
MS-289	V SPRING (2)	MS	541-3.4	308	1,4,M
MS-290	SPRING	MS	541-3.4	308	1,4,M
MS-291	SPRING	MS	541-6	308	1,4,M
MS-292	SPRING	MS	541-6	308	1,4,M
MS-293	SPRING	MS	555-1	310	1,4,M
MS-294	SPRING	MS	555-3	310	1,4,M
MS-295	SPRING (2)	MS	555-4	310	1,4,M
MS-296	SPRING	MS	554-1	311	1,4,M
MS-297	V SPRING	MS	554-3	311	1,4,M
MS-298	SPRING	MS	554-3	311	1,4,M
MS-299	SPRING (2)	MS	554-4	311	1,4,M
MS-30	SPRING (2)	MS	530-7.10	203	4
MS-300	SPRING	MS	553-1	312	1,4,M
MS-301	SPRING	MS	553-2	312	1,4,M
MS-302	SPRING	MS	553-3.4	312	1,4,M
MS-303	SPRING	MS	553-5.6	312	1,4,M
MS-304	SPRING	MS	552-1.2	313	1,4,M
MS-305	SPRING	MS	552-3.4	313	1,4,M
MS-306	SPRING	MS	552-3.4	313	1,4,M
MS-307	SPRING	MS	552-5.6	313	1,4,M
MS-308	SPRING	MS	546-1	315	1,4,M
MS-309	SPRING	MS	546-3	315	1,4,M
MS-31	PSA-3 SN(2)	MS	530-7.10	203	4
MS-310	SPRING	MS	546-4	315	1,4,M
MS-311	SPRING	MS	545-1	316	1,4,M
MS-312	SPRING	MS	545-3	316	1,4,M
MS-313	SPRING	MS	545-5	316	1,4,M
MS-314	SPRING	MS	544-1	317	1,4,M
MS-315	SPRING	MS	544-3	317	1,4,M
MS-316	SPRING (2)	MS	544-4.5	317	1,4,M
MS-317	SPRING	MS	543-1	318	1,4,M
MS-318	SPRING	MS	543-3	318	1,4,M
MS-319	SPRING	MS	543-3	318	1,4,M
MS-320	SPRING	MS	539-1	306	1,4,M
MS-321	SPRING	MS	539-2	306	1,4,M
MS-322	SPRING	MS	539-2	306	1,4,M
MS-323	SPRING	MS	539-4.5	306	1,4,M
MS-324	SPRING	MS	551-1	314	1,4,M
MS-325	SPRING (2)	MS	551-1	314	1,4,M
MS-326	SPRING	MS	551-2	314	1,4,M
MS-327	SPRING (2)	MS	551-4.5	314	1,4,M
MS-328	SPRING	MS	542-1.2	309	1,4,M
MS-329	V SPRING (2)	MS	542-3.4	309	1,4,M
MS-33	SPRING (2)	MS	530-4.6	203	4
MS-330	SPRING	MS	542-6	309	1,4,M
MS-332	SPRING	MS	548-5	302	1,4,M
MS-333	SPRING	MS	550-5.6	304	1,4,M

TABLE 1 -- COMPONENT SUPPORTS WITHIN PSI BOUNDARIES -- 21 JAN 1985

EQUIP PIECE NO	DESCRIPTION	ISOMETRIC DWG NO	ISO DWG NO	EXAMS
MS-334	SPRING	MS 538-4	305	1,4,M
MS-335	SPRING	MS 540-5.6	307	1,4,M
MS-336	SPRING	MS 555-4	310	1,4,M
MS-337	SPRING	MS 554-4	311	1,4,M
MS-338	SPRING	MS 553-5.6	312	1,4,M
MS-339	SPRING	MS 552-5.6	313	1,4,M
MS-34	STRUT	MS 530-4.6	203	4
MS-340	SPRING	MS 546-4	315	1,4,M
MS-341	SPRING	MS 545-5	316	1,4,M
MS-342	SPRING	MS 544-4.5	317	1,4,M
MS-344	SPRING	MS 539-4.5	306	1,4,M
MS-345	SPRING	MS 542-6	309	1,4,M
MS-346	SPRING	MS 551-4.5	314	1,4,M
MS-36	STRUT	MS 530-4.6	203	4
MS-37	SPRING (2)	MS 530-4.6	203	4
MS-38	PSA-10 SN(2)	MS 530-4.6	203	4
MS-39	STRUT	MS 530-4.6	203	4
MS-40	STRUT	MS 530-4.6	203	4
MS-42	SPRING (2)	MS 530-4.6	203	4
MS-44	SPRING	MS 530-1.3	203	4
MS-45	PSA-35 SN	MS 530-1.3	203	4
MS-47	SPRING	MS 530-1.3	203	4
MS-48	PSA-3 SN	MS 530-7.10	203	4
MS-49	SPRING	MS 530-7.10	203	4
MS-50	SPRING	MS 531-11	204	4
MS-51	SPRING (2)	MS 531-7.10	204	4
MS-53	PSA-35 SN(2)	MS 531-7.10	204	4
MS-54	PSA-10 SN	MS 531-7.10	204	4
MS-55	SPRING (2)	MS 531-7.10	204	4
MS-56	PSA-10 SN(2)	MS 531-7.10	204	4
MS-57	PSA-3 SN(2)	MS 531-7.10	204	4
MS-58	SPRING (2)	MS 531-7.10	204	4
MS-59	STRUT	MS 531-4.6	204	4
MS-61	STRUT	MS 531-4.6	204	4
MS-62	SPRING (2)	MS 531-4.6	204	4
MS-63	SPRING (2)	MS 531-4.6	204	4
MS-65	STRUT	MS 531-4.6	204	4
MS-66	SPRING (2)	MS 531-4.6	204	4
MS-68	STRUT	MS 531-4.6	204	4
MS-69	SPRING	MS 531-4.6	204	4
MS-71	SPRING	MS 531-1.3	204	4
MS-72	PSA-35 SN	MS 531-1.3	204	4
MS-74	SPRING	MS 531-1.3	204	4
MS-86	PSA-3 SN	MS 531-7.10	204	4
MS-87	SPRING	MS 531-7.10	204	4
MS-88	SPRING	MS 528-11.12	201	4
MS-89	SPRING (2)	MS 528-7.10	201	4
MS-906N	PSA-3 SN(2)	MS 531-4.6	204	4
MS-908N	PSA-35 SN(2)	MS 531-4.6	204	4

TABLE 1 -- COMPONENT SUPPORTS WITHIN PSI BOUNDARIES -- 21 JAN 1985

EQUIP PIECE NO	DESCRIPTION	ISOMETRIC DWG NO		ISO DWG NO	EXAMS
MS-91	PSA-3 SN(2)	MS	528-7.10	201	4
MS-921N	STRUT	MS	530-4.6	203	4
MS-924N	SPRING	MS	528-7.10	201	4
MS-93	SPRING (2)	MS	528-7.10	201	4
MS-94	BOX	MS	528-7.10	201	4
MS-95	STRUT	MS	528-7.10	201	4
MS-96	PSA-10 SN(2)	MS	528-7.10	201	4
MS-97	SPRING (2)	MS	528-7.10	201	4
MS-98	STRUT	MS	528-7.10	201	4
MS-992N	BOX	MS	528-7.10	201	4
MS-993N	PSA-10 SN(2)	MS	528-4.6	201	4
MS-994N	BOX	MS	530-7.10	203	4
MS-996N	PSA-10 SN(2)	MS	529-4.7	202	4
MS-997N	PSA-10 SN(2)	MS	529-4.7	202	4
MS-998N	PSA-10 SN(2)	MS	529-4.7	202	4
MS-999N	PSA-10 SN	MS	530-7.10	203	4
MS-HA-1	SPRING (2)	BC/G	211	101.1	4
MS-HA-2	SPRING (2)	BC/G	211	101.2	4
MS-HB-1	SPRING (2)	BC/G	212	102.1	4
MS-HB-2	SPRING	BC/G	212	102.1	4
MS-HB-3	SPRING (2)	BC/G	212	102.2	4
MS-HC-1	SPRING (2)	BC/G	213	103.1	4
MS-HC-2	SPRING	BC/G	213	103.1	4
MS-HC-3	SPRING (2)	BC/G	213	103.2	4
MS-HD-1	V SPRING (2)	BC/G	214	104.1	4
MS-HD-2	SPRING (2)	BC/G	214	104.2	4
MS-SA-1	PSA-100 SN	BC/G	211	101.2	4
MS-SA-10	PSA-35 SN	BC/G	211	101.1	4
MS-SA-2	PSA-100 SN	BC/G	211	101.2	4
MS-SA-3	PSA-35 SN	BC/G	211	101.2	4
MS-SA-4	PSA-35 SN	BC/G	211	101.2	4
MS-SA-5	PSA-35 SN	BC/G	211	101.1	4
MS-SA-6	PSA-35 SN	BC/G	211	101.1	4
MS-SA-7	PSA-35 SN	BC/G	211	101.1	4
MS-SA-9	PSA-35 SN	BC/G	211	101.1	4
MS-SB-1	PSA-100 SN	BC/G	212	102.2	4
MS-SB-10	PSA-35 SN	BC/G	212	102.1	4
MS-SB-2	PSA-100 SN	BC/G	212	102.2	4
MS-SB-3	PSA-35 SN	BC/G	212	102.2	4
MS-SB-4	PSA-35 SN	BC/G	212	102.2	4
MS-SB-5	PSA-35 SN	BC/G	212	102.1	4
MS-SB-6	PSA-35 SN	BC/G	212	102.1	4
MS-SB-7	PSA-35 SN	BC/G	212	102.1	4
MS-SB-8	PSA-35 SN	BC/G	212	102.1	4
MS-SB-9	PSA-35 SN	BC/G	212	102.1	4
MS-SC-1	PSA-100 SN	BC/G	213	103.2	4
MS-SC-10	PSA-35 SN	BC/G	213	103.1	4
MS-SC-2	PSA-100 SN	BC/G	213	103.2	4
MS-SC-3	PSA-35 SN	BC/G	213	103.2	4

TABLE 1 -- COMPONENT SUPPORTS WITHIN PSI BOUNDARIES -- 21 JAN 1985

EQUIP PIECE NO	DESCRIPTION	ISOMETRIC DWG NO	ISO DWG NO	EXAMS
MS-SC-4	PSA-35 SN	BC/G 213	103.2	4
MS-SC-5	PSA-35 SN	BC/G 213	103.1	4
MS-SC-6	PSA-35 SN	BC/G 213	103.1	4
MS-SC-7	PSA-35 SN	BC/G 213	103.1	4
MS-SC-8	PSA-35 SN	BC/G 213	103.1	4
MS-SC-9	PSA-35 SN	BC/G 213	103.1	4
MS-SD-1	PSA-100 SN	BC/G 214	104.2	4
MS-SD-10	PSA-35 SN	BC/G 214	104.1	4
MS-SD-2	PSA-100 SN	BC/G 214	104.2	4
MS-SD-3	PSA-35 SN	BC/G 214	104.2	4
MS-SD-4	PSA-35 SN	BC/G 214	104.2	4
MS-SD-5	PSA-35 SN	BC/G 214	104.1	4
MS-SD-6	PSA-35 SN	BC/G 214	104.1	4
MS-SD-7	PSA-35 SN	BC/G 214	104.1	4
MS-SD-9	PSA-35 SN	BC/G 214	104.1	4
MSRV-1A-1	PSA-10 SN	MS 547-1	301	1,4,M
MSRV-1A-2	PSA-10 SN	MS 547-1	301	1,4,M
MSRV-1A-3	PSA-10 SN	MS 547-1	301	1,4,M
MSRV-1A-4	PSA-10 SN	MS 547-1	301	1,4,M
MSRV-1A-5	PSA-10 SN	MS 547-2	301	1,4,M
MSRV-1A-6	PSA-10 SN	MS 547-2	301	1,4,M
MSRV-1A-7PS	RIGID	MS 547-3	301	1,4,M
MSRV-1B-1	PSA-10 SN	MS 538-1	305	1,4,M
MSRV-1B-2	PSA-10 SN	MS 538-1	305	1,4,M
MSRV-1B-3	PSA-10 SN	MS 538-1	305	1,4,M
MSRV-1B-4	PSA-10 SN	MS 538-2.3	305	1,4,M
MSRV-1B-5	PSA-10 SN	MS 538-2.3	305	1,4,M
MSRV-1B-6PS	RIGID	MS 538-4	305	1,4,M
MSRV-1C-1	PSA-10 SN	MS 555-2	310	1,4,M
MSRV-1C-1PS				1,4,M
MSRV-1C-2	PSA-10 SN	MS 555-1	310	1,4,M
MSRV-1C-3	PSA-10 SN	MS 555-2	310	1,4,M
MSRV-1C-4	PSA-10 SN	MS 555-3	310	1,4,M
MSRV-1C-5	PSA-10 SN	MS 555-3	310	1,4,M
MSRV-1C-6PS	RIGID	MS 555-4	310	1,4,M
MSRV-1C-7	PSA-10 SN	MS 555-3	310	1,4,M
MSRV-1D-1	PSA-10 SN	MS 546-1	315	1,4,M
MSRV-1D-2	PSA-10 SN	MS 546-2	315	1,4,M
MSRV-1D-3	PSA-10 SN	MS 546-2	315	1,4,M
MSRV-1D-4	PSA-10 SN	MS 546-2	315	1,4,M
MSRV-1D-5	PSA-10 SN	MS 546-4	315	1,4,M
MSRV-1D-6	PSA-10 SN	MS 546-4	315	1,4,M
MSRV-1D-7	PSA-10 SN(2)	MS 546-4	315	1,4,M
MSRV-1D-7PS	RIGID	MS 546-4	315	1,4,M
MSRV-2A-1	PSA-10 SN	MS 548-1.2	302	1,4,M
MSRV-2A-2	PSA-10 SN	MS 548-1.2	302	1,4,M
MSRV-2A-3	PSA-35 SN	MS 548-1.2	302	1,4,M
MSRV-2A-4	PSA-10 SN	MS 548-3.4	302	1,4,M
MSRV-2A-5	PSA-10 SN	MS 548-3.4	302	1,4,M

TABLE 1 -- COMPONENT SUPPORTS WITHIN PSI BOUNDARIES -- 21 JAN 1985

EQUIP PIECE NO	DESCRIPTION	ISOMETRIC DWG NO	ISO. DWG. NO.	EXAMS
MSRV-2A-5PS	RIGID	MS 548-5	302	1,4,M
MSRV-2B-1	PSA-10 SN	MS 539-1	306	1,4,M
MSRV-2B-2	PSA-10 SN	MS 539-1	306	1,4,M
MSRV-2B-3	PSA-10 SN	MS 539-1	306	1,4,M
MSRV-2B-4	PSA-10 SN	MS 539-1	306	1,4,M
MSRV-2B-5	PSA-10 SN	MS 539-3	306	1,4,M
MSRV-2B-6	PSA-10 SN	MS 539-3	306	1,4,M
MSRV-2B-7	PSA-10 SN	MS 539-3	306	1,4,M
MSRV-2B-8	PSA-10 SN	MS 539-3	306	1,4,M
MSRV-2B-9PS	RIGID	MS 539-4.5	306	1,4,M
MSRV-2C-1	PSA-10 SN	MS 554-4	311	1,4,M
MSRV-2C-10PS	RIGID	MS 554-2	311	1,4,M
MSRV-2C-2	PSA-10 SN	MS 554-1	311	1,4,M
MSRV-2C-3	PSA-10 SN	MS 554-1	311	1,4,M
MSRV-2C-4	PSA-10 SN	MS 554-3	311	1,4,M
MSRV-2C-5	PSA-10 SN	MS 554-3	311	1,4,M
MSRV-2C-6	PSA-10 SN	MS 554-3	311	1,4,M
MSRV-2C-7	PSA-10 SN	MS 554-3	311	1,4,M
MSRV-2C-8	PSA-10 SN	MS 554-2	311	1,4,M
MSRV-2C-9	PSA-10 SN	MS 554-2	311	1,4,M
MSRV-2D-1	PSA-10 SN	MS 545-2	316	1,4,M
MSRV-2D-2	PSA-10 SN	MS 545-1	316	1,4,M
MSRV-2D-3	PSA-10 SN	MS 545-2	316	1,4,M
MSRV-2D-4	PSA-10 SN	MS 545-3	316	1,4,M
MSRV-2D-5	PSA-10 SN	MS 545-3	316	1,4,M
MSRV-2D-6PS	RIGID	MS 545-3	316	1,4,M
MSRV-3A-1	PSA-10 SN	MS 549-1	303	1,4,M
MSRV-3A-2	PSA-10 SN	MS 549-1	303	1,4,M
MSRV-3A-3	PSA-10 SN	MS 549-1	303	1,4,M
MSRV-3A-4	PSA-10 SN	MS 549-2.3	303	1,4,M
MSRV-3A-5	PSA-10 SN	MS 549-2.3	303	1,4,M
MSRV-3A-6	PSA-10 SN	MS 549-4.5	303	1,4,M
MSRV-3A-7PS	RIGID	MS 549-4.5	303	1,4,M
MSRV-3B-1	PSA-10 SN	MS 540-1	307	1,4,M
MSRV-3B-2	PSA-10 SN	MS 540-1	307	1,4,M
MSRV-3B-3	PSA-10 SN	MS 540-1	307	1,4,M
MSRV-3B-4	PSA-10 SN	MS 540-2.4	307	1,4,M
MSRV-3B-5	PSA-10 SN	MS 540-2.4	307	1,4,M
MSRV-3B-6	PSA-10 SN	MS 540-2.4	307	1,4,M
MSRV-3B-7	PSA-10 SN	MS 540-5.6	307	1,4,M
MSRV-3C-1	PSA-10 SN	MS 553-1	312	1,4,M
MSRV-3C-10	PSA-3 SN(2)	MS 553-5.6	312	1,4,M
MSRV-3C-2	PSA-10 SN	MS 553-1	312	1,4,M
MSRV-3C-3	PSA-10 SN	MS 553-1	312	1,4,M
MSRV-3C-4	PSA-10 SN	MS 553-3.4	312	1,4,M
MSRV-3C-5	PSA-10 SN	MS 553-3.4	312	1,4,M
MSRV-3C-6	PSA-10 SN	MS 553-3.4	312	1,4,M
MSRV-3C-7	PSA-10 SN	MS 553-3.4	312	1,4,M
MSRV-3C-8	PSA-10 SN	MS 553-3.4	312	1,4,M

TABLE 1 -- COMPONENT SUPPORTS WITHIN PSI BOUNDARIES -- 21 JAN 1985

EQUIP PIECE NO	DESCRIPTION	ISOMETRIC DWG NO	ISO DWG NO	EXAMS
MSRV-3D-1	PSA-10 SN	MS 544-1	317	1,4,M
MSRV-3D-2	PSA-10 SN	MS 544-1	317	1,4,M
MSRV-3D-3	PSA-10 SN	MS 554-2	317	1,4,M
MSRV-3D-4	PSA-10 SN	MS 544-1	317	1,4,M
MSRV-3D-5	PSA-10 SN	MS 544-2	317	1,4,M
MSRV-3D-6	PSA-10 SN	MS 544-4.5	317	1,4,M
MSRV-3D-7	PSA-10 SN	MS 544-4.5	317	1,4,M
MSRV-3D-8PS	RIGID	MS 544-4.5	317	1,4,M
MSRV-4A-1	PSA-10 SN	MS 550-1.2	304	1,4,M
MSRV-4A-10	PSA-10 SN	MS 550-3.4	304	1,4,M
MSRV-4A-2	PSA-10 SN	MS 550-1.2	304	1,4,M
MSRV-4A-3	PSA-10 SN	MS 550-1.2	304	1,4,M
MSRV-4A-4	PSA-10 SN	MS 550-3.4	304	1,4,M
MSRV-4A-5	PSA-10 SN	MS 550-3.4	304	1,4,M
MSRV-4A-6	PSA-10 SN	MS 550-5.6	304	1,4,M
MSRV-4A-7	PSA-10 SN	MS 550-5.6	304	1,4,M
MSRV-4A-8	PSA-10 SN	MS 550-3.4	304	1,4,M
MSRV-4A-8PS	RIDGID	541-3.4	308	1,4,M
MSRV-4A-9	PSA-10 SN	MS 550-3.4	304	1,4,M
MSRV-4B-10	PSA-10 SN	MS 541-3.4	308	1,4,M
MSRV-4B-2	PSA-10 SN	MS 541-1.2	308	1,4,M
MSRV-4B-3	PSA-10 SN	MS 541-1.2	308	1,4,M
MSRV-4B-4	PSA-10 SN	MS 541-1.2	308	1,4,M
MSRV-4B-5	PSA-10 SN	MS 541-3.4	308	1,4,M
MSRV-4B-6	PSA-10 SN	MS 541-3.4	308	1,4,M
MSRV-4B-7	PSA-10 SN	MS 541-3.4	308	1,4,M
MSRV-4B-8	PSA-10 SN	MS 541-5	308	1,4,M
MSRV-4B-9	PSA-10 SN	MS 541-5	308	1,4,M
MSRV-4B-9PS	RIGID	MS 541-6	308	1,4,M
MSRV-4C-1	PSA-10 SN	MS 552-1.2	313	1,4,M
MSRV-4C-2	PSA-10 SN	MS 552-1.2	313	1,4,M
MSRV-4C-3	PSA-10 SN	MS 552-1.2	313	1,4,M
MSRV-4C-4	PSA-10 SN	MS 552-3.4	313	1,4,M
MSRV-4C-5	PSA-10 SN	MS 552-3.4	313	1,4,M
MSRV-4C-6	PSA-10 SN	MS 552-3.4	313	1,4,M
MSRV-4C-7	PSA-10 SN	MS 552-3.4	313	1,4,M
MSRV-4C-8	PSA-10 SN	MS 552-3.4	313	1,4,M
MSRV-4C-9	PSA-10 SN(2)	MS 552-5.6	313	1,4,M
MSRV-4D-1	PSA-10 SN	MS 543-1	318	1,4,M
MSRV-4D-2	PSA-10 SN	MS 543-1	318	1,4,M
MSRV-4D-3	PSA-10 SN	MS 543-1	318	1,4,M
MSRV-4D-4	PSA-10 SN	MS 543-3	318	1,4,M
MSRV-4D-5	PSA-10 SN	MS 543-3	318	1,4,M
MSRV-4D-6	PSA-10 SN	MS 543-2	318	1,4,M
MSRV-4D-7PS	RIGID	MS 543-2	318	1,4,M
MSRV-5B-1	PSA-10 SN(2)	MS 542-1.2	309	1,4,M
MSRV-5B-10PS	RIGID	MS 542-6	309	1,4,M
MSRV-5B-2	PSA-10 SN	MS 542-1.2	309	1.4,M
MSRV-5B-3	PSA-10 SN	MS 542-1.2	309	1,4,M

TABLE 1 -- COMPONENT SUPPORTS WITHIN PSI BOUNDARIES -- 21 JAN 1985

EQUIP PIECE NO	DESCRIPTION	ISOMETRIC DWG NO		ISO. DWG NO	EXAMS
MSRV-5B-4	PSA-10 SN	MS	542-1.2	309	1,4,M
MSRV-5B-5	PSA-10 SN	MS	542-1.2	309	1,4,M
MSRV-5B-6	PSA-10 SN	MS	542-3.4	309	1,4,M
MSRV-5B-7	PSA-10 SN	MS	542-5	309	1,4,M
MSRV-5B-8	PSA-10 SN	MS	542-5	309	1,4,M
MSRV-5B-9	PSA-10 SN	MS	542-6	309	1,4,M
MSRV-5C-1	PSA-10 SN	MS	551-1	314	1,4,M
MSRV-5C-2	PSA-10 SN	MS	551-1	314	1,4,M
MSRV-5C-3	PSA-10 SN	MS	551-1	314	1,4,M
MSRV-5C-4	PSA-10 SN	MS	551-2	314	1,4,M
MSRV-5C-5	PSA-10 SN	MS	551-3	314	1,4,M
MSRV-5C-6	PSA-10 SN	MS	551-2	314	1,4,M
MSRV-5C-7	PSA-10 SN	MS	551-3	314	1,4,M
MSRV-5C-8	PSA-35 SN	MS	551-3	314	1,4,M
MSRV-5C-9	PSA-10 SN	MS	551-4.5	314	1,4,M
RCC-255	BOX	RCC	949-10.12	201	1
RCC-256	SPRING	RCC	949-10.12	201	1
RCC-267	SPRING	RCC	831-1.2	301	1
RCC-269	BOX	RCC	831-3.5	301	1
RCC-274	SPRING	RCC	831-6.10	301	1
RCC-276	BOX	RCC	831-6.10	301	1
RCC-279	SPRING	RCC	831-6.10	301	1
RCC-280	ANCHOR	RCC	831-6.10	301	1
RCC-285	STRUT	RCC	831-11.15	301	1
RCC-287	ANCHOR	RCC	831-11.15	301	1
RCC-306	BOX	RCC	830-12.13	302	1
RCC-308	STRUT	RCC	830-12.13	302	1
RCC-309	STRUT	RCC	830-12.13	302	1
RCC-311	STRUT	RCC	830-20.21	302	1
RCC-312	STRUT	RCC	830-20.21	302	1
RCC-315	SPRING	RCC	830-20.21	302	1
RCC-316	ANCHOR	RCC	830-20.21	302	1
RCC-325	SPRING	RCC	830-20.21	302	1
RCC-327	PSA-3 SN	RCC	830-30.32	302	1
RCC-345	SPRING	RCC	830-37.39	302	1
RCC-389	SPRING	RCC	948-1.3	202	1
RCC-434	ANCHOR	RCC	831-38.40	301	1
RCC-439	STRUT	RCC	831-23.26	301	1
RCC-440	ANCHOR	RCC	831-23.26	301	1
RCC-443	ANCHOR	RCC	831-23.26	301	1
RCC-462	SPRING	RCC	830-12.13	302	1
RCC-465	SPRING	RCC	830-30.32	302	1
RCC-469	STRUT	RCC	831-11.15	301	1
RCC-472	STRUT	RCC	830-12.13	302	1
RCC-475	STRUT	RCC	830-20.21	302	1
RCC-477	STRUT	RCC	831-38.40	301	1
RCC-478	STRUT	RCC	831-23.26	301	1
RCC-487	STRUT	RCC	830-20.21	302	1
RCC-488	BOX	RCC	830-20.21	302	1

TABLE 1 -- COMPONENT SUPPORTS WITHIN PSI BOUNDARIES -- 21 JAN 1985

EQUIP PIECE NO	DESCRIPTION	ISOMETRIC DWG NO	ISO DWG NO	EXAMS
RCC-908N	BOX	RCC 831-3.5	301	1
RCC-909N	PSA-3 SN	RCC 830-11.15	301	1
RCC-912N	STRUT	RCC 831-1.2	301	1
RCC-913N	STRUT	RCC 831-23.26	301	1
RCC-937N	RIGID	RCC 825-19.21	304	1
RCC-938N	RIGID	RCC 825-19.21	304	1
RCC-939N	RIGID	RCC 825-19.21	304	1
RCC-940N	RIGID	RCC 825-19.21	304	1
RCC-941N	RIGID	RCC 825-19.21	304	1
RCC-945N	RIGID	RCC 950-8.10	303	1
RCC-946N	RIGID	RCC 950-8.10	303	1
RCC-947N	PIGID	RCC 950-8.10	303	1
RCC-948N	RIGID	RCC 950-8.10	303	1
RCC-949N	SPRING	RCC 950-8.10	303	1
RCC-950N	RIGID	RCC 950-8.10	303	1
RCC-951N	RIGID	RCC 950-8.10	303	1
RCC-952N	RIGID	RCC 950-8.10	303	1
RCIC-1	PSA-1 SN	RCIC 660-1	203	4,B
RCIC-10	STRUT	RCIC 659-3.6	205	1
RCIC-100	PSA-1 SN	RCIC 659-22.23	102	1
RCIC-102	STRUT	RCIC 659-24	102	N6
RCIC-103	STRUT	RCIC 659-24	102	N6
RCIC-104	SPRING	RCIC 659-24	102	N6
RCIC-106	BOX	RCIC 664-1.7	202	N1
RCIC-107	BOX	RCIC 664-8.10	202	N1
RCIC-108	PSA-1/2 SN	RCIC 664-8.10	202	N1
RCIC-109	PSA-3 SN	RCIC 664-8.10	202	N1
RCIC-11	BOX	RCIC 659-3.6	205	1
RCIC-111	BOX	RCIC 664-8.10	202	N1
RCIC-113	SPRING	RCIC 664-1.7	202	N1
RCIC-114	SPRING	RCIC 664-8.10	202	N1
RCIC-116	STRUT	RCIC 665-4.9	202	N1
RCIC-117	STRUT	RCIC 665-4.9	202	N1
RCIC-119	SPRING	RCIC 665-4.9	202	N1
RCIC-12	BOX	RCIC 659-3.6	205	1
RCIC-121	SPRING	RCIC 665-4.9	202	N1
RCIC-123	SPRING	RCIC 665-4.9	202	N1
RCIC-126	PSA-1 SN(2)	RCIC 659-26	102.2	4
RCIC-127	SPRING	RCIC 659-27.28	102.3	4
RCIC-128	PSA-3 SN	RCIC 659-27.28	102.3	4
RCIC-129	SPRING	RCIC 659-27.28	102.3	4
RCIC-13	BOX	RCIC 659-1.2	205	1
RCIC-14	BOX	RCIC 659-7.10	205	1
RCIC-15	BOX	RCIC 659-7.10	205	1
RCIC-16	BOX	RCIC 659-7.10	205	1
RCIC-17	BOX	RCIC 659-7.10	205	1
RCIC-18	OTHER	RCIC 659-7.10	205	1
RCIC-19	BOX	RCIC 659-7.10	205	1
RCIC-1C-1	PSA-1 SN	RCIC 662-2.4	101.3	4,A,B

TABLE 1 -- COMPONENT SUPPORTS WITHIN PSI BOUNDARIES -- 21 JAN 1985

EQUIP PIECE NO	DESCRIPTION	ISOMETRIC DWG NO	ISO DWG NO	EXAMS
RCIC-1C-10	PSA-3 SN	RCIC 663-1.2	101.1	4,A,B
RCIC-1C-12	PSA-3 SN	RCIC 662-1	101.2	4,A,B
RCIC-1C-13	PSA-3 SN(2)	RCIC 662-2.4	101.2	4,A,B
RCIC-1C-14	PSA-1 SN	RCIC 662-2.4	101.3	4,A,B
RCIC-1C-15	PSA-3 SN(2)	RCIC 662-1	101.2	4,A,B
RCIC-1C-16	PSA-3 SN	RCIC 662-2.4	101.2	4,A,B
RCIC-1C-2	PSA-3 SN(2)	RCIC 662-2.4	101.3	4,A,B
RCIC-1C-3	PSA-1 SN	RCIC 662-2.4	101.3	4,A,B
RCIC-1C-4	PSA-1 SN	RCIC 662-2.4	101.2	4,A,B
RCIC-1C-5	PSA-10 SN	RCIC 662-2.4	101.2	4,A,B
RCIC-1C-6	PSA-3 SN(2)	RCIC 662-2.4	101.2	4,A,B
RCIC-1C-7	PSA-3 SN	RCIC 662-2.4	101.2	4,A,B
RCIC-1C-8	PSA-3 SN	RCIC 662-2.4	101.2	4,A,B
RCIC-1C-9	PSA-10 SN	RCIC 663-1.2	101.1	4,A,B
RCIC-2	PSA-1 SN	RCIC 660-1	203	4,B
RCIC-20	BOX	RCIC 659-7.10	205	1
RCIC-21	STRUT	RCIC 659-7.10	205	1
RCIC-22	BOX	RCIC 649-11.17	205	1
RCIC-23	STRUT	RCIC 660-2.4	203	4,B
RCIC-24	STRUT	RCIC 660-2.4	203	4,B
RCIC-25	STRUT	RCIC 660-2.4	203	4,B
RCIC-26	PSA-3 SN	RCIC 660-5	203	4,B
RCIC-27	SPRING	RCIC 660-5	203	4,B
RCIC-28	BOX	RCIC 661-1.2	203	4,B
RCIC-29	ANCHOR	RCIC 659-11.17	205	1
RCIC-3	V. SPRING (2)	RCIC 660-1	203	4,B
RCIC-30	SPRING (2)	RCIC 661-1.2	203	4,B
RCIC-31	SPRING	RCIC 659-1.2	205	1
RCIC-32	BOX	RCIC 662-11.15	201.1	4,B
RCIC-33	ANCHOR	RCIC 662-11.15	201.1	4,B
RCIC-34	PSA-1/2 SNG1	RCIC 662-11.15	201	4,B
RCIC-35	BOX	RCIC 662-11.15	201.1	4,B
RCIC-36	SPRING	RCIC 662-11.15	201.1	4,B
RCIC-38	BOX	RCIC 662-6	201.1	4,B
RCIC-4	BOX	RCIC 660-2.4	203	4,B
RCIC-40	SPRING	RCIC 662-7.10	201.1	4,B
RCIC-41	BOX	RCIC 662-7.10	201.1	4,B
RCIC-42	BOX	RCIC 662-7.10	201.1	4,B
RCIC-43	SPRING	RCIC 662-7.10	201.1	4,B
RCIC-44	PSA-1/4 SNG1	RCIC 662-7.10	201	4,B
RCIC-45	ANCHOR	RCIC 662-7.10	201.1	4,B
RCIC-47	BOX	RCIC 656-1.3	204	1
RCIC-5	PSA-1/2 SN(2)	RCIC 660-2.4	203	4,B
RCIC-52	ANCHOR	RCIC 658-1.2	204	1
RCIC-53	SPRING	RCIC 658-1.2	204	1
RCIC-54	SPRING	RCIC 642-1.5	205	1
RCIC-56	SPRING	RCIC 656-1.3	204	1
RCIC-59	SPRING (2)	RCIC 662-2.4	101.3	4,A,B
RCIC-6	SPRING	RCIC 660-2.4	203	4,B

TABLE 1 -- COMPONENT SUPPORTS WITHIN PSI BOUNDARIES -- 21 JAN 1985

EQUIP. PIECE NO	DESCRIPTION	ISOMETRIC DWG NO	ISO DWG NO	EXAMS
RCIC-61	SPRING	RCIC 662-2.4	101.2	4,A,B
RCIC-66	SPRING	RCIC 662-2.4	101.2	4,A,B
RCIC-67	SPRING	RCIC 662-2.4	101.2	4,A,B
RCIC-68	SPRING	RCIC 662-2.4	101.2	4,A,B
RCIC-7	ANCHOR	RCIC 660-2.4	203	4,B
RCIC-72	SPRING	RCIC 662-1	101.2	4,A,B
RCIC-74	SPRING	RCIC 663-1.2	101.1	4,A,B
RCIC-75	SPRING	RCIC 663-1.2	101.1	4,A,B
RCIC-79	BOX	RCIC 659-11.17	205	1
RCIC-8	PSA-1 SN(2)	RCIC 642-1.5	205	1
RCIC-80	U-BOLT	RCIC 659-11.17	205	1
RCIC-82	BOX	RCIC 659-11.17	205	1
RCIC-83	SPRING	RCIC 659-18.21	205	1
RCIC-86	SPRING	RCIC 659-18.21	205	1
RCIC-88	BOX	RCIC 659-18.21	205	1
RCIC-9	BOX	RCIC 642-1.5	205	1
RCIC-90	BOX	RCIC 659-18.21	205	1
RCIC-900N	PSA-3 SN	RCIC 664-1.7	202	N1
RCIC-901N	STRUT	RCIC 665-5.8	204	1
RCIC-902N	SPRING	RCIC 656-1.3	204	1
RCIC-903N	STRUT	RCIC 657-1.2	204	1
RCIC-904N	BOX	RCIC 657-1.2	204	1
RCIC-905N	PSA-10 SN	RCIC 665-1.3	202	N1
RCIC-906N	STRUT	RCIC 665-1.3	202	N1
RCIC-907N	STRUT	RCIC 665-1.3	202	N1
RCIC-908N	PSA-3 SN	RCIC 665-1.3	202	N1
RCIC-909N	PSA-3 SN	RCIC 665-1.3	202	N1
RCIC-91	ANCHOR	RCIC 659-18.21	205	1
RCIC-910N	STRUT	RCIC 665-1.3	202	N1
RCIC-911N	STRUT	RCIC 665-4.9	202	N1
RCIC-912N	ANCHOR	RCIC 665-4.9	202	N1
RCIC-913N	ANCHOR	RCIC 664-1.7	202	N1
RCIC-914N	PSA-3 SN02	RCIC 664-1.7	202	N1
RCIC-916N	STRUT	RCIC 657-1.2	204	1
RCIC-917N	PSA-3 SN	RCIC 663-3.5	101	N1
RCIC-918N	PSA-3 SN	RCIC 664-1.7	202	N1
RCIC-919N	SPRING	RCIC 663-3.5	101	N1
RCIC-920N	SPRING	RCIC 663-3.5	101	N1
RCIC-921N	STRUT	RCIC 664-1.7	202	N1
RCIC-922N	SPRING	RCIC 664-1.7	202	N1
RCIC-923N	STRUT	RCIC 664-1.7	202	N1
RCIC-924N	STRUT	RCIC 664-1.7	202	N1
RCIC-925N	PSA-3 SN	RCIC 663-3.5	101	N1
RCIC-926N	SPRING	RCIC 664-1.7	202	N1
RCIC-927N	ANCHOR	RCIC 656-1.3	204	1
RCIC-928N	STRUT	RCIC 664-1.7	202	N1
RCIC-929N	STRUT	RCIC 665-4.9	202	N1
RCIC-93	BOX	RCIC 659-18.21	205	1
RCIC-931N	PSA-3 SN	RCIC 659-27.28	102.3	4

TABLE 1 -- COMPONENT SUPPORTS WITHIN PSI BOUNDARIES -- 21 JAN 1985

EQUIP PIECE NO	DESCRIPTION	ISOMETRIC DWG NO	ISO DWG NO	EXAMS
RCIC-932N	PSA-1 SN(2)	RCIC 659-27.28	102.3	4
RCIC-933N	PSA-1 SN	RCIC 659-27.28	102.3	4
RCIC-934N	PSA-1 SN	RCIC 659-27.28	102.3	4
RCIC-935N	PSA-1 SN	RCIC 659-27.28	102.3	4
RCIC-936N	PSA-1 SN(2)	RCIC 659-27.28	102.3	4
RCIC-937N	PSA-3 SN	RCIC 659-26	102.2	4
RCIC-938N	PSA-3 SN	RCIC 659-26	102.2	4
RCIC-939N	PSA-3 SN	RCIC 659-26	102.2	4
RCIC-940N	SPRING	RCIC 659-27.28	102.3	4
RCIC-941N	SPRING	RCIC 659-27.28	102.3	4
RCIC-942N	SPRING	RCIC 659-26	102.2	4
RCIC-943N	PSA-10 SNG1	RCIC 662-6	201	4,B
RCIC-944N	PSA-3 SN(2)G1	RCIC 662-6	201	4,B
RCIC-945N	PSA-10 SNG1	RCIC 662-6	201	4,B
RCIC-946N	STRUT	RCIC 662-6	201.1	4,B
RCIC-948N	PSA-1 SN(2)	RCIC 659-24	102	N6
RCIC-949N	PSA-10 SN	RCIC 662-7.10	201.1	4,B
RCIC-95	BOX	RCIC 659-18.21	205	1
RCIC-951N	SPRING	RCIC 665-4.9	202	N1
RCIC-952N	BOX	RCIC 659-11.17	205	1
RCIC-954N	BOX	RCIC 659-11.17	205	1
RCIC-955N	BOX	RCIC 659-11.17	205	1
RCIC-956N	STRUT	RCIC 659-7.10	205	1
RCIC-961N	PSA-1/4 SN	RCIC 662-11.15	201.1	4,B
RCIC-962N	PSA-1/2 SN	RCIC 662-11.15	201.1	4,B
RCIC-966N	BOX	RCIC 658-1.2	204	1
RCIC-967N	PSA-1/4 SN	RCIC 658-1.2	204	1
RCIC-968S	PSA-1 SN	RCIC 663-1.2	101.1	4,B
RCIC-969S	PSA-1/2 SN	RCIC 663-1.2	101.1	4,B
RCIC-97	SPRING	RCIC 659-22.23	205	1
RCIC-970S	PSA-1/2 SN	RCIC 663-1.2	101.1	4,B
RCIC-971N	PSA-1 SN	RCIC 660-2.4	203	4
RCIC-973N	STRUT	RCIC 659-3.6	205	1
RCIC-974S	PSA-1 SN	RCIC 663-1.2	101.1	4,B
RCIC-975S	PSA-1/4 SN	RCIC 663-1.2	101.1	4,B
RCIC-976S	SPRING	RCIC 663-1.2	101.1	1
RCIC-98	STRUT	RCIC 659-22.23	205	1
RCIC-99	STRUT	RCIC 659-22.23	205	1
RFW-146	PSA-10 SN(2)	RFW 418-4	101.1	4,A,N
RFW-147	PSA-100 SN	RFW 418-4	101.1	4,A,N
RFW-148	PSA-35 SN	RFW 418-4	101.1	4,A,N
RFW-150	PSA-10 SN(2)	RFW 418-7.8	101.2	4,A,N
RFW-151	PSA-10 SN	RFW 418-7.8	101.3	4,A,N
RFW-152	SPRING	RFW 418-7.8	101.3	4,A,N
RFW-153	PSA-10 SN	RFW 418-7.8	101.3	4,A,N
RFW-154	PSA-10 SN(2)	RFW 418-7.8	101.2	4,A,N
RFW-155	PSA-10 SN(2)	RFW 418-7.8	101.2	4,A,N
RFW-156	SPRING	RFW 418-9.10	101.5	4,A,N
RFW-157	C SPRING (2)	RFW 418-9.10	101.5	4,A,N

TABLE 1 -- COMPONENT SUPPORTS WITHIN PSI BOUNDARIES -- 21 JAN 1985

EQUIP PIECE NO	DESCRIPTION	ISOMETRIC DWG NO	ISO DWG NO	EXAMS
RFW-158	C SPRING	RFW 418-11.12	101.4	4,A,N
RFW-159	SPRING	RFW 418-13	101.3	4,A,N
RFW-160	PSA-10 SN(2)	RFW 418-7.8	101.2	4,A,N
RFW-162	PSA-10 SN(2)	RFW 419-4	102.1	4,A,N
RFW-163	PSA-100 SN	RFW 419-4	102.1	4,A,N
RFW-164	PSA-35 SN	RFW 419-4	102.1	4,A,N
RFW-166	PSA-10 SN(2)	RFW 419-5.7	102.2	4,A,N
RFW-167	PSA-10 SN(2)	RFW 419-5.7	102.2	4,A,N
RFW-168	PSA-10 SN(2)	RFW 419-5.7	102.2	4,A,N
RFW-170	PSA-10 SN(2)	RFW 419-5.7	102.2	4,A,N
RFW-171	PSA-10 SN	RFW 419-8.9	102.3	4,A,N
RFW-172	PSA-35 SN	RFW 419-8.9	102.3	4,A,N
RFW-173	SPRING	RFW 419-8.9	102.3	4,A,N
RFW-175	SPRING	RFW 419-12.13	102.5	4,A,N
RFW-177	V SPRING	RFW 438-1.2	103	1,4,M
RFW-178	BOX	RFW 438-1.2	103	1,4,M
RFW-179	RIGID	RFW 438-1.2	103	1,4,M
RFW-180	PSA-1 SN	RFW 438-3	103	1,4,M
RFW-181	SPRING	RFW 438-3	103	1,4,M
RFW-182	SPRING	RFW 419-4	102.1	4,A,N
RFW-183	C SPRING (2)	RFW 419-8.5	102.3	4,A,N
RFW-185	SPRING (2)	RFW 419-12.13	102.5	4,A,N
RFW-186	SPRING	RFW 418-4	101.1	4,A,N
RFW-903N	SPRING	RFW 438-3	103	1,4,M
RFW-915N	PSA-10 SN	RFW 419-8.9	102.3	4,A,N
RFW-929N	PSA-10 SN	RFW 418-7.8	101.3	4,A,N
RFW-942N	SPRING	RFW 438-1.2	103	1,4,M
RHR-1000N	PSA-3 SN	RHR 867-13.15	201.1	4,B,N
RHR-1001N	PSA-1 SN(2)	RHR 867-13.15	201.1	4,B,N
RHR-1002N	PSA-1 SN(2)	RHR 898-9.14	207.1	4,B,N
RHR-1003N	STRUT	RHR 898-21.29	208	N1
RHR-1004N	STRUT	RHR 851-3.9	201.6	4,B,N
RHR-1017N	SPRING	RHR 897-19	103	N6
RHR-1019N	----	RHR 851-18.19	201	N6
RHR-1020N	----	RHR 898-36.38	207	1
RHR-1021N	PSA-3 SN(2)	RHR 897-1.2	210	1
RHR-1022N	PSA-35 SN(2)	RHR 851-13	201.6	4,B,N
RHR-117	SPRING	RHR 879-1.3	209	1
RHR-118	SPRING	RHR 875-9.12	209	4,B,N
RHR-119	STRUT	RHR 875-13.16	205	4,B,N
RHR-120	STRUT	RHR 875-13.16	205	4,B,N
RHR-121	PSA-10 SN(2)	RHR 881-4.7	206	1
RHR-122	STRUT	RHR 881-4.7	206	1
RHR-123	BOX	RHR 881-4.7	206	1
RHR-124	STRUT	RHR 881-4.7	206	1
RHR-125	STRUT	RHR 881-8.13	206	1
RHR-126	STRUT	RHR 881-8.13	206	1
RHR-127	BOX	RHR 881-8.13	206	1
RHR-128	BOX	RHR 881-8.13	206	1

TABLE 1 -- COMPONENT SUPPORTS WITHIN PSI BOUNDARIES -- 21 JAN 1985

EQUIP PIECE NO	DESCRIPTION	ISOMETRIC DWG NO	ISO DWG NO	EXAMS
RHR-129	STRUT	RHR 881-8.13	206	1
RHR-130	BOX	RHR 881-8.13	206	1
RHR-131	STRUT	RHR 881-8.13	206	1
RHR-132	ANCHOR	RHR 881-8.13	206	1
RHR-135	STRUT	RHR 881-1.3	205	1
RHR-136	STRUT	RHR 881-1.3	205	1
RHR-137	PSA-3 SN(2)	RHR 881-1.3	205	1
RHR-138	SPRING	RHR 881-1.3	205	1
RHR-139	SPRING	RHR 880-1.6	211	1
RHR-140	SPRING	RHR 880-1.6	211	1
RHR-142	PSA-1 SN(2)	RHR 867-20.22	201	1
RHR-144	SPRING	RHR 867-16.19	201	1
RHR-145	PSA-1 SN	RHR 867-16.19	201	1
RHR-146	SPRING	RHR 867-16.19	201	1
RHR-147	PSA-1 SN(2)	RHR 867-16.19	201	1
RHR-148	BOX	RHR 867-16.19	201	1
RHR-149	STRUT	RHR 867-16.19	201	1
RHR-150	SPRING	RHR 854-12.16	203	1
RHR-157	SPRING (2)	RHR 867-1.4	201.1	4,B,N
RHR-158	PSA-3SN	RHR 867-1.4	201.1	4,B,N
RHR-159	STRUT	RHR 867-1.4	201.1	4,B,N
RHR-160	PSA-3 SN	RHR 867-1.4	201.1	4,B,N
RHR-161	SPRING	RHR 867-1.4	201.1	4,B,N
RHR-162	STRUT	RHR 867-1.4	201.1	4,B,N
RHR-163	STRUT	RHR 867-1.4	201.1	4,B,N
RHR-164	STRUT	RHR 867-5.7	201.1	4,B,N
RHR-165	STRUT	RHR 867-5.7	201.1	4,B,N
RHR-166	SPRING	RHR 875-6.8	205	4,B,N
RHR-167	SPRING	RHR 875-9.12	209	4,B,N
RHR-174	BOX	RHR 867-8.12	201.1	4,B,N
RHR-176	RIGID	RHR 875-13.16	205	4,B,N
RHR-181	SPRING	RHR 976-5.6	207	1
RHR-183	PSA-10 SN	RHR 976-5.6	207	1
RHR-184	STRUT	RHR 976-1.4	207	N6
RHR-185	SPRING	RHR 976-1.4	207	1,4,M
RHR-187	SPRING	RHR 867-16.19	201	N6
RHR-188	SPRING	RHR 867-5.7	201.1	4,B,N
RHR-218	PSA-3 SN(2)	RHR 976-1.4	207	N6
RHR-228	ANCHOR	RHR 745-1.2	207.11	N6
RHR-230	BOX	RHR 745-1.2	207.11	N6
RHR-231	SPRING	RHR 851-20	101	N6
RHR-232	RIGID	RHR 851-20	101	N6
RHR-234	BOX	RHR 851-3.9	201.6	4,B,N
RHR-235	PSA-10 SN	RHR 851-3.9	201.6	4,B,N
RHR-237	STRUT	RHR 851-3.9	201.6	4,B,N
RHR-238	ANCHOR	RHR 851-3.9	201.6	4,B,N
RHR-240	BOX	RHR 851-10.12	201.6	4,B,N
RHR-243	SPRING (2)	RHR 851-13	201.6	4,B,N
RHR-244	PSA-35 SN	RHR 851-13	201.6	4,B,N

TABLE 1 -- COMPONENT SUPPORTS WITHIN PSI BOUNDARIES -- 21 JAN 1985

EQUIP PIECE NO	DESCRIPTION	ISOMETRIC DWG NO	ISO DWG NO	EXAMS
RHR-245	BOX	RHR 855-1.3	201	N6
RHR-247	SPRING	RHR 855-1.3	201	1
RHR-248	SPRING	RHR 853-1.4	202	N6
RHR-249	BOX	RHR 853-1.4	201	N6
RHR-251	PSA-3 SN	RHR 853-1.4	202	N6
RHR-252	SPRING	RHR 853-1.4	202	N6
RHR-256	PSA-35 SN	RHR 853-5.6	202	1
RHR-260	PSA-3 SN	RHR 851-13	201.6	4,B,N
RHR-261	SPRING	RHR 851-13	201.6	4,B,N
RHR-262	SPRING	RHR 854-1.5	203	1,4,M
RHR-263	C SPRING	RHR 851-3.9	201.6	4,B,N
RHR-264	PSA-3 SN(2)	RHR 851-3.9	201.6	4,B,N
RHR-265	SPRING	RHR 854-1.5	203	N6
RHR-266	BOX	RHR 851-3.9	201.6	4,B,N
RHR-267	BOX	RHR 851-3.9	201.6	4,B,N
RHR-268	BOX	RHR 851-3.9	201.6	4,B,N
RHR-269	PSA-3 SN	RHR 851-3.9	201.6	4,B,N
RHR-270	PSA-3 SN	RHR 851-3.9	201.6	4,B,N
RHR-271	PSA-3 SN(2)	RHR 851-3.9	201.6	4,B,N
RHR-272	PSA-3 SN	RHR 854-1.5	203	N6
RHR-273	PSA-3 SN	RHR 854-1.5	203	N6
RHR-274	PSA-3 SNQ1	RHR 854-1.5	203	N6
RHR-275	PSA-3 SN	RHR 854-1.5	203	N6
RHR-276	PSA-1 SN(2)	RHR 854-1.5	203	N6
RHR-277	PSA-3 SN	RHR 854-1.5	203	N6
RHR-278	BOX	RHR 854-1.5	203	N6
RHR-279	SPRING	RHR 854-1.5	203	N6
RHR-280	C SPRING	RHR 851-3.9	201.6	4,B,N
RHR-281	PSA-10 SN	RHR 897-20.24	103	4,A
RHR-282	PSA-35	RHR 897-20.24	103	4,A
RHR-286	PSA-10 SN(2)	RHR 897-20.24	103	4,A
RHR-287	PSA-35 SN	RHR 897-20.24	103	4,A
RHR-295	BOX	RHR 897-10.14	210	1
RHR-298	BOX	RHR 897-3.5	210	1
RHR-301	PSA-3 SN	RHR 897-3.5	210	1
RHR-302	STRUT	RHR 897-3.5	210	1
RHR-303	SPRING	RHR 897-3.5	210	1
RHR-304	PSA-10 SN	RHR 897-3.5	210	1
RHR-311	PSA-1 SN(2)	RHR 897-3.5	210	1
RHR-316	SPRING	RHR 897-6.9	210	1
RHR-321	SPRING	RHR 897-1.2	210	1
RHR-322	BOX	RHR 897-1.2	210	1
RHR-323	SPRING	RHR 897-1.2	210	1
RHR-324	STRUT	RHR 897-25.30	210	1
RHR-337	STRUT	RHR 897-25.30	210	1
RHR-338	SPRING	RHR 897-25.30	210	1
RHR-345	PSA-1/4 SN(2)	RHR 897-25.30	210	1
RHR-346	STRUT	RHR 897-25.30	210	1
RHR-347	BOX	RHR 897-25.30	210	1

TABLE 1 -- COMPONENT SUPPORTS WITHIN PSI BOUNDARIES -- 21 JAN 1985

EQUIP PIECE NO	DESCRIPTION	ISOMETRIC DWG NO	ISO DWG NO	EXAMS
RHR-348	SPRING	RHR 897-25.30	210	1
RHR-349	SPRING	RHR 897-25.30	210	1
RHR-35	SPRING	RHR 880-1.6	211	1
RHR-350	SPRING	RHR 851-18.19	201	N6
RHR-351	C SPRING	RHR 851-3.9	201.6	4,B,N
RHR-352	STRUT	RHR 851-3.9	201.6	4,B,N
RHR-353	STRUT	RHR 851-3.9	201.6	4,B,N
RHR-354	SPRING (2)	RHR 852-1.4	201.1	4,B,N
RHR-355	PSA-3 SN	RHR 852-1.4	201.1	4,B,N
RHR-356	PSA-3 SN	RHR 852-1.4	201.1	4,B,N
RHR-357	PSA-3 SN	RHR 852-1.4	201.1	4,B,N
RHR-358	BOX	RHR 852-1.4	201.1	4,B,N
RHR-359	PSA-3 SN	RHR 852-1.4	201.1	4,B,N
RHR-360	SPRING	RHR 852-1.4	201.1	4,B,N
RHR-361	PSA-3 SN	RHR 852-1.4	201.1	4,B,N
RHR-362	PSA-3 SN(2)	RHR 852-1.4	201.1	4,B,N
RHR-363	SPRING	RHR 852-1.4	201.1	4,B,N
RHR-365	STRUT	RHR 851-1.2	201.6	4,B,N
RHR-366	STRUT	RHR 851-1.2	201.6	4,B,N
RHR-367	SPRING (2)	RHR 851-1.2	201.6	4,B,N
RHR-368	STRUT	RHR 851-1.2	201.6	4,B,N
RHR-369	PSA-3 SN	RHR 854-1.5	203	N6
RHR-37	BOX	RHR 880-1.6	211	1
RHR-380	PSA-10 SN	RHR 851-21.24	101	4,A
RHR-381	PSA-10 SN(2)	RHR 851-21.24	101	4,A
RHR-382	PSA-35 SN	RHR 851-21.24	101	4,A
RHR-383	PSA-35 SN	RHR 851-21.24	101	4,A
RHR-387	PSA-10 SN	RHR 899-39.44	102	4,A
RHR-388	PSA-10 SN(2)	RHR 899-39.44	102	4,A
RHR-389	PSA-35 SN	RHR 899-39.44	102	4,A
RHR-39	PSA-1 SN(2)	RHR 880-1.6	211	1
RHR-390	PSA-35 SN	RHR 899-39.44	102	4,A
RHR-391	ANCHOR	RHR 667-16.19	212	N1
RHR-392	BOX	RHR 667-20.21	212	N1
RHR-393	BOX	RHR 667-20.21	212	N1
RHR-394	SPRING	RHR 667-20.21	212	N1
RHR-395	SPRING	RHR 667-16.19	212	N1
RHR-40	STRUT	RHR 880-1.6	211	N6
RHR-405	PSA-3 SN	RHR 854-1.5	203	N6
RHR-406	PSA-3 SN	RHR 854-1.5	203	N6
RHR-407	SPRING	RHR 854-1.5	203	N6
RHR-408	STRUT	RHR 854-6.11	203	N6
RHR-409	BOX	RHR 854-6.11	203	N6
RHR-41	BOX	RHR 880-1.6	211	N6
RHR-410	ANCHOR	RHR 854-6.11	203	N6
RHR-411	BOX	RHR 854-6.11	203	N6
RHR-412	STRUT	RHR 854-6.11	203	N6
RHR-414	PSA-3 SN(2)	RHR 854-6.11	203	N6.
RHR-415	STRUT	RHR 854-6.11	203	N6

TABLE 1 -- COMPONENT SUPPORTS WITHIN PSI BOUNDARIES -- 21 JAN 1985

EQUIP PIECE NO.	DESCRIPTION	ISOMETRIC DWG NO	ISO DWG NO	EXAMS
RHR-416	PSA-10 SN(2)	RHR 854-6.11	203	N6
RHR-417	STRUT	RHR 854-12.16	203	N6
RHR-419	PSA-3 SN(2)Q1	RHR 854-12.16	203	N6
RHR-42	PSA-3 SN	RHR 882-5	211	1
RHR-420	SPRING	RHR 854-12.16	203	N6
RHR-423	SPRING	RHR 881-8.13	206	N6
RHR-425	SPRING	RHR 874-1.3	104	4,A,B
RHR-428	SPRING (2)	RHR 874-1.3	104	4,A,B
RHR-43	SPRING	RHR 882-5	211	1
RHR-431	SPRING	RHR 874-1.3	104	4,A,B
RHR-432	SPRING	RHR 881-8.13	206	1
RHR-433	V SPRING (2)	RHR 899-1.4	207.7	4,B,N
RHR-434	BOX	RHR 899-1.4	207.7	4,B,N
RHR-435	STRUT	RHR 899-1.4	207.7	4,B,N
RHR-436	BOX	RHR 899-1.4	207.7	4,B,N
RHR-437	PSA-3 SN(2)	RHR 899-1.4	207.7	4,B,N
RHR-438	STRUT	RHR 899-1.4	207.7	4,B,N
RHR-459	PSA-10 SN	RHR 978-1.4	207	N6
RHR-46	BOX	RHR 882-1.4	211	1
RHR-461	SPRING	RHR 900-1.5	207.1	4,B,N
RHR-462	SPRING	RHR 899-1.4	207.7	4,B,N
RHR-463	PSA-3 SN	RHR 899-5.7	207.7	4,B,N
RHR-464	BOX	RHR 899-5.7	207.7	4,B,N
RHR-465	PSA-3 SN(2)	RHR 899-5.7	207.7	4,B,N
RHR-466	PSA-3 SN	RHR 899-5.7	207.7	4,B,N
RHR-467	STRUT	RHR 899-5.7	207.7	4,B,N
RHR-468	C SPRING	RHR 899-5.7	207.7	4,B,N
RHR-469	SPRING	RHR 899-5.7	207.7	4,B,N
RHR-47	STRUT	RHR 882-1.4	211	1
RHR-470	STRUT	RHR 899-36.37	207	N6
RHR-471	V SPRING	RHR 875-6.8	205	4,B,N
RHR-472	PSA-1 SN	RHR 899-36.37	207	N6
RHR-473	SPRING	RHR 899-36.37	207	N6
RHR-475	ANCHOR	RHR 899-8.11	207.7	4,B,N
RHR-476	BOX	RHR 745-1.2	207.11	N6
RHR-478	SPRING	RHR 899-8.11	207.7	4,B,N
RHR-479	PSA-3 SN(2)	RHR 899-8.11	207.7	4,B,N
RHR-480	STRUT	RHR 899-8.11	207.7	4,B,N
RHR-481	PSA-35 SN	RHR 899-8.11	207.7	4,B,N
RHR-482	STRUT	RHR 899-38	102	N6
RHR-483	SPRING	RHR 899-38	102	N6
RHR-485	PSA-10 SN	RHR 899-12.17	207.7	4,B,N
RHR-486	C SPRING	RHR 899-8.11	207.7	4,B,N
RHR-488	ANCHOR	RHR 899-12.17	207.7	4,B,N
RHR-49	STRUT	RHR 880-1.6	211	1
RHR-491	SPRING	RHR 899-12.17	207.7	4,B,N
RHR-492	PSA-3 SN(2)	RHR 899-12.17	207.7	4,B,N
RHR-493	C SPRING	RHR 899-18.19	207.7	4,B,N
RHR-494	PSA-3 SN	RHR 899-18.19	207.7	4,B,N

TABLE 1 -- COMPONENT SUPPORTS WITHIN PSI BOUNDARIES -- 21 JAN 1985

EQUIP PIECE NO	DESCRIPTION	ISOMETRIC DWG NO	ISO DWG NO	EXAMS
RHR-495	PSA-3 SN(2)	RHR 899-18.19	207.7	4,B,N
RHR-496	PSA-3 SN	RHR 899-18.19	207.7	4,B,N
RHR-497	C SPRING	RHR 899-18.19	207.7	4,B,N
RHR-498	SPRING	RHR 899-20.22	207	N6
RHR-50	STRUT	RHR 880-1.6	211	1
RHR-500	PSA-3 SN	RHR 899-18.19	207	1,4,M
RHR-501	SPRING	RHR 899-20.22	207	1
RHR-502	PSA-3 SN	RHR 899-20.22	207	1
RHR-503	PSA-10 SN	RHR 899-20.22	207	1
RHR-504	SPRING	RHR 851-15.16	105	4,A,B
RHR-506	SPRING	RHR 851-15.16	105	4,A,B
RHR-51	STRUT	RHR 880-1.6	211	1
RHR-510	SPRING	RHR 851-17	105	4,A,B
RHR-512	SPRING	RHR 899-46.47	106	4,A,B
RHR-514	SPRING	RHR 899-46.47	106	4,A,B
RHR-518	SPRING	RHR 899-48	106	4,A,B
RHR-52	PSA-3 SN	RHR 978-1.4	207	N6
RHR-520	V SPRING	RHR 748-1	102(RCIC)	N6
RHR-521	C SPRING	RHR 899-39.44	102	4,A
RHR-522	C SPRING	RHR 899-39.44	102	4,A
RHR-523	SPRING	RHR 899-39.44	102	4,A
RHR-524	C SPRING	RHR 897-20.24	103	4,A
RHR-525	C SPRING	RHR 897-20.24	103	4,A
RHR-526	SPRING	RHR 897-20.24	103	4,A
RHR-527	SPRING	RHR 851-21.24	101	4,A
RHR-528	C SPRING	RHR 851-21.24	101	4,A
RHR-529	C SPRING	RHR 851-21.24	101	4,A
RHR-53	SPRING	RHR 978-1.4	207	N6
RHR-539	STRUT	RHR 898-9.14	207.1	4,B,N
RHR-54	SPRING	RHR 978-1.4	207	N6
RHR-540	STRUT	RHR 898-9.14	207.1	4,B,N
RHR-548	PSA-1 SN(2)	RHR 898-9.14	207.1	4,B,N
RHR-55	BOX	RHR 881-8.13	206	1
RHR-551	PSA-3 SN(2)	RHR 898-9.14	207.1	4,B,N
RHR-552	STRUT	RHR 898-9.14	207.1	4,B,N
RHR-553	STRUT	RHR 898-9.14	207.1	4,B,N
RHR-554	STRUT	RHR 898-9.14	207.1	4,B,N
RHR-555	SPRING (2)	RHR 898-9.14	207.1	4,B,N
RHR-556	PSA-3 SN	RHR 898-9.14	207.1	4,B,N
RHR-557	PSA-3 SN(2)	RHR 900-1.5	207.1	4,B,N
RHR-558	PSA-3 SN	RHR 900-1.5	207.1	4,B,N
RHR-559	C SPRING	RHR 900-1.5	207.1	4,B,N
RHR-56	SPRING	RHR 875-6.8	205	1
RHR-560	SPRING (2)	RHR 900-1.5	207.1	4,B,N
RHR-561	STRUT	RHR 900-1.5	207.1	4,B,N
RHR-562	PSA-3 SN	RHR 900-1.5	207.1	4,B,N
RHR-563	PSA-1 SN(2)	RHR 900-1.5	207.1	4,B,N
RHR-564	PSA-3 SN	RHR 900-1.5	207.1	4,B,N
RHR-565	PSA-3 SN	RHR 900-1.5	207.1	4,B,N

TABLE 1 -- COMPONENT SUPPORTS WITHIN PSI BOUNDARIES -- 21 JAN 1985

EQUIP PIECE NO	DESCRIPTION	ISOMETRIC DWG NO	ISO DWG NO	EXAMS
RHR-566	STRUT	RHR 898-21.29	208	N1
RHR-567	STRUT	RHR 898-21.29	208	N1
RHR-568	SPRING	RHR 898-21.29	208	N1
RHR-569	PSA-3 SN	RHR 898-21.29	208	N1
RHR-570	PSA-3 SN	RHR 898-21.29	208	N1
RHR-571	SPRING	RHR 898-16.17	208	N1
RHR-572	SPRING	RHR 898-15	208	N1
RHR-573	PSA-3 SN	RHR 898-15	208	N1
RHR-574	PSA-3 SN	RHR 898-15	208	N1
RHR-575	PSA-3 SN	RHR 898-16.17	208	N1
RHR-576	STRUT	RHR 898-16.17	208	N1
RHR-577	SPRING	RHR 898-18.20	208	N1
RHR-578	PSA-3 SN	RHR 898-18.20	208	N1
RHR-58	ANCHOR	RHR 875-6.8	205	4,B,N
RHR-580	SPRING	RHR 898-15	208	N1
RHR-581	STRUT	RHR 898-18.20	208	N1
RHR-582	STRUT	RHR 867-31.37	204	N1
RHR-583	STRUT	RHR 867-31.37	204	N1
RHR-584	SPRING	RHR 867-31.37	204	N1
RHR-585	PSA-3 SN	RHR 867-31.37	204	N1
RHR-586	PSA-3 SN	RHR 867-31.37	204	N1
RHR-587	SPRING	RHR 867-24.25	204	N1
RHR-588	PSA-3 SN(2)	RHR 867-24.25	204	N1
RHR-589	PSA-3 SN	RHR 867-24.25	204	N1
RHR-59	PSA-10 SN	RHR 875-6.8	205	4,B,N
RHR-590	SPRING	RHR 867-24.25	204	N1
RHR-591	SPRING	RHR 867-28.30	204	N1
RHR-592	PSA-1/2 SN	RHR 867-28.30	204	N1
RHR-593	STRUT	RHR 867-28.30	204	N1
RHR-594	STRUT	RHR 867-28.30	204	N1
RHR-595	PSA-1 SN	RHR 867-28.30	204	N1
RHR-596	SPRING	RHR 867-28.30	204	N1
RHR-597	STRUT	RHR 867-28.30	204	N6
RHR-598	SPRING	RHR 867-13.15	201.1	4,B,N
RHR-599	PSA-3 SN	RHR 867-13.15	201.1	4,B,N
RHR-60	PSA-3 SN	RHR 875-6.8	205	4,B,N
RHR-600	STRUT	RHR 867-13.15	201.1	4,B,N
RHR-601	STRUT	RHR 867-13.15	201.1	4,B,N
RHR-603	PSA-3 SN(2)	RHR 867-8.12	201.1	4,B,N
RHR-604	C SPRING (2)	RHR 867-8.12	201.1	4,B,N
RHR-605	STRUT	RHR 867-8.12	201.1	4,B,N
RHR-606	STRUT	RHR 867-8.12	201.1	4,B,N
RHR-607	SPRING	RHR 898-16.17	208	N1
RHR-608	SPRING	RHR 898-18.20	208	N1
RHR-609	SPRING	RHR 900-1.5	207.1	4,B
RHR-61	PSA-10 SN	RHR 875-6.8	205	4,B
RHR-611	SPRING	RHR 867-24.25	204	N1
RHR-612	SPRING	RHR 867-24.25	204	N1
RHR-62	SPRING	RHR 875-6.8	205	4,B,N

TABLE 1 -- COMPONENT SUPPORTS WITHIN PSI BOUNDARIES -- 21 JAN 1985

EQUIP PIECE NO	DESCRIPTION	ISOMETRIC DWG NO	ISO DWG NO	EXAMS
RHR-66	V SPRING	RHR 875-1.5	205	4,B,N
RHR-67	PSA-3 SN	RHR 875-1.5	205	4,B,N
RHR-68	STRUT	RHR 875-1.5	205	4,B,N
RHR-69	STRUT	RHR 875-1.5	205	4,B,N
RHR-70	STRUT	RHR 875-1.5	205	4,B,N
RHR-71	ANCHOR	RHR 875-1.5	205	4,B,N
RHR-76	SPRING	RHR 875-1.5	205	4,B,N
RHR-77	SPRING (2)	RHR 875-1.5	205	4,B,N
RHR-78	SPRING	RHR 874-6	205	4,B,N
RHR-79	SPRING	RHR 875-9.12	209	4,B,N
RHR-80	STRUT	RHR 875-9.12	209	4,B,N
RHR-81	RIGID	RHR 875-9.12	209	4,B,N
RHR-84	ANCHOR	RHR 879-1.3	209	1
RHR-87	PSA-10 SN	RHR 897-19	210	N6
RHR-90	BOX	RHR 897-15.18	210	1
RHR-900N	STRUT	RHR 882-1.4	211	1
RHR-901N	PSA-3 SN (2)	RHR 976-1.4	207	N6
RHR-902N	PSA-3 SN	RHR 976-1.4	207	N6
RHR-903N	PSA-3 SN	RHR 976-7.8	207	1
RHR-904N	STRUT	RHR 879-1.3	209	1
RHR-905N	STRUT	RHR 882-1.4	211	1
RHR-907N	PSA-35 SN	RHR 899-38	102	N6
RHR-908N	PSA-3 SN (2)	RHR 899-12.17	207.7	4,B,N
RHR-909N	STRUT	RHR 881-1.3	205	1
RHR-91	STRUT	RHR 897-15.18	210	1
RHR-910N	STRUT	RHR 899-45	207.7	4,B,N
RHR-911N	PSA-10 SN	RHR 899-45	207.7	4,B,N
RHR-912N	PSA-3 SN	RHR 976-1.4	207	N6
RHR-913N	PSA-3 SN	RHR 976-1.4	207	1
RHR-915N	PSA-3 SN	RHR 976-1.4	207	N6
RHR-916N	OTHER	RHR 881-8.13	206	1
RHR-917N	SPRING (2)	RHR 875-13.16	205	4,B,N
RHR-918N	BOX	RHR 898-1.4	207.1	4,B,N
RHR-919N	BOX	RHR 898-1.4	207.1	4,B,N
RHR-920N	BOX	RHR 898-5.8	207.1	4,B,N
RHR-921N	BOX	RHR 898-5.8	207.1	4,B,N
RHR-922N	PSA-1 SN	RHR 898-36.38	207	1
RHR-923N	SPRING (2)	RHR 898-1.4	207.1	4,B,N
RHR-924N	SPRING (2)	RHR 898-5.8	207.1	4,B,N
RHR-925N	SPRING	RHR 898-36.38	207	1
RHR-926N	SPRING	RHR 898-1.4	207.1	4,B,N
RHR-927N	SPRING	RHR 898-36.38	207	1
RHR-928N	SPRING	RHR 898-36.38	207	N6
RHR-929N	SPRING	RHR 898-1.4	207.1	4,B,N
RHR-930N	STRUT	RHR 898-21.29	208	N1
RHR-933N	SPRING	RHR 898-30.32	208	N1
RHR-935N	SPRING	RHR 898-21.29	208	N1
RHR-936N	SPRING	RHR 898-21.29	208	N1
RHR-938N	PSA-1 SN (2)	RHR 898-21.29	208	N1

TABLE 1 -- COMPONENT SUPPORTS WITHIN PSI BOUNDARIES -- 21 JAN 1985

EQUIP PIECE NO	DESCRIPTION	ISOMETRIC DWG NO	ISO DWG NO	EXAMS
RHR-939N	PSA-3 SN	RHR 898-21.29	208	N1
RHR-94	STRUT	RHR 897-10.14	210	1
RHR-941N	PSA-3 SN	RHR 851-20	101	N6
RHR-942N	PSA-1 SN(2)	RHR 898-36.38	207	1
RHR-943N	PSA-3 SN	RHR 898-1.4	207.1	4,B
RHR-944N	PSA-3 SN	RHR 898-1.4	207.1	4,B
RHR-945N	PSA-1 SN(2)	RHR 898-36.38	207	1
RHR-946N	PSA-3 SNQ1	RHR 867-20.22	201	N6
RHR-947N	PSA-3 SN(2)	RHR 854-12.16	203	1
RHR-948N	PSA-3 SN(2)	RHR 854-12.16	203	1
RHR-949N	BOX	RHR 867-31.37	204	N1
RHR-95	SPRING	RHR 897-10.14	210	1
RHR-950N	BOX	RHR 867-31.37	204	N1
RHR-951N	BOX	RHR 867-38.39	204	N1
RHR-952N	PSA-3 SN	RHR 867-40.44	204	N1
RHR-953N	PSA-3 SN	RHR 867-38.39	204	N1
RHR-954N	PSA-1 SN(2)	RHR 867-40.44	204	N1
RHR-955N	BOX	RHR 867-40.44	204	N1
RHR-956N	BOX	RHR 899-5.7	207.7	4,B,N
RHR-957N	PSA-3 SN	RHR 898-21.29	208	N1
RHR-958N	ANCHOR	RHR 853-1.4	202	N6
RHR-96	BOX	RHR 897-10.14	210	1
RHR-960N	PSA-1 SN	RHR 898-21.29	208	N1
RHR-961N	PSA-3 SN	RHR 898-21.29	208	N1
RHR-963N	BOX	RHR 855-1.3	201	N6
RHR-964N	ANCHOR	RHR 851-10.12	201.6	4,B,N
RHR-965N	ANCHOR	RHR 851-18.19	201	N6
RHR-966N	ANCHOR	RHR 882-1.4	211	1
RHR-967N	ANCHOR	RHR 898-36.38	207	1
RHR-968N	ANCHOR	RHR 898-5.8	207.1	4,B,N
RHR-969N	ANCHOR	RHR 898-21.29	208	N1
RHR-97	BOX	RHR 897-10.14	210	1
RHR-970N	ANCHOR	RHR 867-8.12	201.1	4,B,N
RHR-971N	ANCHOR	RHR 867-16.19	201	1
RHR-972N	BOX	RHR 897-25.30	210	1
RHR-973N	ANCHOR	RHR 897-25.30	210	1
RHR-974N	PSA-3 SN	RHR 867-20.22	201	N6
RHR-975N	ANCHOR	RHR 867-31.37	204	N1
RHR-976N	STRUT	RHR 899-12.17	207.7	4,B,N
RHR-977N	PSA-1 SN(2)	RHR 867-40.44	204	N1
RHR-979N	STRUT	RHR 748-1	102(RCIC)	N6
RHR-98	STRUT	RHR 897-10.14	210	1
RHR-980N	PSA-3 SN	RHR 898-9.14	207.1	4,B,N
RHR-984N	SPRING	RHR 867-28.30	204	N1
RHR-985N	STRUT	RHR 898-18.20	208	N1
RHR-986N	PSA-1 SN	RHR 667-16.19	212	N1
RHR-987N	STRUT	RHR 667-16.19	212	N1
RHR-99	ANCHOR	RHR 897-10.14	210	1
RHR-990N	BOX	RHR 667-16.19	212	N1

TABLE 1 -- COMPONENT SUPPORTS WITHIN PSI BOUNDARIES - 21 JAN 1985

EQUIP PIECE NO	DESCRIPTION	ISOMETRIC DWG NO	ISO DWG NO	EXAMS
RHR-996N	ANCHOR	RHR 897-15.18	210	1
RHR-997N	ANCHOR	RHR 897-6.9	210	1
RHR-998N	PSA-3 SN	RHR 978-1.4	207	N6
RHR-999N	STRUT	RHR 897-6.9	210	1
RHR-SA-32	PSA-10 SN(2)	RHR 851-17	105	4,A,B
RHR-SA-33	PSA-10 SN	RHR 851-17	105	4,A,B
RHR-SA-34	PSA-35 SN	RHR 851-17	105	4,A,B
RHR-SA-35	PSA-10	RHR 851-15.16	105	4,A,B
RHR-SA-36	PSA-10	RHR 851-15.16	105	4,A,B
RHR-SA-37	PSA-10	RHR 851-15.16	105	4,A,B
RHR-SA-38	PSA-10	RHR 851-15.16	105	4,A,B
RHR-SA-39	PSA-10 SN(2)	RHR 851-15.16	105	4,A,B
RHR-SA-40	PSA-10	RHR 851-15.16	105	4,A,B
RHR-SA-53	PSA-10 SN	RHR 874-1.3	104	4,A,B
RHR-SA-54	PSA-35 SN	RHR 874-1.3	104	4,A,B
RHR-SA-55	PSA-100 SN	RHR 874-1.3	104	4,A,B
RHR-SA-56	PSA-10 SN	RHR 874-1.3	104	4,A,B
RHR-SA-57	PSA-35 SN	RHR 874-1.3	104	4,A,B
RHR-SA-58	PSA-35 SN(2)	RHR 874-1.3	104	4,A,B
RHR-SA-59	PSA-35 SN	RHR 874-1.3	104	4,A,B
RHR-SB-32	PSA-10 SN	RHR 899-46.47	106	4,A,B
RHR-SB-33	PSA-10 SN	RHR 899-46.47	106	4,A,B
RHR-SB-34	PSA-10 SN(2)	RHR 899-46.47	106	4,A,B
RHR-SB-35	PSA-10 SN	RHR 899-46.47	106	4,A,B
RHR-SB-36	PSA-10 SN	RHR 899-46.47	106	4,A,B
RHR-SB-37	PSA-10 SN	RHR 899-46.47	106	4,A,B
RHR-SB-38	PSA-10 SN	RHR 899-46.47	106	4,A,B
RHR-SB-39	PSA-10 SN(2)	RHR 899-46.47	106	4,A,B
RHR-SB-40	PSA-10 SN	RHR 899-46.47	106	4,A,B
RRC-1	SPRING	RRC 565-1	105	4,A
RRC-10	SPRING (RRC)	RRC 568-1	106	4,A
RRC-11	SPRING	RHR 874-1.3	104(RHR)	4,A,B
RRC-1C-1	PSA-1 SN(2)	RRC 564-1.3	104	4,A
RRC-1C-10	PSA-1 SN	RRC 569-1.2	109	4,A
RRC-1C-12	SPRING	RRC 564-1.3	104	4,A
RRC-1C-13	PSA-1 SN	RRC 566-1	108	4,A
RRC-1C-14	PSA-1 SN(2)	RRC 566-1	108	4,A
RRC-1C-15	PSA-1 SN	RRC 566-1	108	4,A
RRC-1C-2	PSA-1 SN	RRC 564-1.3	104	4,A
RRC-1C-3	PSA-1 SN	RRC 564-1.3	104	4,A
RRC-1C-4	PSA-1/2 SN(2)	RRC 564-1.3	104	4,A
RRC-1C-6PS	STRUT	RRC 569-1.2	109	4,A
RRC-1C-8PS	STRUT	RRC 566-1	108	4,A
RRC-1C-9	PSA-1 SN	RRC 569-1.2	109	4,A
RRC-1C-900N	PSA-1 SN(2)	RRC 564-1.3	104	4,A
RRC-2	C SPRING	RRC 566-1	108	4,A
RRC-3	SPRING	RRC 566-1	108	4,A
RRC-4	SPRING	RRC 566-1	108	4,A
RRC-6	C SPRING	RRC 569-1.2	109	4,A

TABLE 1 -- COMPONENT SUPPORTS WITHIN PSI BOUNDARIES -- 21 JAN 1985

EQUIP PIECE NO	DESCRIPTION	ISOMETRIC DWG NO	ISO DWG NO	EXAMS
RRC-9	SPRING (RRC)	RRC 567-1	105	1,4,A
RRC-900N	STRUT	BC/G 216-	101.1	4,A
RRC-901N	STRUT	BC/G 218-	102.1	4,A
RRC-HA-1	V SPRING (2)	BC/G 215-	101.1	4,A
RRC-HA-2	C SPRING	BC/G 216-	101.1	4,A
RRC-HA-3	C SPRING	BC/G 216-	101.1	4,A
RRC-HA-4	C SPRING	BC/G 216-	101.1	4,A
RRC-HA-5	C SPRING	BC/G 216-	101.1	4,A
RRC-HA-7	C SPRING	BC/G 216-	101.1	4,A
RRC-HA-8	SPRING	BC/G 216-	101.1	4,A
RRC-HA-9	SPRING	BC/G 216-	101.1	4,A
RRC-HB-1	V SPRING (2)	BC/G 217	102.1	4,A
RRC-HB-2	C SPRING	BC/G 218	102.1	4,A
RRC-HB-3	C SPRING	BC/G 218-	102.1	4,A
RRC-HB-4	C SPRING	BC/G 218-	102.1	4,A
RRC-HB-5	C SPRING	BC/G 218-	102.3	4,A
RRC-HB-7	C SPRING	BC/G 218-	102.2	4,A
RRC-HB-8	V SPRING	BC/G 218-	102.3	4,A
RRC-HB-9	V SPRING	BC/G 218-	102.1	4,A
RRC-RA-1	STRUT	BC/G 216-	101.1	4,A
RRC-RB-1	STRUT	BC/G 218-	102.1	4,A
RRC-SA-1	PSA-35 SN	BC/G 215	101.1	4,A
RRC-SA-11	PSA-35 SN	BC/G 216	101.1	4,A
RRC-SA-12	PSA-35 SN	BC/G 216	101.1	4,A
RRC-SA-13	PSA-35 SN	BC/G 216	101.1	4,A
RRC-SA-14	PSA-35 SN	BC/G 216	101.1	4,A
RRC-SA-15	PSA-35 SN	BC/G 216	101.1	4,A
RRC-SA-16	PSA-35 SN	BC/G 215	101.1	4,A
RRC-SA-17	PSA-35 SN	BC/G 216	101.1	4,A
RRC-SA-18	PSA-35 SN	BC/G 216	101.1	4,A
RRC-SA-19	PSA-35 SN	BC/G 215	101.1	4,A
RRC-SA-2	PSA-35 SN	BC/G 215	101.1	4,A
RRC-SA-20	PSA-35 SN	BC/G 215	101.1	4,A
RRC-SA-25	PSA-35 SN	BC/G 215	101.1	4,A
RRC-SA-3	PSA-100 SN	BC/G 216	101.1	4,A
RRC-SA-30	SN	RRC 567	106	4,A
RRC-SA-31	SN	RRC 567	106	4,A
RRC-SA-4	PSA-100 SN	BC/G 216	101.1	4,A
RRC-SA-5	PSA-100 SN	BC/G 216	101.1	4,A
RRC-SA-50	PSA-35 SN	RRC 565-1	304	4,A
RRC-SA-51	PSA-35 SN	RRC 565-1	304	4,A
RRC-SA-52	PSA-10 SN	RRC 565-1	304	4,A
RRC-SA-6	PSA-100 SN	BC/G 216	101.1	4,A
RRC-SA-65	PSA-35 SN	BC/G 216	101.1	4,A
RRC-SA-66	PSA-35 SN	BC/G 216	101.1	4,A
RRC-SA-7	PSA-35 SN	BC/G 216	101.1	4,A
RRC-SA-8	PSA-35 SN	BC/G 216	101.1	4,A
RRC-SA-9	PSA-35 SN	BC/G 216	101.1	4,A
RRC-SB-1	PSA-35 SN	BC/G 217	102.1	4,A

TABLE 1 -- COMPONENT SUPPORTS WITHIN PSI BOUNDARIES -- 21. JAN 1985

EQUIP PIECE NO	DESCRIPTION	ISOMETRIC DWG NO	ISO DWG NO	EXAMS
RRC-SB-11	PSA-35 SN	BC/G 218	102.3	4,A
RRC-SB-12	PSA-35 SN	BC/G 218	102.3	4,A
RRC-SB-13	PSA-35 SN	BC/G 218	102.3	4,A
RRC-SB-14	PSA-35 SN	BC/G 218	102.3	4,A
RRC-SB-15	PSA-35 SN	BC/G 218	102.2	4,A
RRC-SB-16	PSA-35 SN(2)	BC/G 217	102.1	4,A
RRC-SB-17	PSA-35 SN	BC/G 218	102.2	4,A
RRC-SB-18	PSA-35 SN	BC/G 218	102.2	4,A
RRC-SB-2	PSA-35 SN	BC/G 217	102.1	4,A
RRC-SB-25	PSA-35 SN	BC/G 217	102.1	4,A
RRC-SB-3	PSA-100 SN	BC/G 218	102.1	4,A
RRC-SB-30	SN	RRC 568-1	107	4,A
RRC-SB-31	SN	RRC 568-1	107	4,A
RRC-SB-4	PSA-100 SN	BC/G 218	102.1	4,A
RRC-SB-5	PSA-100 SN	BC/G 218	102.1	4,A
RRC-SB-6	PSA-100 SN	BC/G 217	102.1	4,A
RRC-SB-65	PSA-35 SN	BC/G 218	102.2	4,A
RRC-SB-66	PSA-35 SN	BC/G 218	102.1	4,A
RRC-SB-7	PSA-35 SN	BC/G 218	102.2	4,A
RRC-SB-8	PSA-35 SN	BC/G 218	102.2	4,A
RRC-SB-9	PSA-35 SN	BC/G 218	102.2	4,A
RWCU-139	SPRING	RWCU 812-3.7	101.4	4,B
RWCU-140	SPRING	RWCU 812-3.7	101.4	4,B
RWCU-141	SPRING	RWCU 812-3.7	101.4	4,B
RWCU-142	SPRING (2)	RWCU 812-2	101.3	4,B
RWCU-143	SPRING	RWCU 811-1.2	101.1	4,B
RWCU-144	SPRING	RWCU 811-1.2	101.1	4,B
RWCU-145	SPRING	RWCU 812-1	101.2	4,B
RWCU-146	C SPRING	RWCU 812-1	101.2	4,B
RWCU-168	PSA-1/4 SN(2)	RWCU 277-1.3	304	1
RWCU-169	PSA-1/2 SN	RWCU 277-1.3	304	1
RWCU-170	SPRING	RWCU 277-1.3	304	1
RWCU-172	SPRING	RWCU 894-14.21	302.2	4,B,N
RWCU-173	PSA-1 SN	RWCU 894-14.21	302.2	4,B,N
RWCU-174	SPRING	RWCU 894-14.21	302.2	4,B,N
RWCU-175	SPRING	RWCU 894-14.21	302.2	4,B,N
RWCU-176	BOX	RWCU 894-14.21	302.2	4,B,N
RWCU-177	C SPRING	RWCU 894-14.21	302.2	4,B,N
RWCU-178	C SPRING	RWCU 894-14.21	302.2	4,B,N
RWCU-179	STRUT	RWCU 894-14.21	302.2	4,B,N
RWCU-180	SPRING	RWCU 894-14.21	302.2	4,B,N
RWCU-181	ANCHOR	RWCU 894-14.21	302.2	4,B,N
RWCU-182	SPRING	RWCU 894-14.21	302.2	4,B,N
RWCU-183	BOX	RWCU 894-14.21	302.2	4,B,N
RWCU-184	STRUT	RWCU 894-14.21	302.2	4,B,N
RWCU-1C-1	PSA-35 SN	RWCU 812-3.7	101.4	4,B
RWCU-1C-11	PSA-35 SN	RWCU 812-1	101.2	4,B
RWCU-1C-12	PSA-35 SN	RWCU 812-1	101.2	4,B
RWCU-1C-16	PSA-1 SN	RWCU 811-1.2	101.1	4,B

TABLE 1 -- COMPONENT SUPPORTS WITHIN PSI BOUNDARIES -- 21 JAN 1985

EQUIP PIECE NO	DESCRIPTION	ISOMETRIC DWG NO	ISO DWG NO	EXAMS
RWCU-1C-17	PSA-1 SN(2)	RWCU 811-1.2	101.1	4,B
RWCU-1C-1PS	ANCHOR7 PIPE WH	RWCU 812-3.7	101.4	4,B
RWCU-1C-2	PSA-1 SN	RWCU 812-3.7	101.4	4,B
RWCU-1C-2PS	STRUT	RWCU 812-3.7	101.4	4,B
RWCU-1C-3	PSA-3 SN(2)	RWCU 812-3.7	101.4	4,B
RWCU-1C-3PS	STRUT	RWCU 812-2	101.3	4,B
RWCU-1C-4	PSA-3 SN	RWCU 812-3.7	101.4	4,B
RWCU-1C-4PS	STRUT	RWCU 812-2	101.3	4,B.
RWCU-1C-5	PSA-3 SN01	RWCU 812-2	101.3	4,B
RWCU-1C-5PS	STRUT	RWCU 812-2	101.3	4,B
RWCU-1C-6	PSA-3 SN01	RWCU 812-2	101.3	4,B
RWCU-1C-7	PSA-3 SN	RWCU 812-1	101.2	4,B
RWCU-1C-7PS	STRUT	RWCU 812-1	101.2	4,B
RWCU-1C-8	PSA-3 SN	RWCU 812-1	101.3	4,B
RWCU-1C-9PS	STRUT	RWCU 811-1.2	101.1	4,B
RWCU-210	SPRING	RWCU 895-1.7	303	4,B,N
RWCU-211	PSA-1/2 SN	RWCU 895-1.7	303	4,B,N
RWCU-212	V-SPRING	RWCU 895-1.7	303	4,B,N
RWCU-213	STRUT	RWCU 895-1.7	303	4,B,N
RWCU-214	V-SPRING	RWCU 895-1.7	303	4,B,N
RWCU-215	BOX	RWCU 895-1.7	303	4,B,N
RWCU-216	V-SPRING	RWCU 895-1.7	303	4,B,N
RWCU-217	BOX	RWCU 895-1.7	303	4,B,N
RWCU-218	V-SPRING	RWCU 895-1.7	303	4,B,N
RWCU-219	BOX	RWCU 895-1.7	303	4,B,N
RWCU-220	SPRING	RWCU 895-1.7	303	4,B,N
RWCU-221	BOX	RWCU 895-8.12	303	4,B,N
RWCU-222	PSA-1/4 SN(2)	RWCU 895-8.12	303	4,B,N
RWCU-223	BOX	RWCU 895-8.12	303	4,B,N
RWCU-225	STRUT	RWCU 895-8.12	303	4,B,N
RWCU-227	BOX	RWCU 895-8.12	303	4,B,N
RWCU-228	SPRING	RWCU 895-8.12	303	4,B,N
RWCU-229	PSA-3 SN	RWCU 895-8.12	303	4,B,N
RWCU-230	V-SPRING	RWCU 895-1.7	303	4,B,N
RWCU-239	OTHER	RWCU 278-30.35	304	1
RWCU-240	STRUT	RWCU 278-30.35	304	1
RWCU-241	STRUT	RWCU 278-30.35	304	1
RWCU-242	BOX	RWCU 278-30.35	304	1
RWCU-243	STRUT	RWCU 278-30.35	304	1
RWCU-247		RWCU	304	1
RWCU-248		RWCU	304	1
RWCU-249		RWCU	304	1
RWCU-250		RWCU	304	1
RWCU-251	BOX	RWCU 278-25.29	304	1
RWCU-252	BOX	RWCU 278-25.29	304	1
RWCU-253	BOX	RWCU 278-25.29	304	1
RWCU-254	BOX	RWCU 278-25.29	304	1
RWCU-255	BOX	RWCU 278-25.29	304	1
RWCU-256	ANCHOR	RWCU 278-25.29	304	1

TABLE 1 -- COMPONENT SUPPORTS WITHIN PSI BOUNDARIES -- 21 JAN 1985

EQUIP PIECE NO.	DESCRIPTION	ISOMETRIC DWG NO	ISO DWG NO	EXAMS
RWCU-257	OTHER	RWCU 278-30.35	304	1
RWCU-258	U-BOLT	RWCU 278-30.35	304	1
RWCU-259	PSA-1/2 SN	RWCU 278-30.35	304	1
RWCU-260	BOX	RWCU 278-30.35	304	1
RWCU-261	SPRING	RWCU 278-30.35	304	1
RWCU-262	SPRING	RWCU 278-30.35	304	1
RWCU-263	SPRING	RWCU 278-25.29	304	1
RWCU-264		RWCU	304	1
RWCU-266	SPRING	RWCU 278-25.29	304	1
RWCU-268	SPRING	RWCU 278-30.35	304	1
RWCU-269	SPRING	RWCU 699-1.4	304	1
RWCU-270	BOX	RWCU 699-1.4	304	1
RWCU-272	SPRING	RWCU 699-5.7	305	1
RWCU-900N	PSA-3 SN(2)Q1	RWCU 812-8.13	301	4,B,N
RWCU-901N	ANCHOR	RWCU 895-8.12	303	4,B,N
RWCU-904N	PSA-1/2 SN(2)	RWCU 895-1.7	303	4,B,N
RWCU-905N	STRUT	RWCU 894-14.21	302.2	4,B,N
RWCU-906N	PSA-1/4 SN	RWCU 894-14.21	302.2	4,B,N
RWCU-907N	PSA-1/4 SN(2)	RWCU 894-14.21	302.2	4,B,N
RWCU-908N	PSA-1/4 SN(2)	RWCU 894-14.21	302.2	4,B,N
RWCU-912N	PSA-1/4 SN(3)	RWCU 895-1.7	303	4,B,N
RWCU-913N	PSA-1 SN	RWCU 895-1.7	303	4,B,N
RWCU-914N	PSA-1 SN	RWCU 895-1.7	303	4,B,N
RWCU-915N	PSA-1/2 SN	RWCU 895-1.7	303	4,B,N
RWCU-916N	PSA-1/2 SN(2)	RWCU 895-1.7	303	4,B,N
RWCU-917N	PSA-3 SN	RWCU 894-14.21	302.2	4,B,N
RWCU-925N	PSA-1/4 SN	RWCU 812-8.13	301	4,B,N
RWCU-926N	PSA-35 SN	RWCU 812-8.13	301	4,B,N
RWCU-927N	PSA-35 SN	RWCU 812-8.13	301	4,B,N
RWCU-928N	PSA-10 SNQ1	RWCU 812-8.13	301	4,B,N
RWCU-949N	PSA-1 SN(2)	RWCU 278-22.24	304	1
RWCU-950N	PSA-1/2 SN	RWCU 278-22.24	304	1
RWCU-969N	V-SPRING	RWCU 895-1.7	303	4,B,N
SW-1	BOX	SW 291-1.6	301	1
SW-10	BOX	SW 292-1.5	----	1
SW-11	BOX	SW 292-1.5	----	1
SW-118	SPRING	SW 251-34.35	305	1
SW-119	SPRING	SW 251-30.33	----	1
SW-12	BOX	SW 292-1.5	----	1
SW-120	BOX	SW 250-41.50	301	1
SW-121	SPRING	SW 250-41.50	301	1
SW-122	SPRING	SW 250-52.54	301	1
SW-123	OTHER	SW 250-52.54	301	1
SW-124	PSA-35 SN(2)	SW 250-52.54	301	1
SW-126	STRUT	SW 250-31.40	301	1
SW-127	STRUT	SW 296-33.36	303	1
SW-128	BOX	SW 296-27.32	303	1
SW-129	BOX	SW 296-27.32	303	1
SW-13	BOX	SW 290-1.3	309	1

TABLE 1 -- COMPONENT SUPPORTS WITHIN PSI BOUNDARIES -- 21 JAN 1985

EQUIP PIECE NO	DESCRIPTION	ISOMETRIC DWG NO	ISO DWG NO	EXAMS
SW-130	OTHER	SW 296-27.32	303	1
SW-131	BOX	SW 296-27.32	303	1
SW-132	STRUT	SW 296-27.32	303	1
SW-133	STRUT	SW 296-17.26	303	1
SW-134	STRUT	SW 296-17.26	303	1
SW-135	STRUT	SW 296-17.26	303	1
SW-136	BOX	SW 296-17.26	303	1
SW-137	OTHER	SW 296-17.26	303	1
SW-138	BOX	SW 296-17.26	303	1
SW-139	STRUT	SW 296-17.26	303	1
SW-140	BOX	SW 296-17.26	303	1
SW-141	STRUT	SW 296-17.26	303	1
SW-142	OTHER	SW 296-17.26	303	1
SW-143	STRUT	SW 296-7.16	303	1
SW-144	BOX	SW 296-7.16	303	1
SW-145	BOX	SW 296-7.16	303	1
SW-146	STRUT	SW 296-7.16	303	1
SW-147	BOX	SW 296-7.16	303	1
SW-148	SPRING	SW 296-7.16	303	1
SW-149	BOX	SW 296-7.16	303	1
SW-150	SPRING	SW 296-7.16	303	1
SW-151	STRUT	SW 296-1.5	303	1
SW-152	OTHER	SW 296-1.5	303	1
SW-153	BOX	SW 296-1.5	303	1
SW-154	STRUT	SW 296-1.5	303	1
SW-155	BOX	SW 296-1.5	303	1
SW-156	STRUT	SW 296-1.5	303	1
SW-171	STRUT	SW 250-31.40	301	1
SW-172	STRUT	SW 250-25.30	301	1
SW-173	STRUT	SW 250-31.40	301	1
SW-174	BOX	SW 250-1.3	301	1
SW-179	STRUT	SW 251-30.33	----	1
SW-180	STRUT	SW 295-7.11	307	1
SW-19	BOX	SW 295-39.42	307	1
SW-194	STRUT	SW 251-30.33	----	1
SW-195	BOX	SW 295-7.11	307	1
SW-196	STRUT	SW 251-34.35	305	1
SW-197	BOX	SW 295-4.6	307	1
SW-198	BOX	SW 251-1.3	----	1
SW-2	BOX	SW 291-1.6	301	1
SW-20	BOX	SW 296-54.57	303	1
SW-200	STRUT	SW 251-41.50	----	1
SW-201	STRUT	SW 251-41.50	----	1
SW-202	STRUT	SW 251-41.50	----	1
SW-203	OTHER	SW 291-1.6	----	1
SW-205	STRUT	SW 291-1.6	----	1
SW-207	STRUT	SW 296-17.26	303	1
SW-208	STRUT	SW 296-7.16	303	1
SW-21	PSA-3 SN	SW 322-1.2	305	1

TABLE 1 -- COMPONENT SUPPORTS WITHIN PSI BOUNDARIES -- 21 JAN 1985

EQUIP PIECE NO	DESCRIPTION	ISOMETRIC DWG NO	ISO DWG NO	EXAMS
SW-212	BOX	SW 296-6	303	1
SW-22	SPRING	SW 322-1.2	305	1
SW-227	STRUT	SW 296-27.32	303	1
SW-228	STRUT	SW 296-7.16	303	1
SW-229	STRUT	SW 296-7.16	303	1
SW-23	SPRING	SW 251-36.37	305	1
SW-230	BOX	SW 296-27.32	303	1
SW-231	BOX	SW 300-4.9	302	1
SW-232	BOX	SW 300-4.9	302	1
SW-233	BOX	SW 300-4.9	302	1
SW-234	BOX	SW 300-4.9	302	1
SW-235	BOX	SW 300-4.9	302	1
SW-236	BOX	SW 300-4.9	302	1
SW-237	BOX	SW 300-1.3	302	1
SW-24	OTHER	SW 251-36.37	305	1
SW-243	OTHER	SW 300-1.3	302	1
SW-25	OTHER	SW 251-34.35	305	1
SW-251	BOX	SW 283-1.5	308	1
SW-252	BOX	SW 283-1.5	308	1
SW-253	BOX	SW 283-1.5	308	1
SW-254	BOX	SW 283-1.5	308	1
SW-255	BOX	SW 283-1.5	308	1
SW-256	BOX	SW 283-1.5	308	1
SW-257	BOX	SW 283-1.5	308	1
SW-258	BOX	SW 283-6	308	1
SW-259	BOX	SW 283-6	308	1
SW-26	BOX	SW 251-34.35	305	1
SW-266	BOX	SW 293-3.8	306	1
SW-267	BOX	SW 293-3.8	306	1
SW-268	BOX	SW 250-21.24	301	1
SW-269	BOX	SW 300-1.3	302	1
SW-27	STRUT	SW 251-30.33	305	1
SW-270	BOX	SW 300-4.9	302	1
SW-273	BOX	SW 290-21.23	310	1
SW-28	STRUT	SW 251-30.33	305	1
SW-280	STRUT	SW 290-24.29	310	1
SW-282	BOX	SW 112-7.9	311	1
SW-29	PSA-10 SN(4)	SW 251-30.33	305	1
SW-291	BOX	SW 112-7.9	311	1
SW-292	BOX	SW 293-3.8	306	1
SW-293	BOX	SW 293-3.8	306	1
SW-294	BOX	SW 293-3.8	306	1
SW-3	BOX	SW 291-1.6	301	1
SW-30	STRUT	SW 251-30.33	305	1
SW-301	BOX	SW 293-1.2	306	1
SW-302	BOX	SW 293-1.2	306	1
SW-303	BOX	SW 293-1.2	306	1
SW-304	BOX	SW 295-19.22	307	1
SW-306	BOX	SW 293-3.8	306	1

TABLE 14-- COMPONENT SUPPORTS WITHIN PSI BOUNDARIES -- 21 JAN 1985

EQUIP PIECE NO	DESCRIPTION	ISOMETRIC DWG NO	ISO DWG NO	EXAMS
SW-307	BOX	SW 293-3.8	306	1
SW-308	BOX	SW 293-3.8	306	1
SW-31	BOX	SW 251-30.33	305	1
SW-310	BOX	SW 290-24.29	310	1
SW-312	BOX	SW 293-1.2	306	1
SW-315	STRUT	SW 296-27.32	303	1
SW-317	RIGID	SW 250-31.40	301	1
SW-318	STRUT	SW 250-25.30	301	1
SW-319	STRUT	SW 250-25.30	301	1
SW-32	BOX	SW 251-23.29	305	1
SW-33	BOX	SW 251-23.29	305	1
SW-34	OTHER	SW 251-23.29	305	1
SW-348	BOX	SW 304-1.5	----	1
SW-349	BOX	SW 304-1.5	----	1
SW-35	STRUT	SW 251-23.29	305	1
SW-350	BOX	SW 304-1.5	----	1
SW-351	BOX	SW 304-1.5	----	1
SW-352	BOX	SW 304-1.5	----	1
SW-353	BOX	SW 304-1.5	----	1
SW-354	BOX	SW 304-6	----	1
SW-355	BOX	SW 304-6	----	1
SW-356	BOX	SW 304-1.5	----	1
SW-357	BOX	SW 304-1.5	----	1
SW-358	BOX	SW 304-1.5	----	1
SW-36	OTHER	SW 251-19.22	306	1
SW-386	STRUT	SW 295-4.6	307	1
SW-4	BOX	SW 291-1.6	301	1
SW-426	BOX	SW 304-6	----	1
SW-430	STRUT	SW 250-41.50	301	1
SW-431	OTHER	SW 296-7.16	303	1
SW-432	STRUT	SW 296-17.26	303	1
SW-433	BOX	SW 296-17.26	303	1
SW-434	BOX	SW 250-41.50	301	1
SW-435	BOX	SW 250-31.40	301	1
SW-436	STRUT	SW 250-25.30	301	1
SW-437	STRUT	SW 250-25.30	301	1
SW-438	OTHER	SW 296-17.26	303	1
SW-439	OTHER	SW 296-33.36	303	1
SW-449	OTHER	SW 290-24.29	310	1
SW-57	OTHER	SW 250-21.24	302	1
SW-58	BOX	SW 250-25.30	301	1
SW-59	BOX	SW 250-25.30	301	1
SW-6	BOX	SW 295-39.42	307	1
SW-60	OTHER	SW 250-25.30	301	1
SW-61	STRUT	SW 250-25.30	301	1
SW-62	STRUT	SW 250-25.30	301	1
SW-63	BOX	SW 250-31.40	301	1
SW-64	BOX	SW 250-31.40	301	1
SW-65	STRUT	SW 250-31.40	301	1

TABLE 1 -- COMPONENT SUPPORTS WITHIN PSI BOUNDARIES -- 21 JAN 1985

EQUIP PIECE NO	DESCRIPTION	ISOMETRIC DWG NO	ISO DWG NO	EXAMS
SW-66	BOX [illegible]	SW 250-31.40	301	1
SW-67	OTHER [illegible]	SW 250-31.40	301	1
SW-68	BOX [illegible]	SW 250-31.40	301	1
SW-69	OTHER [illegible]	SW 250-31.40	301	1
SW-7	BOX [illegible]	SW 295-39.42	307	1
SW-70	STRUT [illegible]	SW 250-31.40	301	1
SW-71	STRUT [illegible]	SW 250-31.40	301	1
SW-72	OTHER [illegible]	SW 250-31.40	301	1
SW-73	STRUT [illegible]	SW 250-41.50	301	1
SW-74	STRUT [illegible]	SW 250-41.50	301	1
SW-75	OTHER [illegible]	SW 250-41.50	301	1
SW-76	STRUT [illegible]	SW 250-41.50	301	1
SW-77	BOX [illegible]	SW 250-41.50	301	1
SW-78	SPRING [illegible]	SW 250-41.50	301	1
SW-79	STRUT [illegible]	SW 295-1.3[illegible]	307	1
SW-8	BOX [illegible]	SW 296-49.53	303	1
SW-80	BOX [illegible]	SW 295-1.3[illegible]	307	1
SW-81	BOX [illegible]	SW 295-1.3[illegible]	307	1
SW-83	U-BOLT [illegible]	SW 295-4.6[illegible]	307	1
SW-84	U-BOLT [illegible]	SW 295-7.11[illegible]	307	1
SW-86	STRUT [illegible]	SW 295-7.11[illegible]	307	1
SW-87	BOX [illegible]	SW 295-7.11[illegible]	307	1
SW-88	BOX [illegible]	SW 295-12.18	307	1
SW-89	BOX [illegible]	SW 295-12.18	307	1
SW-9	BOX [illegible]	SW 295-54.57	303	1
SW-90	OTHER [illegible]	SW 295-12.18	307	1
SW-91	STRUT [illegible]	SW 295-19.22	307	1
SW-913N	STRUT [illegible]	SW 250-25.30	301	1
SW-914N	PSA-10-SN(2)	SW 295-4.6[illegible]	307	1
SW-915N	BSA-10-SN(2)	SW 295-7.11[illegible]	307	1
SW-916N	OTHER [illegible]	SW 295-4.6[illegible]	307	1
SW-917N	SPRING [illegible]	SW 295-4.6[illegible]	307	1
SW-918N	STRUT [illegible]	SW 296-54.57	303	1
SW-919N	BOX [illegible]	M200 707 [illegible]	307	1
SW-92	OTHER [illegible]	SW 295-19.22	307	1
SW-920N	BOX [illegible]	M200 707 [illegible]	307	1
SW-921N	BOX [illegible]	M200 707 [illegible]	307	1
SW-922N	BOX [illegible]	M200 707 [illegible]	307	1
SW-923N	BOX [illegible]	M200 707 [illegible]	307	1
SW-924N	BOX [illegible]	M200 707 [illegible]	307	1
SW-925N	BOX [illegible]	M200 707 [illegible]	307	1
SW-926N	BOX [illegible]	M200 707 [illegible]	307	1
SW-927N	BOX [illegible]	M200 707 [illegible]	307	1
SW-928N	BOX [illegible]	M200 707 [illegible]	307	1
SW-929N	BOX [illegible]	M200 707 [illegible]	307	1
SW-930N	BOX [illegible]	M200 707 [illegible]	307	1
SW-931N	BOX [illegible]	M200 707 [illegible]	307	1
SW-932N	BOX [illegible]	M200 707 [illegible]	307	1
SW-933N	BOX	M200 707	307	1

TABLE 1 -- COMPONENT SUPPORTS WITHIN PSI BOUNDARIES -- 21 JAN 1985

EQUIP PIECE NO	DESCRIPTION	ISOMETRIC DWG NO	ISO DWG NO	EXAMS
SW-934N	------SN	M200 707	307	1
SW-935N	BOX	M200 707	307	1
SW-936N	BOX	M200 707	307	1
SW-937N	------SN	M200 707	307	1
SW-938N	BOX	M200 707	307	1
SW-939N	BOX	M200 707	307	1
SW-940N	BOX	M200 707	307	1
SW-941N	BOX	M200 707	307	1
SW-942N	STRUT	SW 250-31.40	301	1
SW-943N	STRUT	SW 295-39.42	307	1
SW-946N	RIGID	SW 251-38.64	314	1
SW-948N	RIGID	SW 295-43.63	315	1
SW-949N	RIGID	SW		1
SW-950N	RIGID	SW 295-43.63	315	1
SW-951N	RIGID	SW 295-43.63	315	1
SW-953N	RIGID	SW 251-38.64	314	1
SW-954N	RIGID	SW 251-38.64	314	1
SW-955N	RIGID	SW 296-58.77	313	1
SW-956N	RIGID	SW 296-58.77	313	1
SW-957N	RIGID	SW 296-58.77	313	1
SW-958N	RIGID	SW 296-58.77	313	1
SW-959N	RIGID	SW 296-58.77	313	1
SW-960N	RIGID	SW 296-58.77	313	1
SW-961N	RIGID	SW 250-55.75	312	1
SW-962N	RIGID	SW 250-55.75	312	1
SW-963N	RIGID	SW 250-55.75	312	1
SW-964N	RIGID	SW 250-55.75	312	1
SW-965N	RIGID	SW 250-55.75	312	1
SW-966N	RIGID	SW 250-55.75	312	1
SW-982N	ANCHOR	SW 500-1.5	312	1
SW-983N	ANCHOR	SW 501-1.10	314	1
SW-984N	RIGID	SW 502-1.3	313	1
SW-985N	RIGID	SW 503-1.3	315	1
SW-986N	RIGID	SW 500-1.5	312	1
SW-987N	PSA-3 SN(2)	SW 250-41.50	301	1

TOTAL COUNT = 1848

TABLE 2 -- LIST OF ADDITIONAL SAFETY RELATED SNUBBERS
OUTSIDE PSI BOUNDARIES -- AS OF 21 JAN 1985

EQUIP PIECE NO	DESCRIPTION	ISOMETRIC DWG NO	ISO DWG NO	EXAMS
CEP-905S	PSA-1/2 SN		QC-1-SN	1
CEP-908N	PSA-3 SN	CEP 625-5.8	QC-1-SN	1
COND-862	PSA-1/2 SN(2)	COND 364-5.10	QC-1-SN	1
COND-863	PSA-1 SN	COND 364-5.10	QC-1-SN	1
COND-880	PSA-3 SN(2)	COND 361-7.11	QC-1-SN	1
COND-957N	PSA-1 SN	COND 363-1.3	QC-1-SN	1
DE-2	PSA-3 SN	DE 797-1.5	QC-1-SN	4,B,N
DE-23	PSAS-3 SN	DE 065-1.19	QC-1-SN	4,B,N
DE-2836-15	PSA-1/2 SN	DE 2836-1	QC-1-SN	4,B,N
DE-2837-17	PSA-1/4 SN	DE 2837-1	QC-1-SN	4,B,N
DE-2838-18	PSA-1/4 SN	DE 2838-1	QC-1-SN	4,B,N
DE-2839-14B	PSA-1/4 SN	DE 2839-1	QC-1-SN	4,B,N
DE-3	PSA-3 SN(2)	DE 797-1.5	QC-1-SN	4,B,N
DE-49	PSA-3 SN	DE 064-1.19	QC-1-SN	4,B,N
DE-57	PSA-3 SN	DE 062-1.19	QC-1-SN	4,B,N
DE-59	PSA-3 SN	DE 063-1.19	QC-1-SN	4,B,N
DE-902N	PSA-1 SN(2)	DE 797-1.5	QC-1-SN	4,B,N
EDR-903N	PSA-1/4 SNQ1	EDE 526-7.9	QC-1-SN	1
EDR-904N	PSA-1/4 SNQ1	EDE 526-7.9	QC-1-SN	1
EDR-905N	PSA-1/4 SNQ1	EDE 526-7.9	QC-1-SN	1
EDR-906N	PSA-1/4 SNQ1	EDE 526-7.9	QC-1-SN	1
FDR-900N	PSA-1 SNQ1	FDR 527-7.9	QC-1-SN	1
FDR-901N	PSA-1/4 SNQ1	FDR 527-7.9	QC-1-SN	1
FDR-902N	PSA-1 SNQ1	FDR 527-7.9	QC-1-SN	1
FDR-903N	PSA-3 SN(2)	FDR 527-7.9	QC-1-SN	1
HY-4235-11C	PSA-1/4 SN	HY 4235-1	QC-1-SN	1
HY-4236-11C	PSA-1/4 SN	HY 4236-1	QC-1-SN	1
HY-4237-11C	PSA-1/4 SN	HY 4237-1	QC-1-SN	1
MD-1285-11B	PSA-1/4 SN	MD 1285-1	QC-1-SN	1
MD-1285-14A	PSA-1/4 SN	MD 1285-1	QC-1-SN	1
MD-1285-14C	PSA-1/4 SN	MD 1285-1	QC-1-SN	1
MD-1285-14D	PSA-1/2 SN	MD 1285-1	QC-1-SN	1
MD-1287-11	PSA-1/4 SN	MD 1287-1	QC-1-SN	1
MD-1287-15	PSA-1 SN	MD 1287-1	QC-1-SN	1
MD-1288-17	PSA-1/2 SN	MD 1288-1	QC-1-SN	1
MD-1290-11B	PSA-1/4 SN	MD 1290-1	QC-1-SN	1
MD-74	PSA-1/2 SN	MD 580-1.2	QC-1-SN	1
MS-1011S	PSA-1/4 SN	MS 531-12	QC-1-SN	4,A
MS-1012S	PSA-1/4 SN	MS 531-12	QC-1-SN	4,A
MS-1013S	PSA-1/4 SN	MS 528-13	QC-1-SN	4,A
MS-1014S	PSA-1/4 SN	MS 528-13	QC-1-SN	4,A
MS-1015S	PSA-1/4 SN	MS 530-12	QC-1-SN	4,A
MS-1016S	PSA-1/4 SN	MS 529-13	QC-1-SN	4,A
MS-255	PSA-1 SN	MS 582-5	QC-1-SN	4,A
MS-256	PSA-3 SN(2)	MS 582-5	QC-1-SN	4,A
MS-2619-11	PSA-1/4 SNQ1	MS 2619-1	QC-1-SN	4,A
MS-2619-12	PSA-1/4 SNQ1	MS 2619-1	QC-1-SN	4,A
MS-4448-12	PSA-1/4 SN	MS 4448-1	QC-1-SN	4,A

TABLE 2 -- LIST OF ADDITIONAL SAFETY RELATED SNUBBERS
OUTSIDE PSI BOUNDARIES -- AS OF 21 JAN 1985

EQUIP PIECE NO	DESCRIPTION	ISOMETRIC DWG NO	ISO DWG NO	EXAMS
MS-4448-411	PSA-1/4 SN	MS 4448-4	+ QC-1-SN	4,A
MS-4448-413	PSA-1/4 SN	MS 4448-4	+ QC-1-SN	4,A
MS-4448-46	PSA-1/4 SN	MS 4448-4	+ QC-1-SN	4,A
MS-954N	PSA-3 SN	MS 582-5	+ QC-1-SN	4,A
MSLC-2821-12	PSA-1/2 SN(2)	MSLC 2821-1	+ QC-1-SN	4,A
MSLC-2821-22	PSA-1 SN	MSLC 2821-2	+ QC-1-SN	4,A
MSLC-2822-12	PSA-1/2 SN	MSLC 2822-1	+ QC-1-SN	4,A
RCC-177	PSA-3 SN	RCC 826-4.5	+ QC-1-SN	1
RCC-4505-13	PSA-1/4 SN	RCC 4505-1	+ QC-1-SN	1
RCC-4505-15	PSA-1/2 SN	RCC 4505-1	+ QC-1-SN	1
RCC-4505-17	PSA-1/2 SN	RCC 4505-1	+ QC-1-SN	1
RCC-915N	PSA-1 SN	RCC 830-7	+ QC-1-SN	1
RCIC-1490-13	PSA-1/2 SN	RCIC 1490-1	+ QC-1-SN	1
RHR-10	PSA-_ SN	RHR 883-34.38	+ QC-1-SN	1
RHR-20	PSA-1/2 SN	RHR 883-34.38	+ QC-1-SN	1
RHR-200	PSA-1/2 SN	RHR 977-1.2	+ QC-1-SN	1
RHR-206	PSA-1/2 SN	RHR 883-16.19	+ QC-1-SN	1
RHR-210	PSA-1/2 SN	RHR 883-16.19	+ QC-1-SN	1
RHR-214	PSA-1/2 SN	RHR 883-16.19	+ QC-1-SN	1
RHR-2264-11	PSA-1/4 SN	RHR 2264-1	+ QC-1-SN	4,B
RHR-2264-21	PSA-1/4 SN	RHR 2264-2	+ QC-1-SN	4,B
RHR-2264-22	PSA-1 SN	RHR 2264-2	+ QC-1-SN	4,B
RHR-23	PSA-1/4 SN(2)	RHR 883-34.38	+ QC-1-SN	1
RHR-290	PSA-1/2 SN	RHR 883-20.22	+ QC-1-SN	1
RHR-325	PSA-1/2 SN	RHR 667-3.7	+ QC-1-SN	1
RHR-326	PSA-1/4 SN(2)	RHR 667-3.7	+ QC-1-SN	1
RHR-332	PSA-1 SN	RHR 667-3.7	+ QC-1-SN	1
RHR-333	PSA-1 SN	RHR 667-3.7	+ QC-1-SN	1
RHR-334	PSA-1/4 SN	RHR 667-3.7	+ QC-1-SN	1
RHR-373	PSA-1 SN	RHR 667-8.12	+ QC-1-SN	1
RHR-400	PSA-1/2 SN	RHR 667-22.23	+ QC-1-SN	1
RHR-401	PSA-1/2 SN	RHR 667-22.23	+ QC-1-SN	1
RHR-403	PSA-1 SN	RHR 899-33.35	+ QC-1-SN	1
RHR-441	PSA-1/2 SN	RHR 899-23.26	+ QC-1-SN	1
RHR-442	PSA-1/2 SN	RHR 899-23.26	+ QC-1-SN	1
RHR-443	PSA-1/2 SN	RHR 899-23.26	+ QC-1-SN	1
RHR-448	PSA-1/2 SN	RHR 899-27.32	+ QC-1-SN	1
RHR-449	PSA-1/4 SN(2)	RHR 899-27.32	+ QC-1-SN	1
RHR-453	PSA-1/4 SN	RHR 899-27.32	+ QC-1-SN	1
RHR-454	PSA-1/2 SN	RHR 899-27.32	+ QC-1-SN	1
RHR-4605-41A	PSA-1/4 SN	RHR 4605-4	+ QC-1-SN	4,B
RHR-9	PSA-1/2 SN	RHR 883-26.29	+ QC-1-SN	1
RHR-906N	PSA-3 SN(2)	RHR 898-33	+ QC-1-SN	N1
RHR-914N	PSA-10 SN	RHR 898-36.38	+ QC-1-SN	1
RHR-940N	PSA-1 SN(2)	RHR 898-34.35	+ QC-1-SN	N1
RHR-959N	PSA-1 SN(2)	RHR 898-34.35	+ QC-1-SN	N1
RHR-962N	PSA-3 SN	RHR 898-33	+ QC-1-SN	N1
RHR-983N	PSA-1/4 SNQ1	RHR 667-8.12	+ QC-1-SN	1

TABLE 2 -- LIST OF ADDITIONAL SAFETY RELATED SNUBBERS
OUTSIDE PSI BOUNDARIES -- AS OF 21 JAN 1985

EQUIP PIECE NO	DESCRIPTION	ISOMETRIC DWG NO	ISO DWG NO	EXAMS
RHR-993N	PSA-1 SN	RHR 883-16.19	+ QC-1-SN	1
RRC-1549-62	PSA-1/4 SN	RRC 1549-6	+ QC-1-SN	4,A
RRC-1552-12	PSA-1/4 SN	RRC 1552-1	+ QC-1-SN	4,A
RRC-1946-31	PSA-1/4 SN	RRC 1946-3	+ QC-1-SN	4,A
RRC-1946-32	PSA-1/4 SN	RRC 1946-3	+ QC-1-SN	4,A
RRC-4470-31	PSA-1 SN	RRC 4470-3	+ QC-1-SN	4,A
SGT-11	PSA-10 SN(2)	SGT 624-6.7	+ QC-1-SN	4,A
SGT-19	PSA-3 SN	SGT 623-4.7	+ QC-1-SN	N6
SGT-23	PSA-3 SN(2)	SGT 624-5	+ QC-1-SN	4,A
SLC-4453-68	PSA-1/4 SN	SLC 4453-6	+ QC-1-SN	1
SLC-4453-69	PSA-1/4 SN	SLC 4453-6	+ QC-1-SN	1
SLC-4475-112	PSA-1/4 SN	SLC 4475-11	+ QC-1-SN	1
SLC-4475-113	PSA-1/2 SN	SLC 4475-11	+ QC-1-SN	1
SLC-4475-114	PSA-1 SN	SLC 4475-11	+ QC-1-SN	1
SLC-4475-116	PSA-1 SN	SLC 4475-11	+ QC-1-SN	1
SLC-4475-117	PSA-1/2 SN	SLC 4475-11	+ QC-1-SN	1
SLC-4475-12	PSA-1/4 SN	SLC 4475-1	+ QC-1-SN	1
SLC-4475-120	PSA-1 SN	SLC 4475-12	+ QC-1-SN	1
SLC-4475-122	PSA-1/4 SN	SLC 4475-12	+ QC-1-SN	1
SLC-4475-13	PSA-1/2 SN	SLC 4475-1	+ QC-1-SN	1
SLC-4475-14	PSA-1/2 SN	SLC 4475-1	+ QC-1-SN	1
SLC-4475-19	PSA-1/2 SN	SLC 4475-1	+ QC-1-SN	1
VR-3	PSA-1/2 SN(2)	VR 666-1.3	+ QC-1-SN	1
VR-6	PSA-1 SN	VR 666-4.5	+ QC-1-SN	1
VR-8	PSA-1 SN	VR 666-4.5	+ QC-1-SN	1
VR-900N	PSA-1/2 SN	VR 666-1.3	+ QC-1-SN	1
VR-901N	PSA-1/2 SN	VR 666-4.5	+ QC-1-SN	1
VR-902N	PSA-1/2 SN	VR 666-4.5	+ QC-1-SN	1
	TOTAL COUNT =	124		