QSA GLOBAL

QSA Global, Inc.
40 North Avenue
Burlington, MA 01803
Telephone: (781) 272-2000
Toll Free: (800) 815-1383
Facsimile: (781) 359-9191

29 June 2017

Mr. Pierre Saverot
Spent Fuel Licensing Branch
U.S. Nuclear Regulatory Commission
Office of Nuclear Material Safety and Safeguards
Division of Spent Fuel Management
Mailstop EBB-3D-02M
11555 Rockville Pike
One White Flint
Rockville, MD 20852

71-9296

RE: Response to RAI Request for CoC number USA/9296/B(U)-96

Dear Mr. Saverot:

QSA Global, Inc. provides the following in response to Huda Akhavannik's letter dated 5 April 2017 requesting additional information in support of our 13 January 2017 amendment request for the Model 880 package designs.

1-1 *Clarify which jacket version is depicted on the licensing drawings and its importance to safety.*

As discussed in telephone conversation with NRC on 14 April 2017, the licensing drawings are dimensioned to cover all jacket options with variations in overall height noted as a range on the drawings. As discussed, the drawings indicate the jacket is "optional" which was intended to imply that the jacket is not important to safety (NITS). For clarification purposes, we have revised drawing R88000 to Revision X. This revision will list the jacket, jacket rivets, and sealant currently identified as "optional" on the drawing, as also "NITS" in the drawing BOM for these items.

As discussed on 14 April 2017, and as will be clarified in the attached SAR revision, the presence of the lithium-ion batteries and electronics in the Version 3 jacket will have no adverse impact on the package during normal or hypothetical accident conditions. The details associated with the batteries and electronics are not included on the descriptive drawings as they have no significant impact on the package integrity and are not expected to be installed/replaced by general users of the package.

QSA has decided to rescind its request to add Version 3 of the optional jacket to the Model 880SC package design. As such, we no longer request approval of drawing R880SC Revision F under the certificate, and request that reference for this package remain at Revision E of the drawing. The enclosed SAR Revision 12, has been updated to remove reference of the Version 3 jacket with the Model 880SC package design.

AD06
NMSS01

2-1 *Clarify the package weight for those packages that use jacket version 1 or 3.*

The maximum package weights, with the heaviest jacket attached, are specified on drawing R88000 Rev X on sheet 1 in the table column labelled "Maximum Total Package Weight with Jacket". Since the jacket's only significant impact on package compliance is how its weight impacts the overall final package weight, any version of the jacket is compliant to the drawings so long as the overall package weight does not exceed that specified on the drawing with the jacket attached, and the jacket meets the other dimensional specifications for the final package assembly on the drawing.

The 1 pound discrepancy noted when comparing weight increases for the Version 3 jacket to the jacketless versions of the different models is related to a rounding discrepancy correction made on the jacketless versions of the package, but which was not carried over in description of the package with jacket attached. When changed, the maximum values for the package with the jacket were not increased to accommodate slight variations in the base unit's mass which was corrected for the rounding issue. When we determined the maximum package weight for the packages with the Version 3 jacket, a uniform 3 pounds were added to each previous value listed in the "Maximum Total Package Weight with Jacket" column of the table on sheet 1 of drawing R88000.

This discrepancy has no effect on the NCT or HAC drop test results of the package since the overall maximum package weight for the heavier jackets (versions 2 and 3) were tested and found compliant under Test Report #1 for Test Plan 186, Revision 1 (Section 2.12.11 of the SAR) and Test Plan 216 Report Revision 0 (Section 2.12.19 of the SAR).

As noted in response to item 1-1, QSA no longer requests approval of the Model 880SC for use with the Version 3 jacket.

2-2 *Describe the performance of the Model 880SC with respect to the drop tests described for NCT and HAC, the puncture test as described under HAC and the cumulative damage as described under the HAC with jacket version 3.*

As noted in response to item 1-1, QSA no longer requests approval of the Model 880SC for use with the Version 3 jacket, so these questions are no longer applicable to this pending amendment request.

3-1 *Provide the lithium-ion battery test report and describe in the SAR the performance of the Model 880 package with jacket version 3 with respect to the thermal tests described for NCT and HAC.*

a) *Test Plan 216 was submitted to support use of jacket version 3 with respect to satisfying NCT requirements. In Section 3.2 of Test Plan 216, the applicant discusses the NCT testing for the new jacket version. In regards to the NCT Heat test, the applicant states that the test will not be performed because the new jacket will not change the previous evaluation in Test Plan 100. The tests in Test Plan 100 were performed on a Type A Model 880 package without a jacket and no thermal heat test was performed. In regards to the NCT Cold test, the applicant states that this test will not be performed because the new jacket will not change the previous evaluation in Test Plan 186. The tests in Test Plan 186 were performed on the Model 880 Pipeliner with a different jacket that did not include lithium-ion batteries and the thermal test was not performed. The applicant should describe in the SAR the performance of the Type B Model 880 package with the version 3 jacket including lithium-ion batteries with respect to the NCT heat and cold tests.*

Based on discussions with NRC staff on 18 April 2017, the expected increase in package temperature due to the battery pack presence was estimated to be ~ 2°C. Further measurements were made and documented in Technical Report 318 to determine the temperature rise to the package from the lithium-ion battery pack for NCT both when the battery cells are not charging during transport, and also when they are charging during transport. Results of the Model 880 when demonstrating compliance to the requirements of 10 CFR 71.43(g) with the package in still air (shaded), shows the maximum package temperature increases from 47°C to 50°C. Under the insolation conditions in 10 CFR 71.43(g), results for the Model 880 package with the Version 3 jacket showed no increase in the maximum package temperature from that previously assessed for the package.

In addition, the $LiFePO_4$ cells used in the Version 3 jacket comply with the requirements of United Nations "Recommendations on the Transport of Dangerous Goods – Manual of Tests and Criteria", Sixth revised edition (2015) Part III, Section 38.3[1]. This includes testing to the T.2 Thermal test conditions. Under this test, test cells are stored for at least six hours at a test temperature equal to 72 ± 2°C, followed by storage for at least six hours at a test temperature equal to -40 ± 2°C. The maximum time interval between test temperature extremes is 30 minutes. This test is repeated until 10 total cycles are complete, after which all test cells are stored for 24 hours at ambient temperature (20 ± 5°C). The manufacture of the $LiFePO_4$ cells confirmed the Version 3 cells passed the 38.3 testing. To meet the testing under T.2, the cells must show no leakage, no venting, no disassembly, no rupture and no fire.

Based on the above analysis, under the NCT heat test and cold test requirements, this nominal temperature increase per battery cell will have no adverse impact on the package integrity or conformance and the battery cells will remain intact and undamaged when exposed to temperatures between 72°C to -40°C. The applicable sections of the SAR have been updated to reflect the temperature impact of the lithium-ion battery pack when the package is transported with the Version 3 jacket.

b) *Test Plan 216 was submitted to support use of jacket version 3 with respect to satisfying HAC requirements. On page 7 of Test Plan 216, the applicant states that the lithium-ion battery may be the only material used in the proposed jacket version 3 that may change the results of the original thermal test evaluation. The application then states, "the lithium-ion battery will be tested and/or evaluated at 800°C for 30 minutes separately in another report." Staff requests this lithium-ion battery test report. Additionally, the applicant should demonstrate the thermal performance of the package with jacket version 3 in order to demonstrate that the battery will not have a significant impact on the results of the original thermal test evaluation. This demonstration should include the effects of the preceding HAC tests (30 ft. drop, puncture, etc. on the damaged package/battery, followed by the 30 minute fire (and subsequent immersion). As part of evaluating the thermal tests, the effects of the flammable electrolyte jets should be considered and demonstrated to not lead to exceeding the melting temperature of any important to safety components and materials in the transport package. In SAR section 2.7.4, the applicant states that the July 2011 Fire Protection Research Foundation report in, "Lithium-Ion Batteries Hazard and Use Assessment", suggests that batteries that combust in a fire will produce small localized heat jets. The applicant states that these heat jets, "...are not expected to produce enough sustained heat to exceed the melding temperature of the stainless steel shell protecting the shield." The applicant should*

---

[1] United Nations "Recommendations on the Transport of Dangerous Goods – Manual of Tests and Criteria", Sixth Revised (2015).

> *demonstrate how the analysis in the Fire Protection Research Foundation report provides adequate evidence that the localized heat jets will not produce enough sustained heat to exceed the melting temperature of materials important to safety in the transport package.*

As discussed during our conversation with NRC staff on 18 April 2017, the report referenced in Test Plan 216 was not generated. Evaluation of the battery pack cell performance under the thermal test conditions is provided as follows.

The battery pack cells, used in the Version 3 jacket, are comprised of four (4) Lithium iron phosphate ($LiFePO_4$) cathode cells with a graphite anode. This battery cell chemistry is safer than the typical lithium cobalt oxide composition. The $LiFePO_4$ cell materials also include copper, aluminum and a steel casing.

The $LiFePO_4$ battery pack cells, used in the Version 3 jacket, are designed with the following protective features:

- Vent seals which activate under high pressure build-up.
- A Current Interrupt Device (CID) which activates on excessive pressure due to an overcharge condition.
- A Shutdown separator which activates when the cells reach a temperature of 130°C as this temperature could melt the battery cell's poly separator.

Under the HAC thermal test (800°C for 30 minutes), the individual cells contained within the battery pack would be expected to exceed the threshold temperature needed to exhibit thermal runaway. Typically, this would occur to cells exposed to temperatures in the 150°C - 260°C range which would allow melting of the cell separators.

As noted in The Fire Protection Research Foundation reference below[2], the severity of a cell thermal runaway event will depend upon a number of factors, including the cell state of charge (SOC), the ambient environmental temperature, the electrochemical design of the cell and the mechanical design of the cell. For any given cell, the most severe thermal runaway reaction will occur when the cell is at 100% SOC, or is overcharged, because the cell will contain maximum electrical energy. During a thermal runaway reaction for a fully (or overcharged) cell, a number of things occur:

1. Cell internal temperature increases for fully charged cells can reach temperatures in excess of 600°C (1,110°F), although $LiFePO_4$ cells are generally lower. This is also within the typical temperature range of 800°C – 1,000°C specified in DOT/FAA/TC-TN15/17[3].

   These temperatures are considered sufficient to cause hot surface ignition of flammable mixtures, but do not reach levels that will cause the melting of pure copper, nickel or steel. The shell of the 880 packages does not begin to melt until 1,400°C.

   The figure below shows an 18650 cell that underwent thermal runaway. Although the aluminium within the cell melted and the cell separator was consumed, the cell's steel case and the copper current collector from the anode remained intact.

---

[2] Lithium-ion Batteries Hazard and Use Assessment Final Report, July 2011 Fire Protection Research Foundation.

[3] Fire Hazards of Lithium Batteries, DOT/FAA/TC-TN 15/17, February 2016.

An 18650 cell that has undergone thermal runaway.

2. Cell internal pressure increases for cylindrical designs will not cause appreciable swelling. In these cases, if sufficiently heated externally, the case wall may soften to allow bulging of the cell base.

3. Cell Venting. Cylindrical cells have venting mechanisms installed in their cap assemblies that activate when internal pressures are high (typically > 200 psi). CIDs contained in the cells activate to control the venting during thermal runaway.

4. Cell vent gases may ignite. This is dependent on the environment around the cell. The gases are not self-igniting and there must be sufficient oxygen in the surrounding environment to sustain combustion as well as an ignition source. During the thermal test, the battery pack is protected by the jacket and the 880 body weldment. Access to oxygen will therefore require combustion of the jacket material and breach of the battery pack case prior to accessing the individual LiFePO4 cells contained within the watertight case.

   Should conditions for ignition occur, the flames emanating from the battery pack cells will be highly directional (e.g., flames from 18650 cells are often described as "torch-like"). Since the battery pack cells are aligned parallel to the 880 body weldment, any flames that may be generated under the thermal test would also be oriented parallel to the 880 weldment and not be directed directly facing the body weldment. This will further minimize any temperature increase to the steel shell during the thermal test condition.

5. If thermal runaway occurs in one cell, it is likely to cause thermal runaway in adjacent cells. Under the thermal HAC testing, it is conservatively assumed that all (4) cells in the battery pack will undergo thermal runaway.

When evaluating the impact of the LiFePO4 cells contained in the Version 3 jacket of the Model 880 Series packages during the HAC, the worst case scenario would be for all cells in the battery pack to undergo thermal runaway during the thermal test of 10 CFR 71.73(a)(4). In this case, the expected package temperature exterior to the shell could be expected to increase to ~1,000°C. This temperature increase will be in localized to a small area surrounding and in contact with the individual battery pack cells that come into direct contact with the base of the shell. This value is below the melting point of 304L stainless steel of ~1,400°C. Based on this localized temperature increase of ~1,000°C, no failure or breach of the shell weldment will occur even if all cells in the battery pack undergo thermal runaway during the HAC thermal test.

As noted in Section 3.5.1 and supported by section 2.7.4.5 of the SAR, damage to the outer containment (shell), sufficient to impact the integrity of the depleted uranium shield, would require significant gaps in the shell (e.g. greater than 1.5 in^2) to allow ingress of oxygen inside the weldment, before pyrolization of the foam and subsequent oxidation of the depleted uranium shield could be induced. Based on the information related to Li-ion cells under thermal runaway conditions, the added heat generated by these cells will be insufficient to cause a breach of the 880 body weldment, and therefore, the Model 880 Series packages will retain their shielding integrity and containment during the HAC thermal test when assembled with the Version 3 jacket.

The SAR has been updated in Section 3 to reflect this additional information.

3-2 *Quantify in the SAR whether the lithium-ion batteries will have an effect on the package surface temperature.*

The applicant has requested to add an optional version 3 jacket with lithium-ion batteries without updating the thermal analysis or describing any added heat load from the batteries or any effect on the package surface temperature. The application should describe if there is any internal heat load associated with the batteries, and if so, demonstrate the effect of the added heat load from the lithium-ion batteries on the package surface temperature.

The thermal evaluation in Section 3.4.1.1 et. al. of the SAR has been updated based on our response to Question 3-1a).

3-3 *Identify in the SAR any established codes and standards applicable to the use of lithium-ion batteries in a transportation package.*

The applicant has requested to add an optional version 3 jacket with lithium-ion batteries without identifying any applicable codes and standards. The applicant should identify any codes and standards applicable for use of lithium-ion batteries in the transport package to provide staff with quality assurance of the lithium-ion batteries used.

Although the $LiFePO_4$ cells used in the Version 3 jacket comply with the requirements of UN 38.3 (see footnote reference 1 on page 3), this is standard for transport of lithium-ion cells and would be required of any battery/cell transported compliant to 49 CFR 173.185. As described in response to question 3-1(a) of this letter, the Version 3 jacket including the battery pack with the $LiFePO_4$ cells, is not important to the safety (NITS) or integrity of the Model 880 Delta, 880 Sigma or 880 Elite transport packages. We maintain that adding a requirement to the descriptive drawings for the $LiFePO_4$ cells to this established regulatory standard is unnecessary since it would complicate the drawing to address a requirement ensured under an existing, applicable regulation.

The document revisions associated with these changes are included as enclosures to this letter. Should you have any additional questions, or wish to discuss this response further, please contact me.

Sincerely,

e-Signed by Lori Podolak
on 2017-06-29 18:56:22 GMT

Lori Podolak
Manager,
Regulatory Affairs/Quality Assurance
Ph: (781) 505-8241
Fax: (781) 359-9191
Email: Lori.Podolak@qsa-global.com

e-Signed by Michael Fuller on 2017-06-29 19:08:34 GMT	June 29, 2017
RA/QA Approval	Date
e-Signed by Steve Grenier on 2017-06-29 19:08:19 GMT	June 29, 2017
Engineering Approval	Date

Enclosures:

- Lithium-ion Batteries Hazard and Use Assessment Final Report, July 2011 Fire Protection Research Foundation
- Fire Hazards of Lithium Batteries, DOT/FAA/TC-TN 15/17, February 2016
- SAR Revision 12
- List of Affected Pages
- Revision Description for the Model 880 Series SAR from Revision 11 to Revision 12

cc: ATTN: Document Control Desk
Director, Division of Spent Fuel Storage and Transportation
Office of Nuclear Material Safety and Safeguards
U.S. Nuclear Regulatory Commission
11555 Rockville Pike
One White Flint
Rockville, MD 20852

Safety Analysis Report

QSA Global, Inc.

Model 880 Series
Type B(U) - 96
Transport Package

June 2017

Revision 12

Contents

List of Tables

List of Figures

Section 1 - GENERAL INFORMATION

1.1 Introduction

The Model 880 Series are designed as industrial radiography exposure devices, source changers and transport packages for Type B quantities of special form radioactive material. They conform to the Type B(U)-96 criteria for packaging in accordance 10 CFR 71, 49 CFR 173, IAEA Regulations for the Safe Transport of Radioactive Material No. TS-R-1 (2009 Edition) and Canadian Nuclear Safety Commission (CNSC) PTNS Regulations SOR/2015-145. This submission is formatted in accordance with NUREG-1886 "Joint Canada – United States Guide for Approval of Type B(U) and Fissile Material Transportation Packages" dated March 2009.

1.2 Package Description

The Model 880 Series packages are constructed in accordance with the drawings included in Section 1.3. The 880 has four versions for Type B quantity transport. Table 1.2.A lists the maximum activity capacities of each version. The physical construction of the 880 Delta and the 880 Sigma (including the shield construction) is identical. These devices differ from the 880 Elite devices in the size and weight of the shield as well as the overall package weight. The 880SC construction is identical to the 880 Delta except that the 880 Delta front and rear plates are replaced with a different lock assembly plate on the 880SC.

The shields for the 880 Delta and 880 Sigma vary in Ir-192 unit capacity which is based on the natural variability in the shield consistency created during the depleted uranium pouring/cooling process. These variations can produce shields with slightly lower shielding capacity than the 150 Curies required for the 880 Delta (e.g. 130 Curies of Ir-192) and are therefore made into 880 Sigma packages. (Note that the capacity for both the 880 Delta and 880 Sigma are the same for Se-75. The gamma energy from Se-75 is less penetrating than Ir-192 therefore the shield variations which are clearly observable for Ir-192 do not occur with Se-75. Since the shielding on the 880 Sigma is greater than the shielding for the 880 Elite, and the 880 Elite is rated for the same Se-75 capacity as the 880 Delta, the 880 Sigma will be adequate to shield Se-75 at that same capacity. The shield used on the 880SC is the same shield used on the 880 Delta and radiation profiles for the 880SC demonstrate unit capacity equal to the 880 Delta.

All 880 Series packages allow for the use of an optional jacket which facilitates the package use as a radiography device/source changer and transport package. There are three versions of the jacket for use on the 880 Delta, 880 Sigma and 880 Elite packages. The 880SC can use the Version 1 jacket. These jackets do not impair the package's ability to meet the Type B requirements as described in this Safety Analysis Report (SAR).

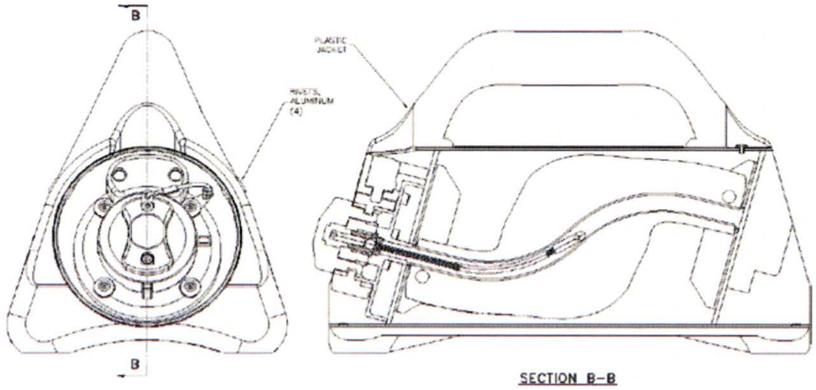

Figure 1.2.A – 880 Delta, 880 Sigma and 880 Elite Packages with Optional Jacket (Version 1)

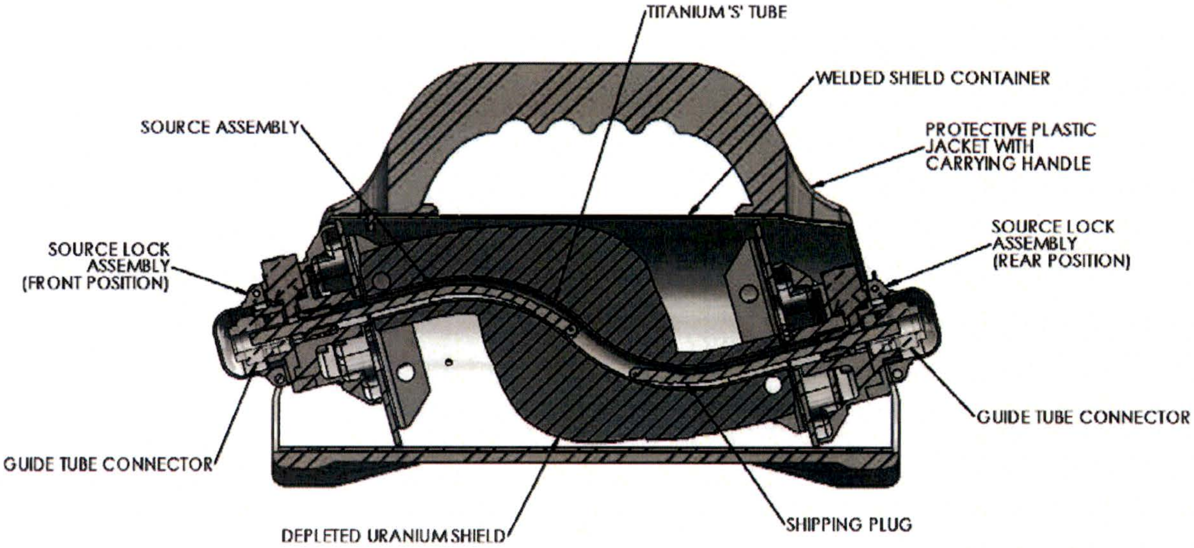

Figure 1.2.B – 880SC Package with Optional Jacket (Version 1)

The 880 Delta, 880 Sigma and 880 Elite packages without the jacket measure approximately 5 inches (127 mm) in diameter by 13 5/16 inches (338 mm) long. The packages with Version 1 of the jacket measures approximately 13 ½ inches (343 mm) long by 7 ½ inches (191 mm) wide by 9 inches (229 mm) tall. The packages with Version 2 of the jacket measures approximately 13 ½ inches (343 mm) long by 6 inches (152 mm) wide by 11.33 inches (288 mm) tall. The packages with Version 3 of the jacket measures approximately 13 ½ inches (343 mm) long by 6 inches (152 mm) wide by 9.7 inches (246 mm) tall.

The 880SC package without the jacket measure approximately 5 inches (127 mm) in diameter by 15 ¼ inches (387 mm) long. The 880SC package with Version 1 of the jacket measures approximately 15 ¼ inches (387 mm) long by 7 ½ inches (191 mm) wide by 9 inches (229 mm) tall.

The general package information is shown in Table 1.2.A. The maximum weight of the package contents will not exceed 0.04 lbs (18 grams) as special form sources attached to a source wire assembly.

Table 1.2A: Model 880 Series Package Information

Model	Nuclide	Form	Maximum Capacity[1]	Maximum DU Weight	Maximum Weight Without Jacket	Maximum Weight With Jacket (Version 1)	Maximum Weight With Jacket (Version 2 or 3)
880 Delta	Ir-192	Special Form Sources	150 Ci	34.4 lbs (15.6 kg)	46 lbs (21 kg)	52 lbs (24 kg)	55 lbs (25 kg)
	Se-75	Special Form Sources	150 Ci				
880 Sigma	Ir-192	Special Form Sources	130 Ci	34.4 lbs (15.6 kg)	46 lbs (21 kg)	52 lbs (24 kg)	55 lbs (25 kg)
	Se-75	Special Form Sources	150 Ci				
880 Elite	Ir-192	Special Form Sources	50 Ci	25 lbs (11 kg)	37 lbs (17 kg)	42 lbs (19 kg)	45 lbs (20 kg)
	Se-75	Special Form Sources	150 Ci				
880SC	Ir-192	Special Form Sources	150 Ci	34.4 lbs (15.6 kg)	46 lbs (21 kg)	52 lbs (24 kg)	NA
	Se-75		150 Ci				

[1]The Model 880SC uses only the Version 1 optional jacket.

1.2.1 Packaging

Except for the shield assembly, fill foam, copper spacers, some of the lock assembly components, lock cover, shield pin, source wire assembly and optional jackets, all material of construction are stainless steels. On the Model 880 Delta, 880 Sigma and 880 Elite packages, the keyed lock assembly mount and the lock cover can be either stainless steel or aluminum. The major components of the package consist of the following:

- Welded cylindrical body
- Depleted Uranium shield
- Rear plate with locking assembly (Models 880 Delta, 880 Sigma or 880 Elite Only)
- Front plate with shield port (Models 880 Delta, 880 Sigma or 880 Elite Only)

---

[1] Maximum Capacity Activity for Ir-192 is defined as output Curies as required in ANSI N432 and 10 CFR 34.20 and in line with TS-R-1 and Rulemaking by the USNRC and the USDOT published in the Federal Register on 26 January 2004.

- Lock Assembly plates (Model 880SC Only)
- Shipping Plug Assembly (Model 880SC Only)
- Optional jacket (three versions)
- Containment System

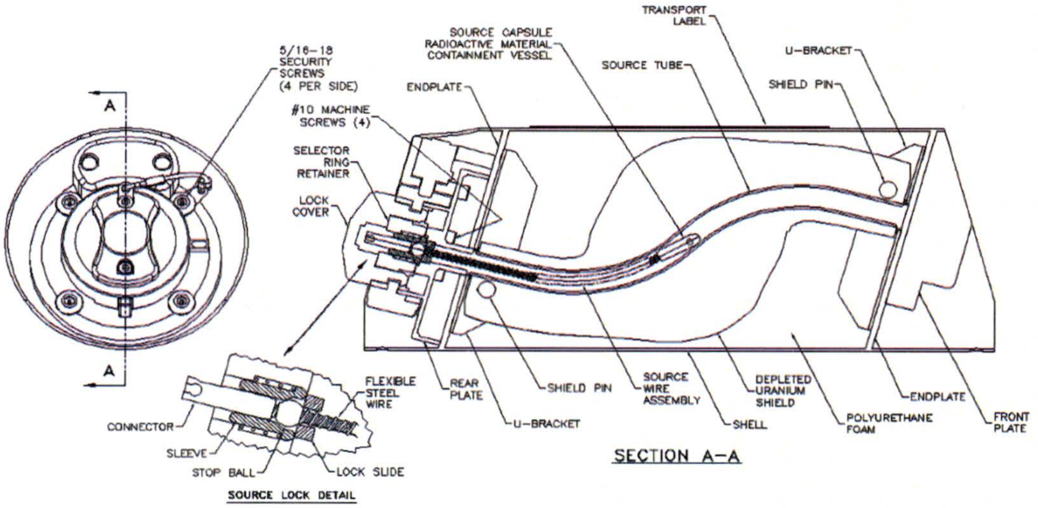

Figure 1.2.B - Model 880 Delta, 880 Sigma and 880 Elite Transport Packages

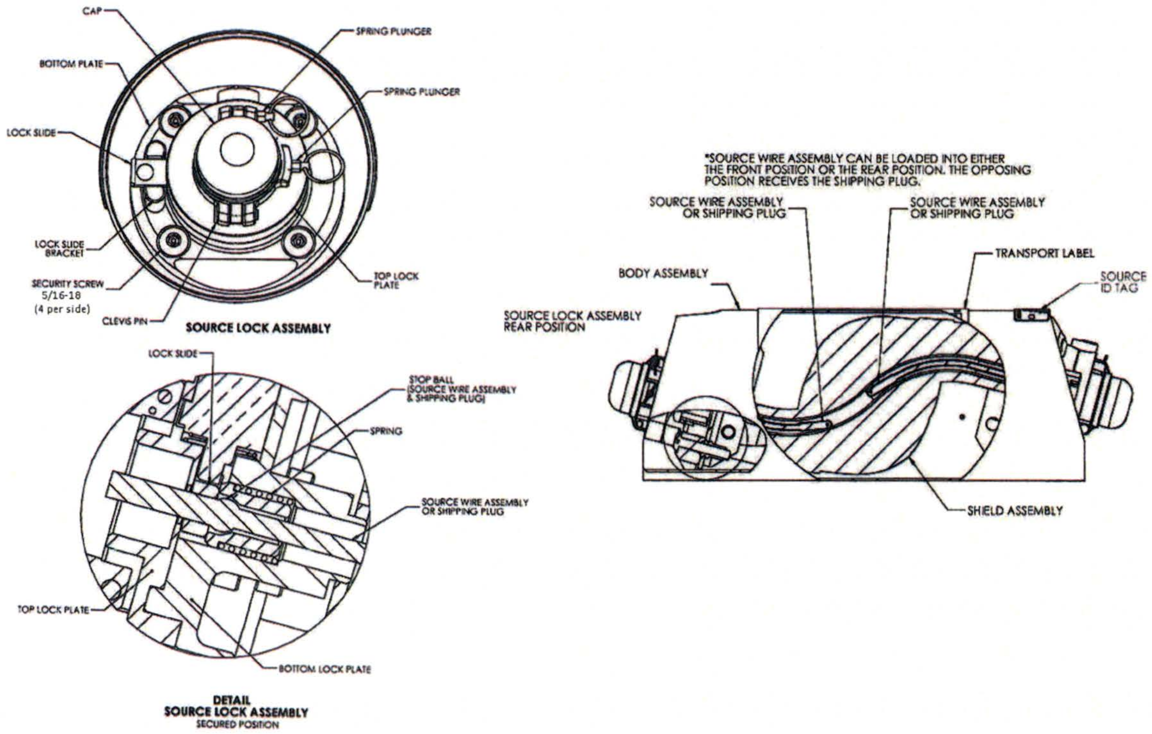

Figure 1.2.C - Model 880SC Transport Package

The following paragraphs describe the major components of the transport package

1.2.1.1 Welded Cylindrical Body

The welded body consists of a 5 inch (127 mm) diameter, 0.059-0.071 inch (1.5-1.8 mm) walled stainless steel tube with 0.12 inch (3 mm) thick endplates welded to the inner tube diameter at both ends. Both endplates are parallel to each other but are angled at 75° to the horizontal tube. The endplates are machined at the 75° angle to reduce the welding gap at the tube-shell interface. A U-bracket is welded to each endplate and located on the inside cavity of the shell tube.

1.2.1.2 Depleted Uranium Shield

The depleted uranium shield is centrally located within the welded body between the endplates. It is fastened to each U-bracket by a 0.37 inch (9.5 mm) diameter, titanium shield pin. The pin passes through a hole on the end (ear) of the shield and holes of the U-bracket. A U-shaped copper spacer fills the gap between the shield and U-bracket. The shield is not supported by the source tube (S-tube).

An S-shaped titanium source tube is cast into the center of the shield. The source tube provides a cavity for the source wire assembly and the shipping plug assembly to travel through during use. For the Models 880 Delta, 880 Sigma and 880 Elite, the source capsule is positioned at the center of the shield when the source wire is in the secured position. For the Model 880SC the source capsule is positioned approximately 4 mm (0.15 inches) away from the center of the shield when the source wire is in the secured position.

The depleted uranium shield weights are shown in Table 1.2.A. The difference in weight is contained in the center section of the shield. The end (ear) sections of the two shield types are structurally the same.

Polyurethane foam is poured through a hole in the endplate and U-bracket to fill the cavity around the depleted uranium shield. This prevents contamination to and from the shield. A label with all the necessary transport information is attached to the cylindrical shell body.

1.2.1.3 Rear Plate with Locking Assembly (Model 880 Delta, 880 Sigma and 880 Elite Only)

The rear plate assembly is attached to the welded body with four (4) 5/16-18, 1 ½ inch long security (tamperproof) screws and thread lubricant through rivnuts assembled into the endplate. The security screws are torqued to 110 ± 5 inch-pounds.

The rear plate assembly consists of a source wire locking mechanism fastened to the rear plate with four (4), #10-32, 1 ¼ inch long (or 1 3/16 inch long) machine screws and loctite. These screws are torqued to 30 ± 5 inch-pounds. A lock mount with keyed plunger lock is secured to the rear plate with two (2), #10-32, ½ inch long machine screws and loctite. Torque requirements for the lock mount screws are not needed. The keyed plunger lock serves as a tertiary lock for transport. It can only be engaged when the source wire assembly is located in the fully shielded position as described in Section 1.2.4. The lock mount for the keyed plunger lock can be made from aluminum or stainless steel. Additionally the aluminum version can include a stainless steel sleeve which is inserted between the lock mount and the keyed plunger lock.

The locking mechanism of the rear plate assembly is protected during storage and transportation by a lock cover. This lock cover can be either aluminum or stainless steel.

1.2.1.4 Front Plate with Shield Port Assembly (Model 880 Delta, 880 Sigma and 880 Elite Only)

The front plate assembly is attached to the welded body with four (4) 5/16-18, 1 ½ inch long security (tamperproof) screws and thread lubricant through rivnuts assembled into the endplate. The security screws are torqued to 110 ± 5 inch-pounds.

The front plate assembly consists of shielded port mechanism contained within the front plate. The mechanism can only be opened with a guide tube connector fitting inserted into the opening and rotated. A knob covers the port and blocks access to the shield disc. The shield disc and knob both block access to the source assembly.

1.2.1.5 Locking Plate Assembly (Model 880SC Only)

The locking plate assembly is attached to the welded body with four (4) 5/16-18, 1 ½ inch long security (tamperproof) screws and thread lubricant through rivnuts assembled into the endplate. The security screws are torqued to 110 ± 5 inch-pounds. The Model 880SC uses two locking plate assemblies located at the front and rear ends of the package. These locking plates are used to secure a source wire assembly on one end of the package and a shipping plug assembly on the opposite end of the package. The source wire assembly and the shipping plug assembly can be loaded into either side of the transport package.

The locking plate assembly consists of a locking mechanism fastened to the plate with four (4), ¼ -28, ¾ inch long screws and loctite. These screws are torqued to 60 ± 5 inch-pounds. A keyed plunger lock is incorporated into the top lock plate. The keyed plunger lock serves as a tertiary lock for transport. It can only be engaged when the source wire and shipping plug assemblies are located in the fully shielded position. The locking mechanism of the plate assembly is protected during storage and transportation by a stainless steel cap.

1.2.1.6 Shipping Plug Assembly (Model 880SC Only)

During transport of a radioactive source assembly in the 880SC package, a shipping plug assembly is loaded into the other locking plate assembly on the opposite side of the package. During transport and storage, this shipping plug assembly provides additional shielding to the package and it is only removed during radiography operations.

1.2.1.7 Optional Jacket

The package cylinder can be modified to include an optional polyurethane jacket. There are three versions of the jacket which can be used for these packages. The Models 880 Delta, 880 Sigma and 880 Elite can use any of the optional jackets, the Model 880SC can use only the Version 1 jacket design.

All versions of the jacket provide a handle, a stable base and are attached to the shell cylinder by rivets or screws located outside the shield cavity area. Version 1 of the jacket has a handle section that may also contain an optional handle support tube and wire molded in for additional reinforcement. Version 2 of the jacket incorporates wheels on the base to facilitate movement during use as a radiography exposure device. Version 3 of the jacket incorporates a PM-Tag assembly used for unit tracking purposes. This assembly includes antennas in the handle support, lithium-ion batteries and other circuitry associated with the functionality of the PM-Tag. The PM-Tag assembly parts are sealed in a watertight plastic box located in the base of the jacket.

All jackets include a cutout to allow permanent labeling to be attached directly to the shell cylinder. Space is available on the permanent label for stick-on DOT shipping labels. The permanent label has the required information etched similar to other previously approved Type B packages (CoC 9283, 9269) which have demonstrated the ability to pass the fire test.

1.2.1.8 Containment System

The locking assembly on the Model 880 Delta, 880 Sigma and 880 Elite transport packages is similar to the locking assembly on the previously approved model 660-OP package, Certificate number 9283. This allows the same source wire assemblies to be used in the Model 880 Delta, 880 Sigma and 880 Elite as in the 660-OP package.

The locking assembly on the Model 880SC transport package utilizes many of the same components as the other Model 880 style package designs with some modifications to limit source assembly placement within the package. The 880SC package is designed to transport the same source wire assemblies used in the Model 880 Delta, 880 Sigma and 880 Elite style packages.

The radioactive material of these source assemblies is sealed in a special form source capsule. The source capsule, stop ball and connector are swaged to a flexible steel wire to form the source wire assembly.

1.2.2 Contents

The Model 880 Series transport packages are designed to transport special form capsules containing the isotopes listed in Table 1.2.A. Additional information for the contents is provided in Table 1.2.B. Table 1.2.B has been adjusted to include the maximum decay heat for Ir-192 adjusted to account for content activity of the source, and to include the weight of the source wire assembly holding the radioactive contents. Actual content to output activity varies based on the capsule configuration as well as variations in isotope self-absorption. A factor of 2.3 was used for Ir-192 to convert output activity to content activity as this factor reflects the worst case variation for Ir-192 sources transported in these packages. The source capsules are loaded into the Model 880 Series device and secured according to the procedure described in Section 7.

The maximum weight of the contents for the shield containers listed in Table 1.2.B are calculated based on the package capacity, the lowest specific activity of Ir-192 (200 Ci/gram) used in source production for these devices and the weight of the remaining source assembly components that comprise the source holder.

Note: Ir-192 of higher specific activity can be used but this would produce sources with lower total mass of the contents. Se-75 has a lower density than Ir-192 and will produce source capsules of lesser maximum weight than their Ir-192 counterparts. Values listed in the Table 1.2.B are the maximum content masses.

Table 1.2.B: Isotope Information Permitted in the Model 880 Series Packages

Package ID	Isotope	Activity[1]	Capsule Form[2]	Chemical/Physical Form	Maximum Content Weight	Maximum Decay Heat[3]
880 Delta	Ir-192	150 Ci	Special Form	Metal	18 gram	3 Watts
	Se-75	150 Ci	Special Form	Metal-Selenide Compound		0.76 Watts
880 Sigma	Ir-192	130 Ci	Special Form	Metal	18 gram	2.4 Watts
	Se-75	150 Ci	Special Form	Metal-Selenide Compound		0.76 Watts
880 Elite	Ir-192	50 Ci	Special Form	Metal	18 gram	1 Watt
	Se-75	150 Ci	Special Form	Metal-Selenide Compound		0.76 Watts
880SC	Ir-192	150 Ci	Special Form	Metal	18 gram	3 Watts
	Se-75	150 Ci	Special Form	Metal-Selenide Compound		0.76 Watts

[1] Maximum Activity for Ir-192 is defined as output Curies as required in ANSI N432 and 10 CFR 34.20 and in line with TS-R-1 and Rulemaking by the USNRC and the USDOT published in the Federal Register on 26 January 2004.

[2] Special Form is defined in 10 CFR 71, 49 CFR 173, and IAEA TS-R-1.

[3] Maximum decay heat for Ir-192 is calculated by correcting the output activity to content activity. A factor of 2.3 is used for Ir-192 to account for source capsule and self-absorption in this conversion. No corrections are made for Se-75.

1.2.3 Special Requirements for Plutonium

Not applicable. This package is not used for the transportation of plutonium.

1.2.4 Operational Features

These packages do not involve complex containment systems for source securement. The sources for these packages are all special form, welded capsules. The source wire assembly is held securely in the device by components of the rear plate assembly on the Models 880 Delta, 880 Sigma and 880 Elite style packages and by components of the locking plate assembly on the Model 880SC package. On the Model 880 Delta, 880 Sigma and 880 Elite packages, the sleeve, in conjunction with the selector ring retainer, prevents the stop ball of the source wire from being pulled through the rear of the package during transport. On the Model 880SC, the sleeve, in conjunction with the lockslide and top and bottom lock plates, prevents the stop ball of the source wire from being pulled out the rear of the package during transport.

For the Model 880 Delta, 880 Sigma and 880 Elite packages, the lock slide in the rear plate assembly, prevents the stop ball from being pushed out through the front of the package when in the secured position. When the Model 880 Delta, 880 Sigma and 880 Elite packages are prepared for transport, the lock slide is locked in the secured position and the selector ring is rotated to the lock position preventing source movement. A cover over the source wire connector prevents access to the source assembly until a keyed lock is actuated and the cover removed. This cover is in place during transport of the package.

For the Model 880SC package, the sleeve in the locking plate assembly, prevents the stop ball from being pushed forward past the center of the shield out through the opposite end of the package when in the secured position. When the Model 880SC is prepared for transport, the lock slide further secures the source wire in the lock position preventing its removal from the package. A cap is installed over the source wire connector which prevents access to the source assembly until a spring plunger is released to allow opening of the cover. This cover is in place during transport of the package.

The 880 Series transport containers are assembled and secured as described in Section 7.

1.3 Appendix

Figures 1.3.A. through 1.3.G show sketches of the Model 880 style packages as prepared for transport in the possible transport configurations. Additional drawings of the Model 880 style transport packages are also enclosed in this appendix.

Figure 1.3.A – Sketch of Model 880 Delta, 880 Sigma or 880 Elite without optional Jacket Prepared for Transport

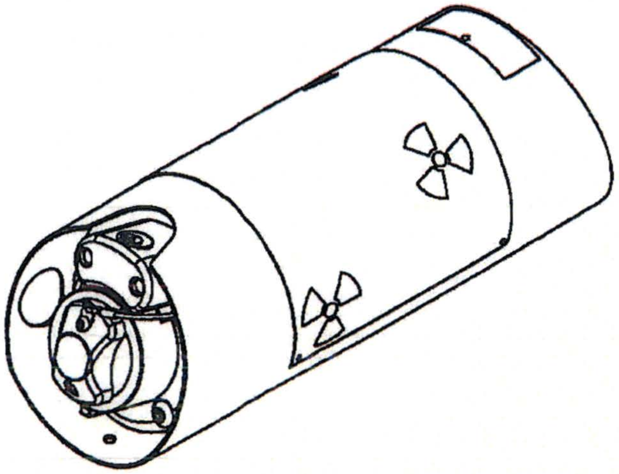

Figure 1.3.B – Sketch of Model 880 Delta, 880 Sigma or 880 Elite with optional Jacket #1 Prepared for Transport

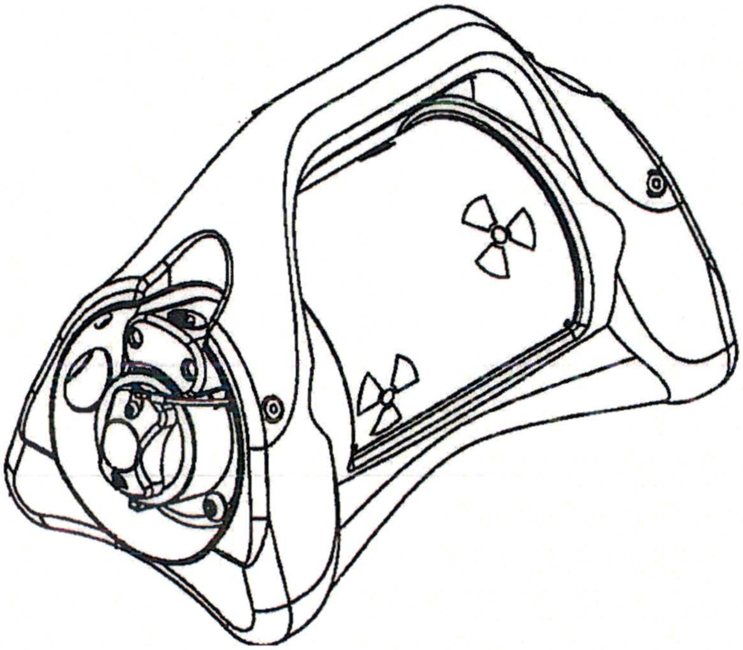

Figure 1.3.C – Sketch of Model 880 Delta, 880 Sigma or 880 Elite with optional Jacket #2 Prepared for Transport

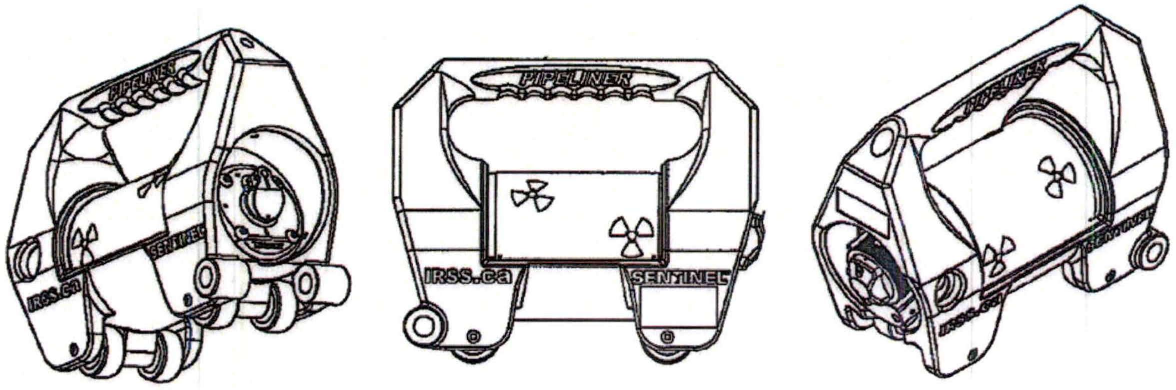

Figure 1.3.D – Sketch of Model 880 Delta, 880 Sigma or 880 Elite with optional Jacket #3 Prepared for Transport

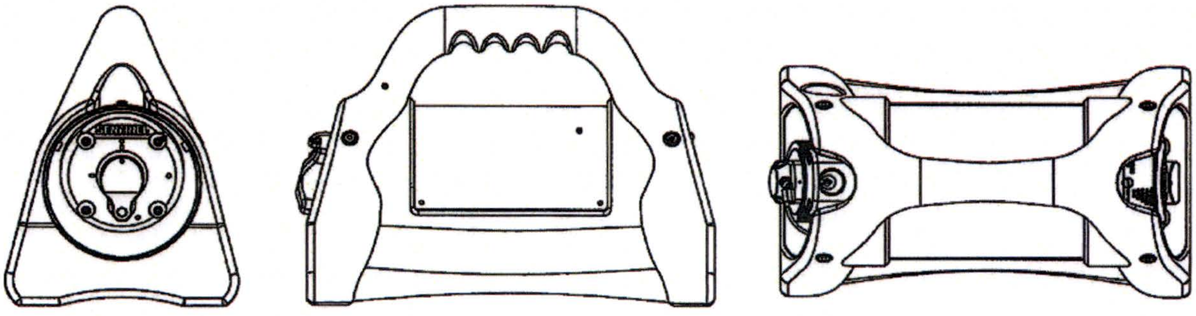

Figure 1.3.E – Sketch of Model 880 without optional Jacket Prepared for Transport

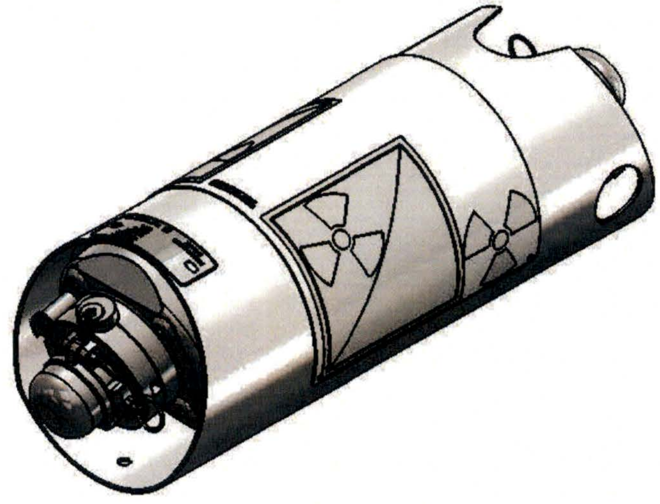

Figure 1.3.F – Sketch of Model 880SC with optional Jacket Version #1 Prepared for Transport

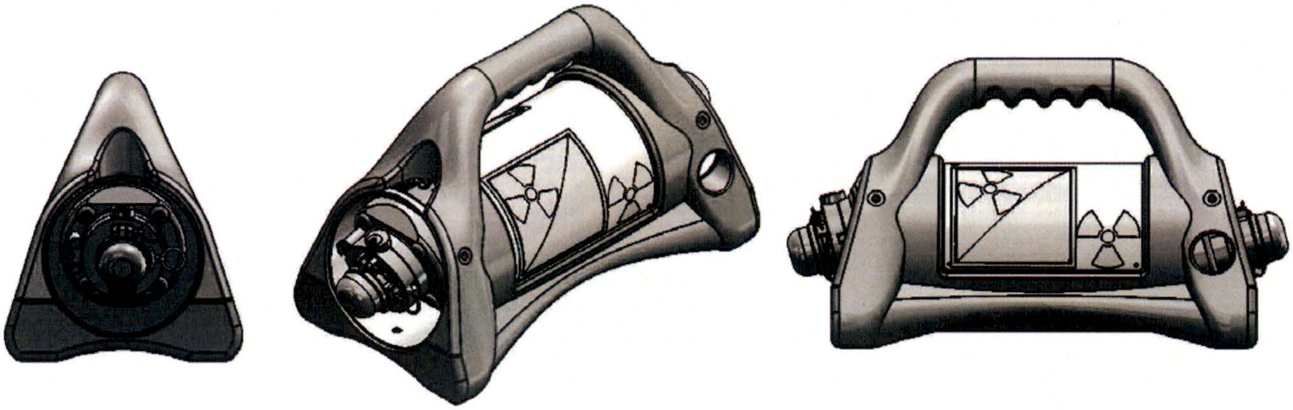

1.3.1 Drawing R88000

Security-Related Information Figure Withheld Under 10 CFR 2.390.

APPROVALS

	11-Jan-17
	12Jan17
	12Jan17

DIMENSIONS IN INCHES
TOLERANCES:
FRACTIONS ±1/16
X ± 0.1
XX ± 0.01
XXX ± 0.005

QSA GLOBAL
40 NORTH AVE, BURLINGTON MA 01803

DESCRIPTIVE DRAWING

TITLE MODEL 880 PROJECTOR

SIZE A
DWG. NO. R88000
REV W
SCALE: NONE
SHEET 1 OF 6

Security-Related Information
Figure Withheld Under 10 CFR 2.390.

DIMENSIONS IN INCHES
TOLERANCES:
FRACTIONS ±1/16
X ± 0.1
XX ± 0.01
XXX ± 0.005

QSA GLOBAL
40 NORTH AVE. BURLINGTON MA 01803

DESCRIPTIVE DRAWING

TITLE MODEL 880 PROJECTOR

SIZE A
DWG. NO. R88000
SCALE: NONE
SHEET 2 OF 6
REV W

Security-Related Information
Figure Withheld Under 10 CFR 2.390.

DIMENSIONS IN INCHES
TOLERANCES:
FRACTIONS ±1/16
X ± 0.1
XX ± 0.01
XXX ± 0.005

QSA GLOBAL
40 NORTH AVE, BURLINGTON MA 01803

DESCRIPTIVE
DRAWING

TITLE MODEL 880 PROJECTOR

SIZE A
DWG. NO. R88000
SCALE: NONE
SHEET 3 OF 6
REV W

Security-Related Information
Figure Withheld Under 10 CFR 2.390.

DIMENSIONS IN INCHES
TOLERANCES:
FRACTIONS ±1/16
X ± 0.1
XX ± 0.01
XXX ± 0.005

QSA GLOBAL
40 NORTH AVE, BURLINGTON MA 01803

DESCRIPTIVE
DRAWING

TITLE MODEL 880 PROJECTOR

SIZE A
DWG. NO. R88000
SCALE: NONE
SHEET 4 OF 6
REV W

Security-Related Information
Figure Withheld Under 10 CFR 2.390.

DIMENSIONS IN INCHES
TOLERANCES:
FRACTIONS ±1/16
X ± 0.1
XX ± 0.01
XXX ± 0.005

QSA GLOBAL
40 NORTH AVE, BURLINGTON MA 01803

DESCRIPTIVE DRAWING

TITLE MODEL 880 PROJECTOR

SIZE A
DWG. NO. R88000
SCALE: NONE
SHEET 5 OF 6
REV W

Security-Related Information
Figure Withheld Under 10 CFR 2.390.

DIMENSIONS IN INCHES
TOLERANCES:
FRACTIONS ±1/16
X ± 0.1
XX ± 0.01
XXX ± 0.005

QSA GLOBAL
40 NORTH AVE, BURLINGTON MA 01803

DESCRIPTIVE
DRAWING

TITLE MODEL 880 PROJECTOR

SIZE A
DWG. NO. R88000
SCALE: NONE
SHEET 6 OF 6
REV W

1.3.2 Drawing R880SC

Security-Related Information
Figure Withheld Under 10 CFR 2.390.

QSA GLOBAL
40 NORTH AVE, BURLINGTON, MA 01803

DESCRIPTIVE DRAWING

ERF #	APPROVALS	DATE
3387		22Dec15
		22Dec15

TITLE MODEL 880SC - SOURCE CHANGER

SIZE A

DWG. NO. **R880SC**

SCALE: NONE

SHEET 1 OF 6

REV E

Security-Related Information
Figure Withheld Under 10 CFR 2.390.

QSA GLOBAL
40 NORTH AVE, BURLINGTON, MA 01803

DESCRIPTIVE DRAWING

TITLE MODEL 880SC - SOURCE CHANGER

SIZE A
DWG. NO. **R880SC**
SCALE: NONE
SHEET 2OF6
REV **E**

Security-Related Information
Figure Withheld Under 10 CFR 2.390.

QSA GLOBAL
40 NORTH AVE. BURLINGTON, MA 01803

DESCRIPTIVE DRAWING

TITLE	MODEL 880SC - SOURCE CHANGER		
SIZE A	DWG. NO. **R880SC**		REV E
	SCALE: NONE	SHEET 3 OF 6	

Security-Related Information
Figure Withheld Under 10 CFR 2.390.

QSA GLOBAL
40 NORTH AVE, BURLINGTON, MA 01803

DESCRIPTIVE DRAWING

TITLE MODEL 880SC - SOURCE CHANGER

SIZE A
DWG. NO. **R880SC**
SCALE: NONE
SHEET 4 OF 6
REV **E**

Security-Related Information
Figure Withheld Under 10 CFR 2.390.

QSA GLOBAL 40 NORTH AVE, BURLINGTON, MA 01803		DESCRIPTIVE DRAWING
TITLE	MODEL 880SC - SOURCE CHANGER	
SIZE A	DWG. NO. **R880SC** SCALE: NONE	SHEET 5 OF 6

REV E

Security-Related Information
Figure Withheld Under 10 CFR 2.390.

QSA GLOBAL
40 NORTH AVE, BURLINGTON, MA 01803

DESCRIPTIVE DRAWING

TITLE MODEL 880SC - SOURCE CHANGER

SIZE A
DWG. NO. **R880SC**
SCALE: NONE
SHEET 6 OF 6
REV **E**

1.3.3 Drawing R88095

Section 2 - STRUCTURAL EVALUATION

This section identifies and describes the principal structural engineering design of the packaging, components, and systems important to safety and compliance with the performance requirements of 10 CFR Part 71 and TS-R-1.

2.1 Description of Structural Design

2.1.1 Discussion

The Model 880 Series transport packages are described in Section 1.2, "Package Description."

2.1.2 Design Criteria

The Model 880 Series transport packages are designed to comply with the requirements for Type B(U) packaging as prescribed by 10 CFR 71, IAEA TS-R-1 (2009 Edition) and CNSC PTNS SOR/2015-145. All design criteria are evaluated by a straightforward application of the appropriate section of these requirements.

2.1.3 Weight and Centers of Gravity

The transport package weight varies from 37 lbs (17 kg) up to 55 lb (25 kg). The center of gravity of the 880 Series transport packages is approximately 2.5 inches (64 mm) above the bottom of the package.

2.1.4 Identification of Codes and Standards for Package Design

See Section 2.1.2 relating to design criteria of the package. For components important to safety or package integrity, any applicable, specific codes or standards related to the finished assemblies for these transport packages are specified on the drawings contained in Appendix 1.3. All component fabrication (including assembly) is controlled under the QSA Global, Inc. Quality Assurance Plan approved by the USNRC and ISO. All welding under this plan adheres to the standards referenced on the drawings in Appendix 1.3. All hardware meets the standards referenced on the drawings in Appendix 1.3. All external fabrication deemed critical to safety is either verified to equivalent in-house standards or dedicated as appropriate for use prior to release as part of this transport package.

In general, the transport aspects of this design was based on the Type A and Type B(U) container requirements of 49 CFR, 10 CFR 71, CNSC PTNS and IAEA regulations as identified in Section 1.1.

Security-Related Information
Figure Withheld Under 10 CFR 2.390.

ERF #	APPROVALS	DATE
2479		18Nov10
		15Nov10

QSA GLOBAL
40 NORTH AVE, BURLINGTON, MA 01803

DESCRIPTIVE DRAWING

TITLE **PIPELINER TYPE B TRANSPORT DEVICE**

SIZE B
DWG. NO. R88095
SCALE: 1:2
SHEET 1 OF 2
REV A

Security-Related Information
Figure Withheld Under 10 CFR 2.390.

QSA GLOBAL

40 NORTH AVE. BURLINGTON, MA 01803

DESCRIPTIVE DRAWING

TITLE **PIPELINER JACKET ASSEMBLY**

SIZE B

DWG. NO. **R88095**

SCALE: 1:2

SHEET **2** OF **2**

REV **A**

2.2 Materials

2.2.1 Material Properties and Specifications

Table 2.2.A lists the relevant mechanical properties (at ambient temperature) of the principal materials used in the Model 880 Series transport package. The location and use of these materials is shown on the drawings contained in Section 1.3. The sources in the last column are listed after the tables.

Table 2.2.A: Mechanical Properties of Principal Package Materials

Material	Form	Condition	Tensile Strength (ksi)	Yield Strength (ksi)	Elongation (%)	Specification
Aluminum Type 6061	Bar	T6	45	40	17	Ref #1 Page 61
Brass Type 360	Bar	H02	58	45	25	Ref #1 Page 337
Copper Type C101 or C110	Sheet	H02	42	36	14	Ref #1 Page 276 & 284
Depleted Uranium (Minimum 99%)	Casting	As Cast	58	29	4	Ref #1 Page 822
Stainless Steel Type CF3	Casting	As Cast	70	30	35	ASTM A743
Stainless Steel Type CF16FA	Casting	As Cast	65	28	25	ASTM A743
Stainless Steel Type XM-7 (S30430)	Fastener	NA	80	30	10	Federal Specification FF-S-86.
Stainless Steel Type 303	Bar	Annealed	85	35	50	Ref #2 Page 19
Stainless Steel Type 304/304L	Plate/Sheet	Annealed	70	25	40	ASTM A240 or A666
Stainless Steel Type 304/304L	Bar	Annealed	70	25	30	ASTM A276 or A479
Stainless Steel Type 304L	Tube	Annealed	70	25	40	ASTM A249 or A269
Stainless Steel Type 304L	Bar	Annealed	75	30	35	ASTM A743 Grade CF3
Stainless Steel Type 316	Fastener	CW	95	60	20	ASTM F593
Stainless Steel Type 430	Fastener	NA	Ref #3 Note	NA	NA	A276, A580 per NAS1330 or as specified in Ref #3
Stainless Steel Type 630 (17-4PH)	Bar	H900	190	170	10	ASTM A564
Stainless Steel Type 18-8	Fastener	NA	70	45	30	Commercial Grade Item
Titanium Tube Ti-3AL-2.5V	Tube	Grade 9 Annealed	90	70	15	ASTM B338 Grade 9
Titanium Shield Pin Ti-6AL-4V	Rod	Grade 5	130	120	10	ASTM B348
Tungsten	Bar	Class 1	94	75	2	ASTM B777 Class 1

Resource references:

1. American Society for Metals, Metals Handbook Ninth Edition, Volume 2 Properties and Selections: Nonferrous Alloys and Pure Metals, 1979.

2. American Society for Metals. Metals Handbook Ninth Edition, Volume 3 Properties and Selections: Stainless Steels, Tool Materials and Special-Purpose Metals, 1980.

3. National Aerospace Standard, NAS1330, Nut, Blind Rivet – Countersunk Head. Note: Fastener used is NAS1330C5E having 6870 Lb-Min Ultimate Thread Strength Tested per ASTM F606.

2.2.2 Chemical, Galvanic or Other Reactions

The non-safety related materials are aluminum, brass and polyurethane. Version 3 of the optional jacket also includes lithium-ion batteries and other circuitry associated with the functionality of the PM-Tag. The aluminum and brass are more susceptible to corrosion and chemical reaction than the safety materials, but pose no threat to safety or containment.

The lithium-ion batteries, and other circuitry in Version 3 of the optional jacket, are contained in a watertight plastic container within the jacket. These components do not come in contact with the other package components and will pose no threat to safety or containment due to chemical, galvanic or other reactions during transport.

The lithium-ion battery/cells comply with the transport requirements of 49 CFR 173.185 which requires all lithium cell(s) or batteries to comply with UN Manual of Tests and Criterial Sub-Section 38.3. This includes performance based testing that would simulate transport conditions and requires the battery/cells to maintain their integrity without leakage, rupture or other failure. So long as the lithium-ion cells and battery retain their integrity, there will be no chemical, galvanic or other reactions that could adversely impact the package integrity during transport.

The safety related materials used in the construction of the Model 880 Series transport packages are depleted uranium metal, stainless steel, titanium, tungsten, and copper. There will be no significant chemical or galvanic action between any of these components.

To prevent the possible formation of a eutectic alloy from steel and depleted uranium during the Hypothetical Accident Conditions thermal scenario, defined by 10 CFR 71.73(c)(4), copper separators are used at all steel-uranium interfaces. With this construction, there will be no significant chemical or galvanic reaction between package components during normal or hypothetical accident conditions of transport.

2.2.3 Effects of Radiation on Materials

Depleted uranium, tungsten, steel and polyurethane foam have been used in this package as well as other transport packaging for decades without degradation of the package performance over time due to irradiation from the package contents.

2.3 Fabrication and Examination

2.3.1 Fabrication

Package components are procured, manufactured and inspected for use under QSA Global, Inc. NRC approved QA Program Number 0040. This QA program is based on the application of guidance contained in NUREG/CR-6407 "Classification of Transportation Packing and Dry Spent Fuel Storage System Components According to Importance to Safety" (1996) and Regulatory Guide 7.10 Revision 3 "Establishing Quality Assurance Programs for Packaging Used in Transport of Radioactive Material" (2015). Quality Class A components on the package are considered to be important to the package safety. All transport packages will be evaluated and documented for compliance to the drawings provided in Section 1.3 prior to initial use as part of a Model 880 Series transport package.

2.3.2 Examination

Section 8 describes the acceptance testing and routine maintenance requirements for package components used on the Model 880 Series packages.

2.4 General Requirements for All Packages

2.4.1 Minimum Package Size

The Model 880 transport package is cylindrically shaped, with the smallest overall dimensions of 5 inches (127 mm) in diameter and 13 5/16 inches (338 mm) in length. Therefore, it exceeds the minimum package size requirements specified in the referenced regulations.

2.4.2 Tamper-Indicating Feature

The front port of the Model 880 Delta, 880 Sigma and 880 Elite packages are designed to require a special tool (guide tube fitting) to be placed in the front port and rotated before the shield can be opened. This prevents any inadvertent or unintentional opening of the package during transport. A provision for a tamper indicator seal wire around the knob of the front plate assembly is provided. This seal wire is not readily breakable, therefore if it is broken during transport, it serves as evidence of possible unauthorized access to the contents. Use of either of these features meets the tamper indicator requirements for these packages.

For the Model 880SC, a tamper indicator seal wire is inserted through the lock assembly top plate and cap on each locking assembly. This seal wire is not readily breakable, therefore if it is broken during transport, it serves as evidence of possible unauthorized access to the contents. Use of these features meets the tamper indicator requirements for this package.

2.4.3 Positive Closure

These packages do not involve complex containment systems for source securement. The sources for these packages are all special form, welded capsules. The source wire assembly is held securely in the packages by components of the rear plate or locking plate assemblies (as applicable). These components prevent the stop ball of the source wire from moving from the secured position in the package.

When the Model 880 Series packages are prepared for transport, the sleeve and the lock slide maintain the source wire assembly locked in the secured position preventing source movement. A cover/cap over the source wire connector prevents access to the source assembly during transport. These features maintain positive closure of the transport package and containment of the radioactive material during transport.

2.5 Lifting and Tiedown Standards for All Packages

2.5.1 Lifting Devices

The Model 880 transport package has no lifting device but can be lifted by grasping the steel welded cylinder with two hands. The optional plastic jackets incorporate handles to be used for lifting and carrying. The plastic jacket handles were tested and proven in Test Plan Report 115 Rev 1 and Test Plan 188 Report #1 Rev 12 (See Section 2.12) to withstand a static load of 125 times the package weight without failure.

The 1-1/4-inch diameter hole through the side of the shell cylinder at the lock end could possibly be used as a hoisting point. When lifted from this hole, the minimum factor of safety is 40 against yielding.

If the jacket or hoisting point feature were to fail, it would not affect the shield container and source wire security. As a result, the package safety would not be compromised. Therefore, the lifting devices comply with the requirements of 10 CFR 71.45(a).

2.5.2 Tie-Down Devices

The Model 880 has no system of tie down devices that are a structural part of the transport package. The package could possibly be tied down using the 1-1/4 inch hole, but is not recommended. This hole can withstand a g-force equal to a static force 11 times the weight of the package when applied in tension. At this force, a factor of safety of 4 exists before yielding. As demonstrated in Test Plan Report 115 (Section 2.12) Version 1 of the package handle if used as a tie down can withstand 125 times the weight of the package without failure. As demonstrated in Test Plan Report 188 (Section 2.12), the handle on Version 2 of the package jacket, if used as a tie down, can withstand 25 times the weight of the package without failure. There are no other tie-down features that are part of the structure of the package. The package can be blocked and braced according to standard transportation practices.

2.6 Normal Conditions of Transport

2.6.1 Heat

The decay heat source for the Model 880 Series transport packages are listed in Table 1.2.B. Iridium-192, supplies approximately 8.6 milliwatts per Curie based on assuming a decay energy of 1.46 MeV/decay. The thermal evaluation for the heat test is described in Section 3 and is based on the decay energy of Ir-192 as this is greater than Se-75 (see Table 1.2.B).

The Version 3 jacket includes a lithium-ion battery and electronic circuitry. The Model 880 devices transported with the Version 3 jacket can be transported under two configurations that can affect the package compliance with the heat conditions under normal transport. The Model 880 with the Version 3 jacket can be transported as follows:

- Transport Configuration 1: Similar to the transport modes for the Version 1 and 2 transport jackets.
- Transport Configuration 2: This configuration places the Model 880 with the Version 3 transport jacket inside a charging box where the lithium-ion batteries are charging during transport. In this transport condition, the charging box acts as an overpack during transport for the Model 880 package. This transport configuration is not applicable to the Model 880 when transported by commercial carriers, airlines or ships. This configuration is only applicable to road transport of the package by users of the package within vehicles equipped with a charging box.

Calculations supporting the decay heating performance of the Model 880 packages is contained in Section 3.4.1.2 and summarized in Table 2.6.A. In all transport configurations, the maximum temperature of the package is 50°C (122°F) in the shade and still air at 38°C. Accounting for solar heating effects (Section 3.4.1.1), the maximum temperature of the package surface was calculated to be 65.4°C (149.6°F).

2.6.1.1 Summary of Pressures and Temperatures

Table 2.6.A: Summary Temperatures Normal Transport

Temperature Condition	Model 880 Series	Comments
Insolation (38°C in full sun)	65.4°C (149.7°F)	Section 3.4.1.1.
Decay Heating (38°C in shade) (Model 880 Series without the optional jacket)	47°C (117°F)	Section 3.4.1.2
Decay Heating (38°C in shade) (Model 880 Series using the Version 3 jacket transported outside of the charging box)	48°C (118°F)	Section 3.4.1.2
Decay Heating (38°C in shade) (Model 880 Series using the Version 3 jacket transported inside of the charging box)	50°C (122°F)	Section 3.4.1.2

As all components are vented to ambient, no pressure will build up in the package under Normal Transport conditions that would adversely affect package performance or integrity. Evaluation of pressures for this package are contained in Section 3.4.2 and summarized in Table 3.1.B.

2.6.1.2 Differential Thermal Expansion

Expansion of the outer steel shell circumference during Normal Transport is approximated by:

$$E = \pi D \alpha \Delta T$$

Where: D = Diameter of the outer shell (5 in)
α = Coefficient of Thermal expansion
ΔT = Cold temperature differential (from -40°F to 65°F)
ΔT = Hot temperature differential (from 65°F to 150°F)

Substituting we get: $E = \pi$ (5 in)(9.9μin/in°F)(105°F) = 0.016 in (cold)
$E = \pi$ (5 in)(9.9μin/in°F)(85°F) = 0.013 in (hot)

Manufacturing tolerance on this component is ±1/16 inch, therefore the thermal expansion encountered during Normal Transport will be insignificant with respect to the manufacturing tolerances of the package.

Reference: "American Society for Metals, Volume 1", 10th Edition.

2.6.1.3 Stress Calculations

As shown in Section 2.6.1.2, thermal differentials will have no adverse effect on the package. Mechanical loads at the maximum weight of the series (55 lbs) are distributed across the central 1/3 of the package body and are small compared to the yield strength of the steel (30,000 psi – See Table 2.2.A).

Inner diameter of body = (5 in – 2(0.071 in)) = 4.86 in
Area of Central 1/3 of body cylinder = (4.86 in)(4 in) = 19.44 in^2
Stress on body cylinder = 55 lbs/19.44 in^2 = 2.8 psi

This material stress is insignificant to the yield strength of the outer stainless steel cylinder.

2.6.1.4 Comparison with Allowable Stresses

All stresses calculated in Section 2.6.1 are well below strengths for the materials of construction. Further, the Model 880 Series package was fully tested and passed under Normal Conditions of transport. It is therefore concluded that the Model 880 Series package will satisfy the performance requirements specified by the regulations.

2.6.2 Cold

An ambient air temperature of -40°C (–40°F) in still air and shade has no effect on the safety of the package. The safety materials: stainless steel, titanium, tungsten and depleted uranium retain their mechanical properties at this temperature. This temperature will also have no adverse effect on the battery contained in the Version 3 jacket which comply with 49 CFR 173.185, as these batteries are required to retain integrity after repeated exposure to -40°C (-40°F). Thus, it is concluded that the Model 880 transport package will withstand the normal transport cold condition.

2.6.3 Reduced External Pressure

The Model 880 Series transport packages are open to the atmosphere and contains no components which could create a differential pressure relative to atmospheric conditions or components within the package. The authorized contents are special form source capsules that meet a minimum ANSI N43.6-2007 and ISO 2919-1999 classification of Class 3 for pressure. This classification is more limiting than the reduced external pressure requirement as it covers 25 kN/m^2 to 7MN/m^2. Therefore, the reduced external pressure requirements of 3.5 psi in 10 CFR, 8.7 psi (60 kPa) in 49 CFR and IAEA will not adversely affect the package containment.

The Model 880 Series transport packages are open to the atmosphere and contains no components which could create a differential pressure relative to atmospheric conditions or components within the package. The authorized contents are special form source capsules that meet a minimum ANSI N43.6-2007 and ISO 2919-1999 classification of Class 3 for pressure. This classification is more limiting than the reduced external pressure requirement as it covers 25 kN/m^2 to 7MN/m^2. Therefore, the reduced external pressure requirements of 3.5 psi in 10 CFR, 8.7 psi (60 kPa) in 49 CFR and IAEA will not adversely affect the package containment.

2.6.4 Increased External Pressure

The Model 880 Series transport packages are open to the atmosphere and contain no components which could create a differential pressure relative to atmospheric conditions. The authorized contents are special form source capsules that meet a minimum ANSI N43.6-2007 and ISO 2919-1999 classification of Class 3 for pressure. This classification is more limiting than the reduced external pressure requirement as it covers 25 kN/m^2 to 7 MN/m^2. Therefore, the increased external pressure requirements of 20 psi in 10 CFR 71 will not adversely affect the package containment.

2.6.5 Vibration

The lock assemblies on the Model 880 Series package are secured using the fasteners similar to those used on the Model 660 devices (Reference Certificate of Compliance USA/9283/B(U)). The Model 880 Delta, 880 Sigma and 880 Elite packages have been use in transport since 2001 without incident caused by vibration. The lock assembly of the Model 880SC utilizes fasteners similar to those used on the other Model 880 packages, and will also not be adversely impacted by vibration incident to transport.

The shield in the Model 880 Series packages is attached to the brackets by titanium pins. These pins are secured by stainless steel cotter pins. Cotter pins are routinely used in high vibration situations (i.e. wheel bearing nut retention) and will easily withstand vibration incident to transport.

The compact profile of the package ensures a limited affect from transport vibration and acceleration to critical components of the device. The lock attachment screws and end plate screws are tightened to a prescribed torque to prevent unintentional release even after repeated use. It is therefore concluded that the Model 880 Series packages will withstand vibration normally incident to transport.

2.6.6 Water Spray

The Model 880 Series transport packages are constructed of water-resistant materials throughout. Therefore, the water spray test would not reduce the shielding effectiveness or structural integrity of the package.

2.6.7 Free Drop

A total of ten test specimens have been tested and evaluated for compliance to these requirements. Four units were tested as described in Test Plan Report 108 to evaluate the non-jacket and Version 1 jacket configurations and two additional units were tested as described in Test Plan Report 186 #1 to evaluate the Version 2 jacket configuration (Section 2.12). One additional unit was tested as described in Test Plan 216 Report to evaluate the Version 3 jacket configuration (Section 2.12). The remaining three test units were tested to evaluate compliance of the Model 880SC under Test Plan Report 206 #1. Justification for drop test orientations and test conditions are contained in Test Plan 108, Test Plan 186, Test Plan 206 and Test Plan 216 (Section. 2.12). The test units were subjected to the 1.2 meter (4 foot) free drop followed by the hypothetical accident 9 m drop and puncture bar drop tests.

Drop orientation impact locations for the 1.2 m free drop included the lock cover and cylinder lip, the cylinder bottom surface, the cylinder left side surface, the lock cap and the lock cover. As seen in Test Reports 108, 186, 206 and 216 (Section 2.12), the test units sustained some damage but remained fully functional with the sources remaining secured and shielded after testing. Radiation profiles performed at the conclusion of all the testing showed that there was no significant increase in radiation levels from any of the test units. The Model 880 Series packages maintained their structural integrity and shielding effectiveness under the normal transport drop test conditions and the packages comply with the requirements of this section.

2.6.8 Corner Drop

This test is not applicable, as the transport package does not transport fissile material, nor is the exterior of the transport package made from either fiberboard or wood.

2.6.9 Compression or Stacking

Test Plan and Report 100 (Section 2.12) documents that Test Specimens P01 and P02 were subjected simultaneously to a compressive load of 459 lbs (209 kg) for a period of 24 hours. This exceeds five times the maximum transport package weight of 46 lbs for the heaviest version of the Model 880 (without the optional jacket). The actual compressive weight of 459 lbs (209 kg) is greater than 13 kPa (2 lb/in^2) multiplied by the vertically projected area of the transport package.

Following the test, no damage to the specimens was observed. Radiation profiles performed at the conclusion of the test showed no significant increase in radiation levels. The Model 880 series package maintained its structural integrity and shielding effectiveness and demonstrated that the packages comply with the requirements of this section.

2.6.10 Penetration

Models 880 Delta, 880 Sigma and 880 Elite

Test Plan and Report 100 (Section 2.12) documents that Test Specimen P01 was subjected to the penetration test. The penetration bar impacted on top, exterior of the steel cylinder at the point where the shield is closest to the steel cylinder (see Figure 2.6.A).

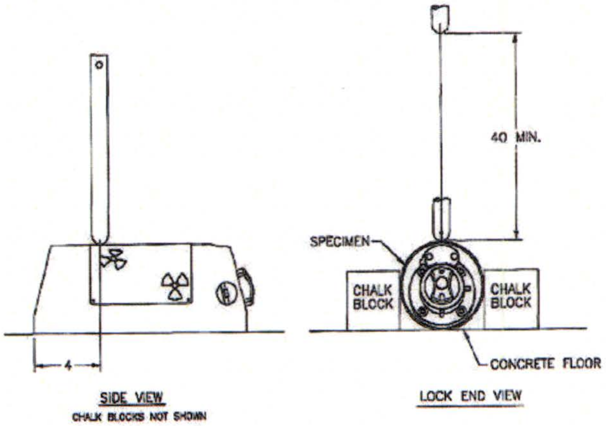

Figure 2.6.A – Specimen P01 Orientation for the Penetration Test

The penetration bar impacted as intended and caused minor damage to the steel cylinder. Radiation profiles performed at the conclusion of the test showed no significant increase in radiation levels. The Model 880 series package maintained its structural integrity and shielding effectiveness and demonstrated that the packages comply with the requirements of this section.

Model 880SC

Test Plan and Report 206 (Section 2.12) documents that Test Specimens TP206(A) and TP206(B) were subjected to the penetration test. The penetration bar impacted on the lock and the lock slide as these were determined to be the most vulnerable to impact (see Figures 2.6.B and 2.6.C).

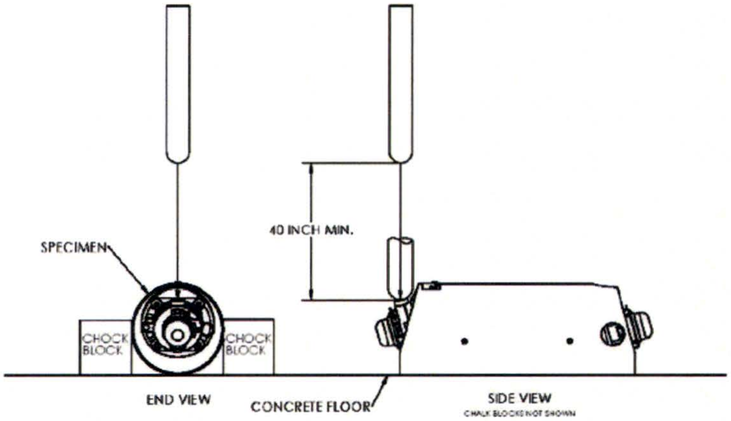

Figure 2.6.B – Specimen TP206(A) Orientation for the Penetration Test

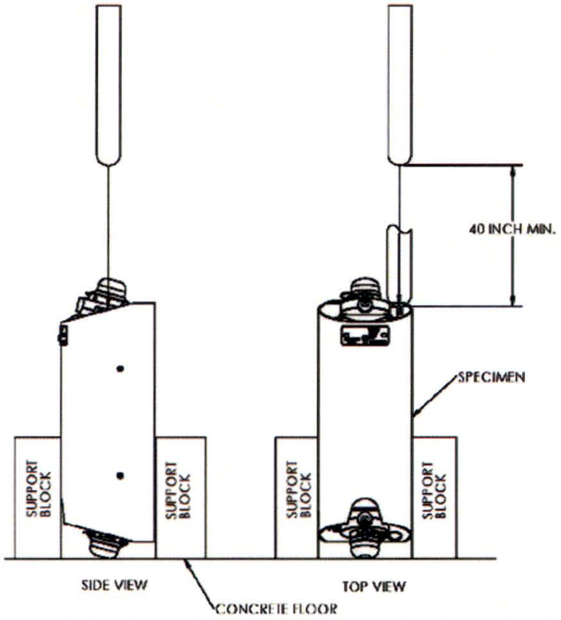

Figure 2.6.C – Specimen TP206(B) Orientation for the Penetration Test

The penetration bar impacted as intended and caused minor damage to the steel cylinder and lock slide components. Radiation profiles performed at the conclusion of the test showed no significant increase in radiation levels. The Model 880SC package maintained its structural integrity and shielding effectiveness and demonstrated that the package complies with the requirements of this section.

2.7 Hypothetical Accident Conditions

Sections 2.7.1 through 2.7.5 summarize evaluations and testing for the hypothetical accident conditions of transport tests. Section 2.7.8 summarizes the results of this testing. The test sequence as specified in 10 CFR 71.73 was determined to be the order which would result in the maximum damage to the package, considering the subsequent application of the fire test, because the 880 weldment provides containment and protection to the depleted uranium shield. This weldment protects the shield from damage during the puncture test and also limits shield degradation due to oxidation during the thermal test. The intention of the 30 ft drop was to breach the 880 weldment and/or remove the lock assembly which could allow aggregate damage during the subsequent puncture and thermal testing. Performance of the puncture test after the 30 ft drop test allows for additional damage to an area weakened by the 30 ft drop, thereby possibly creating or expanding any breach in the containment which would make the container shield susceptible to oxidation during the thermal testing which would produce the worst case potential damage to the containment system.

A total of ten test specimens have been tested and evaluated for compliance to these requirements. Four units were tested as described in Test Plan Report 108 to evaluate the non-jacket and Version 1 jacket configurations and two additional units were tested as described in Test Plan Report 186 #1 to evaluate the Version 2 jacket configuration (Section 2.12). One additional unit was tested as described in Test Plan Report 216 to evaluate the Version 3 jacket configuration (Section 2.12). The drop of test units from Test Plan 186 were conducted with the test specimens at or below -40°C (-40°F) to evaluate the effect of the cold temperature on the jacket material. Three test specimens were tested as described in Test Plan Report 206 #2 to evaluate the 880SC package configuration. Justification for drop test orientations and test conditions are contained in Test Plan 108, Test Plan 186, Test Plan 206 and Test Plan 216 (Section. 2.12).

2.7.1 Free Drop

2.7.1.1 End Drop

This orientation was used for Test Specimens TP108(B), TP186(A), TP186(B), TP206(A), TP206(B) and TP216-2 these orientations are shown in Figure 2.7.A. Results of this testing for TP108(B) produced one broken rear plate security screw, deformation of the steel cylinder and the rear plate puckered. Test unit TP186(A) produced cracks in the jacket, a slight bend to the rear plate, and damage to the lock cover after testing. Test unit TP186(B) caused the jacket to shatter into 5-6 major pieces after impact and caused bending to the jacket mounting screws. Some additional damage was also received by the lock assemblies and weldment shell. Results of this testing for TP206(A) produced two broken lock plate security screws and the top of the lock assembly moved approximately 1/8" away from the weldment end plate. Results of this testing for TP206(B) produced minor damage to the shell and cap. Results of this testing for TP216-2 produced crushing of the dust cover and shell on the rear plate end. The selector ring was also inoperable preventing the ability to unlock the source. In all cases the source remained secured and the shielding intact. Radiation profiles performed at the conclusion of this (and subsequent testing) showed no significant increase in radiation levels and that the package had maintained its structural integrity.

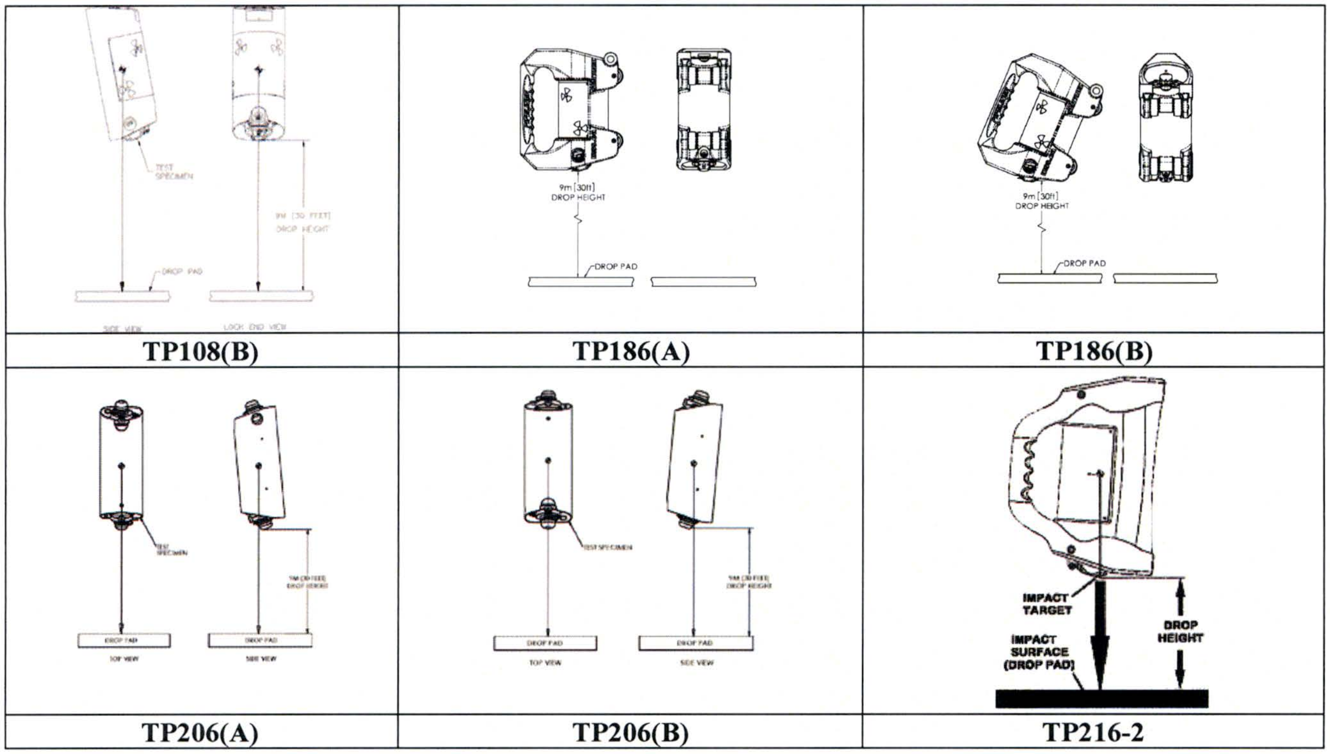

TP108(B) **TP186(A)** **TP186(B)**

TP206(A) **TP206(B)** **TP216-2**

Figure 2.7.A - 9 m Drop Test Orientation – End Drop

2.7.1.2 Side Drop

The side drop was performed on Test Specimens TP108(C) and TP108(D). These drop orientations are shown in Figures 2.7.B and 2.7.C. Results of the testing on specimen TP108(C) produced flattening of the steel cylinder bottom and bending of the front endplate near the bottom. This caused associated binding in movement of the outlet port but did not adversely affect source securement or unit shielding.

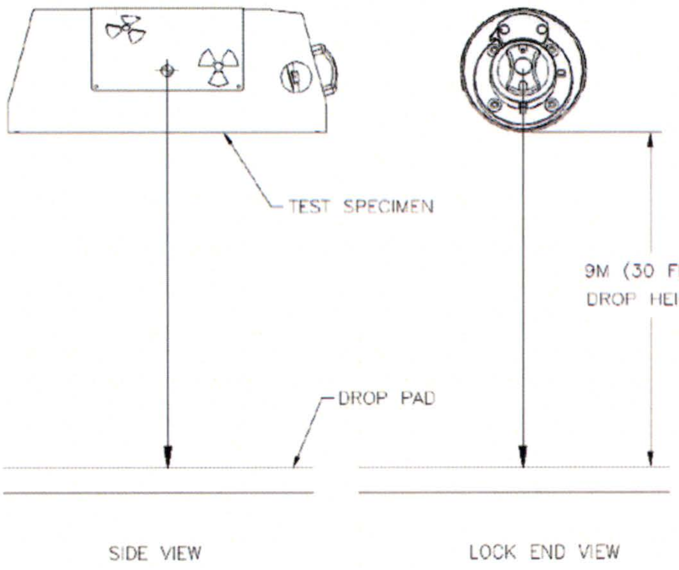

Figure 2.7.B - Model 880 (TP108(C)) 9 m Drop Test Orientation – Bottom Drop

Results of the testing on specimen TP108(D) produced flattening of the left side of the steel cylinder. Radiation profiles performed at the conclusion of the 9 m (and subsequent testing) showed no significant increase in radiation levels for either test unit and demonstrated that the package maintains its structural integrity under these drop orientations.

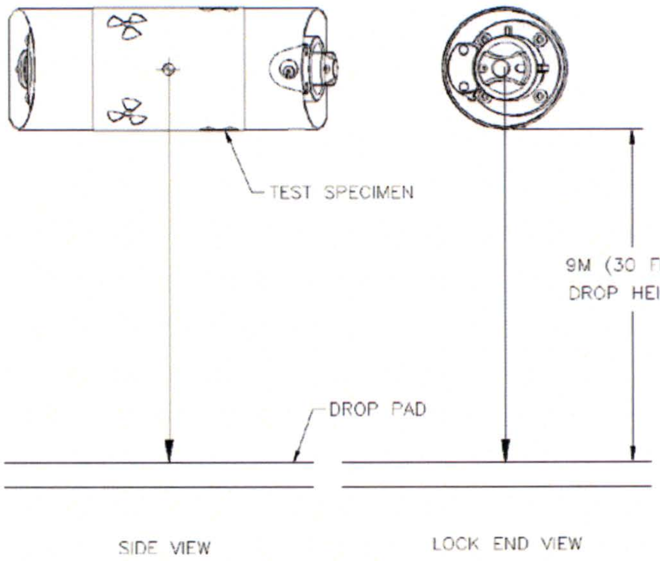

Figure 2.7.C - Model 880 (TP108(D)) 9 m Drop Test Orientation – Left Side Drop

2.7.1.3 Corner Drop

Not Applicable. The 880 Series package does not have corners.

2.7.1.4 Oblique Drops

The oblique drop was performed on Test Specimen TP206(C). This drop orientation is shown in Figure 2.7.D. Results of this testing for TP206(C) produced minor damage to the shell and rear cap. The rear cap opened but remained attached to the assembly. The source remained locked and secured.

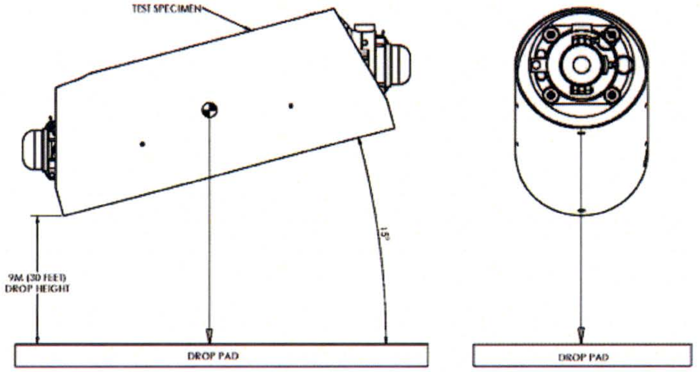

Figure 2.7.D - Model 880SC (TP206(C)) 9 m Drop Test Orientation – Shallow Angle Drop

Radiation profiles performed at the conclusion of this and subsequent testing showed no significant increase in radiation levels and that the 880SC package had maintained its structural integrity

The oblique drop was not performed on the Model 880 Delta, 880 Sigma or 880 Elite package configurations. In an oblique drop, the energy generated at impact would be distributed across the initial and secondary impact surfaces. This will produce less force on impact at the initial impact location and the force from the secondary impact will cause deformation of the ends of the steel cylinder without contributing to damage which could result in container failure.

Unlike the End and Side drops described in Sections 2.7.1.1 and 2.7.1.2, an oblique drop for these package configurations is less likely to cause a container failure by the mechanisms identified in Test Plans 108 and 186 (Section 2.12). These included fracture or penetration of the projector weldment, displacement of the shield within the projector weldment, distortion or fracture of the source, and failure of the source lock assembly and/or lock mounting screws.

2.7.1.5 Summary of Results

See Table 2.7.A for additional test unit results summary. In all cases, radiation profiles performed at the conclusion of all testing showed no significant increase in radiation levels for the test units and demonstrated that the 880 Series packages comply with the requirements of this section.

2.7.2 Crush

Not applicable. This package is not used for the Type B transport of normal form radioactive material.

2.7.3 Puncture

Justification for all test unit puncture orientations are included in Test Plan 108 Report, Test Plan 186 Report #1, Test Plan 206 Report #2 and Test Plan 216 Report (Section 2.12). Following the 9 meter (30 foot) free drop, the test specimens were subjected to the puncture test, in accordance with their respective test plan (Section 2.12). The drop of test unit TP186(A) was conducted with the test specimen at or below -40°C (-40°F) to evaluate the effect of the cold temperature on the jacket material. (The jacket material had broken away from the 880 weldment on test unit TP186(B) during the 9 meter (30 foot) drop and so this unit was tested for the puncture test at ambient temperature since the materials remaining on the 880 package would not be significantly affected by testing at -40°C (-40°F).

The drop orientation for each test specimen was selected based on an assessment following the 9 meter (30 foot) drop tests of which orientation would impart the most damage to the specimen.

2.7.3.1 Side Puncture Drop

<u>Test Specimen TP81(C):</u> Test Specimen TP108(C) impacted the puncture bar on the steel cylinder bottom surface (see Figure 2.7.E). Results of this testing produced no new observable damage to the test specimen. Radiation profiles performed at the conclusion of this (and subsequent testing) showed no significant increase in radiation levels and that the package had maintained its structural integrity.

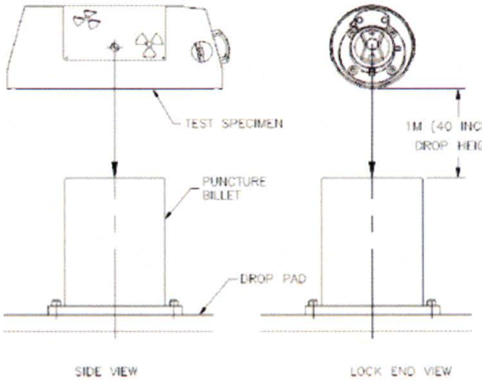

Figure 2.7.E - Model 880 (TP108(C)) Puncture Drop Orientation – Bottom Surface

Test Specimen TP108(D): Impacted the puncture bar on the steel cylinder left side surface (see Figure 2.7.F). Results of this testing produced no new observable damage to the test specimen. Radiation profiles performed at the conclusion of this (and subsequent testing) showed no significant increase in radiation levels and that the package had maintained its structural integrity.

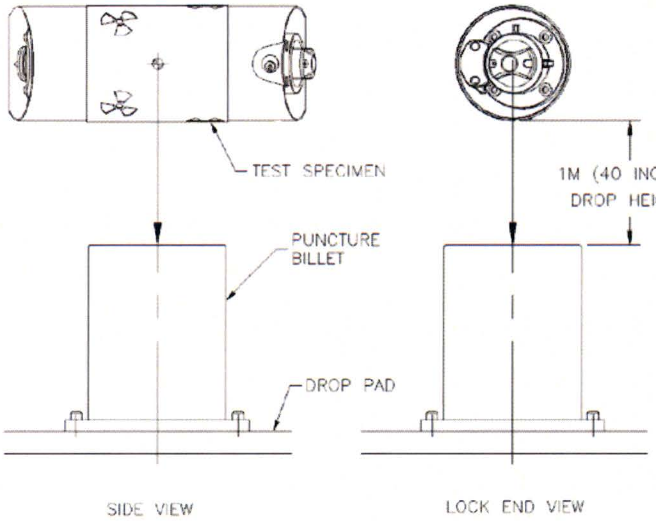

Figure 2.7.F - Model 880 (TP108(D)) Puncture Drop Orientation – Left Side Surface

2.7.3.2 Oblique Puncture Drop

Test Specimen TP206(A): Impacted the puncture bar at a shallow angle on the top of the lock cap and lock assembly front plate (see Figure 2.7.G). The drop orientation was changed from Test Plan 206 based on the condition of the test unit after the 30-foot (9 meter) drop test. Since the top two lock plate screws were sheared/broken off during the 30-foot drop, the puncture test was modified to attempt to completely shear off the source lock assembly or try to dislodge or shear off the remaining two bottom screws holding the lock assembly to the end plate weldment. The test unit impacted as intended and produced no additional damage. The source remained locked and secured after the test. Radiation profiles performed at the conclusion of this testing showed dose levels well below the 1 R/hr at a meter limit from the package.

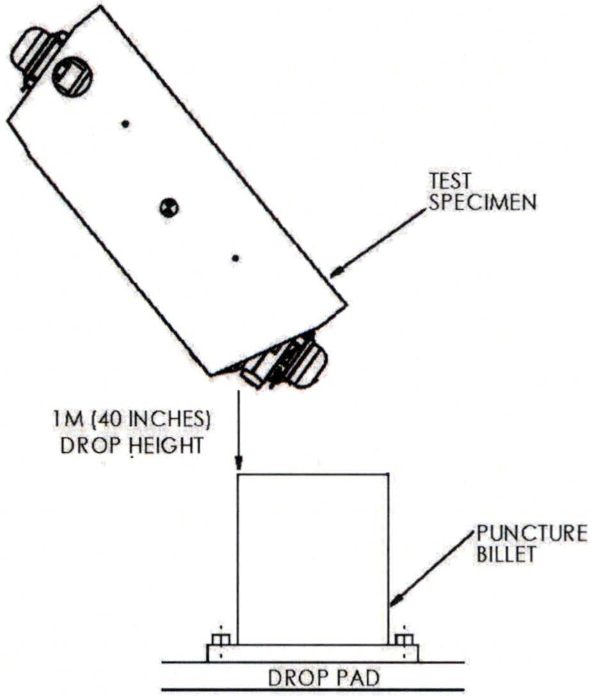

Figure 2.7.G - Model 880 (TP206(A)) Puncture Drop Orientation – Lock Cover

Test Specimen TP206(C): Impacted the puncture bar at a shallow angle on the bottom side of the rear source lock assembly (see Figure 2.7.H). The test unit impacted as intended and produced minor damage to the source caps. The source remained locked and secured after the test. Radiation profiles performed at the conclusion of this testing showed dose levels well below the 1 R/hr at a meter limit from the package.

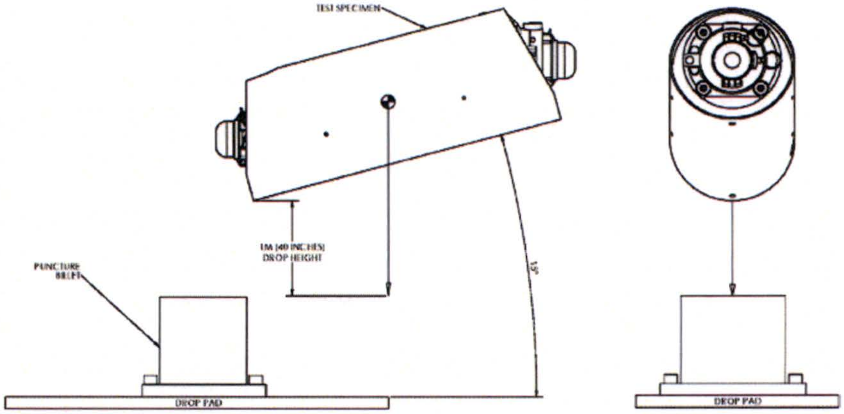

Figure 2.7.H - Model 880 (TP206(C)) Puncture Drop Orientation – Lock Cover

2.7.3.3 End Puncture Drop

Test Specimen TP108(B): Impacted the puncture bar on the lock cover (see Figure 2.7.I). To achieve the designed impact orientation, this test specimen was dropped on the puncture bar twice. Results of this testing produced denting of the lock cover. Radiation profiles performed at the conclusion of this (and subsequent testing) showed no significant increase in radiation levels and that the package had maintained its structural integrity.

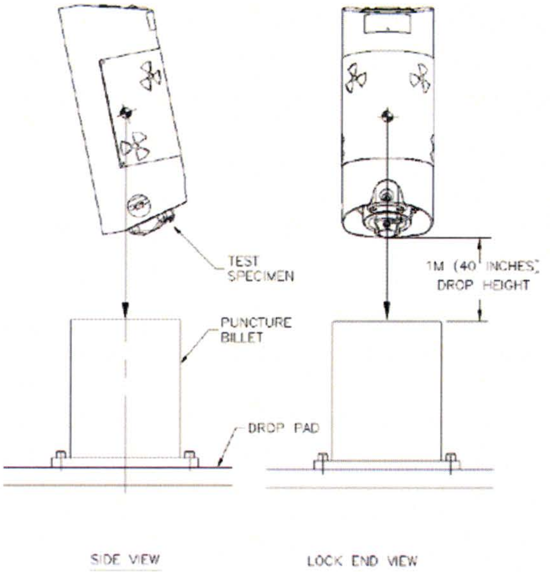

Figure 2.7.I - Model 880 (TP108(B)) Puncture Drop Orientation – Lock Cover

Test Specimen TP108(G): The test unit included the optional jacket (Version 1), and impacted the puncture bar on the lock cover (see Figure 2.7.I). Results of this testing produced no new observable damage to the test specimen. Radiation profiles performed at the conclusion of this (and subsequent testing) showed no significant increase in radiation levels and that the package had maintained its structural integrity.

Test Specimen TP186(A): Impacted the puncture bar on the lock cover (see Figure 2.7.J) as intended. After the initial impact, the side of the device impacted the post causing additional cracking to the jacket. Results of this testing produced additional denting of the lock cover, but it remained in place. The rear plate casting was also bent further inward causing the source position to move approximately 1/16th of an inch. Radiation profiles performed at the conclusion of this testing showed no significant increase in radiation levels and that the package had maintained its structural integrity.

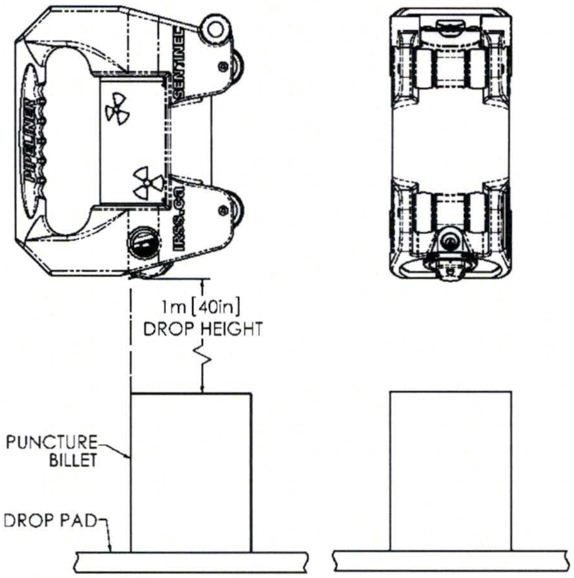

Figure 2.7.J - Model 880 (TP186(A) Jacket Version 2) Puncture Drop Orientation – Lock Cover

Test Specimen TP186(B): Was tested at ambient temperature without the jacket since the jacket had broken away from the 880 weldment during the 9 m (30 foot) drop and the remaining weldment materials are not significantly affected by temperatures of -40°C (-40°F).

The test unit impacted the puncture bar on the lock cover (see Figure 2.7.K) as intended. Results of this testing produced additional denting of the lock cover, but it remained in place. The 880 weldment shell was also bent in areas around the front and rear plates. Radiation profiles performed at the conclusion of this testing showed no significant increase in radiation levels and that the package had maintained its structural integrity

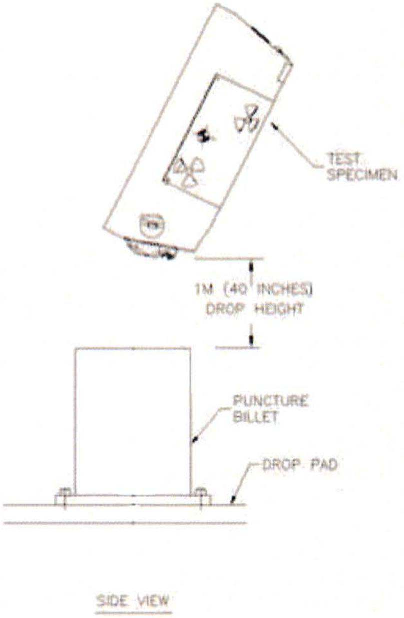

Figure 2.7.K - Model 880 (TP186(B) Jacket Version 2) Puncture Drop Orientation – Lock Cover

Test Specimen TP206(B): Impacted the puncture bar on the lock cap (see Figure 2.7.L). The test unit impacted as intended and the cap remained open for this drop since it had become dislodged during the 30-Foot drop test. After the puncture drop, the cap was broken off and the bottom lock plate appeared slightly bent. The source remained locked and secured after the test. Radiation profiles performed at the conclusion of this testing showed dose levels well below the 1 R/hr at a meter limit from the package.

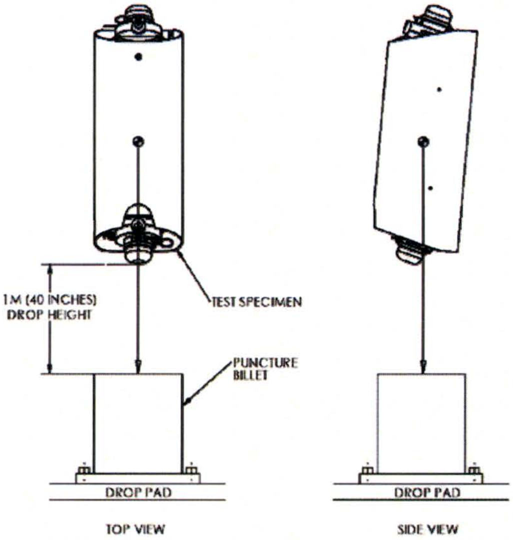

Figure 2.7.L - Model 880 (TP206(B)) Puncture Drop Orientation – Lock Cover

Test Specimen TP216-2: The test unit included the optional jacket (Version 3), and impacted the puncture bar on the lock cover (see Figure 2.7.M). Results of this testing produced no new observable damage to the test specimen. Radiation profiles performed at the conclusion of this (and subsequent testing) showed no significant increase in radiation levels and that the package had maintained its structural integrity.

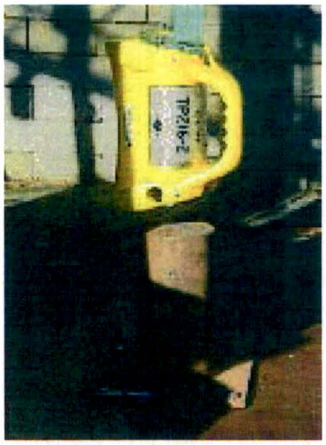

Figure 2.7.M - Model 880 (TP216-2 Jacket Version 3) Puncture Drop Orientation – Lock Cover

2.7.3.4 Summary of Results – Puncture Drop

See Table 2.7.A for additional test unit results summary. Additional inspections were performed using radiography to check for potential internal damage. A more detailed summary is given in the applicable test reports referenced in each section (Section 2.12). In all cases, radiation profiles performed at the conclusion of the puncture testing showed no significant increase in radiation levels for the test units and demonstrated that the 880 Series packages comply with the requirements of this section.

2.7.4 Thermal

Because no damage occurred during the Hypothetical Accident Conditions of Transport Tests that could result in oxidation of the depleted uranium shield, thermal testing was not performed on any of the 880 Series test specimens. Compliance for this requirement was assessed. The assessment demonstrates that the thermal test would not be sufficient to weaken the package and cause its failure under the final profile criteria.

Review of the condition of the test specimens after the drop tests suggests the fire test would have no effect on the resulting radiation measurements if the thermal test was performed. This is justified based on the condition of the test specimens after the drop tests and the properties of the materials used to secure and shield the source within the specimens. Without oxidation of the shield the shielding integrity of the package is maintained and it will meet the requirements of 10 CFR 71.73(c)(4).

The battery pack cells, used in the Version 3 jacket, are comprised of four (4) Lithium iron phosphate ($LiFePO_4$) cathode cells with a graphite anode. This battery cell chemistry is safer than the typical lithium cobalt oxide composition. The $LiFePO_4$ cell materials also include copper, aluminum and a steel casing.

The $LiFePO_4$ battery pack cells, used in the Version 3 jacket, are designed with the following protective features:

- Vent seals which activate under high pressure build-up.
- A Current Interrupt Device (CID) which activates on excessive pressure due to an overcharge condition.
- A Shutdown separator which activates when the cells reach a temperature of 130°C as this temperature could melt the battery cell's poly separator.

Under the HAC thermal test (800°C for 30 minutes), the individual cells contained within the battery pack would be expected to exceed the threshold temperature needed to exhibit thermal runaway. Typically, this would occur to cells exposed to temperatures in the 150°C - 260°C range which would allow melting of the cell separators.

As noted in the DOT/FAA report in reference 1 of this section, during thermal runaway, the cell internal temperature can increase with a typical temperature range of 800°C – 1,000°C. These temperatures are considered sufficient to cause hot surface ignition of flammable mixtures, but do not reach levels that will cause the melting of pure copper, nickel or steel. The shell of the 880 packages does not begin to melt until 1,400°C.

If thermal runaway does occur in one cell, it is likely to cause thermal runaway in adjacent cells. Under the thermal HAC testing of 10 CFR 71.73(a)(4), it is conservatively assumed that all (4) cells in the battery pack will undergo thermal runaway. In this case, the expected package temperature, exterior to the shell, could be expected to increase to ~1,000°C. This temperature increase will be localized to a small area surrounding and in contact with the individual battery pack cells that come into direct contact with the base of the shell. This value is below the melting point of 304L stainless steel of ~1,400°C. Based on this localized temperature increase of ~1,000°C, no failure or breach of the shell weldment will occur even if all cells in the battery pack undergo thermal runaway during the HAC thermal test.

As noted in Section 3.5.1 and supported by section 2.7.4.5 of the SAR, damage to the outer containment (shell), sufficient to impact the integrity of the depleted uranium shield, would require significant gaps in the shell (e.g. greater than 1.5 in^2) to allow ingress of oxygen inside the weldment, before pyrolization of the foam and subsequent oxidation of the depleted uranium shield could be induced. Based on the information related to lithium ion cells under thermal runaway conditions, the added heat generated by these cells will be insufficient to cause a breach of the 880 body weldment, and therefore, the Model 880 Series packages will retain their shielding integrity and containment during the HAC thermal test when assembled with the Version 3 jacket. The battery cells contained in the Version 3 jacket will not prevent the package from meeting the thermal test requirements of 10 CFR 71.73 (c)(4).

Resource reference:

1. Fire Hazards of Lithium Batteries, DOT/FAA/TC-TN 15/17, February 2016.

2.7.4.1 Summary of Pressures and Temperatures

See Tables 3.1.A and 3.1.B for summary tables of temperature and maximum pressure related to the Model 880 Series package. The Model 880 Series containers are vented to atmosphere. As such, no pressure will build up in the units under Hypothetical Accident conditions.

2.7.4.2 Differential Thermal Expansion

Expansion of the 880 steel cylinder circumference is approximated by:

$$E = \pi D \alpha \Delta T$$

Where:

D = inner Diameter of the steel cylinder = 4.87 in = 0.12 m or
Outer diameter of the depleted uranium shield = 4.38 in = 0.11 m
α = Material Coefficient of Thermal Expansion
ΔT = Fire temperature differential (from 38°C (311°K) to 800°C (1,073°K)

Substituting gives:

$E = \pi(4.87 \text{ in})(9.9\ \mu\text{in/in}°\text{F})(1{,}372°\text{F}) = 0.2$ in steel
$E = \pi(4.38 \text{ m})(28\mu\text{m/m}°\text{F})(762°\text{K}) = 0.29$ in depleted uranium

This translates to a diameter increase of 0.026 inches for the steel shell and 0.04 inches for the depleted uranium. Since the depleted uranium modulus of elasticity is less than stainless steel (190 GPa versus 210 GPa, from Mechanics of Materials, Fall 1999) and the expansion rate is approximately the same, the weldment shell will keep the depleted uranium compressed within its volume. The rear plate and front plate attachment screws will expand at approximately the same rate as the steel encasement thus maintaining the security of the source within the package.

2.7.4.3 Stress Calculations

As was shown in Section 2.7.4.2, thermal differentials will have no detrimental effect on the interfaces between the outer steel cylinder, shield or endplates. The Model 880 Series transport packages are open to the atmosphere and contain no components which could create a differential pressure relative to atmospheric conditions. See Section 2.7.4.5 for additional considerations.

2.7.4.4 Comparison of Allowable Stresses

All stresses calculated in Section 2.7.4 are well below strengths for the materials of construction. Further, the Model 880 Series package was fully tested and passed under Normal and Hypothetical Accident Conditions of transport. It is therefore concluded that the Model 880 Series package will satisfy the performance requirements specified by the regulations. See Section 2.7.4.5 for additional considerations.

2.7.4.5 Additional Thermal Analysis

a. Condition of the Test Specimens

Damage to the outer containment was not sufficient to increase oxygen ingress to the shield, build up pressure within the assembly through the pyrolization of the foam, or expand a trapped volume of air within the cylinder. The container is vented to the atmosphere through both the front and rear end plates. These vents will relieve any internal generation or expansion of gases created by the elevated temperatures.

Damage incurred during the drop testing (4 foot, 30 foot and puncture) was minimal, consisting of insignificant deformation of the weldments, lock mounting block and dust cover, slight bowing of the end plates and loss of two locking plate bolts. There were no holes or tears in the cylinder weldment to allow air to circulate through the package. None of the damage significantly increased, or created new, pathways for the ingress of oxygen. Oxygen ingress has been shown empirically to be the primary contributing factor in the oxidation of depleted uranium shields during thermal testing (see Section 2.12 regarding previous testing on the 650L, 680-OP and 660 packages). Further analysis against shield degradation due to oxidation is contained in Section 2.12 in Test Plan 206 Report #2 and Section 2.7.4.5.b.

Without the possibility of gross shield oxidation, and subsequent shield degradation, failure under the thermal test conditions would require mechanical degradation of the packages' support structure. The Model 880 support structure is predominately of welded stainless steel construction.

The internal support structure for the test specimen shields was intact and fully functional. The internal support structure consists of the shield, cylinder weldment, shield pins, U-shaped brackets, and endplates with rivnuts. The source assemblies were intact, undamaged and secure in the shielded position. The source assembly consists of the source capsule, flexible wire, stop ball and source connector.

The rear plate assemblies remained intact and continued to secure the source assemblies in the shielded position within the package. For the Model 880 Delta, 880 Sigma and 880 Elite, the securing components of the rear plate assembly consists of the rear plate, lock slide, sleeve, selector ring, selector ring retainer, four #10 machine screws, and four 5/16-18 security screws. For the Model 880SC, the securing components of the rear plate assembly consists of the lock slide, sleeve, top lock plate, bottom lock plate, four ¼-28 screws, and four 5/16-18 security screws.

The effect of structural yielding under self-weight at temperature caused by the degradation of mechanical properties of the materials of construction is insignificant. The likely failure modes are further assessed in Sections 2.7.4.5.c.

b. Oxidation of Depleted Uranium (DU) Shielding

Significant oxidation of the depleted uranium does not occur if there is insufficient flow of oxygen available to the shield. Two major contributing factors to limiting this oxidation are the oxygen inhibitive nature of charred polyurethane foam and the packages' ability to contain the foam once charred. This has been demonstrated by thermal testing conducted by QSA Global Inc. in support of previous Type B package submissions described in the following paragraphs.

Under Test Plan 74 (Section 2.12), the Model 660 Series, Specimen D was tested successfully through normal and accidental conditions. Before thermal testing, the unit showed gaps in the outer containment (shell to endplate interface) up to ½ inch wide and 1 inch long. Pyrolized foam was contained within the unit. Although the shield oxidized slightly on the end nearest the largest gap, the unit passed final profile at 0.0047 R/hr at one meter.

Under Test Plan 72-S2 (Section 2.12), in support of Certificate of Compliance number USA/9035/B(U) for the Model 680-OP Series, camera s/n B198 was subjected to thermal testing. Before testing, the unit was intact and essentially undamaged with no gaps between mating surfaces. After the 30 foot and puncture drop tests, ¾ inch long by 1/16 inch wide gaps were present on both sides of the unit at the side plate/shell interface. Thermocouple readings showed temperatures of up to 1000°C on the unit and over 900°C within the depleted uranium shield. The foam was completely pyrolized but was contained within the unit. No oxidation of the shield occurred and the unit passed final profile at 0.330 R/hr at one meter.

Under Test Plan 80 Report (Section 2.12), in support of Certificate of Compliance number USA/9269/B(U) for the Model 650L, test specimen TP80(B) was subjected to thermal testing. The drop tests (30 foot and puncture) caused the outer shell to split completely open and the inner shell to crack, creating a 3 inch long by ½ inch wide gap. Subsequent thermal testing caused pyrolization of all the foam and vaporization in the area of the gap. Some minor oxidation of the shield was also noted. Thermocouples recorded temperatures in the shield of over 900°C and close to 1000°C at the shell. Although the shield oxidized slightly in the area of the gap, the unit passed final profile at 0.028 R/hr at one meter.

As demonstrated in previous thermal testing, minor air gaps in the containment surrounding the shield are insufficient to allow significant oxidation of the depleted uranium shield during the thermal test. The Model 880 Series test specimens had no breach of the shield containment and would therefore prevent oxygen ingress to the shield and any resulting deterioration of the depleted uranium shield during the thermal test.

c. Material Properties at Elevated Temperatures

The melting temperature for all materials of the internal support structure, rear plate/locking assemblies and source assembly are above the thermal test temperature of 800°C. The thermal expansion for the internal support structure materials is less than the design clearance allowed for assembly. Further, the stainless steel and titanium components of the internal support structure, rear plate/locking assemblies and source assembly retain about 30% and 60% of their room temperature strength at 800°C.

The load condition for the thermal test is for the internal structure to support the static weight of the shield in suspension. The dynamic impact nature of the drop tests can subject the structure to a force over 100 times the static weight of the shield. This means the strength of the materials used in the structure would need to decrease by two orders of magnitude or to about 1% of their strength at room temperature. The 30-minute thermal test is not long enough for significant creep deformation to occur in the structure.

(1) Tear Out of the Shield Support Pin

If the device were suspended with its diametrical axis in the vertical, the weight of the shield would be supported by the front and rear brackets. Tear out of the materials under the pin can be assessed by assuming one (1) pin supports the entire shield.

Tear out Area = 0.4 in X 0.059 in (material thickness) X 4
= 0.09 in^2

Weight of Shield = 34.4 lbs. (max)

Therefore: 34.4 lbs. / 0.09 in^2 = 382 psi

The strength of 304 stainless steel at 800 C° = ~15,000 psi

(Reference: ASM Stainless Steels, J.R. Davis ed.,1994, p. 508)

This gives a factor of safety of approximately 39 against failure.

(2) *Depleted Uranium Cracking around the Titanium Pin*

The pin is in poor contact with the supporting brackets (0.060 inches thickness each side) and is in intimate contact with the shield (possible line to line). The heat transmitted through conduction from the outer shell through the bracket to the pin will be dissipated by the mass of the shield at the point of contact. Whereas upon heat up of the shield, the heat flow from the shield to the pin will be substantial. Therefore, the shield and pin should be at approximately the same temperature throughout the thermal test. Based on this assumption, the relative expansion coefficients for the materials are compared to determine if the pin will exert damaging force on the depleted uranium shield.

The volume expansion coefficient of materials is taken to be approximately three times the linear expansion coefficient (Reference: ASM Material Properties Handbook Titanium Alloys, ed. Rodney Boyer, Gerhard Welsch, E.W. Collings, 1994, p. 516). As such:

Linear expansion coefficient – Titanium 11.0E-6 in/in · C°
(Reference: ASM Metals Handbook Desk Edition, ed. Howard E. Boyer, Timothy L. Gall, 1985, p. 1.4)

Linear expansion coefficient – Depleted Uranium 12.0E-6 in/in · C°
(Reference: Universal reference calculator, TAD Technical Services Corp)

Based on the linear expansion coefficients, the two materials will expand volumetrically at approximately the same rate. This will prevent the pin from exerting force onto the inside diameter of the hole in the shield. Therefore, the material around the pin will remain intact and the shield will remain secured to the brackets.

(3) *De-Attachment of the Rear Lock Assembly*

On the test unit where two security screws failed, two (3) of the four (4) security screws remained intact after the drop and puncture testing. These screws retained the lock assembly to prevent the source from movement relative to the shield. If the device were suspended as in 2.7.4.5.c(1) with the lock assembly downward, the self-weight of the assembly would put all three screws in tension. At temperature, the stresses would be:

Stress area of 5/16-18 screw: 0.0524 in^2
(Reference Manual of Steel Construction , 7th Edition, page 4-125)

Total stress area (2 screws): $2(0.0524\ \text{in}^2) = 0.1048\ \text{in}^2$

At 15,000 psi*, the screws will support a weight of:

$$15{,}000 \text{ psi } (0.1048 \text{ in}^2) = 1{,}572 \text{ lbs.}$$

The lock assembly weighs approximately two (2) lbs. Therefore, the lock assembly will remain attached and undisturbed as the remaining screws can easily support the weight.

* The use of 15,000 psi is based on the yield strength of the stainless steel security screws at temperature.

d. Conclusions

The test specimens were subjected to the 9 m drop and 1 m puncture tests in accordance with Test Plan 108 (Section 2.12), Test Plan 186 #1, Test Plan 206 and Test Plan 216. These test plans conform to the requirements in 10 CFR Part 71 and IAEA TS-R-1 for Type B(U) transport packages.

The test specimens demonstrated that the Model 880 Series transport packages satisfy the test requirements of their respective Test Plans as demonstrated in Test Plan Reports 108, 186 #1 and 206 #2, and 216 (Section 2.12). The Model 880 Series package, in any transport configuration described on the drawings referenced in Section 1.3, does not adversely affect the results of these tests. This conclusion is drawn from the drop test results and thermal analysis as supported by the test data, test inspection data and damage assessments.

Based on the previous empirical data and analyses, we conclude that oxidation of the shield will not occur, the structural integrity of the package will remain intact and the containment of the source will not be affected. As such, the Model 880 style packages comply with the requirements of this section.

2.7.5 Immersion - Fissile Material

Not applicable. This package is not used for transport of Type B quantities of fissile material.

2.7.6 Immersion - All Packages

The Model 880 Series transport packages are open to the atmosphere and contain no components, other than the watertight battery case used on the Version 3 jacket, that would create a differential pressure under immersion. All other materials are impervious to water and would not be affected.

In the case of the battery case, the case is sonically sealed creating a watertight enclosure with the exception of the two connectors which have O-rings. Under 50-feet of water, it is possible for the O-rings to leak. At that point, a fuse in the tag would render the tag electronics inoperable.

Should the watertight seal on the battery case breach for any reason during transport and allow ingress of water to the interior of the case, this could create a short circuit condition for the individual lithium ion cells leading to, under worst case conditions, thermal runaway for the cells. Should this occur, as described in Section 2.7.4, this condition will not cause a breach of package integrity and the 880 package will meet the criteria in 10 CFR 71.51(a)(2).

Regarding the source capsule transported in the Model 880 packages, the primary containment system in these packages is a special form source, which minimally meets the ANSI N43.6 and ISO 2919 requirements for Class 3 pressure testing. Therefore, the Model 880 Series could withstand the immersion test criteria since the Class 3 pressure test requirements are in excess of the required 150 kPa (21.7 lb ft/in2).

2.7.7 Deep Water Immersion Test (for Type B Packages Containing More than 10^5 A_2)

Not applicable. This packaged does not transport normal form radioactive material in quantities exceeding 10^5A_2.

2.7.8 Summary of Damage

Table 2.7.A summarizes the results of the Normal Conditions of Transport and Hypothetical Accident testing performed on the Model 880 Series, in the sequence that the tests were completed.

Table 2.7.A: Summary of Damages During Testing

Test Specimen	Test	Weight	Actual Impact Point	Damage
TP108(B)	4-foot free drop	44.2 lbs	Lock cover & shell lip	• Shell bottom rear lip bent.
	30-foot free drop	44.4 lbs	Lock cover & shell lip	• One rear plate security screw broken. • Rear plate puckered. • Shell lip bent further.
	Puncture drop #1	44.4 lbs	Lock cover	• Lock cover dented.
	Puncture drop #2	NA	Lock cover	• Lock cover dented.
	Damage After all Testing			

<table>
<tr><th>Test Specimen</th><th>Test</th><th>Weight</th><th>Actual Impact Point</th><th>Damage</th></tr>
<tr><td></td><td colspan="4">• Shell at rear end is bent in toward lock by about 1 inch at bottom.
• Shell at front end has two spot dimples about 3/16 inch deep.
• Rear plate is puckered in at selector ring about 1/16 inch.
• Rear plate security screw at top right is broken.
• Rear plate security screw at top left & bottom right is bent.
• Rear plate security screw at bottom left slightly is bent.
• Lock cover is dented 3/16 inch at three spots.
• Rear plate tube feature is slightly bent but intact.
• Three rear plate security screws are slightly bent but intact.
• One rear plate security screw broken end remained in the rivnut.</td></tr>
<tr><td rowspan="5">TP108(C)</td><td>4-foot free drop</td><td>44.3 lbs</td><td>Shell bottom surface</td><td>• Shell bottom flattened.
• Shell rear lip bent in.</td></tr>
<tr><td>30-foot free drop</td><td>44.4 lbs</td><td>Shell bottom surface</td><td>• Shell bottom flattened further.
• Shell rear top bent.
• Front endplate bent near bottom.
• Outlet port binds.</td></tr>
<tr><td>Puncture drop</td><td>44.4 lbs</td><td>Shell bottom surface</td><td>• None observed.</td></tr>
<tr><td colspan="4">Damage After all Testing</td></tr>
<tr><td colspan="4">• Shell bottom is depressed about 3/16 inch.
• Shell top has two spot dimples about 3/16 deep.
• Front plate knob pin is bent about 3/16 inch.
• Shield contacts the shell at the impact surface.</td></tr>
<tr><td rowspan="5">TP108(D)</td><td>4-foot free drop</td><td>44.4 lbs</td><td>Shell left side</td><td>• Shell left side flattened.</td></tr>
<tr><td>30-foot free drop</td><td>44.3 lbs</td><td>Shell left side</td><td>• Shell left side flattened further.</td></tr>
<tr><td>Puncture drop</td><td>44.3 lbs</td><td>Shell left side</td><td>• None observed.</td></tr>
<tr><td colspan="4">Damage After all Testing</td></tr>
<tr><td colspan="4">• Shell left side is depressed about 1/8 to 1 inch.
• Shell right side at rear end is bent about 3/16 inch.
• U-shaped bracket is bent on the left side about 1/8 inch.</td></tr>
<tr><td rowspan="4">TP108(G) (with Version 1 jacket)</td><td>4-foot free drop</td><td>48.8 lbs</td><td>Lock cover</td><td>• Lock cover dented.</td></tr>
<tr><td>30-foot free drop</td><td>48.8 lbs</td><td>Lock cover & shell side lip</td><td>• Shell rear side lip bent.
• Two jacket rivets broken.
• Label rivets missing.</td></tr>
<tr><td>Puncture drop</td><td>48.8 lbs</td><td>Lock cover</td><td>• None observed.</td></tr>
<tr><td colspan="4">Damage After all Testing</td></tr>
</table>

Test Specimen	Test	Weight	Actual Impact Point	Damage
	• Shell left side at rear end is bent about 5/8 inch. • Shell left side at front end is bent about 3/16 inch. • Rear plate security screw at top right is slightly bent. • Jacket rivets on left side are broken. • Lock cover is dented about 3/16 inch. • Lock cover pin at bottom is loose and can be removed. • Label rivets missing. • No apparent internal damage.			
TP186(A) (with Version 2 Jacket – Unit Tested at -40°C)	4-foot free drop	54 lbs	Lock cover	• Crushed and cracked lock cover. • Broke head off one lock cover mounting screw.
	30-foot free drop	54 lbs	Lock cover	• Cracks in jacket. • Rear plate bent in 1/8". • Lock cover broken. • Lock cover pin broken.
	Puncture drop	54 lbs	Lock cover	• Additional cracks in jacket. • Additional lock cover damage. • Additional damage/bending to rear plate. • Source position moved ~1/16".
	Damage After all Testing			
	• Plunger key lock would not operate • Lock plate mounting screws bent and threads stripped during removal. • Lock plate required use of hammer and pry bar to remove from 880. • Lock cover pin mounting holes were deformed. • Lockslide was bent and jammed between rear plate and selector ring retainer. • Source wire assembly female connector bent/damaged but source remained locked and secured in shielded position after testing.			
TP186(B) (with Version 2 Jacket – Unit Tested at -40°C for all but Puncture)	4-foot free drop	54 lbs	Lock cover	• Dented lock cover. • Cracked jacket.
	30-foot free drop	54 lbs	Lock cover	• Jacket shattered. • Jacket mounting screws bent the 880 shell. • Additional damage to lock plate and lock assembly. • 880 shell bent inward.
	Puncture drop	54 lbs	Lock cover	• Additional denting to lock cover. • Additional bending to 880 shell.
	Damage After all Testing			
	• Plunger key lock would not operate • Lock cover assembly was broken and pins misaligned. • Key lock pin deformed and jammed in selector ring.			
TP206(A)	4-foot free drop	44.8 lbs	Front Cap	• Dent to cap, but remained closed. • Spring Plunger damaged. • Lock slide fully functional.

Test Specimen	Test	Weight	Actual Impact Point	Damage
	Penetration Bar	44.8 lbs	Lock	• Minor scuffing of lock.
	30-foot free drop	44.8 lbs	Front Cap	• Two top plate bolts missing, • Minor cap damage, cap opened after drop. • Damage to top of lock.
	Puncture drop	44.8 lbs	Top of Front lock plate	• Minor additional damage to lock and cap at area of impact. • Dent to top of shell.
	Damage After all Testing			
	• Plunger key lock would not operate due to damage. • Lock cap was dented. • Top security screws sheared, bottom two security screws bent but intact. • Rear plate pulled ~1/8" away from shield body weldment endcap. • Shell bent but intact.			
TP206(B)	4-foot free drop	44.85 lbs	Rear Cap	• Dent to cap, and cap opened after test. • Spring Plunger damaged. • Lock slide fully functional.
	Penetration Bar	44.85 lbs	Lock Slide	• Minor dent to lock slide and top plate.
	30-foot free drop	44.85 lbs	Rear Cap	• Minor damage to shell and cap, cap remained attached to the assembly.
	Puncture drop	44.85 lbs	Rear Cap	• Cap broke off the unit. • Bottom lock plate slightly bent. • Lock slide non-operational due to binding on the lock slide bracket but secured source in stored position.
	Damage After all Testing			
	• Cap broke off the unit. • Minor damage/denting to shell. • Top plate surface scuffing. • Bottom lock plate slightly bent. • Lock slide non-operational due to binding on the lock slide bracket but secured source in stored position.			
TP206(C)	4-foot free drop	44.8 lbs	Rear End Shell Base	• Base of shell on both ends deformed/bent. • Lock slide fully functional.
	30-foot free drop	44.8 lbs	Rear End Shell Base	• Minor damage to shell and rear cap. • Rear cap opened but remained attached to unit.
	Puncture drop	44.8 lbs	Rear Lock Plate, Bottom	• Minor damage to rear cap. Cap bent but attached to unit. • Front cap damaged but attached. • Minor damage to shell.

Test Specimen	Test	Weight	Actual Impact Point	Damage
	Damage After all Testing			
	• Minor damage to rear cap. Cap bent but attached to unit. • Front cap damaged but attached. • Minor damage to shell.			
TP216-2	4-foot free drop	51.3 lbs	Rear Cap	• Scuff mark at point of impact on dust cover. • Bent pins of dust cover.
	30-foot free drop	51.3 lbs	Rear Cap	• Crushed dust cover. • Shell edges bent in 2 places.
	Puncture drop	51.3 lbs	Rear Cap	• Slightly more dust cover compression after drop.
	Damage After all Testing			
	• Minor damage to rear cap. Cap bent but attached to unit. • Minor damage to shell. • Lockslide and source connector bent about 0.06 inches but source remained locked and secured.			

Based on these results, it is concluded that the Model 880 Series transport package maintains structural integrity and shielding effectiveness during Hypothetical Accident Conditions and Normal Conditions of Transport.

2.8 Accident Conditions for Air Transport of Plutonium or Packages with Large Quantities of Radioactivity

Not applicable. This package is not used for transport of plutonium or normal form radioactive material. This package is also not used for transport of special form material in quantities ≥ 3,000 A_1.

2.9 Accident Conditions for Fissile Material Packages for Air Transport

Not Applicable. This package is not used for transport of Type B quantities of fissile material.

2.10 Special Form

The Model 880 Series transport package is designed for use with a variety of special form source capsules attached to a flexible source wire assembly. All special form sources transported in the Model 880 Series will meet a minimum ANSI N43.6 and ISO 2919 Classification of 3 for pressure testing.

Typical special form sources transported in this container and their associated source wire assembly are shown in Table 2.10.A.

Table 2.10.A: Typical Special Form Capsule Transport Information

Special Form Capsule	Radionuclide	Special Form Reference	Typical Source Wire Assembly Identification
875 Capsule	Ir-192	USA/0392/S-96	A424-9
875 Series	Ir-192	USA/0335/S-96	A424-23
X540/1	Se-75	USA/0502/S-96	A424-25 & A424-25W

Based on performance testing, any source capsule that has been tested and achieved special form classification from a Competent Authority and also has achieved an ANSI/ISO Pressure Classification rating of 3 can be safely transported in the Model 880 Series package so long as the source wire assembly properly locates the source capsule within the package radiation shielding. Therefore any compatible source capsule/source wire assembly meeting these criteria should be approved for transport without requirement of amendment to the Type B(U) certification.

Examples of typical special form certifications, including the current approved capsule drawings, are included in Section 2.12.

2.11 Fuel Rods

Not applicable. This package is not used for transport of fuel rods.

2.12 Appendices

2.12.1	Test Plan and Report 100 (Feb 2000)
2.12.2	Test Plan 108 Issue 5 (Jul 2000)
2.12.3	Test Report 108 Minus Appendices A-C (Aug 2000)
2.12.4	Test Plan 115 (Feb 2001)
2.12.5	Test Plan Report 115 Minus Appendices (March 2001)
2.12.6	Test Plan Report 125 Rev B (Mar 2003)
2.12.7	Test Plan Report 74 (Feb 1998)
2.12.8	Test Plan 80 Rev 1 (Mar 1999)
2.12.9	Test Plan 80 Report Minus Manufacturing Records (Jun 1999)
2.12.10	Test Report #1 for Test Plan 188 Rev 1 (minus Sections 7.3 – 7.5)
2.12.11	Test Report #1 for Test Plan 186 Rev 1 (minus Sections 8.4 & 8.5)
2.12.12	USDOT Special Form Certificate USA/0392/S-96 Rev 11
2.12.13	USDOT Special Form Certificate USA/0335/S-96 Rev 11
2.12.14	USDOT Special Form Certificate USA/0502/S-96 Rev 9
2.12.15	Test Plan 206 (Sep 2013)
2.12.16	Test Plan 206 Report #1 minus Appendices D & E (Nov 2013)
2.12.17	Test Plan 206 Report #2 minus Appendices D & E (Nov 2013)
2.12.18	Test Plan 216 (Nov 2016)
2.12.19	Test Plan 216 Report minus manufacturing docs (Dec 2016)

2.12.1 Test Plan and Report 100 (Feb 2000)

SENTINEL

TEST PLAN NO. 100

TEST PLAN COVER SHEET

TEST TITLE: NORMAL TRANSPORT TESTS

PRODUCT MODEL: MODEL 880

ORIGINATED BY: S. Gianni

DATE: 8 FEB 00

TEST PLAN REVIEW

ENGINEERING APPROVAL:

DATE: 15 FEB 00

QUALITY ASSURANCE APPROVAL: D.W. Kurtz

DATE: 17 Feb 00

REGULATORY APPROVAL: C. Roughan

DATE: 15 Feb 00

COMMENTS:

TEST RESULTS REVIEW

ENGINEERING APPROVAL:

DATE: 25 FEB 00

QUALITY ASSURANCE APPROVAL: Daniel W. Kurtz

DATE: 25 Feb 00

REGULATORY APPROVAL:

DATE: 25 FEB 00

Amersham QSA

TABLE OF CONTENTS

Model 880 Type A Transport Tests

1.0 Purpose

The purpose of this test is to demonstrate the Model 880-transport package meets the normal transport requirements of 49CFR173, 10CFR71, and IAEA Safety Series 6 (As amended 1990).

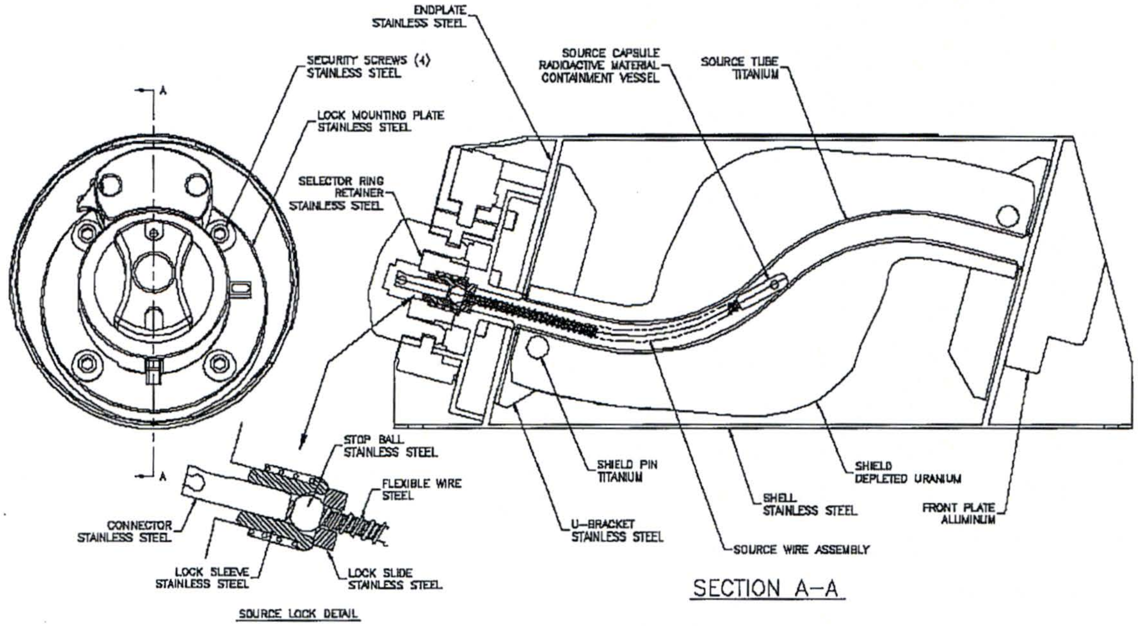

Figure 1. Model 880-Transport Package.

2.0 Package Design Description

The transport package safety features for the Model 880 are described in figure 1. The radioactive material, sealed in a special form source capsule, is located, secured and protected in the package by the following component relationships.

The capsule, stop ball and connector are swaged to a flexible steel wire. These four components form the source wire assembly. The stop ball is held securely by the lock slide and sleeve of the lock assembly. The sleeve prevents the stop ball from being pulled through the rear of the package, while the lock slide prevents the stop ball from being pushed out of the front. Both the sleeve and lock slide are captured by the selector ring retainer and lock mounting plate.

The selector ring retainer is fastened to the lock mounting plate with four, #10, stainless steel machine screws. The lock mounting plate is bolted to the welded endplate of the cylinder shaped shell housing using four, 5/16-18 by 1-1/2 inch long stainless steel security screws.

A U-shaped bracket welded to the endplate holds a 3/8-inch diameter titanium pin that connects the shield within the U of the bracket. This structure secures the shield to the welded package. Copper spacers prevent contact of the depleted uranium shield with the stainless steel components. This method of shield attachment is repeated at both ends of the shell.

The shield is centered in the shell and has the source tube cast into its center. The source tube provides a cavity for the source wire assembly to travel through during use. The capsule with radioactive material is positioned at the center of the ball of the shield within the source tube cavity.

Polyurethane foam fills the air void between the shield and shell inner walls. The foam acts only to prevent the ingress of material into the air void.

The outlet port, located at the front end, serves to block access into or out of the source tube cavity. Four security screws fix the front plate to the shell endplate.

A plastic jacket, not shown in figure 1, may be used to carry the package. This jacket will not be on the specimen for the tests below. Testing without the jacket will not significantly affect the results of the 4-foot drop test; in fact the plastic material and geometry of the jacket will prevent enough damage to the shell to cause failure of the lock mounting plate. The extra drop energy supplied by the 4-pound jacket would be offset by its impact absorption characteristics. The jacket would provide better protection against the penetration bar at its most vulnerable area and would provide additional support to the shell under compression. Therefore testing without the jacket would give more conservative test conditions.

3.0 Failures of Interest

The failures of interest will depend upon the test being performed on the package. Each test will be conducted on the same specimen so as to incur a cumulative damage affect to the package.

The compression test will try to flatten the package to deform the shell enough to shorten the distance from the source to an outer surface measurement point. This may raise radiation measurements above the requirement limits of 200 mR/hr at the surface.

The penetration test will attempt to puncture through the shell housing at its thinnest and most unsupported area. This may reduce the effectiveness of the package and raise radiation levels due to possible access to the inner void of the shell housing. Material thickness and support of other features on the package would prevent sufficient damage from the bar's impact and therefore not considered.

The 4-foot free drop test will try to shear the four lock mounting plate screws upon impact on the bottom edge of the shell at the lock end. This may produce enough deformation to the shell to bend the lock mounting plate and shear the screws. This could remove the source wire assembly from the package or increase radiation levels as a result of relocation of the capsule within the shield.

Two other orientations reviewed for the four-foot free drop are:

1. Shear the shield pins by orientating the shell and shield pins parallel with the impact surface. The pins are designed to take at least a 500-G load upon impact. The estimated load at impact for this drop is about 50G's. Therefore this orientation will not be considered.
2. Bend the U-bracket by orientating the shell and bracket parallel with the impact surface. The shield is less than ¼ -inch from the shell. This prevents sufficient shield travel when you consider the shell deflects to meet the shield upon impact. Therefore this orientation will not be considered.

4.0 Test Conditions and Orientations

The materials used in the construction of the package, see figure 1, retain their mechanical properties within the temperature range of -40 F to +158 F and pressure range of 3.6 psi to 20 psia as specified in the test requirements. Except for the source capsule (tested special form), the package is open to the atmosphere allowing inner and outer pressures to equalize naturally. Therefore testing at ambient conditions, both temperature and pressure would not change the results of these tests and are therefore acceptable initial conditions.

Since the materials of construction are metallic and do not loose strength when exposed to a water spray, the water spray test per 49CFR173.465(b) is not required and will not be conducted.

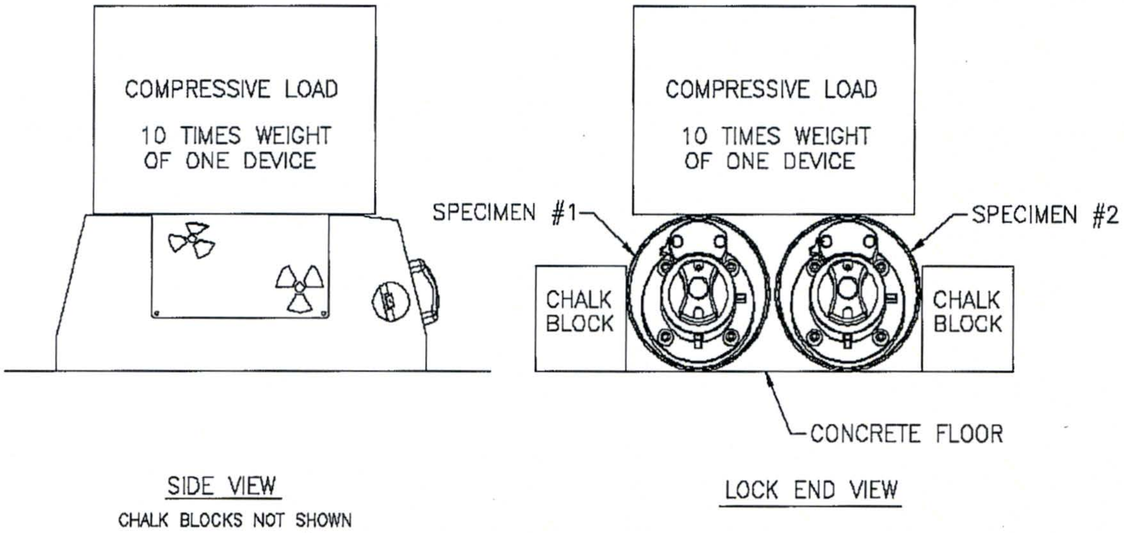

Figure 2. Stacking Test Setup.

Orientation for the stacking test, as shown in figure 2, is with the cylindrical shell housing lying horizontally with its longitudinal surface touching the ground. This would be its natural orientation during transport. The load is distributed opposite the floor contact surface. Two packages will be tested together to provide a stable setup. If this is the case, then the compressive load will be 5 times the weight of each specimen. For example, if the specimen weighs 40 lbs., then the total compressive load for 2 specimen tested together is 5 x 40 x 2 = 400 lbs. The actual compressive weight will be determined at the time of the test.

Blocking or specimen restraint may be used to prevent the specimen from rolling, provided the blocking or restraint does not support the specimen vertically. Use figure 2 as a guide to place the blocks next to the specimen.

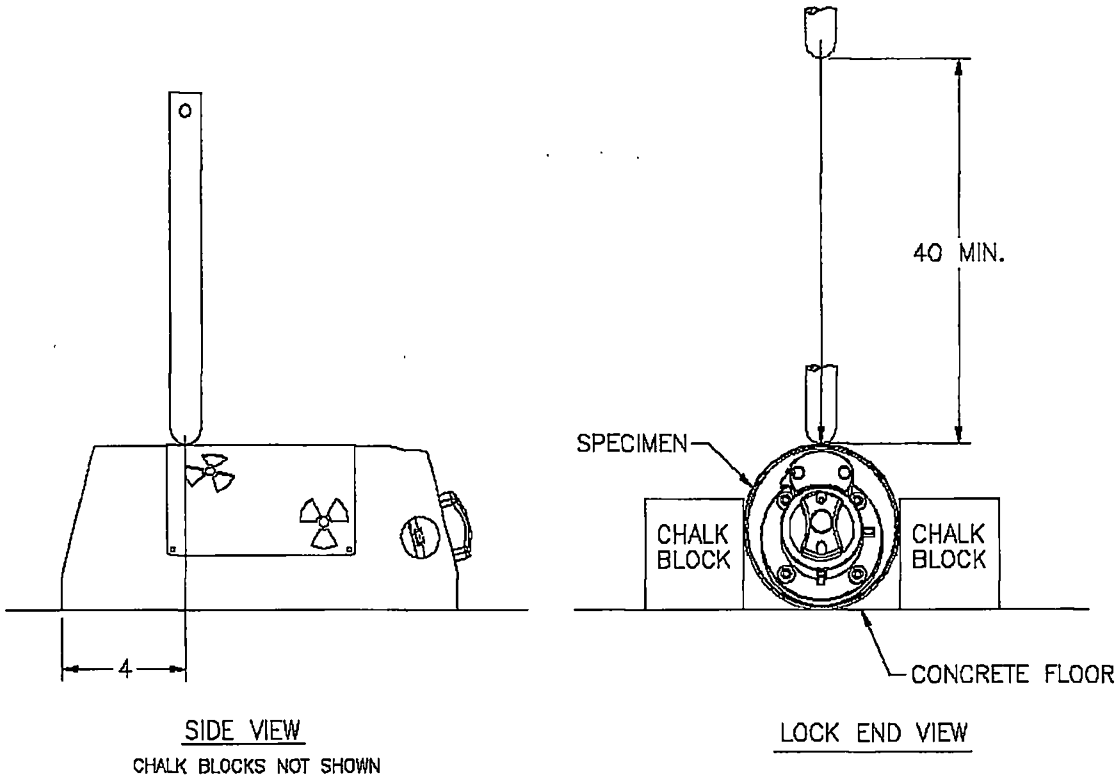

Figure 3. Penetration Test Setup.

Orientation for the penetration test, as shown in figure 3, is with the cylindrical shell lying horizontally with its longitudinal surface touching the ground. The ends of the shell are reinforced by welded endplates and the shield is in close proximity to the housing at the midpoint. The most vulnerable spot for sufficient penetration is at a point about 4 inches from either end of the shell. This point provides the least support for the shell.

Blocking or specimen restraint may be used to prevent the specimen from rolling, provided the blocking or restraint does not support the specimen vertically. Use figure 3 as a guide to place the blocks next to the specimen.

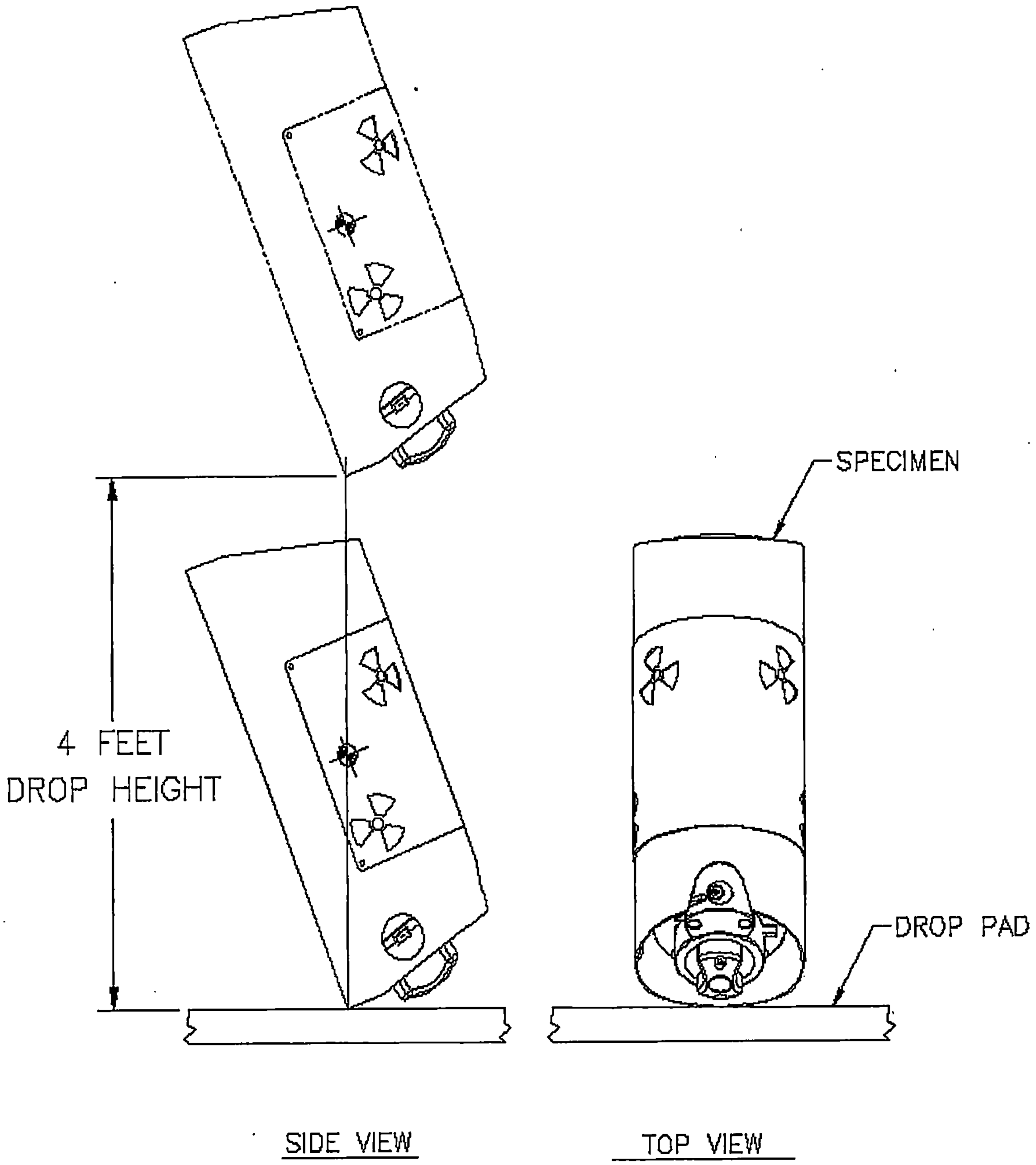

Figure 4. Four-Foot Free Drop Test.

Orientation for the 4-foot free drop, as shown in figure 4, is with the longitudinal axis of the package nearly vertical, but at a slight angle to the impact surface. The impact point is on the bottom edge of the shell at the lock end with the center of gravity directly over that point. This is the most vulnerable spot to produce enough deformation of the housing to bend the lock mounting plate and shear the attachment screws.

5.0 Changes to Test Conditions or Orientations

Changes to the planned test conditions or orientations shall only be done after careful consideration and documented justification. Prior to performing the test, Engineering, Regulatory and Quality Assurance shall approve the justification.

6.0 Pass and Fail Criteria

Post Test Initial Assessments.

- An initial assessment shall be made upon the completion of each test to evaluate the specimen's performance against the requirements of the test.

Post Test Final Assessment.

- A final assessment shall be made upon the completion of the entire test sequence to evaluate the specimen's performance against the test requirements and determine a pass or fail judgement. The specimen(s) shall be considered passing the test requirement, if the following conditions apply to the specimen after being subjected to all three tests:
  1. The source capsule must remain within the source tube, attached to the source wire and undamaged.
  2. The radiation profile results must be less than 200 mR/hr at the package's surface and must not be a significant increase between initial profile measurements and post-test profile measurements. Profile measurements evaluated against type A quantities of radioactive material, in this case 27.0 curies of IR192.

7.0 Test Equipment

Table of key test equipment:

Equipment	Drawing No.	Serial No.	Tolerance	Used on
Weight Scale				All tests
Temperature gage				All tests
Penetration bar	BT10129, Rev. B			Penetration test
Drop pad	AT10122, Rev B			Free drop test

8.0 Test Specimen

The test specimen is clearly described on drawing number TP100 revision A. A minimum of two test specimen shall be manufactured in accordance with drawing TP100 and the AEA Technology QSA Inc. quality assurance system.

9.0 Test Procedure

1. Manufacture and inspect the specimens per the test specimen drawing.
2. Perform and record radiation profile inspections per WI-Q09.
3. Conduct stacking test per 49 CFR 173.465 (d).
   - Record test data, damage descriptions (if any), initial test assessment.
4. Conduct penetration test per 49 CFR 173.465 (e).

- Record test data, damage descriptions (if any), initial test assessment.

5. Conduct 4-foot free drop test 49 CFR 173.465 (c).
   - Record test data, damage descriptions (if any), initial test assessment.
6. Perform and record radiation profile inspections per WI-Q09.
7. Record final test assessment.

Appendix A: Drawings and Figures.

- Test Specimen TP100, Revision A.

Appendix B: Worksheets.

- Compression Test.
- Penetration Test.
- 4-foot Free Drop Test.
- Final Test Assessment.

Compression Test
49 CFR 173.465(d)

Test Specimen:

Drawing No. ________________ Rev. _______________ Serial Number: ______________

Weight: _________________________ Scale used: _________________________________

Test Setup:

Photograph setup

Use Figure 2 to position the specimen and apply the compressive load.

Setup verified by: ________________________________ Date: __________________________

Compressive Load:

Weight: ________________________ Scale used: ___________________________________

Test Period:

Start date & time: ____________________ Ambient Temp. ________ Gage used: ___________

Stop date & time: ____________________ Ambient Temp. ________ Gage used: ___________

Damage description:

Photograph damage (if present)

____

____

Post test initial assessment:

____

____

____

Recorded by:	Date:
Witnessed by:	Date:
Quality Assurance Review by:	Date:

Notes:

Penetration Test

49 CFR 173.465 (e)

Test Specimen:

Drawing No. ______________________ Rev. ______ Serial Number: ____________

Test Setup:

Photograph Setup

Use Figure 3 to position specimen, locate impact point and set drop height (40 inches).

Setup verified by: __________________________ Date: _____________________

Penetration Bar:

Drawing No. ______________________ Rev. ______ Weight: _________________

Test Period:

Date & time: ____________________ Ambient Temp. _______ Gage used: __________

Specimen Damage:

Photograph Damage (if present)

____

____

____

Post test initial assessment:

____

____

____

____

Recorded by:	Date:
Witnessed by:	Date:
Quality Assurance Review by:	Date:

Notes:

Free Drop Test
49 CFR 173.465 (c)

Test Specimen:

Drawing No. ____________________ Rev. _______ Serial Number: ______________

Pretest weight ________________________ Scale Used ____________________

Test Setup:

Photograph Setup

Use Figure 4 to position specimen, locate impact point and set drop height (4 feet).

Setup verified by: ________________________ Date: ____________________

Drop surface:

Drawing No. ____________________ Rev. _______ Location: ________________

Test Period:

Date & time: __________________ Ambient Temp. ________ Gage used: __________

Specimen Damage:

Photograph Damage (if present)

Post test weight ______________________ Scale Used ____________________

____

____

Post test initial assessment:

____

____

____

____

Recorded by:	Date:
Witnessed by:	Date:
Quality Assurance Review by:	Date:

Notes:

Final Test Assessment

49 CFR 173.412 (j)

Test Specimen:

Model 880 Serial Number(s): ____________________

Loss or Dispersal of Radioactive Contents:

Did the source capsule remain within the source tube, attached to the source wire and undamaged? ____________________

Verified by: ____________________ Date: ____________________

Increase in radiation levels:

Are the final radiation profile results less than 200 mR/hr at the package's surface? __________

Is there a significant increase between pre-test profile measurements and post-test profile measurements? ____________________

Verified by: ____________________ Date: ____________________

Comments:

____

____

____

____

____

____

____

____

____

____

Engineering Review by:	Date:
Regulatory Review by:	Date:
Quality Assurance Review by:	Date:

TABLE OF CONTENTS

Model 880 Type A Transport Test Results

1.0 Introduction

This document describes the type A transport test results for the Model 880-transport package. The tests were conducted in accordance with AEA Technology QSA test plan #100.

One test specimen was tested and assessed to the type A test requirements. The test specimen experienced minor deformation to the shell, had radiation measurements less than 200 mR/hr at the surface with type A quantity material, and showed no significant increase in radiation measurement compared with the pre-test radiation measurements.

The final assessment concludes the model 880 transport package meets the requirements for Type A per DOT 49CFR173, NRC 10CFR71, and IAEA Safety Series 6 (As amended 1990).

2.0 Test Specimen

Two test specimen were manufactured at the AEA Technology QSA facility to the test specimen drawing TP100, revision A. One specimen was tested through all tests with the other as a spare.

Both specimens are identical except for the front plate assembly differences. These differences are documented on the route card or attached list.

3.0 Changes to Test Conditions or Orientations

There were no changes to the planned test conditions or orientations.

4.0 Compression Test Data

Both test specimen, serial number P01 & P02, tested.

Damage description.

- There was no apparent damage to either test specimen.

Post Test Initial Assessment.

- The damage caused by the test indicates the test specimens meet the requirements of the test.

5.0 Penetration Test Data

Test performed on test specimen serial number P01 only.

Damage description.

- A spherical bent approximately 1/8 inch deep at the point of impact. Point of impact as per the setup, 4 inches from front end and on top.

Post Test Initial Assessment.

- The damage caused by the test indicates the test specimens meet the requirements of the test.

6.0 Four Foot Free Drop Test Data

Test performed on test specimen serial number P01 only.

Damage Description.
- The rear end of the shell lip bent up towards the lock assembly. Bend of the shell lip approximately ½ inch out of original location.
- The front end of shell has a slight, ¼ inch dent.

Post Test Initial Assessment.
- The damage caused by the test indicates the test specimens meet the requirements of the test.

Function Check.
- The dummy source easily cycles in and out of the package without hindrance.

7.0 Radiation Measurement Data (Serial number P01 only)

Radiation measurements taken on the test specimen consisted of slowly scanning over the surface and at a meter of the package. The highest measured readings are recorded for each quadrant and each end.

A 147-curie source was used for the pre-test radiation measurements. This produced surface readings on the shell below 200 mR/hr and port readings on the ends under 300 mR/hr. One-meter readings around the shell were below 1 mR/hr and at or under 2 mR/hr at the ends.

A 128-curie source was used for the post-test radiation measurements. This produced the same results as the pre-test measurements with very little difference between each measured point.

Factored for a 27-curie source, the maximum intensity is calculated to be under 50 mR/hr at the surface and under 0.4 mR/hr at a meter.

8.0 Post Test Final Assessment.

The test specimen was tested in accordance with test plan #100 and therefore tested to the normal transport test requirements of DOT 49CFR173, NRC 10CFR71, and IAEA Safety Series 6 (As amended 1990). The model 880-transport package sustained very little damage and remained intact.

The dummy source remained secured in its fully shielded position within the source tube, attached to the source wire and undamaged.

The radiation profile results for a 27.0 curie, IR192 source is less than 200 mR/hr at the package's surface and there is no significant increase between initial profile measurements and post-test profile measurements.

Based on the above results, the model-880 prototype build passes the normal transport test requirements of 49CFR173, 10CFR71, and IAEA Safety Series 6 (As amended 1990).

TP#100
RESULTS
SG 25FEB00

RADIATION MEASUREMENT SUMMARY

10-Feb-00 150 Curie Max Activity Capacity
147.3 Curie Activity Used

S/N P01	Direct At Surface	Surface Factor	Direct At Meter	Capacity Factor	Corrected At Surface	Corrected At Meter
Top	95	1.27	0.5	1.02	123	0.5
Right	110	1.27	0.5	1.02	142	0.5
Front	250	1.10	2.0	1.02	280	2.0
Left	150	1.27	0.6	1.02	194	0.6
Rear	230	1.10	1.3	1.02	258	1.3
Bottom	145	1.27	0.8	1.02	188	0.8

25-Feb-00 150 Curie Max Activity Capacity
128 Curie Activity Used

S/N P01	Direct At Surface	Surface Factor	Direct At Meter	Capacity Factor	Corrected At Surface	Corrected At Meter
Top	130	1.27	0.6	1.17	193	0.7
Right	110	1.27	0.6	1.17	164	0.7
Front	210	1.10	1.6	1.17	271	1.9
Left	110	1.27	0.5	1.17	164	0.6
Rear	170	1.10	1.4	1.17	219	1.6
Bottom	120	1.27	0.7	1.17	179	0.8

25-Feb-00 27 Curie Max Activity Capacity
128 Curie Activity Used

S/N P01	Direct At Surface	Surface Factor	Direct At Meter	Capacity Factor	Corrected At Surface	Corrected At Meter
Top	130	1.27	0.6	0.21	35	0.1
Right	110	1.27	0.6	0.21	29	0.1
Front	210	1.10	1.6	0.21	49	0.3
Left	110	1.27	0.5	0.21	29	0.1
Rear	170	1.10	1.4	0.21	39	0.3
Bottom	120	1.27	0.7	0.21	32	0.1

SENTINEL

"880 Prototype"

COPY

SHIELDING PROFILE AND INSPECTION FORM

WI-Q09 Work Sheet

Model: 880 Serial Number: PO1 Radionuclide: IR 192 Max.Capacity: 150 Ci

Shield Data

Shield Heat#: 38909-1 | Mass of Shield: 33.50 Lbs. | Lot #: 00024-1

Initial Profile

Source Model: Source SN: Activity: Ci

Survey Inst.: SN: Date Cal.: Date Due:

Surface	Observed Intensity mR/hr	Surface Correction Factor		Adjusted Intensity mR/hr
Top			N/A Capacity Correction Factor:	
Right				
Front				
Left				
Rear				
Bottom				

Inspector: Date: NCR #:

Final Profile

Source Model: 424-9 Source SN: D2879 Activity: 147.3 Ci | Mass of Device: Lbs.

Survey Inst.: AN/PDR27T SN: SM392401 Date Cal.: 10 May 99 Date Due: 10 May 00

Observed Intensity mR/hr						Adjusted Intensity mR/hr		
Surface	At Surface	Surface Corr. Factor	At One Meter			At Surface	At One Meter	
			6"	Meter			6"	Meter
Top	95	1.27	12	.5	Capacity Correction Factor: 1.01	122	12.1	.5
Right	110	1.27	15	.5		141	15.1	.5
Front	250	1.10	40	2.0		278	40.4	2.0
Left	150	1.27	17	.6		192	17.1	.6
Rear	230	1.10	45	1.3		256	45.4	1.3
Bottom	145	1.27	20	.8		186	20.2	.8

Inspector: MCBoyd Date: 10 Feb 00 NCR #: N/A

QI6-1/1

Comments: MCBoyd

Source ~~Start~~/Locked Position: .392

Amersham QSA

SENTINEL

SHIELDING PROFILE AND INSPECTION FORM

Model: 880 Serial Number: PO1 Radionuclide: IR 192 Max.Capacity: 150 Ci

Shield Data

Shield Heat#: Mass of Shield: Lbs. Lot #:

Initial Profile

Source Model: Source SN: Activity: Ci

Survey Inst.: SN: Date Cal.: Date Due:

Surface	Observed Intensity mR/hr	Surface Correction Factor	N/A Capacity Correction Factor:	Adjusted Intensity mR/hr
Top				
Right				
Front				
Left				
Rear				
Bottom				

Inspector: Date: NCR #:

Final Profile

Source Model: 424-9 Source SN: D2879 Activity: 128.0 Ci Mass of Device: Lbs.

Survey Inst.: AN/PDR27T SN: SM392401 Date Cal.: 10 MAY 99 Date Due: 10 MAY 00

	Observed Intensity mR/hr				Adjusted Intensity mR/hr	
Surface	At Surface	Surface Corr. Factor	At One Meter		At Surface	At One Meter
Top	130	1.27	.6	Capacity Correction Factor: 1.17	193	.7
Right	110	1.27	.6		163	.7
Front	210	1.10	1.6		270	1.9
Left	110	1.27	.5		163	.6
Rear	170	1.10	1.4		219	1.6
Bottom	120	1.27	.7		178	.8

Inspector: Dave Date: 25 feb 00 NCR #:

Q16-1/1

omments:

Amersham QSA

Appendix A. Test Data.

Compression Test
49 CFR 173.465(d)

Test Specimen:

Drawing No. TP100 Rev. A Serial Number: P01

Weight: 42.95 lbs. Scale used: OHAUS # 35014

Test Setup:

Photograph setup

Use Figure 2 to position the specimen and apply the compressive load.

Setup verified by: Dave Annis Date: 23 feb 00

Compressive Load:

Weight: 459 lbs Scale used: Port Beam Scale # L482397

Test Period:

Start date & time: 23 feb 00 12:05 PM Ambient Temp. 73.4 °F Gage used: OMEGA HH21 #ENG-12

Stop date & time: 24 feb 00 12:30 PM Ambient Temp. 73.1 °F Gage used: OMEGA HH21 #ENG-12

Damage description:

Photograph damage (if present)

NO DAMAGE

Post test initial assessment:

NO DAMAGE THEREFORE INITIAL INDICATIONS ARE THE TEST SPECIMEN MEETS THE REQUIREMENTS OF THIS TEST.

Recorded by: Dave Annis	Date: 24 feb 00
Witnessed by:	Date: 24 Feb 00
Quality Assurance Review by: Daniel W. Kurtz	Date: 24 Feb 00

Notes:

Compression Test
49 CFR 173.465(d)

Test Specimen:

Drawing No. TP100 Rev. A Serial Number: P02

Weight: 43.00 lbs Scale used: OHAUS # 35014

Test Setup:

Photograph setup

Use Figure 2 to position the specimen and apply the compressive load.

Setup verified by: Dave Date: 23 feb 00

Compressive Load:

Weight: 459 lbs. Scale used: Port Beam Scale #L482397

Test Period:

Start date & time: 23 feb 00 12:05 PM Ambient Temp. 73.4°F Gage used: OMEGA HH21 #ENG-12

Stop date & time: 24 feb 00 12:30 PM Ambient Temp. 73.1°F Gage used: OMEGA HH21 #ENG-12

Damage description:

Photograph damage (if present)

NO DAMAGE

Post test initial assessment:

NO DAMAGE THEREFORE INITIAL INDICATIONS ARE THE TEST SPECIMEN MEETS THE REQUIREMENTS OF THIS TEST.

Recorded by: Dave	Date: 24 feb 00
Witnessed by:	Date: 24 FEB 00
Quality Assurance Review by: Daniel W. Kurtz	Date: 24 Feb 00

Notes:

Penetration Test
49 CFR 173.465 (e)

Test Specimen:

Drawing No. TP100 Rev. A Serial Number: P01

Test Setup:

Photograph Setup

Use Figure 3 to position specimen, locate impact point and set drop height (40 inches).

Setup verified by: Dave Date: 24 feb 00

Penetration Bar:

Drawing No. BT10129 Rev. B Weight: 13.4 lbs SN 1

Test Period:

Date & time: 24 feb 00 2:53 PM Ambient Temp. 58° F Gage used: ENG-12 OMEGA HH-21

Specimen Damage:

Photograph Damage (if present)

DENT .134 DEEP

Post test initial assessment:

MINOR DAMAGE INDICATES THE TEST SPECIMEN MEETS THE REQUIREMENTS OF THIS TEST.

Recorded by: Dave	Date: 24 feb 00
Witnessed by: Steve	Date: 24 FEB 00 / 24 FEB 00
Quality Assurance Review by: Daniel W. Kurtz	Date: 24 FEB 00

Notes:

Free Drop Test
49 CFR 173.465 (c)

Test Specimen:

Drawing No. TP100 Rev. A Serial Number: P01

Pretest weight 42.95 lb. Scale Used 35014

Test Setup:

Photograph Setup

Use Figure 4 to position specimen, locate impact point and set drop height (4 feet).

Setup verified by: Dave Arnt Date: 24 feb 00

Drop surface:

Drawing No. A T10122 Rev. B Location: VALLY TREE GROVELAND, MA

Test Period:

Date & time: 24 Feb 00 3:00 PM Ambient Temp. 59° F Gage used: OMEGA HH21 #ENG-12

Specimen Damage:

Photograph Damage (if present)

Post test weight 42.90 lbs Scale Used 35014

* **Post test initial assessment:**

DAMAGE:

REAR OF DEVICE SHELL MATERIAL ROLLED APPROX 1/2" (DENTED)

FRONT OF DEVICE SHELL MATERIAL SLIGHTLY BENT APPROX 1/4"

Recorded by: Dave Arnt	Date: 24 feb .00
Witnessed by: Steve Brown	Date: 24 Feb 00 / 24 Feb 00
Quality Assurance Review by: Danny W. Kurtz	Date: 24 Feb 00

Notes:

* MINOR DAMAGE INDICATES THE TEST SPECIMEN MEETS THE REQUIREMENTS OF THIS TEST.

FUNCTIONAL TEST: DUMMY SOURCE PROJECTS AND SECURES WITHOUT HINDERANCE.

DW 24 feb 00

SD 24 Feb 00

Final Test Assessment

49 CFR 173.412 (j)

Test Specimen:

Model 880 Serial Number(s): P01

Loss or Dispersal of Radioactive Contents:

Did the source capsule remain within the source tube, attached to the source wire and undamaged? Yes

Verified by: Dave

Date: 25 feb 00

Increase in radiation levels: * FOR 27 CURIES OF IR192

Are the final radiation profile results less than 200 mR/hr at the package's surface? Yes *

Is there a significant increase between pre-test profile measurements and post-test profile measurements? NO

Verified by: Dave

Date: ~~24~~ DW 25 feb 00 25 feb 00

Comments:

Engineering Review by: S. G	Date: 25 Feb00
Regulatory Review by:	Date: 25 Feb00
Quality Assurance Review by: D.W. Kuntz	Date: 25 Feb 00

W/O M107730 + Q89650

No	Description of nonconformance	Disposition	Prod.	Eng.	Insp.
	DWG A88012 REV 1 TRIGGER ASSEMBLY ① PARTS NOT AVAILABLE FOR ASSEMBLY S/N P01 + P02	USE WITHOUT	RWE 23 Feb 00	SC 23 FEB 00	Da 23 feb 00
	DWG. B88013 REV 1 LOCK MOUNT ASSEMBLY ① TRIGGER ASSEMBLY NOT INCLUDED. ② TRIGGER ASSY SCREW NOT INCLUDED. S/N P01 + P02	USE WITHOUT TRIGGER ASSY	RWE 23 Feb 00	SC 23 FEB 00	Da 23 feb 00
	DWG B88011 REV. 2 BODY WELDMENT ① TUBE SLEEVE (A88006) GLUED TO FRONT + REAR ENDPLATES. ② SHIELD SPACER (A88005) TAPED TO SHIELD. ③ BOTH ENDS OF STUBE RADIUS + DEBURRED ON INSIDE TO REMOVE SHARP EDGES. ④ STAMPED SERIAL NUMBER TO ENDPLATE S/N P01 + P02	UPDATE DWGS	RWE 23 Feb 00	SC 23 FEB 00	Da 23 feb 00
	DWG B88020 REV. 1 REAR PLATE ASSEMBLY ① STAMPED SERIAL NO. ON BACK. ② TORQUED ITEM 12 TO 30 IN-LB [illegible] ③ ADDED VIBRATITE TO ITEMS 12 + 13. ④ LUBRICATED ITEMS 5 + 8 ⑤ SLIDE CHANGED TO REV. 3, DWG A88024. S/N P01 + P02	UPDATE DWGS. — TORQUE WRENCH:	RWE 23 Feb 00	SZ 23 FEB 00	Da 23 feb 00
	DWG B88030 REV 1. FRONT PLATE ASSEMBLY ① REPLACED PIN TO DWG A88037 REV 1. ② MODIFIED ROTOR TO DWG B88032 REV 5. ③ MODIFIED KNOB TO DWG A88033 REV. 2. ④ ADDED GRIP KNOB PER DWG A88038 REV 1 ⑤ ADDED PIVOT DISK PER DWG A88039 REV 1 ⑥ ADDED FLAT HD SCREWS	UPDATE DWGS. S/N P01. ONLY	RWE 23 Feb 00	SC 23 FEB 00	Da 23 feb 00

w/o M107730 +
Q89650

No	Description of nonconformance	Disposition	Prod.	Eng.	Insp.
	DWG. TP100 + TP104 TEST SPECIMEN DWG. ① ADDED ANTI-SIEZE TO 5/16 BOLTS. ② ADDED RELIEF TO LOCK PLATES TO CLEAR WELD (1/16 High AT Bottom Lip between BOLT Holes) S/N P01 + P02	UPDATE DWG	R20G 23Feb00	SL 23Feb00	DW 23 feb 00

SENTINEL

ROUTE CARD

C Lot# NA
Complete Lot:
Total WO Qty.: 2
Serial No: P01
M: A
Split Lot : ✓
Rte. Cd. Qty.: 1
Lot No: NA

art # TP100
Description MODEL 880 TEST UNIT TYPE A
Dwg TP100
Rev A
WO Q89650

per. Seq.	Department	Operation Description	By	Date	Qty Acc	Qty Rej	Reference	Comments
010	ASSY / MS	ASSEMBLE PER NOTES 1-4	RWE	23 Feb 00			TP100	
020	QC	INSPECTION	DW	23 feb 00	1	0	SOP-Q015	
030	QA	QA REVIEW		23 Feb 00			SOP-Q025 & TP100	
040	IC	STOCKROOM PROCESSING DELIVER TO QC FOR TESTING	AC	22Feb00			SOP-M002	

Drawing	Checklist	Initials	WI-Step	Checklist	Initials	WI-Step	Checklist	Initials
TP100	NOTE 1. TORQUE 110 +/-5" LBS.	RWE DW						
TP100	NOTE 3 TOTAL WEIGHT	42.95 DW 23 feb 00						

ENGINEERING: S. G 23 FEB 00
REGULATORY: 23 Feb 00
MATERIALS: Alan Cain 23 Feb 00
PRODUCTION: RW Evans 23 Feb 00
QUALITY ASSURANCE: D.W. Kurtz 23 Feb 00
ISSUE NUMBER: 1

QP25-1/2

SENTINEL

NO	DESCRIPTION OF NONCONFORMANCE	DISPOSITION	INDIV/ DATE	INSP/DATE	PART NUMBER	DESCRIPTION	CM	SERIAL/ LOT NO.	INITIALS	DATE
					88011	BODY WELDMENT	A	P01	RWC	23 Feb 00
					88020	REAR PLATE ASSY.	A	P01	RWC	23 Feb 00
					MTE SN	MTE DESCRIPTION	CAL DUE DATE		INITIALS	DATE
					ASSY/15	TORQUE WRENCH	4-2-00		RWC	23 Feb 00
					35014	SCALE	11-24-00		TW	23 Feb 00
					CHANGE VERIFICATION					
					PART NUMBER	DESCRIPTION	REV	ECO	INDIVIDUAL	VERIFIED

SIMCO
electronics
127 RIVERNECK ROAD
CHELMSFORD, MA 01824

Da 21 OCT 99 Certificate No. **1054915**

KEMA CERTIFIED
ISO 9002
REGISTERED
CERT.NO. 10458.01

CERTIFICATE OF CALIBRATION
FOR
AEA TECHNOLOGIES

Description: **OMEGA ENGINEERING, HH21, MICROPROCESSOR THERMOMETER**

Serial No: **T179139** Asset No: **ENG-12** Simco ID: **24948-10**

Dept: **NONE** PO No: **P4732-00**

Calibration Date: **10/18/99**	Calibration Interval: **12 Months**	Recall Date: **10/18/00**

Arrival Condition: **MEETS MANUFACTURER'S SPEC'S.**	Service: **CLEAN/CALIBRATE TO MFR'S SPEC**

Procedure: **PER MFRS. SPEC** Cal Ratio: **2.00:1**
Temperature: **67°F** Relative Humidity: **38%**

Standards Used:

Type	Simco ID	Due Date	Intvl Mos	Accuracy	NIST No
POTENTIOMETER	**23565*210**	**01/08/00**	**6**	**+/-12uV**	**413348**
POTENTIOMETER	**23565*210**	**01/08/00**	**6**	**+/-0.6'C**	**255343**

Work performed by: DA
Duane A. Archambault
Technician (11468)

Reviewed by:
Phillip A. Maltais
Lab Supervisor

All calibrations are performed using internationally recognized standards traceable to the National Institute of Standards and Technology (NIST) or the National Physical Laboratory (NPL), or using natural physical constants or ratio calibration techniques. Our calibration system complies with MIL-STD-45662A and ANSI/NCSL Z540-1. The information shown on this certificate applies only to the instrument identified above and may not be reproduced, except in full, without prior written consent from SIMCO Electronics.
Dated: **10/18/99**

```
   Customer: AEA TECHNOLOGY                                              P.O. No.: P4634-00
                                                                         Date Cal: 11/24/99
     ID.No.: 268               Manufacturer: TOLEDO                      Date Due: 11/24/00
   2 ID.No.:                     Serial No.: 2642125-2VT               Technician: DD
 Department:                      Model No.: 8582                   Cal. Proc. No: 01
Deviation u.:                  Standard No.: 018        Cal.: 03/24/99      Due: 03/24/00
   Accuracy: +/-4%             Standard No.:            Cal.:               Due:
   Accuracy:                   Standard No.:            Cal.:               Due:
                               Standard No.:            Cal.:               Due:
  Gage Type: 0-10.0lb SCALE
            :
  Required: :  0      1.0      2.0      5.0      7:0      10.0 lb
 Deviation: :
  Measured: : REF   1.000    2.000    5.000    7.000    10.000 lb
            :-----------------------------------------------------------------

   Customer: AEA TECHNOLOGY                                              P.O. No.: P4634-00
                                                                         Date Cal: 11/24/99
     ID.No.: 269               Manufacturer: NCI                         Date Due: 11/24/00
   2 ID.No.:                     Serial No.: SR878400111               Technician: DD
 Department:                      Model No.: 8300                   Cal. Proc. No: 01
Deviation u.:                  Standard No.: 018        Cal.: 03/24/99      Due: 03/24/00
   Accuracy: +/-4%             Standard No.:            Cal.:               Due:
   Accuracy:                   Standard No.:            Cal.:               Due:
                               Standard No.:            Cal.:               Due:
  Gage Type: 0-10.0lb DIGITAL SCALE
            :
  Required: :  0       1.0       2.0       5.0       7.0       10.0lb
 Deviation: :
  Measured: : REF    1.000     2.000     5.002     7.002     10.002lb
            :-----------------------------------------------------------------

   Customer: AEA TECHNOLOGY                                              P.O. No.: P4634-00
                                                                         Date Cal: 11/24/99
     ID.No.: 3500              Manufacturer: DILLON                      Date Due: 11/24/00
   2 ID.No.:                     Serial No.: D-3500                    Technician: DD
 Department:                      Model No.:                        Cal. Proc. No: 22
Deviation u.:                  Standard No.: 018        Cal.: 03/24/99      Due: 03/24/00
   Accuracy: +/-4%             Standard No.: 031        Cal.: 02/23/95      Due: 02/23/00
   Accuracy:                   Standard No.:            Cal.:               Due:
                               Standard No.:            Cal.:               Due:
  Gage Type: 0-500lb FORCE GAGE
            :
  Required: :  0      50.0     100.0     150.0      200.0 lb
 Deviation: :
  Measured: : REF     51.0     103.0     153.0      202.0 lb
            :-----------------------------------------------------------------

   Customer: AEA TECHNOLOGY                                              P.O. No.: P4634-00
                                                                         Date Cal: 11/24/99
     ID.No.: 35014             Manufacturer: O'HAUS                      Date Due: 11/24/00
   2 ID.No.:                     Serial No.: 35014                     Technician: DD
 Department:                      Model No.: DS10                   Cal. Proc. No: 01
Deviation u.:                  Standard No.: 018        Cal.: 03/24/99      Due: 03/24/00
   Accuracy: +/-4%             Standard No.: 031        Cal.: 02/23/95      Due: 02/23/00
   Accuracy:                   Standard No.:            Cal.:               Due:
                               Standard No.:            Cal.:               Due:
  Gage Type: 0-110lb DIGITAL SCALE
            :
  Required: :  0      5.0      10.0      20.0      50.0      70.0      100.0lb
 Deviation: :
  Measured: : REF     5.00     10.00     20.00     50.00     69.95     100.00lb
            :-----------------------------------------------------------------
```

CERTIFICATE OF CALIBRATION

Test and Inspection Report prepared by [redacted] Mettler Toledo

This is to certify that the undersigned has inspected the following for

AEA Technologies

Make NES

Capacity 2000 LB.

Grad Size .5

Type Port Beam Scale

Model No. Port Beam

Serial No. L 482397

Location Assembly-11

I. D. No.

SCALE READINGS

STANDARD'S USED	BEFORE ADJUSTMENTS	AFTER ADJUSTMENTS
0	0	N/A
500 LB.	500.0	
1000 "	1000.0	
1500 "	1498.0	

☑ SCALE PASSES ☐ DOES NOT PASS

This is to certify that the weighing device identified above has been calibrated using certified test weight traceable to the National Institute of Standards and Technology (formerly NBS) and is guaranteed accurate to the tolerance indicated. Traceability # 12691 CT.

Inspection in accordance with National Bureau of Standard Handbook 44 and Mil Standard C-45662A.

Additional Data:

Scale Inspector Carmine J Belleville

Date: 11-22-99

Company Mettler Toledo

Due Date: 5-22-2000

Service Report / Order No.

```
   Customer: AEA TECHNOLOGY                                          P.O. No.: 3753
                                                                    Date Cal: 04/01/99
     ID.No.: 273 A&B          Manufacturer: THREADS, INC.           Date Due: 04/01/00
   2 ID.No.:                     Serial No.:                       Technician: PR
  Department:                     Model No.:                     Cal. Proc. No: 15
Deviation u.:                  Standard No.: 006       Cal.: 02/10/99    Due: 08/31/99
   Accuracy: GO  +0.000 20"    Standard No.: 021       Cal.: 02/10/99    Due: 08/31/99
   Accuracy: NG  -0.000 20"    Standard No.:           Cal.:             Due:
                               Standard No.:           Cal.:             Due:
  Gage Type: GO/NO GO PLAIN PLUG SET
           :          GO                               NO GO
  Required: :       0.6250"                           0.6256"
 Deviation: : +0.00001"     +0.00001"          -0.00001"     -0.00001"
  Measured: : +0.62501"     +0.62501"          -0.62559"     -0.62559"
            :-------------------------------------------------------------

   Customer: AEA TECHNOLOGY                                          P.O. No.: 3753
                                                                    Date Cal: 04/01/99
     ID.No.: 285 A&B          Manufacturer: REGAL BELOIT            Date Due: 04/01/00
   2 ID.No.:                     Serial No.:                       Technician: PR
  Department:                     Model No.:                     Cal. Proc. No: 15
Deviation u.:                  Standard No.: 011       Cal.: 03/23/99    Due: 06/30/99
   Accuracy: GO  -0.000 30"    Standard No.:           Cal.:             Due:
   Accuracy: NG  +0.000 30"    Standard No.:           Cal.:             Due:
                               Standard No.:           Cal.:             Due:
  Gage Type: 1.0"-8 UN-2A THREAD RING SET     (SET PLUG PASSES)
           :          GO                               NO GO
  Required: :       0.9168"                           0.9100"
 Deviation: :       0.0000"                           0.0000"
  Measured: :       0.9168"                           0.9100"
            :-------------------------------------------------------------

   Customer: AEA TECHNOLOGY                                          P.O. No.: 3753
                                                                    Date Cal: 04/01/99
     ID.No.: ASSY-1           Manufacturer: MITUTOYO                Date Due: 04/01/00
   2 ID.No.:                     Serial No.:                       Technician: PR
  Department: MACHINE SHOP        Model No.: 101-105             Cal. Proc. No: 03
Deviation u.:                  Standard No.: 026       Cal.: 02/10/99    Due: 08/31/99
   Accuracy: +/-0.000 10"      Standard No.:           Cal.:             Due:
   Accuracy:                   Standard No.:           Cal.:             Due:
                               Standard No.:           Cal.:             Due:
  Gage Type: 0-1.0" OD MICROMETER
           :
  Required: : 0     0.100"    0.115"    0.250"    0.500"    0.750"    1.000"
 Deviation: :REF      0         0         0         0         0         0
  Measured: :REF  0.1000"   0.1150"   0.2500"   0.5000"   0.7500"   1.0000"
            :-------------------------------------------------------------

   Customer: AEA TECHNOLOGY                                          P.O. No.: 3753
                                                                    Date Cal: 04/02/99
     ID.No.: ASSY-15  (A)     Manufacturer: CRAFTSMAN               Date Due: 04/02/00
   2 ID.No.:                     Serial No.:                       Technician: PR
  Department:                     Model No.: 44593               Cal. Proc. No: 23
Deviation u.:                  Standard No.: 158       Cal.: 07/06/98    Due: 07/06/99
   Accuracy: +/-4%             Standard No.: 159       Cal.: 07/06/98    Due: 07/06/99
   Accuracy:                   Standard No.: 160       Cal.: 07/06/98    Due: 07/06/99
                               Standard No.:           Cal.:             Due:
  Gage Type: 25.250 in/lb TORQUE WRENCH   C.W.     (PART 1 OF 2)
           :
  Required: :  25.0     50.0     75.0    100.0    150.0    200.0    250.0 lb
 Deviation: : +0.32    +0.63    -0.74    +0.3     +2.4     +5.0     +4.1  lb
  Measured: : 25.32    50.63    74.26    100.3    152.4    205.0    254.1 lb
            :-------------------------------------------------------------
```

```
     Customer: AEA TECHNOLOGY                                      P.O. No.: 3753
                                                                  Date Cal: 04/02/99
       ID.No.: ASSY-15  (B)        Manufacturer: CRAFTSMAN        Date Due: 04/02/00
     2 ID.No.:                        Serial No.:                Technician: PR
   Department:                         Model No.: 44593        Cal. Proc. No: 23
 Deviation u.:                      Standard No.: 158      Cal.: 07/06/98    Due: 07/06/99
     Accuracy: +/-4%                Standard No.: 159      Cal.: 07/06/98    Due: 07/06/99
     Accuracy:                      Standard No.: 160      Cal.: 07/06/98    Due: 07/06/99
                                    Standard No.:          Cal.:             Due:
    Gage Type: 25.250 in/lb TORQUE WRENCH   C.C.W.     (PART 2 OF 2)
             :
    Required:  :  25.0    50.0    75.0    100.0    150.0    200.0    250.0 lb
   Deviation:  : -0.51   +1.02   +1.26    +2.1     +3.6     +4.8     +6.1  lb
    Measured:  : 24.49   51.02   76.26    102.1    153.6    204.8    256.1 lb
               :----------------------------------------------------------------

     Customer: AEA TECHNOLOGY                                      P.O. No.: 3753
                                                                  Date Cal: 04/01/99
       ID.No.: ASSY-2              Manufacturer: MITUTOYO         Date Due: 04/01/00
     2 ID.No.:                        Serial No.:                Technician: PR
   Department: MACHINE SHOP            Model No.: 505-644-50   Cal. Proc. No: 16
 Deviation u.:                      Standard No.: 026      Cal.: 02/10/99    Due: 08/31/99
     Accuracy: +/-0.0010"           Standard No.: 088      Cal.: 02/10/99    Due: 08/31/99
     Accuracy:                      Standard No.: 137      Cal.: 02/10/99    Due: 02/28/00
                                    Standard No.:          Cal.:             Due:
    Gage Type: 0-8.0" DIAL CALIPER
             :
    Required:  :  0   PARA    ID   OD    1.0"     2.0"     4.0"     6.0"     8.0"
   Deviation:  : REF .0005 +.0005       +.0005   +.0005   +.0005   -.0010   -.0010
    Measured:  : REF .0005 1.0005"      1.0005"  2.0005"  4.0005"  5.9990"  7.9990"
               :----------------------------------------------------------------

     Customer: AEA TECHNOLOGY                                      P.O. No.: 3753
                                                                  Date Cal: 04/01/99
       ID.No.: ASSY-4  (A)         Manufacturer: MITUTOYO         Date Due: 04/01/00
     2 ID.No.:                        Serial No.:                Technician: PR
   Department: MACHINE SHOP            Model No.: 505-628-50   Cal. Proc. No: 16
 Deviation u.:                      Standard No.: 027      Cal.: 02/10/99    Due: 08/31/99
     Accuracy: +/-0.0010"           Standard No.: 088      Cal.: 02/10/99    Due: 08/31/99
     Accuracy:                      Standard No.: 134      Cal.: 02/10/99    Due: 02/28/00
                                    Standard No.:          Cal.:             Due:
    Gage Type: 0-12.0" DIAL CALIPER      (PART 1 OF 2)
             :
    Required:  :  0      PARA     ID      OD      1.0"     2.0"     4.0"
   Deviation:  : REF    .0010   -.0010           -.0010   -.0010   -.0010
    Measured:  : REF    .0010   0.9990           0.9990"  1.9990"  3.9990"
               :----------------------------------------------------------------

     Customer: AEA TECHNOLOGY                                      P.O. No.: 3753
                                                                  Date Cal: 04/01/99
       ID.No.: ASSY-4  (B)         Manufacturer: MITUTOYO         Date Due: 04/01/00
     2 ID.No.:                        Serial No.:                Technician: PR
   Department: MACHINE SHOP            Model No.: 505-628-50   Cal. Proc. No: 16
 Deviation u.:                      Standard No.: 027      Cal.: 02/10/99    Due: 08/31/99
     Accuracy: +/-0.0010"           Standard No.: 088      Cal.: 02/10/99    Due: 08/31/99
     Accuracy:                      Standard No.: 134      Cal.: 02/10/99    Due: 02/28/00
                                    Standard No.:          Cal.:             Due:
    Gage Type: 0-12.0" DIAL CALIPER      (PART 2 OF 2)
             :
    Required:  :  6.0"       8.0"       10.0"       12.0"
   Deviation:  : -.0010     -.0010     -.0010      -.0010
    Measured:  :  5.9990"    7.9990"    9.9990"    11.9990"
               :----------------------------------------------------------------
```

SENTINEL

ROUTE CARD

QC Lot# 11930 Complete Lot:_______ Total WO Qty.: 10 Serial No: P01

CM: A Split Lot :_______ Rte. Cd. Qty.: 1 Lot No: NA

FOR PROTOTYPE FABRICATION ONLY

SD DW 23 Feb 00 SD 23 Feb 00 SD DW 23 Feb 00 SD DW 23 Feb 00

Part # ~~88000~~ TP100 + TP104 23 Feb 00 Description (TEST SPECIMEN) MODEL 880 ASSEMBLY Dwg ~~B88000~~ TP100 + TP104 Rev ~~1~~ A WO M107730

Oper. Seq.	Department	Operation Description	By	Date	Qty Acc	Qty Rej	Reference	Comments
0010	MS	WELD	DRD	3 FEB 00			A88010	REV.2
0020	QC	INSPECT	MRB	3 Feb 00	2 ~~0~~	~~0~~ 2 MRB 3 Feb 00	A88010	REV.2 LOT# QCL#11852
0030	MS/ASSY.	ASSEMBLE	←	NA	—		A88012	REV.1 (SEE ATTACHED)
			23 Feb 00 ↔	RWE			B88013	REV.1
			RWE	23 Feb 00			B88020	REV.1
			RWE	23 Feb 00			B88030	REV.1
0040	QC	INSPECT	—	NA	—	—	A88012	REV.1
			DW	23 Feb 00	1	~~0~~	B88013	REV.1
			DW	23 feb 00	1	~~0~~	B88020	REV.1 LOT# SN135 T660 .198 00054-1
			DW	23 feb 00	1	~~0~~	B88030	REV.1
0050	MS	ASSEMBLE	DFW	4 FEB 00			B88011	REV. 2 WI-AS48
0060	QC	ENDPLATES PROPERLY ATTACHED TO SHIELD		4 Feb 00	1	0	B88011	REV.2 LOT# P01
0070	MS/ASSY	TACK.WELD & ASSEMBLE	DRB	4 FEB 00			B88011	REV.2 WI-AS48
0080	QC	*INSPECT & INITIAL PROFILE	MRB	10 Feb. 00	0	1	B88011 DW	REV.2 MRB 14 Feb 00 *Tack Welds
0090	MS	WELD ,FOAM & ASSEMBLE	DRB RWE	14 FEB 00 17 Feb 00	1		~~B88000~~ SD 23 Feb 00 TP100	REV ~~1~~ A B88011REV.2WI-AS48,AS40
0100	QC	~~FINAL INSPECTION~~ Weld Only	MRB	17Feb00	~~0~~ 1	~~1~~ 0	UAE 17Feb00 MRB ~~B88000~~ TP100 DW	Under/Oversize QCL11956 REV.~~1~~A
0110	QC	~~FINAL PROFILE~~	Process Shifted				TP100 SD 23 Feb 00 ~~B88000~~	REV ~~1~~ A
0120	QA	~~QA REVIEW~~	To TP100 + TP104				SOP-Q025	
0130	IC	~~STOCKROOM PROCESSING~~	Route Card				SOP-M02	

SD 23 Feb 00

DW 23 feb 00

WI-STEP	Checklist	Initials	WI–Step	Checklist	Initials	Drawing #	Checklist	Initials
9.3	PERFORM & VERIFY FINAL CUT OF SHIELD	RWE	9.20	VERIFY S.N. OF SHELL vs. NAMEPLATE AND LABELS	RWE	B88000	TOTAL PACKAGE WEIGHT	DW 42.95 lb
			9.21	TORQUE	RWE			
9.5	VERIFY S.N. OF DEVICE STAMPED ON SHELL	RWE	9.23	FUNCTONAL TEST W/ DUMMY SOURCE	RWE			

ENGINEERING: S-Gen 3 Feb 00 REGULATORY: C. Rongan 3 Feb 00 MATERIALS: Alan Cain 3 Feb 00

PRODUCTION: RW Crowse 3 Feb 00 QUALITY ASSURANCE: 3 Feb 00 ISSUE NUMBER: 1

38.50 (B88011)

SENTINEL

NO	DESCRIPTION OF NONCONFORMANCE	DISPOSITION	INDIV/ DATE	INSP/DATE	PART NUMBER	DESCRIPTION	CM	SERIAL/ LOT NO.	INITIALS	DATE
1	OP.SEQ 0020 88010 ~~NCR-4989~~ W-2	~~* NCR 4989 VOIDED MAB 3Feb00 *~~ ~~See NCR~~			88001	D.U. SHIELD	Heat Lot	38909-1 00024-1	RWE	4 Feb 00
/	NCR# QCL 11852	SUBMIT DCR TO CHG DWG.			88004	ENDPLATE	A	LOT 00034-2	DRB	13 FEB 00
		(1/16 min) SD 3Feb00	CMR 3Feb00		88010	ENDPLATE WELD'T.	A	Lot 00034-5	MAB	3 Feb 00
		RWE 3Feb00			88011	BODY WELDMENT	A	00054-2	DW	23 feb 00
		3Feb00			88020	REAR PLATE ASSY.	A	00054-1	DW	23 feb 00
2	P/N 38037 Rev 2	Rework in MS		4 Feb 00	88021	LOCK MTG. PLATE	A	00034-1	DW	23 feb 00
	Rework from 1	DFW 4FEB00			CBL004	7 X 19 CABLE	A	000	RWE	8 Feb 00
		SD 4Feb00 4 Feb 00			SCR003	10-32 X 1 ¼ SCREW	A	99139-1	RWE	8 Feb 00
	washer	CMR 4Feb00			*	WELD ROD	A	LOT 94042-4	DRB	16 FEB 00
3	add Flat ^ one on each	4 Feb 00			*	ac 16Feb00 DW 16 Feb 00				
	End Plate between :	SD 4Feb00			MTE SN	MTE DESCRIPTION	CAL DUE DATE		INITIALS	DATE
	Cotter Pin + Bracket	CMR 4Feb00			ASSY-2	CALIPERS	4-1-00		RWE	4 Feb 00
	(at installation of Pin Asm)	RWE 4Feb00			ASSY-15	TORQUE WRENCH	4-2-00		RWE	23 Feb 00
	P/N 65006-6) 2 per	step 0070			269	FOAM SCALE	11-24-00		RWE	17 Feb 00
					35014	SCALE	11-24-00		DW	23 Feb 00
5	operation .0030 to	Proceed to 0050								
	0050 not performed due	SD 7Feb00 7Feb00								
	to part availability	RWE 7Feb00								
		CMR 7Feb00								
	IT IS ACCEPTABLE TO GO	OUT OF SEQUENCE								
	ON THIS ROUTE CARD FOR	PROFILE PURPOSES.								
	A FUNCTIONAL TEST WAS	BEEN PERFORMED.				CHANGE VERIFICATION				
	DWK 10FEB00	CMR 10Feb00			PART NUMBER	DESCRIPTION	REV	ECO	INDIVIDUAL	VERIFIED
		RAM 10FEB00								
		SD 10Feb00								
⑥	Fail Initial Profile (See Attached SP1 F/G-11/ NCR QCL 11930	— Proceed to weld + Finish Assy 88011								
(7)	½" art + ½. OVERSIZE	11AT	DW 17Feb00	SD 14Feb00						

SENTINEL

Sheet 1 of 1

TP 100

INSPECTION INSTRUCTION AND RECORD	ORIGINATOR / DATE 23 Feb 00	REV A	PART NO. TP100	SUPPLIER ASSEMBLY
	QA APPROVAL / DATE 23 Feb 00	CM A	PIL NA	DESCRIPTION MODEL 880 TYPE A TEST SPECIMEN

CHARACTERISTICS	TOLERANCE	MTE / SN.	AQL	1	2	3	4	5	6	7	8	9	10
GENERAL VISUAL	NA	NA	C / 100%	0 / 2									
VERIFY ALL ITEMS PRESENT PER DWG.	NA	NA	↓	0 / 2									
NOTE 1 TORQUE 110 IN LB ± 5	± 5 IN LB	SEE ROUTE CARD		0 / 2									
NOTE 2 INSTALL DUMMY SOURCE ASSY	NA	NA		0 / 2									
NOTE 3 RECORD TOTAL WEIGHT	NA	SEE ROUTE CARD		0 / 2									
NOTE 4 MARK SN ON ENDPLATE & LABEL	NA	NA		0 / 2									

COMMENTS:	PO/WO #										
	TRAVELER / QCL #	N / A									
	LOT / SERIAL #	P01 P02									
	LOT QTY.	2									
	QTY. REJ / NCR #	0 / NA									
	QTY. ACC.	2									
	INSP / DATE	DW 23 Feb 00									

REVISIONS				
REV.	ECO/TGR #	DESCRIPTION	APPROVALS	DATE
A	2655	INITIAL RELEASE	SEE TITLE	BLOCK

PRODUCTION PRINT
THIS DRAWING FOR USE WITH
ORDER NUMBER Q89650 ONLY.

FEB 2000

RETURN TO ENGINEERING WITH DCR
IF NOTES ARE ADDED DURING MANUFACTURING.
THIS DRAWING IS NOT TO BE USED FOR PRODUCTION
FOLLOWING THE COMPLETION OF THE WORK ORDER.

Security-Related Information
Figure Withheld Under 10 CFR 2.390.

MATERIALS: SEE PARTS LIST
PROTECTIVE FINISH: NONE

UNLESS OTHERWISE SPECIFIED;
1. DIMENSIONS ARE IN INCHES.
2. MIN SURFACE TEXTURE: 125
3. TOLERANCES APPLY AFTER PLATING.
4. REMOVE BURRS AND SHARP EDGES.
5. DO NOT SCALE DRAWING.
6. TOLERANCES:
FRACTIONS ± 1/64 .X ± 0.1
MACHINED ANGLES ± 1° .XX ± 0.01
.XXX ± 0.005

USED ON:

DRAWN S.G. 22Feb
CHECKED 22Feb00
APPR. 22Feb00

THIRD ANGLE PROJECTION

SAFETY CLASS A

AEATECHNOLOGY QSA
40 NORTH AVE, BURLINGTON, MA 01803

TITLE: MODEL 880 TYPE A TEST SPECIMEN

SIZE B
DWG. NO. TP100
REV A
SCALE: 1/2
SHEET 1 OF 1

24 FEB00

TEST PLAN #100 AND #104 DEVIATIONS

① ADDED A .094 DIAMETER HOLE IN SHELL AT THE TOP FRONT END OF BOTH TEST SPECIMEN (P01 + P02).

This will Provide Single Point Hang For THE DROP TESTS.

SD 24FEB00
DW 24 feb 00
25FEB00
DWK 25 Feb 00

2.12.2 Test Plan 108 Issue 5 (Jul 2000)

Issue 5

TEST PLAN 108

MODEL 880

RADIOGRAPHY PROJECTOR TYPE (B) TRANSPORT PACKAGE TESTS

As of

July 13, 2000

Contents

List of Figures and Tables

Test Plan No. 108

Section 1 Introduction

This document describes the mechanical test plan for the Model 880 Projector to meet NRC requirements for Type B(U)-85 packages as described in the Code of Federal Regulations, 10 CFR Part 71, revised as of March 31, 1999. The test plan also covers the criteria stated in the IAEA Regulations for the Safe Transport of Radioactive Material, Safety Series No.6 1985 Edition (As Amended 1990).

This document describes the test package specifications, testing equipment, testing scenario, justifies the package orientations for the different test specimens and provides test worksheets to record key steps in the testing sequence.

Section 2 Transport Package Description

Figure 2.1 describes the Model 880 projector transport package. Figure 2.2 shows the transport package with the plastic jacket.

The radioactive material is sealed in a special form source capsule. The source capsule, stop ball and connector are swaged to a flexible steel wire to form the source wire assembly. The source wire assembly is held securely to the device by components of the rear plate assembly. One of these components, the sleeve, in conjunction with the selector ring retainer, prevents the stop ball of the source wire from being pulled through the rear of the package. Another component, the lock slide, prevents the stop ball from being pushed out of the front when in the secured position. A cover over the source wire connector prevents access to the source assembly until a keyed lock is actuated and the cover removed. This cover is in place during transport of the package. This source assembly securing mechanism is functionally identical to the existing model 660 and 680 projector transport packages.

The selector ring retainer is fastened to the rear plate with four, #10 stainless steel machine screws. The rear plate is attached to rivnuts assembled on the endplate weldment with four 5/16-18 stainless steel security screws. The endplate weldment consists of the endplate disc, a U-shaped bracket and the four rivnuts. The U-brackets are welded to the endplate disc and the endplate disc is welded to the cylindrical shell.

The shield is fastened within the device at each end by a titanium shield pin. The pin passes through the shield and the U-bracket. The shield is centered in the shell and has the source tube cast into its center. The source tube provides a cavity for the source wire assembly to travel through during use. The source capsule is positioned at the center of the ball of the shield within the source tube cavity when the source wire is in its secured position.

The model 880 uses polyurethane foam to fill the cavity around the depleted uranium shield. The foam prevents contamination to and from the depleted uranium shield.

Previous thermal tests have shown charred polyurethane foam will inhibit the flow of oxygen to the shield and prevent oxidation from occurring during a fire as long as the foam remains confined. This is shown on AEA Technology QSA Test plan number 70.

It has also been shown the charred foam will not support the shield at temperatures of 800°C. The model 880 relies on the shield pins to hold the shield in place at all times. These pins are designed to retain the shield throughout testing without the added support of the foam.

The outlet port, located at the front end, serves to block access into or out of the source tube cavity. Four stainless steel security screws fix the front plate to the endplate rivnuts.

The plastic jacket is not part of the Type B transport package and therefore not considered for the type B transport testing. The absence of the jacket will present a worst case 30-foot drop and puncture test condition. In a drop, the plastic jacket protects the transport package from further damage by absorbing energy upon impact.

However, since the jacket will usually be on the package during transport and its weight will add approximately 4lbs, one specimen will be tested with the jacket. The "with jacket" 30-foot drop and puncture orientations will be based on damage observed from previously selected orientations and speculative damaging effects the jacket may have on the safety aspects of the package.

The weight of the Model 880 transport package without the jacket is not greater than 46 pounds. The total weight of the package with the jacket is not greater than 50 pounds.

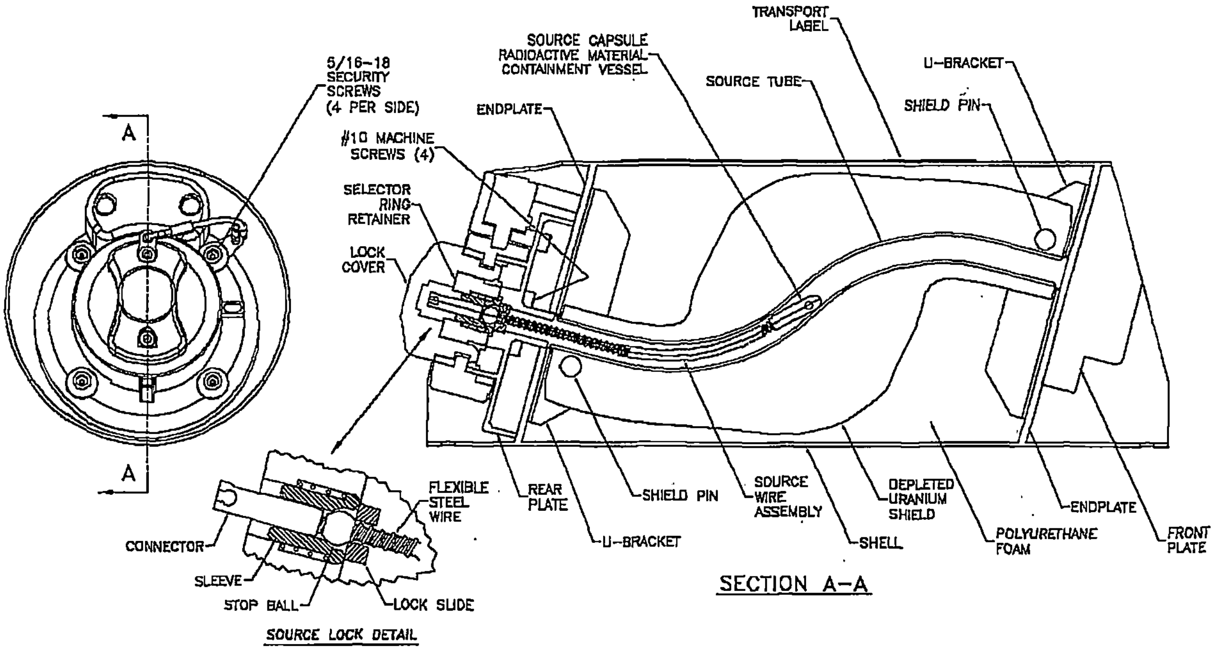

FIGURE 2.1: MODEL 880 PROJECTOR TRANSPORT PACKAGE.

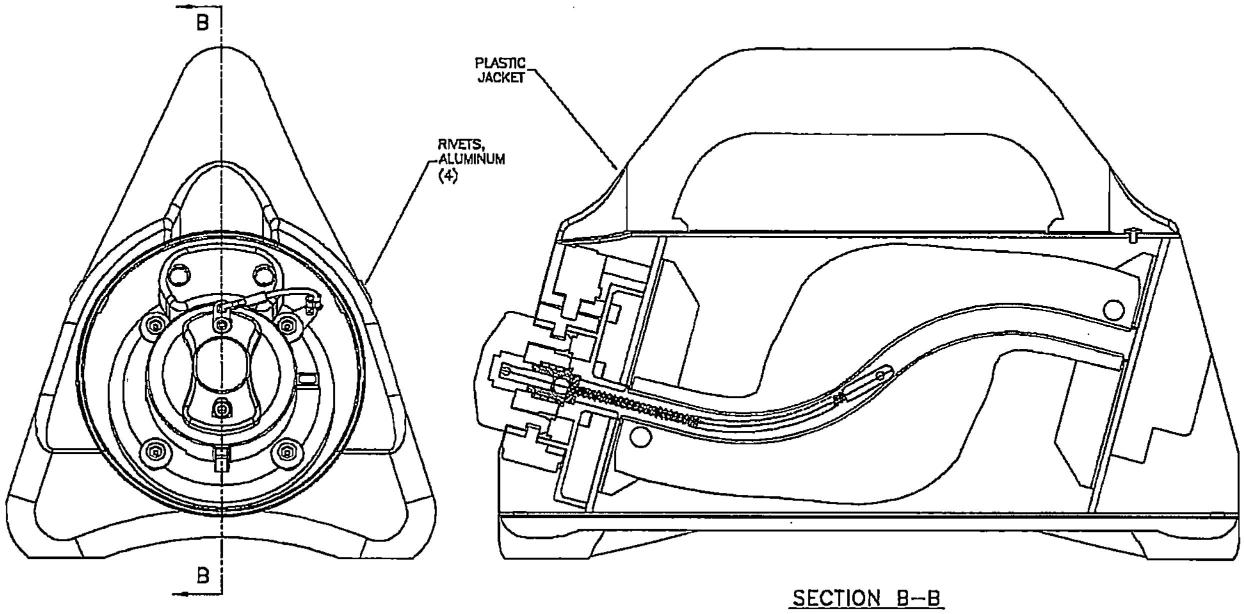

FIGURE 2.2: MODEL 880 PROJECTOR WITH JACKET.

Section 3 Regulatory Compliance

The purpose of this plan, which was developed in accordance with AEA Technology QSA SOP-E005, is to demonstrate that the Model 880 projector complies with the Type B(U)-85 transport package test requirements of 10 CFR 71 and the IAEA Safety Series No.6.

The tests for Normal Conditions of Transport (10 CFR 71.71) were performed under AEA Technology QSA test plan number 100. However, the 4-foot drop will be performed as the first test to produce typical damage that might occur during normal transport conditions. The 4-foot drop of test plan number 100 was the only test to produce any significant damage to the package.

The water spray preconditioning of the package will not be performed as the Model 880 projector is constructed of waterproof materials throughout. The water spray would not contribute to any degradation in structural integrity.

The Hypothetical Accident Tests (10 CFR 71.73) to be performed are the 9m (30 foot) free drop test and the puncture test.

The crush test (10 CFR 71.73(c)(2)) will not be performed because the radioactive contents are qualified as Special-Form radioactive material.

The thermal test of (10 CFR 71.73(c)(4)) will either be evaluated using a finite element analysis model or subjected to a simulated fire test in an oven at 800°C for at least 30 minutes.

The melting points for the materials of the package are listed below:

Material	Melting Point
Stainless steel	1390°C (2530°F)
Depleted uranium	1135°C (2075°F)
Titanium	1700°C (3100°F)
Tungsten	3410°C (6170°F)
Copper/Brass	1080°C (1980°F)
Aluminum	580°C (1080°F)
Rubber/Plastic	Less than 540°C (1000°F)

The immersion test will not be performed. Only the source capsule (containment vessel) is sealed and able to pressurize as a result of 50 feet of water depth. The source capsule is designed and tested to withstand external pressures well in excess of 22 lbf/in^2.

Section 4 Discussion on System Failure Modes of Interest

4.1 General

The tests in this plan focus on damaging those components of the package which could cause displacement of the source from its stored position within the depleted uranium shield and which affect the integrity of the shield itself.

4.2 Normal and Accident Conditions of Transport

The modes of failure under normal and accident conditions that could lead to elevated dose rates include the following:

4.2.1 Fracture or penetration of the projector weldment.

4.2.2 Displacement of the shield within the projector weldment and distortion or fracture of the source.

4.2.3 Failure of the source lock assembly and/or lock mounting screws.

The test conditions specified in this Test Plan are intended to challenge the ability of the Model 880 package with respect to these failure modes.

Section 5 Assessment of Package Conformance

5.1 Regulatory Requirements

5.1.1 Normal Conditions of Transport (71.43(f))

There should be no loss or dispersal of radioactive contents, no significant increase in external surface radiation levels and no substantial reduction in the effectiveness of the packaging.

IAEA Safety Series No. 6 para. 537 stipulates the same criteria except that it states in paragraph 537(b) that the loss of shielding integrity should not result in more than a 20% increase in the radiation level at any external surface of the package.

5.1.2 Hypothetical Accident Conditions (71.51(a))

There should be no escape of radioactive materials greater than A_2 in one week and no external dose rate greater than 1 R/hr at 1m from the external surface with the maximum radioactive contents which the package is designed to carry.

5.2 Test Package Contents

The Model 880 projector is designed to carry a special form source. Containment of the radioactive source is tested at manufacture. The source capsule design has been certified in accordance with the performance requirements for special form as specified in 10 CFR Part 71 and IAEA Safety Series #6.

This test plan therefore does <u>not</u> discuss/specify tests of the containment of the radioactive source. The purpose of the tests is to demonstrate that the source remains shielded within the limits specified by the regulations.

Since source integrity has been demonstrated through special form testing, a simulated source will be used during testing of the package. The radiation levels after testing will be measured by replacing the simulated source with an active source. The post-test measurements will be compared with pre-test measurements to verify the source has not shifted within the shield.

Section 6 Construction and Condition of Test Specimens

The Model 880 transport package test specimens will be constructed in accordance with AEA Technology QSA drawing B88015 revision A and the AEA Technology QSA Quality Assurance Program. The weight of the test specimens per this drawing is not greater than 46 pounds.

The "With Jacket" test specimen will be constructed in accordance with AEA Technology QSA drawing B88000 revision A and the AEA Technology QSA Quality Assurance Program. This specimen is the same as the specimen built to drawing B88015 revision A, but with the plastic jacket and rivets added. The weight of the "With Jacket" test specimen is not greater than 50 pounds.

The structural materials of the Model 880 are made of AISI Type 300 series stainless steel and titanium. The shielding materials are depleted uranium and tungsten. The non-safety related parts are made from aluminum, brass, copper, plastic, and rubber.

Except for the thermal test, all tests of this plan will subject the test specimen to an impact from a drop. The mechanical strength and ductility of the critical components of the package must continue to perform as expected at the ambient temperature conditions of –40°F to 100°F.

The fracture toughness, strength and ductility, of the structural materials in the Model 880 does not change significantly at or between the temperatures of –40°F to 100°F. The shielding materials are relatively brittle throughout this entire temperature range. Therefore, any temperature within the –40°F to 100°F range for the 4-foot, 30-foot, and puncture tests will have the same result. So, the test specimen will be dropped at ambient temperature at time of testing.

The internal operating pressure of the containment system, namely the source capsule, is considered to be in equilibrium with the outside pressure of the package. The sealed capsule is welded at atmospheric pressure and except for the capsule, the package is open to the atmosphere. Therefore, the initial internal pressure of the containment system is considered to be insignificant.

Section 7 Material and Equipment List

The equipment list worksheets in Section 9 identify the equipment required, with additional space to list other necessary equipment and measuring instruments needed to perform the tests. Additional materials and equipment used to facilitate the tests will be listed as needed.

Section 8 Test Procedure

8.1 General

All test specimens are to be tested in the sequence presented below. Each test has been designed to check the integrity of various components of the package. An assessment of transport integrity of the package can be made based on the cumulative effect of the tests performed on the package

After completing the 4-foot, 30-foot, and puncture drop test sequence on all three specimens, a "With Jacket" test specimen will follow the same drop sequence. The "With Jacket" test specimen will have an orientation chosen from either the first three orientations or another orientation selected to produce the most damage to the package. The justification and description for this orientation shall be documented.

The tests have the following sequence:

1. Test specimen preparation and inspection
2. 1.2m (Four-foot) free drop test (10 CFR 71.71(c)(7))
3. 9m (30-foot) free drop test (10 CFR 71.73(c)(1))
4. Puncture test (10 CFR 71.73(c)(3))
5. Test inspection.
6. Thermal test or analysis (10 CFR 71.73(c)(4)).
7. Final test inspection and/or assessment.
8. Test specimen storage.

8.2 Roles and Responsibilities

The responsibilities of the groups identified in this plan are:

- **Engineering** executes the tests according to the test plan and summarizes the test results. Engineering also provides technical input to assist Regulatory Affairs and Quality Assurance as needed.

- **Regulatory Affairs** monitors the tests and reviews test reports for compliance with regulatory requirements.

- **Quality Assurance** oversees test execution and test report generation to assure compliance with the AEA Technology QSA Quality Assurance Program.

- **Engineering, Regulatory Affairs** and **Quality Assurance** are jointly responsible for assessing test and specimen conditions relative to 10 CFR 71 and IAEA Safety Series #6.

- **Quality Control** is responsible for ensuring test and specimen data is measured and recorded throughout the test cycle.

8.3 Test Specimen Preparation and Inspection

1. Manufacture five Model 880 projectors per AEA Technology QSA drawing number B88015, revision A. Clearly and indelibly mark each specimen: "TP108(X)". Where X is an alphabetically incremented letter beginning with "A". One of the five projectors will be used as a spare and used to replace a specimen dropped onto the wrong impact point, if necessary. The spare, if used, will follow the same test sequence as the initially selected specimen.

2. Measure and record the weight of each specimen.

3. Inspect the test specimens to ensure that:

    - All fabrication and inspection records are documented in accordance with the AEA Technology QSA Quality Assurance Program.

    - The test specimens comply with the requirements of the drawing.

4. Measure and record the location of the source from the front plate using the source location tool.

5. Perform and record the radiation profile in accordance with AEA Technology QSA Work Instruction WI-Q09.

6. **Engineering, Regulatory Affairs** and **Quality Assurance** will jointly verify that the test specimens comply with the drawings and the AEA Technology QSA Quality Assurance Program.

7. Prepare the test specimens for transport.

8.4 Summary of Test Schedule

This section provides an overall view of the test specimen orientations for each test.

Normal Conditions Test	Para.	Specimen	Diagram
1.2m Drop 1.	71.71(c)(7)	TP108(A)	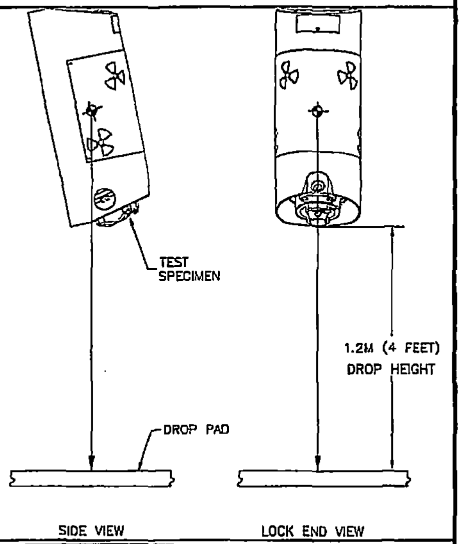
1.2m Drop 2.	71.71(c)(7)	TP108(B)	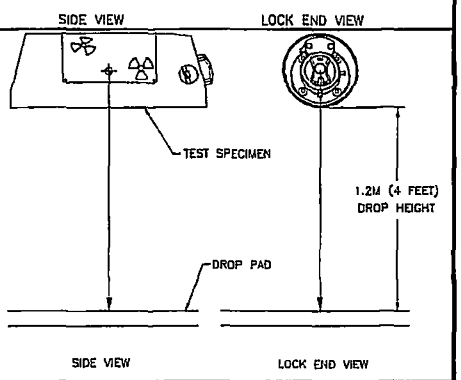
1.2m Drop 3.	71.71(c)(7)	TP108(C)	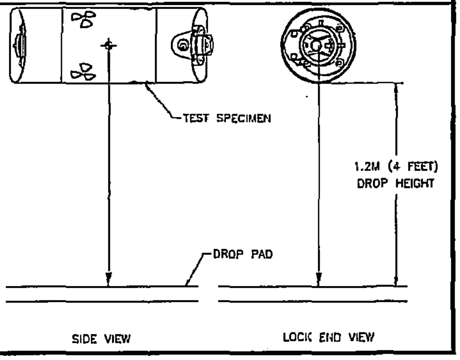

Accident Conditions Test	Para.	Specimen	Diagram
9m Drop 1.	71.73(c)(1)	TP108(A)	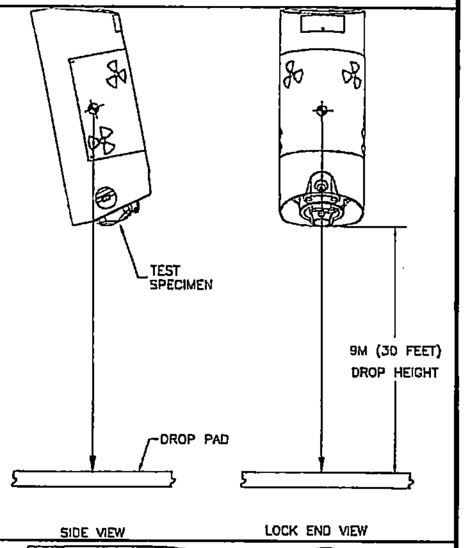
9m Drop 2.	71.73(c)(1)	TP108(B)	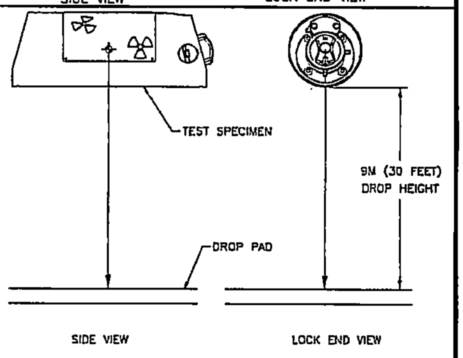
9m Drop 3.	71.73(c)(1)	TP108(C)	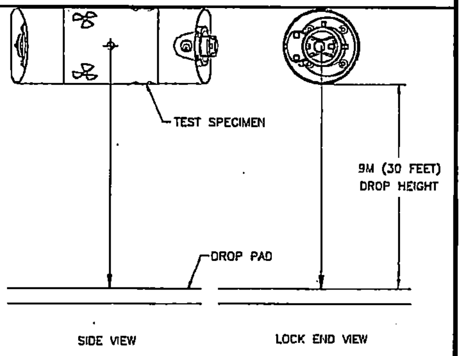

Puncture 1.	71.73(c)(3)	TP108(A)	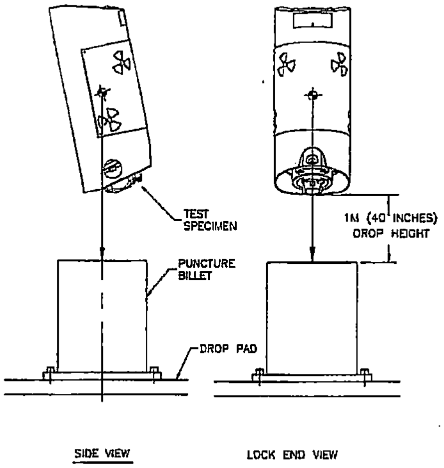
Puncture 2.	71.73(c)(3)	TP108(B)	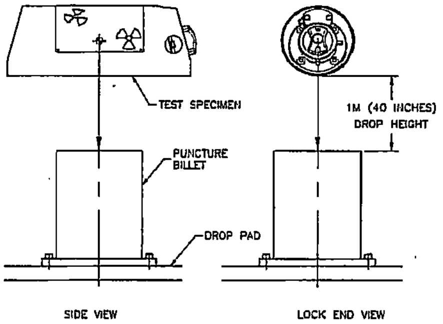
Puncture 3.	71.73(c)(3)	TP108(C)	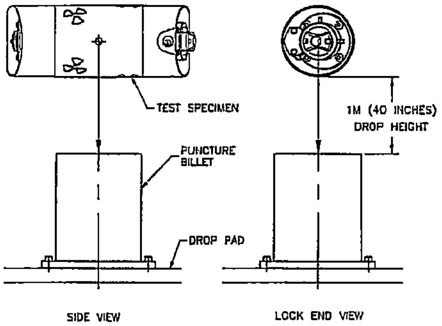

8.5 1.2m (4-foot) Free Drop Test (10 CFR 71.71(c)(7))

The Normal Transport Conditions Test is the 1.2m (4-foot) free drop test as described in 10 CFR 71.71(c)(7).

The figures of section 8.5.2.1, 8.5.3.1, and 8.5.4.1 illustrate the orientations for the test specimens.

8.5.1 1.2m Free Drop Test Set-up

To set up a package for the 1.2m (4-foot) drop test:

1. Place each specimen on the drop surface and position it according to the specimen-specific orientation shown in Figure 8.5.2.1, Figure 8.5.3.1, or Figure 8.5.4.1
2. Raise the package so that the impact target is 1.2m (4 feet) above the drop surface. Ensure the center of gravity is over the impact point
3. Measure and record the ambient temperature.
4. Photograph the set-up.
5. Start the video recorder.
6. Drop the package.
7. Stop the video recorder.
8. Record the damage to the package and take a photographic record.

8.5.2 Specimen TP108(A) Orientation for the 1.2m Drop Test

Figure 8.5.2.1 shows the package orientation for Specimen TP108(A). The object of the drop is to use the shell lip as leverage to drive the rear plate across the endplate to shear the rear plate mounting screws. This drop is meant to stiffen the impact area to reduce energy absorption during the 30-foot drop test.

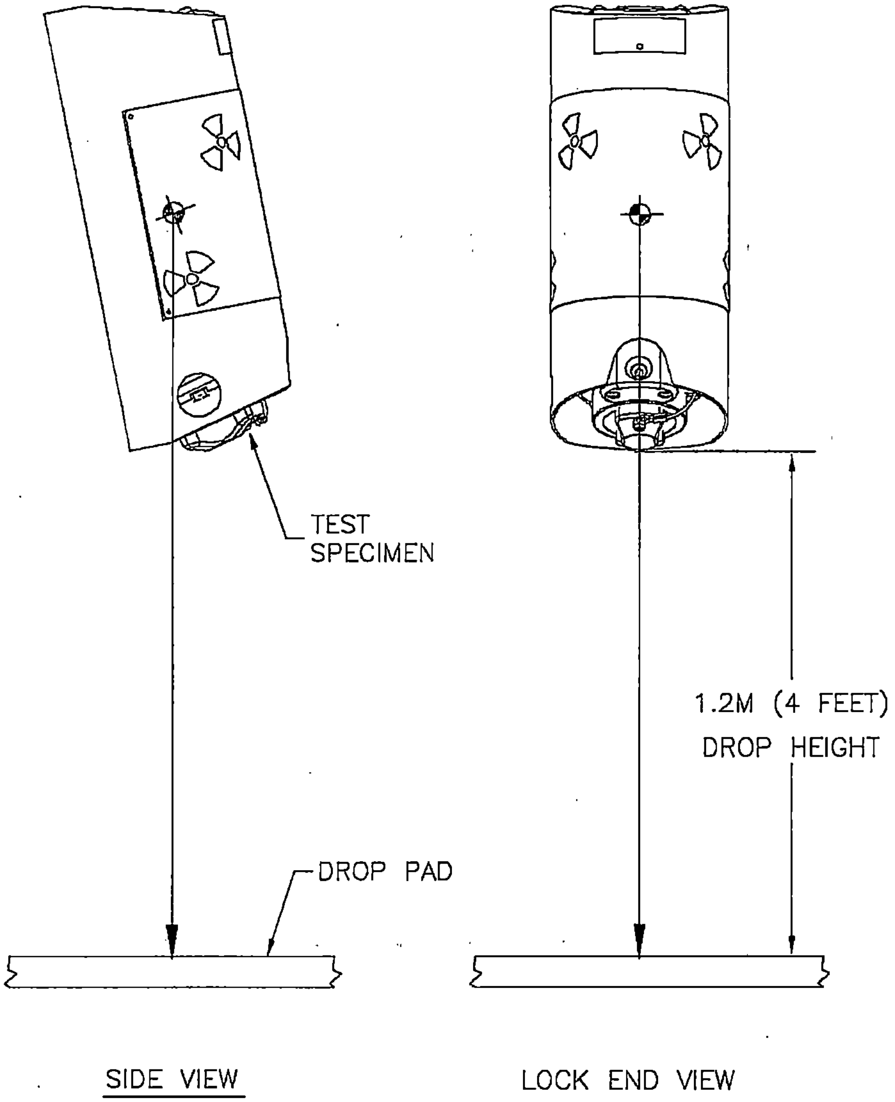

Figure 8.5.2.1: Specimen TP108(A) Orientation for the 1.2m Drop Test

8.5.3 Specimen TP108(B) Orientation for the 1.2m Drop Test

Figure 8.5.3.1 shows the package orientation for Specimen TP108(B). The object of this drop is to test the integrity of the shield pins and to determine the effect of the drop on the depleted uranium shield.

The specimen will be dropped with its axis parallel to the drop surface onto the cylindrical shell with the transport label facing up.

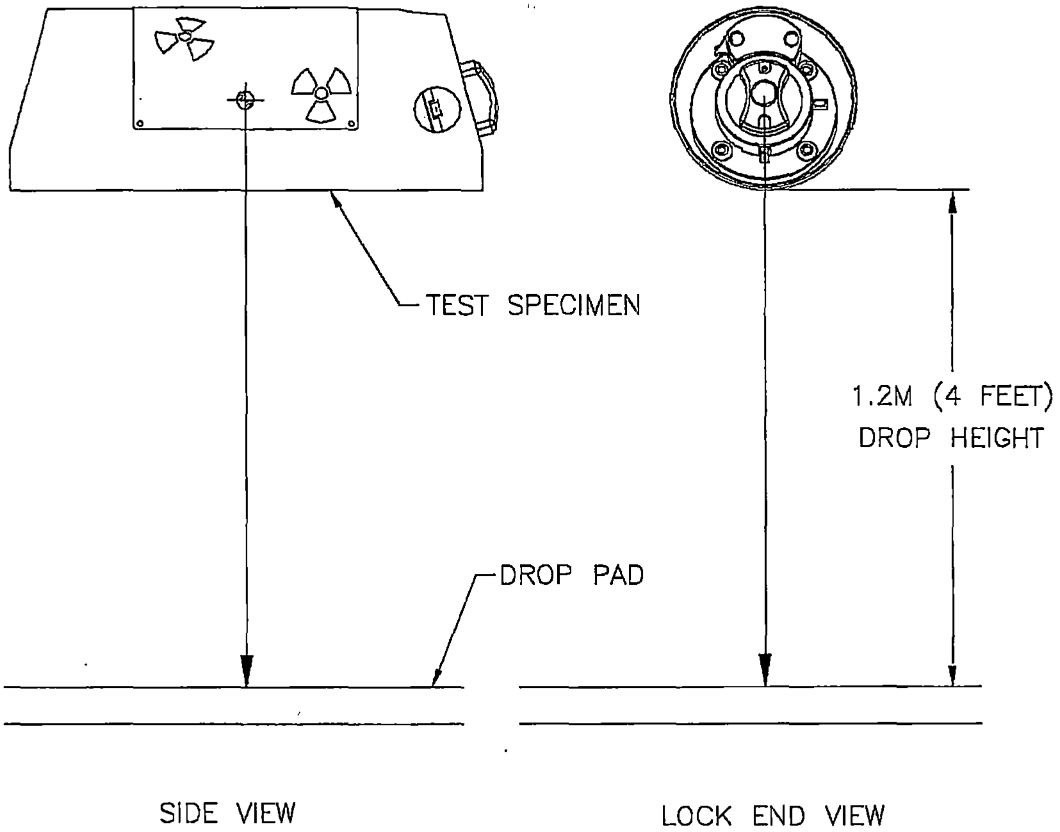

Figure 8.5.3.1: Specimen TP108(B) Orientation for the 1.2m Drop Test

8.5.4 Specimen TP108(C) Orientation for the 1.2m Drop Test

Figure 8.5.4.1 shows the package orientation for Specimen TP108(C). The object of this drop is to test the integrity of the U-brackets and to determine the effect of the drop on the depleted uranium shield.

The specimen will be dropped with its axis parallel to the drop surface onto the cylindrical shell with the transport label facing out to the side.

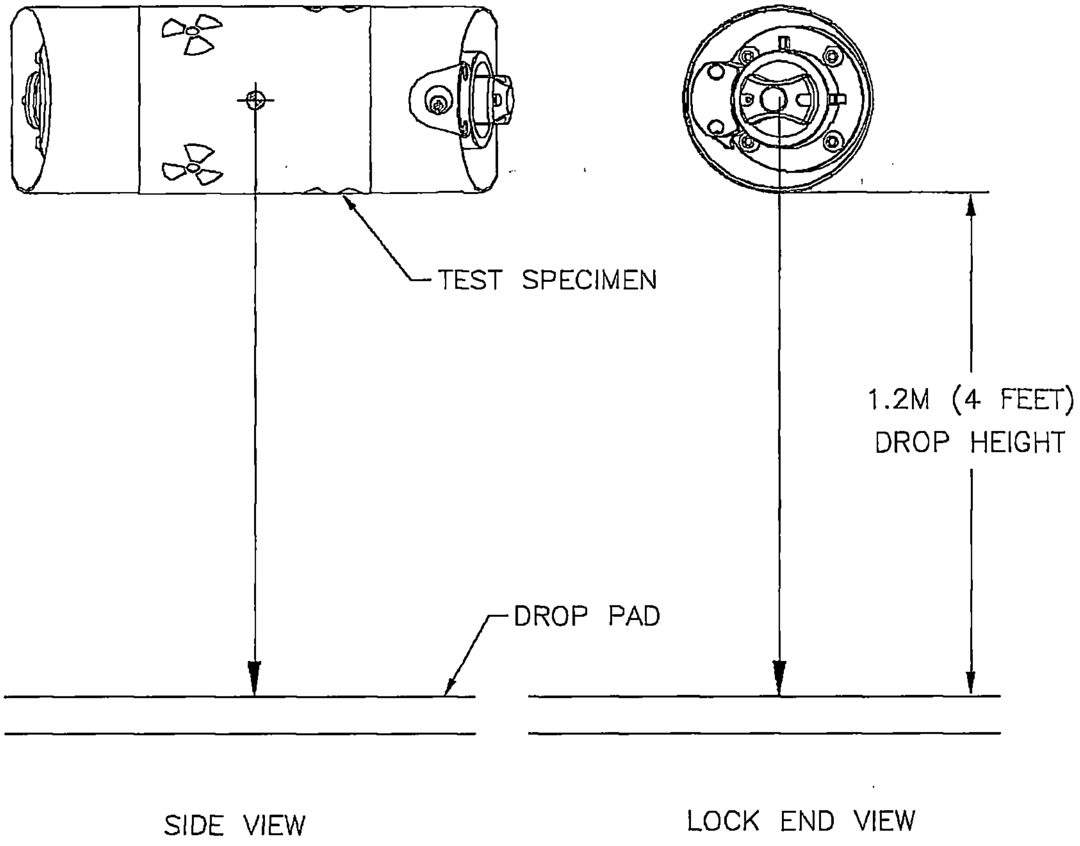

Figure 8.5.4.1: Specimen TP108(C) Orientation for the 1.2m Drop Test

8.5.5 1.2m Free Drop Test Assessment

Upon completion of each test, **Engineering, Regulatory Affairs** and **Quality Assurance** team members will jointly take the following actions:

- Review the test execution to ensure that each test was performed in accordance with 10 CFR 71, IAEA Safety Series #6, and this test plan.
- Make a preliminary evaluation of the specimens relative to the requirements of 10 CFR 71 and IAEA Safety Series #6.
- Assess the damage to each specimen to decide whether testing of that specimen is to continue.
- Evaluate the condition of each specimen to determine what changes, if any, are necessary in package orientation in the 30-foot drop test to achieve maximum damage.

8.6 9m Free Drop Test (10 CFR 71.73(c)(1))

The first Hypothetical Accident Test is the 9m (30-foot) free drop test as described in 10 CFR 71.73(c)(1).

The figures of section 8.6.2.1, 8.6.3.1, and 8.6.4.1 illustrate the orientations for the test specimen.

8.6.1 9m Free Drop Test Set-up

To set up a package for the 9m (30-foot) drop test:

1. Measure and record the weight of each of the test specimens.
2. Place each specimen on the drop surface and position it according to the specimen-specific orientation as shown in Figure 8.6.2.1, Figure 8.6.3.1, or Figure 8.6.4.1.
3. Raise the package so that the impact target is 9m (30 feet) above the drop surface. Ensure the center of gravity is over the impact point
4. Measure and record the ambient temperature.
5. Photograph the set-up.
6. Start the video recorder.
7. Drop the package.
8. Stop the video recorder.
9. Record the damage to the package and take a photographic record.

8.6.2 Specimen TP108(A) Orientation for the 9m Drop Test

Figure 8.6.2.1 shows the package orientation for Specimen TP108(A). The object of the drop is to use the shell lip as leverage to drive the rear plate across the endplate to shear the rear plate mounting screws.

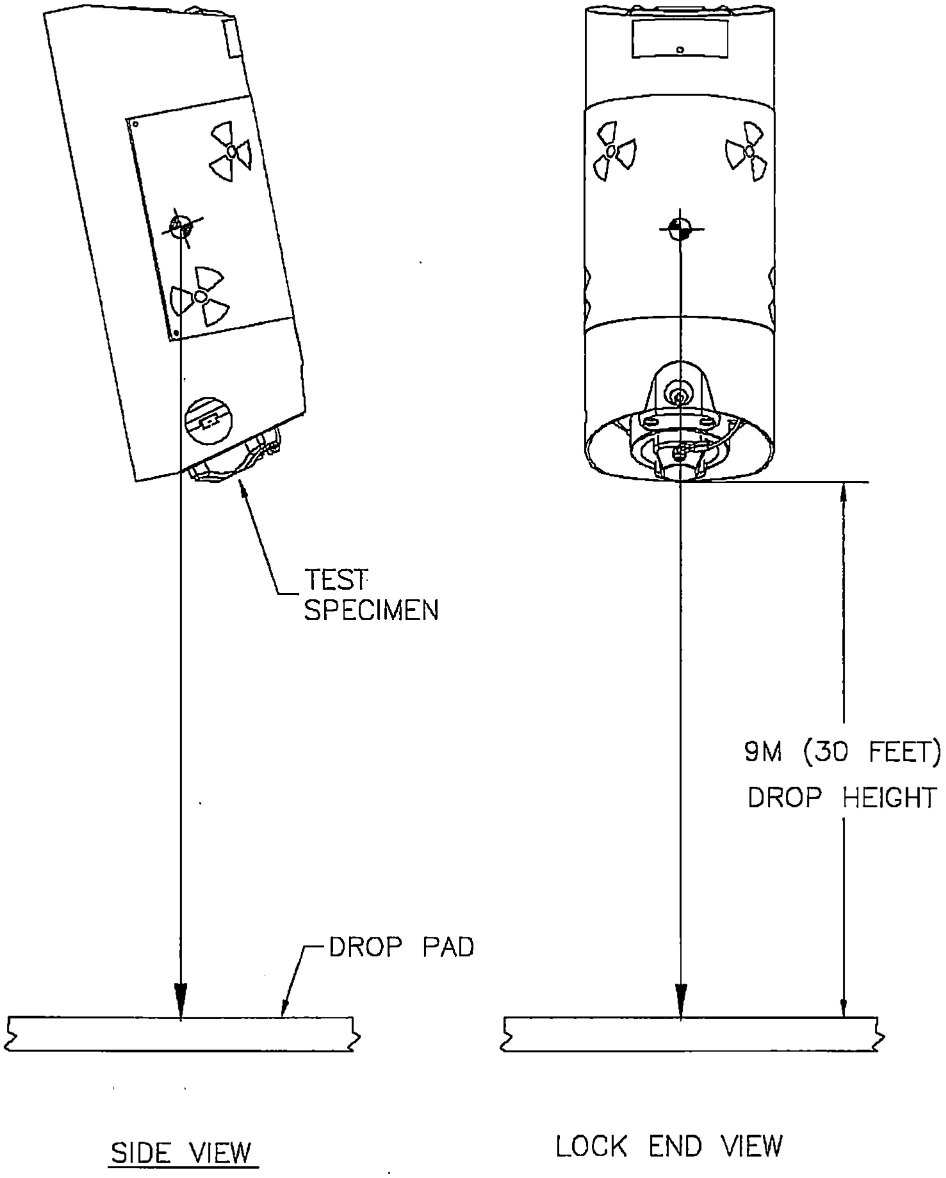

Figure 8.6.2.1: Specimen TP108(A) Orientation for the 9m Drop Test

8.6.3 Specimen TP108(B) Orientation for the 9m Drop Test

Figure 8.6.3.1 shows the package orientation for Specimen TP108(B). The object of this drop is to test the integrity of the shield pins and to determine the effect of the drop on the depleted uranium shield.

The specimen will be dropped with its axis parallel to the drop surface onto the cylindrical shell with the transport label facing up.

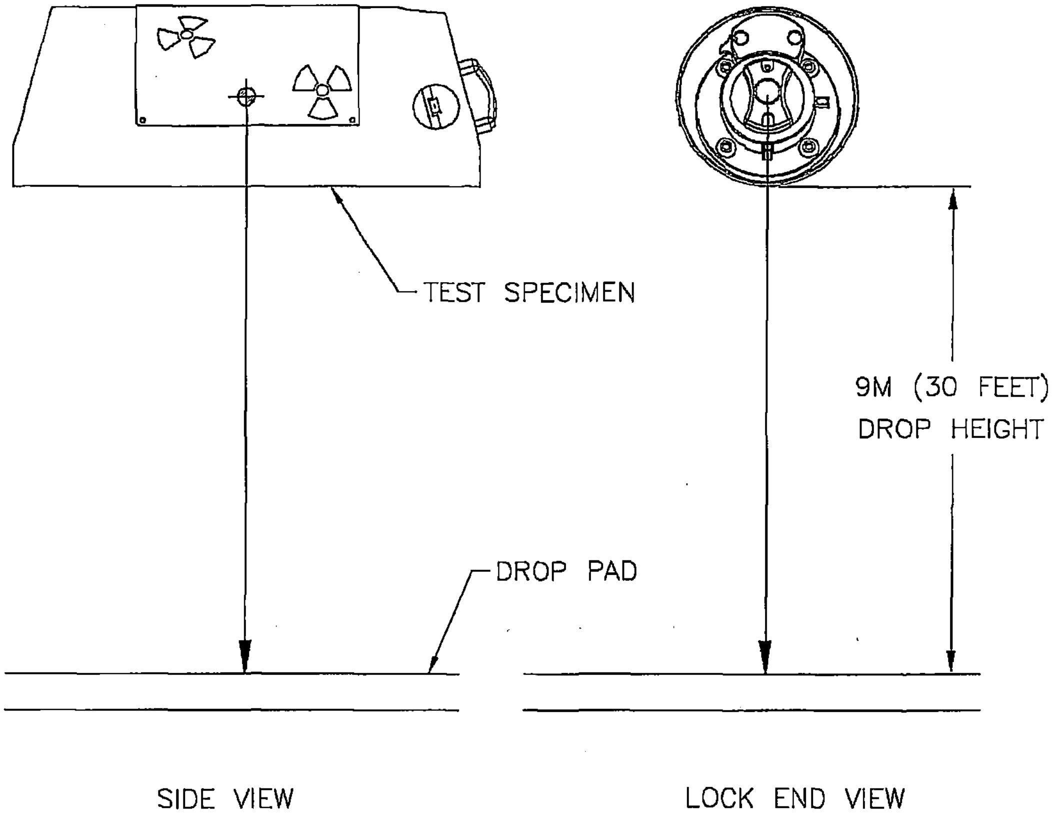

Figure 8.6.3.1: Specimen TP108(B) Orientation for the 9m Drop Test

8.6.4 Specimen TP108(C) Orientation for the 9m Drop Test

Figure 8.6.4.1 shows the package orientation for Specimen TP108(C). The object of this drop is to test the integrity of the U-brackets and to determine the effect of the drop on the depleted uranium shield.

The specimen will be dropped with its axis parallel to the drop surface onto the cylindrical shell with the transport label facing out to the side.

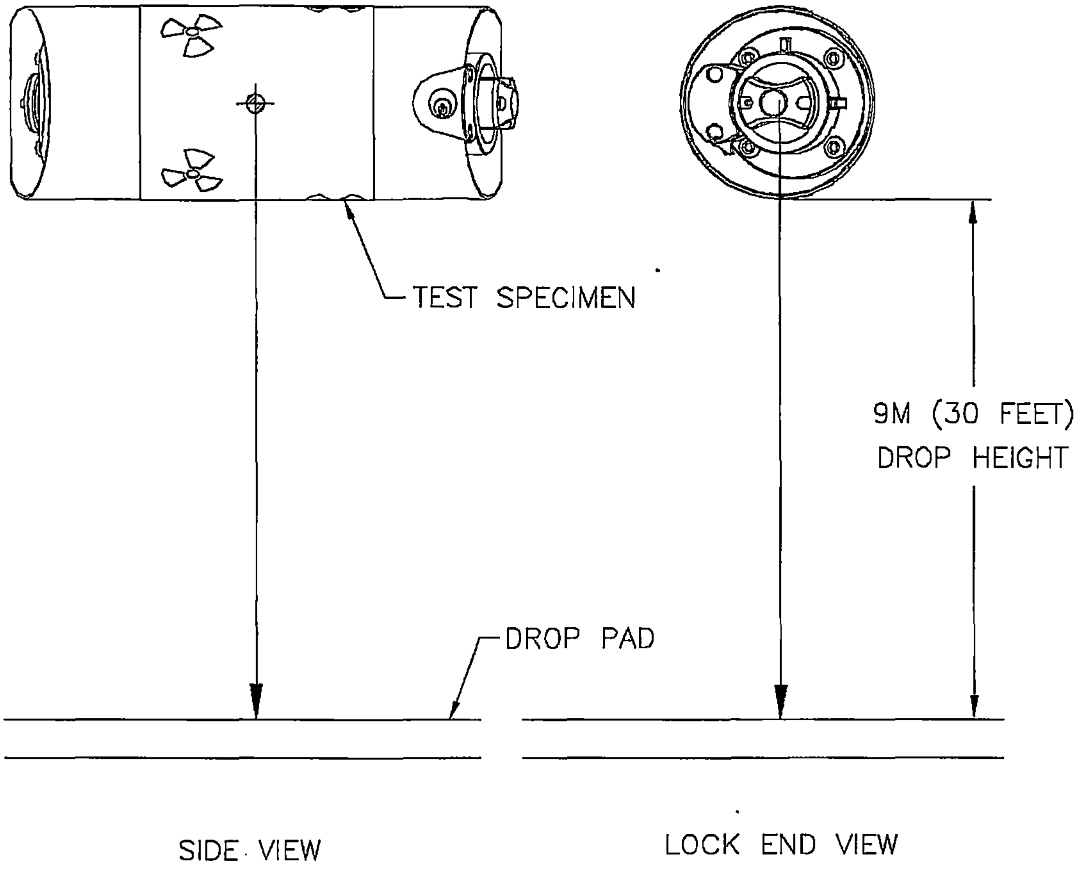

Figure 8.6.4.1: Specimen TP108(C) Orientation for the 9m Drop Test

8.6.5 9m Free Drop Test Assessment

Upon completion of each test, **Engineering**, **Regulatory Affairs** and **Quality Assurance** team members will jointly take the following actions:

- Review the test execution to ensure that each test was performed in accordance with 10 CFR 71, IAEA Safety Series #6, and this test plan.
- Make a preliminary evaluation of the specimens relative to the requirements of 10 CFR 71 and IAEA Safety Series #6.
- Assess the damage to each specimen to decide whether testing of that specimen is to continue.
- Evaluate the condition of each specimen to determine what changes, if any, are necessary in package orientation in the puncture test to achieve maximum damage.

8.7 Puncture Test (10 CFR 71.73(c)(3))

The package is dropped from a height of 1m (40") onto the puncture billet. This test uses the 12" high puncture billet. The billet meets the minimum height (8") required in 10 CFR 71.73(c)(3). The specimen has no projections or overhanging members longer than 12" which could act as impact absorbers, allowing the billet to cause the maximum damage to the specimen. The billet is to be bolted to the drop surface used in the drop tests.

The figures: 8.7.2.1, 8.7.3.1, and 8.7.4.1 illustrate the orientations for each puncture test.

The justification for each puncture orientation is the same as the orientation for the 30-foot drop test. If the orientation needs to be changed, the new orientation must be documented and approved with a justification describing how it would be a worst condition than the planned orientation.

8.7.1 Puncture Test Set-up

NOTE: *Because each test is designed to add to damage inflicted on a specific component or assembly in the preceding test, it is important that each specimen maintain its identity throughout the battery of tests and that the set-up instructions specific to the specimen are strictly followed.*

To set up a package for the puncture test:

1. Measure and record the weight of the test specimen.
2. Measure and record the ambient temperature.
3. Position the test package according to the specimen-specific orientation shown in figures 8.7.2.1, 8.7.3.1, or 8.7.4.1.
4. Raise the package so that the impact target is 1m (40") between the impact point on the package and the top of the puncture billet. Ensure the center of gravity is over the impact point
5. Photograph the set-up.
6. Start the video recorder.
7. Drop the package.
8. Stop the video recorder.
9. Record the damage to the package and take a photographic record.

8.7.2 Specimen TP108(A) Orientation for the Puncture Test

The objective of this drop orientation (Figure 8.7.2.1) is to continue the damage inflicted on the specimen by the 9m-drop test.

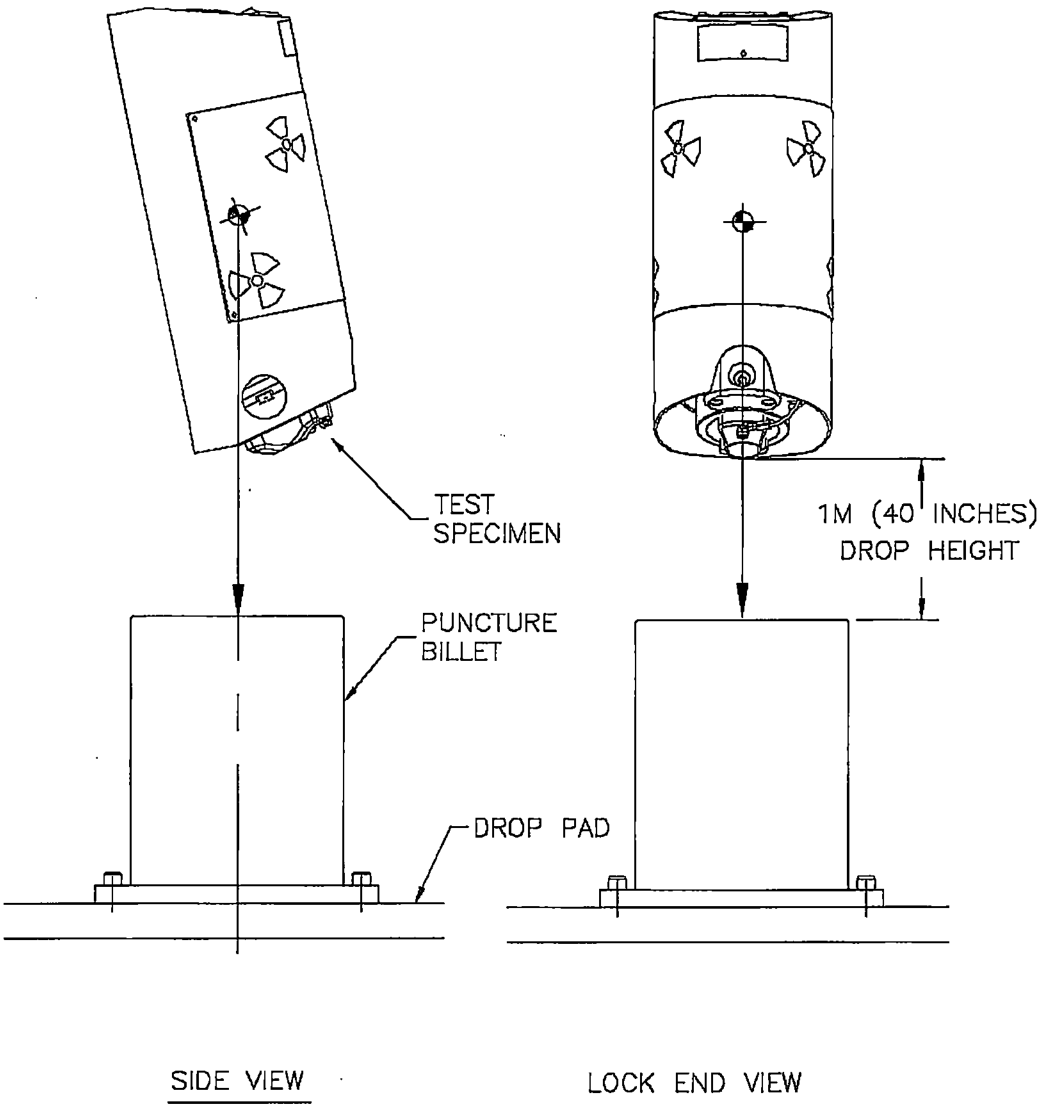

Figure 8.7.2.1: Specimen TP108(A) Orientation for the Puncture Test

8.7.3 Specimen TP108(B) Orientation for the Puncture Test

The objective of this drop orientation (Figure 8.7.3.1) is to continue the damage inflicted on the specimen by the 9m-drop test.

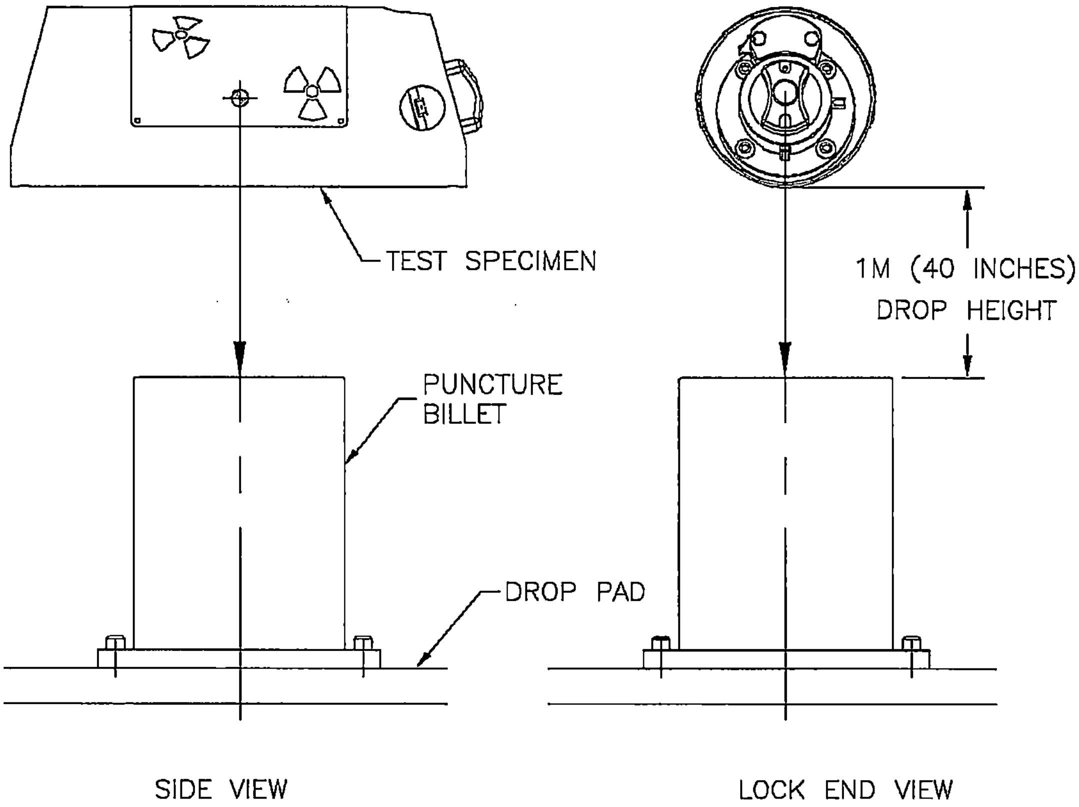

Figure 8.7.3.1: Specimen TP108(B) Orientation for the Puncture Test

8.7.4 Specimen TP108(C) Orientation for the Puncture Test

The objective of this drop orientation (Figure 8.7.4.1) is to continue the damage inflicted on the specimen by the 9m-drop test.

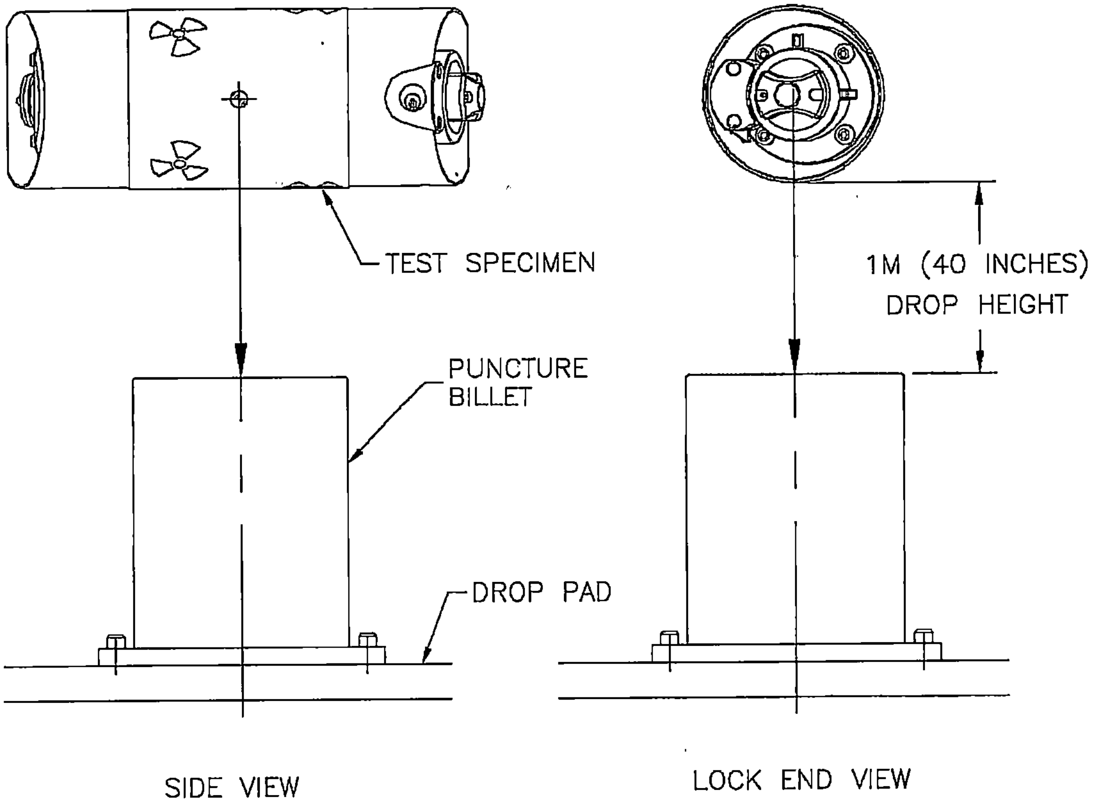

Figure 8.7.4.1: Specimen TP108(C) Orientation for the Puncture Test

8.7.5 Puncture Test Assessment

Upon completion of the test, **Engineering**, **Regulatory Affairs** and **Quality Assurance** team members will jointly take the following actions:

- Review the test execution to ensure that the tests were performed in accordance with 10 CFR 71, IAEA Safety Series #6, and this test plan.
- Make a preliminary evaluation of each specimen relative to the requirements of 10 CFR 71 and IAEA Safety Series #6.
- Justify and describe the orientation for the "With Jacket" test specimen test sequence.

8.8 "With Jacket" Test Sequence

Repeat the 4-foot, 30-foot, and puncture drop test sequence on the "with jacket" test specimen per the orientation determined in section 8.7.5. Document and justify the selected orientation.

8.9 Test Inspection

Perform the test inspection after the puncture tests.

1. Measure and record the damage to each of the test specimens. Measure and record the package for signs of any permanent strain.

2. Measure and record the location of the source from the front plate using the source location tool.

3. Remove and assess the condition of the simulated source.

4. Reassemble the packages using a representative active source, making sure that the source position and the package configuration are the same as they were immediately after the puncture test.

5. Measure and record a radiation profile of each test specimen in accordance with AEA Technology QSA Work Instruction WI-Q09.

6. Assess the significance of any change in radiation at the surface and at one meter from the packages.

7. Determine whether it is necessary to radiograph the test specimens for inspection of hidden component damage or failure.

8. Record any damage or failure found in radiograph of the test specimens, if performed.

8.10 Thermal Test (10 CFR 71.73(c)(4))

The thermal test shall be evaluated using either a finite element thermal analysis or a physical test. Either shall be performed to the requirements of 10 CFR 71.73 (c)(4).

The thermal test specimen orientation will be determined on an assessment performed after the puncture test. The documented justification must consider the worst case position for the specimen due to the damage inflicted from the previous tests.

If a finite element analysis is to be performed, no further actions are required under this section and proceed to section 8.11.

If a physical test is to be performed, complete section 8 of this test plan. The test environment will be a vented oven operating above 800°C. There will sufficient airflow to allow combustion. Air will be allowed to enter the oven through the door opening. The temperature of the package's exterior surface closest to the air entry point will be monitored throughout the test to ensure that the package remains above 800°C.

If the specimen is burning when it is removed, the unit is allowed to extinguish by itself and then cool naturally. The final evaluation of the package shall be performed when the specimen reaches ambient temperature.

8.10.1 Physical Thermal Test Set-up

To set up a package for the thermal test:

1 Heat the oven above 800°C.

2 Attach thermocouples to the package's external surface.

3 Place the package in the oven and close the door.

4 When all thermocouples indicate 800°C, start the 30-minute timer.

5 Measure and record the oven and test specimen temperatures.

6 Monitor the specimen and oven temperature throughout the 30-minute test period to ensure that all temperatures remain above 800°C.

7 At the end of 30-minutes, remove the specimen from the oven.

8 Allow the specimen to self-extinguish and cool.

9 Photograph and weigh the test specimen.

8.10.2 Thermal Test Assessment

Upon completion of the test, **Engineering, Regulatory Affairs** and **Quality Assurance** team members will jointly take the following actions:

- Review the test execution to ensure that the tests were performed in accordance with 10 CFR 71, IAEA Safety Series #6, and this test plan.

- Make a preliminary evaluation of each specimen relative to the requirements of 10 CFR 71 and IAEA Safety Series #6.

8.11 Final Test Inspection

Perform the following inspection after the thermal test.

1. Measure and record the damage to each of the test specimens.
2. Measure and record the location of the source from the front plate using the source location tool.
3. Remove and assess the condition of the simulated source.
4. Reassemble the packages using a representative active source, making sure that the source position and the package configuration are the same as they were immediately after the thermal test.
5. Measure and record a radiation profile of each test specimen in accordance with AEA Technology QSA Work Instruction WI-Q09.
6. Assess the significance of any change in radiation at the surface and at one meter from the packages.
7. Determine whether it is necessary to dismantle either of the test specimens for inspection of hidden component damage or failure.
8. If the decision is taken to proceed with the inspection, record and photograph the process of removing any component.
9. Measure and record any damage or failure found in the process of dismantling the test specimens.

Engineering, **Regulatory Affairs**, and **Quality Assurance** team members will make a final assessment of each test specimen and jointly determine whether the specimens meet the requirements of 10 CFR 71 and IAEA Safety Series #6.

8.12 Test Specimen Storage

Place the test specimens in an appropriate container and store the container in the "low level" waste room. Dispose the test specimens only when the governing regulatory body provides written authorization to do so.

Section 9 Worksheets

Use the following worksheets for executing the tests of section 8. Each test shall have three worksheets; an equipment list, a procedure checklist, and a data sheet. Record the information onto copies of these worksheets for each test performed.

Attach a copy of the relevant inspection report or calibration certificate after the range and accuracy of the equipment has been verified.

Drop & Puncture Test Equipment List

Test:		
Description * Mark NA when not used.	**Enter the Model and Serial Number**	**Attach Inspection Report or Calibration Certificate**
Test Specimen, Drawing No.		
Drop Surface, Drawing No.		
* Puncture Billet, Drawing No.		
Record any additional tools used to facilitate the test and attach the appropriate inspection report or calibration certificates.		
Signature	**Print Name**	**Date**
Completed by:		
Verified by:		

Drop & Puncture Test Checklist

Test:

Test Location:

Step	Data	Measuring Instrument
1. Record test specimen serial number:		▨
2. Record the test specimen weight:		
3. Record the ambient temperature (°C):		
4. Record set-up orientation figure:		
5. Verify set-up orientation and drop height.		
6. Photograph set-up in at least two perpendicular planes.		
7. Begin video recording of the test so that impact is recorded.		
8. Release the test specimen.		
9. Stop the video recorder. Ensure the point of impact and orientation specified in the plan has been achieved.		
10. Record the damage to the test specimen on a separate sheet and attach.		
11. Engineering, Regulatory Affairs and Quality Assurance make a preliminary assessment relative to 10 CFR 71. Record the assessment on a separate sheet and attach.		

Test witnessed by (Signature)	Print Name	Date
Engineering:		
Regulatory Affairs:		
Quality Assurance:		

Drop & Puncture Test Data Sheet

Test Unit Model/Serial No.:

Test:

Test Date:

Test Time:

Describe drop orientation and drop height:

Describe impact (location, rotation, etc.):

Describe on-site inspection (damage, broken parts, etc.):

On-site test assessment:

Engineering: Regulatory: QA:

Describe any post-test disassembly and inspection:

Describe any change in source position:

Describe results of radiography:

Completed by:

Date:

Thermal Test Equipment List

Test:		
Description * Mark NA when not used.	**Enter the Model and Serial Number**	**Attach Inspection Report or Calibration Certificate**
Test Specimen, Drawing No.		
Thermometer		
Record any additional tools used to facilitate the test and attach the appropriate inspection report or calibration certificates.		
Signature	**Print Name**	**Date**
Completed by:		
Verified by:		

Thermal Test Checklist

Test:

Test Location:

Step	**Data**	**Measuring instrument**
1. Record test specimen serial number:		
2. Record the start time:		
3. Record the oven temperature(°C):		
4. Record the test specimen temperature (°C):		
5. Monitor oven and test specimen temperature.		
6. Record stop time:		
7. Record the oven temperature(°C):		
8. Record the test specimen temperature (°C):		
9. Remove test specimen, let it self extinguish and cool.		
10. Record the damage to the test specimen on a separate sheet and attach.		
11. Engineering, Regulatory Affairs and Quality Assurance make a preliminary assessment relative to 10 CFR 71. Record the assessment on a separate sheet and attach.		

Test witnessed by (Signature)	**Print Name**	**Date**
Engineering:		
Regulatory Affairs:		
Quality Assurance:		

Thermal Test Data Sheet

Test Unit Model/Serial No.:	Test:
Test Date:	Test Time:

Describe orientation:

Describe on-site inspection (damage, broken parts, etc.):

On-site test assessment:

Engineering: Regulatory: QA:

Describe any post-test disassembly and inspection:

Describe any change in source position:

Describe results of radiography:

Completed by:	Date:

2.12.3 Test Report 108 Minus Appendices A-C (Aug 2000)

Test Report #108

Model 880 Type (B) Transport Package Test Results

TABLE of CONTENTS

Section 1 Introduction

This document describes the results of the package design tests conducted in accordance with Test Plan #108.

The tests described under test plan #108 subjects the Model 880 Projector to the hypothetical accident test requirements for Type B(U)-85 packages as described in the Code of Federal Regulations, 10 CFR Part 71, revised as of March 31, 1999 and the IAEA Regulations for the Safe Transport of Radioactive Material, Safety Series No.6 1985 Edition (As Amended 1990).

This report will show the Model-880 transport package satisfies the test requirements as described in test plan #108 and therefore meets the hypothetical accident test requirements for type B(U)-85 transport packages. Additionally, the plastic jacket does not adversely affect the results of these tests.

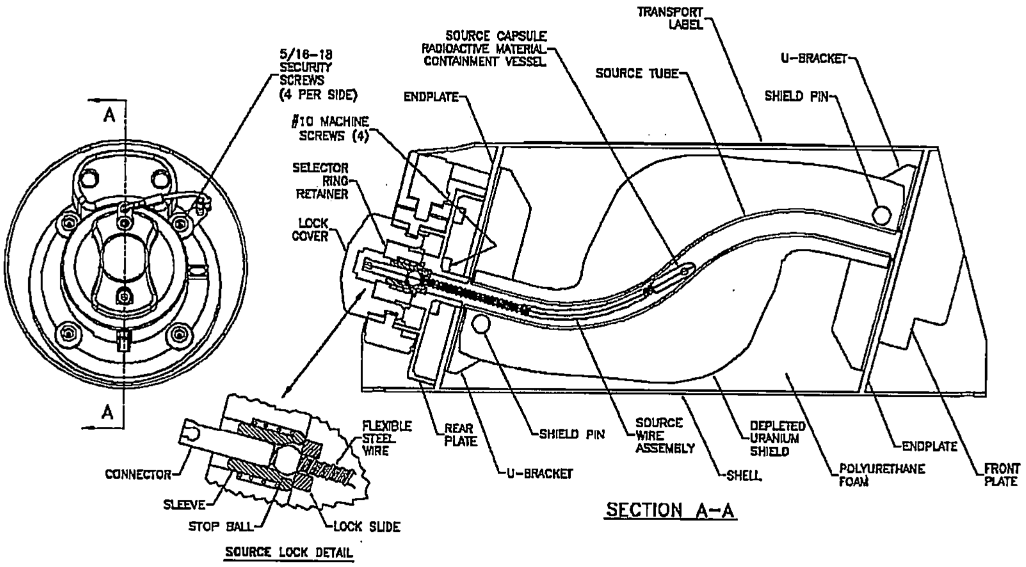

FIGURE 1. MODEL 880 PROJECTOR TRANSPORT PACKAGE.

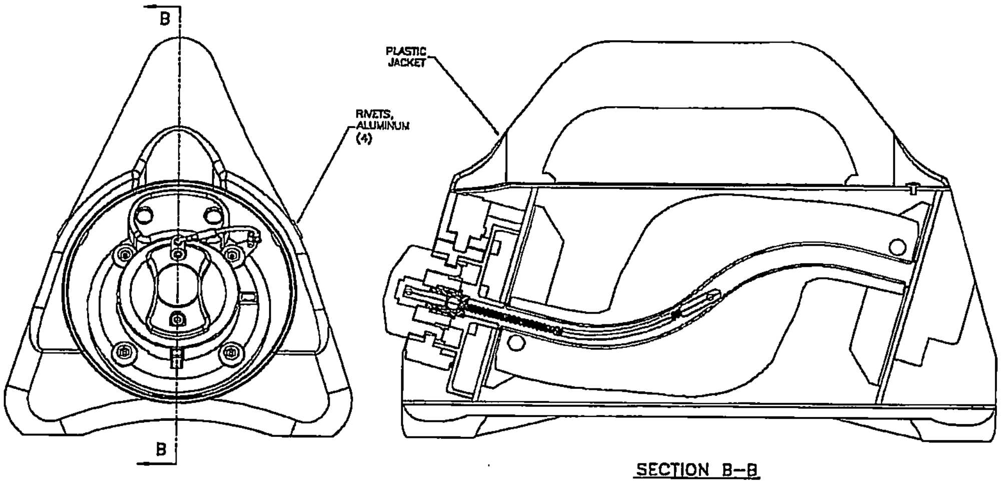

FIGURE 2. MODEL 880 PROJECTOR WITH JACKET.

Section 2 Construction and Acceptance of Test Specimens

A total of seven Model-880 transport package test specimens were manufactured in accordance with the AEA Technology QSA Quality Assurance Program. One of the seven, TP108(A), was not accepted due to borderline initial surface measurements taken during radiation profile inspection. The remainder of the six were constructed per drawing B88015 revision A. One of the six, TP108(G), was identified as the "With Jacket" test specimen and further assembled to meet the requirements of drawing B88000 revision A.

Since the test plan describes orientations for specifically identified test specimens and test specimen TP108(A) was not used, the drop test orientation for each specimen was shifted. TP108(B) took the place of TP108(A), TP108(C) for TP108(B), and so on.

Table 2.1. Test specimen data.

Test Specimen	Package Weight	Initial Source Location	Maximum Initial Surface Measurements	Maximum Initial 1 Meter Measurements	Test Orientation impact point
TP108(A)	Not used – Borderline initial surface measurements.				
TP108(B)	44.2 lbs.	6-47/64 in.	178 mR/hr	1.2 mR/hr	Lock cover
TP108(C)	44.3 lbs.	6-47/64 in.	178 mR/hr	0.9 mR/hr	Shell bottom
TP108(D)	44.4 lbs.	6-48/64 in.	160 mR/hr	1.1 mR/hr	Shell left side
TP108(E)	44.4 lbs.	6-46/64 in.	193 mR/hr	0.7 mR/hr	Not used
TP108(F)	44.1 lbs.	6-47/64 in.	192 mR/hr	1.0 mR/hr	Not used
TP108(G)	48.8 lbs.	6-48/64 in.	176 mR/hr	1.4 mR/hr	Lock cover

Section 3 Test Objectives and Orientations

3.1 Test objectives

The objective in each of the tests was to target specific areas of the package that could cause displacement of the source from its stored position within the depleted uranium shield and/or affect the integrity of the shield itself.

The modes of failure under the test conditions that could achieve the test objectives and lead to elevated dose rates include the following:

- Fracture or penetration of the shield and shell weldment.
- Displacement of the shield within the shell weldment and distortion or fracture of the source.
- Failure of the source lock assembly and/or rear plate security screws.

3.2 Package Drop Orientations

Test plan #108 identified three basic drop orientations to target three specific areas on the package. One test specimen was used for each orientation in the entire drop test sequence: 4-foot, 30-foot, and puncture, unless otherwise assessed.

The first orientation was an attack on the lock mechanism and its attachment screws by impacting on the lock cover in conjunction with the shell weldment. The object was to use the shell lip as leverage to drive the rear plate across the endplate and shear the rear plate security screws. Test specimen TP108(B) was used for this orientation.

The next orientation attacks the shield and its attachment to the shell weldment by impacting on the bottom surface of the shell weldment. This orientation has two objectives; (1) Fracture the shield by hitting the shield at a point where it is closest to the outer surface. (2) Break the shield attachment pin by forcing the shield through it as the shield is driven back up into the shell or pivots around the center of gravity upon impact. Test specimen TP108(C) was used for this orientation.

The last orientation is similar to the one above. It also attempts to fracture the shield by hitting it at a point in close proximity to the exterior surface. It also could cause failure at the shield and shell connection point by forcing the shield through the attachment pin as the shield or shell translates or rotates in relation to one another. Test specimen TP108(D) was used for this orientation.

The "with jacket" orientation is similar to the first orientation. The first orientation was considered the worst orientation for the package based on the damage recorded on test specimen TP108(B). The justification and description for the orientation is recorded on each of the drop test checklists for the "with jacket" test specimen. The "with jacket" test specimen was TP108(G).

Section 4 Drop Test Data

The drop tests were conducted at Valley Tree in Groveland, Mass., on July 21, 2000. All test specimens were tested as planned per Test plan #108 and hit their intended target impact points.

Table 4.1 Test data summary.

Test Specimen	Test	Weight	Actual Impact Point	Damage Observed at Test Site
TP108(B)	4-foot free drop	44.2 lbs.	Lock cover & shell lip	• Shell bottom rear lip bent.
	30-foot free drop	44.4 lbs.	Lock cover & shell lip	• One rear plate security screw broken. • Rear plate puckered. • Shell lip bent further.
	Puncture drop #1	44.4 lbs.	Lock cover	• Lock cover dented.
	Puncture drop #2	NA	Lock cover	• Lock cover dented.
TP108(C)	4-foot free drop	44.3 lbs.	Shell bottom surface	• Shell bottom flattened. • Shell rear lip bent in.
	30-foot free drop	44.4 lbs.	Shell bottom surface	• Shell bottom flattened further. • Shell rear top bent. • Front endplate bent near bottom. • Outlet port binds.
	Puncture drop	44.4 lbs.	Shell bottom surface	• None observed.
TP108(D)	4-foot free drop	44.4 lbs.	Shell left side	• Shell left side flattened.
	30-foot free drop	44.3 lbs.	Shell left side	• Shell left side flattened further.
	Puncture drop	44.3 lbs.	Shell left side	• None observed.
TP108(G) (with jacket)	4-foot free drop	48.8 lbs.	Lock cover	• Lock cover dented.
	30-foot free drop	48.8 lbs.	Lock cover & shell side lip	• Shell rear side lip bent. • Lock mount dented. • Two jacket rivets broken. • Label rivets missing.
	Puncture drop	48.8 lbs.	Lock cover	• None observed.

Section 5 Test Inspection Results

The tables below summarize the inspection results after the drop test sequence. A physical thermal test was not conducted, but instead evaluated by analysis. Since the condition of the test specimens does not change, a final test inspection is not needed.

Table 5.1. Damage Measurements.

Test Specimen	Damage
TP108(B)	• Shell at rear end is bent in toward lock by about 1 inch at bottom. • Shell at front end has two spot dimples about 3/16 inch deep. • Rear plate is puckered in at selector ring about 1/16 inch. • Rear plate security screw at top right is broken. • Rear plate security screw at top left & bottom right is bent. • Rear plate security screw at bottom left slightly is bent. • Lock cover is dented 3/16 inch at three spots.
TP108(C)	• Shell bottom is depressed about 3/16 inch. • Shell top has two spot dimples about 3/16 deep. • Front plate knob pin is bent about 3/16 inch.
TP108(D)	• Shell left side is depressed about 1/8 to 1 inch. • Shell right side at rear end is bent about 3/16 inch.
TP108(G)	• Shell left side at rear end is bent about 5/8 inch. • Shell left side at front end is bent about 3/16 inch. • Rear plate security screw at top right is slightly bent. • Jacket rivets on left side are broken. • Lock cover is dented about 3/16 inch. • Lock cover pin at bottom is loose and can be removed. • Label rivets missing.

Table 5.2. Radiograph Inspection.

Test Specimen	Damage
TP108(B)	• Rear plate tube feature is slightly bent but intact. • Three rear plate security screws are slightly bent but intact. • One rear plate security screw broken end remained in the rivnut.
TP108(C)	• Shield contacts the shell at the impact surface.
TP108(D)	• U-shaped bracket is bent on the left side about 1/8 inch.
TP108(G)	• No apparent internal damage.

Table 5.3. Source Location Measurements.

Test Specimen	Before Test Measurement	After Test Measurement	Difference
TP108(B)	6-47/64 in.	6-45/64 in.	1/32 in.
TP108(C)	6-47/64 in.	6-47/64 in.	0 in.
TP108(D)	6-48/64 in.	6-48/64 in.	0 in.
TP108(G)	6-48/64 in.	6-46/64 in.	1/32 in.

Table 5.4. Simulated Source Condition Assessment.

Test Specimen	Condition
TP108(B)	No indication of damage
TP108(C)	No indication of damage
TP108(D)	No indication of damage
TP108(G)	No indication of damage

Table 5.5. Maximum Radiation Measurements at Surface.

Test Specimen	Before Test Measurement	After Test Measurement	% Change
TP108(B)	178 mR/hr	180 mR/hr	1.1
TP108(C)	178 mR/hr	180 mR/hr	1.1
TP108(D)	160 mR/hr	150 mR/hr	-6.3
TP108(G)	176 mR/hr	150 mR/hr	-14.8

Table 5.6. Maximum Radiation Measurements at One Meter from Surface.

Test Specimen	Before Test Measurement	After Test Measurement	% Change
TP108(B)	1.2 mR/hr	1.1 mR/hr	-8.3
TP108(C)	0.9 mR/hr	0.8 mR/hr	-11.1
TP108(D)	1.1 mR/hr	0.8 mR/hr	-27.3
TP108(G)	1.4 mR/hr	0.9 mR/hr	-35.7

Section 6 Drop Test Results

The damage measurements and radiograph inspections, tables 5.1 and 5.2, respectively show no fracture or penetration of the shield or shell weldment, displacement of the shield within the projector or distortion or fracture of the source.

Table 5.1 does reveal one broken and three bent rear plate security screws on test specimen TP108(B). However, the rear plate and lock assembly with source remained firmly attached to the shell weldment and in the shielded position. The bent screws held even after a repeated puncture drop on the same impact point and in the same direction as the 4-foot & 30-foot drops. The "with jacket" specimen, TP108(G), was dropped in a similar orientation as specimen TP108(B), except an adjustment was made to miss hitting the jacket at the bottom rear edge. The damage indicates similar results, although less in magnitude. The rear plate security screws are bent but none are broken on TP108(G).

Radiograph examination of the specimens, from table 5.2, indicates no damage to the shield or its attachment structure. Test specimen TP108(D) showed some minor bending of the U-shaped bracket in the direction in which it was dropped. The shield remains securely fastened to the welded shell for all test specimens.

The source location, see table 5.3, for each of the two specimens, TP108(B) & TP108(G), indicates similar displacement of the source about 1/32 inch towards the front end. This appears to be the result of the lock cover being forced into the rear plate upon impact. The maximum radiation measurements given in tables 5.5 and 5.6 show this displacement does not affect radiation levels at the surface or at one meter from the surface of the package.

Test specimen TP108(G) was measured for radiation levels without the jacket before the tests and with the jacket after the test. This would explain the lower readings and high percent change for this specimen.

The radiation levels at the surface and at one meter did not change significantly; in fact, they changed very little, if at all. The average 1 mR/hr maximum "after test" reading is well below the one R/hr limit for all specimens.

Table 5.4 shows that there was no affect on the simulated source condition for any of the specimen after the test.

Section 7 Thermal Analysis

Review of the damage to all test specimens after the drop tests suggest the fire test would have no affect on the radiation measurements taken after the drop tests. The reasons for this can be justified based on the condition of the test specimen after the drop tests and the properties of the materials used to secure and shield the source within the specimen.

Condition of Test Specimens

- The internal support structure for the shield is intact and fully functional. The internal support structure consists of the shield, shell weldment, shield pins, U-shaped brackets, and endplates with rivnuts.
- There are no holes or tears in the shell weldment to allow air to circulate through the package.
- The source assembly is intact, undamaged and secure in the shielded position. The source assembly consists of the source capsule, flexible wire, stop ball and source connector.
- The rear plate assembly continues to securely attach the source assembly to the package in the shielded position. The securing components of the rear plate assembly consists of the rear plate, lock slide, sleeve, selector ring, selector ring retainer, four #10 machine screws, and four 5/16-18 security screws.

Material Properties at Elevated Temperatures

- The melting temperature for all materials of the internal support structure, rear plate assembly and source assembly is above the thermal test temperature of 800°C.
- The thermal expansion for all materials of the internal support structure is less than the design clearance allowed for assembly.
- The stainless steel and titanium components of the internal support structure, rear plate assembly and source assembly have about 30% and 60% of their room temperature strength at 800°C, respectively.

  The load condition for the thermal test is for the internal structure to support the static weight of the shield in suspension. The dynamic impact nature of the drop tests can subject the structure to a force over 100 times the static weight of the shield. This means the strength of the materials used in the structure would need to decrease by two orders of magnitude or to about 1% of their strength at room temperature. The 30-minute thermal test is not long enough for significant creep deformation to occur in the structure.

Section 8 Conclusion

The test specimens were tested in accordance with test plan #108 and therefore as required in 10 CFR Part 71 and IAEA Safety Series No. 6 for type B(U)-85 transport packages.

The Model-880 transport package satisfies the test requirements of test plan #108. The Model-880 with jacket does not adversely affect the results of these tests. This conclusion is drawn from the drop test results and thermal analysis as supported by the test data, test inspection data and damage assessments.

APPENDIX D

TEST PHOTOGRAPHS

Test Specimen (B)

Figure 1: Four Foot Drop of Specimen (B)

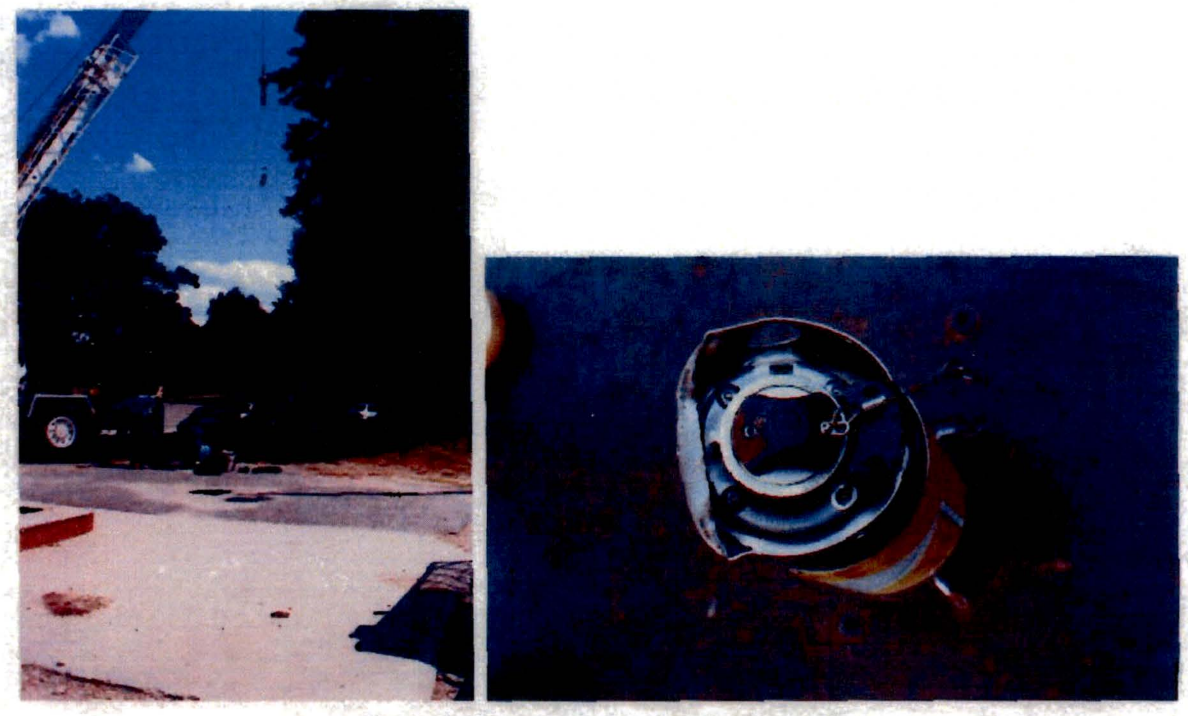

Figure 2: Thirty Foot Drop of Specimen (B)

Figure 3: Puncture Test of Specimen (B)

Test Specimen (C)

Figure 1: Four Foot Drop of Specimen (C)

Figure 2: Thirty Foot Drop of Specimen (C)

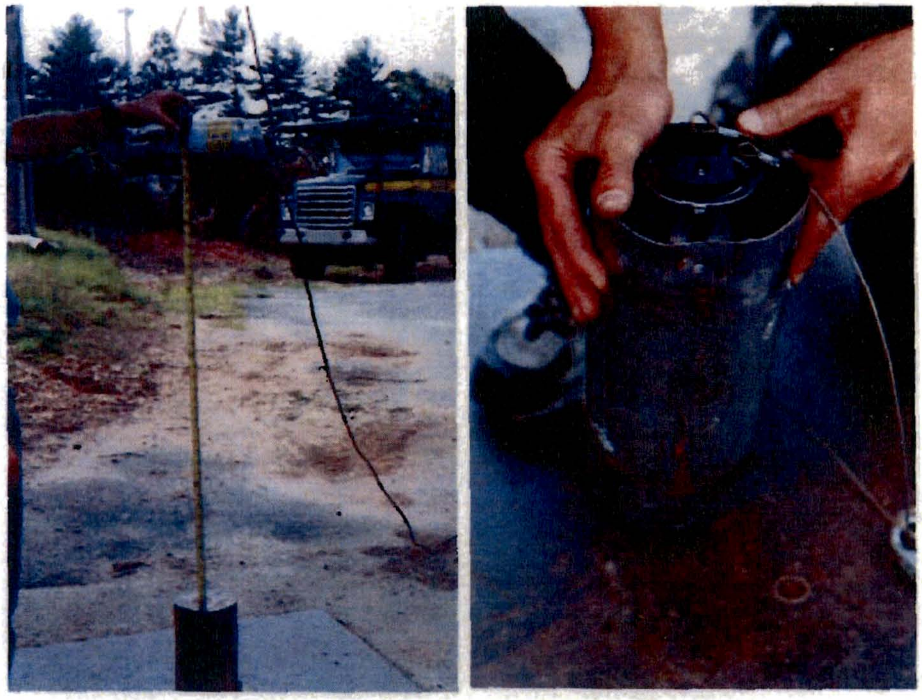

Figure 3: Puncture Test of Specimen (C)

Test Specimen (D)

Figure 1: Four Foot Drop of Specimen (D)

Figure 2: Thirty Foot Drop of Specimen (D)

Figure 3: Puncture Test of Specimen (D)

Test Specimen (G)

Figure 1: Four Foot Drop of Specimen (G)

Figure 2: Thirty Foot Drop of Specimen (G)

Figure 3: Puncture Test of Specimen (G)

2.12.4 Test Plan 115 (Feb 2001)

TEST PLAN 115

MODEL 880
RADIOGRAPHY PROJECTOR

ISO 3999-1:2000(E)
PERFORMANCE TESTS

Table of Contents

Test Plan No. 115

Section 1 Introduction

This test plan is intended to qualify the Model 880 Radiographic Projector to the performance requirements of ISO 3999-1:2000(E), “Radiographic protection – Apparatus for industrial gamma radiography – Part 1: Specifications for performance, design, and tests”.

The ISO 3999-1:2000(E) tests covered under this plan are the following with their respective ISO 3999-1:2000(E) sections listed in parenthesis:

- Projection Test (6.2)
- Tensile Test for Source Assemblies (6.5)
- Shield Efficiency Test (6.4.1)
- Endurance Test (6.2)
- Horizontal Shock Test (6.4.6.1)
- Vertical Shock Test (6.4.6.2)
- Tensile Test for Guide Tubes (6.7.4)
- Tensile Test for Drive Cable Assembly (6.6.3)
- Kinking Test for Guide Tubes (6.7.3)
- Kinking Test for Drive Cable Assembly (6.6.2)
- Crushing and Bending Tests (6.6.1 & 6.7.2)
- Lock Breaking Test (6.4.2)
- Wrench Test (6.4.3)

This plan outlines the test procedure, describes the test specimen construction, identifies the test equipment, and provides worksheets for test data recording.

The vibration resistance test was evaluated and deemed unnecessary. The only parts that could come loose from vibration are the tamper-proof screws. However, tamper-proof screws have been used on similar devices over the past 25 years and field use of the screws has shown that the screws have never loosened as a result of vibration.

The accidental drop test was previously accomplished under Test Plan 104 in which the device was dropped from a height of 30 feet. After this drop, the dummy source remained secured in its fully shielded position within the source tube, attached to the source wire and was undamaged.

The design of the Model 880 Radiography Projector ensures that the device will operate continually under normal conditions. The Model 880 was designed ruggedly with non-corrosive materials, such as stainless steel, to prevent any harmful rusting or corrosion.

Only the Model 880-150 Ci device will be used to demonstrate compliance with ISO 3999-1:2000(E) performance tests. The Model 880-50 Ci device, by default, will perform the same or better than the Model 880-150 Ci device due to its lower weight and identical structural construction.

The test sequence to be used for the testing is listed in Section 6.

Section 2 Gamma Radiography Projector Description

The Model 880 projector, shown in Figure 2.1, is a portable (Class P), externally projecting source (Category II) device. The device consists of four major assemblies; the body assembly, the rear plate assembly, the front plate assembly, and the jacket assembly. A source assembly is also used and stored with the device.

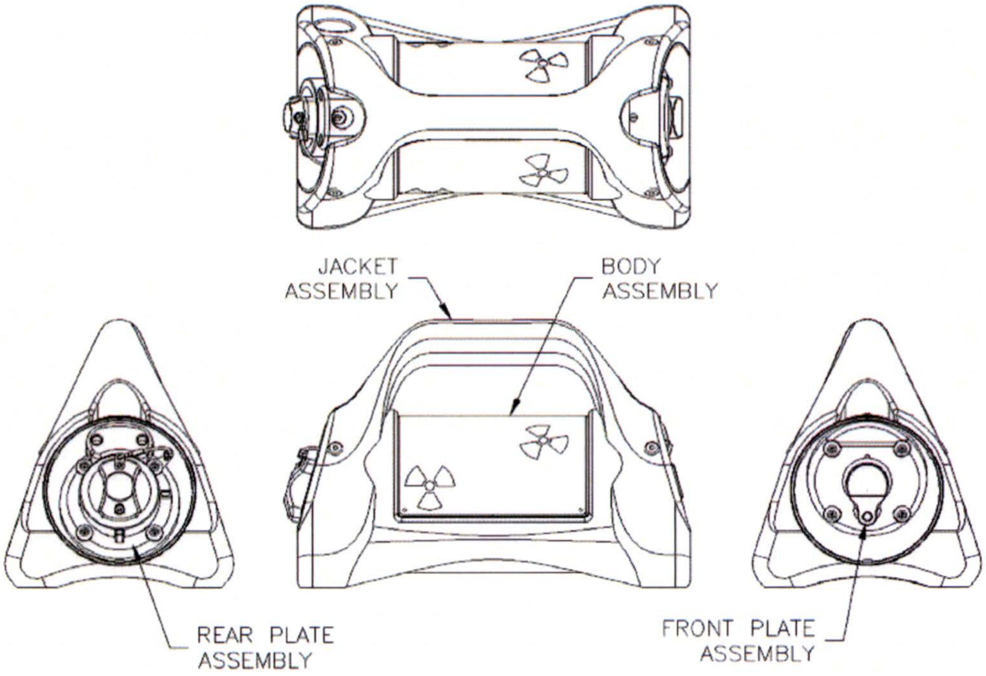

FIGURE 2.1: MODEL 880 PROJECTOR.

Section 3 Discussion on System Failure Modes of Interest

The tests in this test plan subject the test specimen to conditions likely to occur during use. The exposure device and integral safety features shall remain operational after the test and shall experience no loss of shielding efficiency.

A projection test is to be performed to determine the resistance to projection before and after the sequence of operational tests. The maximum force applied to the control handle must not increase by 25% after performing the operational tests. The projection test will be performed before and after the entire sequence of tests instead of each single test. Conducting the test in this manner will give a more conservative test result rather than smaller incremental increases in force from each single test. The test will be set up per Figure 6 in the ISO 3999-1:2000 standards. However, because of limited space, the cable paths used will have added difficulty and will actually be a more tortuous path than the one shown in the figure. The adjustment of this setup will only make the test more difficult and so will not make the test easier to pass. The operational tests include the endurance test, the shielding efficiency test, the horizontal and vertical shock tests, the tensile tests, the kinking tests, and the crushing and bending tests. A failure of the projection test would show an increase of over 125% of the force required to move the source assembly before the test to the force required after the test. A failure would indicate that a part of the exposure device, drive cable, drive cable housing, guide tube, or source assembly was damaged and is restricting movement of the source assembly or drive cable. This could result in an active source getting hung up in an unsecured location.

The source assembly tensile test is also to be performed before and after the sequence of operational tests. The purpose of the test is to ensure that the operational tests do not have any negative effects on the source wire assembly. The same dummy source assembly will be used with all of the operational tests requiring a source assembly except for the shielding efficiency test which requires an active source assembly. If there is enough wear on the swaged features of the assembly, the connections could fail when pulled.

The shielding efficiency test measures the performance of the shield when loaded with a maximum rated activity of 150 curies of Iridium-192. The shield efficiency test was completed on the test device after manufacture on November 10, 2000 and will not be completed again for this test. The results from this test will be included in the final test report at the conclusion of the tests in this test plan. The completion of the shielding efficiency test before the initial projection test and initial tensile test for source assemblies as shown in the test procedure in Section 6 of this test plan will not effect the testing in a negative manner. Performance of the shielding efficiency test does not have any effect on restricting the movement of a source assembly that is measured in the projection test. Also, the dummy source that is to be tested in the tensile test for source assemblies is not the same source assembly that would be used with the shield efficiency test because the shield efficiency test requires an active source. The source used with this test may not be the maximum rated source (150 Ci of Ir-192) that the device can handle but a correction factor will be used to determine the actual maximum dose rates if this is the case. The possible failure mode for this test would be high radiation levels over the exposure limits for a class P exposure device. Radiation levels over the limits may be the result of a number of factors. The following are possible factors:

1. Wrong source position within the shield tube.
2. Poor shield design or translation of the design to the manufacturing process.
3. Changes in distance of the container's exterior surface relative to the source position.

The endurance test demonstrates that the radiographic system will remain operational after 50,000 cycles. This test will use the same setup as the Projection Test. A failure could cause the source tube to wear resulting in depleted uranium contamination. Also, wear on the front and rear plate mechanisms may prevent the source wire assembly from becoming completely secure in the fully shielded position.

The horizontal shock test demonstrates the ability of the test specimen to withstand swing type impacts occurring during normal use. Three areas of the device that could cause the greatest effect on radiological safety if impacted were chosen for this. The areas include the front cover, the lock, and the rear cover test (see figures 11.1, 11.2, and 11.3). Possible failure would involve the inability to operate the front or rear plate mechanisms. Hitting the small protruding features on each end could cause deformation to the assembly mounting plates or shell endplates that may produce binding in the rotating parts of the mechanisms.

The vertical shock test demonstrates the ability of the test specimen to withstand many short drops expected during normal use. There are two normal carrying positions for this device; one with the jacket and the other without the jacket. Although the jacket would add a small amount of weight to the device, the jacket would also absorb some of the impact. This test will be performed without the jacket to prevent any impact absorption and give a more conservative test assessment. Possible failure could occur at the shield support structure, specifically at the pinned connection. If the connection were to fail, misalignment of the source tube could prevent the source wire from moving. Also, damage to the jacket could result in not being able to use the handle to carry the device.

The purpose of the tensile tests on the controls and guide tubes is to demonstrate that the they are able to withstand tensile stresses that may occur during normal use. The connections could fail if there is enough wear on the swaged features. Also, a failure could indicate that the design or manufacture of the controls or guide tubes is faulty.

The kinking tests on the control cable assembly and guide tubes are done to show that the sheaths are able to withstand the conditions they may likely encounter during use. After performing the kinking tests, the control cable assembly and guide tubes should remain operable without any loss of integrity. Also, a failure could indicate that the design or manufacture of the controls or guide tubes is faulty.

The crushing and bending tests are performed to demonstrate that the control cable assembly and guide tubes remain operational after being stepped on by the heel of a shoe. A mechanical device is used to simulate the crushing effect on the tubes from a shoe. After performing the crushing and bending test, the control cable assembly and guide tubes should remain operational without any loss to integrity.

The lock breaking test is performed to check the durability of the lock on the exposure device. A force of 400 N (90 lbs) is gradually applied to the lock and held for several seconds before being released. The force will be applied to where the key is inserted because this is the most exposed part of the lock and could become jammed or damaged by a force. The force is applied and released in this way eleven consecutive times at each position. A failure would occur if the exposure container could be opened without unlocking the device. A failure of the lock could develop into having an active source exposed without the operator's knowledge.

The wrench test is used to demonstrate that the handle of the exposure device is able to withstand forces that may be encountered during use. A static load of 25 times the weight of the device is placed at the most fragile part of the handle. A failure would be indicated by the handle becoming unattached from the device or becoming unstable. A failure could result in not being able to use the handle to carry the device or possibly an accidental drop.

Section 4 Construction and Condition of Test Specimens

All radiography system components listed in the table below and used in this test plan are manufactured in accordance with the AEA Technology QSA, Inc. Quality Assurance Program.

The Model 880, 150-Curie assembly, part number B88000 will be the device used in all tests requiring the use of a test projection device.

A Model 424-9 dummy source assembly will be loaded into the test specimen for all tests except the shield efficiency test and accidental drop test. An active Model 424-9 source assembly, part number A42409, with at least 75% of the maximum rated capacity (minimum of 112.5 curies of Iridium-192) shall be loaded into the test specimen for the shield efficiency test.

The radiography system consisting of the components in the table below will be used for the endurance test. The same Model 424-9 dummy source assembly used in the endurance test will be used in the tensile test.

Table of Model 880 Radiography System Components

Part number	Part Name	Quantity
B88000 Rev.A	MODEL 880 150 Ci MAX ASSEMBLY	1
A42409XL Rev.A	MODEL 424-9 DUMMY SOURCE ASSEMBLY	1*
A42409 Rev.E	MODEL 424-9 SOURCE ASSEMBLY	1*
BTAN69250	PISTOL GRIP CONTROL SYSTEM, 50 FOOT	1
B48930-7 Rev.A	SOURCE GUIDE TUBE ASSEMBLY, 7 FOOT	1
B48907-7 Rev.T	SOURCE GUIDE TUBE ASSEMBLY, 7 FOOT	4
B48906-7 Rev.Q	SOURCE GUIDE TUBE ASSEMBLY, 7 FOOT	1

* Note: Either one of the Model 424-9 source assemblies, Dummy (XL) or Active may be used in the system, but not simultaneously.

Section 5 Material and Equipment List

The worksheets in section 24 identify the equipment and procedure required for the tests. Additional materials and equipment used to facilitate the tests will be listed as needed.

Section 6 Test Procedures

The testing shall follow the sequence below.

Device 1: Model 880, 150 Ci Assembly

1. Initial Projection Test
2. Initial Tensile Test for Source Assemblies
3. Shield Efficiency Test (See Section 3)
4. Endurance Test
5. Horizontal Shock Test
6. Vertical Shock Test
7. Tensile Test for Guide Tubes
8. Tensile Test for Control Cable Assembly
9. Kinking Test for Guide Tubes
10. Kinking Test for Control Cable Assembly
11. Crushing and Bending Tests for Control Cable Assembly and Guide Tubes
12. Final Tensile Test for Source Assemblies
13. Final Projection Test (See Section 3)
14. Lock Breaking Test
15. Wrench Test

Section 7 Testing Safety and Waste Disposal

Testing Safety

The shield efficiency test uses active radioactive material and the test specimen contains depleted uranium (low level radioactive material). Handling radioactive material shall be done with caution and only by qualified personnel.

The weight of the test specimen is approximately 50 pounds. Proper lifting techniques shall be used to prevent injury.

Some tests of this plan may result in heavy falling objects and flying debris. Safety glasses and a safe distance must be used.

The possibility of depleted uranium contamination could be present during and after the tests. Qualified personnel shall ensure all applicable surfaces are free of contamination.

Waste Disposal

The test specimen shall be stored in the low-level waste room until authorization by the regulatory department is given to properly dispose.

Section 8 Initial Projection Test

Requirements

The Projection Test demonstrates that the torque required at the controls to move the source assembly from the secured position to the working position and back to the secured position after certain tests remains within 125% of the torque before the tests. The minimum movement rate for projecting and retracting the source assembly shall be a constant 0.75 m/s (2.5 ft/s) of linear movement until the source stops after each cycle.

Equipment

1. The test projection device equipped with the largest diameter and greatest length dummy source assembly recommended for the device.
2. The largest recommended guide tube and controls (42 ft. guide tube and 50 ft. control cable) connected to the projection device set up in accordance with Figure 6 of the ISO 3999-1:2000 standards (see Section 3).
3. Motor and Controller with torque readout.
4. Cycle counter.
5. Pneumatic actuator for lock slide actuation.

Section 9 Initial Tensile Test for Source Assemblies

Requirements

The tensile tests demonstrate that the source assembly maintains its integrity after experiencing tensile loads that may be encountered during normal use. The Tensile Test for Source Assemblies is performed before and after the sequence of operational tests. The source assembly should remain operable and maintain its integrity.

Equipment

1. Dummy source assembly. (See Section 3)
2. Force gage for measuring the forces required from Section 6.5 of the ISO 3999-1:2000 standard.

Section 10 Endurance Test

Requirements

The Endurance Test demonstrates the gamma radiography system remains operational after 50,000 cycles of the source assembly moving from secure to working positions and back. This test is done to check the resistance due to fatigue and wear of the different components and accessories of the device during normal operation. The automatic securing mechanism and the lock should remain operational and effective.

Equipment

The equipment used for this test is equivalent to the equipment used in the initial projection test (see Section 8).

Section 11 Horizontal Shock Test

Requirements

The horizontal shock test demonstrates that the exposure device will withstand the horizontal impacts the device may encounter (see Section 3).

The exposure device and integral safety features shall remain operational after the test and the device shall experience no loss of shielding efficiency.

Equipment

1. The test projection device equipped with a dummy source assembly secured and locked in its most shielded position with all covers.
2. A target consisting of a steel bar with a flat vertical face 50 mm (1.97 in.) diameter by 300 mm (11.81 in.) long. The bar shall lie horizontally and be fixed or welded to a rigid mass at least 10 times the mass of the exposure device (500 lbs).
3. Suspension equipment for the test projection device that does not cause undesirable rotation around a vertical axis when suspended before being exposed to the shock.

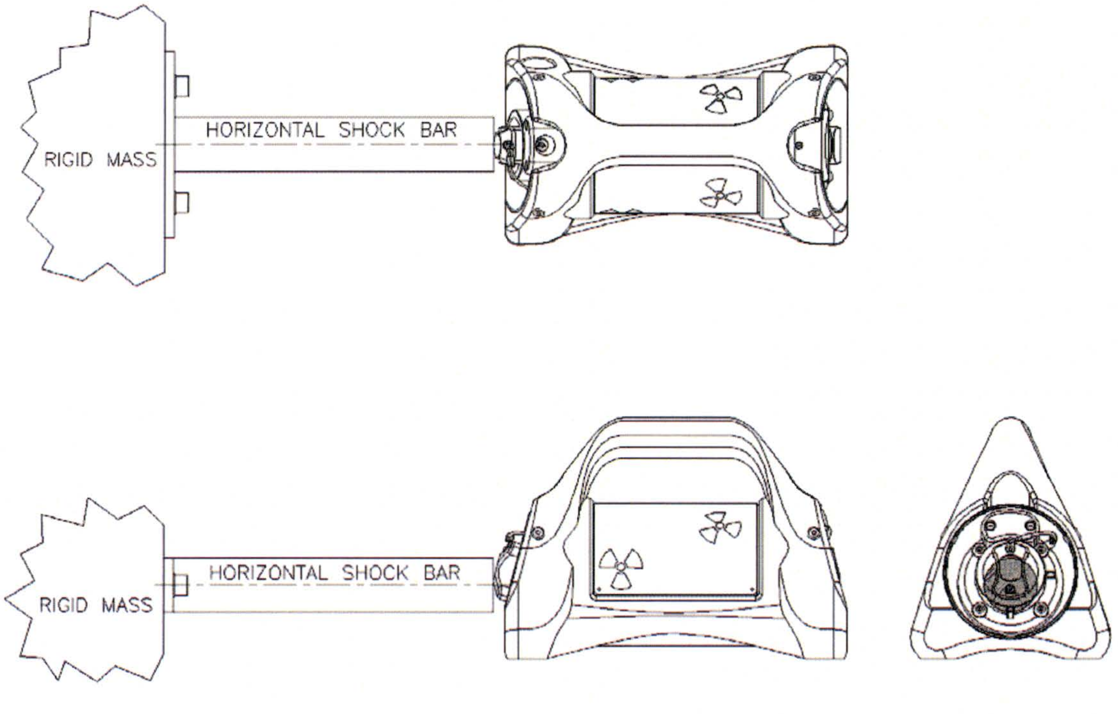

Figure 11.1 Setup for lock cover area.

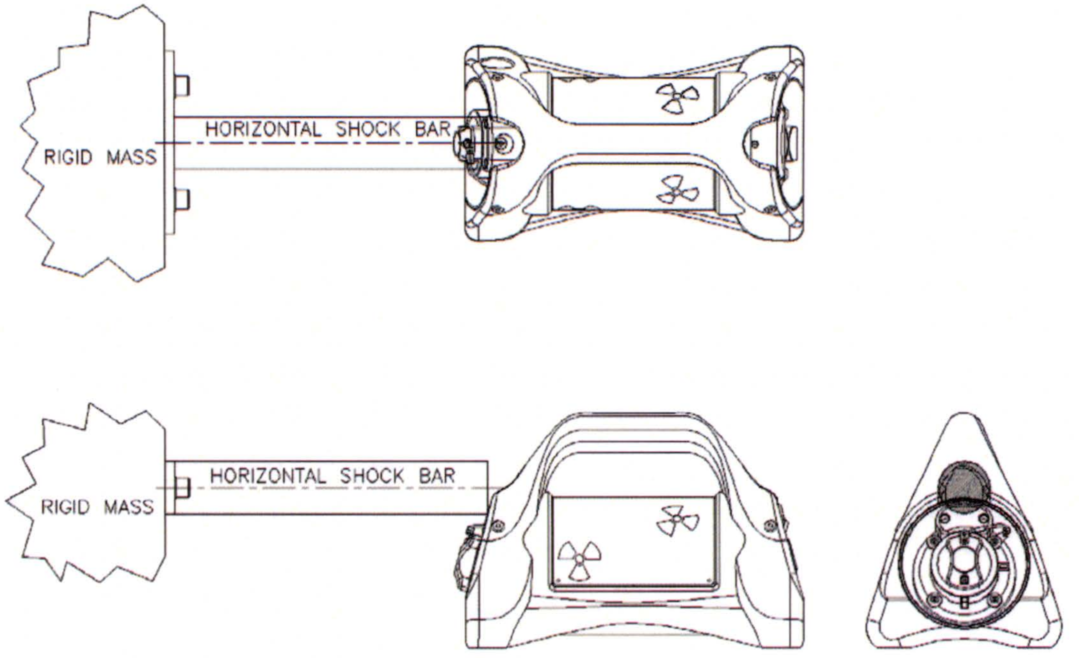

Figure 11.2 Setup for lock mount area.

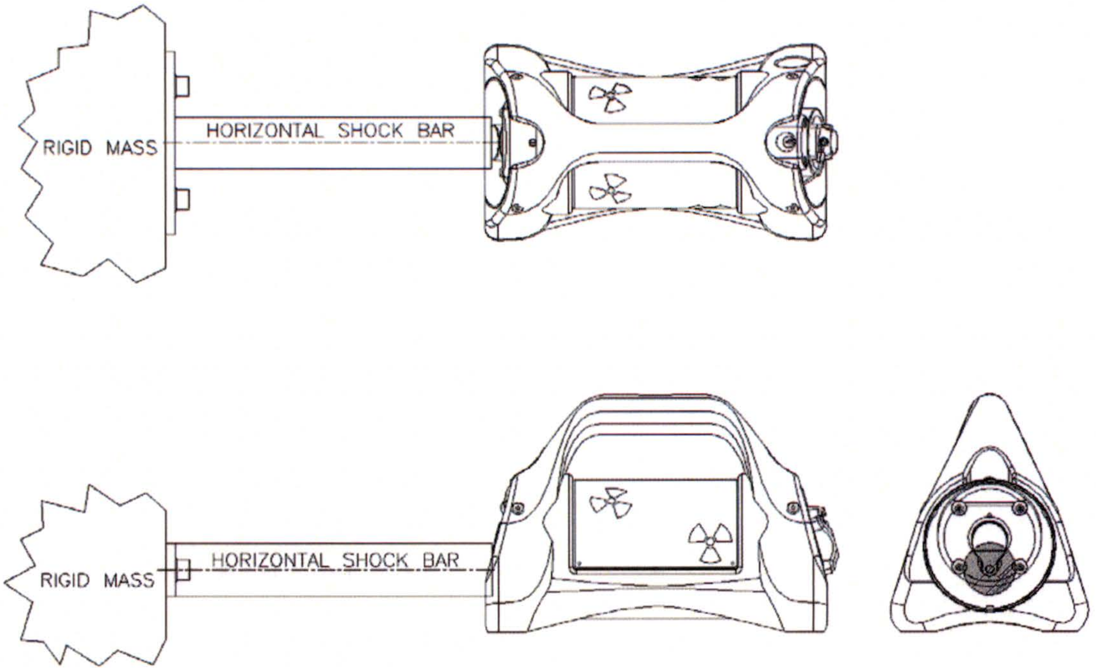

Figure 11.3 Setup for front knob area.

Section 12 Vertical Shock Test

Requirement

The vertical shock test demonstrates that the exposure device will withstand the vertical impacts the device may encounter. This test will be performed without the jacket as shown in Figure 12.1 (see Section 3).

The exposure device and integral safety features shall remain operational after the test and shall experience no loss of shielding efficiency.

Equipment

1. The test projection device equipped with a dummy source assembly secured and locked in its most shielded position with all covers but without the jacket.
2. A rigid target consisting of a flat horizontal surface of steel, concrete or solid timber having a mass at least 10 times the test specimen (500 lbs.). The surface shall be covered with a sheet of 7 or 9 ply (25mm thick) fir plywood or equivalent.

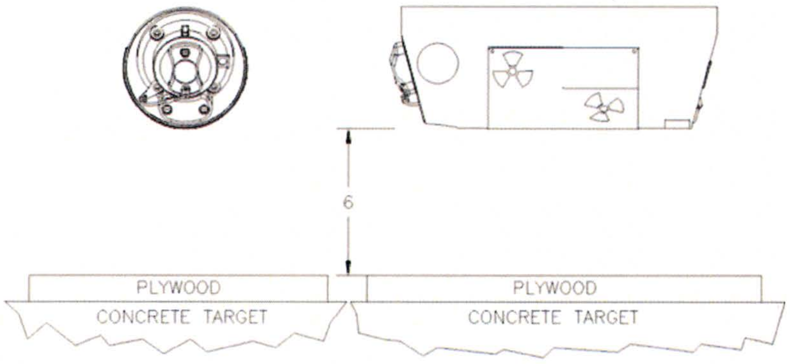

Figure 12.1

Section 13 Tensile Test for Guide Tubes

Requirements

The Tensile Tests demonstrate that the guide tube housing maintains its integrity after experiencing tensile loads that may be encountered during use as shown in Section 6.74 of the ISO 3999-1:2000 standard. The guide tube should remain completely operable without any damage that may restrict travel of the source assembly.

Equipment

1. The test projection device equipped with the dummy source assembly.
2. Test apparatus T10281 used to secure the guide tube.
3. A force or pressure gage for measuring the required loads.

Section 14 Tensile Test for Control Cable Assembly

Requirements

The Tensile Tests demonstrate that the control cable assembly maintains its integrity after experiencing tensile loads that may be encountered during use as shown in Section 6.74 of the ISO 3999-1:2000 standard. The control cable assembly will remain operational after the tests.

Equipment

1. The test projection device equipped with the dummy source assembly.
2. The test control cable assembly.
3. A force or pressure gage for measuring the required loads.

Section 15 Kinking Test for Guide Tube

Requirements

The kinking test demonstrates that the guide tube will withstand conditions that may be encountered during use as shown in Section 6.73 of the ISO 3999-1:2000 standard. The guide tube shall remain operational after the test without any damage that may restrict the travel of the source assembly.

Equipment

1. The test guide tube.
2. A flat test surface equipped with horizontal guides separated by less than or equal to 5 times the diameter of the guide tube.
3. A dynamometer.
4. A tape measure.

Section 16 Kinking Test for Drive Cable Assembly

Requirements

The kinking test demonstrates that the drive cable housing will withstand conditions that may be encountered during use as shown in Section 6.62 of the ISO 3999-1:2000 standard. The drive cable housing shall remain operational without any loss to structural integrity after the test.

Equipment

1. The test drive cable assembly.
2. A stop watch.
3. A tape measure.
4. A flat test surface.

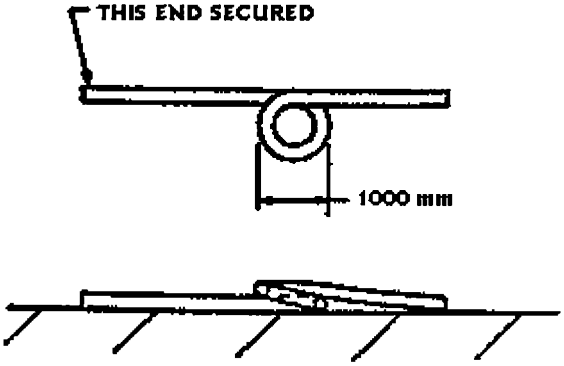

Figure 16.1

Section 17 Crushing and Bending Test

Requirements

The Crushing and Bending Test demonstrates that the drive cable and the guide tubes remain operational after being impacted by the heel of a shoe. The control cable assembly should remain operable without any loss to structural integrity.

Equipment

1. Test guide tube and control cable.
2. Test surface having a minimum mass of 150 kg (330 lb) and must be hard enough to not deform from the application of a steel punch without the presence of the drive cable housing or guide tube.
3. Steel guides to laterally hold housings with length greater than two heel lengths and a height between .5 and .75 times the sheath height for juxtaposed sheaths or single guide tube and between 1.5 and 1.75 times the sheath height for superimposed sheaths.
4. Steel punch tool T10280 as shown in figure 17.1.
5. Tape measure.

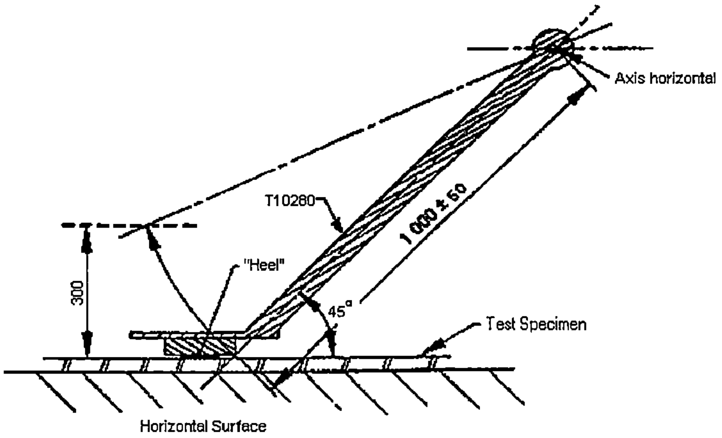

17.1 Crushing Test

Section 18 Final Tensile Test for Source Assemblies

Requirements

The tensile tests demonstrate that the source assembly maintains its integrity after experiencing tensile loads that may be encountered during normal use. The Tensile Test for Source Assemblies is performed before and after the sequence of operational tests. The source assembly should remain operable and maintain its integrity.

Equipment

1. Dummy source assembly. (See Section 3)
2. Force gage for measuring the forces required from Section 6.5 of the ISO 3999-1:2000 standard.

Section 19 Final Projection Test

Requirements

The Projection Test demonstrates that the torque required at the controls to move the source assembly from the secured position to the working position and back to the secured position after certain tests remains within 125% of the torque before the tests. The minimum movement rate for projecting and retracting the source assembly shall be a constant 0.75 m/s (2.5 ft/s) of linear movement until the source stops after each cycle.

Equipment

The equipment used for this test is equivalent to the equipment used in the initial projection test (see Section 8).

Section 20 Lock Breaking Test

Requirements

The Lock Breaking Test demonstrates that the locking mechanism can withstand a breaking force while in the locked position with the key removed. The lock must remain effective and operable after the test.

Equipment

1. The test projection device equipped with a dummy source assembly secured and locked in its most shielded position with all covers.
2. The lock breaking tool, Tool number T10345.
3. A stopwatch.
4. At least 90 lbs. of weights to be added gradually to lock breaking tool during test.

Section 21 Wrench Test

Requirements

The Wrench Test demonstrates that the exposure container handle is able to withstand a static force equal to 25 times the weight of the device (1250 lbs). The force is to be supplied to the most vulnerable part of the handle. The most vulnerable part of the handle is considered to be the middle of the handle the most bending stresses will occur.

Equipment

1. The test projection device equipped with a dummy source assembly secured and locked in its most shielded position with all covers.
2. A test plate with weights that, when strapped to the device, weighs at least 1250 lbs.
3. A scale to verify the weight of the test equipment.
4. Crane

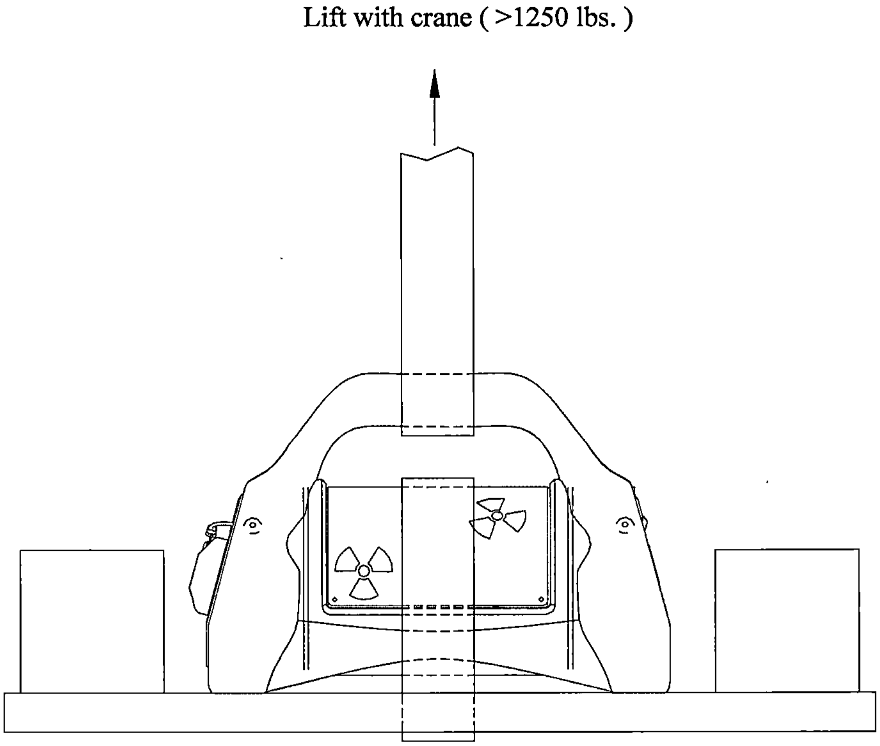

Fig. 21.1

Section 22 Final Test Assessment

After all the tests have been completed, evaluate the condition of the test specimen and assess its performance relative to the test requirements of standard ISO 3999-1:2000(E).

Section 23 Test Worksheets

Test Plan 115 Initial Projection Test

Material and Equipment:

Test device (Model 880) serial number: ____________________
Dummy source assembly serial number: ____________________
Drive control assembly and guide tubes.
Automatic cycling apparatus including motor, controller, pneumatic actuator, and counter.

Test Procedure:

1. Assemble system using Figure 6 of ISO 3999-1:2000 as a guide.
2. Assemble and connect the test specimen to the system.
3. Complete 10 full cycles.
4. Record the rotational speed (P177 rpm): ____________
5. Record the highest operational torque for each cycle. 1:_____ 2:_____ 3:_____ 4:_____ 5:_____
   6:_____ 7:_____ 8:_____ 9:_____ 10:_____
6. Record the average operational torque: _____

Damage and/or operational malfunctions:

____
____
____
____

Test Assessment:

____
____
____

Recorded by: ______________________________ Date: ____________

Witnessed by: ______________________________ Date: ____________

Test Plan 115 Initial Tensile Test for Source Assemblies

Material and Equipment:

Dummy source assembly serial number: ____________________

Force gage serial number: ______________________________

Test Procedure:

1. Record stop ball to connector measurement: ______________
2. Attach control cable to the dummy source assembly.
3. Restrain end of source assembly opposite control cable connection.
4. Gradually apply 1000 N +44/-0 (225 lb +10/-0) force over 10 seconds, hold for 5 seconds, then release.
5. Complete test a total of 10 times.
6. Unrestrain source assembly.
7. Restrain source assembly at largest diameter and repeat steps 3-5.
8. Record stop ball to connector measurement: ______________.
9. Perform a complete functional operation of the device using the dummy source assembly.

Damage and/or operational malfunctions:

____

____

____

____

Test Assessment:

____

____

____

Recorded by: ________________________________ Date: ____________

Witnessed by: ________________________________ Date: ____________

Test Plan 115 Endurance Test

Material and Equipment:

Test device (Model 880) serial number: ___________________
Dummy source assembly serial number: ___________________
Drive control assembly and guide tubes.
Automatic cycling apparatus including motor, controller, pneumatic actuator, and counter.

Test Procedure:

1. Prepare test specimen by securing a dummy source into its fully shielded position, attaching all covers, and locking the device.
2. Assemble system using Figure 6 of ISO 3999-1:2000.
3. Set the cycle counter to zero.
4. Cycle the test specimen a minimum of 50,000 times.
5. Record the rotational speed (>2.5 ft/s): ___________________
6. Record the highest operational torque: ___________________
7. Record the total number of cycles (>50,000): ___________________
8. Clean the dummy source assembly.
9. Perform a complete functional operation of the device using the dummy source assembly used in the test.

Damage, maintenance, and/or operational malfunctions:

____
____
____
____

Test Assessment:

____
____
____

Recorded by: ____________________________ Date: ____________

Witnessed by: ____________________________ Date: ____________

Reviewed by:

Engineering: ____________________________ Date: ____________

Regulatory Affairs: ____________________________ Date: ____________

Quality Assurance: ____________________________ Date: ____________

Test Plan 115 Horizontal Shock Test

Material and Equipment:

Test device (Model 880) serial number: ____________________

Target horizontal test bar: Tool Number T10333, serial number: __________

Target mass weight: ________________________ Weight scale used: ________________________

Test Procedure:

1. Prepare test specimen by securing a dummy source into its fully shielded position, attaching all covers, and locking the device.
2. Suspend the test specimen to the test apparatus.
3. Contact the area of impact to the target per figure 11.1.
4. Swing and raise the test specimen "center of gravity" up to at least 4 inches above the target center.
5. Release the test specimen.
6. Perform steps 4 & 5 for a total of twenty (20) times.
7. Perform a complete functional operation of the device using a dummy source assembly.

Damage and/or operational malfunctions:

____
____
____
____

Test Assessment:

____
____
____

Recorded by: ______________________________ Date: ____________

Witnessed by: ______________________________ Date: ____________

Test Plan 115 Horizontal Shock Test

Material and Equipment:

Test device (Model 880) serial number: ____________________

Target horizontal test bar: Tool Number T10333, serial number: __________

Target mass weight: ________________________ Weight scale used: ________________________

Test Procedure:

1. Prepare test specimen by securing a dummy source into its fully shielded position, attaching all covers, and locking the device.
2. Suspend the test specimen to the test apparatus.
3. Contact the area of impact to the target per figure 11.2.
4. Swing and raise the test specimen "center of gravity" up to at least 4 inches above the target center.
5. Release the test specimen.
6. Perform steps 4 & 5 for a total of twenty (20) times.
7. Perform a complete functional operation of the device using a dummy source assembly.

Damage and/or operational malfunctions:

____

____

____

____

Test Assessment:

____

____

____

Recorded by: ______________________ Date: __________

Witnessed by: ______________________ Date: __________

Test Plan 115 Horizontal Shock Test

Material and Equipment:

Test device (Model 880) serial number: ______________

Target horizontal test bar: Tool Number T10333, serial number: ________

Target mass weight: ______________ Weight scale used: ______________

Test Procedure:

1. Prepare test specimen by securing a dummy source into its fully shielded position, attaching all covers, and locking the device.
2. Suspend the test specimen to the test apparatus.
3. Contact the area of impact to the target per figure 11.3.
4. Swing and raise the test specimen "center of gravity" up to at least 4 inches above the target center.
5. Release the test specimen.
6. Perform steps 4 & 5 for a total of twenty (20) times.
7. Perform a complete functional operation of the device using a dummy source assembly.

Damage and/or operational malfunctions:

____

____

____

____

Test Assessment:

____

____

____

Recorded by: ________________________________ Date: ____________

Witnessed by: ________________________________ Date: ____________

Test Plan 115 Vertical Shock Test

Material and Equipment:

Test device (Model 880) serial number: ________________

Target Used: ______________________

Test Procedure:

1. Prepare test specimen by securing a dummy source into its fully shielded position, attaching all covers, and locking the device.
2. Suspend the test specimen at least 6 inches over the test target upside-down with the jacket removed.
3. Drop the test specimen onto target.
4. Perform steps 2 & 3 a total of one hundred (100) times.
5. Perform a complete functional operation of the device using a dummy source assembly.

Damage and/or operational malfunctions:

____

____

____

____

Test Assessment:

____

____

____

Recorded by: ______________________ Date: __________

Witnessed by: ______________________ Date: __________

Test Plan 115 Tensile Test for Guide Tubes

Material and Equipment:

Test device (Model 880) serial number: ______________

Test apparatus T10281.

Force gage serial number: ______________________

Test Procedure:

1. Prepare test specimen by securing a dummy source into its fully shielded position, attaching all covers, and locking the device.
2. Secure exposure device to prevent movement during test.
3. Attach one end of test specimen to apparatus, T10281.
4. Apply a tensile load of 500 N +44/-0 (112 lb +10/-0) for 30 seconds to the end of test specimen. The 112 lbf. tensile load will register as a minimum of 78.4 psi (84.3 psi with gauge tolerance allowance) on the pressure gauge.
5. Release the pressure.
6. Perform steps 4 & 5 a total of 10 times.

Damage and/or operational malfunctions:

____

____

____

____

Test Assessment:

____
____
____

Recorded by: ______________________ Date: __________

Witnessed by: ______________________ Date: __________

Test Plan 115 Tensile Test for Control Cable Assembly

Material and Equipment:

Test device (Model 880) serial number: ______________

Force gage serial number: ______________________

Control Cable Assembly

Test Procedure:

1. Secure test device (Model 880) so that it cannot move during test.
2. Attach the controls to the test device.
3. Apply a tensile load of 500 N +44/-0 (112 lb +10/-0) for 30 seconds to the end of test specimen. The 112 lbf. tensile load will register as a minimum of 78.4 psi (84.3 psi with gauge tolerance allowance) on the pressure gauge.
4. Release the pressure.
5. Perform steps 3 & 4 a total of 10 times.
6. Secure the controls so they will not move during test.
7. Apply a force of 1000 N +44/-0 (225 lb +10/-0) tensile force to the free end of the source assembly for 10 seconds.
8. Perform step 7 a total of 10 times.

Damage and/or operational malfunctions:

____
____
____
____

Test Assessment:

____
____
____

Recorded by: ______________________ Date: __________

Witnessed by: ______________________ Date: __________

Test Plan 115 Kinking Test for Guide Tubes

Material and Equipment:

Guide Tube.

Dynamometer Ser. No. __________

Tape measure.

Test Procedure:

1. Secure test specimen without connection on a horizontal surface between two parallel plates.
2. Make a flat closed loop with guide tube.
3. Pull the free end of the loop with a force of 200 N +22/-0 (45 lb +5/-0) over 5 seconds and maintain for 10 seconds.
4. Repeat steps 2 through 4 for a total of 10 times using the same point of the guide tube.
5. Redo complete test 10 times with a connection in the loop opposite the crossing point.
6. Remove the test specimen from the clamp.
7. Verify that guide tube is operational.

Damage and/or operational malfunctions:

____

____

____

____

Test Assessment:

____

____

____

Recorded by: ______________________ Date: __________

Witnessed by: ______________________ Date: __________

Test Plan 115 Kinking Test for Control Cable Assembly

Material and Equipment:

Control Cable Assembly.

Tape Measure.

Stop Watch.

Test Procedure:

1. Secure the control housing rectilinearly on a horizontal surface and clamp one end of the housing to the tabletop.
2. Make a 1000mm (39.37 in) loop with the housing on the horizontal surface (see figure 17.1). Verify the diameter of the loop using a tape measure.
3. Pull the free end of the housing without allowing it to rotate along its original axis at a minimum speed of 2.0 m/s (6.6 ft/sec).
4. Repeat test for a total of 10 times at each of 10 equidistant points along the length of the control housing.
5. Remove control housing from the clamp.
6. Verify that control assembly is operational.

Damage and/or operational malfunctions:

____

____

____

____

Test Assessment:

____

____

____

Recorded by: ______________________ Date: __________

Witnessed by: ______________________ Date: __________

Test Plan 115 Crushing and Bending Test

Material and Equipment:

Steel Punch, Tool Number T10280.

Tape Measure.

Guide Tube and Control Cable Assembly.

Test Procedure:

1. Place the guide tube test specimen on a rigid horizontal test surface with a minimum mass of 150 kg between the lateral guides. The surface must be hard enough that it will not be deformed by a steel punch (heel) without the presence of the object to be tested.
2. Place the steel punch (T10280) at a point on the test specimen as shown in Figure 17.1
3. Lift the edge of the steel punch heel a minimum of 300mm (11-13/16 in).
4. Drop the steel punch onto the test specimen.
5. Perform steps 3 & 4 a total of ten (10) times on randomly selected points on the test specimen. One of these points shall be on a joint.
6. Verify that the guide tube is operational.
7. Place the control cable test specimen in the juxtaposed position on the same surface used with the guide tube and laterally support with guides 0.5 to 0.75 times the control cable housing height.
8. Repeat steps 2 through 4 on five randomly selected points on the housing making sure the punch heel hits both juxtaposed housings simultaneously.
9. Rotate the control cable test specimen on the surface to the superimposed position between lateral guides 1.5 to 1.75 times the height of a tube.
10. Repeat steps 2 through 4 on five randomly selected points making sure that the heel drops on the top tube.
11. Verify that the control cable assembly is operational.

Damage and/or operational malfunctions:

____
____
____
____

Test Assessment:

____
____
____

Recorded by: ________________________ Date: __________

Witnessed by: ________________________ Date: __________

Test Plan 115 Final Tensile Test for Source Assemblies

Material and Equipment:

Dummy source assembly serial number: ____________________

Force gage serial number: ______________________________

Test Procedure:

1. Record stop ball to connector measurement: ______________
2. Attach control cable to the dummy source assembly.
3. Restrain end of source assembly opposite control cable connection.
4. Gradually apply 1000 N +44/-0 (225 lb +10/-0) force over 10 seconds, hold for 5 seconds, then release.
5. Complete test a total of 10 times.
6. Unrestrain source assembly.
7. Restrain source assembly at largest diameter and repeat steps 3-5.
8. Record stop ball to connector measurement: ______________
9. Perform a complete functional operation check of the device using the dummy source assembly.

Damage and/or operational malfunctions:

____
____
____
____

Test Assessment:

____
____
____

Recorded by: ________________________________ Date: ______________

Witnessed by: ________________________________ Date: ______________

Test Plan 115 Final Projection Test

Material and Equipment:

Test device (Model 880) serial number: ____________________
Dummy source assembly serial number: ____________________
Drive control assembly and guide tubes.
Automatic cycling apparatus including motor, controller, pneumatic actuator, and counter.

Test Procedure:

1. Assemble system using Figure 6 of ISO 3999-1:2000 as a guide.
2. Assemble and connect the test specimen to the system.
3. Complete 10 full cycles.
4. Record the rotational speed (P 177 rpm): ____________
5. Record the highest operational torque for each cycle. 1:_____ 2:_____ 3:_____ 4:_____ 5:_____
   6:_____ 7:_____ 8:_____ 9:_____ 10:_____
6. Record the average operational torque: _____

Damage and/or operational malfunctions:

____
____
____
____

Test Assessment:

____
____
____

Recorded by: ____________________________________ Date: ______________

Witnessed by: ____________________________________ Date: ______________

Test Plan 115 Lock Breaking Test

Material and Equipment:

Test device (Model 880) serial number: ___________________

Lock Breaking Tool, Tool Number T10345

Stopwatch.

Weights.

Test Procedure:

1. Prepare test specimen by securing a dummy source into its fully shielded position, attaching all covers, and locking the device.
2. Secure test specimen to prevent movement during test.
3. Set up Lock Breaking Tool with rod end resting on lock.
4. Gradually apply a load of 400 N +44/-0 (90 lbs +10/-0) force to lock over 10 seconds by adding weights to the top of the Lock Breaking Tool. Max Force: _______
5. Maintain the force for 5 seconds.
6. Gradually remove weights over 10 seconds.
7. Repeat test 10 times.
8. Perform a complete functional operation of the device using the dummy source assembly.

Damage and/or operational malfunctions:

____

____

____

____

Test Assessment:

____

____

____

Recorded by: ____________________________ Date: ______________

Witnessed by: ____________________________ Date: ______________

Test Plan 115 Wrench Test

Material and Equipment:

Test device (Model 880) serial number: ________________

Weight of test device (Model 880): ________________

Total weight of test equipment: ______________

Scale: ______________

Test Procedure:

1. Prepare test specimen by securing a dummy source into its fully shielded position, attaching all covers, and locking the device.
2. Secure device to plate and add weight to 25 times weight of test specimen as shown in Fig. 22.1.
3. Lift test specimen and weight from middle of handle with crane.
4. Perform a complete functional operation of the device using the dummy source assembly.

Damage and/or operational malfunctions:

____

____

____

____

Test Assessment:

____

____

____

Recorded by: ______________________________ Date: ____________

Witnessed by: ______________________________ Date: ____________

Section 25 Appendix: ISO 3999-1:2000

2.12.5 Test Plan Report 115 Minus Appendices (March 2001)

TEST REPORT 115

MODEL 880
RADIOGRAPHY PROJECTOR

ISO 3999-1:2000
PERFORMANCE TESTS

Table of Contents

Test Report No. 115

Section 1 Introduction

This report documents the performance of the Model 880 Radiographic Projector to the test requirements of ISO 3999-1:2000, Radiological Safety for the Design and Construction of Apparatus for Gamma Radiography.

The ISO 3999-1:2000 tests were done in the following order:

- Initial Projection Test
- Initial Tensile Test for Source Assemblies
- Endurance Test
- Horizontal Shock Test
- Vertical Shock Test
- Tensile Test for Guide Tubes
- Tensile Test for Control Cable Assembly
- Kinking Test for Guide Tubes
- Kinking Test for Control Cable Assembly
- Crushing and Bending Tests
- Final Tensile Test for Source Assemblies
- Final Projection Test
- Lock Breaking Test
- Wrench Test

A test data worksheet was produced for each test detailing the material and equipment used for the test, the test procedure, a list of any damage or operational malfunctions as a result of the test, and the test assessment. Each test data worksheet is located in Appendix A. Copies of the route cards used in the production of the test device and dummy source assembly are located in Appendix B. In addition, a shield efficiency profile was completed before and after all of the above tests. Copies of the shield profile inspection forms are contained within Appendix C.

Section 2 Test Specimen Construction and Acceptance

All radiography system components listed in the table below and used in this test plan were manufactured and accepted in accordance with the AEA Technology QSA, Inc. Quality Assurance Program.

Except for the tensile test, the test specimen was the Model 880, 150-Curie projector. The projector was manufactured to drawing B88000 Rev. A and is serialized D1000.

A Model 424-9 dummy source assembly was loaded into the test specimen for all tests.

The radiography system consisting of the components in the table below was used for the endurance test. The same Model 424-9 dummy source assembly used in the endurance test was used in the tensile test for the source assembly.

Table of Model 880 Radiography System Components

Part number	Part Name	Quantity
B88000 Rev. A	MODEL 880 150 Ci MAX ASSEMBLY	1
A42409XL Rev. A	MODEL 424-9 DUMMY SOURCE ASSEMBLY	1
BTAN69250 Rev. C	PISTOL GRIP CONTROL SYSTEM, 50 FOOT	1
B48930-7 Rev. A	SOURCE GUIDE TUBE ASSEMBLY, 7 FOOT	1
B48907-7 Rev. T	SOURCE GUIDE TUBE ASSEMBLY, 7 FOOT	4
B48906-7 Rev. Q	SOURCE GUIDE TUBE ASSEMBLY, 7 FOOT	1

Section 3 Test Objectives and Results

Initial Projection Test

The initial projection test is used to determine crank torque amounts before any other testing. A final projection test is done following all of the operational tests. ISO-3999:1-2000 standards state that the torque values cannot increase by more than 25% from the initial projection test to the final projection test. The setup for the test is the same as the setup for the endurance test.

The test resulted in an average torque of 41% of full motor torque (or 51 in-lbs).

Initial Tensile Test for Source Assembly

The tensile test demonstrates the source assembly maintains its integrity after experiencing tensile loads likely to occur during use.

The tensile tests resulted in an increase in the stop ball to connector measurement from 1.227 in. to 1.249 in. Inspection of the source assembly under a microscope revealed that the source wire stretched and unraveled slightly nearest the stop ball connector explains the increased measurement. However, a complete functional test with the test Model 880 projector showed that the source assembly was still completely functional. Therefore, the source assembly passed this test.

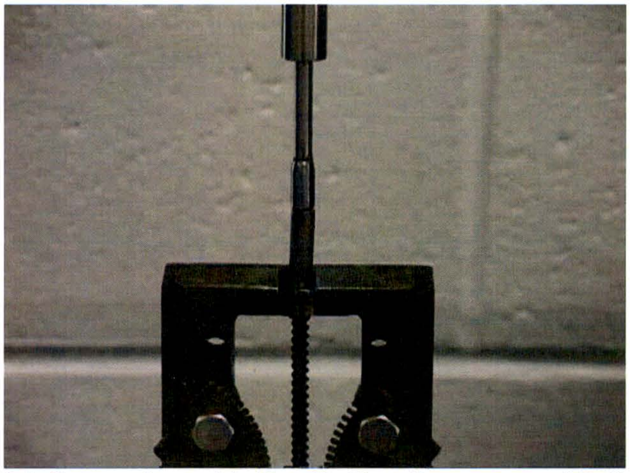

Figure 3.1 Source Assembly Tensile Test Connector and Ball Setup

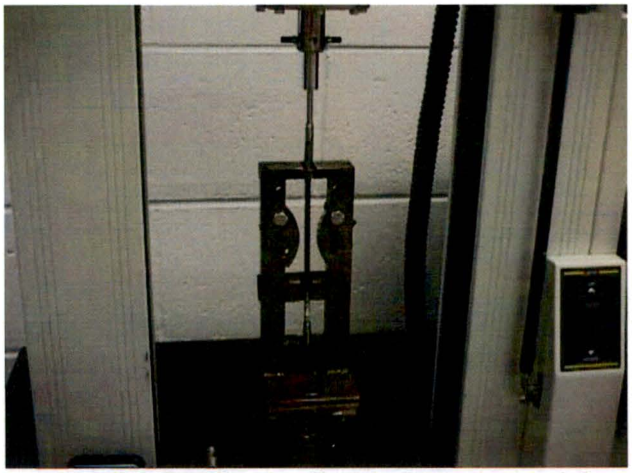

Figure 3.2 Source Assembly Tensile Test Connector and Capsule Setup

Endurance Test

The endurance test demonstrates that the gamma radiation system remains operational after 50,000 cycles of the source assembly moving from secure to working position and back while using the longest recommended guide tubes and controls. The exposure device and integral safety features shall remain operational after experiencing this test.

The device was put through 51,026 cycles at a speed of 3.28 ft/s. The highest operational torque observed was 41.4 % full load torque (or 51 in-lbs). There was no visible damage and there was only negligible wear to the device, drive cable, and guide tubes. One of the crank bearings was broken but the crank still turned freely. There were no functional or operational problems resulting from this test. Therefore, the device passed this endurance test.

Figure 3.3 Endurance Test Setup

Horizontal Shock Test

The horizontal shock test demonstrates the exposure device will withstand the horizontal impacts likely to occur during use. The exposure device and integral safety features shall remain operational after the test and the device shall experience no loss to shielding integrity.

The test was performed on three areas of the device: the lock cover area (Fig. 3.4), the lock mount area, and the front knob area (Fig. 3.5). The test was initially performed by measuring the 4 inch pendulum lift from the foot of the impact side of the device. This resulted in the center of gravity being lifted 4.5 inches which is more than the 4 inch lift required by ISO 3999-1:2000. The lock cover and lock mount areas became dented after the 4.5 inch center of gravity lift. However, the two areas did not lose any functionality.

The front knob area was tested twice using the 4.5 inch center of gravity lift. The impacts resulted in the front knob tightening enough to not be able to be pulled and turned by hand. Also, the front plate buckled inward slightly which prevented the fitting entering and turning the slider.

A new front plate assembly was installed and tested by lifting the center of gravity of the device only the required 4 inches. This test resulted only in minor dents to the front knob and very slight buckling of the front plate. The knob could be pulled and turned by hand and the fitting could enter and turn the slider proving that the device passes the minimum requirements of this test.

A further test was performed on the front knob by lifting the center of gravity of the device the 4 inches and allowing it to drop on the impact cylinder at an angle. This test was done to prove that the device could withstand an angled shock to the most fragile area of the device. The test produced only minor dents on the impact side of the front knob. The knob could be pulled and turned by hand and the fitting could enter and turn the slider.

After the tests, the device was put through a complete functional test that resulted in normal operation. Therefore, the device passed the horizontal shock test.

Figure 3.4 Horizontal Shock on Lock Cover

Figure 3.5 Horizontal Shock on Front Knob

Vertical Shock Test

The vertical shock test demonstrates the exposure device will withstand the vertical impacts likely to occur during use. The exposure device and integral safety features shall remain operational after the test and shall experience no loss of shielding integrity.

The test was performed on the device without the jacket in the normal carrying position. The device showed no visible damage after being dropped one hundred times from a height of 6 inches. The device functioned properly after having undergone a complete functional test. The device passed the vertical shock test.

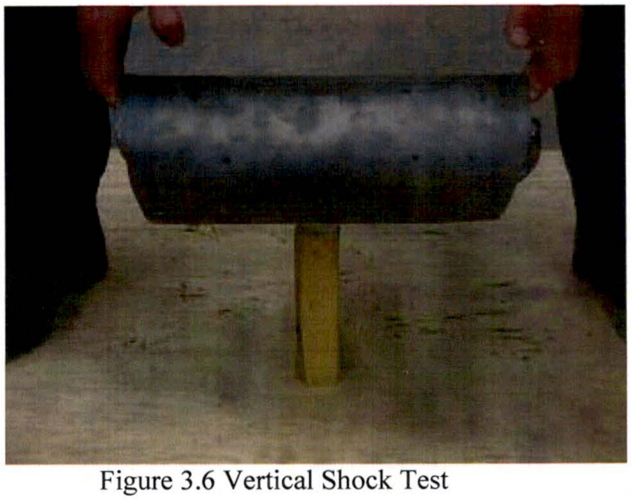

Figure 3.6 Vertical Shock Test

Tensile Test for Guide Tubes

The tensile test for guide tubes demonstrates that the guide tube housing maintains its integrity after experiencing tensile loads that may be encountered during regular use. The guide tube should remain operable after this test.

This test resulted in no apparent damage to the guide tube. The test dummy source assembly was not restricted while being passed through the guide tube during a functional test. Therefore, the guide tubes pass this test.

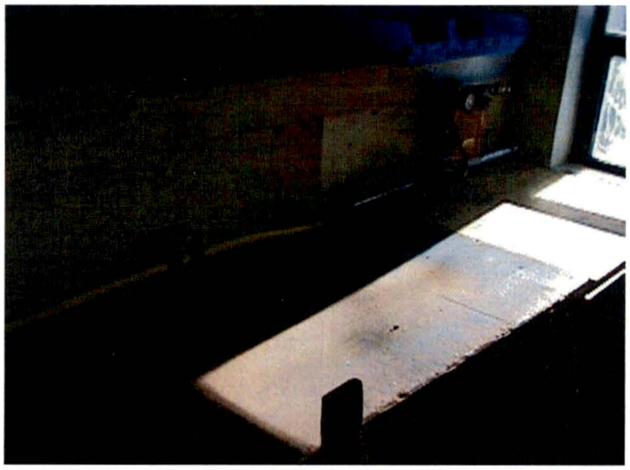

Figure 3.7 Tensile Test for Guide Tubes

Tensile Test for Control Cable Assembly

The tensile test for control cable assembly demonstrates that the control cable assembly maintains its integrity after experiencing tensile loads that may be encountered during regular use. The control cable assembly should remain operable after this test.

The test was conducted in two parts. The first part (Fig. 3.8 & 3.9) placed a tensile load on the control cable housing while connected to the device. The second part of the test (Fig. 3.10) placed a tensile load on the control cable itself while inside the control cable housing. This test resulted in no visible damage to the control cable assembly. The control cable was not restricted while being cranked through the control cable housing during a functional test. Therefore, the control cable assembly passes this test.

Figure 3.9 Tensile Test for Control Cable Housing

Figure 3.10 Tensile Test for Control Cable with Source Assembly

Kinking Test for Guide Tubes

The kinking test for the guide tube demonstrates that the guide tube withstands conditions that may be encountered during regular use. The guide tube should remain operational after experiencing this test.

The kinking test resulted in no visible damage to the guide tube. A complete functional test verified that the test dummy source assembly passed through the guide tube without any problems. Therefore, the guide tubes passed this test.

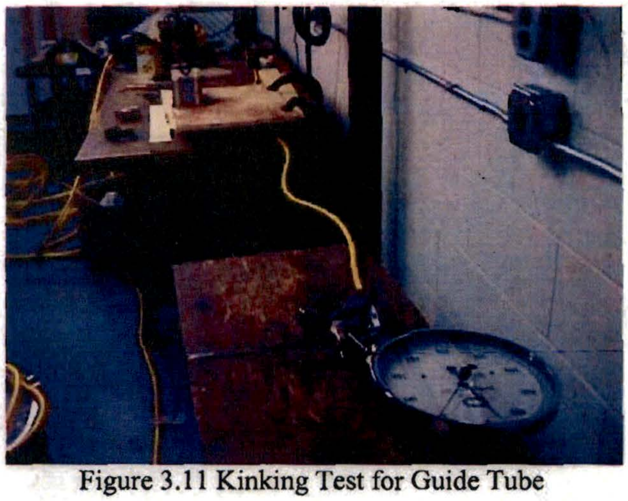

Figure 3.11 Kinking Test for Guide Tube

Kinking Test for Control Cable Assembly

The kinking test for the control cable assembly demonstrates that the control cable assembly can withstand kinking conditions that may occur during normal use. The control cable assembly should remain operational after performing this test.

After experiencing this test, the control cable assembly maintained its integrity without any apparent damage. A complete functional test was performed satisfactorily. The control cable assembly passed this kinking test.

Crushing and Bending Test

The crushing and bending demonstrates that the guide tubes and control cable assemblies can withstand a crushing test from a simulated heel (Fig. 3.12).

The control cable assembly showed some slight deformation from the impact of the simulated heel but the control cable had no problems passing through the control housings.

Three guide tubes were used in the crushing test. All of the guide tubes showed deformation from the heel impacts at each of the crushed points except for the connection point. The crushing test on the guide tube connection point resulted in no apparent damage. One of the ten crush points on each of the first two guide tubes tested resulted in enough deformation that the source assembly had trouble sliding through the area. Adding extra force to the hand crank allowed the source assembly to be forced through these tight areas. The test on the third guide tube did not require as much added force at the hand crank and the source assembly traveled through all ten crush points on the third guide tube much easier.

Although increased torque was required at the hand crank to push the source assembly through some of the crushed areas of the guide tubes, the source assembly was able to pass through all of the test samples during a functional test. Therefore, the guide tubes pass the crushing and bending test.

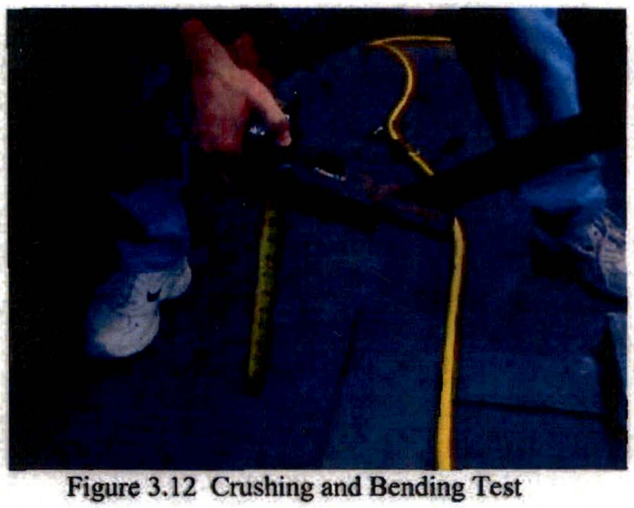

Figure 3.12 Crushing and Bending Test

Final Tensile Test

The final tensile test demonstrates the source assembly maintains its integrity after having undergone all of the other operational tests. The same dummy source assembly (Serial number TP115DEMO) that was used for this test is the same as used in all of the operational tests.

The tensile tests resulted in an increase in the stop ball to connector measurement from 1.240 in. to 1.250 in. A complete functional test with the test Model 880 projector showed that the source assembly was still completely functional. Therefore, the source assembly passed this test.

Final Projection Test

The final projection test demonstrates that the crank torque amount does not increase by more than 25% after the device and equipment have undergone all other operational tests. The setup that was used for this test is the same as the setup used for the initial projection test and the endurance test.

The test resulted in an average torque of 45% (or 56 in-lbs). The increase from the initial projection test was only approximately 10%. Therefore, the device passes the final projection test.

Lock Breaking Test

The lock breaking test demonstrates that the locking mechanism can withstand a breaking force while in the locked position with the key removed. The lock should remain operable after experiencing this test.

The locking mechanism had no visible damage after performance of the lock breaking test. The locking mechanism continued to be completely functional after this test. Therefore, the device passes the lock breaking test.

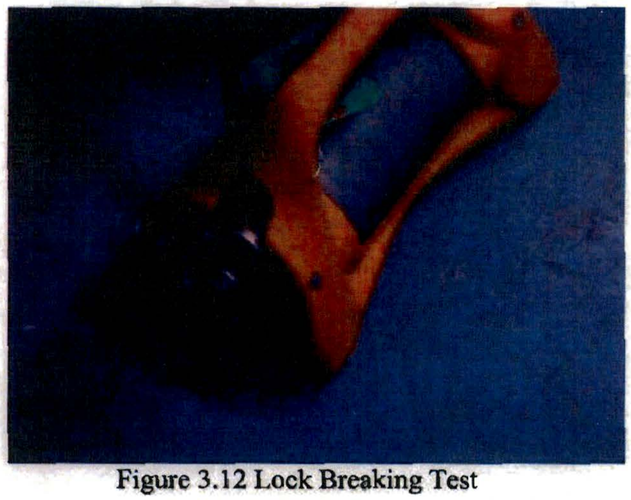

Figure 3.12 Lock Breaking Test

Wrench Test

The wrench test demonstrates that the handle of the exposure device is able to withstand a static force equal to at least 25 times the weight of the device (1250 lbs). This test was conducted on two different jackets with similar results. The first jacket contained metal wire wrapped around the device connected to a steel tube inside the handle for added support. The second device did not contain any added supports. Both handles lifted a load of 1288 lbs. with only slight bowing of the handle during the lift. The devices were inspected after the lift and showed no visible damage. Therefore, both handle options passed the wrench test.

Section 4 Conclusion

The Model 880 system consisting of the projector, control assembly, guide tubes and source assembly, satisfies the projection tests, the tensile tests for source assemblies, the endurance test, the horizontal shock test, the vertical shock test, the tensile and kinking tests for guide tubes and control cable assemblies, the crushing and bending tests, the lock breaking test, and the handle wrench test in accordance with ISO 3999-1:2000.

In addition to the tests performed under this test plan, ISO 3999-1:2000 also calls for a vibration resistance test and an accidental drop test.

A final shield profile was performed after the completion of all tests. There were only minor changes between the shield profile done previous to all the tests and the device remained within acceptable dose ranges. Both shield profile data sheets are located in Appendix C.

The vibration resistance test was evaluated and deemed unnecessary. The only parts that could come loose from vibration are the tamper proof screws. However, the tamper-proof screws are tightened to a prescribed torque to prevent unintentional release after repeated use or vibration. None of the tests performed resulted in a conditions that would increase chance that vibration could cause damage.

The accidental drop test was previously conducted under test plan 108 by dropping a Model 880 Projector from a height of 1.2 m (4 ft) three times to impact three different areas. There was no affect on the simulated source assembly from any of the impacts. Also, a shield profile did not show any increase in dose rate as a result of the impacts.

2.12.6 Test Plan Report 125 Rev B (Mar 2003)

TEST PLAN 125 (Rev. B) Report

MODEL 880
TYPE B CONTAINER
TRANSPORT CONDITIONS
With #88070 Foot Button Assembly
And #88022 Lock Mount Modification

AEA Technology QSA Inc.
40 North Avenue
Burlington
MA 01803

MARCH 2003

CONTENTS

Section 1. Purpose

The purpose of these tests were to assess the Model 880 transport container with the addition of the #88070 (F.C.B.A.) foot control button assembly. With the addition of this assembly and the modification of the #88022 lock mount, they will not adversely affect the packages ability as a "Type B" transport container.

Testing was performed on the 88070 F.C.B.A. to 10CFR71 regulations for 71.73(1) *free drop*, 71.73(3) *puncture*, and 71.71(10) *penetration*. These tests followed a random order except that the 71.73(3) puncture test was to follow the 71.73(1) free drop test if the specimen survived. Also, testing was performed according to ISO 3999-1 regulations for 6.4.6.1 *horizontal shock*. This horizontal shock test was relevant for both the 88070 F.C.B.A. and the 88022 lock mount assembly.

Section 2. Scope of Testing

Section 2.1 Normal Conditions of Transport and Accidental Drop

The tests for accidental drop described in ISO 3999-1, and normal conditions of transport in 10CFR71 are the tests. These tests will include a horizontal shock test, and penetration test.

Horizontal Shock Test

The 880 unit was oriented so the (1) F.C.B.A. and the (2) Lock Mount would impact the end-face of (T10333 SN01) 50 mm (2 in) diameter steel bar. The criteria is 300 mm (12 in) in length lying horizontally, that is fixed or welded to a rigid mass at least ten times the mass of the 880. The 880 was suspended from a fixed point so that, when at rest, the F.C.B.A. and Lock Mount just touches the target. The 880 was moved from its resting position until its center of gravity is 100 mm (4 in) higher than in the resting position and let loose, so that it swung in a pendulum movement against the target. This was carried out for a total of twenty (20) times.

Penetration Test

The 880 unit was oriented so as the foot control button assembly would be facing upward while the jacket will be supported on an unyielding surface. The hemispherical end of a vertical steel cylinder (AEA Technology QSA Drawing #BT10129) of 3.2 cm (1.25 in) diameter and 6 kg (13 lbs.) mass dropped from a height of 1 m (40 in) onto the surface of the F.C.B.A.

Section 2.2 Hypothetical Accident Conditions

The Hypothetical Accident Tests described in 10CFR71 are the 9m (30-foot) drop, the 1m (~3-foot) puncture drop.

9m (30-foot) Free Drop Test

The 880 radiographic unit was oriented so that the F.C.B.A. would be facing downward toward the test pad (T10261 SN01) for the 9m (30 ft.) drop test. This exposed the assembled unit so the F.C.B.A. received an impact similar to a slap down effect. One test was performed. It is described in the following sections.

Puncture Test

According to the Purpose (Section 1.0 paragraph 4) section of the test plan, an evaluation would be made before this test was to be performed. Normally, the 880 unit would be oriented in a similar angled fashion as above for the 1m (40 in.) drop test. The unit would be dropped onto a test billet (T10119 SN01) so as the F.C.B.A. sustains the full initial impact. This test was not performed. Reasons are described in the following sections.

Section 3. Test Unit Descriptions

Section 3.1 Test Unit 1 – Serial Number 01

The construction of this package is in accordance with the following AEA TECHNOLOGY QSA INC. documentation:

Assembly	Bill of Materials	Assembly Drawing
880 Delta Simulator Drawings	88017XLS TP125A Rev 1	B88017XLS Rev A BTP125A Rev 1
Foot Button Assy	BM 88070 Rev C	A88070 Rev B
Foot Control Shaft	N/A	A88070-4 Rev 3
Rear Plate Assy	BM 88020 Rev 5	B88020 Rev 5

The unit started construction to an earlier revision and Test Plan (See Appendix C Manufacturing Support Documentation). Changes to the unit during construction were recorded as mark-ups on the production prints and subsequently transferred to the above revisions.

As indicated above, the test unit was assembled with a modified rear plate assembly that includes changes to the *lock mount assembly*. Also, the *foot control button assembly* was modified with a G-10 shaft (Rev. 3) and installed onto the jacket for the testing. The test unit weighed approximately 49 pounds.

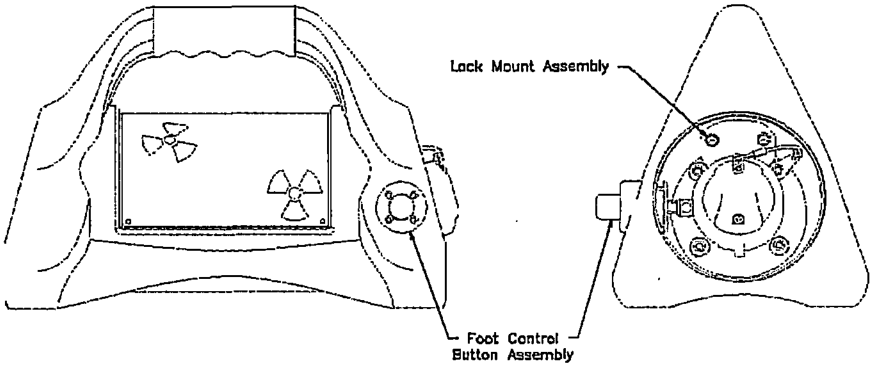

FIGURE 1. MODEL 880 (Test Unit #21) WITH FOOT BUTTON AND LOCK MOUNT ASSEMBLIES

Section 4. Changes to Test Conditions or Orientations

Section 4.1 Normal Conditions of Transport and Accidental Drop

No changes from plan were performed.

Section 4.2 Hypothetical Accident Conditions of Transport

No changes from plan were performed.

Section 5. Test Specimen Results

Section 5.1 Horizontal Shock Test – Foot Button Assembly

The test unit was set up on a portable crane type apparatus. Lead blocks were stacked around the base of the unit to keep it stationary and in position. The test unit was suspended (see figure 1) from the crane by means of its steel cable and a cloth rope around the test unit's handle. The 50mm 2 in diameter bar (T10333 SN01) was bolted to a Model 770 that weighted approx. 950 lbs.

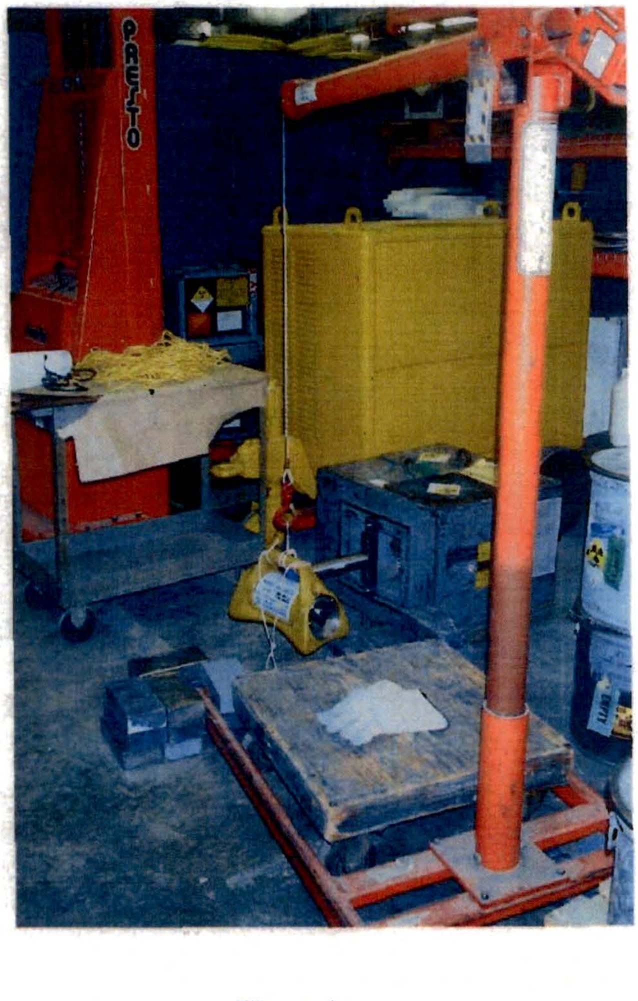

Figure 1

The test was then performed according to ISO 3999-1 regulations for 6.4.6.1 horizontal shock (see figure 2) test.

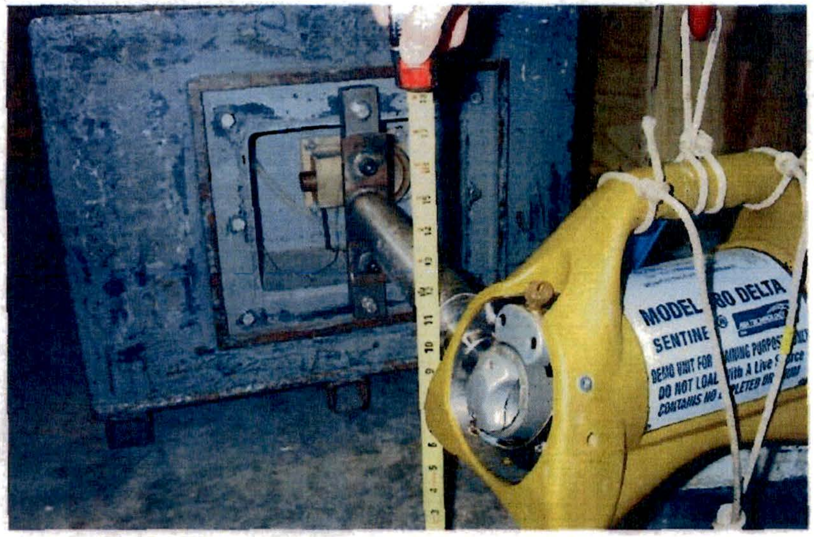

Figure 2

The unit was swung from the apparatus for a total of 20 times. The G-10 Shaft inside the F.C.B.A. broke, this was the piece that was expected to break. (see figure 3) The selector ring was not compromised. The unit passed the test.

Figure 3

Section 5.2 Horizontal Shock Test – Lock Mount Assembly

The test unit was set up on the portable crane type apparatus as on the F.C.B.A. The same testing was performed. See figure 4.

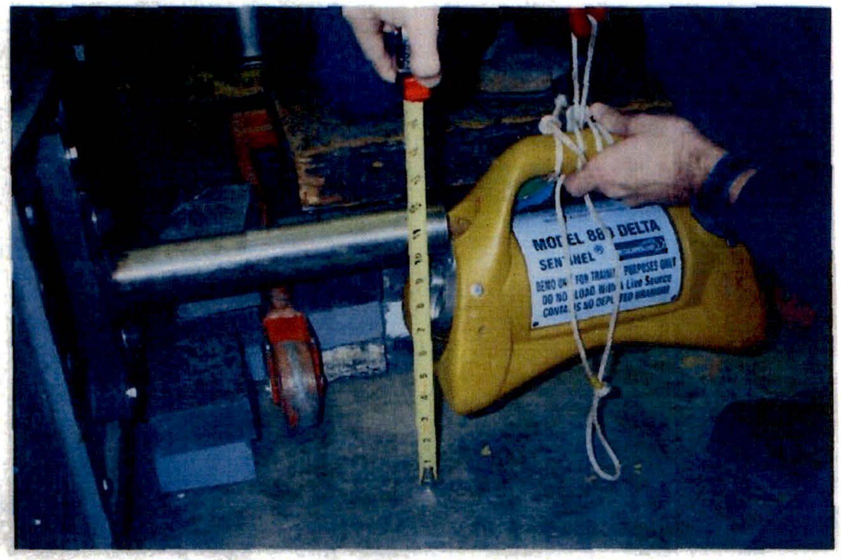

Figure 4

The unit was swung from the apparatus for a total of 20 times. The Lock Mount Assembly sustained minimal damage. Moreover, the corbin lock actuated smoothly and effortlessly. (See figure 5) The unit passed the test.

Figure 5

Section 5.3 Penetration Shock Test – Foot Button Assembly

The test unit was set up so the F.C.B.A. was facing upward. An aluminum angle was used to guide the test bar directly to the center of the F.C.B.A. (as shown in Figure 6).

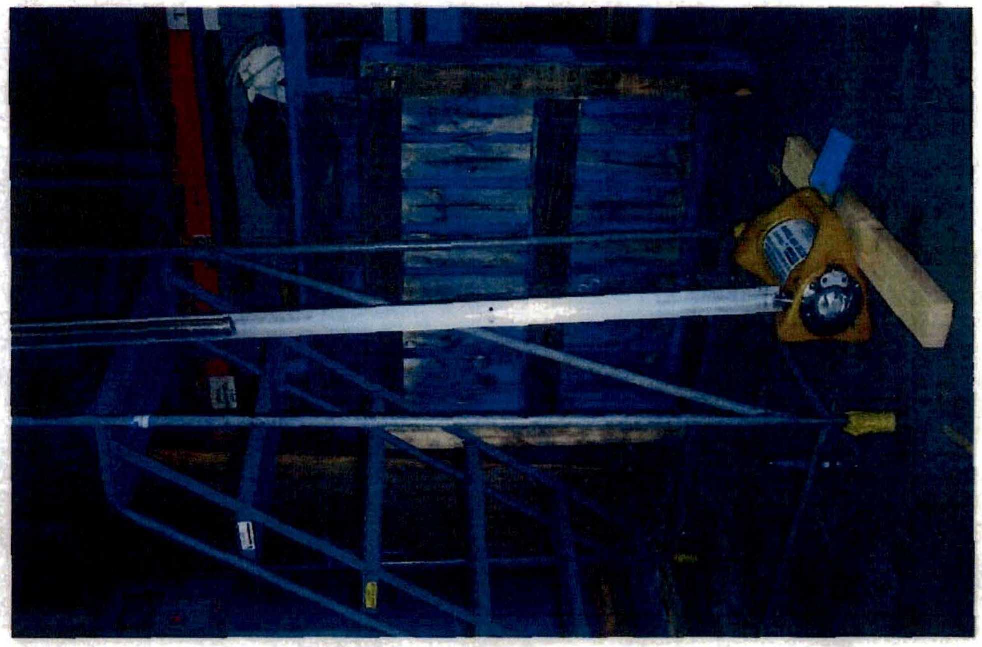

Figure 6 (rotated 90 degrees)

Upon dropping the bar, the G-10 Shaft broke. The button assembly needed to be disassembled to activate the selector ring and lock slide on the test unit. The test unit worked fine and passed the test.

Figure 7

Section 5.4 9.m (30 ft.) Free Drop Test – Foot Button Assembly

The test unit was set up so that the F.C.B.A. was facing downward according to test plan instructions. The unit was dropped to induce the most rapid and damaging deceleration, which in this case had a slap down effect. See Test Plan 125B section 8.0 for setup orientation, and below (figure 8) for more information.

Figure 8

When the test unit was dropped, the unit fell as anticipated in the test plan. The polyurethane jacket and stainless steel canister deflected inward from the impact. The F.C.B.A. dented the side of the #88021 rear plate and the G-10 shaft contained within the button assembly shattered upon impact. Unfortunately due to the severe deflection of the components, the back of the F.C.B.A. hit the lock slide forcing it through the selector ring. The unit failed the test. See figure 9 and 10 for visual results. All testing was stopped at this time. Moreover, the Puncture Test was not performed.

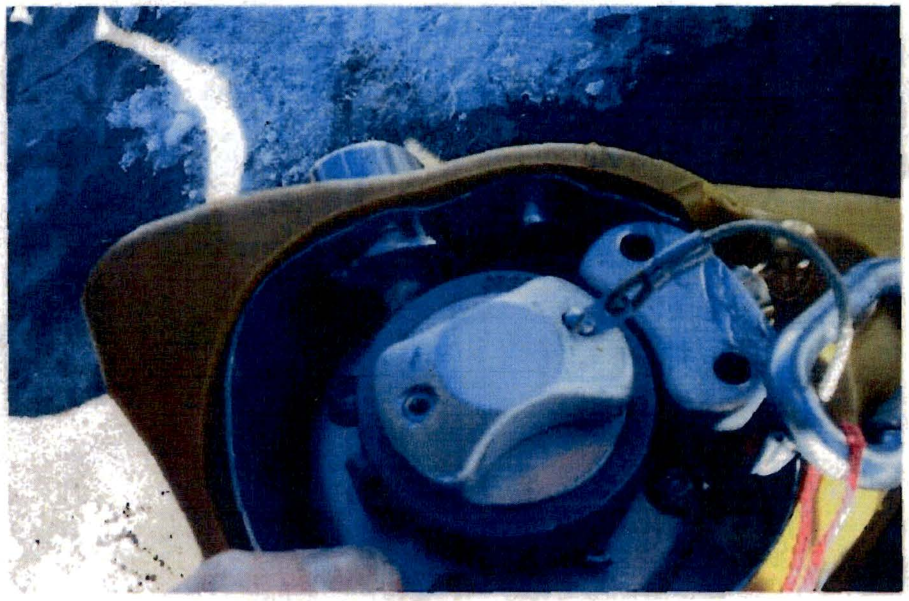

Figure 9

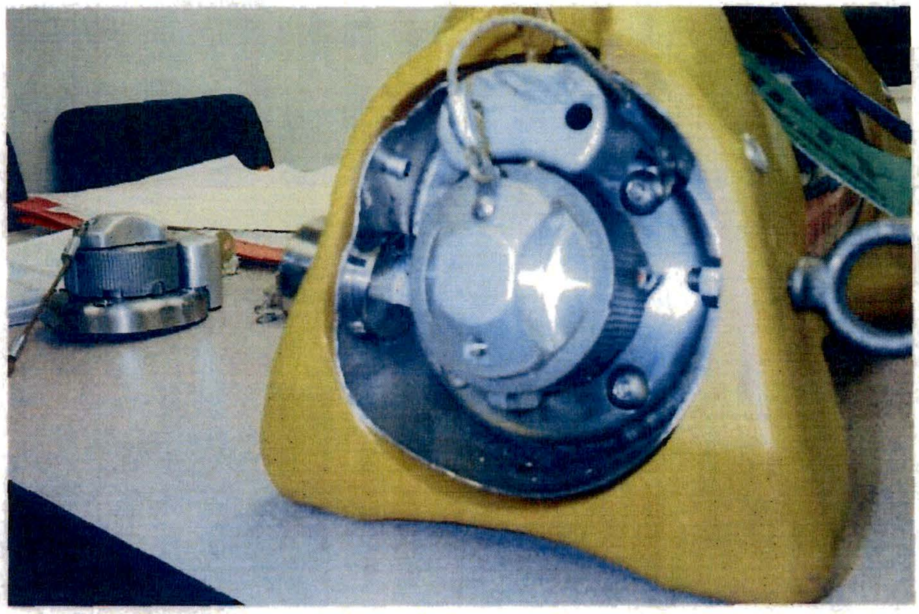

Figure 10

Section 6. Analysis, Summary, and Conclusions

Section 6.1 Analysis of testing not performed

Thermal Analysis
Because of the detailed assessment contained in TP108 a full weight "lead" dummy unit was used for this testing. Also, the melting temperature for all other materials of the internal support structure, rear plate assembly and source assembly is above the thermal test temperature of 800°C.

Moreover, the load condition for the thermal test is for the internal structure to support the static weight of the shield in suspension. The dynamic impact nature of the drop tests can subject the structure to a force over 100 times the static weight of the shield. This means the strength of the materials used in the structure would need to decrease by two orders of magnitude or to about 1% of their strength at room temperature. The 30-minute thermal test is not long enough for significant creep deformation to occur in the structure.

Puncture Test Analysis
This testing was performed on TP108. The testing passed when no damage occurred to the units. Therefore, testing was not performed on the Lock Mount Assembly. Also, the Lock Mount sits below the surface (with or without the jacket) of the radiographic camera and therefore would not be compromised. Moreover, the Lock Cover that is attached to the Rear Plate Assembly aids in the protection of the Lock Mount Assembly.

Vertical Shock Test Analysis
The vertical shock testing that was performed on TP115 for the model 880 unit showed no damage. The device functioned properly after having undergone a complete functional test. Therefore, vertical shock testing was not performed on this test unit.

Section 6.2 Summary and Conclusion

The Lock Mount Assembly with its addition of a stainless steel sleeve performed very well. The Lock Mount was also environmentally tested (see Technical Report #40) and performed superior. The design of the lock mount can be modified easily by enlarging its corbin lock retaining hole to accept the stainless sleeve. Moreover, the sleeve will be secured in place from the back with a 8-32 stainless set screw and a removable thread lock material.

The F.C.B.A. button assembly did pass the Horizontal Shock, and Penetration Test, but failed at the 9m (30ft.) Drop test. The G-10 fiberglass shaft reacted as designed, which shattered upon impact. As stated in the section 5.4, because of the severe force that was distributed through the F.C.B.A. stainless steel housing the lock slide was forced through the side of the selector ring.

From the test data, and the analysis contained within this report, we draw the following conclusions about the Model 880 (as tested):

1. The lock mount and F.C.B.A. can withstand the *Normal Conditions of Transport* and *Accidental Drop Test* situations.
2. The lock mount can withstand the *Hypothetical Conditions of Transport.*

Section 7. APPENDIX A – DRAWINGS

REVISIONS				
REV.	ECO/TGR #	DESCRIPTION	APPROVALS	DATE
A	2731	INITIAL RELEASE	SEE TITLE	BLOCK

Security-Related Information
Figure Withheld Under 10 CFR 2.390.

THIS DRAWING IS THE EXCLUSIVE PROPERTY OF AEA TECHNOLOGY QSA. IT MAY ONLY BE USED FOR THE PURPOSE FOR WHICH IT WAS ISSUED. IT MAY NOT BE DUPLICATED IN ANY WAY, NOR TRANSMITTED TO ANY THIRD PARTY WITHOUT THE EXPRESS PERMISSION OF AEA TECHNOLOGY QSA.

MATERIALS: SEE PARTS LIST

PROTECTIVE FINISH: NONE

UNLESS OTHERWISE SPECIFIED:
1. DIMENSIONS ARE IN INCHES.
2. MIN SURFACE TEXTURE: 125
3. TOLERANCES APPLY AFTER PLATING.
4. REMOVE BURRS AND SHARP EDGES.
5. DO NOT SCALE DRAWING.
6. TOLERANCES:
FRACTIONS ± 1/64 .X ± 0.1
MACHINED ANGLES ± 1° .XX ± 0.01
.XXX ± 0.005

USED ON:

DRAWN		8 Sep 00
CHECKED		11 SEP 00
APPR.		11 SEP 00

THIRD ANGLE PROJECTION

SAFETY CLASS C

AEA TECHNOLOGY
QSA
40 NORTH AVE, BURLINGTON, MA 01803

TITLE: MODEL 880 DELTA SIMULATOR ASSEMBLY

SIZE B
DWG. NO. 88017XLS
REV A
SCALE: NONE
SHEET 1 OF 1

REVISIONS

REV.	ECO/TCR #	DESCRIPTION	APPROVALS	DATE
1		PROTOTYPE	SEE TITLE	BLOCK

Security-Related Information Figure Withheld Under 10 CFR 2.390.

MATERIALS: SEE PARTS LIST

PROTECTIVE FINISH: NONE

UNLESS OTHERWISE SPECIFIED:
1. DIMENSIONS ARE IN INCHES.
2. MIN SURFACE TEXTURE: 125
3. TOLERANCES APPLY AFTER PLATING.
4. REMOVE BURRS AND SHARP EDGES.
5. DO NOT SCALE DRAWING.
6. TOLERANCES:
   FRACTIONS ± 1/64
   MACHINED ANGLES ± 1°
   .X ± 0.1
   .XX ± 0.01
   .XXX ± 0.005

USED ON:

DRAWN

CHECKED

APPR.

THIRD ANGLE PROJECTION

SAFETY CLASS A

AEA TECHNOLOGY
QSA
40 NORTH AVE, BURLINGTON, MA 01803

TITLE: MODEL 880 DELTA SIMULATOR ASSEMBLY

SIZE B

DWG. NO. TP125A

REV 1

SCALE: NONE

SHEET 1 OF 1

REVISIONS				
REV.	ECO/TGR #	DESCRIPTION	APPROVALS	DATE
A	2731	INITIAL RELEASE	SEE TITLE	BLOCK
B	163	ADDED WELDING SYMBOL AND TOLERANCES	PAG/[illegible]	14 DEC 01

Security-Related Information
Figure Withheld Under 10 CFR 2.390.

THIS DRAWING IS THE EXCLUSIVE PROPERTY OF AEA TECHNOLOGY QSA. IT MAY ONLY BE USED FOR THE PURPOSE FOR WHICH IT WAS ISSUED. IT MAY NOT BE DUPLICATED IN ANY WAY, NOR TRANSMITTED TO ANY THIRD PARTY WITHOUT THE EXPRESS PERMISSION OF AEA TECHNOLOGY QSA.

MATERIALS: SEE PARTS LIST
PROTECTIVE FINISH: NONE

AEA TECHNOLOGY QSA
40 NORTH AVE, BURLINGTON, MA 01803

UNLESS OTHERWISE SPECIFIED;
1. DIMENSIONS ARE IN INCHES.
2. MIN SURFACE TEXTURE: 125
3. TOLERANCES APPLY AFTER PLATING.
4. REMOVE BURRS AND SHARP EDGES.
5. DO NOT SCALE DRAWING.
6. TOLERANCES: .X ± 0.1
FRACTIONS ± 1/64 .XX ± 0.01
MACHINED ANGLES ± 1° .XXX ± 0.005

USED ON: 880

DRAWN	S.GRENIER	11SEP00
CHECKED	M.TREMBLAY	11SEP00
APPR.	M.TREMBLAY	11SEP00

THIRD ANGLE PROJECTION

SAFETY CLASS C

TITLE: BODY WELDMENT DELTA SIMULATOR

SIZE B
DWG. NO. 88011XLS
REV B
SCALE: 1/2
SHEET 1 OF 1.

REVISIONS				
REV.	ERF #	DESCRIPTION	APPROVALS	DATE
5		ADDED ITEMS 17 AND 18	SEE TITLE	BLOCK

PROTOTYPE
PROCESS IN ACCORDANCE WITH
ENGINEERING INSTRUCTIONS ⑥
ENG DATE 09JAN03

Security-Related Information Figure Withheld Under 10 CFR 2.390.

THIS DRAWING IS THE EXCLUSIVE PROPERTY OF AEA TECHNOLOGY QSA. IT MAY ONLY BE USED FOR THE PURPOSE FOR WHICH IT WAS ISSUED. IT MAY NOT BE DUPLICATED IN ANY WAY, NOR TRANSMITTED TO ANY THIRD PARTY WITHOUT THE EXPRESS PERMISSION OF AEA TECHNOLOGY QSA.

MATERIALS: SEE PARTS LIST
PROTECTIVE FINISH: NONE

UNLESS OTHERWISE SPECIFIED;
1. DIMENSIONS ARE IN INCHES.
2. MIN SURFACE TEXTURE: 63✓
3. DIMENSIONS APPLY AFTER FINISH.
4. REMOVE BURRS AND SHARP EDGES.
5. DO NOT SCALE DRAWING.
6. TOLERANCES: .X ± 0.1
FRACTIONS ± 1/64 .XX ± 0.01
ANGLES ± 1° .XXX ± 0.005

880

DRAWN	S.GRENIER	20JUL00
CHECKED	M.TREMBLAY	20JUL00
APPR.	M.TREMBLAY	20JUL00

THIRD ANGLE PROJECTION

QUALITY CLASS A

AEA TECHNOLOGY
QSA
40 NORTH AVE, BURLINGTON, MA 01803

TITLE: REAR PLATE ASSEMBLY

SIZE B
DWG. NO. 88020
REV 5
SCALE: 1/2
SHEET 1 OF 1

REVISIONS				
REV.	ERF #	DESCRIPTION	APPROVALS	DATE
3	N/A	PROTOTYPE RELEASE	SEE TITLE	BLOCK

PROTOTYPE

PROCESS IN ACCORDANCE WITH ENGINEERING INSTRUCTIONS

ENG Buttrick DATE 07OCT02

Security-Related Information Figure Withheld Under 10 CFR 2.390.

MATERIALS: 300 SERIES STAINLESS STEEL

PROTECTIVE FINISH: NONE

UNLESS OTHERWISE SPECIFIED;
1. DIMENSIONS ARE IN INCHES.
2. MIN SURFACE TEXTURE: 63
3. DIMENSIONS APPLY AFTER FINISH.
4. REMOVE BURRS AND SHARP EDGES.
5. DO NOT SCALE DRAWING.
6. TOLERANCES:
FRACTIONS ± 1/64
ANGLES ± 1°
.X ± 0.1
.XX ± 0.01
.XXX ± 0.005

DRAWN
CHECKED NA
APPR.

THIRD ANGLE PROJECTION

QUALITY CLASS B

AEA TECHNOLOGY QSA
40 NORTH AVE, BURLINGTON, MA 01803

TITLE: LOCK MOUNT S.S. INSERT

SIZE B
DWG. NO. 88022-1
REV 3

SCALE: 1:1
SHEET 1 OF 1

PROTOT

PROCESS IN ACCORDANCE WITH ENGINEERING INSTRUCTIONS

ENG Buttrick DATE 07OCT02

TIVE FINISH: CLEAR ANODIZE PER
25, .[illegible] THICK, COLOR: CLEAR.

SIONS APPLY AFTER PLATING.

DOES NOT APPLY T

REVISIONS				
REV.	ECO/TGR #	DESCRIPTION	APPROVALS	DATE
A	2701	INITIAL RELEASE	SEE TITLE	BLOCK
B	2812	CHANGE PLATING NOTES, ADDED CHAMFERS		
6		HOLE WAS .858, NOW .880 +.000/-.003		
7		ADDED 8-32 THREADED HOLE		

Security-Related Information
Figure Withheld Under 10 CFR 2.390.

THIS DRAWING IS THE EXCLUSIVE PROPERTY OF AEA TECHNOLOGY QSA. IT MAY ONLY BE USED FOR THE PURPOSE FOR WHICH IT WAS ISSUED. IT MAY NOT BE DUPLICATED IN ANY WAY, NOR TRANSMITTED TO ANY THIRD PARTY WITHOUT THE EXPRESS PERMISSION OF AEA TECHNOLOGY QSA.

MATERIALS: 6061-T6 ALUMINUM

PROTECTIVE FINISH: SEE NOTES

UNLESS OTHERWISE SPECIFIED;
1. DIMENSIONS ARE IN INCHES.
2. MIN SURFACE TEXTURE: 63✓
3. DIMENSIONS APPLY AFTER FINISH.
4. REMOVE BURRS AND SHARP EDGES.
5. DO NOT SCALE DRAWING.
6. TOLERANCES: .X ± 0.1
FRACTIONS ± 1/64 .XX ± 0.01
ANGLES ± 1° .XXX ± 0.005

DRAWN	S.GRENIER	15JUN00
CHECKED	M.TREMBLAY	15JUN00
APPR.	M.TREMBLAY	15JUN00

THIRD ANGLE PROJECTION

SAFETY CLASS C

AEA TECHNOLOGY QSA
40 NORTH AVE, BURLINGTON, MA 01803

TITLE: LOCK MOUNT

SIZE B DWG. NO. 88022 REV 7

SCALE: 1:1 SHEET 1 OF 1

610
663
1.47

REVISIONS

V.	ECO/TGR #	DESCRIPTION	APPROVALS	DATE
		PROTOTYPE RELEASE	SEE TITLE	BLOCK

Security-Related Information
Figure Withheld Under 10 CFR 2.390.

S DRAWING IS THE EXCLUSIVE PROPERTY OF AEA TECHNOLOGY QSA. IT MAY ONLY BE USED FOR THE PURPOSE FOR WHICH IT WAS ISSUED.
MAY NOT BE DUPLICATED IN ANY WAY, NOR TRANSMITTED TO ANY THIRD PARTY WITHOUT THE EXPRESS PERMISSION OF AEA TECHNOLOGY QSA.

TERIALS: SPECIFICATION #3

ROTECTIVE FINISH: NONE

NLESS OTHERWISE SPECIFIED;
DIMENSIONS ARE IN INCHES.
MIN SURFACE TEXTURE: 125
TOLERANCES APPLY AFTER PLATING.
REMOVE BURRS AND SHARP EDGES.
DO NOT SCALE DRAWING.
TOLERANCES: .X ± 0.1
FRACTIONS ± 1/64 .XX ± 0.01

USED ON: 880

DRAWN		
CHECKED		
APPR.		

SAFETY CLASS

AEA TECHNOLOGY
QSA
40 NORTH AVE, BURLINGTON, MA 01803

TITLE: 8-32 X 3/16 LONG
DOG PT. SET SCREW

SIZE A

DWG. NO. SCR225

REV 1

AEA TECHNOLOGY
QSA

FORM E001 rev A

Bill Of Materials

Part No.: 88070

Title: FOOT CONTROL BUTTON ASSY.

Rev: C

Page 1 of 1

Rev	ERF	Date	Ckd.	Appvd.	Rev	ECO	Date	Ckd.	Appvd.	Rev	ECO	Date	Ckd.	Appvd.
A	2871	6APR01	PAB	MT										
B	15	25Jun01	RLM	PAB										
C	27	11JUL01	PAB											

Item	Qty	P/N	Description
1	0	A88070	FOOT CONTROL BUTTON ASSEMBLY
2	1	B88070-1	FOOT CONTROL SLEEVE
3	1	B88070-2	FOOT CONTROL END
4	1	A88070-3	FOOT CONTROL KNOB
5	1	B88070-4	FOOT CONTROL SHAFT
6	1	B88070-5	FOOT CONTROL CORE
7	4	SCR210	#6-32 SOCKET HEAD CAP SCREW 3/8" LONG
8	1	SPR040	SPRING, 3/8" LONG X .48" O.D. (61 lbs./in.)
9	1	SPR041	SPRING, 3/4" LONG X .48" O.D. (19 lbs./in.)
10	1	BAG003	7" x 9" zip lock bag
11	1	INST 02	Instruction Sheet - Foot Control Button
12	1	TOL009	7/64 Hex Key

REVISIONS				
EV.	ERF #	DESCRIPTION	APPROVALS	DATE
3	27	CHANGED SPRINGS/ ADDED BALLOONS	RAB /	11JUL01

07-FEB-03
9:45 AM
RAB

Security-Related Information
Figure Withheld Under 10 CFR 2.390.

IS DRAWING IS THE EXCLUSIVE PROPERTY OF AEA TECHNOLOGY QSA. IT MAY ONLY BE USED FOR THE PURPOSE FOR WHICH IT WAS ISSUED. MAY NOT BE DUPLICATED IN ANY WAY, NOR TRANSMITTED TO ANY THIRD PARTY WITHOUT THE EXPRESS PERMISSION OF AEA TECHNOLOGY QSA.

ATERIALS: AISI TYPE 304 STAINLESS STEEL

ROTECTIVE FINISH: NONE

INLESS OTHERWISE SPECIFIED;
DIMENSIONS ARE IN INCHES.
MIN SURFACE TEXTURE: 63
DIMENSIONS APPLY AFTER FINISH.
REMOVE BURRS AND SHARP EDGES.
DO NOT SCALE DRAWING.
TOLERANCES: .X ± 0.1
FRACTIONS ± 1/64 .XX ± 0.01
ANGLES ± 1° .XXX ± 0.005

DRAWN	P.BUTTRICK	10APR01
CHECKED	M.TREMBLAY	10APR01
APPR.	M.TREMBLAY	10APR01

THIRD ANGLE PROJECTION

SAFETY CLASS B

AEA TECHNOLOGY QSA
40 NORTH AVE, BURLINGTON, MA 01803

TITLE: FOOT CONTROL BUTTON ASSEMBLY

SIZE A DWG. NO. 88070 REV B

SCALE: 1:1 SHEET 1 OF 1

REVISIONS				
REV.	ECO/TGR #	DESCRIPTION	APPROVALS	DATE
A	2871	INITIAL RELEASE	SEE TITLE	BLOCK
B	2877	CHG. R.025 TO R.125, ADDED R.062	P.A.B./M.T	20APR01
C	2887	WAS 10-32 THREAD, NOW 6-32	PAB/MLT	15MAY01

Security-Related Information Figure Withheld Under 10 CFR 2.390.

THIS DRAWING IS THE EXCLUSIVE PROPERTY OF AEA TECHNOLOGY QSA. IT MAY ONLY BE USED FOR THE PURPOSE FOR WHICH IT WAS ISSUED. IT MAY NOT BE DUPLICATED IN ANY WAY, NOR TRANSMITTED TO ANY THIRD PARTY WITHOUT THE EXPRESS PERMISSION OF AEA TECHNOLOGY QSA.

MATERIALS: AISI TYPE 304 STAINLESS STEEL

PROTECTIVE FINISH: PASSIVATE PER MILS-5002C

AEA TECHNOLOGY QSA
40 NORTH AVE, BURLINGTON, MA 01803

UNLESS OTHERWISE SPECIFIED:
1. DIMENSIONS ARE IN INCHES.
2. MIN SURFACE TEXTURE: 63
3. DIMENSIONS APPLY AFTER FINISH.
4. REMOVE BURRS AND SHARP EDGES.
5. DO NOT SCALE DRAWING.
6. TOLERANCES:
   - FRACTIONS ± 1/64
   - ANGLES ± 1°
   - .X ± 0.1
   - .XX ± 0.01
   - .XXX ± 0.005

DRAWN	P.BUTTRICK	10APR01
CHECKED	M.TREMBLAY	10APR01
APPR.	M.TREMBLAY	10APR01

THIRD ANGLE PROJECTION

SAFETY CLASS B

TITLE: FOOT CONTROL CORE

SIZE B

DWG. NO. 88070-5

REV C

SCALE: 1:1

SHEET 1 OF 1

REVISIONS

REV.	ECO/TGR #	DESCRIPTION	APPROVALS	DATE
A	2871	INITIAL RELEASE	SEE TITLE	BLOCK
B	2877	ADDED CENTER MARK NOTE	PAB/M.T.	20APR01
C	2892	WAS .500,NOW .437 & WAS 1.38,NOW 1.500	PAB/	24MAY01

Security-Related Information Figure Withheld Under 10 CFR 2.390.

THIS DRAWING IS THE EXCLUSIVE PROPERTY OF AEA TECHNOLOGY QSA. IT MAY ONLY BE USED FOR THE PURPOSE FOR WHICH IT WAS ISSUED. IT MAY NOT BE DUPLICATED IN ANY WAY, NOR TRANSMITTED TO ANY THIRD PARTY WITHOUT THE EXPRESS PERMISSION OF AEA TECHNOLOGY QSA.

MATERIALS: AISI TYPE 304 STAINLESS STEEL

PROTECTIVE FINISH: PASSIVATE PER MILS-5002C

UNLESS OTHERWISE SPECIFIED;
1. DIMENSIONS ARE IN INCHES.
2. MIN SURFACE TEXTURE: 63✓
3. DIMENSIONS APPLY AFTER FINISH.
4. REMOVE BURRS AND SHARP EDGES.
5. DO NOT SCALE DRAWING.
6. TOLERANCES:
   FRACTIONS ± 1/64 .X ± 0.1
   ANGLES ± 1° .XX ± 0.01
   .XXX ± 0.005

DRAWN	P.BUTTRICK	10APR01
CHECKED	M.TREMBLAY	10APR01
APPR.	M.TREMBLAY	10APR01

THIRD ANGLE PROJECTION

SAFETY CLASS B

40 NORTH AVE, BURLINGTON, MA 01803

TITLE: FOOT CONTROL SHAFT

SIZE	DWG. NO.	REV
B	88070-4	C

SCALE: 1:1

SHEET 1 OF 1

REVISIONS				
REV.	ECO/TGR #	DESCRIPTION	APPROVALS	DATE
A	2871	INITIAL RELEASE	SEE TITLE	BLOCK
B	2885	PICTORIAL DRAWING CHANGE	PAB/MT	8MAY01
C	5	CHANGED TOERANCES	PAB/RLM	26JUN01

Security-Related Information Figure Withheld Under 10 CFR 2.390.

THIS DRAWING IS THE EXCLUSIVE PROPERTY OF AEA TECHNOLOGY QSA. IT MAY ONLY BE USED FOR THE PURPOSE FOR WHICH IT WAS ISSUED. IT MAY NOT BE DUPLICATED IN ANY WAY, NOR TRANSMITTED TO ANY THIRD PARTY WITHOUT THE EXPRESS PERMISSION OF AEA TECHNOLOGY QSA.

MATERIALS: AISI TYPE 304 STAINLESS STEEL

PROTECTIVE FINISH: PASSIVATE PER MILS-5002C

AEA TECHNOLOGY QSA
40 NORTH AVE, BURLINGTON, MA 01803

UNLESS OTHERWISE SPECIFIED:
1. DIMENSIONS ARE IN INCHES.
2. MIN SURFACE TEXTURE: 63✓
3. DIMENSIONS APPLY AFTER FINISH.
4. REMOVE BURRS AND SHARP EDGES.
5. DO NOT SCALE DRAWING.
6. TOLERANCES:
   FRACTIONS ± 1/64 .X ± 0.1
   ANGLES ± 1° .XX ± 0.01
   .XXX ± 0.005

DRAWN	P.BUTTRICK	10APR01
CHECKED	M.TREMBLAY	10APR01
APPR.	M.TREMBLAY	10APR01

THIRD ANGLE PROJECTION

SAFETY CLASS B

TITLE: FOOT CONTROL END

SIZE B | DWG. NO. 88070-2 | REV C

SCALE: 1:1 | SHEET 1 OF 1

REVISIONS				
REV.	ECO/TGR #	DESCRIPTION	APPROVALS	DATE
A	2871	INITIAL RELEASE	SEE TITLE	BLOCK

Security-Related Information
Figure Withheld Under 10 CFR 2.390.

MATERIALS: AISI TYPE 304 STAINLESS STEEL

PROTECTIVE FINISH: PASSIVATE PER MILS-5002C

AEA TECHNOLOGY
QSA
40 NORTH AVE, BURLINGTON, MA 01803

UNLESS OTHERWISE SPECIFIED:
1. DIMENSIONS ARE IN INCHES.
2. MIN SURFACE TEXTURE: 63✓
3. DIMENSIONS APPLY AFTER FINISH.
4. REMOVE BURRS AND SHARP EDGES.
5. DO NOT SCALE DRAWING.
6. TOLERANCES:
   - FRACTIONS ± 1/64
   - ANGLES ± 1°
   - .X ± 0.1
   - .XX ± 0.01
   - .XXX ± 0.005

DRAWN		10APR01
CHECKED		10APR01
APPR.		10APR01

THIRD ANGLE PROJECTION

SAFETY CLASS B

TITLE: FOOT CONTROL SLEEVE

SIZE	DWG. NO.	REV
B	88070-1	A

SCALE: 1:1

SHEET 1 OF 1

REVISIONS				
REV.	ECO/TGR #	DESCRIPTION	APPROVALS	DATE
A	2871	INITIAL RELEASE	SEE TITLE	BLOCK
B	2877	CHG. R.025 TO R.063, ADDED DRILL NOTE	PB	20APR01

Security-Related Information
Figure Withheld Under 10 CFR 2.390.

THIS DRAWING IS THE EXCLUSIVE PROPERTY OF AEA TECHNOLOGY QSA. IT MAY ONLY BE USED FOR THE PURPOSE FOR WHICH IT WAS ISSUED. IT MAY NOT BE DUPLICATED IN ANY WAY, NOR TRANSMITTED TO ANY THIRD PARTY WITHOUT THE EXPRESS PERMISSION OF AEA TECHNOLOGY QSA.

MATERIALS: AISI TYPE 304 STAINLESS STEEL

PROTECTIVE FINISH: PASSIVATE PER MILS-5002C

UNLESS OTHERWISE SPECIFIED;
1. DIMENSIONS ARE IN INCHES.
2. MIN SURFACE TEXTURE: 63
3. DIMENSIONS APPLY AFTER FINISH.
4. REMOVE BURRS AND SHARP EDGES.
5. DO NOT SCALE DRAWING.
6. TOLERANCES: .X ± 0.1
   FRACTIONS ± 1/64 .XX ± 0.01
   ANGLES ± 1° .XXX ± 0.005

DRAWN	P.BUTTRICK	10APR01
CHECKED	M.TREMBLAY	10APR01
APPR.	M.TREMBLAY	10APR01

THIRD ANGLE PROJECTION

SAFETY CLASS B

AEA TECHNOLOGY
QSA

40 NORTH AVE, BURLINGTON, MA 01803

TITLE: FOOT CONTROL KNOB

SIZE A

DWG. NO. 88070-3

REV B

SCALE: 1:1

SHEET 1 OF 1

REVISIONS				
REV.	ECO/TGR #	DESCRIPTION	APPROVALS	DATE
A	2871	INITIAL RELEASE	SEE TITLE	BLOCK
B	2877	ADDED CENTER MARK NOTE	PAB/M.T.	20APR01
C	2892	WAS .500,NOW .437 & WAS 1.38,NOW 1.500		
3	N/A	PROTOTYPE PART		

Security-Related Information Figure Withheld Under 10 CFR 2.390.

PROTOTYPE

PROCESS IN ACCORDANCE WITH ENGINEERING INSTRUCTIONS

ENG Buttrick DATE 20SEP02

"RETURN PARTS TO ENGINEERING"

MATERIALS: G-10 FIBERGLASS

PROTECTIVE FINISH: N/A

UNLESS OTHERWISE SPECIFIED;
1. DIMENSIONS ARE IN INCHES.
2. MIN SURFACE TEXTURE: 63✓
3. DIMENSIONS APPLY AFTER FINISH.
4. REMOVE BURRS AND SHARP EDGES.
5. DO NOT SCALE DRAWING.
6. TOLERANCES: .X ± 0.1
FRACTIONS ± 1/64 .XX ± 0.01
ANGLES ± 1° .XXX ± 0.005

DRAWN	P.BUTTRICK	10APR01
CHECKED	M.TREMBLAY	10APR01
APPR.	M.TREMBLAY	10APR01

THIRD ANGLE PROJECTION

SAFETY CLASS B

AEA TECHNOLOGY
QSA
40 NORTH AVE, BURLINGTON, MA 01803

TITLE: FOOT CONTROL SHAFT

SIZE B DWG. NO. 88070-4 REV 3

SCALE: 1:1 SHEET 1 OF 1

REVISIONS				
REV.	ECO/TGR #	DESCRIPTION	APPROVALS	DATE
A	2871	INITIAL RELEASE	SEE TITLE	BLOCK
B	2877	ADDED CENTER MARK NOTE	PAB/M.T.	20APR01
C	2892	WAS .500,NOW .437 & WAS 1.38,NOW 1.500		
3	N/A	PROTOTYPE PART		

Security-Related Information Figure Withheld Under 10 CFR 2.390.

THIS DRAWING IS THE EXCLUSIVE PROPERTY OF AEA TECHNOLOGY QSA. IT MAY ONLY BE USED FOR THE PURPOSE FOR WHICH IT WAS ISSUED. IT MAY NOT BE DUPLICATED IN ANY WAY, NOR TRANSMITTED TO ANY THIRD PARTY WITHOUT THE EXPRESS PERMISSION OF AEA TECHNOLOGY QSA.

MATERIALS: G-10 FIBERGLASS

PROTECTIVE FINISH: N/A

UNLESS OTHERWISE SPECIFIED;
1. DIMENSIONS ARE IN INCHES.
2. MIN SURFACE TEXTURE: 63
3. DIMENSIONS APPLY AFTER FINISH.
4. REMOVE BURRS AND SHARP EDGES.
5. DO NOT SCALE DRAWING.
6. TOLERANCES: .X ± 0.1
FRACTIONS ± 1/64 .XX ± 0.01
ANGLES ± 1° .XXX ± 0.005

DRAWN	P.BUTTRICK	10APR01
CHECKED	M.TREMBLAY	10APR01
APPR.	M.TREMBLAY	10APR01

THIRD ANGLE PROJECTION

SAFETY CLASS B

AEA TECHNOLOGY
QSA
40 NORTH AVE, BURLINGTON, MA 01803

TITLE: FOOT CONTROL SHAFT

SIZE B
DWG. NO. 88070-4
REV 3

SCALE: 1:1
SHEET 1 OF 1

Section 8. APPENDIX B – CALCULATIONS

①
F.C.B.A.

Horizontal Shock Test
ISO 3999-1

Test Specimen:

Drawing No. 88017XLS/TP125A Rev. B Serial Number: 12

Test weight 49 LBS Scale Used FWC DWM III
CAL. DATE MAY 28 2003

Test Setup:

Set up per: ISO 3999-1 (6.4.6.1) horizontal shock test procedure.

Pictures: K:\TEST PLAN\TP125A

Notes:

Horizontal Test Bar:

Drawing No. T10333 S001 Rev. A Location: ENGR TEST CAGE

Test Period:

Date & time: 13FEB03 2:30 PM

Specimen Damage:

G-10 SHAFT BROKE AFTER 4TH HIT. FINISHED TEST OF 20 HITS. F.C.B.A. DID NOT WORK AT COMPLETION. UNIT (880) WAS NOT DAMAGED, WORKED FINE. PASSED TEST.

Post test assessment:

Recorded by:	Date: 14FEB03
Witnessed by:	Date: 13FEB03
Regulatory reviewed by:	Date: 13 Feb03
Q.A. reviewed by:	Date: 13 feb 03

①

LOCK MOUNT

Horizontal Shock Test
ISO 3999-1

Test Specimen:

Drawing No. 8807XLS/TP125A Rev. B Serial Number: 12

Test weight 49 LBS. Scale Used FWC DWM III

CAL. DATE MAY 28 2003

Test Setup:

Set up per: ISO 3999-1 (6.4.6.1) horizontal shock test procedure.

Pictures: K:\TEST PLAN\TP125A

Notes:

Horizontal Test Bar:

Drawing No. T10333 SN01 Rev. A Location: ENGR. STOCK CAGE

Test Period:

Date & time: 13FEB03 3PM

Specimen Damage:

ALUMINUM LOCK MOUNT W/S.S. INSERT WAS HIT 20 TIMES. FRONT OF LOCK MOUNT DAMAGEDED BUT FUNCTIONED PROPERLY. KEY ACTUATION WAS SMOOTH. PASSED TEST.

Post test assessment:

Recorded by:	Date: 13 FEB 03
Witnessed by:	Date: 13 Feb 03
Regulatory reviewed by:	Date: 13 Feb 03
Q.A. reviewed by:	Date: 13 Feb 04

2

Penetration Test
10CRF71

Test Specimen:

Drawing No. 88017XLS/TP125A Rev. B Serial Number: 12

Test weight 49 LBS. Scale Used FWC DWM-IV
CAL. DATE 28 MAY 03

Test Setup:

Set up per: 10CR71 (71.71(10)) penetration test procedure.

Pictures: K:\TEST PLAN\TP125

Notes:

Drop surface:

Drawing No. T10129 SN01 Rev. A Location: ENG./SHIPPING

Test Period:

Date & time: 17 FEB03 9:30AM

Specimen Damage:

UPON DROPPING BAR ON THE F.C.B.A., THE 6-10 SHAFT BROKE. THE F.C.B.A. NEEDED TO BE DIS-ASSEMBLED TO ACTUATE THE SELECTOR RING AND LOCK SLIDE. UNIT WORKED FINE, PASSED TEST.

Post test assessment:

Recorded by:	Date: 17FEB03
Witnessed by:	Date: 17FEB03
Regulatory reviewed by:	Date: 17Feb03
Q.A. reviewed by:	Date: 17Feb03

③

Free Drop Test
10CRF71

Test Specimen:

Drawing No. 88017 XLS/TP125A Rev. B Serial Number: 12

Test weight 49 LBS. Scale Used FWC DWM III
CAL. DATE 28 MAY03

Test Setup:

Set up per: 10CFR71 (71.73(1)) free drop test procedure.

Pictures: K:\TEST PLAN\TP125B

Notes:
SUSPENDED UNIT BY EYEHOOKS FROM A CRANE UNIT. VIDEO AND DIGITAL CAMERAS WERE USED TO DOCUMENT DROP.

Drop surface:

Drawing No. T10261 SN01 Rev. A Location: GROVELAND, MA.

Test Period:

Date & time: 07 MAR03 9:42 AM

Specimen Damage:

UPON HITTING THE TEST PAD THE F.C.B.A.'S G-10 SHAFT BROKE AS DESIGNED. UNFORTUNATELY THE F.C.B.A.'S S.S. HOUSING ALSO CAME IN CONTACT WITH THE ~~SELECTOR~~ LOCK SLIDE, FORCING IT THROUGH THE SELECTOR RING.

Post test assessment:

IF THE REAR MOST COMPONENT (F.C.B.A.) WAS ALSO MADE OF G-10 MATERIAL, THAN THERE WOULD BE A CHANCE OF THE F.C.B.A. WOULD PASS THE TEST.

Recorded by:	Date: 14 MAR03
Witnessed by:	Date: 17 MAR03
Regulatory reviewed by:	Date: 18 Mar03
Q.A. reviewed by: JB Beauchamp	Date: 19 March 03

(4)

Puncture Test
10CRF71

Test Specimen:

Drawing No. 88017XLS /TP125A Rev. A Serial Number: 12

Test weight 49 LBS. Scale Used FNC DWM IV
CAL. DATE 28MAY03

Test Setup:

Set up per: 10CR71 (71.73(3)) puncture test procedure and assessed configuration.

Pictures: N/A

Notes (assessed configuration):

Drop surface:

Drawing No. T10261 SN01 Rev. A Location: GROVELAND, MA.

Test Period:

Date & time: 07MAR03 10:00 AM

Specimen Damage:

NOT PERFORMED. UNIT FAILED ON FREE DROP TEST. ALL TESTING STOPPED AT THIS TIME.

Post test assessment:

Recorded by:	Date: 14MAR03
Witnessed by:	Date: 17MAR03
Regulatory reviewed by:	Date: 18Mar03
Q.A. reviewed by:	Date: 19Mar03

Final Test Assessment

Test Specimen:

Serial Number(s): 88017XLS/TP125 S/N 21

Foot Control Button evaluation:

Spring (61lb.): IN GOOD WORKING ORDER
Spring (19lb.): IN GOOD WORKING ORDER
Stainless steel components: IN GOOD WORKING ORDER
F.C.B.A. working condition after Horizontal shock. YES *

Foot Control Button Assembly evaluation:

Is the F.C.B.A. in working condition?

THE ASSEMBLIES G-10 SHAFT BROKE ON IMPACT. THE F.C.B.A. HOUSING CAME IN CONTACT W/THE LOCK SLIDE, FORCING IT THROUGH THE SELECTOR RING

Comments:

* THE G-10 SHAFT WAS REPLACED AND THE ASSEMBLY WORKED FINE.

THE F.C.B.A. FAILED THE 9m FREE DROP. THE PUNCTURE TEST WAS NOT PERFORMED.

Engineering Review by:	Date: 03 APR03
SME Review by:	Date: 03APR03
Regulatory Review by:	Date: 3 Apr 03
Q.A. Review by:	Date: 4 april 03

Final Test Assessment

Test Specimen:

Serial Number(s): 88017XLS

Lock Mount Assembly evaluation:

Aluminum housing: DENTED AND SCRAPED (OK)
Stainless steel insert: NO DAMAGE
Corbin lock: NO DAMAGE
Lock Mount Assembly working condition after Horizontal shock. YES

Lock Mount evaluation:

Is the lock mount assembly in working condition?

THE LOCK MOUNT ASSY. STILL WORKS VERY SMOOTHLY.

Comments:

REFFER TO TECHNICAL REPORT #20 FOR ADDITIONAL TEST OF THE LOCK MOUNT ASSY. WHICH ALSO FAVORS THE S.S. INSERT DESIGN.

Engineering Review by:	Date: 02APR03
SME Review by:	Date: 03APR03
Regulatory Review by:	Date: 3 Apr 03
Q.A. Review by:	Date: 4 April 03

Section 10. APPENDIX D – MANUFACTURING RECORDS

AEA TECHNOLOGY
QSA

SPS-E-1724-1Rev1

ROUTE CARD

Part No.: 88017XLS
Rev: B
Page 1 of 1
Desc: 880 DELTA “SIMULATOR” ASSEMBLY
By: P Buttrick 9 JAN 03
Ckd: R. 9 JAN 03
Safety Class: N/A
WO INDIRECT
Qty: 1
Serial/Lot Number(s): Z1

OP#	Work Center	Operation	Part#	Rev	Lot or s/n	Reference Document	Tools	By	Date	Comments
010	Assy	Attach jacket	88041-1 88011XLS RIV093	C B A	S/n 21	B88017XLS	T10367 T10324	DA	9 JAN 03	
020	Assy	Attach front plate Torque screws ✓	88030 SCR154	C A		B88017XLS	Torque wrench S/n 182	DA	9 JAN 03	
030	Assy	Attach rear plate Torque screws ✓	88020 SCR154	5 A	S/n 1146	B88017XLS	Torque wrench S/n 182	DA	9 JAN 03	DA 7 FEB 03
040	Assy	Attach F.C.B.A.	88070	2		B88070		DA	9 JAN 03	
050	Assy	Label	88042-5 RIV003			B88017XLS		DA	9 JAN 03	
060	QC	Final inspection			Pass ____ Fail X RE-INSPECT Acceptable D 7 Feb 03	B88017XLS		D	7 Feb 03	

AEA TECHNOLOGY
QSA

SPS-E-1724-1Rev1

ROUTE CARD

Part No.: 88017XLS		Rev: A	**Page 1 of 1**
Desc: 880 DELTA “SIMULATOR” ASSEMBLY			
By: 17DEC01		Ckd: 17DEC01	
Safety Class: C ~~N/A~~ DAL 17JAN02	WO INDIRECT	Qty: 1	
Serial/Lot Number(s): 21			

OP#	Work Center	Operation	Part#	Rev	Lot or s/n	Reference Document	Tools	By	Date	Comments
010	Assy	Attach jacket	88041-1 88011XLS RIV093	C A A	S/n 21	B88017XLS	T10367 T10324	DAL	17 Dec 01	
020	Assy	Attach front plate Torque screws ✓	88030 SCR154	B A		B88017XLS	Torque wrench S/n 182	DAL	17 Dec 01	
030	Assy	Attach rear plate Torque screws ✓	88020 SCR154	B A	S/n 1146	B88017XLS	Torque wrench S/n 182	DAL	17 DEC 01	
040	Engr	Attach F.C.B.A.	88070	2		B88070		DAL	17 Dec 01	DAL 14 NOV 02
050	QC	Final inspection			Pass X Fail ____	B88017XLS	Dw	Da	20 Dec 01	

AEA TECHNOLOGY QSA

DW 17 JAN02
PAB 17JAN02

Device for Test Plan ~~119~~ 125 A

Sheet 1 of 1

Inspection Instruction And Record	Originator/Date 18DEC01	Rev A	Part No. 88017XLS	Supplier	
	QA Approval/Date 18DEC01	CM C	PIL N/A	Eng. Approval/Date 18DEC01	

Item Description: Model 880 Delta Simulator Assembly

Characteristics	Tolerance	MTE	AQL	1	2	3	4	5	6	7	8	9
General Visual	N/A	N/A	C / 100%	0 1								
Verify all Items Present Per Drawing	N/A	N/A	C / 100%	0 1								
Verify Assembled per Drawing	N/A	N/A	C / 100%	0 1								
Total Weight 50 Lbs Max.	N/A	Scale	C / 100%	0 1								
Funtional Test With Dummy Source	N/A	N/A	C / 100%	0 1								
Verify Foot Control Button Assy Pt. # 88070 Installed	N/A	N/A	C / 100%	0 1								
Verify Foot Control Button Assy Functions Properly	N/A	N/A	C / 100%	0 1								
Less Name Plate & Source ID Tag	N/A	N/A	C / 100%	0 1								

Comments		1	2	3	4	5	6	7	8	9
	PO / WO #	INDIRECT								
	Traveler / QCL #	N A								
	Lot / Serial #	21								
	Lot Qty.	1								
	Qty. Rej / NCR	0 NA								
	Qty. Acc.	1								
	Insp / Date	DW 20 DEC01								

DW 17 JAN 02 GT 17JAN

AEA TECHNOLOGY
QSA

SPS-E-1724-3Rev1

ROUTE CARD

Part No.: 88011XLS		Rev: B ~~A~~	Page 1 of 1
Desc: Body Weldment "Delta Simulator"			
By: 12DEC01		Ckd: R. 12 DEC 01	
Safety Class: C ~~N/A~~ DW 17JAN02	WO INDIRECT		Qty: 1
Serial/Lot Number(s): 21			

Op #	Work Center	Operation	Part #	Lot or S/N	Reference Documents/Rev	Tools	by	Date	Comments
010	Assy	Stamp S/N	88010	S/N 21	B88011XLS		DAL	12 DEC 01	
020	Assy	Assemble shields & End plates	88052-1 88010 88003	Lot# 01171-1	B88011XLS		RWR	12 Dec 01	
030	Weld	Tack Weld	88011XLS WEL003	Lot# 01026-2	B88011XLS	T10318 S/N 02	EP	12 Dec 01	
040	Weld	Weld	88011XLS WEL003	Lot# 01026-2	B88011XLS		EP	12 Dec 01	
050	QC	Inspect weld (VT)		Pass X Fail ___	B88011XLS		DW	14 Dec 01	
060	Assy	Foam	FOM001		B88011XLS WI-P1712 SPS-P1712-1	T10329 S/N N4	DFW	15 DEC 01	
070	~~Assy~~ QC	Inspect			B88011XLS		DW	17 Dec 01	

AEA TECHNOLOGY QSA

Sheet 1 of 1

Inspection Instruction And Record	**Originator/Date** 17 Dec 01	**Rev B**	**Part No. 88011XLS**	**Supplier**
	QA Approval/Date 17 Dec 01	**CM C**	**PIL 3**	**Eng. Approval/Date** 18 DEC 01

Item Description: Body Weldment Delta Simulator

Characteristics	Tolerance	MTE	AQL	1	2	3	4	5	6	7	8	9
General Visual	N/A	N/A	MJ / 1.0	0 / 1								
Verify Assembled per Drawings Route Card Verification	N/A	N/A	MJ / 1.0	0 / 1								
1.75	+ .02 - .08	Micro Hite	MJ / 1.0	0 / 1								
8.5	+ / - .1	Micro Hite	MJ / 1.0	0 / 1								
Welded Per Dwg.	N/A	N/A	MJ / 1.0	0 / 1								
Stamp Serial # per Dwg.	N/A	N/A	MJ / 1.0	0 / 1								
Comments		**PO / WO #**		INDIRECT								
		Traveler / QCL #		N / A								
		Lot / Serial #		21								
		Lot Qty.		1								
		Qty. Rej / NCR		0 / NA								
		Qty. Acc.		1								
		Insp / Date		DW 17 Dec 01								

AEA TECHNOLOGY
QSA

FIRST ARTICLE REPORT
Form F-Q1807-2

Supplier: MACHINE SHOP	Part No.: 88022-1	P.O. /W.O.
Item Description: Lock Mount INSERT	Qty. 2	Qty./Insp. 2
Drawing No. 88022-1	Rev. 3	CM: B
Inspected by: Dave	Date: 18 Dec 02	Lot/Ser.#

Drawing Dimension	Actual Dimension	M&TE Used	SN & Cal. Due Date
SLOT .188	.188-.189	Caliper	#305 10-4-03
.562	.565 - .560	✓	" "
.755 ± .003	.756 - .758	Bore Gage	#111 4-5-03
.875 $^{+.000}_{-.005}$	.875	Caliper	#305 10-4-03
.165	.164 - .166	micro Hite	271 4-2-03
.125 Ø Thru	.125	Pin gage	292 4-2-03
.35	.345 / .350	micro HITE	#270 4-2-03
.89	.892 / .896	↓ ↓	↓ ↓
.93	.933		
.16	.158 .160	Caliper	#305 10-4-03
.31 Rad	.31 Rad	Pin Gage	293 4-2-03
300 Series S.S.	S.S	Visual / magnet	NA
	Results:	Accepted ☒	Rejected ☐

Comments:

QC Forward this inspection report along with the samples to Engineering for review and approval. Retain a copy of the report in the file until approved.

Approved ☒ **Not Approved** ☐

Engineering Date: 06 JAN 03

Engineering return approved report to QC for records retention.

QCL#
#125730

REVISIONS				
REV.	ERF #	DESCRIPTION	APPROVALS	DATE
3	N/A	PROTOTYPE RELEASE	SEE TITLE	BLOCK

PROTOTYPE
PROCESS IN ACCORDANCE WITH
ENGINEERING INSTRUCTIONS
ENG Buttrick DATE 07OCT02

Security-Related Information
Figure Withheld Under 10 CFR 2.390.

MATERIALS: 300 SERIES STAINLESS STEEL

PROTECTIVE FINISH: NONE

UNLESS OTHERWISE SPECIFIED;
1. DIMENSIONS ARE IN INCHES.
2. MIN SURFACE TEXTURE: 63√
3. DIMENSIONS APPLY AFTER FINISH.
4. REMOVE BURRS AND SHARP EDGES.
5. DO NOT SCALE DRAWING.
6. TOLERANCES:
FRACTIONS ± 1/64 .X ± 0.1
ANGLES ± 1° .XX ± 0.01
.XXX ± 0.005

DRAWN
CHECKED NA
APPR.

THIRD ANGLE PROJECTION

QUALITY CLASS B

AEA TECHNOLOGY QSA
40 NORTH AVE, BURLINGTON, MA 01803

TITLE: LOCK MOUNT
S.S. INSERT

SIZE B
DWG. NO. 88022-1
REV 3

SCALE: 1:1
SHEET 1 OF 1

AEA TECHNOLOGY
QSA

FIRST ARTICLE REPORT
Form F-Q1807-2

Supplier: A.E.A MACHINE Shop	Part No.: 88070-4	P.O. /W.O: Indirect
Item Description: Foot Control Shaft	Qty. 10	Qty./Insp. 5
Drawing No.	Rev. 3	CM: B
Inspected by: Virgie Benitez	Date: 01 Oct 02	Lot/Ser.# N/A

Drawing Dimension	Actual Dimension	M&TE Used	SN & Cal. Due Date
General Visual	Conform	Visual	N/A
1.500	1.500	CALIPER	340 - 8/8/03
R.030	.030	RADIUS GAGE	QC-10 - 4/1/03
Φ.490	.490	Caliper	340 - 8/8/03
.60°	.60°	OPTICAL COMP.	340 - 8/8/03
.437	.437	Caliper	↓
.500	.500	↓	↓
.156	.156	↓	↓
R.180 (2 PLS)	R.187	Radius Gage	QC-10 - 4/1/03
.115	.115	Caliper	340 - 8/8-03
.230	.230	Caliper	340 - 8/8-03
.360	.360	Caliper	340 - 8/8-03
	Results:	Accepted ☐	Rejected ☒

Comments:

QC Forward this inspection report along with the samples to Engineering for review and approval. Retain a copy of the report in the file until approved.

Approved ☒ **Not Approved** ☐

Engineering Date: 03 OCT 02

Engineering return approved report to QC for records retention.

REVISIONS				
REV.	ECO/TGR #	DESCRIPTION	APPROVALS	DATE
A	2871	INITIAL RELEASE	SEE TITLE	BLOCK
B	2877	ADDED CENTER MARK NOTE	PAB/M.T.	20APR01
C	2892	WAS .500,NOW .437 & WAS 1.38,NOW 1.500		
3	N/A	PROTOTYPE PART		

Security-Related Information
Figure Withheld Under 10 CFR 2.390.

PROTOTYPE

PROCESS IN ACCORDANCE WITH ENGINEERING INSTRUCTIONS

ENG Buttrick DATE 20SEP02

"RETURN PARTS TO ENGINEERING"

THIS DRAWING IS THE EXCLUSIVE PROPERTY OF AEA TECHNOLOGY QSA. IT MAY ONLY BE USED FOR THE PURPOSE FOR WHICH IT WAS ISSUED. IT MAY NOT BE DUPLICATED IN ANY WAY, NOR TRANSMITTED TO ANY THIRD PARTY WITHOUT THE EXPRESS PERMISSION OF AEA TECHNOLOGY QSA.

MATERIALS: G-10 FIBERGLASS

PROTECTIVE FINISH: N/A

UNLESS OTHERWISE SPECIFIED;
1. DIMENSIONS ARE IN INCHES.
2. MIN SURFACE TEXTURE: 63√
3. DIMENSIONS APPLY AFTER FINISH.
4. REMOVE BURRS AND SHARP EDGES.
5. DO NOT SCALE DRAWING.
6. TOLERANCES:
FRACTIONS ± 1/64
ANGLES ± 1°
.X ± 0.1
.XX ± 0.01
.XXX ± 0.005

DRAWN	P.BUTTRICK	10APR01
CHECKED	M.TREMBLAY	10APR01
APPR.	M.TREMBLAY	10APR01

THIRD ANGLE PROJECTION

SAFETY CLASS B

AEA TECHNOLOGY
QSA
40 NORTH AVE, BURLINGTON, MA 01803

TITLE: FOOT CONTROL SHAFT

SIZE B

DWG. NO. 88070-4

REV 3

SCALE: 1:1

SHEET 1 OF 1

Section 11. APPENDIX E – TECHNICAL REPORTS

AEA TECHNOLOGY QSA, Inc.
Engineering Department
Technical Report

Title: 88022 Lock Mount "Environmental Test" evaluation

Prepared by: Date: 11JUN02
Checked by: Date: 11JUN02
Engineering Approval: Date: 11JUN02

1.0 PURPOSE

The purpose of the report is to set forth results on testing of the #88022 Lock Mount assembly, then propose and test new designs as to arrive at one that will not experience operating problems in the future.

2.0 SCOPE

We have received customer concerns (see CR 151, CR177) about the aluminum #88022 lock mount and its brass #66001-11 lock plunger sticking (not unlocking) after being subjected to several days of marine environment and dark room exposure. Other concerns of mud and water submersion to the lock mount assembly during "normal" daily operations have been made in reference to faulty lock operations. Moreover, corrosion between the aluminum lock mount and the brass lock plunger will be evaluated when tested.

3.0 METHODS

The test method employed was performed on three different designs. The first design is the part as currently manufactured. The second design has a stainless steel sleeve inserted into the existing design's enlarged hole. The third, a rubber o-ring design incorporated into the existing design. Two complete assemblies of each of the three different configurations were used in the testing. The test was as follows.

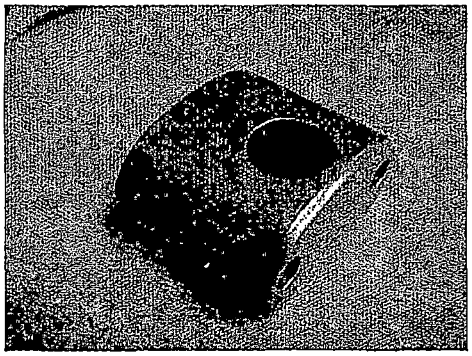

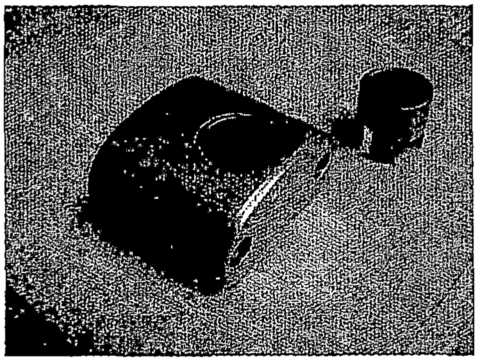

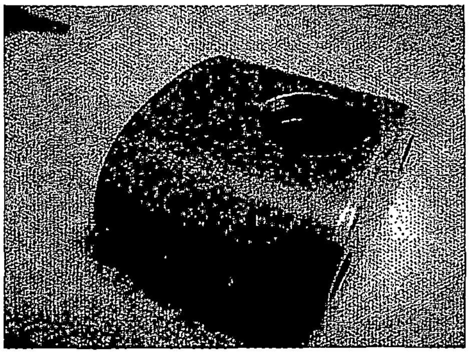

Two different tests were conducted:

a. One each of the three different designs were submerged into a heavy salt water mixture for a period of 3 days. Each day the solution was stirred, as to fully coat the samples. On the fourth day the test samples were set on a table at ambient temperature to dry for a period of four hours. The samples were then placed in an oven and were subjected to a temperature of approximately 140 degrees Fahrenheit for a period of 4 hours.

The above process was to simulate exposure to a marine environment. The test samples did have some minor corrosion occur between the brass lock plunger and the aluminum housing. The brass lock plunger also had some discoloring around the key area but had little effect in operation.

See pictures below.......

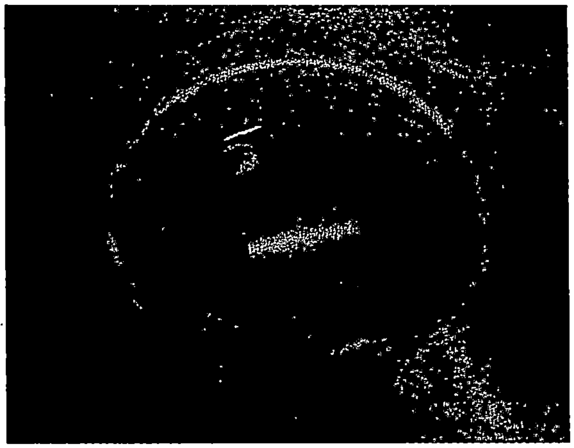

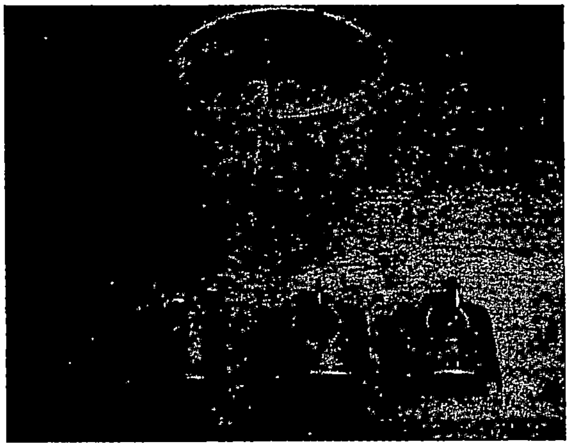

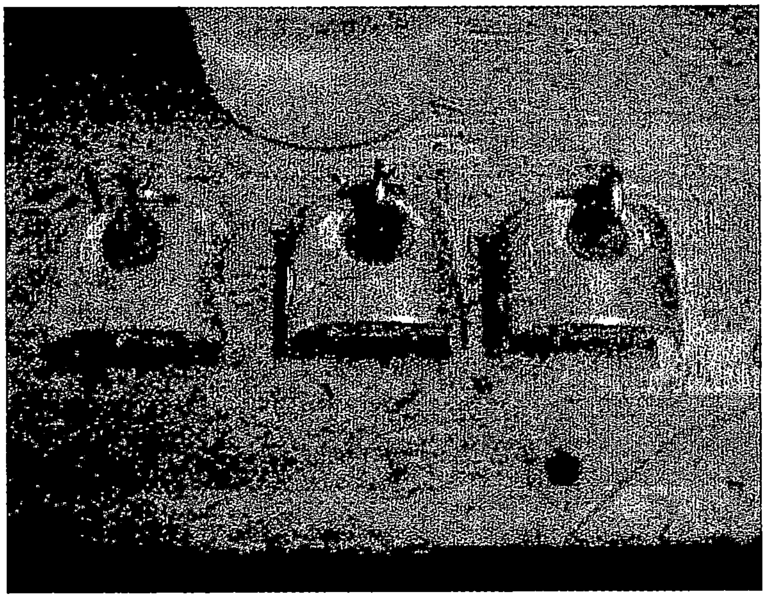

b. One each of the three different designs were submerged into a thick mud mixture for a period of 3 days. Each day the solution was stirred, as to fully coat the samples. On the fourth day the test samples were set on a table at ambient temperature to dry for a period of four hours. The samples were then placed in an oven and were subjected to a temperature of approximately 140 degrees Fahrenheit for a period of 4 hours.

The above process was to simulate exposure to dirt and mud for long periods of time. A drying cycle was introduced as a normal occurrence during storage or non-use.

See pictures below…….

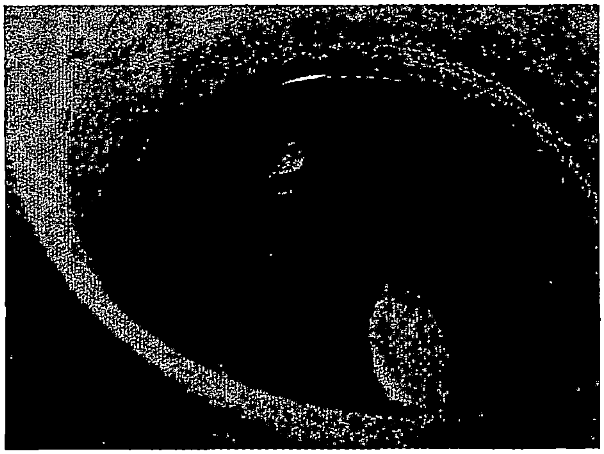

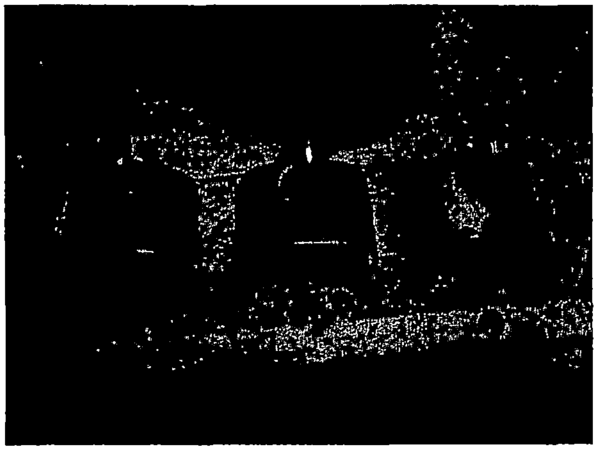

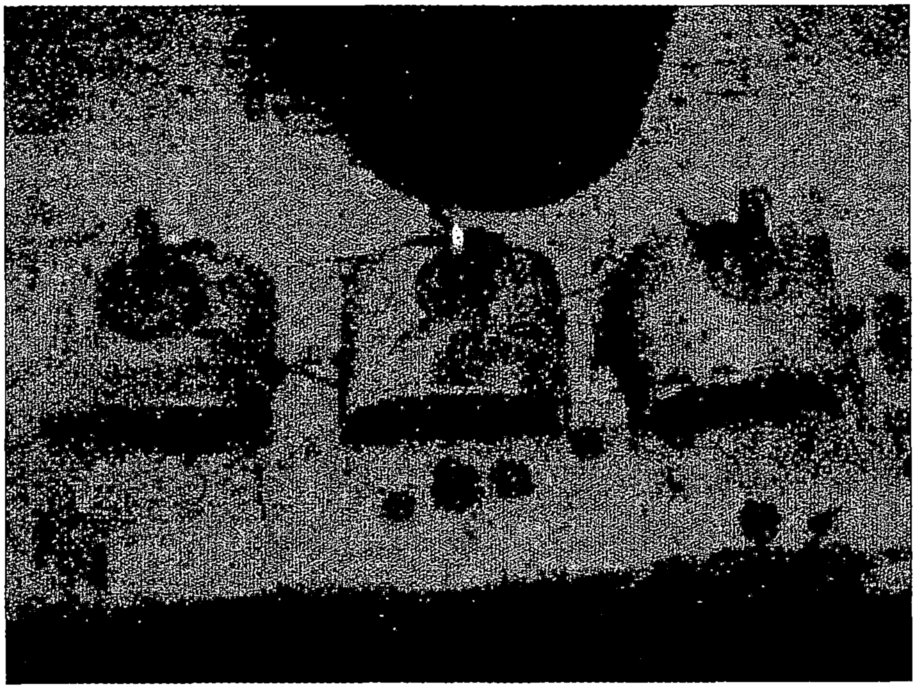

4.0 INITIAL INPUT

The first sample, which is our normal production part was tested without any modifications. It was assembled by applying a petroleum (AEROSHELL Grease 7) lubricant to the perimeter of the hole on the aluminum lock mount. The brass plunger was than inserted into the hole and secured in place by a 6-32 hex slot machine screw through the side of the assembly.

The second sample, #88022 (Rev. 6) lock mount had the 0.858 diameter drill hole opened to .880 +.000/-.003 x .930 deep. A stainless steel sleeve #88022-1 (Rev. 1) with an outside diameter of 0.875 +.000/-.005 was bonded with a 5 minute epoxy into the .880 hole. The #66001-11 lock plunger was than inserted into the lubricated (AEROSHELL) stainless steel sleeve and secured in place with a 6-32 machine screw.

The third sample, #88022 (Rev. 5) lock mount was modified to accept an o-ring (Green Rubber #AS568-210) approximately 1/8" from the top edge of the .758 diameter hole. Upon insertion of the o-ring the 0.758 diameter hole was greased with the lubricant (AEROSHELL) and the brass lock plunger was secured in place as above.

See attached drawings for more information.

5.0 RESULTS / DISCUSSION

5.1 The parts were first evaluated (not cleaned) while still warm from the oven.

All the salt covered test sample's lock plungers were hard to turn with the key and did not actuate properly. The Stainless steel sleeve sample did however work the best after only a few iterations. The normal production sample was very stiff while turning the key and did not actuate fully. The o-ring sample did not turn or actuate at all.

The mud covered test sample's lock plungers turned easily with the key but did not actuate fully on the current design and the o-ring designed test sample. The stainless steel sample however actuated fully without any effort.

5.2 The parts were then cleaned (washed with water) while turning the key and actuating the lock plunger.

The salt covered stainless steel insert test sample and the o-ring test sample worked well after cleaning. The normal production sample however, never worked properly even after being rinsed thoroughly with water. The production sample was then disassembled, re-cleaned, and reassembled. At which point it worked as designed.

The mud samples were evaluated to find that the regular production sample's key turned fine but did not actuate completely. The o-ring design worked well. The o-ring kept out most of the mud and water enabling it to function properly. The sample with the stainless steel insert worked best. The key turned easily and the lock plunger actuated smoothly.

6.0 REFERENCES

Not applicable.

7.0 CONCLUSION

The overall conclusion is that the #88022 lock mount assembly should be kept clean as possible during normal operation. After use, the radiographic unit and it's lock mount assembly should be washed to remove any dirt, salt, and grime to insure proper functioning.

The conclusion from testing different designs is that the #88026 lock mount should be modified from it's original design to include the #88002-1 stainless steel insert. The stainless steel insert was quoted at approximately $5.00 each and will be incorporated at the time of assembly. The aluminum lock mount presently is being produced as a finished casting. The light weight aluminum design is both desirable and is a functional alternative to an all solid stainless steel design.

Section 12. APPENDIX F – ORIGINAL TEST PLAN

TEST PLAN 125 (Rev. B)
Model 880 Type B Container
With 88070 Foot Button Assembly
And 88022 Lock Mount Modification
10CFR71, ISO 3999-1
Transport Conditions

TABLE OF CONTENTS

1.0 Purpose

The purpose of these tests is to assess the Model 880 transport container with the addition of the #88070 foot control button assembly. With the addition of these components and the modification of the #88022 lock mount, they will not adversely affect the packages ability as a "Type B" transport container.

The tests will be conducted and witnessed by at least one Engineer (the originator), one Regulatory, and one Quality person. The results of the test will be written in a test report and distributed through the engineering, quality, and regulatory departments for review.

We will test to 10CFR71 regulations for 71.73(1) *free drop*, 71.73(3) *puncture*, and 71.71(10) *penetration*. These tests will follow a random order except that the 71.73(3) puncture test will follow the 71.73(1) free drop test. Also, testing will be performed according to ISO 3999-1 regulations for 6.4.6.1 *horizontal shock*.

This test is a revision to Test Plan 125A. In this test plan, AEA Technology QSA will revert back to the original test plan (TP125) for it's #88070 component design with the following exception. The #88070-4 Shaft which was made of 304 stainless steel will be manufactured from phenolic (G-10 fiberglass) rod stock.

In reference to TP125A, the test failed when the 88070-4 Shaft made impact with the 88024 Titanium lock slide, pushing it through the 88026 Selector ring causing a failure. By manufacturing the Shaft out of G-10 material it would fail first before any damage could occur to the lock slide or the selector ring. See drawing #88070-4 (Rev. 3) for details of the improved design.

Testing not performed under this test (and necessary to demonstrate compliance with 10CFR71, ISO 3999-1, 49CFR and IAEA ~~TR-S-1~~) will be addressed in an assessment located in the final test report.

TS-R-1

23 oct 02

2.0 Product Design Description

The Model 880 "Delta" source projector, drawing #TP125A (weighted dummy unit) consists of the following components:

- 5" Dia. stainless steel body weldment with a "lead core" containing an S-tube.
- Stainless steel front and rear plate assemblies (with modified lock mount).
- #88041 Polyurethane jacket.
- #88070 foot control button assembly.

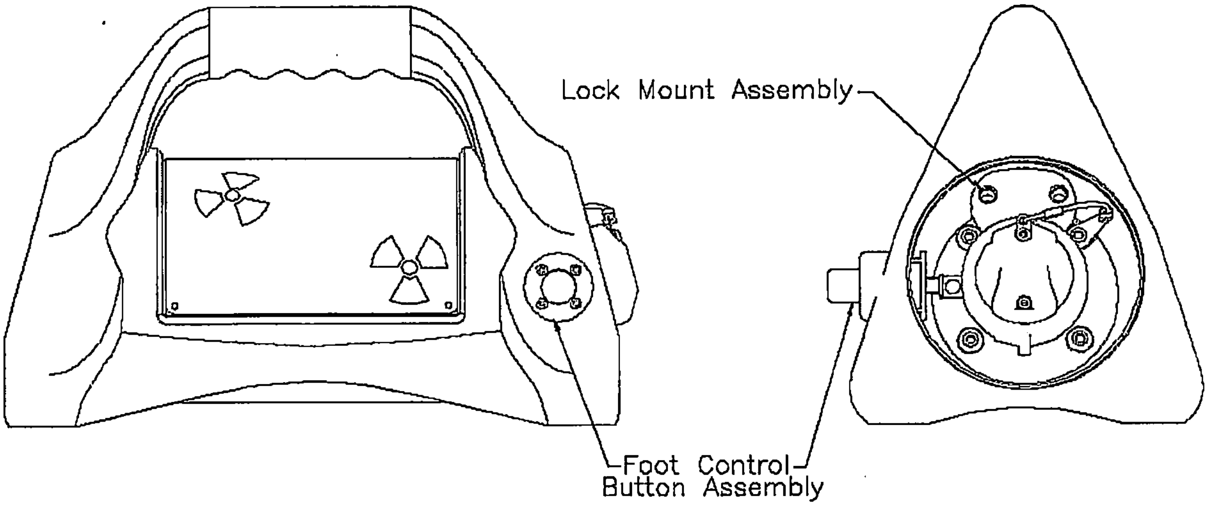

3.0 Failures of Interest

3.1 Foot Control Button Assembly

If the lock slide were to be forced from it's locked position, the source wire could become free to float inside the unit.

The drop test will show that the compressive load being transmitted through the 88070 foot control button assembly will not damage the 88024 lock slide located inside the 88020 rear plate assembly.

3.2 Lock Mount

If the aluminum lock mount receives a blow which damages this component and prevents the locking mechanism from actuating properly then the operator might be unable to use the radiographic camera as specified in the operations manual.

D

The ISO 3999-1 (6.4.6.1) horizontal shock test will show that with the addition of a stainless steel insert, that this will aid in better structural integrity to the lock mount assembly. See drawing 88022-1 for insert information.

Because the lock mount is designed not to extend beyond the surface of the camera body, the ISO 3999-1 (6.4.2) lock-breaking test, 10CFR 71 (71.73.1) free drop and (71.73.3) puncture test would not be relevant tests therefore will not performed.

Moreover, the ISO 3999-1 horizontal shock test is more severe than the 10CFR71 (71.71.10) penetration test. Because of this, the penetration test will not be performed.

4.0 Test Conditions and Orientations

The Foot Control Button Assembly (F.C.B.A.) was designed to thrust the lock slide into it's active position during operation. The F.C.B.A. was also designed to bottom out when the lock slide was fully actuated. With the new design (phenolic) of the lock slide, the force from actuating the F.C.B.A. cannot be translated directly to the lock slide.

4.1 Free Drop Test ③

The 880 radiographic unit will be oriented so that the F.C.B.A. will be facing downward toward the test pad (T10261 SN01) for the 9m (30 ft.) drop test (see section 8.0). This will expose the assembled unit so the F.C.B.A. will receive an impact similar to a slap down effect. See section 3.2 for lock mount testing information.

4.2 Puncture Test ④

According to the Purpose (Section 1.0 paragraph 4) section of this test plan an evaluation will be made before this test is performed. Unless stated in the test report, the following will most likely be performed. The 880 unit will be oriented in a similar angled fashion as above for the 1m (40 in.) drop test. The unit will be dropped onto a test billet (T10119 SN01) so as the F.C.B.A. sustains the full initial impact. See section 3.2 for lock mount testing information.

4.3 Penetration Test ②

The 880 unit will be oriented so as the foot control button assembly will be facing upward while the jacket will be supported on an unyielding surface. The hemispherical end of a vertical steel cylinder (AEA Technology QSA Drawing #BT10129) of 3.2 cm (1.25 in) diameter and 6 kg (13 lbs.) mass will be dropped from a height of 1 m (40 in) onto the surface of the F.C.B.A. See section 3.2 for lock mount testing information.

4.4 Horizontal Shock Test ①

The 880 unit will be oriented so the (1) F.C.B.A. and the (2) Lock Mount will impact the end-face of (T10333 SN01) 50 mm (2 in) diameter steel bar. The criteria is 300 mm (12 in) in length lying horizontally, that is fixed or welded to a rigid mass at least ten times the mass of the 880. The 880 will be suspended from a fixed point so that, when at rest, the F.C.B.A. and Lock Mount just touches the target. The 880 will be moved from its resting position until its center of gravity is 100 mm (4 in) higher than in the resting position and let loose, so that it swings in a pendulum movement against the target. This will be carried out for a total of twenty (20) times.

5.0 Pass and Fail Criteria

A final assessment shall be made upon the completion of the tests to evaluate the specimen's performance against the test requirements and determine a pass or fail judgement. The specimen(s) shall be considered passing the test requirement if the specimen meets the following criteria:

5.1 Foot Control Button Assembly

The lock slide must not be damaged in a way that the source wire assembly becomes free to move.

The radiographic unit must remain operational after the horizontal shock test. This means either with the actuation of the F.C.B.A. or by manual operation of the lock slide mechanism.

5.2 Lock Mount Assembly

The corbin lock mechanism must actuate freely after being subjected to the horizontal shock test. Also the stainless steel insert must stay in position. The Lock Mount and stainless steel insert will be secured in place with a dog point hex set screw. Loctite will also be added to a set screw prior to assembly. Moreover, the set screw in the Lock Mount assembly cannot back out of position after assembly because the Lock Mount seats up against the 88031 Front Plate.

Final assembly configuration will be noted on QC inspection/acceptance forms. The production unit will be assembled to comply with the tested configuration.

6.0 Test Specimen

The test specimen will be a fully weighted dummy "lead core" 880 Delta radiographic camera (reference AEA Technology QSA Drawing No. TP125A). The core will have no depleted uranium, however the lead core will encapsulate a titanium s-tube. The test specimen shall be examined after the test and any defects will be noted.

The test specimen was developed under drawing #88017XLS but stated that the unit was a Safety Class "C". The test unit should be a Safety Class "A" for traceability reasons. Therefore drawing TP125A was developed as a prototype drawing of the test unit with a Safety Class A.

AEA Technology QSA used a lead unit for this test for the soul evaluation of the Mechanical testing of exterior components. Therefore the unit did not need to be profiled.

Lead was also used to replicate the weight of the unit. The lead billet is orientated (center of gravity) in the same location as a DU unit. Moreover, the billet is mechanically attached with the same pins and hardware as a DU unit. Therefore the test unit will react in the same manner as the DU unit.

7.0 Testing Safety and Waste Disposal

Testing Safety

The tests will not be conducted with any radioactive sources. Instead, the testing of the Model 880 unit will use a dummy source wire assembly.

The weight of the testing will require lifting heavy objects. Proper lifting techniques shall be used to prevent injury.

Some tests of this plan may result in heavy falling objects and flying debris. Safety glasses and a safe distance must be used in these cases.

Waste Disposal

The test Model 880 and accessories will be kept and stored for reference until authorization by the engineering and regulatory department to dispose. No radioactive material will be used in the testing so the test specimens do not need to be kept in any special radiation storage areas.

Once approved for disposal by the engineering department and the regulatory department, the entire test units can be disposed of as standard garbage except for the lead shielding. The lead shall be removed from the Model 880 device and kept for the production department to melt down for other applications if applicable. If the unit remains in good condition, the unit will be repaired if necessary and used for future demo purposes.

8.0 Test Procedures

Free Drop Test 9m

1. Prepare test device by placing device into a sling device.
2. Hold test specimen orientated toward impact surface at a height of 9 m (30 ft) from the top of the drop pad surface to the bottom of the test specimen.
3. Drop the test specimen onto the rigid target surface.
4. Examine test specimen and evaluate to test requirements.
5. Record the results of the test.

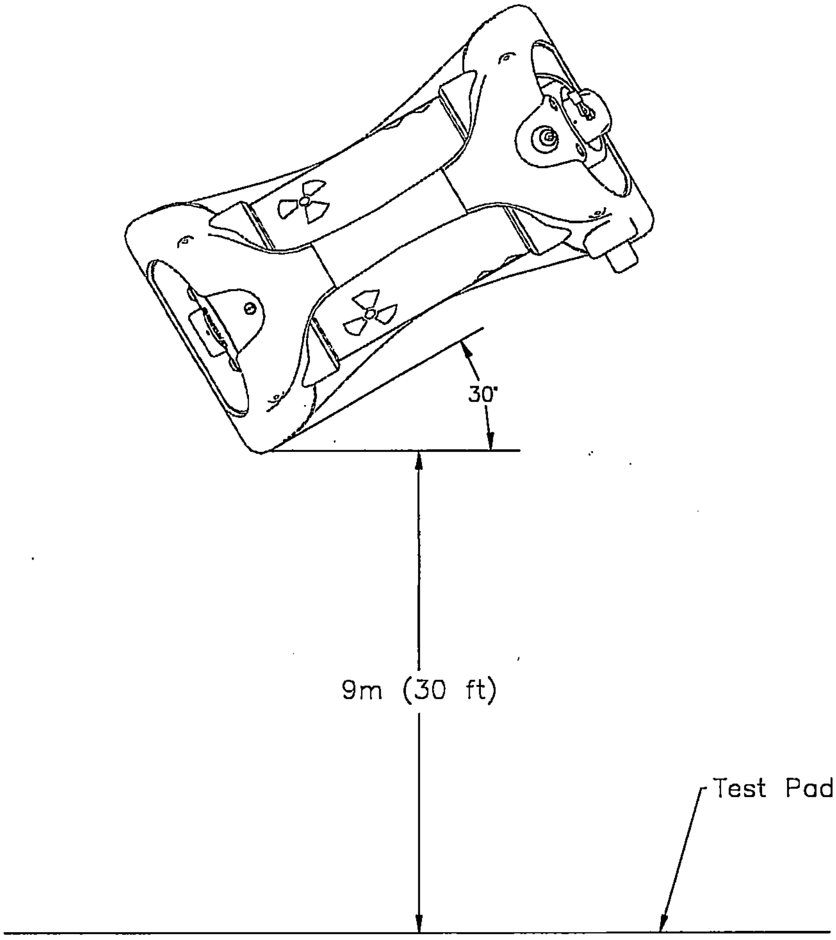

Puncture Test 1m

1. Prepare test device by placing device into sling device.
2. Hold test specimen orientated toward impact surface at a height of 1 m (40 in.) from the top of the test billet surface to the bottom of the test specimen.
3. Drop the test specimen onto the test billet surface.
4. Examine test specimen and evaluate to test requirements.
5. Record the results of the test.

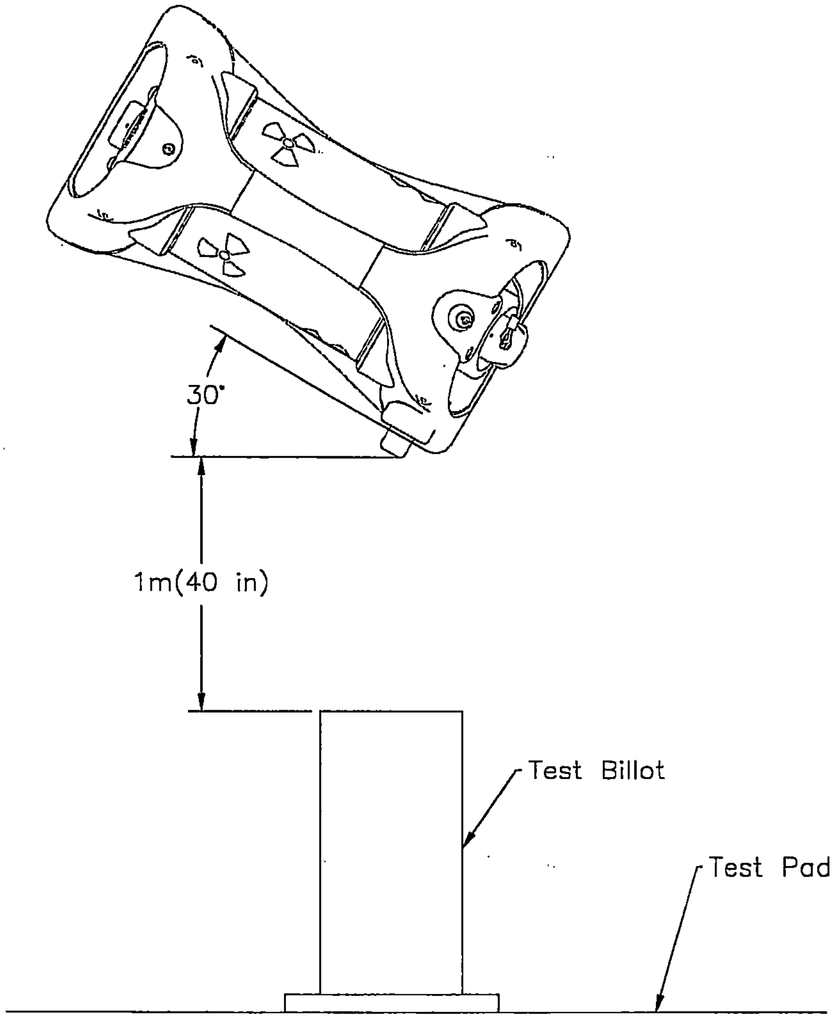

Penetration Test

1. Prepare test device by placing device on an unyielding surface.
2. Orient F.C.B.A. in a vertical position while supporting handle of jacket.
3. Drop steel cylinder (T10129) from a height of 1m (40 in) onto the F.C.B.A.
4. Examine test specimen and evaluate to test requirements.
5. Record the results of the test.

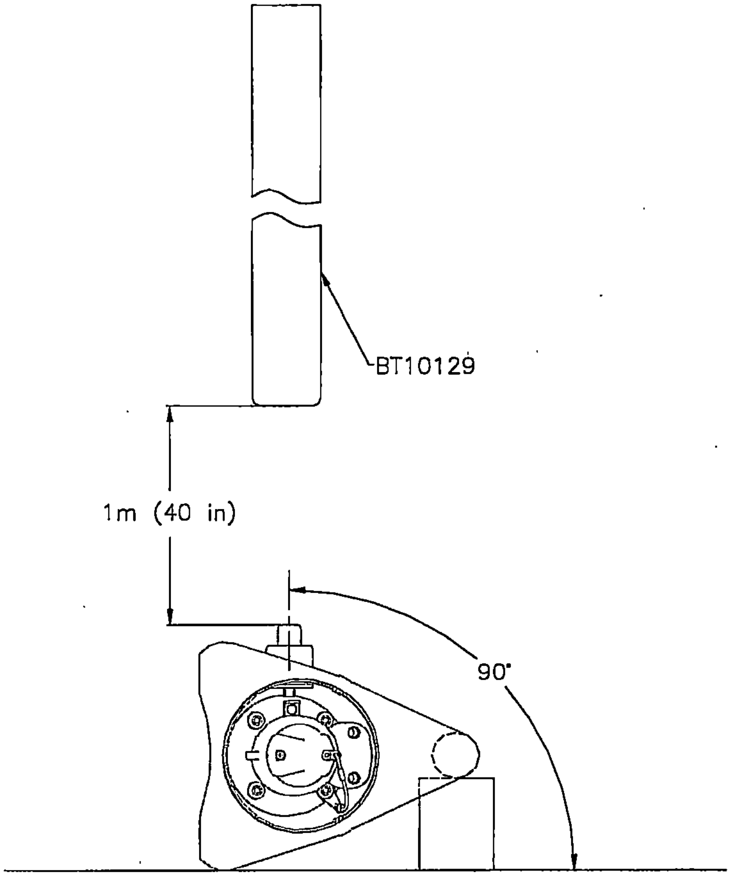

Horizontal Shock Test

1. Prepare test device by placing device into a sling device.
2. Orient by suspending the F.C.B.A. in a horizontal position while touching (T10333) horizontal shock bar.
3. Move the 880 unit until its center of gravity is 100 mm (4 in) higher than its resting position.
4. Let it loose, so that it swings in a pendulum movement against the target for a total of 20 times.
5. Examine test specimen and evaluate to the test requirements.
6. Record the results of the test.

Foot Button Assembly (1)

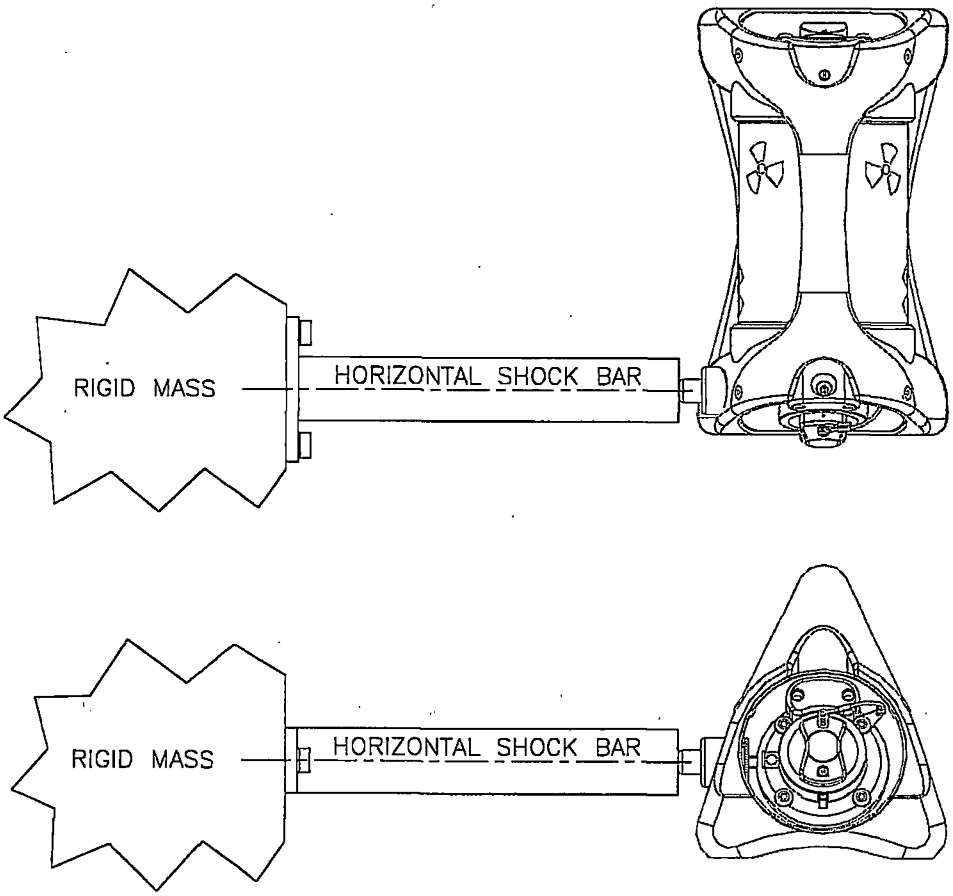

Horizontal Shock Test

1. Prepare test device by placing device into a sling device.
2. Orient by suspending the Lock Mount in a horizontal position while touching (T10333) horizontal shock bar.
3. Move the 880 unit until its center of gravity is 100 mm (4 in) higher than its resting position.
4. Let it loose, so that it swings in a pendulum movement against the target for a total of 20 times.
5. Examine test specimen and evaluate to the test requirements.
6. Record the results of the test.

Lock Mount (2)

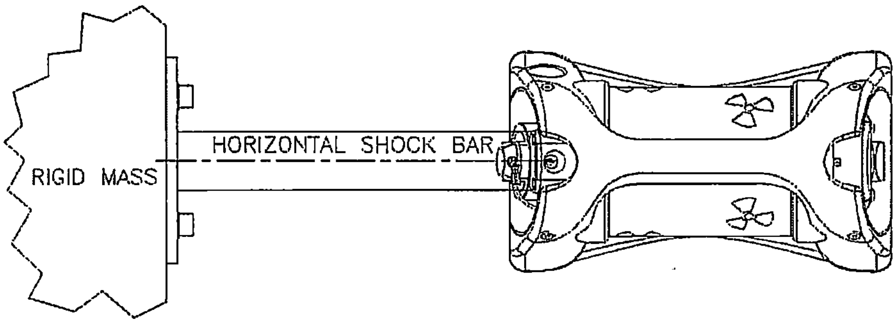

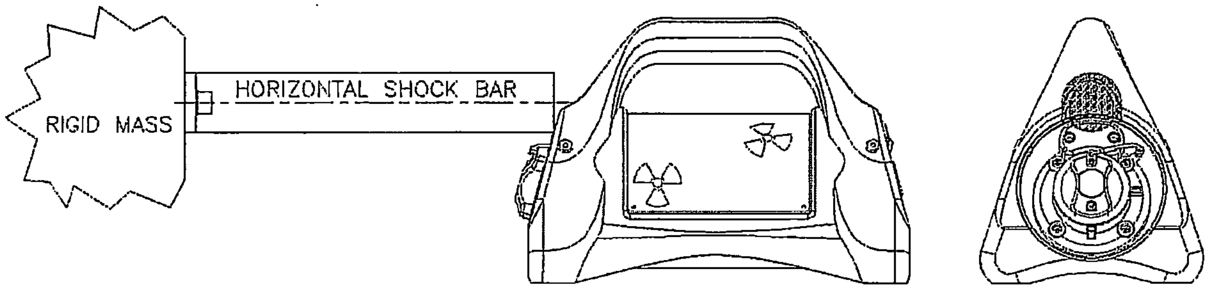

Free Drop Test
10CRF71

Test Specimen:

Drawing No. ____________________ Rev. _______ Serial Number: ____________

Test weight ________________________ Scale Used ____________________

Test Setup:

Set up per: 10CFR71 (71.73(1)) free drop test procedure.

Pictures: ____________

Notes:

____

____

Drop surface:

Drawing No. ____________________ Rev. _______ Location: ________________

Test Period:

Date & time: ____________________

Specimen Damage:

____

____

____

Recorded by:	Date:
Witnessed by:	Date:
Regulatory reviewed by:	Date:
Q.A. reviewed by:	Date:

Puncture Test
10CRF71

Test Specimen:

Drawing No. ____________________________ Rev. _______ Serial Number: _______________

Test weight _________________________________ Scale Used __________________________

Test Setup:

Set up per: 10CR71 (71.73(3)) puncture test procedure and assessed configuration.

Pictures: _______________

Notes (assessed configuration):

____

____

Drop surface:

Drawing No. ____________________________ Rev. _______ Location: _____________________

Test Period:

Date & time: __________________________

Specimen Damage:

____

____

____

Post test assessment:

____

____

Recorded by:	Date:
Witnessed by:	Date:
Regulatory reviewed by:	Date:
Q.A. reviewed by:	Date:

Penetration Test
10CRF71

Test Specimen:

Drawing No. ______________________________ Rev. ________ Serial Number: ________________

Test weight ____________________________________ Scale Used ____________________________

Test Setup:

Set up per: 10CR71 (71.71(10)) penetration test procedure.

Pictures: ________________

Notes:

____

____

Drop surface:

Drawing No. ______________________________ Rev. ________ Location: _______________________

Test Period:

Date & time: ____________________________

Specimen Damage:

____

____

____

Post test assessment:

____

____

Recorded by:	Date:
Witnessed by:	Date:

Horizontal Shock Test
ISO 3999-1

Test Specimen:

Drawing No. ______________________ Rev. ______ Serial Number: ____________

Test weight ___________________________ Scale Used ____________________

Test Setup:

Set up per: ISO 3999-1 (6.4.6.1) horizontal shock test procedure.

Pictures: ____________

Notes:

____

____

Horizontal Test Bar:

Drawing No. ______________________ Rev. ______ Location: _________________

Test Period:

Date & time: _____________________

Specimen Damage:

____

____

____

Post test assessment:

____

____

Recorded by:	Date:
Witnessed by:	Date:
Regulatory reviewed by:	Date:
Q.A. reviewed by:	Date:

Final Test Assessment

Test Specimen:

Serial Number(s): ______________________________

Foot Control Button evaluation:

Spring (61lb.): ______________________________
Spring (19lb.): ______________________________
Stainless steel components: ______________________________
F.C.B.A. working condition after Horizontal shock. ______________________________

Foot Control Button Assembly evaluation:

Is the F.C.B.A. in working condition?

Comments:

____
____
____
____
____
____
____
____
____
____
____
____
____

Engineering Review by:	Date:
SME Review by:	Date:
Regulatory Review by:	Date:
Q.A. Review by:	Date:

Final Test Assessment

Test Specimen:

Serial Number(s): ______________________________

Lock Mount Assembly evaluation:

Aluminum housing: ______________________________
Stainless steel insert: ______________________________
Corbin lock: ________________________
Lock Mount Assembly working condition after Horizontal shock. ____________

Lock Mount evaluation:

Is the lock mount assembly in working condition?

Comments:

____
____
____
____
____
____
____
____
____
____
____
____
____

Engineering Review by:	Date:
SME Review by:	Date:
Regulatory Review by:	Date:
Q.A. Review by:	Date:

10.0 Appendix: 10CFR71, ISO 3999-1, Technical Report #40, and F.C.B.A. Instruction Sheet.

2.12.7 Test Plan Report 74 (Feb 1998)

SENTINEL

TEST PLAN NO. 74

TEST PLAN COVER SHEET

TEST TITLE: Model 660 Hypothetical Accident Condition Tests

PRODUCT MODEL: 660 (with stainless steel screws)

ORIGINATED BY:	DATE: 17 DEC 1997

TEST PLAN REVIEW

ENGINEERING APPROVAL:	DATE: 17 Dec 97
QUALITY ASSURANCE APPROVAL:	DATE: 17 Dec 97
REGULATORY AFFAIRS APPROVAL: C. Rongman	DATE: 17 Dec 97

COMMENTS:

TEST RESULTS REVIEW

ENGINEERING APPROVAL:	DATE: 18 Feb 98
QUALITY ASSURANCE APPROVAL: Changes - CMR for KMA	DATE: 17 Feb 98 18 Feb 98
REGULATORY AFFAIRS APPROVAL: C. Rongman	DATE: 18 Feb 98

Amersham QSA

Test Plan #74 Results

This document describes the results of package design tests conducted for Hypothetical Accident Conditions (10 CFR 71.73) by Amersham to determine whether Model 660 Series projectors meet NRC requirements for Type B(U) packages.

The Model 660 Series includes the following models: 660, 660A, 660B, 660E, 660AE, and 660BE. Reference Certificate of Compliance 9033.

The tests were conducted in accordance with Amersham Test Plan #74 (dated December 16, 1997). The test plan also covers the criteria stated in IAEA, Safety Series 6 (1985, as amended 1990).

The purpose of the plan was to evaluate the performance of the Model 660 Series projectors that incorporate a proposed design change in which stainless steel end-plate screws are used instead of carbon steel screws.

This document reports on the manufacturing and acceptance of the test specimens, execution of the tests, test inspections, and assessment of the units as to their conformity with the requirements of 10 CFR 71.

Section 1 Transport Package Overview

The Model 660 Series projector consists of a source tube enclosed in a depleted-uranium shield, an end-plate with a lock assembly, a second end-plate with a storage plug assembly, four steel connecting rods, a sheet metal shell and foam packing material (Figure 1).

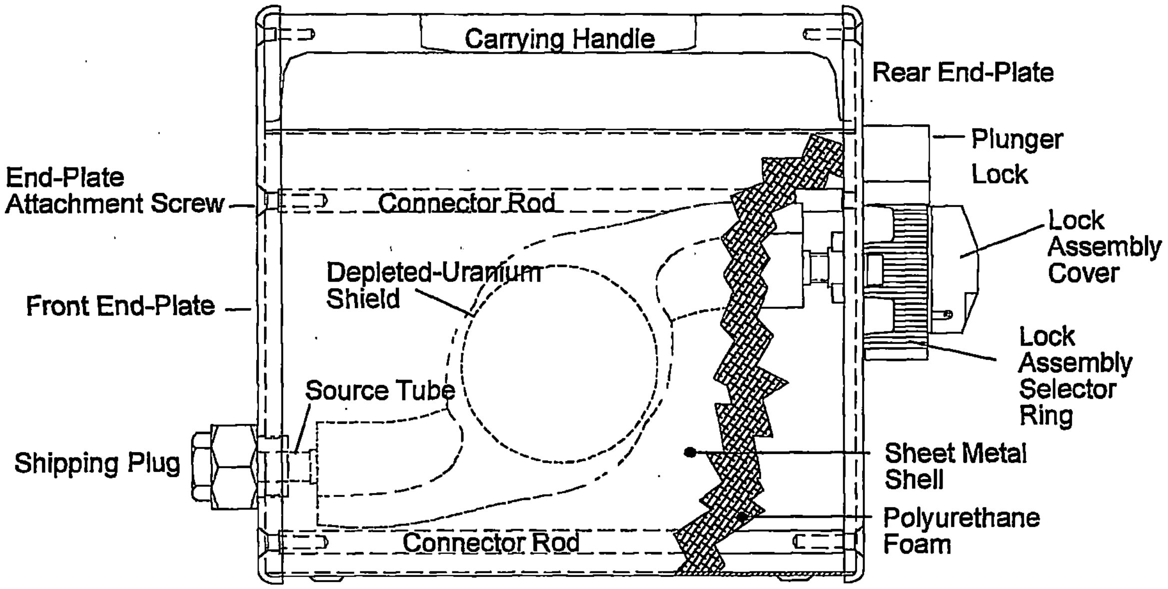

Figure 1: Side View of a Model 660 Series Projector

The shield consists of a 1/2-inch outside diameter source tube with its mid-section set in depleted uranium. One end of the source tube is inserted into a 1/2-inch hole in the lock assembly at the rear end-plate. The other end of the shield's source tube is inserted into another 1/2-inch hole in the shipping plug at the front end-plate. Both 1/2-inch holes allow enough radial clearance for a slip fitting attachment. There is approximately 1/8-inch axial clearance at the front end for assembly.

The source is contained in a special-form, encapsulated capsule assembly which is attached to the source wire assembly. This source wire assembly is secured in the package by the lock assembly. The lock assembly, in turn, is attached to the rear end-plate by four #10 stainless steel screws. There are two versions of the lock assembly used on the Model 660 series projectors. The size, material and location of the end-plate screws are identical on both versions.

The shield, end-plates and the sheet metal shell are connected by four 3/8-inch thick steel rods which are threaded at each end to accept 1/4-inch screws securing the end-plates to the rods.

A polyurethane foam is used to fill the space around the shield and to fill the void within the sheet metal shell. The foam acts as an impact absorber.

The depleted-uranium shield provides the primary radiation protection for the Model 660 Series projector. The shield accomplishes this by limiting the transmission of gamma rays to a dose level at or below 200 mR/hr at the package surface and limiting the dose level at or below 10 mR/hr at one meter from the surface of the package.

The location of the source relative to its stored position in the shield is also an important safety element. A large displacement of the source relative to its stored position could elevate the dose at the surface of the package above regulatory limits.

There are two possible scenarios to displace the source relative to its stored position:

- The shield could move away from the source if the source tubes were bent or fractured during testing.
- The source could move away from the shield if the lock assembly became loose or was removed from the end-plate or if the end-plates themselves became loose or were removed during testing.

The tests in this plan focused on damaging those components of the package which could cause the displacement of the source relative to its stored position within the shield.

Section 2 Test Specimen Production and Acceptance

The test units specified for this plan were seven test specimens manufactured for the Normal Transport Conditions testing under Test Plan #73.

The tests in Test Plan #74 were designed to further the damage inflicted on the units in Test Plan #73. The tests units were manufactured in the Amersham Burlington, Mass., facility in accordance with Amersham Drawing TP73, Rev. A.

As required in both test plans, the TP73 test units are standard Model 660B projectors with the following modifications:

- Shields weighing 37 to 39 pounds
- Supplemental lead added to the shield to increase shield assembly weight to 40 pounds
- Stainless steel screws used for end-plate fasteners instead of carbon steel screws
- End-plate screws with torque values set to either 10 in-lbs or 120 in-lbs

These modifications enabled us to produce test specimens that weighed at least 54 pounds, and to test the use of stainless steel end-plate screws as original equipment and as retrofit components.

Four test units (A, B, C and D) and three spares (S1, S2 and S3) were built according to the Drawing TP73, Rev. A. The units enabled us to test two different impact targets on units with end-plate screws set to different torque values (Table 1).

Table 1: TP73 Units

End-plate screw torque value	120 in-lbs (±10 in-lbs)	10 in-lbs (±2 in-lbs)
Impact bottom edge of rear plate	Specimens A, S1 and S3	Specimens C and S2
Impact top edge of front plate	Specimen B	Specimen D

The test specimens were manufactured in accordance with the Amersham Quality Assurance Program. The program provides for documentation of the manufacturing process, assures that the units comply with the relevant drawings and manufacturing instructions, and specifies radiological profiling of the completed product. Table 2 summarizes key manufacturing and profiling data.

Table 2: Test Specimen Manufacturing Data

Specimen	A	B	C	D	S1	S2	S3
Completion Date	12/16/97	12/16/97	12/16/97	12/16/97	12/16/97	12/16/97	1/6/98
Total Weight	55.1 lbs	54.9 lbs	55.3 lbs	54.9 lbs	54.8 lbs	55.1 lbs	55.3 lbs
Profile Data, Maximum Readings							
Package Surface (mR/hr)	142.5	142.5	133.0	133.0	152.0	152.0	147.0
At One Meter (mR/hr)	1.6	1.7	1.5	1.3	1.5	1.6	1.6

At the conclusion of Test Plan #73, representatives from Engineering, Quality Assurance and Regulatory Affairs reviewed test inspections and damage assessments on the test specimens. The assessment included radiation profiles on Specimens A, B, C, and D in accordance with Amersham Work Instruction Q09. The radiation profile worksheets are included in Appendix A. The maximum readings for each specimen are shown in Table 3. These readings, which are corrected for maximum capacity, demonstrate that the units met the requirements of 10 CFR 71.71 for normal conditions of transport.

Specimens S1, S2 and S3 were not subjected to Test Plan #73 testing until they were required as spares in Test Plan #74. The units were not profiled at the conclusion of the Normal Transport Conditions tests, as the purpose of the testing was to qualify the units for use in Test Plan #74 and profiling of A, B, C and D had already demonstrated conformity with 10 CFR 71.71 for all orientations.

Table 3: Maximum Readings from Test Plan #73 Final Test Inspection

Specimen	A	B	C	D	S1	S2	S3
Package Surface (mR/hr)	159.0	174.0	188.0	188.0	N/A	N/A	N/A
At One Meter (mR/hr)	1.4	1.2	1.5	1.3	N/A	N/A	N/A

Representatives from Engineering, Quality Assurance and Regulatory Affairs jointly confirmed that:

- The seven units selected for Test Plan #74 were adequately tested under Test Plan #73.
- There were no changes to the units since the final test inspections and assessments performed under Test Plan #73.
- No changes in orientation were required for the hypothetical accident conditions tests in Test Plan #74 because of damage sustained in Test Plan #73 testing.

Section 3 Hypothetical Accident Conditions

The TP73 test units underwent Hypothetical Accident Conditions tests in December 1997 and January 1998.

The testing demonstrated that the stainless steel end-plate screws maintained the end-plate connection throughout the tests. However, Specimen A had unacceptable radiation profile measurements after the thermal tests. Based on the data available, it is inconclusive whether the specimen failed because of a design flaw or because of damage incurred during handling and shipment.

This section describes the execution of the tests, results and the assessments made by representatives from Engineering, Regulatory Affairs and Quality Assurance.

3.1 Test Execution

The following Hypothetical Accident Conditions tests were conducted to meet the requirements of 10 CFR 71.73 and Test Plan #74:

- 30-foot free drop
- Puncture test
- Thermal test

Table 4 summarizes information about execution of the tests. In the table, package orientation is described as:

BRE	where the impact surface is the bottom edge of the rear end-plate
TFE	where the impact surface is the top edge of the front end-plate
NTP	for normal transport position, that is, resting on the bottom

Table 4: Hypothetical Accident Conditions Tests (10 CFR 71.73)

Specimen	A	B	C	D	S1	S2	S3
30-foot Free Drop (Valley Tree, Groveland, Mass.)							
Test Date	12/23/97	12/24/97	12/23/97	12/24/97	1/8/98	12/24/97	1/11/98
Attempts	One	One	One	Two	One	One	Two
Orientation	BRE	TFE	BRE	TFE	BRE	BRE	BRE
Comments	Good hit	Good hit	Missed hit Replaced by S2	1st hit on right side; 2nd hit good	Missed hit Replaced by S3	Good hit	1st hit toward base; 2nd toward lock

Table 4: Hypothetical Accident Conditions Tests (10 CFR 71.73) (Continued)

Specimen	A	B	C	D	S1	S2	S3
Puncture Test (Valley Tree, Groveland, Mass)							
Test Date	12/23/97	12/23/97	Not Tested	12/24/97	Not Tested	12/24/97	1/11/98
Attempts	One	One		One		One	One
Orientation	BRE	TFE	BRE	TFE	BRE	BRE	BRE
Thermal Test (Manufacturing Science, Oak Ridge, Tenn.)							
Test Date	12/30/97	Not Tested	See Note1	12/30/97	Not Tested	12/30/97	1/13/98
Orientation	NTP			NTP		NTP	NTP

Note 1: Specimen C was subjected to the thermal test only to provide information to help in evaluating other specimens.

Testing began on December 23, 1997, with the four units that were used in the first round of Test Plan #73 testing. In the 30-foot free drop, Specimen C missed its intended impact surface, and was replaced by Specimen S2. S2 underwent normal testing under Test Plan #73 and on December 24, 1997, began testing under Test Plan #74.

The puncture test orientation for Specimens B and D was changed after the 30-foot drop to impact the top edge of the front end-plate to induce more damage, specifically to peel back the area of the end-plate left by the removed handle.

Specimen B did not undergo the thermal test because it was not as damaged as the other units. Specifically, there was no opening between the end-plate and the package, and therefore, it would sustain less damage from thermal testing.

Specimens A, D and S2 underwent thermal testing on December 30, 1997. The units were positioned in the normal transport position, that is, upright and resting on the bottom, to allow optimal airflow in and around the open gap created by damage to the shell and end-plates.

The units were shipped to Amersham's Burlington, Mass., facility on January 2, 1998, for radiographs and profiling. Amersham personnel were not on site in Oak Ridge to supervise the packaging and shipment of the test units.

The radiographs after the thermal tests showed displacement of the shield relative to the positions shown in radiographs taken after the puncture tests. In all three cases, a significant portion of the displacement was on the horizontal plane, indicating that the movement may have been caused during handling or shipment from Oak Ridge to Burlington. The thermal test orientation for these specimens would not have caused movement in the horizontal plane.

Profile results of Specimen A showed 9.3 R/hr at one meter. The other units (Specimens B and D) were within acceptable levels. To determine whether handling during transport caused the failure of Specimen A, we prepared Specimen S1 for testing and planned to measure the source position after the thermal test and before shipment.

In the 30-foot free drop, Specimen S1 missed its impact surface, creating the need for another substitution. A new unit, Specimen S3, was built and subjected to testing under Test Plan #73. The new unit underwent the 30-foot free drop and puncture test on January 11 and the thermal test on January 13.

The Specimen S3 was radiographed on site to determine source location before shipment and then radiographed upon receipt in Burlington. Comparison of the two radiographs showed no significant movement of the source. Subsequently the unit passed the radiation profile.

3.2 Damage Inspections

The test units incurred levels of mechanical damage as a result of the 30-foot free drop that were seen in previous testing:

- The rear end-plates were bowed on Specimens A, S2 and S3, producing a 3/16-inch (maximum) gap between the shell and end-plate.
- The tops of both end-plates were bent on Specimens B and D. No gap was produced on B; there was a 1/2-inch (maximum) gap on D.
- End-plate corners were crushed on Specimens S1 and C when these units missed their target impact surfaces. Both units were replaced.

In addition, the handle of Specimen B broke.

No additional mechanical damage to the tested units was evident as a result of the puncture test.

All of the stainless steel end-plate screws, including those set to 10 in-lb torque values, held the end-plates to the connecting rods, and there was no breakage.

Inspection of the units, including radiographs, showed that they maintained their structural integrity throughout the 30-foot drop and puncture test, that is, the source remained in the secured and shielded position and the end-plate screws held.

Four units were subjected to the thermal test: A, D, S2 and S3. As expected, the handle melted on each of the four units, and all or some of the foam burned off. There was no substantial oxidation of the shields as occurred in Test Plan #70. The end-plate-screws held the end-plates to the package throughout the testing and did not allow for increased airflow around the shield.

3.3 Test Assessment

The primary area of interest was the performance of the stainless steel end-plate screws. The test proved that the design change resolves the problem of shield performance caused by oxidation as occurred in Test Plan #70 and reported in the Test Plan #70 Test Results. In Test Plan #70, the oxidation occurred when the end-plate was not fully secured because of the breaks in the carbon steel end-plate screws.

Appendix A includes the worksheets for the radiation profiles taken as part of the final test inspection. Table 5 shows the maximum radiation measured in these profiles. The readings have been corrected for maximum capacity.

Table 5: Maximum Readings from Test Plan #74 Final Test Inspection

Specimen	A	B	C	D	S1	S2	S3
Profile date	1/5/98	1/5/98	Not profiled	1/7/98	Not profiled	Not profiled	1/19/98
Package Surface (mR/hr)	3000	390		281			1862
At One Meter (mR/hr)	9300	2.7		4.7			9.3

The evaluation of Specimen A and the subsequent testing of Specimen S3 did not resolve whether the movement of the source from its ideal shielded position was the result of a design flaw or the result of damage caused in handling and transport of the package. We were unable to exactly replicate the mechanical damage to Specimen A.

The measurement after the S3 thermal test showed that the source had moved only 0.2 inch, which resulted in acceptable levels of radiation. Test inspection revealed that the source wire had severed. The Specimen A source wire did not break and remained engaged in the lock assembly when the shield moved, pulling the source from the center of the shield which provides maximum shielding.

Although Specimen S3 satisfactorily met all of the test requirements, the damage was not identical to to Specimen A, and therefore, it could not be used as a replacement for Specimen A.

No conclusion can be drawn as to whether the Specimen A failed because of transport damage.

3.4 Conclusions

Based on the testing performed under Test Plan #74, the team concluded that:

- The stainless steel end-plate screws satisfactorily met all of the test requirements and the screws should be used on all Model 660 Series projectors.
- The torque value of the screws is not a significant factor in their performance and retrofitting of projectors with new screws can be accomplished in the field.
- Because of the difficulty of replicating specific mechanical damage, continued testing of TP73 units will probably not resolve the question of whether Specimen A failed because of design or damage from handling.
- Amersham should proceed with design evaluation *as if* Specimen A had failed because of its design, and examine design changes that would restrict shield movement during thermal testing.

Appendix A: Radiation Profile Worksheets

SENTINEL

660/660B DEVICE PROFILING FORM

B3587 LMA 12Jan98

Device Model No.: 660B Device Serial No.: TP73"A" ~~After~~ Thermal

Model ~~424-9~~ Ti0163 Source Serial Number: X0016 Activity: 93.2 Ci

<500 mR/hr ~~Surface~~ Survey Instrument: AN/PDR 27T Serial No: SM-392401 Cal Due: 3/18/98

k) ≥ 500 mR/hr ~~One Meter~~ Survey Instrument: Tech-50 Serial No: B-814-S Cal Due: 7/22/98

Capacity Corr. Factor
1.5

SURFACE READINGS
mR/hr

	Extrapolated ~~Allowed~~ for Capacity only	Actual
TOP	780	520*
RIGHT	3 R/hr	2 R/hr*
FRONT	40.5	27
LEFT	3 R/hr	2 R/hr*
REAR	3 R/hr	2 R/hr*
BOTTOM	1.8 R/hr	1.2 R/hr*

ONE METER READINGS
mR/hr

	Extrapolated ~~Allowed~~	Actual
TOP		
RIGHT		
FRONT	1.4	0.9
LEFT		
REAR	9.3 R/hr	6.2 R/hr*
BOTTOM	18	12.0

>1 R/hr. No add'l measurements taken on device.

INSPECTOR: DATE: 5 Jan 98 NCR No.:

Comments:

- No surface corrections made. Actual surface enclosed in plastic bagging which varied in thickness from ½-1".
- Surface doses for general info only. Primary purpose of profile was for 1 meter readings. Surface levels on sides and rear may be higher than recorded. Radiation was a finely collimated beam from S-tube out the rear of the device which was difficult to quantify precisely without receiving

VA 12Jan98

Amersham QSA

WI-Q05

SENTINEL

660/660B DEVICE PROFILING FORM

B3588 (KNA) 12 Jan 98

Device Model No.: 660B Device Serial No.: TP73 "B" ~~After Thermal~~ After 30 Ft & Puncture LP 5 Jan

Model ~~424-9~~ TT0163 Source Serial Number: X0016 Activity: 93.2C

Surface Survey Instrument: AN/PDR 27T Serial No: SM-392401 Cal Due: 3/18/98

One Meter Survey Instrument: Same Serial No: – Cal Due: –

* Non-leaded plug used during profile.

Capacity Corr. ~~Factor~~ 1.50

SURFACE READINGS
mR/hr

	Surf Corr fact	~~Allowed~~ Extrapolated	Actual
TOP	1.16	104.4	60
RIGHT	1.28	153.6	80
FRONT	1.13	389.9	230
LEFT	1.28	115.2	60
REAR	1.13	152.6	90
BOTTOM	1.19	107.1	60

ONE METER READINGS
mR/hr

	~~Allowed~~ Extrapolate	Actual
TOP	1.0	0.7
RIGHT	0.9	0.6
FRONT	2.7	1.8
LEFT	0.75	0.5
REAR	1.5	1.0
BOTTOM	0.9	0.6

INSPECTOR: DATE: 5 Jan 98 NCR No.:

Comments:

(KNA) 12 Jan 98

Amersham QSA

WI-Q05

SENTINEL

660/660B DEVICE PROFILING FORM

B3590 (KNA) 12 Jan 98

Device Model No.: 660B **Device Serial No.:** TP73 "D" After Thermal

Model ~~424-9~~ T70/63 **Source Serial Number:** X0016 **Activity:** 89.7 Ci

Surface Survey Instrument: Bicron Tech-50 **Serial No:** B-814-5 **Cal Due:** 7/22/98

One Meter Survey Instrument: Same **Serial No:** - **Cal Due:** -

Capacity Corr. Factor
1.56

SURFACE READINGS
mR/hr

	Allowed	Actual
TOP		130
RIGHT		180
FRONT		80
LEFT		50
REAR		90
BOTTOM		50

ONE METER READINGS
mR/hr

	Extrapolated ~~Allowed~~	Actual
TOP	2.3	1.5
RIGHT	1.9	1.2
FRONT	2.7	1.7
LEFT	2.2	1.4
REAR	4.7	3.0
BOTTOM	1.7	1.1

INSPECTOR: **DATE:** 9 Jan 98 **NCR No.:**

Comments:

* Surface of unit enclosed in multiple layers of plastic bags for contamination control of Uranium oxide. Thickness varies from 1/4" to 1".

* Surface readings taken for exposure control and general information purposes only.

(KNA) 12 Jan 98

Amersham QSA

SENTINEL

660/660B DEVICE PROFILING FORM

TP74 +
TP73 "53"

Serial# B3586
KMA 21 Jan 98

Device Model No.: 660B Device Serial No.: After Thermal

Model T10163 ~~424-9~~ Source Serial Number: X0017 Activity: 105.0 C.

Surface Survey Instrument: AN/PDR-27T Serial No: SM-392401 Cal Due: 18 Mar 98

One Meter Survey Instrument: AN/PDR-27T Serial No: SM-392401 Cal Due: 18 Mar 98

Capacity Corr. Factor
1.33

SURFACE READINGS
mR/hr

	~~Allowed~~	Actual
TOP		70 mR/hr
RIGHT		80 mR/hr
FRONT		940 mR/hr Δ
LEFT		110 mR/hr
REAR		1400 mR/hr Δ
BOTTOM		130 mR/hr

ONE METER READINGS
mR/hr

	Extrapolated ~~Allowed~~	Actual
TOP	1.9	1.4 mR/hr
RIGHT	1.5	1.1 mR/hr
FRONT	5.6	4.2 mR/hr
LEFT	1.3	1.0 mR/hr
REAR	9.3	7.0 mR/hr
BOTTOM	1.6	1.2 mR/hr

INSPECTOR: DATE: 19 Jan 98 NCR No.: NA

Comments:

* Surface readings taken for exposure control and general information purposes only.

Δ Measurements taken with Model # ND 3000, S/N 9837 (Next cal date 23 Sept 98) 19 Jan 98

Amersham QSA

Table of Contents

List of Figures and Tables

Amersham Test Plan #74

This document describes additional package design testing for Sentinel Model 660 Series projectors to meet NRC requirements for Type B(U) packages under Hypothetical Accident Conditions (10 CFR 71.73). Testing under Normal Transport Conditions (10 CFR 71.71) is described in Amersham Test Plan #73.

The test plan also covers the criteria stated in IAEA, Safety Series 6 (1985, as amended 1990). Quality Assurance will be involved in all aspects of this test plan and its execution.

The Model 660 Series includes the following models: 660, 660A, 660B, 660E, 660AE, and 660BE. Reference Certificate of Compliance 9033.

The tests in this plan evaluate a Model 660 Series design change that resulted from tests performed under Amersham Test Plan #70. In that testing, the 30-foot free drop caused failure of the end-plate screws on Specimen D, and subsequent oxidation and loss of the shield during the thermal test. The design change involves the use of stainless steel end-plate screws instead of the carbon steel screws used in the Test Plan #70 specimens.

We are specifying Military Standard screws, MS 51959-81 (1/4-20 x 3/4" long). The specification is included in Appendix B: Selected Fasteners. The tensile strength of these screws is twice that of the nominal strength of the carbon steel screws (110,000 psi versus 55,000 psi). In addition, at room temperature, the toughness of stainless steel is 40% greater than that of carbon steel; at -40° C, the stainless steel's toughness is four times greater than carbon steel's. Refer to the toughness versus temperature curve in Appendix B: Selected Fasteners.

As noted in the failure analysis by Packaging Technology, Inc. (November 25, 1997), the Specimen D shield experienced a deceleration of 200g in the 30-foot free drop in Test Plan #70. If the two end-plate screws closest to the lock assembly experience the full extent of the shield deceleration load, the tensile stress induced in these screws is calculated as follows:

$$\begin{aligned} \text{stress} &= \text{(shield mass) (impact deceleration) / tensile area} \\ &= \text{(40 lbs) (200g x cos 39°) / (2 x 0.0318 in}^2\text{)} \\ &= \text{97,800 psi} \end{aligned}$$

The induced stress is less than the ultimate strength of the two stainless steel screws (110,000 psi).

This document outlines the testing scenario, justifies the package orientations, and provides test worksheets to record key steps in the testing sequence.

1.0 Current Transport Package Overview

The Model 660 Series projector consists of a source tube enclosed in a depleted-uranium shield, an end plate with a lock assembly, a second end plate with a storage-plug assembly, four steel connecting rods, a sheet metal shell and foam packing material (Figure 1).

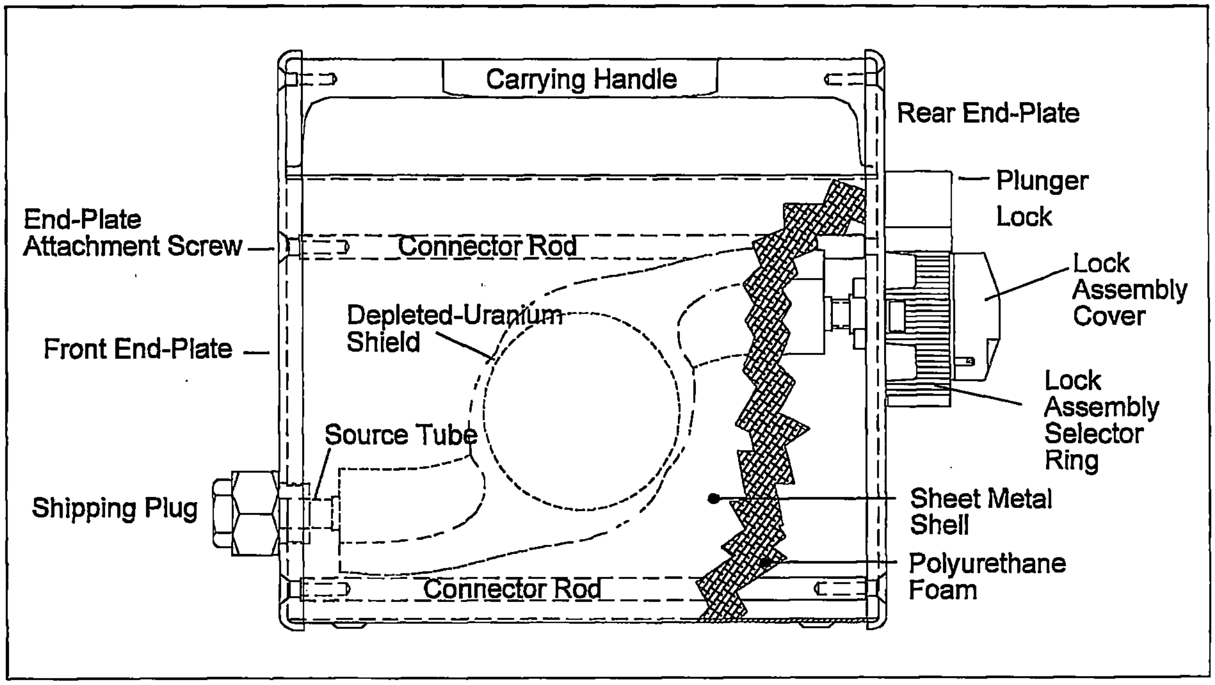

Figure 1: Side View of a Model 660 Series Projector

The shield consists of a 1/2-inch outside diameter source tube with its mid-section set in depleted uranium. One end of the source tube is inserted into a 1/2-inch hole in the lock assembly at the rear end-plate. The other end of the shield's source tube is inserted into another 1/2-inch hole in the shipping plug at the front end-plate. Both 1/2-inch holes allow enough radial clearance for a slip fitting attachment. There is approximately 1/8-inch axial clearance at the front end for assembly.

The source is contained in a special-form, encapsulated capsule assembly which is attached to the source wire assembly. This source wire assembly is secured in the package by the lock assembly. The lock assembly, in turn, is attached to the rear end-plate by four #10 stainless steel screws. There are two versions of the lock assembly used on the Model 660 series projectors. The size, material and location of the end-plate screws are identical on both versions.

The shield, end plates and the sheet metal shell are connected by four 3/8-inch thick steel rods which are threaded at each end to accept 1/4-inch screws securing the end plates to the rods.

A polyurethane foam is used to fill the space around the shield and fill void within the sheet metal shell. The foam acts as an impact absorber.

The depleted-uranium shield provides the primary radiation protection for the Model 660 Series projector. The shield accomplishes this by limiting the transmission of gamma rays to a dose level at or below 200 mR/hr at the package surface and limiting the dose level at or below 10 mR/hr at one meter from the surface of the package. A fracture of the shield could compromise this protection.

The location of the source relative to its stored position in the shield is also an important safety element. A large displacement of the source relative to its stored position could elevate the dose at the surface of the package above regulatory limits.

There are two possible scenarios to displace the source relative to its stored position:

- The shield could move away from the source if the source tubes were bent or fractured during testing.
- The source could move away from the shield if the lock assembly became loose or was removed from the end plate or if the end plates themselves became loose or were removed during testing.

The tests in this plan focus on damaging those components of the package which could cause the displacement of the source relative to its stored position within the shield and which affect the integrity of the shield itself.

2.0 Purpose

The purpose of this plan, which was developed in accordance with Amersham SOP-E005, is to test and evaluate modifications to the Model 660 Series projectors so that the Type B transport package requirements of 10 CFR 71 are met.

The series includes these models: 660, 660A, 660B, 660E, 660AE, and 660BE. Refer to Appendix A for descriptive drawings of these models.

The Normal Transport Conditions tests (10 CFR 71.71) have been performed on the test specimens as part of Amersham Test Plan #73. These tests included the compression test, penetration test and four-foot free drop.

The Hypothetical Accident Conditions tests (10 CFR 71.73) to be performed are the 30-foot free drop, puncture test, and thermal test.

The crush test (10 CFR 71.73(c)(2)) is not performed because the radioactive contents are special-form radioactive material.

The immersion test and all other conditions specified in 10 CFR 71 will be separately evaluated in accordance with Amersham Work Instruction WI-E08.

3.0 System Failure of Interest

The possible system failure tested in this plan is the failure of the end-plate screws. Failure of the end-plate screws on either plate could cause exposure of the shield to damage during the thermal test, especially if the foam burns.

Two package orientations are specified in this plan:

- Specimen D orientation in Test Plan #70, the orientation that caused the end-plate screw failure.
- Inversion of the Test Plan #70 Specimen D orientation. The impact surface is the top edge of the front plate.

Other orientations that were considered but rejected include:

- End plate sides. Because these surfaces are curved, they provide very small impact surfaces compared to the top or bottom edge of either plate.
- Top edge of the rear plate. The load on the screws provided by this orientation would be less than the load created by the orientation for Specimens B and D.

Figure 2 through Figure 5 show the four possible orientations to impact either the top or the bottom edge of an end-plate. With each figure is a calculation of the loading on the screws of interest. The calculations assume that the end plate is attached only at point **a**.

For sake of illustration, the calculations use 56 pounds for the vertical force. In the calculations:

$\mathbf{f_x}$ is the component force loading parallel with the axis of the screws.

$\mathbf{f_y}$ is the component force loading perpendicular to the axis of the screws.

Summing the moments around the impact point (**r**) and equating it to zero determines the resultant force at the point of the screws (**a**).

Figures 3 and 4 demonstrate the worst-case loading on the end-plate screws of interests. These are the orientations selected for this test plan.

Two units are to be tested with each orientation, one with the end-plate screws torqued to 120 in-lbs (±10 in-lbs), the other with the end-plate screws tightened to 10 in-lbs (±2 in-lbs).

The orientations in this test plan are designed to further the damage to the end-plate screws caused during the execution of Test Plan #73.

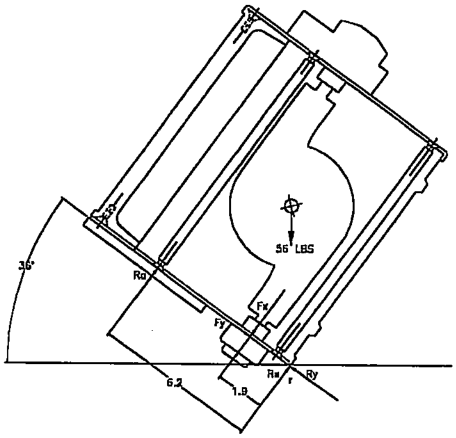

Fx = 56 COS (36°) = 45 LBS
Fy = 56 SIN (36°) = 33 LBS
Mr = 0 = (1.9)*(45) − (6.2)*(Ra) = 0
Ra = 13.8 LBS
IMPACT ON BOTTOM FRONT EDGE

Figure 2: Impact on Bottom Edge of Front End Plate

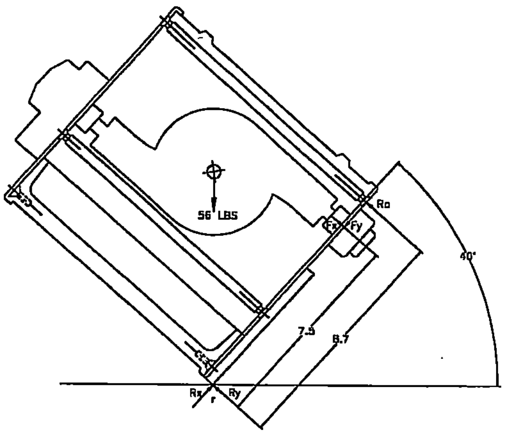

Fx = 56 COS (40°) = 43 LBS
Fy = 56 SIN (40°) = 36 LBS
Mr = 0 = (7.5)*(43) − (8.7)*(Ra) = 0
Ra = 37.1 LBS
IMPACT ON TOP FRONT EDGE
(ORIENTATION B&D)

Figure 3: Impact on Top Edge of the Front Plate

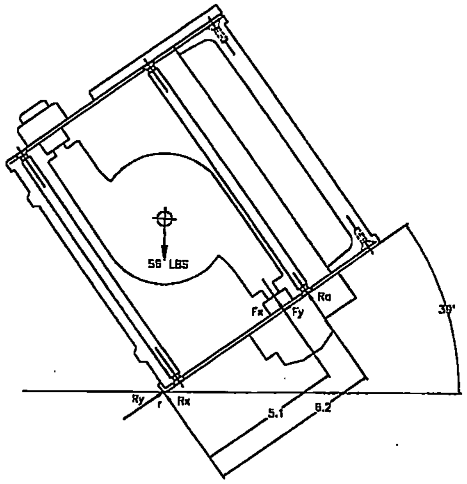

$$Fx = 56 \cos(39^\circ) = 44 \text{ LBS}$$
$$Fy = 56 \sin(39^\circ) = 35 \text{ LBS}$$
$$Mr = 0 = (5.1)*(44) - (6.2)*(Ro) = 0$$
$$\boxed{Ro = 36.2 \text{ LBS}}$$

IMPACT ON BOTTOM REAR EDGE
(ORIENTATION A&C)

Figure 4: Impact on Bottom Edge of Rear Plate

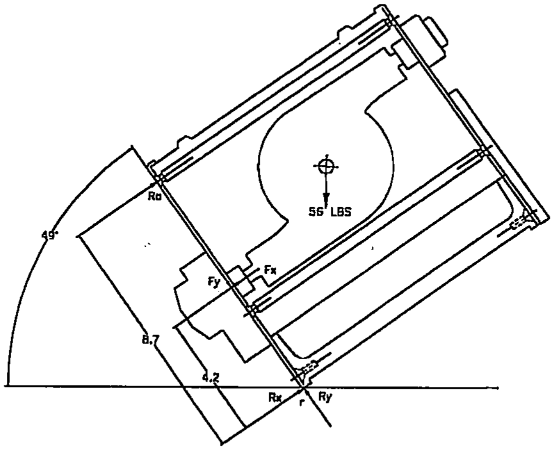

$$Fx = 56 \cos(49^\circ) = 37 \text{ LBS}$$
$$Fy = 56 \sin(49^\circ) = 42 \text{ LBS}$$
$$Mr = 0 = (4.2)*(37) - (8.7)*(Ro) = 0$$
$$Ro = 17.9 \text{ LBS}$$

IMPACT ON TOP REAR EDGE

Figure 5: Impact on Top Edge of the Rear Plate

4.0 Construction and Condition of Test Specimens

The test specimens will be the Model 660B units built for the Normal Transport Conditions tests in Test Plan #73. These units were constructed in accordance with Amersham Drawing TP73, Rev. A (Drawing TP73). With the exception of the stainless steel end-plate screws, the units specified in Drawing TP73 are in accordance with the NRC-approved design.

Drawing TP73, specifies the Model 660 Series in its worst-case transport condition, that is, with supplemental lead added to the shield. The added weight induces higher loads during dynamic testing.

For the 30-foot free drop and the puncture tests, the test temperature of specimen must be at or below -40° C at the time of each test, a minimum temperature required by IAEA, Safety Series 6 (1985, as amended 1990). The low temperature represents the worst-case condition for the package because of the potential for reduction in strength of the end-plate screws.

Four test units and two spares were built according to the Drawing TP73 and the Amersham Quality Assurance Program:

End-plate screw torque value	120 in-lbs (±10 in-lbs)	10 in-lbs (±2 in-lbs)
Impact bottom edge of rear plate	Specimen A	Specimen C
Impact top edge of front plate	Specimen B	Specimen D
Spare unit	Specimen S1	Specimen S2

- The tests for Specimens A and C attack the end-plate screws by targeting the bottom edge of the rear end-plate.
- The tests for Specimens B and D attack the top edge of the front plate.

The package orientations specified in this plan are designed to further the damage inflicted on the TP73 test units in testing under Normal Transport Conditions.

NOTE: *Because each test is designed to add to damage inflicted on a specific component or assembly in the preceding test, it is important that each specimen maintain its identity throughout the battery of tests and that the setup instructions specific to the specimen are strictly followed.*

Table 1 lists the differences between the test specimens and other 660 Series models.

Table 1: Model 660 Series Variations

Feature	Test Specimen per Drawing TP73	660 Series Models
Shell Material	Stainless steel	Models 660AE, 660BE and 660E have wires and connectors attached to ends plates for automatic actuation. Models 660, 660A and 660B do not have actuator wires and connectors.
Lock Assembly	Posilok™	The Model 660 and 660E use a non Posilok lock assembly. All other models feature the Posilok lock assembly.
Actuator Wires and Connectors	No actuator wires and connectors	Models 660AE, 660BE and 660E have wires and connectors attached to ends plates for automatic actuation. Models 660, 660A and 660B do not have actuator wires and connectors.
Shield Capacity	140 Curie	The following models have 120-Curie capacity shields: 660, 660A, 660AE and 660E. The following models have 140-Curie capacity shields: 660B and 660BE.
Body Width	Standard width (5 1/4 inches)	Some Model 660s and Model 660Es have a narrow-body design (4 3/4 inches wide). All other models only use the standard-width body (5 1/4 inches).
Source Tube Material	Titanium	Prior to 1980, the Models 660, 660A, 660AE and 660E were manufactured with zircaloy source tubes. All other units have titanium source tubes.
Use of Lead	Supplemental lead added	Prior to June 1992, some units in the Model 660 Series had lead added to supplement the shielding. The maximum amount of lead added was three pounds. The amount was also limited by a maximum shield weight of 40 pounds and a maximum package weight of 56 pounds.
Weight	54 pounds minimum	Over the last five years, the average package weight has been approximately 50 pounds. Earlier in the product history, the average weight was approximately 53 pounds.
End-plate fasteners	Stainless steel screws MS 51959-81	Standard Model 660 Series projectors have commercial carbon steel end-plate screws.

Table 1: Model 660 Series Variations (Continued)

Feature	Test Specimen per Drawing TP73	660 Series Models
End-plate screw torque value	Specimens A, B and S1 end-plate screws tightened to 120 in-lbs (±10 in-lbs) Specimens C, D and S2 end-plate screws tightened to 10 in-lbs (±2 in-lbs)	Carbon steel screws used in the standard Model 660 Series projectors are torqued to 80 in-lbs (±10 in-lbs)

The differences listed in Table 1 impact the testing or are made for the following reasons:

- **Shell Materials**: The shell thickness is 1/16-inch for the carbon steel and stainless steel versions. The likelihood of a crack or brittle flaw increases with the thickness of the section and is a problem in sections greater than 1/8-inch. Additionally, the temperature for transition from ductile to brittle failure is lower for the thinner sections. The thicker carbon steel end plates will reach the ductile-to-brittle transition temperature long before the shell does. The end plates are structural members, while the shell is not structurally significant.

- **Lock Style**: Damage to the Posilok lock assembly used on the test specimen would represent damage to any Model 660 Series lock assembly, including the non Posilok style assemblies used on the Model 660 and the Model 660E.

  The internal components of both lock assemblies are protected by the same lock assembly cover and practically the same selector ring. The cover and selector ring must be significantly damaged before an impact can disrupt the internal components' securement of the source. Because of the strength of the cover and the selector ring, damage to the source securement is more likely to occur from the failure of the lock assembly screws. All models use the same type and size screws in the same locations.

- **Actuator Wires and Connectors:** The additional parts used for automatic actuation provide no structural support.

- **Shield Capacity:** The lower-capacity shields are either lighter than or the same weight as the shield used on the Model 660B, making the 660B the worst case for shield failures of interest in these tests.

- **Body Width:** The end plates and shells of the narrow-body versions of the Model 660 and the Model 660E would provide smaller impact surfaces than the standard-width plates and shell used in the test specimen. The smaller impact surfaces would result in greater surface deformation and less deceleration on impact. As a result there would be less transfer of impact forces that could affect the integrity of the source securement.

- **Source Tube Material:** The Model 660 Series projectors have been manufactured with titanium source tubes exclusively since 1980. Because this represents our current manufacturing methods and because the majority of Model 660 Series units currently in use have titanium source tubes, the test specimens will be manufactured with titanium source tubes. Based on an evaluation of the damage caused by the tests, we will assess the implications for previously fabricated packages which utilized zircaloy.

  Note that although listed on the descriptive drawings, stainless steel source tubes have never been used in the fabrication of Model 660 Series units, nor do we intend to use them in future fabrication.

- **Supplemental Lead:** Prior to June 1992, supplemental lead was used in the production of Model 660 Series projectors with the depleted-uranium shield. Although the addition of supplemental lead is no longer a production technique, the test specimens will be fabricated with the supplemental lead to ensure the maximum device mass.

- **Package Weight:** Because of more efficient casting and the elimination of supplemental lead shielding, the average weight of Model 660 units produced in the last five years is three pounds less than the average weight for units produced in the early years of the series history. Two steps will be taken to build test specimens that will weigh at least 54 pounds:

  - Heavier depleted-uranium shields will be fabricated.
  - Supplemental lead will be added to the shield.

  The TP73 will be consistent with current manufacturing procedures and will represent the heavier units in the Model 660 population. Ninety-seven percent of all 660 units produced weigh 54 pounds or less.

- **End-plate screws:** Stainless steel end-plate screws are being used on the TP73 to test the ability of these fasteners to prevent the failure of the end-plate screws seen in TP70 Specimen D.

- **End-plate screw torque values:** The greater strength of the selected stainless steel end-plate screws allows tightening to a higher torque value than the carbon steel screws. The higher value is being tested with Specimens A and B to evaluate a new manufacturing standard. A low torque value is being tested with Specimens C and D to simulate an untorqued assembly.

5.0 Material and Equipment List

The test worksheets in Section 7.0 list the key materials and equipment specified in 10 CFR 71 and the necessary measurement instruments.

When video recording is specified in the following tests, select video cameras with the highest shutter speed practical to record testing.

Additional materials and equipment may be used to facilitate the tests.

6.0 Test Procedure

Four units are tested in parallel with the same sequence but with two different package orientations that test the use of stainless steel end-plate screws, as described in Section 3.0. The tests have the following sequence:

1. Test specimen preparation and inspection
2. 30-foot free drop (10 CFR 71.73(c)(1))
3. Puncture test (10 CFR 71.73(c)(3))
4. Intermediate test inspection
5. Thermal test (10 CFR 71.73(c)(4))
6. Final test inspection

6.1 Roles and Responsibilities

The responsibilities of the groups identified in this plan are:

- Engineering executes the tests according to the test plan and summarizes the test results. Engineering also provides technical input to assist Regulatory Affairs and Quality Assurance as needed.
- Regulatory Affairs monitors the tests and reviews test reports for compliance with regulatory requirements.
- Quality Assurance oversees test execution and test report generation to ensure compliance with 10 CFR 71, other regulatory requirements and the Amersham Quality Assurance Program.
- Engineering, Regulatory Affairs and Quality Assurance are jointly responsible for assessing test and specimen conditions relative to 10 CFR 71.
- Quality Control, a function that reports directly to Quality Assurance, is responsible for measuring and recording test and specimen data throughout the test cycle.
- The managers directly responsible for Engineering, Regulatory Affairs and Quality Assurance will identify and document personnel who are qualified to represent their departments in carrying out this test plan.

6.2 Test Specimen Preparation and Inspection

To prepare the test units:

1. Select the units tested under Amersham Test Plan #73.
2. Inspect the test units to ensure that they match the units described on the Test Plan #73 worksheets and attached damage assessments.
3. Confirm that a radiation profile was performed and recorded in accordance with Amersham Work Instruction WI-Q09 at the conclusion of Test Plan #70.
4. Measure and record the weight of each test specimen.
5. Prepare the packages for transport.

6.3 30-foot Free Drop Test (10 CFR 71.73(c)(1))

The first Hypothetical Accident Conditions test is the 30-foot free drop as described in 10 CFR 71.73(c)(1). This drop compounds any damage caused in the three Normal Transport Conditions tests in Test Plan #73.

Use *Checklist 1: 30-foot Free Drop* on page 27 to ensure that the test sequence is followed. Date and initial all action items, and record required data on the worksheet.

Figure 6 illustrates the orientation for Specimens A and C. Figure 7 shows the orientation for Specimen B and D. The orientations are the same as those for the four-foot free drop in Test Plan #73 except the package is raised 30 feet above the drop surface.

This test requires that test specimens be at or below -40° C at the time of the drop. Follow the Worksheet instructions for measuring and recording the specimen temperature before and after the drop.

6.3.1 30-foot Free Drop Setup

To set up a package for the 30-foot drop test:

1. Use the drop surface specified in Drawing AT10122, Rev B.
2. Measure and record the weight of test specimen.
3. Measure and record the specimen's internal and surface temperature, and ensure that the package is at or below -40° C.
4. Place the specimen on the drop surface and position it according to the appropriate orientation.

   Refer to Figure 6 for Specimens A and C.

   Refer to Figure 7 for Specimens B and D.
5. Align the selected center-of-gravity marker as shown in the referenced drawing.
6. Raise the package so that the impact target is 30 to 32 feet above the drop surface.

6.3.2 Orientation for the 30-foot Free Drop: Specimens A & C

Figure 6 shows the package orientation for Specimens A and C for the 30-foot free drop.

This orientation targets the bottom edge of the rear end-plate with the objective of loosening or shearing the end-plate screws which hold the plate to the steel connecting rods. The bottom edge of the plate provides the greatest surface area for a direct hit, and thus the most rapid deceleration, and was proven to be the most damaging to the unit during previous testing in Test Plan#70.

Make sure the center of gravity is directly over the point of impact.

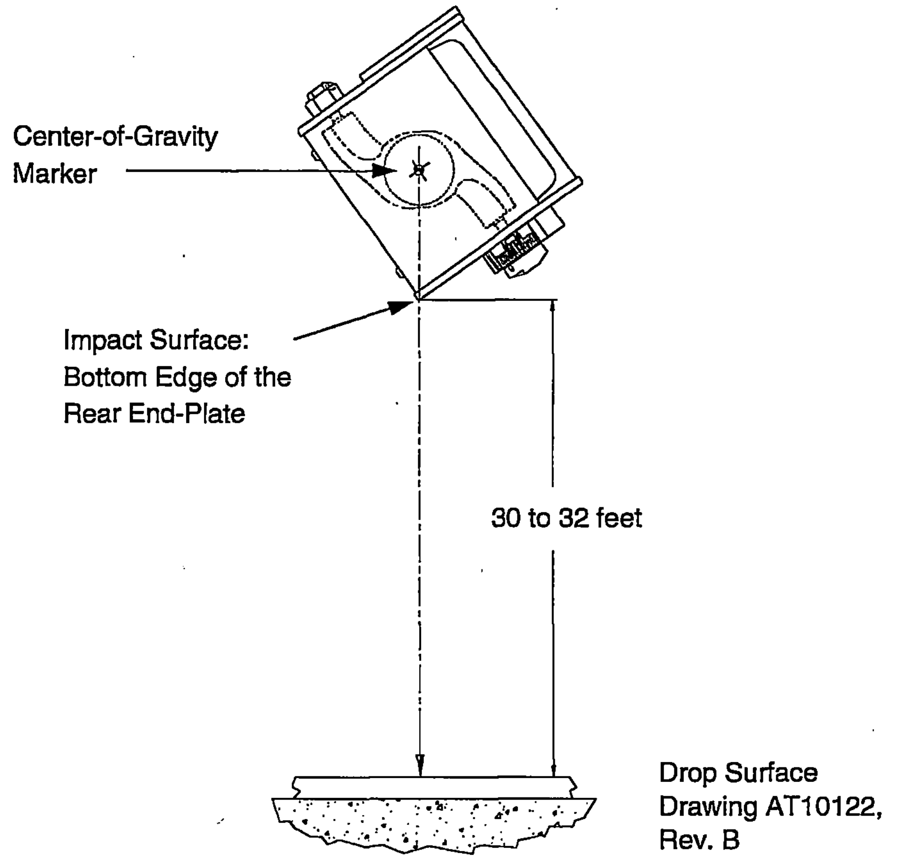

Figure 6: Orientation for the 30-foot Free Drop: Specimens A & C

6.3.3 Orientation for the 30-foot Free Drop: Specimens B & D

Figure 7 shows the package orientation for Specimens B and D for the 30-foot free drop.

This orientation targets the top edge of the front end-plate. The drop is designed to cause deformation of the end plate, which in turn will create multiple loads paths on the end-plate screws.

Make sure the center of gravity is directly over the point of impact.

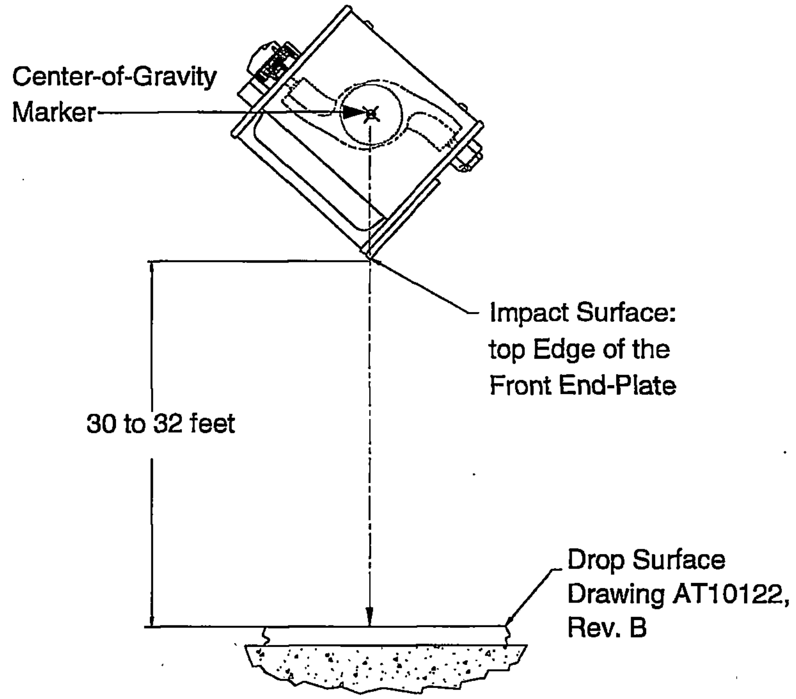

Figure 7: Orientation for the 30-foot Free Drop: Specimens B & D

6.3.4 30-foot Free Drop Test Assessment

Upon completion of the test, Engineering, Regulatory Affairs and Quality Assurance team members will jointly perform the following tasks:

- Review the test execution to ensure that the test was performed in accordance with 10 CFR 71. Units S1 and S2 may need to be tested, possibly with torque adjustments, to ensure test compliance.
- Make a preliminary evaluation of the specimen relative to the requirements of 10 CFR 71.
- Assess the damage to the specimen to decide whether testing of that specimen is to continue.
- Evaluate the condition of the specimen to determine what changes are necessary in package orientation in the puncture test to achieve maximum damage.

6.4 Puncture Test (10 CFR 71.73(c)(3))

The 30-foot free drop is followed by the puncture test per 10 CFR 71.73(c)(3), in which the package is dropped from a height of at least 40 inches onto the puncture billet specified in Drawing CT10119, Rev. C.

The billet is to be bolted to the drop surface used in the free drop tests (Figure 8).

Use *Checklist 2: Puncture Test* on page 31 to ensure that test sequence is followed. Date and initial all action items, and record required data.

6.4.1 Puncture Test Setup

There are two different package orientations for the puncture test. Each orientation assures that the package lands on the component or assembly of interest.

NOTE: *Because each test is designed to add to damage inflicted on a specific component or assembly in the preceding test, it is important that each specimen maintain its identity throughout the battery of tests and that the setup instructions specific to the specimen are strictly followed.*

This test requires that the test specimens be at or below -40° C at the time of the test. The worksheet calls for measuring and recording the specimen temperature before and after the test.

This test uses the 12-inch high puncture billet (Drawing CT10119, Rev. C). The billet meets the minimum height (8 inches) required in 10 CFR 71.73(c)(3). The specimen has no projections or overhanging members longer than 8 inches which could act as impact absorbers, thus allowing the billet to cause the maximum damage to the specimen.

To set up a package for the puncture test:

1. Measure and record the weight of the package.
2. Measure and record the specimen's internal and surface temperature, and ensure that the package is at or below -40° C.
3. Position the unit according to the appropriate orientation:

   For Specimens A and C, refer to Figure 8 on Page 18.

   For Specimens B and D, refer to Figure 9 on Page 19.
4. Check the alignment of the specified center-of-gravity marker with the targeted point of impact.
5. Raise the package so that there is 40 to 42 inches between the package and the top of the puncture billet.

6.4.2 Orientation for the Puncture Test: Specimens A & C

The orientation for Specimens A and C (Figure 8) targets the bottom edge of the rear end-plate to distort the end plate and possibly loosen or shear the end-plate screws.

The bottom edge provides the largest unobstructed flat surface on the plate. The impact will crush the bottom of the end plate into the polyurethane foam, the softest material in the package, and cause the maximum distortion of the plate. Attacking the top edge was rejected because the flat surface area is less than half that of the bottom edge and the carrying handle would deflect much of the energy.

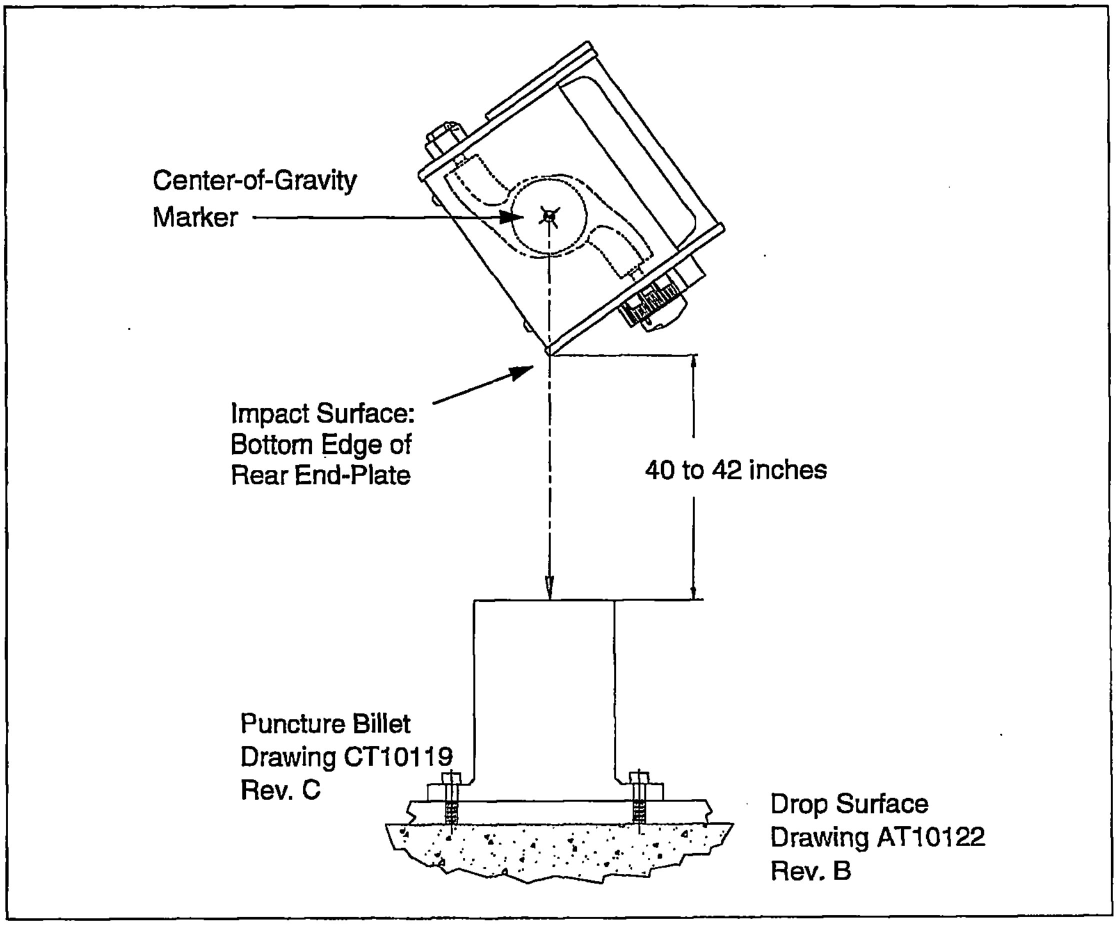

Figure 8: Orientation for the Puncture Test: Specimens A & C

6.4.3 Orientation for the Puncture Test: Specimens B & D

For Specimen B and D, the puncture test impact point is the lower left corner of the rear end-plate (Figure 9). This orientation continues the attack on the bottom left screw on the rear end plate that was inflicted with the penetration test and the two free drops. The impact will also have the effect of increasing any gap between the end plate and the shell caused by the previous tests.

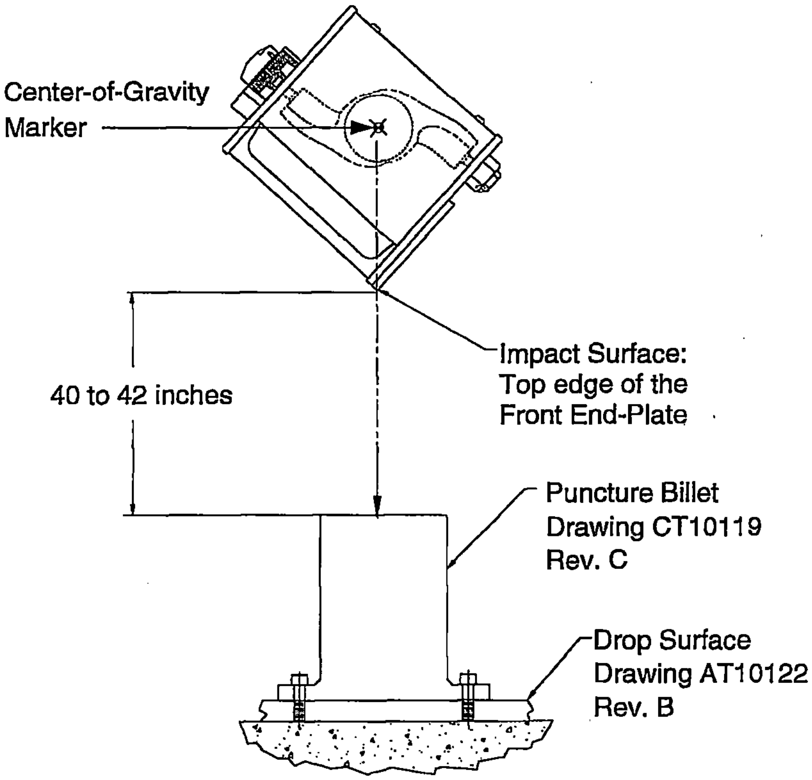

Figure 9: Orientation for the Puncture Test: Specimens B & D

6.4.4 Puncture Test Assessment

Upon completion of the test, Engineering, Regulatory Affairs and Quality Assurance team members will jointly perform the following tasks:

- Review the test execution to ensure that the test was performed in accordance with 10 CFR 71.73.
- Make a preliminary evaluation of the specimen relative to the requirements of 10 CFR 71.73.
- Assess the damage to the specimen to decide whether testing of that specimen is to continue.
- Evaluate the condition of the specimen to determine whether the thermal test should be performed with the specimen.
- Evaluate the condition of the specimen to determine the package orientation for the thermal test to achieve maximum damage.

As part of the evaluation, measure the weight of the specimen.

6.5 Intermediate Test Inspection

Perform an intermediate test inspection after the puncture test.

1. Measure and record any damage to the test specimen.
2. If a source can be installed without affecting the integrity of the test specimen, profile the package using an active source in accordance with Amersham Work Instruction WI-Q09.
3. Assess the significance of any change in radiation at the surface or at one meter from the package.

6.6 Thermal Test (10 CFR 71.73(c)(4))

The final requirement is the thermal test specified in 10 CFR 71.73(c)(4).

To ensure sufficient heat input to the test specimens, each specimen will be pre-heated to a temperature of at least 800° C and held to at least that temperature for 30 minutes. This test condition provides heat input in excess of the requirements specified in 10 CFR 71.73(c)(4), which does not include a pre-heat condition. The pre-heat condition assures equivalent heat input regardless of emissivity and absorptivity coefficients.

The test environment is a vented electric oven operating greater than 800° C. There will be sufficient air flow to allow combustion. Air will be forced into the oven at a minimum rate of 9.6 cubic feet per minute to ensure sufficient oxygen to fully combust all package materials that are capable of burning. This rate is based on the following analysis:

1. The only combustible material in the TP73 is the polyurethane foam.
2. The chemical composition of polyurethane is $[C_{26}H_{33}NO_{13}]_n$.
3. The products of combustion are carbon dioxide (CO_2) and water (H_2O) and the molecular weights of the component materials are:

   C = 12   H = 1   O = 16   N = 14
4. The maximum mass of the polyurethane in a TP73 is 988 grams. The maximum amounts of carbon and hydrogen present in the polyurethane are computed as follows:

Polyurethane	C_{26}	H_{33}	N	O_{13}
Molecular Weight	(26x12) +	(33x1)+	(1x14)+	(13x16)
567 =	312 +	33 +	14 +	208
Percent by Mass	55.0%	5.8%	2.5%	36.7%
988 g =	543g +	57g +	25g +	363g

5. The amount of oxygen required to fully combust the carbon to carbon dioxide is computed as follows:

Carbon Dioxide	C	O_2
Molecular Weight	(1x12) +	(2x16)
44 =	12 +	32

For a given mass of carbon, 32/12 = 2.67 times that mass of oxygen is required to fully combust the carbon to carbon dioxide. For a TP73 containing 543 grams of carbon, full combustion would require 1450 grams of oxygen.

6. The amount of oxygen required to fully convert the hydrogen to water is computed as follows:

Water	H_2	O
Molecular Weight	(2x1) +	16
18 =	2 +	16

For a given mass of hydrogen, 16/2 = 8 times that mass of oxygen is required to fully convert the hydrogen to water. For a TP73 with 57 grams of hydrogen, full combustion would require 456 grams of oxygen.

7. The sum of these oxygen requirements (1450g + 456 g) less the oxygen supplied by the polyurethane (-363 g) equals 1543 grams of oxygen to assure sufficient oxygen to burn the polyurethane foam. At standard conditions, the composition of air is 23.2% oxygen by mass[1]. Therefore, 6650 grams of air are required.

8. The volume of air is computed at a density of 1.225 grams/liter to be 192 cubic feet:

   $6650g/1.225g/l = 5430\ l = 5.43m^3=192\ ft^3$

9. A 50% safety factor is added and the volume is distributed over the 30-minute test period to determine a minimum air flow rate of 9.6 cubic feet per minute:

   $(192\ ft^3)\ (1.5)\ /\ 30\ min. = 9.6\ ft^3/min.$

The air will be introduced as compressed air passing through a flowmeter and into the oven via metal tubing. A sufficient length of tubing will be inside the oven to ensure sufficient preheating.

The temperature of the package's exterior surface closest to the air entry point will be monitored throughout the test to ensure that the package remains above 800° C.

If the specimen is burning when it is removed, the unit is allowed to extinguish by itself and then cool naturally. The final evaluation of the package is performed when the specimen reaches ambient temperature.

---

[1] Avallone, Eugene A., and Theodore Baumeister III, Editors, *Marks' Standard Handbook for Mechanical Engineers*, Ninth Edition (New York: McGraw-Hill Book Company, 1987), page 4-27

6.6.1 Thermal Test

To perform the thermal test:

1. Bring the oven temperature above 800° C.
2. Attach thermocouples to the package's internal and external measurement locations, and inside the oven.
3. Place the package in the oven and close the door.
4. When the internal temperature of the package goes above 800° C, start air flow and start a 30-minute timer.
5. Measure and record the oven temperature, test specimen internal and external temperatures, and the air flow rate. Record whether there is any combustion.
6. Monitor the specimen's internal and external temperatures, and the oven temperature throughout the 30-minute test period to ensure that all temperatures remain above 800° C.
7. Monitor the airflow rate throughout the test period to ensure that it remains above 9.6 ft^3/minute.
8. At the end of the 30 minutes, repeat Step 5.
9. Remove the test specimen from the oven.
10. Allow the package to self-extinguish and cool.

6.6.2 Thermal Test Assessment

Upon completion of the test, Engineering, Regulatory Affairs and Quality Assurance team members will jointly perform the following task:

- Review the test execution to ensure that the test was performed in accordance with 10 CFR 71.

6.7 Final Test Inspection

Perform the following inspections after completion of the thermal test:

1. Measure and record any damage to the test specimen.
2. Profile the package using an active source in accordance with Amersham Work Instruction WI-Q09.
3. Assess the significance of any change in radiation at one meter from the package.
4. Determine whether it is necessary to dismantle the test specimen for inspection of hidden component damage or failure.
5. If you decide to proceed with the inspection, record and photograph the process of removing any component.
6. Measure and record any damage or failure found in the process of dismantling the test specimen.

6.8 Final Assessment

Engineering, Regulatory Affairs, and Quality Assurance team members will make a final assessment of the test specimen, and jointly determine whether the specimen meets the requirements of 10 CFR 71.73.

7.0 Worksheets

Use the following worksheets for executing these tests. There are two worksheets for each test: an equipment list and a test procedure checklist.

Use the test equipment list to record the serial number of each measurement device used. Attach a copy of the relevant inspection report or calibration certificate after you have verified the range and accuracy of the equipment.

Quality Control will initial each step on the checklist as it is executed and record data as required. The Engineering, Regulatory Affairs and Quality Assurance representatives must witness all testing to ensure the testing is performed in accordance with this test plan and 10 CFR 71.

Make copies of the forms for additional attempts. Maintain records of all attempts.

Equipment List 1: 30-foot Free Drop

Description	Enter the Model and Serial Number	Attach Inspection Report or Calibration Certificate
Drop Surface, Drawing AT10122, Rev. B		
Weight Scale		
Thermometer		
Thermocouple flexible probe		
Thermocouple surface probe		
Record any additional tools used to facilitate the test and attach the appropriate inspection report or calibration certificate.		
Verified by:	Signature	Date
Engineering		
Regulatory Affairs		
Quality Assurance		

Checklist 1: 30-foot Free Drop

Test Location:

Attempt Number:

Step	Specimen A	Specimen B	Specimen C	Specimen D
1. Measure and record test specimen's weight.				
Record the specimen's weight:				
Note the instrument used:				
2. Immerse the test specimen in dry ice as needed to bring specimen temperature below -40^{0} C.				
Steps 1 through 2 witnessed by:				
Engineering				
Regulatory Affairs				
Quality Assurance				
3. Measure the ambient temperature.				
Record ambient temperature:				
Note the instrument used:				
4. Attach the test specimen to the release mechanism.				
5. Begin video recording of test so that the impact is recorded.				
6. Measure the temperature of the specimen. Ensure that the specimen is below -40° C.				
Record the specimen's internal temperature:				
Note the instrument used:				
Record the specimen's surface temperature.				
Note the instrument used:				
7. Lift and orient the test specimen as shown in the referenced figure for the specimen.	Figure 6 on Page 14	Figure 7 on Page 15	Figure 6 on Page 14	Figure 7 on Page 15
8. Inspect the orientation setup and verify the drop height.				
9. Photograph the setup in at least two perpendicular planes.				

Checklist 1: 30-foot Free Drop (Continued)

Test Location:

Attempt Number:

Step	Specimen A	Specimen B	Specimen C	Specimen D
Steps 3 through 9 witnessed by:				
Engineering				
Regulatory Affairs				
Quality Assurance				
10. Release the test specimen.				
11. Measure the surface temperature of the test specimen.				
Record the surface temperature:				
Note the instrument used:				
12. Measure and record the test specimen's weight.				
Record the specimen's weight:				
Note the instrument used:				
13. Pause the video recorder. Ensure that the point of impact and orientation specified in the plan have been achieved and recorded.				
14. Record damage to test specimen on a separate sheet and attach.				
Steps 10 through 14 witnessed by:				
Engineering				
Regulatory Affairs				
Quality Assurance				

Checklist 1: 30-foot Free Drop (Continued)

Test Location: **Attempt Number:**

Step	Specimen A	Specimen B	Specimen C	Specimen D
15. Engineering, Regulatory Affairs and Quality Assurance make a preliminary assessment relative to 10 CFR 71. Record the assessment on a separate sheet and attach. Determine what changes are necessary in package orientation for the puncture test to achieve maximum damage.				

Test Data Accepted by (Signature):	Date:
Engineering	
Regulatory Affairs	
Quality Assurance	

Equipment List 2: Puncture Test

Description	Enter the Model and Serial Number	Attach Inspection Report or Calibration Certificate
Drop Surface, Drawing AT10122, Rev. B		
Puncture Billet, Drawing CT10119, Rev. C		
Weight Scale		
Thermometer		
Thermocouple flexible probe		
Thermocouple surface probe		
Record any additional tools used to facilitate the test and attach the appropriate inspection report or calibration certificate.		
Verified by:	Signature	Date
Engineering		
Regulatory Affairs		
Quality Assurance		

Checklist 2: Puncture Test

Test Location:

Attempt Number:

Step	Specimen A	Specimen B	Specimen C	Specimen D
1. Immerse the test specimen in dry ice as need to bring the specimen's temperature below -40° C.				
Step 1 witnessed by:				
Engineering				
Regulatory Affairs				
Quality Assurance				
2. Measure the weight of the specimen.				
Record the specimen's weight:				
Note instrument used:				
3. Measure the ambient temperature.				
Record ambient temperature:				
Note the instrument used:				
4. Attach the test specimen to the release mechanism.				
5. Begin video recording of test so that the impact is recorded.				
6. Measure the surface temperature of the specimen. Ensure that the specimen is below -40° C.				
Record the specimen surface temperature:				
Note the instrument used:				
7. Lift and orient the test specimen as shown in the referenced figure for the specimen.	Figure 8 on Page 18	Figure 9 on Page 19	Figure 8 on Page 18	Figure 9 on Page 19
8. Inspect the orientation setup and verify drop height.				

Checklist 2: Puncture Test (Continued)

Test Location:

Attempt Number:

Step	Specimen A	Specimen B	Specimen C	Specimen D
9. Photograph the setup in at least two perpendicular planes.				
Steps 2 through 9 witnessed by:				
Engineering				
Regulatory Affairs				
Quality Assurance				
10. Release the test specimen.				
11. Measure the surface temperature of the test specimen.				
Record the surface temperature:				
Note the instrument used:				
12. Measure and record the test specimen's weight.				
Record the specimen's weight:				
Note the instrument used:				
13. Pause the video recorder. Ensure that the point of impact and orientation specified in the plan have been achieved and recorded.				
14. Record damage to test specimen on a separate sheet and attach.				
Steps 10 through 14 witnessed by:				
Engineering				
Regulatory Affairs				
Quality Assurance				

Checklist 2: Puncture Test (Continued)

Test Location:

Attempt Number:

Step	Specimen A	Specimen B	Specimen C	Specimen D
15. Engineering, Regulatory Affairs and Quality Assurance make a preliminary assessment relative to 10 CFR 71. Record the assessment on a separate sheet and attach. Determine the package orientation for the thermal test that will achieve maximum damage.				

Test Data Accepted by (Signature):	Date:
Engineering	
Regulatory Affairs	
Quality Assurance	

Equipment List 3: Thermal Test

Description	Enter the Model and Serial Number	Attach Inspection Report or Calibration Certificate
Air Flowmeter		
Thermocouple (internal)		
Thermocouple (external)		
Thermocouple (oven)		
Temperature recorder		
Record any additional tools used to facilitate the test and attach the appropriate inspection report or calibration certificate.		
Verified by:	Signature	Date
Engineering		
Regulatory Affairs		
Quality Assurance		

Checklist 3: Thermal Test

Test Location:

Attempt Number:

Step	Specimen A	Specimen B	Specimen C	Specimen D
1. Pre-heat the oven to a temperature above 800° C.				
2. Attach the thermocouples the specimen's internal and external measuring points.				
3. Place the package in the oven and close the oven door.				
Record the date and time that the package is placed in oven.				
4. When the specimen's internal temperature exceeds 800° C, start the air flow into the oven. Record the time.				
Steps 1 through 4 witnessed by:				
Engineering				
Regulatory Affairs				
Quality Assurance				
5. Measure the oven temperature, the specimen's internal and external temperatures and the air flow rate.				
Record the oven temperature:				
Note instrument used:				
Record the specimen's internal temperature:				
Note instrument used:				
Record the specimen's external temperature:				
Note instrument used:				
Record airflow rate:				
Note instrument used:				
6. Monitor the internal and external temperatures of the specimen and the oven temperature throughout the 30-minute period to ensure that they are above 800° C.				

Checklist 3: Thermal Test (Continued)

Test Location: **Attempt Number:**

Step	Specimen A	Specimen B	Specimen C	Specimen D
7. Monitor the airflow throughout the 30-minute period to ensure a rate of at least 9.6 ft^3/min.				
8. At the end of the 30-minute period, repeat step 5 using the same measurement devices.				
Record the oven temperature:				
Record the specimen's internal temperature:				
Record the specimen's external temperature:				
Record intake air flow velocity:				
Steps 5 through 8 witnessed by:				
Engineering				
Regulatory Affairs				
Quality Assurance				
9. Remove test specimen from the oven.				
Record time the specimen is removed.				
Describe combustion when door is opened to remove specimen.				
NOTE: If specimen continues to burn, let it self-extinguish and cool naturally.				
10. Measure the ambient temperature.				
Record the ambient temperature:				
Note the instrument used:				
11. Photograph the test specimen and any subsequent damage				
12. Record damage to test specimen on a separate sheet and attach.				
Steps 9 through 12 witnessed by:				
Engineering				
Regulatory Affairs				
Quality Assurance				

Checklist 3: Thermal Test (Continued)

Test Location:

Attempt Number:

Step	Specimen A	Specimen B	Specimen C	Specimen D
13. Engineering, Regulatory Affairs and Quality Assurance make a preliminary assessment relative to 10 CFR 71. Record the assessment on a separate sheet and attach.				

Test Data Accepted by (Signature):	Date:
Engineering	
Regulatory Affairs	
Quality Assurance	

Appendix A: Drawings

Test Specimen
TP73, Rev. A

Model 660 Gamma Ray Projector Shipping Container Descriptive Assembly
C66025, Rev. F (3 sheets)

Model 660 Gamma Ray Projector Shipping Container Descriptive Assembly
C66025, Rev. B (4 sheets)

Model 660 Gamma Ray Projector Shipping Container Descriptive Assembly
C66030, Rev. D (3 sheets)

Model 660 Gamma Ray Projector Shipping Container Descriptive Assembly
C66030, Rev. A (3 sheets)

Model 660 Gamma Ray Projector Shipping Container Descriptive Assembly
C66030, Rev. – (4 sheets)

REV	REVISED BY	DATE	DESCRIPTION	ECO
A	SEE TITLE	BLOCK	RELEASE FOR PRODUCTION	2382

Security-Related Information Figure Withheld Under 10 CFR 2.390.

USED ON: TEST PLAN #73

MATERIALS: SEE NOTE 1

SURFACE TEXTURE: 63/ UNLESS OTHERWISE STATED

FINISH: FINISH

REMOVE ALL BURRS

DRAWN
CHECKED
APPROVED

APPROVED DRAWING ON FILE

UNLESS OTHERWISE NOTED DIMENSIONS ARE IN INCHES TOLERANCES ARE:

.X	± 0.1
.XX	± 0.01
.XXX	± 0.005
ANGLES	± 1°
FRACT	± 1/64

AMERSHAM CORPORATION
BURLINGTON, MA 01803

SENTINEL

DWG. TITLE

MODEL 660 TEST SPECIMEN

SAFETY CLASS	SIZE	DWG. NO.	REV
A	C	TP73	A

SCALE NONE

SHEET 1 OF 1

E	1/13/93	SEE ECO 1222	IA
F	3/20/94	SEE ECO 1222	RM

Security-Related Information
Figure Withheld Under 10 CFR 2.390.

NOTED

[redacted]

TECHNICAL OPERATIONS INC.
RADIATION PRODUCTS DIVISION
[illegible]

MODEL 660 GAMMA RAY PROJECTOR
SHIPPING CONTAINER
DESCRIPTIVE ASSEMBLY

C

66025

E

SHEET 1 OF X

E	1-13 93	SEE ECO 1222	
F	3/30/94	SEE ECO 1222	RM/GP

A	6 JUN 79	SEE SHT 1	
B	[illegible]	WAS SHT 2 OF 3	
C	11-21- 89	SEE SHT 1 & THIS SHT WAS SHT 2 OF 7	
D	4-9-90	SEE SHT 3	

Security-Related Information Figure Withheld Under 10 CFR 2.390.

MATERIALS NOTED		[redacted] TECHNICAL OPERATIONS INC. RADIATION PRODUCTS DIVISION, BURLINGTON, MA	
FINISH —		DWG TITLE MODEL 660 GAMMA RAY PROJECTOR SHIPPING CONTAINER DESCRIPTIVE ASSEMBLY	
DRAWN BY 6-27-78	.X ±		
CHECKED BY	.XX ±		
	.XXX ±	CLASSIFICATION	SIZE C · DWG. NO. 66025 · REV. F
APPROVED BY 23 JAN 86	ANGLES ±		
	FRACTIONS ±	SCALE 2:1	SHEET 2 OF 3

C	11-22 89	WAS SHT 4 OF 4 & REV OF THIS SHT WAS – & ADDED SECT. A-A	FF/
D	9-4 90	ADDED "WELDED & INSPECTED IN ACCORDANCE WITH - - - -" WAS "(MIL-W-6858)" E.C.O. # 718	FF/
E	1-13 93	SEE ECO 1222	
F	3/30/94	ADDED "LEAD" TO NOTE PER ECO 1222	RM/

Security-Related Information
Figure Withheld Under 10 CFR 2.390.

MATERIALS
AS NOTED

FINISH

DRAWN BY

CHECKED BY

APPROVED BY

UNLESS OTHERWISE SPECIFIED TOLERANCES ARE
.X ±
.XX ±
.XXX ±
ANGLES ±
FRACTIONS ±

Tech/Ops
Tech/Ops, Inc.
RADIATION PRODUCTS DIVISION
BURLINGTON, MA 01803

DWG TITLE
MODEL 660 GAMMA RAY PROJECTOR
SHIPPING CONTAINER
DESCRIPTIVE ASSEMBLY

CLASSIFICATION
SIZE C
DWG. NO. 66025
REV. F
SCALE 1:1
SHEET 3 OF 3

C66025

REV.	DATE	DESCRIPTION
A	6 JUN 79	ADDED GENERAL INFO.
B	4-1878	ADDED SHT 4, ST. STL OPTION ADDED NOTE 5 TUBE & FITTINGS

Security-Related Information Figure Withheld Under 10 CFR 2.390.

MATERIALS NOTED

FINISH

DRAWN BY

CHECKED BY

APPROVED BY

UNLESS OTHERWISE SPECIFIED TOLERANCES ARE

X ±

.XX ±

.XXX ±

ANGLES ±

FRACTIONS ±

TECHNICAL OPERATIONS INC.
RADIATION PRODUCTS DIVISION
BURLINGTON, MA 01803

DWG TITLE
MODEL 660 GAMMA RAY PROJECTOR
SHIPPING CONTAINER
DESCRIPTIVE ASSEMBLY

CLASSIFICATION

SIZE C

DWG. NO. 66025

REV. B

SCALE 1

SHEET 1 OF 4

G66025

A	6JUN79	SEE SHT 1	[illegible]
B	18NOV04	WAS SHT 2 OF 3	[illegible]

Security-Related Information
Figure Withheld Under 10 CFR 2.390.

MATERIALS NOTED

FINISH —

DRAWN BY [illegible] 6-27-78

CHECKED BY

APPROVED BY

UNLESS OTHERWISE SPECIFIED TOLERANCES ARE
.X ±
.XX ±
.XXX ±
ANGLES ±
FRACTIONS ±

[redacted]
TECHNICAL OPERATIONS INC.
RADIATION PRODUCTS DIVISION
BURLINGTON, MA 01803

DWG TITLE
MODEL 660 GAMMA RAY PROJECTOR
SHIPPING CONTAINER
DESCRIPTIVE ASSEMBLY

CLASSIFICATION
SIZE C
DWG. NO. 66025
REV. B
SCALE 2:1
SHEET 2 OF 4

66025

REV.	DATE	DESCRIPTION	
A	6 Jun 79	ADDED GENERAL INFO.	F.
B	4-18-[illegible]	ADDED [illegible] OPTION ADDED FOR'S TUBE & SLEEVE	F.

Security-Related Information
Figure Withheld Under 10 CFR 2.390.

MATERIALS NOTED		TECHNICAL OPERATIONS INC. RADIATION PRODUCTS DIVISION BURLINGTON, MA 01803	
FINISH		DWG TITLE MODEL 660 GAMMA RAY PROJECTOR SHIPPING CONTAINER DESCRIPTIVE ASSEMBLY	
DRAWN BY	UNLESS OTHERWISE SPECIFIED TOLERANCES ARE		
	.X ±		
CHECKED BY	.XX ±		
	.XXX ±	CLASSIFICATION	SIZE C · DWG. NO. 66025 · REV. B
APPROVED BY	ANGLES ±		
	FRACTIONS ±	SCALE 1	SHEET 1 OF 4

C66025

REV.	DATE	DESCRIPTION	
A	6 JUN 79	SEE SHT 1	SOT.
B	13 APR 84	WAS SHT 3 OF 3	R.

Security-Related Information
Figure Withheld Under 10 CFR 2.390.

MATERIALS: NOTED

TECHNICAL OPERATIONS INC.
RADIATION PRODUCTS DIVISION
BURLINGTON, MA 01803

MODEL 660 GAMMA RAY PROJECTOR
SHIPPING CONTAINER
DESCRIPTIVE ASSEMBLY

SIZE: C
DWG. NO. 66025
SCALE 2:1
SHEET 3 OF 8

REV.	DATE	DESCRIPTION
B	4-11-94	SEE SHT 1

Security-Related Information
Figure Withheld Under 10 CFR 2.390.

MATERIALS
AS NOTED

FINISH

DRAWN BY

CHECKED BY

APPROVED BY

UNLESS OTHERWISE SPECIFIED TOLERANCES ARE
.X ±
.XX ±
.XXX ±
ANGLES ±
FRACTIONS ±

Tech Ops
Tech/Ops, Inc.
RADIATION PRODUCTS DIVISION
BURLINGTON, MA 01803

DWG TITLE
MODEL 660 GAMMA RAY PROJEC.
SHIPPING CONTAINER
DESCRIPTIVE ASSEMBLY

CLASSIFICATION
SIZE C
DWG. NO. 66025
B
SCALE 1:1
SHEET 4 OF 4

[illegible]	3/23/[illegible]	SEE ECO [illegible]2	RM / GP

Security-Related Information
Figure Withheld Under 10 CFR 2.390.

MATERIALS NOTED	[redacted] TECHNICAL OPERATIONS INC. RADIATION PRODUCTS DIVISION BURLINGTON, MA [illegible]
FINISH —	DWG TITLE MODEL 660 GAMMA RAY PROJECTO SHIPPING CONTAINER DESCRIPTIVE ASSEMBLY
DRAWN BY [illegible] 6-27-[illegible]	
CHECKED BY	CLASSIFICATION · SIZE C · DWG NO. 66030
APPROVED BY [illegible] 23 JAN 76	SCALE 2:1 · SHEET 2 OF 3

UNLESS OTHERWISE SPECIFIED	
.X	±
.XX	±
.XXX	±
ANGLES	±
FRACTIONS	±

C	1/13/7[illegible]	SEE ECO [illegible] 2	[illegible]
D	3/30/94	SEE ECO [illegible]	RM/[illegible]

Security-Related Information
Figure Withheld Under 10 CFR 2.390.

NOTED	[redacted] TECHNICAL OPERATIONS INC. RADIATION PRODUCTS DIVISION
	MODEL 660 GAMMA RAY PROJECTOR SHIPPING CONTAINER DESCRIPTIVE ASSEMBLY
	C | 66030 | D

D 7/30/94 SEE ECO 1222

Security-Related Information
Figure Withheld Under 10 CFR 2.390.

AS NOTED

Tech/Ops, Inc.
RADIATION PRODUCTS DIVISION
BURLINGTON, MA 01803

MODEL 660 GAMMA RAY PROJECTOR
SHIPPING CONTAINER
DESCRIPTIVE ASSEMBLY

C

66030

SCALE 1:1

SHEET 3 OF 3

A SEE SHT 1

Security-Related Information
Figure Withheld Under 10 CFR 2.390.

MATERIALS NOTED	[redacted] TECHNICAL OPERATIONS INC. RADIATION PRODUCTS DIVISION BURLINGTON, MA [illegible]
FINISH	DWG TITLE MODEL 660 GAMMA RAY PROJECTOR SHIPPING CONTAINER DESCRIPTIVE ASSEMBLY
DRAWN BY 6-27-[illegible]	CLASSIFICATION · SIZE C · DWG NO 66030
CHECKED BY	
APPROVED BY	SCALE 2:1 · SHEET 2 OF 3

Security-Related Information
Figure Withheld Under 10 CFR 2.390.

SHT. 3 of

AS NOTED

RADIATION PRODUCTS DIVISION

MODEL 660 GAMMA RAY PROJECT
SHIPPING CONTAINER
DESCRIPTIVE ASSEMBLY

Security-Related Information Figure Withheld Under 10 CFR 2.390.

NOTED

[redacted]

TECHNICAL OPERATIONS INC.
RADIATION PRODUCTS DIVISION
BURLINGTON, MA 01803

MODEL 660 GAMMA RAY PROJECTOR
SHIPPING CONTAINER
DESCRIPTIVE ASSEMBLY

C

66030

FRACTIONS

SCALE 1

SHEET 1 OF 4

Security-Related Information
Figure Withheld Under 10 CFR 2.390.

NOTED

[redacted]

TECHNICAL OPERATIONS, INC.
RADIATION PRODUCTS DIVISION
BURLINGTON, MA [illegible]

MODEL 660 GAMMA RAY PROJECTO
SHIPPING CONTAINER
DESCRIPTIVE ASSEMBLY

C

66030

SCALE 2:1

SHEET 2 OF 4

Security-Related Information
Figure Withheld Under 10 CFR 2.390.

NOTED

[redacted] TECHNICAL OPERATIONS INC.
RADIATION PRODUCTS DIVISION
BURLINGTON, MA

MODEL 660 GAMMA RAY PROJECTOR
SHIPPING CONTAINER;
DESCRIPTIVE ASSEMBLY

C 66030

SHEET 5 OF 4

L66030

Security-Related Information Figure Withheld Under 10 CFR 2.390.

AS NOTED

Tech/Ops, Inc.
RADIATION PRODUCTS DIVISION
BURLINGTON, MA 01803

MODEL 660 GAMMA-RAY PROJECTOR
SHIPPING CONTAINER
DESCRIPTIVE ASSEMBLY

C 66030

SCALE 1/1

SHEET 4 OF 4

Appendix B: Selected Fasteners

The stainless steel screw selected for the end-plate fasteners is 51959-81 as specified in Military Standard 51959, a copy of which is included in this appendix. The item is highlighted on page 2 of the specification.

The toughness versus temperature curve below shows the consistent toughness of stainless steel over a wide range of temperatures. The curve is excerpted from Deutschman, Aaron D, Walter J. Michels, and Charles E. Wilson, *Machine Design: Theory and Practice* (New York: Macmillan Publishing Co., Inc. 1975), page 136.

Low temperature effects

As the temperature is lowered, there is an increase in yield strength, tensile strength, elastic modulus, and hardness and a decrease in ductility for metals such as aluminum and aluminum alloys, nickel alloys, austenitic steels, lead, and copper. Carbon and low alloy steels tend to become embrittled at much higher temperatures than the aforementioned metals. Embrittlement is measured by loss of toughness over a small temperature range (for example, see Section 3.21) when tested by the Charpy or Izod machines. The transition temperature is taken to be that for which the impact energy is reduced by 50% of its ductile value. Figure 3-43 shows some average value curves of toughness (energy in foot-pounds) versus temperature for a variety

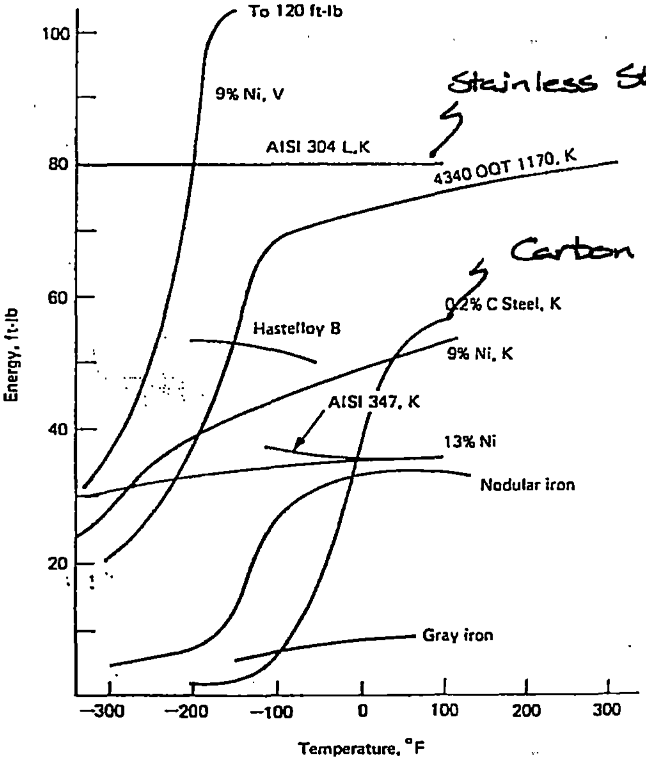

Stainless Steel

Carbon Steel

Figure 3-43 Toughness versus temperature for several metals. Note the sharp drop in toughness that takes place within a narrow temperature range. [From V. M. Faires: *Design of Machine Elements*, 4th ed. The Macmillan Company, New York, 1965.]

FED. SUP CLASS
5305

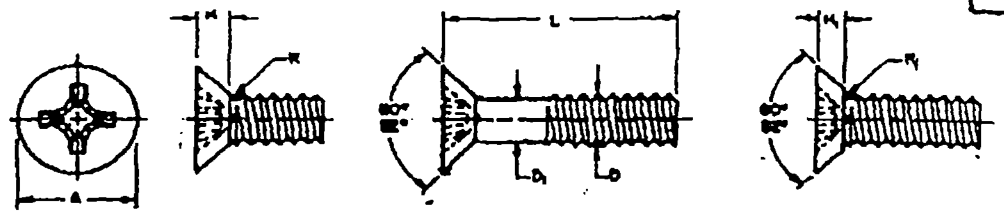

REVIEWER: AV, EL, GL, IS, MI, SSA
USER: AS, AT, MC, ME, MC, OS, YD

TABLE I

D NOMINAL SIZE		#2 .0860	#4 .1120	#6 .1380	#8 .1640
THREADS PER INCH		56UNC	40UNC	32UNC	32UNC
D1 BODY DIAMETER	Max Min	.0860 .0717	.1120 .0925	.1380 .1141	.1640 .1399
A HEAD DIAMETER	Max Sharp Min Sharp Abs Min	.172 .156 .147	.225 .207 .195	.279 .257 .244	.332 .308 .292
H HEAD HEIGHT-FULL HEAD	Ref	.051	.067	.083	.100
H1 HEAD HEIGHT-UNDERCUT HEAD	Max Min	.036 .028	.047 .038	.059 .048	.070 .058
R RADIUS-FULL HEAD	Max	.034	.045	.055	.066
R1 RADIUS-UNDERCUT HEAD	Max	.013	.017	.021	.025
DRIVER SIZE		1	1	2	2
** MINIMUM TENSILE STRENGTH LOAD LBS.		300	480	730	1,120

L	LENGTH	Tolerance	Dash Number	Dash Number	Dash Number	Dash Number
Threads shall extend to within 2 threads of the bearing surface of the head, or closer if practicable.	1/8	+0 -1/32	1	11	24	39
	3/16		2	12	25	40
	1/4		3	13	26	41
	5/16		4	14	27	42
	3/8		5	15	28	43
	7/16		6	16	29	44
	1/2		7	17	30	45
	5/8		8	18	31	46
	3/4		9	19	32	47
	7/8		10*	20	33	48
				21	34	49
	1-1/4	+0 -1/16		22*	35	50
	1-1/2			23*	36	51
	1-3/4				37	52
	2				38	53
Minimum complete thread length of 1-3/4	2-1/4	+0 -3/32				54*
	2-1/2					55*
	2-3/4					56*
	3					57*

* Indicates manufacturer's non-stock production items.

** Based on 80,000 PSI minimum tensile strength. Load pounds are calculated by the stress areas indicated in Screw-Thread Standards for Federal Services, Handbook H-28.

1. MATERIAL: Steel, Corrosion-Resisting in accordance with Fed. Std. No. 66, AISI 302, 303, 304 and 305, or equal to or interchangeable with the 16:18 chrome-nickel alloy steel.
2. PROTECTIVE COATING: Passivated in accordance with QQ-P-35.
   Ⓑ Black oxide coated in accordance with MIL-C-13924, class 4. (When black oxide coating is required the dash number shall be followed by a "B".)
3. MAGNETIC PERMEABILITY: These fasteners have a magnetic permeability of 2.0 maximum (air = 1.0) for a field strength of H = 200 oersteds using a magnetic indicator per MIL-I-17214.
4. THREADS: The threads shall be in accordance with Screw-Thread Standards for Federal Services, Handbook H28.
5. RECESS: The recess shall conform with MS9006.
6. DIMENSIONS: All dimensions are in inches, unless otherwise specified.
7. PART NUMBER: The MS part number consists of the MS number, plus the dash number.
   Ⓑ Example: MS51959-1; Passivated.
   MS51959-1B; Black oxide coated.
8. Referenced documents shall be of the issue in effect on date of invitations for bid.
9. For design feature purposes, this standard takes precedence over procurement documents referenced herein.
10. Sizes above dotted line have undercut head.

Ⓑ For changes see sheet 3.

APPROVED 15 DECEMBER 1963 REVISED Ⓐ 15 OCTOBER 1965 Ⓑ 5 DEC 1968

P.A. WC Other Cust SH A2	TITLE SCREW, MACHINE-FLAT COUNTERSUNK HEAD, 82°, CROSS-RECESSED, CORROSION RESISTING STEEL, UNC-2A	MILITARY STANDARD MS 51959
PROCUREMENT SPECIFICATION FF-S-92	SUPERSEDES: MS35300 and in part: MS35249, MS35358, MS35363 and AN505	SHEET 1 OF 4

DD FORM 672-1 (Continued)

FED. SUP CLASS
5305

REVIEWER: AV, EL, CL, IS, MI, NSA
USER: AS, AT, MC, ME, MC, OS, YD

TABLE I (CONTINUED)

D NOMINAL SIZE		#10 .1900	1/4 .2500	5/16 .3125	3/8 .3750
THREADS PER INCH		24UNC	20UNC	18UNC	16UNC
D_1 BODY DIAMETER	Max Min	.1900 .1566	.2500 .2127	.3125 .2712	.3750 .3287
A HEAD DIAMETER	Max Sharp Min Sharp Abs Min	.385 .359 .340	.507 .477 .452	.635 .600 .568	.762 .722 .685
H HEAD HEIGHT-FULL HEAD	Ref	.116	.153	.191	.230
H_1 HEAD HEIGHT-UNDERCUT HEAD	Max Min	.081 .068	.107 .092	.134 .116	.161 .140
R RADIUS-FULL HEAD	Max	.074	.100	.125	.150
R_1 RADIUS-UNDERCUT HEAD	Max	.029	.038	.047	.056
DRIVER SIZE		2	3	4	4
** MINIMUM TENSILE STRENGTH LOAD LBS.		1,400	2,540	4,190	6,200

L	LENGTH	Tolerance	Dash Number	Dash Number	Dash Number	Dash Number
Threads shall extend to within 2 threads of the bearing surface of the head, or closer if practicable.	1/8					
	3/16		58*			
	1/4		59			
	5/16		60	76		
	3/8	+0 -1/32	61	77	92	
	7/16		62	78	93	
	1/2		63	79	94	107
	5/8		64	80	95	108
	3/4		65	81	96	109
	7/8		66	82	97	110
	1		67	83	98	111
	1-1/4		68	84	99	112
	1-1/2	+0 -1/16	69	85	100	113
	1-3/4		70	86	101	114
	2		71	87	102	115
Minimum complete thread length of 1-3/4	2-1/4		72	88	103	116
	2-1/2	+0 -3/32	73	89	104	117
	2-3/4		74*	90*	105*	118
	3		75*	91*	106*	119

* Indicates manufacturer's non-stock production items.

** Based on 80,000 PSI minimum tensile strength. Load pounds are calculated by the stress areas indicated in Screw-Thread Standards for Federal Services, Handbook H-28.

NOTE: For illustration, material, treatment, and other pertinent data, see sheet 3.

APPROVED 19 DECEMBER 1963 REVISED (A) 15 OCT 1965 (B) FOR CHANGES SEE SHEET 1.

P.A. VC Other Cust SH 82	TITLE SCREW,MACHINE-FLAT COUNTERSUNK HEAD,82°,CROSS-RECESSED,CORROSION RESISTING STEEL, UNC-2A	MILITARY STANDARD MS 51959
PROCUREMENT SPECIFICATION FF-S-92	SUPERSEDES: MS35200 and in part: MS35249, MS35358, MS35363 and AN505	SHEET 2 OF

FED. SUP CLASS
5305

TABLE II
INTERCHANGEABILITY TABLE

The screws covered by dash numbers given MS35200 and in part MS35249 and AN505 are cancelled/inactivated after the dates indicated on the documents. Use the dash numbers given in the preceding sheets for nominal sizes thru 3/8 inch, and MS24671 for larger sizes. The cancelled screws cannot always replace the new screws and should be used until existing stocks are depleted. Use only the new screws for design and replacement. Replacement shall be in accordance with this table and MS24671.

CROSS REFERENCE OF PART NUMBERS

CANCELLED				NEW	CANCELLED				NEW
MS35249	MS35200	AN505		MS51959	MS35249	MS35200	AN505		MS51959
Dash Number				Dash Number	Dash Number				Dash Number
1				No Replacement			C5R14	C5-14	No Replacement
2				No Replacement			C5R15	C5-15	No Replacement
3				No Replacement			C5R16	C5-16	No Replacement
4				No Replacement			C5R18	C5-18	No Replacement
5				No Replacement			C5R20	C5-20	No Replacement
6				No Replacement			C5R22	C5-22	No Replacement
7				No Replacement			C5R24	C5-24	No Replacement
8	1			1	31	21			24
9	2	C2R3	C2-3	2	32	22	C6R3	C6-3	25
10	3	C2R4	C2-4	3	33	23	C6R4	C6-4	26
11	4	C2R5	C2-5	4	34	24	C6R5	C6-5	27
12	5	C2R6	C2-6	5	35	25	C6R6	C6-6	28
13	6	C2R7	C2-7	6	36	26	C6R7	C6-7	29
14	7	C2R8	C2-8	7	37	27	C6R8	C6-8	30
		C2R9	C2-9	No Replacement			C6R9	C6-9	No Replacement
15	8	C2R10	C2-10	8	38	28	C6R10	C6-10	31
		C2R11	C2-11	No Replacement			C6R11	C6-11	No Replacement
16	9	C2R12	C2-12	9	39	29	C6R12	C6-12	32
17				10			C6R13	C6-13	No Replacement
		C3R3	C3-3	No Replacement	40	30	C6R14	C6-14	33
		C3R4	C3-4	No Replacement			C6R15	C6-15	No Replacement
		C3R5	C3-5	No Replacement	41	31	C6R16	C6-16	34
		C3R6	C3-6	No Replacement			C6R18	C6-18	No Replacement
		C3R7	C3-7	No Replacement	42	32	C6R20	C6-20	35
		C3R8	C3-8	No Replacement			C6R22	C6-22	No Replacement
		C3R9	C3-9	No Replacement	43	33	C6R24	C6-24	36
		C3R10	C3-10	No Replacement			C6R26	C6-26	No Replacement
		C3R11	C3-11	No Replacement	44	34	C6R28	C6-28	37
		C3R12	C3-12	No Replacement			C6R30	C6-30	No Replacement
		C3R13	C3-13	No Replacement	45	35	C6R32	C6-32	38
		C3R14	C3-14	No Replacement			C6R34	C6-34	No Replacement
		C3R15	C3-15	No Replacement			C6R36	C6-36	No Replacement
		C3R16	C3-16	No Replacement			C6R38	C6-38	No Replacement
18	10			11			C6R40	C6-40	No Replacement
19	11	C4R3	C4-3	12			C6R42	C6-42	No Replacement
20	12	C4R4	C4-4	13			C6R44	C6-44	No Replacement
21	13	C4R5	C4-5	14			C6R46	C6-46	No Replacement
22	14	C4R6	C4-6	15			C6R48	C6-48	No Replacement
23	15	C4R7	C4-7	16	46	36			39
24	16	C4R8	C4-8	17	47	37			40
		C4R9	C4-9	No Replacement	48	38	C8R4	C8-4	41
25	17	C4R10	C4-10	18	49	39	C8R5	C8-5	42
		C4R11	C4-11	No Replacement	50	40	C8R6	C8-6	43
26	18	C4R12	C4-12	19	51	41	C8R7	C8-7	44
		C4R13	C4-13	No Replacement	52	42	C8R8	C8-8	45
27	19	C4R14	C4-14	20			C8R9	C8-9	No Replacement
		C4R15	C4-15	No Replacement	53	43	C8R10	C8-10	46
28	20	C4R16	C4-16	21			C8R11	C8-11	No Replacement
		C4R18	C4-18	No Replacement	54	44	C8R12	C8-12	47
29		C4R20	C4-20	22			C8R13	C8-13	No Replacement
		C4R22	C4-22	No Replacement	55	45	C8R14	C8-14	48
30		C4R24	C4-24	23			C8R15	C8-15	No Replacement
		C5R3	C5-3	No Replacement	56	46	C8R16	C8-16	49
		C5R4	C5-4	No Replacement			C8R18	C8-18	No Replacement
		C5R5	C5-5	No Replacement	57	47	C8R20	C8-20	50
		C5R6	C5-6	No Replacement			C8R22	C8-22	No Replacement
		C5R7	C5-7	No Replacement	58	48	C8R24	C8-24	51
		C5R8	C5-8	No Replacement			C8R26	C8-26	No Replacement
		C5R9	C5-9	No Replacement	59	49	C8R28	C8-28	52
		C5R10	C5-10	No Replacement			C8R30	C8-30	No Replacement
		C5R11	C5-11	No Replacement	60	50	C8R32	C8-32	53
		C5R12	C5-12	No Replacement			C8R34	C8-34	No Replacement
		C5R13	C5-13	No Replacement	61		C8R36	C8-36	54

(Continued on Sheet 4)

REVIEWER: AV, EL, CL, IS, MI, NSA
USER: AS, AT, MC, ME, MC, OS, YD

APPROVED 19 DECEMBER 1963 REVISED Ⓐ 15 OCT 1965 Ⓑ FOR CHANGES SEE SHEET 1

THIS MILITARY STANDARD HAS BEEN APPROVED BY THE DEPARTMENT OF DEFENSE AND IS MANDATORY FOR USE BY ALL DEPARTMENTS AND AGENCIES OF THE DEPARTMENT OF DEFENSE. SELECTION FOR ALL NEW ENGINEERING AND DESIGN APPLICATIONS AND FOR REPETITIVE USE SHALL BE MADE FROM THIS DOCUMENT.

P.A. WC
Other Cust SH
82

TITLE
SCREW, MACHINE-FLAT COUNTERSUNK HEAD, 82°, CROSS-RECESSED, CORROSION RESISTING STEEL, UNC-2A

MILITARY STANDARD
MS 51959

PROCUREMENT SPECIFICATION
FF-S-92

SUPERSEDES: MS35200 and in part: MS35249, MS35358, MS35363 and AN505

SHEET 3 OF

FED. SUP CLASS
5305

TABLE XI (CONTINUED)

INTERCHANGEABILITY TABLE (CONTINUED)

CROSS REFERENCE OF PART NUMBERS

CANCELLED				NEW
MS35249	MS35200	AN505		MS51959
Dash Number				Dash Number
		C8R38	C8-38	No Replacement
62		C8R40	C8-40	55
		C8R42	C8-42	No Replacement
63		C8R44	C8-44	56
		C8R46	C8-46	No Replacement
64		C8R48	C8-48	57
65				58
66	51			59
67	52	C10R5	C10-5	60
68	53	C10R6	C10-6	61
69	54	C10R7	C10-7	62
70	55	C10R8	C10-8	63
		C10R9	C10-9	No Replacement
71	56	C10R10	C10-10	64
		C10R11	C10-11	No Replacement
72	57	C10R12	C10-12	65
		C10R13	C10-13	No Replacement
73	58	C10R14	C10-14	66
		C10R15	C10-15	No Replacement
74	59	C10R16	C10-16	67
		C10R18	C10-18	No Replacement
75	60	C10R20	C10-20	68
		C10R22	C10-22	No Replacement
76	61	C10R24	C10-24	69
		C10R26	C10-26	No Replacement
77	62	C10R28	C10-28	70
		C10R30	C10-30	No Replacement
78	63	C10R32	C10-32	71
		C10R34	C10-34	No Replacement
79	64	C10R36	C10-36	72
		C10R38	C10-38	No Replacement
80	65	C10R40	C10-40	73
		C10R42	C10-42	No Replacement
81		C10R44	C10-44	74
		C10R46	C10-46	No Replacement
82		C10R48	C10-48	75
83	66	C416R5	C416-5	76
84	67	C416R6	C416-6	77
85	68	C416R7	C416-7	78
86	69	C416R8	C416-8	79
		C416R9	C416-9	No Replacement
87	70	C416R10	C416-10	80
		C416R11	C416-11	No Replacement
88	71	C416R12	C416-12	81
		C416R13	C416-13	No Replacement
89	72	C416R14	C416-14	82
		C416R15	C416-15	No Replacement
90	73	C416R16	C416-16	83
		C416R18	C416-18	No Replacement
91	74	C416R20	C416-20	84
		C416R22	C416-22	No Replacement
92	75	C416R24	C416-24	85
		C416R26	C416-26	No Replacement
93	76	C416R28	C416-28	86
		C416R30	C416-30	No Replacement
94	77	C416R32	C416-32	87
		C416R34		No Replacement
95	78	C416R36		88
		C416R38		No Replacement

CANCELLED				NEW
MS35249	MS35200	AN505		MS51959
Dash Number				Dash Number
96	79	C416R40	C416-40	89
		C416R42	C416-42	No Replacement
97		C416R44	C416-44	90
		C416R46	C416-46	No Replacement
98		C416R48	C416-48	91
99	80			92
100	81			93
101	82	C516R8	C516-8	94
		C516R9	C516-9	No Replacement
102	83	C516R10	C516-10	95
		C516R11	C516-11	No Replacement
103	84	C516R12	C516-12	96
		C516R13	C516-13	No Replacement
104	85	C516R14	C516-14	97
		C516R15	C516-15	No Replacement
105	86	C516R16	C516-16	98
		C516R18	C516-18	No Replacement
106	87	C516R20	C516-20	99
		C516R22	C516-22	No Replacement
107	88	C516R24	C516-24	100
		C516R26	C516-26	No Replacement
108	89	C516R28	C516-28	101
		C516R30	C516-30	No Replacement
109	90	C516R32	C516-32	102
		C516R34	C516-34	No Replacement
110	91	C516R36	C516-36	103
		C516R38	C516-38	No Replacement
111	92	C516R40	C516-40	104
		C516R42	C516-42	No Replacement
112		C516R44	C516-44	105
		C516R46	C516-46	No Replacement
113		C516R48	C516-48	106
114	93	C616R8	C616-8	107
		C616R9	C616-9	No Replacement
115	94	C616R10	C616-10	108
		C616R11	C616-11	No Replacement
116	95	C616R12	C616-12	109
		C616R13	C616-13	No Replacement
117	96	C616R14	C616-14	110
		C616R15	C616-15	No Replacement
118	97	C616R16	C616-16	111
		C616R18	C616-18	No Replacement
119	98	C616R20	C616-20	112
		C616R22	C616-22	No Replacement
120	99	C616R24	C616-24	113
		C616R26	C616-26	No Replacement
121	100	C616R28	C616-28	114
		C616R30	C616-30	No Replacement
122	101	C616R32	C616-32	115
		C616R34	C616-34	No Replacement
123	102	C616R36	C616-36	116
		C616R38	C616-38	No Replacement
124	103	C616R40	C616-40	117
		C616R42	C616-42	No Replacement
125	104	C616R44	C616-44	118
		C616R46	C616-46	No Replacement
126	105	C616R48	C616-48	119
127 thru 178				*Use MS24671

* Diameters over 3/8" covered by MS24671.

REVIEWER: AV, EL, CL, 1S, MI, NSA
USER: AS, AT, MC, ME, MI, CS, 1D

This military standard has been approved by the Department of Defense and is mandatory for use by all departments and agencies of the Department of Defense. Selection for all new engineering and design applications and for repetitive use shall be made from this document.

APPROVED 19 DECEMBER 1963 REVISED Ⓐ 15 OCT 1965 Ⓑ FOR CHANGES SEE SHEET 1

P.A. WC
Other Cust SH
F2

TITLE
SCREW, MACHINE-FLAT COUNTERSUNK HEAD, 82°, CROSS-RECESSED, CORROSION RESISTING STEEL, UNC-2A

MILITARY STANDARD

MS 51959

PROCUREMENT SPECIFICATION
FF-S-92

SUPERSEDES: MS35200 and in part: MS35249, MS35358, MS35363 and AN505

SHEET 4 OF

DD FORM 1 APR 57 672-1 (Continued)

Previous edition of this form are obsolete

☆ U. S. GOVERNMENT PRINTING OFFICE: 1964-341-514/A-3540

Appendix C: Referenced Materials

The following is an excerpt from Avallone, Eugene A., and Theodore Baumeister III, Editors, *Marks' Standard Handbook for Mechanical Engineers*, Ninth Edition (New York: McGraw-Hill Book Company, 1987), page 4-27.

Table 4.1.5 Approximate Inversion-Curve Locus for Air

P, bar	0	25	50	75	100	125	150	175	200	225
T_L, K	(112)*	114	117	120	124	128	132	137	143	149
T_U, K	653	641	629	617	606	594	582	568	555	541
P, bar	250	275	300	325	350	375	400	425	432	
T_L, K	156	164	173	184	197	212	230	265	300	
T_U, K	526	509	491	470	445	417	386	345	300	

*Hypothetical low-pressure limit.

Loss Due to Throttling A throttling process in a cycle of operations always introduces a loss of efficiency. If T_0 is the temperature corresponding to the back pressure, the loss of available energy is the product of T_0 and the increase of entropy during the throttling process. The following example illustrates the calculation in the case of ammonia passing through the expansion valve of a refrigerating machine.

EXAMPLE. The liquid ammonia at a temperature of 70°F passes through the valve into the brine coil in which the temperature is 20 deg and the pressure is 48.21 psia. The initial enthalpy of the liquid ammonia is $h_{f1} = 120.5$, and therefore the final enthalpy is $h_{f2} + x_2 h_{fg2} = 64.7 + 553.1 x_2 = 120.5$, whence $x_2 = 0.101$. The initial entropy is $s_{f1} = 0.254$. The final entropy is $s_{f2} + (x_2 h_{fg2}/T_2) = 0.144 + 0.101 \times 1.153 = 0.260$. $T_0 = 20 + 460 = 480$; hence the loss of refrigerating effect is $480 \times (0.260 - 0.254) = 2.9$ Btu.

COMBUSTION

REFERENCES: Chigier, "Energy, Combustion and Environment," McGraw-Hill, 1981. Campbell, "Thermodynamic Analysis of Combustion Engines," Wiley, 1979. Glassman, "Combustion," Academic Press, New York, 1977. Lefebvre, "Gas Turbine Combustion," McGraw-Hill, New York, 1983. Strehlow, "Combustion Fundamentals," McGraw-Hill, New York, 1984. Williams et al., "Fundamental Aspects of Solid Propellant Rockets," *Agardograph*, 116, Oct. 1969. Basic thermodynamic table type information needed in this area is found in Glushko et al., "Thermodynamic and Thermophysical Properties of Combustion Products," Moscow, and IPST translation; Gordon, NASA Technical Paper 1906, 1982; "JANAF Thermochemical Tables," NSRDS-NBS-37, 1971.

Fuels For special properties of various fuels, see Sec. 7. In general, fuels may be classed under three heads: (1) gaseous fuels, (2) liquid fuels, and (3) solid fuels.

The combustible elements that characterize fuels are carbon, hydrogen, and, in some cases, sulphur. The complete combustion of carbon gives, as a product, carbon dioxide, CO_2; the combustion of hydrogen gives water, H_2O.

Combustion of Gaseous and Liquid Fuels

Combustion Equations The approximate molecular weights of the important elements and compounds entering into combustion calculations are:

Material	C	H_2	O_2	N_2	CO	CO_2	H_2O	CH_4	C_2H_4	C_2H_6O	S	NO	NO_2	SO_2
Molecular weight	12	2	32	28	28	44	18	16	28	46	32	30	46	64

For the elements C and H, the equations of complete combustion are

$$\begin{cases} C + O_2 = CO_2 & H_2 + \frac{1}{2}O_2 = H_2O \\ 12 \text{ lb} + 32 \text{ lb} = 44 \text{ lb} & 2 \text{ lb} + 16 \text{ lb} = 18 \text{ lb} \end{cases}$$

For a combustible compound, as CH_4, the equation may be written

$$CH_4 + x \cdot O_2 = y \cdot CO_2 + z \cdot H_2O$$

Taking, as a basis, 1 molecule of CH_4 and making a balance of the atoms on the two sides of the equation, it is seen that

$$y = 1 \qquad z = 2 \qquad 2x = 2y + z \qquad \text{or} \qquad x = 2$$

Hence,

$$\begin{cases} CH_4 + 2O_2 = CO_2 + 2H_2O \\ 16 \text{ lb} + 64 \text{ lb} = 44 \text{ lb} + 36 \text{ lb} \end{cases}$$

The coefficients in the combustion equation give the combining volumes of the gaseous components. Thus, in the last equation 1 ft^3 of CH_4 requires for combustion 2 ft^3 of oxygen and the resulting gaseous products of combustion are 1 ft^3 of CO_2 and 2 ft^3 of H_2O. The coefficients multiplied by the corresponding molecular weights give the combining weights. These are conveniently referred to 1 lb of the fuel. In the combustion of CH_4, for example, 1 lb of CH_4 requires $64/16 = 4$ lb of oxygen for complete combustion and the products are $44/16 = 2.75$ lb of CO_2 and $36/16 = 2.25$ lb of H_2O.

Air Required for Combustion The composition of air is approximately 0.232 O_2 and 0.768 N_2 on a pound basis, or 0.21 O_2 and 0.79 N_2 by volume. For exact analyses, it may be necessary sometimes to take account of the water vapor mixed with the air, but ordinarily this may be neglected.

The minimum amount of air required for the combustion of 1 lb of a fuel is the quantity of oxygen required, as found from the combustion equation, divided by 0.232. Likewise, the minimum volume of air required for the combustion of 1 ft^3 of a fuel gas is the volume of oxygen divided by 0.21. For example, in the combustion of CH_4 the air required per pound of CH_4 is $4/0.232 = 17.24$ lb and the volume of air per cubic foot of CH_4 is $2/0.21 = 9.52$ ft^3. Ordinarily, more air is provided than is required for complete combustion. Let a denote the minimum amount required and xa the quantity of air admitted; then $x - 1$ is the excess coefficient.

Products of Combustion The products arising from the complete combustion of a fuel are CO_2, H_2O, and, if sulphur is present, SO_2. Accompanying these are the nitrogen brought in with the air and the oxygen in the excess of air. Hence the products of complete combustion are principally CO_2, H_2O, N_2, and O_2. The presence of CO indicates incomplete combustion. In simple calculations the reaction of nitrogen with oxygen to form noxious oxides, often termed NO_x, such as nitric oxide (NO), nitrogen peroxide (NO_2), etc., is neglected. In practice, an automobile engine is run at a lower compression ratio to reduce NO_x formation. The reduced pollution is bought at the

Specimen S1 Serial #B3591

Equipment List 1: 30-foot Free Drop

Description	Enter the Model and Serial Number	Attach Inspection Report or Calibration Certificate
Drop Surface, Drawing AT10122, Rev. B	01	SEE ATTACH
Weight Scale	OHAUS / 35014	SEE ATTACH
Thermometer	OMEGA / ENG-12	SEE ATTACH
Thermocouple flexible probe	OMEGA / ENG-11	SEE ATTACH
Thermocouple surface probe	OMEGA / ENG-13	SEE ATTACH
Record any additional tools used to facilitate the test and attach the appropriate inspection report or calibration certificate.		
THERMOCOUPLE STRAIGHT PROBE	OMEGA / ENG-14	SEE ATTACH

Verified by:	Signature	Date
Engineering		12 JAN 98
Regulatory Affairs		12 Jan 98
Quality Assurance		12-Jan 98

Checklist 1: 30-foot Free Drop

Test Location: VALLEY TREE GROVELAND MA **Attempt Number:** 1

Serial # B3591

Step	Specimen ~~A~~ S1 DW 8 JAN 98	Specimen B	Specimen C	Specimen D
1. Measure and record test specimen's weight.	DW 8 JAN 98	N/A	N/A	N/A
Record the specimen's weight:	54.5 lbs			
Note the instrument used:	35014	35014	35014	35014
2. Immerse the test specimen in dry ice as needed to bring specimen temperature below -40° C.	DW 8 JAN 98			
Steps 1 through 2 witnessed by:				
Engineering	SD 12 JAN 98			
Regulatory Affairs	LR 12 Jan 98			
Quality Assurance	KAF 12 Jan 98			
3. Measure the ambient temperature.	DW 8 JAN 98			
Record ambient temperature:	36.9° F			
Note the instrument used:	ENG-12 ENG-14	ENG-12 ENG-14	ENG-12 ENG-14	ENG-12 ENG-14
4. Attach the test specimen to the release mechanism.	DW 8 JAN 98			
5. Begin video recording of test so that the impact is recorded.	DW 8 JAN 98			
6. Measure the temperature of the specimen. Ensure that the specimen is below -40° C.	DW 8 JAN 98			
Record the specimen's internal temperature:	-71.4°C			
Note the instrument used:	ENG-12 ENG-11	ENG-12 ENG-11	ENG-12 ENG-11	ENG-12 ENG-11
Record the specimen's surface temperature.	-64.7°C			
Note the instrument used:	ENG-12 ENG-13	ENG-12 ENG-13	ENG-12 ENG-13	ENG-12 ENG-13
7. Lift and orient the test specimen as shown in the referenced figure for the specimen.	Figure 6 on Page 14	Figure 7 on Page 15	Figure 6 on Page 14	Figure 7 on Page 15
8. Inspect the orientation setup and verify the drop height.	DW 8 JAN 98			
9. Photograph the setup in at least two perpendicular planes.	DW 8 JAN 98			

Checklist 1: 30-foot Free Drop (Continued)

Test Location: GROVELAND, MA. **Attempt Number:** 1

Step	Specimen ~~A~~ S1 DW 8 JAN 98	Specimen B	Specimen C	Specimen D
Steps 3 through 9 witnessed by:		N/A	N/A	N/A
Engineering	SD 12 JAN 98			
Regulatory Affairs	LP 12 Jan 98			
Quality Assurance	KNA 12 Jan 98			
10. Release the test specimen.	DW 8 JAN 98			
11. Measure the surface temperature of the test specimen.	DW 8 JAN 98			
Record the surface temperature:	-39.6°C			
Note the instrument used:	~~ENG-12~~ ENG-13	~~ENG-12~~ ENG-13	~~ENG-12~~ ENG-13	~~ENG-12~~ ENG-13
12. Measure and record the test specimen's weight.	DW 8 JAN 98			
Record the specimen's weight:	54.5 lbs			
Note the instrument used:	35014	35014	35014	35014
13. Pause the video recorder. Ensure that the point of impact and orientation specified in the plan have been achieved and recorded.	DW 8 JAN 98			
14. Record damage to test specimen on a separate sheet and attach.	DW 8 JAN 98			
Steps 10 through 14 witnessed by:				
Engineering	SD 12 JAN 98			
Regulatory Affairs	LP 12 Jan 98			
Quality Assurance	KNA 12 Jan 98			

Checklist 1: 30-foot Free Drop (Continued)

Test Location: GROVELAND, MA. **Attempt Number:** 1

Step	Specimen ~~A~~ S1 CMK	Specimen B	Specimen C	Specimen D
15. Engineering, Regulatory Affairs and Quality Assurance make a preliminary assessment relative to 10 CFR 71. Record the assessment on a separate sheet and attach. Determine what changes are necessary in package orientation for the puncture test to achieve maximum damage.	18Feb98 See Attached	N/A	N/A	N/A

Test Data Accepted by (Signature):	Date:
Engineering	18 FEB 98
Regulatory Affairs	22 Jan 98
Quality Assurance	19 Feb 98

Serial #B3591

30 FOOT FREE DROP. DO 9 JAN 97

SPECIMEN "A" ORIENTATION S1: HIT ON ANGLE REAR END PLATE BOTTOM RIGHT SIDE

DENTED IN 35°

.165 GAP BETWEEN SHELL & REAR END PLATE

FRONT NUT WILL NOT ROTATE

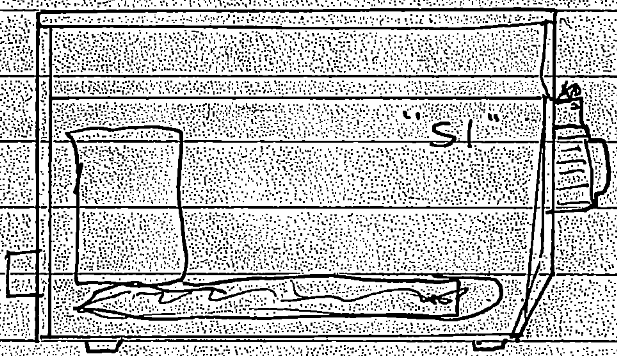

KNA 14 Jan 98

ASSESSMENT : S1, 30 FOOT FREE DROP

TEST EXECUTED PER TEST PLAN #7A, therefore it WAS PERFORMED IN ACCORDANCE WITH 10 CFR 71

SD 14FEB98

DROP ~~[illegible]~~ MISSED IMPACT HIT ORIENTATION.

BASED ON DAMAGE AND MISSED HIT, THE GROUP AGREED TO NOT PROCEED TO NEXT ~~TESTS~~ SD 14FEB98 TESTS.

SD 18 FEB 98

Equipment List 1: 30-foot Free Drop

Specimen S2 – Serial#B35

Description	Enter the Model and Serial Number	Attach Inspection Report or Calibration Certificate
Drop Surface, Drawing AT10122, Rev. B	01	SEE ATTACH
Weight Scale	35014	SEE ATTACH
Thermometer	ENG-12	SEE ATTACH
Thermocouple flexible probe	ENG-11	SEE ATTACH
Thermocouple surface probe	ENG-13	

Record any additional tools used to facilitate the test and attach the appropriate inspection report or calibration certificate.

THERMOCOUPLE STRAIGHT PROBE	ENG-14	SEE ATTACH

Verified by:	Signature	Date
Engineering		14 Jan 98
Regulatory Affairs		12 Jan 98
Quality Assurance		12 Jan 98

Checklist 1: 30-foot Free Drop

Test Location: VALLEY TREE GROVELAND MA **Attempt Number:** 1

Step	Specimen A MB 24Dec97 Spec S 2 DW	Specimen B	Specimen C	Specimen D
1. Measure and record test specimen's weight.	DW 24 DEC 97	NA	NA	NA
Record the specimen's weight:	55.5 lb			
Note the instrument used:	35014	35014	35014	35014
2. Immerse the test specimen in dry ice as needed to bring specimen temperature below -40° C.	DW 24 DEC 97			
Steps 1 through 2 witnessed by:				
Engineering	14 Jan 98			
Regulatory Affairs	LP 12 Jan 98			
Quality Assurance	KNA 12 Jan 98			
3. Measure the ambient temperature.	24 Dec 97 MDB			
Record ambient temperature:	35.6 °F			
Note the instrument used:	~~ENG-12~~ ENG-14	~~ENG-12~~ ENG-14	~~ENG-12~~ ENG-14	~~ENG-12~~ ENG-14
4. Attach the test specimen to the release mechanism.	DG 24 DEC 97			
5. Begin video recording of test so that the impact is recorded.	DW 24 DEC 97			
6. Measure the temperature of the specimen. Ensure that the specimen is below -40° C.	24 Dec. 97 MDB			
Record the specimen's internal temperature:	-65.6 °C			
Note the instrument used:	~~ENG-12~~ ENG-11	~~ENG-12~~ ENG-11	~~ENG-12~~ ENG-11	~~ENG-12~~ ENG-11
Record the specimen's surface temperature.	-57.1 °C			
Note the instrument used:	~~ENG-12~~ ENG-13	~~ENG-12~~ ENG-13	~~ENG-12~~ ENG-13	~~ENG-12~~ ENG-13
7. Lift and orient the test specimen as shown in the referenced figure for the specimen.	Figure 6 on Page 14	Figure 7 on Page 15	Figure 6 on Page 14	Figure 7 on Page 15
8. Inspect the orientation setup and verify the drop height.	DW 24 DEC 97			
9. Photograph the setup in at least two perpendicular planes.	DW 24 DEC 97			

Equipment List 1: 30-foot Free Drop

Specimen D Serial #B3590

Description	Enter the Model and Serial Number	Attach Inspection Report or Calibration Certificate
Drop Surface, Drawing AT10122, Rev. B	01	SEE ATTACH
Weight Scale	35014	SEE ATTACH
Thermometer	ENG-12	SEE ATTACH
Thermocouple flexible probe	ENG-11	SEE ATTACH
Thermocouple surface probe	ENG-13	
Record any additional tools used to facilitate the test and attach the appropriate inspection report or calibration certificate.		
THERMOCOUPLE STRAIGHT PROBE	ENG-14	SEE ATTACH

Verified by:	Signature	Date
Engineering		14 Jan 98
Regulatory Affairs		12 Jan 98
Quality Assurance		12 Jan 98

Checklist 1: 30-foot Free Drop

Test Location: Valley Tree Groveland MA **Attempt Number:** 2nd

Step	Specimen A	Specimen B	Specimen C	Serial #B2590 Specimen D
1. Measure and record test specimen's weight.	NA	NA	NA	24 Dec 97 MBB
Record the specimen's weight:				54.84 lb
Note the instrument used:	35014	35014	35014	35014
2. Immerse the test specimen in dry ice as needed to bring specimen temperature below -40° C.				DW 24 DEC 97
Steps 1 through 2 witnessed by:				
Engineering				Jan 98
Regulatory Affairs				12 Jan 98
Quality Assurance				KNA 12Jan98
3. Measure the ambient temperature.				24 Dec 97 MBB
Record ambient temperature:				38.6°F
Note the instrument used:	~~ENG-12~~ ENG-14	~~ENG-12~~ ENG-14	~~ENG-12~~ ENG-14	~~ENG-12~~ ENG-14
4. Attach the test specimen to the release mechanism.				DW 24 DEC 97
5. Begin video recording of test so that the impact is recorded.				DW 24 DEC 97
6. Measure the temperature of the specimen. Ensure that the specimen is below -40° C.				24 Dec 97 MBB
Record the specimen's internal temperature:				-72.5°C
Note the instrument used:	~~ENG-12~~ ENG-11	~~ENG-12~~ ENG-11	~~ENG-12~~ ENG-11	~~ENG-12~~ ENG-11
Record the specimen's surface temperature.				-50.3°C
Note the instrument used:	~~ENG-12~~ ENG-13	~~ENG-12~~ ENG-13	~~ENG-12~~ ENG-13	~~ENG-12~~ ENG-13
7. Lift and orient the test specimen as shown in the referenced figure for the specimen.	Figure 6 on Page 14	Figure 7 on Page 15	Figure 6 on Page 14	Figure 7 on Page 15
8. Inspect the orientation setup and verify the drop height.				DW 24 DEC 97
9. Photograph the setup in at least two perpendicular planes.				DW 24 DEC 97

Checklist 1: 30-foot Free Drop (Continued)

Test Location: GROVELAND, MA. **Attempt Number:** 2

Step	Specimen A	Specimen B	Specimen C	Specimen D
Steps 3 through 9 witnessed by:	NA	NA	NA	
Engineering				14 Jan 98
Regulatory Affairs				12 Jan 98
Quality Assurance				KNA 12 Jan 98
10. Release the test specimen.				DW 24 DEC 97
11. Measure the surface temperature of the test specimen.				24 Dec 97 MB
Record the surface temperature:				-48.3°C
Note the instrument used:	~~ENG-12~~ ENG-13	~~ENG-12~~ ENG-13	~~ENG-12~~ ENG-13	~~ENG-12~~ ENG-13
12. Measure and record the test specimen's weight.				24 Dec 97 MB
Record the specimen's weight:				53.75 lb
Note the instrument used:	35014	35014	35014	35014
13. Pause the video recorder. Ensure that the point of impact and orientation specified in the plan have been achieved and recorded.				DW 24 DEC 97
14. Record damage to test specimen on a separate sheet and attach.				DW 24 DEC 97
Steps 10 through 14 witnessed by:				
Engineering				14 Jan 98
Regulatory Affairs				12 Jan 98
Quality Assurance				KNA 12 Jan 98

Specimen A Serial# B3587
B #B3588
C #B3589
D #B35

Equipment List 1: 30-foot Free Drop

Description	Enter the Model and Serial Number	Attach Inspection Report or Calibration Certificate
Drop Surface, Drawing AT10122, Rev. B	01	See Attach.
Weight Scale	35014	See Attach.
Thermometer	ENG-12	See Attach.
Thermocouple flexible probe	ENG-11	See Attach.
Thermocouple surface probe	ENG-13	
Record any additional tools used to facilitate the test and attach the appropriate inspection report or calibration certificate.		
Thermocouple Straigt Probe	ENG-14	See Attach.
Verified by:	Signature	Date
Engineering		14 Jan 98
Regulatory Affairs		12 Jan 98
Quality Assurance		12 Jan 98

Checklist 1: 30-foot Free Drop

Test Location: Valley Tree Groveland MA **Attempt Number:** 1

Step Serial#	#3587 Specimen A	#3588 Specimen B	#3589 Specimen C	#3590 Specimen D
1. Measure and record test specimen's weight.	23 Dec 97 MAB	24 Dec 97 MAB	23 Dec 97 MAB	24 Dec 97 MAB
Record the specimen's weight:	55.20 lb	54.90 lb	55.60 lb	54.85 lb
Note the instrument used: ✓	35014	35014	35014	35014
2. Immerse the test specimen in dry ice as needed to bring specimen temperature below -40° C.	DW 23 DEC 97	DW 24 DEC 97	DW 23 DEC 97	DW 24 DEC 97
Steps 1 through 2 witnessed by:				
Engineering	14 Jan 98	14 Jan 98	14 Jan 98	14 Jan 98
Regulatory Affairs	12 Jan 98	12 Jan 98	12 Jan 98	12 Jan 98
Quality Assurance	KNA 12 Jan 98	KNA 12 Jan 98	KNA 12 Jan 98	KNA 12 Jan 98
3. Measure the ambient temperature.	23 Dec 97 MAB	24 Dec 97 MAB	23 Dec 97 MAB	24 Dec 97 MAB
Record ambient temperature:	32.2°F	35.4°F	35.1°F	38.6°F
Note the instrument used:	ENG 12 ENG 114	ENG 12 ENG 14	ENG 12 ENG 14	ENG 12 ENG 14
4. Attach the test specimen to the release mechanism.	DW 23 DEC 97	DW 24 DEC 97	DW 23 DEC 97	DW 24 DEC 97
5. Begin video recording of test so that the impact is recorded.	DW 23 DEC 97	DW 24 DEC 97	DW 23 DEC 97	DW 24 DEC 97
6. Measure the temperature of the specimen. Ensure that the specimen is below -40° C.	DW 23 DEC 97	24 Dec 97 MAB	DW 23 DEC 97	24 Dec 97 MAB
Record the specimen's internal temperature:	-74.1°C	-54.6°C	-71.6°C (*)	-72.5°C
Note the instrument used:	ENG 12 ENG 11	ENG 12 ENG 11	ENG 12 ENG 11	ENG 12 ENG 11
Record the specimen's surface temperature.	-52.9°C	-56.9°C	-70.6°C	-67.5°C
Note the instrument used:	ENG 12 ENG 13	ENG 12 ENG 13	ENG 12 ENG 13	ENG 12 ENG 13
7. Lift and orient the test specimen as shown in the referenced figure for the specimen.	Figure 6 on Page 14	Figure 7 on Page 15	Figure 6 on Page 14	Figure 7 on Page 15
8. Inspect the orientation setup and verify the drop height.	DW 23 DEC 97	DW 24 DEC 97	DW 23 DEC 97	DW 24 DEC 97
9. Photograph the setup in at least two perpendicular planes.	23 Dec 97 MAB	24 Dec 97 MAB	23 Dec 97 MAB	DW 24 DEC 97

(*) KNA for M
12 Jan

Checklist 1: 30-foot Free Drop (Continued)

Test Location: VALLEY TREE GROVELAND MA **Attempt Number:** 1

Step	Specimen A	Specimen B	Specimen C	Specimen D
Steps 3 through 9 witnessed by:				
Engineering	14 Jan 98	14 Jan 98	14 Jan 98	14 Jan 98
Regulatory Affairs	12 Jan 98	12 Jan 98	12 Jan 98	12 Jan 98
Quality Assurance	KNA 12 Jan 98	KNA 12 Jan 98	KNA 12 Jan 98	KNA 12 Jan 98
10. Release the test specimen.				
11. Measure the surface temperature of the test specimen.	DW 23 DEC 97	24 Dec 97 MAB	DW 23 DEC 97	24 Dec 97 MAB
Record the surface temperature:	-44.2°C	-54.9°C	-42.6°C	-60.0°C
Note the instrument used:	ENG 12 ENG 13	ENG 12 ENG 13	ENG 12 ENG 13	ENG 12 ENG 13
12. Measure and record the test specimen's weight.	DW 23 DEC 97	24 Dec 97 MAB	DW 23 DEC 97	24 Dec 97 MAB
Record the specimen's weight:	55.25 lb	54.50 lb	55.50 lb	54.84 lb
Note the instrument used:	35014	35014	35014	35014
13. Pause the video recorder. Ensure that the point of impact and orientation specified in the plan have been achieved and recorded.	DW ~~29~~ DW 23 DEC 97	DW 24 DEC 97	DW 23 DEC 97	DW 24 DEC 97
14. Record damage to test specimen on a separate sheet and attach.	DW 29 DEC 97	DW 29 DEC 97	DW 29 DEC 97	DW 29 DEC 97
Steps 10 through 14 witnessed by:				
Engineering	14 Jan 98	14 Jan 98	14 Jan 98	14 Jan 98
Regulatory Affairs	12 Jan 98	12 Jan 98	12 Jan 98	12 Jan 98
Quality Assurance	KNA 12 Jan 98	KNA 12 Jan 98	KNA 12 Jan 98	KNA 12 Jan 98

Checklist 1: 30-foot Free Drop (Continued)

Test Location: Valley Tree Groveland, MA **Attempt Number:** 1

Step	Specimen A	Specimen B	Specimen C	Specimen D
15. Engineering, Regulatory Affairs and Quality Assurance make a preliminary assessment relative to 10 CFR 71. Record the assessment on a separate sheet and attach. Determine what changes are necessary in package orientation for the puncture test to achieve maximum damage.	See	Attached	14	Jan 98

Test Data Accepted by (Signature):	Date:
Engineering	14 Jan 98
Regulatory Affairs	22 Jan 98
Quality Assurance	14 Jan 98

30-foot Free Drop Test Assessment

The test was executed per test plan #74, therefore it was performed in accordance with 10 CFR 71.

Unit S2 was needed for replacing Unit C, since Unit C did not hit the target impact point. There was no adjustment to the torque values of the end plate screws. The penetration test and 4-foot free drop test was performed on S2 before the 30-foot free drop test.

Unit D was dropped twice since it did not hit the target impact point. Second attempt hit same impact point as previous. This produced worst damage of all attempts.

Based on assessment of damage, there is no indication of any damage that would alter original acceptance of test specimens to meet requirements of 10 CFR 71.

As there is no structural damage to the dropped units, conclude that testing will continue as described in test plan 74.

Except for specimen B and D, there was no change in orientation for the puncture test. Orientations for specimen B and D was changed to try to peel back the area of the end plate left by the removed handle.

14 Jan 98

KMA 14 Jan 98

22 Jan 98

Intermediate Test Inspection

Damage recorded for each test specimen. See attached.

It was decided to delay the radiation profile of the test specimen, since it could possibly affect their structural integrity and affect the outcome of the thermal test.

14 Jan 98

KNA 14Jan98

22 Mar 98

30 FOOT FREE DROP & PUNCTURE TEST

DQ 29 DEC 97

SPECIMEN	VISUAL: BOTTOM SHELL CONVEXED ~~3~~ DQ 29 DEC 97 1/4" CENTER OF SHELL (BOTTOM)
A	LEFT SIDE .168 GAP OPENING BETWEEN SHELL & REAR PLATE, CROWN OF REAR PLATE 3 3/4"
HIT REAR PLATE BOTTOM	RIGHT SIDE .149 GAP BETWEEN SHELL & REAR PLATE CROWN OF REAR PLATE 4" 10.280 W FRONT TO REA
Serial#B3587	
SPECIMEN	VISUAL: HANDLE BROKEN OFF, FRONT PLATE TOP BENT IN 45°
B	REAR END PLATE BENT OUT 13°
HIT FRONT PLATE TOP	(1/8 GAP ON TOP REAR) NO GAP ON SHELL & FRONT, OR REAR PLATES 10" W FRONT TO REAR
Serial#B3588	CROWN FRONT PLATE 3 1/2 HIGH CONVEX 1/16", FRONT NUT DOESNT SPIN
SPECIMEN	GAP .147 BOTH SIDES CROWN 4" HIGH (CONVEXED)
S2	BOTTOM SHELL CONVEXED 1/4" 1/2" FROM MID POINT TO REAR
HIT REAR PLATE BOTTOM	FRONT NUT SPINS FREELY 10.255 / 10.270 W FRONT TO REAR
Serial#B3592	
SPECIMEN	GAP .480 FRONT PLATE TO SHELL 4 1/8" TO CROWN FROM BASE
"D"	.094 GAP TOP SHELL TO REAR PLATE, SHELL TWIST APPROX 1/8"
HIT FRONT PLATE TOP RIGHT SIDE	
Serial#B3590	

KNA 12 Jan 98

12 Jan 98

14 Jan 98

30 FT FREE DROP 29 DEC 97

SPECIMEN C
HIT BOTTOM REAR PLATE CORNER
Serial #B3589

VISUAL: DAMAGE TO BOTTOM LEFT CORNER OF REAR PLATE & SHELL

DIDN'T HIT ON TARGET

.200 GAP BETWEEN SHELL & REAR PLATE

DENT APPROX 1" REAR PLATE LEFT BOTTOM

KNA 12 Jan 98

LDP 12 Jan 98

14 Jan 98

Specimen A serial #B3587
B #B3588
D #B3590
S2 #B3592

Equipment List 2: Puncture Test

Description	Enter the Model and Serial Number	Attach Inspection Report or Calibration Certificate
Drop Surface, Drawing AT10122, Rev. B	SN-01	SEE ATTACH
Puncture Billet, Drawing CT10119, Rev. C	SN-01	SEE ATTACH
Weight Scale	OHAUS DS10 #35014	SEE ATTACH
Thermometer	OMEGA HH21 #ENG-12	SEE ATTACH
Thermocouple flexible probe	#ENG-11	SEE ATTACH
Thermocouple surface probe	#ENG-13	SEE ATTACH
Record any additional tools used to facilitate the test and attach the appropriate inspection report or calibration certificate.		
Thermocouple Straight Probe	#ENG-14	SEE ATTACH

Verified by:	Signature	Date
Engineering		14 Jan 98
Regulatory Affairs		12 Jan 98
Quality Assurance		12 Jan 98

Checklist 2: Puncture Test

Test Location: GROUE LAND MA

Attempt Number: 1

Step	Specimen A	Specimen B	Specimen 24 MRB 24 Dec 97 ~~C~~ S-2	Specimen D
Serial #	B3587	B3588	B3592	B3590
1. Immerse the test specimen in dry ice as need to bring the specimen's temperature below -40° C.	Dw 24 DEC 97	Dw 24 DEC 97	Dw 24 DEC 97	Dw 24 DEC 97
Step 1 witnessed by:				
Engineering	14 Jan 98	14 Jan 98	14 Jan 98	14 Jan 98
Regulatory Affairs	12 Jan 98	12 Jan 98	12 Jan 98	12 Jan 98
Quality Assurance	KNA 12 Jan 98	KNA 12 Jan 98	KNA 12 Jan 98	KNA 12 Jan 98
2. Measure the weight of the specimen.	24 Dec 97 MRB	24 Dec 97 MRB	24 Dec 97 MRB	24 Dec 97 MRB
Record the specimen's weight:	55.20 lb	54.50 lb	55.01 lb	54.84 lb
Note instrument used:	#35014	# 35014	# 35014	#35014
3. Measure the ambient temperature.	Dw 24 DEC 97	Dw 24 DEC 97	Dw 24 DEC 97	Dw 24 DEC 97
Record ambient temperature:	36.8 °F	35.6°F	35.3° F	31.6° F
Note the instrument used:	ENG-12 #ENG-14	ENG-12 #ENG-14	ENG-12 #ENG-14	ENG-12 #ENG-14
4. Attach the test specimen to the release mechanism.	Dw 24 DEC 97	Dw 24 DEC 97	Dw 24 DEC 97	Dw 24 DEC 97
5. Begin video recording of test so that the impact is recorded.	Dw 24 DEC 97	Dw 24 DEC 97	Dw 24 DEC 97	Dw 24 DEC 97
6. Measure the surface temperature of the specimen. Ensure that the specimen is below -40° C.	24 Dec 97 MRB	24 Dec 97 MRB	24 Dec 97 MRB	24 Dec 97 MRB
Record the specimen surface temperature:	-70.4°C	-42.2°C	-57.2°C	-58.5°C
Note the instrument used:	ENG-12 #ENG-13	ENG-12 #ENG-13	ENG-12 #ENG-13	ENG-12 #ENG-13
7. Lift and orient the test specimen as shown in the referenced figure for the specimen.	Figure 8 on Page 18	Figure 9 on Page 19	Figure 8 on Page 18	Figure 9 on Page 19
8. Inspect the orientation setup and verify drop height.	Dw 24 DEC 97	Dw 24 DEC 97	Dw 24 DEC 97	Dw 24 DEC 97

Checklist 2: Puncture Test (Continued)

Test Location: VALLEY TREE GROVELAND, MA. **Attempt Number:** 1

Step	Specimen A	Specimen B	Specimen ~~C~~ MRB 24 Dec 97 S-2	Specimen D
9. Photograph the setup in at least two perpendicular planes.	DW 24 DEC 97	DW 24 DEC 97	DW 24 DEC 97	DW 24 DEC 97
Steps 2 through 9 witnessed by:				
Engineering	14 Jan 98	14 Jan 98	14 Jan 98	14 Jan 98
Regulatory Affairs	LP 12 Jan 98	LP 12 Jan 98	LP 12 Jan 98	LP 12 Jan 98
Quality Assurance	KNA 12 Jan 98	KNA 12 Jan 98	KNA 12 Jan 98	KNA 12 Jan 98
10. Release the test specimen.	DW 24 DEC 97	DW 24 DEC 97	DW 24 DEC 97	DW 24 DEC 97
11. Measure the surface temperature of the test specimen.	24 Dec. 97 MRB	24 Dec 97 MRB	24 Dec 97 MRB	24 Dec 97 MRB
Record the surface temperature:	-65.2 °C	- 42.2 °C	- 40.1 °C	- 48.7 °C
Note the instrument used:	ENG - 12 #ENG-13	ENG - 12 # ENG-13	ENG - 12 #ENG-13	ENG - 12 #ENG-13
12. Measure and record the test specimen's weight.	24 Dec. 97 MRB	24 Dec. 97 MRB	24 Dec. 97 MRB	24 Dec. 97 MRB
Record the specimen's weight:	55.05 lb	53.91 lb	55.05 lb	55.20 lb
Note the instrument used:	#35014	#35014	#35014	#35014
13. Pause the video recorder. Ensure that the point of impact and orientation specified in the plan have been achieved and recorded.	DW 24 DEC 97	DW 24 DEC 97	DW 24 DEC 97	DW 24 DEC 97
14. Record damage to test specimen on a separate sheet and attach.	DW 29 DEC 97	DW 29 DEC 97	DW 29 DEC 97	DW 29 DEC 97
Steps 10 through 14 witnessed by:				
Engineering	14 Jan 98	14 Jan 98	14 Jan 98	14 Jan 98
Regulatory Affairs	LP 12 Jan 98	LP 12 Jan 98	LP 12 Jan 98	LP 12 Jan 98
Quality Assurance	KNA 12 Jan 98	KNA 12 Jan 98	KNA 12 Jan 98	KNA 12 Jan 98

Checklist 2: Puncture Test (Continued)

Test Location: VALLEY TREE GROVELAND, MA. **Attempt Number:** 1

Step	Specimen A	Specimen B	Specimen ~~C~~ 52 14 Jan 98	Specimen D
15. Engineering, Regulatory Affairs and Quality Assurance make a preliminary assessment relative to 10 CFR 71. Record the assessment on a separate sheet and attach. Determine the package orientation for the thermal test that will achieve maximum damage.	see	attached	14 Jan 98	

Test Data Accepted by (Signature):	Date:
Engineering	14 Jan 98
Regulatory Affairs	22 Jan 98
Quality Assurance	14 Jan 98

Puncture Test Assessment

The puncture test was executed per test plan #74, therefore it was performed in accordance with 10 CFR 71.

Based on assessment of damage, there is no indication of any damage that would alter original acceptance of test specimens to meet requirements of 10 CFR 71.

As there is no structural damage to the dropped units, conclude that testing will continue as described in test plan 74.

Since the damage for specimen B did not produce a gap in the shell or end plates, It was decided to not perform the thermal test on this specimen.

There is no special orientation for the thermal test. All specimen to be oriented on their feet. This will allow optimal air flow in and around open gap areas of the damaged shell and end plates.

14 Jan 98

KMA 14Jan98

LLB 22Jan98

Specimen A Serial#B3587
D #B3590
S2 #B3592

Equipment List 3: Thermal Test

Description	Enter the Model and Serial Number	Attach Inspection Report or Calibration Certificate
Air Flowmeter	3367 /ENG-08	SEE ATTACH
Thermocouple (internal)	ENG-18A	SEE ATTACH
Thermocouple (external)	ENG-17A	SEE ATTACH
Thermocouple (oven)	ENG-16A	SEE ATTACH
Temperature recorder	ENG-16/ENG-17/ENG-18	SEE ATTACH

Record any additional tools used to facilitate the test and attach the appropriate inspection report or calibration certificate.

THERMOMETER	ENG-12	SEE ATTACH
THERMOCOUPLE PROBE	ENG-14	SEE ATTACH

Verified by:	Signature	Date
Engineering		14 Jan 98
Regulatory Affairs		12 Jan 98
Quality Assurance		12 Jan 98

Checklist 3: Thermal Test

Test Location: MFG SCIENCES OAKRIDGE, TN. **Attempt Number:** 1

Step	#B3587 Specimen A	Specimen B	#B3592 Specimen ~~C~~ S2 DW 30 DEC 97	#B3590 Specimen D
1. Pre-heat the oven to a temperature above 800° C.	DW 3:24 PM 902.2°C		DW 3:24 PM 902.2	DW 3:24 PM 902.2°c
2. Attach the thermocouples the specimen's internal and external measuring points.	DW 30 DEC 97		DW 30 DEC 97	DW 30 DEC 97
3. Place the package in the oven and close the oven door.	DW 30 DEC 97		DW 30 DEC 97	DW 30 DEC 97
Record the date and time that the package is placed in oven.	3:25 PM 844°c		6:16 PM 807.9°c	4:50 PM 852°c
4. When the specimen's internal temperature exceeds 800° C, start the air flow into the oven. Record the time.	4:06 PM DW 30 DEC 97		7:25 PM DW 30 DEC 97	5:34 PM DW 30 DEC 97
Steps 1 through 4 witnessed by:				
Engineering	14 Jan 98		14 Jan 98	14 Jan 98
Regulatory Affairs	12 Jan 98		12 Jan 98	12 Jan 98
Quality Assurance	KNA 12 Jan 98		KNA 12 Jan 98	KNA 12 Jan 98
5. Measure the oven temperature, the specimen's internal and external temperatures and the air flow rate.	DW 30 DEC 97		DW 30 DEC 97	DW 30 DEC 97
Record the oven temperature:	904°c		900.7°c	900.0°c
Note instrument used:	ENG-16 ENG-16A		ENG-16 ENG-16A	ENG-16 ENG-16A
Record the specimen's internal temperature:	800°c		800.1°c	801.1°c
Note instrument used:	ENG-18 ENG-18A		ENG-18 ENG-18A	ENG-18 ENG-18A
Record the specimen's external temperature:	844.3°c		823.8°c	842.2°c
Note instrument used:	ENG-17 ENG-17A		ENG-17 ENG-17A	ENG-17 ENG-17A
Record airflow rate:	10 CFM		10 CFM	10 CFM
Note instrument used:	3367 ENG-08		3367 ENG-08	3367 ENG-08
6. Monitor the internal and external temperatures of the specimen and the oven temperature throughout the 30-minute period to ensure that they are above 800° C.	DW 30 DEC 97		DW 30 DEC 97	DW 30 DEC 97

Checklist 3: Thermal Test (Continued)

Test Location: MFG SCIENCES OAKRIDGE, TN.

Attempt Number: 1

Step	Specimen A	Specimen B	Specimen ~~C~~ 52 DW 30 DEC 97	Specimen D
7. Monitor the airflow throughout the 30-minute period to ensure a rate of at least 9.6 ft^3/min.	DW 30 DEC 97		DW 30 DEC 97	DW 30 DEC 97
8. At the end of the 30-minute period, repeat step 5 using the same measurement devices.	DW 30 DEC 97		DW 30 DEC 97	DW 30 DEC 97
Record the oven temperature:	905.2°c		901.5°c	907.1°c
Record the specimen's internal temperature:	841.2°c		857.0°c	842.5°c
Record the specimen's external temperature:	850.4°c		843.0°c	850.4°c
Record intake air flow velocity:	10 CFM		10 CFM	10 CFM
Steps 5 through 8 witnessed by:				
Engineering	14 Jan 98		14 Jan 98	14 Jan 98
Regulatory Affairs	12 Jan 98		12 Jan 98	12 Jan 98
Quality Assurance	KNA 12 Jan 98		KNA 12 Jan 98	KNA 12 Jan 98
9. Remove test specimen from the oven.	DW 30 DEC 97		DW 30 DEC 97	DW 30 DEC 97
Record time the specimen is removed.	4:36 PM		7:55 pm	6:04
Describe combustion when door is opened to remove specimen.	RED HOT NO FLAMES		RED HOT FLAMES INSIDE	RED HOT SOME FLAMES TOF REAR
NOTE: If specimen continues to burn, let it self-extinguish and cool naturally.				
10. Measure the ambient temperature.	DW 30 DEC 97		DW	DW 30 DEC 97
Record the ambient temperature:	62.3°F		62.3°F	61.9°F
Note the instrument used:	ENG-12 ENG-14		ENG-12 ENG-14	ENG-12 ENG-14
11. Photograph the test specimen and any subsequent damage	DW 30 DEC 97		DW 30 DEC 97	DW 30 DEC 97
12. Record damage to test specimen on a separate sheet and attach.	See photos + videos			
Steps 9 through 12 witnessed by:				
Engineering	8 Feb 98		18 Feb 98	18 Feb 98
Regulatory Affairs	12 Jan 98		12 Jan 98	12 Jan 98
Quality Assurance	KNA 12 Jan 98		KNA 12 Jan 98	KNA 12 Jan 98

Checklist 3: Thermal Test (Continued)

Test Location: MFG SCIENCES OAK RIDGE, TN.

Attempt Number: 1

Step	Specimen A	Specimen B	Specimen ~~C~~ S2 30 DEC 97	Specimen D
13. Engineering, Regulatory Affairs and Quality Assurance make a preliminary assessment relative to 10 CFR 71. Record the assessment on a separate sheet and attach.	see attached		see attached	see attached

Test Data Accepted by (Signature):		Date:
Engineering	S. Gen	18 FEB 98
Regulatory Affairs	C. Roughan	18 FEB 98
Quality Assurance		02-MAR 98

Post Thermal Temp. at Mfg. Sciences

8:35 AM 31 Dec 97 Room Temp 17.8

Serial#B3587 Specimen A: Internal temp 17.6°C

Serial#B3590 Specimen D: Internal temp ~~54.1~~ 31 Dec 97
541.3°C

Serial#B3592 Specimen S2: Internal temp ~~417.3°C~~ 31 Dec97
417.5°C

DO 31 DEC 97
~~Spec~~

KNA 31 Dec 97

Assessment – Specimen A (Thermal results)

Serial #B3587

Based on physical appearance of Specimen A, it is probable that additional movement of the shield was due to transport/handling.

The shield in Specimen A appears (based on radiographs) to have experienced lateral movement from time of concluding puncture test to arrival back at Amersham after thermal testing. The evidence of lateral movement is the distance the front S tube was displaced from the front nut. Comparisons of this position after thermal (and transport) to radiographs taken after puncture indicate an approximate 1/4 inch movement. As the thermal test was performed with the 660 flat, there were no forces or loads produced during thermal that could have produced this degree of lateral movement.

In order to validate that the lateral movement was a result of handling and transport, additional specimens will be subject to the thermal test.

In addition observations of the unpacking operation at Amersham of the test units indicate that the test specimens had been packaged with an end plate down, i.e. not on its normal resting position on the feet.

The additional test specimens include:

① S_3 – This is a specimen that was originally
Serial #B3586

edge drop. Based on the orientation miss, the puncture test was not performed. Upon examination of C through radiographs and visual observation and mechanical measurements, it was determined that although the damage was not exactly as in Specimen A prior to, B thermal test, it would provide information on the ~~m~~ amount of possible movement as a result of the thermal test. The S tube location in the front nut was similar to that seen on Specimen A. The rear plate on C was not bowed out in the same location as on A, but as the strike was disengaged from the boss of the lock assembly it appeared that the shield would have room to move downward. The teleflex engagement of C was severed.

SD 18 FEB 98
CMR 18 FEB 98
KMA 02 MAR 98

was corrupted during transport/ handling.

If it doesn't pass profile, information will not be used as it was subjected to four 30 foot drop tests and had ~~the~~ excessive damage. Other test specimens subjected to 1 or 2 30 foot drops did not exhibit the extent of damage shown by EX-1

Radiographs of all three specimens were taken prior to transport to thermal testing. Source position was also taken prior to transport. The source position was taken upon receipt at Manufacturing Sciences to determine actual position prior to thermal.

Radiographs and ~~LA~~ source position will be taken when units are cooled down after thermal test to record source position prior to any movement or transport,

(CG) 18 FEB 98

CMR 19Feb98

(KMA) 02 MAR 98

TEST PLAN # 74

SPECIMEN "D" - PROFILE RESULTS INDICATE THIS TEST SPECIMEN PASSED THE TEST REQUIREMENTS OF 10 CFR 71.73.

Serial# B3590

SPECIMEN "S2" - THE TEAM AGREED TO NOT PROFILE THIS TEST SPECIMEN. THIS IS BECAUSE THE RESULTS PROBABLY WOULD NOT HAVE MATTERED SINCE THE RESULTS OF SPECIMEN "A" WAS QUESTIONABLE. ALSO, ~~PRESONAL~~ PERSONAL SAFETY WAS CONSIDERED IN THE DECISION NOT TO PROFILE "S2".

SD 18FEB98

Serial# B3592

SD 18 FEB 98

CMR 18 Feb 98

KMA 02 MAR 98

SENTINEL

WORKSHEET

I. Device Model 660 Stylo Capacity 140 Ci Isotope IR-192 Source Model 424-9 TI0763

II. Maximum acceptable surface reading: 200 mR/hr * If used to show compliance wi normal transport requiremen

Maximum acceptable meter reading: 10 mR/hr * For normal transport

1 R/hr * For hypothetical accident conditions of 10 CFR 71.

III. Surface Correction Factors:

(applicable for normal transport only).

Top	1.16
Right	1.28
Front	1.13
Left	1.28
Rear	1.13
Bottom	1.19

IV. Specific Instructions for loading/unloading:

See Attachment

V. Approved By:

Engineering 9 Jan 98 Date

Regulatory 9 Jan 98 Date

Quality Assurance 9 Jan 98 Date

Amersham QSA

Profile Worksheet Supplement (PEF-003/97) Supplement # PWS-1/98

4. ALARA Justification

Step 1:

Assuming surface intensity of 5 R/hr, source securement/unsecurement time of 2 minute and working behind supplemental shielding to reduce body intensities to less than 500 mR/hr, exposure estimates for operation as follows:

$$E_{WB} = \left(500 \ \frac{mR}{hr} \times \ 0.033 \ hr\right) = 17 \ mR$$

$$E_{Hand} = \left(5{,}000 \ \frac{mR}{hr} \times \ 0.033 \ hr\right) = 165 \ mR$$

Step 2 and 3:

Dose to personnel the same as general cutting cell work.

Profile Operation:

5 minutes for assessment of surface dose rates and general handling/adjustment at average intensity of 1 R/hr, whole body average dose rate of 200 mR/hr for 15 minutes for one meter dose rate readings.

$$E_{WB} = \left(200 \ \frac{mR}{hr} \times \ 0.25 \ hr\right) = 50 \ mR$$

$$E_{Hand} = \left(1{,}000 \ \frac{mR}{hr} \times \ 0.083 \ hr\right) = 83 \ mR$$

RHP Approval Initials & Date: 9Jan98

Profile Worksheet Supplement (PEF-003/97) Supplement # PWS-1/98

5. Authorized Individuals:

Profile: ☐ RT Qualified & Operationally Approved for Device Profiles

☒ Others: RSO, RAM, E. Shaffer, R. Kelly

Steps 2 & 3: ☐ RT Qualified & Operationally Approved for Cutting Cell Procedure

☒ Others: E. Shaffer, R. Kelly, RSO, RAM

6. Operational Hold-points:

None.

7. Other Applicable Comments/Criteria:

None.

RHP Approval Initials & Date: 9Jan98

SENTINEL

660/660B DEVICE PROFILING FORM

B3588 (KNA) 12 Jan 98

TP73 "B"

Device Model No.: 660B **Device Serial No.:** ~~After Thermal~~ After 30 Ft + Puncture LP 5 Jan

Model ~~424-9~~ T10163 **Source Serial Number:** X0016 **Activity:** 93.2 C

Surface Survey Instrument: AN/PDR 27T **Serial No:** SM-392401 **Cal Due:** 3/18/98

One Meter Survey Instrument: Same **Serial No:** – **Cal Due:** –

* Non-leaded plug used during profile.

Capacity Corr. factor 1.50

SURFACE READINGS
mR/hr

	Surf Corr fact	Extrapolated ~~Allowed~~	Actual
TOP	1.16	104.4	60
RIGHT	1.28	153.6	80
FRONT	1.13	389.9	230
LEFT	1.28	115.2	60
REAR	1.13	152.6	90
BOTTOM	1.19	107.1	60

ONE METER READINGS
mR/hr

	Extrapolate ~~Allowed~~	Actual
TOP	1.0	0.7
RIGHT	0.9	0.6
FRONT	2.7	1.8
LEFT	0.75	0.5
REAR	1.5	1.0
BOTTOM	0.9	0.6

INSPECTOR: L. Padolek **DATE:** 5 Jan 98 **NCR No.:**

Comments:

(KNA) 12 Jan 98

Amersham QSA

WI-Q05

SENTINEL

660/660B DEVICE PROFILING FORM

B3587 (KNA) 12 Jan 98

Device Model No.: 660B Device Serial No.: TP73"A" After Thermal

Model ~~424-9~~ T10163 Source Serial Number: X0016 Activity: 93.2 Ci

<500 mR/hr ~~Surface~~ Survey Instrument: AN/PDR 27T Serial No: SM-392401 Cal Due: 3/18/98

*) ≥ 500 mR/hr ~~One Meter~~ Survey Instrument: Tech-50 Serial No: B-814-S Cal Due: 7/22/98

Capacity Corr. Factor

1.5

SURFACE READINGS
mR/hr

	Extrapolated ~~Allowed~~ for Capacity only	Actual
TOP	780	520*
RIGHT	3 R/hr	2 R/hr*
FRONT	40.5	27
LEFT	3 R/hr	2 R/hr*
REAR	3 R/hr	2 R/hr*
BOTTOM	1.8 R/hr	1.2 R/hr*

ONE METER READINGS
mR/hr

	Extrapolated ~~Allowed~~	Actual
TOP		
RIGHT		
FRONT	1.4	0.9
LEFT		
REAR	9.3 R/hr	6.2 R/hr*
BOTTOM	18	12.0

>1 R/hr. No add'l measurements taken on device.

INSPECTOR: DATE: 5 Jan 98 NCR No.:

Comments:

- No surface corrections made. Actual surface enclosed in plastic bagging which varied in thickness from 1/2-1".
- Surface doses for general info only. Primary purpose of profile was for 1 meter readings. Surface levels on sides and rear may be higher than recorded. Radiation was a finely collimated beam from s-tube out the rear of the device which was difficult to quantify precisely without receiving add'l. extremity exposure.

KNA 12 Jan 98

SENTINEL

660/660B DEVICE PROFILING FORM

B3590 (KNA) 12 Jan 98

Device Model No.: 660B Device Serial No.: TP73 "D" After Thermal

Model ~~424-9~~ T70/63 Source Serial Number: X0016 Activity: 89.7 Ci

Surface Survey Instrument: Bicron Tech-50 Serial No: B-814-5 Cal Due: 7/22/98

One Meter Survey Instrument: Same Serial No: – Cal Due: –

Capacity Corr. Factor

1.56

SURFACE READINGS
mR/hr

	~~Allowed~~	Actual
TOP		130
RIGHT		180
FRONT		80
LEFT		50
REAR		90
BOTTOM		50

ONE METER READINGS
mR/hr

	Extrapolated ~~Allowed~~	Actual
TOP	2.3	1.5
RIGHT	1.9	1.2
FRONT	2.7	1.7
LEFT	2.2	1.4
REAR	4.7	3.0
BOTTOM	1.7	1.1

INSPECTOR: DATE: 9 Jan 98 NCR No.: ______

Comments:

* Surface of unit enclosed in multiple layers of plastic bags for contamination control of uranium oxide. Thickness varies from 1/4" to 1".

* Surface readings taken for exposure control and general information purposes only.

(KNA) 12 Jan 98

Amersham QSA

WI-Q05

Equipment List 1: 30-foot Free Drop

S3 Serial#B3586

Description	Enter the Model and Serial Number	Attach Inspection Report or Calibration Certificate
Drop Surface, Drawing AT10122, Rev. B	01	SEE ATTACH
Weight Scale	OHAUS / 35014	SEE ATTACH
Thermometer	OMEGA / ENG-12	SEE ATTACH
Thermocouple flexible probe	OMEGA / ENG-11	SEE ATTACH
Thermocouple surface probe	OMEGA / ENG-13	SEE ATTACH
Record any additional tools used to facilitate the test and attach the appropriate inspection report or calibration certificate.		
THERMOCOUPLE STRAIGHT PROBE	OMEGA / ENG-14	SEE ATTACH

Verified by:	Signature	Date
Engineering		14 Jan 98
Regulatory Affairs		12 Jan 98
Quality Assurance		14 Jan 98

Checklist 1: 30-foot Free Drop

Test Location: VALLEY TREE GROVELAND MA serial #B3586 **Attempt Number:** *

Step	#1 Specimen ~~A~~ 11 JAN 98 53	#2 Specimen ~~B~~ 11 JAN 98 53	Specimen C	Specimen D
1. Measure and record test specimen's weight.	55.3 lbs	55.25 lbs	N/A	N/A
Record the specimen's weight:	DW 11 JAN 98	DW 11 JAN 98		
Note the instrument used:	35014	35014	35014	35014
2. Immerse the test specimen in dry ice as needed to bring specimen temperature below -40° C.	DW 11 JAN 98	DW 11 JAN 98		
Steps 1 through 2 witnessed by:				
Engineering	12 Jan 98	12 Jan 98		
Regulatory Affairs	LLB 12 Jan 98	LLB 12 Jan 98		
Quality Assurance	CMP 14 Jan 98	CMP 14 Jan 98		
3. Measure the ambient temperature.	11 JAN 98	11 JAN 98		
Record ambient temperature:	42.6°F	42.6°F		
Note the instrument used:	ENG-12 ENG-14	ENG-12 ENG-14	ENG-12 ENG-14	ENG-12 ENG-14
4. Attach the test specimen to the release mechanism.	DW 11 JAN 98	DW 11 JAN 98		
5. Begin video recording of test so that the impact is recorded.	DW 11 JAN 98	DW 11 JAN 98		
6. Measure the temperature of the specimen. Ensure that the specimen is below -40° C.	11 JAN 98	11 JAN 98		
Record the specimen's internal temperature:	-77.1°C	-77.1°C		
Note the instrument used:	ENG-12 ENG-11	ENG-12 ENG-11	ENG-12 ENG-11	ENG-12 ENG-11
Record the specimen's surface temperature.	-58.2°C	-51.1°C		
Note the instrument used:	ENG-12 ENG-13	ENG-12 ENG-13	ENG-12 ENG-13	ENG-12 ENG-13
7. Lift and orient the test specimen as shown in the referenced figure for the specimen.	Figure 6 on Page 14	Figure 7 on Page ~~15~~ 14 CMP	Figure 6 on Page 14	Figure 7 on Page 15
8. Inspect the orientation setup and verify the drop height.	DW 11 JAN 98	DW 11 JAN 98		
9. Photograph the setup in at least two perpendicular planes.	DW 11 JAN 98	DW 11 JAN 98		

Checklist 1: 30-foot Free Drop (Continued)

Test Location: GROVELAND, MA. **Attempt Number:** *

Step		Specimen S3 ~~A~~ *1 DW 11 JAN 98	Specimen S3 ~~B~~ *2 DW 11 JAN 98	Specimen C	Specimen D
Steps 3 through 9 witnessed by:				N/A	N/A
	Engineering	14 Jan 98	14 Jan 98		
	Regulatory Affairs	12 Jan 98	12 Jan 98		
	Quality Assurance	CMR 14 Jan 98	CMR 14 Jan 98		
10. Release the test specimen.		DW 11 JAN 98	DW 11 JAN 98		
11. Measure the surface temperature of the test specimen.		F 11 JAN 98	F 11 JAN 98		
	Record the surface temperature:	-45.4°C	-26.2°C		
	Note the instrument used:	ENG-12 ENG-13	ENG-12 ENG-13	ENG-12 ENG-13	ENG-12 ENG-13
12. Measure and record the test specimen's weight.		F 11 JAN 98	F 11 JAN 98		
	Record the specimen's weight:	55.25 lbs	55.4 lbs		
	Note the instrument used:	35014	35014	35014	35014
13. Pause the video recorder. Ensure that the point of impact and orientation specified in the plan have been achieved and recorded.		DW 11 JAN 98	DW 11 JAN 98		
14. Record damage to test specimen on a separate sheet and attach.		DW 11 JAN 98	DW 11 JAN 98		
Steps 10 through 14 witnessed by:					
	Engineering	14 Jan 98	14 Jan 98		
	Regulatory Affairs	12 Jan 98	12 Jan 98		
	Quality Assurance	CMR 14 Jan 98	CMR 14 Jan 98		

Checklist 1: 30-foot Free Drop (Continued)

Test Location: GROVELAND, MA. **Attempt Number:** *

Step	Specimen S3 ~~A~~ *1 DW 11 JAN 98	Specimen S3 ~~B~~ *2 DW 11 JAN 98	Specimen C	Specimen D
15. Engineering, Regulatory Affairs and Quality Assurance make a preliminary assessment relative to 10 CFR 71. Record the assessment on a separate sheet and attach. Determine what changes are necessary in package orientation for the puncture test to achieve maximum damage.	DW 11 JAN 98	DW 11 JAN 98	N/A	N/A

Test Data Accepted by (Signature):	Date:
Engineering	14 Jan 98
Regulatory Affairs	22 Jan 98
Quality Assurance C.	17 Feb 98

TP 74 - 53 11 Jan 98

30 foot drop 1st attempt

Impact was on rear plate bottom with a following slap down effect towards the front plate along the bottom of the device, but did not produce the bowing of rear plate seen with previous specimens A and 51 of TP 74. Usually the specimen 53 has minor deformation at bottom edge, bottom of shell bent upwards into rear plate.

Will attempt another 30 foot drop to try and recreate damage seen from specimen A, as CoG was not directly over planned impact point.

30 foot drop 2nd Attempt

Impact was on the rear plate bottom, with a secondary impact on the lock cover, follow~~ing~~ed ~~by a full rotation and a third impact on the rear plate bottom.~~ The rear end plate bowed and the bottom of the plate and shell deformed further.

H.P. 14 Jan

The temperature after this 2nd attempt was -26.2°C (above the -40°C requirement). However, the team did not see this as detrimental to the test because brittle fracture of the screws,

TP 74   11 Jan 98
S3

Assessment:

Orientation For Puncture Test -

Team assessed condition of specimen to determine worst case orientation for puncture. An alternate orientation was suggested on the front plate bottom. The intent of this drop would be to try and drive tube out of boss of rear plate, ie disengaging tube to rear plate connection.

The team evaluated and ~~conti~~ conceptually determined that the bottom edge drop orientation (ie continue on with original orientation) would be worse to continue on with already incurred damage.

The worst case for thermal would be to disengage connection of rear plate to shield, continuing on damage to the tube, based on radiographs from earlier test specimens ie A, S, - tube was damaged from 30 foot and puncture.

As puncture is only a one meter drop, any minor damage to the front would not result in worst case for thermal. The drop on

11 JAN 98 DW

SPECIMEN "S3" PUNCTURE TEST

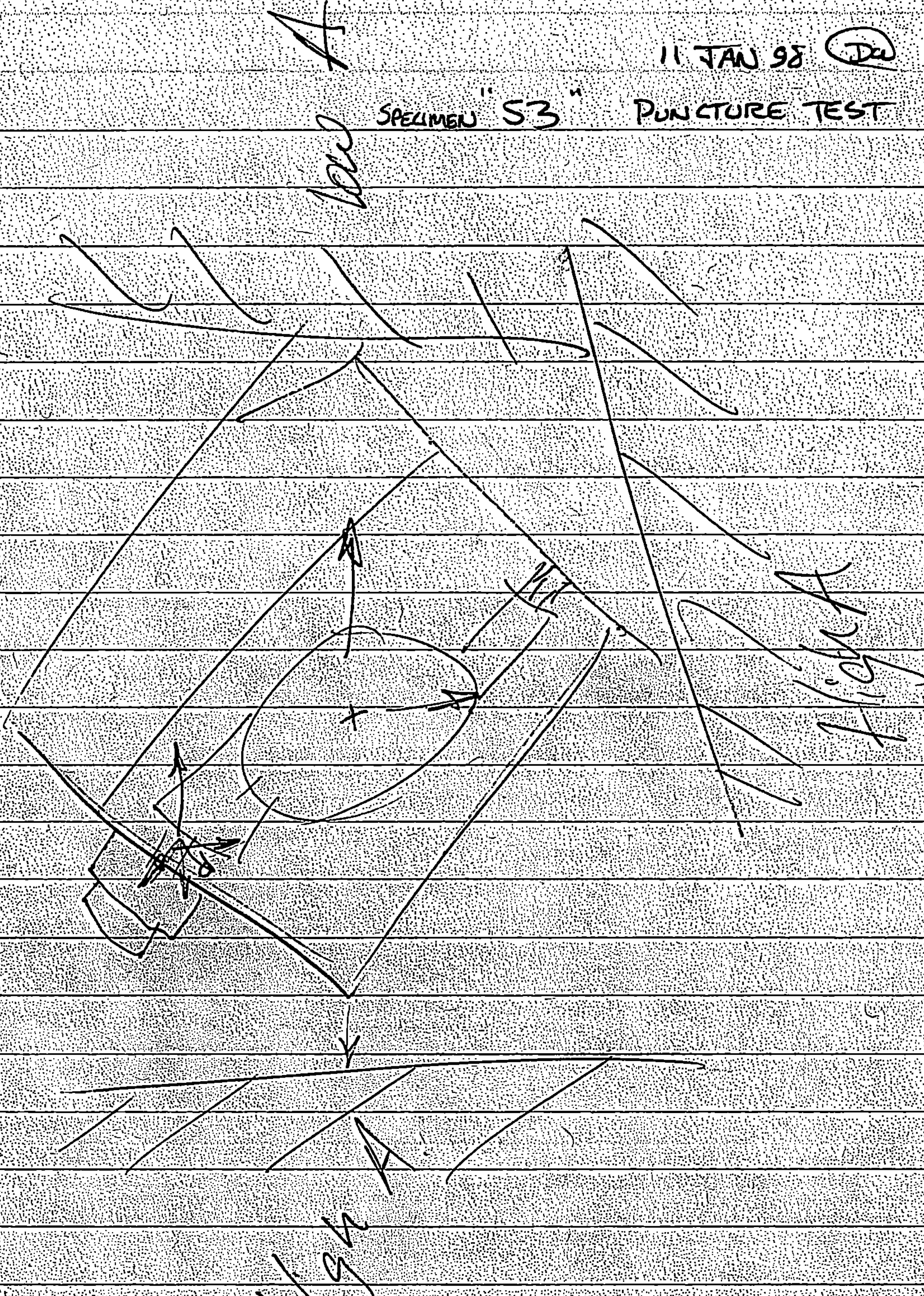

Equipment List 2: Puncture Test

S3 Serial#B3586

Description	Enter the Model and Serial Number	Attach Inspection Report or Calibration Certificate
Drop Surface, Drawing AT10122, Rev. B	01	SEE ATTACH
Puncture Billet, Drawing CT10119, Rev. C	01	SEE ATTACH
Weight Scale	#35014 / OHAUS	SEE ATTACH
Thermometer	ENG-12 / OMEGA	SEE ATTACH
Thermocouple flexible probe	ENG-11 / OMEGA	SEE ATTACH
Thermocouple surface probe	ENG-13 / OMEGA	SEE ATTACH
Record any additional tools used to facilitate the test and attach the appropriate inspection report or calibration certificate.		
THERMOCOUPLE STRAIGHT PROBE	ENG-14 / OMEGA	SEE ATTACH

Verified by:	Signature	Date
Engineering		14 Jan 98
Regulatory Affairs		12 Jan 98
Quality Assurance	C. Kaufman	14 Jan 98

Checklist 2: Puncture Test

Test Location: VALLEY TREE GROVELAND MA

Attempt Number: 1

Serial #B3586

Step	Specimen A DW 11 JAN 98 S3	Specimen B	Specimen C	Specimen D
1. Immerse the test specimen in dry ice as need to bring the specimen's temperature below -40° C.	DW 11 JAN 98	N/A	N/A	N/A
Step 1 witnessed by:				
Engineering	Jan 98			
Regulatory Affairs	12 Jan 98			
Quality Assurance	CM 14 Jan 98			
2. Measure the weight of the specimen.	DW 11 JAN 98			
Record the specimen's weight:	55.40 lbs			
Note instrument used:	#35014	#35014	#35014	#35014
3. Measure the ambient temperature.	42.6° F			
Record ambient temperature:	DW 11 JAN 98			
Note the instrument used:	ENG-12 ENG-14	ENG-12 ENG-14	ENG-12 ENG-14	ENG-12 ENG-14
4. Attach the test specimen to the release mechanism.	DW 11 JAN 98			
5. Begin video recording of test so that the impact is recorded.	DW 11 JAN 98			
6. Measure the surface temperature of the specimen. Ensure that the specimen is below -40° C.	DW 11 JAN 98			
Record the specimen surface temperature:	-66.7°C			
Note the instrument used:	ENG-12 ENG-13	ENG-12 ENG-13	ENG-12 ENG-14	ENG-12 ENG-14
7. Lift and orient the test specimen as shown in the referenced figure for the specimen.	Figure 8 on Page 18	Figure 9 on Page 19	Figure 8 on Page 18	Figure 9 on Page 19
8. Inspect the orientation setup and verify drop height.	DW 11 JAN 98			

Checklist 2: Puncture Test (Continued)

Test Location: VALLEY TREE GROVELAND MA **Attempt Number:** 1

Step	Specimen ~~A~~ S3 DW 11 JAN 98	Specimen B	Specimen C	Specimen D
9. Photograph the setup in at least two perpendicular planes.	DW 11 JAN 98	N/A	N/A	N/A
Steps 2 through 9 witnessed by:				
Engineering	14 Jan 98			
Regulatory Affairs	12 Jan 98			
Quality Assurance	CMP 14 Jan 98			
10. Release the test specimen.	DW 11 JAN 98			
11. Measure the surface temperature of the test specimen.	DW 11 JAN 98			
Record the surface temperature:	− 58.2 °C			
Note the instrument used:	ENG-12 ENG-13	ENG-12 ENG-13	ENG-12 ENG-13	ENG-12 ENG-13
12. Measure and record the test specimen's weight.	DW 11 JAN 98			
Record the specimen's weight:	55.3 lbs			
Note the instrument used:	#35014	#35014	#35014	#35014
13. Pause the video recorder. Ensure that the point of impact and orientation specified in the plan have been achieved and recorded.	DW 11 JAN 98			
14. Record damage to test specimen on a separate sheet and attach.	DW 11 JAN 98			
Steps 10 through 14 witnessed by:				
Engineering	14 Jan 98			
Regulatory Affairs	12 Jan 98			
Quality Assurance	CMP 14 Jan 98			

Checklist 2: Puncture Test (Continued)

Test Location: VALLEY TREE GROVELAND MA **Attempt Number:** 1

Step	Specimen ~~A~~ 53 DC 11 JAN 98	Specimen B	Specimen C	Specimen D
15. Engineering, Regulatory Affairs and Quality Assurance make a preliminary assessment relative to 10 CFR 71. Record the assessment on a separate sheet and attach. Determine the package orientation for the thermal test that will achieve maximum damage.	14 Jan 98	N/A	N/A	N/A

Test Data Accepted by (Signature):	Date:
Engineering	14 Jan 98
Regulatory Affairs	22 Jan 98
Quality Assurance	17 Feb 98

Puncture Test Assessment - Specimen 53 Serial # B3586

Impacted in accordance with Test Plan 74. Little damage noted.

Orientation for thermal test should be normal upright position. This will allow the shield to move downward due to the force of gravity.

14 Jan 98

CmR 14 Jan 98
RWB 22 Jan 98

serial #B3586

SPECIMEN S3 Dave

"A" ORIENTATTON 11 JAN 98

PENETRATION TEST

SIX ATTEMPTS BEFORE TARGET HIT LIGHT DENT ABOVE TARGET AND ON TARGET, NO DAMAGE TO SCREW

FOUR FOOT FREE DROP

DROP ON TARGET 1ST DROP PAINT CHIPPED ON BOTTOM OF REAR PLATE, NO ADDITIONAL DAMAGE VISIBLE.

30' FREE DROP

1ST DROP HIT ON BOTTOM OF REAR PLATE EVENLY ON EACH SIDE

CENTER OF GRAVITY SLIGHTLY TO BOTTOM OF DEVICE,

BOTTOM OF REAR PLATE & SHELL DENTED IN, NO GAP BETWEEN SHELL & REAR PLATE

2ND DROP 30' HIT ON BOTTOM OF REAR PLATE ON TARGET

BOTTOM OF REARPLATE & SHELL DENTED,

SHELL CONVEXED ON BOTTOM,

FRONT NUT DOESN'T TURN,

DW 12 JAN 89

PEL PUNCTURE TEST

NO ADDITIONAL DAMAGE VISIBAL.

SENTINEL

660/660B DEVICE PROFILING FORM

TP74 +
TP73 "S3"

Serial# B3586
KMA 21 Jan 98

Device Model No.: 660B **Device Serial No.:** After Thermal

Model ~~424-9~~ T10163 **Source Serial Number:** X0017 **Activity:** 105.0 Ci

Surface Survey Instrument: AN/PDR-27T **Serial No:** SM-392401 **Cal Due:** 18 Mar 98

One Meter Survey Instrument: AN/PDR-27T **Serial No:** SM-392401 **Cal Due:** 18 Mar 98

Capacity Corr. Factor
1.33

SURFACE READINGS
mR/hr

	~~Allowed~~	Actual
TOP		70 mR/hr
RIGHT		80 mR/hr
FRONT		940 mR/hr Δ
LEFT		110 mR/hr
REAR		1400 mR/hr Δ
BOTTOM		130 mR/hr

ONE METER READINGS
mR/hr

	Extrapolated ~~Allowed~~	Actual
TOP	1.9	1.4 mR/hr
RIGHT	1.5	1.1 mR/hr
FRONT	5.6	4.2 mR/hr
LEFT	1.3	1.0 mR/hr
REAR	9.3	7.0 mR/hr
BOTTOM	1.6	1.2 mR/hr

INSPECTOR: **DATE:** 19 Jan 98 **NCR No.:** NA

Comments:

* Surface readings taken for exposure control and general information purposes only.

Δ Measurements taken with Model # ND 3000, S/N 9837 (Next cal date 23 Sept 98) 19 Jan 98

Amersham QSA

19 Jan 98

Serial # 33586

S3 Source position measurement

0,362 unthreaded strip plug length
6,802 teleflex wire off tool.

Removed section from shield = $4\frac{3}{8}$"
(source dummy wire from "S3" specimen)

19 Jan 98

Serial #B3586 and #B3589

Equipment List 3: Thermal Test

S_3 and C

Description	Enter the Model and Serial Number	Attach Inspection Report or Calibration Certificate
Air Flowmeter	HEDLAND / 3367 / WINTERS ENG-08	SEE ATTACH
Thermocouple (internal)	OMEGA / ENG-18 A	SEE ATTACH
Thermocouple (external)	OMEGA / ENG-17 A	SEE ATTACH
Thermocouple (oven)	OMEGA / ENG-16 A	SEE ATTACH
Temperature recorder	OMEGA / ENG - 16, 17, 18	SEE ATTACH
Record any additional tools used to facilitate the test and attach the appropriate inspection report or calibration certificate.		
THERMOMETER	OMEGA / ENG-12	SEE ATTACH
THERMOCOUPLE STRAIGHT PROBE	OMEGA / ENG-14	SEE ATTACH
SOURCE LOCATION TOOL / DIGITAL CALIPER	710142 / #277	SEE ATTACH
Verified by:	Signature	Date
Engineering		13 Jan 98
Regulatory Affairs		14 Jan 98
Quality Assurance		13 Jan 98

SOURCE LOCATION BEFORE THERMAL TEST "S3" 5.922 / "C" 5.824

Checklist 3: Thermal Test

Test Location: MFG SCIENCES OAK RIDGE TN

Serial #B3586 **Attempt Number:** 1
Serial #B3589

Step	Specimen A	Specimen ~~B~~ S3 DW 13 JAN 98	Specimen C	Specimen D
1. Pre-heat the oven to a temperature above 800° C.	N/A	DW 13 JAN 98	DW 13 JAN 98	N/A
2. Attach the thermocouples the specimen's internal and external measuring points.		DW 13 JAN 98	DW 13 JAN 98	
3. Place the package in the oven and close the oven door.		DW 13 JAN 98	DW 13 JAN 98	
Record the date and time that the package is placed in oven.		13 JAN 98 424 pm	13 JAN 98 2:51PM	
4. When the specimen's internal temperature exceeds 800° C, start the air flow into the oven. Record the time.		453 pm 13 JAN 98	3:47PM DW 13 JAN 98	
Steps 1 through 4 witnessed by:				
Engineering		13 Jan 98	13 Jan 98	
Regulatory Affairs		C. Roughan 13 Jan 98	C. Roughan 13 Jan 98	
Quality Assurance		KNA 13 Jan 98	KNA 13 Jan 98	
5. Measure the oven temperature, the specimen's internal and external temperatures and the air flow rate.		DW 13 JAN 98	DW 13 JAN 98	
Record the oven temperature:		891.4°c	896.7°c	
Note instrument used:	ENG-16 ENG-16A	ENG-16 ENG-16A	ENG-16 ENG-16A	ENG-16 ENG-16A
Record the specimen's internal temperature:		803.5°c	800.9°c	
Note instrument used:	ENG-18 ENG-18A	ENG-18 ENG-18A	ENG-18 ENG-18A	ENG-18 ENG-18 A
Record the specimen's external temperature:		838.3°c	834.9°c	
Note instrument used:	ENG-17 ENG-17A	ENG-17 ENG-17 A	ENG-17 ENG-17 A	ENG-17 ENG-17A
Record airflow rate:		11 CFM	11 CFM	
Note instrument used:	3367 ENG-08	3367 ENG-08	3367 ENG-08	3367 ENG-08
6. Monitor the internal and external temperatures of the specimen and the oven temperature throughout the 30-minute period to ensure that they are above 800° C.		DW 13 JAN 98	DW 13 JAN 98	

Checklist 3: Thermal Test (Continued)

Test Location: MFG SCIENCES OAK RIDGE TN

Attempt Number: 1

Step	Specimen A	Specimen ~~B~~ S3 DW 13 JAN 98	Specimen C	Specimen D
7. Monitor the airflow throughout the 30-minute period to ensure a rate of at least 9.6 ft³/min.	N/A	DW 13 JAN 98	DW 13 JAN 97	N/A
8. At the end of the 30-minute period, repeat step 5 using the same measurement devices.		DW 13 JAN 98	DW 13 JAN 97	
Record the oven temperature:		904.7° c	902.8° c	
Record the specimen's internal temperature:		844.1°	853.5° c	
Record the specimen's external temperature:		836.2° c	850.9° c	
Record intake air flow velocity:		11 CFM	11 CFM	
Steps 5 through 8 witnessed by:				
Engineering		13 Jan 98	13 Jan 98	
Regulatory Affairs		C. [illegible] 13 Jan 98	C. [illegible] 13 Jan 98	
Quality Assurance		KMA 13 Jan 98	KMA 13 Jan 98	
9. Remove test specimen from the oven.		DW 13 JAN 98	DW 13 JAN 98	
Record time the specimen is removed.		5 25 PM	4:17 PM	
Describe combustion when door is opened to remove specimen.		DW 13 JAN 98 RED HOT	DW 13 JAN 98 RED HOT	
NOTE: If specimen continues to burn, let it self-extinguish and cool naturally.				
10. Measure the ambient temperature.	N/A	DW 13 JAN 98	DW 13 JAN 98	N/A
Record the ambient temperature:		65.7° F	67.2° F	
Note the instrument used:	ENG-12 ENG-14	ENG-12 ENG-14	ENG-12 ENG-14	ENG-12 ENG-14
11. Photograph the test specimen and any subsequent damage		DW 13 JAN 98	DW 13 JAN 98	
12. Record damage to test specimen on a separate sheet and attach.		DW 15 JAN 98	DW 15 JAN 98	
Steps 9 through 12 witnessed by:				
Engineering		17 Feb 98	17 Feb 98	
Regulatory Affairs		C. [illegible] 17 Feb 98	C. [illegible] 17 Feb 98	
Quality Assurance				

Checklist 3: Thermal Test (Continued)

Test Location:

Attempt Number:

Step	Specimen A	Specimen B	Specimen C	Specimen D
13. Engineering, Regulatory Affairs and Quality Assurance make a preliminary assessment relative to 10 CFR 71. Record the assessment on a separate sheet and attach.	NA	see attached		NA

Test Data Accepted by (Signature):	Date:
Engineering	18FEB98
Regulatory Affairs	18 Feb 98
Quality Assurance	02MAR98

15 Jan 98
at Mfg. Sciences

Specimen EX-1

max length 10.534 (right side)
gap (rt side) .378
height to gap 3.220 right – to crown
height to gap – 3.105 left – to crown
max length 10.450 (left side)
gap (left side) – .272

observation – oxide is soft on left side

Specimen S3 Serial# B3586

Max length 10.132" (left side)
No gap
Max length 10.138" (Right side)
Bowing height 3.438" left
(crown)

Bowing (crown) height 3.505" Right

15 Jan 98
at Mfg. Sciences

Specimen C #B3589

gap	.288"	Right
Max length	16.397"	Right
Height [Crown]	2.705"	Right
Max length	9.936"	left
NO gap	———	left
Height (Crown)	3.234"	left

~~Shipping plug~~ (KMA) 15 Jan 98
Specimen "C", #B3589
Source location (Partial measurement) 2.580"
due to obstruction in the "S-tube".

Specimen C3 #B3586

Front plate - loose
Source location 6.610" - .150 = 6.460"
Shipping plug gap = .150"

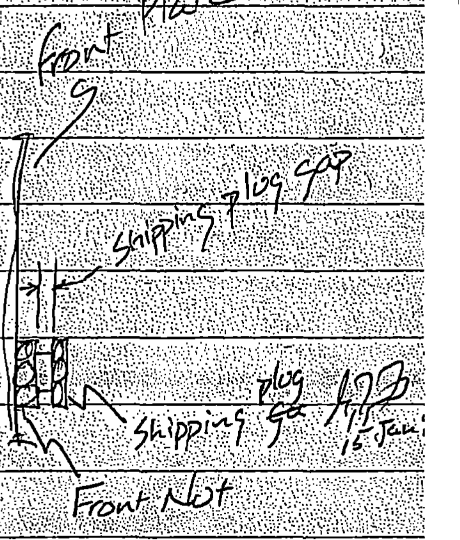

Ex-1

wire inserted through front nut
went in 1.960 (~~front~~ from outside of front
nut (shipping plug)

Specimen C #B3589

15 Jan 98

Distance from face of front Nut to dummy Source = 7.822"
(measured with piece of wire)

(Da) 12 JAN 98

SOURCE LOCATION

		C	S3	~~EX2~~ EX1 (Da 14 JAN 98)
2 AMERSHAM	12 JAN 98	5.829	5.897	5.620
4 Mfg. Screw [illegible] to Thread	13 JAN 98	5.824	5.922 ~~5.927~~ (Da) 13 JAN 98	5.650

14 Jan 98

Unit Temp

8:45 "C" 17.3 °C

8:47 "S3" * 1" into gripping 17.4 °C

8:49 "EX-1" * 60.6 °C

" 1/4" into gripping

Note: Surface Thermocouple was used to measure the internal & surface Temp. (KNA) 14 Jan 98

* ~~Surface temp~~ (KNA) 14 Jan 98

OMR
18Feb98

18FEB98.
KNB 02MAR98

17 Feb 98

Assessment - Part 71

53 / Specimen C after Thermal Test

~~Serial #B3586~~ Serial #B3589

As specimen C has not gone through all the testing, i.e. no puncture test, the thermal was performed for informational purposes only and is not a valid test specimen. Therefore no assessment to 10 CFR 71 is required.

Specimen 53 underwent the full range of testing and successfully passed the radiation profile, indicating this specific unit passes all the Type B tests.

However the specimen 53 was tested to try and exactly mimic the damage seen in Specimen A of TP 73/74 in order to validate / assess the liklihood of transport damage to Specimen A.
53 damage from all testing was not an exact replica of damage seen from A, and therefore cannot conclusively determine that Specimen A from TP 73/TP 74 would have passed the tests if it had not been subjected to transport damage.

Conclusion is ~~that~~ 33 passes the Type B testing, but cannot conclude that Specimen A would have passed all the Type B test.

Equipment List 3: Thermal Test

EX-1 R+D Unit

Description	Enter the Model and Serial Number	Attach Inspection Report or Calibration Certificate
Air Flowmeter	HEDLAND / 3367 / WINTERS ENG-08	SEE ATTACH
Thermocouple (internal)	OMEGA / ENG-18 A	SEE ATTACH
Thermocouple (external)	OMEGA / ENG-17 A	SEE ATTACH
Thermocouple (oven)	OMEGA / ENG-16 A	SEE ATTACH
Temperature recorder	OMEGA / ENG - 16, 17, 18	SEE ATTACH
Record any additional tools used to facilitate the test and attach the appropriate inspection report or calibration certificate.		
THERMOMETER	OMEGA / ENG-12	SEE ATTACH
THERMOCOUPLE STRAIGHT PROBE	OMEGA / ENG-14	SEE ATTACH
SOURCE LOCATION TOOL / DIGITAL CALIPER	T10142 / #277	SEE ATTACH
Verified by:	Signature	Date
Engineering		13 Jan 98
Regulatory Affairs	C. Ronghan	14 Jan 98
Quality Assurance		13 Jan 98

EX1 SOURCE LOCATION BEFORE THERMAL TEST 5.650 14 JAN 98

Checklist 3: Thermal Test

Test Location: MFG SCIENCES OAK RIDGE TN RFD Unit **Attempt Number:** 1

Step	Specimen ~~A~~ SD 13 JAN 98 EX1	Specimen B	Specimen C	Specimen D
1. Pre-heat the oven to a temperature above 800° C.	DW 13 JAN 98			
2. Attach the thermocouples the specimen's internal and external measuring points.	DW 13 JAN 98			
3. Place the package in the oven and close the oven door.	DW 13 JAN 98			
Record the date and time that the package is placed in oven.	DW 13 JAN 98 5:35 PM			
4. When the specimen's internal temperature exceeds 800° C, start the air flow into the oven. Record the time.	13 JAN 98 608 PM			
Steps 1 through 4 witnessed by:				
Engineering	13 Jan 98			
Regulatory Affairs	C 14 Jan 98			
Quality Assurance	KNA 13 Jan 98			
5. Measure the oven temperature, the specimen's internal and external temperatures and the air flow rate.	DW 13 JAN 98			
Record the oven temperature:	898.9° c			
Note instrument used:	ENG-16 ENG-16A	ENG-16 ENG-16A	ENG-16 ENG-16A	ENG-16 ENG-16A
Record the specimen's internal temperature:	803.9			
Note instrument used:	ENG-18 ENG-18A	ENG-18 ENG-18A	ENG-18 ENG-18 A	ENG-18 ENG-18 A
Record the specimen's external temperature:	845.2°			
Note instrument used:	ENG-17 ENG-17A	ENG-17 ENG-17 A	ENG-17 ENG-17 A	ENG-17 ENG-17A
Record airflow rate:	10 CFM			
Note instrument used:	3367 ENG-08	3367 ENG-08	3367 ENG-08	3367 ENG-08
6. Monitor the internal and external temperatures of the specimen and the oven temperature throughout the 30-minute period to ensure that they are above 800° C.	DW 13 JAN 98			

Checklist 3: Thermal Test (Continued)

Test Location: MFG SKAYES

Attempt Number: 1

R&D UNIT

Step	Specimen DO 13 JAN 98 ~~A~~ EX1	Specimen B	Specimen C	Specimen D
7. Monitor the airflow throughout the 30-minute period to ensure a rate of at least 9.6 ft^3/min.	DO 13 JAN 98	N/A	N/A	N/A
8. At the end of the 30-minute period, repeat step 5 using the same measurement devices.	DO 13 JAN 98			
Record the oven temperature:	904.0°c			
Record the specimen's internal temperature:	849.9°c			
Record the specimen's external temperature:	856.5°c			
Record intake air flow velocity:	10.5 CFM			
Steps 5 through 8 witnessed by:				
Engineering	18 Feb 98			
Regulatory Affairs	C. Rougner 13 Jan 98			
Quality Assurance	KMA 13 Jan 98			
9. Remove test specimen from the oven.	13 6:38 PM ~~JAN 98 6:04~~ DO			
Record time the specimen is removed.	DO 6:38 pm			
Describe combustion when door is opened to remove specimen.	NO FLAME RED HOT DO 13 JAN 98			
NOTE: If specimen continues to burn, let it self-extinguish and cool naturally.				
10. Measure the ambient temperature.	DO 13 JAN 98			
Record the ambient temperature:	63.1° F			
Note the instrument used:	ENG-12 ENG-14	ENG-12 ENG-14	ENG-12 ENG-14	ENG-12 ENG-14
11. Photograph the test specimen and any subsequent damage	DO 13 JAN 98			
12. Record damage to test specimen on a separate sheet and attach.	DO 15 JAN 98			
Steps 9 through 12 witnessed by:				
Engineering	18 Feb 98			
witnessed on 15 Jan 98 Regulatory Affairs	CMR 18 Feb 98			
Quality Assurance				

Checklist 3: Thermal Test (Continued)

Test Location: MFG SIENLES OAK RIDGE TN R&D **Attempt Number:** 1

Step	Specimen A DW 13JAN98 EX-1	Specimen B	Specimen C	Specimen D
13. Engineering, Regulatory Affairs and Quality Assurance make a preliminary assessment relative to 10 CFR 71. Record the assessment on a separate sheet and attach.	NA*	N/A	N/A	N/A

Test Data Accepted by (Signature):	Date:
Engineering	
Regulatory Affairs	
Quality Assurance	

* NA - as test unit was expirimental and not a valid test specimen in the TP 74

CMR
18Feb98