Tennessee Valley Authority, Post Office Box 2000, Decatur, Alabama 35609-2000

July 15, 2005

10 CFR 50.55a

U.S. Nuclear Regulatory Commission
ATTN: Document Control Desk
Mail Stop: OWFN P1-35
Washington, D.C. 20555-0001

Gentlemen:

In the Matter of)
Tennessee Valley Authority)

Docket No. 50-260

BROWNS FERRY NUCLEAR PLANT (BFN) - UNIT 2 - AMERICAN SOCIETY OF MECHANICAL ENGINEERS (ASME) SECTION XI, INSERVICE INSPECTION, CONTAINMENT INSPECTION (IWE), AND REPAIR AND REPLACEMENT PROGRAMS - SUMMARY REPORTS (NIS-1 AND NIS-2) FOR CYCLE 13 OPERATION

In accordance with paragraphs IWA-6220, IWA-6230, and IWA-6240 of the American Society of Mechanical Engineers (ASME) Boiler and Pressure Vessel Code, Section XI, 1995 Edition, 1996 addenda, TVA is submitting BFN Unit 2 outage summary reports for NRC review. The summary reports are for inservice and containment inspection (NIS-1 Report), and repair and replacement activities (NIS-2 Report) for Unit 2 Cycle 13 operation.

TVA has determined that certain BFN Unit 2 welds had nondestructive examination (NDE) coverage limitations (less than 90 percent coverage completed) which exceed that specified in ASME Code Case N-460, "Alternative Examination Coverage for Class 1 and Class 2 Welds, Section XI, Division 1."

A047

Specifically, one Reactor Recirculation System and one Residual Heat Removal pipe welds received ultrasonic examination coverage of 62.5 and 87.6 percent, respectively. These weld examination limitations will be addressed by TVA in a request for relief and submitted to NRC for staff review and approval at a later date.

Enclosure 1 of this letter contains the BFN Unit 2 Inservice and Containment Inspection Summary Report (NIS-1) for Code Class 1 and 2 pressure retaining components and their supports. Enclosure 2 contains the Repair and Replacement Summary Report (NIS-2) for Code Class 1 and 2 components and supports.

There are no new regulatory commitments in this letter. If you have any questions regarding these reports, please contact me at (256) 729-2636.

Sincerely,

William D. Crouch
Manager of Licensing
and Industry Affairs

Enclosures

ENCLOSURE 1

TENNESSEE VALLEY AUTHORITY
BROWNS FERRY NUCLEAR PLANT (BFN)
UNIT 2
AMERICAN SOCIETY OF MECHANICAL ENGINEERS (ASME),
SECTION XI, THIRD TEN-YEAR INSPECTION INTERVAL

INSERVICE INSPECTION (ISI), CONTAINMENT INSPECTION, AND
AUGMENTED EXAMINATIONS PROGRAM

SUMMARY REPORT (NIS-1) FOR CYCLE 13 OPERATION

(SEE ATTACHED)

BROWNS FERRY

NUCLEAR PLANT

UNIT 2 CYCLE 13

ASME SECTION XI

NIS-1 OWNERS REPORT

OWNER: TENNESSEE VALLEY AUTHORITY OFFICE OF NUCLEAR POWER 1101 MARKET STREET CHATTANOOGA, TENNESSEE 37402	PLANT: BROWNS FERRY NUCLEAR PLANT P.O. BOX 2000 DECATUR, ALABAMA 35609-2000
UNIT: TWO	CERTIFICATE OF AUTHORIZATION: NOT REQUIRED.
COMMERCIAL SERVICE DATE: MARCH 1, 1975	
NATIONAL BOARD NUMBER FOR UNIT: NOT REQUIRED.	

UNIT 2 CYCLE 13

NIS-1

"OWNER'S REPORT FOR INSERVICE INSPECTION"

TABLE OF CONTENTS

OWNER: TENNESSEE VALLEY AUTHORITY OFFICE OF NUCLEAR POWER 1101 MARKET STREET CHATTANOOGA, TENNESSEE 37402	PLANT: BROWNS FERRY NUCLEAR PLANT P.O. BOX 2000 DECATUR, ALABAMA 35609-2000
UNIT: TWO	CERTIFICATE OF AUTHORIZATION: NOT REQUIRED.
COMMERCIAL SERVICE DATE: MARCH 1, 1975	
NATIONAL BOARD NUMBER FOR UNIT: NOT REQUIRED.	

OWNER: TENNESSEE VALLEY AUTHORITY OFFICE OF NUCLEAR POWER 1101 MARKET STREET CHATTANOOGA, TENNESSEE 37402	PLANT: BROWNS FERRY NUCLEAR PLANT P.O. BOX 2000 DECATUR, ALABAMA 35609-2000
UNIT: TWO	CERTIFICATE OF AUTHORIZATION: NOT REQUIRED.
COMMERCIAL SERVICE DATE: MARCH 1, 1975	
NATIONAL BOARD NUMBER FOR UNIT: NOT REQUIRED.	

APPENDIX I

NIS-1 OWNER'S REPORT

OWNER: TENNESSEE VALLEY AUTHORITY OFFICE OF NUCLEAR POWER 1101 MARKET STREET CHATTANOOGA, TENNESSEE 37402	PLANT: BROWNS FERRY NUCLEAR PLANT P.O. BOX 2000 DECATUR, ALABAMA 35609-2000
UNIT: TWO	CERTIFICATE OF AUTHORIZATION: NOT REQUIRED.
COMMERCIAL SERVICE DATE: MARCH 1, 1975	
NATIONAL BOARD NUMBER FOR UNIT: NOT REQUIRED.	

Inservice Inspection Introduction Summary

In accordance with paragraph IWA-6230 of 1995 Edition, 1996 Addenda of Section XI of the ASME Boiler and Pressure Vessel Code the following information is provided.

1. Date of document completion: June 02, 2005

2. Name of owner and address of principal offices:

   Tennessee Valley Authority
   Office Of Nuclear Power
   1101 Market Street
   Chattanooga, Tennessee 37402-2801

3. Name and address of the nuclear generating plant:

   Browns Ferry Nuclear Plant
   P.O. Box 2000
   Decatur, Alabama 35602

4. Name or number assigned to the nuclear power unit by TVA:

   Browns Ferry Nuclear Plant, Unit 2.

5. Commercial operation date of unit:

   March 1, 1975

FORM NIS-1 OWNERS' REPORT FOR INSERVICE INSPECTIONS
As required by the Provisions of the ASME Code Rules

1. Owner Tennessee Valley Authority, 1101 Market St. Chattanooga, TN. 37402
(Name and Address of Owner)

2. Plant Browns Ferry Nuclear Plant, P.O. Box 2000 Decatur, AL. 35602
(Name and Address of Plant)

3. Plant Unit 2 4. Owner Certificate of Authorization Not Required

5. Commercial Service Date 03/01/75 6. National Board Number for Unit Not Required

7. Components Inspected:

Component or Appurtenance	Manufacturer or Installer	Manufacturer or Installer Serial No.	State or Province No.	National Board No.
Reactor Pressure Vessel	General Electric	Contract No. 67C31-90744	N/A	N/A
Various systems and components. (See Appendix V)	TVA	N/A	N/A	N/A
The NIS-1 Owners Report for Inservice Inspections includes Appendices I, II, III, IV, V, and VI.				

Note: Supplemental sheets in form of lists, sketches, or drawings may be used provided (1) size is 8.5 in. X 11 in., (2) information in items 1 through 6 on this data report is included on each sheet, and (3) each sheet is numbered and the number of sheets is recorded at the top of this form.

FORM NIS-1 (back)

8. Examination Dates 07/11/03 to 04/11/05

9. Inspection Period Identification: Second Period, 05/25/04 to 05/24/08

10. Inspection Interval Identification: 05/25/01 to 05/24/11

11. Applicable Edition of Section XI 1995 Edition Addenda 1996

12. Date/Revision of Inspection Plan: 2-SI-4.6.G Revision 027

13. Abstract of Examinations and Tests. Include a list of examinations and tests and a statement concerning status of work required for the Inspection Plan.

    See Appendix II, III, IV, V, VI, and Attachment 2

14. Abstract of Results of Examinations and Tests.

    See Appendix II, III, IV, V, VI, and Attachment 2

15. Abstract of Corrective Measures. See Appendix VI

We certify that a) the statements made in this report are correct, b) the examinations and tests meet the Inspection Plan as required by the ASME Code, Section XI, and c) corrective measures taken conform to the rules of the ASME Code, Section XI.

Certificate of Authorization No. Not Applicable Expiration Date Not Applicable

Date June 7, 2005 Signed Tennessee Valley Authority By [signature]
Owner

CERTIFICATE OF INSERVICE INSPECTION

I, The undersigned, holding a valid commission issued by the National Board of Boiler and Pressure Vessel Inspectors and the State or Province of Tennessee and employed by HSB-CT of Hartford, CT., have inspected the components described in this Owners' Report during the period 07/11/03 to 04/11/05, and state that to the best of my knowledge and belief, the Owner has performed examinations and tests and taken corrective measures described in this Owners' Report in accordance with the Inspection Plan and as required by the ASME Code, Section XI.

By signing this certificate neither the Inspector nor his employer makes any warranty, expressed or implied, concerning the examinations tests, and corrective measures described in this Owners' Report. Furthermore, neither the Inspector nor his employer shall be liable in any manner for any personal injury or property damage or a loss of any kind arising from or connected with this inspection.

[signature] Commissions TN 4011
Inspectors Signature National Board, State, Province and No.

Date 7/5, 2005

OWNER: TENNESSEE VALLEY AUTHORITY OFFICE OF NUCLEAR POWER 1101 MARKET STREET CHATTANOOGA, TENNESSEE 37402	PLANT: BROWNS FERRY NUCLEAR PLANT P.O. BOX 2000 DECATUR, ALABAMA 35609-2000
UNIT: TWO	CERTIFICATE OF AUTHORIZATION: NOT REQUIRED.
COMMERCIAL SERVICE DATE: MARCH 1, 1975	
NATIONAL BOARD NUMBER FOR UNIT: NOT REQUIRED.	

APPENDIX II

SCOPE AND INTRODUCTION

OWNER: TENNESSEE VALLEY AUTHORITY OFFICE OF NUCLEAR POWER 1101 MARKET STREET CHATTANOOGA, TENNESSEE 37402	PLANT: BROWNS FERRY NUCLEAR PLANT P.O. BOX 2000 DECATUR, ALABAMA 35609-2000
UNIT: TWO	CERTIFICATE OF AUTHORIZATION: NOT REQUIRED.
COMMERCIAL SERVICE DATE: MARCH 1, 1975	
NATIONAL BOARD NUMBER FOR UNIT: NOT REQUIRED.	

Scope:

The scope of this appendix is to provide an overview of the Inservice inspections performed during the Unit 2/Cycle 13 Outage on Class 1 and 2 components for ASME Section XI Code credit and other augmented examinations.

Introduction:

The examinations were performed in accordance with implementing plant surveillance instruction 2-SI-4.6.G "Inservice Inspection and Risk Informed Inservice Inspection Program Unit 2". 2-SI-4.6.G is organized to comply with the ISI NDE requirements of the 1995 Edition, 1996 Addenda of the American Society of Mechanical Engineers (ASME) Boiler and Pressure Vessel Code, Section XI, Division 1, Articles IWX-1000, IWX-2000, IWX-3000, and IWX-6000 in accordance with Title 10 Code of Federal Regulations (CFR) Part 50, 50.55a (g); to implement the Browns Ferry Nuclear Plant (BFN) Technical Requirements TR-3.4.3; and to fulfill the requirements of SPP-9.1, ASME Section XI Inservice Inspection Program.

Beginning in the Third Period of the Second Inspection Interval , Surveillance Instruction 2-SI-4.6.G implemented the NRC approved BFN Risk-Informed Inservice Inspection Program to address all piping locations that are subject to service induced degradation. In accordance with, "Westinghouse Owners Group (WOG) Application Of Risk-Informed Methods To Piping Inservice Inspection Topical Report, WCAP-14572 revision 1-NP-A, Section 4, Table 4.1-1," this program provides an acceptable alternative approach to the existing ASME Section XI requirements for scope and frequency of piping weld examinations, and satisfies the criteria of 10CFR50.55a(a)(3)(i) providing an acceptable level of quality and safety.

2-SI-4.6.G reflects the built-in limitations of the original plant design, geometry, construction, component materials and the current technology or state-of-the-art nondestructive examination techniques. The SI specifies the methods to be used and provides schedule tables from which specific items were scheduled for examination during the outage. Examinations were witnessed or verified by an Authorized Nuclear Inservice Inspector (ANII) and performed in accordance with the Section XI of the ASME Boiler and Pressure Vessel Code.

Inservice Inspections for the Unit 2 Cycle 13 refueling outage began on July 11, 2003 and ended on April 11, 2005. ISI examinations were performed on the following systems: Core Spray (CS), Reactor Feedwater (FW), High Pressure Coolant Injection (HPCI), Main Steam (MS), Reactor Recirculation (RECIRC), Residual Heat Removal (RHR), Residual Heat Removal Service Water (RHRSW), Reactor Pressure Vessel (RPV), and Reactor Water Clean-up (RWCU).

OWNER: TENNESSEE VALLEY AUTHORITY OFFICE OF NUCLEAR POWER 1101 MARKET STREET CHATTANOOGA, TENNESSEE 37402	PLANT: BROWNS FERRY NUCLEAR PLANT P.O. BOX 2000 DECATUR, ALABAMA 35609-2000
UNIT: TWO	CERTIFICATE OF AUTHORIZATION: NOT REQUIRED.
COMMERCIAL SERVICE DATE: MARCH 1, 1975	
NATIONAL BOARD NUMBER FOR UNIT: NOT REQUIRED.	

The majority of examinations were performed by the TVA Inspection Services Organization (ISO). Augmentation of personnel was provided by Wesdyne, Inc., and AREVA (Framatome).

An overview of ISI activities consists of the following:

. ASME Section XI Class 1 and 2 Piping Examinations

. ASME Section XI Class 1 Reactor Pressure Vessel Weld Examinations

. ASME Section XI Class 1 and 2 Support Examinations

. Reactor Pressure Vessel In-Vessel Visual Inspection Examinations (RPVII)

. Augmented Examinations

OWNER: TENNESSEE VALLEY AUTHORITY OFFICE OF NUCLEAR POWER 1101 MARKET STREET CHATTANOOGA, TENNESSEE 37402	PLANT: BROWNS FERRY NUCLEAR PLANT P.O. BOX 2000 DECATUR, ALABAMA 35609-2000
UNIT: TWO	CERTIFICATE OF AUTHORIZATION: NOT REQUIRED.
COMMERCIAL SERVICE DATE: MARCH 1, 1975	
NATIONAL BOARD NUMBER FOR UNIT: NOT REQUIRED.	

APPENDIX III

ISI ABSTRACT

OWNER: TENNESSEE VALLEY AUTHORITY OFFICE OF NUCLEAR POWER 1101 MARKET STREET CHATTANOOGA, TENNESSEE 37402	PLANT: BROWNS FERRY NUCLEAR PLANT P.O. BOX 2000 DECATUR, ALABAMA 35609-2000
UNIT: TWO	CERTIFICATE OF AUTHORIZATION: NOT REQUIRED.
COMMERCIAL SERVICE DATE: MARCH 1, 1975	
NATIONAL BOARD NUMBER FOR UNIT: NOT REQUIRED.	

Examination Summary:

The Unit 2, Cycle 13 Inservice Inspection (ISI) was the first scheduled refueling outage during the second inspection period of the third ASME Section XI 10-year inspection interval. Approximately 39 visual, 20 ultrasonic (14 of these welds are inclusive to take credit for BWRVIP-75, IGSCC Category "C"= 6, "D" = 2, "E" = 4, and "G" = 2 visual examinations. Also 8 of these were for Risk – Informed ISI Credit for the Flow Accelerated Corrosion (FAC) Program.), 2 magnetic particle and 1 liquid penetrant examinations were performed in support of code credit components. Also, preservice examinations were performed; 4 visual examinations, 2 liquid penetrant examinations, and 1 ultrasonic examination. These examinations were performed on ASME Section XI Code Class 1 and 2 Components. ASME Code Category and Item Numbers for components examined are listed in Appendix V.

Nine (9) Notification of Indications (NOI's) were issued to document indications identified during the performance of the examinations in the Containment Inservice Inspection (CISI) Program (IWE). These NOI's were evaluated by engineering and dispositioned (see Appendix VI, Summary of Indications).

Other examinations were performed in accordance with BFN's augmented inspection program and are included in Attachment 1 for information. Approximately 182 visual, 53 ultrasonic, and 11 radiography examinations were performed in accordance with the augmented programs. These totals are inclusive of the Reactor Pressure Vessel Internals Inspection (RPVII) Augmented examination program on Unit 2 RPV internals.

OWNER: TENNESSEE VALLEY AUTHORITY OFFICE OF NUCLEAR POWER 1101 MARKET STREET CHATTANOOGA, TENNESSEE 37402	PLANT: BROWNS FERRY NUCLEAR PLANT P.O. BOX 2000 DECATUR, ALABAMA 35609-2000
UNIT: TWO	CERTIFICATE OF AUTHORIZATION: NOT REQUIRED.
COMMERCIAL SERVICE DATE: MARCH 1, 1975	
NATIONAL BOARD NUMBER FOR UNIT: NOT REQUIRED.	

ASME Code Cases

The following code cases have been approved for use as applicable during the Unit 2/Cycle 13 outage:

N-498-4 Alternate Requirements for 10-Year System Hydrostatic Testing for Class 1, 2 and 3 Systems Section XI, Division 1. With additional condition from Regulatory Guide 1.147, Revision 13, January 2004.
The provisions of IWA-5213, "Test Condition Holding Times," 1989 Edition, are to be used.

N-577 Risk-Informed Requirements for Class 1, 2, and 3 Piping, Method A, , Section XI, Division 1, (RIMS # R08 000601 846), with the more detailed provisions provided in WCAP-14572, Revision 1-NPA, "Westinghouse Owners Group Application Of Risk - Informed Methods To Piping Inservice Inspection Topical Report." Reference Safety Evaluation Report (SER) from NRC Date January 19, 2001.

N-526 Alternate Requirements for Successive Inspections of Class 1, and 2 Vessels Section XI, Division 1.

N-586 Alternate Additional Examination Requirements for Class 1, 2, and 3 Piping, Components, and Supports, Section XI, Division 1. With additional condition from Regulatory Guide 1.147, Revision 13, January 2004.
The engineering evaluations addressed under item (a) and the additional examinations addressed under Item (b) shall be performed during this outage.
If the additional examinations performed under (b) reveal indications exceeding the applicable acceptance criteria of Section XI, the engineering evaluations and the examinations shall be further extended to include additional evaluations and examinations at this outage.

N-598 Alternate requirements to Required Percentages of Examinations Section XI, Division 1.

N-623 Deferral of Inspections of Shell-to-Flange and Head-to-Flange Welds of a Reactor Vessel Section XI, Division 1.

N-624 Successive Inspections, Section XI, Division 1.

OWNER: TENNESSEE VALLEY AUTHORITY OFFICE OF NUCLEAR POWER 1101 MARKET STREET CHATTANOOGA, TENNESSEE 37402	PLANT: BROWNS FERRY NUCLEAR PLANT P.O. BOX 2000 DECATUR, ALABAMA 35609-2000

UNIT: TWO CERTIFICATE OF AUTHORIZATION: NOT REQUIRED.

COMMERCIAL SERVICE DATE: MARCH 1, 1975

NATIONAL BOARD NUMBER FOR UNIT: NOT REQUIRED.

UNIT 2 INTERVAL STATUS

The BFN Unit 2 cycle 13 outage ISI examinations were performed during the first scheduled refueling outage of the second period of the third interval. The component quantities examined were determined from 2-SI-4.6.G, Table 8.1 (Parts 1, 2, 3, 4, and 6), Unit 2 Class 1 and 2 components, and from applicable BFN Unit 2 relief requests. This NIS-1 report covers the Cycle 13 Outage for Browns Ferry Unit 2. The following table summarizes the percentage of Code required examinations completed to date.

Table 1 summarizes code credited examinations by category and percentages completed and complies with ASME Section XI percentage requirements.

TABLE 1
ASME SECTION XI EXAMINATION SUMMARY FOR THE SECOND PERIOD OF THE THIRD TEN-YEAR INSPECTION INTERVAL

CATEGORY/CLASS	% COMPLETE	COMMENTS
B-A/ 1	12%	Reference RFR # 2-ISI-9 (Category B-A, Item No. B1.11)
B-B	N/A	
B-D/1	42%	Reference RFR # 2-ISI-16 and 2-ISI-17, approved by NRC
B-F/ 1	N/A	Risk-Informed ISI implemented in the second interval
B-G-1/ 1	12%	
B-G-2/ 1	40%	Item No. B7.50 Pipe Bolting
B-G-2/ 1	22%	Item No.B7.70 Valve Bolting, inspect when the valve is disassembled
B-J/1	N/A	Risk-Informed ISI implemented in the second interval
B-K/ 1	47%	
B-L-1	N/A	
B-L-2/ 1	0%	
B-M-1	N/A	
B-M-2/ 1	19%	When disassembled
B-N-1/ 1	40%	Each period
B-N-2/ 1	5%	Deferral permissible
B-O	N/A	Make-up exclusion reference 2-SI-4.6.G, Paragraph 7.1.3.G
B-P	N/A	Refer to pressure test program
C-A/ 2	25%	
C-B/ 2	33%	
C-C/ 2	31%	
C-D	N/A	
C-F-1/ 2	N/A	Risk-Informed ISI implemented in the second interval
C-F-2/ 2	N/A	Risk-Informed ISI implemented in the second interval
C-G	N/A	
F-A/ 1 and 2	38%	ASME Code Class 1 and 2 Pipe Supports only
R-A / 1 and 2	41%	Risk-Informed ISI implemented in the second period second interval. This percentage does not include Flow Accelerated Corrosion (FAC) Item # R1.18.

OWNER: TENNESSEE VALLEY AUTHORITY OFFICE OF NUCLEAR POWER 1101 MARKET STREET CHATTANOOGA, TENNESSEE 37402	PLANT: BROWNS FERRY NUCLEAR PLANT P.O. BOX 2000 DECATUR, ALABAMA 35609-2000
UNIT: TWO	CERTIFICATE OF AUTHORIZATION: NOT REQUIRED.
COMMERCIAL SERVICE DATE: MARCH 1, 1975	
NATIONAL BOARD NUMBER FOR UNIT: NOT REQUIRED.	

PERSONNEL/EQUIPMENT CERTIFICATIONS:

NDE personnel certification records for TVA and contractor employees are maintained by TVA's Nuclear Engineering and Technical Services Corporate, Inspection Services Organization (ISO). These records are maintained as permanent QA records for a forty year plant life. Any details or specifics regarding NDE certification records should be directed to the ISO at the Sequoyah Training Center in Soddy-Daisy, Tennessee at telephone number (423) 843-4026.

NDE equipment certification records are maintained by the TVA ISO. Any details or specifics regarding NDE equipment certification records should be directed to ISO at the Sequoyah Training Center in Soddy Daisy, Tennessee at telephone number (423)843-4026.

OWNER: TENNESSEE VALLEY AUTHORITY OFFICE OF NUCLEAR POWER 1101 MARKET STREET CHATTANOOGA, TENNESSEE 37402	PLANT: BROWNS FERRY NUCLEAR PLANT P.O. BOX 2000 DECATUR, ALABAMA 35609-2000
UNIT: TWO	CERTIFICATE OF AUTHORIZATION: NOT REQUIRED.
COMMERCIAL SERVICE DATE: MARCH 1, 1975	
NATIONAL BOARD NUMBER FOR UNIT: NOT REQUIRED.	

APPENDIX IV
EXAMINATION LIMITATIONS

OWNER: TENNESSEE VALLEY AUTHORITY OFFICE OF NUCLEAR POWER 1101 MARKET STREET CHATTANOOGA, TENNESSEE 37402	PLANT: BROWNS FERRY NUCLEAR PLANT P.O. BOX 2000 DECATUR, ALABAMA 35609-2000
UNIT: TWO	CERTIFICATE OF AUTHORIZATION: NOT REQUIRED.
COMMERCIAL SERVICE DATE: MARCH 1, 1975	
NATIONAL BOARD NUMBER FOR UNIT: NOT REQUIRED.	

METHOD OF CALCULATION OF LIMITATIONS

During the performance of Inservice Inspections, the ASME Section XI Code 1995 Edition, 1996 Addenda, requires the determination of the ultrasonic examination volume to establish the required beam path angles needed to maximize coverage and verify technique parameters. This information is necessary in those instances where there may be a reduction in the examination volume.

Surface examinations are typically conducted on 100% of the weld length plus a defined amount of base material on each side of the weld. Surface areas are calculated in those instances where there may be a reduction in the examination area.

The Code required ultrasonic examination volume or surface examination area for each type of piping weld or nozzle-to-vessel weld is depicted in the figures of IWB-2500 or IWC-2500. As depicted for piping welds, volume width generally constitutes the weld plus 1/4" on each side while volume thickness generally constitutes the lower 1/3 of the piping thickness for the length of the weld. As depicted, for nozzle-to-vessel welds, the volume width generally constitutes the weld plus 1/2t (ts/2) on each side of the weld while volume thickness generally constitutes the entire component thickness (i.e. full volume). The volume changes with variations in weld configuration (e.g. transition between different pipe thickness or nozzle-to-vessel configuration). Therefore, it is necessary to determine the required volume for each group of similar welds to allow setting of scanner limits for automated ultrasonic examinations and scan paths for manual ultrasonic examinations. Surface examination area is generally the weld plus 1/2-inch of base material on each side of the weld.

Reactor Pressure Vessel Nozzle to shell or head weld examination volume has been reduced to ½" beyond the widest part of the boundary of the deposited weld material in lieu of the requirements of ASME Section XI Figures IWB-2500-7 (a) and IWB-2500-7 (b) per Request For Relief No. PDI-2 .

Paragraph IWA-2232 of the Code requires that the ultrasonic examination of piping systems be conducted in accordance with Appendix I of ASME Section XI. Appendix I requires that the ultrasonic examination of piping systems be conducted in accordance with Appendix VIII of ASME Section XI, and the nozzle-to-vessel welds be conducted in accordance with Article 4 of ASME Section V, 1995 Edition, 1996 Addenda as supplemented by Appendix I of ASME Section XI. Appendix VIII and Article 4 define the applicable examination methods (e.g., examination angles, scan directions) to be used during examination.

TVA developed procedure N-GP-28 to provide a standardized methodology for calculation of Code coverage in those instances where configuration or other components cause an examination limitation. Components/welds with limitations were evaluated in terms of the feasibility of other NDE techniques or methods to increase coverage.

OWNER: TENNESSEE VALLEY AUTHORITY OFFICE OF NUCLEAR POWER 1101 MARKET STREET CHATTANOOGA, TENNESSEE 37402	PLANT: BROWNS FERRY NUCLEAR PLANT P.O. BOX 2000 DECATUR, ALABAMA 35609-2000
UNIT: TWO	CERTIFICATE OF AUTHORIZATION: NOT REQUIRED.
COMMERCIAL SERVICE DATE: MARCH 1, 1975	
NATIONAL BOARD NUMBER FOR UNIT: NOT REQUIRED.	

EXAMINATION LIMITATIONS:

A tabulation of NDE examination limitations recorded during the Unit 2/Cycle 13 Inservice Inspection is contained in this Appendix.

The following items/components had less than 100% R-A/Code coverage achieved. In accordance with the 1995 Edition, 1996 Addenda of ASME Section XI Code and NRC Information Notice, 98-42 "Implementation Of 10 CFR 50.55a(g) Inservice Inspection Requirements," which defines , "essentially 100%" of each weld to mean "greater than 90%" in 10CFR 50.55a(g)(6)(ii)(A)(2) for required examination coverage of reactor pressure vessel welds. This standard has been applied to all examinations of welds or other areas required by ASME Section XI.

SYSTEM	COMPONENT ID	COVERAGE ASME XI	CALCULATED 10CFR50.55a	REPORT NO.
RECIRC	RWC-2-001-G002	94.25%	94.25%	R-029
RECIRC	KR-2-14	91.25%	91.25%	R-050
RECIRC	KR-2-36	91.75%	91.75%	R-047
RECIRC	KR-2-41	91.75%	91.75%	R-042

The following items/components had examination limitations outside those specified in 1995 Edition, 1996 Addenda of ASME Section XI Code and NRC Information Notice, 98-42 "Implementation Of 10 CFR 50.55a(g) Inservice Inspection Requirements." The Inservice Inspection Program 2-SI-4.6.G will be revised to incorporate these limitations in the form of Requests for Relief (RFR). Program revisions, including Requests for Relief, will be submitted to the NRC. Reference Request For Relief 2-ISI-18 Revision 001.

SYSTEM	COMPONENT ID	COVERAGE ASME XI	CALCULATED 10CFR50.55a	REPORT NO.	RFR NO.
RECIRC	KR-2-03	62.50%	62.50%	R-043	2-ISI-18
RHR	DRHR-2-03	87.58%	87.58%	R-022	2-ISI-18

OWNER: TENNESSEE VALLEY AUTHORITY OFFICE OF NUCLEAR POWER 1101 MARKET STREET CHATTANOOGA, TENNESSEE 37402	PLANT: BROWNS FERRY NUCLEAR PLANT P.O. BOX 2000 DECATUR, ALABAMA 35609-2000
UNIT: TWO	CERTIFICATE OF AUTHORIZATION: NOT REQUIRED.
COMMERCIAL SERVICE DATE: MARCH 1, 1975	
NATIONAL BOARD NUMBER FOR UNIT: NOT REQUIRED.	

APPENDIX V

EXAMINATION PLAN

OWNER: TENNESSEE VALLEY AUTHORITY OFFICE OF NUCLEAR POWER 1101 MARKET STREET CHATTANOOGA, TENNESSEE 37402	PLANT: BROWNS FERRY NUCLEAR PLANT P.O. BOX 2000 DECATUR, ALABAMA 35609-2000
UNIT: TWO	CERTIFICATE OF AUTHORIZATION: NOT REQUIRED.
COMMERCIAL SERVICE DATE: MARCH 1, 1975	
NATIONAL BOARD NUMBER FOR UNIT: NOT REQUIRED.	

The following printout is an outage ISI report designed to meet the reporting requirements of IWA-6000 of the ASME Section XI Code. This report contains Unit 2/Cycle 13 Inservice Inspection data for Code Class 1 and Code Class 2 components selected for ASME Section XI credit. Attachment 1 contains a summary of Augmented examinations performed during Unit 2/Cycle 13 outage. Attachment 2 contains a summary of IWE-Containment Inservice Inspection (CISI) examinations performed during the Unit 2 Cycle 13 outage. Essential unit and system files are contained herein as a reference to describe abbreviations and features in the printout. The aforementioned precedes the outage ISI report.

Code Class 3 Inservice data and reports are contained in the Browns Ferry Inservice Inspection (ISI) Final Plant Report.

OWNER: TENNESSEE VALLEY AUTHORITY OFFICE OF NUCLEAR POWER 1101 MARKET STREET CHATTANOOGA, TENNESSEE 37402	PLANT: BROWNS FERRY NUCLEAR PLANT P.O. BOX 2000 DECATUR, ALABAMA 35602
UNIT: TWO	CERTIFICATE OF AUTHORIZATION: NOT REQUIRED.
COMMERCIAL SERVICE DATE: MARCH 1, 1975	
NATIONAL BOARD NUMBER FOR UNIT: NOT REQUIRED.	

Key to computer weld/feature tracking system

A. CYCLE- Refueling Cycle Number and Unit Number
B. SYSTEM- System/Component

CCWS- Closed Cooling Water System (Reactor Building Closed Cooling Water)
CRDS- Control Rod Drive System
CSS- Core Spray System
EECW- Emergency Equipment Cooling Water System
FPCS- Fuel Pool Cooling System
FWS- Feedwater System
HPCIS- High Pressure Coolant Injection System
MSS- Main Steam System
RCICS- Reactor Core Isolation Cooling System
RECIR- Recirculation System
RHRS- Residual Heat Removal System
RHRSW- Residual Heat Removal Service Water System
RPV- Reactor Pressure Vessel
RWCU- Reactor Water Cleanup System

C. Component Number/Identifier

D. Drawing- ISI Drawing Number and sheet number from the Surveillance Instruction (SI-4.6.G)

E. Exreq- ASME Section XI Code year and interval (See Note # 1)

F. Category- Code Category

G. Item Number- Code Item Number

H. Exam Scheduled

I. NDE METH- Nondestructive Examination (NDE) Method

ET- Eddy Current Test
MT- Magnetic Particle Test
PT- Penetrant Test
RT- Radiography Test
UT- Ultrasonic Test
VT- Visual Test

OWNER: TENNESSEE VALLEY AUTHORITY OFFICE OF NUCLEAR POWER 1101 MARKET STREET CHATTANOOGA, TENNESSEE 37402	PLANT: BROWNS FERRY NUCLEAR PLANT P.O. BOX 2000 DECATUR, ALABAMA 35602
UNIT: TWO	CERTIFICATE OF AUTHORIZATION: NOT REQUIRED.
COMMERCIAL SERVICE DATE: MARCH 1, 1975	
NATIONAL BOARD NUMBER FOR UNIT: NOT REQUIRED.	

J. Calibration Standard- If required

K. Exam Date- Date of Inspection

L. Exam Report No.- Examination Report Number

M. Exam Results - P - Pass
R- Rejectable
E- Evaluated acceptable for continued operation by Engineering

O. COMMENTS

NOTE (1): EXREQ Identifiers:

96E-03 - ASME Section XI Code 1995 Edition, 1996 Addenda/ Third Interval

P95-96 - Preservice Examination Cycle 12/ Third Interval

B01-02 - Feedwater Sparger Visual (VT-1) Examinations to 0-TI-365

B02-02 - Examinations performed to BWRVIP-75 for IGSCC detection

B04-02 - Weld inspection for Pipe Whip Protection

B07-02 - Examinations performed to the recommendations of BWRVIP-27 and BWRVIP-49

S01-03 - Successive Examinations

V01-02 - Voluntary Examinations

OTI365 - Augmented examinations of RPV Internals

OWNER: TENNESSEE VALLEY AUTHORITY OFFICE OF NUCLEAR POWER 1101 MARKET STREET CHATTANOOGA, TENNESSEE 37402	PLANT: BROWNS FERRY NUCLEAR PLANT P.O. BOX 2000 DECATUR, ALABAMA 35609-2000
UNIT: TWO	CERTIFICATE OF AUTHORIZATION: NOT REQUIRED.
COMMERCIAL SERVICE DATE: MARCH 1, 1975	
NATIONAL BOARD NUMBER FOR UNIT: NOT REQUIRED.	

UNIT 2/CYCLE 13
ISI REPORT OF CLASS 1 AND CLASS 2 COMPONENTS

December 14, 2004

Sam Flood, ANI/ANII, PEC-1C, BFN

BROWNS FERRY NUCLEAR PLANT (BFN) – UNIT 2 CYCLE 13 REFUELING OUTAGE INSERVICE INSPECTION (ISI) SCAN PLAN REV 000

Attached for your review is the BFN Unit 2 Cycle 13 Refueling Outage ISI Scan Plan, Revision 000, for the examinations to be performed for the current Unit 2 outage by BFN Site Engineering/Components Engineering. These examinations are being performed to satisfy the requirements of ASME Section XI Code, 1995 Edition, 1996 Addenda.

This document was prepared by Harold E. Hodges of BFN Components Engineering and coordinated with Matthew Welch and Fred Froscello of TVAN Inspection Services Organization (ISO).

1/1/2005

Harold E. Hodges
ISI Engineer
BFN Components Engineering

Matthew C. Welch 12/15/04

Matthew C. Welch
BFN ISO, NDE Level III

Frederick W. Froscello Jr. 12/14/04

Frederick W. Froscello Jr.
BFN ISO, NDE Specialist - ISI

Paul E. Huffman 02/15/2005

Kevin L. Groom for K.L. Groom
BFN Materials Engineering Supervisor,
Mechanical Nuclear

Sam Flood 2/22/05

Sam Flood ANI/ANII
Concurrence

cc: R. K. Golub, SAB-1B, BFN
M. L. Turnbow, STC-1I, SQN

Revision 000
02/03/2005
Total Examinations: 77

TENNESSEE VALLEY AUTHORITY
BROWNS FERRY NUCLEAR POWER PLANT - UNIT 2
EXAMS SCHEDULED FOR CYCLE 13

SYSTEM	WELDNO	SEGMENT	ISONO	CYCLE	ITEMNO	CATEGORY	EXREQ	EXSCHD	NDEPROC	CALSTD	COMPDIA	NOMTHCK	COMPDESA	COMPDESB
CSS	2-47B458S0004-IA		2-ISI-0280-C-01	13	B10.20	B-K	96E-03	MT	N-MT-6			0.750	WLD ATT	
FWS	2RFW2A-17R	2-003-036	2-ISI-0269-C-01	13	R1.18	R-A	96E-03	UT	N-UT-26	STP WDG	20	1.281	RED	
FWS	2RFW2A-39E	2-003-039	2-ISI-0269-C-01	13	R1.18	R-A	96E-03	UT	N-UT-26	STP WDG	12	1.012	EL	
FWS	2RFW2A-41E	2-003-039	2-ISI-0269-C-01	13	R1.18	R-A	96E-03	UT	N-UT-26	STP WDG	12	0.844	EL	
FWS	2RFW2B-14R	2-003-040	2-ISI-0269-C-01	13	R1.18	R-A	96E-03	UT	N-UT-26	STP WDG	24	1.531	RED	
FWS	2RFW5A1-1N	2-003-044	2-FAC-003-005-01	13	R1.18	R-A	96E-03	VIS	BOP-VT-2		18	0.938	NOZ	
FWS	2RFW5A1-2E	2-003-044	2-FAC-003-005-01	13	R1.18	R-A	96E-03	VIS	BOP-VT-2		18	0.938	EL	
FWS	GFW-2-12		2-ISI-0269-C-01	13	TS3432	B-J	B04-02	UT	N-UT-76	ALTCS	12.75	0.844	TEE	P
FWS	GFW-2-29		2-ISI-0269-C-01	13	TS3432	B-J	B04-02	UT	N-UT-76	ALTCS	12.75	0.844	TEE	P
HPCIS	2-47B455H0048		ISI-0275-C-01	13	F1.10C	F-A	96E-03	VT-3	N-VT-1		10.00		VAR SUP	
HPCIS	HPCI-2-004-009		ISI-0128-C-02	13	C5.51	C-F-2	P95-96	MT	N-MT-6		10.00	0.719	EL	VLV
HPCIS	HPCI-2-004-009		ISI-0128-C-02	13	C5.51	C-F-2	P95-96	UT	N-UT-76	ALTCS	10.00	0.719	EL	VLV
MSS	2-47B400S0006		2-ISI-0279-C-02	13	F1.10B	F-A	P95-96	VT-3	N-VT-1		26.00		RGD HGR	
MSS	2-47B400S0007		2-ISI-0279-C-02	13	F1.10B	F-A	96E-03	VT-3	N-VT-1		26.00		RGD HGR	
MSS	2-47B400S0007		2-ISI-0279-C-02	13	F1.10B	F-A	P95-96	VT-3	N-VT-1		26.00		RGD HGR	
MSS	2-47B400S0014		2-ISI-0279-C-02	13	F1.10C	F-A	96E-03	VT-3	N-VT-1		26.00		VAR SUP	
MSS	2-47B400S0014-IA		2-ISI-0279-C-02	13	B10.20	B-K	96E-03	MT	N-MT-6			0.500	WLD ATT	
MSS	2-47B400S0102		2-ISI-0279-C-02	13	F1.10D	F-A	96E-03	VT-3	N-VT-1		26.00		SNBR	
MSS	2-47B400S0201		2-ISI-0279-C-01	13	F1.10D	F-A	96E-03	VT-3	N-VT-1		26.00		SNBR	
MSS	2MSZ1A-HDR	2-001-036	2-ISI-0222-C-01	13	R1.18	R-A	96E-03	VIS	N-VT-14		26	0.950	HDR	
MSS	2MSZ-MS1A-9FN	2-001-036	2-ISI-0222-C-01	13	R1.18	R-A	96E-03	UT	N-UT-26	STP WDG	26	1.012	NOZ BR	
MSS	2MSZ-MS2B-20E	2-001-046	2-MSG-0021-C-01	13	R1.18	R-A	96E-03	UT	N-UT-26	STP WDG	24	1.219	EL	
MSS	2MSZ-MS2C-8E	2-001-038	2-ISI-0222-C-02	13	R1.18	R-A	96E-03	UT	N-UT-26	STP WDG	26	1.012	EL	
MSS	2MSZ-MS2C-9FN	2-001-038	2-ISI-0222-C-02	13	R1.18	R-A	96E-03	UT	N-UT-26	STP WDG	26	1.012	NOZ BR	
MSS	GMS-2-06		2-ISI-0222-C-01	13	TS3432	B-J	B04-02	UT	N-UT-76	ALTCS	26.00	0.950	P	EL
MSS	KMS-2-104		2-ISI-0222-C-01	13	TS3432	B-J	B04-02	UT	N-UT-76	ALTCS	26.00	0.950	EL	HDR
MSS	MSBC-2-03		2-ISI-0312-B-01	13	B7.50	B-G-2	96E-03	VT-1	N-VT-1				BLTG	
MSS	MSBC-2-12		2-ISI-0312-B-01	13	B7.50	B-G-2	96E-03	VT-1	N-VT-1				BLTG	
MSS	PCV1-2-030-PBC		2-ISI-0312-B-01	13	B7.50	B-G-2	96E-03	VT-1	N-VT-1				BLTG	
MSS	PCV1-2-034-PBC		2-ISI-0312-B-01	13	B7.50	B-G-2	96E-03	VT-1	N-VT-1				BLTG	
MSS	PCV1-2-041-PBC		2-ISI-0312-B-01	13	B7.50	B-G-2	96E-03	VT-1	N-VT-1				BLTG	
MSS	PCV1-2-042-PBC		2-ISI-0312-B-01	13	B7.50	B-G-2	96E-03	VT-1	N-VT-1				BLTG	
RECIR	2-47B408S0068-IE		2-ISI-0278-C-01	13	F1.40D	F-A	96E-03	VT-3	N-VT-1				SNBR	
RECIR	2-47B408S0069-IE		2-ISI-0278-C-01	13	F1.40D	F-A	96E-03	VT-3	N-VT-1				SNBR	
RECIR	2-47B408S0074		2-ISI-0278-C-02	13	F1.10A	F-A	96E-03	VT-3	N-VT-1		22.00		RGD STRT	

SORT ORDER: SYSTEM-WELDNO

SYSTEM	WELDNO	SEGMENT	ISONO	CYCLE	ITEMNO	CATEGORY	EXREQ	EXSCHD	NDEPROC	CALSTD	COMPDIA	NOMTHCK	COMPDESA	COMPDESB
RECIR	GR-2-15(OL)	2-068-006	2-ISI-0270-C-01	13	R1.16E	R-A	96E-03	UT	N-UT-66	BF-50	12.00	1.139	SDL	P
RECIR	GR-2-15(OL)	2-068-006	2-ISI-0270-C-01	13	NU0313	E	B02-02	UT	N-UT-66	BF-50	12.00	1.139	SDL	P
RECIR	KR-2-02	2-068-002	2-ISI-0270-C-01	13	R1.16C	R-A	96E-03	UT	N-UT-64	ALTSS	28.00	1.322	EL	P
RECIR	KR-2-02	2-068-002	2-ISI-0270-C-01	13	NU0313	C	B02-02	UT	N-UT-64	ALTSS	28.00	1.322	EL	P
RECIR	KR-2-03	2-068-002	2-ISI-0270-C-01	13	R1.16C	R-A	96E-03	UT	N-UT-64	ALTSS	28.00	1.322	P	TEE
RECIR	KR-2-03	2-068-002	2-ISI-0270-C-01	13	NU0313	C	B02-02	UT	N-UT-64	ALTSS	28.00	1.322	P	TEE
RECIR	KR-2-14	2-068-003	2-ISI-0270-C-01	13	R1.16E	R-A	96E-03	UT	N-UT-64	ALTSS	12.00	0.569	HDR	BRCN
RECIR	KR-2-14	2-068-003	2-ISI-0270-C-01	13	NU0313	E	B02-02	UT	N-UT-64	ALTSS	12.00	0.569	HDR	BRCN
RECIR	KR-2-36	2-068-015	2-ISI-0270-C-02	13	R1.16E	R-A	96E-03	UT	N-UT-64	ALTSS	12.00	0.569	HDR	BRCN
RECIR	KR-2-36	2-068-015	2-ISI-0270-C-02	13	NU0313	E	B02-02	UT	N-UT-64	ALTSS	12.00	0.569	HDR	BRCN
RECIR	KR-2-37	2-068-015	2-ISI-0270-C-02	13	R1.16E	R-A	96E-03	UT	N-UT-64	ALTSS	22.00	1.030	HDR	CAP
RECIR	KR-2-37	2-068-015	2-ISI-0270-C-02	13	NU0313	E	B02-02	UT	N-UT-64	ALTSS	22.00	1.030	HDR	CAP
RECIR	KR-2-41	2-068-015	2-ISI-0270-C-02	13	R1.16E	R-A	96E-03	UT	N-UT-64	ALTSS	12.00	0.569	HDR	BRCN
RECIR	KR-2-41	2-068-015	2-ISI-0270-C-02	13	NU0313	E	B02-02	UT	N-UT-64	ALTSS	12.00	0.569	HDR	BRCN
RECIR	KR-2-50	2-068-016	2-ISI-0270-C-02	13	R1.16C	R-A	96E-03	UT	N-UT-64	ALTSS	28.00	1.138	P	EL
RECIR	KR-2-50	2-068-016	2-ISI-0270-C-02	13	NU0313	C	B02-02	UT	N-UT-64	ALTSS	28.00	1.138	P	EL
RECIR	KR-2-51	2-068-016	2-ISI-0270-C-02	13	R1.16C	R-A	96E-03	UT	N-UT-64	ALTSS	28.00	1.138	P	EL
RECIR	KR-2-51	2-068-016	2-ISI-0270-C-02	13	NU0313	C	B02-02	UT	N-UT-64	ALTSS	28.00	1.138	P	EL
RHRS	2-47B452S0239		2-ISI-0276-C-01	13	F1.10C	F-A	96E-03	VT-3	N-VT-1		20.00		VAR SUP	
RHRS	2-47B452S0239-IA		2-ISI-0276-C-01	13	B10.20	B-K	96E-03	PT	N-PT-9			0.750	WLD ATT	
RHRS	DRHR-2-03	2-074-002	2-ISI-0221-C-01	13	R1.16D	R-A	96E-03	UT	N-UT-64	ALTSS	24.00	1.219	VERT LS	P
RHRS	DRHR-2-03	2-074-002	2-ISI-0221-C-01	13	NU0313	D	B02-02	UT	N-UT-64	ALTSS	24.00	1.219	VERT LS	P
RHRS	DRHR-2-03B	2-074-005	2-ISI-0221-C-01	13	R1.16G	R-A	96E-03	VT-2	N-VT-4		24.00	1.219	P	P
RHRS	DRHR-2-03B	2-074-005	2-ISI-0221-C-01	13	NU0313	G	B02-02	VT-2	N-VT-4		24.00	1.219	P	P
RHRS	DRHR-2-11		2-MSG-0018-C-09	13	NU0313	D	B02-02	UT	N-UT-82	ALTSS	24.00	1.531	P	VLV
RHRS	DRHR-2-13B	2-074-013	2-ISI-0221-C-01	13	R1.16G	R-A	96E-03	VT-2	N-VT-4		24.00	1.219	P	P
RHRS	DRHR-2-13B	2-074-013	2-ISI-0221-C-01	13	NU0313	G	B02-02	VT-2	N-VT-4		24.00	1.219	P	P
RHRS	DSRHR-2-06		2-ISI-0221-C-01	13	NU0313	C	B02-02	UT	N-UT-64	ALTSS	24.00	1.219	P	P
RHRS	DSRHR-2-06		2-ISI-0221-C-01	13	TS3432	B-J	B04-02	UT	N-UT-64	ALTSS	24.00	1.219	P	P
RHRS	DSRHR-2-09	2-074-007	2-ISI-0221-C-01	13	R1.16C	R-A	96E-03	UT	N-UT-64	ALTSS	20.00	1.031	TEE	EL
RHRS	DSRHR-2-09	2-074-007	2-ISI-0221-C-01	13	NU0313	C	B02-02	UT	N-UT-64	ALTSS	20.00	1.031	TEE	EL
RPV	N10-SE		2-ISI-0380-C-01	13	N/A	BWRVIP-27	B07-02	VT-2	N-VT-4		1.5	0.218	SE	NOZ
RPV	N11A-SE		2-ISI-0383-C-01	13	N/A	BWRVIP-49	B07-02	VT-2	N-VT-4		2.00	0.250	SE	P
RPV	N11B-SE		2-ISI-0383-C-02	13	N/A	BWRVIP-49	B07-02	VT-2	N-VT-4		2.00	0.250	SE	P
RPV	N12A-SE		2-ISI-0383-C-01	13	N/A	BWRVIP-49	B07-02	VT-2	N-VT-4		2.00	0.250	SE	P
RPV	N12B-SE		2-ISI-0383-C-02	13	N/A	BWRVIP-49	B07-02	VT-2	N-VT-4		2.00	0.250	P	PC,PIPE
RPV	N-16A-SE		2-ISI-0383-C-01	13	N/A	BWRVIP-49	B07-02	VT-2	N-VT-4		2.00	0.218	NOZ	SE
RPV	N-16B-SE		2-ISI-0383-C-02	13	N/A	BWRVIP-49	B07-02	VT-2	N-VT-4		2.00	0.250	NOZ	SE
RPV	RCRD-2-33		2-ISI-0272-C-01	13	NU0313	D	B02-02	UT	N-UT-82	ALTSS	4.00	0.674	NOZ	CAP
RWCUS	RCRD-2-50	2-085-031	2-ISI-0272-C-01	13	R1.16D	R-A	96E-03	UT	N-UT-82	ALTSS	4.00	0.432	EL	VLV

SYSTEM	WELDNO	SEGMENT	ISONO	CYCLE	ITEMNO	CATEGORY	EXREQ	EXSCHD	NDEPROC	CALSTD	COMPDIA	NOMTHCK	COMPDESA	COMPDESB
RWCUS	RCRD-2-50	2-085-031	2-ISI-0272-C-01	13	NU0313	D	B02-02	UT	N-UT-82	ALTSS	4.00	0.432	EL	VLV
RWCUS	RWC-2-001-G002	2-069-003	2-ISI-0272-C-01	13	R1.16A	R-A	96E-03	UT	N-UT-82	ALTSS	04.00	0.337	PC,VLV	PC,EL

April 12, 2005

Sam Flood, ANI/ANII, PEC-1C, BFN

BROWNS FERRY NUCLEAR PLANT (BFN) – UNIT 2 CYCLE 13 REFUELING OUTAGE INSERVICE INSPECTION (ISI) SCAN PLAN REV 001

Attached for your review is the BFN Unit 2 Cycle 13 Refueling Outage ISI Scan Plan, Revision 001, for the examinations to be performed for the current Unit 2 outage by BFN Site Engineering/Components Engineering. These examinations are being performed to satisfy the requirements of ASME Section XI Code, 1995 Edition, 1996 Addenda.

This document was prepared by Harold E. Hodges of BFN Components Engineering and coordinated with Matthew Welch and Fred Froscello of TVAN Inspection Services Organization (ISO).

5/19/2005

Harold E. Hodges
ISI Engineer
BFN Components Engineering

Matthew C. Welch
BFN ISO, NDE Level III

Frederick W. Froscello Jr.
BFN ISO, NDE Specialist - ISI

Kevin L. Groom
BFN Materials Engineering Supervisor,
Mechanical Nuclear

5/23/05

Sam Flood ANI/ANII
Concurrence

cc: R. K. Golub, SAB-1B, BFN
M. L. Turnbow, STC-1I, SQN

Revision 001
04/21/2005
Total Examinations: 114

TENNESSEE VALLEY AUTHORITY
BROWNS FERRY NUCLEAR POWER PLANT - UNIT 2
EXAMS SCHEDULED FOR CYCLE 13

SYSTEM	WELDNO	SEGMENT	ISONO	CYCLE	ITEMNO	CATEGORY	EXREQ	EXSCHD	NDEPROC	CALSTD	COMPDIA	NOMTHICK	COMPDESA	COMPDESB
CSS	2-47B458S0004-IA		2-ISI-0280-C-01	13	B10.20	B-K	96E-03	MT	N-MT-6			0.750	WLD ATT	
CSS	2-SI-3.3.6		N/A	13	C7.30	C-H	96E-03	VT-2	N-VT-4				SYSLEAK	
CSS	2-SI-3.3.6		N/A	13	C7.50	C-H	96E-03	VT-2	N-VT-4				SYSLEAK	
CSS	2-SI-3.3.6		N/A	13	C7.70	C-H	96E-03	VT-2	N-VT-4				SYSLEAK	
FWS	2RFW2A-17R	2-003-036	2-ISI-0269-C-01	13	R1.18	R-A	96E-03	UT	N-UT-26	01-7471	20	1.281	RED	
FWS	2RFW2A-39E	2-003-039	2-ISI-0269-C-01	13	R1.18	R-A	96E-03	UT	N-UT-26	01-7471	12	1.012	EL	
FWS	2RFW2A-41E	2-003-039	2-ISI-0269-C-01	13	R1.18	R-A	96E-03	UT	N-UT-26	04-8732	12	0.844	EL	
FWS	2RFW2B-14R	2-003-040	2-ISI-0269-C-01	13	R1.18	R-A	96E-03	UT	N-UT-26	04-8732	24	1.531	RED	
FWS	2RFW5A1-1N	2-003-044	2-FAC-003-005-01	13	R1.18	R-A	96E-03	VIS	BOP-VT-2	N/A	18	0.938	NOZ	
FWS	2RFW5A1-2E	2-003-044	2-FAC-003-005-01	13	R1.18	R-A	96E-03	VIS	BOP-VT-2	N/A	18	0.938	EL	
FWS	GFW-2-12		2-ISI-0269-C-01	13	TS3432	B-J	B04-02	UT	N-UT-76	WB-78	12.75	0.844	TEE	P
FWS	GFW-2-29		2-ISI-0269-C-01	13	TS3432	B-J	B04-02	UT	N-UT-76	WB-78	12.75	0.844	TEE	P
HPCIS	2-47B455H0048		ISI-0275-C-01	13	F1.10C	F-A	96E-03	VT-3	N-VT-1		10.00		VAR SUP	
HPCIS	HPCI-2-004-009		ISI-0128-C-02	13	C5.51	C-F-2	P95-96	PT	N-PT-9		10.00	0.719	EL	VLV
HPCIS	HPCI-2-004-009		ISI-0128-C-02	13	C5.51	C-F-2	P95-96	UT	N-UT-76	WB-78	10.00	0.719	EL	VLV
MSS	2-47B400S0006		2-ISI-0279-C-02	13	F1.10B	F-A	P95-96	VT-3	N-VT-1		26.00		RGD HGR	
MSS	2-47B400S0007		2-ISI-0279-C-02	13	F1.10B	F-A	P95-96	VT-3	N-VT-1		26.00		RGD HGR	
MSS	2-47B400S0014		2-ISI-0279-C-02	13	F1.10C	F-A	96E-03	VT-3	N-VT-1		26.00		VAR SUP	
MSS	2-47B400S0014-IA		2-ISI-0279-C-02	13	B10.20	B-K	96E-03	MT	N-MT-6			0.500	WLD ATT	
MSS	2-47B400S0102		2-ISI-0279-C-02	13	F1.10D	F-A	96E-03	VT-3	N-VT-1		26.00		SNBR	
MSS	2-47B400S0201		2-ISI-0279-C-01	13	F1.10D	F-A	96E-03	VT-3	N-VT-1		26.00		SNBR	
MSS	2MSZ-MS1A-9FN	2-001-036	2-ISI-0222-C-01	13	R1.18	R-A	96E-03	UT	N-UT-26	01-7473	26	1.012	NOZ BR	
MSS	2MSZ-MS2B-20E	2-001-046	2-MSG-0021-C-01	13	R1.18	R-A	96E-03	UT	N-UT-26	01-7478	24	1.219	EL	
MSS	2MSZ-MS2C-8E	2-001-038	2-ISI-0222-C-02	13	R1.18	R-A	96E-03	UT	N-UT-26	01-7472	26	1.012	EL	
MSS	2MSZ-MS2C-9FN	2-001-038	2-ISI-0222-C-02	13	R1.18	R-A	96E-03	UT	N-UT-26	04-8727	26	1.012	NOZ BR	
MSS	2-SI-3.3.1.C		N/A	13	C7.30	C-H	96E-03	VT-2	N-VT-4				SYSLEAK	
MSS	2-SI-3.3.1.C		N/A	13	C7.70	C-H	96E-03	VT-2	N-VT-4				SYSLEAK	
MSS	GMS-2-06		2-ISI-0222-C-01	13	TS3432	B-J	B04-02	UT	N-UT-76	WB-78	26.00	0.950	P	EL
MSS	KMS-2-104		2-ISI-0222-C-01	13	TS3432	B-J	B04-02	UT	N-UT-76	WB-78	26.00	0.950	EL	HDR
MSS	MS-2-009-016		2-ISI-0222-C-03	13	B9.40	B-J	P95-96	PT	N-PT-9		3.0	.438	P	VLV
MSS	MSBC-2-03		2-ISI-0312-B-01	13	B7.50	B-G-2	96E-03	VT-1	N-VT-1				BLTG	
MSS	MSBC-2-12		2-ISI-0312-B-01	13	B7.50	B-G-2	96E-03	VT-1	N-VT-1				BLTG	
MSS	PCV1-2-030-PBC		2-ISI-0312-B-01	13	B7.50	B-G-2	96E-03	VT-1	N-VT-1				BLTG	
MSS	PCV1-2-034-PBC		2-ISI-0312-B-01	13	B7.50	B-G-2	96E-03	VT-1	N-VT-1				BLTG	
MSS	PCV1-2-041-PBC		2-ISI-0312-B-01	13	B7.50	B-G-2	96E-03	VT-1	N-VT-1				BLTG	

SYSTEM	WELDNO	SEGMENT	ISONO	CYCLE	ITEMNO	CATEGORY	EXREQ	EXSCHD	NDEPROC	CALSTD	COMPDIA	NOMTHCK	COMPDESA	COMPDESB
MSS	PCV1-2-042-PBC		2-ISI-0312-B-01	13	B7.50	B-G-2	96E-03	VT-1	N-VT-1				BLTG	
MSS	PCV1-2-179-VBC		2-ISI-0312-B-01	13	B7.70	B-G-2	P95-96	VT-1	N-VT-1				BLTG	
RECIR	2-47B408S0068-IE		2-ISI-0278-C-01	13	F1.40D	F-A	96E-03	VT-3	N-VT-1				SNBR	
RECIR	2-47B408S0068-IE		2-ISI-0278-C-01	13	F1.40D	F-A	P95-96	VT-3	N-VT-1				SNBR	
RECIR	2-47B408S0069-IE		2-ISI-0278-C-01	13	F1.40D	F-A	96E-03	VT-3	N-VT-1				SNBR	
RECIR	2-47B408S0074		2-ISI-0278-C-02	13	F1.10A	F-A	96E-03	VT-3	N-VT-1		22.00		RGD STRT	
RECIR	KR-2-02	2-068-002	2-ISI-0270-C-01	13	R1.16C	R-A	96E-03	UT	N-UT-64	ALTSS	28.00	1.322	EL	P
RECIR	KR-2-02	2-068-002	2-ISI-0270-C-01	13	NU0313	C	B02-02	UT	N-UT-64	WB-85	28.00	1.322	EL	P
RECIR	KR-2-03	2-068-002	2-ISI-0270-C-01	13	R1.16C	R-A	96E-03	UT	N-UT-64	WB-85	28.00	1.322	P	TEE
RECIR	KR-2-03	2-068-002	2-ISI-0270-C-01	13	NU0313	C	B02-02	UT	N-UT-64	WB-85	28.00	1.322	P	TEE
RECIR	KR-2-14	2-068-003	2-ISI-0270-C-01	13	R1.16E	R-A	96E-03	UT	N-UT-64	WB-85	12.00	0.569	HDR	BRCN
RECIR	KR-2-14	2-068-003	2-ISI-0270-C-01	13	R1.16E	R-A	96E-03	UT	N-UT-65	ISI-165	12.00	0.569	HDR	BRCN
RECIR	KR-2-14	2-068-003	2-ISI-0270-C-01	13	NU0313	E	B02-02	UT	N-UT-64	WB-85	12.00	0.569	HDR	BRCN
RECIR	KR-2-14	2-068-003	2-ISI-0270-C-01	13	NU0313	E	B02-02	UT	N-UT-65	ISI-165	12.00	0.569	HDR	BRCN
RECIR	KR-2-36	2-068-015	2-ISI-0270-C-02	13	R1.16E	R-A	96E-03	UT	N-UT-64	WB-85	12.00	0.569	HDR	BRCN
RECIR	KR-2-36	2-068-015	2-ISI-0270-C-02	13	R1.16E	R-A	96E-03	UT	N-UT-65	ISI-165	12.00	0.569	HDR	BRCN
RECIR	KR-2-36	2-068-015	2-ISI-0270-C-02	13	NU0313	E	B02-02	UT	N-UT-64	WB-85	12.00	0.569	HDR	BRCN
RECIR	KR-2-36	2-068-015	2-ISI-0270-C-02	13	NU0313	E	B02-02	UT	N-UT-65	ISI-165	12.00	0.569	HDR	BRCN
RECIR	KR-2-37	2-068-015	2-ISI-0270-C-02	13	R1.16E	R-A	96E-03	UT	N-UT-64	WB-85	22.00	1.030	HDR	CAP
RECIR	KR-2-37	2-068-015	2-ISI-0270-C-02	13	R1.16E	R-A	96E-03	UT	N-UT-65	ISI-165	22.00	1.030	HDR	CAP
RECIR	KR-2-37	2-068-015	2-ISI-0270-C-02	13	NU0313	E	B02-02	UT	N-UT-64	WB-85	22.00	1.030	HDR	CAP
RECIR	KR-2-37	2-068-015	2-ISI-0270-C-02	13	NU0313	E	B02-02	UT	N-UT-65	ISI-165	22.00	1.030	HDR	CAP
RECIR	KR-2-41	2-068-015	2-ISI-0270-C-02	13	R1.16E	R-A	96E-03	UT	N-UT-64	WB-85	12.00	0.569	HDR	BRCN
RECIR	KR-2-41	2-068-015	2-ISI-0270-C-02	13	R1.16E	R-A	96E-03	UT	N-UT-65	ISI-165	12.00	0.569	HDR	BRCN
RECIR	KR-2-41	2-068-015	2-ISI-0270-C-02	13	NU0313	E	B02-02	UT	N-UT-64	WB-85	12.00	0.569	HDR	BRCN
RECIR	KR-2-41	2-068-015	2-ISI-0270-C-02	13	NU0313	E	B02-02	UT	N-UT-65	ISI-165	12.00	0.569	HDR	BRCN
RECIR	KR-2-50	2-068-016	2-ISI-0270-C-02	13	R1.16C	R-A	96E-03	UT	N-UT-64	WB-85	28.00	1.138	P	EL
RECIR	KR-2-50	2-068-016	2-ISI-0270-C-02	13	NU0313	C	B02-02	UT	N-UT-64	WB-85	28.00	1.138	P	EL
RECIR	KR-2-51	2-068-016	2-ISI-0270-C-02	13	R1.16C	R-A	96E-03	UT	N-UT-64	WB-85	28.00	1.138	P	EL
RECIR	KR-2-51	2-068-016	2-ISI-0270-C-02	13	NU0313	C	B02-02	UT	N-UT-64	WB-85	28.00	1.138	P	EL
RHRS	2-47B452S0239		2-ISI-0276-C-01	13	F1.10C	F-A	96E-03	VT-3	N-VT-1		20.00		VAR SUP	
RHRS	2-47B452S0239-IA		2-ISI-0276-C-01	13	B10.20	B-K	96E-03	PT	N-PT-9			0.750	WLD ATT	
RHRS	DRHR-2-03	2-074-002	2-ISI-0221-C-01	13	R1.16D	R-A	96E-03	UT	N-UT-64	WB-85	24.00	1.219	VLV	FH
RHRS	DRHR-2-03	2-074-002	2-ISI-0221-C-01	13	NU0313	D	B02-02	UT	N-UT-64	WB-85	24.00	1.219	VLV	FH
RHRS	DRHR-2-03B	2-074-005	2-ISI-0221-C-01	13	R1.16G	R-A	96E-03	VT-2	N-VT-4		24.00	1.219	P	P
RHRS	DRHR-2-03B	2-074-005	2-ISI-0221-C-01	13	NU0313	G	B02-02	VT-2	N-VT-4		24.00	1.219	P	P
RHRS	DRHR-2-11		2-MSG-0018-C-09	13	NU0313	D	B02-02	UT	N-UT-82	WB-85	24.00	1.531	P	VLV
RHRS	DRHR-2-13B	2-074-013	2-ISI-0221-C-01	13	R1.16G	R-A	96E-03	VT-2	N-VT-4		24.00	1.219	P	P
RHRS	DRHR-2-13B	2-074-013	2-ISI-0221-C-01	13	NU0313	G	B02-02	VT-2	N-VT-4		24.00	1.219	P	P
RHRS	DSRHR-2-06		2-ISI-0221-C-01	13	NU0313	C	B02-02	UT	N-UT-64	WB-85	24.00	1.219	P	P

SYSTEM	WELDNO	SEGMENT	ISONO	CYCLE	ITEMNO	CATEGORY	EXREQ	EXSCHD	NDEPROC	CALSTD	COMPDIA	NOMTHCK	COMPDESA	COMPDESB
RHRS	DSRHR-2-06		2-ISI-0221-C-01	13	TS3432	B-J	B04-02	UT	N-UT-64	WB-85	24.00	1.219	P	P
RHRS	DSRHR-2-09	2-074-007	2-ISI-0221-C-01	13	R1.16C	R-A	96E-03	UT	N-UT-64	WB-85	20.00	1.031	TEE	EL
RHRS	DSRHR-2-09	2-074-007	2-ISI-0221-C-01	13	NU0313	C	B02-02	UT	N-UT-64	WB-85	20.00	1.031	TEE	EL
RHRSW	2-SI-3.3.13		N/A	13	D2.30	D-B	96E-03	VT-2	N-VT-4				SYSLEAK	
RHRSW	2-SI-3.3.13		N/A	13	D2.50	D-B	96E-03	VT-2	N-VT-4				SYSLEAK	
RHRSW	2-SI-3.3.13		N/A	13	D2.70	D-B	96E-03	VT-2	N-VT-4				SYSLEAK	
RPV	2-SI-3.3.1.A		N/A	13	B15.10	B-P	96E-03	VT-2	N-VT-4				SYSLEAK	
RPV	2-SI-3.3.1.A		N/A	13	B15.50	B-P	96E-03	VT-2	N-VT-4				SYSLEAK	
RPV	2-SI-3.3.1.A		N/A	13	B15.60	B-P	96E-03	VT-2	N-VT-4				SYSLEAK	
RPV	2-SI-3.3.1.A		N/A	13	B15.70	B-P	96E-03	VT-2	N-VT-4	N/A			SYSLEAK	
RPV	ACCESS HOLE COVER		2-CHM-2046-C-02	13	N/A	N/A	0TI365	EVT-1	VENDOR VT				INT	
RPV	JET PUMPS			13	N/A	N/A	0TI365	UT	VENDOR UT					
RPV	JET PUMPS			13	N/A	N/A	0TI365	VT-1	VENDOR VT					
RPV	N10-SE		2-ISI-0380-C-01	13	N/A	BWRVIP-27	B07-02	VT-2	N-VT-4		1.5	0.218	SE	NOZ
RPV	N11A-SE		2-ISI-0383-C-01	13	N/A	BWRVIP-49	B07-02	VT-2	N-VT-4		2.00	0.250	SE	P
RPV	N11B-SE		2-ISI-0383-C-02	13	N/A	BWRVIP-49	B07-02	VT-2	N-VT-4		2.00	0.250	SE	P
RPV	N12A-SE		2-ISI-0383-C-01	13	N/A	BWRVIP-49	B07-02	VT-2	N-VT-4		2.00	0.250	SE	P
RPV	N12B-SE		2-ISI-0383-C-02	13	N/A	BWRVIP-49	B07-02	VT-2	N-VT-4		2.00	0.250	P	PC,PIPE
RPV	N-16A-SE		2-ISI-0383-C-01	13	N/A	BWRVIP-49	B07-02	VT-2	N-VT-4		2.00	0.218	NOZ	SE
RPV	N-16B-SE		2-ISI-0383-C-02	13	N/A	BWRVIP-49	B07-02	VT-2	N-VT-4		2.00	0.250	NOZ	SE
RPV	RCRD-2-33		2-ISI-0272-C-01	13	NU0313	D	B02-02	UT	N-UT-82	WB-85	4.00	0.674	NOZ	CAP
RPV	RPV CORE PLATE		2-CHM-2046-C-02	13	N/A	N/A	0TI365	VT-3	VENDOR VT				INT	
RPV	RPV CORE SUPPORT		2-CHM-2046-C-02	13	B13.40	B-N-2	96E-03	VT-3	VENDOR VT				INT	
RPV	RPV CR GUIDE TUBES		2-CHM-2046-C-02	13	N/A	N/A	0TI365	VT-1E	VENDOR VT				INT	
RPV	RPV CR GUIDE TUBES		2-CHM-2046-C-02	13	N/A	N/A	0TI365	VT-3	VENDOR VT				INT	
RPV	RPV CS PIPING		2-CHM-2046-C-02	13	N/A	N/A	0TI365	UT	VENDOR UT		6.000		INT	
RPV	RPV CS PIPING		2-CHM-2046-C-02	13	N/A	N/A	0TI365	VT-3	VENDOR VT		6.000		INT	
RPV	RPV CS PIPING		2-CHM-2046-C-02	13	N/A	N/A	0TI365	EVT-1	VENDOR VT		6.000		INT	
RPV	RPV INT ATT NBLR		2-CHM-2046-C-02	13	B13.30	B-N-2	96E-03	VT-3	VENDOR VT				INT	
RPV	RPV INT ATT NBLR		2-CHM-2046-C-02	13	B13.40	B-N-2	96E-03	VT-3	VENDOR VT				INT	
RPV	RPV SHROUD WELD H-9		2-CHM-2046-C-02	13	N/A	N/A	0TI365	UT	VENDOR UT	BF-18			INT	
RPV	RPV SHROUD WELD H-9		2-CHM-2046-C-02	13	N/A	N/A	0TI365	EVT-1	VENDOR VT				INT	
RPV	RPV STEAM DRYER		2-CHM-2046-C-02	13	N/A	N/A	0TI365	VT-1	VENDOR VT				INT	
RPV	RPV STEAM DRYER		2-CHM-2046-C-02	13	N/A	N/A	0TI365	VT-3	VENDOR VT				INT	
RPV	RPV-INTERIOR		2-CHM-2046-C-02	13	B13.10	B-N-1	96E-03	VT-3	VENDOR VT				INT	
RWCUS	FCV-69-002		2-ISI-0272-C-01	13	B12.50	B-M-2	96E-03	VT-3	N-VT-1		06.00		INT	
RWCUS	RCRD-2-50	2-085-031	2-ISI-0272-C-01	13	R1.16D	R-A	96E-03	UT	N-UT-82	WB-85	4.00	0.432	EL	VLV
RWCUS	RCRD-2-50	2-085-031	2-ISI-0272-C-01	13	NU0313	D	B02-02	UT	N-UT-82	WB-85	4.00	0.432	EL	VLV
RWCUS	RWC-2-001-G002	2-069-003	2-ISI-0272-C-01	13	R1.16A	R-A	96E-03	UT	N-UT-82	WB-85	04.00	0.337	PC,VLV	PC,EL

BFN SCAN PLAN REVISION LOG

UNIT/ CYCLE	SCAN PLAN REV.	SYSTEM	COMPONENT IDENTIFIER	ASME XI	REVISION	REASON FOR REVISION	APPROVED BY ISI/NDE SIGN AND DATE	APPROVED BY NDE LEVEL III SIGN AND DATE	ISI DATA BASE REVISED BY ISO SIGN AND DATE	ISI DATA BASE REVISION VERIFIED BY ISI/NDE SIGN AND DATE
2/13	001	HPCIS	HPCI-2-004-009	Y	CHANGE SCHEDULED EXAM AND PROCEDURE FROM MT, N-MT-6 TO PT, N-PT-9	PT EXAM WAS REQUESTED BY WELDING ENGINEERING	3/23/2005	3/18/05	3/18/05	3/18/05
2/13	001	MSS	2MSZ1A-HDR	Y	DELETE 2MSZ1A-HDR FROM U2C13 BFN SCHEDULED EXAMS EXREQ - V15 NDE PROC - N-VT-14	Not Required by Engineering Decision. Conditional Assessment.	3/23/2005	3/18/05	3/18/05	3/18/05
2/13	001	RPV	PARTIAL EXAM OF TOTAL COMPONENT POPULATION.	Y	ADD EXAM CATEGORY B-N-1 ITEM B13.10, AND CATEGORY B-N-2, ITEM B13.40.	TO DOCUMENT CODE EXAMS PERFORMED THIS RFO	3/29/2005	3/27/05	3/29/05	3/27/05
2/13	001	MSS	MS-2-009-016	Y	ADD COMPONENT AS FOLLOWS: CATEGORY - BJ EXREQ - P95-96 ITEM - B9.40 NDEPROC - N-PT-9	PRESERVICE EXAM	3/30/05	3/29/05	3/29/05	3/29/05
2/13	001	MSS	2-47B400-5007	Y	REMOVE EXAM FOR EXREQ 9LE-03 AND ENTER IN RFOC14	TO BE PERFORMED IN U2C14 RFO.	3/30/05	3/30/05	3/30/05	3/30/05

BFN SCAN PLAN REVISION LOG

UNIT/ CYCLE	SCAN PLAN REV.	SYSTEM	COMPONENT IDENTIFIER	ASME XI	REVISION	REASON FOR REVISION	APPROVED BY ISI/NDE SIGN AND DATE	APPROVED BY NDE LEVEL III SIGN AND DATE	ISI DATA BASE REVISED BY ISO SIGN AND DATE	ISI DATA BASE REVISION VERIFIED BY ISI/NDE SIGN AND DATE
2/13	01	RWCU	2-FCV-69-002	Y	ADD COMPONENT TO U2C13 RFO: CATEGORY: B-M-2 ITEM: B12.50 EXREQ: 96E-03 NDE PROC: N-VT-1/VT-2	U2C13 RFO EMERGENT WORK. ~~CATEGORY: C-H~~ ~~ITEM: C7.30, C7.50, C7.70~~ NDE PROC: N-VT-4 WT 4/1/04	1/2/06 4/2/2005	4/1/05	4/1/05	4/1/05
2/13	01	CSS	2-SI-3.3.6		ADD COMPONENT TO U2C13 RFO: CATEGORY: C-H ITEM: C7.30, C7.50, C7.70 NDE PROC: N-VT-4/VT-2 EXREQ: 96E03	COMPLETED HYDRO	1/2/06 4/2/2005	4/1/05	4/1/05	4/4/05
2/13	01	MSS	2-SI-3.3.1.C		ADD COMPONENT TO U2C13 RFO: CATEGORY: CH ITEM: C7.30, C7.70 NDE PROC: N-VT-4/VT2 EXREQ: 96E03	COMPLETED HYDRO	1/2/06 4/2/2005	4/1/05	4/1/05	4/4/05
2/13	01	RPV	2-SI-3.3.1.A		ADD COMPONENT TO U2C13 RFO: CATEGORY: B-P ITEMS: B15.10, B15.50, B15.60 & B15.20 NDE PROC: N-VT-4/VT2 EXREQ: 96E03	COMPLETED HYDRO	1/2/06 4/2/2005	4/1/05	4/1/05	4/4/05
2/34	01	RHRSW	2-SI-3.3.13		ADD COMPONENT TO U2C13 RFO: CATEGORY: D-B ITEMS: D2.30, D2.50, D2.70 NDE PROC: N-VT-4/VT2 EXREQ: 96E03	COMPLETED HYDRO	1/2/06 4/2/2005	4/1/05	4/1/05	4/4/05

BFN SCAN PLAN REVISION LOG

UNIT/ CYCLE	SCAN PLAN REV.	SYSTEM	COMPONENT IDENTIFIER	ASME XI	REVISION	REASON FOR REVISION	APPROVED BY ISI/NDE SIGN AND DATE	APPROVED BY NDE LEVEL III SIGN AND DATE	ISI DATA BASE REVISED BY ISO SIGN AND DATE	ISI DATA BASE REVISION VERIFIED BY ISI/NDE SIGN AND DATE
2/13	01	RHRS	2-SI-3.3.8.A	Y	ADD COMPONENT TO U2C13 RFO: CATEGORY: C-H ITEMS: C7.30, C7.50, C7.70 NDE PROC: N-VT-4/VT-2 EXREQ: 96E02	COMPLETED HYDRO	1k/1/2/92 4/2/2005	4/1/04	4/1/04	F.W. Frosello Jr. 4/4/05
2/13	01	MSS	PCV 1-2-179-VBC	Y	ADD COMPONENT TO U2C13 RFO: CATEGORY: BG2 ITEM: B7.70 NDE PROC: N-VT-1/VT-1 EXREQ: P95-96	ADDED SCOPE	1k/1/92 4/2/2005	4/1/04	4/1/04	F.W. Frosello Jr. 4/4/05
2/13	01	RPV	RPV INT ATTACMENTS BEYOND BELTLINE	Y	ADD COMPONENT TO U2C13 RFO: CATEGORY: B-N-2 ITEM: B13.30 NDE PROC: VENDOR VT EXREQ: 96E02	UPDATE OF ITEMS	1k/1/92 4/4/05	4/4/05	4/4/05	F.W. Frosello Jr. 4/4/05
2/13	01	REZIRC	2-47B408S0068	Y	ADD COMPONENT TO U2C13 RFO: CATEGORY: FA ITEM: ~~F1.40D~~ F1.40D 4/4/04 EXREQ: P95-96 NDE PROC: N-VT-1/VT3	PSI RE: W/O 04-718364-000	1k/1/92 4/12/2005	4/4/05	4/4/05	F.W. Frosello Jr. 4/5/05
4/15	01	RWCU	2-FCV-69-002	Y	Change exam from VT-1 to VT-3	Typo-ERROR.	1k/1/92 4/12/2005	4/15/05	4/15/05	F.W. Frosello Jr. 4/15/05

H SCAN PLAN REV LOG XLS

 4/18/05

BFN SCAN PLAN REVISION LOG

UNIT/ CYCLE	SCAN PLAN REV.	SYSTEM	COMPONENT IDENTIFIER	ASME XI	REVISION	REASON FOR REVISION	APPROVED BY ISI/NDE SIGN AND DATE	APPROVED BY NDE LEVEL III SIGN AND DATE	ISI DATA BASE REVISED BY ISO SIGN AND DATE	ISI DATA BASE REVISION VERIFIED BY ISI/NDE SIGN AND DATE
2/13	01	RHRS	2-SI-3.3.8.A	Y	2-SI-3.3.8.A Remove Component from U2C13 Outage CATagory C-H IT# C7.30 C7.50, C7.70	Hydro to be per-formed in 2006 of September	Stephen Willard 4/18/05	Darlene Turley 4/18/05	F.W. Fuscello Jr. 4/18/05	F.W. Fuscello Jr. 4/18/05
2/13	01	RECIRC	GR-2-15(OL)	Y	Remove Component GR-2-15(OL) From U2C13 OUTAGE CATEGORY R-A IT# R1.16E & E/NUREG-0313 96E-03 B02-02	INVALID EXAM Reference PER# 80950	1.1.1.1.92 4/19/05	M.R. Bentley 4/19/05	Darlene Turley 4/19/05	F.W. Fuscello Jr. 4/19/05

OWNER: TENNESSEE VALLEY AUTHORITY
NUCLEAR POWER GROUP
1101 MARKET STREET
CHATTANOOGA, TENNESSEE 37402

PLANT: BROWNS FERRY NUCLEAR PLANT
PO BOX 2000
DECATUR, ALABAMA 35609-2000

EXAM REQUIREMENT: 96E-03
P95-96

UNIT: TWO CYCLE: 13

COMMERCIAL SERVICE DATE: MARCH 1, 1975

CERTIFICATION OF AUTHORIZATION: NOT REQUIRED
NATIONAL BOARD NUMBER FOR UNIT: NOT REQUIRED

System	Component Number	ISO Drawing	Exreq	Category	Item Number	Exam Scheduled	Calibration Standard	Exam Date	Exam Report	Exam Results	Comments
CSS	2-47B458S0004-IA	2-ISI-0280-C-01	96E-03	B-K	B10.20	MT		20050401	R-039	P	MAGNETIC FIELD INDICATOR USED.
CSS	2-SI-3.3.6	N/A	96E-03	C-H	C7.30	VT-2		20031017	R-002	P	
CSS	2-SI-3.3.6	N/A	96E-03	C-H	C7.30	VT-2		20030711	R-001	P	
CSS	2-SI-3.3.6	N/A	96E-03	C-H	C7.50	VT-2		20030711	R-001	P	LOOP I
CSS	2-SI-3.3.6	N/A	96E-03	C-H	C7.50	VT-2		20031017	R-002	P	
CSS	2-SI-3.3.6	N/A	96E-03	C-H	C7.70	VT-2		20031017	R-002	P	CORE SPRAY LOOP II
CSS	2-SI-3.3.6	N/A	96E-03	C-H	C7.70	VT-2		20030711	R-001	P	LOOP I
FWS	2RFW2A-17R	2-ISI-0269-C-01	96E-03	R-A	R1.18	UT	01-7471	20050404	R-056	P	0-TI-140 REV. 01
FWS	2RFW2A-39E	2-ISI-0269-C-01	96E-03	R-A	R1.18	UT	01-7471	20050404	R-059	P	0-TI-140 REV. 01
FWS	2RFW2A-41E	2-ISI-0269-C-01	96E-03	R-A	R1.18	UT	04-8732	20050404	R-061	P	0-TI-140, REV. 01
FWS	2RFW2B-14R	2-ISI-0269-C-01	96E-03	R-A	R1.18	UT	04-8732	20050404	R-060	P	0-TI-140 REV. 01
FWS	2RFW5A1-1N	2-FAC-003-005-01	96E-03	R-A	R1.18	VIS	N/A	20050324	R-064	P	0-TI-140, REV. 01. EXAMINER LESLIE JOHNSON
FWS	2RFW5A1-2E	2-FAC-003-005-01	96E-03	R-A	R1.18	VIS	N/A	20050324	R-064	P	0-TI-140, REV. 01. EXAMINER LESLIE JOHNSON
HPCIS	2-47B455H0048	ISI-0275-C-01	96E-03	F-A	F1.10C	VT-3		20050401	R-040	R	
HPCIS	HPCI-2-004-009	ISI-0128-C-02	P95-96	C-F-2	C5.51	PT		20050317	R-008	P	Valve 2-FCV-73-35. W.O. 03-006432-000
HPCIS	HPCI-2-004-009	ISI-0128-C-02	P95-96	C-F-2	C5.51	UT	WB-78	20050321	R-009	P	Valve 2-FCV-73-35. W.O. 03-006432-000
MSS	2-47B400S0006	2-ISI-0279-C-02	P95-96	F-A	F1.10B	VT-3		20050401	R-044	P	W.O. 04-717654-000
MSS	2-47B400S0007	2-ISI-0279-C-02	P95-96	F-A	F1.10B	VT-3		20050401	R-045	P	W.O 04-717654-000
MSS	2-47B400S0014	2-ISI-0279-C-02	96E-03	F-A	F1.10C	VT-3		20050330	R-032	P	
MSS	2-47B400S0014-IA	2-ISI-0279-C-02	96E-03	B-K	B10.20	MT		20050330	R-033	P	Used magnetic field indicator.
MSS	2-47B400S0102	2-ISI-0279-C-02	96E-03	F-A	F1.10D	VT-3		20050330	R-030	P	REFERENCE RFR# 2-ISI-13
MSS	2-47B400S0201	2-ISI-0279-C-01	96E-03	F-A	F1.10D	VT-3		20050330	R-031	P	REFERENCE RFR# 2-ISI-13

OWNER: TENNESSEE VALLEY AUTHORITY
NUCLEAR POWER GROUP
1101 MARKET STREET
CHATTANOOGA, TENNESSEE 37402

PLANT: BROWNS FERRY NUCLEAR PLANT
PO BOX 2000
DECATUR, ALABAMA 35609-2000

EXAM REQUIREMENT: 96E-03
P95-96

UNIT: TWO CYCLE: 13 COMMERCIAL SERVICE DATE: MARCH 1, 1975

CERTIFICATION OF AUTHORIZATION: NOT REQUIRED
NATIONAL BOARD NUMBER FOR UNIT: NOT REQUIRED

System	Component Number	ISO Drawing	Exreq	Category	Item Number	Exam Scheduled	Calibration Standard	Exam Date	Exam Report	Exam Results	Comments
MSS	2MSZ-MS1A-9FN	2-ISI-0222-C-01	96E-03	R-A	R1.18	UT	01-7473	20050404	R-058	P	0-TI-140, REV. 01
MSS	2MSZ-MS2B-20E	2-MSG-0021-C-01	96E-03	R-A	R1.18	UT	01-7478	20050404	R-063	P	0-TI-140, REV. 01
MSS	2MSZ-MS2C-8E	2-ISI-0222-C-02	96E-03	R-A	R1.18	UT	01-7472	20050404	R-062	P	0-TI-140, REV. 01
MSS	2MSZ-MS2C-9FN	2-ISI-0222-C-02	96E-03	R-A	R1.18	UT	04-8727	20050404	R-057	P	0-TI-140 REV. 01
MSS	2-SI-3.3.1.C	N/A	96E-03	C-H	C7.30	VT-2		20040427	R-005	P	
MSS	2-SI-3.3.1.C	N/A	96E-03	C-H	C7.30	VT-2		20040519	R-006	P	
MSS	2-SI-3.3.1.C	N/A	96E-03	C-H	C7.70	VT-2		20040427	R-005	P	
MSS	2-SI-3.3.1.C	N/A	96E-03	C-H	C7.70	VT-2		20040519	R-006	P	
MSS	MS-2-009-016	2-ISI-0222-C-03	P95-96	B-J	B9.40	PT		20050402	R-049	P	W. O. 04-720057-000. Valve 2-FCV-1-056
MSS	MSBC-2-03	2-ISI-0312-B-01	96E-03	B-G-2	B7.50	VT-1		20050325	R-018	P	
MSS	MSBC-2-12	2-ISI-0312-B-01	96E-03	B-G-2	B7.50	VT-1		20050326	R-019	P	
MSS	PCV1-2-030-PBC	2-ISI-0312-B-01	96E-03	B-G-2	B7.50	VT-1		20050325	R-012	P	
MSS	PCV1-2-034-PBC	2-ISI-0312-B-01	96E-03	B-G-2	B7.50	VT-1		20050325	R-011	P	
MSS	PCV1-2-041-PBC	2-ISI-0312-B-01	96E-03	B-G-2	B7.50	VT-1		20050325	R-013	P	
MSS	PCV1-2-042-PBC	2-ISI-0312-B-01	96E-03	B-G-2	B7.50	VT-1		20050325	R-014	P	
MSS	PCV1-2-179-VBC	2-ISI-0312-B-01	P95-96	B-G-2	B7.70	VT-1		20030505	R-021	P	
RECIR	2-47B408S0068-IE	2-ISI-0278-C-01	P95-96	F-A	F1.40D	VT-3		20050404	R-055	P	REFERENCE RFR# 2-ISI-13. W.O. 04-718364-000
RECIR	2-47B408S0068-IE	2-ISI-0278-C-01	96E-03	F-A	F1.40D	VT-3		20050327	R-023	P	REFERENCE RFR# 2-ISI-13
RECIR	2-47B408S0069-IE	2-ISI-0278-C-01	96E-03	F-A	F1.40D	VT-3		20050327	R-024	P	REFERENCE RFR# 2-ISI-13
RECIR	2-47B408S0074	2-ISI-0278-C-02	96E-03	F-A	F1.10A	VT-3		20050331	R-036	P	REFERENCE RFR# 2-ISI-13
RECIR	KR-2-02	2-ISI-0270-C-01	96E-03	R-A	R1.16C	UT	ALTSS				
RECIR	KR-2-03	2-ISI-0270-C-01	96E-03	R-A	R1.16C	UT	WB-85	20050401	R-043	P	

OWNER: TENNESSEE VALLEY AUTHORITY
NUCLEAR POWER GROUP
1101 MARKET STREET
CHATTANOOGA, TENNESSEE 37402

PLANT: BROWNS FERRY NUCLEAR PLANT
PO BOX 2000
DECATUR, ALABAMA 35609-2000

EXAM REQUIREMENT: 96E-03
P95-96

UNIT: TWO CYCLE: 13

COMMERCIAL SERVICE DATE: MARCH 1, 1975

CERTIFICATION OF AUTHORIZATION: NOT REQUIRED
NATIONAL BOARD NUMBER FOR UNIT: NOT REQUIRED

System	Component Number	ISO Drawing	Exreq	Category	Item Number	Exam Scheduled	Calibration Standard	Exam Date	Exam Report	Exam Results	Comments
RECIR	KR-2-14	2-ISI-0270-C-01	96E-03	R-A	R1.16E	UT	WB-85	20050402	R-050	P	
RECIR	KR-2-14	2-ISI-0270-C-01	96E-03	R-A	R1.16E	UT	ISI-165	20050403	R-050	P	SIZING UT
RECIR	KR-2-36	2-ISI-0270-C-02	96E-03	R-A	R1.16E	UT	ISI-165	20050402	R-047	P	SIZING UT
RECIR	KR-2-36	2-ISI-0270-C-02	96E-03	R-A	R1.16E	UT	WB-85	20050401	R-047	P	
RECIR	KR-2-37	2-ISI-0270-C-02	96E-03	R-A	R1.16E	UT	ISI-165	20050401	R-046	P	SIZING UT
RECIR	KR-2-37	2-ISI-0270-C-02	96E-03	R-A	R1.16E	UT	WB-85	20050331	R-046	P	
RECIR	KR-2-41	2-ISI-0270-C-02	96E-03	R-A	R1.16E	UT	WB-85	20050330	R-042	P	
RECIR	KR-2-41	2-ISI-0270-C-02	96E-03	R-A	R1.16E	UT	ISI-165	20050330	R-042	P	SIZING UT
RECIR	KR-2-50	2-ISI-0270-C-02	96E-03	R-A	R1.16C	UT	WB-85	20050331	R-038	P	
RECIR	KR-2-51	2-ISI-0270-C-02	96E-03	R-A	R1.16C	UT	WB-85	20050403	R-051	P	
RHRS	2-47B452S0239	2-ISI-0276-C-01	96E-03	F-A	F1.10C	VT-3		20050326	R-017	P	
RHRS	2-47B452S0239-IA	2-ISI-0276-C-01	96E-03	B-K	B10.20	PT		20050328	R-026	P	
RHRS	DRHR-2-03	2-ISI-0221-C-01	96E-03	R-A	R1.16D	UT	WB-85	20050326	R-022	P	
RHRS	DRHR-2-03B	2-ISI-0221-C-01	96E-03	R-A	R1.16G	VT-2		20050410	R-052	P	
RHRS	DRHR-2-13B	2-ISI-0221-C-01	96E-03	R-A	R1.16G	VT-2		20050410	R-052	P	
RHRS	DSRHR-2-09	2-ISI-0221-C-01	96E-03	R-A	R1.16C	UT	WB-85	20050329	R-027	P	
RPV	2-SI-3.3.1.A	N/A	96E-03	B-P	B15.10	VT-2		20050410	R-052	P	
RPV	2-SI-3.3.1.A	N/A	96E-03	B-P	B15.50	VT-2		20050410	R-052	P	
RPV	2-SI-3.3.1.A	N/A	96E-03	B-P	B15.60	VT-2		20050410	R-052	P	
RPV	2-SI-3.3.1.A	N/A	96E-03	B-P	B15.70	VT-2		20050410	R-052	P	
RPV	2-SI-3.3.1.A	N/A	96E-03	C-H	C7.30	VT-2		20050410	R-052	P	
RPV	2-SI-3.3.1.A	N/A	96E-03	C-H	C7.70	VT-2		20050410	R-052	P	

OWNER: TENNESSEE VALLEY AUTHORITY
NUCLEAR POWER GROUP
1101 MARKET STREET
CHATTANOOGA, TENNESSEE 37402

PLANT: BROWNS FERRY NUCLEAR PLANT
PO BOX 2000
DECATUR, ALABAMA 35609-2000

EXAM REQUIREMENT: 96E-03
P95-96

UNIT: TWO CYCLE: 13 COMMERCIAL SERVICE DATE: MARCH 1, 1975

CERTIFICATION OF AUTHORIZATION: NOT REQUIRED
NATIONAL BOARD NUMBER FOR UNIT: NOT REQUIRED

System	Component Number	ISO Drawing	Exreq	Category	Item Number	Exam Scheduled	Calibration Standard	Exam Date	Exam Report	Exam Results	Comments
RPV	RPV CORE SUPPORT	2-CHM-2046-C-02	96E-03	B-N-2	B13.40	VT-3		20050327	R-054	P	Partial, Core plate component. Procedure 54-ISI-363-02 (SDCN# 30-5038911-02).
RPV	RPV INT ATT NBLR	2-CHM-2046-C-02	96E-03	B-N-2	B13.30	VT-3		20050405	R-054	P	Procedure 54-ISI-363-02 (SDCN# 30-5038911-02).
RPV	RPV INT ATT NBLR	2-CHM-2046-C-02	96E-03	B-N-2	B13.40	VT-3		20050405	R-054	P	Procedure 54-ISI-363-02 (SDCN# 30-5038911-02).
RPV	RPV-INTERIOR	2-CHM-2046-C-02	96E-03	B-N-1	B13.10	VT-3		20050405	R-054	P	Partial Code Credit. Procedure 54-ISI-363-02 (SDCN# 30-5038911-02).
RWCU	FCV-69-002	2-ISI-0272-C-01	96E-03	B-M-2	B12.50	VT-3		20050331	R-037	P	
RWCU	RCRD-2-50	2-ISI-0272-C-01	96E-03	R-A	R1.16D	UT	WB-85	20050329	R-028	P	
RWCU	RWC-2-001-G002	2-ISI-0272-C-01	96E-03	R-A	R1.16A	UT	WB-85	20050329	R-029	P	

OWNER: TENNESSEE VALLEY AUTHORITY OFFICE OF NUCLEAR POWER 1101 MARKET STREET CHATTANOOGA, TENNESSEE 37402	PLANT: BROWNS FERRY NUCLEAR PLANT P.O. BOX 2000 DECATUR, ALABAMA 35609-2000
UNIT: TWO	CERTIFICATE OF AUTHORIZATION: NOT REQUIRED.
COMMERCIAL SERVICE DATE: MARCH 1, 1975	
NATIONAL BOARD NUMBER FOR UNIT: NOT REQUIRED.	

ASME SECTION XI PRESSURE TESTS CLASS 1, 2, AND 3

OWNER: TENNESSEE VALLEY AUTHORITY
NUCLEAR POWER GROUP
1101 MARKET STREET
CHATTANOOGA, TENNESSEE 37402

PLANT: BROWNS FERRY NUCLEAR PLANT
PO BOX 2000
DECATUR, ALABAMA 35609-2000

PRESSURE TEST:
B-P
C-H

UNIT: TWO CYCLE: 13 COMMERCIAL SERVICE DATE: MARCH 1, 1975

CERTIFICATION OF AUTHORIZATION: NOT REQUIRED
NATIONAL BOARD NUMBER FOR UNIT: NOT REQUIRED

System	Component Number	ISO Drawing	Exreq	Category	Item Number	Exam Scheduled	Calibration Standard	Exam Date	Exam Report	Exam Results	Comments
CSS	2-SI-3.3.6	N/A	96E-03	C-H	C7.30	VT-2		20031017	R-002	P	
CSS	2-SI-3.3.6	N/A	96E-03	C-H	C7.30	VT-2		20030711	R-001	P	
CSS	2-SI-3.3.6	N/A	96E-03	C-H	C7.50	VT-2		20030711	R-001	P	LOOP I
CSS	2-SI-3.3.6	N/A	96E-03	C-H	C7.50	VT-2		20031017	R-002	P	
CSS	2-SI-3.3.6	N/A	96E-03	C-H	C7.70	VT-2		20030711	R-001	P	LOOP I
CSS	2-SI-3.3.6	N/A	96E-03	C-H	C7.70	VT-2		20031017	R-002	P	CORE SPRAY LOOP II
MSS	2-SI-3.3.1.C	N/A	96E-03	C-H	C7.30	VT-2		20040519	R-006	P	
MSS	2-SI-3.3.1.C	N/A	96E-03	C-H	C7.30	VT-2		20040427	R-005	P	
MSS	2-SI-3.3.1.C	N/A	96E-03	C-H	C7.70	VT-2		20040519	R-006	P	
MSS	2-SI-3.3.1.C	N/A	96E-03	C-H	C7.70	VT-2		20040427	R-005	P	
RPV	2-SI-3.3.1.A	N/A	96E-03	B-P	B15.10	VT-2		20050410	R-052	P	
RPV	2-SI-3.3.1.A	N/A	96E-03	B-P	B15.50	VT-2		20050410	R-052	P	
RPV	2-SI-3.3.1.A	N/A	96E-03	B-P	B15.60	VT-2		20050410	R-052	P	
RPV	2-SI-3.3.1.A	N/A	96E-03	B-P	B15.70	VT-2		20050410	R-052	P	
RPV	2-SI-3.3.1.A	N/A	96E-03	C-H	C7.30	VT-2		20050410	R-052	P	
RPV	2-SI-3.3.1.A	N/A	96E-03	C-H	C7.70	VT-2		20050410	R-052	P	

OWNER: TENNESSEE VALLEY AUTHORITY OFFICE OF NUCLEAR POWER 1101 MARKET STREET CHATTANOOGA, TENNESSEE 37402	PLANT: BROWNS FERRY NUCLEAR PLANT P.O. BOX 2000 DECATUR, ALABAMA 35609-2000
UNIT: TWO	CERTIFICATE OF AUTHORIZATION: NOT REQUIRED.
COMMERCIAL SERVICE DATE: MARCH 1, 1975	
NATIONAL BOARD NUMBER FOR UNIT: NOT REQUIRED.	

ISOMETRICS FOR COMPONENT LOCATIONS

REFERENCE DRAWINGS
47W335-9 11
2-ISI-0130-C (SH. 2) SUPPORT MAP

MATERIAL SPECIFICATIONS
CARBON STEEL
16" x .375" NOM. WALL THK. SCH 30
14" x .938" NOM. WALL THK. SCH 100
14" x .375" NOM. WALL THK. SCH 30
10" x .719" NOM. WALL THK. SCH 100
12" x .375" NOM. WALL THK. SCH 40S

ASME CC-2 (EQUIVALENT)

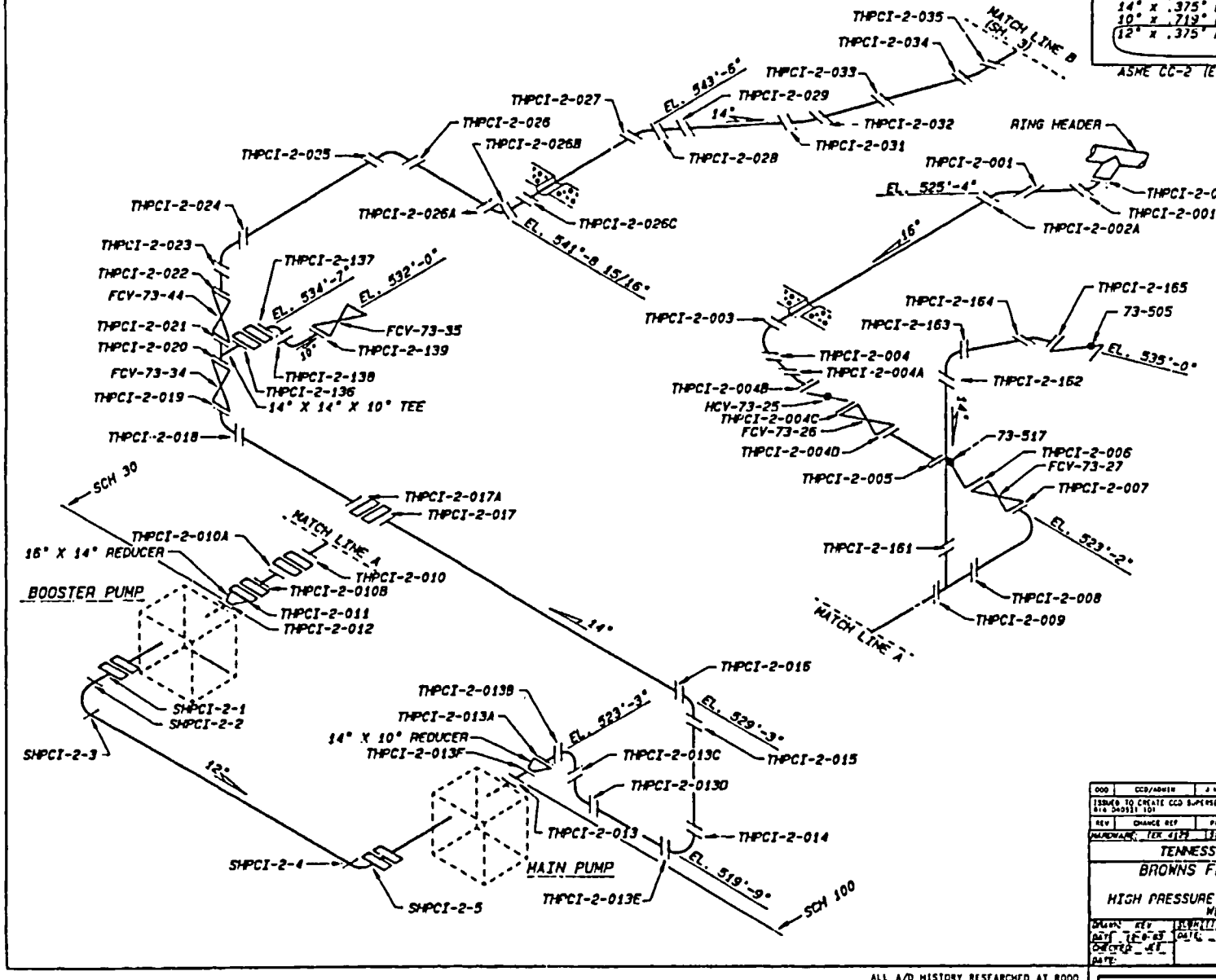

000	CCD/ADMIN	J MCFARLAND	WC HODGES	DP Walker	9-28-90
ISSUED TO CREATE CCD SUPERSEDES AD ISI-0128-C-2 R3; REVISED PER RIMS MEMO 616 DAOSII 101					
REV	CHANGE REF	PREPARER	CHECKER	APPROVED	DATE
HARDWARE: TEK 4129		SOFTWARE: TOPCAD		B. FLOWRY 10-11	

TENNESSEE VALLEY AUTHORITY

BROWNS FERRY NUCLEAR PLANT
UNIT # 2
HIGH PRESSURE COOLANT INJECTION SYSTEM
WELD LOCATIONS

DRAWN BY	REVIEWED	APPROVED	SCALE NTS
DATE 10-8-85	DATE	DATE	SHEET 2 OF 3 SHEETS (3)
CHECKED		GLB	DRAWING NO. 2-ISI-0128-C
DATE			REV 000

ALL A/D HISTORY RESEARCHED AT ROOO

CAD MAINTAINED DRAWING

CCD

NOTE:

1. PIPE SEGMENTS CONTAINING TWO LONGITUDINAL SEAMS WILL BE IDENTIFIED AS:

   (BASE WELD NO.)-LS-1D (DOWNSTREAM)
   (BASE WELD NO.)-LS-2D (DOWNSTREAM)
   (BASE WELD NO.)-LS-1U (UPSTREAM)
   (BASE WELD NO.)-LS-2U (UPSTREAM)

   THE -LS-1 SEAM WILL BE NUMERICALLY CLOSEST TO 0° ON THE PIPE, AND THE -LS-2 SEAM WILL BE NUMERICALLY FARTHERMOST FROM 0° ON THE PIPE. (e.g. -LS-1 AT 130°, AND -LS-2 AT 310°)

2. PIPE SEGMENTS CONTAINING ONLY ONE LONGITUDINAL SEAM WILL BE IDENTIFIED AS:

   (BASE WELD NO.)-LS-D (DOWNSTREAM)
   (BASE WELD NO.)-LS-U (UPSTREAM)

REFERENCE DRAWINGS:
47N1568
47W335-4 & 6
47W452 SERIES
DRAVO E-2458-1C-31, 32, & 33
2-ISI-0276-C SH1
NOTE: THIS DRAWING SUPERCEDES CHM-2070-C ALL SHEETS.

MATERIAL SPECIFICATION:
STAINLESS PIPE A-358, GR 304, CL.1
STAINLESS FITTINGS A-403WP304

24" X 1.219" NOM. WALL THK. SHC. 80 SS
20" X 1.031" NOM. WALL THK. SCH. 80 SS
20" X 1.031" NOM. WALL THK. SCH. 80 CS
6" X 0.432" NOM. WALL THK. SCH. 80S SS

ASME CC-1 (EQUIVALENT)

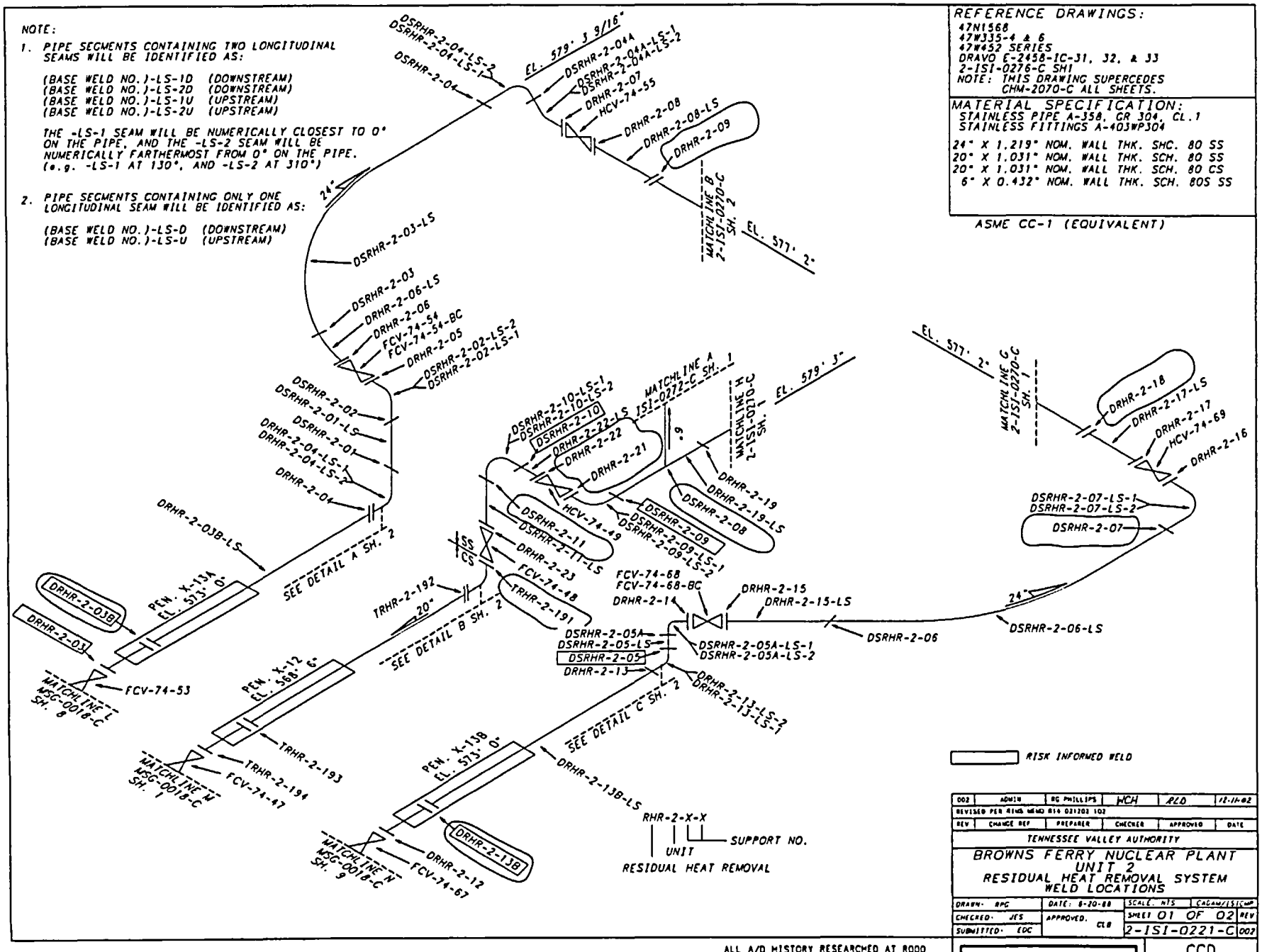

REV	CHANGE REF	PREPARER	CHECKER	APPROVED	DATE
002	ADMIN	RG PHILLIPS	WCH	RLD	12-11-02
REVISED PER RIMS MEMO R16 021202 102					

TENNESSEE VALLEY AUTHORITY

BROWNS FERRY NUCLEAR PLANT
UNIT 2
RESIDUAL HEAT REMOVAL SYSTEM
WELD LOCATIONS

DRAWN: RPC | DATE: 8-20-88 | SCALE: NTS | CADAM/ISICAP
CHECKED: JES | APPROVED: CLB | SHEET 01 OF 02 | REV
SUBMITTED: EDC | 2-ISI-0221-C | 002

CAD MAINTAINED DRAWING

CCD

ALL A/D HISTORY RESEARCHED AT ROOD

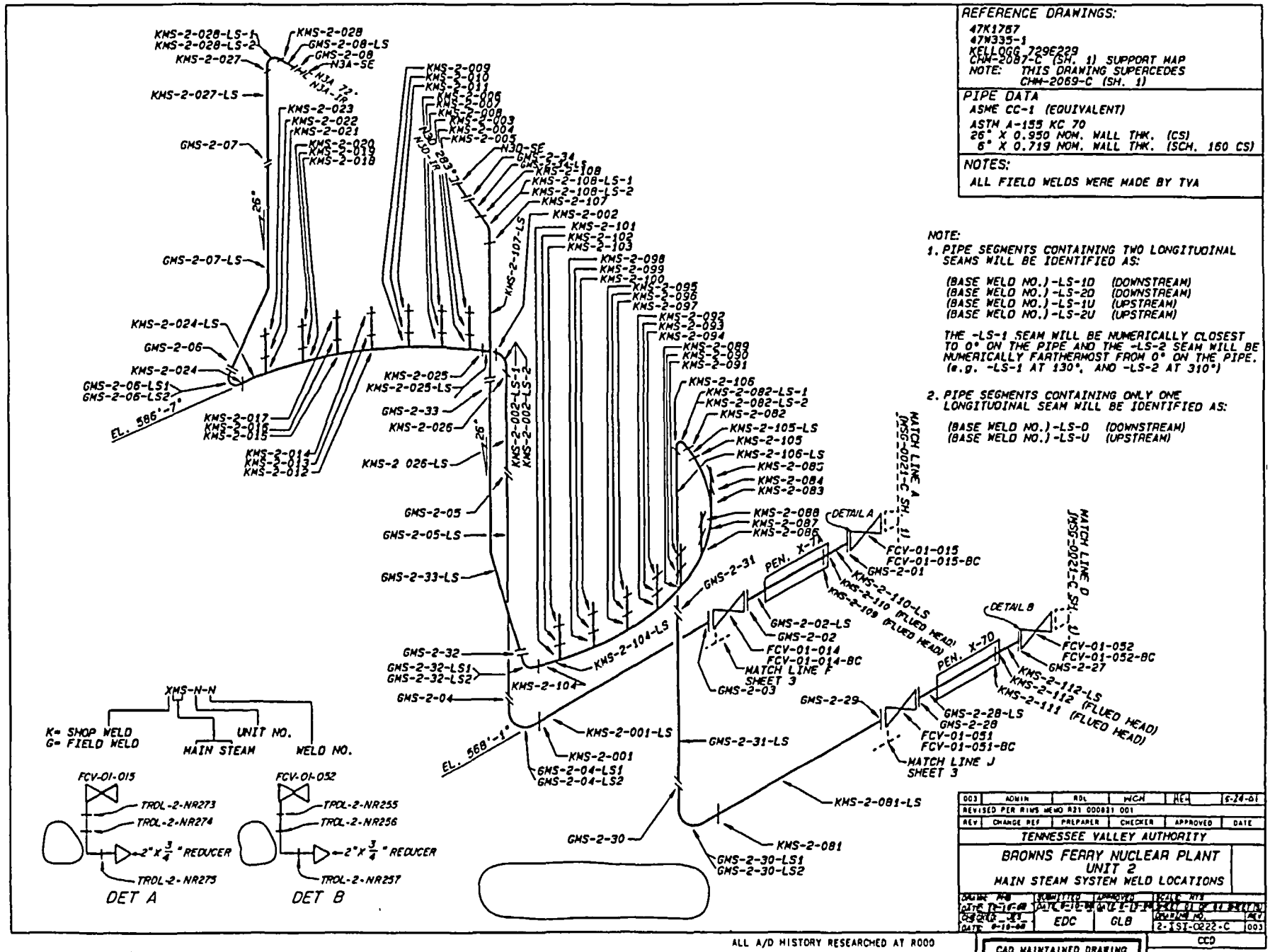
REFERENCE DRAWINGS:
47K1767
47W335-1
KELLOGG 729E229
CHM-2087-C (SH. 1) SUPPORT MAP
NOTE: THIS DRAWING SUPERCEDES CHM-2069-C (SH. 1)
PIPE DATA
ASME CC-1 (EQUIVALENT)
ASTM A-155 KC 70
26" X 0.950 NOM. WALL THK. (CS)
6" X 0.719 NOM. WALL THK. (SCH. 160 CS)
NOTES:
ALL FIELD WELDS WERE MADE BY TVA
NOTE:
1. PIPE SEGMENTS CONTAINING TWO LONGITUDINAL SEAMS WILL BE IDENTIFIED AS:
(BASE WELD NO.)-LS-1D (DOWNSTREAM)
(BASE WELD NO.)-LS-2D (DOWNSTREAM)
(BASE WELD NO.)-LS-1U (UPSTREAM)
(BASE WELD NO.)-LS-2U (UPSTREAM)
THE -LS-1 SEAM WILL BE NUMERICALLY CLOSEST TO 0° ON THE PIPE AND THE -LS-2 SEAM WILL BE NUMERICALLY FARTHERMOST FROM 0° ON THE PIPE. (e.g. -LS-1 AT 130°, AND -LS-2 AT 310°)
2. PIPE SEGMENTS CONTAINING ONLY ONE LONGITUDINAL SEAM WILL BE IDENTIFIED AS:
(BASE WELD NO.)-LS-D (DOWNSTREAM)
(BASE WELD NO.)-LS-U (UPSTREAM)
KMS-2-028-LS-1
KMS-2-028-LS-2
KMS-2-028
GMS-2-08-LS
GMS-2-08
N3A-SE
KMS-2-027
KMS-2-027-LS
KMS-2-023
KMS-2-022
KMS-2-021
KMS-2-020
KMS-2-019
KMS-2-018
GMS-2-07
GMS-2-07-LS
KMS-2-024-LS
GMS-2-06
KMS-2-024
GMS-2-06-LS1
GMS-2-06-LS2
EL. 586'-1"
KMS-2-017
KMS-2-016
KMS-2-015
KMS-2-014
KMS-2-013
KMS-2-012
KMS-2-009
KMS-2-010
KMS-2-011
KMS-2-006
KMS-2-007
KMS-2-008
KMS-2-003
KMS-2-004
KMS-2-005
N30-SE
GMS-2-34
KMS-2-108
KMS-2-108-LS-1
KMS-2-108-LS-2
KMS-2-107
KMS-2-107-LS
KMS-2-002
KMS-2-101
KMS-2-102
KMS-2-103
KMS-2-098
KMS-2-099
KMS-2-100
KMS-2-095
KMS-2-096
KMS-2-097
KMS-2-092
KMS-2-093
KMS-2-094
KMS-2-089
KMS-2-090
KMS-2-091
KMS-2-025
KMS-2-025-LS
GMS-2-33
KMS-2-026
KMS-2 026-LS
KMS-2-002-LS-1
KMS-2-002-LS-2
KMS-2-106
KMS-2-082-LS-1
KMS-2-082-LS-2
KMS-2-082
KMS-2-105-LS
KMS-2-105
KMS-2-106-LS
KMS-2-085
KMS-2-084
KMS-2-083
KMS-2-088
KMS-2-087
KMS-2-086
GMS-2-05
GMS-2-05-LS
GMS-2-33-LS
GMS-2-31
PEN. X-7A
DETAIL A
FCV-01-015
FCV-01-015-BC
GMS-2-01
KMS-2-110-LS
KMS-2-110 (FLUED HEAD)
KMS-2-109 (FLUED HEAD)
GMS-2-02-LS
GMS-2-02
FCV-01-014
FCV-01-014-BC
MATCH LINE F SHEET 3
GMS-2-03
MATCH LINE A JMS-0021-C SH. 11
MATCH LINE D JMS-0021-C SH. 11
DETAIL B
PEN. X-7D
FCV-01-052
FCV-01-052-BC
GMS-2-27
KMS-2-112-LS
KMS-2-112 (FLUED HEAD)
KMS-2-111 (FLUED HEAD)
GMS-2-29
GMS-2-28-LS
GMS-2-28
FCV-01-051
FCV-01-051-BC
MATCH LINE J SHEET 3
GMS-2-32
GMS-2-32-LS1
GMS-2-32-LS2
KMS-2-104-LS
KMS-2-104
GMS-2-04
EL. 568'-1"
KMS-2-001-LS
KMS-2-001
GMS-2-04-LS1
GMS-2-04-LS2
GMS-2-31-LS
KMS-2-081-LS
GMS-2-30
KMS-2-081
GMS-2-30-LS1
GMS-2-30-LS2
XMS-N-N
K= SHOP WELD
G= FIELD WELD
MAIN STEAM
UNIT NO.
WELD NO.
FCV-01-015
TROL-2-NR273
TROL-2-NR274
2"X3/4" REDUCER
TROL-2-NR275
DET A
FCV-01-052
TROL-2-NR255
TROL-2-NR256
2"X3/4" REDUCER
TROL-2-NR257
DET B
003 ADMIN RDL WCH HCH 5-24-01
REVISED PER RIMS MEMO R21 000831 001
REV CHANGE REF PREPARER CHECKER APPROVED DATE
TENNESSEE VALLEY AUTHORITY
BROWNS FERRY NUCLEAR PLANT
UNIT 2
MAIN STEAM SYSTEM WELD LOCATIONS
EDC
GLB
2-ISI-0222-C
003
CCD
CAD MAINTAINED DRAWING
ALL A/D HISTORY RESEARCHED AT R000

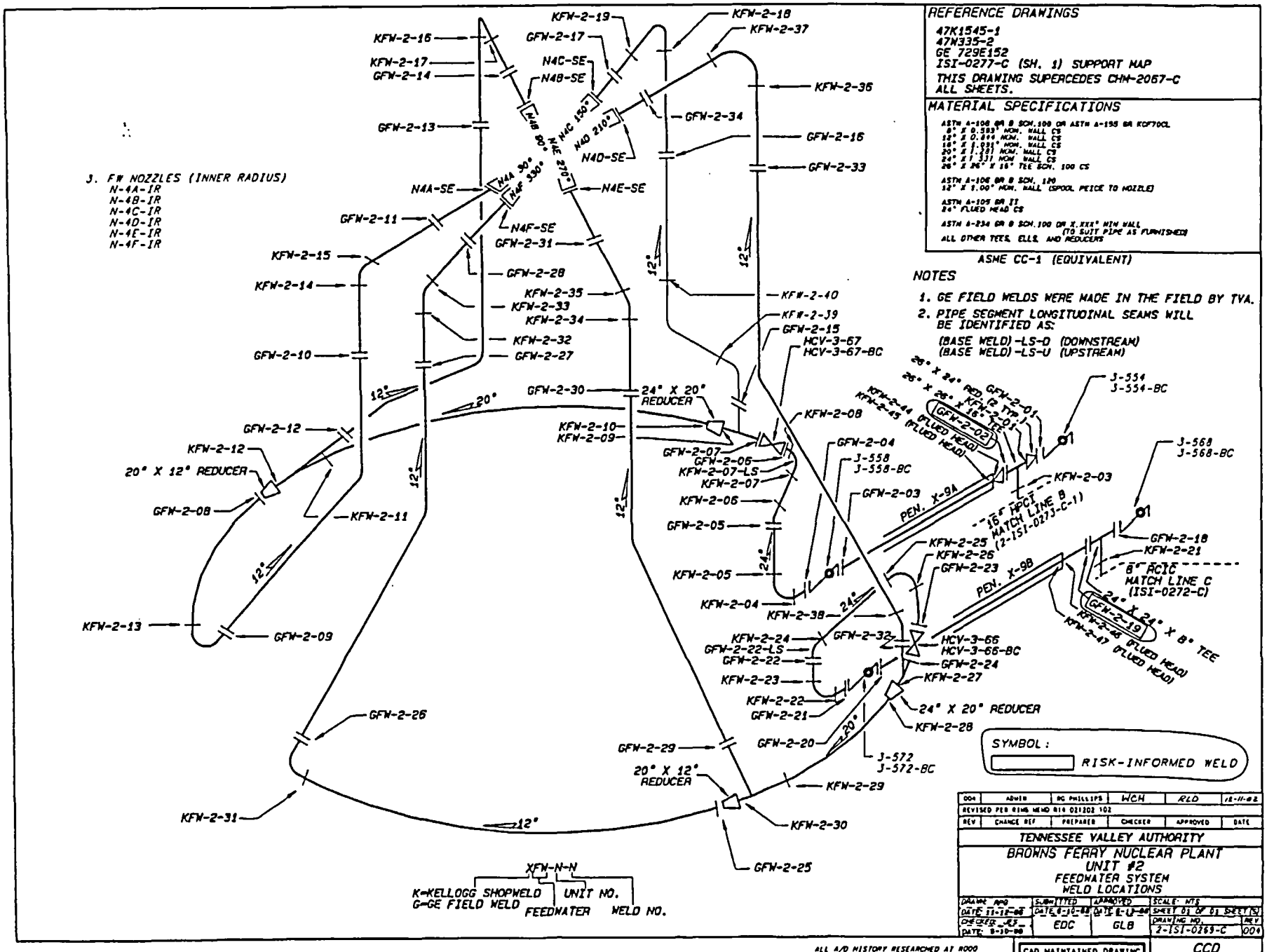
REFERENCE DRAWINGS
47K1545-1
47N335-2
GE 729E152
ISI-0277-C (SH. 1) SUPPORT MAP
THIS DRAWING SUPERCEDES CHM-2067-C ALL SHEETS.
MATERIAL SPECIFICATIONS
ASTM A-106 GR B SCH.100 OR ASTM A-155 GR KCF70CL
8" X 0.593" NOM. WALL CS
12" X 0.844 NOM. WALL CS
16" X 1.031" NOM. WALL CS
20" X 1.125 NOM. WALL CS
24" X 1.531 NOM. WALL CS
26" X 26" X 16" TEE SCH. 100 CS
ASTM A-106 GR B SCH. 120
12" X 1.00" NOM. WALL (SPOOL PIECE TO NOZZLE)
ASTM A-105 GR II
24" FLUED HEAD CS
ASTM A-234 GR B SCH.100 OR X.XXX" MIN WALL (TO SUIT PIPE AS FURNISHED)
ALL OTHER TEES, ELLS, AND REDUCERS
ASME CC-1 (EQUIVALENT)
NOTES
1. GE FIELD WELDS WERE MADE IN THE FIELD BY TVA.
2. PIPE SEGMENT LONGITUDINAL SEAMS WILL BE IDENTIFIED AS:
(BASE WELD)-LS-D (DOWNSTREAM)
(BASE WELD)-LS-U (UPSTREAM)
3. FW NOZZLES (INNER RADIUS)
N-4A-IR
N-4B-IR
N-4C-IR
N-4D-IR
N-4E-IR
N-4F-IR
SYMBOL:
RISK-INFORMED WELD
24" X 20" REDUCER
20" X 12" REDUCER
24" X 24" X 8" TEE
PEN. X-9A
PEN. X-9B
16" HPCI MATCH LINE B (2-ISI-0273-C-1)
8" RCIC MATCH LINE C (ISI-0272-C)
XFW-N-N
K=KELLOGG SHOPWELD
G=GE FIELD WELD
UNIT NO.
FEEDWATER
WELD NO.
TENNESSEE VALLEY AUTHORITY
BROWNS FERRY NUCLEAR PLANT
UNIT #2
FEEDWATER SYSTEM
WELD LOCATIONS
CAD MAINTAINED DRAWING
CCD
ALL A/D HISTORY RESEARCHED AT ROOO

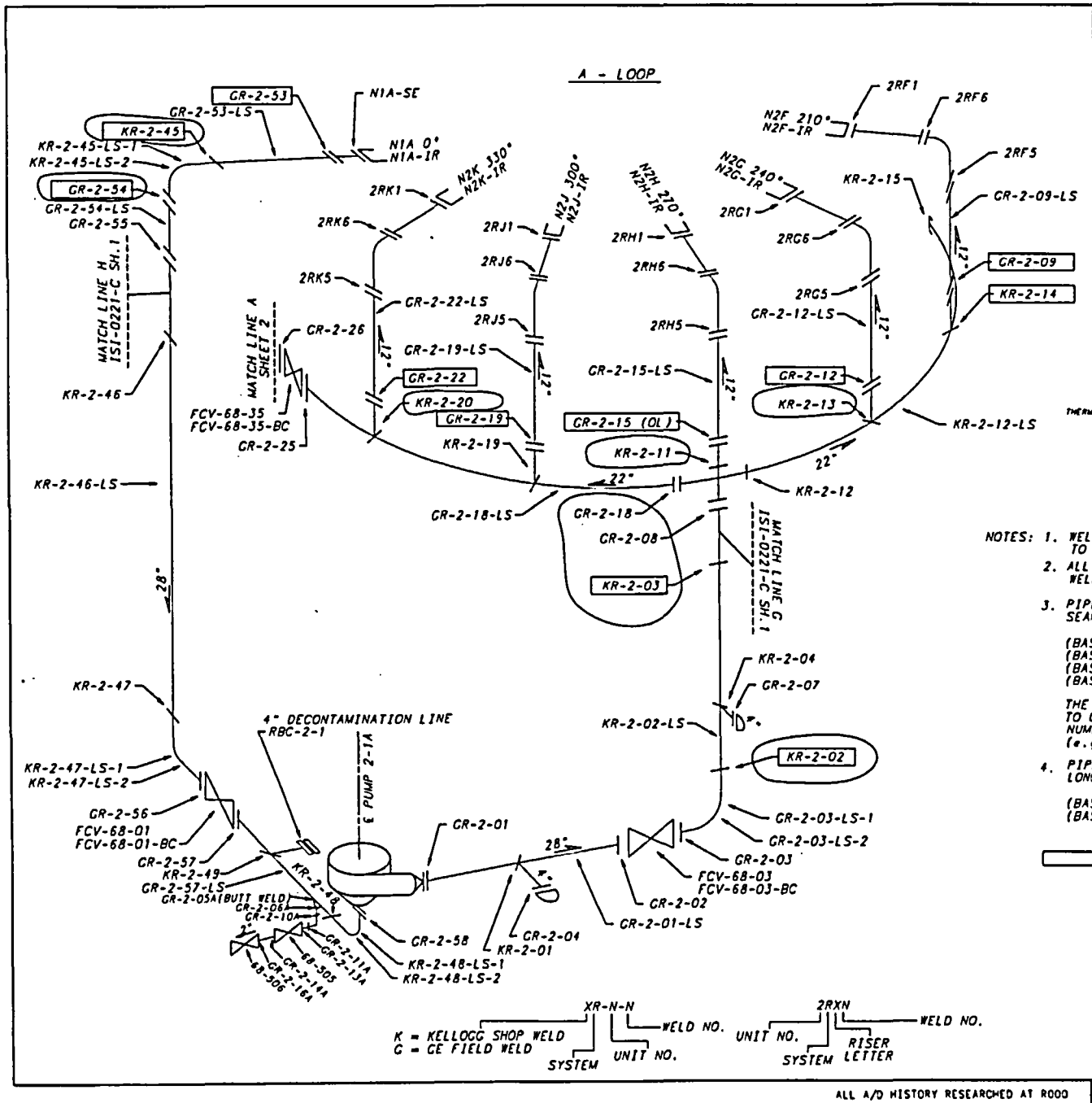

REFERENCE DRAWINGS:

2-47W2408-8,9 (S.E. REPLACEMENT)
GE 769E963 (S.E. REPLACEMENT)
TVA 47K1544-2
GE 2-153F254
KELLOGG BF 2-180
NOTE: THIS DRAWING SUPERSEDES CHM-2068-C ALL SHEETS

MATERIAL SPECIFICATIONS:

A358, TP 304
4" X 0.337" NOM WALL THK. (SS)
12" X 0.569" NOM. WALL THK. (SS)
22" X 1.030" NOM. WALL THK. (SS)
28" X 1.138" NOM. WALL THK. (SS) SUCTION
28" X 1.322" NOM. WALL THK. (SS) DISCHARGE

2" SCH. 80 A-376, TP304
2" FITTINGS A-182, F304

SAFE END REPLACEMENT
12" X 0.688 NOM. WALL THK. (SS)
SA 403 WP 316 N.C.

ASME CC-1 (EQUIVALENT)

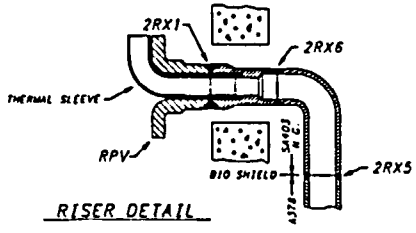

RISER DETAIL

NOTES:
1. WELDS 2RX1 ARE THE NOZZLE TO SAFE-END WELDS
2. ALL 2" WELDS ARE SOCKET WELDED EXCEPT WHERE NOTED.
3. PIPE SEGMENTS CONTAINING TWO LONGITUDINAL SEAMS WILL BE IDENTIFIED AS:

(BASE WELD NO.)-LS-1D (DOWNSTREAM)
(BASE WELD NO.)-LS-2D (DOWNSTREAM)
(BASE WELD NO.)-LS-1U (UPSTREAM)
(BASE WELD NO.)-LS-2U (UPSTREAM)

THE -LS-1 SEAM WILL BE NUMERICALLY CLOSEST TO 0° ON THE PIPE, AND THE -LS-2 SEAM WILL BE NUMERICALLY FARTHERMOST FROM 0° ON THE PIPE. (e.g. -LS-1 AT 130°, AND -LS-2 AT 310°)

4. PIPE SEGMENTS CONTAINING ONLY ONE LONGITUDINAL SEAM WILL BE IDENTIFIED AS

(BASE WELD NO.)-LS-D (DOWNSTREAM)
(BASE WELD NO.)-LS-U (UPSTREAM)

RISK IMFORMED WELDS

REV	CHANGE REF	PREPARER	CHECKER	APPROVED	DATE
003	ADMIN	RD LOOSIER	WCH	RLD	12-19-02
REVISED PER RIMS MEMO R14 021202 102					

TENNESSEE VALLEY AUTHORITY

BROWNS FERRY NUCLEAR PLANT
UNIT 2
RECIRCULATION SYSTEM
WELD LOCATIONS

DRAWN PMD	SUBMITTED	APPROVED	SCALE NTS
DATE: 9-10-87	DATE 8-14-88	DATE 8-16-88	SHEET 1 OF 2 SHEET(S)
CHECKED: JES	EDC	GLB	DRAWING NO. / REV
DATE: 8-14-88			2-1SI-0270-C / 003

CAD MAINTAINED DRAWING

CCD

ALL A/D HISTORY RESEARCHED AT R000

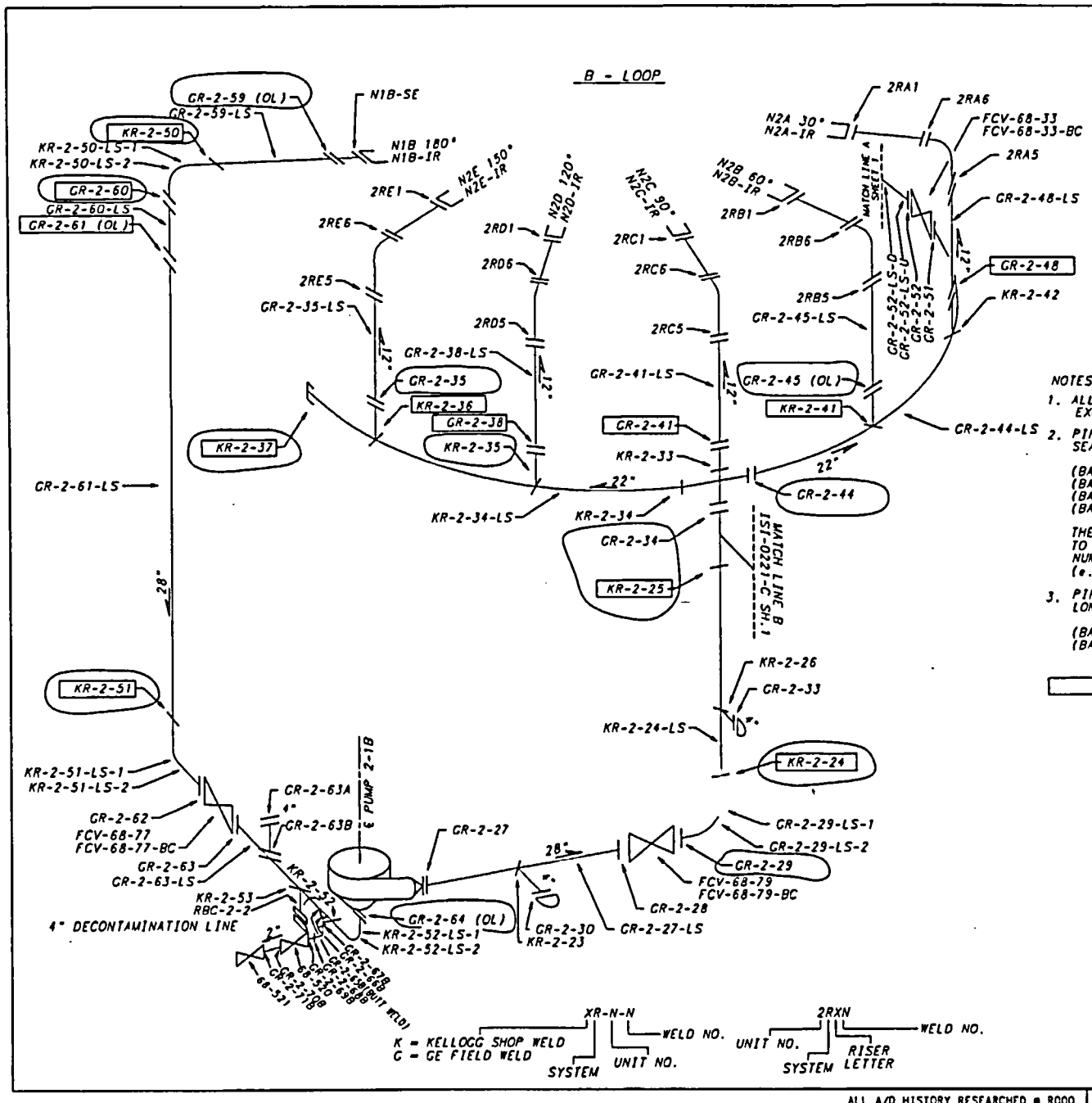

REFERENCE DRAWINGS:

2-47W2408-8,9 (S.E. REPLACEMENT)
GE 769E963 (S.E. REPLACEMENT)
TVA 47K1544-2
GE 2-153F754
KELLOGG BF 2-180
NOTE: THIS DRAWING SUPERSEDES CHM-2068-C ALL SHEETS

MATERIAL SPECIFICATIONS:

A358, TP 304
4" X 0.337" NOM WALL THK. (SS)
12" X 0.569" NOM. WALL THK. (SS)
22" X 1.030" NOM. WALL THK. (SS)
28" X 1.138" NOM. WALL THK. (SS) SUCTION
28" X 1.322" NOM. WALL THK. (SS) DISCHARGE

2" SCH. 80, A376, TP304
2" FITTINGS A182,F304

SAFE END REPLACEMENT
12" X 0.688 NOM. WALL THK. (SS)
SA 403 WP 316 N.C.

ASME CC-1 (EQUIVALENT)

NOTES:

1. ALL 2" WELDS ARE SOCKET WELDED EXCEPT WHERE NOTED.
2. PIPE SEGMENTS CONTAINING TWO LONGITUDINAL SEAMS WILL BE IDENTIFIED AS:

   (BASE WELD NO.)-LS-1D (DOWNSTREAM)
   (BASE WELD NO.)-LS-2D (DOWNSTREAM)
   (BASE WELD NO.)-LS-1U (UPSTREAM)
   (BASE WELD NO.)-LS-2U (UPSTREAM)

   THE -LS-1 SEAM WILL BE NUMERICALLY CLOSEST TO 0° ON THE PIPE, AND THE -LS-2 SEAM WILL BE NUMERICALLY FARTHERMOST FROM 0° ON THE PIPE. (e.g. -LS-1 AT 130°, AND -LS-2 AT 310°)
3. PIPE SEGMENTS CONTAINING ONLY ONE LONGITUDINAL SEAM WILL BE IDENTIFIED AS

   (BASE WELD NO.)-LS-D (DOWNSTREAM)
   (BASE WELD NO.)-LS-U (UPSTREAM)

RISK INFORMED WELDS

REV	CHANGE REF	PREPARER	CHECKER	APPROVED	DATE
004	ADMIN	RD LOOSIER	WCH	RLD	12-11-02
REVISED PER RIWS MEMO R14 021202 102					

TENNESSEE VALLEY AUTHORITY

BROWNS FERRY NUCLEAR PLANT
UNIT 2
RECIRCULATION SYSTEM
WELD LOCATIONS

DRAWN PHB	SUBMITTED	APPROVED	SCALE NTS
DATE 3-28-89	DATE 3-8-89	DATE 3-17-89	SHEET 2 OF 2 SHEET(S)
CHECKED JES	EDC	GLB	DRAWING NO. 2-ISI-0270-C004 REV
DATE 3-3-89			

CCD

CAD MAINTAINED DRAWING

ALL A/D HISTORY RESEARCHED @ R000

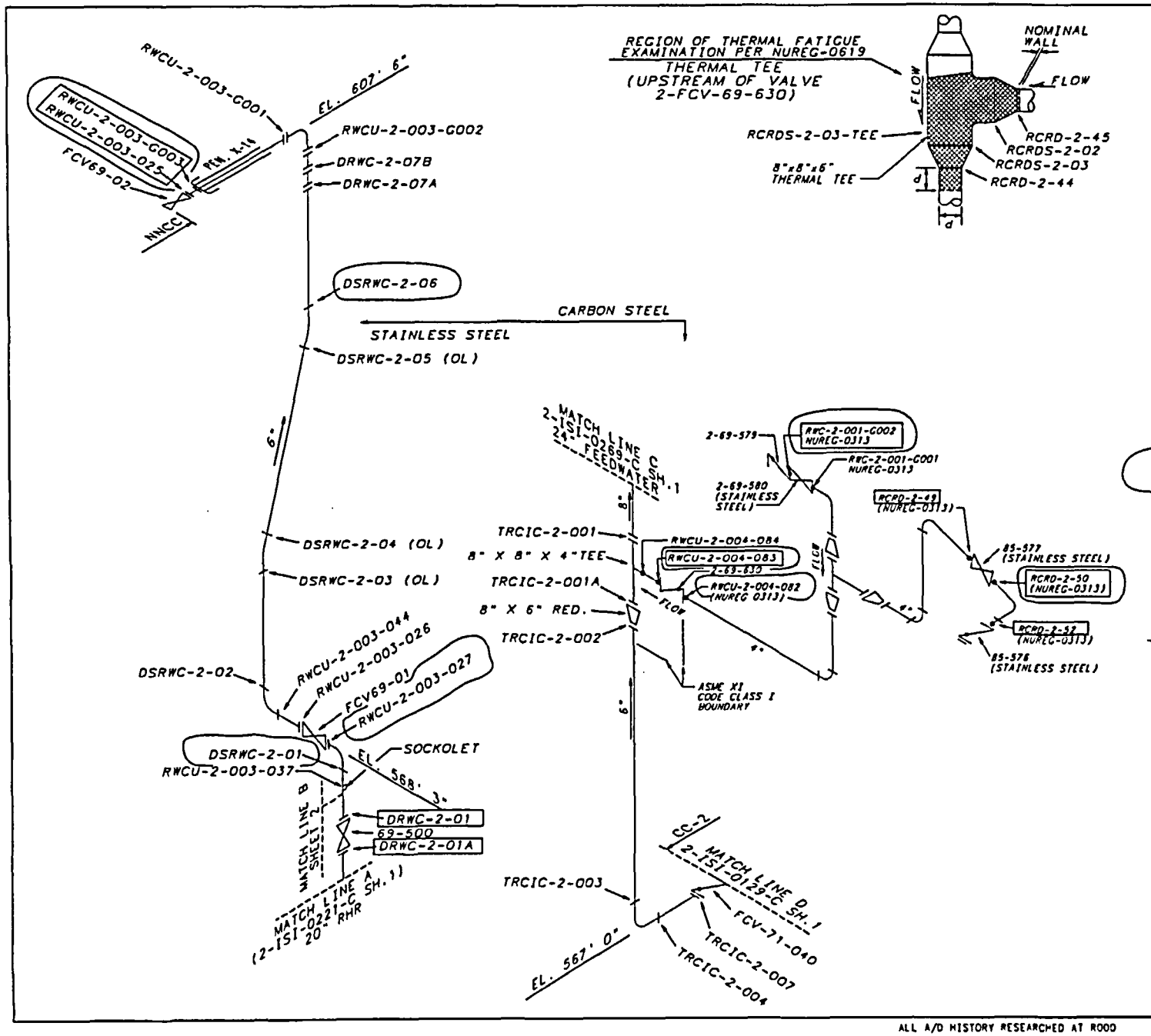

REFERENCE DRAWINGS
CRD-2-005
RCIC-2-004
RWC-2-001
47W335-14, -17

NOTE:
THIS DRAWING SUPERSEDES CHM-2075-C AND CHM-2072-C (ALL SHEETS)

MATERIAL SPECIFICATIONS

STAINLESS STEEL
FITTINGS
6" SA403 WP316NG SCH. 80 SS
PIPING
6" SA376 TP316NG SCH. 80 SS
6" A376GR TP304 SCH. 80 SS
6" A312GR TP304 SCH. 80 SS

CARBON STEEL
4" SCH. 80 A-333, GR1 (SEAMLESS) CS
6" X 0.562" NOM WALL SCH. 120 CS
8" X 0.593" NOM WALL SCH. 100 CS
VALVE
2-69-630 SA182 F316
CRD CAP
4" X 0.674" NOM WALL SS

ASME CC-1 (EQUIVALENT)

RISK INFORMED WELD

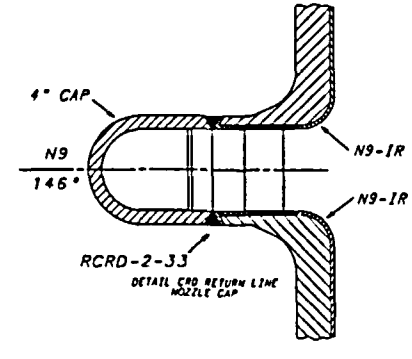

REV	CHANGE REF	PREPARER	CHECKER	APPROVED	DATE
007	ADMIN	PG PHILLIPS	WCH	RLD	12-11-02
REVISED PER RIMS MEMO R14 021202 102					

TENNESSEE VALLEY AUTHORITY

BROWNS FERRY NUCLEAR PLANT
UNIT 2
REACTOR WATER CLEAN UP, RCIC, AND CRD WELD IDENTIFICATION

DRAWN: PHB	DATE: 6-9-88	SCALE: NTS	CADAM/ISICMP
CHECKED: JES	APPROVED: CLB	SHEET 01 OF 03	REV
SUBMITTED: EDC		2-ISI-0272-C	007

CCD

CAD MAINTAINED DRAWING

ALL A/D HISTORY RESEARCHED AT ROOD

REFERENCE DRAWINGS
47W455-4
1SI-0273-C (SH. 1) WELD MAP
NOTE: THIS DRAWING SUPERCEDES CHM-2083-C ALL SHEETS.

LEGEND:

- RIGID HANGER
- VARIABLE SUPPORT
- HYDRAULIC SNUBBER
- MECHANICAL SNUBBER

ASME CC-1 (EQUIVALENT)

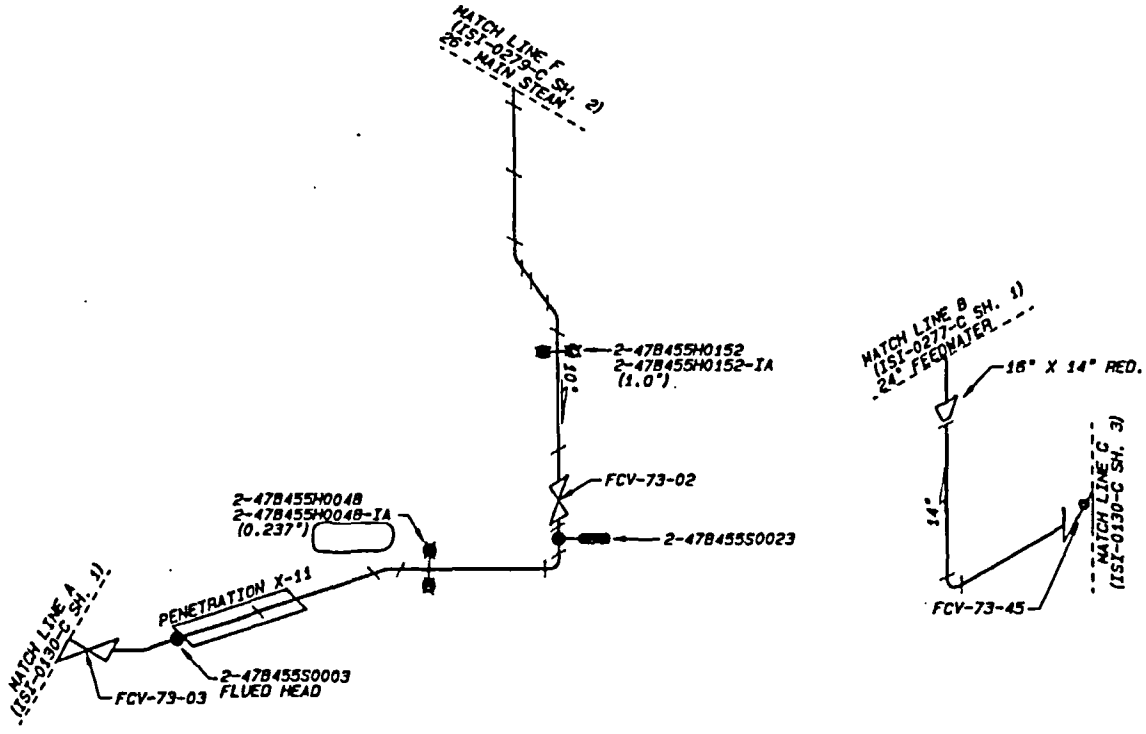

REV	CHANGE REF	PREPARER	CHECKER	APPROVED	DATE
000	CCD/ADMIN	RGP	RLD	RCH	6-30-2004

ISSUED TO CREATE CCD. SUPERSEDES A/D 1SI-0273-C-1 R005 AND TO DEPICT AS-CONSTRUCTED STATUS PER RIMS MEMO R21 000621 002 (ADMINISTRATIVE REVISION)

TENNESSEE VALLEY AUTHORITY

BROWNS FERRY NUCLEAR PLANT
UNIT 2
HIGH PRESSURE COOLANT INJECTION
SUPPORT LOCATIONS

DRAWN: RPG	SUBMITTED	APPROVED	SCALE: NTS
DATE: 2-17-87	DATE: 6-9-04	DATE: 6-15-04	SHEET 01 OF 01 SHEET(S)
CHECKED: JES	EDC	GLB	DRAWING NO. 2-1SI-0273-C
DATE: 6-13-88			REV 000

ALL A/D HISTORY RESEARCHED TO R000

CAD MAINTAINED DRAWING

CCD

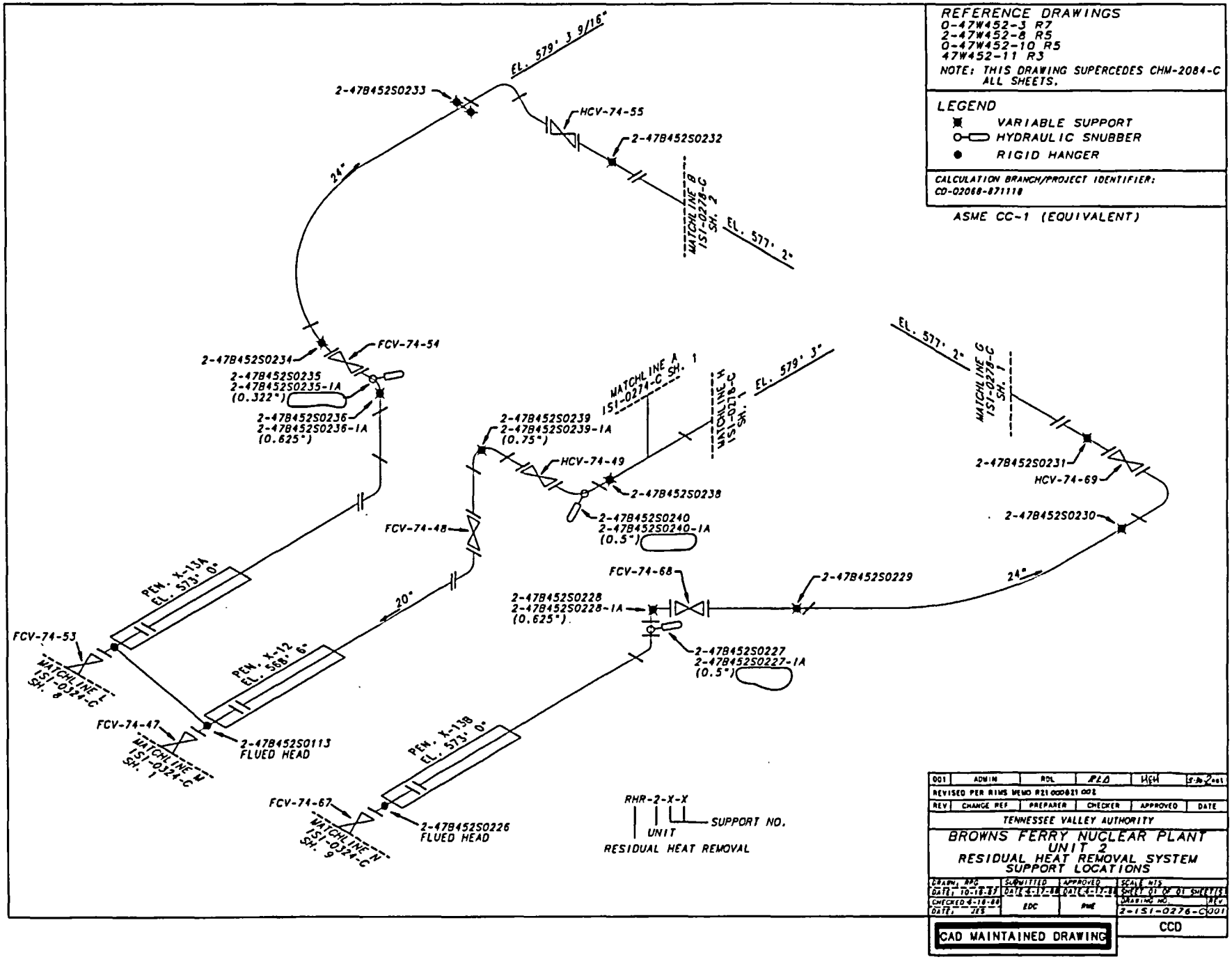
REFERENCE DRAWINGS
0-47W452-3 R7
2-47W452-8 R5
0-47W452-10 R5
47W452-11 R3
NOTE: THIS DRAWING SUPERCEDES CHM-2084-C ALL SHEETS.
LEGEND
VARIABLE SUPPORT
HYDRAULIC SNUBBER
RIGID HANGER
CALCULATION BRANCH/PROJECT IDENTIFIER: CD-02068-871118
ASME CC-1 (EQUIVALENT)
EL. 579' 3 9/16"
2-47B452S0233
HCV-74-55
2-47B452S0232
24"
MATCHLINE B 1S1-0278-C SH. 2
EL. 577' 2"
2-47B452S0234
FCV-74-54
2-47B452S0235
2-47B452S0235-1A
(0.322")
2-47B452S0236
2-47B452S0236-1A
(0.625")
MATCHLINE A 1S1-0274-C SH. 1
MATCHLINE H 1S1-0278-C SH. 1
EL. 579' 3"
2-47B452S0239
2-47B452S0239-1A
(0.75")
HCV-74-49
2-47B452S0238
2-47B452S0240
2-47B452S0240-1A
(0.5")
FCV-74-48
EL. 577' 2"
MATCHLINE G 1S1-0278-C SH. 1
2-47B452S0231
HCV-74-69
2-47B452S0230
24"
2-47B452S0229
FCV-74-68
2-47B452S0228
2-47B452S0228-1A
(0.625")
2-47B452S0227
2-47B452S0227-1A
(0.5")
20"
PEN. X-13A EL. 573' 0"
FCV-74-53
MATCHLINE L 1S1-0324-C SH. 8
PEN. X-12 EL. 568' 6"
FCV-74-47
MATCHLINE M 1S1-0324-C SH. 1
2-47B452S0113
FLUED HEAD
PEN. X-13B EL. 573' 0"
FCV-74-67
MATCHLINE N 1S1-0324-C SH. 9
2-47B452S0226
FLUED HEAD
RHR-2-X-X
UNIT
SUPPORT NO.
RESIDUAL HEAT REMOVAL
001 ADMIN RDL RLD HGH 5-30-2001
REVISED PER RIMS MEMO R21 000821 002
REV CHANGE REF PREPARER CHECKER APPROVED DATE
TENNESSEE VALLEY AUTHORITY
BROWNS FERRY NUCLEAR PLANT
UNIT 2
RESIDUAL HEAT REMOVAL SYSTEM
SUPPORT LOCATIONS
DRAWN: RPC DATE: 10-18-87
SUBMITTED DATE: 4-17-88
APPROVED DATE: 4-17-88
SCALE: NTS
SHEET 01 OF 01 SHEET(S)
CHECKED 4-18-88 DATE: JKS
EDC
RWE
DRAWING NO. 2-1S1-0276-C001
REV
CAD MAINTAINED DRAWING
CCD

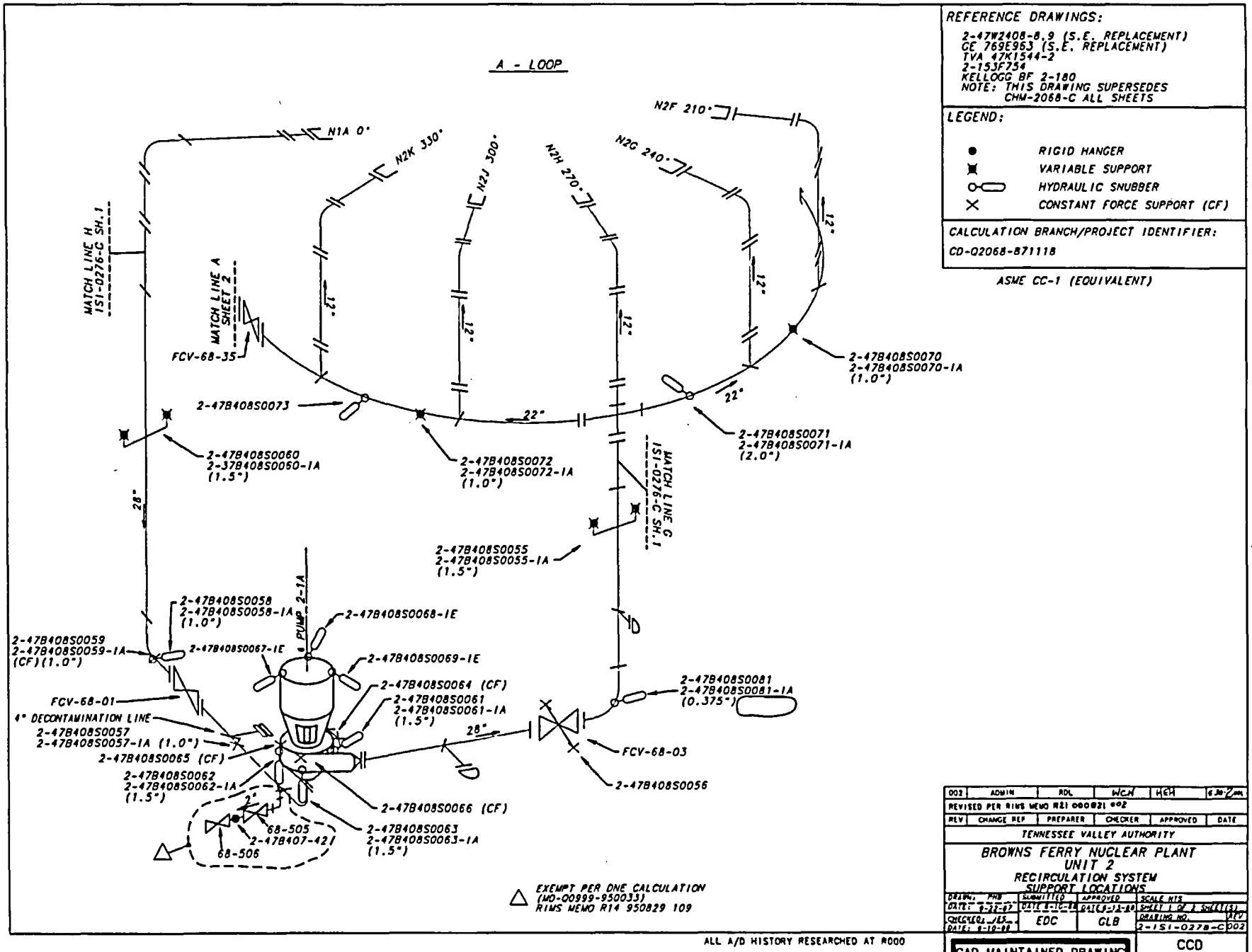
A - LOOP
REFERENCE DRAWINGS:
2-47W2408-8,9 (S.E. REPLACEMENT)
GE 769E963 (S.E. REPLACEMENT)
TVA 47K1544-2
2-153F754
KELLOGG BF 2-180
NOTE: THIS DRAWING SUPERSEDES CHM-2068-C ALL SHEETS
LEGEND:
RIGID HANGER
VARIABLE SUPPORT
HYDRAULIC SNUBBER
CONSTANT FORCE SUPPORT (CF)
CALCULATION BRANCH/PROJECT IDENTIFIER:
CD-Q2068-871118
ASME CC-1 (EQUIVALENT)
N1A 0°
N2K 330°
N2J 300°
N2H 270°
N2G 240°
N2F 210°
MATCH LINE H 1S1-0276-C SH.1
MATCH LINE A SHEET 2
MATCH LINE G 1S1-0276-C SH.1
FCV-68-35
2-47B408S0073
2-47B408S0060
2-37B408S0060-1A
(1.5")
2-47B408S0072
2-47B408S0072-1A
(1.0")
2-47B408S0070
2-47B408S0070-1A
(1.0")
2-47B408S0071
2-47B408S0071-1A
(2.0")
2-47B408S0055
2-47B408S0055-1A
(1.5")
2-47B408S0058
2-47B408S0058-1A
(1.0")
2-47B408S0059
2-47B408S0059-1A
(CF)(1.0")
2-47B408S0067-1E
PUMP 2-1A
2-47B408S0068-1E
2-47B408S0069-1E
2-47B408S0064 (CF)
2-47B408S0061
2-47B408S0061-1A
(1.5")
2-47B408S0081
2-47B408S0081-1A
(0.375")
FCV-68-01
4" DECONTAMINATION LINE
2-47B408S0057
2-47B408S0057-1A (1.0")
2-47B408S0065 (CF)
2-47B408S0062
2-47B408S0062-1A
(1.5")
FCV-68-03
2-47B408S0056
2-47B408S0066 (CF)
2-47B408S0063
2-47B408S0063-1A
(1.5")
68-505
2-47B407-421
68-506
22"
28"
12"
EXEMPT PER DNE CALCULATION (MD-00999-950033) RIMS MEMO R14 950829 109
ALL A/D HISTORY RESEARCHED AT R000
002 ADMIN RDL WCH HEH 6-Jul-2
REVISED PER RIMS MEMO R21 000821 002
REV CHANGE REF PREPARER CHECKER APPROVED DATE
TENNESSEE VALLEY AUTHORITY
BROWNS FERRY NUCLEAR PLANT
UNIT 2
RECIRCULATION SYSTEM
SUPPORT LOCATIONS
DRAWN: PHB
DATE: 8-22-87
SUBMITTED
DATE 8-10-88
APPROVED
DATE 8-11-88
SCALE NTS
SHEET 1 OF 2 SHEET(S)
CHECKED: JES
DATE: 8-10-88
EDC
GLB
DRAWING NO.
2-1S1-0278-C
REV
002
CAD MAINTAINED DRAWING
CCD

CLCUALTION BRANCH/PROJECT IDENTIFIER: CD-Q2068-871118

REFERENCE DRAWINGS:
TVA 47K1544-2
GE 2-153F754
KELLOGG BF 2-180
NOTE: THIS DRAWING SUPERSEDES CHM-2068-C ALL SHEETS

LEGEND:
- RIGID HANGER
- VARIABLE SUPPORT
- HYDRAULIC SNUBBER
- CONSTANT FORCE SUPPORT (CF)
- RIGID STRUT

ASME CC-1 (EQUIVALENT)

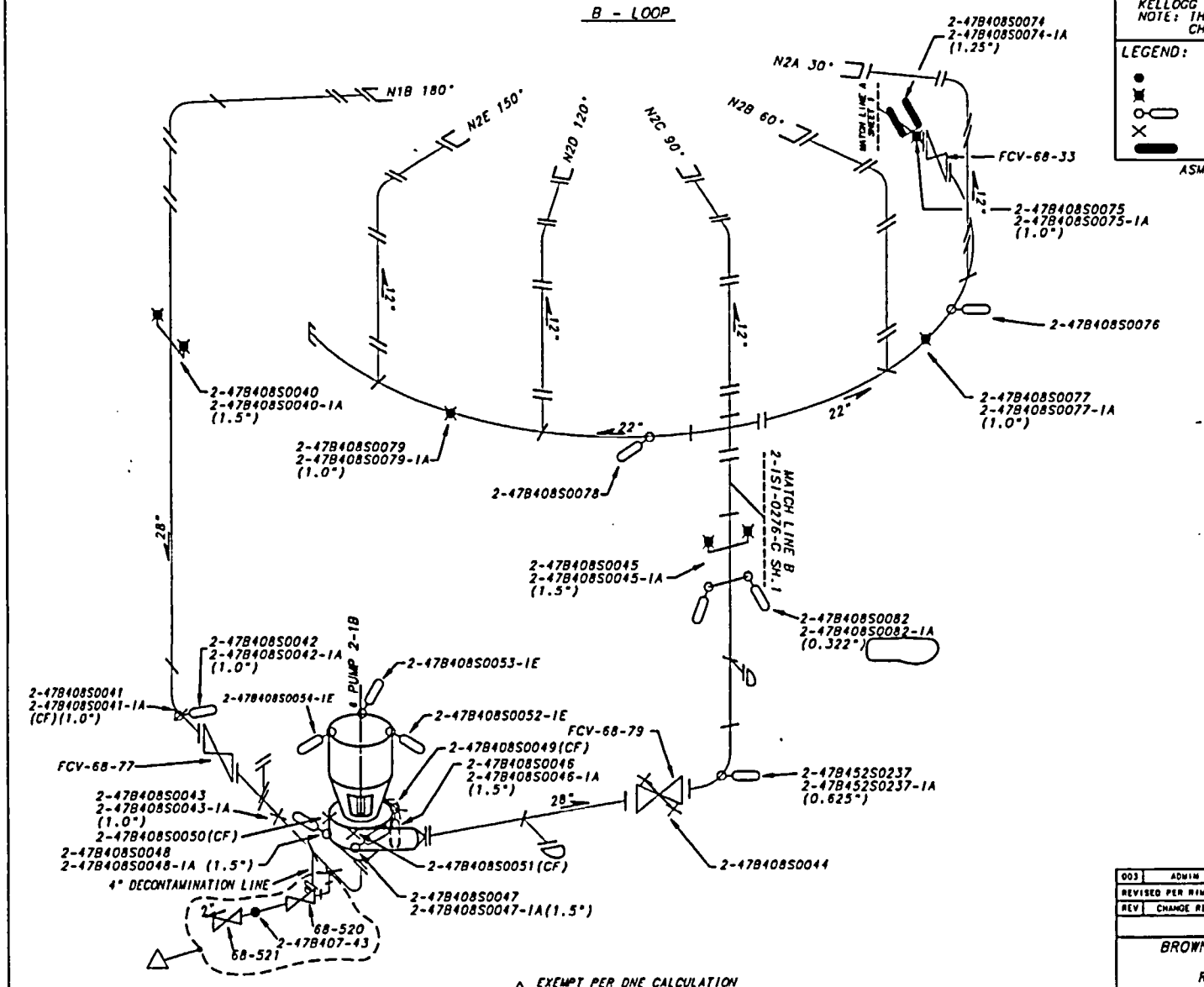

△ EXEMPT PER DNE CALCULATION (WO-00999-950033) RIMS MEMO R14 950829 109

ALL A/D HISTORY RESEARCHED AT R001

REV	CHANGE REF	PREPARER	CHECKER	APPROVED	DATE
003	ADMIN	RDL	WCN	HEH	6-30-2000
REVISED PER RIMS MEMO R21 000821 002					

TENNESSEE VALLEY AUTHORITY

BROWNS FERRY NUCLEAR PLANT
UNIT 2
RECIRCULATION SYSTEM
SUPPORT LOCATIONS

DRAWN: PHB	SUBMITTED	APPROVED	SCALE NTS
DATE: 3-28-89	DATE 3-10-89	DATE 3-11-89	SHEET 2 OF 2 SHEET(S)
CHECKED: JES	EDC	GLB	DRAWING NO. 2-1S1-0278-C
DATE: 3-8-89			REV. R003

CAD MAINTAINED DRAWING

CCD

REFERENCE DRAWINGS:
GE 729E401-1
0-729E401-2
2-ISI-0222-C-1 (WELD LOCATIONS)
NOTE: THIS DRAWING SUPERCEDES CHM-2087-L SH. 1

LEGEND:
- RIGID HANGER
- VARIABLE SUPPORT
- HYDRAULIC SNUBBER
- RIGID STRUT
- CONSTANT FORCE SUPPORT
- MECHANICAL SNUBBER

CALCULATION BRANCH/PROJECT IDENTIFIERS:
CD-02001-88971
CD-02001-88969

ASME CC-1 (EQUIVALENT)

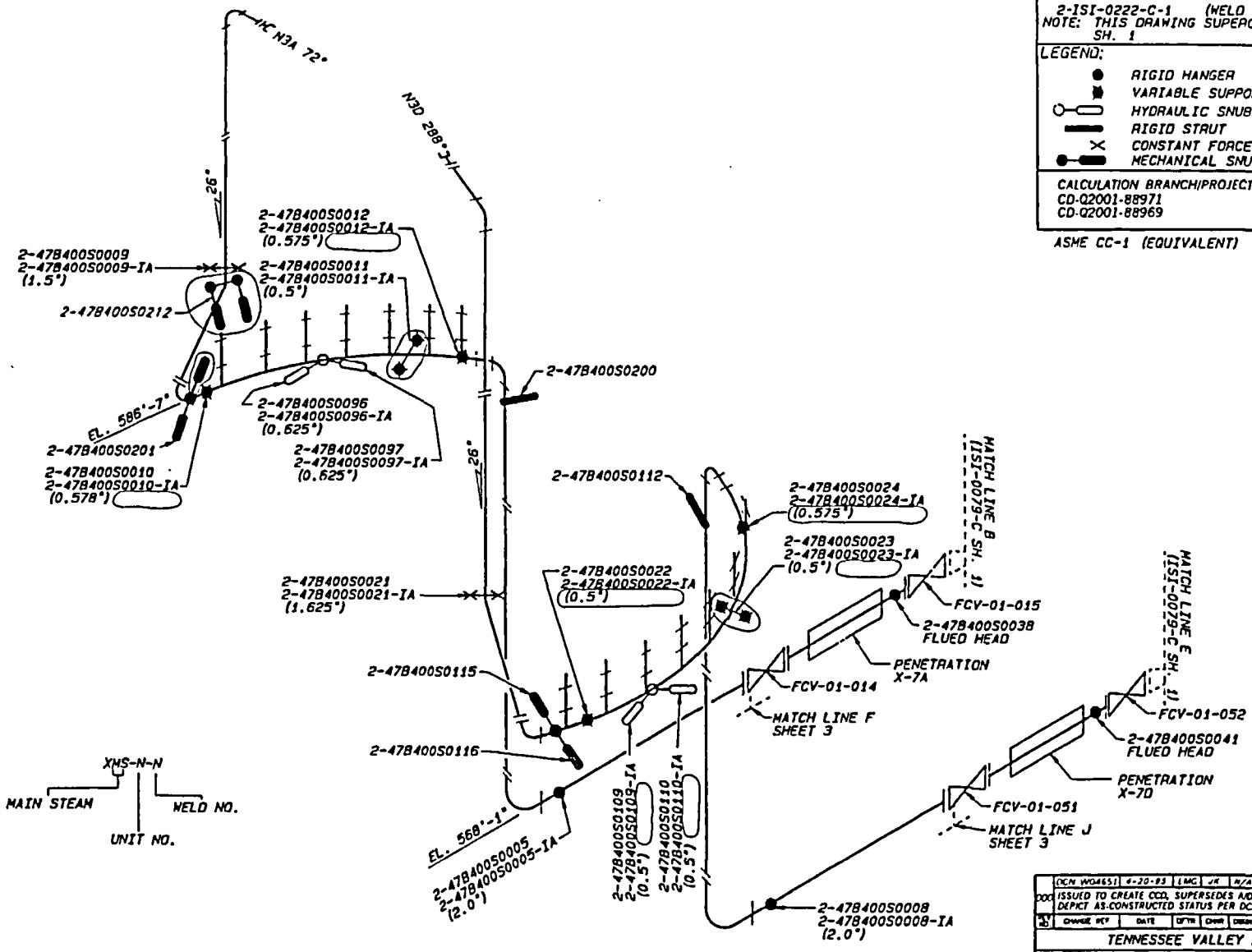

001	ADMIN	7-30-96	RML	WAL	N/A	ELD	N/A	N/A	ELD		
	REVISED TO REFLECT SUPPORT CONFIGURATION AND ATTACHMENT THICKNESS PER RIMS MEMO RDI 960524 002 (ADMINISTRATIVE REVISION)										
REV NO.	CHANGE REF	DATE	DFTR	CHKR	DESIGN	RVWR	APPD	APPD	APPD	ISSD	

000	DCN WO4651	4-20-93	LMC	JR	N/A		FDF	JRC			
	ISSUED TO CREATE CCD, SUPERSEDES A/D ISI 0279 C-1 R06 AND TO DEPICT AS-CONSTRUCTED STATUS PER DCN WO4651										
REV NO.	CHANGE REF	DATE	DFTR	CHKR	DESIGN	RVWR	APPD	APPD	APPD	ISSD	

TENNESSEE VALLEY AUTHORITY

S

BROWNS FERRY NUCLEAR PLANT
UNIT 2
MAIN STEAM SYSTEM SUPPORT LOCATIONS

DRAWN PHB	SUBMITTED	APPROVED	SCALE: NTS
DATE: 12-16-88	DATE:	DATE:	SHEET 01 OF 04 SHEETS
CHECKED JES	EDC	GLB	DRAWING NO
DATE:			2-ISI-0279-C

CCD R001

ALL A/D HISTORY RESEARCHED @ R010

CALCULATION BRANCH/PROJECT IDENTIFIERS: CD-Q2001-88972
CD-Q2001-88970

REFERENCE DRAWINGS:
GE 729E401 SH. 1 & 2
ISI-0232-C SH. 2 (WELD MAP)
NOTE: THIS DRAWING SUPERCEDES CHM-2087-C SH. 2

LEGEND:
- RIGID HANGER
- VARIABLE SUPPORT
- HYDRAULIC SNUBBER
- CONSTANT FORCE SUPPORT
- MECHANICAL SNUBBER

ASME CC-1 (EQUIVALENT)

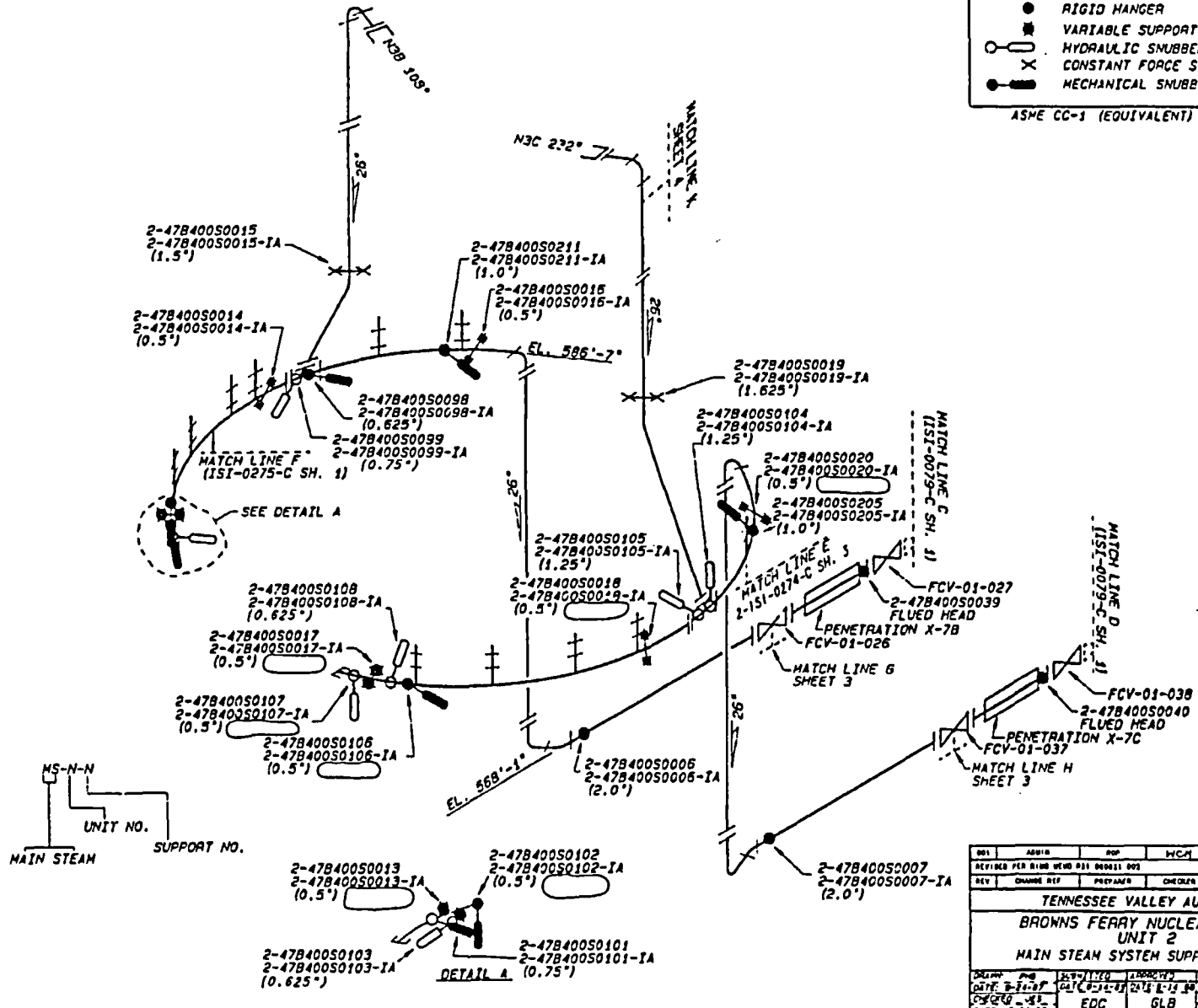

REV	CHANGE REF	PREPARER	CHECKER	APPROVED	DATE
001	ADDED	RDP	WCM	REH	5-30-2001
REVISED PER BIND WEND 001 000811 002					

TENNESSEE VALLEY AUTHORITY

BROWNS FERRY NUCLEAR PLANT
UNIT 2
MAIN STEAM SYSTEM SUPPORT LOCATIONS

DRAWN: RDP	DESIGNED: WCM	ISSUED: REH	SCALE: NTS
DATE: 8-24-87	DATE: 8-24-87	DATE: 8-24-88	SHEET 2 OF 2 SHEETS
CHECKED: GLB	EDC	GLB	DRAWING NO. 2-151-0279-C1000
DATE: 8-24-88			REV.

ALL A/O HISTORY RESEARCHED TO R000

CAD MAINTAINED DRAWING

CCD R001

REFERENCE DRAWINGS:
47W458-1R8
ISI-0271-C (SH. 1) WELD MAP
NOTE: THIS DRAWING SUPERCEDES CHM-2089-C ALL SHEETS.

LEGEND:
VARIABLE SUPPORT
HYDRAULIC STRUT

ASME CC-1 (EQUIVALENT)

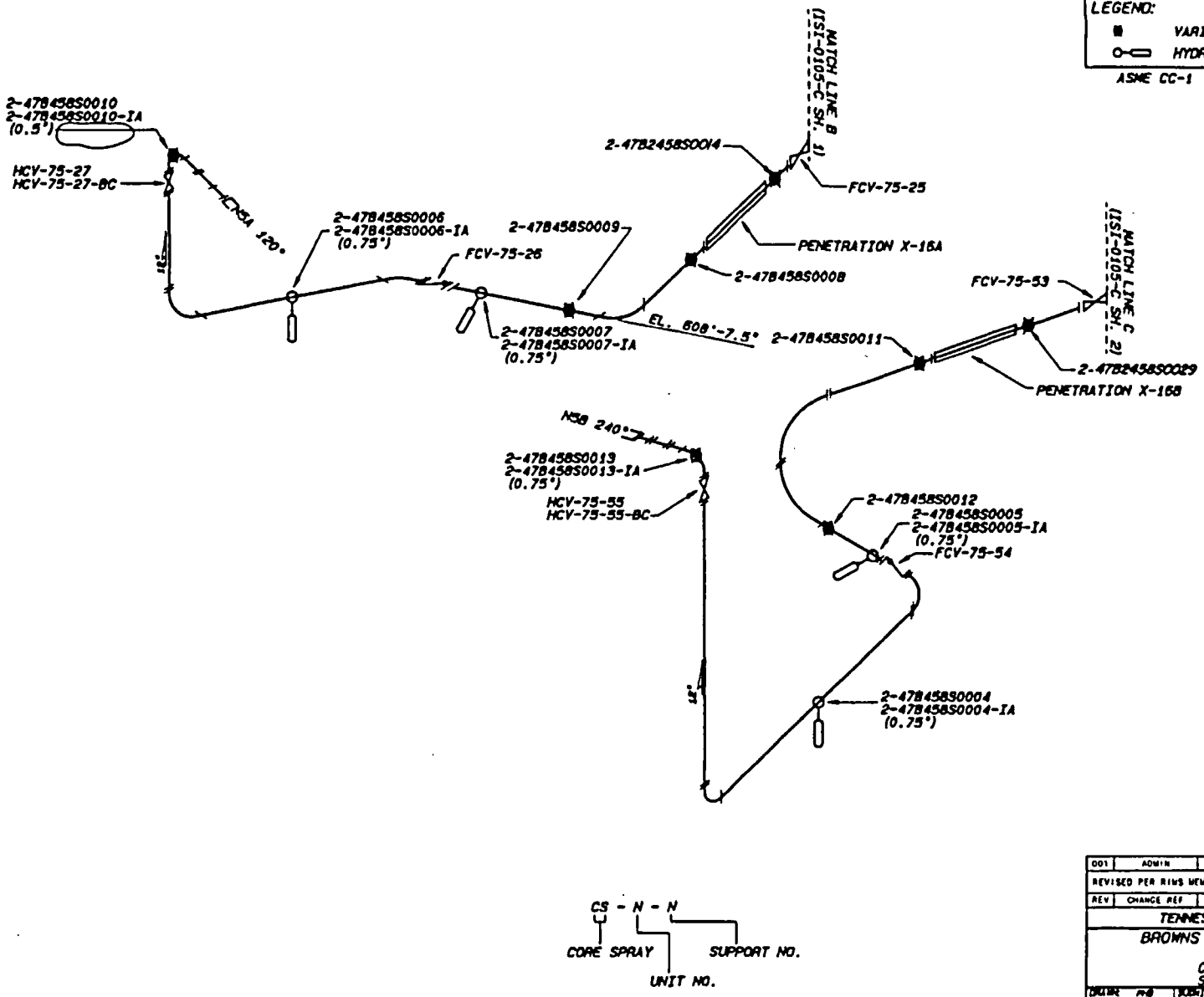

CS - N - N
CORE SPRAY
UNIT NO.
SUPPORT NO.

CAD MAINTAINED DRAWING

REV	CHANGE REF	PREPARER	CHECKER	APPROVED	DATE
001	ADMIN	RDL	MCH	WGH	8-30-2000

REVISED PER RIMS MEMO R21 000821 002

TENNESSEE VALLEY AUTHORITY

BROWNS FERRY NUCLEAR PLANT
UNIT 2
CORE SPRAY SYSTEM
SUPPORT LOCATIONS

DRAWN	PAB	DESIGNED	APPROVED	SCALE NTS
DATE 7-15-97	DATE	DATE		SHEET 1 OF 1 SHEETS
CHECKED		EDC	GLB	DRAWING NO. 2-ISI-0280-C
DATE				REV 001

CCD

ALL A/D HISTORY RESEARCHED AT ROOD

REFERENCE DRAWINGS:
2-47E801-1

ASME CC-1 (EQUIVALENT)

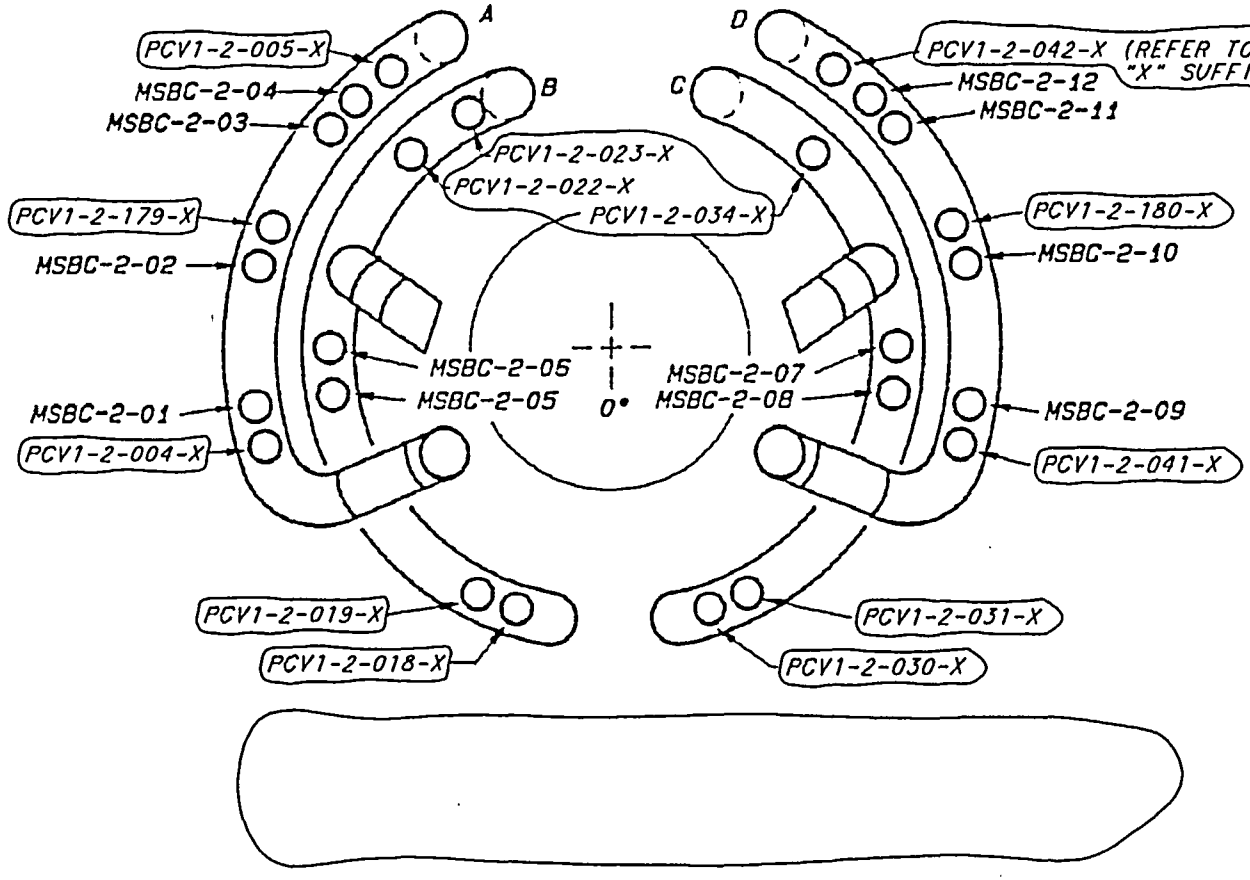

ALL REVISION CIRCLES ARE ADMINISTRATIVE REVISION

NOTES:
1. THIS DRAWING SUPERSEDES 1SI-0027-B FOR UNIT 2 ONLY.
2. SUBSTITUTE "VBC" FOR "X" WHEN EXAMINING VALVE BODY BOLTING AND "PBC" FOR "X" WHEN EXAMINING VALVE TO PIPE BOLTING.

REV NO	CHANGE REF	DATE	DFTR	CHKR	DSGN	RVWR	1 APPD	2 APPD	3 APPD	ISSD
	CCD ADMIN		BCC		N/A		N/A	N/A		
000	ISSUED TO CREATE CCD. SUPERSEDES AS-DESIGNED 1SI-0312-B-1 R2 AND TO DEPICT AS-CONSTRUCTED STATUS PER A/D R0, R1; RIMS MEMO R92 960604 850 (ADMINISTRATIVE REVISION)									

TENNESSEE VALLEY AUTHORITY

S

BROWNS FERRY NUCLEAR PLANT
UNIT 2
MAINSTEAM SYSTEM
BOLTED CONNECTIONS

DRAWN: PHB	SUBMITTED	APPROVED	SCALE: NTS
DATE: *	DATE:	DATE:	SHEET 1 OF 1 SHEET(S)
CHECKED:	*	*	DRAWING NO. 2-1SI-0312-B — REV 000
DATE: *			CCD

HARDWARE	TEKTRONIX 4129
SOFTWARE	TEKNICAD 8.2
FLOPPY OR TAPE #	FLOPPY #BF4

* FOR ORIGINAL SIGNATURES AND PREVIOUS REV. INFO. SEE "ORIGINAL".

PROCAD

ALL A/D HISTORY RESEARCHED AT R000

REFERENCE DRAWINGS:
47W462 SERIES
47B462 SERIES
2-47E854-1

MATERIAL SPECIFICATIONS:
PIPING
1 1/2" & 2" SCH. 80 A-312 TP 304
FITTINGS
A182 F304, SCH. 80

ASME CC-1 (EQUIVALENT)

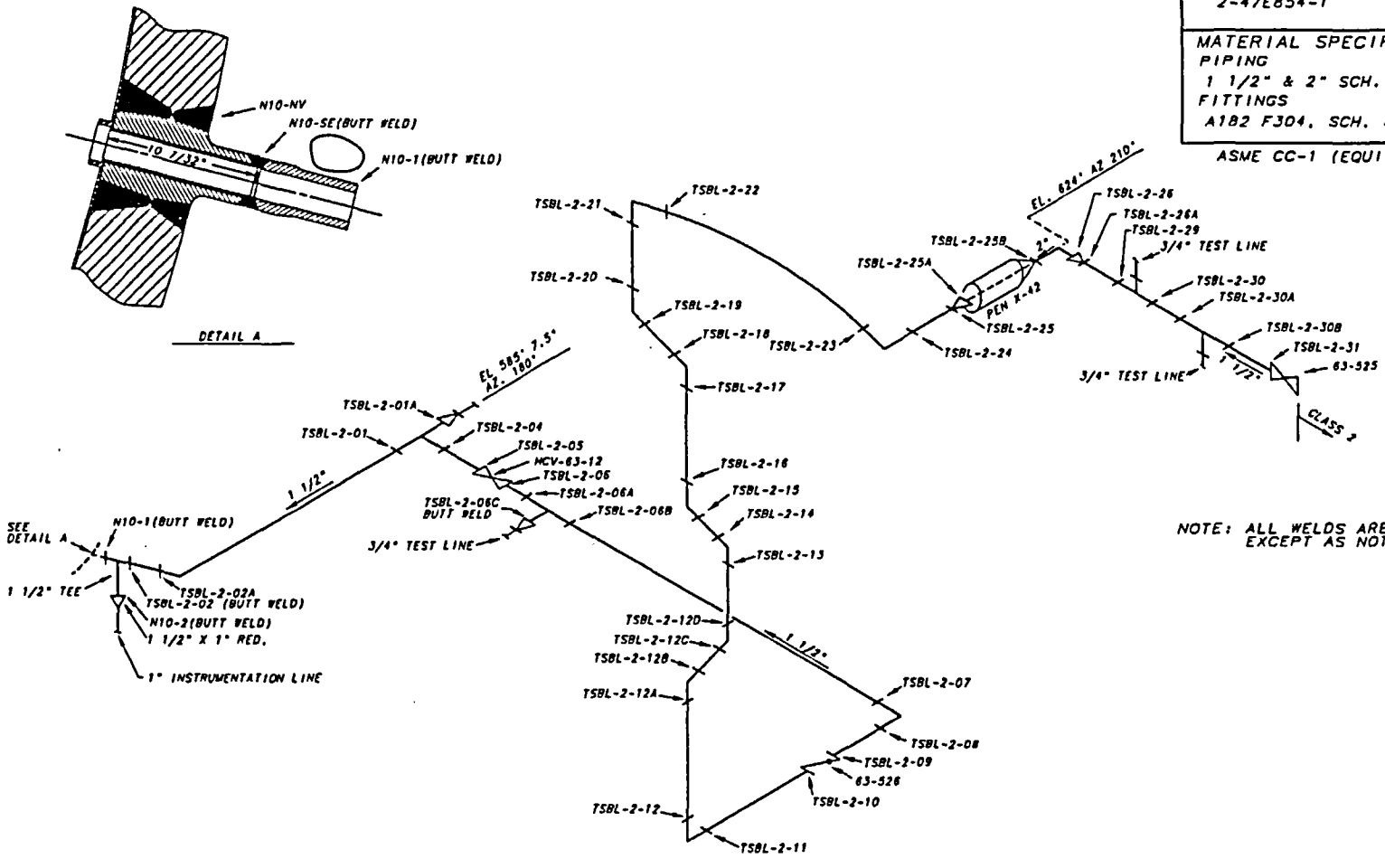

NOTE: ALL WELDS ARE SOCKET WELDED EXCEPT AS NOTED.

REV	CHANGE REF	PREPARER	CHECKER	APPROVED	DATE
001	ADMIN	RDL	WCW	[illegible]	9-29-92

REVISED PER RIMS MEMO R21 000821 001

TENNESSEE VALLEY AUTHORITY

BROWNS FERRY NUCLEAR PLANT
UNIT 2
STANDBY LIQUID CONTROL 1" TO 3"
WELD LOCATIONS

DRAWN: PHB	DATE: 9-29-91	SCALE: NTS	CADAM/ISI CAP
CHECKED: JAA	APPROVED: CLB	SHEET 01 OF 01	REV
SUBMITTED: JES		2-ISI-0380-C	001

CAD MAINTAINED DRAWING

CCD

ALL A/D HISTORY RESEARCHED AT R000

REFERENCE DRAWINGS:
2-47E803-5
2-47W2650-100
2-47E600-602
47BM600-SERIES
0-47W600-20

MATERIAL SPECIFICATIONS:
PIPING
A312 OR A376 GR. TP-304 OR TP-316
SCH. 80
FITTINGS
A182 GR. F-316

ASME CC-1 (EQUIVALENT)

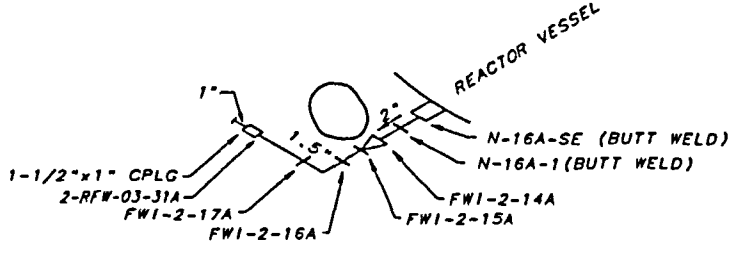

NOZZLE N-16A
REF. DWG. 1S1-0351-A

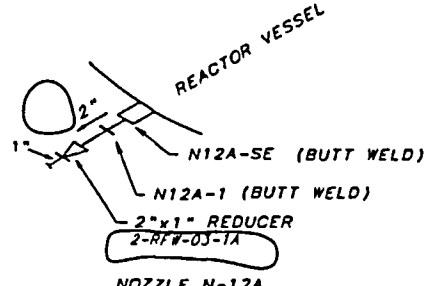

NOZZLE N-12A
REF. DWG. 1S1-0351-A

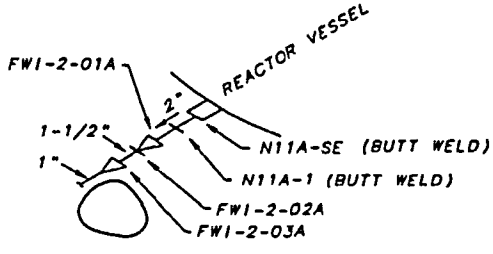

NOZZLE N-11A
REF. DWG. 1S1-0351-A

REV	CHANGE REF	PREPARER	CHECKER	APPROVED	DATE
001	ADMIN	RDL	ZLD	HEW	6-29-2001
REVISED PER RIMS MEMO R21 000821 001					

TENNESSEE VALLEY AUTHORITY

BROWNS FERRY NUCLEAR PLANT
UNIT 2
FEEDWATER INSTRUMENTATION
WELD LOCATIONS

DRAWN: PHB	SUBMITTED	APPROVED	SCALE: NTS
DATE: 9-17-91	DATE 6-20-01	DATE 6-28-01	SHEET 01 OF 02 SHEET(S)
CHECKED: JM	JES	CLB	DRAWING NO. 2-1S1-0383-C
DATE: 9-20-91			REV 001

CAD MAINTAINED DRAWING

CCD

ALL A/D HISTORY RESEARCHED AT ROOD

REFERENCE DRAWINGS:
2-47E803-5
2-47W2650-100
2-47E600-601
47BM600-SERIES
0-47W600-20

MATERIAL SPECIFICATIONS:
PIPING
A312 OR A376 GR. TP-304 OR TP-316
SCH. 80
FITTINGS
A182 GR. F-316

ASME CC-1 (EQUIVALENT)

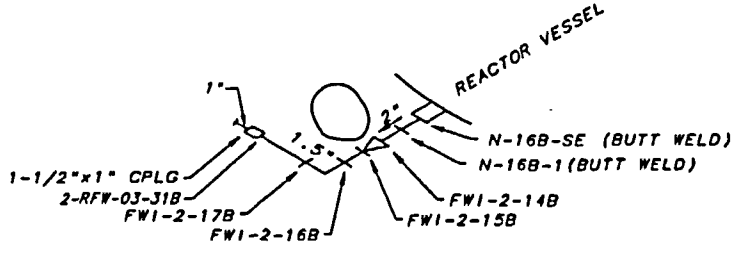

NOZZLE N-16B
REF. DWG. 1S1-0351-A

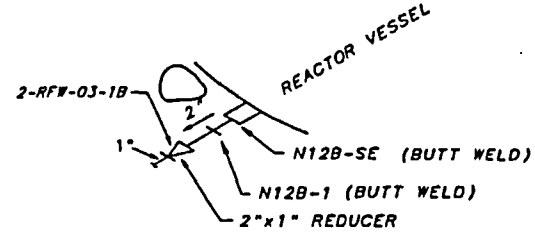

NOZZLE N-12B
REF. DWG. 1S1-0351-A

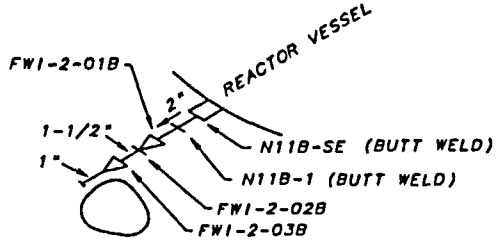

NOZZLE N-11B
REF. DWG. 1S1-0351-A

REV	CHANGE REF	PREPARER	CHECKER	APPROVED	DATE
001	ADWIN	RDL	RLO	HEH	5-29-92
REVISED PER RIMS MEMO R21 000821 001					

TENNESSEE VALLEY AUTHORITY

BROWNS FERRY NUCLEAR PLANT
UNIT 2
FEEDWATER INSTRUMENTATION
WELD LOCATIONS

DRAWN: PHB	SUBMITTED	APPROVED	SCALE: NTS
DATE: 7-31-81	DATE: 8-7-81	DATE: 8-18-81	SHEET 01 OF 02 SHEETS
CHECKED: JM	JES	CLB	DRAWING NO. 2-1S1-0383-C 001
DATE: 8-20-81			REV

CAD MAINTAINED DRAWING

CCD

ALL A/D HISTORY RESEARCHED AT R000

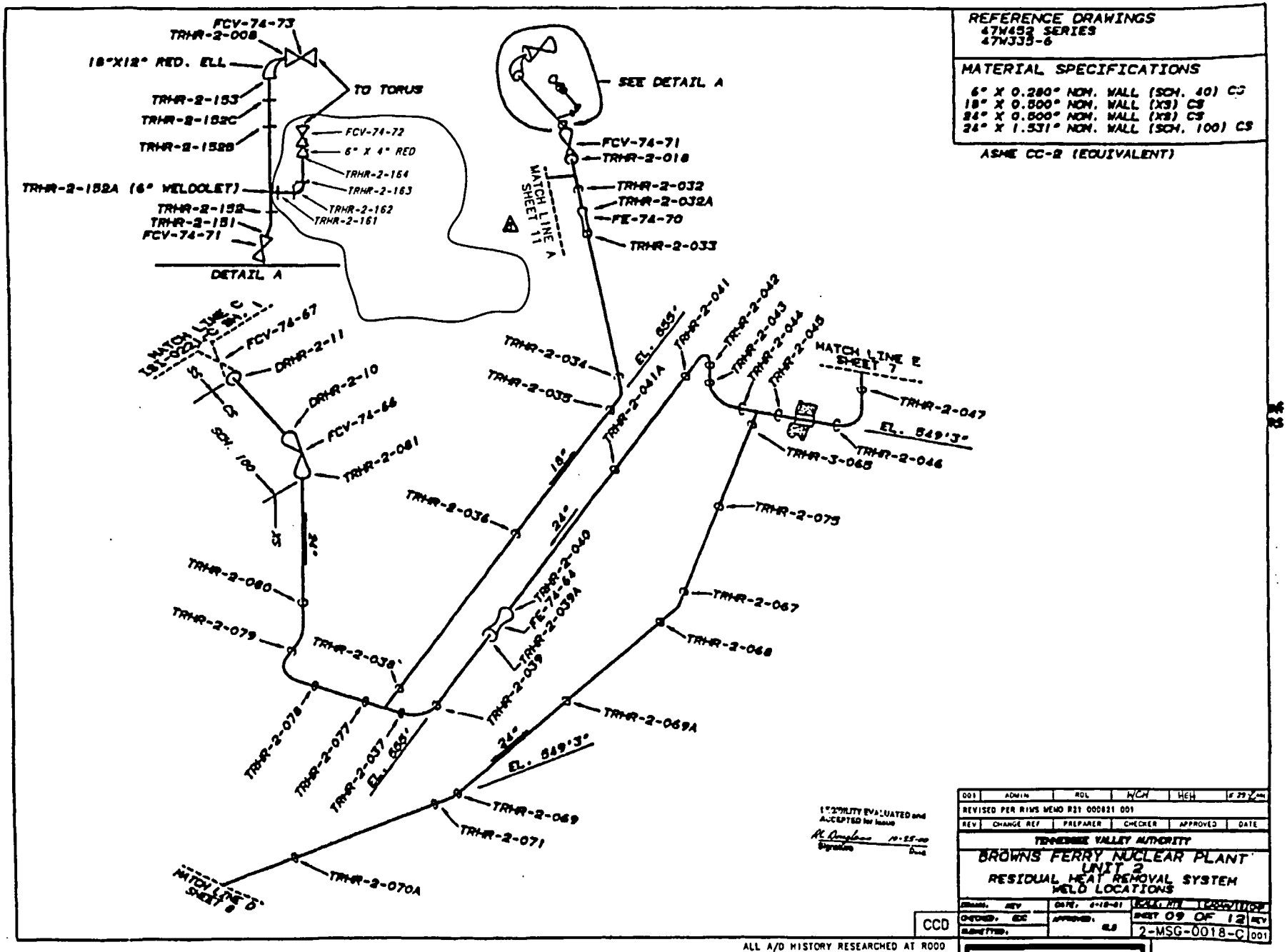
REFERENCE DRAWINGS
47W452 SERIES
47W333-6
MATERIAL SPECIFICATIONS
6" X 0.280" NOM. WALL (SCH. 40) CS
18" X 0.500" NOM. WALL (XS) CS
24" X 0.500" NOM. WALL (XS) CS
24" X 1.531" NOM. WALL (SCH. 100) CS
ASME CC-2 (EQUIVALENT)
FCV-74-73
TRHR-2-008
18"X12" RED. ELL
TO TORUS
TRHR-2-153
TRHR-2-152C
TRHR-2-152B
FCV-74-72
6" X 4" RED
TRHR-2-164
TRHR-2-163
TRHR-2-162
TRHR-2-161
TRHR-2-152A (6" WELDOLET)
TRHR-2-152
TRHR-2-151
FCV-74-71
DETAIL A
SEE DETAIL A
FCV-74-71
TRHR-2-018
TRHR-2-032
TRHR-2-032A
FE-74-70
TRHR-2-033
MATCH LINE A SHEET 11
MATCH LINE C SHEET 1
FCV-74-67
DRHR-2-11
DRHR-2-10
FCV-74-66
TRHR-2-081
SCH. 100
CS
TRHR-2-034
TRHR-2-035
TRHR-2-041A
EL. 655'
TRHR-2-041
TRHR-2-042
TRHR-2-043
TRHR-2-044
TRHR-2-045
MATCH LINE E SHEET 7
TRHR-2-047
EL. 649'3"
TRHR-2-046
TRHR-3-065
18"
24"
TRHR-2-036
TRHR-2-040
TRHR-2-064
FE-74-64
TRHR-2-039A
TRHR-2-039
TRHR-2-075
TRHR-2-067
TRHR-2-068
TRHR-2-069A
TRHR-2-080
TRHR-2-079
TRHR-2-038
TRHR-2-078
TRHR-2-077
TRHR-2-037
EL. 655'
EL. 649'3"
TRHR-2-069
TRHR-2-071
TRHR-2-070A
MATCH LINE D SHEET 8
1" SENSITIVITY EVALUATED and ACCEPTED for Issue
Signature
Date
CCD
ALL A/D HISTORY RESEARCHED AT ROOD
001 ADMIN RDL WCH HEW
REVISED PER RIMS MEMO R21 000821 001
REV CHANGE REF PREPARER CHECKER APPROVED DATE
TENNESSEE VALLEY AUTHORITY
BROWNS FERRY NUCLEAR PLANT
UNIT 2
RESIDUAL HEAT REMOVAL SYSTEM
WELD LOCATIONS
DATE: 6-18-81
SHEET 09 OF 12
2-MSG-0018-C
001
CAD MAINTAINED DRAWING

NOZZLE GROUP	DISTANCE TO MATING SURFACE
N3X	86.5°
N12X	146°
N11X	228°
N4X	246.5°
N5X	259.5°
N9	296.5°
N16X	379°
N2X	564°
N1X	583.5°
N8X	610°

REFERENCE DRAWINGS (GE)

SKETCHES - RPV EXAMINATION PLAN (GE)

SK-B2001 SK-B2005 SK-B2010
SK-B2003 SK-B2007
SK-B2004 SK-B2008

LEGEND

O VESSEL NOZZLE
) FULL PENETRATION NOZZLE WELD

ASME CC-1 (EQUIVALENT)

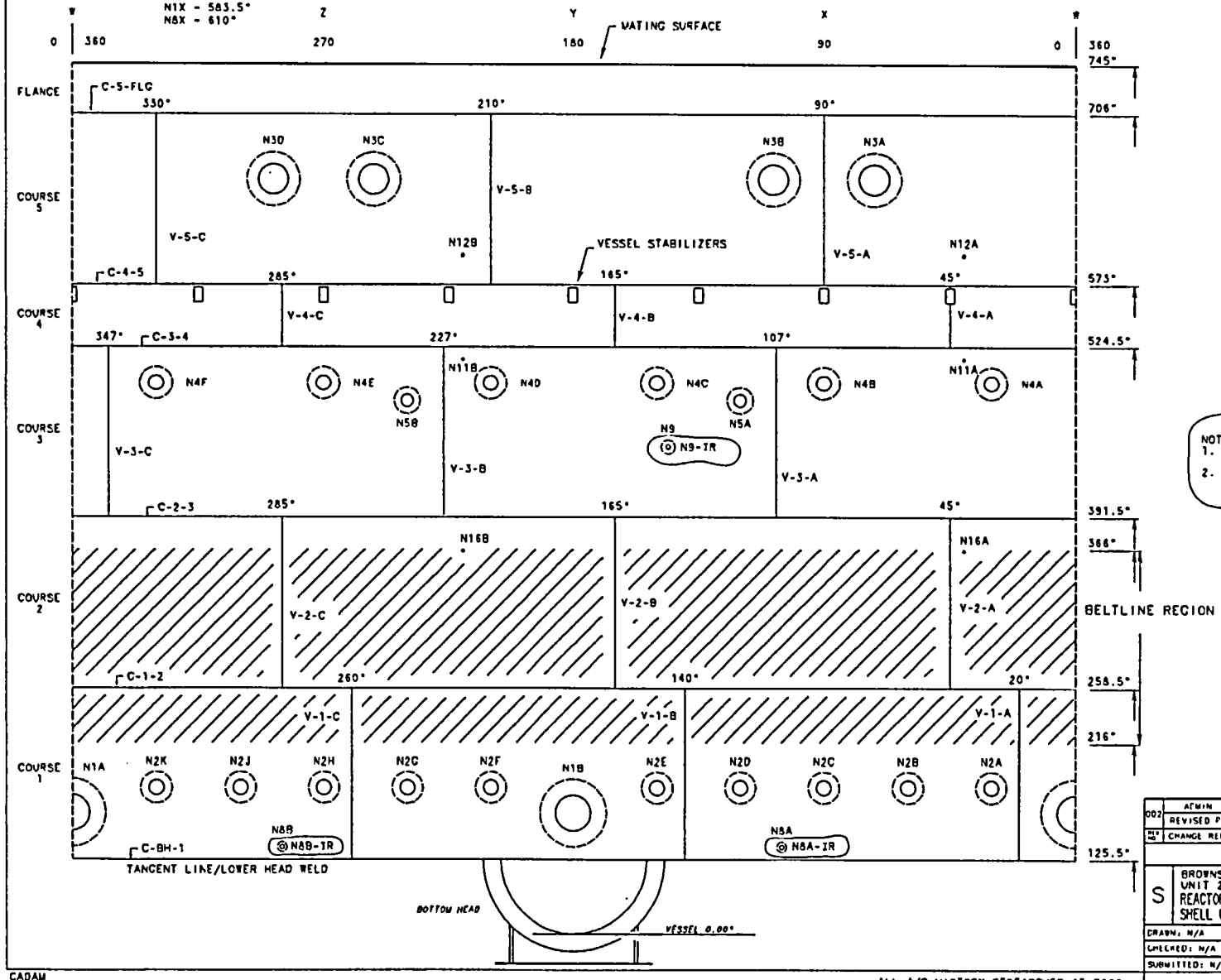

NOTES:
1. REFER TO RPV MANUAL FOR MATERIAL SPECIFICATION AND MATERIAL THICKNESS.
2. NOZZLES N-11A, N-11B, N-12A, N-12B, N-16A, AND N-16B ARE CATEGORY B-E.

002	ADMIN		RDL		N/A		N/A	N/A		
	REVISED PER RIMS MEMO R14 970505 302									
REV	CHANGE REF	DATE	DFTR	CHKR	DSGN	RVWR	APPD	APPD	APPD	ISSD

TENNESSEE VALLEY AUTHORITY

S

BROWNS FERRY NUCLEAR PLANT
UNIT 2
REACTOR PRESSURE VESSEL (RPV)
SHELL COURSE WELD/NOZZLE LOCATIONS (OUTSIDE VIEW)

DRAWN: N/A	DATE: N/A	SCALE: NTS	CADAM/ISILMP
CHECKED: N/A	APPROVED:	SHEET 01 OF 02	REV
SUBMITTED: N/A	CLB	2-CHM-2046-C	002

CCD

CADAM

ALL A/D HISTORY RESEARCHED AT R000

OWNER: TENNESSEE VALLEY AUTHORITY OFFICE OF NUCLEAR POWER 1101 MARKET STREET CHATTANOOGA, TENNESSEE 37402	PLANT: BROWNS FERRY NUCLEAR PLANT P.O. BOX 2000 DECATUR, ALABAMA 35602
UNIT: TWO	CERTIFICATE OF AUTHORIZATION: NOT REQUIRED.
COMMERCIAL SERVICE DATE: MARCH 1, 1975	
NATIONAL BOARD NUMBER FOR UNIT: NOT REQUIRED.	

APPENDIX VI

SUMMARY OF INDICATIONS

OWNER: TENNESSEE VALLEY AUTHORITY OFFICE OF NUCLEAR POWER 1101 MARKET STREET CHATTANOOGA, TENNESSEE 37402	PLANT: BROWNS FERRY NUCLEAR PLANT P.O. BOX 2000 DECATUR, ALABAMA 35602

UNIT: TWO CERTIFICATE OF AUTHORIZATION: NOT REQUIRED.

COMMERCIAL SERVICE DATE: MARCH 1, 1975

NATIONAL BOARD NUMBER FOR UNIT: NOT REQUIRED.

Summary of Indications

Indications detected during the performance of examinations for Browns Ferry Nuclear Plant Unit 2/Cycle13 were evaluated in accordance with approved written procedures. Generally, examination results yielded either No Recordable Indications (NRI) or Recordable Indications.

Recordable Indications were evaluated to determine their origin. Indications determined to be of a geometric, metallurgical, or similar origin were typically dispositioned as non-relevant. Indications determined to be of a non-geometric, non-metallurgical, or similar origin were typically dispositioned as relevant. Such indications required additional measures such as further evaluation in accordance with ASME Section XI acceptance standards, engineering analysis, repair, or replacement.

The following is a summary indications detected and corrective measures taken during the Unit 2 Cycle 13 Refueling Outage. Reference Attachment # 2 BFN IWE Containment Inservice Inspection (CISI) Program for the summary.

NOI No.	Code Cat.	Component Identifier	Indication Description	Resolution	Additional samples
U2C13-001	E-D	MSB-2-1, MSB-2-2, MSB-2-3	Moisture Seal Barrier seperation.	Replace and reinspected	NONE
U2C13-002	E-A	DW LNR-2-3	Coatings flaking, blistering, and pitting.	Scape back to sound coating and reinspected	NONE
U2C13-003	E-A	PSC-INT-2-B 1A – 16A	96 Downcomers exhibit light to heavy corrosion with blisters and pitting.	UT readings taken to verify wall thickness maintained. Use As Is.	NONE
U2C13-004	E-A	DW LNR-2-1	Pitting and corrosion on Moisture Seal Barrier.	UT readings taken to verify wall thickness maintained. Use As Is.	NONE
U2C13-005	E-A	DW LNR-2-5	Loose flaking coatings.	Scape back to sound coating and reinspected	NONE
U2C13-006	E-A	DW LNR-2-2	Blistered and flaking coatings on Drywell liner elev. 563'.	Scape back to sound coating and reinspected	NONE
U2C13-008	E-A	PEN 2-X5G	Flaking and bubbled coatings near bottom end of penetration.	Scape back to sound coating and reinspected.	NONE
U2C13-009	E-A	PSC-INT-B-2A, 3A, 4A, 8A, 12A, 13A, 14A, 15A, and 16A	Blistered coating found on main vent line and vent header.	Scape back to sound coating and reinspected.	NONE
U2C13-010	E-A	PSC-INT-2-B-1B to PSC-INT-2-B-16B	15 of 16 bays had at least one pit greater than 3 mils deep and coatings blistering.	Coatings repaired and reinspected.	NONE

ADDITIONAL SAMPLES

There were no additional samples required this outage.

OWNER: TENNESSEE VALLEY AUTHORITY OFFICE OF NUCLEAR POWER 1101 MARKET STREET CHATTANOOGA, TENNESSEE 37402	PLANT: BROWNS FERRY NUCLEAR PLANT P.O. BOX 2000 DECATUR, ALABAMA 35602
UNIT: TWO	CERTIFICATE OF AUTHORIZATION: NOT REQUIRED.
COMMERCIAL SERVICE DATE: MARCH 1, 1975	
NATIONAL BOARD NUMBER FOR UNIT: NOT REQUIRED.	

ATTACHMENT 1

UNIT 2 CYCLE 13
AUGMENTED EXAMINATION
SUMMARY

OWNER: TENNESSEE VALLEY AUTHORITY OFFICE OF NUCLEAR POWER 1101 MARKET STREET CHATTANOOGA, TENNESSEE 37402	PLANT: BROWNS FERRY NUCLEAR PLANT P.O. BOX 2000 DECATUR, ALABAMA 35602
UNIT: TWO	CERTIFICATE OF AUTHORIZATION: NOT REQUIRED.
COMMERCIAL SERVICE DATE: MARCH 1, 1975	
NATIONAL BOARD NUMBER FOR UNIT: NOT REQUIRED.	

SECTION 1

AUGMENTED SUMMARY

OWNER: TENNESSEE VALLEY AUTHORITY OFFICE OF NUCLEAR POWER 1101 MARKET STREET CHATTANOOGA, TENNESSEE 37402	PLANT: BROWNS FERRY NUCLEAR PLANT P.O. BOX 2000 DECATUR, ALABAMA 35602
UNIT: TWO	CERTIFICATE OF AUTHORIZATION: NOT REQUIRED.
COMMERCIAL SERVICE DATE: MARCH 1, 1975	
NATIONAL BOARD NUMBER FOR UNIT: NOT REQUIRED.	

This section includes augmented examinations performed to comply with NRC or TVA self-imposed requirements. Typical sources include generic letters, IE Bulletins, technical specifications, vendor recommendations, and industry experience. The following summarizes the augmented examinations performed during the Unit 2 Cycle 13 outage and references the corresponding paragraph in 2-SI-4.6.G and/or 0-TI-365.

Paragraph 7.11.5 Augmented Examination of Austenitic Stainless Steel and Dissimilar Metal Welds Susceptible to IGSCC (BWRVIP-75)

Austenitic stainless steel and dissimilar metal circumferential welds in piping four inches or larger in nominal pipe diameter which contain reactor coolant at temperatures above 200 degrees F during power operation shall be examined. There was no new IGSCC identified in Cycle 13.

Reference: *BWR Vessel and Internals Project, Technical Basis for Revisions to Generic Letter 88-01 Inspection Schedules, BWRVIP-75.*

NUREG-0313 CATEGORY	TOTAL NUMBER OF WELDS	WELDS EXAMINED DURING U2/C12 Outage
A	47	*0
B	N/A	N/A
C	115	6
D	7	4
E	15	4
F	N/A	N/A
G	2	2 (VT-2)

*Category A Welds are sampled in accordance with the Unit 2 Risk - Informed ISI Program.

Examination Results: No indications of IGSCC cracking observed.

OWNER: TENNESSEE VALLEY AUTHORITY OFFICE OF NUCLEAR POWER 1101 MARKET STREET CHATTANOOGA, TENNESSEE 37402	PLANT: BROWNS FERRY NUCLEAR PLANT P.O. BOX 2000 DECATUR, ALABAMA 35602
UNIT: TWO	CERTIFICATE OF AUTHORIZATION: NOT REQUIRED.
COMMERCIAL SERVICE DATE: MARCH 1, 1975	
NATIONAL BOARD NUMBER FOR UNIT: NOT REQUIRED.	

Paragraph 7.11.6 Weld inspection For Pipe Whip Protection

Additional examinations shall be performed each inspection interval on selected circumferential pipe welds to provide additional protection against pipe whip in accordance with TSR 3.4.3.2.

The following welds were ultrasonically examined during the Unit 2 Cycle 13 Refueling Outage to locate evidence of pipe whip:

GFW-2-12	REPORT # R-015
GFW-2-29	REPORT # R-016
GMS-2-06	REPORT # R-034
KMS-2-104	REPORT # R-035
DSRHR-2-06	REPORT # R-020

Examination results: The examinations were acceptable.

Paragraph 7.11.7 Reactor Pressure Vessel Interior

Augmented examinations of the RPV interior components are performed in accordance with 0-TI-365, Revision 014, Reactor Pressure Vessel Internals Inspection (RPVII) Units 1, 2 and 3. Reference ISI Reports # R-054 and R-065.

Core Spray Piping, T-Box's and Sparger Inspection's Visual (VT-1, EVT-1 , and UT) Examinations: Total: 49

Visual of Welds: T-Box @ 120°, P1 @120°, P2 @120°, AP3@120°, BP3 @120°, 240° T-Box, P1 @240°, P2 @ 240°, P3 @240°, CP3 @ 240°, and DP3 @240°. **UT of Welds:** Downcomer "A"; P5, P6, P7, P8A, and P8B. Downcomer "B", P4A, P4B, P4C, P4D, P5, P6, P7, P8A, and P8B. Downcomer "C", P5, P6, P7, P8A, and P8B. Downcomer "D", P5, P6, P7, P8A, and P8B.

Reference: 0-TI-365, Paragraph 7.6 and 7.11.2 and Appendix 9.2 and BWRVIP-18, BWR Core Spray Internals Inspection and Flaw Evaluation Guidelines, EPRI TR-106740

Examination Results: No indications of IGSCC cracking observed.

OWNER: TENNESSEE VALLEY AUTHORITY OFFICE OF NUCLEAR POWER 1101 MARKET STREET CHATTANOOGA, TENNESSEE 37402	PLANT: BROWNS FERRY NUCLEAR PLANT P.O. BOX 2000 DECATUR, ALABAMA 35602
UNIT: TWO	CERTIFICATE OF AUTHORIZATION: NOT REQUIRED.
COMMERCIAL SERVICE DATE: MARCH 1, 1975	
NATIONAL BOARD NUMBER FOR UNIT: NOT REQUIRED.	

Core Plate, Core Plate Plugs and Core Support Bolts Visual (EVT-1 and VT-3) Examinations: Total = 67

34 – Core Support Bolts, CPHDB L-10, 0 TO 90 Degrees, CPHDB L-10, 90 to 180 Degrees, CPHDB L-10, 180 to 270 Degrees, and CPHDB L-10, 270 to 360 Degrees.

33 - Core Plate Plugs at location: CRGT 50-23, CRGT 42-47, CRGT 42-15, CRGT 22-43, CRGT 22-11, CRGT 18-15, CRGT 14-43, CRGT 10-39, CRGT 14-35, CRGT 14-27, CRGT 22-51, CRGT 10-23, CRGT 14-19, CRGT 18-35, CRGT 18-47, CRGT 22-19, CRGT 26-19, CRGT 30-43, CRGT 34-43, CRGT 38-11, CRGT 38-19, CRGT 38-43, CRGT 38-51, CRGT 42-27, CRGT 46-19, CRGT 46-27, CRGT 46-43, CRGT 50-39, LPRM 08-25, LPRM 16-33, LPRM 24-41, LPRM 32-17, and LPRM 48-25.

Reference: 0-TI-365, Paragraph 7.14 and Appendix 9.2 and BWRVIP-25, BWR Core Plate Inspection and Flaw Evaluation Guidelines, EPRI TR-107284.

Examination Results: No Recordable Indications noted.

Control Rod Guide Tubes Visual (VT-3 and EVT-1) Examinations: Total = 10

CRGT 50-23, CRGT 42-47, CRGT 42-15, CRGT 22-43, CRGT 22-11, CRGT 18-15, CRGT 14-43, CRGT 10-39, CRGT 14-35, CRGT 14-27. Areas below on each componnent.

Anti-Rotational Pin (ARPIN-1) and Alignment Lug Welds (CRGT-1)
Upper Circumferential Weld (CRGT-2)
Lower Circumferential Weld (CRGT-3)
Interior Surfaces

Reference: 0-TI-365, Paragraph 7.9 and Appendix 9.2 and BWRVIP-26, BWR Top Guide Inspection and Flaw Evaluation Guidelines, EPRI TR-107285.

Examination Results: No indications of IGSCC cracking observed.

OWNER: TENNESSEE VALLEY AUTHORITY OFFICE OF NUCLEAR POWER 1101 MARKET STREET CHATTANOOGA, TENNESSEE 37402	PLANT: BROWNS FERRY NUCLEAR PLANT P.O. BOX 2000 DECATUR, ALABAMA 35602
UNIT: TWO	CERTIFICATE OF AUTHORIZATION: NOT REQUIRED.
COMMERCIAL SERVICE DATE: MARCH 1, 1975	
NATIONAL BOARD NUMBER FOR UNIT: NOT REQUIRED.	

Core Shroud Access Hole Cover Visual (EVT-1) Examination: Total = 2

Access Hole Cover @ 0 Degrees and 180 Degrees.

Reference: 0-TI-365, Reactor Pressure Vessel Internals Inspection (RPVII) Units 1, 2 and 3.

Examination Results: No Recordable Indications noted.

Core Shroud Support Plate Welds H-8 and H-9 Visual (EVT-1/VT-3) and UT Examination: Total = 2

UT of H-9 weld on the outside of Reactor Pressure Vessel at RECIRC Nozzle N1A (0 Degrees) and N1B (180 Degrees).

`EVT-1/VT-3 of welds H-8 and H-9, Area @ 0 degrees from the diffuser of Jet Pump 10 to the diffuser on Jet Pump 11 and Area @ 180 degrees from the diffuser of Jet Pump 1 to the diffuser on Jet Pump 20.

Reference: 0-TI-365, Reactor Pressure Vessel Internals Inspection (RPVII) Units 1, 2 and 3.

Examination Results: No Recordable Indications noted.

Steam Dryer Visual (VT-1) Examination: Total = 16

Manway Covers: 90 Degree Side.
Dryer Cover Plate @ 90 Degrees and 270 Degrees (horizontal and vertical (V8 and V10 welds that outline the outer Bank (Bank 1).
Dryer Tie Bars
Dryer Drain Channel #3 @ 230 Degrees
Dryer Surfaces 0° to 360°
Dryer Leveling Screw Tack Welds @ 05 Degrees and 180 Degrees
V3 adnd V4, Vertical Welds on Bank 2 at 0 and 180 Degrees
V1 and V2, Vertical Welds on Bank 3 at 0 and 180 Degrees
V1 and V2, Vertical Welds on Bank 4 at 0 and 180 Degrees
V3 adnd V4, Vertical Welds on Bank 5 at 0 and 180 Degrees

Reference: 0-TI-365, Reactor Pressure Vessel Internals Inspection (RPVII) Units 1, 2 and 3.

Examination Results: No Recordable Indications noted.

OWNER: TENNESSEE VALLEY AUTHORITY OFFICE OF NUCLEAR POWER 1101 MARKET STREET CHATTANOOGA, TENNESSEE 37402	PLANT: BROWNS FERRY NUCLEAR PLANT P.O. BOX 2000 DECATUR, ALABAMA 35602
UNIT: TWO	CERTIFICATE OF AUTHORIZATION: NOT REQUIRED.
COMMERCIAL SERVICE DATE: MARCH 1, 1975	
NATIONAL BOARD NUMBER FOR UNIT: NOT REQUIRED.	

Jet Pump Assemblies Visual Inspections (VT-1) and UT Examinations: Total = 60

JPA# 1 JP-1 WD-1 JP-1 AS-1 & 2	**JPA# 2** JP-2 WD-1 JP-2 AS-1 & 2	**JPA# 3** JP-3 WD-1 JP-3 AS-1 & 2	**JPA# 4** JP-4 WD-1 JP-4 AS-1 & 2	**JPA# 5** JP-5 WD-1 JP-5 AS-1 & 2
JPA# 6 JP-6 WD-1 JP-6 AS-1 & 2	**JPA# 7** JP-7 WD-1 JP-7 AS-1 & 2	**JPA# 8** JP-8 WD-1 JP-8 AS-1 & 2	**JPA# 9** JP-9 WD-1 JP-9 AS-1 & 2	**JPA# 10** JP-10 WD-1 JP-10 AS-1 & 2
JPA# 11 JP-11 WD-1 JP-11 AS-1 & 2	**JPA# 12** JP-12 WD-1 JP-12 AS-1 & 2	**JPA# 13** JP-13 WD-1 JP-13 AS-1 & 2	**JPA# 14** JP-14 WD-1 JP-14 AS-1 & 2	**JPA# 15** JP-15 WD-1 JP-15 AS-1 & 2
JPA# 16 JP-16 WD-1 JP-16 AS-1 & 2	**JPA# 17** JP-17 WD-1 JP-17 AS-1 & 2	**JPA# 18** JP-18 WD-1 JP-18 AS-1 & 2	**JPA# 19** JP-19 WD-1 JP-19 AS-1 & 2	**JPA# 20** JP-20 WD-1 JP-20 AS-1 & 2

Note: JP-XX-WD-1 = Wedge Bearing Surface
JP-XX AS-1 & 2 = Set Screw Gaps and Tacks

Jet Pump Hold Down Beams on Jet Pumps # 1 through 20 were ultrasonically examined in the Bolt Hole Region (BB-1), Radius Region (BB-2), and Taper Region (BB-3).

Reference: 0-TI-365, Paragraph 7.8 and Appendix 9.2 and BWRVIP-41, BWR Jet Pump Assembly Inspection and Flaw Evaluation Guidelines, EPRI TR-108728.

Examination Results: Reference ISI Report R-054 and R-065.

OWNER: TENNESSEE VALLEY AUTHORITY OFFICE OF NUCLEAR POWER 1101 MARKET STREET CHATTANOOGA, TENNESSEE 37402	PLANT: BROWNS FERRY NUCLEAR PLANT P.O. BOX 2000 DECATUR, ALABAMA 35602
UNIT: TWO	CERTIFICATE OF AUTHORIZATION: NOT REQUIRED.
COMMERCIAL SERVICE DATE: MARCH 1, 1975	
NATIONAL BOARD NUMBER FOR UNIT: NOT REQUIRED.	

Paragraph 7.11.8 Level Instrumentation Nozzle Safe Ends BWRVIP-49: 6 VT-2 (Visual) Examinations

Perform a VT-2 Visual inspection of the Level Instrumentation safe end to nozzle weld of the N11A-SE, N11B-SE, N12A-SE, N12B-SE, N16-SE, and N16B-SE, nozzles in accordance with the recommendations of BWRVIP-49. The recommendations are to perform a visual leak check of the safe end to nozzle weld during the drywell leak check effort performed each outage. Insulation removal is not necessary to perform the leak check. The implementation interval shall start with the Unit 2 Cycle 13 Refueling Outage. Leakage inspections shall be performed as described during the Cycle 13 outage and during each subsequent refueling outage.

Reference: 0-TI-365, Paragraph 7.12 and BWRVIP-49, "Instrument Penetration Inspection and Flaw *Evaluation Guidelines"*

Examination Results: A VT-2 examination was performed on all six nozzle safe-end welds during the system leakage test and revealed no leakage.

Paragraph 7.11.9 Core Plate delta/P Standby Liquid Control (SLC) Nozzle BWRVIP-27: 1 VT-2 (Visual) Examination

Perform a VT-2 Visual inspection of the Core Plate delta/P Standby Liquid Control (SLC), nozzle to safe end weld and safe end of the N10-SE in accordance with the recommendations of BWRVIP-27. The recommendations are to perform a visual leak check of the safe end to nozzle weld and safe end during the drywell leak check effort performed each outage. Insulation removal is required to perform the leak check. The implementation interval shall start with the Unit 2 Cycle 13 Refueling Outage.

Leakage inspections shall be performed as described during the Cycle 13 outage and during each subsequent refueling outage.

Reference: 0-TI-365, Paragraph 7.16 and Appendix 9.2 and BWRVIP-27, "BWR Standby Liquid Control System/Core Plate delta/P Inspection and Flaw Evaluation Guidelines"

Examination Results: A VT-2 examination was performed on the nozzle to safe-end weld and safe end during the system leakage test and revealed no leakage.

OWNER: TENNESSEE VALLEY AUTHORITY OFFICE OF NUCLEAR POWER 1101 MARKET STREET CHATTANOOGA, TENNESSEE 37402	PLANT: BROWNS FERRY NUCLEAR PLANT P.O. BOX 2000 DECATUR, ALABAMA 35602
UNIT: TWO	CERTIFICATE OF AUTHORIZATION: NOT REQUIRED.
COMMERCIAL SERVICE DATE: MARCH 1, 1975	
NATIONAL BOARD NUMBER FOR UNIT: NOT REQUIRED.	

TVA/Browns Ferry Nuclear Plant, NRC Commitment in FSAR Section 10.10.5: 6 Welds

TVA/BFN to monitor the Unit 2 Emergency Equipment Cooling Water (EECW) System 067, stainless steel butt welds each cycle to ensure structural integrity of the system. Perform radiography in accordance with TVA Nondestructive Examination (NDE) Procedures, of designated welds to monitor for Microbiologically Induced Corrosion (MIC) progress. Reference Work Order # 04-724255-000 and 04-717753-000.

Core Spray (CS) Loop II Room Coolers B & D Welds:

T-EECW-2-CBD-07B, T-EECW-2-CBD-10B, T-EECW-2-CBD-39B, AND T-EECW-2-40B.

Residual Heat Removal (RHR) Loop I Room Coolers A & C Welds:

T-EECW-2-AC-19B and T-EECW-2-23B.

Examination Results: No new MIC growth recorded.

OWNER: TENNESSEE VALLEY AUTHORITY OFFICE OF NUCLEAR POWER 1101 MARKET STREET CHATTANOOGA, TENNESSEE 37402	PLANT: BROWNS FERRY NUCLEAR PLANT P.O. BOX 2000 DECATUR, ALABAMA 35602
UNIT: TWO	CERTIFICATE OF AUTHORIZATION: NOT REQUIRED.
COMMERCIAL SERVICE DATE: MARCH 1, 1975	
NATIONAL BOARD NUMBER FOR UNIT: NOT REQUIRED.	

SECTION 2

EXAMINATION SUMMARY

EXAMINATIONS PERFORMED DURING

UNIT 2 CYCLE 13 OUTAGE

OWNER: TENNESSEE VALLEY AUTHORITY
NUCLEAR POWER GROUP
1101 MARKET STREET
CHATTANOOGA, TENNESSEE 37402

PLANT: BROWNS FERRY NUCLEAR PLANT
PO BOX 2000
DECATUR, ALABAMA 35609-2000

EXAM REQUIREMENT: B02-02
B04-02
B07-02
0TI365

UNIT: TWO CYCLE: 13 COMMERCIAL SERVICE DATE: MARCH 1, 1975

CERTIFICATION OF AUTHORIZATION: NOT REQUIRED
NATIONAL BOARD NUMBER FOR UNIT: NOT REQUIRED

System	Component Number	ISO Drawing	Exreq	Category	Item Number	Exam Scheduled	Calibration Standard	Exam Date	Exam Report	Exam Results	Comments
FWS	GFW-2-12	2-ISI-0269-C-01	B04-02	B-J	TS3432	UT	WB-78	20050324	R-015	P	
FWS	GFW-2-29	2-ISI-0269-C-01	B04-02	B-J	TS3432	UT	WB-78	20050324	R-016	P	
MSS	GMS-2-06	2-ISI-0222-C-01	B04-02	B-J	TS3432	UT	WB-78	20050330	R-034	P	
MSS	KMS-2-104	2-ISI-0222-C-01	B04-02	B-J	TS3432	UT	WB-78	20050331	R-035	P	
RECIR	KR-2-02	2-ISI-0270-C-01	B02-02	C	NU031	UT	WB-85	20050402	R-048	P	
RECIR	KR-2-03	2-ISI-0270-C-01	B02-02	C	NU031	UT	WB-85	20050401	R-043	P	
RECIR	KR-2-14	2-ISI-0270-C-01	B02-02	E	NU031	UT	ISI-165	20050403	R-050	P	SIZING UT
RECIR	KR-2-14	2-ISI-0270-C-01	B02-02	E	NU031	UT	WB-85	20050402	R-050	P	
RECIR	KR-2-36	2-ISI-0270-C-02	B02-02	E	NU031	UT	ISI-165	20050402	R-047	P	SIZING UT
RECIR	KR-2-36	2-ISI-0270-C-02	B02-02	E	NU031	UT	WB-85	20050401	R-047	P	
RECIR	KR-2-37	2-ISI-0270-C-02	B02-02	E	NU031	UT	ISI-165	20050401	R-046	P	SIZING UT
RECIR	KR-2-37	2-ISI-0270-C-02	B02-02	E	NU031	UT	WB-85	20050331	R-046	P	
RECIR	KR-2-41	2-ISI-0270-C-02	B02-02	E	NU031	UT	WB-85	20050330	R-042	P	
RECIR	KR-2-41	2-ISI-0270-C-02	B02-02	E	NU031	UT	ISI-165	20050401	R-042	P	SIZING UT
RECIR	KR-2-50	2-ISI-0270-C-02	B02-02	C	NU031	UT	WB-85	20050331	R-038	P	
RECIR	KR-2-51	2-ISI-0270-C-02	B02-02	C	NU031	UT	WB-85	20050403	R-051	P	
RHRS	DRHR-2-03	2-ISI-0221-C-01	B02-02	D	NU031	UT	WB-85	20050326	R-022	P	
RHRS	DRHR-2-03B	2-ISI-0221-C-01	B02-02	G	NU031	VT-2		20050410	R-052	P	
RHRS	DRHR-2-11	2-MSG-0018-C-09	B02-02	D	NU031	UT	WB-85	20050325	R-025	P	
RHRS	DRHR-2-13B	2-ISI-0221-C-01	B02-02	G	NU031	VT-2		20050410	R-052	P	
RHRS	DSRHR-2-06	2-ISI-0221-C-01	B04-02	B-J	TS3432	UT	WB-85	20050326	R-020	P	
RHRS	DSRHR-2-06	2-ISI-0221-C-01	B02-02	C	NU031	UT	WB-85	20050326	R-020	P	

OWNER: TENNESSEE VALLEY AUTHORITY
NUCLEAR POWER GROUP
1101 MARKET STREET
CHATTANOOGA, TENNESSEE 37402

PLANT: BROWNS FERRY NUCLEAR PLANT
PO BOX 2000
DECATUR, ALABAMA 35609-2000

EXAM REQUIREMENT: B02-02
B04-02
B07-02
0TI365

UNIT: TWO CYCLE: 13 COMMERCIAL SERVICE DATE: MARCH 1, 1975

CERTIFICATION OF AUTHORIZATION: NOT REQUIRED
NATIONAL BOARD NUMBER FOR UNIT: NOT REQUIRED

System	Component Number	ISO Drawing	Exreq	Category	Item Number	Exam Scheduled	Calibration Standard	Exam Date	Exam Report	Exam Results	Comments
RHRS	DSRHR-2-09	2-ISI-0221-C-01	B02-02	C	NU031	UT	WB-85	20050329	R-027	P	Hanger 2-47B452S0229 must be moved to UT this Weld
RPV	ACCESS HOLE COVER	2-CHM-2046-C-02	0TI365	N/A	N/A	EVT-1		20050328	R-054	P	0' AND 180'. Procedure 54-ISI-363-02 (SDCN# 30-5038911-02).
RPV	JET PUMPS		0TI365	N/A	N/A	UT		20050326	R-065	P	Procedure 54-ISI-159-07 (SDCN# 30-5061633-00).
RPV	JET PUMPS		0TI365	N/A	N/A	VT-1		20050329	R-054	P	Procedure 54-ISI-363-02 (SDCN# 30-5038911-02).
RPV	N10-SE	2-ISI-0380-C-01	B07-02	BWRVIP	N/A	VT-2		20050410	R-052	P	
RPV	N11A-SE	2-ISI-0383-C-01	B07-02	BWRVIP	N/A	VT-2		20050410	R-052	P	
RPV	N11B-SE	2-ISI-0383-C-02	B07-02	BWRVIP	N/A	VT-2		20050410	R-052	P	
RPV	N12A-SE	2-ISI-0383-C-01	B07-02	BWRVIP	N/A	VT-2		20050410	R-052	P	
RPV	N12B-SE	2-ISI-0383-C-02	B07-02	BWRVIP	N/A	VT-2		20050410	R-052	P	
RPV	N-16A-SE	2-ISI-0383-C-01	B07-02	BWRVIP	N/A	VT-2		20050410	R-052	P	
RPV	N-16B-SE	2-ISI-0383-C-02	B07-02	BWRVIP	N/A	VT-2		20050410	R-052	P	
RPV	RCRD-2-33	2-ISI-0272-C-01	B02-02	D	NU031	UT	WB-85	20050331	R-041	P	
RPV	RPV CORE PLATE	2-CHM-2046-C-02	0TI365	N/A	N/A	VT-3		20050327	R-054	P	Includes, Core Plate Bolting and Core Plate Plugs. Procedure 54-ISI-363-02 (SDCN# 30-5038911-02).
RPV	RPV CR GUIDE TUBES	2-CHM-2046-C-02	0TI365	N/A	N/A	VT-1E		20050327	R-054	P	Procedure 54-ISI-363-02 (SDCN# 30-5038911-02).
RPV	RPV CR GUIDE TUBES	2-CHM-2046-C-02	0TI365	N/A	N/A	VT-3		20050327	R-054	P	Procedure 54-ISI-363-02 (SDCN# 30-5038911-02).
RPV	RPV CS PIPING	2-CHM-2046-C-02	0TI365	N/A	N/A	EVT-1		20050326	R-054	P	Procedure 54-ISI-363-02 (SDCN# 30-5038911-02).
RPV	RPV CS PIPING	2-CHM-2046-C-02	0TI365	N/A	N/A	UT			R-065	P	Procedure 54-ISI-160-02 (SDCN# 30-5056952 REV.00). Exam dates 20050326 to 20050329. Core Spray Downcomer Piping A, B, C, and D.
RPV	RPV CS PIPING	2-CHM-2046-C-02	0TI365	N/A	N/A	VT-3		20050326	R-054	P	Includes T-Box "A" @ 120' and T-Box "B" @ 240'. Procedure 54-ISI-363-02 (SDCN# 30-5038911-02).
RPV	RPV SHROUD WELD H	2-CHM-2046-C-02	0TI365	N/A	N/A	EVT-1		20050328	R-054	P	Weld H-9. Procedure 54-ISI-363-02 (SDCN# 30-5038911-02).

OWNER: TENNESSEE VALLEY AUTHORITY
NUCLEAR POWER GROUP
1101 MARKET STREET
CHATTANOOGA, TENNESSEE 37402

PLANT: BROWNS FERRY NUCLEAR PLANT
PO BOX 2000
DECATUR, ALABAMA 35609-2000

EXAM REQUIREMENT: B02-02
B04-02
B07-02
0TI365

UNIT: TWO CYCLE: 13 COMMERCIAL SERVICE DATE: MARCH 1, 1975

CERTIFICATION OF AUTHORIZATION: NOT REQUIRED
NATIONAL BOARD NUMBER FOR UNIT: NOT REQUIRED

System	Component Number	ISO Drawing	Exreq	Category	Item Number	Exam Scheduled	Calibration Standard	Exam Date	Exam Report	Exam Results	Comments
RPV	RPV SHROUD WELD H	2-CHM-2046-C-02	0TI365	N/A	N/A	UT	BF-18	20050323	R-010	P	Weld H-9. EXAMINER W. J. PERSINGER. PROCEDURE 54-ISI-166, SDCN# 30-5041850-00. REFERENCE BWRVIP-38. TOTAL AREA SCANNED 120° AT 0' AND 180'
RPV	RPV STEAM DRYER	2-CHM-2046-C-02	0TI365	N/A	N/A	VT-1		20050330	R-054	P	Procedure 54-ISI-363-02 (SDCN# 30-5038911-02).
RPV	RPV STEAM DRYER	2-CHM-2046-C-02	0TI365	N/A	N/A	VT-3		20050330	R-054	P	Procedure 54-ISI-363-02 (SDCN# 30-5038911-02).
RWCU	RCRD-2-50	2-ISI-0272-C-01	B02-02	D	NU031	UT	WB-85	20050329	R-028	P	

OWNER: TENNESSEE VALLEY AUTHORITY OFFICE OF NUCLEAR POWER 1101 MARKET STREET CHATTANOOGA, TENNESSEE 37402	PLANT: BROWNS FERRY NUCLEAR PLANT P.O. BOX 2000 DECATUR, ALABAMA 35602
UNIT: TWO	CERTIFICATE OF AUTHORIZATION: NOT REQUIRED.
COMMERCIAL SERVICE DATE: MARCH 1, 1975	
NATIONAL BOARD NUMBER FOR UNIT: NOT REQUIRED.	

ATTACHMENT 2

IWE-BFN CONTAINMENT INSERVICE INSPECTION (CISI) PROGRAM

OWNER: TENNESSEE VALLEY AUTHORITY OFFICE OF NUCLEAR POWER 1101 MARKET STREET CHATTANOOGA, TENNESSEE 37402	PLANT: BROWNS FERRY NUCLEAR PLANT P.O. BOX 2000 DECATUR, ALABAMA 35602
UNIT: TWO	CERTIFICATE OF AUTHORIZATION: NOT REQUIRED.
COMMERCIAL SERVICE DATE: MARCH 1, 1975	
NATIONAL BOARD NUMBER FOR UNIT: NOT REQUIRED.	

The information contained in this report is provided in accordance with the requirements of 10CFR50.55a(b)(2)(x)(A), evaluation of inaccessible areas, and 10CFR50.55a(b)(2)(x)(D), evaluation for additioal examinations, as they pertain to containment inservice examinations performed during the BFN Unit 2 Cycle 13 refueling outage.

The subject examinations were performed in accordance with ASME Section XI Subsection IWE, 1992 Edition/1992 Addenda. BFN Unit 2 is in the second period of the first examination interval.

OWNER: TENNESSEE VALLEY AUTHORITY OFFICE OF NUCLEAR POWER 1101 MARKET STREET CHATTANOOGA, TENNESSEE 37402	PLANT: BROWNS FERRY NUCLEAR PLANT P.O. BOX 2000 DECATUR, ALABAMA 35602
UNIT: TWO	CERTIFICATE OF AUTHORIZATION: NOT REQUIRED.
COMMERCIAL SERVICE DATE: MARCH 1, 1975	
NATIONAL BOARD NUMBER FOR UNIT: NOT REQUIRED.	

BFN CONTAINMENT INSERVICE INSPECTION (CISI) PROGRAM U2C13 REFUELING OUTAGE SUMMARY REPORT

Unit:	BFN Unit 2
Refueling Outage:	U2C13
Period/Interval:	Second Period of the First Interval
Code of Record:	ASME Section XI, 1992 Edition/1992 Addenda
Program Procedure:	0-TI-376, Revision 4

Summary of Examinations

The records contained within the U2C13 Site Final Report comprise the Containment Inservice examinations performed to implement the requirements of ASME Section XI, Subsection IWE. The examinations are summarized as follows:

Table IWE-2500-1, Examination Category E-A, Containment Surfaces

There were no periodic examinations scheduled for the U2C13 outage. However, examinations were performed in support of maintenance activities as described below.

- The Coatings Program identified some areas of loose, flaking and peeling coatings on the drywell liner and torus vent header which were corrected by scrape back to sound coating. A VT-3 was performed before coating removal (scrape back) and another VT-3 was performed following coating removal (scrape back).
- The Coatings Program identified areas of light to heavy corrosion on the torus downcomers above waterline which was to be corrected by hydrolazing. A VT-3 was performed before coating removal (hydrolazing). A follow-up VT-3 was not performed because hydrolazing was cancelled and scrape back determined the corrosion was on surface of coating only.
- A VT-3 was performed on areas of the drywell liner at elevation 550' which are normally inaccessible, but were exposed during repair of the moisture seal barrier.

Table IWE-2500-1, Examination Category E-C, Containment Surfaces Requiring Augmented Examination

During U2C13, 100% of the Pressure Suppression Chamber interior air/water interface area was examined. The air/water interface is the only area currently identified as an augment area for BFN Unit 2. During the previous outage (U2C12), 100% of the Pressure Suppression Chamber exterior air/water interface area was examined. The combination of exams during U2C12 and U2C13 complete 100% of the examinations required by Code Category E-C, Item Number E4.11 for the Second Period.

Table IWE-2500-1, Examination Category E-D, Seals, Gaskets and Moisture Barriers

During U2C13, 100% of the Drywell moisture barrier seal at elevation 550 ft. was examined.

Table IWE-2500-1, Examination Category E-G, Pressure Retaining Bolting

No examinations were performed in this category.

OWNER: TENNESSEE VALLEY AUTHORITY OFFICE OF NUCLEAR POWER 1101 MARKET STREET CHATTANOOGA, TENNESSEE 37402	PLANT: BROWNS FERRY NUCLEAR PLANT P.O. BOX 2000 DECATUR, ALABAMA 35602
UNIT: TWO	CERTIFICATE OF AUTHORIZATION: NOT REQUIRED.
COMMERCIAL SERVICE DATE: MARCH 1, 1975	
NATIONAL BOARD NUMBER FOR UNIT: NOT REQUIRED.	

SUMMARY OF INDICATIONS

OWNER: TENNESSEE VALLEY AUTHORITY OFFICE OF NUCLEAR POWER 1101 MARKET STREET CHATTANOOGA, TENNESSEE 37402	PLANT: BROWNS FERRY NUCLEAR PLANT P.O. BOX 2000 DECATUR, ALABAMA 35602
UNIT: TWO	CERTIFICATE OF AUTHORIZATION: NOT REQUIRED.
COMMERCIAL SERVICE DATE: MARCH 1, 1975	
NATIONAL BOARD NUMBER FOR UNIT: NOT REQUIRED.	

BFN CONTAINMENT INSERVICE INSPECTION PROGRAM

ASME SECTION XI SUBSECTION IWE

This information contained in this Appendix is provided in accordance with the requirements of 10CFR50.55a (b)(2)(ix)(A), evaluation of inaccessible areas, and 10CFR50.55a(b)(2)(ix)(D), evaluation for additional examinations, as they pertain to containment inservice examinations performed during the BFN Unit 2 Cycle 13 refueling outage.

These subject examinations were performed in accordance with ASME Section XI Subsection IWE, 1992 Edition/1992 Addenda. BFN Unit 2 is in the second period of the first examination interval.

NOI No: U2C13-001	**Report No:** CISI-213-002	**Component:** Drywell Moisture Seal Barrier

Condition/Indication: Moisture seal barrier is separated from the drywell and concrete and is damaged.

EVALUATION OF INACCESSIBLE AREAS 10CFR50.55a(b)(2)(ix)(A)

(1) **Description of the type and estimated extent of degradation, and the conditions that led to the degradation:**

N/A. All areas of the seal have been examined. No inaccessible areas.

(2) **Evaluation of each area, and the result of the evaluation:**

N/A. All areas of the seal have been examined. No inaccessible areas.

(3) **Description of necessary corrective actions:**

Areas of Moisture Seal Barrier failure (e.g., separation from shell/concrete, damage, depression, etc.) were removed and then replaced to meet the standards specified in 0-SI-4.7.A.2.K.

ADDITIONAL EXAMINATIONS 10CFR50.55a(b)(2)(ix)(D)

(1) ***Description of each flaw or area, including the extent of degradation, and the conditions that led to the degradation::***

N/A. All areas of the seal have been examined. No additional examinations required.

(2) **The acceptability of each flaw or area, and the need for additional examinations to verify that similar degradation does not exist in similar components:**

N/A. All areas of the seal have been examined. No additional examinations required.

OWNER: TENNESSEE VALLEY AUTHORITY OFFICE OF NUCLEAR POWER 1101 MARKET STREET CHATTANOOGA, TENNESSEE 37402	PLANT: BROWNS FERRY NUCLEAR PLANT P.O. BOX 2000 DECATUR, ALABAMA 35602
UNIT: TWO	CERTIFICATE OF AUTHORIZATION: NOT REQUIRED.
COMMERCIAL SERVICE DATE: MARCH 1, 1975	
NATIONAL BOARD NUMBER FOR UNIT: NOT REQUIRED.	

(3) A description of the necessary corrective actions:

Areas of Moisture Seal Barrier failure (e.g., separation from shell/concrete, damage, depression, etc.) were removed and then replaced to meet the standards specified in 0-SI-4.7.A.2.K.

(4) The number and type of additional examinations to ensure detection of similar degradation in similar components:

N/A. All areas of the seal have been examined. No additional examinations required.

NOI No: U2C13-002	**Report No:** CISI-213-001	**Component:** Drywell Liner Elevation 584 ft.

Condition/Indication: Loose and peeling paint on the metal containment liner.

EVALUATION OF INACCESSIBLE AREAS **10CFR50.55a(b)(2)(ix)(A)**

(1) Description of the type and estimated extent of degradation, and the conditions that led to the degradation:

NOI U2C13-002 and Report CISI-213-001 document conditions noted during VT-3 examination of the steel Drywell containment vessel on elevation 584 ft. in areas identified for coating removal by the Coatings Program. This examination was performed to satisfy the requirements of IWE-2500(b), examination of coating prior to removal. The reported conditions consist of flaking and peeling coating.

(2) Evaluation of each area, and the result of the evaluation:

The coating failure identified during the U2C13 RFO is the result of oxidation of the zinc primer coat. The protective function of the zinc primer is sacrificial and in time, oxidation will occur in all areas, accessible and inaccessible, resulting in delamination of the epoxy top coat. The loss of the top coat is not expected to be detrimental to the steel liner in the inaccessible areas because the remaining zinc primer, the nitrogen atmosphere and the absence of moisture/moisture retaining crevasses on the Liner wall will provide corrosion protection for the primary containment boundary.

(3) Description of necessary corrective actions:

The areas of coating failure (e.g., delamination, peeling, blistering, etc.) were scraped back until proper adhesion (sound coating) was obtained. In areas where scrape back was performed the zinc primer is intact and will provide corrosion protection for the primary containment boundary. The areas of coating failure have been documented and are being tracked in the plant corrective action program (PER 80430).

OWNER: TENNESSEE VALLEY AUTHORITY OFFICE OF NUCLEAR POWER 1101 MARKET STREET CHATTANOOGA, TENNESSEE 37402	PLANT: BROWNS FERRY NUCLEAR PLANT P.O. BOX 2000 DECATUR, ALABAMA 35602
UNIT: TWO	CERTIFICATE OF AUTHORIZATION: NOT REQUIRED.
COMMERCIAL SERVICE DATE: MARCH 1, 1975	
NATIONAL BOARD NUMBER FOR UNIT: NOT REQUIRED.	

ADDITIONAL EXAMINATIONS 10CFR50.55a(b)(2)(ix)(D)

(1) Description of each flaw or area, including the extent of degradation, and the conditions that led to the degradation::

NOI U2C13-002 documents indications noted during VT-3 examination of containment vessel surface in areas identified for coating removal on drywell elevation 584 ft. . The indications noted consist of areas of flaking and peeling of the applied coating. This examination was performed to satisfy the requirements of IWE-2500(b), examination of coating prior to removal.

(2) The acceptability of each flaw or area, and the need for additional examinations to verify that similar degradation does not exist in similar components:

The coating failure identified during the U2C13 RFO is the result of oxidation of the zinc primer coat. The protective function of the zinc primer is sacrificial and in time, oxidation will occur in all areas, accessible and inaccessible, resulting in delamination of the epoxy top coat. The loss of the top coat is not expected to be detrimental to the steel liner in the inaccessible areas because the remaining zinc primer, the nitrogen atmosphere and the absence of moisture/moisture retaining crevasses on the Liner wall will provide corrosion protection for the primary containment boundary.

(3) A description of the necessary corrective actions:

The areas of coating failure (e.g., delamination, peeling, blistering, etc.) were scraped back until proper adhesion (sound coating) was obtained. In areas where scrape back was performed the zinc primer is intact and will provide corrosion protection for the primary containment boundary. The areas of coating failure have been documented and are being tracked in the plant corrective action program (PER 80430).

(4) The number and type of additional examinations to ensure detection of similar degradation in similar components:

During the previous U2C12 outage, 100% of the accessible areas of the Drywell Liner received a general visual examination and all areas identified were corrected as required. During this outage, U2C13, coating examinations in accordance with 0-TI-417 were performed in 100% of the accessible areas of the Drywell Liner. No additional examinations are required.

OWNER: TENNESSEE VALLEY AUTHORITY OFFICE OF NUCLEAR POWER 1101 MARKET STREET CHATTANOOGA, TENNESSEE 37402	PLANT: BROWNS FERRY NUCLEAR PLANT P.O. BOX 2000 DECATUR, ALABAMA 35602
UNIT: TWO	CERTIFICATE OF AUTHORIZATION: NOT REQUIRED.
COMMERCIAL SERVICE DATE: MARCH 1, 1975	
NATIONAL BOARD NUMBER FOR UNIT: NOT REQUIRED.	

NOI No: U2C13-003	Report No: CISI-213-004	Component: Torus Vent System Downcomers Above Water Line

Condition/Indication: Downcomers exhibit light to heavy corrosion with blisters and pitting.

EVALUATION OF INACCESSIBLE AREAS 10CFR50.55a(b)(2)(ix)(A)

(1) Description of the type and estimated extent of degradation, and the conditions that led to the degradation:

NOI U2C13-003 and Report CISI-213-004 document conditions noted during VT-3 examination of the steel Pressure Suppression Chamber (Torus) vent system downcomers above the water line in areas identified for coating removal by the Coatings Program. This examination was performed to satisfy the requirements of IWE-2500(b), examination of coating prior to removal. The reported conditions consist of light to heavy corrosion with blisters and pitting.

(2) Evaluation of each area, and the result of the evaluation:

The coating failure identified during the U2C13 RFO is the result of moisture intrusion through pinholes in the coating. The pinholes are random in location and continue to develop with time (age of coating). The rust on the surface of coating is the result of a cleanup sanding performed with contaminated sanding material during recovery. This surface rust can result in the development of pinholes. With minimal moisture and the nitrogen atmosphere during operation corrosion of the downcomer steel should not occur or be very light.

(3) Description of necessary corrective actions:

The coating in downcomers with areas of heavy corrosion and blisters were scraped to remove the failed coating. Scraping identified that the light to heavy corrosion was a condition that existed on the surface of the coating and did not affect the adhesion or protective qualities of the coating. Minor blisters at the weld joint and in the surface of the coating in some of the downcomers were removed. In these spots the substrate had surface rust and the pitting was minor and light in appearance. UT readings (BOP-284) taken in five of the downcomers with heavy corrosion identified that there is no wall loss. Areas of coating failure have been documented under PER 80430.

ADDITIONAL EXAMINATIONS 10CFR50.55a(b)(2)(ix)(D)

(1) Description of each flaw or area, including the extent of degradation, and the conditions that led to the degradation::

NOI U2C13-003 and Report CISI-213-004 document conditions noted during VT-3 examination of the steel Pressure Suppression Chamber (Torus) vent system downcomers above the water line in areas identified for coating removal by the Coatings Program. This examination was performed to satisfy the requirements of IWE-2500(b), examination of coating prior to removal. The reported conditions consist of light to heavy corrosion with blisters and pitting.

OWNER: TENNESSEE VALLEY AUTHORITY OFFICE OF NUCLEAR POWER 1101 MARKET STREET CHATTANOOGA, TENNESSEE 37402	PLANT: BROWNS FERRY NUCLEAR PLANT P.O. BOX 2000 DECATUR, ALABAMA 35602
UNIT: TWO	CERTIFICATE OF AUTHORIZATION: NOT REQUIRED.
COMMERCIAL SERVICE DATE: MARCH 1, 1975	
NATIONAL BOARD NUMBER FOR UNIT: NOT REQUIRED.	

(2) The acceptability of each flaw or area, and the need for additional examinations to verify that similar degradation does not exist in similar components:

The coating failure identified during the U2C13 RFO is the result of moisture intrusion through pinholes in the coating. The pinholes are random in location and continue to develop with time (age of coating). The rust on the surface of coating is the result of a cleanup sanding performed with contaminated sanding material during recovery. This surface rust can result in the development of pinholes. With minimal moisture and the nitrogen atmosphere during operation corrosion of the downcomer steel should not occur or be very light.

(3) A description of the necessary corrective actions:

The coating in downcomers with areas of heavy corrosion and blisters were scraped to remove the failed coating. Scraping identified that the light to heavy corrosion was a condition that existed on the surface of the coating and did not affect the adhesion or protective qualities of the coating. Minor blisters at the weld joint and in the surface of the coating in some of the downcomers were removed. In these spots the substrate had surface rust and the pitting was minor and light in appearance. UT readings (BOP-284) taken in five of the downcomers with heavy corrosion identified that there is no wall loss. Areas of coating failure have been documented under PER 80430.

(4) The number and type of additional examinations to ensure detection of similar degradation in similar components:

During the previous U2C12 outage, 100% of the accessible areas of the downcomers received a general visual examination and all areas identified were corrected as required. During the U2C13 RFO, coating examinations in accordance with 0-TI-417 were performed in 100% of the accessible areas of the downcomers. This NOI documents recordable indications in areas before coating repairs were initiated. No additional examinations are required.

NOI No: U2C13-004	Report No: CISI-213-007	Component: Drywell Liner Elevation 550 ft.

Condition/Indication: Pitting and corrosion identified where moisture seal barrier was removed.

EVALUATION OF INACCESSIBLE AREAS **10CFR50.55a(b)(2)(ix)(A)**

(1) Description of the type and estimated extent of degradation, and the conditions that led to the degradation:

NOI U2C13-004 and Report CISI-213-007 document conditions noted during VT-3 examination of the steel Primary Containment liner in areas where the moisture seal barrier was removed. This examination was performed because the normally inaccessible area was exposed during repair of the moisture seal barrier. The reported conditions consist of pitting and corrosion.

OWNER: TENNESSEE VALLEY AUTHORITY OFFICE OF NUCLEAR POWER 1101 MARKET STREET CHATTANOOGA, TENNESSEE 37402	PLANT: BROWNS FERRY NUCLEAR PLANT P.O. BOX 2000 DECATUR, ALABAMA 35602
UNIT: TWO	CERTIFICATE OF AUTHORIZATION: NOT REQUIRED.
COMMERCIAL SERVICE DATE: MARCH 1, 1975	
NATIONAL BOARD NUMBER FOR UNIT: NOT REQUIRED.	

(2) Evaluation of each area, and the result of the evaluation:

Pitting was found in the Primary Containment liner in selected locations behind the moisture seal barrier. This pitting is located in the top 2/3 of the 2 inch deep "V" groove. No active corrosion was found. UT readings (BOP-287) found the Primary Containment liner thickness to be above the 1 inch minimum allowable thickness.

Inaccessible areas are located under the 6 foot wide air duct at the 90° azimuth and 270° azimuth. Liner pitting has been the result of moisture entrapment. Due to age and/or damage, the seal separates from the liner allowing moisture, if present, to get between the seal and liner. Based on past inspection, the seal under the duct has not separated from the liner until the U2C13 outage. Since there was not any moisture or water in the areas identified, and during plant operation the atmosphere is inerted with nitrogen and there will be some remaining ligament in the seal barrier, it is concluded that seal barrier will perform its intended function. Therefore, the present condition should be acceptable for continued use.

(3) Description of necessary corrective actions:

No other corrective actions are necessary.

ADDITIONAL EXAMINATIONS 10CFR50.55a(b)(2)(ix)(D)

(1) Description of each flaw or area, including the extent of degradation, and the conditions that led to the degradation::

NOI U2C13-004 documents conditions noted during VT-3 examination of the steel Primary Containment liner in areas where the moisture seal barrier was removed. This examination was performed because the normally inaccessible area was exposed during repair of the moisture seal barrier. The reported conditions consist of pitting and corrosion.

(2) The acceptability of each flaw or area, and the need for additional examinations to verify that similar degradation does not exist in similar components:

Inaccessible areas are located under the 6 foot wide air duct at the 90° azimuth and 270° azimuth. Liner pitting has been the result of moisture entrapment. Due to age and/or damage, the seal separates from the liner allowing moisture, if present, to get between the seal and liner. Based on past inspection, the seal under the duct has not separated from the liner until the U2C13 outage. Since there was not any moisture or water in the areas identified, and during plant operation the atmosphere is inerted with nitrogen and there will be some remaining ligament in the seal barrier, it is concluded that seal barrier will perform its intended function. Therefore, the present condition should be acceptable for continued use.

(3) A description of the necessary corrective actions:

Pitting was found in the Primary Containment liner in selected locations behind the moisture seal barrier. This pitting is located in the top 2/3 of the 2 inch deep "V" groove. No active corrosion was found. UT readings (BOP-287) found the Primary Containment liner thickness to be above the 1 inch minimum allowable thickness. No corrective actions are necessary.

OWNER: TENNESSEE VALLEY AUTHORITY OFFICE OF NUCLEAR POWER 1101 MARKET STREET CHATTANOOGA, TENNESSEE 37402	PLANT: BROWNS FERRY NUCLEAR PLANT P.O. BOX 2000 DECATUR, ALABAMA 35602
UNIT: TWO	CERTIFICATE OF AUTHORIZATION: NOT REQUIRED.
COMMERCIAL SERVICE DATE: MARCH 1, 1975	
NATIONAL BOARD NUMBER FOR UNIT: NOT REQUIRED.	

(4) The number and type of additional examinations to ensure detection of similar degradation in similar components:

In all locations where the moisture seal barrier was removed the liner has been checked for pitting. Pitting depths have been measured to determine loss of liner thickness. In no case has the minimum allowable thickness of one inch been reached. No additional examinations are required.

NOI No: U2C13-005	**Report No:** CISI-213-005	**Component:** Drywell Liner Elevation 616 ft.

Condition/Indication: Loose flaking paint identified on shell prior to scrape back to sound coating.

EVALUATION OF INACCESSIBLE AREAS **10CFR50.55a(b)(2)(ix)(A)**

(1) Description of the type and estimated extent of degradation, and the conditions that led to the degradation:

NOI U2C13-005 and Report CISI-213-005 document conditions noted during VT-3 examination of the steel Primary Containment Drywell at elevation 616 ft. in areas identified for coating removal by the Coatings Program. This examination was performed to satisfy the requirements of IWE-2500(b), examination of coating prior to removal. The reported conditions consist of loose flaking paint.

(2) Evaluation of each area, and the result of the evaluation:

The coating failure identified during the U2C13 RFO is the result of oxidation of the zinc primer coat. The protective function of the zinc primer is sacrificial and in time, oxidation will occur in all areas, accessible and inaccessible, resulting in delamination of the epoxy top coat. The loss of the top coat is not expected to be detrimental to the steel liner in the accessible areas because the remaining zinc primer, the nitrogen atmosphere during operation, and the absence of moisture/moisture retaining crevasses on the Liner wall will provide corrosion protection for the primary containment boundary.

(3) *Description of necessary corrective actions:*

The areas of coating failure (e.g., delamination, peeling, blistering, etc.) were scraped back until proper adhesion (sound coating) was obtained. In areas where scrape back was performed the zinc primer is intact and will provide corrosion protection for the primary containment boundary. The areas of coating failure have been documented and are being tracked in the plant corrective action program (PER 80430).

ADDITIONAL EXAMINATIONS **10CFR50.55a(b)(2)(ix)(D)**

(1) Description of each flaw or area, including the extent of degradation, and the conditions that led to the degradation::

NOI U2C13-005 and Report CISI-213-005 document conditions noted during VT-3 examination of the steel Primary Containment Drywell at elevation 616 ft. in areas identified for coating removal by the Coatings Program. This examination was performed to satisfy the requirements of IWE-2500(b), examination of coating prior to removal. The reported conditions consist of loose flaking paint.

OWNER: TENNESSEE VALLEY AUTHORITY OFFICE OF NUCLEAR POWER 1101 MARKET STREET CHATTANOOGA, TENNESSEE 37402	PLANT: BROWNS FERRY NUCLEAR PLANT P.O. BOX 2000 DECATUR, ALABAMA 35602
UNIT: TWO	CERTIFICATE OF AUTHORIZATION: NOT REQUIRED.
COMMERCIAL SERVICE DATE: MARCH 1, 1975	
NATIONAL BOARD NUMBER FOR UNIT: NOT REQUIRED.	

(2) The acceptability of each flaw or area, and the need for additional examinations to verify that similar degradation does not exist in similar components:

The coating failure identified during the U2C13 RFO is the result of oxidation of the zinc primer coat. The protective function of the zinc primer is sacrificial and in time, oxidation will occur in all areas, accessible and inaccessible, resulting in delamination of the epoxy top coat. The loss of the top coat is not expected to be detrimental to the steel liner in the accessible areas because the remaining zinc primer, the nitrogen atmosphere during operation, and the absence of moisture/moisture retaining crevasses on the Liner wall will provide corrosion protection for the primary containment boundary.

(3) A description of the necessary corrective actions:

The areas of coating failure (e.g., delamination, peeling, blistering, etc.) were scraped back until proper adhesion (sound coating) was obtained. In areas where scrape back was performed the zinc primer is intact and will provide corrosion protection for the primary containment boundary. The areas of coating failure have been documented and are being tracked in the plant corrective action program (PER 80430).

(4) The number and type of additional examinations to ensure detection of similar degradation in similar components:

During the previous U2C12 outage, 100% of the accessible areas of the Drywell Liner received a general visual examination and all areas identified were corrected as required. During this outage, U2C13, coating examinations in accordance with 0-TI-417 were performed in 100% of the accessible areas of the Drywell Liner. This NOI documents recordable conditions in areas before coating repairs were initiated. No additional examinations are required.

NOI No: U2C13-006	**Report No:** CISI-213-008	**Component:** Drywell Liner Elevation 563 ft.

Condition/Indication: Blistering and flaking coating on Drywell liner elevation 563 ft.

EVALUATION OF INACCESSIBLE AREAS 10CFR50.55a(b)(2)(ix)(A)

(1) Description of the type and estimated extent of degradation, and the conditions that led to the degradation:

NOI U2C13-006 and Report CISI-213-008 document conditions noted during VT-3 examination of the steel Primary Containment Drywell at elevation 563 ft. in areas identified for coating removal by the Coatings Program. This examination was performed to satisfy the requirements of IWE-2500(b), examination of coating prior to removal. The reported conditions consist of blistering and flaking coating.

OWNER: TENNESSEE VALLEY AUTHORITY OFFICE OF NUCLEAR POWER 1101 MARKET STREET CHATTANOOGA, TENNESSEE 37402	PLANT: BROWNS FERRY NUCLEAR PLANT P.O. BOX 2000 DECATUR, ALABAMA 35602
UNIT: TWO	CERTIFICATE OF AUTHORIZATION: NOT REQUIRED.
COMMERCIAL SERVICE DATE: MARCH 1, 1975	
NATIONAL BOARD NUMBER FOR UNIT: NOT REQUIRED.	

(2) Evaluation of each area, and the result of the evaluation:

The coating failure identified during the U2C13 RFO is the result of oxidation of the zinc primer coat. The protective function of the zinc primer is sacrificial and in time, oxidation will occur in all areas, accessible and inaccessible, resulting in delamination of the epoxy top coat. The loss of the top coat is not expected to be detrimental to the steel liner in the accessible areas because the remaining zinc primer, the nitrogen atmosphere during operation, and the absence of moisture/moisture retaining crevasses on the Liner wall will provide corrosion protection for the primary containment boundary.

(3) Description of necessary corrective actions:

The areas of coating failure (e.g., delamination, peeling, blistering, etc.) were scraped back until proper adhesion (sound coating) was obtained. In areas where scrape back was performed the zinc primer is intact and will provide corrosion protection for the primary containment boundary. The areas of coating failure have been documented and are being tracked in the plant corrective action program (PER 80430).

ADDITIONAL EXAMINATIONS 10CFR50.55a(b)(2)(ix)(D)

(1) Description of each flaw or area, including the extent of degradation, and the conditions that led to the degradation::

NOI U2C13-006 and Report CISI-213-008 document conditions noted during VT-3 examination of the steel Primary Containment Drywell at elevation 616 ft. in areas identified for coating removal by the Coatings Program. This examination was performed to satisfy the requirements of IWE-2500(b), examination of coating prior to removal. The reported conditions consist of loose flaking paint.

(2) The acceptability of each flaw or area, and the need for additional examinations to verify that similar degradation does not exist in similar components:

The coating failure identified during the U2C13 RFO is the result of oxidation of the zinc primer coat. The protective function of the zinc primer is sacrificial and in time, oxidation will occur in all areas, accessible and inaccessible, resulting in delamination of the epoxy top coat. The loss of the top coat is not expected to be detrimental to the steel liner in the accessible areas because the remaining zinc primer, the nitrogen atmosphere during operation, and the absence of moisture/moisture retaining crevasses on the Liner wall will provide corrosion protection for the primary containment boundary.

(3) A description of the necessary corrective actions:

The areas of coating failure (e.g., delamination, peeling, blistering, etc.) were scraped back until proper adhesion (sound coating) was obtained. In areas where scrape back was performed the zinc primer is intact and will provide corrosion protection for the primary containment boundary. The areas of coating failure have been documented and are being tracked in the plant corrective action program (PER 80430).

OWNER: TENNESSEE VALLEY AUTHORITY OFFICE OF NUCLEAR POWER 1101 MARKET STREET CHATTANOOGA, TENNESSEE 37402	PLANT: BROWNS FERRY NUCLEAR PLANT P.O. BOX 2000 DECATUR, ALABAMA 35602
UNIT: TWO	CERTIFICATE OF AUTHORIZATION: NOT REQUIRED.
COMMERCIAL SERVICE DATE: MARCH 1, 1975	
NATIONAL BOARD NUMBER FOR UNIT: NOT REQUIRED.	

(4) The number and type of additional examinations to ensure detection of similar degradation in similar components:

During the previous U2C12 outage, 100% of the accessible areas of the Drywell Liner received a general visual examination and all areas identified were corrected as required. During this outage, U2C13, coating examinations in accordance with 0-TI-417 were performed in 100% of the accessible areas of the Drywell Liner. This NOI documents recordable conditions in areas before coating repairs were initiated. No additional examinations are required.

NOI No: U2C13-007	**Report No:** N/A	**Component:** N/A

Condition/Indication: This NOI was voided.

NOI No: U2C13-008	**Report No:** CISI-213-012	**Component:** Penetration 2-X-5G

Condition/Indication: Flaking and bubbled paint near bottom end of penetration.

EVALUATION OF INACCESSIBLE AREAS 10CFR50.55a(b)(2)(ix)(A)

(1) Description of the type and estimated extent of degradation, and the conditions that led to the degradation:

NOI U2C13-008 and Report CISI-213-012 document conditions noted during VT-3 examination of the steel Primary Containment Penetration 2-X-5G in areas identified for coating removal by the Coatings Program. This examination was performed to satisfy the requirements of IWE-2500(b), examination of coating prior to removal. The reported conditions consist of flaking and bubbled coating.

(2) Evaluation of each area, and the result of the evaluation:

During the Unit 2 recovery coating repair was performed within the Main Vent Line and Vent Header. The repair coating used was Valspar 78 which was being applied over Plastite 7107. During application the configuration of the surface being repaired resulted in a thin (less than 3 mils) overspray coat of paint being applied to a surface that did not receive/require surface preparation. These areas are small in area (less than 1 sq. ft.) and over time will delaminate. Sound coating does exist under the overspray coat.

(3) Description of necessary corrective actions:

The coating failure identified during the U2C13 RFO is the result of moisture intrusion through pinholes in the coating. The pinholes are random in location and will continue to develop with time (age of coating). With minimal moisture and the nitrogen atmosphere during operation, corrosion of the steel should not occur or be very light. Coating adhesion will be lost, so continued surveillance under 0-TI-417 will be performed for the removal of loose coatings. Active corrosion cells were not found.

OWNER: TENNESSEE VALLEY AUTHORITY OFFICE OF NUCLEAR POWER 1101 MARKET STREET CHATTANOOGA, TENNESSEE 37402	PLANT: BROWNS FERRY NUCLEAR PLANT P.O. BOX 2000 DECATUR, ALABAMA 35602
UNIT: TWO	CERTIFICATE OF AUTHORIZATION: NOT REQUIRED.
COMMERCIAL SERVICE DATE: MARCH 1, 1975	
NATIONAL BOARD NUMBER FOR UNIT: NOT REQUIRED.	

ADDITIONAL EXAMINATIONS 10CFR50.55a(b)(2)(ix)(D)

(1) Description of each flaw or area, including the extent of degradation, and the conditions that led to the degradation::

NOI U2C13-008 and Report CISI-213-012 document conditions noted during VT-3 examination of the steel Primary Containment Penetration 2-X-5G in areas identified for coating removal by the Coatings Program. This examination was performed to satisfy the requirements of IWE-2500(b), examination of coating prior to removal. The reported conditions consist of flaking and bubbled coating.

(2) The acceptability of each flaw or area, and the need for additional examinations to verify that similar degradation does not exist in similar components:

During the Unit 2 recovery coating repair was performed within the Main Vent Line and Vent Header. The repair coating used was Valspar 78 which was being applied over Plastite 7107. During application the configuration of the surface being repaired resulted in a thin (less than 3 mils) overspray coat of paint being applied to a surface that did not receive/require surface preparation. These areas are small in area (less than 1 sq. ft.) and over time will delaminate. Sound coating does exist under the overspray coat.

(3) A description of the necessary corrective actions:

The coating failure identified during the U2C13 RFO is the result of moisture intrusion through pinholes in the coating. The pinholes are random in location and will continue to develop with time (age of coating). With minimal moisture and the nitrogen atmosphere during operation, corrosion of the steel should not occur or be very light. Coating adhesion will be lost, so continued surveillance under 0-TI-417 will be performed for the removal of loose coatings. Active corrosion cells were not found.

(4) The number and type of additional examinations to ensure detection of similar degradation in similar components:

During the U2C12 outage, 100% of the accessible areas of the Vent Lines received a general visual examination and all areas identified were corrected as required. During the U2C13 outage, coating examinations in accordance with 0-TI-417 were performed in 100% of the accessible areas of the Vent Lines. This NOI documents recordable indication n areas before coating repairs were initiated. No additional examinations are required.

OWNER: TENNESSEE VALLEY AUTHORITY OFFICE OF NUCLEAR POWER 1101 MARKET STREET CHATTANOOGA, TENNESSEE 37402	PLANT: BROWNS FERRY NUCLEAR PLANT P.O. BOX 2000 DECATUR, ALABAMA 35602
UNIT: TWO	CERTIFICATE OF AUTHORIZATION: NOT REQUIRED.
COMMERCIAL SERVICE DATE: MARCH 1, 1975	
NATIONAL BOARD NUMBER FOR UNIT: NOT REQUIRED.	

NOI No: U2C13-009	Report No: CISI-213-015	Component: Main Vent Line and Vent Header

Condition/Indication: Blistered coating found on Main Vent Line and Vent Header surfaces.

EVALUATION OF INACCESSIBLE AREAS 10CFR50.55a(b)(2)(ix)(A)

(1) Description of the type and estimated extent of degradation, and the conditions that led to the degradation:

NOI U2C13-009 and Report CISI-213-015 document conditions noted during VT-3 examination of the steel Primary Containment Main Vent Line and Vent Header in areas identified for coating removal by the Coatings Program. This examination was performed to satisfy the requirements of IWE-2500(b), examination of coating prior to removal. The reported conditions consist of flaking and bubbled coating.

(2) Evaluation of each area, and the result of the evaluation:

The blisters in the coating in the Main Vent Line and Vent Header are the result of age and mechanical damage. Minor scrape back with no pitting found in substrate.

(3) Description of necessary corrective actions:

The coating failure identified during the U2C13 RFO is the result of moisture intrusion through pinholes in the coating. The pinholes are random in location and will continue to develop with time (age of coating). With minimal moisture and the nitrogen atmosphere during operation, corrosion of the steel should not occur or be very light. Coating adhesion will be lost, so continued surveillance under 0-TI-417 will be performed for the removal of loose coatings. Active corrosion cells were not found.

ADDITIONAL EXAMINATIONS 10CFR50.55a(b)(2)(ix)(D)

(1) Description of each flaw or area, including the extent of degradation, and the conditions that led to the degradation::

NOI U2C13-009 and Report CISI-213-015 document conditions noted during VT-3 examination of the steel Primary Containment Main Vent Line and Vent Header in areas identified for coating removal by the Coatings Program. This examination was performed to satisfy the requirements of IWE-2500(b), examination of coating prior to removal. The reported conditions consist of flaking and bubbled coating.

(2) The acceptability of each flaw or area, and the need for additional examinations to verify that similar degradation does not exist in similar components:

The blisters in the coating in the Main Vent Line and Vent Header are the result of age and mechanical damage. Minor scrape back with no pitting found in substrate.

OWNER: TENNESSEE VALLEY AUTHORITY OFFICE OF NUCLEAR POWER 1101 MARKET STREET CHATTANOOGA, TENNESSEE 37402	PLANT: BROWNS FERRY NUCLEAR PLANT P.O. BOX 2000 DECATUR, ALABAMA 35602
UNIT: TWO	CERTIFICATE OF AUTHORIZATION: NOT REQUIRED.
COMMERCIAL SERVICE DATE: MARCH 1, 1975	
NATIONAL BOARD NUMBER FOR UNIT: NOT REQUIRED.	

(3) A description of the necessary corrective actions:

The coating failure identified during the U2C13 RFO is the result of moisture intrusion through pinholes in the coating. The pinholes are random in location and will continue to develop with time (age of coating). With minimal moisture and the nitrogen atmosphere during operation, corrosion of the steel should not occur or be very light. Coating adhesion will be lost, so continued surveillance under 0-TI-417 will be performed for the removal of loose coatings. Active corrosion cells were not found.

(4) The number and type of additional examinations to ensure detection of similar degradation in similar components:

During the U2C12 outage, 100% of the accessible areas of the Vent Lines received a general visual examination and all areas identified were corrected as required. During the U2C13 outage, coating examinations in accordance with 0-TI-417 were performed in 100% of the accessible areas of the Vent Lines. This NOI documents recordable indication n areas before coating repairs were initiated. No additional examinations are required.

NOI No: U2C13-010	Report No: CISI-213-018	Component: Torus Shell Interior - Immersion Zone

Condition/Indication: 15 of 16 Bays had at least one pit over 3 mils or greater and a few areas of blistering of 1/4" to 1/8" diameter. A few fractured blisters have been repaired.

EVALUATION OF INACCESSIBLE AREAS 10CFR50.55a(b)(2)(ix)(A)

(1) Description of the type and estimated extent of degradation, and the conditions that led to the degradation:

NOI U2C13-010 and Report CISI-213-018 document conditions noted during VT-3 examination of the steel Primary Containment Torus interior immersion zone in areas identified for coating removal by the Coatings Program. This examination was performed to satisfy the requirements of IWE-2500(b), examination of coating prior to removal. The reported conditions consist of pits and blisters in the coating.

(2) Evaluation of each area, and the result of the evaluation:

Due to elevated dose rates around the spent filters and equipment used in the sludge removal operation, plates 1, 2, 3, and 4 of Bay 9 were considered inaccessible. In the areas that were examined, three coating degradations were found, mechanical damage, pitting, and blisters.

Areas of mechanical damage found have been few and small in size. These areas were the result of removal of scaffolding and equipment during the Unit 2 recovery. Pitting that was found is random and is the result of holidays (pin holes) within the coating system that has developed since application. Areas of blisters found are few. The blisters are the result of improper surface cleaning during coating application. Current inspections show that the improper surface cleaning was random and small in size.

OWNER: TENNESSEE VALLEY AUTHORITY OFFICE OF NUCLEAR POWER 1101 MARKET STREET CHATTANOOGA, TENNESSEE 37402	PLANT: BROWNS FERRY NUCLEAR PLANT P.O. BOX 2000 DECATUR, ALABAMA 35602
UNIT: TWO	CERTIFICATE OF AUTHORIZATION: NOT REQUIRED.
COMMERCIAL SERVICE DATE: MARCH 1, 1975	
NATIONAL BOARD NUMBER FOR UNIT: NOT REQUIRED.	

Only spot corrosion was found in the areas of Bay 9 that were inspected (plates 5, 6, &7) and none of the indications were significant enough for quantitative measurement. During the U2C11 RFO, April 2001, all pits with a metal loss great than 30 mils were cleaned and recoated. Therefore, unacceptable coating degradation is not expected to be found in the inaccessible areas.

(3) Description of necessary corrective actions:

Loose coating around areas of mechanical damage, pits and fractured blisters was scraped back until proper coating adhesion was obtained. Substrate damage and or pits with a metal loss of 25 mils or greater were cleaned and repaired with coating system SL-1-110, a qualified coating system specified in G-55. No additional corrective actions are required.

ADDITIONAL EXAMINATIONS 10CFR50.55a(b)(2)(ix)(D)

(1) Description of each flaw or area, including the extent of degradation, and the conditions that led to the degradation::

NOI U2C13-010 and Report CISI-213-018 document conditions noted during VT-3 examination of the steel Primary Containment Torus interior immersion zone in areas identified for coating removal by the Coatings Program. This examination was performed to satisfy the requirements of IWE-2500(b), examination of coating prior to removal. The reported conditions consist of pits and blisters in the coating.

(2) The acceptability of each flaw or area, and the need for additional examinations to verify that similar degradation does not exist in similar components:

Due to elevated dose rates around the spent filters and equipment used in the sludge removal operation, plates 1, 2, 3, and 4 of Bay 9 were considered inaccessible. In the areas that were examined, three coating degradations were found, mechanical damage, pitting, and blisters.

Areas of mechanical damage found have been few and small in size. These areas were the result of removal of scaffolding and equipment during the Unit 2 recovery. Pitting that was found is random and is the result of holidays (pin holes) within the coating system that has developed since application. Areas of blisters found are few. The blisters are the result of improper surface cleaning during coating application. Current inspections show that the improper surface cleaning was random and small in size.

Only spot corrosion was found in the areas of Bay 9 that were inspected (plates 5, 6, &7) and none of the indications were significant enough for quantitative measurement. During the U2C11 RFO, April 2001, all pits with a metal loss great than 30 mils were cleaned and recoated. Therefore, unacceptable coating degradation is not expected to be found in the inaccessible areas.

OWNER: TENNESSEE VALLEY AUTHORITY OFFICE OF NUCLEAR POWER 1101 MARKET STREET CHATTANOOGA, TENNESSEE 37402	PLANT: BROWNS FERRY NUCLEAR PLANT P.O. BOX 2000 DECATUR, ALABAMA 35602
UNIT: TWO	CERTIFICATE OF AUTHORIZATION: NOT REQUIRED.
COMMERCIAL SERVICE DATE: MARCH 1, 1975	
NATIONAL BOARD NUMBER FOR UNIT: NOT REQUIRED.	

(3) A description of the necessary corrective actions:

Loose coating around areas of mechanical damage, pits and fractured blisters was scraped back until proper coating adhesion was obtained. Substrate damage and or pits with a metal loss of 25 mils or greater were cleaned and repaired with coating system SL-1-110, a qualified coating system specified in G-55. No additional corrective actions are required.

(4) The number and type of additional examinations to ensure detection of similar degradation in similar components:

All 16 Torus Bays and ring girders below water line, except plates 1, 2, 3 and 4 of Bay 9, were examined this refueling outage. All similar accessible areas were examined, therefore, no additional examinations are required.

February 01, 2005

Sam Flood, ANI/ANII, PEC-1C, BFN

BROWNS FERRY NUCLEAR PLANT (BFN) – UNIT 2 CYCLE 13 REFUELING OUTAGE CONTAINMENT INSERVICE INSPECTION (CISI) SCAN PLAN REV 000

Attached for your review is the BFN Unit 2 Cycle 13 Refueling Outage CISI Scan Plan, Revision 000, for the examinations to be performed for the current Unit 2 outage by BFN Site Engineering/Components Engineering. These examinations are being performed to satisfy the requirements of ASME Section XI Code, Subsection IWE, 1992 Edition and 1992 Addenda.

This document was prepared by Fred Nilsen of BFN Components Engineering and forwarded to Matthew Welch and Fred Froscello of TVAN Inspection Services Organization (ISO) as notification of work scope.

Frederick J. Nilsen
BFN Components Engineering

Matthew C. Welch
BFN ISO, NDE Level III

Frederick W. Froscello Jr. 2/01/05
Frederick W. Froscello Jr.
BFN ISO, ISI/NDE Supervisor

2/23/05
Sam Flood ANI/ANII
Concurrence

cc: R. K. Golub, SAB-1B, BFN
M. L. Turnbow, STC-1I, SQN

Revision 000
03/02/2005
Total Examinations: 19

TENNESSEE VALLEY AUTHORITY
BROWNS FERRY NUCLEAR POWER PLANT - UNIT 2
IWE EXAMS SCHEDULED FOR CYCLE 13

SYSTEM	WELDNO	SEGMENT	ISONO	CYCLE	ITEMNO	CATEGORY	EXREQ	EXSCHD	NDEPROC	CALSTD	COMPDIA	NOMTHCK	COMPDESA	COMPDESB
SCV	MSB-2-1		41N720	13	E5.30	E-D	92E-92	VT-3	N-VT-15					
SCV	MSB-2-2		41N720	13	E5.30	E-D	92E-92	VT-3	N-VT-15					
SCV	MSB-2-3		41N720	13	E5.30	E-D	92E-92	VT-3	N-VT-15					
SCV	PSC INT 2-B-10C		BFN-CISI-007	13	E4.11	E-C	92E-92	VT-1	QP.10.09					
SCV	PSC INT 2-B-11C		BFN-CISI-007	13	E4.11	E-C	92E-92	VT-1	QP.10.09					
SCV	PSC INT 2-B-12C		BFN-CISI-007	13	E4.11	E-C	92E-92	VT-1	QP.10.09					
SCV	PSC INT 2-B-13C		BFN-CISI-007	13	E4.11	E-C	92E-92	VT-1	QP.10.09					
SCV	PSC INT 2-B-14C		BFN-CISI-007	13	E4.11	E-C	92E-92	VT-1	QP.10.09					
SCV	PSC INT 2-B-15C		BFN-CISI-007	13	E4.11	E-C	92E-92	VT-1	QP.10.09					
SCV	PSC INT 2-B-16C		BFN-CISI-007	13	E4.11	E-C	92E-92	VT-1	QP.10.09					
SCV	PSC INT 2-B-1C		BFN-CISI-007	13	E4.11	E-C	92E-92	VT-1	QP.10.09					
SCV	PSC INT 2-B-2C		BFN-CISI-007	13	E4.11	E-C	92E-92	VT-1	QP.10.09					
SCV	PSC INT 2-B-3C		BFN-CISI-007	13	E4.11	E-C	92E-92	VT-1	QP.10.09					
SCV	PSC INT 2-B-4C		BFN-CISI-007	13	E4.11	E-C	92E-92	VT-1	QP.10.09					
SCV	PSC INT 2-B-5C		BFN-CISI-007	13	E4.11	E-C	92E-92	VT-1	QP.10.09					
SCV	PSC INT 2-B-6C		BFN-CISI-007	13	E4.11	E-C	92E-92	VT-1	QP.10.09					
SCV	PSC INT 2-B-7C		BFN-CISI-007	13	E4.11	E-C	92E-92	VT-1	QP.10.09					
SCV	PSC INT 2-B-8C		BFN-CISI-007	13	E4.11	E-C	92E-92	VT-1	QP.10.09					
SCV	PSC INT 2-B-9C		BFN-CISI-007	13	E4.11	E-C	92E-92	VT-1	QP.10.09					

SORT ORDER: SYSTEM-WELDNO

March 23, 2005

Sam Flood, ANI/ANII, PEC-1C, BFN

BROWNS FERRY NUCLEAR PLANT (BFN) – UNIT 2 CYCLE 13 REFUELING OUTAGE CONTAINMENT INSERVICE INSPECTION (CISI) SCAN PLAN REV 001

Attached for your review is the BFN Unit 2 Cycle 13 Refueling Outage CISI Scan Plan, Revision 001, for the examinations to be performed for the current Unit 2 outage by BFN Site Engineering/Components Engineering. These examinations are being performed to satisfy the requirements of ASME Section XI Code, Subsection IWE, 1992 Edition and 1992 Addenda.

This document was prepared by Fred Nilsen of BFN Components Engineering and forwarded to Matthew Welch and Fred Froscello of TVAN Inspection Services Organization (ISO) as notification of work scope.

D. Kelvin Green
BFN Components Engineering

Matthew C. Welch
BFN ISO, NDE Level III

Frederick W. Froscello Jr.
BFN ISO, ISI/NDE Supervisor

5/23/05
Sam Flood ANI/ANII
Concurrence

cc: R. K. Golub, SAB-1B, BFN
M. L. Turnbow, STC-1I, SQN

Revision 001
03/23/2005
Total Examinations: 19

TENNESSEE VALLEY AUTHORITY
BROWNS FERRY NUCLEAR POWER PLANT - UNIT 2
IWE EXAMS SCHEDULED FOR CYCLE 13

SYSTEM	WELDNO	SEGMENT	ISONO	CYCLE	ITEMNO	CATEGORY	EXREQ	EXSCHD	NDEPROC	CALSTD	COMPDIA	NOMTHCK	COMPDESA	COMPDESB
SCV	MSB-2-1		41N720	13	E5.30	E-D	92E-92	VT-3	N-VT-15					
SCV	MSB-2-2		41N720	13	E5.30	E-D	92E-92	VT-3	N-VT-15					
SCV	MSB-2-3		41N720	13	E5.30	E-D	92E-92	VT-3	N-VT-15					
SCV	PSC INT 2-B-10C		BFN-CISI-007	13	E4.11	E-C	92E-92	VT-1	QP.10.09A					
SCV	PSC INT 2-B-11C		BFN-CISI-007	13	E4.11	E-C	92E-92	VT-1	QP.10.09A					
SCV	PSC INT 2-B-12C		BFN-CISI-007	13	E4.11	E-C	92E-92	VT-1	QP.10.09A					
SCV	PSC INT 2-B-13C		BFN-CISI-007	13	E4.11	E-C	92E-92	VT-1	QP.10.09A					
SCV	PSC INT 2-B-14C		BFN-CISI-007	13	E4.11	E-C	92E-92	VT-1	QP.10.09A					
SCV	PSC INT 2-B-15C		BFN-CISI-007	13	E4.11	E-C	92E-92	VT-1	QP.10.09A					
SCV	PSC INT 2-B-16C		BFN-CISI-007	13	E4.11	E-C	92E-92	VT-1	QP.10.09A					
SCV	PSC INT 2-B-1C		BFN-CISI-007	13	E4.11	E-C	92E-92	VT-1	QP.10.09A					
SCV	PSC INT 2-B-2C		BFN-CISI-007	13	E4.11	E-C	92E-92	VT-1	QP.10.09A					
SCV	PSC INT 2-B-3C		BFN-CISI-007	13	E4.11	E-C	92E-92	VT-1	QP.10.09A					
SCV	PSC INT 2-B-4C		BFN-CISI-007	13	E4.11	E-C	92E-92	VT-1	QP.10.09A					
SCV	PSC INT 2-B-5C		BFN-CISI-007	13	E4.11	E-C	92E-92	VT-1	QP.10.09A					
SCV	PSC INT 2-B-6C		BFN-CISI-007	13	E4.11	E-C	92E-92	VT-1	QP.10.09A					
SCV	PSC INT 2-B-7C		BFN-CISI-007	13	E4.11	E-C	92E-92	VT-1	QP.10.09A					
SCV	PSC INT 2-B-8C		BFN-CISI-007	13	E4.11	E-C	92E-92	VT-1	QP.10.09A					
SCV	PSC INT 2-B-9C		BFN-CISI-007	13	E4.11	E-C	92E-92	VT-1	QP.10.09A					

SORT ORDER: SYSTEM-WELDNO

April 12, 2005

Sam Flood, ANI/ANII, PEC-1C, BFN

BROWNS FERRY NUCLEAR PLANT (BFN) – UNIT 2 CYCLE 13 REFUELING OUTAGE CONTAINMENT INSERVICE INSPECTION (CISI) SCAN PLAN REV 002

Attached for your review is the BFN Unit 2 Cycle 13 Refueling Outage CISI Scan Plan, Revision 002, for the examinations to be performed for the current Unit 2 outage by BFN Site Engineering/Components Engineering. These examinations are being performed to satisfy the requirements of ASME Section XI Code, Subsection IWE, 1992 Edition and 1992 Addenda.

This document was prepared by Fred Nilsen of BFN Components Engineering and forwarded to Matthew Welch and Fred Froscello of TVAN Inspection Services Organization (ISO) as notification of work scope.

D. Kelvin Green
BFN Components Engineering

Matthew C. Welch
BFN ISO, NDE Level III

Frederick W. Froscello Jr.
BFN ISO, ISI/NDE Supervisor

5/23/05
Sam Flood ANI/ANII
Concurrence

cc: R. K. Golub, SAB-1B, BFN
M. L. Turnbow, STC-1I, SQN

Revision 002
04/13/2005
Total Examinations: 98

TENNESSEE VALLEY AUTHORITY
BROWNS FERRY NUCLEAR POWER PLANT - UNIT 2
IWE EXAMS SCHEDULED FOR CYCLE 13

SYSTEM	WELDNO	SEGMENT	ISONO	CYCLE	ITEMNO	CATEGORY	EXREQ	EXSCHD	NDEPROC	CALSTD	COMPDIA	NOMTHCK	COMPDESA	COMPDESB
SCV	DW LNR-2-1		2-719E532-4	13	E1.12	E-A	92E-MS	VT-3	N-VT-15					
SCV	DW LNR-2-2		BFN-CISI-010&11	13	N/A	N/A	92E-CV	VT-3	N-VT-15					
SCV	DW LNR-2-2		BFN-CISI-010&11	13	N/A	N/A	92E-PC	VT-3	N-VT-15					
SCV	DW LNR-2-3		BFN-CISI-010&11	13	N/A	N/A	92E-CV	VT-3	N-VT-15					
SCV	DW LNR-2-3		BFN-CISI-010&11	13	N/A	N/A	92E-PC	VT-3	N-VT-15					
SCV	DW LNR-2-3		BFN-CISI-010&11	13	N/A	N/A	P92-01	VT-3	N-VT-15					
SCV	DW LNR-2-3		BFN-CISI-010&11	13	N/A	N/A	P92-01	VT-3	N-VT-15					
SCV	DW LNR-2-5		BFN-CISI-010&11	13	N/A	N/A	92E-CV	VT-3	N-VT-15					
SCV	DW LNR-2-5		BFN-CISI-010&11	13	N/A	N/A	92E-PC	VT-3	N-VT-15					
SCV	MSB-2-1		41N720	13	E5.30	E-D	92E-92	VT-3	N-VT-15					
SCV	MSB-2-1		41N720	13	E5.30	E-D	P92-92	VT-3	N-VT-15					
SCV	MSB-2-2		41N720	13	E5.30	E-D	92E-92	VT-3	N-VT-15					
SCV	MSB-2-2		41N720	13	E5.30	E-D	P92-92	VT-3	N-VT-15					
SCV	MSB-2-3		41N720	13	E5.30	E-D	92E-92	VT-3	N-VT-15					
SCV	MSB-2-3		41N720	13	E5.30	E-D	P92-92	VT-3	N-VT-15					
SCV	PEN 2-X-5G		BFN-CISI-015	13	N/A	N/A	92E-CV	VT-3	N-VT-15					
SCV	PEN 2-X-5G		BFN-CISI-015	13	N/A	N/A	92E-PC	VT-3	N-VT-15					
SCV	PSC INT 2-B-10A		BFN-CISI-007	13	N/A	N/A	92E-CV	VT-3	N-VT-15					
SCV	PSC INT 2-B-10B		BFN-CISI-007	13	N/A	N/A	92E-CV	VT-3	QP.10.09A					
SCV	PSC INT 2-B-10B		BFN-CISI-007	13	N/A	N/A	P92-01	VT-3	QP.10.09A					
SCV	PSC INT 2-B-10C		BFN-CISI-007	13	E4.11	E-C	92E-92	VT-1	QP.10.09A					
SCV	PSC INT 2-B-11A		BFN-CISI-007	13	N/A	N/A	92E-CV	VT-3	N-VT-15					
SCV	PSC INT 2-B-11B		BFN-CISI-007	13	N/A	N/A	92E-CV	VT-3	QP.10.09A					
SCV	PSC INT 2-B-11B		BFN-CISI-007	13	NA	N/A	P92-01	VT-3	QP.10.09A					
SCV	PSC INT 2-B-11C		BFN-CISI-007	13	E4.11	E-C	92E-92	VT-1	QP.10.09A					
SCV	PSC INT 2-B-12A		BFN-CISI-007	13	N/A	N/A	92E-CV	VT-3	N-VT-15					
SCV	PSC INT 2-B-12A		BFN-CISI-007	13	N/A	N/A	92E-CV	VT-3	N-VT-15					
SCV	PSC INT 2-B-12A		BFN-CISI-007	13	N/A	N/A	92E-PC	VT-3	N-VT-15					
SCV	PSC INT 2-B-12B		BFN-CISI-007	13	N/A	N/A	92E-CV	VT-3	QP.10.09A					
SCV	PSC INT 2-B-12B		BFN-CISI-007	13	N/A	N/A	P92-01	VT-3	QP.10.09A					
SCV	PSC INT 2-B-12C		BFN-CISI-007	13	E4.11	E-C	92E-92	VT-1	QP.10.09A					
SCV	PSC INT 2-B-13A		BFN-CISI-007	13	N/A	N/A	92E-CV	VT-3	N-VT-15					
SCV	PSC INT 2-B-13A		BFN-CISI-007	13	N/A	N/A	92E-CV	VT-3	N-VT-15					
SCV	PSC INT 2-B-13A		BFN-CISI-007	13	N/A	N/A	92E-PC	VT-3	N-VT-15					
SCV	PSC INT 2-B-13B		BFN-CISI-007	13	N/A	N/A	92E-CV	VT-3	QP.10.09A					

SORT ORDER: SYSTEM-WELDNO

SYSTEM	WELDNO	SEGMENT	ISONO	CYCLE	ITEMNO	CATEGORY	EXREQ	EXSCHD	NDEPROC	CALSTD	COMPDIA	NOMTHCK	COMPDESA	COMPDESB
SCV	PSC INT 2-B-13B		BFN-CISI-007	13	N/A	N/A	P92-01	VT-3	QP.10.09A					
SCV	PSC INT 2-B-13C		BFN-CISI-007	13	E4.11	E-C	92E-92	VT-1	QP.10.09A					
SCV	PSC INT 2-B-14A		BFN-CISI-007	13	N/A	N/A	92E-CV	VT-3	N-VT-15					
SCV	PSC INT 2-B-14A		BFN-CISI-007	13	N/A	N/A	92E-CV	VT-3	N-VT-15					
SCV	PSC INT 2-B-14A		BFN-CISI-007	13	N/A	N/A	92E-PC	VT-3	N-VT-15					
SCV	PSC INT 2-B-14B		BFN-CISI-007	13	N/A	N/A	92E-CV	VT-3	QP.10.09A					
SCV	PSC INT 2-B-14B		BFN-CISI-007	13	N/A	N/A	P92-01	VT-3	QP.10.09A					
SCV	PSC INT 2-B-14C		BFN-CISI-007	13	E4.11	E-C	92E-92	VT-1	QP.10.09A					
SCV	PSC INT 2-B-15A		BFN-CISI-007	13	N/A	N/A	92E-CV	VT-3	N-VT-15					
SCV	PSC INT 2-B-15A		BFN-CISI-007	13	N/A	N/A	92E-CV	VT-3	N-VT-15					
SCV	PSC INT 2-B-15A		BFN-CISI-007	13	N/A	N/A	92E-PC	VT-3	N-VT-15					
SCV	PSC INT 2-B-15B		BFN-CISI-007	13	N/A	N/A	92E-CV	VT-3	QP.10.09A					
SCV	PSC INT 2-B-15B		BFN-CISI-007	13	N/A	N/A	P92-01	VT-3	QP.10.09A					
SCV	PSC INT 2-B-15C		BFN-CISI-007	13	E4.11	E-C	92E-92	VT-1	QP.10.09A					
SCV	PSC INT 2-B-16A		BFN-CISI-007	13	N/A	N/A	92E-CV	VT-3	N-VT-15					
SCV	PSC INT 2-B-16A		BFN-CISI-007	13	N/A	N/A	92E-CV	VT-3	N-VT-15					
SCV	PSC INT 2-B-16A		BFN-CISI-007	13	N/A	N/A	92E-PC	VT-3	N-VT-15					
SCV	PSC INT 2-B-16B		BFN-CISI-007	13	N/A	N/A	92E-CV	VT-3	QP.10.09A					
SCV	PSC INT 2-B-16B		BFN-CISI-007	13	N/A	N/A	P92-01	VT-3	QP.10.09A					
SCV	PSC INT 2-B-16C		BFN-CISI-007	13	E4.11	E-C	92E-92	VT-1	QP.10.09A					
SCV	PSC INT 2-B-1A		BFN-CISI-007	13	N/A	N/A	92E-CV	VT-3	N-VT-15					
SCV	PSC INT 2-B-1B		BFN-CISI-007	13	N/A	N/A	92E-CV	VT-3	QP.10.09A					
SCV	PSC INT 2-B-1B		BFN-CISI-007	13	N/A	N/A	P92-01	VT-3	QP.10.09A					
SCV	PSC INT 2-B-1C		BFN-CISI-007	13	E4.11	E-C	92E-92	VT-1	QP.10.09A					
SCV	PSC INT 2-B-2A		BFN-CISI-007	13	N/A	N/A	92E-CV	VT-3	N-VT-15					
SCV	PSC INT 2-B-2A		BFN-CISI-007	13	N/A	N/A	92E-CV	VT-3	N-VT-15					
SCV	PSC INT 2-B-2A		BFN-CISI-007	13	N/A	N/A	92E-PC	VT-3	N-VT-15					
SCV	PSC INT 2-B-2B		BFN-CISI-007	13	N/A	N/A	92E-CV	VT-3	QP.10.09A					
SCV	PSC INT 2-B-2B		BFN-CISI-007	13	N/A	N/A	P92-01	VT-3	QP.10.09A					
SCV	PSC INT 2-B-2C		BFN-CISI-007	13	E4.11	E-C	92E-92	VT-1	QP.10.09A					
SCV	PSC INT 2-B-3A		BFN-CISI-007	13	N/A	N/A	92E-CV	VT-3	N-VT-15					
SCV	PSC INT 2-B-3A		BFN-CISI-007	13	N/A	N/A	92E-CV	VT-3	N-VT-15					
SCV	PSC INT 2-B-3A		BFN-CISI-007	13	N/A	N/A	92E-PC	VT-3	N-VT-15					
SCV	PSC INT 2-B-3B		BFN-CISI-007	13	N/A	N/A	92E-CV	VT-3	QP.10.09A					
SCV	PSC INT 2-B-3B		BFN-CISI-007	13	N/A	N/A	P92-01	VT-3	QP.10.09A					
SCV	PSC INT 2-B-3C		BFN-CISI-007	13	E4.11	E-C	92E-92	VT-1	QP.10.09A					
SCV	PSC INT 2-B-4A		BFN-CISI-007	13	N/A	N/A	92E-CV	VT-3	N-VT-15					
SCV	PSC INT 2-B-4A		BFN-CISI-007	13	N/A	N/A	92E-CV	VT-3	N-VT-15					
SCV	PSC INT 2-B-4A		BFN-CISI-007	13	N/A	N/A	92E-PC	VT-3	N-VT-15					
SCV	PSC INT 2-B-4B		BFN-CISI-007	13	N/A	N/A	92E-CV	VT-3	QP.10.09A					

SYSTEM	WELDNO	SEGMENT	ISONO	CYCLE	ITEMNO	CATEGORY	EXREQ	EXSCHD	NDEPROC	CALSTD	COMPDIA	NOMTHCK	COMPDESA	COMPDESB
SCV	PSC INT 2-B-4B		BFN-CISI-007	13	N/A	N/A	P92-01	VT-3	QP.10.09A					
SCV	PSC INT 2-B-4C		BFN-CISI-007	13	E4.11	E-C	92E-92	VT-1	QP.10.09A					
SCV	PSC INT 2-B-5A		BFN-CISI-007	13	N/A	N/A	92E-CV	VT-3	N-VT-15					
SCV	PSC INT 2-B-5B		BFN-CISI-007	13	N/A	N/A	92E-CV	VT-3	QP.10.09A					
SCV	PSC INT 2-B-5B		BFN-CISI-007	13	N/A	N/A	P92-01	VT-3	QP.10.09A					
SCV	PSC INT 2-B-5C		BFN-CISI-007	13	E4.11	E-C	92E-92	VT-1	QP.10.09A					
SCV	PSC INT 2-B-6A		BFN-CISI-007	13	N/A	N/A	92E-CV	VT-3	N-VT-15					
SCV	PSC INT 2-B-6B		BFN-CISI-007	13	N/A	N/A	92E-CV	VT-3	QP.10.09A					
SCV	PSC INT 2-B-6B		BFN-CISI-007	13	N/A	N/A	P92-01	VT-3	QP.10.09A					
SCV	PSC INT 2-B-6C		BFN-CISI-007	13	E4.11	E-C	92E-92	VT-1	QP.10.09A					
SCV	PSC INT 2-B-7A		BFN-CISI-007	13	N/A	N/A	92E-CV	VT-3	N-VT-15					
SCV	PSC INT 2-B-7B		BFN-CISI-007	13	N/A	N/A	92E-CV	VT-3	QP.10.09A					
SCV	PSC INT 2-B-7B		BFN-CISI-007	13	N/A	N/A	P92-01	VT-3	QP.10.09A					
SCV	PSC INT 2-B-7C		BFN-CISI-007	13	E4.11	E-C	92E-92	VT-1	QP.10.09A					
SCV	PSC INT 2-B-8A		BFN-CISI-007	13	N/A	N/A	92E-CV	VT-3	N-VT-15					
SCV	PSC INT 2-B-8A		BFN-CISI-007	13	N/A	N/A	92E-CV	VT-3	N-VT-15					
SCV	PSC INT 2-B-8A		BFN-CISI-007	13	N/A	N/A	92E-PC	VT-3	N-VT-15					
SCV	PSC INT 2-B-8B		BFN-CISI-007	13	N/A	N/A	92E-CV	VT-3	QP.10.09A					
SCV	PSC INT 2-B-8B		BFN-CISI-007	13	N/A	N/A	P92-01	VT-3	QP.10.09A					
SCV	PSC INT 2-B-8C		BFN-CISI-007	13	E4.11	E-C	92E-92	VT-1	QP.10.09A					
SCV	PSC INT 2-B-9A		BFN-CISI-007	13	N/A	N/A	92E-CV	VT-3	N-VT-15					
SCV	PSC INT 2-B-9B		BFN-CISI-007	13	N/A	N/A	92E-CV	VT-3	QP.10.09A					
SCV	PSC INT 2-B-9C		BFN-CISI-007	13	E4.11	E-C	92E-92	VT-1	QP.10.09A					

BFN SCAN PLAN REVISION LOG

UNIT/ CYCLE	SCAN PLAN REV.	SYSTEM	COMPONENT IDENTIFIER	ASME XI	REVISION	REASON FOR REVISION	APPROVED BY ISI/NDE SIGN AND DATE	APPROVED BY NDE LEVEL III SIGN AND DATE	ISI DATA BASE REVISED BY ISO SIGN AND DATE	ISI DATA BASE REVISION VERIFIED BY ISI/NDE SIGN AND DATE
2/13	1	SCV	PSC INT-2-B-10C THROUGH PSC INT 2-B-16C AND PSC INT 2-B-1C THROUGH PSC INT 2-B-9C	Y	CHANGE NDE PROCEDURE TO QP.10.09A (VENDOR PROC).	VENDOR REVISED	3/23/05 John T. Lewis 4-13-05	3/22/05	3/22/05	3/23/05
2/13	2	SCV	DWLNR-2-1 ↯ -2-2 -2-3 DWLNR-2-3	Y	ADD COMPONENTS TO U2C13 RFO: DWLNR-2-1; EXREQ 92E-MS DWLNR-2-2 TO -2-5; EXREQ's 92E-CV & 92E-PC DWLNR-2-3; EXREQ P92-01	SCOPE EXPANSION	4/12/05 John T. Lewis 4-13-05	4/12/05	4/12/05	4/12/05
2/13	2	SCV	PEN2-X-5G	Y	ADD COMPONENT TO U2C13 RFO EXREQ: 92E-CV & 92E-PC	SCOPE EXPANSION	4/12/05 John T. Lewis 4-13-05	4/12/05	4/12/05	4/12/05
2/13	2	SCV	PSC INT 2-B-10A THROUGH PSC INT 2-B-16A	Y	ADD COMPONENTS TO U2C13 RFO EXREQ: 92E-CV	SCOPE EXPANSION	4/12/05 John T. Lewis 4-13-05	4/12/05	4/12/05	4/12/05
2/13	2	SCV	PSC INT 2-B-10B THROUGH PSC INT 2-B-16B	Y	ADD COMPONENTS TO U2C13 RFO: EXREQ: 92E-CV & P92-01	SCOPE EXPANSION	4/12/05 John T. Lewis 4-13-05	4/12/05	4/12/05	4/12/05

BFN SCAN PLAN REVISION LOG

UNIT/ CYCLE	SCAN PLAN REV.	SYSTEM	COMPONENT IDENTIFIER	ASME XI	REVISION	REASON FOR REVISION	APPROVED BY ISI/NDE SIGN AND DATE	APPROVED BY NDE LEVEL III SIGN AND DATE	ISI DATA BASE REVISED BY ISO SIGN AND DATE	ISI DATA BASE REVISION VERIFIED BY ISI/NDE SIGN AND DATE
2/13	2	SCV	PSC INT 2-B-1A THROUGH PSC INT 2-B-9A	Y	ADD COMPONENTS TO U2C13 RFO: EXREQ: 92E-CV, 92E-PC	SCOPE EXPANSION	4/12/05 4-13-05	4/12/05	4/12/05	4/12/05
2/13	2	SCV	PSC INT 2-B-1B THROUGH 8B. PSC INT 2-B-~~9B~~	Y	ADD COMPONENTS TO U2C13 RFO: EXREQ: 92E-CV, P92-01 8 8 5/20/05	SCOPE EXPANSION	4/12/05 5/23/05 4-13-05	5/20/05 4/12/05	5/20/05 4/12/05	4/12/05 5/20/05
			PSC INT2-B-9B	Y	Add EXREQ-92E-CV	Scope Expansion	5-23-05			
2/13	2	SCV	MSB-2-1 THROUGH MSB-2-3	Y	ADD EXREQ P92-42	SCOPE EXPANSION	4/12/05 4-13-05	4/12/05	4/12/05	4/12/05

TENNESSEE VALLEY AUTHORITY
BROWNS FERRY NUCLEAR POWER PLANT - UNIT 2
CYCLE 13 IWE EXAMINATIONS FOR CODE CREDIT
EXAM REQUIREMENTS: 92E-92, 92E-MS, AND P92-92

04/18/2005
EXAMS: 23

SYSTEM	WELDNO	ISONO	CATEGORY	ITEMNO	EXREQ	EXSCHD	NDEPROC	CALSTD	COMPDIA	NOMTHICK	EXDATE	EXAMINER	EXAMREP	RESULTS
SCV	MSB-2-1	41N720	E-D	E5.30	92E-92	VT-3	N-VT-15				20050324	GLJ	CISI-213-002	F
SCV	MSB-2-2	41N720	E-D	E5.30	92E-92	VT-3	N-VT-15				20050324	JAF	CISI-213-002	F
SCV	MSB-2-3	41N720	E-D	E5.30	92E-92	VT-3	N-VT-15				20050324	GLJ	CISI-213-002	F
SCV	DW LNR-2-1	2-719E532-4	E-A	E1.12	92E-MS	VT-3	N-VT-15				20050326	JAF	CISI-213-007	P
SCV	MSB-2-1	41N720	E-D	E5.30	P92-92	VT-3	N-VT-15				20040405	JAF	CISI-213-014	P
SCV	MSB-2-2	41N720	E-D	E5.30	P92-92	VT-3	N-VT-15				20050405	JAF	CISI-213-014	P
SCV	MSB-2-3	41N720	E-D	E5.30	P92-92	VT-3	N-VT-15				20050324	GLJ	CISI-213-014	P
SCV	PSC INT 2-B-10C	BFN-CISI-007	E-C	E4.11	92E-92	VT-1	QP.10.09A				20050404	BTM	CISI-213-017	P
SCV	PSC INT 2-B-11C	BFN-CISI-007	E-C	E4.11	92E-92	VT-1	QP.10 09A				20050404	FJN	CISI-213-017	P
SCV	PSC INT 2-B-12C	BFN-CISI-007	E-C	E4.11	92E-92	VT-1	QP.10.09A				20050404	BTM	CISI-213-017	P
SCV	PSC INT 2-B-13C	BFN-CISI-007	E-C	E4.11	92E-92	VT-1	QP.10.09A				20050404	FJN	CISI-213-017	P
SCV	PSC INT 2-B-14C	BFN-CISI-007	E-C	E4.11	92E-92	VT-1	QP.10 09A				20050404	FJN	CISI-213-017	P
SCV	PSC INT 2-B-15C	BFN-CISI-007	E-C	E4.11	92E-92	VT-1	QP.10.09A				20050404	FJN	CISI-213-017	P
SCV	PSC INT 2-B-16C	BFN-CISI-007	E-C	E4.11	92E-92	VT-1	QP.10 09A				20050404	FJN	CISI-213-017	P
SCV	PSC INT 2-B-1C	BFN-CISI-007	E-C	E4.11	92E-92	VT-1	QP.10.09A				20050404	FJN	CISI-213-017	P
SCV	PSC INT 2-B-2C	BFN-CISI-007	E-C	E4.11	92E-92	VT-1	QP.10.09A				20050404	FJN	CISI-213-017	P
SCV	PSC INT 2-B-3C	BFN-CISI-007	E-C	E4.11	92E-92	VT-1	QP.10 09A				20050404	FJN	CISI-213-017	P
SCV	PSC INT 2-B-4C	BFN-CISI-007	E-C	E4.11	92E-92	VT-1	QP.10.09A				20050404	FJN	CISI-213-017	P
SCV	PSC INT 2-B-5C	BFN-CISI-007	E-C	E4.11	92E-92	VT-1	QP.10.09A				20050404	FJN	CISI-213-017	P
SCV	PSC INT 2-B-6C	BFN-CISI-007	E-C	E4.11	92E-92	VT-1	QP.10.09A				20050404	FJN	CISI-213-017	P
SCV	PSC INT 2-B-7C	BFN-CISI-007	E-C	E4.11	92E-92	VT-1	QP.10.09A				20050404	FJN	CISI-213-017	P
SCV	PSC INT 2-B-8C	BFN-CISI-007	E-C	E4.11	92E-92	VT-1	QP.10 09A				20050404	FJN	CISI-213-017	P
SCV	PSC INT 2-B-9C	BFN-CISI-007	E-C	E4.11	92E-92	VT-1	QP.10.09A				20050404	FJN	CISI-213-017	P

TENNESSEE VALLEY AUTHORITY
BROWNS FERRY NUCLEAR POWER PLANT - UNIT 2
CYCLE 13 IWE EXAMINATIONS FOR CODE CREDIT
EXAM REQUIREMENTS: 92E-PC, 92E-CV, AND P92-01

04/18/2005
EXAMS: 75

SYSTEM	WELDNO	ISONO	CATEGORY	ITEMNO	EXREQ	EXSCHD	NDEPROC	CALSTD	COMPDIA	NOMTHCK	EXDATE	EXAMINER	EXAMREP	RESULTS
SCV	DW LNR-2-2	BFN-CISI-010&11	N/A	N/A	92E-CV	VT-3	N-VT-15				20050325	JAF	CISI-213-008	F
SCV	DW LNR-2-5	BFN-CISI-010&11	N/A	N/A	92E-CV	VT-3	N-VT-15				20050324	JAF	CISI-213-005	F
SCV	PEN 2-X-5G	BFN-CISI-015	N/A	N/A	92E-CV	VT-3	N-VT-15				20050329	MAB	CISI-213-012	F
SCV	PSC INT 2-B-10B	BFN-CISI-007	N/A	N/A	92E-CV	VT-3	QP.10.09A				20050401	FJN	CISI-213-018	F
SCV	PSC INT 2-B-11B	BFN-CISI-007	N/A	N/A	92E-CV	VT-3	QP.10 09A				20050401	FJN	CISI-213-018	F
SCV	PSC INT 2-B-12A	BFN-CISI-007	N/A	N/A	92E-CV	VT-3	N-VT-15				20050405	MAB	CISI-213-015	F
SCV	PSC INT 2-B-12B	BFN-CISI-007	N/A	N/A	92E-CV	VT-3	QP.10 09A				20050401	FJN	CISI-213-018	F
SCV	PSC INT 2-B-13A	BFN-CISI-007	N/A	N/A	92E-CV	VT-3	N-VT-15				20050405	MAB	CISI-213-015	F
SCV	PSC INT 2-B-13B	BFN-CISI-007	N/A	N/A	92E-CV	VT-3	QP.10.09A				20050401	FJN	CISI-213-018	F
SCV	PSC INT 2-B-14A	BFN-CISI-007	N/A	N/A	92E-CV	VT-3	N-VT-15				20050405	MAB	CISI-213-015	F
SCV	PSC INT 2-B-14B	BFN-CISI-007	N/A	N/A	P92-01	VT-3	QP.10.09A				20050401	FJN	CISI-213-018	F
SCV	PSC INT 2-B-15A	BFN-CISI-007	N/A	N/A	92E-CV	VT-3	N-VT-15				20050405	MAB	CISI-213-015	F
SCV	PSC INT 2-B-15B	BFN-CISI-007	N/A	N/A	92E-CV	VT-3	QP.10.09A				20050401	FJN	CISI-213-018	F
SCV	PSC INT 2-B-16A	BFN-CISI-007	N/A	N/A	92E-CV	VT-3	N-VT-15				20050405	MAB	CISI-213-015	F
SCV	PSC INT 2-B-16B	BFN-CISI-007	N/A	N/A	92E-CV	VT-3	QP.10.09A				20050401	FJN	CISI-213-018	F
SCV	PSC INT 2-B-1B	BFN-CISI-007	N/A	N/A	92E-CV	VT-3	QP.10.09A				20050401	FJN	CISI-213-018	F
SCV	PSC INT 2-B-2A	BFN-CISI-007	N/A	N/A	92E-CV	VT-3	N-VT-15				20050405	MAB	CISI-213-015	F
SCV	PSC INT 2-B-2B	BFN-CISI-007	N/A	N/A	92E-CV	VT-3	QP.10.09A				20050401	FJN	CISI-213-018	F
SCV	PSC INT 2-B-3A	BFN-CISI-007	N/A	N/A	92E-CV	VT-3	N-VT-15				20050405	MAB	CISI-213-015	F
SCV	PSC INT 2-B-3B	BFN-CISI-007	N/A	N/A	92E-CV	VT-3	QP.10 09A				20050401	FJN	CISI-213-018	F
SCV	PSC INT 2-B-4A	BFN-CISI-007	N/A	N/A	92E-CV	VT-3	N-VT-15				20050405	MAB	CISI-213-015	F
SCV	PSC INT 2-B-4B	BFN-CISI-007	N/A	N/A	92E-CV	VT-3	QP.10.09A				20050401	FJN	CISI-213-018	F
SCV	PSC INT 2-B-5B	BFN-CISI-007	N/A	N/A	92E-CV	VT-3	QP.10 09A				20050401	FJN	CISI-213-018	F
SCV	PSC INT 2-B-7B	BFN-CISI-007	N/A	N/A	92E-CV	VT-3	QP.10 09A				20050401	FJN	CISI-213-018	F
SCV	PSC INT 2-B-8A	BFN-CISI-007	N/A	N/A	92E-CV	VT-3	N-VT-15				20050405	MAB	CISI-213-015	F
SCV	PSC INT 2-B-8B	BFN-CISI-007	N/A	N/A	92E-CV	VT-3	QP.10 09A				20050401	FJN	CISI-213-018	F
SCV	DW LNR-2-2	BFN-CISI-010&11	N/A	N/A	92E-PC	VT-3	N-VT-15				20050325	JAF	CISI-213-009	P
SCV	DW LNR-2-3	BFN-CISI-010&11	N/A	N/A	92E-PC	VT-3	N-VT-15				20050322	JAF	CISI-213-003	P
SCV	DW LNR-2-3	BFN-CISI-010&11	N/A	N/A	92E-CV	VT-3	N-VT-15				20050322	JAF	CISI-213-001	P
SCV	DW LNR-2-3	BFN-CISI-010&11	N/A	N/A	P92-01	VT-3	N-VT-15				20050322	JAF	CISI-213-003	P
SCV	DW LNR-2-3	BFN-CISI-010&11	N/A	N/A	P92-01	VT-3	N-VT-15				20050404	MAB	CISI-213-020	P
SCV	DW LNR-2-5'	BFN-CISI-010&11	N/A	N/A	92E-PC	VT-3	N-VT-15				20050324	JAF	CISI-213-006	P
SCV	PEN 2-X-5G	BFN-CISI-015	N/A	N/A	92E-PC	VT-3	N-VT-15				20050329	MAB	CISI-213-013	P
SCV	PSC INT 2-B-10A	BFN-CISI-007	N/A	N/A	92E-CV	VT-3	N-VT-15				20050323	BTM	CISI-213-004	P
SCV	PSC INT 2-B-10B	BFN-CISI-007	N/A	N/A	P92-01	VT-3	QP.10.09A				20050404	FJN	CISI-213-019	P

SORT ODER: SYSTEM-WELDNO-CATEGORY-EXSCHD

SYSTEM	WELDNO	ISONO	CATEGORY	ITEMNO	EXREQ	EXSCHD	NDEPROC	CALSTD	COMPDIA	NOMTHCK	EXDATE	EXAMINER	EXAMREP	RESULTS
SCV	PSC INT 2-B-11A	BFN-CISI-007	N/A	N/A	92E-CV	VT-3	N-VT-15				20050323	BTM	CISI-213-004	P
SCV	PSC INT 2-B-11B	BFN-CISI-007	N/A	NA	P92-01	VT-3	QP.10.09A				20050404	FJN	CISI-213-019	P
SCV	PSC INT 2-B-12A	BFN-CISI-007	N/A	N/A	92E-PC	VT-3	N-VT-15				20050405	MAB	CISI-213-016	P
SCV	PSC INT 2-B-12A	BFN-CISI-007	N/A	N/A	92E-CV	VT-3	N-VT-15				20050323	BTM	CISI-213-004	P
SCV	PSC INT 2-B-12B	BFN-CISI-007	N/A	N/A	P92-01	VT-3	QP.10 09A				20050404	FJN	CISI-213-019	P
SCV	PSC INT 2-B-13A	BFN-CISI-007	N/A	N/A	92E-PC	VT-3	N-VT-15				20050405	MAB	CISI-213-016	P
SCV	PSC INT 2-B-13A	BFN-CISI-007	N/A	N/A	92E-CV	VT-3	N-VT-15				20050323	BTM	CISI-213-004	P
SCV	PSC INT 2-B-13B	BFN-CISI-007	N/A	N/A	P92-01	VT-3	QP.10.09A				20050404	FJN	CISI-213-019	P
SCV	PSC INT 2-B-14A	BFN-CISI-007	N/A	N/A	92E-PC	VT-3	N-VT-15				20050405	MAB	CISI-213-016	P
SCV	PSC INT 2-B-14A	BFN-CISI-007	N/A	N/A	92E-CV	VT-3	N-VT-15				20050323	BTM	CISI-213-004	P
SCV	PSC INT 2-B-14B	BFN-CISI-007	N/A	N/A	92E-CV	VT-3	QP.10.09A				20050404	FJN	CISI-213-019	P
SCV	PSC INT 2-B-15A	BFN-CISI-007	N/A	N/A	92E-PC	VT-3	N-VT-15				20050405	MAB	CISI-213-016	P
SCV	PSC INT 2-B-15A	BFN-CISI-007	N/A	N/A	92E-CV	VT-3	N-VT-15				20050323	BTM	CISI-213-004	P
SCV	PSC INT 2-B-15B	BFN-CISI-007	N/A	N/A	P92-01	VT-3	QP.10.09A				20050404	FJN	CISI-213-019	P
SCV	PSC INT 2-B-16A	BFN-CISI-007	N/A	N/A	92E-CV	VT-3	N-VT-15				20050323	BTM	CISI-213-004	P
SCV	PSC INT 2-B-16A	BFN-CISI-007	N/A	N/A	92E-PC	VT-3	N-VT-15				20050405	MAB	CISI-213-016	P
SCV	PSC INT 2-B-16B	BFN-CISI-007	N/A	N/A	P92-01	VT-3	QP.10.09A				20050404	FJN	CISI-213-019	P
SCV	PSC INT 2-B-1A	BFN-CISI-007	N/A	N/A	92E-CV	VT-3	N-VT-15				20050323	BTM	CISI-213-004	P
SCV	PSC INT 2-B-1B	BFN-CISI-007	N/A	N/A	P92-01	VT-3	QP.10.09A				20050404	BTM	CISI-213-019	P
SCV	PSC INT 2-B-2A	BFN-CISI-007	N/A	N/A	92E-PC	VT-3	N-VT-15				20050405	MAB	CISI-213-016	P
SCV	PSC INT 2-B-2A	BFN-CISI-007	N/A	N/A	92E-CV	VT-3	N-VT-15				20050323	BTM	CISI-213-004	P
SCV	PSC INT 2-B-2B	BFN-CISI-007	N/A	N/A	P92-01	VT-3	QP.10.09A				20050404	FJN	CISI-213-019	P
SCV	PSC INT 2-B-3A	BFN-CISI-007	N/A	N/A	92E-PC	VT-3	N-VT-15				20050405	MAB	CISI-213-016	P
SCV	PSC INT 2-B-3A	BFN-CISI-007	N/A	N/A	92E-CV	VT-3	N-VT-15				20050323	BTM	CISI-213-004	P
SCV	PSC INT 2-B-3B	BFN-CISI-007	N/A	N/A	P92-01	VT-3	QP.10 09A				20050404	FJN	CISI-213-019	P
SCV	PSC INT 2-B-4A	BFN-CISI-007	N/A	N/A	92E-CV	VT-3	N-VT-15				20050323	BTM	CISI-213-004	P
SCV	PSC INT 2-B-4A	BFN-CISI-007	N/A	N/A	92E-PC	VT-3	N-VT-15				20050405	MAB	CISI-213-016	P
SCV	PSC INT 2-B-4B	BFN-CISI-007	N/A	N/A	P92-01	VT-3	QP.10 09A				20050404	FJN	CISI-213-019	P
SCV	PSC INT 2-B-5A	BFN-CISI-007	N/A	N/A	92E-CV	VT-3	N-VT-15				20050323	BTM	CISI-213-004	P
SCV	PSC INT 2-B-5B	BFN-CISI-007	N/A	N/A	P92-01	VT-3	QP.10.09A				20050404	FJN	CISI-213-019	P
SCV	PSC INT 2-B-6A	BFN-CISI-007	N/A	N/A	92E-CV	VT-3	N-VT-15				20050323	BTM	CISI-213-004	P
SCV	PSC INT 2-B-6B	BFN-CISI-007	N/A	N/A	92E-CV	VT-3	QP.10.09A				20050401	FJN	CISI-213-018	P
SCV	PSC INT 2-B-6B	BFN-CISI-007	N/A	N/A	P92-01	VT-3	QP.10.09A				20050404	FJN	CISI-213-019	P
SCV	PSC INT 2-B-7A	BFN-CISI-007	N/A	N/A	92E-CV	VT-3	N-VT-15				20050323	BTM	CISI-213-004	P
SCV	PSC INT 2-B-7B	BFN-CISI-007	N/A	N/A	P92-01	VT-3	QP.10 09A				20050404	FJN	CISI-213-019	P
SCV	PSC INT 2-B-8A	BFN-CISI-007	N/A	N/A	92E-PC	VT-3	N-VT-15				20050405	MAB	CISI-213-016	P
SCV	PSC INT 2-B-8A	BFN-CISI-007	N/A	N/A	92E-CV	VT-3	N-VT-15				20050323	BTM	CISI-213-004	P
SCV	PSC INT 2-B-8B	BFN-CISI-007	N/A	N/A	P92-01	VT-3	QP.10.09A				20050404	FJN	CISI-213-019	P
SCV	PSC INT 2-B-9A	BFN-CISI-007	N/A	N/A	92E-CV	VT-3	N-VT-15				20050323	BTM	CISI-213-004	P
SCV	PSC INT 2-B-9B	BFN-CISI-007	N/A	N/A	92E-CV	VT-3	QP.10.09A				20050401	FJN	CISI-213-018	P

OWNER: TENNESSEE VALLEY AUTHORITY
NUCLEAR POWER GROUP
1101 MARKET STREET
CHATTANOOGA, TENNESSEE 37402

PLANT: BROWNS FERRY NUCLEAR PLANT
PO BOX 2000
DECATUR, ALABAMA 35609-2000

CERTIFICATION OF AUTHORIZATION: NOT REQUIRED
NATIONAL BOARD NUMBER FOR UNIT: NOT REQUIRED

IWE Exams UNIT: TWO CYCLE: 13 COMMERCIAL SERVICE DATE: MARCH 1, 1975

System	Component Number	ISO Drawing	Exreq	Category	Item Number	Exam Scheduled	Calibration Standard	Exam Date	Exam Report	Exam Results	Comments
SCV	DW LNR-2-1	2-719E532-4	92E-MS	E-A	E1.12	VT-3		20050326	CISI-213-007	P	EXAMINER M. A. BARNETTE. W.O. 04-723986-000. NOI# U2C13-004 "USE AS IS" CLOSED.
SCV	DW LNR-2-2	BFN-CISI-010&11	92E-CV	N/A	N/A	VT-3		20050325	CISI-213-008	F	W. O. 03-003908-000
SCV	DW LNR-2-2	BFN-CISI-010&11	92E-PC	N/A	N/A	VT-3		20050325	CISI-213-009	P	CLOSES NOI# U2C13-006. W.O. 03-003908-000
SCV	DW LNR-2-3	BFN-CISI-010&11	P92-01	N/A	N/A	VT-3		20050404	CISI-213-020	P	EXAMINER J.A. FERGERSON. W.O. 03-003908-000. PIN HOLES DISCOVERED AND REPAIRED IN NEW COATING ELEV. 584' BETWEEN CONTAIN. SPRAY RING HEADER AND 1ST GIRTH WELD BELOW SPRAY HEADER.
SCV	DW LNR-2-3	BFN-CISI-010&11	92E-PC	N/A	N/A	VT-3		20050322	CISI-213-003	P	Examiner H. B. Barnett. W.O. 03-003908-000. Closes NOI# U2C13-002.
SCV	DW LNR-2-3	BFN-CISI-010&11	92E-CV	N/A	N/A	VT-3		20050322	CISI-213-001	P	EXAMINER H. B. BARNETT. W.O. 03-003908-000
SCV	DW LNR-2-3	BFN-CISI-010&11	P92-01	N/A	N/A	VT-3		20050322	CISI-213-003	P	EXAMINER H. B. BARNETT. W.O. 03-003908-000
SCV	DW LNR-2-5	BFN-CISI-010&11	92E-PC	N/A	N/A	VT-3		20050324	CISI-213-006	P	W.O.03-003908-000. CLOSES NOI# U2C13-005
SCV	DW LNR-2-5	BFN-CISI-010&11	92E-CV	N/A	N/A	VT-3		20050324	CISI-213-005	F	W.O. 03-003908-000
SCV	MSB-2-1	41N720	92E-92	E-D	E5.30	VT-3		20050324	CISI-213-002	F	EXAMINER H. B. BARNETTE
SCV	MSB-2-1	41N720	P92-92	E-D	E5.30	VT-3		20040405	CISI-213-014	P	EXAMINER M. A. BARNETT W.O. 04-782986-000. Closes NOI# U2C13-001.
SCV	MSB-2-2	41N720	92E-92	E-D	E5.30	VT-3		20050324	CISI-213-002	F	EXAMINER H. B. BARNETT
SCV	MSB-2-2	41N720	P92-92	E-D	E5.30	VT-3		20050405	CISI-213-014	P	EXAMINER M. A. BARNETTE. W.O. 04-782986-000. CLOSES NOI# U2C13-001.
SCV	MSB-2-3	41N720	P92-92	E-D	E5.30	VT-3		20050324	CISI-213-014	P	EXAMINER M. A. BARNETTE. W.O. 04-782986-000. CLOSES NOI# U2C13-001.
SCV	MSB-2-3	41N720	92E-92	E-D	E5.30	VT-3		20050324	CISI-213-002	F	EXAMINER H. B. BARNETT.
SCV	PEN 2-X-5G	BFN-CISI-015	92E-PC	N/A	N/A	VT-3		20050329	CISI-213-013	P	W. O. 03-003908-000. CLOSES NOI# U2C13-008.
SCV	PEN 2-X-5G	BFN-CISI-015	92E-CV	N/A	N/A	VT-3		20050329	CISI-213-012	F	W.O.-03003908-000

OWNER: TENNESSEE VALLEY AUTHORITY
NUCLEAR POWER GROUP
1101 MARKET STREET
CHATTANOOGA, TENNESSEE 37402

PLANT: BROWNS FERRY NUCLEAR PLANT
PO BOX 2000
DECATUR, ALABAMA 35609-2000

IWE Exams

UNIT: TWO CYCLE: 13 COMMERCIAL SERVICE DATE: MARCH 1, 1975

CERTIFICATION OF AUTHORIZATION: NOT REQUIRED
NATIONAL BOARD NUMBER FOR UNIT: NOT REQUIRED

System	Component Number	ISO Drawing	Exreq	Category	Item Number	Exam Scheduled	Calibration Standard	Exam Date	Exam Report	Exam Results	Comments
SCV	PSC INT 2-B-10A	BFN-CISI-007	92E-CV	N/A	N/A	VT-3		20050323	CISI-213-004	P	EXAMINER M. A BARNETTE. W.O. 01-010668-000. NOI# U2C13-003 "USE AS IS" CLOSED. TORUS DOWNCOMERS ABOVE WATERLINE.
SCV	PSC INT 2-B-10B	BFN-CISI-007	92E-CV	N/A	N/A	VT-3		20050401	CISI-213-018	F	TORUS BELOW WATERLINE. W.O. 04-723956-000.
SCV	PSC INT 2-B-10B	BFN-CISI-007	P92-01	N/A	N/A	VT-3		20050404	CISI-213-019	P	TORUS BELOW WATERLINE. W.O. 04-723956-000. CLOSES NOI# U2C13-010.
SCV	PSC INT 2-B-10C	BFN-CISI-007	92E-92	E-C	E4.11	VT-1		20050404	CISI-213-017	P	TORUS AIR/WATER INTERFACE. W.O. 04-723956-000
SCV	PSC INT 2-B-11A	BFN-CISI-007	92E-CV	N/A	N/A	VT-3		20050323	CISI-213-004	P	EXAMINER M. A BARNETTE. W.O. 01-010668-000. NOI# U2C13-003 "USE AS IS" CLOSED. TORUS DOWNCOMERS ABOVE WATERLINE.
SCV	PSC INT 2-B-11B	BFN-CISI-007	92E-CV	N/A	N/A	VT-3		20050401	CISI-213-018	F	TORUS BELOW WATERLINE. W.O. 04-723956-000.
SCV	PSC INT 2-B-11B	BFN-CISI-007	P92-01	N/A	NA	VT-3		20050404	CISI-213-019	P	TORUS BELOW WATERLINE. W.O. 04-723956-000. CLOSES NOI# U2C13-010.
SCV	PSC INT 2-B-11C	BFN-CISI-007	92E-92	E-C	E4.11	VT-1		20050404	CISI-213-017	P	W.O. 04-723956-000. TORUS AIR/WATER INTERFACE
SCV	PSC INT 2-B-12A	BFN-CISI-007	92E-CV	N/A	N/A	VT-3		20050323	CISI-213-004	P	EXAMINER M. A BARNETTE. W.O. 01-010668-000. NOI# U2C13-003 "USE AS IS" CLOSED. TORUS DOWNCOMERS ABOVE WATERLINE.
SCV	PSC INT 2-B-12A	BFN-CISI-007	92E-PC	N/A	N/A	VT-3		20050405	CISI-213-016	P	MAIN VENT LINES AND VENT HEADER. EXAMINER J.A. FERGERSON. W.O. 03-003908-000. CLOSES NOI# U2C13-009.
SCV	PSC INT 2-B-12A	BFN-CISI-007	92E-CV	N/A	N/A	VT-3		20050405	CISI-213-015	F	MAIN VENT LINES AND VENT HEADER. EXAMINER J.A. FERGERSON. W.O. 03-003908-000.
SCV	PSC INT 2-B-12B	BFN-CISI-007	P92-01	N/A	N/A	VT-3		20050404	CISI-213-019	P	TORUS BELOW WATERLINE. W.O. 04-723956-000. CLOSES NOI# U2C13-010.
SCV	PSC INT 2-B-12B	BFN-CISI-007	92E-CV	N/A	N/A	VT-3		20050401	CISI-213-018	F	TORUS BELOW WATERLINE. W.O. 04-723956-000.
SCV	PSC INT 2-B-12C	BFN-CISI-007	92E-92	E-C	E4.11	VT-1		20050404	CISI-213-017	P	W.O. 04-723956-000. TORUS AIR/WATER INTERFACE

OWNER: TENNESSEE VALLEY AUTHORITY
NUCLEAR POWER GROUP
1101 MARKET STREET
CHATTANOOGA, TENNESSEE 37402

PLANT: BROWNS FERRY NUCLEAR PLANT
PO BOX 2000
DECATUR, ALABAMA 35609-2000

IWE Exams UNIT: TWO CYCLE: 13 COMMERCIAL SERVICE DATE: MARCH 1, 1975

CERTIFICATION OF AUTHORIZATION: NOT REQUIRED
NATIONAL BOARD NUMBER FOR UNIT: NOT REQUIRED

System	Component Number	ISO Drawing	Exreq	Category	Item Number	Exam Scheduled	Calibration Standard	Exam Date	Exam Report	Exam Results	Comments
SCV	PSC INT 2-B-13A	BFN-CISI-007	92E-PC	N/A	N/A	VT-3		20050405	CISI-213-016	P	MAIN VENT LINES AND VENT HEADER. EXAMINER J.A. FERGERSON. W.O. 03-003908-000. CLOSES NOI# U2C13-009.
SCV	PSC INT 2-B-13A	BFN-CISI-007	92E-CV	N/A	N/A	VT-3		20050323	CISI-213-004	P	EXAMINER M. A BARNETTE. W.O. 01-010668-000. NOI# U2C13-003 "USE AS IS" CLOSED. TORUS DOWNCOMERS ABOVE WATERLINE.
SCV	PSC INT 2-B-13A	BFN-CISI-007	92E-CV	N/A	N/A	VT-3		20050405	CISI-213-015	F	MAIN VENT LINES AND VENT HEADER. EXAMINER J.A. FERGERSON. W.O. 03-003908-000.
SCV	PSC INT 2-B-13B	BFN-CISI-007	P92-01	N/A	N/A	VT-3		20050404	CISI-213-019	P	TORUS BELOW WATERLINE. W.O. 04-723956-000. CLOSES NOI# U2C13-010.
SCV	PSC INT 2-B-13B	BFN-CISI-007	92E-CV	N/A	N/A	VT-3		20050401	CISI-213-018	F	TORUS BELOW WATERLINE. W.O. 04-723956-000
SCV	PSC INT 2-B-13C	BFN-CISI-007	92E-92	E-C	E4.11	VT-1		20050404	CISI-213-017	P	W.O. 04-723956-000. TORUS AIR/WATER INTERFACE
SCV	PSC INT 2-B-14A	BFN-CISI-007	92E-CV	N/A	N/A	VT-3		20050323	CISI-213-004	P	EXAMINER M. A BARNETTE. W.O. 01-010668-000. NOI# U2C13-003 "USE AS IS" CLOSED. TORUS DOWNCOMERS ABOVE WATERLINE.
SCV	PSC INT 2-B-14A	BFN-CISI-007	92E-PC	N/A	N/A	VT-3		20050405	CISI-213-016	P	MAIN VENT LINES AND VENT HEADER. J.A. FERGERSON. W.O. 03-003908-000. CLOSES NOI# U2C13-009.
SCV	PSC INT 2-B-14A	BFN-CISI-007	92E-CV	N/A	N/A	VT-3		20050405	CISI-213-015	F	MAIN VENT LINES AND VENT HEADER. EXAMINER J.A. FERGERSON. W.O. 03-003908-000.
SCV	PSC INT 2-B-14B	BFN-CISI-007	92E-CV	N/A	N/A	VT-3		20050404	CISI-213-019	P	TORUS BELOW WATERLINE. W.O. 04-723956-000. CLOSES NOI# U2C13-010.
SCV	PSC INT 2-B-14B	BFN-CISI-007	P92-01	N/A	N/A	VT-3		20050401	CISI-213-018	F	TORUS BELOW WATERLINE. W.O. 04-723956-000.
SCV	PSC INT 2-B-14C	BFN-CISI-007	92E-92	E-C	E4.11	VT-1		20050404	CISI-213-017	P	W.O. 04-723956-000. TORUS AIR/WATER INTERFACE
SCV	PSC INT 2-B-15A	BFN-CISI-007	92E-CV	N/A	N/A	VT-3		20050323	CISI-213-004	P	EXAMINER M. A BARNETTE. W.O. 01-010668-000. NOI# U2C13-003 "USE AS IS" CLOSED. TORUS DOWNCOMERS ABOVE WATERLINE.

OWNER: TENNESSEE VALLEY AUTHORITY
NUCLEAR POWER GROUP
1101 MARKET STREET
CHATTANOOGA, TENNESSEE 37402

PLANT: BROWNS FERRY NUCLEAR PLANT
PO BOX 2000
DECATUR, ALABAMA 35609-2000

CERTIFICATION OF AUTHORIZATION: NOT REQUIRED
NATIONAL BOARD NUMBER FOR UNIT: NOT REQUIRED

IWE Exams UNIT: TWO CYCLE: 13 COMMERCIAL SERVICE DATE: MARCH 1, 1975

System	Component Number	ISO Drawing	Exreq	Category	Item Number	Exam Scheduled	Calibration Standard	Exam Date	Exam Report	Exam Results	Comments
SCV	PSC INT 2-B-15A	BFN-CISI-007	92E-PC	N/A	N/A	VT-3		20050405	CISI-213-016	P	MAIN VENT LINES AND VENT HEADER. EXAMINER J.A. FERGERSON. W.O. 03-003908-000. CLOSES NOI# U2C13-009.
SCV	PSC INT 2-B-15A	BFN-CISI-007	92E-CV	N/A	N/A	VT-3		20050405	CISI-213-015	F	MAIN VENT LINES AND VENT HEADER. EXAMINER J.A. FERGERSON. W.O. 03-003908-000.
SCV	PSC INT 2-B-15B	BFN-CISI-007	92E-CV	N/A	N/A	VT-3		20050401	CISI-213-018	F	TORUS BELOW WATERLINE. W.O. 04-723956-000
SCV	PSC INT 2-B-15B	BFN-CISI-007	P92-01	N/A	N/A	VT-3		20050404	CISI-213-019	P	TORUS BELOW WATERLINE. W.O. 04-723956-000. CLOSES NOI# U2C13-010.
SCV	PSC INT 2-B-15C	BFN-CISI-007	92E-92	E-C	E4.11	VT-1		20050404	CISI-213-017	P	W.O. 04-723956-000. TORUS AIR/WATER INTERFACE
SCV	PSC INT 2-B-16A	BFN-CISI-007	92E-CV	N/A	N/A	VT-3		20050323	CISI-213-004	P	EXAMINER M. A BARNETTE. W.O. 01-010668-000. NOI# U2C13-003 "USE AS IS" CLOSED. TORUS DOWNCOMERS ABOVE WATERLINE.
SCV	PSC INT 2-B-16A	BFN-CISI-007	92E-PC	N/A	N/A	VT-3		20050405	CISI-213-016	P	MAIN VENT LINES AND VENT HEADER. EXAMINER J.A. FERGERSON. W.O. 03-003908-000. CLOSES NOI# U2C13-009.
SCV	PSC INT 2-B-16A	BFN-CISI-007	92E-CV	N/A	N/A	VT-3		20050405	CISI-213-015	F	MAIN VENT LINES AND VENT HEADER. EXAMINER J.A. FERGERSON. W.O. 03-003908-000.
SCV	PSC INT 2-B-16B	BFN-CISI-007	92E-CV	N/A	N/A	VT-3		20050401	CISI-213-018	F	TORUS BELOW WATERLINE.
SCV	PSC INT 2-B-16B	BFN-CISI-007	P92-01	N/A	N/A	VT-3		20050404	CISI-213-019	P	TORUS BELOW WATERLINE. W.O. 04-723956-000. CLOSES NOI# U2C13-010.
SCV	PSC INT 2-B-16C	BFN-CISI-007	92E-92	E-C	E4.11	VT-1		20050404	CISI-213-017	P	W.O. 04-723956-000. TORUS AIR/WATER INTERFACE
SCV	PSC INT 2-B-1A	BFN-CISI-007	92E-CV	N/A	N/A	VT-3		20050323	CISI-213-004	P	EXAMINER M. A BARNETTE. W.O. 01-010668-000. NOI# U2C13-003 "USE AS IS" CLOSED. TORUS DOWNCOMERS ABOVE WATERLINE.
SCV	PSC INT 2-B-1B	BFN-CISI-007	92E-CV	N/A	N/A	VT-3		20050401	CISI-213-018	F	TORUS BELOW WATERLINE. W.O. 04-723956-000
SCV	PSC INT 2-B-1B	BFN-CISI-007	P92-01	N/A	N/A	VT-3		20050404	CISI-213-019	P	TORUS BELOW WATERLINE. W.O. 04-723956-000. CLOSES NOI# U2C13-010

OWNER: TENNESSEE VALLEY AUTHORITY
NUCLEAR POWER GROUP
1101 MARKET STREET
CHATTANOOGA, TENNESSEE 37402

PLANT: BROWNS FERRY NUCLEAR PLANT
PO BOX 2000
DECATUR, ALABAMA 35609-2000

CERTIFICATION OF AUTHORIZATION: NOT REQUIRED
NATIONAL BOARD NUMBER FOR UNIT: NOT REQUIRED

IWE Exams UNIT: TWO CYCLE: 13 COMMERCIAL SERVICE DATE: MARCH 1, 1975

System	Component Number	ISO Drawing	Exreq	Category	Item Number	Exam Scheduled	Calibration Standard	Exam Date	Exam Report	Exam Results	Comments
SCV	PSC INT 2-B-1C	BFN-CISI-007	92E-92	E-C	E4.11	VT-1		20050404	CISI-213-017	P	W.O. 04-723956-000. TORUS AIR/WATER INTERFACE
SCV	PSC INT 2-B-2A	BFN-CISI-007	92E-CV	N/A	N/A	VT-3		20050323	CISI-213-004	P	EXAMINER M. A BARNETTE. W.O. 01-010668-000. NOI# U2C13-003 "USE AS IS" CLOSED. TORUS DOWNCOMERS ABOVE WATERLINE.
SCV	PSC INT 2-B-2A	BFN-CISI-007	92E-CV	N/A	N/A	VT-3		20050405	CISI-213-015	F	EXAMINER J. A. FERGERSON. W. O. 03-003908-000. MAIN VENT LINES AND VENT HEADER.
SCV	PSC INT 2-B-2A	BFN-CISI-007	92E-PC	N/A	N/A	VT-3		20050405	CISI-213-016	P	EXAMINER J. A. FERGERSON. W.O. 03-003908-000. CLOSES NOI# U2C13-009. MAIN VENT LINES AND VENT HEADER.
SCV	PSC INT 2-B-2B	BFN-CISI-007	P92-01	N/A	N/A	VT-3		20050404	CISI-213-019	P	TORUS BELOW WATERLINE. W.O. 04-723956-000. CLOSES NOI# U2C13-010.
SCV	PSC INT 2-B-2B	BFN-CISI-007	92E-CV	N/A	N/A	VT-3		20050401	CISI-213-018	F	TORUS BELOW WATERLINE. W.O. 04-723956-000
SCV	PSC INT 2-B-2C	BFN-CISI-007	92E-92	E-C	E4.11	VT-1		20050404	CISI-213-017	P	W.O. 04-723956-000. TORUS AIR/WATER INTERFACE
SCV	PSC INT 2-B-3A	BFN-CISI-007	92E-CV	N/A	N/A	VT-3		20050405	CISI-213-015	F	MAIN VENT LINES AND VENT HEADER. EXAMINER J.A. FERGERSON. W.O. 03-003908-000.
SCV	PSC INT 2-B-3A	BFN-CISI-007	92E-CV	N/A	N/A	VT-3		20050323	CISI-213-004	P	EXAMINER M. A BARNETTE. W.O. 01-010668-000. NOI# U2C13-003 "USE AS IS" CLOSED. TORUS DOWNCOMERS ABOVE WATERLINE.
SCV	PSC INT 2-B-3A	BFN-CISI-007	92E-PC	N/A	N/A	VT-3		20050405	CISI-213-016	P	MAIN VENT LINES AND VENT HEADER. EXAMINER J.A. FERGERSON. W.O. 03-003908-000. CLOSES NOI# U2C13-009
SCV	PSC INT 2-B-3B	BFN-CISI-007	92E-CV	N/A	N/A	VT-3		20050401	CISI-213-018	F	TORUS BELOW WATERLINE. W.O. 04-723956-000.
SCV	PSC INT 2-B-3B	BFN-CISI-007	P92-01	N/A	N/A	VT-3		20050404	CISI-213-019	P	TORUS BELOW WATERLINE. W.O. 04-723956-000. CLOSES NOI# U2C13-010.
SCV	PSC INT 2-B-3C	BFN-CISI-007	92E-92	E-C	E4.11	VT-1		20050404	CISI-213-017	P	W.O. 04-723956-000. TORUS AIR/WATER INTERFACE
SCV	PSC INT 2-B-4A	BFN-CISI-007	92E-CV	N/A	N/A	VT-3		20050323	CISI-213-004	P	EXAMINER M. A BARNETTE. W.O. 01-010668-000. NOI# U2C13-003 "USE AS IS" CLOSED. TORUS DOWNCOMERS ABOVE WATERLINE.

OWNER: TENNESSEE VALLEY AUTHORITY
NUCLEAR POWER GROUP
1101 MARKET STREET
CHATTANOOGA, TENNESSEE 37402

PLANT: BROWNS FERRY NUCLEAR PLANT
PO BOX 2000
DECATUR, ALABAMA 35609-2000

CERTIFICATION OF AUTHORIZATION: NOT REQUIRED
NATIONAL BOARD NUMBER FOR UNIT: NOT REQUIRED

IWE Exams UNIT: TWO CYCLE: 13 COMMERCIAL SERVICE DATE: MARCH 1, 1975

System	Component Number	ISO Drawing	Exreq	Category	Item Number	Exam Scheduled	Calibration Standard	Exam Date	Exam Report	Exam Results	Comments
SCV	PSC INT 2-B-4A	BFN-CISI-007	92E-CV	N/A	N/A	VT-3		20050405	CISI-213-015	F	MAIN VENT LINES AND VENT HEADER. EXAMINER J.A. FERGERSON. W.O. 03-003908-000.
SCV	PSC INT 2-B-4A	BFN-CISI-007	92E-PC	N/A	N/A	VT-3		20050405	CISI-213-016	P	MAIN VENT LINES AND VENT HEADER. EXAMINER J.A. FERGERSON. W.O. 03-003908-000. CLOSES NOI# U2C13-009.
SCV	PSC INT 2-B-4B	BFN-CISI-007	P92-01	N/A	N/A	VT-3		20050404	CISI-213-019	P	TORUS BELOW WATERLINE. W.O. 04-723956-000. CLOSES NOI# U2C13-010.
SCV	PSC INT 2-B-4B	BFN-CISI-007	92E-CV	N/A	N/A	VT-3		20050401	CISI-213-018	F	TORUS BELOW WATERLINE. W.O. 04-723956-000.
SCV	PSC INT 2-B-4C	BFN-CISI-007	92E-92	E-C	E4.11	VT-1		20050404	CISI-213-017	P	W.O. 04-723956-000. TORUS AIR/WATER INTERFACE
SCV	PSC INT 2-B-5A	BFN-CISI-007	92E-CV	N/A	N/A	VT-3		20050323	CISI-213-004	P	EXAMINER M. A BARNETTE. W.O. 01-010668-000. NOI# U2C13-003 "USE AS IS" CLOSED. TORUS DOWNCOMERS ABOVE WATERLINE.
SCV	PSC INT 2-B-5B	BFN-CISI-007	P92-01	N/A	N/A	VT-3		20050404	CISI-213-019	P	TORUS BELOW WATERLINE. W.O. 04-723956-000. CLOSES NOI# U2C13-010.
SCV	PSC INT 2-B-5B	BFN-CISI-007	92E-CV	N/A	N/A	VT-3		20050401	CISI-213-018	F	TORUS BELOW WATERLINE. W.O. 04-723956-000.
SCV	PSC INT 2-B-5C	BFN-CISI-007	92E-92	E-C	E4.11	VT-1		20050404	CISI-213-017	P	W.O. 04-723956-000. TORUS AIR/WATER INTERFACE
SCV	PSC INT 2-B-6A	BFN-CISI-007	92E-CV	N/A	N/A	VT-3		20050323	CISI-213-004	P	EXAMINER M. A BARNETTE. W.O. 01-010668-000. NOI# U2C13-003 "USE AS IS" CLOSED. TORUS DOWNCOMERS ABOVE WATERLINE.
SCV	PSC INT 2-B-6B	BFN-CISI-007	92E-CV	N/A	N/A	VT-3		20050401	CISI-213-018	P	TORUS BELOW WATERLINE. W.O. 04-723956-000.
SCV	PSC INT 2-B-6B	BFN-CISI-007	P92-01	N/A	N/A	VT-3		20050404	CISI-213-019	P	TORUS BELOW WATERLINE. W.O. 04-723956-000. CLOSES NOI# U2C13-010.
SCV	PSC INT 2-B-6C	BFN-CISI-007	92E-92	E-C	E4.11	VT-1		20050404	CISI-213-017	P	W.O. 04-723956-000. TORUS AIR/WATER INTERFACE
SCV	PSC INT 2-B-7A	BFN-CISI-007	92E-CV	N/A	N/A	VT-3		20050323	CISI-213-004	P	EXAMINER M. A BARNETTE. W.O. 01-010668-000. NOI# U2C13-003 "USE AS IS" CLOSED. TORUS DOWNCOMERS ABOVE WATERLINE.

OWNER: TENNESSEE VALLEY AUTHORITY
NUCLEAR POWER GROUP
1101 MARKET STREET
CHATTANOOGA, TENNESSEE 37402

PLANT: BROWNS FERRY NUCLEAR PLANT
PO BOX 2000
DECATUR, ALABAMA 35609-2000

CERTIFICATION OF AUTHORIZATION: NOT REQUIRED
NATIONAL BOARD NUMBER FOR UNIT: NOT REQUIRED

IWE Exams UNIT: TWO CYCLE: 13 COMMERCIAL SERVICE DATE: MARCH 1, 1975

System	Component Number	ISO Drawing	Exreq	Category	Item Number	Exam Scheduled	Calibration Standard	Exam Date	Exam Report	Exam Results	Comments
SCV	PSC INT 2-B-7B	BFN-CISI-007	92E-CV	N/A	N/A	VT-3		20050401	CISI-213-018	F	TORUS BELOW WATERLINE. W.O.04-723956-000.
SCV	PSC INT 2-B-7B	BFN-CISI-007	P92-01	N/A	N/A	VT-3		20050404	CISI-213-019	P	TORUS BELOW WATERLINE. W.O. 04-723956-000. CLOSES NOI# U2C13-010.
SCV	PSC INT 2-B-7C	BFN-CISI-007	92E-92	E-C	E4.11	VT-1		20050404	CISI-213-017	P	W.O. 04-723956-000. TORUS AIR/WATER INTERFACE
SCV	PSC INT 2-B-8A	BFN-CISI-007	92E-PC	N/A	N/A	VT-3		20050405	CISI-213-016	P	MAIN VENT LINES AND VENT HEADER. EXAMINER J.A. FERGERSON. W.O. 03-003908-000. CLOSES NOI# U2C13-009.
SCV	PSC INT 2-B-8A	BFN-CISI-007	92E-CV	N/A	N/A	VT-3		20050405	CISI-213-015	F	MAIN VENT LINES AND VENT HEADER. EXAMINER J.A. FERGERSON. W.O. 03-003908-000.
SCV	PSC INT 2-B-8A	BFN-CISI-007	92E-CV	N/A	N/A	VT-3		20050323	CISI-213-004	P	EXAMINER M. A BARNETTE. W.O. 01-010668-000. NOI# U2C13-003 "USE AS IS" CLOSED. TORUS DOWNCOMERS ABOVE WATERLINE.
SCV	PSC INT 2-B-8B	BFN-CISI-007	92E-CV	N/A	N/A	VT-3		20050401	CISI-213-018	F	TORUS BELOW WATERLINE. W.O. 04-723956-000.
SCV	PSC INT 2-B-8B	BFN-CISI-007	P92-01	N/A	N/A	VT-3		20050404	CISI-213-019	P	TORUS BELOW WATERLINE. W.O. 04-723956-000. CLOSES NOI# U2C13-010.
SCV	PSC INT 2-B-8C	BFN-CISI-007	92E-92	E-C	E4.11	VT-1		20050404	CISI-213-017	P	W.O. 04-723956-000. TORUS AIR/WATER INTERFACE
SCV	PSC INT 2-B-9A	BFN-CISI-007	92E-CV	N/A	N/A	VT-3		20050323	CISI-213-004	P	EXAMINER M. A BARNETTE. W.O. 01-010668-000. NOI# U2C13-003 "USE AS IS" CLOSED. TORUS DOWNCOMERS ABOVE WATERLINE.
SCV	PSC INT 2-B-9B	BFN-CISI-007	92E-CV	N/A	N/A	VT-3		20050401	CISI-213-018	P	TORUS BELOW WATERLINE. W.O. 04-723956-000.
SCV	PSC INT 2-B-9C	BFN-CISI-007	92E-92	E-C	E4.11	VT-1		20050404	CISI-213-017	P	W.O. 04-723956-000. TORUS AIR/WATER INTERFACE

ENCLOSURE 2

TENNESSEE VALLEY AUTHORITY
BROWNS FERRY NUCLEAR PLANT (BFN)
UNIT 2
AMERICAN SOCIETY OF MECHANICAL ENGINEERS (ASME),
SECTION XI, THIRD TEN-YEAR INSPECTION INTERVAL

REPAIR AND REPLACEMENT PROGRAM

SUMMARY REPORT (NIS-2) FOR CYCLE 13 OPERATION

(SEE ATTACHED)

BROWNS FERRY

NUCLEAR PLANT

UNIT 2 CYCLE 13

ASME SECTION XI

NIS-2 OWNER'S REPORT

OWNER'S REPORT FOR REPAIRS OR REPLACEMENTS

APPENDIX I _____ **Summary of Repair and Replacement Activities**

APPENDIX II _____ **Form NIS-2 Owner's Report For Repairs or Replacements**

Owner: TENNESSEE VALLEY AUTHORITY 1101 Market Street Chattanooga, TN 37402-2801	Plant: Browns Ferry Nuclear Plant P. O. Box 2000 Decatur, AL 35609-2000
Unit: Two	Certificate of Authorization: Not Required
Commercial Service Date: March 1, 1975	
National Board Number for Unit: Not Required	

APPENDIX I

SUMMARY OF REPAIR AND REPLACEMENT ACTIVITIES

Owner: TENNESSEE VALLEY AUTHORITY
1101 Market Street
Chattanooga, TN 37402-2801

Plant: Browns Ferry Nuclear Plant
P. O. Box 2000
Decatur, AL 35609-2000

Unit: Two

Certificate of Authorization: Not Required

Commercial Service Date: March 1, 1975

National Board Number for Unit: Not Required

WID	SYS	ORG	CLASS	ACTIVITY
04-712068-000	071	MAINT	2	REPLACEMENT
04-712069-000	073	MAINT	2	REPLACEMENT
04-712613-001 04-712613-002	001	MAINT	2	REPLACEMENT
04-720770-000 through 04-720770-004 05-713848-000	085	MAINT	2	REPLACEMENT
04-720767-000	085	TVA	1	REPLACEMENT
04-718533-000 through 04-718533-019	001	MAINT	1 & 2	REPLACEMENT
04-718528-000	003	TVA	1	REPLACEMENT
03-022883-000 03-022883-002	010	TVA	1	MODIFICATION
04-716165-000 04-716165-001	073	TVA	2	MODIFICATION
04-717654-000	001	TVA	1	MODIFICATION
04-718364-000	068	MAINT	1	REPLACEMENT
04-720057-000 04-720057-002	001	TVA	1	MODIFICATION

Owner: TENNESSEE VALLEY AUTHORITY
1101 Market Street
Chattanooga, TN 37402-2801

Plant: Browns Ferry Nuclear Plant
P. O. Box 2000
Decatur, AL 35609-2000

Unit: Two

Certificate of Authorization: Not Required

Commercial Service Date: March 1, 1975

National Board Number for Unit: Not Required

WID	SYS	ORG	CLASS	ACTIVITY
04-720786-000 04-720786-002 04-720788-000	006	TVA	2	MODIFICATION
05-713340-000	074	MAINT	2	REPLACEMENT
05-713699-000	074	MAINT	2	REPLACEMENT
01-004739-000	074	MAINT	2	REPLACEMENT
00-011219-001 03-004245-001 03-004255-000 03-004268-000	001	MAINT	1	REPLACEMENT
03-006432-000	073	MAINT	2	REPLACEMENT
04-711639-000	001	MAINT	2	REPLACEMENT

Owner: TENNESSEE VALLEY AUTHORITY 1101 Market Street Chattanooga, TN 37402-2801	Plant: Browns Ferry Nuclear Plant P. O. Box 2000 Decatur, AL 35609-2000
Unit: Two	Certificate of Authorization: Not Required
Commercial Service Date: March 1, 1975	
National Board Number for Unit: Not Required	

LEGEND

WID - Work Implementing Document
Example: A99999A or 50000A refers to a Design Change Notice
99-999999-999 refers to a Work Order

SYS- System

001 - Main Steam
003 - Reactor Feedwater
006 - Heater Drains & Vents
008 - Turbine Drains
010 - Reactor Drains, Vents and Blowdown
063 - Standby Liquid Control
068 - Reactor Water Recirculation
069 - Reactor Water Cleanup
071 - Reactor Core Isolation Cooling
073 - High Pressure Coolant Injection
074 - Residual Heat Removal
075 - Core Spray
085 - Control Rod Drive
092 - Neutron Monitoring

ORG - Organization which performed the WID
MAINT - TVA's Maintenance Organization
GE - General Electric Company
TVA - Work performed by Stone and Webster Engineering Corporation or Framatome utilizing TVA's Quality Assurance Program and procedures

CLASS - Refers to ASME Code Class 1 or 2

ACTIVITY - Classifies work activity as being repair, replacement or modification

Owner: TENNESSEE VALLEY AUTHORITY 1101 Market Street Chattanooga, TN 37402-2801	Plant: Browns Ferry Nuclear Plant P. O. Box 2000 Decatur, AL 35609-2000
Unit: Two	Certificate of Authorization: Not Required
Commercial Service Date: March 1, 1975	
National Board Number for Unit: Not Required	

APPENDIX II

FORM NIS-2 OWNER'S REPORT FOR REPAIRS OR REPLACEMENTS

Owner:	TENNESSEE VALLEY AUTHORITY 1101 Market Street Chattanooga, TN 37402-2801	Plant:	Browns Ferry Nuclear Plant P. O. Box 2000 Decatur, AL 35609-2000
Unit:	Two	Certificate of Authorization:	Not Required
Commercial Service Date:	March 1, 1975		
National Board Number for Unit:	Not Required		

FORM NIS-2 OWNER'S REPORT FOR REPAIR/REPLACEMENT ACTIVITY
As Required by the Provisions of the ASME Code Section XI

1. Owner Tennessee Valley Authority (TVA) (Name)
   1101 Market Street
   Chattanooga, TN 37402-2801 (Address)

   Date June 3, 2005

   Sheet 1 of 1

2. Plant Browns Ferry Nuclear Plant (BFN) (Name)
   P. O. Box 2000, Decatur, AL 35609-2000 (Address)

   Unit 2

   Work Order (WO) 04-712068-000
   Repair/Replacement Organization P.O. No., Job No., etc.

3. Work Performed by TVA-BFN (Name)
   P. O. Box 2000, Decatur, AL 35609-2000 (Address)

   Type Code Symbol Stamp N/A

   Authorization No. N/A

   Expiration Date N/A

4. Identification of System System 071, Reactor Core Isolation Cooling (RCIC) System (ASME Code Class 2 equivalent)

5. (a) Applicable Construction Code USAS B31.1.0 19 67 * Edition, N/A Addenda, N/A Code Case

   (b) Applicable Edition of Section XI Utilized for Repairs or Replacements 19 95 Edition, 1996 Addenda

6. Identification of Components

Name of Component	Name of Manufacturer	Manufacturer Serial No.	National Board No.	Other Identification	Year Built	Corrected, Removed, or Installed	ASME Code Stamped (Yes or No)
RCIC Turbine Exhaust Rupture Disc	Fike Metal Products 8-CPV-C-BT	Lot# 0113039	N/A	2-RPD-071-0011A	N/A	Replaced	No
RCIC Turbine Exhaust Rupture Disc	Fike Metal Products 8-CPV-C-BT	Lot # 0113039	N/A	2-RPD-071-0011A	N/A	Replacement	No

7. Description of Work Replaced rupture disc on turbine exhaust.

8. Tests Conducted: Hydrostatic ☐ Pneumatic ☐ Nominal Operating Pressure ☒ Exempt ☐

   Other ☐ Pressure N/A psi Test Temp. N/A °F

NOTE: Supplemental Sheets in form of lists, sketches, or drawings may be used, provided (1) size is 8½ in. X 11 in., (2) information in items 1 through 6 on this report is included on each sheet, and (3) each sheet is numbered and the number of sheets is recorded at the top of this form.

*as amended by additional quality assurance requirements found in Contracts 70C53-92291-7 & 01NJN-270016 and Design Criteria BFN-50-7071 & BFN-50-C-7105.

FORM NIS-2 (Back)

WID: 04-712068-000

9. Remarks This activity is a normal, periodic replacement and inspection of the rupture disc required by ASME/ANSI OM-10 and controlled by
Applicable Manufacturer's Data Reports to be attached
the BFN Preventive Maintenance Program. No degradation was identified during inspection of the rupture disc removed during this subject activity.

CERTIFICATE OF COMPLIANCE

I certify that the statements made in the report are correct and this conforms to the rules of the ASME Code, Section XI.

Type Code Symbol Stamp N/A

Certificate of Authorization No. N/A Expiration Date N/A

Signed Stephen C. Willard, System Engineer Date 6-3, 20 05
Owner or Owner's Designee, Title

CERTIFICATE OF INSERVICE INSPECTION

I, the undersigned, holding a valid commission issued by the National Board of Boiler and Pressure Vessel Inspectors and the State or Province of Tennessee and employed by HSB CT of Connecticut have inspected the components described in this Owner's Report during the period 3/24/05 to 6/6/05, and state that to the best of my knowledge and belief, the Owner has performed examinations and taken corrective measures described in this Owner's Report in accordance with the requirements of the ASME Code, Section XI.

By signing this certificate neither the Inspector nor his employer makes any warranty, expressed or implied, concerning the examinations and corrective measures described in this Owner's Report. Furthermore, neither the Inspector nor his employer shall be liable in any manner for any personal injury or property damage or a loss of any kind arising from or connected with this inspection.

Inspector's Signature Commissions TN 4011
National Board, State, Province, and Endorsements

Date 6/6 20 05

FORM NIS-2 OWNER'S REPORT FOR REPAIR/REPLACEMENT ACTIVITY
As Required by the Provisions of the ASME Code Section XI

1. Owner Tennessee Valley Authority (TVA) (Name)
   1101 Market Street
   Chattanooga, TN 37402-2801 (Address)

   Date June 3, 2005

   Sheet 1 of 1

2. Plant Browns Ferry Nuclear Plant (BFN) (Name)
   P. O. Box 2000, Decatur, AL 35609-2000 (Address)

   Unit 2

   Work Order (WO) 04-712069-000
   Repair/Replacement Organization P.O. No., Job No., etc.

3. Work Performed by TVA-BFN (Name)
   P. O. Box 2000, Decatur, AL 35609-2000 (Address)

   Type Code Symbol Stamp N/A
   Authorization No. N/A
   Expiration Date N/A

4. Identification of System System 073, High Pressure Coolant Injection (HPCI) System (ASME Code Class 2 equivalent)

5. (a) Applicable Construction Code USAS B31.1.0 19 67 * Edition, N/A Addenda, N/A Code Case

   (b) Applicable Edition of Section XI Utilized for Repairs or Replacements 19 95 Edition, 1996 Addenda

6. Identification of Components

Name of Component	Name of Manufacturer	Manufacturer Serial No.	National Board No.	Other Identification	Year Built	Corrected, Removed, or Installed	ASME Code Stamped (Yes or No)
HPCI Turbine Exhaust Inner Rupture Disc	Fike Metal Products 16-CPV-C-BT	Lot # 9723640	N/A	2-RPD-073-0729	1997	Replaced	Yes
HPCI Turbine Exhaust Inner Rupture Disc	Fike Metal Products 16-CPV-C-BT	Lot # 9723640	N/A	2-RPD-073-0729	1997	Replacement	Yes

7. Description of Work Replaced rupture disc on turbine exhaust.

8. Tests Conducted: Hydrostatic ☐ Pneumatic ☐ Nominal Operating Pressure ☒ Exempt ☐
   Other ☐ Pressure N/A psi Test Temp. N/A °F

NOTE: Supplemental Sheets in form of lists, sketches, or drawings may be used, provided (1) size is 8½ in. X 11 in., (2) information in items 1 through 6 on this report is included on each sheet, and (3) each sheet is numbered and the number of sheets is recorded at the top of this form.

*as amended by additional quality assurance requirements found in Contracts 70C53-92291-7, 221688 and Design Criteria BFN-50-7073 and BFN-50-C-7105.

FORM NIS-2 (Back)

WID: 04-712069-000

9. Remarks This activity is a normal, periodic replacement and inspection of the rupture disc required by ASME/ANSI OM-10 and controlled by the BFN Preventive Maintenance Program. No degradation was identified during inspection of the rupture disc removed during this subject activity.

Applicable Manufacturer's Data Reports to be attached

CERTIFICATE OF COMPLIANCE

I certify that the statements made in the report are correct and this conforms to the rules of the ASME Code, Section XI.

Type Code Symbol Stamp N/A

Certificate of Authorization No. N/A Expiration Date N/A

Signed System Engineer Date 6-3 , 20 05

Owner or Owner's Designee, Title

CERTIFICATE OF INSERVICE INSPECTION

I, the undersigned, holding a valid commission issued by the National Board of Boiler and Pressure Vessel Inspectors and the State or Province of Tennessee and employed by HSB CT of Connecticut have inspected the components described in this Owner's Report during the period 3/24/05 to 6/7/05, and state that to the best of my knowledge and belief, the Owner has performed examinations and taken corrective measures described in this Owner's Report in accordance with the requirements of the ASME Code, Section XI.

By signing this certificate neither the Inspector nor his employer makes any warranty, expressed or implied, concerning the examinations and corrective measures described in this Owner's Report. Furthermore, neither the Inspector nor his employer shall be liable in any manner for any personal injury or property damage or a loss of any kind arising from or connected with this inspection.

Inspector's Signature Commissions TN 4011

National Board, State, Province, and Endorsements

Date 6/7 20 05

44

FORM NR-1
DATA REPORT OF RUPTURE DISKS
As Required by the Provisions of the ASME Code Rules, Section III, Div. 1

1. Manufactured by FIKE CORPORATION BLUE SPRINGS, MO U.S.A.
(Name and address)

IDENTIFICATION OF RUPTURE DISK

2. Type or Style No. CPV-C-BT Serial No. 9723640 Lot No. 9723640

3. Disk Dimensional Characteristics:

Inlet Size 16 inch Outlet Size 16 inch Relief Area 201.06 in^2

4. Material Specification 316 SST ASTM A240

5. Drawing No. A3975-1

AUTHORIZATION TEST RESULTS

6. Burst Pressure 185 (psi) Max. 165 (psi) Min.

7. Coincident Disk Temperature 378 (F)

8. Fluid Used in Tests AIR

9. Cyclic Test Results (if required) N/A

CERTIFICATION

10. Place of Test BLUE SPRINGS, MO U.S.A. Date of Test 12/29/97

We certify the above data to be correct and that the requirements of the ASME Code rules have been met.

Signed FIKE CORPORATION by Kristen C. Roy Date 12-29 19 97

BURST TEST RESULTS:

1. 171.3 psig @ 378°F
2. 170.7 psig @ 378°F

The above burst tests were witnessed, at Fike Blue Springs, MO by A.Majmudar of TVA

(12/80) This form (E00026) may be obtained from the Order Dept., ASME, 345 E. 47th St., New York, N.Y. 10017

CK 3/24/05

FORM NIS-2 OWNER'S REPORT FOR REPAIR/REPLACEMENT ACTIVITY
As Required by the Provisions of the ASME Code Section XI

1. Owner Tennessee Valley Authority (TVA) (Name)
1101 Market Street
Chattanooga, TN 37402-2801 (Address)

Date June 6, 2005

Sheet 1 of 1

2. Plant Browns Ferry Nuclear Plant (BFN) (Name)
P. O. Box 2000, Decatur, AL 35609-2000 (Address)

Unit 2

Work Orders (WO) 04-712613-001 and 04-712613-002
Repair/Replacement Organization P.O. No., Job No., etc.

3. Work Performed by TVA-BFN (Name)
P. O. Box 2000, Decatur, AL 35609-2000 (Address)

Type Code Symbol Stamp N/A
Authorization No. N/A
Expiration Date N/A

4. Identification of System System 001, Main Steam System (ASME Code Class 2 equivalent)

5. (a) Applicable Construction Code (valves) ASME III, Class 2 1989 Edition (no N-stamp) (piping sys) USAS B31.1.0 19 67 * Edition, N/A Addenda, N/A Code Case

(b) Applicable Edition of Section XI Utilized for Repairs or Replacements 19 95 Edition, 1996 Addenda

6. Identification of Components

Name of Component	Name of Manufacturer	Manufacturer Serial No.	National Board No.	Other Identification	Year Built	Corrected, Removed, or Installed	ASME Code Stamped (Yes or No)
Off-gas Preheater CKV	FLOWSERVE	E966A-1-1	N/A	2-CKV-001-0742	2000	Removed	No
Off-gas Preheater CKV	FLOWSERVE	31BBM or 32BBM**	N/A	2-CKV-001-0742	2005	Installed	No
Off-gas Preheater CKV	FLOWSERVE	E966A-1-2	N/A	2-CKV-001-0744	2000	Removed	No
Off-gas Preheater CKV	FLOWSERVE	31BBM or 32BBM**	N/A	2-CKV-001-0744	2005	Installed	No

7. Description of Work Replaced valves with new valves, same model and manufacturer.

8. Tests Conducted: Hydrostatic ☐ Pneumatic ☐ Nominal Operating Pressure ☒ Exempt ☐
Other ☐ Pressure N/A psi Test Temp. N/A °F

NOTE: Supplemental Sheets in form of lists, sketches, or drawings may be used, provided (1) size is 8½ in. X 11 in., (2) information in items 1 through 6 on this report is included on each sheet, and (3) each sheet is numbered and the number of sheets is recorded at the top of this form.

*as amended by additional quality assurance requirements found in Contract 1474286, PO 20077/Release 00321 and Design Criteria BFN-50-7001 and BFN-50-C-7105.

** The serial numbers versus location were not recorded at the time of installation and the valves are located in a high radiation area which is inaccessible at the time this report is being prepared. The two valves installed were verified to be from Purchase Order 20077/Release 00321. Only these two valves were purchased under this contract. The serial numbers associated with this contract were verified by BFN during the reciept inspection.

FORM NIS-2 (Back)

WID: 04-712613-001 and 04-712613-002

9. Remarks Replaced valves with new valves, same model and manufacturer.
Applicable Manufacturer's Data Reports to be attached

CERTIFICATE OF COMPLIANCE

I certify that the statements made in the report are correct and this conforms to the rules of the ASME Code, Section XI.

Type Code Symbol Stamp N/A

Certificate of Authorization No. N/A Expiration Date N/A

Signed [signature], System Engineer Date 6-7, 20 05
Owner or Owner's Designee, Title

CERTIFICATE OF INSERVICE INSPECTION

I, the undersigned, holding a valid commission issued by the National Board of Boiler and Pressure Vessel Inspectors and the State or Province of Tennessee and employed by HSB CT of Connecticut have inspected the components described in this Owner's Report during the period 4/12/05 to 6/8/05, and state that to the best of my knowledge and belief, the Owner has performed examinations and taken corrective measures described in this Owner's Report in accordance with the requirements of the ASME Code, Section XI.

By signing this certificate neither the Inspector nor his employer makes any warranty, expressed or implied, concerning the examinations and corrective measures described in this Owner's Report. Furthermore, neither the inspector nor his employer shall be liable in any manner for any personal injury or property damage or a loss of any kind arising from or connected with this inspection.

[signature] Commissions TN4011
Inspector's Signature National Board, State, Province, and Endorsements

Date 6/8 20 05

FORM NIS-2 OWNER'S REPORT FOR REPAIR/REPLACEMENT ACTIVITY
As Required by the Provisions of the ASME Code Section XI

1. Owner Tennessee Valley Authority (TVA) (Name)
   1101 Market Street
   Chattanooga, TN 37402-2801 (Address)

   Date June 7, 2005

   Sheet 1 of 2

2. Plant Browns Ferry Nuclear Plant (BFN) (Name)
   P. O. Box 2000, Decatur, AL 35609-2000 (Address)

   Unit 2

   Work Orders (WO) 04-720770-000 through 04-720770-004 and 05-713848-000
   (Repair/Replacement Organization P.O. No., Job No., etc.)

3. Work Performed by TVA-BFN (Name)
   P. O. Box 2000, Decatur, AL 35609-2000 (Address)

   Type Code Symbol Stamp N/A
   Authorization No. N/A
   Expiration Date N/A

4. Identification of System System 085, Control Rod Drive (CRD) System (ASME Code Class 2 equivalent)

5. (a) Applicable Construction Code USAS B31.1.0 19 67 * Edition, N/A Addenda, N/A Code Case
   Accumulators - ASME Section VIII, Div 1, 1974 Edition, Summer 1975 Addenda

   (b) Applicable Edition of Section XI Utilized for Repairs or Replacements 19 95 Edition, 1996 Addenda

6. Identification of Components

Name of Component	Name of Manufacturer	Manufacturer Serial No.	National Board No.	Other Identification	Year Built	Corrected, Removed, or Installed	ASME Code Stamped (Yes or No)
CRD Hydraulic Control Unit Accumulator	General Electric	A4652	N/A	2-ACC-085-718/5819	1969	Removed	Yes
CRD Hydraulic Control Unit Accumulator	General Electric	C0358	N/A	2-ACC-085-718/5819	1979	Installed	Yes
CRD Hydraulic Control Unit Accumulator	General Electric	A3157	N/A	2-ACC-085-718/1435	1968	Removed	Unknown
CRD Hydraulic Control Unit Accumulator	General Electric	H1671	N/A	2-ACC-085-718/1435	1978	Installed	Yes
CRD Hydraulic Control Unit Accumulator	General Electric	A4450	N/A	2-ACC-085-718/2635	1969	Removed	Yes
CRD Hydraulic Control Unit Accumulator	General Electric	H1496	N/A	2-ACC-085-718/2635	1978	Installed	Yes

Continued on Sheet 2

7. Description of Work Replaced 6 CRD Hydraulic Control Unit accumulators with new accumulators

8. Tests Conducted: Hydrostatic ☐ Pneumatic ☐ Nominal Operating Pressure ☒ Exempt ☐
   Other ☐ Pressure N/A psi Test Temp. N/A °F

NOTE: Supplemental Sheets in form of lists, sketches, or drawings may be used, provided (1) size is 8½ in. X 11 in., (2) information in items 1 through 6 on this report is included on each sheet, and (3) each sheet is numbered and the number of sheets is recorded at the top of this form.

*as amended by additional quality assurance requirements found in Contract 73C60-75210, HAR-03-0410, 93185033, PEG pkg 050209-ABF490HG0 and Design Criteria BFN-50-7085 and BFN-50-C-7105.

FORM NIS-2 (Back)

WID: 04-720770-000 through 04-720770-004 and 05-713848-000

9. Remarks Replaced 6 CRD Hydraulic Control Unit accumulators with new accumulators. Manufacturers' Data Reports attached.
Applicable Manufacturer's Data Reports to be attached

CERTIFICATE OF COMPLIANCE

I certify that the statements made in the report are correct and this conforms to the rules of the ASME Code, Section XI.

Type Code Symbol Stamp N/A

Certificate of Authorization No. N/A Expiration Date N/A

Signed [signature] System Engineer Date 6-7 , 20 05
Owner or Owner's Designee, Title

CERTIFICATE OF INSERVICE INSPECTION

I, the undersigned, holding a valid commission issued by the National Board of Boiler and Pressure Vessel Inspectors and the State or Province of Tennessee and employed by HSB CT of Connecticut have inspected the components described in this Owner's Report during the period 3/4/05 to 6/8/05, and state that to the best of my knowledge and belief, the Owner has performed examinations and taken corrective measures described in this Owner's Report in accordance with the requirements of the ASME Code, Section XI.

By signing this certificate neither the Inspector nor his employer makes any warranty, expressed or implied, concerning the examinations and corrective measures described in this Owner's Report. Furthermore, neither the Inspector nor his employer shall be liable in any manner for any personal injury or property damage or a loss of any kind arising from or connected with this inspection.

[signature] Commissions TN 4011
Inspector's Signature National Board, State, Province, and Endorsements

Date 6/8 20 05

FORM NIS-2 OWNER'S REPORT FOR REPAIRS/REPLACEMENT ACTIVITY
SUPPLEMENTAL SHEET

1. Owner Tennessee Valley Authority (TVA) (Name)
1101 Market Street
Chattanooga, TN 37402-2801 (Address)

Date June 7, 2005

Sheet 2 of 2

2. Plant Browns Ferry Nuclear Plant (BFN) (Name)
P. O. Box 2000, Decatur, AL 35609-2000 (Address)

Unit 2

Work Orders (WO) 04-720770-000 through 04-720770-004 and 05-713848-000
Repair/Replacement Organization P.O. No., Job No., etc.

3. Work Performed by TVA-BFN (Name)
P. O. Box 2000, Decatur, AL 35609-2000 (Address)

Type Code Symbol Stamp N/A
Authorization No. N/A
Expiration Date N/A

4. Identification of System System 085, Control Rod Drive (CRD) System (ASME Code Class 2 equivalent)
Accumulators - ASME Section VIII, Div 1, 1974 Edition, Summer 1975 Addenda

5. (a) Applicable Construction Code USAS B31.1.0 19 - 67 * Edition, N/A Addenda, N/A Code Case
(b) Applicable Edition of Section XI Utilized for Repairs or Replacements 19 95, 1996 Addenda

6. Identification of Components

Name of Component	Name of Manufacturer	Manufacturer Serial No.	National Board No.	Other Identification	Year Built	Corrected, Removed, or Installed	ASME Code Stamped (Yes or No)
CRD Hydraulic Control Unit Accumulator	General Electric	A4716	N/A	2-ACC-085-718/1043	1969	Removed	Yes
CRD Hydraulic Control Unit Accumulator	General Electric	H0784	N/A	2-ACC-085-718/1043	1977	Installed	Yes
CRD Hydraulic Control Unit Accumulator	General Electric	C0147	N/A	2-ACC-085-718/3007	Unknown	Removed	Unknown
CRD Hydraulic Control Unit Accumulator	General Electric	H1370	N/A	2-ACC-085-718/3007	1978	Installed	Yes
CRD Hydraulic Control Unit Accumulator	General Electric	A4547	N/A	2-ACC-085-718/3031	1969	Removed	Yes
CRD Hydraulic Control Unit Accumulator	General Electric	C0455	N/A	2-ACC-085-718/3031	1979	Installed	Yes

7. Description of Work Replaced 6 CRD Hydraulic Control Unit accumulators with new accumulators

8. Tests Conducted: Hydrostatic ☐ Pneumatic ☐ Nominal Operating Pressure ☒ Exempt ☐
Other ☐ Pressure N/A psi Test Temp. N/A °F

FORM NIS-2, SUPPLEMENTAL SHEET (Back)

WID: 04-720770-000 through 04-720770-004 and 05-713848-000

Remarks See sheet 1

FORM U-1A MANUFACTURERS' DATA REPORT FOR PRESSURE VESSELS
(Alternate Form for Single Chamber, Completely Shop-Fabricated Vessels Only)
As Required by the Provisions of the ASME Code Rules, Section VIII, Division 1

1. Manufactured by General Electric Company, P.O. Box 780, Wilmington, N.C.
2. Manufactured for Same as Above
3. Location of Installation
4. Type Verrical (Horiz. or vert. tank) C0358 (Mfgr's Serial No.) (CRN) 105D6136G001 (Drawing No.) N/R (Nat'l Brd No.) (Year Built) 1979
5. The chemical and physical properties of all parts meet the requirements of material specifications of the ASME BOILER AND PRESSURE VESSEL CODE. The design, construction, and workmanship conform to ASME Rules, Section VIII, Division 1 1974 (Year) and Addenda to S'75 (Date) and Code Case Nos. --
Special Service per UG-120(d) As Per This Data Report - See Remarks Below
Manufacturers' Partial Data Reports properly identified and signed by Commissioned Inspectors have been furnished for the following items of the report: N/A
6. Shell: Matl. SA-106 Gr. B (Spec. No., Grade) Nom. Thk .55 in. Corr. Allow. ____ in. Diam. 8.70 in Lgth 3 ft 2.38 in
7. Seams: Long. N/A Seamless (Welded, Dbl. Sngl. Lap, Butt) R.T. N/A (Spot or Full) Efficiency -- % H.T. Temp -- F Time -- hr
Girth No Welding Performed (Welded, Dbl. Sngl. Lap, Butt) R.T. -- (Spot, Partial, or Full) No. of Courses --
8. Heads: (a) Material Sa-182-F304 (Spec. No., Grade) (b) Material Sa-182-F304 (Spec. No., Grade)

	Location (Top, Bottom, Ends)	Min Thk	Corr Allow	Crown Radius	Knuckle Radius	Ellipse Ratio	Conical Apex Angle	Hemisph Radius	Flat Diam	Side to Pressure (Convex or Concave)
(a)	Top	2.5"							7.230	Flathead
(b)	Bottom	2.5"							7.230	Flathead

If removable, bolts used (describe other fastenings) 500-13 Bolts-ASME-SA193-B7 for Split Flanges (4
(Material, Spec. No., Gr., Size, No.)
9. Constructed for max. allowable working pressure 2100 psi at max. temp. 700 F. Min. temp. (when less than -20 F) -- F. Hydrostatic, pneumatic, or combination test pressure 3200 psi.
10. Safety Valve Outlets: Number None Size -- Location --
11. Nozzles and Inspection Openings:

Purpose (Inlet, Outlet, Drain)	No.	Diam or Size	Type	Matl	Nom Thk	Reinforcement Matl	How Attached	Location
Gas Port	1	.75"	Split Flng.	30455	1.060	None	Bolts	(4) Bottom.
Water Port	1	.97"	Split Flng.	30455	1.300	None	Bolts	(4) Top

12. Supports: Skirt No (Yes or no) Lugs ____ (No) Legs ____ (No) Other ____ (Describe) Attached ____ (Where and how)
13. Remarks: Complete Mechanical Assembly with No Welded Joints.

Although A Differential Pressure Exists on each side of the Internal Piston, the Accumulator Cylinder is Hydrostatically tested with the Piston removed. The Hydro Test pressure is based on the higher design pressure.

CERTIFICATE OF COMPLIANCE

We certify that the statements made in this report are correct and that all details of design, material, construction, and workmanship of this vessel conform to the ASME Code for Pressure Vessels, Section VIII, Div. 1.
Date 1/10/79 Signed General Electric Co. (Manufacturer) by [signature] (Representative)
"U" Certificate of Authorization No. 10,572 expires June 10, 1981

CERTIFICATE OF SHOP INSPECTION

Vessel made by General Electric Co. at Wilmington, N. C.
I, the undersigned, holding a valid commission issued by the National Board of Boiler and Pressure Vessel Inspectors and/or the State or Province of N. Carolina and employed by Dept. Of Labor have inspected the pressure vessel described in this Manufacturers' Data Report on 1/10, 1979, and state that, to the best of my knowledge and belief, the Manufacturer has constructed this pressure vessel in accordance with ASME Code, Section VIII, Division 1. By signing this certificate neither the Inspector nor his employer makes any warranty, expressed or implied, concerning the pressure vessel described in the Manufacturers' Data Report. Furthermore, neither the Inspector nor his employer shall be liable in any manner for any personal injury or property damage or a loss of any kind arising from or connected with this inspection.
Signed [signature] (Inspector) Date 1/10/79 Commissions NC799, PA, WC2L60, Ohio (Nat'l Board, State, Province and No.)

(176) This form (E00117) may be obtained from the Order Dept., ASME, 345 E. 47th St., New York, N.Y. 10017

CA 3/2/05

FORM A MANUFACTURERS' DATA REPORT FOR PRESSURE VESSELS
(Alternate Form for Single Chamber, Completely Shop-Fabricated Vessels Only)
As Required by the Provisions of the ASME Code Rules, Section VIII, Division 1

1. Manufactured by General Electric Company, P.O. Box 780, Wilmington, N.C.
2. Manufactured for Same as Above
3. Location of Installation
4. Type Vertical (Horiz. or vert. tank) 111671 (Mfgr's Serial No.) 105D6136G001 (CRN) N/R (Drawing No.) (Nat'l Bd No.) (Year Built) 1978
5. The chemical and physical properties of all parts meet the requirements of material specifications of the ASME BOILER AND PRESSURE VESSEL CODE. The design, construction, and workmanship conform to ASME Rules, Section VIII, Division 1 1974 (Year) and Addenda to S'75 (Date) and Code Case Nos. --
Special Service per UG-120(d) As Per This Data Report - See Remarks Below
Manufacturers' Partial Data Reports properly identified and signed by Commissioned Inspectors have been furnished for the following items of the report: N/A
6. Shell: Matl. SA-106 Gr. B (Spec. No., Grade) Nom. Thk. .55 in. Corr. Allow. in. Diam. 8.70 in. Lgth. 3 ft 2.38 in.
7. Seams: Long. N/A Seamless (Welded, Dbl, Sngl, Lap, Butt) R.T. N/A (Spot or Full) Efficiency -- % H.T. Temp. -- F Time -- hr
Girth No Welding Performed (Welded, Dbl, Sngl, Lap, Butt) R.T. -- (Spot, Partial, or Full) No. of Courses --
8. Heads: (a) Material Sa-182-F304 (Spec. No., Grade) (b) Material Sa-182-F304 (Spec. No., Grade)

	Location (Top, Bottom, Ends)	Min Thk.	Corr. Allow.	Crown Radius	Knuckle Radius	Elliptic Ratio	Conical Apex Angle	Hemisph. Radius	Flat Diam	Side to Pressure (Convex or Concave)
(a)	Top	2.5"							7.230	Flathead
(b)	Bottom	2.5"							7.230	Flathead

If removable, bolts used (describe other fastenings) 500-13 Bolts-ASME-SA193-B7 for Split Flanges (4
(Material, Spec. No., Gr., Size, No.)
9. Constructed for max. allowable working pressure 2100 psi at max. temp. 400 F. Min. temp (when less than -20 F) -- F. Hydrostatic, pneumatic, or combination test pressure 3200 psi.
10. Safety Valve Outlets: Number None Size -- Location --
11. Nozzles and Inspection Openings:

Purpose (Inlet, Outlet, Drain)	No.	Diam or Size	Type	Matl.	Nom. Thk.	Reinforcement Matl.	How Attached	Location
Gas Port	1	.75"	Split Flng.	30455	1.060	None	Bolts	(4) Bottom.
Water Port	1	.97"	Split Flng.	30455	1.300	None	Bolts	(4) Top

12. Supports: Skirt No (Yes or no) Legs (No.) Legs (No.) Other (Describe) Attached (Where and how)
13. Remarks: Complete Mechanical Assembly with No Welded Joints.
Although A Differential Pressure Exists on each side of the Internal Piston, the Accumulator Cylinder is Hydrostatically tested with the Piston removed. The Hydro Test pressure is based on the higher design pressure.

CERTIFICATE OF COMPLIANCE

We certify that the statements made in this report are correct and that all details of design, material, construction, and workmanship of this vessel conform to the ASME Code for Pressure Vessels, Section VIII, Division 1.
Date 7/10/78 Signed General Electric Co. (Manufacturer) by [signature] (Representative)
"U" Certificate of Authorization No. 10,572 expires June 10, 1981

CERTIFICATE OF SHOP INSPECTION

Vessel made by General Electric Co. at Wilmington, N.C.
I, the undersigned, holding a valid commission issued by the National Board of Boiler and Pressure Vessel Inspectors and/or the State or Province of N. Carolina and employed by Dept Of Labor have inspected the pressure vessel described in this Manufacturers' Data Report on 7/10 1978, and state that, to the best of my knowledge and belief, the Manufacturer has constructed this pressure vessel in accordance with ASME Code, Section VIII, Division 1. By signing this certificate neither the Inspector nor his employer makes any warranty, expressed or implied, concerning the pressure vessel described in the Manufacturers' Data Report. Furthermore, neither the Inspector nor his employer shall be liable in any manner for any personal injury or property damage or a loss of any kind arising from or connected with this inspection.
Signed [signature] (Inspector) Date 7/10/78 Commissions NC799, PA. WC2160, Ohio (Nat'l Board, State, Province and No.)

(176) This form (E00117) may be obtained from the Order Dept., ASME, 345 E. 47th St., New York, N.Y. 10017

[signature] 3/2/05

FORM U-1A MANUFACTURERS' DATA REPORT FOR PRESSURE VESSELS

(Alternate Form for Single Chamber, Completely Shop-Fabricated Vessels Only)
As Required by the Provisions of the ASME Code Rules, Section VIII, Division 1

1. Manufactured by General Electric Company, P.O. Box 780, Wilmington, N.C.
2. Manufactured for Same as Above
3. Location of Installation
4. Type Vertical (Horiz. or vert. tank) H1496 (Mfg'r's Serial No.) (CRN) 105D6138G001 (Drawing No.) N/R (Nat'l Brd No.) (Year Built) 1978
5. The chemical and physical properties of all parts meet the requirements of material specifications of the ASME BOILER AND PRESSURE VESSEL CODE. The design, construction, and workmanship conform to ASME Rules, Section VIII, Division 1 1974 (Year) and Addenda to S'75 (Date) and Code Case Nos. --
Special Service per UG-120(d) As Per This Data Report - See Remarks Below
Manufacturers' Partial Data Reports properly identified and signed by Commissioned Inspectors have been furnished for the following items of the report: N/A
6. Shell: Matl. SA-106 Gr.B (Spec. No., Grade) Nom. Thk. .55 in. Corr. Allow. ____ in. Diam. 8.70 in. Lgth. 3 ft 2.38 in.
7. Seams: Long. N/A Seamless (Welded, Dbl. Sngl. Lap, Butt) R.T. N/A (Spot or Full) Efficiency -- % H.T. Temp. -- F Time -- hr
Girth No Welding Performed (Welded, Dbl. Sngl. Lap, Butt) R.T. -- (Spot, Partial, or Full) No. of Courses --
8. Heads: (a) Material Sa-182-F304 (Spec. No., Grade) (b) Material Sa-182-F304 (Spec. No., Grade)

	Location (Top, Bottom, Ends)	Min. Thk.	Corr. Allow.	Crown Radius	Knuckle Radius	Ellipse Ratio	Conical Apex Angle	Hemisph. Radius	Flat Diam.	Side to Pressure (Convex or Concave)
(a)	Top	2.5"							7.230	Flathead
(b)	Bottom	2.5"							7.230	Flathead

If removable, bolts used (describe other fastenings) 500-13 Bolts-ASME-SA193-B7 for Split Flanges (
(Material, Spec. No., Gr., Size, No.)
9. Constructed for max. allowable working pressure 2100 psi at max. temp. 400 F. Min. temp. (when less than -20 F) -- F. Hydrostatic, pneumatic, or combination test pressure 3200 psi.
10. Safety Valve Outlets: Number None Size -- Location -------
11. Nozzles and Inspection Openings:

Purpose (Inlet, Outlet, Drain)	No.	Diam. or Size	Type	Matl.	Nom. Thk.	Reinforcement Matl.	How Attached	Location
Gas Port	1	.75"	Split Flng.	30455	1.060	None	Bolts	(4) Bottom.
Water Port	1	.97"	Split Flng.	30455	1.300	None	Bolts	(4) Top

12. Supports: Skirt No (Yes or no) Lugs ____ (No.) Legs ____ (No.) Other ____ (Describe) Attached ____ (Where and how)
13. Remarks: Complete Mechanical Assembly with No Welded Joints.

Although A Differential Pressure Exists on each side of the Internal Piston, the Accumulator Cylinder is Hydrostatically tested with the Piston removed. The Hydro Test pressure is based on the higher design pressure.

CERTIFICATE OF COMPLIANCE

We certify that the statements made in this report are correct and that all details of design, material, construction, and workmanship of this vessel conform to the ASME Code for Pressure Vessels, Section VIII, Division 1.
Date 7/10/78 Signed General Electric Co. (Manufacturer) by [signature] (Representative)
"U" Certificate of Authorization No. 10,572 expires June 10, 1981

CERTIFICATE OF SHOP INSPECTION

Vessel made by General Electric Co. at Wilmington, N. C.
I, the undersigned, holding a valid commission issued by the National Board of Boiler and Pressure Vessel Inspectors and/or the State or Province of N. Carolina and employed by Dept Of Labor have inspected the pressure vessel described in this Manufacturers' Data Report on 7/10 1978, and state that, to the best of my knowledge and belief, the Manufacturer has constructed this pressure vessel in accordance with ASME Code, Section VIII, Division 1. By signing this certificate neither the Inspector nor his employer makes any warranty, expressed or implied, concerning the pressure vessel described in the Manufacturers' Data Report. Furthermore, neither the Inspector nor his employer shall be liable in any manner for any personal injury or property damage or a loss of any kind arising from or connected with this inspection.
Signed [signature] (Inspector) Date 7/10/78 Commissions NC799, PA. WC2L60, Ohio (Nat'l Board, State, Province and No.)

3/2/05

FORM U-1A MANUFACTURERS' DATA REPORT FOR PRESSURE VESSELS
(Alternate Form for Single Chamber, Completely Shop-Fabricated Vessels Only)
As Required by the Provisions of the ASME Code Rules, Section VIII, Division 1

1. Manufactured by General Electric Company, P.O. Box 780, Wilmington, N.C.
2. Manufactured for Same as Above
3. Location of Installation
4. Type Vertical (Horiz. or vert. tank) H0784 (Mfgr's Serial No.) (CRN) 105D6138G001 (Drawing No.) N/R (Nat'l Brd No.) (Year Built) 1977
5. The chemical and physical properties of all parts meet the requirements of material specifications of the ASME BOILER AND PRESSURE VESSEL CODE. The design, construction, and workmanship conform to ASME Rules, Section VIII, Division 1 1974 (Year) and Addenda to S'75 (Date) and Code Case Nos. --
Special Service per UG-120(d) As Per This Data Report - See Remarks Below
Manufacturers' Partial Data Reports properly identified and signed by Commissioned Inspectors have been furnished for the following items of the report: N/A
6. Shell: Matl. SA-106 Gr. B (Spec. No., Grade) Nom. Thk. .55 in. Corr. Allow. in Dism. 8.70 in. Lgth. 3 ft 2.38 in.
7. Seams: Long. N/A Seamless (Welded, Dbl, Sngl, Lap, Butt) R.T. N/A (Spot or Full) Efficiency -- % H.T. Temp. -- F Time -- hr
Girth No Welding Performed (Welded, Dbl, Sngl, Lap, Butt) R.T. -- (Spot, Partial, or Full) No. of Courses --
8. Heads: (a) Material Sa-182-F304 (Spec. No., Grade) (b) Material Sa-182-F304 (Spec. No., Grade)

	Location (Top, Bottom, Ends)	Min. Thk.	Corr. Allow.	Crown Radius	Knuckle Radius	Ellipse Ratio	Conical Apex Angle	Hemisph. Radius	Flat Diam.	Side to Pressure (Convex or Concave)
(a)	Top	2.5"							7.230	Flathead
(b)	Bottom	2.5"							7.230	Flathead

If removable, bolts used (describe other fastenings) 500-13 Bolts-ASME-SA193-B7 for Split Flanges (4) (Material, Spec. No., Gr., Size, No.)
9. Constructed for max. allowable working pressure 2100 psi at max. temp. 400 F. Min. temp. (when less than -20 F) -- F. Hydrostatic, pneumatic, or combination test pressure 3200 psi.
10. Safety Valve Outlets: Number None Size -- Location -------
11. Nozzles and Inspection Openings:

Purpose (Inlet, Outlet, Drain)	No.	Diam. or Size	Type	Matl.	Nom. Thk.	Reinforcement Matl.	How Attached	Location
Gas Port	1	.75"	Split Flng.	30455	1.060	None	Bolts	(4) Bottom.
Water Port	1	.97"	Split Flng.	30455	1.300	None	Bolts	(4) Top

12. Supports: Skirt No (Yes or no) Lugs (No.) Legs (No.) Other (Describe) Attached (Where and how)
13. Remarks: Complete Mechanical Assembly with No Welded Joints.
Although A Differential Pressure Exists on each side of the Internal Piston, the Accumulator Cylinder is Hydrostatically tested with the Piston removed. The Hydro Test pressure is based on the higher design pressure.

CERTIFICATE OF COMPLIANCE

We certify that the statements made in this report are correct and that all details of design, material, construction, and workmanship of this vessel conform to the ASME Code for Pressure Vessels, Section VIII, Division 1.
Date 11-15-77 Signed General Electric Co. (Manufacturer) by (Representative)
"U" Certificate of Authorization No. 10,572 expires June 10, 1978

CERTIFICATE OF SHOP INSPECTION

Vessel made by General Electric Co. at Wilmington, N. C.
I, the undersigned, holding a valid commission issued by the National Board of Boiler and Pressure Vessel Inspectors and/or the State or Province of N. Carolina and employed by Dept of Labor have inspected the pressure vessel described in this Manufacturers' Data Report on 11-15-19 77, and state that, to the best of my knowledge and belief, the Manufacturer has constructed this pressure vessel in accordance with ASME Code, Section VIII, Division 1. By signing this certificate neither the Inspector nor his employer makes any warranty, expressed or implied, concerning the pressure vessel described in the Manufacturers' Data Report. Furthermore, neither the Inspector nor his employer shall be liable in any manner for any personal injury or property damage or a loss of any kind arising from or connected with this inspection.
Signed (Inspector) Date 11-15-77 Commissions NC 723, PA. VC1766, (Nat'l Board, State, Province and No.)

DY 8/7/05

FORM U-1A MANUFACTURERS' DATA REPORT FOR PRESSURE VESSELS

(Alternate Form for Single Chamber, Completely Shop-Fabricated Vessels Only)
As Required by the Provisions of the ASME Code Rules, Section VIII, Division 1

1. Manufactured by General Electric Company, P.O. Box 780, Wilmington, N.C.
2. Manufactured for Same as Above
3. Location of Installation
4. Type Vertical (Horiz. or vert. tank) H1370 (Mfgr's Serial No.) (CRN) 105D6138G001 (Drawing No.) N/R (Nat'l Brd No.) (Year Built) 1978
5. The chemical and physical properties of all parts meet the requirements of material specifications of the ASME BOILER AND PRESSURE VESSEL CODE. The design, construction, and workmanship conform to ASME Rules, Section VIII, Division 1 1974 (Year) and Addenda to S'75 (Date) and Code Case Nos. --
Special Service per UG-120(d) As Per This Data Report - See Remarks Below
Manufacturers' Partial Data Reports properly identified and signed by Commissioned Inspectors have been furnished for the following items of the report: N/A
6. Shell: Matl. SA-106 Gr.B (Spec. No., Grade) Nom. Thk. .55 in. Corr. Allow. in. Diam. 8.70 in. Lgth. 3 ft 2.38 in.
7. Seams: Long. N/A Seamless (Welded, Dbl, Sngl, Lap, Butt) R.T. N/A (Spot or Full) Efficiency -- % H.T. Temp. -- F Time -- hr
Girth No Welding Performed (Welded, Dbl, Sngl, Lap, Butt) R.T. -- (Spot, Partial, or Full) No. of Courses --
8. Heads: (a) Material Sa-182-F304 (Spec. No., Grade) (b) Material Sa-182-F304 (Spec. No., Grade)

	Location (Top, Bottom, Ends)	Min. Thk.	Corr. Allow	Crown Radius	Knuckle Radius	Ellipse Ratio	Conical Apex Angle	Hemisph. Radius	Flat Diam.	Side to Pressure (Convex or Concave)
(a)	Top	2.5"							7.230	Flathead
(b)	Bottom	2.5"							7.230	Flathead

If removable, bolts used (describe other fastenings) 500-13 Bolts-ASME-SA193-B7 for Split Flanges (4) (Material, Spec. No., Gr., Size, No.)
9. Constructed for max. allowable working pressure 2100 psi at max. temp. 400 F. Min. temp. (when less than -20 F) -- F. Hydrostatic, pneumatic, or combination test pressure 3200 psi.
10. Safety Valve Outlets: Number None Size -- Location. -------
11. Nozzles and Inspection Openings:

Purpose (Inlet, Outlet, Drain)	No.	Diam. or Size	Type	Matl.	Nom. Thk.	Reinforcement Matl.	How Attached	Location
Gas Port	1	.75"	Split Flng.	30455	1.060	None	Bolts	(4) Bottom.
Water Port	1	.97"	Split Flng.	30455	1.300	None	Bolts	(4) Top

12. Supports: Skirt No (Yes or no) Lugs (No.) Legs (No.) Other (Describe) Attached (Where and how)
13. Remarks: Complete Mechanical Assembly with No Welded Joints.

Although A Differential Pressure Exists on each side of the Internal Piston, the Accumulator Cylinder is Hydrostatically tested with the Piston removed. The Hydro Test pressure is based on the higher design pressure.

CERTIFICATE OF COMPLIANCE

We certify that the statements made in this report are correct and that all details of design, material, construction, and workmanship of this vessel conform to the ASME Code for Pressure Vessels, Section VIII, Division 1.
Date 7/5/78 Signed General Electric Co. (Manufacturer) by (Representative)
"U" Certificate of Authorization No. 10,572 expires June 10, 1981.

CERTIFICATE OF SHOP INSPECTION

Vessel manufactured by General Electric Co. at Wilmington, N. C.
I, the undersigned, holding a valid commission issued by the National Board of Boiler and Pressure Vessel Inspectors and/or the State or Province of N. Carolina and employed by Dept Of Labor have inspected the pressure vessel described in this Manufacturers' Data Report on 7/5 19 78, and state that, to the best of my knowledge and belief, the Manufacturer has constructed this pressure vessel in accordance with ASME Code, Section VIII, Division 1. By signing this certificate neither the Inspector nor his employer makes any warranty, expressed or implied, concerning the pressure vessel described in the Manufacturers' Data Report. Furthermore, neither the Inspector nor his employer shall be liable in any manner for any personal injury or property damage or a loss of any kind arising from or connected with this inspection.
Signed (Inspector) Date 7/5/78 Commissions NB 13, PA, NC1766, OHIO (National Board, State, Province and No.)

3/2/05

FORM U-1A MANUFACTURERS' DATA REPORT FOR PRESSURE VESSELS

(Alternate Form for Single Chamber, Completely Shop-Fabricated Vessels Only)
As Required by the Provisions of the ASME Code Rules, Section VIII, Division 1

1. Manufactured by General Electric Company, P.O. Box 780, Wilmington, N.C.
2. Manufactured for General Electric Co., San Jose, Ca. (NEBG)
3. Location of Installation
4. Type Verrical (Horiz. or vert. tank) C0455 (Mfgr's Serial No.) (CRN) 105D6138G001 (Drawing No.) N/R (Nat'l Brd No.) (Year Built) 1979
5. The chemical and physical properties of all parts meet the requirements of material specifications of the ASME BOILER AND PRESSURE VESSEL CODE. The design, construction, and workmanship conform to ASME Rules, Section VIII, Division 1 1974 (Year) and Addenda to S'75 (Date) and Code Case Nos. --
   Special Service per UG-120(d) As Per This Data Report - See Remarks Below
   Manufacturers' Partial Data Reports properly identified and signed by Commissioned Inspectors have been furnished for the following items of the report: N/A
6. Shell: Matl. SA-106 Gr. B (Spec. No., Grade) Nom. Thk. .55 in. Corr. Allow. ____ in. Diam. 8.70 in. Lgth. 3 ft 2.38 in.
7. Seams: Long. N/A Seamless (Welded, Dbl. Sngl. Lap, Butt) R.T. N/A (Spot or Full) Efficiency -- % H.T. Temp. -- F Time -- hr
   Girth No Welding Performed (Welded, Dbl. Sngl. Lap, Butt) R.T. -- (Spot, Partial, or Full) No. of Courses --
8. Heads: (a) Material Sa-182-F304 (Spec. No., Grade) (b) Material Sa-182-F304 (Spec. No., Grade)

	Location (Top, Bottom, Ends)	Min. Thk.	Corr. Allow.	Crown Radius	Knuckle Radius	Ellipse Ratio	Conical Apex Angle	Hemisph. Radius	Flat Diam.	Side to Pressure (Convex or Concave)
(a)	Top	2.5"							7.230	Flathead
(b)	Bottom	2.5"							7.230	Flathead

   If removable, bolts used (describe other fastenings) 500-13 Bolts-ASME-SA193-B7 for Split Flanges (4) (Material, Spec. No., Gr., Size, No.)
9. Constructed for max. allowable working pressure 2100 psi at max. temp. 400 F. Min. temp. (when less than -20 F) -- F. Hydrostatic, pneumatic, or combination test pressure 3200 psi.
10. Safety Valve Outlets: Number None Size -- : Location --------
11. Nozzles and Inspection Openings:

Purpose (Inlet, Outlet, Drain)	No.	Diam. or Size	Type	Matl.	Nom. Thk.	Reinforcement Matl.	How Attached	Location
Gas Port	1	.75"	Split Flng.	30455	1.060	None	Bolts	(4) Bottom.
Water Port	1	.97"	Split Flng.	30455	1.300	None	Bolts	(4) Top

12. Supports: Skirt No (Yes or no) Lugs ____ (No.) Legs ____ (No.) Other ____ (Describe) Attached ____ (Where and how)
13. Remarks: Complete Mechanical Assembly with No Welded Joints.

Although A Differential Pressure Exists on each side of the Internal Piston, the Accumulator Cylinder is Hydrostatically tested with the Piston removed. The Hydro Test pressure is based on the higher design pressure.

CERTIFICATE OF COMPLIANCE

We certify that the statements made in this report are correct and that all details of design, material, construction, and workmanship of this vessel conform to the ASME Code for Pressure Vessels, Section VIII, Division 1.

Date 3-22-79 Signed General Electric Co. (Manufacturer) by [signature] (Representative)

"U" Certificate of Authorization No. 10,572 expires June 10, 1981

CERTIFICATE OF SHOP INSPECTION

Vessel made by General Electric Co. at Wilmington, N. C.

I, the undersigned, holding a valid commission issued by the National Board of Boiler and Pressure Vessel Inspectors and/or the State or Province of N. Carolina and employed by Dept Of Labor have inspected the pressure vessel described in this Manufacturers' Data Report on 3-22 1979 and state that, to the best of my knowledge and belief, the Manufacturer has constructed this pressure vessel in accordance with ASME Code, Section VIII, Division 1. By signing this certificate neither the Inspector nor his employer makes any warranty, expressed or implied, concerning the pressure vessel described in the Manufacturers' Data Report. Furthermore, neither the Inspector nor his employer shall be liable in any manner for any personal injury or property damage or a loss of any kind arising from or connected with this inspection.

Signed [signature] (Inspector) Date 3-22-79 Commissions NC 723, Pa. WC1766, Ohio (Nat'l Board, State, Province and No.)

4/2005

FORM NIS-2 OWNER'S REPORT FOR REPAIR/REPLACEMENT ACTIVITY
As Required by the Provisions of the ASME Code Section XI

1. Owner Tennessee Valley Authority (TVA) (Name)
1101 Market Street
Chattanooga, TN 37402-2801 (Address)

Date June 7, 2005

Sheet 1 of 4

2. Plant Browns Ferry Nuclear Plant (BFN) (Name)
P. O. Box 2000, Decatur, AL 35609-2000 (Address)

Unit 2

Work Order (WO) 04-720767-000,
Design Change Notice (DCN) S18883A
(Repair/Replacement Organization P.O. No., Job No., etc)

3. Work Performed by TVA-BFN (Name)
P. O. Box 2000, Decatur, AL 35609-2000 (Address)

Type Code Symbol Stamp N/A
Authorization No. N/A
Expiration Date N/A

4. Identification of System System 085, Control Rod Drive (CRD) System (ASME Code Class 1 equivalent)

5. (a) Applicable Construction Code ASME Section III 19 74 Edition, Winter 1975 Addenda, N207.1361-2 Code Case

(b) Applicable Edition of Section XI Utilized for Repairs or Replacements 19 95 Edition, 1996 Addenda

6. Identification of Components

Name of Component	Name of Manufacturer	Manufacturer Serial No.	National Board No.	Other Identification	Year Built	Corrected, Removed, or Installed	ASME Code Stamped (Yes or No)
Control Rod Drive Mechanism 42-15	General Electric Nuclear Energy	A4737	N/A	2-CRDM-085-42-15	1996	Removed	Yes
Control Rod Drive Mechanism 42-15	General Electric Nuclear Energy	A5417	N/A	2-CRDM-085-42-15	1992	Installed	Yes
Control Rod Drive Mechanism 42-47	General Electric Nuclear Energy	A5712	N/A	2-CRDM-085-42-47	1996	Removed	Yes
Control Rod Drive Mechanism 42-47	General Electric Nuclear Energy	A4176	N/A	2-CRDM-085-42-47	1992	Installed	Yes
Control Rod Drive Mechanism 10-39	General Electric Nuclear Energy	A5646	N/A	2-CRDM-085-10-39	1996	Removed	Yes
Control Rod Drive Mechanism 10-39	General Electric Nuclear Energy	A8993	N/A	2-CRDM-085-10-39	1992	Installed	Yes

Identification of Components continued on Page 2

7. Description of Work Replaced 20 Control Rod Drives (CRD) with refurbished BWR/6 CRDs.

8. Tests Conducted: Hydrostatic ☐ Pneumatic ☐ Nominal Operating Pressure ☒ Exempt ☐
Other ☐ Pressure N/A psi Test Temp. N/A °F

NOTE: Supplemental Sheets in form of lists, sketches, or drawings may be used, provided (1) size is 8½ in. X 11 in., (2) information in items 1 through 6 on this report is included on each sheet, and (3) each sheet is numbered and the number of sheets is recorded at the top of this form.

FORM NIS-2 (Back)

WID: 04-720767-000

9. Remarks Replaced 20 Control Rod Drives (CRD) with refurbished BWR/6 CRDs previously installed at BFN.
Applicable Manufacturer's Data Reports to be attached

CERTIFICATE OF COMPLIANCE

I certify that the statements made in the report are correct and this conforms to the rules of the ASME Code, Section XI.

Type Code Symbol Stamp N/A

Certificate of Authorization No. N/A Expiration Date N/A

Signed [signature], System Engineer Date 6-15, 20 05
Owner or Owner's Designee, Title

CERTIFICATE OF INSERVICE INSPECTION

I, the undersigned, holding a valid commission issued by the National Board of Boiler and Pressure Vessel Inspectors and the State or Province of Tennessee and employed by HSB CT of Connecticut have inspected the components described in this Owner's Report during the period 3/25/05 to 6/16/05, and state that to the best of my knowledge and belief, the Owner has performed examinations and taken corrective measures described in this Owner's Report in accordance with the requirements of the ASME Code, Section XI.

By signing this certificate neither the Inspector nor his employer makes any warranty, expressed or implied, concerning the examinations and corrective measures described in this Owner's Report. Furthermore, neither the Inspector nor his employer shall be liable in any manner for any personal injury or property damage or a loss of any kind arising from or connected with this inspection.

[signature]
Inspector's Signature

Commissions TN4011
National Board, State, Province, and Endorsements

Date 6/16 20 05

FORM NIS-2 OWNER'S REPORT FOR REPAIRS/REPLACEMENT ACTIVITY
SUPPLEMENTAL SHEET

Owner Tennessee Valley Authority (TVA) (Name)
1101 Market Street
Chattanooga, TN 37402-2801 (Address)

Date June 7, 2005

Sheet 2 of 4

2. Plant Browns Ferry Nuclear Plant (BFN) (Name)
P. O. Box 2000, Decatur, AL 35609-2000 (Address)

Unit 2

Work Order (WO) 04-720767-000
Design Change Notice (DCN) S18883A
Repair/Replacement Organization P.O. No., Job No., etc.

3. Work Performed by TVA-BFN (Name)
P. O. Box 2000, Decatur, AL 35609-2000 (Address)

Type Code Symbol Stamp N/A
Authorization No. N/A
Expiration Date N/A

4. Identification of System System 085, Control Rod Drive System (ASME Code Class 1 equivalent)

5. (a) Applicable Construction Code ASME Section III 19 74 Edition, Winter 1975 Addenda, N207 1361-2 Code Case
Applicable Edition of Section XI Utilized for Repairs or Replacements 19 95, 1996 Addenda

6. Identification of Components

Name of Component	Name of Manufacturer	Manufacturer Serial No.	National Board No.	Other Identification	Year Built	Corrected, Removed, or Installed	ASME Code Stamped (Yes or No)
Control Rod Drive Mechanism 14-43	General Electric Nuclear Energy	A4702	N/A	2-CRDM-085-14-43	1996	Removed	Yes
Control Rod Drive Mechanism 14-43	General Electric Nuclear Energy	A5322	N/A	2-CRDM-085-14-43	1992	Installed	Yes
Control Rod Drive Mechanism 22-11	General Electric Nuclear Energy	A4141	N/A	2-CRDM-085-22-1	1996	Removed	Yes
Control Rod Drive Mechanism 22-1	General Electric Nuclear Energy	A4786	N/A	2-CRDM-085-22-1	1992	Installed	Yes
Control Rod Drive Mechanism 22-43	General Electric Nuclear Energy	A4846	N/A	2-CRDM-085-22-43	1996	Removed	Yes
Control Rod Drive Mechanism 22-43	General Electric Nuclear Energy	A3924	N/A	2-CRDM-085-22-43	1992	Installed	Yes
Control Rod Drive Mechanism 38-59	General Electric Nuclear Energy	A3978	N/A	2-CRDM-085-38-59	1996	Removed	Yes
Control Rod Drive Mechanism 38-59	General Electric Nuclear Energy	A3976	N/A	2-CRDM-085-38-59	1992	Installed	Yes
Control Rod Drive Mechanism 38-35	General Electric Nuclear Energy	A5660	N/A	2-CRDM-085-38-35	1996	Removed	Yes
Control Rod Drive Mechanism 38-35	General Electric Nuclear Energy	A5429	N/A	2-CRDM-085-38-35	1992	Installed	Yes

Identification of Components continued on Page 3

7. Description of Work Replaced 20 Control Rod Drives (CRD) with refurbished BWR/6 CRDs.

8. Tests Conducted: Hydrostatic ☐ Pneumatic ☐ Nominal Operating Pressure ☒ Exempt ☐
Other ☐ Pressure N/A psi Test Temp. N/A °F

FORM NIS-2, SUPPLEMENTAL SHEET (Back)

WID: 04-720767-000

Remarks See back of sheet 1.

FORM NIS-2 OWNER'S REPORT FOR REPAIRS/REPLACEMENT ACTIVITY
SUPPLEMENTAL SHEET

Owner Tennessee Valley Authority (TVA) (Name)
1101 Market Street
Chattanooga, TN 37402-2801 (Address)

Date June 7, 2005

Sheet 3 of 4

2. Plant Browns Ferry Nuclear Plant (BFN) (Name)
P. O. Box 2000, Decatur, AL 35609-2000 (Address)

Unit 2

Work Order (WO) 04-720767-000
Design Change Notice (DCN) S18883A
Repair/Replacement Organization P.O. No., Job No., etc.

3. Work Performed by TVA-BFN (Name)
P. O. Box 2000, Decatur, AL 35609-2000 (Address)

Type Code Symbol Stamp N/A
Authorization No. N/A
Expiration Date N/A

4. Identification of System System 085, Control Rod Drive System (ASME Code Class 1 equivalent)

5. (a) Applicable Construction Code ASME Section III 19 74 Edition, Winter 1975 Addenda, N207 1361-2 Code Case
Applicable Edition of Section XI Utilized for Repairs or Replacements 19 95, 1996 Addenda

6. Identification of Components

Name of Component	Name of Manufacturer	Manufacturer Serial No.	National Board No.	Other Identification	Year Built	Corrected, Removed, or Installed	ASME Code Stamped (Yes or No)
Control Rod Drive Mechanism 46-11	General Electric Nuclear Energy	A4538	N/A	2-CRDM-085-46-11	1996	Removed	Yes
Control Rod Drive Mechanism 46-11	General Electric Nuclear Energy	A5155	N/A	2-CRDM-085-46-11	1992	Installed	Yes
Control Rod Drive Mechanism 50-35	General Electric Nuclear Energy	A3931	N/A	2-CRDM-085-50-35	1996	Removed	Yes
Control Rod Drive Mechanism 50-35	General Electric Nuclear Energy	A4447	N/A	2-CRDM-085-50-35	1992	Installed	Yes
Control Rod Drive Mechanism 54-43	General Electric Nuclear Energy	A5624	N/A	2-CRDM-085-54-43	1996	Removed	Yes
Control Rod Drive Mechanism 54-43	General Electric Nuclear Energy	A4820	N/A	2-CRDM-085-54-43	1992	Installed	Yes
Control Rod Drive Mechanism 58-39	General Electric Nuclear Energy	A5629	N/A	2-CRDM-085-58-39	1996	Removed	Yes
Control Rod Drive Mechanism 58-39	General Electric Nuclear Energy	A4790	N/A	2-CRDM-085-58-39	1992	Installed	Yes
Control Rod Drive Mechanism 02-27	General Electric Nuclear Energy	A4091	N/A	2-CRDM-085-02-27	1996	Removed	Yes
Control Rod Drive Mechanism 02-27	General Electric Nuclear Energy	A4376	N/A	2-CRDM-085-02-27	1992	Installed	Yes

Identification of Components continued on Page 4

7. Description of Work Replaced 20 Control Rod Drives (CRD) with refurbished BWR/6 CRDs.

8. Tests Conducted: Hydrostatic ☐ Pneumatic ☐ Nominal Operating Pressure ☒ Exempt ☐
Other ☐ Pressure N/A psi Test Temp. N/A °F

FORM NIS-2, SUPPLEMENTAL SHEET (Back)

WID: 04-720767-000

Remarks See back of sheet 1.

FORM NIS-2 OWNER'S REPORT FOR REPAIRS/REPLACEMENT ACTIVITY
SUPPLEMENTAL SHEET

Owner Tennessee Valley Authority (TVA) (Name)
1101 Market Street
Chattanooga, TN 37402-2801 (Address)

Date June 7, 2005

Sheet 4 of 4

2. Plant Browns Ferry Nuclear Plant (BFN) (Name)
P. O. Box 2000, Decatur, AL 35609-2000 (Address)

Unit 2

Work Order (WO) 04-720767-000
Design Change Notice (DCN) S18883A (Repair/Replacement Organization P.O. No., Job No., etc)

3. Work Performed by TVA-BFN (Name)
P. O. Box 2000, Decatur, AL 35609-2000 (Address)

Type Code Symbol Stamp N/A
Authorization No. N/A
Expiration Date N/A

4. Identification of System System 085, Control Rod Drive System (ASME Code Class 1 equivalent)

5. (a) Applicable Construction Code ASME Section III 19 74 Edition, Winter 1975 Addenda, N207 1361-2 Code Case
Applicable Edition of Section XI Utilized for Repairs or Replacements 19 95, 1996 Addenda

6. Identification of Components

Name of Component	Name of Manufacturer	Manufacturer Serial No.	National Board No.	Other Identification	Year Built	Corrected, Removed, or Installed	ASME Code Stamped (Yes or No)
Control Rod Drive Mechanism 06-15	General Electric Nuclear Energy	A4307	N/A	2-CRDM-085-06-15	1996	Removed	Yes
Control Rod Drive Mechanism 06-15	General Electric Nuclear Energy	A3834	N/A	2-CRDM-085-06-15	1992	Installed	Yes
Control Rod Drive Mechanism 10-43	General Electric Nuclear Energy	A4688	N/A	2-CRDM-085-10-43	1996	Removed	Yes
Control Rod Drive Mechanism 10-43	General Electric Nuclear Energy	A5312	N/A	2-CRDM-085-10-43	1996	Installed	Yes
Control Rod Drive Mechanism 22-07	General Electric Nuclear Energy	A3819	N/A	2-CRDM-085-22-07	1996	Removed	Yes
Control Rod Drive Mechanism 22-07	General Electric Nuclear Energy	A3877	N/A	2-CRDM-085-22-07	1992	Installed	Yes
Control Rod Drive Mechanism 26-07	General Electric Nuclear Energy	A5234	N/A	2-CRDM-085-26-07	1996	Removed	Yes
Control Rod Drive Mechanism 26-07	General Electric Nuclear Energy	A3707	N/A	2-CRDM-085-26-07	1992	Installed	Yes
Control Rod Drive Mechanism 30-35	General Electric Nuclear Energy	A4814	N/A	2-CRDM-085-30-35	1996	Removed	Yes
Control Rod Drive Mechanism 30-35	General Electric Nuclear Energy	A5450	N/A	2-CRDM-085-30-35	1996	Installed	Yes
Control Rod Drive Mechanism 34-59	General Electric Nuclear Energy	A4842	N/A	2-CRDM-085-34-59	1996	Removed	Yes
Control Rod Drive Mechanism 34-59	General Electric Nuclear Energy	A3987	N/A	2-CRDM-085-34-59	1992	Installed	Yes
Control Rod Drive Mechanism 46-51	General Electric Nuclear Energy	A5111	N/A	2-CRDM-085-46-51	1996	Removed	Yes
Control Rod Drive Mechanism 46-51	General Electric Nuclear Energy	A5036	N/A	2-CRDM-085-46-51	1992	Installed	Yes

7. Description of Work Replaced 20 Control Rod Drives (CRD) with refurbished BWR/6 CRDs.

8. Tests Conducted: Hydrostatic ☐ Pneumatic ☐ Nominal Operating Pressure ☒ Exempt ☐
Other ☐ Pressure N/A psi Test Temp. N/A °F

FORM NIS-2, SUPPLEMENTAL SHEET (Back)

WID: 04-720767-000

Remarks: See back of sheet 1.

FORM N-2 NPT CERTIFICATE HOLDERS' DATA REPORT FOR NUCLEAR PART AND APPURTENANCES*
As required by the Provision of the ASME Code Rules, Section III, Div. I

1. Manufactured & Certified by : General Electric Company Nuclear Fuel & Components Manufacturing (GE NF & CM)
2117 Castle Hayne Road, Wilmington, North Carolina 28401
(Name and Address of NPT Certificate Holder)

(b) Manufactured for : TVA Chattanooga, Tennessee 37402-2127
(Name and Address of N Certificate Holder for completed nuclear component)

2. Identification - Certificate Holder's S/N of Part : A5417 Nat'l Bd. No. N/A

(a) Constructed According to Drawing No: 768E534G008 Rev 9 Dwg. Prepared by D. L. Peterson

(b) Description of Part Inspected: Control Rod Drive, Model # 7RDB144FG005

(c) Applicable ASME Code: Section III , Edition 1974 , Addenda Date W75 , Case No. N207 1361-2 Class 1

3. REMARKS: Standard part for use with Reactor. Hydrostatically tested at 1825 psi. min.
(Brief description of service for which component was designed)

Sheet 1 of 2

We certify that the statements in this report are correct and this vessel part or appurtenance as defined in the code conforms to the rules of construction of the ASME Code Section III. (The applicable Designed Specification and Stress Report are not the responsibility of the NPT Certificate Holder for parts. An NPT Certification Holder for appurtenances is responsible for furnishing a separate Design Specification and Stress Report if the appurtenance is not included in the component Design Specification and Stress Report).

Date: 06/25/92 Signed GE-NEBG-NF & CM-QA By [signature]
(NPT Certificate Holder) (SC QA Representive)

Certificate of Authorization Expires: 6/16/93 Certification of Authorization No. : NPT N-1151

Certification of Design for Appurtenance

Design information on file at GE Company, San Jose, California

Stress analysis report on file at GE Company, San Jose, California

DC22A6253 Rev. 1
Design specification certified by Bjorn Haaberg Prof. Eng. State Calif Reg. No. 15570

DC22A6254 Rev 1
Stress analysis report certified by Edward Yoshio Prof. Eng. State Calif. Reg. No. M018646

Certification of Shop Inspection

I, the undersigned, holding a valid commission by the National Board of Boiler and Pressure Inspectors and/or the State or Province of North Carolina and employed by Department of Labor of State of North Carolina have inspected the part of a pressure vessel described in this Partial Data Report on 6/19, 1992, and state that to the best of my knowledge and belief, the NPT Certificate Holder has constructed this part in accordance with the ASME Code Section III.
By signing this certificate, neither the Inspector nor his employer makes any warranty, expressed or implied, concerning the part described in the Partial Data Report. Furthermore, neither the Inspector nor his employer shall be liable in any manner for any personal injury or property damages or a loss of any kind arising from or connected with this inspection.

6/25, 1992 [signature] NC 1231, Ohio, WC 3686 PA
Date Inspector's Signature National Board, State, Province And No

*Supplemental sheets in form of lists, sketches or drawing may be used provided (1) size is 8-1/2" x 11", (2) information in 1-2 on this Data Report is included on each sheet, and (3) each sheet is numbered and number of sheets is recorded in Item 3. "REMARKS".

(07/90) CA 3/25/05

5122 1589

FORM N-2 NPT CERTIFICATE HOLDERS' DATA REPORT FOR NUCLEAR PART AND APPURTENANCES*
As required by the Provision of the ASME Code Rules, Section III, Div. I

1. Manufactured & Certified by : General Electric Company Nuclear Fuel & Components Manufacturing (GENF&CM)
2117 Castle Hayne Road, Wilmington, North Carolina 28401
(Name and Address of NPT Certificate Holder)

(b) Manufactured for : TVA Chattanooga, Tennessee 37402-2127
(Name and Address of N Certificate Holder for completed nuclear component)

2. Identification - Certificate Holder's S/N of Part : A5417 Nat'l Bd. No. N/A

(a) Constructed According to Drawing No: 768E534G008 Rev 9 Dwg. Prepared by D. L. Peterson

(b) Description of Part Inspected: Control Rod Drive, Model # 7RDB144FG005

(c) Applicable ASME Code: Section III , Edition 1974 , Addenda Date W75 , Case No. N207 1361-2 Class 1

3. REMARKS: Standard part for use with Reactor. Hydrostatically tested at 1825 psi. min.
(Brief description of service for which component was designed)

Sheet 2 of 2

1. Cap 166B6274P001
SA182 - F304
3/8" thick x 1 1/16" OD

2. Indicator Tube 166B6313P001
SA312 - TP316
3/4" sch 40 - seamless pipe
0.113" wall thickness
1.065" max. dia.

3. Plug 158A1176P001
SA182 - F304
1/4" thick x 0.812" OD

4. Flange 818D610P001 (719E474)
SA182 - F304
3.37" thick x 9 5/8" OD

5. Base 137C5311P001
SA182 - F304
7/8" thick x 2.875" dia.

6. Ring Flange 114B5122P002, P003
137C8151P001, P002
SA182 - F304
1" thick x 5.0" OD x 1.75" ID

7. Cap Screw 117C4516P002
SA193 - B8
6 ea. 1/2" dia. on 4 1/8" bolt circle

8. Plug 175A7961P001
SA182 - F304
0.38" thick x 1.307" dia.

9. Nut 137C5934P001
XM - 19 SA479
1.30" thick x 2.62" dia

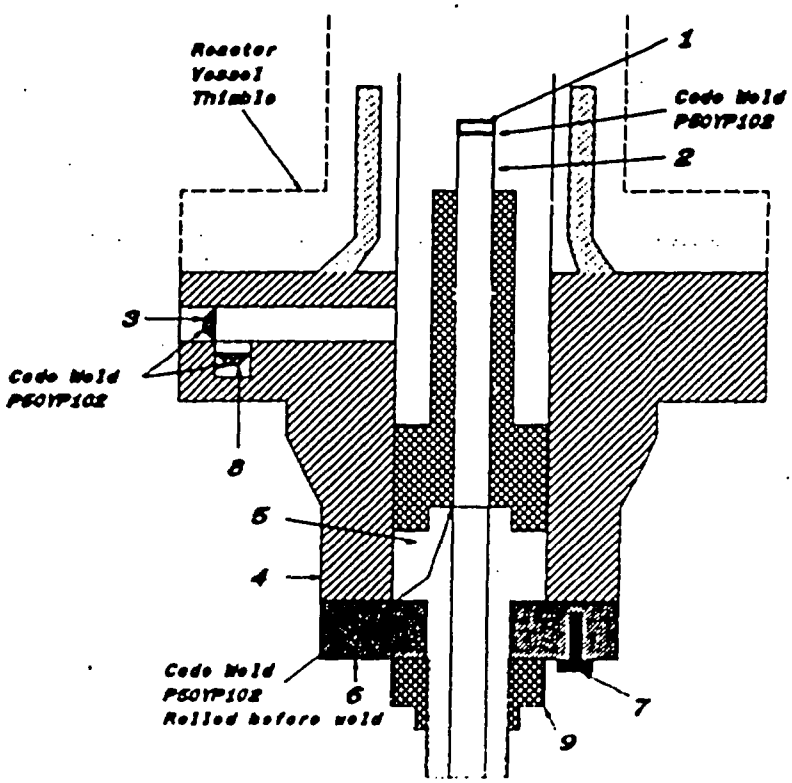

FORM N-2 NPT CERTIFICATE HOLDERS' DATA REPORT FOR NUCLEAR PART AND APPURTENANCES*
As Required by the Provision of the ASME Code Rules, Section III, Div. I

1. Manufactured & Certified by : General Electric Company Nuclear Fuel & Components Manufacturing (GE NF & CM)
2117 Castle Hayne Road, Wilmington, North Carolina 28401
(Name and Address of NPT Certificate Holder)

(b) Manufactured for : TVA Chattanooga, Tennessee 37402-2127
(Name and Address of N Certificate Holder for completed nuclear component)

2. Identification - Certificate Holder's S/N of Part : A4176 Nat'l Bd. No. N/A

(a) Constructed According to Drawing No: 768E534G008 Rev 9 Dwg. Prepared by D. L. Peterson

(b) Description of Part Inspected: Control Rod Drive, Model # 7RDB144FG005

(c) Applicable ASME Code: Section III . Edition 1974 . Addenda Date W75 . Case No. N207 1361-2 Class 1

3. REMARKS: Standard part for use with Reactor. Hydrostatically tested at 1825 psi. min.
(Brief description of service for which component was designed)

Sheet 1 of 2

We certify that the statements in this report are correct and this vessel part or appurtenance as defined in the code conforms to the rules of construction of the ASME Code Section III. (The applicable Designed Specification and Stress Report are not the responsibility of the NPT Certificate Holder for parts. An NPT Certification Holder for appurtenances is responsible for furnishing a separate Design Specification and Stress Report if the appurtenance is not included in the component Design Specification and Stress Report).

Date: 9/14/92 Signed GE-NEBG-NF & CM-QA By [signature]
(NPT Certificate Holder) (QC Or Representative)

Certificate of Authorization Expires: 6/18/93 Certification of Authorization No. : NPT N-1151

Certification of Design for Appurtenance

Design information on file at GE Company, San Jose, California

Stress analysis report on file at GE Company, San Jose, California

DC22A6253 Rev. 1
Design specification certified by Blom Haaberg Prof. Eng. State Calif. Reg. No. 15570

DC22A6254 Rev 1
Stress analysis report certified by Edward Yoshio Prof. Eng. State Calif. Reg. No. M018646

Certification of Shop Inspection

I, the undersigned, holding a valid commission by the National Board of Boiler and Pressure Inspectors and/or the State or Province of North Carolina and employed by Department of Labor of State of North Carolina have inspected the part of a pressure vessel described in this Partial Data Report on [illegible] and state that to the best of my knowledge and belief, the NPT Certificate Holder has constructed this part in accordance with the ASME Code Section III.
By signing this certificate, neither the Inspector nor his employer makes any warranty, expressed or implied, concerning the part described in the Partial Data Report. Furthermore, neither the Inspector nor his employer shall be liable in any manner for any personal injury or property damages or a loss of any kind arising from or connected with this inspection.

[illegible] [signature] NC 1231, Ohio, WC 3686 PA
Date Inspector's Signature National Board, State, Province And No

*Supplemental sheets in form of lists, sketches or drawing may be used provided (1) size is 8-1/2" x 11", (2) information in 1-2 on this Data Report is included on each sheet, and (3) each sheet is numbered and number of sheets is recorded in Item 3. "REMARKS".

[illegible] 3/25/05

FORM N-2 NPT CERTIFICATE HOLDER'S DATA REPORT FOR NUCLEAR PART AND APPURTENANCES*
As required by the Provision of the ASME Code Rules, Section III, Div. I

1. Manufactured & Certified by : General Electric Company Nuclear Fuel & Components Manufacturing (GE NF & CM)
2117 Castle Hayne Road, Wilmington, North Carolina 28401
(Name and Address of NPT Certificate Holder)

(b) Manufactured for : TVA Chattanooga, Tennessee 37402-2127
(Name and Address of N Certificate Holder for completed nuclear component)

2. Identification - Certificate Holder's S/N of Part : A4176 Nat'l Bd. No. N/A

(a) Constructed According to Drawing No: 768E534G008 Rev 9 Dwg. Prepared by D. L. Peterson

(b) Description of Part Inspected: Control Rod Drive, Model # 7RDB144FG005

(c) Applicable ASME Code: Section III , Edition 1974 , Addenda Date W75 , Case No. N207 1361-2 Class 1

3. REMARKS: Standard part for use with Reactor. Hydrostatically tested at 1825 psi, min.
(Brief description of service for which component was designed)

Sheet 2 of 2

1. Cap 168B8274P001
SA182 - F304
3/8" thick x 1 1/16" OD

2. Indicator Tube 168B8313P001
SA312 - TP316
3/4" sch 40 - seamless pipe
0.113" wall thickness
1.065" max. dia.

3. Plug 158A1178P001
SA182 - F304
1/4" thick x 0.812" OD

4. Flange 918D610P001 (719E474)
SA182 - F304
3.37" thick x 9 5/8" OD

5. Base 137C5311P001
SA182 - F304
7/8" thick x 2.875" dia.

6. Ring Flange 114B5122P002, P003
137C8151P001, P002
SA182 - F304
1" thick x 5.0" OD x 1.75" ID

7. Cap Screw 117C4518P002
SA193 - B6
6 ea. 1/2" dia. on 4 1/8" bolt circle

8. Plug 175A7961P001
SA182 - F304
0.38" thick x 1.307" dia.

9. Nut 137C5934P001
XM - 19 SA479
1.30" thick x 2.62" dia.

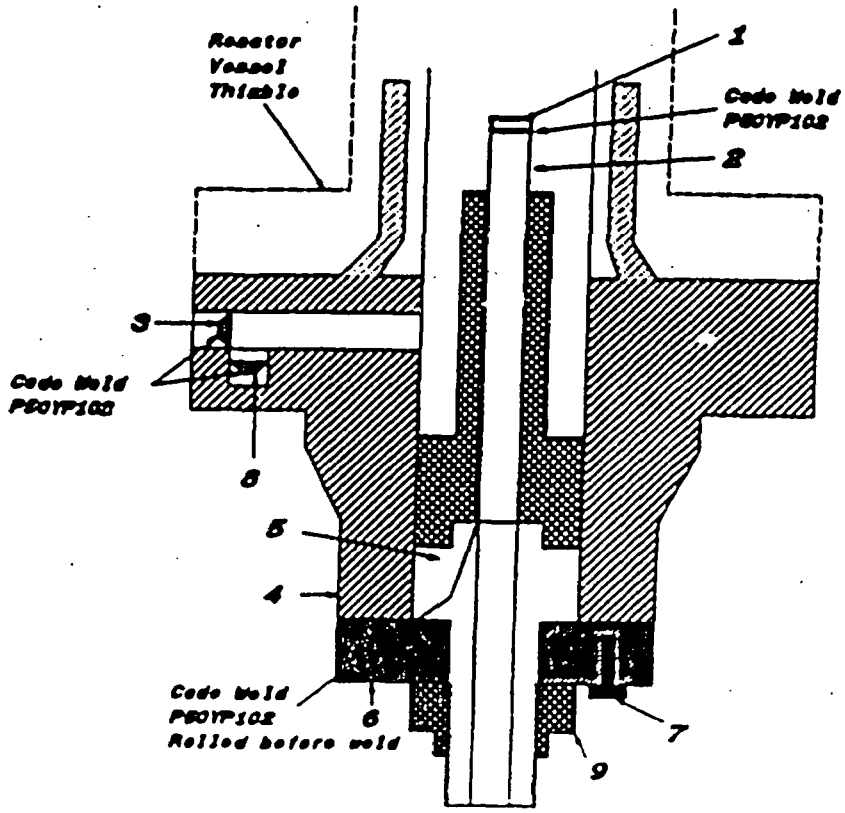

0 1 2 9 7 4 3 0 0 0 0

FORM N-2 NPT CERTIFICATE HOLDERS' DATA REPORT FOR NUCLEAR PART AND APPURTENANCES*

As required by the Provision of the ASME Code Rules, Section III, Div. I

1. Manufactured & Certified by : General Electric Company Nuclear Fuel & Components Manufacturing (GE NF & CM)
   2117 Castle Hayne Road, Wilmington, North Carolina 28401
   (Name and Address of NPT Certificate Holder)

   (b) Manufactured for : TVA Chattanooga, Tennessee 37402-2127
   (Name and Address of N Certificate Holder for completed nuclear component)

2. Identification - Certificate Holder's S/N of Part : A8993 Nat'l Bd. No. N/A

   (a) Constructed According to Drawing No: 768E534G008 Rev 9 Dwg. Prepared by D. L. Peterson

   (b) Description of Part Inspected: Control Rod Drive, Model # 7RDB144FG005

   (c) Applicable ASME Code: Section III , Edition 1974 , Addenda Date W'75 , Case No. N207 1361-2 Class 1

3. REMARKS: Standard part for use with Reactor. Hydrostatically tested at 1825 psi. min.
   (Brief description of service for which component was designed)

Sheet 1 of 2

We certify that the statements in this report are correct and this vessel part or appurtenance as defined in the code conforms to the rules of construction of the ASME Code Section III. (The applicable Designed Specification and Stress Report are not the responsibility of the NPT Certificate Holder for parts. An NPT Certification Holder for appurtenances is responsible for furnishing a separate Design Specification and Stress Report if the appurtenance is not included in the component Design Specification and Stress Report).

Date: 10/06/92 Signed GE - NEBG - NF & CM - QA By
(NPT Certificate Holder) (SC QA Representive)

Certificate of Authorization Expires: 6/16/93 Certification of Authorization No. : NPT N - 1151

Certification of Design for Appurtenance

Design information on file at GE Company, San Jose, California

Stress analysis report on file at GE Company, San Jose, California

DC22A6253 Rev. 1
Design specification certified by Bjorn Haaberg Prof. Eng. State Calif. Reg. No. 15570

DC22A6254 Rev 1
Stress analysis report certified by Edward Yoshio Prof. Eng. State Calif. Reg. No. M018646

Certification of Shop Inspection

I, the undersigned, holding a valid commission by the National Board of Boiler and Pressure Inspectors and/or the State or Province of North Carolina and employed by Department of Labor of State of North Carolina have inspected the part of a pressure vessel described in this Partial Data Report on 9/23, 1992, and state that to the best of my knowledge and belief, the NPT Certificate Holder has constructed this part in accordance with the ASME Code Section III.
By signing this certificate, neither the Inspector nor his employer makes any warranty, expressed or implied, concerning the part described in the Partial Data Report. Furthermore, neither the Inspector nor his employer shall be liable in any manner for any personal injury or property damages or a loss of any kind arising from or connected with this inspection.

10/6, 1992 Jerome P Epure NC 1231, Ohio, WC 3686 PA
Date Inspector's Signature National Board, State, Province And No.

*Supplemental sheets in form of lists, sketches or drawing may be used provided (1) size is 8-1/2" x 11", (2) information in 1-2 on this Data Report is included on each sheet, and (3) each sheet is numbered and number of sheets is recorded in Item 3. "REMARKS".

(07/90)

3/25/05

0 0 2 9 7 4 3 0 0 1

FORM N-2 NPT CERTIFICATE HOLDERS' DATA REPORT FOR NUCLEAR PART AND APPURTENANCES*

As required by the Provision of the ASME Code Rules, Section III, Div. I

1. Manufactured & Certified by : General Electric Company Nuclear Fuel & Components Manufacturing (GE NF & CM)
   2117 Castle Hayne Road, Wilmington, North Carolina 28401
   (Name and Address of NPT Certificate Holder)

   (b) Manufactured for : TVA Chattanooga, Tennessee 37402-2127
   (Name and Address of N Certificate Holder for completed nuclear component)

2. Identification - Certificate Holder's S/N of Part : A8993 Nat'l Bd. No. N/A

   (a) Constructed According to Drawing No: 768E534G008 Rev 9 Dwg. Prepared by D. L. Peterson

   (b) Description of Part Inspected: Control Rod Drive , Model # 7RDB144FG005

   (c) Applicable ASME Code: Section III , Edition 1974 , Addenda Date W'75 , Case No. N207 1361-2 Class 1

3. REMARKS: Standard part for use with Reactor. Hydrostatically tested at 1825 psi. min.
   (Brief description of service for which component was designed)

1. Cap 166B9274P001
   SA182 - F304
   3/8" thick x 1 1/16" OD

2. Indicator Tube 166B9313P001
   SA312 - TP316
   3/4" sch 40 - seamless pipe
   0.113" wall thickness
   1.065" max. dia.

3. Plug 159A1176P001
   SA182 - F304
   1/4" thick x 0.812" OD

4. Flange 919D610P001 (719E474)
   SA182 - F304
   3.37" thick x 9 5/8" OD

5. Base 137C5311P001
   SA182 - F304
   7/8" thick x 2.875" dia.

6. Ring Flange 114B5122P002, P003
   137C8151P001, P002
   SA182 - F304
   1" thick x 5.0" OD x 1.75" ID

7. Cap Screw 117C4516P002
   SA193 - B6
   6 ea. 1/2" dia. on 4 1/8" bolt circle

8. Plug 175A7961P001
   SA182 - F304
   0.38" thick x 1.307" dia.

9. Nut 137C5934P001
   XM - 19 SA479
   1.30" thick x 2.62" dia.

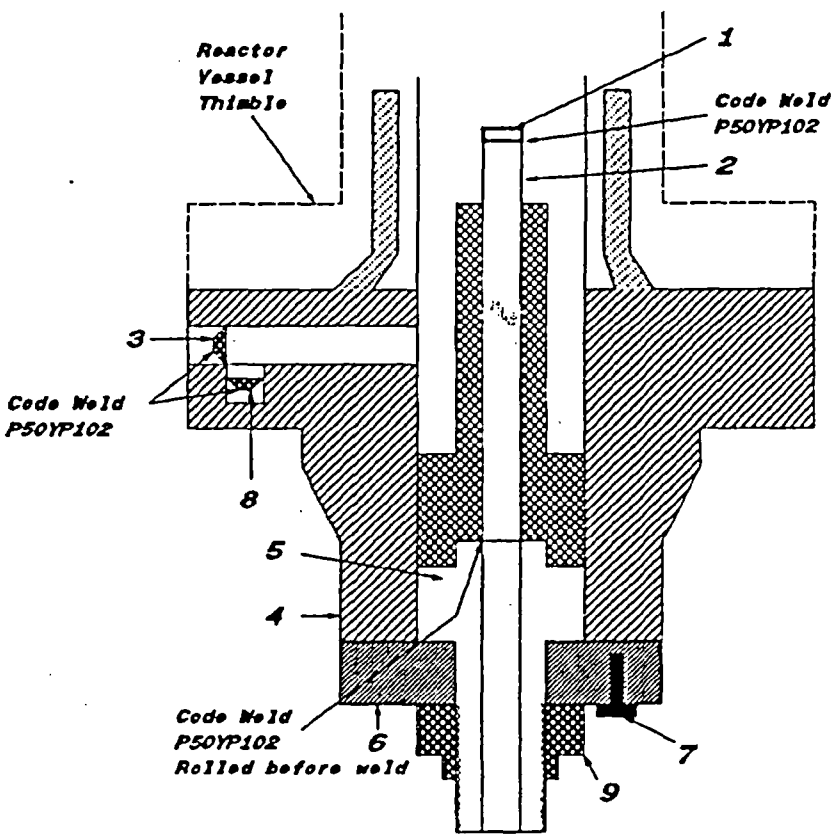

FORM N-2 NPT CERTIFICATE HOLDERS' DATA REPORT FOR NUCLEAR PART AND APPURTENANCES*
As required by the Provision of the ASME Code Rules, Section III, Div. I

1. Manufactured & Certified by : General Electric Company Nuclear Fuel & Components Manufacturing (GE NF & CM)
2117 Castle Hayne Road, Wilmington, North Carolina 28401
(Name and Address of NPT Certificate Holder)

(a) Manufactured for : TVA Chattanooga, Tennessee 37402-2127
(Name and Address of N Certificate Holder for completed nuclear component)

2. Identification - Certificate Holder's S/N of Part : A5322 Nat'l Bd. No. N/A

(a) Constructed According to Drawing No: 768E534G008 Rev 9 Dwg. Prepared by D. L. Peterson

(b) Description of Part Inspected: Control Rod Drive, Model # 7RDB144FG005

(c) Applicable ASME Code: Section III , Edition 1974 , Addenda Date W75 , Case No. N207 1361-2 Class 1

3 REMARKS: Standard part for use with Reactor. Hydrostatically tested at 1825 psi, min.
(Brief description of service for which component was designed)

Sheet 1 of 2

We certify that the statements in this report are correct and this vessel part or appurtenance as defined in the code conforms to the rules of construction of the ASME Code Section III. (The applicable Designed Specification and Stress Report are not the responsibility of the NPT Certificate Holder for parts. An NPT Certification Holder for appurtenances is responsible for furnishing a separate Design Specification and Stress Report if the appurtenance is not included in the component Design Specification and Stress Report).

Date: 03/26/92 Signed GE - NEBG - NF & CM - QA By
(NPT Certificate Holder) (BC QA Representive)

Certificate of Authorization Expires: 6/16/93 Certification of Authorization No. : NPT N - 1151

Certification of Design for Appurtenance

Design information on file at GE Company, San Jose, California

Stress analysis report on file at GE Company, San Jose, California

DC22A6253 Rev. 1
Design specification certified by Bjorn Haaberg Prof. Eng. State Calif. Reg. No. 15570

DC22A6254 Rev 1
Stress analysis report certified by Edward Yoshio Prof. Eng. State Calif. Reg. No. M018646

Certification of Shop Inspection

I, the undersigned, holding a valid commission by the National Board of Boiler and Pressure Inspectors and/or the State or Province of North Carolina and employed by Department of Labor of State of North Carolina have inspected the part of a pressure vessel described in this Partial Data Report on 3/20, 1992, and state that to the best of my knowledge and belief, the NPT Certificate Holder has constructed this part in accordance with the ASME Code Section III

By signing this certificate, neither the Inspector nor his employer makes any warranty, expressed or implied, concerning the part described in the Partial Data Report. Furthermore, neither the Inspector nor his employer shall be liable in any manner for any personal injury or property damages or a loss of any kind arising from or connected with this inspection.

3/20, 1992	Jerome P Green	NC 1231, Ohio, WC 3686 PA
Date	Inspector's Signature	National Board, State, Province And No

*Supplemental sheets in form of lists, sketches or drawing may be used provided (1) size is 8-1/2" x 11", (2) information in 1-2 on this Data Report is included on each sheet, and (3) each sheet is numbered and number of sheets is recorded in Item 3. "REMARKS".

(07/90)

CT 3/25/05

5072-4146

FORM N-2 NPT CERTIFICATE HOLDERS' DATA REPORT FOR NUCLEAR PART AND APPURTENANCES*
As required by the Provision of the ASME Code Rules, Section III, Div. I

1. Manufactured & Certified by : General Electric Company Nuclear Fuel & Components Manufacturing (GE NF & CM)
2117 Castle Hayne Road, Wilmington, North Carolina 28401
(Name and Address of NPT Certificate Holder)

(b) Manufactured for : TVA Chattanooga, Tennessee 37402-2127
(Name and Address of N Certificate Holder for completed nuclear component)

2. Identification - Certificate Holder's S/N of Part : A5322 Nat'l Bd. No. N/A

(a) Constructed According to Drawing No: 768E534G008 Rev 9 Dwg. Prepared by D.L. Peterson

(b) Description of Part Inspected: Control Rod Drive, Model # 7RDB144FG005

(c) Applicable ASME Code: Section III , Edition 1974 , Addenda Date W75 , Case No. N207 1361-2 Class 1

3. REMARKS: Standard part for use with Reactor. Hydrostatically tested at 1825 psi. min.
(Brief description of service for which component was designed)

Sheet 2 of 2

1. Cap 106B9274P001
SA182 - F304
3/8" thick x 1 1/16" OD

2. Indicator Tube 106B9313P001
SA312 - TP316
3/4" sch 40 - seamless pipe
0.113" wall thickness
1.065" max. dia.

3. Plug 158A1178P001
SA182 - F304
1/4" thick x 0.812" OD

4. Flange 919D610P001 (719E474)
SA182 - F304
3.37" thick x 9 5/8" OD

5. Base 137C5311P001
SA182 - F304
7/8" thick x 2.875" dia.

6. Ring Flange 114B5123P002, P003
137C8151P001, P002
SA182 - F304
1" thick x 5.0" OD x 1.75" ID

7. Cap Screw 117C4518P002
SA193 - B6
6 ea. 1/2" dia. on 4 1/8" bolt circle

8. Plug 175A7961P001
SA182 - F304
0.38" thick x 1.307" dia.

9. Nut 137C5934P001
XM - 19 SA479
1.30" thick x 2.62" dia.

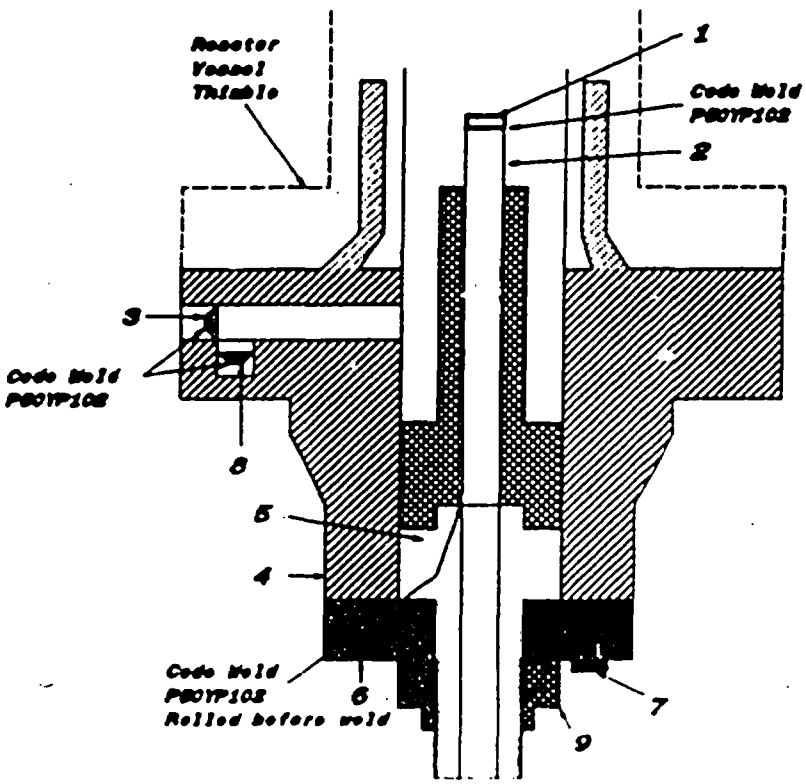

FORM N-2 NPT CERTIFICATE HOLDERS' DATA REPORT FOR NUCLEAR PART AND APPURTENANCES*
As required by the Provision of the ASME Code Rules, Section III, Div. I

1. Manufactured & Certified by : General Electric Company Nuclear Fuel & Components Manufacturing (GE NF & CM)
2117 Castle Hayne Road, Wilmington, North Carolina 28401
(Name and Address of NPT Certificate Holder)

(b) Manufactured for : TVA Chattanooga, Tennessee 37402-2127
(Name and Address of N Certificate Holder for completed nuclear component)

2. Identification - Certificate Holder's S/N of Part : A4786 Nat'l Bd. No. N/A

(a) Constructed According to Drawing No: 768E534G008 Rev 9 Dwg. Prepared by D. L. Peterson

(b) Description of Part Inspected: Control Rod Drive, Model # 7RDB144FG005

(c) Applicable ASME Code: Section III, Edition 1974, Addenda Date W'75, Case No. N207 1361-2 Class 1

3. REMARKS: Standard part for use with Reactor. Hydrostatically tested at 1825 psi. min.
(Brief description of service for which component was designed)

Sheet 1 of 2

We certify that the statements in this report are correct and this vessel part or appurtenance as defined in the code conforms to the rules of construction of the ASME Code Section III. (The applicable Designed Specification and Stress Report are not the responsibility of the NPT Certificate Holder for parts. An NPT Certification Holder for appurtenances is responsible for furnishing a separate Design Specification and Stress Report if the appurtenance is not included in the component Design Specification and Stress Report).

Date: 04/24/92 Signed GE-NEBG-NF & CM-QA By [signature]
(NPT Certificate Holder) (SC Or Representive)

Certificate of Authorization Expires: 8/16/93 Certification of Authorization No. : NPT N-1151

Certification of Design for Appurtenance

Design information on file at GE Company, San Jose, California

Stress analysis report on file at GE Company, San Jose, California

DC22A8253 Rev. 1
Design specification certified by Bjorn Haaberg Prof. Eng. State Calif. Reg. No. 15570

DC22A8254 Rev 1
Stress analysis report certified by Edward Yoshio Prof. Eng. State Calif. Reg. No. M018646

Certification of Shop Inspection

I, the undersigned, holding a valid commission by the National Board of Boiler and Pressure Inspectors and/or the State or Province of North Carolina and employed by Department of Labor of State of North Carolina have inspected the part of a pressure vessel described in this Partial Data Report on 4-9, 1992, and state that to the best of my knowledge and belief, the NPT Certificate Holder has constructed this part in accordance with the ASME Code Section III.
By signing this certificate, neither the Inspector nor his employer makes any warranty, expressed or implied, concerning the part described in the Partial Data Report. Furthermore, neither the Inspector nor his employer shall be liable in any manner for any personal injury or property damages or a loss of any kind arising from or connected with this inspection.

4/24, 1992 [signature] NC 1231, Ohio, WC 3686 PA
Date Inspector's Signature National Board, State, Province And No.

*Supplemental sheets in form of lists, sketches or drawing may be used provided (1) size is 8-1/2" x 11", (2) information in 1-2 on this Data Report is included on each sheet, and (3) each sheet is numbered and number of sheets is recorded in Item 3. "REMARKS".

(07/90)

CR 3/25/05

6022.0634

FORM N-2 NPT CERTIFICATE HOLDERS' DATA REPORT FOR NUCLEAR PART AND APPURTENANCES*

As required by the Provision of the ASME Code Rules, Section III, Div. I

1. Manufactured & Certified by : General Electric Company Nuclear Fuel & Components Manufacturing (GE NF & CM)
2117 Castle Hayne Road, Wilmington, North Carolina 28401
(Name and Address of NPT Certificate Holder)

(b) Manufactured for : TVA Chattanooga, Tennessee 37402-2127
(Name and Address of N Certificate Holder for completed nuclear component)

2. Identification - Certificate Holder's S/N of Part : A4786 Nat'l Bd. No. N/A

(a) Constructed According to Drawing No: 768E534G008 Rev 9 Dwg. Prepared by D. L. Peterson

(b) Description of Part Inspected: Control Rod Drive, Model # 7RDB144FG005

(c) Applicable ASME Code: Section III , Edition 1974 , Addenda Date W'75 . Case No. N207 1361-2 Class 1

3. REMARKS: Standard part for use with Reactor. Hydrostatically tested at 1825 psi. min.
(Brief description of service for which component was designed)

Sheet 2 of 2

1. Cap 166B9274P001
SA182 - F304
3/8" thick x 1 1/16" OD

2. Indicator Tube 166B9313P001
SA312 - TP316
3/4" sch 40 - seamless pipe
0.113" wall thickness
1.065" max. dia.

3. Plug 159A1176P001
SA182 - F304
1/4" thick x 0.812" OD

4. Flange 919C610P001 (719E474)
SA182 - F304
3.37" thick x 9 5/8" OD

5. Base 137C5311P001
SA182 - F304
7/8" thick x 2.875" dia.

6. Ring Flange 114B5122P002, P003
137C8151P001, P002
SA182 - F304
1" thick x 5.0" OD x 1.75" ID

7. Cap Screw 117C4516P002
SA193 - B6
6 ea. 1/2" dia. on 4 1/8" bolt circle

8. Plug 175A7961P001
SA182 - F304
0.38" thick x 1.307" dia.

9. Nut 137C5934P001
XM - 19 SA479
1.30" thick x 2.62" dia.

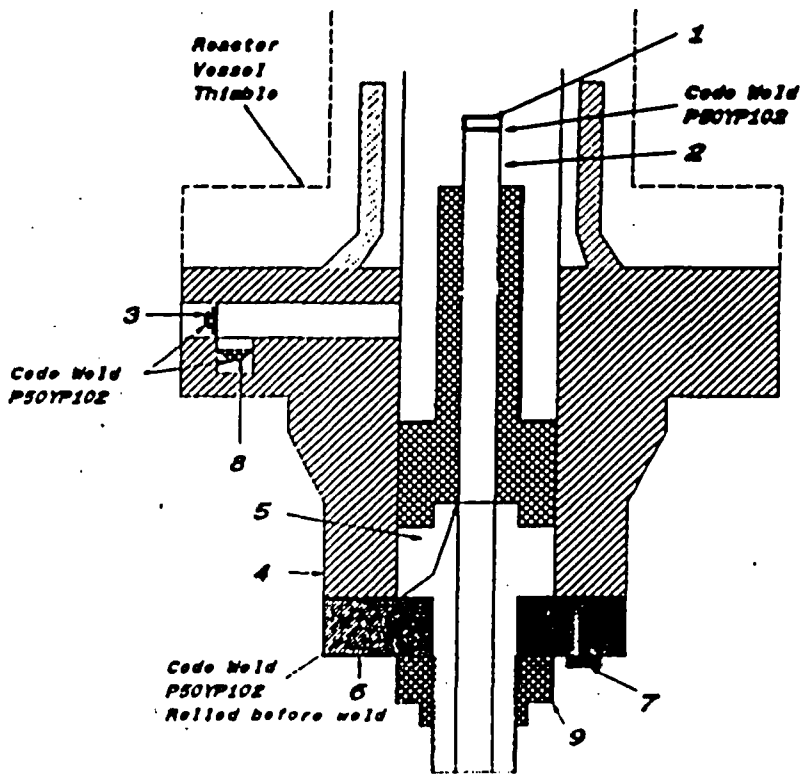

FORM N-2 NPT CERTIFICATE HOLDERS' DATA REPORT FOR NUCLEAR PART AND APPURTENANCES*
as required by the Provision of the ASME Code Rules, Section III, Div. I

1. Manufactured & Certified by : General Electric Company Nuclear Fuel & Components Manufacturing (GE NF & CM)
2117 Castle Hayne Road, Wilmington, North Carolina 28401
(Name and Address of NPT Certificate Holder)

(b) Manufactured for : TVA Chattanooga, Tennessee 37402-2127
(Name and Address of N Certificate Holder for completed nuclear component)

Identification - Certificate Holder's S/N of Part : A3924 Nat'l Bd. No. N/A

(a) Constructed According to Drawing No: 768E534G008 Rev 0 Dwg. Prepared by D. L. Peterson

(b) Description of Part Inspected: Control Rod Drive, Model # 7RDB144FG005

(c) Applicable ASME Code: Section III , Edition 1974 , Addenda Date W75 , Case No. N207 1361-2 Class 1

3. REMARKS: Standard part for use with Reactor. Hydrostatically tested at 1825 psi. min.
(Brief description of service for which component was designed)

Sheet 1 of 2

We certify that the statements in this report are correct and this vessel part or appurtenance as defined in the code conforms to the rules of construction of the ASME Code Section III. (The applicable Designed Specification and Stress Report are not the responsibility of the NPT Certificate Holder for parts. An NPT Certification Holder for appurtenances is responsible for furnishing a separate Design Specification and Stress Report if the appurtenance is not included in the component Design Specification and Stress Report).

Date: 03/26/92 Signed GE - NEBG - NF & CM - QA By [signature]
(NPT Certificate Holder) (NBC QA Representative)

Certificate of Authorization Expires: 6/16/93 Certification of Authorization No. : NPT N - 1151

Certification of Design for Appurtenance

Design information on file at GE Company, San Jose, California

Stress analysis report on file at GE Company, San Jose, California

DC22A6253 Rev. 1
Design specification certified by Bjorn Hasberg Prof. Eng. State Calif. Reg. No. 15570

DC22A6254 Rev 1
Stress analysis report certified by Edward Yoshio Prof. Eng. State Calif. Reg. No. M018646

Certification of Shop Inspection

I, the undersigned, holding a valid commission by the National Board of Boiler and Pressure Inspectors and/or the State or Province of North Carolina and employed by Department of Labor of State of North Carolina have inspected the part of a pressure vessel described in this Partial Data Report on 3/11, 1992, and state that to the best of my knowledge and belief, the NPT Certificate Holder has constructed this part in accordance with the ASME Code Section III.
By signing this certificate, neither the Inspector nor his employer makes any warranty, expressed or implied, concerning the part described in the Partial Data Report. Furthermore, neither the Inspector nor his employer shall be liable in any manner for any personal injury or property damages or a loss of any kind arising from or connected with this inspection.

3/26, 1992 [signature] NC 1231, Ohio, WC 3686 PA
Date Inspector's Signature National Board, State, Province And No

*Supplemental sheets in form of lists, sketches or drawing may be used provided (1) size is 8-1/2" x 11", (2) information in 1-2 on this Data Report is included on each sheet, and (3) each sheet is numbered and number of sheets is recorded in Item 3. "REMARKS".

(07/90)

CA 3/25/05

FORM N-2 NPT CERTIFICATE HOLDERS' DATA REPORT FOR NUCLEAR PART AND APPURTENANCES*
As required by the Provision of the ASME Code Rules, Section III, Div. I

1. Manufactured & Certified by : General Electric Company Nuclear Fuel & Components Manufacturing (GE NF & CM)
2117 Castle Hayne Road, Wilmington, North Carolina 28401
(Name and Address of NPT Certificate Holder)

(b) Manufactured for : TVA Chattanooga, Tennessee 37402-2127
(Name and Address of N Certificate Holder for completed nuclear component)

2. Identification - Certificate Holder's S/N of Part : A3924 Nat'l Bd. No. N/A

(a) Constructed According to Drawing No: 768E534G008 Rev 0 Dwg. Prepared by D. L. Peterson

(b) Description of Part Inspected: Control Rod Drive, Model # 7RDB144FG005

(c) Applicable ASME Code: Section III , Edition 1974 , Addenda Date W75 , Case No. N207 1361-2 Class 1

3. REMARKS: Standard part for use with Reactor. Hydrostatically tested at 1825 psi, min.
(Brief description of service for which component was designed)

Sheet 2 of 2

1. Cap 16689274P001
SA182 - F304
3/8" thick x 1 1/16" OD

2. Indicator Tube 16689313P001
SA312 - TP316
3/4" sch 40 - seamless pipe
0.113" wall thickness
1.065" max. dia.

3. Plug 159A1176P001
SA182 - F304
1/4" thick x 0.812" OD

4. Flange 919D610P001 (719E474)
SA182 - F304
3.37" thick x 9 5/8" OD

5. Base 137C5311P001
SA182 - F304
7/8" thick x 2.875" dia.

6. Ring Flange 114B5122P002, P003
137C8151P001, P002
SA182 - F304
1" thick x 5.0" OD x 1.75" ID

7. Cap Screw 117C4516P002
SA193 - B6
6 ea. 1/2" dia. on 4 1/8" bolt circle

8. Plug 175A7961P001
SA182 - F304
0.38" thick x 1.307" dia.

9. Nut 137C5934P001
XM - 19 SA479
1.30" thick x 2.62" dia

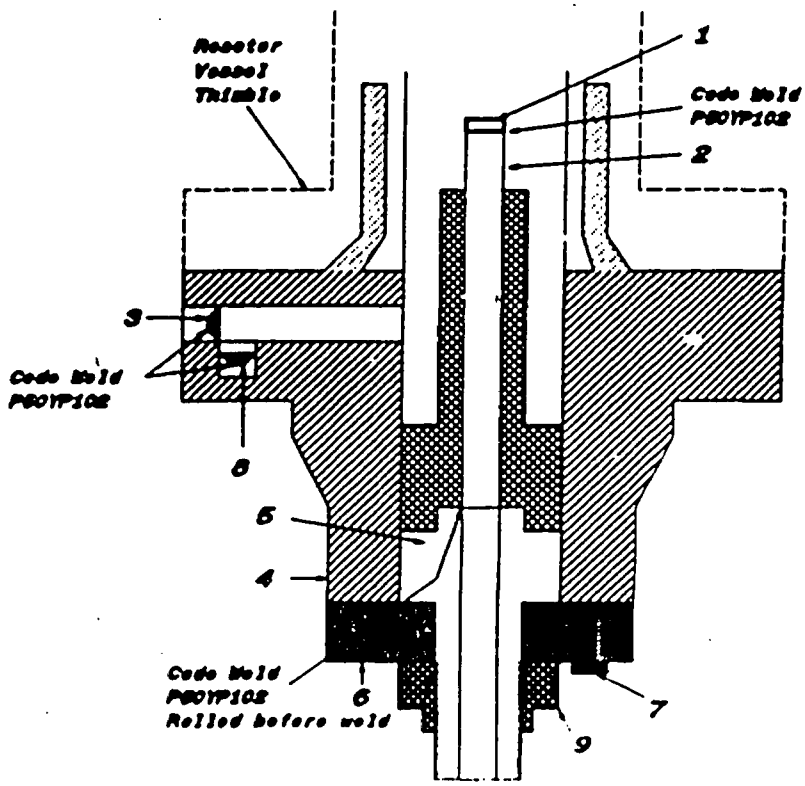

FORM N-1 NPT CERTIFICATE HOLDERS' DATA REPORT FOR NUCLEAR PART AND APPURTENANCES*
As required by the Provision of the ASME Code Rules, Section III, Div. I

1. Manufactured & Certified by : General Electric Company Nuclear Fuel & Components Manufacturing (GE NF & CM)
2117 Castle Hayne Road, Wilmington, North Carolina 28401
(Name and Address of NPT Certificate Holder)

(b) Manufactured for : TVA Chattanooga, Tennessee 37402-2127
(Name and Address of N Certificate Holder for completed nuclear component)

2. Identification - Certificate Holder's S/N of Part : A3976 Nat'l Bd. No. N/A

(a) Constructed According to Drawing No: 768E534G008 Rev 9 Dwg. Prepared by D. L. Peterson

(b) Description of Part Inspected: Control Rod Drive, Model # 7RDB144FG005

(c) Applicable ASME Code: Section III , Edition 1974 , Addenda Date W75 , Case No. N207 1361-2 Class 1

3. REMARKS: Standard part for use with Reactor. Hydrostatically tested at 1825 psi. min.
(Brief description of service for which component was designed)

Sheet 1 of 2

We certify that the statements in this report are correct and this vessel part or appurtenance as defined in the code conforms to the rules of construction of the ASME Code Section III. (The applicable Designed Specification and Stress Report are not the responsibility of the NPT Certificate Holder for parts. An NPT Certification Holder for appurtenances is responsible for furnishing a separate Design Specification and Stress Report if the appurtenance is not included in the component Design Specification and Stress Report).

Date: 9/14/92 Signed GE - NEBG - NF & CM - QA By
(NPT Certificate Holder) (GE QA Representative)

Certificate of Authorization Expires: 6/16/93 Certification of Authorization No. : NPT N - 1151

Certification of Design for Appurtenance

Design information on file at GE Company, San Jose, California

Stress analysis report on file at GE Company, San Jose, California

DC22A6253 Rev. 1
Design specification certified by Blom Hasberg Prof. Eng. State Calif. Reg. No. 15570

DC22A6254 Rev 1
Stress analysis report certified by Edward Yoshio Prof. Eng. State Calif. Reg. No. M018646

Certification of Shop Inspection

I, the undersigned, holding a valid commission by the National Board of Boiler and Pressure Inspectors and/or the State or Province of North Carolina and employed by Department of Labor of State of North Carolina have inspected the part of a pressure vessel described in this Partial Data Report on _____, and state that to the best of my knowledge and belief, the NPT Certificate Holder has constructed this part in accordance with the ASME Code Section III.
By signing this certificate, neither the Inspector nor his employer makes any warranty, expressed or implied, concerning the part described in the Partial Data Report. Furthermore, neither the Inspector nor his employer shall be liable in any manner for any personal injury or property damages or a loss of any kind arising from or connected with this inspection.

Date _____ Inspector's Signature _____ NC 1231, Ohio, WC 3686 PA
National Board, State, Province And No

*Supplemental sheets in form of lists, sketches or drawing may be used provided (1) size is 8-1/2" x 11", (2) information in 1-3 on this Data Report is included on each sheet, and (3) each sheet is numbered and number of sheets is recorded in Item 3. "REMARKS".

3/25/03

FORM N-2 NPT CERTIFICATE HOLDER'S DATA REPORT FOR NUCLEAR PART AND APPURTENANCES*
As required by the Provision of the ASME Code Rules, Section III, Div. I

1. Manufactured & Certified by : General Electric Company Nuclear Fuel & Components Manufacturing (GE NF & CM)
2177 Castle Hayne Road, Wilmington, North Carolina 28401
(Name and Address of NPT Certificate Holder)

(b) Manufactured for : TVA Chattanooga, Tennessee 37402-2127
(Name and Address of N Certificate Holder for completed nuclear component)

2. Identification - Certificate Holder's S/N of Part : A3976 Nat'l Bd. No. N/A

(a) Constructed According to Drawing No: 768E534G008 Rev. 9 Dwg. Prepared by D. L. Peterson

(b) Description of Part Inspected: Control Rod Drive, Model # 7RDB144FG005

(c) Applicable ASME Code: Section III , Edition 1974 , Addenda Date W75 , Case No. N207 1361-2 Class 1

3. REMARKS: Standard part for use with Reactor. Hydrostatically tested at 1825 psi. min.
(Brief description of service for which component was designed)

Sheet 2 of 2

1. Cap 166B8274P001
SA182 - F304
3/8" thick x 1 1/16" OD

2. Indicator Tube 166B8313P001
SA312 - TP316
3/4" sch 40 - seamless pipe
0.113" wall thickness
1.065" max. dia.

3. Plug 159A1178P001
SA182 - F304
1/4" thick x 0.812" OD

4. Flange 919D610P001 (719E474)
SA182 - F304
3.37" thick x 9 5/8" OD

5. Base 137C5311P001
SA182 - F304
7/8" thick x 2.875" dia.

6. Ring Flange 114B5122P002, P003
137C8151P001, P002
SA182 - F304
1" thick x 5.0" OD x 1.75" ID

7. Cap Screw 117C4516P002
SA193 - B6
6 ea. 1/2" dia. on 4 1/8" bolt circle

8. Plug 175A7961P001
SA182 - F304
0.38" thick x 1.307" dia.

9. Nut 137C5934P001
XM - 19 SA479
1.30" thick x 2.62" dia.

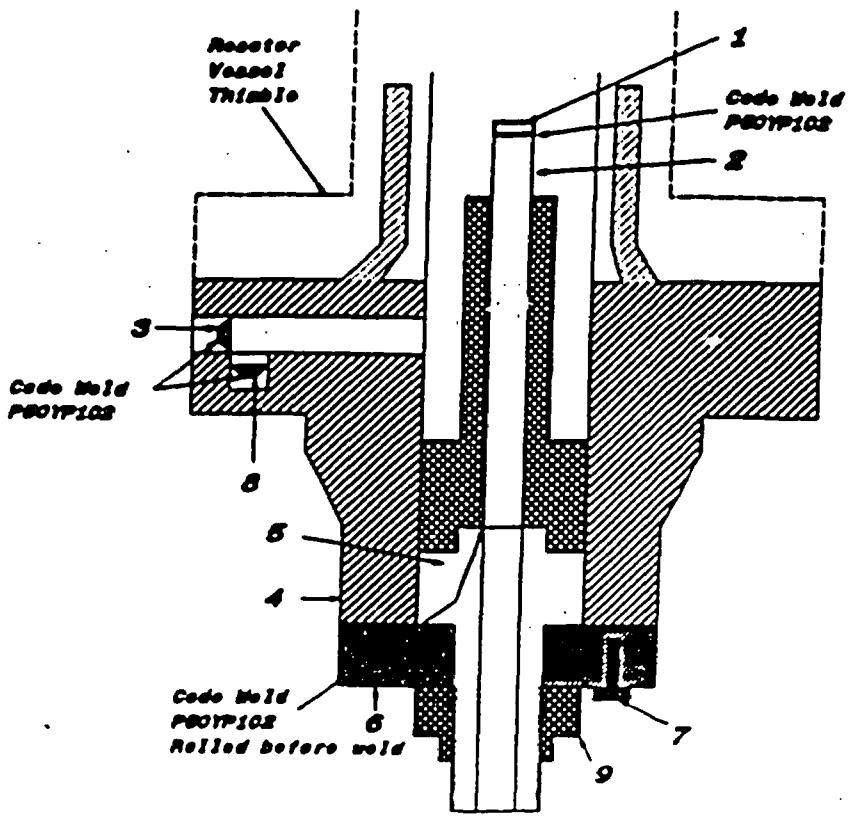

FORM N-2 NPT CERTIFICATE HOLDERS' DATA REPORT FOR NUCLEAR PART AND APPURTENANCES*
As required by the Provision of the ASME Code Rules, Section III, Div. I

1. Manufactured & Certified by : General Electric Company Nuclear Fuel & Components Manufacturing (GE NF & CM)
2117 Castle Hayne Road, Wilmington, North Carolina 28401
(Name and Address of NPT Certificate Holder)

(a) Manufactured for : TVA Chattanooga, Tennessee 37402-2127
(Name and Address of N Certificate Holder for completed nuclear component)

2. Identification - Certificate Holder's S/N of Part : A5429 Nat'l Bd. No. N/A

(a) Constructed According to Drawing No: 768E534G008 Rev 9 Dwg. Prepared by D. L. Peterson

(b) Description of Part Inspected: Control Rod Drive, Model # 7RDB144FG005

(c) Applicable ASME Code: Section III , Edition 1974 , Addenda Date W75 , Case No. N207 1361-2 Class 1

3. REMARKS: Standard part for use with Reactor. Hydrostatically tested at 1825 psi, min.
(Brief description of service for which component was designed)

Sheet 1 of 2

We certify that the statements in this report are correct and this vessel part or appurtenance as defined in the code conforms to the rules of construction of the ASME Code Section III. (The applicable Designed Specification and Stress Report are not the responsibility of the NPT Certificate Holder for parts. An NPT Certification Holder for appurtenances is responsible for furnishing a separate Design Specification and Stress Report if the appurtenance is not included in the component Design Specification and Stress Report).

Date: 03/13/92 Signed GE-NEBG-NF & CM-QA By [signature]
(NPT Certificate Holder) (QC QA Representative)

Certificate of Authorization Expires: 6/16/93 Certification of Authorization No. : NPT N-1151

Certification of Design for Appurtenance

Design information on file at GE Company, San Jose, California

Stress analysis report on file at GE Company, San Jose, California

DC22A8253 Rev. 1
Design specification certified by Bjorn Haaberg Prof. Eng. State Calif. Reg. No. 15570

DC22A8254 Rev 1
Stress analysis report certified by Edward Yoshio Prof. Eng. State Calif. Reg. No. M018846

Certification of Shop Inspection

I, the undersigned, holding a valid commission by the National Board of Boiler and Pressure Inspectors and/or the State or Province of North Carolina and employed by Department of Labor of State of North Carolina have inspected the part of a pressure vessel described in this Partial Data Report on 3/13, 1992, and state that to the best of my knowledge and belief, the NPT Certificate Holder has constructed this part in accordance with the ASME Code Section III.
By signing this certificate, neither the Inspector nor his employer makes any warranty, expressed or implied, concerning the part described in the Partial Data Report. Furthermore, neither the Inspector nor his employer shall be liable in any manner for any personal injury or property damages or a loss of any kind arising from or connected with this inspection.

3/13, 1992 [signature] NC 1231, Ohio, WC 3686 PA
Date Inspector's Signature National Board, State, Province And No.

*Supplemental sheets in form of lists, sketches or drawing may be used provided (1) size is 8-1/2" x 11", (2) information in 1-2 on this Data Report is included on each sheet, and (3) each sheet is numbered and number of sheets is recorded in Item 3. "REMARKS".

(07-90)

CK 2/24/95

6022.3393

FORM N-2 NPT CERTIFICATE HOLDERS' DATA REPORT FOR NUCLEAR PART AND APPURTENANCES*

As required by the Provision of the ASME Code Rules, Section III, Div. I

1. Manufactured & Certified by : General Electric Company Nuclear Fuel & Components Manufacturing (GENF & CM)
2117 Castle Hayne Road, Wilmington, North Carolina 28401
(Name and Address of NPT Certificate Holder)

(b) Manufactured for : TVA Chattanooga, Tennessee 37402-2127
(Name and Address of N Certificate Holder for completed nuclear component)

2. Identification - Certificate Holder's S/N of Part : A5429 Nat'l Bd. No. N/A

(a) Constructed According to Drawing No: 768E534G008 Rev 9 Dwg. Prepared by D. L. Peterson

(b) Description of Part Inspected: Control Rod Drive, Model # 7RDB144FG005

(c) Applicable ASME Code: Section III , Edition 1974 , Addenda Date W75 . Case No. N207 1361-2 Class 1

3. REMARKS. Standard part for use with Reactor. Hydrostatically tested at 1825 psi. min.
(Brief description of service for which component was designed)

Sheet 2 of 2

1. Cap 186B6274P001
SA182 - F304
3/8" thick x 1 1/16" OD

2. Indicator Tube 186B6313P001
SA312 - TP316
3/4" sch 40 - seamless pipe
0.113" wall thickness
1.065" max. dia.

3. Plug 188A1176P001
SA182 - F304
1/4" thick x 0.812" OD

4. Flange 919D610P001 (719E474)
SA182 - F304
3.37" thick x 9 5/8" OD

5. Base 137C5311P001
SA182 - F304
7/8" thick x 2.875" dia.

6. Ring Flange 114B5122P002, P003
137C8151P001, P002
SA182 - F304
1" thick x 5.0" OD x 1.75" ID

7. Cap Screw 117C4516P002
SA193 - B6
6 ea. 1/2" dia. on 4 1/8" bolt circle

8. Plug 175A7961P001
SA182 - F304
0.38" thick x 1.307" dia.

9. Nut 137C5934P001
XM - 19 SA479
1.30" thick x 2.62" dia

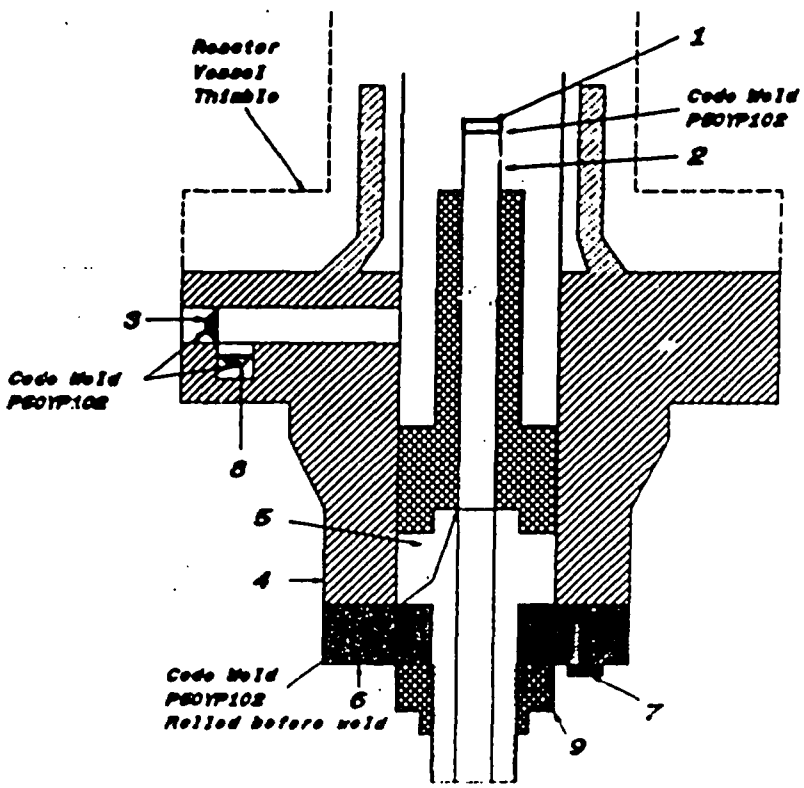

FORM N-2 NPT CERTIFICATE HOLDERS' DATA REPORT FOR NUCLEAR PART AND APPURTENANCES*
As required by the Provision of the ASME Code Rules, Section III, Div. I

1. Manufactured & Certified by : General Electric Company Nuclear Fuel & Components Manufacturing (GE NF & CM)
2117 Castle Hayne Road, Wilmington, North Carolina 28401
(Name and Address of NPT Certificate Holder)

(b) Manufactured for : TVA Chattanooga, Tennessee 37402-2127
(Name and Address of N Certificate Holder for completed nuclear component)

2. Identification - Certificate Holder's S/N of Part : A5155 Nat'l Bd. No. N/A

(a) Constructed According to Drawing No: 768E534G008 Rev 9 Dwg. Prepared by D. L. Peterson

(b) Description of Part Inspected: Control Rod Drive, Model # 7RDB144FG005

(c) Applicable ASME Code: Section III , Edition 1974 , Addenda Date W75 , Case No. N207 1361-2 Class 1

3. REMARKS: Standard part for use with Reactor. Hydrostatically tested at 1825 psi. min.
(Brief description of service for which component was designed)

Sheet 1 of 2

We certify that the statements in this report are correct and this vessel part or appurtenance as defined in the code conforms to the rules of construction of the ASME Code Section III. (The applicable Designed Specification and Stress Report are not the responsibility of the NPT Certificate Holder for parts. An NPT Certification Holder for appurtenances is responsible for furnishing a separate Design Specification and Stress Report if the appurtenance is not included in the component Design Specification and Stress Report).

Date: 07/29/92 Signed GE-NEBG-NF & CM-QA By [signature]
(NPT Certificate Holder) (SC QA Representive)

Certificate of Authorization Expires: 6/16/93 Certification of Authorization No. : NPT N-1151

Certification of Design for Appurtenance

Design information on file at GE Company, San Jose, California

Stress analysis report on file at GE Company, San Jose, California

DC22A6253 Rev. 1
Design specification certified by Bjorn Haaberg Prof. Eng. State Calif. Reg. No. 15570

DC22A6254 Rev 1
Stress analysis report certified by Edward Yoshio Prof. Eng. State Calif. Reg. No. M018646

Certification of Shop Inspection

I, the undersigned, holding a valid commission by the National Board of Boiler and Pressure Inspectors and/or the State or Province of North Carolina and employed by Department of Labor of State of North Carolina have inspected the part of a pressure vessel described in this Partial Data Report on [illegible] and state that to the best of my knowledge and belief, the NPT Certificate Holder has constructed this part in accordance with the ASME Code Section III
By signing this certificate, neither the Inspector nor his employer makes any warranty, expressed or implied, concerning the part described in the Partial Data Report. Furthermore, neither the Inspector nor his employer shall be liable in any manner for any personal injury or property damages or a loss of any kind arising from or connected with this inspection.

[illegible] [signature] NC 1231, Ohio, WC 3686 PA
Date Inspector's Signature National Board, State, Province And No

*Supplemental sheets in form of lists, sketches or drawing may be used provided (1) size is 8-1/2" x 11", (2) information in 1-2 on this Data Report is included on each sheet, and (3) each sheet is numbered and number of sheets is recorded in Item 3. "REMARKS".

(07/86)

CA 3/25/05

FORM N-2 NPT CERTIFICATE HOLDERS' DATA REPORT FOR NUCLEAR PART AND APPURTENANCES*
As required by the Provision of the ASME Code Rules, Section III, Div. I

1. Manufactured & Certified by : General Electric Company Nuclear Fuel & Components Manufacturing (GE NF & CM)
2117 Castle Hayne Road, Wilmington, North Carolina 28401
(Name and Address of NPT Certificate Holder)

(b) Manufactured for : TVA Chattanooga, Tennessee 37402-2127
(Name and Address of N Certificate Holder for completed nuclear component)

2. Identification - Certificate Holder's S/N of Part : A5155 Nat'l Bd. No. N/A

(a) Constructed According to Drawing No: 768E534G008 Rev 9 Dwg. Prepared by D. L. Peterson

(b) Description of Part Inspected: Control Rod Drive, Model # 7RDB144FG005

(c) Applicable ASME Code: Section III . Edition 1974 . Addenda Date W75 . Case No. N207 1361-2 Class 1

3. REMARKS: Standard part for use with Reactor. Hydrostatically tested at 1825 psi. min.
(Brief description of service for which component was designed)

Sheet 2 of 2

1. Cap 166B9274P001
SA182 - F304
3/8" thick x 1 1/16" OD

2. Indicator Tube 166B9313P001
SA312 - TP316
3/4" sch 40 - seamless pipe
0.113" wall thickness
1.065" max. dia.

3. Plug 159A1176P001
SA182 - F304
1/4" thick x 0.812" OD

4. Flange 919D610P001 (719E474)
SA182 - F304
3.37" thick x 9 5/8" OD

5. Base 137C5311P001
SA182 - F304
7/8" thick x 2.875" dia.

6. Ring Flange 114B5122P002, P003
137C8151P001, P002
SA182 - F304
1" thick x 5.0" OD x 1.75" ID

7. Cap Screw 117C4516P002
SA193 - B6
6 ea. 1/2" dia. on 4 1/8" bolt circle

8. Plug 175A7961P001
SA182 - F304
0.38" thick x 1.307" dia.

9. Nut 137C5934P001
XM - 19 SA479
1.30" thick x 2.62" dia

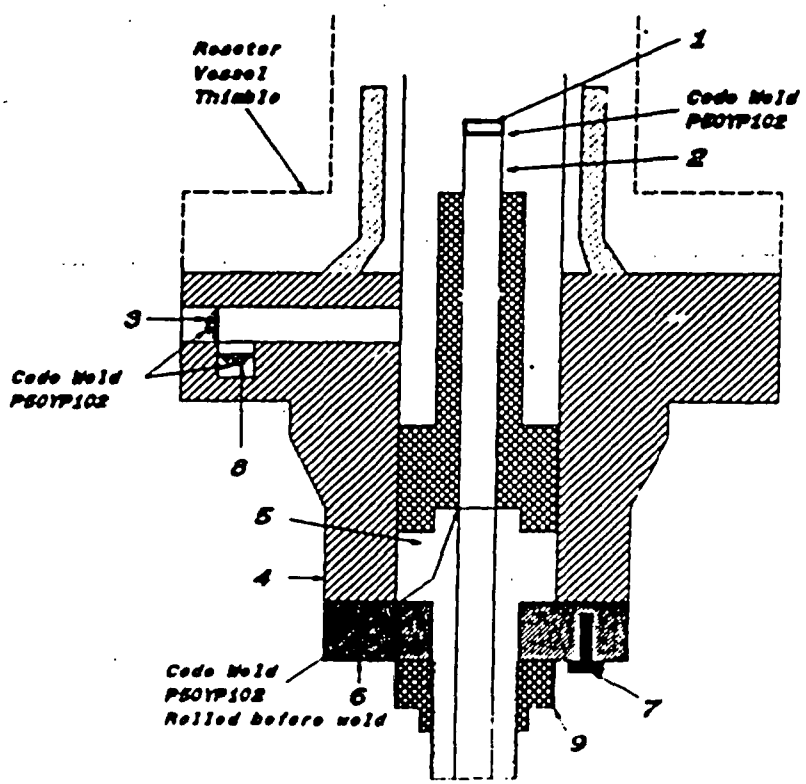

5022.1344

FORM N-2 NPT CERTIFICATE HOLDERS' DATA REPORT FOR NUCLEAR PART AND APPURTENANCES*
As required by the Provision of the ASME Code Rules, Section III, Div. I

1. Manufactured & Certified by : General Electric Company Nuclear Fuel & Components Manufacturing (GE NF & CM)
2117 Castle Hayne Road, Wilmington, North Carolina 28401
(Name and Address of NPT Certificate Holder)

(b) Manufactured for : TVA Chattanooga, Tennessee 37402-2127
(Name and Address of N Certificate Holder for completed nuclear component)

2. Identification - Certificate Holder's S/N of Part : A4447 Nat'l Bd. No. N/A

(a) Constructed According to Drawing No: 768E534G008 Rev 9 Dwg. Prepared by D. L. Peterson

(b) Description of Part Inspected: Control Rod Drive, Model # 7RDB144FG005

(c) Applicable ASME Code: Section III , Edition 1974 , Addenda Date W75 , Case No. N207 1361-2 Class 1

3. REMARKS: Standard part for use with Reactor. Hydrostatically tested at 1825 psi. min.
(Brief description of service for which component was designed)

Sheet 1 of 2

We certify that the statements in this report are correct and this vessel part or appurtenance as defined in the code conforms to the rules of construction of the ASME Code Section III. (The applicable Designed Specification and Stress Report are not the responsibility of the NPT Certificate Holder for parts. An NPT Certification Holder for appurtenances is responsible for furnishing a separate Design Specification and Stress Report if the appurtenance is not included in the component Design Specification and Stress Report).

Date: 06/25/92 Signed GE-NEBG-NF & CM-QA By [signature]
(NPT Certificate Holder) (QC QA Representive)

Certificate of Authorization Expires: 6/16/93 Certification of Authorization No. : NPT N-1151

Certification of Design for Appurtenance

Design information on file at GE Company, San Jose, California

Stress analysis report on file at GE Company, San Jose, California

DC22A8253 Rev. 1
Design specification certified by Biom Hasberg Prof. Eng. State Calif. Reg. No. 15570

DC22A8254 Rev 1
Stress analysis report certified by Edward Yoshio Prof. Eng. State Calif. Reg. No. M018646

Certification of Shop Inspection

I, the undersigned, holding a valid commission by the National Board of Boiler and Pressure Inspectors and/or the State or Province of North Carolina and employed by Department of Labor of State of North Carolina have inspected the part of a pressure vessel described in this Partial Data Report on 6/2, 1992, and state that to the best of my knowledge and belief, the NPT Certificate Holder has constructed this part in accordance with the ASME Code Section III.
By signing this certificate, neither the Inspector nor his employer makes any warranty, expressed or implied, concerning the part described in the Partial Data Report. Furthermore, neither the Inspector nor his employer shall be liable in any manner for any personal injury or property damages or a loss of any kind arising from or connected with this inspection.

6/25, 1992 [signature] NC 1231, Ohio, WC 3686 PA
Date Inspector's Signature National Board, State, Province And No.

*Supplemental sheets in form of lists, sketches or drawing may be used provided (1) size is 8-1/2" x 11", (2) information in 1-2 on this Data Report is included on each sheet, and (3) each sheet is numbered and number of sheets is recorded in Item 3. "REMARKS".

(07/90)

03/25/05

6022.1346

FORM N-2 NPT, CERTIFICATE HOLDERS' DATA REPORT FOR NUCLEAR PART AND APPURTENANCES*
As required by the Provision of the ASME Code Rules, Section III, Div. I

1. Manufactured & Certified by : General Electric Company Nuclear Fuel & Components Manufacturing (GE NF & CM)
2117 Castle Hayne Road, Wilmington, North Carolina 28401
(Name and Address of NPT Certificate Holder)

(b) Manufactured for : TVA Chattanooga, Tennessee 37402-2127
(Name and Address of N Certificate Holder for completed nuclear component)

2. Identification - Certificate Holder's S/N of Part : A4447 Nat'l Bd. No. N/A

(a) Constructed According to Drawing No: 768E534G008 Rev 9 Dwg. Prepared by D. L. Peterson

(b) Description of Part Inspected: Control Rod Drive, Model # 7RDB144FG005

(c) Applicable ASME Code: Section III , Edition 1974 , Addenda Date W75 . Case No. N207 1361-2 Class 1

3. REMARKS: Standard part for use with Reactor. Hydrostatically tested at 1825 psi. min.
(Brief description of service for which component was designed)

Sheet 2 of 2

1. Cap 166B9274P001
SA182 - F304
3/8" thick x 1 1/16" OD

2. Indicator Tube 166B9313P001
SA312 - TP316
3/4" sch 40 - seamless pipe
0.113" wall thickness
1.065" max. dia.

3. Plug 159A1176P001
SA182 - F304
1/4" thick x 0.812" OD

4. Flange 919D610P001 (719E474)
SA182 - F304
3.37" thick x 9 5/8" OD

5. Base 137C5311P001
SA182 - F304
7/8" thick x 2.875" dia.

6. Ring Flange 114B5122P002, P003
137C8151P001, P002
SA182 - F304
1" thick x 5.0" OD x 1.75" ID

7. Cap Screw 117C4516P002
SA193 - B6
6 ea. 1/2" dia. on 4 1/8" bolt circle

8. Plug 175A7961P001
SA182 - F304
0.38" thick x 1.307" dia.

9. Nut 137C5934P001
XM - 19 SA479
1.30" thick x 2.62" dia

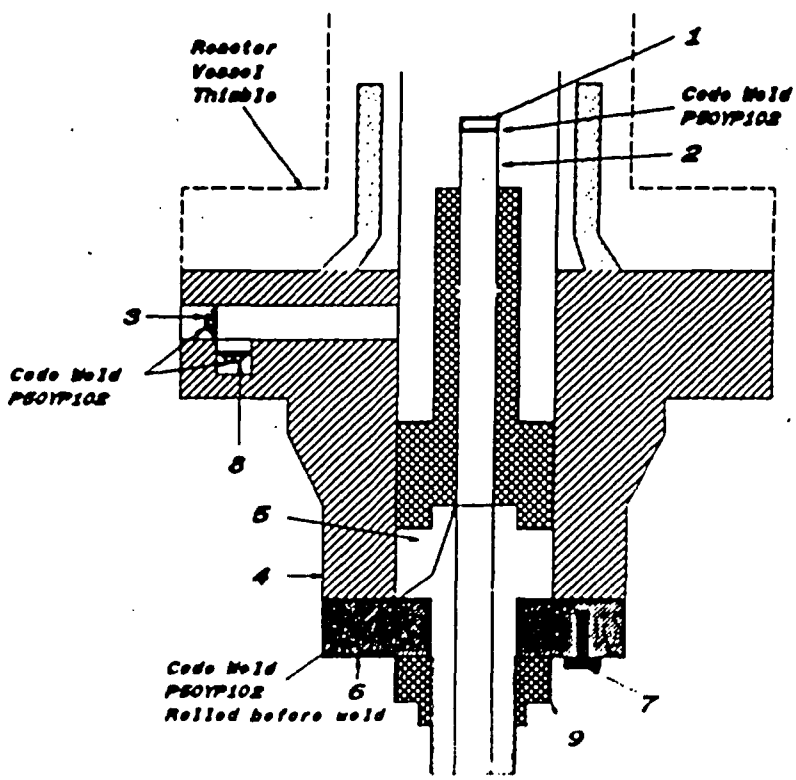

FORM N-2 NPT CERTIFICATE HOLDERS' DATA REPORT FOR NUCLEAR PART AND APPURTENANCES*
As required by the Provision of the ASME Code Rules, Section III, Div. I

1. Manufactured & Certified by : General Electric Company Nuclear Fuel & Components Manufacturing (GE NF & CM)
2117 Castle Hayne Road, Wilmington, North Carolina 28401
(Name and Address of NPT Certificate Holder)

(b) Manufactured for : TVA Chattanooga, Tennessee 37402-2127
(Name and Address of N Certificate Holder for completed nuclear component)

2. Identification - Certificate Holder's S/N of Part : A4820 Nat'l Bd. No. N/A

(a) Constructed According to Drawing No: 768E534G008 Rev 9 Dwg. Prepared by D. L. Peterson

(b) Description of Part Inspected: Control Rod Drive, Model # 7RDB144FG005

(c) Applicable ASME Code: Section III , Edition 1974 , Addenda Date W'75 , Case No. N207 1361-2 Class 1

3. REMARKS: Standard part for use with Reactor. Hydrostatically tested at 1825 psi. min.
(Brief description of service for which component was designed)

Sheet 1 of 2

We certify that the statements in this report are correct and this vessel part or appurtenance as defined in the code conforms to the rules of construction of the ASME Code Section III. (The applicable Designed Specification and Stress Report are not the responsibility of the NPT Certificate Holder for parts. An NPT Certification Holder for appurtenances is responsible for furnishing a separate Design Specification and Stress Report if the appurtenance is not included in the component Design Specification and Stress Report).

Date: 04/24/92 Signed GE - NEBG - NF & CM - QA By [signature]
(NPT Certificate Holder) (ASC QA Representive)

Certificate of Authorization Expires: 6/16/93 Certification of Authorization No. : NPT N - 1151

Certification of Design for Appurtenance

Design information on file at GE Company, San Jose, California

Stress analysis report on file at GE Company, San Jose, California

DC22A8253 Rev. 1
Design specification certified by Bjorn Haaberg Prof. Eng. State Calif. Reg. No. 15570

DC22A6254 Rev 1
Stress analysis report certified by Edward Yoshio Prof. Eng. State Calif. Reg. No. M018646

Certification of Shop Inspection

I, the undersigned, holding a valid commission by the National Board of Boiler and Pressure Inspectors and/or the State or Province of North Carolina and employed by Department of Labor of State of North Carolina have inspected the part of a pressure vessel described in this Partial Data Report on 4/9, 1992, and state that to the best of my knowledge and belief, the NPT Certificate Holder has constructed this part in accordance with the ASME Code Section III.
By signing this certificate, neither the Inspector nor his employer makes any warranty, expressed or implied, concerning the part described in the Partial Data Report. Furthermore, neither the Inspector nor his employer shall be liable in any manner for any personal injury or property damages or a loss of any kind arising from or connected with this inspection.

4/24, 1992 [signature] NC 1231, Ohio, WC 3686 PA
Date Inspector's Signature National Board, State, Province And No.

*Supplemental sheets in form of lists, sketches or drawing may be used provided (1) size is 8-1/2" x 11", (2) information in 1-2 on this Data Report is included on each sheet, and (3) each sheet is numbered and number of sheets is recorded in Item 3. "REMARKS".

(07/86)

CJ 3/25/09

6022.0612

FORM N-2 NPT CERTIFICATE HOLDERS' DATA REPORT FOR NUCLEAR PART AND APPURTENANCES*

As required by the Provision of the ASME Code Rules, Section III, Div. I

1. Manufactured & Certified by : General Electric Company Nuclear Fuel & Components Manufacturing (GE NF & CM)
2117 Castle Hayne Road, Wilmington, North Carolina 28401
(Name and Address of NPT Certificate Holder)

(b) Manufactured for : TVA Chattanooga, Tennessee 37402-2127
(Name and Address of N Certificate Holder for completed nuclear component)

2. Identification - Certificate Holder's S/N of Part : A4820 Nat'l Bd. No. N/A

(a) Constructed According to Drawing No: 768E534G008 Rev 9 Dwg. Prepared by D. L. Peterson

(b) Description of Part Inspected: Control Rod Drive, Model # 7RDB144FG005

(c) Applicable ASME Code: Section III , Edition 1974 , Addenda Date W75 , Case No. N207 1361-2 Class 1

3. REMARKS: Standard part for use with Reactor. Hydrostatically tested at 1825 psi. min.
(Brief description of service for which component was designed)

Sheet 2 of 2

1. Cap 186B9274P001
SA182 - F304
3/8" thick x 1 1/16" OD

2. Indicator Tube 186B9313P001
SA312 - TP316
3/4" sch 40 - seamless pipe
0.113" wall thickness
1.065" max. dia.

3. Plug 189A1176P001
SA182 - F304
1/4" thick x 0.812" OD

4. Flange 919D610P001 (718E474)
SA182 - F304
3.37" thick x 9 5/8" OD

5. Base 137C5311P001
SA182 - F304
7/8" thick x 2.875" dia.

6. Ring Flange 114B5122P002, P003
137C8151P001, P002
SA182 - F304
1" thick x 5.0" OD x 1.75" ID

7. Cap Screw 117C4516P002
SA193 - B6
6 ea. 1/2" dia. on 4 1/8" bolt circle

8. Plug 175A7961P001
SA182 - F304
0.38" thick x 1.307" dia.

9. Nut 137C5934P001
XM - 19 SA479
1.30" thick x 2.62" dia

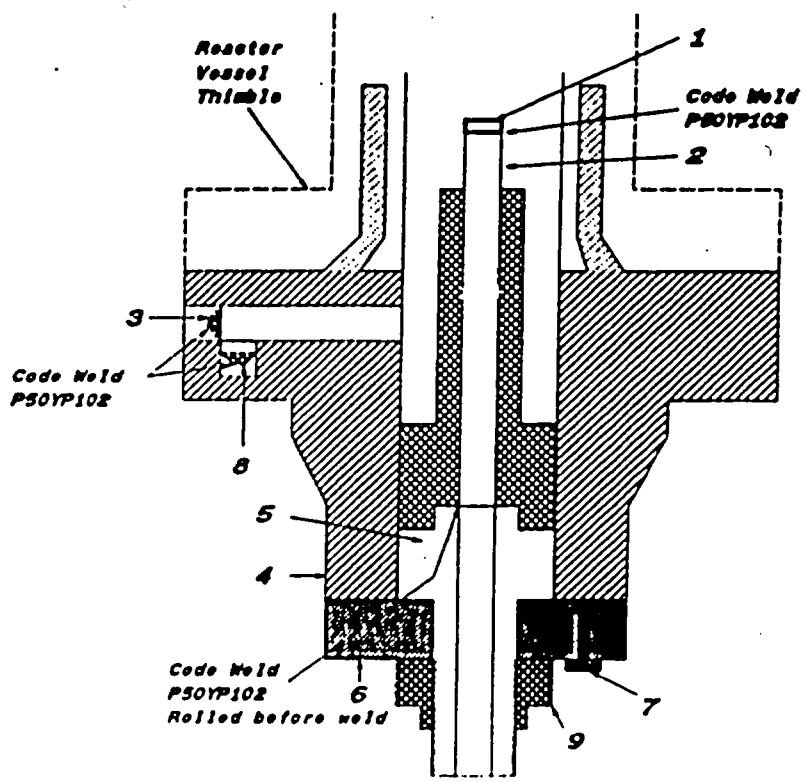

FORM N-2 NPT CERTIFICATE HOLDERS' DATA REPORT FOR NUCLEAR PART AND APPURTENANCES*
As required by the Provision of the ASME Code Rules, Section III, Div. I

1. Manufactured & Certified by : General Electric Company Nuclear Fuel & Components Manufacturing (GE NF & CM)
2117 Castle Hayne Road, Wilmington, North Carolina 28401
(Name and Address of NPT Certificate Holder)

(b) Manufactured for : TVA Chattanooga, Tennessee 37402-2127
(Name and Address of N Certificate Holder for completed nuclear component)

2. Identification - Certificate Holder's S/N of Part : A4790 Nat'l Bd. No. N/A

(a) Constructed According to Drawing No: 788E534G008 Rev 9 Dwg. Prepared by D. L. Peterson

(b) Description of Part Inspected: Control Rod Drive, Model # 7RDB144FG005

(c) Applicable ASME Code: Section III , Edition 1974 , Addenda Date W75 , Case No. N207 1361-2 Class 1

3. REMARKS: Standard part for use with Reactor. Hydrostatically tested at 1825 psi. min.
(Brief description of service for which component was designed)

Sheet 1 of 2

We certify that the statements in this report are correct and this vessel part or appurtenance as defined in the code conforms to the rules of construction of the ASME Code Section III. (The applicable Designed Specification and Stress Report are not the responsibility of the NPT Certificate Holder for parts. An NPT Certification Holder for appurtenances is responsible for furnishing a separate Design Specification and Stress Report if the appurtenance is not included in the component Design Specification and Stress Report).

Date: 06/25/92 Signed GE-NEBG-NF & CM-QA By
(NPT Certificate Holder) (SC QA Representive)

Certificate of Authorization Expires: 6/16/93 Certification of Authorization No. : NPT N-1151

Certification of Design for Appurtenance

Design information on file at GE Company, San Jose, California

Stress analysis report on file at GE Company, San Jose, California

DC22A6253 Rev. 1
Design specification certified by Blom Haaberg Prof. Eng. State Calif. Reg. No. 15570

DC22A6254 Rev 1
Stress analysis report certified by Edward Yoshio Prof. Eng. State Calif. Reg. No. M018646

Certification of Shop Inspection

I, the undersigned, holding a valid commission by the National Board of Boiler and Pressure Inspectors and/or the State or Province of North Carolina and employed by Department of Labor of State of North Carolina have inspected the part of a pressure vessel described in this Partial Data Report on 6/25, 1992, and state that to the best of my knowledge and belief, the NPT Certificate Holder has constructed this part in accordance with the ASME Code Section III.
By signing this certificate, neither the Inspector nor his employer makes any warranty, expressed or implied, concerning the part described in the Partial Data Report. Furthermore, neither the Inspector nor his employer shall be liable in any manner for any personal injury or property damages or a loss of any kind arising from or connected with this inspection.

6/25, 1792 Jerome P Emery NC 1231, Ohio, WC 3686 PA
Date Inspector's Signature National Board, State, Province And No.

*Supplemental sheets in form of lists, sketches or drawing may be used provided (1) size is 8-1/2" x 11", (2) information in 1-2 on this Data Report is included on each sheet, and (3) each sheet is numbered and number of sheets is recorded in Item 3. "REMARKS".

(87/90)

CA 3/25/05

6022.1522

FORM N-2 NPT CERTIFICATE HOLDERS' DATA REPORT FOR NUCLEAR PART AND APPURTENANCES*
As required by the Provision of the ASME Code Rules, Section III, Div. I

1. Manufactured & Certified by : General Electric Company Nuclear Fuel & Components Manufacturing (GE NF & CM)
2117 Castle Hayne Road, Wilmington, North Carolina 28401
(Name and Address of NPT Certificate Holder)

(b) Manufactured for : TVA Chattanooga, Tennessee 37402-2127
(Name and Address of N Certificate Holder for completed nuclear component)

2. Identification - Certificate Holder's S/N of Part : A4790 Nat'l Bd. No. N/A

(a) Constructed According to Drawing No: 768E534G008 Rev 9 Dwg. Prepared by D. L. Peterson

(b) Description of Part Inspected: Control Rod Drive, Model # 7RDB144FG005

(c) Applicable ASME Code: Section III , Edition 1974 . Addenda Date W75 . Case No. N207 1361-2 Class 1

3. REMARKS: Standard part for use with Reactor. Hydrostatically tested at 1825 psi. min.
(Brief description of service for which component was designed)

Sheet 2 of 2

1. Cap 166B9274P001
SA182 - F304
3/8" thick x 1 1/16" OD

2. Indicator Tube 166B9313P001
SA312 - TP316
3/4" sch 40 - seamless pipe
0.113" wall thickness
1.065" max. dia.

3. Plug 159A1176P001
SA182 - F304
1/4" thick x 0.812" OD

4. Flange 919D610P001 (719E474)
SA182 - F304
3.37" thick x 9 5/8" OD

5. Base 137C5311P001
SA182 - F304
7/8" thick x 2.875" dia.

6. Ring Flange 114B5122P002, P003
137C8151P001, P002
SA182 - F304
1" thick x 5.0" OD x 1.75" ID

7. Cap Screw 117C4516P002
SA193 - B6
6 ea. 1/2" dia. on 4 1/8" bolt circle

8. Plug 175A7961P001
SA182 - F304
0.38" thick x 1.307" dia.

9. Nut 137C5934P001
XM - 19 SA479
1.30" thick x 2.62" dia

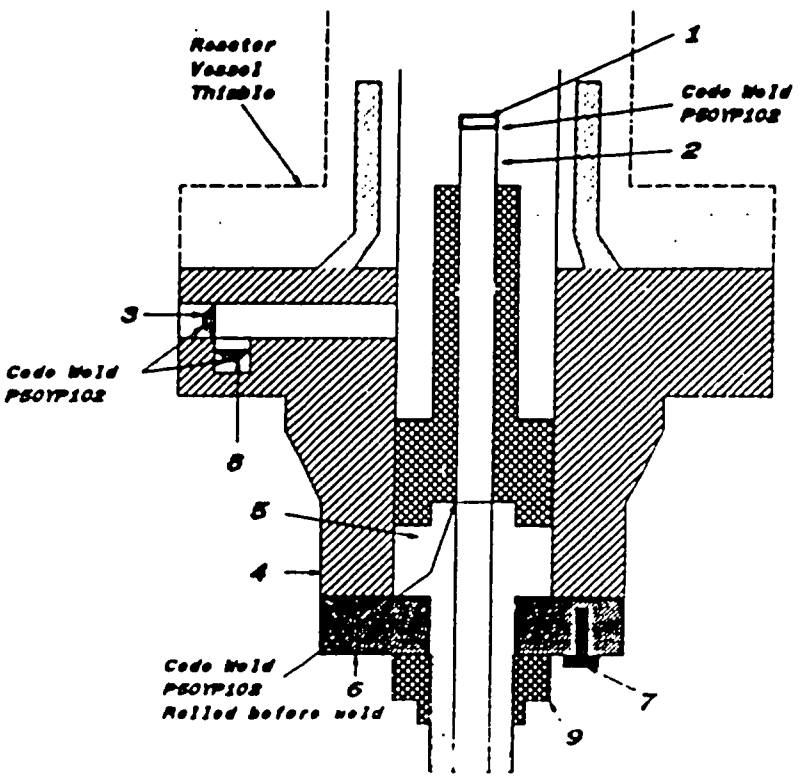

FORM N-2 NPT CERTIFICATE HOLDERS' DATA REPORT FOR NUCLEAR PART AND APPURTENANCES*
As required by the Provision of the ASME Code Rules, Section III, Div. I

1. Manufactured & Certified by : General Electric Company Nuclear Fuel & Components Manufacturing (GE NF & CM)
2117 Castle Hayne Road, Wilmington, North Carolina 28401
(Name and Address of NPT Certificate Holder)

(b) Manufactured for : TVA Chattanooga, Tennessee 37402-2127
(Name and Address of N Certificate Holder for completed nuclear component)

2. Identification - Certificate Holder's S/N of Part : A4378 Nat'l Bd. No. N/A

(a) Constructed According to Drawing No: 768E534G008 Rev 9 Dwg. Prepared by D. L. Peterson

(b) Description of Part Inspected: Control Rod Drive, Model # 7RDB144FG005

(c) Applicable ASME Code: Section III , Edition 1974 , Addenda Date W75 , Case No. N207 1361-2 Class 1

3. REMARKS: Standard part for use with Reactor. Hydrostatically tested at 1825 psi. min.
(Brief description of service for which component was designed)

Sheet 1 of 2

We certify that the statements in this report are correct and this vessel part or appurtenance as defined in the code conforms to the rules of construction of the ASME Code Section III. (The applicable Designed Specification and Stress Report are not the responsibility of the NPT Certificate Holder for parts. An NPT Certification Holder for appurtenances is responsible for furnishing a separate Design Specification and Stress Report if the appurtenance is not included in the component Design Specification and Stress Report).

Date: 06/25/92 Signed GE-NEBG-NF & CM-QA By [signature]
(NPT Certificate Holder) (SC QA Representive)

Certificate of Authorization Expires: 6/16/93 Certification of Authorization No. : NPT N-1151

Certification of Design for Appurtenance

Design information on file at GE Company, San Jose, California

Stress analysis report on file at GE Company, San Jose, California

DC22A6253 Rev. 1
Design specification certified by Blom Haaberg Prof. Eng. State Calif. Reg. No. 15570

DC22A6254 Rev 1
Stress analysis report certified by Edward Yoshio Prof. Eng. State Calif. Reg. No. M018646

Certification of Shop Inspection

I, the undersigned, holding a valid commission by the National Board of Boiler and Pressure Inspectors and/or the State or Province of North Carolina and employed by Department of Labor of State of North Carolina have inspected the part of a pressure vessel described in this Partial Data Report on June, 1992, and state that to the best of my knowledge and belief, the NPT Certificate Holder has constructed this part in accordance with the ASME Code Section III.
By signing this certificate, neither the Inspector nor his employer makes any warranty, expressed or implied, concerning the part described in the Partial Data Report. Furthermore, neither the Inspector nor his employer shall be liable in any manner for any personal injury or property damages or a loss of any kind arising from or connected with this inspection.

6/25, 1992 [signature] NC 1231, Ohio, WC 3686 PA
Date Inspector's Signature National Board, State, Province And No.

*Supplemental sheets in form of lists, sketches or drawing may be used provided (1) size is 8-1/2" x 11", (2) information in 1-2 on this Data Report is included on each sheet, and (3) each sheet is numbered and number of sheets is recorded in Item 3. "REMARKS".

(07/90)

CP-3/23/05

6022.1192

FORM N-2 NPT CERTIFICATE HOLDERS' DATA REPORT FOR NUCLEAR PART AND APPURTENANCES*

As required by the Provision of the ASME Code Rules, Section III, Div. I

1. Manufactured & Certified by : General Electric Comoany Nuclear Fuel & Comoonents Manufacturing (GE NF & CM)
   2117 Castle Hayne Road, Wilmington, North Carolina 28401
   (Name and Address of NPT Certificate Holder)

   (b) Manufactured for : TVA Chattanooga, Tennessee 37402-2127
   (Name and Address of N Certificate Holder for completed nuclear component)

2. Identification - Certificate Holder's S/N of Part : A4378 Nat'l Bd. No. N/A

   (a) Constructed According to Drawing No: 768E534G008 Rev 9 Dwg. Prepared by D. L. Peterson

   (b) Description of Part Inspected: Control Rod Drive, Model # 7RDB144FG005

   (c) Applicable ASME Code: Section III , Edition 1974 . Addenda Date W75 . Case No. N207 1361-2 Class 1

3. REMARKS: Standard part for use with Reactor. Hydrostatically tested at 1825 psi. min.
   (Brief description of service for which component was designed)

Sheet 2 of 2

1. Cap 166B9274P001
   SA182 - F304
   3/8" thick x 1 1/16" OD

2. Indicator Tube 166B9313P001
   SA312 - TP316
   3/4" sch 40 - seamless pipe
   0.113" wall thickness
   1.065" max. dia.

3. Plug 168A1176P001
   SA182 - F304
   1/4" thick x 0.812" OD

4. Flange 919D610P001 (718E474)
   SA182 - F304
   3.37" thick x 9 5/8" OD

5. Base 137C5311P001
   SA182 - F304
   7/8" thick x 2.875" dia.

6. Ring Flange 114B5122P002, P003
   137C8151P001, P002
   SA182 - F304
   1" thick x 5.0" OD x 1.75" ID

7. Cap Screw 117C4516P002
   SA193 - B6
   6 ea. 1/2" dia. on 4 1/8" bolt circle

8. Plug 175A7961P001
   SA182 - F304
   0.38" thick x 1.307" dia.

9. Nut 137C5934P001
   XM - 19 SA479
   1.30" thick x 2.62" dia

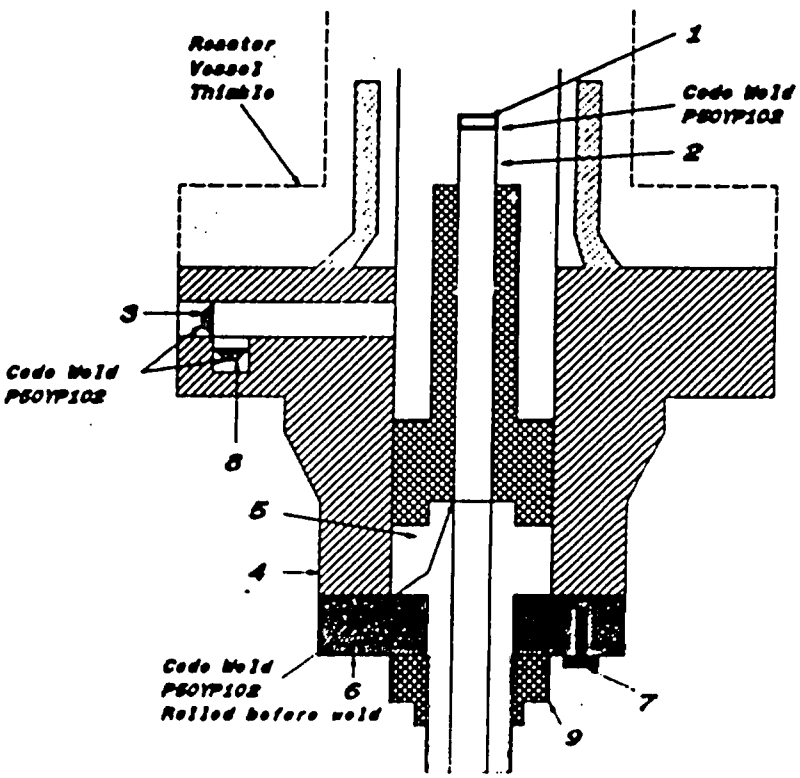

FORM N-2 NPT CERTIFICATE HOLDERS' DATA REPORT FOR NUCLEAR PART AND APPURTENANCES*
As required by the Provision of the ASME Code Rules, Section III, Div. I

1. Manufactured & Certified by : General Electric Company Nuclear Fuel & Components Manufacturing (GE NF & CM)
2117 Castle Hayne Road, Wilmington, North Carolina 28401
(Name and Address of NPT Certificate Holder)

(b) Manufactured for : TVA Chattanooga, Tennessee 37402-2127
(Name and Address of N Certificate Holder for completed nuclear component)

2. Identification - Certificate Holder's S/N of Part : A3834 Nat'l Bd. No. N/A

(a) Constructed According to Drawing No: 768E534G008 Rev 9 Dwg. Prepared by D. L. Peterson

(b) Description of Part Inspected: Control Rod Drive, Model # 7RDB144FG005

(c) Applicable ASME Code: Section III , Edition 1974 , Addenda Date W75 , Case No. N207 1361-2 Class 1

3. REMARKS: Standard part for use with Reactor. Hydrostatically tested at 1825 psi, min.
(Brief description of service for which component was designed)

Sheet 1 of 2

We certify that the statements in this report are correct and this vessel part or appurtenance as defined in the code conforms to the rules of construction of the ASME Code Section III. (The applicable Designed Specification and Stress Report are not the responsibility of the NPT Certificate Holder for parts. An NPT Certification Holder for appurtenances is responsible for furnishing a separate Design Specification and Stress Report if the appurtenance is not included in the component Design Specification and Stress Report).

Date: 03/13/92 Signed GE - NEBG - NF & CM - QA By [signature]
(NPT Certificate Holder) (QC Or Representive)

Certificate of Authorization Expires: 6/16/93 Certification of Authorization No. : NPT N - 1151

Certification of Design for Appurtenance

Design information on file at GE Company, San Jose, California

Stress analysis report on file at GE Company, San Jose, California

DC22A6253 Rev. 1
Design specification certified by Bjorn Haaberg Prof. Eng. State Calif. Reg. No. 15570

DC22A6254 Rev 1
Stress analysis report certified by Edward Yoshio Prof. Eng. State Calif. Reg. No M018646

Certification of Shop Inspection

I, the undersigned, holding a valid commission by the National Board of Boiler and Pressure Inspectors and/or the State or Province of North Carolina and employed by Department of Labor of State of North Carolina have inspected the part of a pressure vessel described in this Partial Data Report on 2/19, 1992, and state that to the best of my knowledge and belief, the NPT Certificate Holder has constructed this part in accordance with the ASME Code Section III.
By signing this certificate, neither the Inspector nor his employer makes any warranty, expressed or implied, concerning the part described in the Partial Data Report. Furthermore, neither the Inspector nor his employer shall be liable in any manner for any personal injury or property damages or a loss of any kind arising from or connected with this inspection

3/13, 1992 [signature] NC 1231, Ohio, WC 3686 PA
Date Inspector's Signature National Board, State, Province And No

*Supplemental sheets in form of lists, sketches or drawing may be used provided (1) size is 8-1/2" x 11", (2) information in 1-2 on this Data Report is included on each sheet, and (3) each sheet is numbered and number of sheets is recorded in Item 3. "REMARKS".

(97,00)

[signature] 8/25/05

6022 .3371

FORM N-2 NPT CERTIFICATE HOLDERS' DATA REPORT FOR NUCLEAR PART AND APPURTENANCES*
As required by the Provision of the ASME Code Rules, Section III, Div. I

1. Manufactured & Certified by : General Electric Company Nuclear Fuel & Components Manufacturing (GE NF & CM)
2117 Castle Hayne Road, Wilmington, North Carolina 28401
(Name and Address of NPT Certificate Holder)

(b) Manufactured for : TVA Chattanooga, Tennessee 37402-2127
(Name and Address of N Certificate Holder for completed nuclear component)

2. Identification - Certificate Holder's S/N of Part : A3834 Nat'l Bd. No. N/A

(a) Constructed According to Drawing No: 768E534G008 Rev 9 Dwg. Prepared by D. L. Peterson

(b) Description of Part Inspected: Control Rod Drive, Model # 7RDB144FG005

(c) Applicable ASME Code: Section III , Edition 1974 , Addenda Date W75 , Case No. N207 1361-2 Class 1

3. REMARKS: Standard part for use with Reactor. Hydrostatically tested at 1825 psi. min.
(Brief description of service for which component was designed)

Sheet 2 of 2

1. Cap 166B9274P001
SA182 - F304
3/8" thick x 1 1/16" OD

2. Indicator Tube 166B9313P001
SA312 - TP316
3/4" sch 40 - seamless pipe
0.113" wall thickness
1.065" max. dia.

3. Plug 159A1176P001
SA182 - F304
1/4" thick x 0.812" OD

4. Flange 919D610P001 (719E474)
SA182 - F304
3.37" thick x 9 5/8" OD

5. Base 137C5311P001
SA182 - F304
7/8" thick x 2.875" dia.

6. Ring Flange 114B5122P002, P003
137C8151P001, P002
SA182 - F304
1" thick x 5.0" OD x 1.75" ID

7. Cap Screw 117C4516P002
SA193 - B6
6 ea. 1/2" dia. on 4 1/8" bolt circle

8. Plug 175A7961P001
SA182 - F304
0.38" thick x 1.307" dia.

9. Nut 137C5934P001
XM - 19 SA479
1 30" thick x 2 62" dia.

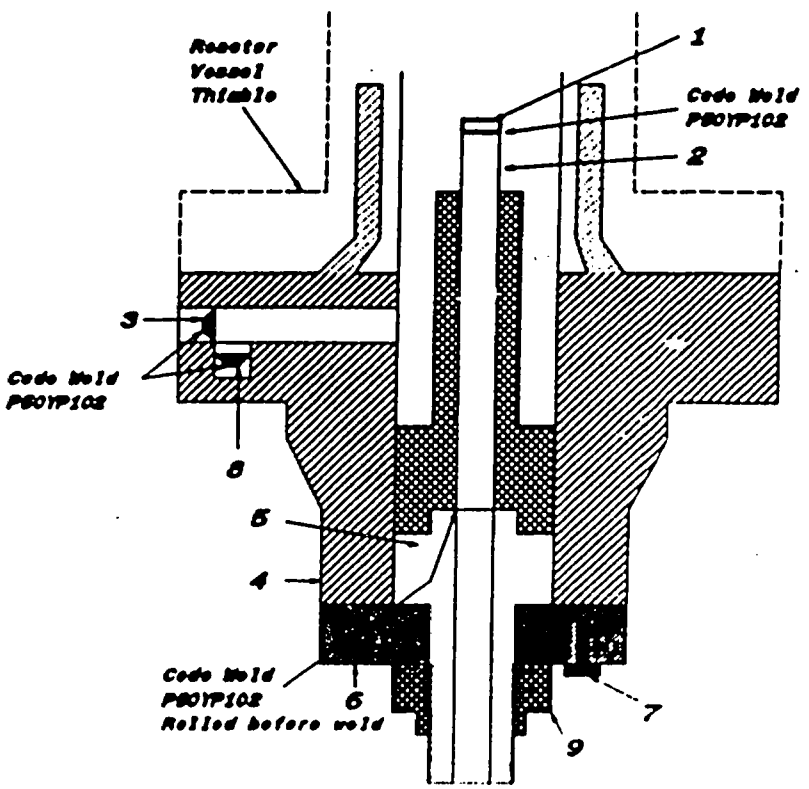

FORM N-2 NPT CERTIFICATE HOLDERS' DATA REPORT FOR NUCLEAR PART AND APPURTENANCES*
As required by the Provision of the ASME Code Rules, Section III, Div. I

1. (a) Manufactured & Certified by : General Electric Company Nuclear Energy (GE-NE) 002670
3901 Castle Hayne Road, Wilmington, North Carolina 28401
(Name and Address of NPT Certificate Holder)

(b) Manufactured for : TVA DECATUR, AL 35609-2000
(Name and Address of N Certificate Holder for completed nuclear component)

2. Identification - Certificate Holder's S/N of Part : A5312 Nat'l Bd. No. N/A

(a) Constructed According to Drawing No: 768E534G008 Rev 8 Dwg. Prepared by D. L. Peterson

(b) Description of Part Inspected: Control Rod Drive, Model # 7RDB144FG005

(c) Applicable ASME Code: Section III, Edition 1974, Addenda Date W75, Case No. N207 1361-2 Class 1

3. REMARKS: Standard part for use with Reactor. Hydrostatically tested at 1825 psi. min
(Brief description of service for which component was designed)

Sheet 1 of 2

We certify that the statements in this report are correct and this vessel part or appurtenance as defined in the code conforms to the rules of construction of the ASME Code Section III. (The applicable Designed Specification and Stress Report are not the responsibility of the NPT Certificate Holder for parts. An NPT Certification Holder for appurtenances is responsible for furnishing a separate Design Specification and Stress Report if the appurtenance is not included in the component Design Specification and Stress Report).

Date: 10/08/96 Signed GE-NE (NPT Certificate Holder) By [signature] (SC QA Representative)

Certificate of Authorization Expires: 6/16/99 Certification of Authorization No. : NPT N - 1151

Certification of Design for Appurtenance

Design information on file at GE Company, San Jose, California

Stress analysis report on file at GE Company, San Jose, California

DC22A6253 Rev. 2
Design specification certified by B N Sridhar Prof. Eng. State Calif Reg. No. 18345

DC22A6254 Rev.
Stress analysis report certified by Edward Yoshio Prof. Eng. State Calif. Reg. No. Mateeas

Certification of Shop Inspection

I, the undersigned, holding a valid commission by the National Board of Boiler and Pressure Inspectors and/or the State or Province of North Carolina and employed by Department of Labor of State of North Carolina have inspected the part of a pressure vessel described in this Partial Data Report on 9/21, 1996, and state that to the best of my knowledge and belief, the NPT Certificate Holder has constructed this part in accordance with the ASME Code Section III.
By signing this certificate, neither the Inspector nor his employer makes any warranty, expressed or implied, concerning the part described in the Partial Data Report. Furthermore, neither the Inspector nor his employer shall be liable in any manner for any personal injury or property damages or a loss of any kind arising from or connected with this inspection.

10/9, 1996 [signature] NC 1231, Ohio, WC 3686 PA
Date Inspector's Signature National Board, State, Province And No.

*Supplemental sheets in form of lists, sketches or drawing may be used provided (1) size is 8-1/2" x 11", (2) information in 1-2 on this Data Report is included on each sheet, and (3) each sheet is numbered and number of sheets is recorded in Item 3. "REMARKS".

(07/96)

CA 3/24/05

FORM N-2 NPT CERTIFICATE HOLDERS' DATA REPORT FOR NUCLEAR PART AND APPURTENANCES*
As required by the Provision of the ASME Code Rules, Section III, Div. I

1. (a) Manufactured & Certified by : General Electric Company Nuclear Energy (GE-NE) 602677
3901 Castle Hayne Road, Wilmington, North Carolina 28401
(Name and Address of NPT Certificate Holder)

(b) Manufactured for : TVA DECATUR, AL 35609-2000
(Name and Address of N Certificate Holder for completed nuclear component)

2. Identification - Certificate Holder's S/N of Part : A5312 Nat'l Bd. No. N/A

(a) Constructed According to Drawing No: 768E534G008 Rev 9 Dwg. Prepared by D. L. Peterson

(b) Description of Part Inspected: Control Rod Drive, Model # 7RDB144FG005

(c) Applicable ASME Code: Section III , Edition 1974 , Addenda Date W75 . Case No. N207 1361-2 Class 1

3. REMARKS: Standard part for use with Reactor. Hydrostatically tested at 1825 psi. min.
(Brief description of service for which component was designed)

Sheet 2 of 2

1. Cap 186B0274P001
SA182 - F316
3/8" thick x 1 1/16" OD

2. Indicator Tube 186B9313P001
SA312 - TP316
3/4" sch 40 - seamless pipe
0.113" wall thickness
1.065" max. dia.

3. Plug 158A1178P001
SA182 - F304
1/4" thick x 0.812" OD

4. Flange 919D610P001 (719E474)
SA182 - F304
3.37" thick x 9 5/8" OD

5. Base 137C5311P001
SA182 - F304
7/8" thick x 2.875" dia.

6. Ring Flange 114B5122P002, P003
137C8151P001, P002
SA182 - F304
1" thick x 5.0" OD x 1.75" ID

7. Cap Screw 117C4516P002
SA193 - B6
6 ea. 1/2" dia. on 4 1/8" bolt circle

8. Plug 175A7961P001
SA182 - F304
0.36" thick x 1.307" dia.

9. Nut 137C5934P001
XM - 19 SA479
1.30" thick x 2.62" dia.

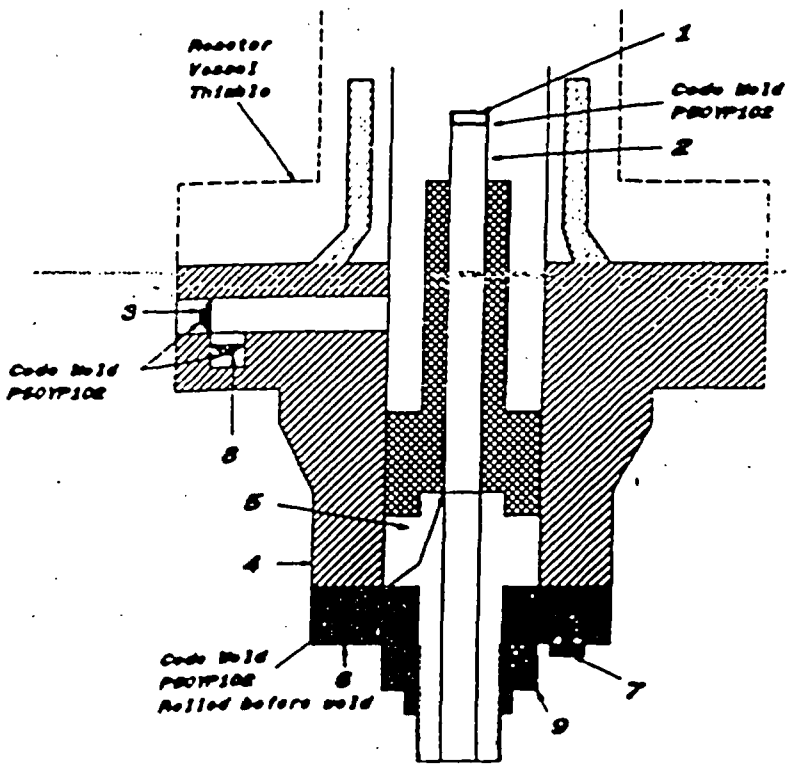

FORM N-2 NPT CERTIFICATE HOLDERS' DATA REPORT FOR NUCLEAR PART AND APPURTENANCES*
As required by the Provision of the ASME Code Rules, Section III, Div. I

1. Manufactured & Certified by : General Electric Company Nuclear Fuel & Components Manufacturing (GE NF & CM)
2117 Castle Hayne Road, Wilmington, North Carolina 28401
(Name and Address of NPT Certificate Holder)

(b) Manufactured for : TVA Chattanooga, Tennessee 37402-2127
(Name and Address of N Certificate Holder for completed nuclear component)

2. Identification - Certificate Holder's S/N of Part : A3877 Nat'l Bd. No. N/A

(a) Constructed According to Drawing No: 768E534G008 Rev 9 Dwg. Prepared by D. L. Peterson

(b) Description of Part Inspected: Control Rod Drive, Model # 7RDB144FG005

(c) Applicable ASME Code: Section III , Edition 1974 , Addenda Date W75 , Case No. N207 1361-2 Class 1

3. REMARKS: Standard part for use with Reactor. Hydrostatically tested at 1825 psi. min.
(Brief description of service for which component was designed)

Sheet 1 of 2

We certify that the statements in this report are correct and this vessel part or appurtenance as defined in the code conforms to the rules of construction of the ASME Code Section III. (The applicable Designed Specification and Stress Report are not the responsibility of the NPT Certificate Holder for parts. An NPT Certification Holder for appurtenances is responsible for furnishing a separate Design Specification and Stress Report if the appurtenance is not included in the component Design Specification and Stress Report).

Date: 03/26/92 Signed GE-NEBG-NF & CM-QA By [signature]
(NPT Certificate Holder) (NC QA Representative)

Certificate of Authorization Expires: 6/16/93 Certification of Authorization No. : NPT N-1151

Certification of Design for Appurtenance

Design information on file at GE Company, San Jose, California

Stress analysis report on file at GE Company, San Jose, California

DC22A6253 Rev. 1
Design specification certified by Biorn Haaberg Prof. Eng. State Calif. Reg. No. 15570

DC22A6254 Rev 1
Stress analysis report certified by Edward Yoshio Prof. Eng. State Calif. Reg. No. M018646

Certification of Shop Inspection

I, the undersigned, holding a valid commission by the National Board of Boiler and Pressure Inspectors and/or the State or Province of North Carolina and employed by Department of Labor of State of North Carolina have inspected the part of a pressure vessel described in this Partial Data Report on 3/6, 1992, and state that to the best of my knowledge and belief, the NPT Certificate Holder has constructed this part in accordance with the ASME Code Section III.
By signing this certificate, neither the Inspector nor his employer makes any warranty, expressed or implied, concerning the part described in the Partial Data Report. Furthermore, neither the Inspector nor his employer shall be liable in any manner for any personal injury or property damages or a loss of any kind arising from or connected with this inspection

3/26, 1992 [signature] NC 1231, Ohio, WC 3686 PA
Date Inspector's Signature National Board, State, Province And No

*Supplemental sheets in form of lists, sketches or drawing may be used provided (1) size is 8-1/2" x 11", (2) information in 1-2 on this Data Report is included on each sheet, and (3) each sheet is numbered and number of sheets is recorded in Item 3. "REMARKS".

(07/90)

CT 3/25/05

8122.0015

FORM N-2 NPT CERTIFICATE HOLDERS' DATA REPORT FOR NUCLEAR PART AND APPURTENANCES*

As required by the Provision of the ASME Code Rules, Section III, Div. I

1. Manufactured & Certified by : General Electric Company Nuclear Fuel & Components Manufacturing (GE NF & CM)
2117 Castle Hayne Road, Wilmington, North Carolina 28401
(Name and Address of NPT Certificate Holder)

(b) Manufactured for : TVA Chattanooga, Tennessee 37402-2127
(Name and Address of N Certificate Holder for completed nuclear component)

2. Identification - Certificate Holder's S/N of Part : A3877 Nat'l Bd. No. N/A

(a) Constructed According to Drawing No: 768E534G008 Rev 9 Dwg. Prepared by D.L. Peterson

(b) Description of Part Inspected: Control Rod Drive, Model # 7RDB144FG005

(c) Applicable ASME Code: Section III , Edition 1974 , Addenda Date W75 , Case No. N207 1361-2 Class 1

3. REMARKS: Standard part for use with Reactor. Hydrostatically tested at 1825 psi. min.
(Brief description of service for which component was designed)

Sheet 2 of 2

1. Cap 166B8274P001
SA182 - F304
3/8" thick x 1 1/16" OD

2. Indicator Tube 166B8313P001
SA312 - TP316
3/4" sch 40 - seamless pipe
0.113" wall thickness
1.065" max. dia.

3. Plug 159A1176P001
SA182 - F304
1/4" thick x 0.812" OD

4. Flange 918D610P001 (718E474)
SA182 - F304
3.37" thick x 9 5/8" OD

5. Base 137C5311P001
SA182 - F304
7/8" thick x 2.875" dia.

6. Ring Flange 114B5122P002, P003
137C8151P001, P002
SA182 - F304
1" thick x 5.0" OD x 1.75" ID

7. Cap Screw 117C4516P002
SA193 - B6
6 ea 1/2" dia. on 4 1/8" bolt circle

8. Plug 175A7961P001
SA182 - F304
0.38" thick x 1.307" dia.

9. Nut 137C5934P001
XM - 19 SA479
1 30" thick x 2 62" dia

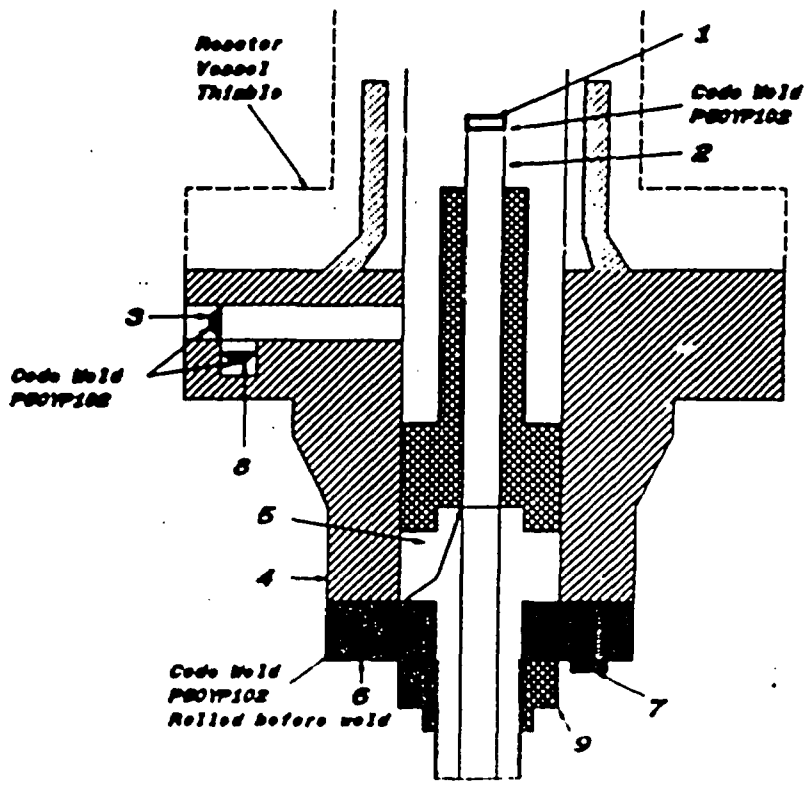

FORM N-2 NPT CERTIFICATE HOLDERS' DATA REPORT FOR NUCLEAR PART AND APPURTENANCES*
As required by the Provision of the ASME Code Rules, Section III, Div. I

1. Manufactured & Certified by : General Electric Company Nuclear Fuel & Components Manufacturing (GE NF & CM)
2117 Castle Hayne Road, Wilmington, North Carolina 28401
(Name and Address of NPT Certificate Holder)

Manufactured for : TVA Chattanooga, Tennessee 37402-2127
(Name and Address of N Certificate Holder for completed nuclear component)

2. Identification - Certificate Holder's S/N of Part : A3707 Nat'l Bd. No. N/A

(a) Constructed According to Drawing No: 768E534G008 Rev 9 Dwg. Prepared by D. L. Peterson

(b) Description of Part Inspected: Control Rod Drive, Model # 7RDB144FG005

(c) Applicable ASME Code: Section III , Edition 1974 , Addenda Date W75 , Case No. N207 1361-2 Class 1

3. REMARKS: Standard part for use with Reactor. Hydrostatically tested at 1825 psi, min.
(Brief description of service for which component was designed)

Sheet 1 of 2

We certify that the statements in this report are correct and this vessel part or appurtenance as defined in the code conforms to the rules of construction of the ASME Code Section III. (The applicable Designed Specification and Stress Report are not the responsibility of the NPT Certificate Holder for parts. An NPT Certification Holder for appurtenances is responsible for furnishing a separate Design Specification and Stress Report if the appurtenance is not included in the component Design Specification and Stress Report).

Date: 11/19/92 Signed GE-NEBG-NF & CM-QA By [signature]
(NPT Certificate Holder) (QC QA Representative)

Certificate of Authorization Expires: 6/16/93 Certification of Authorization No. : NPT N-1151

Certification of Design for Appurtenance

Design information on file at GE Company, San Jose, California

Stress analysis report on file at GE Company, San Jose, California

DC22A8253 Rev. 1
Design specification certified by Bjorn Hasberg Prof. Eng. State Calif. Reg. No. 15570

DC22A8254 Rev 1
Stress analysis report certified by Edward Yoshio Prof. Eng. State Calif. Reg. No. M018646

Certification of Shop Inspection

I, the undersigned, holding a valid commission by the National Board of Boiler and Pressure Inspectors and/or the State or Province of North Carolina and employed by Department of Labor of State of North Carolina have inspected the part of a pressure vessel described in this Partial Data Report on 10/28, 1992, and state that to the best of my knowledge and belief, the NPT Certificate Holder has constructed this part in accordance with the ASME Code Section III.
By signing this certificate, neither the Inspector nor his employer makes any warranty, expressed or implied, concerning the part described in the Partial Data Report. Furthermore, neither the Inspector nor his employer shall be liable in any manner for any personal injury or property damages or a loss of any kind arising from or connected with this Inspection.

11/19, 1992 [signature] NC 1231, Ohio, WC 3686 PA
Date Inspector's Signature National Board, State, Province And No

*Supplemental sheets in form of lists, sketches or drawing may be used provided (1) size is 8-1/2" x 11", (2) information in 1-2 on this Data Report is included on each sheet, and (3) each sheet is numbered and number of sheets is recorded in Item 3. "REMARKS".

(07/90) 3/28/95

5022.1734

FORM N-2 NPT CERTIFICATE HOLDERS' DATA REPORT FOR NUCLEAR PART AND APPURTENANCES*
As required by the Provision of the ASME Code Rules, Section III, Div. I

1. Manufactured & Certified by : General Electric Company Nuclear Fuel & Components Manufacturing (GE NF & CM)
2117 Castle Hayne Road, Wilmington, North Carolina 28401
(Name and Address of NPT Certificate Holder)

(b) Manufactured for : TVA Chattanooga, Tennessee 37402-2127
(Name and Address of N Certificate Holder for completed nuclear component)

2. Identification - Certificate Holder's S/N of Part : A3707 Nat'l Bd. No. N/A

(a) Constructed According to Drawing No: 768E534G008 Rev 9 Dwg. Prepared by D. L. Peterson

(b) Description of Part Inspected: Control Rod Drive, Model # 7RDB144FG005

(c) Applicable ASME Code: Section III , Edition 1974 , Addenda Date W75 , Case No. N207 1361-2 Class 1

3. REMARKS: Standard part for use with Reactor. Hydrostatically tested at 1825 psi. min.
(Brief description of service for which component was designed)

Sheet 2 of 2

1. Cap 166B8274P001
SA182 - F304
3/8" thick x 1 1/16" OD

2. Indicator Tube 166B8313P001
SA312 - TP316
3/4" sch 40 - seamless pipe
0.113" wall thickness
1.065" max. dia.

3. Plug 159A1178P001
SA182 - F304
1/4" thick x 0.812" OD

4. Flange 918D610P001 (719E474)
SA182 - F304
3.37" thick x 9 5/8" OD

5. Base 137C5311P001
SA182 - F304
7/8" thick x 2.875" dia.

6. Ring Flange 114B5122P002, P003
137C8151P001, P002
SA182 - F304
1" thick x 5.0" OD x 1.75" ID

7. Cap Screw 117C4516P002
SA193 - B6
6 ea. 1/2" dia. on 4 1/8" bolt circle

8. Plug 175A7961P001
SA182 - F304
0.38" thick x 1.307" dia.

9. Nut 137C5934P001
XM - 19 SA479
1 30" thick x 2.62" dia.

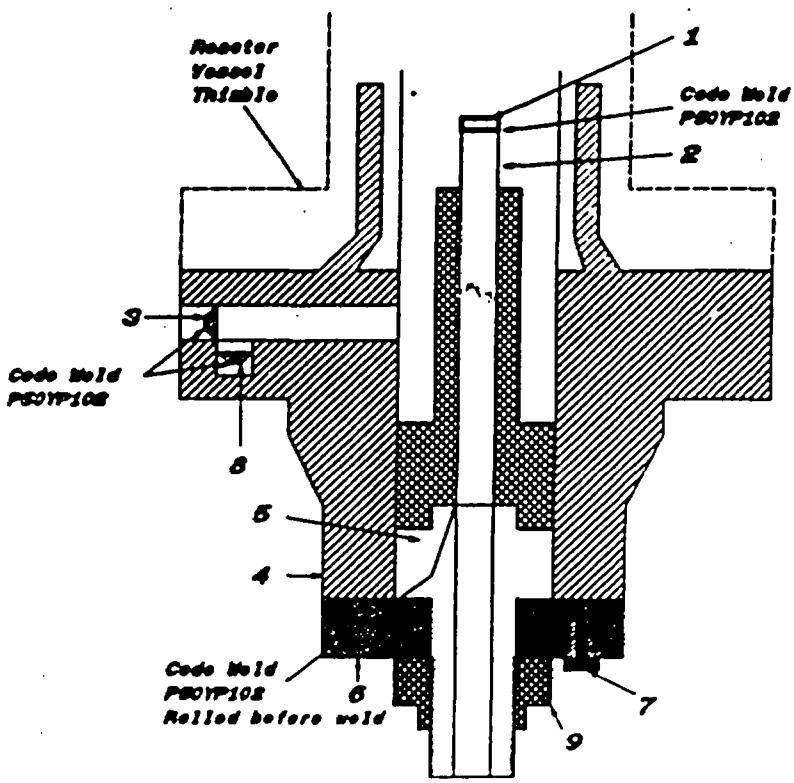

FORM N-2 NPT CERTIFICATE HOLDERS' DATA REPORT FOR NUCLEAR PART AND APPURTENANCES*
As required by the Provision of the ASME Code Rules, Section III, Div. I

1. Manufactured & Certified by : General Electric Company Nuclear Fuel & Components Manufacturing (GE NF & CM)
2117 Castle Hayne Road, Wilmington, North Carolina 28401
(Name and Address of NPT Certificate Holder)

(b) Manufactured for : TVA Chattanooga, Tennessee 37402-2127
(Name and Address of N Certificate Holder for completed nuclear component)

2. Identification - Certificate Holder's S/N of Part : A5450 Nat'l Bd. No. N/A

(a) Constructed According to Drawing No: 768E534G008 Rev 9 Dwg. Prepared by D. L. Peterson

(b) Description of Part Inspected: Control Rod Drive, Model # 7RDB144FG005

(c) Applicable ASME Code: Section III , Edition 1974 , Addenda Date W'75 , Case No. N207 1361-2 Class 1

3. REMARKS: Standard part for use with Reactor. Hydrostatically tested at 1825 psi. min.
(Brief description of service for which component was designed)

Sheet 1 of 2

We certify that the statements in this report are correct and this vessel part or appurtenance as defined in the code conforms to the rules of construction of the ASME Code Section III. (The applicable Designed Specification and Stress Report are not the responsibility of the NPT Certificate Holder for parts. An NPT Certification Holder for appurtenances is responsible for furnishing a separate Design Specification and Stress Report if the appurtenance is not included in the component Design Specification and Stress Report).

Date: 10/06/92 Signed GE - NEBG - NF & CM - QA By
(NPT Certificate Holder) (QC QA Representive)

Certificate of Authorization Expires: 6/16/93 Certification of Authorization No. : NPT N - 1151

Certification of Design for Appurtenance

Design information on file at GE Company, San Jose, California

Stress analysis report on file at GE Company, San Jose, California

DC22A6253 Rev. 1
Design specification certified by Bjorn Haaberg Prof. Eng. State Calif. Reg. No. 15570

DC22A6254 Rev 1
Stress analysis report certified by Edward Yoshio Prof. Eng. State Calif. Reg. No. M018646

Certification of Shop Inspection

I, the undersigned, holding a valid commission by the National Board of Boiler and Pressure Inspectors and/or the State or Province of North Carolina and employed by Department of Labor of State of North Carolina have inspected the part of a pressure vessel described in this Partial Data Report on 9/22, 1992 and state that to the best of my knowledge and belief, the NPT Certificate Holder has constructed this part in accordance with the ASME Code Section III.
By signing this certificate, neither the Inspector nor his employer makes any warranty, expressed or implied, concerning the part described in the Partial Data Report. Furthermore, neither the Inspector nor his employer shall be liable in any manner for any personal injury or property damages or a loss of any kind arising from or connected with this inspection.

10/6, 1992 Jerome P Ewers NC 1231, Ohio, WC 3686 PA
Date / Inspector's Signature National Board, State, Province And No.

*Supplemental sheets in form of lists, sketches or drawing may be used provided (1) size is 8-1/2" x 11", (2) information in 1-2 on this Data Report is included on each sheet, and (3) each sheet is numbered and number of sheets is recorded in Item 3. "REMARKS".

(07/90)

FORM N-2 (back)

Items 4-8 incl. to be completed for single wall vessels, jackets vessels, or shells of heat exchangers.

4. Shell: Material _____ (Kind & Spec. No.) T.S. _____ (Min. of Range Specified) Nominal Thickness ___ in. Corrosion Allowance ___ in. Dia. ___ ft. ___ in. Length ___ ft. ___ in.

5. Seams: Long _____ H.T.[1] _____ R.T. _____ Efficiency _____ %

Girth _____ H.T.[1] _____ R.T. _____ No. of Courses _____

6. Heads: (a) Material _____ T.S. _____ (b) Material _____ T.S. _____

	Location (Top Bottom, Ends)	Thickness	Crown Radius	Knuckle Radius	Elliptical Ratio	Concial Apex Angle	Hemispherical Radius	Flat Diameter	Side to Press. (conv. or conc.)
(a)									
(b)									

If removable, bolts used _____ (Material, Spec. No., T.S. Size Number) Other fastening _____ (Describe or attach sketch)

7. Jacket Closure: _____ (Describe as ogee and weld, bar, etc. If bar give dimensions, if bolts, describe or sketch)

Drop Weight _____
Charpy Impact _____ ft-lb

8. Design pressure[2] 1250 psi at 575 °F at temp of _____ °F

Items 9 and 10 to be completed for tube sections

9. Tube Sheets: Stationary. Material _____ (Kind & Spec. No.) Dia. _____ (Subject to pressure) Thickness ___ in. Attachment _____ (Welded, Bolted)

Floating. Material _____ Dia. _____ Thickness ___ in. Attachment _____

10. Tubes: Material _____ O.D. ___ in. Thickness _____ inches or gage. Number _____ Type _____ (Str or U)

Items 11 - 14 incl. to be completed for inner chambers of jacketed vessels, or channels of heat exchangers.

11. Shell: Material _____ (Kind & Spec. No.) T.S. _____ (Min. of Range Specified) Nominal Thickness ___ in. Corrosion Allowance ___ in. Dia. ___ ft. ___ in. Length ___ ft. ___ in.

12. Seams: Long _____ H.T.[1] _____ R.T. _____ Efficiency _____ %

Girth _____ H.T.[1] _____ R.T. _____ No. of Courses _____

13. Heads: (a) Material _____ T.S. _____ (b) Material _____ T.S. _____

	Location	Thickness	Crown Radius	Knuckle Radius	Elliptical Ratio	Concial Apex Angle	Hemispherical Radius	Flat Diameter	Side to Press. (conv. or conc.)
(a)	Top, bottom, ends								
(b)	Channel								

If removable, bolts used (a)_____ (b)_____ (c)_____ Other fastening _____ (Describe or attach sketch)

Drop Weight _____
Charpy Impact _____ ft-lb

14. Design pressure[2] _____ psi at _____ °F at temp of _____ °F

Items below to be completed for all vessels where applicable.

15. Safety Valve Outlets: Number _____ Size _____ Location _____

16. Nozzles:

Purpose (Inlet, Outlet, Drain)	Number	Dia. or Size	Type	Material	Thickness	Reinforcement Material	How Attached

17. Inspection Openings: Manholes, No. _____ Size _____ Location _____
Handholes, No. _____ Size _____ Location _____
Threaded, No _____ Size _____ Location _____

18. Supports: Skirt _____ (Yes or No) Lugs _____ (Number) Legs _____ (Number) Other _____ (Describe) Attached _____ (Where & How)

1. If Postweld Heat Treated
2. List either internal or external pressure with coincident temperature when applicable

FORM N-2 NPT CERTIFICATE HOLDERS' DATA REPORT FOR NUCLEAR PART AND APPURTENANCES*
As required by the Provision of the ASME Code Rules, Section III, Div. I

1. Manufactured & Certified by : General Electric Company Nuclear Fuel & Components Manufacturing (GE NF & CM)
2117 Castle Hayne Road, Wilmington, North Carolina 28401
(Name and Address of NPT Certificate Holder)

(b) Manufactured for : TVA Chattanooga, Tennessee 37402-2127
(Name and Address of N Certificate Holder for completed nuclear component)

2. Identification - Certificate Holder's S/N of Part : A5450 Nat'l Bd. No. N/A

(a) Constructed According to Drawing No: 768E534G008 Rev 9 Dwg. Prepared by D. L. Peterson

(b) Description of Part Inspected: Control Rod Drive, Model # 7RDB144FG005

(c) Applicable ASME Code: Section III , Edition 1974 , Addenda Date W75 , Case No. N207 1361-2 Class 1

3. REMARKS: Standard part for use with Reactor. Hydrostatically tested at 1825 psi. min.
(Brief description of service for which component was designed)

Sheet 2 of 2

1. Cap 166B9274P001
SA182 - F304
3/8" thick x 1 1/16" OD

2. Indicator Tube 166B9313P001
SA312 - TP316
3/4" sch 40 - seamless pipe
0.113" wall thickness
1.065" max. dia.

3. Plug 159A1176P001
SA182 - F304
1/4" thick x 0.812" OD

4. Flange 919D610P001 (719E474)
SA182 - F304
3.37" thick x 9 5/8" OD

5. Base 137C5311P001
SA182 - F304
7/8" thick x 2.875" dia.

6. Ring Flange 114B5122P002, P003
137C8151P001, P002
SA182 - F304
1" thick x 5.0" OD x 1.75" ID

7. Cap Screw 117C4516P002
SA193 - B6
6 ea. 1/2" dia. on 4 1/8" bolt circle

8. Plug 175A7961P001
SA182 - F304
0.38" thick x 1.307" dia.

9. Nut 137C5934P001
XM - 19 SA479
1.30" thick x 2.62" dia.

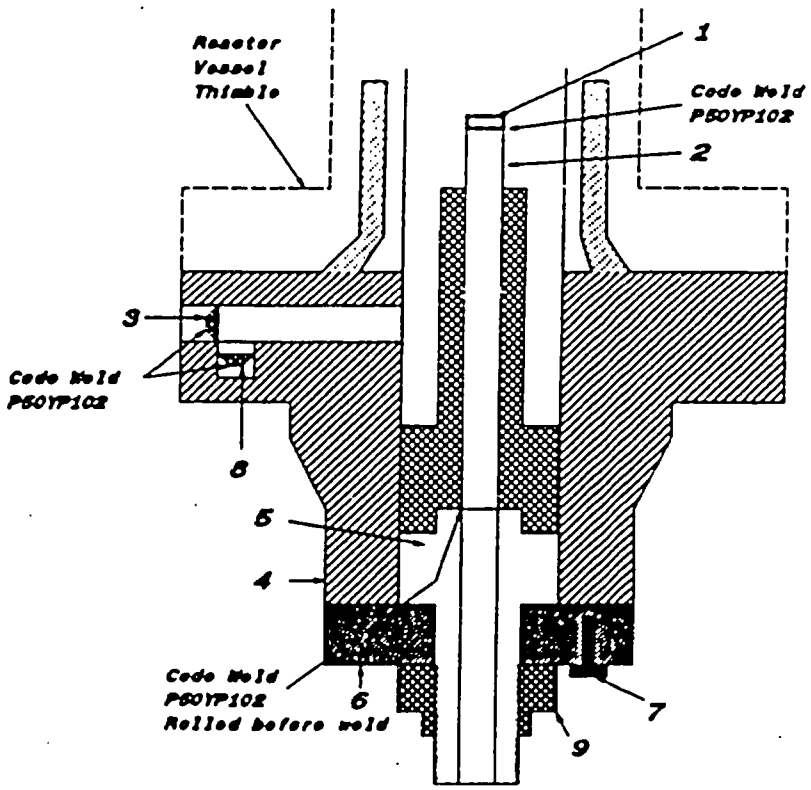

6022.1109

FORM N-2 NPT CERTIFICATE HOLDERS' DATA REPORT FOR NUCLEAR PART AND APPURTENANCES*
As required by the Provision of the ASME Code Rules, Section III, Div. I

Manufactured & Certified by : General Electric Company Nuclear Fuel & Components Manufacturing (GE NF & CM)
2117 Castle Hayne Road, Wilmington, North Carolina 28401
(Name and Address of NPT Certificate Holder)

(b) Manufactured for : TVA Chattanooga, Tennessee 37402-2127
(Name and Address of N Certificate Holder for completed nuclear component)

Identification - Certificate Holder's S/N of Part : A3987 Nat'l Bd. No. N/A

(a) Constructed According to Drawing No: 768E534G008 Rev 9 Dwg. Prepared by D. L. Peterson

(b) Description of Part Inspected: Control Rod Drive, Model # 7RDB144FG005

(c) Applicable ASME Code: Section III , Edition 1974 , Addenda Date W75 , Case No. N207 1361-2 Class 1

3. REMARKS: Standard part for use with Reactor. Hydrostatically tested at 1825 psi. min.
(Brief description of service for which component was designed)

Sheet 1 of 2

We certify that the statements in this report are correct and this vessel part or appurtenance as defined in the code conforms to the rules of construction of the ASME Code Section III. (The applicable Designed Specification and Stress Report are not the responsibility of the NPT Certificate Holder for parts. An NPT Certification Holder for appurtenances is responsible for furnishing a separate Design Specification and Stress Report if the appurtenance is not included in the component Design Specification and Stress Report).

Date: 10/06/92 Signed GE-NEBG-NF & CM-QA (NPT Certificate Holder) By [signature] (GE QA Representive)

Certificate of Authorization Expires: 6/16/93 Certification of Authorization No. : NPT N-1151

Certification of Design for Appurtenance

Design information on file at GE Company, San Jose, California

Stress analysis report on file at GE Company, San Jose, California

DC22A6253 Rev. 1
Design specification certified by Blom Haaberg Prof. Eng. State Calif. Reg. No. 15570

DC22A6254 Rev 1
Stress analysis report certified by Edward Yoshio Prof. Eng. State Calif. Reg. No. M018646

Certification of Shop Inspection

I, the undersigned, holding a valid commission by the National Board of Boiler and Pressure Inspectors and/or the State or Province of North Carolina and employed by Department of Labor of State of North Carolina have inspected the part of a pressure vessel described in this Partial Data Report on 9/25, 1992, and state that to the best of my knowledge and belief, the NPT Certificate Holder has constructed this part in accordance with the ASME Code Section III.
By signing this certificate, neither the Inspector nor his employer makes any warranty, expressed or implied, concerning the part described in the Partial Data Report. Furthermore, neither the Inspector nor his employer shall be liable in any manner for any personal injury or property damages or a loss of any kind arising from or connected with this inspection.

10/6, 1992 [signature] NC 1231, Ohio, WC 3686 PA
Date Inspector's Signature National Board, State, Province And No.

*Supplemental sheets in form of lists, sketches or drawing may be used provided (1) size is 8-1/2" x 11", (2) information in 1-2 on this Data Report is included on each sheet, and (3) each sheet is numbered and number of sheets is recorded in Item 3. "REMARKS".

(07/90)

CT 2/28/05

6022.1111

FORM N-2 NPT CERTIFICATE HOLDERS' DATA REPORT FOR NUCLEAR PART AND APPURTENANCES*

As required by the Provision of the ASME Code Rules, Section III, Div. I

1. Manufactured & Certified by : General Electric Company Nuclear Fuel & Components Manufacturing (GE NF & CM)
2117 Castle Hayne Road, Wilmington, North Carolina 28401
(Name and Address of NPT Certificate Holder)

(b) Manufactured for : TVA Chattanooga, Tennessee 37402-2127
(Name and Address of N Certificate Holder for completed nuclear component)

2. Identification - Certificate Holder's S/N of Part : A3987 Nat'l Bd. No. N/A

(a) Constructed According to Drawing No: 768E534G008 Rev 9 Dwg. Prepared by D. L. Peterson

(b) Description of Part Inspected: Control Rod Drive, Model # 7RDB144FG005

(c) Applicable ASME Code: Section III , Edition 1974 , Addenda Date W75 , Case No. N207 1361-2 Class 1

3. REMARKS: Standard part for use with Reactor. Hydrostatically tested at 1825 psi. min.
(Brief description of service for which component was designed)

Sheet 2 of 2

1. Cap 186B9274P001
SA182 - F304
3/8" thick x 1 1/16" OD

2. Indicator Tube 186B9313P001
SA312 - TP316
3/4" sch 40 - seamless pipe
0.113" wall thickness
1.055" max. dia.

3. Plug 159A1176P001
SA182 - F304
1/4" thick x 0.812" OD

4. Flange 919D610P001 (719E474)
SA182 - F304
3.37" thick x 9 5/8" OD

5. Base 137C5311P001
SA182 - F304
7/8" thick x 2.875" dia.

6. Ring Flange 114B5122P002, P003
137C8151P001, P002
SA182 - F304
1" thick x 5.0" OD x 1.75" ID

7. Cap Screw 117C4516P002
SA193 - B6
8 ea. 1/2" dia. on 4 1/8" bolt circle

8. Plug 175A7961P001
SA182 - F304
0.38" thick x 1.307" dia.

9. Nut 137C5934P001
XM - 19 SA479
1.30" thick x 2 62" dia.

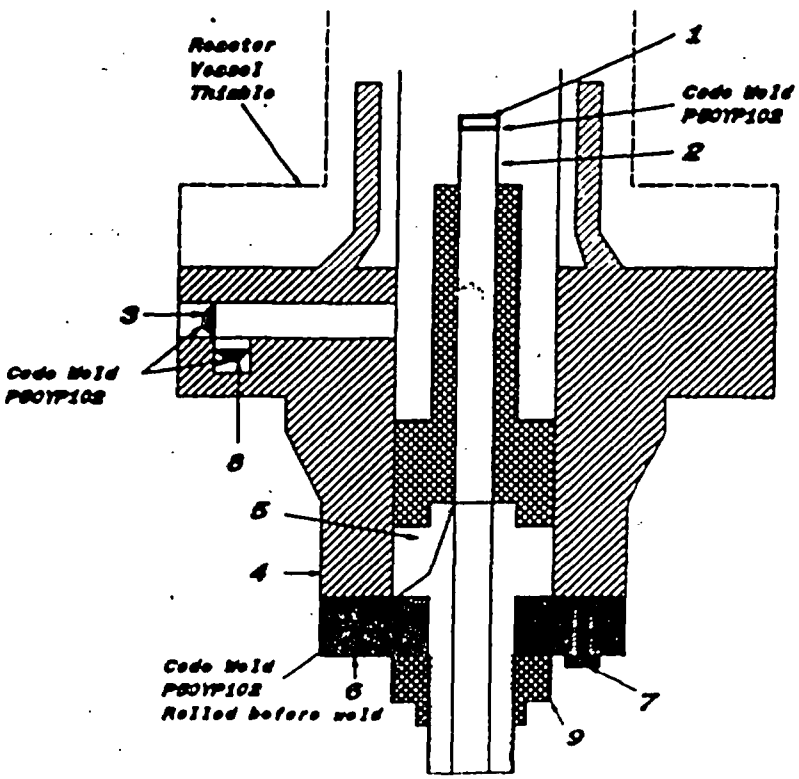

FORM NR-2 NPT CERTIFICATE HOLDERS' DATA REPORT FOR NUCLEAR PART AND APPURTENANCES*
As required by the Provision of the ASME Code Rules, Section III, Div. I

1. Manufactured & Certified by : General Electric Company Nuclear Fuel & Components Manufacturing (GE NF & CM)
2117 Castle Hayne Road, Wilmington, North Carolina 28401
(Name and Address of NPT Certificate Holder)

(1) Manufactured for : TVA Chattanooga, Tennessee 37402-2127
(Name and Address of N Certificate Holder for completed nuclear component)

2. Identification - Certificate Holder's S/N of Part : A5036 Nat'l Bd. No. N/A

(a) Constructed According to Drawing No: 768E534G008 Rev 9 Dwg. Prepared by D. L. Peterson

(b) Description of Part Inspected: Control Rod Drive, Model # 7RDB144FG005

(c) Applicable ASME Code: Section III , Edition 1974 , Addenda Date W75 , Case No. N207 1361-2 Class 1

3. REMARKS: Standard part for use with Reactor. Hydrostatically tested at 1825 psi. min.
(Brief description of service for which component was designed)

Sheet 1 of 2

We certify that the statements in this report are correct and this vessel part or appurtenance as defined in the code conforms to the rules of construction of the ASME Code Section III. (The applicable Designed Specification and Stress Report are not the responsibility of the NPT Certificate Holder for parts. An NPT Certification Holder for appurtenances is responsible for furnishing a separate Design Specification and Stress Report if the appurtenance is not included in the component Design Specification and Stress Report).

Date: 03/26/92 Signed GE - NEBG - NF & CM - QA By
(NPT Certificate Holder) (GE QA Representive)

Certificate of Authorization Expires: 6/16/93 Certification of Authorization No. : NPT N - 1151

Certification of Design for Appurtenance

Design information on file at GE Company, San Jose, California

Stress analysis report on file at GE Company, San Jose, California

DC22A6253 Rev. 1
Design specification certified by Blom Haabara Prof. Eng. State Calif Reg. No. 15570

DC22A6254 Rev 1
Stress analysis report certified by Edward Yoshio Prof. Eng. State Calif Reg. No. M018646

Certification of Shop Inspection

I, the undersigned, holding a valid commission by the National Board of Boiler and Pressure Inspectors and/or the State or Province of North Carolina and employed by Department of Labor of State of North Carolina have inspected the part of a pressure vessel described in this Partial Data Report on 3/20, 1992, and state that to the best of my knowledge and belief, the NPT Certificate Holder has constructed this part in accordance with the ASME Code Section III

By signing this certificate, neither the Inspector nor his employer makes any warranty, expressed or implied, concerning the part described in the Partial Data Report. Furthermore, neither the Inspector nor his employer shall be liable in any manner for any personal injury or property damages or a loss of any kind arising from or connected with this inspection

3/20, 1992	[signature]	NC 1231, Ohio, WC 3686 PA
Date	Inspector's Signature	National Board, State, Province And No.

*Supplemental sheets in form of lists, sketches or drawing may be used provided (1) size is 8-1/2" x 11", (2) information in 1-2 on this Data Report is included on each sheet, and (3) each sheet is numbered and number of sheets is recorded in Item 3. "REMARKS".

(37,98)

PK 3/25/05

FORM N-2 NPT CERTIFICATE HOLDERS' DATA REPORT FOR NUCLEAR PART AND APPURTENANCES*
As required by the Provision of the ASME Code Rules, Section III, Div. I

1. Manufactured & Certified by : General Electric Company Nuclear Fuel & Components Manufacturing (GE NF & CM)
2117 Castle Hayne Road, Wilmington, North Carolina 28401
(Name and Address of NPT Certificate Holder)

(b) Manufactured for : TVA Chattanooga, Tennessee 37402-2127
(Name and Address of N Certificate Holder for completed nuclear component)

2. Identification - Certificate Holder's S/N of Part : A5096 Nat'l Bd. No. N/A

(a) Constructed According to Drawing No: 768E534G008 Rev 9 Dwg. Prepared by D. L. Peterson

(b) Description of Part Inspected: Control Rod Drive, Model # 7RDB144FG005

(c) Applicable ASME Code: Section III , Edition 1974 , Addenda Date W75 , Case No. N207 1361-2 Class 1

3. REMARKS: Standard part for use with Reactor. Hydrostatically tested at 1825 psi, min.
(Brief description of service for which component was designed)

Sheet 2 of 2

1. Cap 186B3274P001
SA182 - F304
3/8" thick x 1 1/16" OD

2. Indicator Tube 186B0313P001
SA312 - TP316
3/4" sch 40 - seamless pipe
0.113" wall thickness
1.065" max. dia.

3. Plug 159A1176P001
SA182 - F304
1/4" thick x 0.812" OD

4. Flange 918D610P001 (718E474)
SA182 - F304
3.37" thick x 9 5/8" OD

5. Base 137C5311P001
SA182 - F304
7/8" thick x 2.875" dia.

6. Ring Flange 114B5122P002, P003
137C8151P001, P002
SA182 - F304
1" thick x 5.0" OD x 1.75" ID

7. Cap Screw 117C4516P002
SA193 - B6
6 ea. 1/2" dia. on 4 1/8" bolt circle

8. Plug 175A7961P001
SA182 - F304
0.38" thick x 1.307" dia.

9. Nut 137C5934P001
XM - 19 SA479
1.30" thick x 2.62" dia

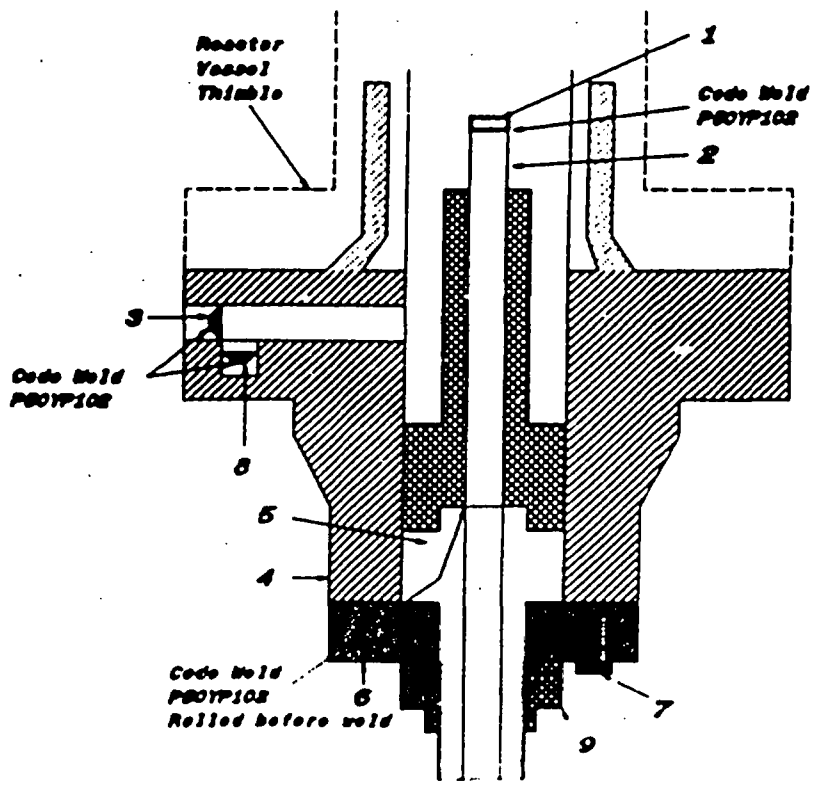

FORM NIS-2 OWNER'S REPORT FOR REPAIR/REPLACEMENT ACTIVITY
As Required by the Provisions of the ASME Code Section XI

1. Owner Tennessee Valley Authority (TVA) (Name)
1101 Market Street
Chattanooga, TN 37402-2801 (Address)

Date June 9, 2005

Sheet 1 of 4

2. Plant Browns Ferry Nuclear Plant (BFN) (Name)
P. O. Box 2000, Decatur, AL 35609-2000 (Address)

Unit 2

Work Orders (WO) 04-718533-000 through 04-718533-019
Repair/Replacement Organization P.O. No., Job No., etc

3. Work Performed by TVA-BFN (Name)
P. O. Box 2000, Decatur, AL 35609-2000 (Address)

Type Code Symbol Stamp N/A
Authorization No. N/A
Expiration Date N/A

4. Identification of System System 001, Main Steam System (ASME Code Class 1 and 2 equivalent)

5. (a) Applicable Construction Code (snubber) ASME Section III, NF, 1977 Edition, Summer 1977 Addenda (piping sys) USAS B31.1.0 19 67* Edition, N/A Addenda, N/A Code Case

(b) Applicable Edition of Section XI Utilized for Repairs or Replacements 19 95 Edition, 1996 Addenda

6. Identification of Components

Name of Component	Name of Manufacturer	Manufacturer Serial No.	National Board No.	Other Identification	Year Built	Corrected, Removed, or Installed	ASME Code Stamped (Yes or No)
Support (Snubber) 2-47B2401-30	Pacific Scientific	475	N/A	2-SNUB-001-5025	N/A	Removed	No
Support (Snubber) 2-47B2401-30	Pacific Scientific	6550	N/A	2-SNUB-001-5025	1980	Installed	Yes
Support (Snubber) 2-47B400S0201	Pacific Scientific	479	N/A	2-SNUB-001-5043	N/A	Removed	No
Support (Snubber) 2-47B400S0201	Pacific Scientific	6549	N/A	2-SNUB-001-5043	1980	Installed	Yes
Support (Snubber) 2-47B400S0201	Pacific Scientific	503	N/A	2-SNUB-001-5042	N/A	Removed	No
Support (Snubber) 2-47B400S0201	Pacific Scientific	6548	N/A	2-SNUB-001-5042	1980	Installed	Yes

7. Description of Work Replaced snubbers with new snubbers.

8. Tests Conducted: Hydrostatic ☐ Pneumatic ☐ Nominal Operating Pressure ☐ Exempt ☐
Other ☒** Pressure N/A psi Test Temp. N/A °F ** - See Remarks

NOTE: Supplemental Sheets in form of lists, sketches, or drawings may be used, provided (1) size is 8½ in. X 11 in., (2) information in items 1 through 6 on this report is included on each sheet, and (3) each sheet is numbered and the number of sheets is recorded at the top of this form.

*as amended by additional quality assurance requirements found in Contract 68C37-91602 and Design Criteria BFN-50-7001 and BFN-50-C-7105.

FORM NIS-2 (Back)

Work Orders (WO): 04-718533-000 through 04-718533-019

9. Remarks The existing snubbers were removed and discarded. New snubbers were functionally tested per 2-SI-4.6.H-2A and installed.

Applicable Manufacturer's Data Reports to be attached

CERTIFICATE OF COMPLIANCE

I certify that the statements made in the report are correct and this conforms to the rules of the ASME Code, Section XI.

Type Code Symbol Stamp N/A

Certificate of Authorization No. N/A Expiration Date N/A

Signed [signature] System Engineer Date 6-13 ,20 05

Owner or Owner's Designee, Title

CERTIFICATE OF INSERVICE INSPECTION

I, the undersigned, holding a valid commission issued by the National Board of Boiler and Pressure Vessel Inspectors and the State or Province of Tennessee and employed by HSB CT of Connecticut have inspected the components described in this Owner's Report during the period 2/14/05 to 6/15/05, and state that to the best of my knowledge and belief, the Owner has performed examinations and taken corrective measures described in this Owner's Report in accordance with the requirements of the ASME Code, Section XI.

By signing this certificate neither the Inspector nor his employer makes any warranty, expressed or implied, concerning the examinations and corrective measures described in this Owner's Report. Furthermore, neither the Inspector nor his employer shall be liable in any manner for any personal injury or property damage or a loss of any kind arising from or connected with this inspection.

[signature] Commissions TN4011

Inspector's Signature National Board, State, Province, and Endorsements

Date 6/15 20 05

FORM NIS-2 OWNER'S REPORT FOR REPAIRS/REPLACEMENT ACTIVITY
SUPPLEMENTAL SHEET

1. Owner Tennessee Valley Authority (TVA) (Name)
1101 Market Street
Chattanooga, TN 37402-2801 (Address)

Date June 9, 2005

Sheet 2 of 4

2. Plant Browns Ferry Nuclear Plant (BFN) (Name)
P. O. Box 2000, Decatur, AL 35609-2000 (Address)

Unit 2

Work Orders (WO) 04-718533-000 through 04-718533-019
Repair/Replacement Organization P.O. No., Job No., etc

3. Work Performed by TVA-BFN (Name)
P. O. Box 2000, Decatur, AL 35609-2000 (Address)

Type Code Symbol Stamp N/A

Authorization No. N/A

Expiration Date N/A

4. Identification of System System 001, Main Steam System (ASME Code Class 1 and 2 equivalent)

5. (a) Applicable Construction Code (piping sys) USAS B31.1.0 19 67 * Edition, N/A Addenda, N/A Code Case (snubber) ASME Section III, NF, 1977 Edition, Summer 1977 Addenda

(b) Applicable Edition of Section XI Utilized for Repairs or Replacements 19 95, 1996 Addenda

6. Identification of Components

Name of Component	Name of Manufacturer	Manufacturer Serial No.	National Board No.	Other Identification	Year Built	Corrected, Removed, or Installed	ASME Code Stamped (Yes or No)
Support (Snubber) 2-47B400S0116	Pacific Scientific	426	N/A	2-SNUB-001-5045	N/A	Removed	No
Support (Snubber) 2-47B400S0116	Pacific Scientific	6497	N/A	2-SNUB-001-5045	1979	Installed	Yes
Support (Snubber) 2-47B2401-2	Pacific Scientific	421	N/A	2-SNUB-001-5001	N/A	Removed	No
Support (Snubber) 2-47B2401-2	Pacific Scientific	6825	N/A	2-SNUB-001-5001	1980	Installed	Yes
Support (Snubber) 2-47B2401-2	Pacific Scientific	397	N/A	2-SNUB-001-5002	N/A	Removed	No
Support (Snubber) 2-47B2401-2	Pacific Scientific	10498	N/A	2-SNUB-001-5002	1981	Installed	Yes
Support (Snubber) 2-47B2401-3	Pacific Scientific	414	N/A	2-SNUB-001-5003	N/A	Removed	No
Support (Snubber) 2-47B2401-3	Pacific Scientific	6469	N/A	2-SNUB-001-5003	1979	Installed	Yes
Support (Snubber) 2-47B2401-3	Pacific Scientific	109	N/A	2-SNUB-001-5004	N/A	Removed	No
Support (Snubber) 2-47B2401-3	Pacific Scientific	7260	N/A	2-SNUB-001-5004	1980	Installed	Yes
Support (Snubber) 2-47B2401-6	Pacific Scientific	400	N/A	2-SNUB-001-5005	N/A	Removed	No
Support (Snubber) 2-47B2401-6	Pacific Scientific	7274	N/A	2-SNUB-001-5005	1980	Installed	Yes

7. Description of Work Replaced snubbers with new snubbers.

8. Tests Conducted: Hydrostatic ☐ Pneumatic ☐ Nominal Operating Pressure ☐ Exempt ☐

Other ☒** Pressure N/A psi Test Temp. N/A °F

** - See Remarks

FORM NIS-2, SUPPLEMENTAL SHEET (Back)

Work Orders (WO) 04-718533-000 through 04-718533-019

Remarks The existing snubbers were removed and discarded. New snubbers were functionally tested per 2-SI-4.6.H-2A and installed.

FORM NIS-2 OWNER'S REPORT FOR REPAIRS/REPLACEMENT ACTIVITY
SUPPLEMENTAL SHEET

1. Owner Tennessee Valley Authority (TVA) (Name) — Date June 9, 2005
   1101 Market Street
   Chattanooga, TN 37402-2801 (Address) — Sheet 3 of 4
2. Plant Browns Ferry Nuclear Plant (BFN) (Name) — Unit 2
   P. O. Box 2000, Decatur, AL 35609-2000 (Address) — Work Orders (WO) 04-718533-000 through 04-718533-019 (Repair/Replacement Organization P.O. No., Job No., etc.)
3. Work Performed by TVA-BFN (Name) — Type Code Symbol Stamp N/A
   P. O. Box 2000, Decatur, AL 35609-2000 (Address) — Authorization No. N/A
   Expiration Date N/A
4. Identification of System System 001, Main Steam System (ASME Code Class 1 and 2 equivalent)
   (snubber) ASME Section III, NF, 1977 Edition, Summer 1977 Addenda
5. (a) Applicable Construction Code (piping sys) USAS B31.1.0 19 67* Edition, N/A Addenda, N/A Code Case
   (b) Applicable Edition of Section XI Utilized for Repairs or Replacements 19 95, 1996 Addenda
6. Identification of Components

Name of Component	Name of Manufacturer	Manufacturer Serial No.	National Board No.	Other Identification	Year Built	Corrected, Removed, or Installed	ASME Code Stamped (Yes or No)
Support (Snubber) 2-47B2401-6	Pacific Scientific	110	N/A	2-SNUB-001-5006	N/A	Removed	No
Support (Snubber) 2-47B2401-6	Pacific Scientific	7261	N/A	2-SNUB-001-5006	1980	Installed	Yes
Support (Snubber) 2-47B2401-9	Pacific Scientific	403	N/A	2-SNUB-001-5007	N/A	Removed	No
Support (Snubber) 2-47B2401-9	Pacific Scientific	5501	N/A	2-SNUB-001-5007	1979	Installed	Yes
Support (Snubber) 2-47B2401-9	Pacific Scientific	401	N/A	2-SNUB-001-5008	N/A	Removed	No
Support (Snubber) 2-47B2401-9	Pacific Scientific	7271	N/A	2-SNUB-001-5008	1980	Installed	Yes
Support (Snubber) 2-47B2401-10	Pacific Scientific	409	N/A	2-SNUB-001-5009	N/A	Removed	No
Support (Snubber) 2-47B2401-10	Pacific Scientific	6516	N/A	2-SNUB-001-5009	1979	Installed	Yes
Support (Snubber) 2-47B2401-10	Pacific Scientific	405	N/A	2-SNUB-001-5010	N/A	Removed	No
Support (Snubber) 2-47B2401-10	Pacific Scientific	5513	N/A	2-SNUB-001-5010	1979	Installed	Yes
Support (Snubber) 2-47B2401-13	Pacific Scientific	404	N/A	2-SNUB-001-5011	N/A	Removed	No
Support (Snubber) 2-47B2401-13	Pacific Scientific	10479	N/A	2-SNUB-001-5011	1981	Installed	Yes

7. Description of Work Replaced snubbers with new snubbers.
8. Tests Conducted: Hydrostatic ☐ Pneumatic ☐ Nominal Operating Pressure ☐ Exempt ☐
   Other ☒** Pressure N/A psi Test Temp. N/A °F ** - See Remarks

FORM NIS-2, SUPPLEMENTAL SHEET (Back)

Work Orders (WO) 04-718533-000 through 04-718533-019

Remarks The existing snubbers were removed and discarded. New snubbers were functionally tested per 2-SI-4.6.H-2A and installed.

FORM NIS-2 OWNER'S REPORT FOR REPAIRS/REPLACEMENT ACTIVITY
SUPPLEMENTAL SHEET

1. Owner Tennessee Valley Authority (TVA) (Name)
1101 Market Street
Chattanooga, TN 37402-2801 (Address)

Date June 9, 2005

Sheet 4 of 4

2. Plant Browns Ferry Nuclear Plant (BFN) (Name)
P. O. Box 2000, Decatur, AL 35609-2000 (Address)

Unit 2

Work Orders (WO) 04-718533-000 through 04-718533-019
Repair/Replacement Organization P.O. No., Job No., etc.

3. Work Performed by TVA-BFN (Name)
P. O. Box 2000, Decatur, AL 35609-2000 (Address)

Type Code Symbol Stamp N/A

Authorization No. N/A

Expiration Date N/A

4. Identification of System System 001, Main Steam System (ASME Code Class 1 and 2 equivalent)

5. (a) Applicable Construction Code (piping sys) USAS B31.1.0 19 67 * Edition, N/A Addenda, N/A Code Case (snubber) ASME Section III, NF, 1977 Edition, Summer 1977 Addenda

(b) Applicable Edition of Section XI Utilized for Repairs or Replacements 19 95, 1996 Addenda

6. Identification of Components

Name of Component	Name of Manufacturer	Manufacturer Serial No.	National Board No.	Other Identification	Year Built	Corrected, Removed, or Installed	ASME Code Stamped (Yes or No)
Support (Snubber) 2-47B2401-13	Pacific Scientific	417	N/A	2-SNUB-001-5012	N/A	Removed	No
Support (Snubber) 2-47B2401-13	Pacific Scientific	6496	N/A	2-SNUB-001-5012	1979	Installed	Yes
Support (Snubber) 2-47B2401-14	Pacific Scientific	411	N/A	2-SNUB-001-5013	N/A	Removed	No
Support (Snubber) 2-47B2401-14	Pacific Scientific	5515	N/A	2-SNUB-001-5013	1979	Installed	Yes
Support (Snubber) 2-47B2401-14	Pacific Scientific	418	N/A	2-SNUB-001-5014	N/A	Removed	No
Support (Snubber) 2-47B2401-14	Pacific Scientific	7279	N/A	2-SNUB-001-5014	1980	Installed	Yes
Support (Snubber) 2-47B2401-17	Pacific Scientific	412	N/A	2-SNUB-001-5015	N/A	Removed	No
Support (Snubber) 2-47B2401-17	Pacific Scientific	6537	N/A	2-SNUB-001-5015	1980	Installed	Yes
Support (Snubber) 2-47B2401-17	Pacific Scientific	415	N/A	2-SNUB-001-5016	N/A	Removed	No
Support (Snubber) 2-47B2401-17	Pacific Scientific	6517	N/A	2-SNUB-001-5016	1981	Installed	Yes

7. Description of Work Replaced snubbers with new snubbers.

8. Tests Conducted: Hydrostatic ☐ Pneumatic ☐ Nominal Operating Pressure ☐ Exempt ☐

Other ☒** Pressure N/A psi Test Temp. N/A °F ** - See Remarks

FORM NIS-2, SUPPLEMENTAL SHEET (Back)

Work Orders (WO) 04-718533-000 through 04-718533-019

Remarks The existing snubbers were removed and discarded. New snubbers were functionally tested per 2-SI-4.6.H-2A and installed.

FORM NF-1 NPT CERTIFICATE HOLDERS' DATA REPORT FOR COMPONENT SUPPORTS

As Required by the Provisions of the ASME Code Rules Section III, Division 1

Sheet 6 of 3

1 Manufactured by Pacific Scientific 1346 S. State College Blvd Anaheim, Ca. 92803
(Name and address of NPT Certificate Holder)

2 Manufactured for Bergen Paterson Pipesupport Corp. 74 C Commerce Way Woburn, Mass. 01801
(Name and address of purchaser or owner)

3 Location of Installation Unknown

4 Identification

(a) Component Support I.D. No.	(b) Canadian Registration No.	(c) Applicable Drawings with Last Rev. & Date	(d) Stress Report or Load Capacity Data Sheet	(e) Type of Component Support	(f) Class	(g) Nat'l Board No.	(h) Year Built
(1) 6536-6566	None	1801103-07-E	DR-1352-Rev. B	Linear	1	None	1980
(2)							
(3)							
(4)							
(5)							
(6)							
(7)							
(8)							
(9)							
(10)							

5 Remarks Built to TVA/C.F. Braun Design Spec. 400-20 Rev. 5

00037765

CERTIFICATE OF COMPLIANCE

We certify that the statements made in this report are correct and that these components supports conform to the rules of construction of the ASME Code for Nuclear Power Plant Components, Section III, Division 1, Edition 1977 Addenda Summer '77 (Date)

Code Case No. 1644-5

Date 1-23-80 Signed Pacific Scientific (NPT Certificate Holder) By D. L. Yager

Our ASME Certificate of Authorization No. 1198 to use the Component Supports (NPT)

Symbol expires Aug 4, 1981 (Date)

CERTIFICATION OF DESIGN

Design Information on File at Pacific Scientific

Stress Report or Load Capacity Data Sheets on File at Pacific Scientific
Filed Per NA 3256

Design Specifications Certified by (1) Alex Walsenko PE State California

Reg. No. C22,109

Stress Analysis Report or Load Capacity Data Sheets Certified by (1) Leo E. Ay

PE State California Reg. No. 13533

(1) Last name only, signature not required

*Supplements: sheets in form of lists, sketches or drawings may be used provided (1) size is 8½ in., (2) information in items 1, 2, 4c, 4g on this Data Report is included on each sheet, and (3) each sheet is numbered and number of sheets is recorded at top of this form

OA-2/15/85

(10/77) This form (E00075) may be obtained from the Order Dept., ASME, 345 E. 47th St., New York, N.Y. 10017

CERTIFICATE OF SHOP INSPECTION

I, the undersigned, holding a valid commission issued by the National Board of Boiler and Pressure Vessel Inspectors and the State or Province of New York and employed by HSB&I Co. of Hartford, CT have inspected the component supports described in this Data Report on 1/25, 19 80 and state that to the best of my knowledge and belief the NPT Certificate Holder has constructed these component supports in accordance with the ASME Code for Nuclear Power Plant Components.

By signing this certificate, neither the Inspector nor his employer makes any warranty, expressed or implied, concerning the component supports described in this Data Report. Furthermore, neither the Inspector nor his employer shall be liable in any manner for any personal injury or property damage or a loss of any kind arising from or connected with this inspection.

Date 1/25/80

Signed William Mayer Commissions N.Y. Com #2770
(Nat'l Bd., State, Prov., and No.)

CERTIFICATION OF FIELD INSPECTION

I, the undersigned, holding a valid commission issued by the National Board of Boiler and Pressure Vessel Inspectors and the State or Province of _____ and employed by _____ of _____ have compared the statements in this Data Report with the described component supports and state that the parts referred to as data items _____, not included in the certificate of shop inspection, have been inspected by me and that to the best of my knowledge and belief the NPT Certificate Holder has constructed these component supports in accordance with the ASME Code for Nuclear Power Plant Components.

By signing this certificate neither the Inspector nor his employer makes any warranty, expressed or implied, concerning the component supports described in this Data Report. Furthermore, neither the Inspector nor his employer shall be liable in any manner for any personal injury or property damage or a loss of any kind arising from or connected with this inspection.

Date _____

Signed _____ Commissions _____
(Nat'l Bd., State, Prov., and No.)

00037766

FORM NF-1 NPT CERTIFICATE HOLDER'S DATA REPORT FOR COMPONENT SUPPORTS

As Required by the Provisions of the ASME Code Rules, Section III, Division 1 Sheet 4 of 12

1 Manufactured by Pacific Scientiric 1346 S. State College Blvd. Anaheim, Ca 92803
(Name and address of NPT Certificate Holder)

2 Manufactured for Bergen-Paterson-Pipesupport Corp. 74 C Commerce Way Woburn, Massachusetts 01801
(Name and address of purchaser or owner)

3 Location of Installation Unknown

4 Identification

	(a) Component Support I.D. No	(b) Canadian Registration No	(c) Applicable Drawings with Last Rev. & Date	(d) Stress Report or Load Capacity Data Sheet	(e) Type of Component Support	(f) Class	(g) Nat'l Board No.	(h) Year Built
(1)	6457-6519	None	1801103-07-H	DR-1352-Rev. B	linear	1	None	1979
(2)								
(3)								
(4)								
(5)								
(6)								
(7)								
(8)								
(9)								
(10)								

5 Remarks

CERTIFICATE OF COMPLIANCE

We certify that the statements made in this report are correct and that these components supports conform to the rules of construction of the ASME Code for Nuclear Power Plant Components, Section III, Division 1, Edition '77, Addenda Summer '77 (Date)

Code Case No 1644-5

Date 12-20-79 Signed Pacific Scientific (NPT Certificate Holder) By [signature]

Our ASME Certificate of Authorization No 1198 to use the Component Supports (NPT)

Symbol expires Aug. 4, 1981 (Date)

CERTIFICATION OF DESIGN

Design Information on File at Pacific Scientific

Stress Report or Load Capacity Data Sheets on File at Pacific Scientific

Filed Per KA 3256

Design Specifications Certified by (1) Alex Walsenko PE State California

Reg. No C22.109

Stress Analysis Report or Load Capacity Data Sheets Certified by (1) Leo E. Ay

PE State California Reg. No 13533

(1) List name only, signature not required

*Supplemental sheets in form of lists, sketches or drawings may be used provided (1) size is 8½ x 11, (2) information in items 1, 2, 4c, 4g on this Data Report is included on each sheet and (3) each sheet is numbered and number of sheets is recorded at top of this form

PJ 2/15/05

(10/77) This form (E00075) may be obtained from the Order Dept., ASME, 345 E. 47th St., New York, N.Y. 10017

00037763

FORM NF-1 (Back)

CERTIFICATE OF SHOP INSPECTION

I, the undersigned, holding a valid commission issued by the National Board of Boiler and Pressure Vessel Inspectors and the State or Province of New York and employed by HSB I&I Co. of Hartford, CT have inspected the component supports described in this Data Report on 12/20, 19 79 and state that to the best of my knowledge and belief the NPT Certificate Holder has constructed these component supports in accordance with the ASME Code for Nuclear Power Plant Components.

By signing this certificate, neither the Inspector nor his employer makes any warranty, expressed or implied, concerning the component supports described in this Data Report. Furthermore, neither the Inspector nor his employer shall be liable in any manner for any personal injury or property damage or a loss of any kind arising from or connected with this inspection.

Date 12/20/79

Signed William G. Meyer Commission N.Y. Commission #2710
(Nat'l Bd., State, Prov., and No.)

CERTIFICATION OF FIELD INSPECTION

I, the undersigned, holding a valid commission issued by the National Board of Boiler and Pressure Vessel Inspectors and the State or Province of _____ and employed by _____ of _____ have compared the statements in this Data Report with the described component supports and state that the parts referred to as data items _____, not included in the certificate of shop inspection, have been inspected by me and that to the best of my knowledge and belief the NPT Certificate Holder has constructed these component supports in accordance with the ASME Code for Nuclear Power Plant Components.

By signing this certificate neither the Inspector nor his employer makes any warranty, expressed or implied, concerning the component supports described in this Data Report. Furthermore, neither the inspector nor his employer shall be liable in any manner for any personal injury or property damage or a loss of any kind arising from or connected with this inspection.

Date _____

Signed _____ Commissions _____
(Nat'l Bd., State, Prov., and No.)

0000087 3764

SHEET 1 OF 1

FORM NF-1 NPT CERTIFICATE HOLDERS' DATA REPORT FOR COMPONENT SUPPORTS*

At Required by the Provisions of the ASME Code Rules, Section III, Division 1

1 Manufactured by Pacific Scientific 1346 S. State College Blvd. Anzheim, Ca. 92803
(Name and address of NPT Certificate Holder)

2 Manufactured for Bergen Paterson Pipesupport Corp. 74 C Commerce Way, Wob[illegible], Mass. 01801
(Name and address of purchaser or owner)

3 Location of Installation Unknown

4 Identification

	(a) Component Support I.D. No	(b) Canadian Registration No	(c) Applicable Drawings with Last Rev. & Date	(d) Stress Report or Load Capacity Data Sheet	(e) Type of Component Support	(f) Class	(g) Nat'l Board No	(h) Year Built
(1)	6791-6836	None	1001103-07-H	DR-1352-Rev. B	Linear	1	None	1980
(2)								
(3)								
(4)								
(5)								
(6)								
(7)								
(8)								
(9)								
(10)								

5 Remarks Built TVA/C.F. Braun Design Spec. No. 400-20

CERTIFICATE OF COMPLIANCE

We certify that the statements made in this report are correct and that these components supports conform to the rules of construction of the ASME Code for Nuclear Power Plant Components, Section III, Division 1, Edition 1977, Addenda Summer 1977 (Date)

Code Case No. 1644-5

Date 2-8-80 Signed Pacific Scientific (NPT Certificate Holder) by D. J. Yager

Our ASME Certificate of Authorization No. N-1198 to use the Component Support (NPT)

Symbol expires Aug. 4, 1981 (Date)

CERTIFICATION OF DESIGN

Design Information on File at Pacific Scientific

Stress Report or Load Capacity Data Sheets on File at:
Pacific Scientific
Filed Per NA 3256

Design Specifications Certified by (1) Alex Whlsenko PE State California

Reg. No. C22,109

Stress Analysis Report or Load Capacity Data Sheets Certified by (1) Leo E. Ay

PE State California Reg. No. 13533

(1) List name only, signature not required

*Supplemental sheets in form of lists, sketches or drawings may be used provided (1) size is 8½ in., (2) information in items 1, 2, 4c, 4g on this Data Report is included on each sheet, and (3) each sheet is numbered and number of sheets is recorded at top of this form.

CA 3/8/05

(10/77) This form (E00075) may be obtained from the Order Dept., ASME, 345 E. 47th St., New York, N.Y. 10017

00087 37 46

CERTIFICATE OF SHOP INSPECTION

I, the undersigned, holding a valid commission issued by the National Board of Boiler and Pressure Vessel Inspectors and the State or Province of New York and employed by HSBIGT Co. of Hartford, Ct. have inspected the component supports described in this Data Report on 2/8 1980 and state that to the best of my knowledge and belief the NPT Certificate Holder has constructed these component supports in accordance with the ASME Code for Nuclear Power Plant Components.

By signing this certificate, neither the Inspector nor his employer makes any warranty, expressed or implied, concerning the component supports described in this Data Report. Furthermore, neither the Inspector nor his employer shall be liable in any manner for any personal injury or property damage or a loss of any kind arising from or connected with this inspection.

Date 2/8/80

Signed William Mayer Commissions N.Y. Comm #2770
(Nat'l Bd. State Prov. and No.)

CERTIFICATION OF FIELD INSPECTION

I, the undersigned, holding a valid commission issued by the National Board of Boiler and Pressure Vessel Inspectors and the State or Province of _____ and employed by _____ of _____ have compared the statements in this Data Report with the described component supports and state that the parts referred to as data items _____, not included in the certificate of shop inspection, have been inspected by me and that to the best of my knowledge and belief the NPT Certificate Holder has constructed these component supports in accordance with the ASME Code for Nuclear Power Plant Components.

By signing this certificate neither the Inspector nor his employer makes any warranty, expressed or implied, concerning the component supports described in this Data Report. Furthermore, neither the inspector nor his employer shall be liable in any manner for any personal injury or property damage or a loss of any kind arising from or connected with this inspection.

Date _____

Signed _____ Commissions _____
(Nat'l Bd. State Prov. and No.)

FORM NPT-1 (NPT) CERTIFICATE HOLDERS' DATA REPORT FOR COMPONENT SUPPORTS
As Required by the Provisions of the ASME Code Rules, Section III, Division 1 Sheet 10 of 13

1. Manufactured by Pacific Scientific 1346 S. State College Blvd. Anaheim, Ca. 92803
(Name and address of NPT Certificate Holder)

2. Manufactured for Bergen Paterson Pipesupport Corp. 74 C Commerce Way, Woburn, Massachusetts, 01801
(Name and address of purchaser or owner)

3. Location of Installation Unknown

4. Identification

(a) Component Support I.D. No.	(b) Canadian Registration No.	(c) Applicable Drawings with Last Rev. & Date	(d) Stress Report or Load Capacity Data Sheet	(e) Type of Component Support	(f) Class	(g) Nat'l Board No.	(h) Year Built
(1) 10434-10617	None	1801103-07-H	DR-1416-Rev. 0	Linear	1	None	1981
(2)							
(3)							
(4)							
(5)							
(6)							
(7)							
(8)							
(9)							
(10)							

5. Remarks Built in accordance with TVA/C.F. Braun Design Spec. No. 400-20

CERTIFICATE OF COMPLIANCE

We certify that the statements made in this report are correct and that these component supports conform to the rules of construction of the ASME Code for Nuclear Power Plant Components, Section III, Division 1, Edition 1977, Addenda Summer 1977 (Date)

Code Case No. 1644-5

Date 7/8/81 Signed Pacific Scientific (NPT Certificate Holder) By Ronald A Nava

Our ASME Certificate of Authorization No. 1198 to use the Component Supports (NPT)

Symbol expires Aug. 4, 1981 (Date)

CERTIFICATION OF DESIGN

Design Information on File at Pacific Scientific

Stress Report or Load Capacity Data Sheets on File at Pacific Scientific

Filed Per PA 3256

Design Specifications Certified by (1) Alex Walsenko PE State California

Reg. No. C22,109

Stress Analysis Report or Load Capacity Data Sheets Certified by (1) Leo E. Ay

PE State California Reg. No. 13533

(1) Last name only, signature not required

Supplemental sheets in form of lists, sketches or drawings may be used provided (1) size is 8½ x 11, (2) information in items 1, 2, 3 and 4g on this Data Report is included on each sheet, and (3) each sheet is numbered and number of sheets is recorded at top of this form.

S/n 10498

CA 2/11/5/05

(10/77) This form (E00075) may be obtained from the Order Dept., ASME, 345 E. 47th St., New York, N.Y. 10017

CERTIFICATE OF SHOP INSPECTION

I, the undersigned, holding a valid commission issued by the National Board of Boiler and Pressure Vessel Inspectors and the State or Province of California and employed by HSB&I Co. of Hartford, CT have inspected the component supports described in this Data Report on 7-8-81, 19 ___ and state that to the best of my knowledge and belief the NPT Certificate Holder has constructed these component supports in accordance with the ASME Code for Nuclear Power Plant Components.

By signing this certificate, neither the Inspector nor his employer makes any warranty, expressed or implied, concerning the component supports described in this Data Report. Furthermore, neither the Inspector nor his employer shall be liable in any manner for any personal injury or property damage or a loss of any kind arising from or connected with this inspection.

Date 7-8-81

Signed William Meyer Commission Ca #1494
(Nat'l Bd., State, Prov., and No.)

CERTIFICATION OF FIELD INSPECTION

I, the undersigned, holding a valid commission issued by the National Board of Boiler and Pressure Vessel Inspectors and the State or Province of ___ and employed by ___ of ___ have compared the statements on this Data Report with the described component supports and state that the parts referred to as data items ___, not included in the certificate of shop inspection, have been inspected by me and that to the best of my knowledge and belief the NPT Certificate Holder has constructed these component supports in accordance with the ASME Code for Nuclear Power Plant Components.

By signing this certificate neither the Inspector nor his employer makes any warranty, expressed or implied, concerning the component supports described in this Data Report. Furthermore, neither the Inspector nor his employer shall be liable in any manner for any personal injury or property damage or a loss of any kind arising from or connected with this inspection.

Date ___

Signed ___ Commission ___
(Nat'l Bd., State, Prov., and No.)

FORM NF-1 NPT CERTIFICATE HOLDERS' DATA REPORT FOR COMPONENT SUPPORTS*
As Required by the Provisions of the ASME Code Rules, Section III, Division 1

1. Manufactured by Pacific Scientific 1346 S. State College Blvd. Anaheim, Ca. 92803
(Name and address of NPT Certificate Holder)

2. Manufactured for Bergen Paterson Pipesupport Corp. 74 C Commerce Way, Woburn, Massachusetts, 01801
(Name and address of purchaser or owner)

3. Location of Installation Unknown

4. Identification

(a) Component Support I.D. No.	(b) Canadian Registration No.	(c) Applicable Drawings with Last Rev. & Date	(d) Stress Report or Load Capacity Data Sheet	(e) Type of Component Support	(f) Class	(g) Nat'l Board No.	(h) Year Built
(1) 7025,	None	1801103-07-H	DR-1352-Rev. B	Linear	1	None	1980
(2) 7242,							
(3) 7256-7299							
(4)							
(5)							
(6)							
(7)							
(8)							
(9)							
(10)							

5. Remarks: Built in accordance with TVA/C.F. Braun Design Spec. No. 400-20

CERTIFICATE OF COMPLIANCE

We certify that the statements made in this report are correct and that these components supports conform to the rules of construction of the ASME Code for Nuclear Power Plant Components, Section III, Division 1, Edition 1977, Addenda Summer 1977 (Date), Code Case No. 1644-5

Date 4-26-80 Signed Pacific Scientific (NPT Certificate Holder) by D. L. Yeager

Our ASME Certificate of Authorization No. 1198 to use the Component Supports (NPT)

Symbol expires Aug. 4, 1981 (Date)

CERTIFICATION OF DESIGN

Design Information on File at Pacific Scientific

Stress Report or Load Capacity Data Sheets on File at:
Pacific Scientific
Filed Per NA 3256

Design Specifications Certified by (1) Alex Walsenko PE State California

Reg. No. C22,109

Stress Analysis Report or Load Capacity Data Sheets Certified by (1) Leo E. Ay

PE State California Reg. No. 13533

(1) List name only, signature not required.

*Supplemental sheets in form of lists, sketches or drawings may be used provided (1) size is 8½ in., (2) information in items 1, 2, 4c, 4g on this Data Report is included on each sheet, and (3) each sheet is numbered and number of sheets is recorded at top of this form

2/28/05

(10/77) This form (E00075) may be obtained from the Order Dept., ASME, 345 E. 47th St., New York, N.Y. 10017

FORM NF-1 (Back)

CERTIFICATE OF SHOP INSPECTION

I, the undersigned, holding a valid commission issued by the National Board of Boiler and Pressure Vessel Inspectors and the State or Province of California and employed by HSBI&I Co. of Hartford, CT have inspected the component supports described in this Data Report on 4/26/80, 19 ___ and state that to the best of my knowledge and belief the NPT Certificate Holder has constructed these component supports in accordance with the ASME Code for Nuclear Power Plant Components.

By signing this certificate, neither the Inspector nor his employer makes any warranty, expressed or implied, concerning the component supports described in this Data Report. Furthermore, neither the Inspector nor his employer shall be liable in any manner for any personal injury or property damage or a loss of any kind arising from or connected with this inspection.

Date 4/26/80

Signed William Mayo Commissions Ca #1494
(Nat'l Bd., State, Prov., and No.)

CERTIFICATION OF FIELD INSPECTION

I, the undersigned, holding a valid commission issued by the National Board of Boiler and Pressure Vessel Inspectors and the State or Province of _____ and employed by _____ of _____ have compared the statements in this Data Report with the described component supports and state that parts referred to as data items _____, not included in the certificate of shop inspection, have been inspected by me and that to the best of my knowledge and belief the NPT Certificate Holder has constructed these component supports in accordance with the ASME Code for Nuclear Power Plant Components.

By signing this certificate neither the Inspector nor his employer makes any warranty, expressed or implied, concerning the component supports described in this Data Report. Furthermore, neither the inspector nor his employer shall be liable in any manner for any personal injury or property damage or a loss of any kind arising from or connected with this inspection.

Date _____

Signed _____ Commissions _____
(Nat'l Bd., State, Prov., and No.)

FORM NF-1 NPT CERTIFICATE HOLDERS' DATA REPORT FOR COMPONENT SUPPORTS*

As Required by the Provisions of the ASME Code Rules, Section III, Division 1

1. Manufactured by Pacific Scientific 1346 S. State College Blvd. Anaheim, Ca. 92803
(Name and address of NPT Certificate Holder)

2. Manufactured for Bergen Paterson Pipesupport Corp. 74 C Commerce Way ~~Woburn, Massachusetts 01~~801
(Name and address of purchaser or owner)

3. Location of Installation Unknown

4. Identification

(a) Component Support I.D. No	(b) Canadian Registration No.	(c) Applicable Drawings with Last Rev. & Date	(d) Stress Report or Load Capacity Data Sheet	(e) Type of Component Support	(f) Class	(g) Nat'l Board No	(h) Year Built
(1) 5417-5419	None	1801103-07-H	DR-1352-	Linear	1	None	1970
(2) 5493-5520			Rev. B				
(3) 5536-5542							
(4)							
(5)							
(6)							
(7)							
(8)							
(9)							
(10)							

5. Remarks

CERTIFICATE OF COMPLIANCE

We certify that the statements made in this report are correct and that these components supports conform to the rules of construction of the ASME Code for Nuclear Power Plant Components, Section III, Division 1, Edition '77, Addenda Summer '77 (Date)

Code Case No 1644-5 & 1686

Date 12-20-79 Signed Pacific Scientific (NPT Certificate Holder) by [signature]

Our ASME Certificate of Authorization No 1198 to use the Component Supports (NPT)

Symbol expires Aug. 4, 1981 (Date)

CERTIFICATION OF DESIGN

Design Information on File at Pacific Scientific

Stress Report or Load Capacity Data Sheets on File at Pacific Scientific

Design Specifications Certified by (1) Filed Per NA 3256 Alex Walsenko PE State California

Reg No C22,109

Stress Analysis Report or Load Capacity Data Sheets Certified by (1) Lee E. Ay

PE State California Reg No 13533

(1) Last name only, signature not required

*Supplemental sheets in form of lists, sketches or drawings may be used provided (1) size is 8½ x 11, (2) information in items 1, 2, 4c, 4g on this Data Report is included on each sheet, and (3) each sheet is numbered and number of sheets is recorded at top of this form.

2/14/8

(10/77) This form (E00035) may be obtained from the Order Dept., ASME, 345 E. 47th St., New York, N.Y. 10017

(Back)

CERTIFICATE OF SHOP INSPECTION

I, the undersigned, holding a valid commission issued by the National Board of Boiler and Pressure Vessel Inspectors and the State or Province of New York and employed by HSB I&I Co. of Hartford, CT 06102 have inspected the component supports described in this Data Report on 12/20, 19 79 and state that to the best of my knowledge and belief the NPT Certificate Holder has constructed these component supports in accordance with the ASME Code for Nuclear Power Plant Components.

By signing this certificate, neither the Inspector nor his employer makes any warranty, expressed or implied, concerning the component supports described in this Data Report. Furthermore, neither the Inspector nor his employer shall be liable in any manner for any personal injury or property damage or a loss of any kind arising from or connected with this inspection.

Date 12/20/79

Signed William G. Meyer Commissions N.Y. Commission #2770
(Nat'l Bd., State, Prov., and No.)

CERTIFICATION OF FIELD INSPECTION

I, the undersigned, holding a valid commission issued by the National Board of Boiler and Pressure Vessel Inspectors and the State or Province of _____ and employed by _____ of _____ have compared the statements in this Data Report with the described component supports and state that the parts referred to as data items _____, not included in the certificate of shop inspection, have been inspected by me and that to the best of my knowledge and belief the NPT Certificate Holder has constructed these component supports in accordance with the ASME Code for Nuclear Power Plant Components.

By signing this certificate neither the Inspector nor his employer makes any warranty, expressed or implied, concerning the component supports described in this Data Report. Furthermore, neither the Inspector nor his employer shall be liable in any manner for any personal injury or property damage or a loss of any kind arising from or connected with this inspection.

Date _____

Signed _____ Commissions _____
(Nat'l Bd., State, Prov., and No.)

FORM NPT-1 NPT CERTIFICATE HOLDERS' DATA REPORT FOR COMPONENT SUPPORTS*

As Required by the Provisions of the ASME Code Rules, Section III, Division 1 Sheet 40 of 125

1. Manufactured by Pacific Scientific 1346 S. State College Blvd. Anaheim, Ca. 92803
(Name and address of Certificate holder)

2. Installed for Bangor Paterson Pipe Support Corp. 74 C Commerce Way, Woburn, Massachusetts
(Name and address of owner)

3. Unknown

4. Identification

	(a) Component Support Identification No	(b) Canadian Registration No	(c) Applicable Drawing with Last Rev. & Date	(d) Stress Report or Load Capacity Data Sheet	(e) Type of Component Support	(f) Class	(g) Nominal Size	(h) Year Built
(1)	10434-10617	None	1811103-27-E	DR-1416-Rev. 3	Linear		None	1981
(2)								
(3)								
(4)								
(5)								
(6)								
(7)								
(8)								
(9)								
(10)								

5. Remarks Built in accordance with CRA/C.E. Braun Design Spec. No. 400-20

CERTIFICATE OF COMPLIANCE

We certify that the statements made in this report are correct and that these components supports conform to the rules of construction of the ASME Code for Nuclear Power Plant Components, Section III, Division 1, Edition 1977 Addenda Summer 1977 (Date)

Code Case No. 1544-5

Date 7/8/81 Signed Pacific Scientific (NPT Certificate holder) By Robert A Nash

Our ASME Certificate of Authorization No 1193 to use the Component Supports (NPT)

Symbol expires Aug. 4, 1981 (Date)

CERTIFICATION OF DESIGN

Design Information on File at Pacific Scientific

Stress Report or Load Capacity Data Sheets on File at Pacific Scientific

Filed Per NA 3256

Design Specifications Certified by (1) Alex Valsanko PE State California

Reg. No C22,109

Stress Analysis Report or Load Capacity Data Sheets Certified by (1) Leo E. Ay

PE State California Reg. No 13533

(1) List name only, signature not required

Supplemental sheets in form of lists, sketches or drawings may be used provided (1) size is 8½ in., (2) information in items 1, 2, 3 and 4g on this Data Report is included on each sheet, and (3) each sheet is numbered and number of sheets is recorded at top of this form.

RJ 2/14/85

110/77

This form (S00075) may be obtained from the Order Dept., ASME, 345 E. 47th St., New York, N.Y. 10017

CERTIFICATE OF SHOP INSPECTION

I, the undersigned, holding a valid commission issued by the National Board of Boiler and Pressure Vessel Inspectors and the State or Province of California and employed by HSEIST Co. of Stamford, Ct. have inspected the component supports described in this Data Report on 7-8-81 and state that to the best of my knowledge and belief the NPT Certificate Holder has constructed these component supports in accordance with the ASME Code for Nuclear Power Plant Components.

By signing this certificate neither the inspector nor his employer makes any warranty, expressed or implied, concerning the component supports described in this Data Report. Furthermore, neither the inspector nor his employer shall be liable in any manner for personal injury or property damage or a loss of any kind arising from or connected with this inspection.

Date 7-8-81

Signed William Mayer Commissions Ca #1494
(Nat'l Bd., State, Prov., and No.)

CERTIFICATION OF FIELD INSPECTION

I, the undersigned, holding a valid commission issued by the National Board of Boiler and Pressure Vessel Inspectors and the State or Province of _____ and employed by _____ of _____ have compared the statements in this Data Report with the described component supports and state that the parts referred to as data items _____, not included in the certificate of shop inspection, have been inspected by me and that to the best of my knowledge and belief the NPT Certificate Holder has constructed these component supports in accordance with the ASME Code for Nuclear Power Plant Components.

By signing this certificate neither the inspector nor his employer makes any warranty, expressed or implied, concerning the component supports described in this Data Report. Furthermore, neither the inspector nor his employer shall be liable in any manner for personal injury or property damage or a loss of any kind arising from or connected with this inspection.

Date _____

Signed _____ Commissions _____
(Nat'l Bd., State, Prov., and No.)

FORM NIS-2 OWNER'S REPORT FOR REPAIR/REPLACEMENT ACTIVITY
As Required by the Provisions of the ASME Code Section XI

1. Owner Tennessee Valley Authority (TVA) (Name) — Date June 9, 2005
   1101 Market Street
   Chattanooga, TN 37402-2801 (Address) — Sheet 1 of 1

2. Plant Browns Ferry Nuclear Plant (BFN) (Name) — Unit 2
   P. O. Box 2000, Decatur, AL 35609-2000 (Address) — Work Orders (WO) 04-718528-000 (Repair/Replacement Organization P.O. No., Job No., etc.)

3. Work Performed by TVA-BFN (Name) — Type Code Symbol Stamp N/A
   P. O. Box 2000, Decatur, AL 35609-2000 (Address) — Authorization No. N/A
   Expiration Date N/A

4. Identification of System System 003, Feedwater System (ASME Code Class 1 equivalent)

5. (a) Applicable Construction Code (snubber) ASME Section III, 1977 Edition, Summer 1977 Addenda, 1644-5 Code Case (piping system) USAS B31.1.0 19 67* Edition, N/A Addenda, N/A Code Case

   (b) Applicable Edition of Section XI Utilized for Repairs or Replacements 19 95 Edition, 1996 Addenda

6. Identification of Components

Name of Component	Name of Manufacturer	Manufacturer Serial No.	National Board No.	Other Identification	Year Built	Corrected, Removed, or Installed	ASME Code Stamped (Yes or No)
Support (Snubber) 2-47B415S0007	Pacific Scientific	5564	N/A	2-SNUB-003-5021	N/A	Removed	Yes
Support (Snubber) 2-47B415S0007	Pacific Scientific	5538	N/A	2-SNUB-003-5021	1981	Installed	Yes

7. Description of Work Replaced snubbers with like for like new snubbers.

8. Tests Conducted: Hydrostatic ☐ Pneumatic ☐ Nominal Operating Pressure ☐ Exempt ☐
   Other ☒** Pressure N/A psi Test Temp. N/A °F ** - See Remarks

NOTE: Supplemental Sheets in form of lists, sketches, or drawings may be used, provided (1) size is 8½ in. X 11 in., (2) information in items 1 through 6 on this report is included on each sheet, and (3) each sheet is numbered and the number of sheets is recorded at the top of this form.

*as amended by additional quality assurance requirements found in Contract 68C37-91602 and Design Criteria BFN-50-7003 and BFN-50-C-7105.

FORM NIS-2 (Back)

9. Remarks WO 04-718528-000 - (2-SNUB-003-5021) -

Applicable Manufacturer's Data Reports to be attached

The original snubber (5564) was removed and tested as part of the 10 percent sample per the snubber program.

The replacement snubber (5538) is a new snubber and was functionally tested per 2-SI-4.6.H-2A prior to installation.

CERTIFICATE OF COMPLIANCE

I certify that the statements made in the report are correct and this conforms to the rules of the ASME Code, Section XI.

Type Code Symbol Stamp N/A

Certificate of Authorization No. N/A Expiration Date N/A

Signed Stephen C. Willard, System Engineer Date 6-9, 2005

Owner or Owner's Designee, Title

CERTIFICATE OF INSERVICE INSPECTION

I, the undersigned, holding a valid commission issued by the National Board of Boiler and Pressure Vessel Inspectors and the State or Province of Tennessee and employed by HSB CT of Connecticut have inspected the components described in this Owner's Report during the period 3/28/05 to 6/13/05, and state that to the best of my knowledge and belief, the Owner has performed examinations and taken corrective measures described in this Owner's Report in accordance with the requirements of the ASME Code, Section XI.

By signing this certificate neither the Inspector nor his employer makes any warranty, expressed or implied, concerning the examinations and corrective measures described in this Owner's Report. Furthermore, neither the Inspector nor his employer shall be liable in any manner for any personal injury or property damage or a loss of any kind arising from or connected with this inspection.

Inspector's Signature

Commissions TN 4011

National Board, State, Province, and Endorsements

Date 6/13 2005

FORM NP-1 NPT CERTIFICATE HOLDER'S DATA REPORT FOR COMPONENT SUPPORTS*
As Required by the Provisions of the ASME Code Rules, Section III, Division 1

1. Manufactured by Pacific Scientific 1346 S. State College Blvd. Anaheim, Ca. 92803
(Name and address of NPT Certificate Holder)

2. Manufactured for Bergen Paterson Pipesupport Corp. 74 C [illegible] Way, [illegible], Massachusetts 01801
(Name and address of purchaser or owner)

3. Location of Installation Dalmain

4. Identification

(a) Component Support I.D. No.	(b) Constitution Registration No.	(c) Applicable Drawings with Last Rev. & Date	(d) Stress Report or Load Capacity Data Sheet	(e) Type of Component Support	(f) Class	(g) Nat'l Board No.	(h) Year Built
1-48-4-C2	None	1801115-00-0	DB-1310-Rev. A	Linear	1	None	1980
01-872-0007							
02							
03							
04							
05							
06							
07							
08							
09							
10							

5. Remarks Built in accordance with TVA/C.E. Bergen Paterson Spec. No. 400-32

00 0 0 8 7 3 7 8 2

CERTIFICATE OF COMPLIANCE

We certify that the components stated in this report and Stress and Load Capacity Data Sheets conform to the rules of construction of the ASME Code for Nuclear Power Plant Components, Section III, Division 1, Subsection NF, Edition 1977, Addenda Summer 1977
Code Case No. [illegible]

Date 8 March 80 Signed Pacific Scientific (NPT Certificate Holder) By Bill Jackson

Our ASME Code "N" or "NA" Authorization No. 1198 to use the Component Supports (NF)

Symbol expires Aug. 4, 1981 (Date)

CERTIFICATION OF DESIGN

Design Information on File at Pacific Scientific

Stress Report or Load Capacity Data Sheets on File at Pacific Scientific

Filed Per NA 3252

Design Specifications Certified by (1) Alex Valencia PE State California

Reg. No. 26-12

Stress Analysis Report or Load Capacity Data Sheets Certified by (1) Leo E. Ay

PE State California Reg. No. 13533

(1) Last name only, signature not required.

* Supplementary sheets in form of lists, sketches or drawings may be used provided (1) size is 8½ x 11, (2) information in items 1, 2, 3, 4a, 4b and Stress Report is included on each sheet, and (3) each sheet is numbered and number of sheets is recorded at top of this form.

(10/77) This form (S00070) may be obtained from the Order Dept., ASME, 345 E. 47th St., New York, N.Y. 10017

CJ 3/28/05
- Attached C-1-C

Form NP-1 (Back)

CERTIFICATE OF SHOP INSPECTION

I, the undersigned, holding a valid commission issued by the National Board of Boiler and Pressure Vessel Inspectors and the State or Province of ~~State of~~ California and employed by BERTAS Co. of Rockford, CT

~~employed by ABB BERTAS~~ have inspected the components described in this Data Report on 3-26, 19 80 and state that to the best of my knowledge and belief the NPT Certificate Holder has constructed these components in accordance with the ASME Code for Nuclear Power Plant Components.

By signing this certificate, neither the Inspector nor his employer makes any warranty, expressed or implied, concerning the components described in this Data Report. Furthermore, neither the Inspector nor his employer shall be liable in any manner for any personal injury or property damage or a loss of any kind arising from or connected with this inspection.

Date 3-26-80.

Signed Will Becker Commissions CA-1280

(Nat'l Bd., State, Prov., and No.)

CERTIFICATION OF FIELD INSPECTION

I, the undersigned, holding a valid commission issued by the National Board of Boiler and Pressure Vessel Inspectors and the State or Province of _____ and employed by _____ of _____ have compared the statements in this Data Report with the described components supports and state that the parts referred to as data items _____, not included in the certificate of shop inspection, have been inspected by me and that to the best of my knowledge and belief the NPT Certificate Holder has constructed these components supports in accordance with the ASME Code for Nuclear Power Plant Components.

By signing this certificate neither the Inspector nor his employer makes any warranty, expressed or implied, concerning the components supports described in this Data Report. Furthermore, neither the Inspector nor his employer shall be liable in any manner for any personal injury or property damage or a loss of any kind arising from or connected with this inspection.

Date _____

Signed _____ Commissions _____

(Nat'l Bd., State, Prov., and No.)

2248

Date March 21, 1980

PACIFIC SCIENTIFIC

CERTIFICATE OF CONFORMANCE

Bergen Paterson Pipesupport Corporation	C-27550 & C-27550-1
Customer	Customer P.O.
ITEM #12 & 13	
1981112-09 PSA-35 Snubber	ABC 30258-09
Part Number(s)	PSCo ABC No.
100	5468-5567
Quantity Shipped	Serial Number(s)

We, Pacific Scientific, certify that the materials supplied on the referenced order comply with all the requirements of ASME Section III, Subsection NF.

We also certify that the fabrication complies with the requirements of ASME Section III, Subsection NF. Assemblies/Parts/Materials manufactured/Supplied in accordance with Pacific Scientific NPT Certificate # N-1190.

Code Cases applicable: 1644-5

Edition: 1977 Addenda: Summer '77.

Documentation Packages are being sent in shipment/~~by mail/special freight~~ to the attention of:

Bergen Paterson Pipesupport Corp.
48 Winnisquam Avenue
Laconia, New Hampshire
Attn: Quality Assurance Manager

R.A. Hadnagy, Q.A. Manager

NF

Form #224 11/29/79

1246 S. State College Boulevard, Anaheim, California 92803, (714) 774-8217, TELEX 65-8421

OK 3/28/05 MP-1

0 8 / 3 7 5 3 0 0

FORM NIS-2 OWNER'S REPORT FOR REPAIR/REPLACEMENT ACTIVITY
As Required by the Provisions of the ASME Code Section XI

1. Owner Tennessee Valley Authority (TVA) (Name)
1101 Market Street
Chattanooga, TN 37402-2801 (Address)

Date June 14, 2005

Sheet 1 of 1

2. Plant Browns Ferry Nuclear Plant (BFN) (Name)
P. O. Box 2000, Decatur, AL 35609-2000 (Address)

Unit 2

Work Orders (WO) 03-022883-000 and 03-022883-002
Engineering Document Changes (EDC) 60410 and 63374
Repair/Replacement Organization P.O No., Job No., etc.

3. Work Performed by TVA-BFN (Name)
P. O. Box 2000, Decatur, AL 35609-2000 (Address)

Type Code Symbol Stamp N/A
Authorization No. N/A
Expiration Date N/A

4. Identification of System System 010, Boiler Drains and Vents and Blowdown (BD&V&BD) System (ASME Code Class 2 equivalent)

5. (a) Applicable Construction Code USAS B31.1.0 19 67 * Edition, N/A Addenda, N/A Code Case

(b) Applicable Edition of Section XI Utilized for Repairs or Replacements 19 95 Edition, 1996 Addenda

6. Identification of Components

Name of Component	Name of Manufacturer	Manufacturer Serial No.	National Board No.	Other Identification	Year Built	Corrected, Removed, or Installed	ASME Code Stamped (Yes or No)
RPV Head Vent to Main Steam	Handcock	unknown	N/A	2-VTV-010-0502	N/A	Removed	No
RPV Head Vent to Main Steam	Flowserve 1-2V-906	38AYH	N/A	2-VTV-010-0502	2004	Installed	No
piping	unknown	N/A	N/A	N/A	N/A	Removed	No
piping	Consolidated Power Supply	N/A	N/A	N/A		Installed	No

7. Description of Work Replaced valve and some associated piping.

8. Tests Conducted: Hydrostatic ☐ Pneumatic ☐ Nominal Operating Pressure ☒** Exempt ☐

Other ☐ Pressure N/A psi Test Temp. N/A °F ** - ref. Code Case N-416-2

NOTE: Supplemental Sheets in form of lists, sketches, or drawings may be used, provided (1) size is 8½ in. X 11 in., (2) information in items 1 through 6 on this report is included on each sheet, and (3) each sheet is numbered and the number of sheets is recorded at the top of this form.

*as amended by additional quality assurance requirements found in Design Criteria BFN-50-7010 and BFN-50-C-7105.

FORM NIS-2 (Back)

WID: Work Orders (WO) 03-022883-000 and 03-022883-002

9. Remarks Replaced valve and some associated piping.

Applicable Manufacturer's Data Reports to be attached

CERTIFICATE OF COMPLIANCE

I certify that the statements made in the report are correct and this conforms to the rules of the ASME Code, Section XI.

Type Code Symbol Stamp N/A

Certificate of Authorization No. N/A Expiration Date N/A

Signed [signature], System Engineer Date 6-14, 20 05

Owner or Owner's Designee, Title

CERTIFICATE OF INSERVICE INSPECTION

I, the undersigned, holding a valid commission issued by the National Board of Boiler and Pressure Vessel Inspectors and the State or Province of Tennessee and employed by HSB CT of Connecticut have inspected the components described in this Owner's Report during the period 1-19-05 to 6-28-05, and state that to the best of my knowledge and belief, the Owner has performed examinations and taken corrective measures described in this Owner's Report in accordance with the requirements of the ASME Code, Section XI.

By signing this certificate neither the Inspector nor his employer makes any warranty, expressed or implied, concerning the examinations and corrective measures described in this Owner's Report. Furthermore, neither the Inspector nor his employer shall be liable in any manner for any personal injury or property damage or a loss of any kind arising from or connected with this inspection.

[signature] Commissions TN4011

Inspector's Signature National Board, State, Province, and Endorsements

Date 6/28 20 05

FORM NIS-2 OWNER'S REPORT FOR REPAIR/REPLACEMENT ACTIVITY
As Required by the Provisions of the ASME Code Section XI

1. Owner Tennessee Valley Authority (TVA) (Name)
1101 Market Street
Chattanooga, TN 37402-2801 (Address)

Date Junr 14, 2005

Sheet 1 of 1

2. Plant Browns Ferry Nuclear Plant (BFN) (Name)
P. O. Box 2000, Decatur, AL 35609-2000 (Address)

Unit 2

Work Orders (WO) 04-716165-000 and 04-716165-001
Engineering Documentation Change (EDC) 61548
Repair/Replacement Organization P.O. No., Job No., etc.

3. Work Performed by TVA-BFN (Name)
P. O. Box 2000, Decatur, AL 35609-2000 (Address)

Type Code Symbol Stamp N/A
Authorization No. N/A
Expiration Date N/A

4. Identification of System System 073, High Pressure Coolant Injection (HPCI) System (ASME Code Class 2 equivalent)

5. (a) Applicable Construction Code (valve) ASME Section III, 1986 thrrough 1995/1996, Class 2 (no N stamp) (piping) USAS B31.1.0 19 67 * Edition, N/A Addenda, N/A Code Case

(b) Applicable Edition of Section XI Utilized for Repairs or Replacements 19 95 Edition, 1996 Addenda

6. Identification of Components

Name of Component	Name of Manufacturer	Manufacturer Serial No.	National Board No.	Other Identification	Year Built	Corrected, Removed, or Installed	ASME Code Stamped (Yes or No)
HPCI/RCIC Aux Steam Drain Check Valve	Hancock	N/A	N/A	2-CKV-073-0629	N/A	Removed	No
HPCI/RCIC Aux Steam Drain Check Valve	Flowserve	99BAP	N/A	2-CKV-073-0629	1982	Installed	No
piping	unknown	N/A	N/A	N/A	N/A	Removed	No
piping	Consolidated Power Supply	N/A	N/A	N/A		Installed	No

7. Description of Work Replaced valve and some associated piping.

8. Tests Conducted: Hydrostatic ☐ Pneumatic ☐ Nominal Operating Pressure ☒** Exempt ☐
** - Ref. Code Case N-416-2
Other ☐ Pressure N/A psi Test Temp. N/A °F

NOTE: Supplemental Sheets in form of lists, sketches, or drawings may be used, provided (1) size is 8½ in. X 11 in., (2) information in items 1 through 6 on this report is included on each sheet, and (3) each sheet is numbered and the number of sheets is recorded at the top of this form.

*as amended by additional quality assurance requirements found in Contract 68C37-91602 and Design Criteria BFN-50-7073 and BFN-50-C-7105.

FORM NIS-2 (Back)

WID: Work Orders (WO) 04-716165-000 and 04-716165-001

9. Remarks Replaced valve and some associated piping.
Applicable Manufacturer's Data Reports to be attached

CERTIFICATE OF COMPLIANCE

I certify that the statements made in the report are correct and this conforms to the rules of the ASME Code, Section XI.

Type Code Symbol Stamp N/A

Certificate of Authorization No. N/A Expiration Date N/A

Signed [signature], System Engineer Date 6-14, 20 05
Owner or Owner's Designee, Title

CERTIFICATE OF INSERVICE INSPECTION

I, the undersigned, holding a valid commission issued by the National Board of Boiler and Pressure Vessel Inspectors and the State or Province of Tennessee and employed by HSB CT of Connecticut have inspected the components described in this Owner's Report during the period 1-19-05 to 6-20-05, and state that to the best of my knowledge and belief, the Owner has performed examinations and taken corrective measures described in this Owner's Report in accordance with the requirements of the ASME Code, Section XI.

By signing this certificate neither the Inspector nor his employer makes any warranty, expressed or implied, concerning the examinations and corrective measures described in this Owner's Report. Furthermore, neither the Inspector nor his employer shall be liable in any manner for any personal injury or property damage or a loss of any kind arising from or connected with this inspection.

[signature] Commissions TN4011
Inspector's Signature National Board, State, Province, and Endorsements

Date 6/20 20 05.

FORM NIS-2 OWNER'S REPORT FOR REPAIR/REPLACEMENT ACTIVITY
As Required by the Provisions of the ASME Code Section XI

1. Owner Tennessee Valley Authority (TVA) (Name) — Date June 14, 2005
   1101 Market Street
   Chattanooga, TN 37402-2801 (Address) — Sheet 1 of 1

2. Plant Browns Ferry Nuclear Plant (BFN) (Name) — Unit 2
   P. O. Box 2000, Decatur, AL 35609-2000 (Address) — Work Order (WO) 04-717654-000; Design Change Notice (DCN) 61629A (Repair/Replacement Organization P.O. No., Job No., etc.)

3. Work Performed by TVA-BFN (Name) — Type Code Symbol Stamp N/A
   P. O. Box 2000, Decatur, AL 35609-2000 (Address) — Authorization No. N/A
   Expiration Date N/A

4. Identification of System System 001, Main Steam System (ASME Code Class 1 equivalent)

5. (a) Applicable Construction Code USAS B31.1.0 19 67* Edition, N/A Addenda, N/A Code Case

   (b) Applicable Edition of Section XI Utilized for Repairs or Replacements 19 95 Edition, 1996 Addenda

6. Identification of Components

Name of Component	Name of Manufacturer	Manufacturer Serial No.	National Board No.	Other Identification	Year Built	Corrected, Removed, or Installed	ASME Code Stamped (Yes or No)
Main Steam Pipe Support	TVA	N/A	N/A	2-47B400S0006	N/A	Installed	No
Main Steam Pipe Support	TVA	N/A	N/A	2-47B400S0007	N/A	Installed	No

7. Description of Work Modified the connection between the 2" thick curved spaced plates and the supporting ring on the supports.

8. Tests Conducted: Hydrostatic ☐ Pneumatic ☐ Nominal Operating Pressure ☐ Exempt ☒
   Other ☐ Pressure N/A psi Test Temp. N/A °F

NOTE: Supplemental Sheets in form of lists, sketches, or drawings may be used, provided (1) size is 8½ in. X 11 in., (2) information in items 1 through 6 on this report is included on each sheet, and (3) each sheet is numbered and the number of sheets is recorded at the top of this form.

*as amended by additional quality assurance requirements found in AISC and Design Criteria BFN-50-7001, BFN-50-C-7105 and BFN-50-C-7107.

FORM NIS-2 (Back)

WID: 04-717654-000

9. Remarks Modified the connection between the 2" thick curved spaced plates and the supporting ring on the supports.
Applicable Manufacturer's Data Reports to be attached

CERTIFICATE OF COMPLIANCE

I certify that the statements made in the report are correct and this conforms to the rules of the ASME Code, Section XI.

Type Code Symbol Stamp N/A

Certificate of Authorization No. N/A Expiration Date N/A

Signed [signature], System Engineer Date 6-14, 20 05
Owner or Owner's Designee, Title

CERTIFICATE OF INSERVICE INSPECTION

I, the undersigned, holding a valid commission issued by the National Board of Boiler and Pressure Vessel Inspectors and the State or Province of Tennessee and employed by HSB CT of Connecticut have inspected the components described in this Owner's Report during the period 2/7/05 to 6/29/05, and state that to the best of my knowledge and belief, the Owner has performed examinations and taken corrective measures described in this Owner's Report in accordance with the requirements of the ASME Code, Section XI.

By signing this certificate neither the Inspector nor his employer makes any warranty, expressed or implied, concerning the examinations and corrective measures described in this Owner's Report. Furthermore, neither the Inspector nor his employer shall be liable in any manner for any personal injury or property damage or a loss of any kind arising from or connected with this inspection.

[signature] Commissions TN 4011
Inspector's Signature National Board, State, Province, and Endorsements

Date 6/29/ 20 05

FORM NIS-2 OWNER'S REPORT FOR REPAIR/REPLACEMENT ACTIVITY
As Required by the Provisions of the ASME Code Section XI

1. Owner Tennessee Valley Authority (TVA) (Name)
   1101 Market Street
   Chattanooga, TN 37402-2801 (Address)

   Date June 14, 2005

   Sheet 1 of 1

2. Plant Browns Ferry Nuclear Plant (BFN) (Name)
   P. O. Box 2000, Decatur, AL 35609-2000 (Address)

   Unit 2

   Work Orders (WO) 04-718364-000
   Design Change Notice (DCN) 51295B
   (Repair/Replacement Organization P.O. No., Job No., etc.)

3. Work Performed by TVA-BFN (Name)
   P. O. Box 2000, Decatur, AL 35609-2000 (Address)

   Type Code Symbol Stamp N/A
   Authorization No. N/A
   Expiration Date N/A

4. Identification of System System 068, Reactor Water Recirculation System (ASME Code Class 1 equivalent)

5. (a) Applicable Construction Code (piping system) USAS B31.1.0 19 67* Edition, N/A Addenda, N/A Code Case

   (b) Applicable Edition of Section XI Utilized for Repairs or Replacements 19 95 Edition, 1996 Addenda

6. Identification of Components

Name of Component	Name of Manufacturer	Manufacturer Serial No.	National Board No.	Other Identification	Year Built	Corrected, Removed, or Installed	ASME Code Stamped (Yes or No)
Support (Snubber) 2-47B408S006	Bergen-Patterson	TVA Serial # G003	N/A	2-SNUB-068-5009	N/A	Removed	Yes
Support (Snubber) 2-47B408S006	Pacific Scientific	5557	N/A	2-SNUB-068-5009	1994	Installed	Yes

7. Description of Work Modified the support and replaced the hydraulic snubber with a mechanical snubber.

8. Tests Conducted: Hydrostatic ☐ Pneumatic ☐ Nominal Operating Pressure ☐ Exempt ☐

   Other ☒** Pressure N/A psi Test Temp. N/A °F ** - See Remarks

NOTE: Supplemental Sheets in form of lists, sketches, or drawings may be used, provided (1) size is 8½ in. X 11 in., (2) information in items 1 through 6 on this report is included on each sheet, and (3) each sheet is numbered and the number of sheets is recorded at the top of this form.

*as amended by additional quality assurance requirements found in Contracts 79KA2-825011 and 94N75-108205-000 and Design Criteria BFN-50-7068 and BFN-50-C-7105.

FORM NIS-2 (Back)

9. Remarks WO 04-718364-000 - (2-SNUB-068-5009) -

Applicable Manufacturer's Data Reports to be attached

Modified the support and replaced the hydraulic snubber with a mechanical snubber.

The replacement snubber (5557) is a new snubber and was functionally tested per 2-SI-4.6.H-2A prior to installation.

CERTIFICATE OF COMPLIANCE

I certify that the statements made in the report are correct and this conforms to the rules of the ASME Code, Section XI.

Type Code Symbol Stamp N/A

Certificate of Authorization No. N/A Expiration Date N/A

Signed System Engineer Date 6-14 , 20 05

Owner or Owner's Designee, Title

CERTIFICATE OF INSERVICE INSPECTION

I, the undersigned, holding a valid commission issued by the National Board of Boiler and Pressure Vessel Inspectors and the State or Province of Tennessee and employed by HSB CT of Connecticut have inspected the components described in this Owner's Report during the period 3/23/05 to 6/20/05 , and state that to the best of my knowledge and belief, the Owner has performed examinations and taken corrective measures described in this Owner's Report in accordance with the requirements of the ASME Code, Section XI.

By signing this certificate neither the Inspector nor his employer makes any warranty, expressed or implied, concerning the examinations and corrective measures described in this Owner's Report. Furthermore, neither the Inspector nor his employer shall be liable in any manner for any personal injury or property damage or a loss of any kind arising from or connected with this inspection.

Inspector's Signature Commissions TN4011

National Board, State, Province, and Endorsements

Date 6/20 20 05

FORM NIS-2 OWNER'S REPORT FOR REPAIR/REPLACEMENT ACTIVITY
As Required by the Provisions of the ASME Code Section XI

1. Owner Tennessee Valley Authority (TVA) (Name)
1101 Market Street
Chattanooga, TN 37402-2801 (Address)

Date June 14, 2005

Sheet 1 of 1

2. Plant Browns Ferry Nuclear Plant (BFN) (Name)
P. O. Box 2000, Decatur, AL 35609-2000 (Address)

Unit 2

Work Orders (WO) 04-720057-000 and 04-720057-002
Design Change Notice (DCN) 61529A
Repair/Replacement Organization P.O. No., Job No., etc.

3. Work Performed by TVA-BFN (Name)
P. O. Box 2000, Decatur, AL 35609-2000 (Address)

Type Code Symbol Stamp N/A
Authorization No. N/A
Expiration Date N/A

4. Identification of System System 001, Main Steam System (ASME Code Class 1 equivalent)

5. (a) Applicable Construction Code (valve) ASME Sec. III, Class 1, 1995 Edition/1996 Addenda (no N stamp) (piping sys) USAS B31.1.0 19 67* Edition, N/A Addenda, N/A Code Case

(b) Applicable Edition of Section XI Utilized for Repairs or Replacements 19 95 Edition, 1996 Addenda

6. Identification of Components

Name of Component	Name of Manufacturer	Manufacturer Serial No.	National Board No.	Other Identification	Year Built	Corrected, Removed, or Installed	ASME Code Stamped (Yes or No)
Main Steam Line Drain Outer Isolation Valve	Velan Valve Corp. B10-7144B-02AA	932753	N/A	2-FCV-001-0056	1993	Removed	No
Main Steam Line Drain Outer Isolation Valve	Anchor Darling/ Flowserve	AX-376	N/A	2-FCV-001-0056	2005	Installed	No
piping	unknown	N/A	N/A	N/A	N/A	Removed	No
piping	Consolidated Power Supply	N/A	N/A	N/A	N/A	Installed	No

7. Description of Work Replaced valve and some associated pipe.

8. Tests Conducted: Hydrostatic ☐ Pneumatic ☐ Nominal Operating Pressure ☒** Exempt ☐
Other ☐ Pressure N/A psi Test Temp. N/A °F ** - ref. Code Case N-416-2

NOTE: Supplemental Sheets in form of lists, sketches, or drawings may be used, provided (1) size is 8½ in. X 11 in., (2) information in items 1 through 6 on this report is included on each sheet, and (3) each sheet is numbered and the number of sheets is recorded at the top of this form.

*as amended by additional quality assurance requirements found in Contract 68C37-91602 and Design Criteria BFN-50-7001 and BFN-50-C-7105.

FORM NIS-2 (Back)

WID: 04-720057-000 and 04-720057-002

9. Remarks Replaced valve and some associated pipe.
Applicable Manufacturer's Data Reports to be attached

CERTIFICATE OF COMPLIANCE

I certify that the statements made in the report are correct and this conforms to the rules of the ASME Code, Section XI.

Type Code Symbol Stamp N/A

Certificate of Authorization No. N/A Expiration Date N/A

Signed Stephen C. Willard, System Engineer Date 6-24, 20 05
Owner or Owner's Designee, Title

CERTIFICATE OF INSERVICE INSPECTION

I, the undersigned, holding a valid commission issued by the National Board of Boiler and Pressure Vessel Inspectors and the State or Province of Tennessee and employed by HSB CT of Connecticut have inspected the components described in this Owner's Report during the period 1/24/05 to 6/24/05, and state that to the best of my knowledge and belief, the Owner has performed examinations and taken corrective measures described in this Owner's Report in accordance with the requirements of the ASME Code, Section XI.

By signing this certificate neither the Inspector nor his employer makes any warranty, expressed or implied, concerning the examinations and corrective measures described in this Owner's Report. Furthermore, neither the Inspector nor his employer shall be liable in any manner for any personal injury or property damage or a loss of any kind arising from or connected with this inspection.

Inspector's Signature Commissions TN4011
National Board, State, Province, and Endorsements

Date 6/29 20 05

FORM NIS-2 OWNER'S REPORT FOR REPAIR/REPLACEMENT ACTIVITY
As Required by the Provisions of the ASME Code Section XI

1. Owner Tennessee Valley Authority (TVA) (Name)
1101 Market Street
Chattanooga, TN 37402-2801 (Address)

Date June 14, 2005

Sheet 1 of 1

2. Plant Browns Ferry Nuclear Plant (BFN) (Name)
P. O. Box 2000, Decatur, AL 35609-2000 (Address)

Unit 2

Work Orders (WO) 04-720786-000, 04-720786-002 and 04-720788-000
Design Change Notice (DCN) 63603
(Repair/Replacement Organization P.O. No., Job No., etc.)

3. Work Performed by TVA-BFN (Name)
P. O. Box 2000, Decatur, AL 35609-2000 (Address)

Type Code Symbol Stamp N/A
Authorization No. N/A
Expiration Date N/A

4. Identification of System System 006, Heater Drains and Vents System (ASME Code Class 2 equivalent)

5. (a) Applicable Construction Code (valves) ASME Sec III, Class 2 (no N stamp) (piping sys) USAS B31.1.0 19 67* Edition, N/A Addenda, N/A Code Case

(b) Applicable Edition of Section XI Utilized for Repairs or Replacements 19 95 Edition, 1996 Addenda

6. Identification of Components

Name of Component	Name of Manufacturer	Manufacturer Serial No.	National Board No.	Other Identification	Year Built	Corrected, Removed, or Installed	ASME Code Stamped (Yes or No)
Steam to SJAE A Drain valve	Handcock 5500W1XLM13	N/A	N/A	2-FCV-006-0113	N/A	Removed	No
Steam to SJAE A Drain valve	Flowserve Anchor Darling	27BAC	N/A	2-FCV-006-0113	2005	Installed	No
Steam to SJAE B Drain valve	Handcock 5500W1XLM13	N/A	N/A	2-FCV-006-0114	N/A	Removed	No
Steam to SJAE B Drain valve	Flowserve Anchor Darling	26BAC	N/A	2-FCV-006-0114	2005	Installed	No
piping	unknown	N/A	N/A	N/A	N/A	Removed	No
piping	Consolidated and Dubose	N/A	N/A	N/A	N/A	Installed	No

7. Description of Work Replaced valves and some associated piping

8. Tests Conducted: Hydrostatic ☐ Pneumatic ☐ Nominal Operating Pressure ☒** Exempt ☐
Other ☐ Pressure N/A psi Test Temp. N/A °F ** - ref. Code Case N-416-2

NOTE: Supplemental Sheets in form of lists, sketches, or drawings may be used, provided (1) size is 8½ in. X 11 in., (2) information in items 1 through 6 on this report is included on each sheet, and (3) each sheet is numbered and the number of sheets is recorded at the top of this form.

*as amended by additional quality assurance requirements found in Contract 68C37-91602 and Design Criteria BFN-50-7006 and BFN-50-C-7105.

FORM NIS-2 (Back)

WID: 04-720786-000, 04-720786-002 and 04-720788-000

9. Remarks Replaced valves and some associated piping
Applicable Manufacturer's Data Reports to be attached

CERTIFICATE OF COMPLIANCE

I certify that the statements made in the report are correct and this conforms to the rules of the ASME Code, Section XI.

Type Code Symbol Stamp N/A

Certificate of Authorization No. N/A Expiration Date N/A

Signed Stephen C. Wilhelm, System Engineer Date 6-20, 20 05
Owner or Owner's Designee, Title

CERTIFICATE OF INSERVICE INSPECTION

I, the undersigned, holding a valid commission issued by the National Board of Boiler and Pressure Vessel Inspectors and the State or Province of Tennessee and employed by HSB CT of Connecticut have inspected the components described in this Owner's Report during the period 3-27-05 to 6-21-05, and state that to the best of my knowledge and belief, the Owner has performed examinations and taken corrective measures described in this Owner's Report in accordance with the requirements of the ASME Code, Section XI.

By signing this certificate neither the Inspector nor his employer makes any warranty, expressed or implied, concerning the examinations and corrective measures described in this Owner's Report. Furthermore, neither the Inspector nor his employer shall be liable in any manner for any personal injury or property damage or a loss of any kind arising from or connected with this inspection.

Inspector's Signature Commissions TN 4011
National Board, State, Province, and Endorsements

Date 6-21 20 05

FORM NIS-2 OWNER'S REPORT FOR REPAIR/REPLACEMENT ACTIVITY
As Required by the Provisions of the ASME Code Section XI

1. Owner Tennessee Valley Authority (TVA) (Name)
1101 Market Street
Chattanooga, TN 37402-2801 (Address)

Date June 15, 2005

Sheet 1 of 1

2. Plant Browns Ferry Nuclear Plant (BFN) (Name)
P. O. Box 2000, Decatur, AL 35609-2000 (Address)

Unit 2

Work Order (WO) 05-713340-000
Repair/Replacement Organization P.O No., Job No., etc.

3. Work Performed by TVA-BFN (Name)
P. O. Box 2000, Decatur, AL 35609-2000 (Address)

Type Code Symbol Stamp N/A
Authorization No. N/A
Expiration Date N/A

4. Identification of System System 074, Residual Heat Removal (RHR) System (ASME Code Class 2 equivalent)

5. (a) Applicable Construction Code USAS B31.1.0 19 67 * Edition, N/A Addenda, N/A Code Case

(b) Applicable Edition of Section XI Utilized for Repairs or Replacements 19 95 Edition, 1996 Addenda

6. Identification of Components

Name of Component	Name of Manufacturer	Manufacturer Serial No.	National Board No.	Other Identification	Year Built	Corrected, Removed, or Installed	ASME Code Stamped (Yes or No)
RHR Systme I Supp Pool Spray/Test Isol Valve	Walworth	N/A	N/A	2-FCV-074-0057	N/A	‡	No
‡ - replaced valve disc							
valve disc	Walworth	N/A	N/A	2-FCV-074-0057	N/A	Removed	No
valve disc	Crane	D1015	N/A	2-FCV-074-0057	N/A	Installed	No

7. Description of Work Replaced valve disc.

8. Tests Conducted: Hydrostatic ☐ Pneumatic ☐ Nominal Operating Pressure ☒ Exempt ☐
Other ☐ Pressure N/A psi Test Temp. N/A °F

NOTE: Supplemental Sheets in form of lists, sketches, or drawings may be used, provided (1) size is 8½ in. X 11 in., (2) information in Items 1 through 6 on this report is included on each sheet, and (3) each sheet is numbered and the number of sheets is recorded at the top of this form.

*as amended by additional quality assurance requirements found in Contract 68C37-90744, GE P.O. 205-H0998, contract 16774 and Design Criteria BFN-50-7074 and BFN-50-C-7105.

FORM NIS-2 (Back)

WID: 05-713340-000

9. Remarks Replaced valve disc.

Applicable Manufacturer's Data Reports to be attached

CERTIFICATE OF COMPLIANCE

I certify that the statements made in the report are correct and this conforms to the rules of the ASME Code, Section XI.

Type Code Symbol Stamp N/A

Certificate of Authorization No. N/A Expiration Date N/A

Signed [signature], System Engineer Date 6-24, 20 05

Owner or Owner's Designee, Title

CERTIFICATE OF INSERVICE INSPECTION

I, the undersigned, holding a valid commission issued by the National Board of Boiler and Pressure Vessel Inspectors and the State or Province of Tennessee and employed by HSB CT of Connecticut have inspected the components described in this Owner's Report during the period 3/28/05 to 7/1/05, and state that to the best of my knowledge and belief, the Owner has performed examinations and taken corrective measures described in this Owner's Report in accordance with the requirements of the ASME Code, Section XI.

By signing this certificate neither the Inspector nor his employer makes any warranty, expressed or implied, concerning the examinations and corrective measures described in this Owner's Report.. Furthermore, neither the Inspector nor his employer shall be liable in any manner for any personal injury or property damage or a loss of any kind arising from or connected with this inspection.

[signature] Commissions TN 4011

Inspector's Signature National Board, State, Province, and Endorsements

Date 7/1 20 05

FORM NIS-2 OWNER'S REPORT FOR REPAIR/REPLACEMENT ACTIVITY
As Required by the Provisions of the ASME Code Section XI

1. Owner Tennessee Valley Authority (TVA) (Name)
   1101 Market Street
   Chattanooga, TN 37402-2801 (Address)

   Date June 15, 2005

   Sheet 1 of 1

2. Plant Browns Ferry Nuclear Plant (BFN) (Name)
   P. O. Box 2000, Decatur, AL 35609-2000 (Address)

   Unit 2

   Work Order (WO) 05-713699-000
   Repair/Replacement Organization P.O. No., Job No., etc.

3. Work Performed by TVA-BFN (Name)
   P. O. Box 2000, Decatur, AL 35609-2000 (Address)

   Type Code Symbol Stamp N/A

   Authorization No. N/A

   Expiration Date N/A

4. Identification of System System 074, Residual Heat Removal (RHR) System (ASME Code Class 2 equivalent)

5. (a) Applicable Construction Code USAS B31.1.0 19 67* Edition, N/A Addenda, N/A Code Case

   (b) Applicable Edition of Section XI Utilized for Repairs or Replacements 19 95 Edition, 1996 Addenda

6. Identification of Components

Name of Component	Name of Manufacturer	Manufacturer Serial No.	National Board No.	Other Identification	Year Built	Corrected, Removed, or Installed	ASME Code Stamped (Yes or No)
Drywell Spray Header pipe nipple	unknown	N/A	N/A	N/A	N/A	Removed	No
Drywell Spray Header pipe nipple	Consolidated Power Supply	N/A	N/A	N/A	2002	Installed	No

7. Description of Work Replace threaded pipe nipple damaged during disassembly

8. Tests Conducted: Hydrostatic ☐ Pneumatic ☐ Nominal Operating Pressure ☐ Exempt ☒

   Other ☐ Pressure N/A psi Test Temp. N/A °F

NOTE: Supplemental Sheets in form of lists, sketches, or drawings may be used, provided (1) size is 8½ in. X 11 in., (2) information in items 1 through 6 on this report is included on each sheet, and (3) each sheet is numbered and the number of sheets is recorded at the top of this form.

*as amended by additional quality assurance requirements found in Design Criteria BFN-50-7064, BFN-50-7074 and BFN-50-C-7105.

FORM NIS-2 (Back)

WID: 05-713699-000

9. Remarks Replace threaded pipe nipple damaged during disassembly

Applicable Manufacturer's Data Reports to be attached

CERTIFICATE OF COMPLIANCE

I certify that the statements made in the report are correct and this conforms to the rules of the ASME Code, Section XI.

Type Code Symbol Stamp N/A

Certificate of Authorization No. N/A Expiration Date N/A

Signed Stephen C. Wittwer, System Engineer Date 6-16, 20 05

Owner or Owner's Designee, Title

CERTIFICATE OF INSERVICE INSPECTION

I, the undersigned, holding a valid commission issued by the National Board of Boiler and Pressure Vessel Inspectors and the State or Province of Tennessee and employed by HSB CT of Connecticut have inspected the components described in this Owner's Report during the period 4/6/05 to 6/17/05, and state that to the best of my knowledge and belief, the Owner has performed examinations and taken corrective measures described in this Owner's Report in accordance with the requirements of the ASME Code, Section XI.

By signing this certificate neither the Inspector nor his employer makes any warranty, expressed or implied, concerning the examinations and corrective measures described in this Owner's Report. Furthermore, neither the Inspector nor his employer shall be liable in any manner for any personal injury or property damage or a loss of any kind arising from or connected with this inspection.

Inspector's Signature Commissions TN 4011

National Board, State, Province, and Endorsements

Date 6/17 20 05

FORM NIS-2 OWNER'S REPORT FOR REPAIR/REPLACEMENT ACTIVITY
As Required by the Provisions of the ASME Code Section XI

1. Owner Tennessee Valley Authority (TVA) (Name)
1101 Market Street
Chattanooga, TN 37402-2801 (Address)

Date June 15, 2005

Sheet 1 of 1

2. Plant Browns Ferry Nuclear Plant (BFN) (Name)
P. O. Box 2000, Decatur, AL 35609-2000 (Address)

Unit 2

Work Order (WO) 01-004739-000
Repair/Replacement Organization P.O. No., Job No., etc.

3. Work Performed by TVA-BFN (Name)
P. O. Box 2000, Decatur, AL 35609-2000 (Address)

Type Code Symbol Stamp N/A
Authorization No. N/A
Expiration Date N/A

4. Identification of System System 074, Residual Heat Removal (RHR) System (ASME Code Class 2 equivalent)

5. (a) Applicable Construction Code USAS B31.1.0 19 67* Edition, N/A Addenda, N/A Code Case

(b) Applicable Edition of Section XI Utilized for Repairs or Replacements 19 95 Edition, 1996 Addenda

6. Identification of Components

Name of Component	Name of Manufacturer	Manufacturer Serial No.	National Board No.	Other Identification	Year Built	Corrected, Removed, or Installed	ASME Code Stamped (Yes or No)
RHR Pump D Disch Ckeck Valve	Powell Valves 20" 3061WE		N/A	2-CKV-074-0559D	N/A	*	No
* - replaced valve disc							
valve disc	Powell Valves	N/A	N/A	N/A	N/A	Removed	No
valve disc	Powell Valves	1	N/A	N/A	2002	Installed	No

7. Description of Work Replaced valve disc

8. Tests Conducted: Hydrostatic ☐ Pneumatic ☐ Nominal Operating Pressure ☒ Exempt ☐
Other ☐ Pressure N/A psi Test Temp. N/A °F

NOTE: Supplemental Sheets in form of lists, sketches, or drawings may be used, provided (1) size is 8½ in. X 11 in., (2) information in items 1 through 6 on this report is included on each sheet, and (3) each sheet is numbered and the number of sheets is recorded at the top of this form.

*as amended by additional quality assurance requirements found in Contract 68C37-91602 and Design Criteria BFN-50-7074 and BFN-50-C-7105.

FORM NIS-2 (Back)

WID: 01-004739-000

9. Remarks Replaced valve disc

Applicable Manufacturer's Data Reports to be attached

CERTIFICATE OF COMPLIANCE

I certify that the statements made in the report are correct and this conforms to the rules of the ASME Code, Section XI.

Type Code Symbol Stamp N/A

Certificate of Authorization No. N/A Expiration Date N/A

Signed [signature], System Engineer Date 6-24, 20 05

Owner or Owner's Designee, Title

CERTIFICATE OF INSERVICE INSPECTION

I, the undersigned, holding a valid commission issued by the National Board of Boiler and Pressure Vessel Inspectors and the State or Province of Tennessee and employed by HSB CT. of Connecticut have inspected the components described in this Owner's Report during the period 3/31/05 to 7/1/05, and state that to the best of my knowledge and belief, the Owner has performed examinations and taken corrective measures described in this Owner's Report in accordance with the requirements of the ASME Code, Section XI.

By signing this certificate neither the Inspector nor his employer makes any warranty, expressed or implied, concerning the examinations and corrective measures described in this Owner's Report. Furthermore, neither the Inspector nor his employer shall be liable in any manner for any personal injury or property damage or a loss of any kind arising from or connected with this inspection.

[signature] Commissions TN4011

Inspector's Signature National Board, State, Province, and Endorsements

Date 7/1 20 05

FORM NIS-2 OWNER'S REPORT FOR REPAIR/REPLACEMENT ACTIVITY
As Required by the Provisions of the ASME Code Section XI

1. Owner Tennessee Valley Authority (TVA) (Name)
1101 Market Street
Chattanooga, TN 37402-2801 (Address)

Date June 16, 2005

Sheet 1 of 1

2. Plant Browns Ferry Nuclear Plant (BFN) (Name)
P. O. Box 2000, Decatur, AL 35609-2000 (Address)

Unit 2

Work Orders (WO) 03-004268-000 & 00-011219-001 and 03-004255-000 & 03-004245-001
Repair/Replacement Organization P.O. No., Job No., etc.

3. Work Performed by TVA-BFN (Name)
P. O. Box 2000, Decatur, AL 35609-2000 (Address)

Type Code Symbol Stamp N/A
Authorization No. N/A
Expiration Date N/A

4. Identification of System System 001, Main Steam System (ASME Code Class 1 equivalent)

5. (a) Applicable Construction Code ASME Section III, Article 9, 1965 and ASME Section III 19 68 Edition, Summer 1970 Addenda, N/A Code Case

(b) Applicable Edition of Section XI Utilized for Repairs or Replacements 19 95 Edition, 1996 Addenda

6. Identification of Components

Name of Component	Name of Manufacturer	Manufacturer Serial No.	National Board No.	Other Identification	Year Built	Corrected, Removed, or Installed	ASME Code Stamped (Yes or No)
Main Steam Relief Valve	Target Rock Corp. 7567F-000-10	1026	N/A	2-PCV-001-0179	1968	Removed	Yes
Main Steam Relief Valve	Target Rock Corp. 7567F-000-10	1015	N/A	2-PCV-001-0179	1968	Installed	Yes
Main Steam Relief Valve	Target Rock Corp. 7567F-000-10	1021	N/A	2-PCV-001-0005	1968	Removed	Yes
Main Steam Relief Valve	Target Rock Corp. 7567F-000-10	1070	N/A	2-PCV-001-0005	1968	Installed	Yes

7. Description of Work Replaced Main Steam Relief valve main bodies.
Replaced one bolt and 12 spline nuts on the 1015 valve body.

8. Tests Conducted: Hydrostatic ☐ Pneumatic ☐ Nominal Operating Pressure ☒ Exempt ☐
Other ☐ Pressure N/A psi Test Temp. N/A °F

NOTE: Supplemental Sheets in form of lists, sketches, or drawings may be used, provided (1) size is 8½ in. X 11 in., (2) information in items 1 through 6 on this report is included on each sheet, and (3) each sheet is numbered and the number of sheets is recorded at the top of this form.

*as amended by additional quality assurance requirements found in GE P. O. 205AJ600, and Design Criteria BFN-50-7001 and BFN-50-C-7105.

FORM NIS-2 (Back)

9. Remarks WOs 03-004268-000 & 00-011219-001 (2-PCV-001-0179)

Applicable Manufacturer's Data Reports to be attached

The main valve body was replaced with rebuilt valve body previously used on Unit 2 (same manufacturer/model number).

As a part of the Tech Spec required valve inspections WO 03-004268-000 replaced 2-PCV-001-0179 with a rebuilt valve previously used in BFN Unit 2 (2-PCV-001-0041, S/N 1015). The replacement valve was removed from Unit 2 by WO 00-011219-000 and refurbished by WO 00-011219-001. Valve body 1015 had a bolt and 12 spline nuts replaced under the refurbishment WO 00-011219-001. The bolt was replaced due to galling during disassembly and the nuts were replaced for ease of maintenance and ALARA considerations.

WOs 03-004255-000 & 03-004245-001 (2-PCV-001-0005)

The main valve body was replaced with rebuilt valve body previously used on Unit 3 (same manufacturer/model number).

As a part of the Tech Spec required valve inspections WO 03-004255-000 replaced 2-PCV-001-0179 with a rebuilt valve previously used in BFN Unit 3 (3-PCV-001-0005, S/N 1070). The replacement valve was removed from Unit 3 by WO 03-004245-000 and refurbished by WO 03-004245-001. Valve body 1070 had no replacements or repairs during the refurbishment of the valve.

CERTIFICATE OF COMPLIANCE

I certify that the statements made in the report are correct and this conforms to the rules of the ASME Code, Section XI.

Type Code Symbol Stamp N/A

Certificate of Authorization No. N/A Expiration Date N/A

Signed [signature], System Engineer (Owner or Owner's Designee, Title) Date 6-23, 20 05

CERTIFICATE OF INSERVICE INSPECTION

I, the undersigned, holding a valid commission issued by the National Board of Boiler and Pressure Vessel Inspectors and the State or Province of Tennessee and employed by HSB CT of Connecticut have inspected the components described in this Owner's Report during the period 4/30/03 to 6/28/05, and state that to the best of my knowledge and belief, the Owner has performed examinations and taken corrective measures described in this Owner's Report in accordance with the requirements of the ASME Code, Section XI.

By signing this certificate neither the Inspector nor his employer makes any warranty, expressed or implied, concerning the examinations and corrective measures described in this Owner's Report. Furthermore, neither the Inspector nor his employer shall be liable in any manner for any personal injury or property damage or a loss of any kind arising from or connected with this inspection.

[signature] (Inspector's Signature) Commissions TN4011 (National Board, State, Province, and Endorsements)

Date 6/28 20 05

FORM NIS-2 OWNER'S REPORT FOR REPAIR/REPLACEMENT ACTIVITY
As Required by the Provisions of the ASME Code Section XI

1. Owner Tennessee Valley Authority (TVA) (Name)
1101 Market Street
Chattanooga, TN 37402-2801 (Address)

Date June 17, 2005

Sheet 1 of 1

2. Plant Browns Ferry Nuclear Plant (BFN) (Name)
P. O. Box 2000, Decatur, AL 35609-2000 (Address)

Unit 2

Design Change Notice (DCN) 51644
Work Order (WO) 03-006432-000
Repair/Replacement Organization P.O No., Job No., etc.

3. Work Performed by TVA-BFN (Name)
P. O. Box 2000, Decatur, AL 35609-2000 (Address)

Type Code Symbol Stamp N/A
Authorization No. N/A
Expiration Date N/A

4. Identification of System System 073, High Pressure Coolant Injection (HPCI) System (ASME Code Class 2 equivalent)

5. (a) Applicable Construction Code USAS B31.1.0 19 67 * Edition, N/A Addenda, N/A Code Case

(b) Applicable Edition of Section XI Utilized for Repairs or Replacements 19 95 Edition, 1996 Addenda

6. Identification of Components

Name of Component	Name of Manufacturer	Manufacturer Serial No.	National Board No.	Other Identification	Year Built	Corrected, Removed, or Installed	ASME Code Stamped (Yes or No)
HPCI Test Flow Valve	Crane	CV-09018-8-1	N/A	2-FCV-073-0035	N/A	Removed	No
HPCI Test Flow Valve	Crane	CV-09018-9-1	N/A	2-FCV-073-0035	N/A	Installed	No
valve plug	Crane	N/A	N/A	2-FCV-073-0035	N/A	Removed	No
valve plug	Crane	N/A	N/A	2-FCV-073-0035	N/A	Installed	No

7. Description of Work Removed Unit 1 valve (same application, manufacturer and model), refurbished valve body and modified the trim. Installed that valve into Unit 2.

8. Tests Conducted: Hydrostatic ☐ Pneumatic ☐ Nominal Operating Pressure ☒** Exempt ☐
Other ☐ Pressure N/A psi Test Temp. N/A °F ** - ref. Code Case N-416-2

NOTE: Supplemental Sheets in form of lists, sketches, or drawings may be used, provided (1) size is 8½ in. X 11 in., (2) information in items 1 through 6 on this report is included on each sheet, and (3) each sheet is numbered and the number of sheets is recorded at the top of this form.

*as amended by additional quality assurance requirements found in GE P.O. 205-H0697, GE Spec 21A1047AK, Contract 68C37-91602 and Design Criteria BFN-50-7073 and BFN-50-C-7105.

FORM NIS-2 (Back)

WID: 03-006432-000

9. Remarks Removed Unit 1 valve 1-FCV-073-0035 (same application, manufacturer and model), refurbished valve body and modified the trim.
Applicable Manufacturer's Data Reports to be attached
Installed the refurbished Unit 1 valve into Unit 2.

CERTIFICATE OF COMPLIANCE

I certify that the statements made in the report are correct and this conforms to the rules of the ASME Code, Section XI.

Type Code Symbol Stamp N/A

Certificate of Authorization No. N/A Expiration Date N/A

Signed [signature], System Engineer Date 6-23, 20 05
Owner or Owner's Designee, Title

CERTIFICATE OF INSERVICE INSPECTION

I, the undersigned, holding a valid commission issued by the National Board of Boiler and Pressure Vessel Inspectors and the State or Province of Tennessee and employed by HSB CT of Connecticut have inspected the components described in this Owner's Report during the period 1/11/05 to 6/30/05, and state that to the best of my knowledge and belief, the Owner has performed examinations and taken corrective measures described in this Owner's Report in accordance with the requirements of the ASME Code, Section XI.

By signing this certificate neither the Inspector nor his employer makes any warranty, expressed or implied, concerning the examinations and corrective measures described in this Owner's Report. Furthermore, neither the Inspector nor his employer shall be liable in any manner for any personal injury or property damage or a loss of any kind arising from or connected with this inspection.

[signature] Commissions TN4011
Inspector's Signature National Board, State, Province, and Endorsements

Date 6/30 20 05

FORM NIS-2 OWNER'S REPORT FOR REPAIR/REPLACEMENT ACTIVITY
As Required by the Provisions of the ASME Code Section XI

1. Owner Tennessee Valley Authority (TVA) (Name)
1101 Market Street
Chattanooga, TN 37402-2801 (Address)

Date June 17, 2005

Sheet 1 of 1

2. Plant Browns Ferry Nuclear Plant (BFN) (Name)
P. O. Box 2000, Decatur, AL 35609-2000 (Address)

Unit 2

Work Order (WO) 04-711639-000
Repair/Replacement Organization P O No., Job No., etc.

3. Work Performed by TVA-BFN (Name)
P. O. Box 2000, Decatur, AL 35609-2000 (Address)

Type Code Symbol Stamp N/A
Authorization No. N/A
Expiration Date N/A

4. Identification of System System 001, Main Steam System (ASME Code Class 2 equivalent)

5. (a) Applicable Construction Code USAS B31.1.0 19 67* Edition, N/A Addenda, N/A Code Case

(b) Applicable Edition of Section XI Utilized for Repairs or Replacements 19 95 Edition, 1996 Addenda

6. Identification of Components

Name of Component	Name of Manufacturer	Manufacturer Serial No.	National Board No.	Other Identification	Year Built	Corrected, Removed, or Installed	ASME Code Stamped (Yes or No)
2C RFPT HP Steam Stop Valve			N/A	2-FCV-001-0143	N/A	‡	No
‡ - replaced valve disc							
valve disc		N/A	N/A	2-FCV-001-0143	N/A	Removed	No
valve disc		N/A	N/A	2-FCV-001-0143	N/A	Installed	No

7. Description of Work Replaced valve disc

8. Tests Conducted: Hydrostatic ☐ Pneumatic ☐ Nominal Operating Pressure ☒ Exempt ☐
SCL 6-22-05
Other ☐ Pressure N/A psi Test Temp. N/A °F 06/23/05

NOTE: Supplemental Sheets in form of lists, sketches, or drawings may be used, provided (1) size is 8½ in. X 11 in., (2) information in Items 1 through 6 on this report is included on each sheet, and (3) each sheet is numbered and the number of sheets is recorded at the top of this form.

*as amended by additional quality assurance requirements found in VTM G080-6870 and Design Criteria BFN-50-7001 and BFN-50-C-7105.

FORM NIS-2 (Back)

WID: 04-711639-000

9. Remarks Replaced valve disc

Applicable Manufacturer's Data Reports to be attached

CERTIFICATE OF COMPLIANCE

I certify that the statements made in the report are correct and this conforms to the rules of the ASME Code, Section XI.

Type Code Symbol Stamp N/A

Certificate of Authorization No. N/A Expiration Date N/A

Signed [signature], System Engineer Date 6-22, 20 05

Owner or Owner's Designee, Title

CERTIFICATE OF INSERVICE INSPECTION

I, the undersigned, holding a valid commission issued by the National Board of Boiler and Pressure Vessel Inspectors and the State or Province of Tennessee and employed by HSB CT of Connecticut have inspected the components described in this Owner's Report during the period 3/24/05 to 6/23/05, and state that to the best of my knowledge and belief, the Owner has performed examinations and taken corrective measures described in this Owner's Report in accordance with the requirements of the ASME Code, Section XI.

By signing this certificate neither the Inspector nor his employer makes any warranty, expressed or implied, concerning the examinations and corrective measures described in this Owner's Report. Furthermore, neither the Inspector nor his employer shall be liable in any manner for any personal injury or property damage or a loss of any kind arising from or connected with this inspection.

[signature] Commissions TN 4011

Inspector's Signature National Board, State, Province, and Endorsements

Date 6/23 20 05