GENERAL

Smart metals
MOUNTING SOLUTIONS

PRODUCT CATALOGUE

Innovative mounting solutions for projectors, flat panels & whiteboards

WELCOME

You just opened our General Catalogue

This catalogue is all about every SmartMetals' mounting solution for any installation purpose. Specific solutions for rental and educational purposes are also covered in separate catalogues mentioned below. All catalogues are downloadable from smartmetals.nl/downloads. For a paper copy simply ask the SmartMetals Team.

Rental Catalogue

Our Rental catalogue covers all mounting solutions for rental purposes.

Education Catalogue

In this catalogue we have collected all mounting solutions suitable for the education market.

Index

TABLE OF CONTENTS

Product Catalogue 2020 - 2021

GENERAL

Prologue 4
Introduction 6

FIXED INSTALLATION

FLAT PANEL

FLAT PANEL - WALL MOUNTS 8
VESA Wall Mounts 10
Universal Wall Mounts 12
Panasonic Brackets 17

FLAT PANEL - CEILING MOUNTS 18
CEILING MOUNTS:
For flat panels max. 32 inch, 10 kg 18
Heavy Duty Series 20
Heavy Duty Series with VESA bracket 21

FLAT PANEL - STANDS & TROLLEYS 24
Desk Stand 26
Design Stand 27
Light Series Stands & Trolleys 28
Heavy Duty Series Stands & Trolleys 30
Heavy Duty Series Stands & Trolleys - back to back 32
Heavy Duty Series Stands & Trolleys - stage 34

FLAT PANEL - INSTALLATION SERIES 36
Stands and trolleys 37
Floor to wall/ceiling mounted columns 38
Videoconferencing columns 39

FLAT PANEL - BUSINESS STANDS & TROLLEYS 40
Static stand and trolleys 41
Electrical stand and trolleys, max. 86 inch 42
Electrical stand and trolley, max. 98 inch 43
Electrical mobile VideoWall 44

FLAT PANEL - LIFT SYSTEMS 46
MANUAL LIFT SYSTEMS 48
ELECTRICAL LIFT SYSTEMS:
Floor supported & wall mounted 50
Floor & wall mounted 51

Wall mounted 52
Freestanding on floor 54
On wheels 56
On wheels with table & tip function 62
Cabinet mounted 64

FLAT PANEL - FLOOR CEILING WALL COLUMNS 66
Floor Columns 67
Floor to wall Columns 68
Floor to ceiling Columns 69
Floor Mounts 70

FLAT PANEL - VIDEOCONFERENCING 74
Trolleys for 1 flat panel 74
Trolleys for 2 flat panels 76
Floor to wall columns 77
Furniture 79

FLAT PANEL - VIDEOWALLS 80
The components of a wall mounted VideoWall 81
VIDEOWALLS WALL MOUNTED 82
Wall mounted configurations 83
VIDEOWALLS FLOOR MOUNTED 84
VideoWall 1: Free standing configurations 85
VideoWall 2: Fixed floor configurations 86
VideoWall 3: Fixed floor + wall configurations 87
VideoWall 4: Fixed floor + ceiling configurations 88
VideoWall 5: Mobile open frame configurations 89
VideoWall 6: Mobile closed frame configurations 90
Ceiling mounted Lightweight VideoWall 92

FLAT PANEL - KIOSKS & HOUSINGS 96
IPad Stands & Housings 97
HOUSINGS:
For indoor use 98
For outdoor use - flat panels up to 700 cd 99
For outdoor use - flat panels up to 2500 cd 100
TouchTable 101
Kiosks 102

FLAT PANEL - BRAND RELATED SOLUTIONS 104
Samsung OMN-D mounting 104

(O)LED

LED & CURVED OLED MOUNTING 106

PROJECTOR

PROJECTOR - WALL MOUNTS 108
Universal wall mounts 108
Projector-specific wall mounts 109
Short throw wall mounts 110

PROJECTOR - CEILING MOUNTS 112
Lightweight Ceiling Mounts including bracket 113
Lightweight Ceiling Mounts including bracket 114
Lightweight Ceiling Mounts excluding bracket 115
Lightweight Ceiling Mounts excluding bracket 116
Lightweight Ceiling Mounts fine adjustment 117

PROJECTOR - HOUSINGS 120
Universal Projector Housing 121

(INTERACTIVE) WHITEBOARD

(INTERACTIVE) WHITEBOARD - LIFT SYSTEMS 122
(Interactive) whiteboard lift systems floor mounted 123
(Interactive) whiteboard lift systems on wheels 125

SPECIALS

CUSTOM MADE SOLUTIONS 126
Inspiration: 27x3 LED wall in control room environment. 128
Inspiration: Flat panel FoldUp Lift in an atelier 130
Inspiration: 5x4 2 sided VideoWall in public venue 132
Inspiration: Flat panel kiosks in retail 134
Inspiration: Easy to install LED wall solutions 136

DIGITAL SIGNAGE 138

RENTAL

FLAT PANEL

FLAT PANEL - WALL-TRUSS MOUNTS 144

FLAT PANEL - STANDS & TROLLEYS 146
Light Series Stands & Trolleys 148
Heavy Duty Series Stands & Trolleys 150
Heavy Duty Series Stands & Trolleys back to back 152
Stage Stands, Light and Heavy Duty Series 154
Smart Screen Hoister with flightcase 156

FLAT PANEL - VIDEOWALLS 160
VideoWalls freestanding on the floor 161

FLAT PANEL - BRACKETS 162
With three point coupling 162
Direct mounted bracket 167

PROJECTOR

PROJECTOR - TRUSS MOUNTS 168
Truss mounts with ball joint 169
Lightweight Truss Mounts with fine adjustment 170
Heavy Duty Truss Mounts with fine adjustment 171

PROJECTOR - STACK FRAMES 174
Small Series 175
Medium Series 176
Large Series 177

PROJECTOR - FLOOR STAND 178

AV MOUNTING **MADE SMART**

What once started as a graduation assignment from only one student in Industrial Engineering & Management is now a thriving company with 50+ employees, dedicated to develop smart mounting solutions for the professional AV market.

There is more to our mounts than just metal:
we supply not just any piece of metal to mount your valuable audiovisual and multi media equipment to, we supply smart mounting solutions made of metals: *"SmartMetals Mounting Solutions".*

Smart does not only apply to the functionality of our products, smart also applies to the way we work. By closely following the evolutions and needs of the audiovisual market, listening to and closely working together with our customers we stay ahead of the game.

We take great pride in the fact that all our products, from standard to custom-made, are of Dutch design. Developed in house and manufactured in the Netherlands. Our products distinguish themselves in quality, ease of use and functionality.

Despite the fact we have grown into a prominent international supplier it does not mean we have forgotten where we came from: underneath the shimmering successes we remain simple humans. We care. Not just about making innovative products but above everything we care about you and your business.

All team members of

The SmartMetals Team

ABOUT US

SmartMetals explained

SmartMetals Mounting Solutions is one of the leading international suppliers of audiovisual mounting solutions. Established and based in the Netherlands, we deliver high quality solutions for professionals.
Resources devoted to R&D translate in great responsiveness in the development of innovative products, closely following the evolutions and needs of the audiovisual market and offering quality in design.

Our complete product range includes fixed and mobile mounting solutions, motorized or manually in height adjustable or on a fixed height for projectors, flat screens and whiteboards. We offer a free warranty of 5 years on all our products.

Last but not least we develop custom made solutions for audiovisual installation, including flat panel housings and kiosks, for indoor and outdoor use.

WHY CHOOSE US?

Quality & Functionality

Our goal is to reach true functionality in all our products by combining innovative product design with high quality materials and craftsmanship.

Flexibility & Innovation

We respond to our customers' requests in a flexible way and timely manner.
Developing and improving our products and services is a dynamic and continuous process.

Quick & easy installation

All our products are designed to ensure quick and trouble-free installation in any environment.

Honest business

We believe in honesty. We believe in caring. We treat our customers, partners, suppliers as well as our employees the way we would want them to treat us. As simple as that.

Just because you don't find it, doesn't mean we don't have it.

We have all sorts of smart mounting solutions, ranging from standard to customised to completely custom-made ones. Not every project benefits from our standard solutions, nor does every customer settle for standard. When you are involved in a project where demands go beyond what our standard products have to offer, please contact us:
We hear what you ask, listen to what you need and supply you with a solution that embodies just that.

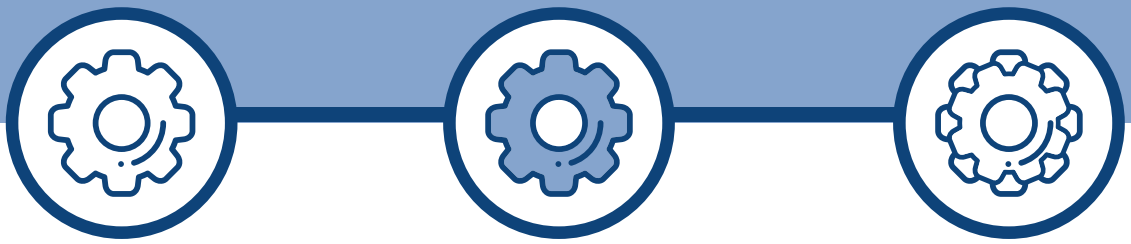

STANDARD

We have a vast product range as presented to you in this catalogue: all standard mounting solutions for your flat panels, projectors and whiteboards, usually available from stock or within a few days after order.

CUSTOMISED

When you require a slight deviation of our standard product, like for example an other colour or an other length, we happily customise our standard product to meet your wishes.

CUSTOM-MADE

Although you have taken inspiration from our standard product range, you want something totally different. It is our pleasure to develop a custom-made product for you to accommodate your needs perfectly.

FROM CONCEPT TO COMPLETION

STEP 1
Product request.

You contact us with your request for a custom-made product. Together we determine product requirements and we provide you with an offer. Upon order we move on to the next step.

STEP 2
Specification drawing.

After order we will convert your demand and, if any, concept drawing into a detailed specification drawing. Upon presentation you check details and we will process minor changes if any. When you are satisfied with the results, you give us your approval for production.
Process duration: 1-2 weeks

STEP 3
Production.

Materials are purchased. Individual make parts are produced after which they are subjected to a provisional quality check.
Process duration: 2-4 weeks

STEP 4
Finishing and assembly.

All manufactured metal make parts are galvanized or powder coated after which they are subjected to yet again a quality check. Then assembly starts followed by final testing the end-product. Remains only packing before collection by you or the carrier.
Process duration: 1-2 weeks

Easy install, safe use

The SmartMetals range of flat panel wall mounts is extensive. Suitable for landscape and portrait positioning of flat panels with a maximum weight of 160 kg.

Installation is a breeze as all mounts are supplied including mounting materials for the flat panel. And since safety and security come first (both people and properties need to be kept safe), we made securing your installation easy: simply lock the safety bar with a padlock.

The 052.xxxx Series wall mounts, except for the 052.1200 project wall mount, are part of our modular system. With the 170 x 140 mounting pattern they combine perfectly with for example our floor stands and ceiling mounts.

WALL MOUNTS

Benefits & Applications

✓ Anti-theft

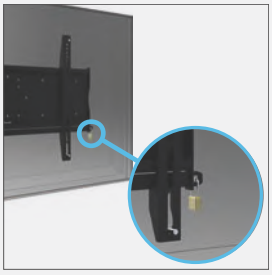

✓ Minimal depth

✓ Tiltable

✓ Landscape & portrait

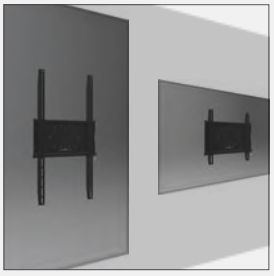

Modular designed to offer multiple application options

WALL

Easily install your flat panel to the wall. We offer models for landscape and for portrait use. All models can be secured with a pad lock.

WEAK WALL

In case a wall is too weak to install a flat panel and wall mount and space is too limited to place a floor stand the solution is a floor to wall stand. The floor supports the weight of the monitor in this case instead of the wall.
The maximum load of the stand head is 100 kg.

CEILING

It is possible to mount all VESA and universal screen mounts to the ceiling by using SmartMetals tube sets. The tube sets are available in three standard lengths which can be shortened on location. One or two flat screens (on top of one another or back-to-back) can be mounted to the tubes.

FLOOR

To install a flat panel on the floor you combine a wall mount and floor stand.
We offer two types of flat panel wall mount: with a three-point-coupling mounting system, ideal for rental purposes (see our rental catalogue) or a 170 x 140 mm mounting system for fixed installations.

VESA WALL MOUNTS

VESA WALL MOUNT, MAX. 200 x 100

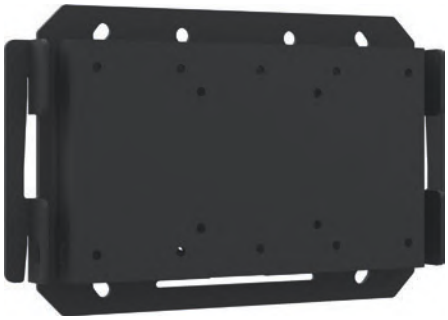

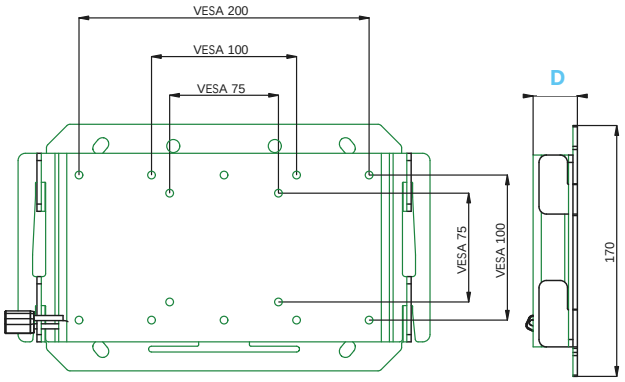

Article code	Tilt function	Depth (D)
052.3000	-	30 mm
052.3050	+13° / -13°	70 mm

Colour	●
Max. load	40 kg
Position	Landscape
VESA	75 x 75, 100 x 100, 200 x 100
Accessories	See page 15
Note	170 x 140 modular mounting

VESA WALL MOUNT, MAX. 200 x 200

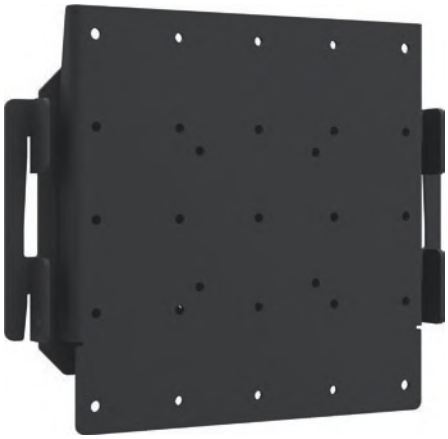

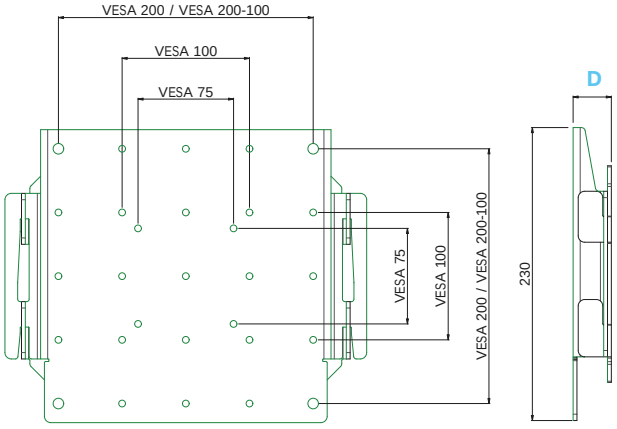

Article code	Tilt function	Depth (D)
052.4000	-	27 mm
052.4050	+13° / -13°	70 mm

Colour	●
Max. load	50 kg
Position	Landscape
VESA	75 x 75, 100 x 100, 00 x 100, 200 x 200
Accessories	See page 15
Note	170 x 140 modular mounting

WALL MOUNT FOR TOUCH SCREEN (& 152.0110, 152.0120)

This wall mount for touch screens easily combines with the whiteboard mounting kit further below on this page to create a five surface solution.

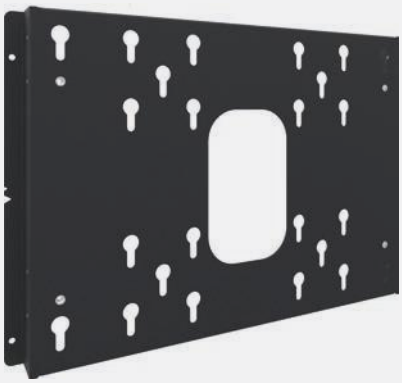

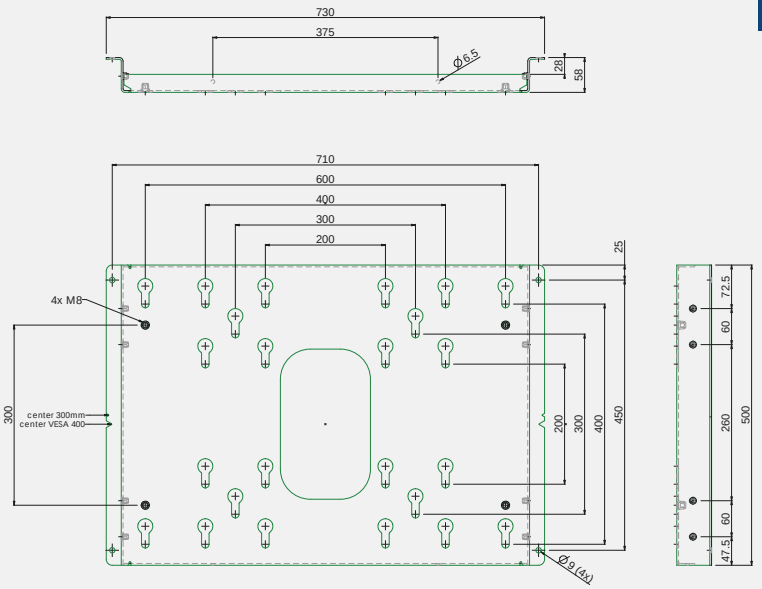

Article code
152.0010

	Colour	●
KG	**Max. load**	150 kg
	Position	Landscape
	VESA	Max. 600 x 400

Accessories 152.0010

KEYBOARD SUPPORT

Use this keyboard support in combination with flat panels of maximum 70 inch.

Article code
063.7240

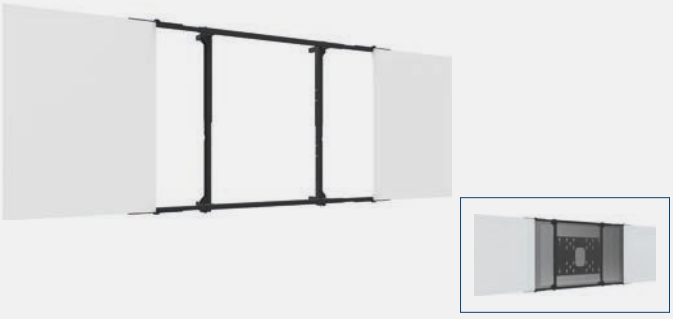

MOUNTING KIT INCL. WHITEBOARDS

Our whiteboard mounting kits come with enamel or laquered steel whiteboards custom-made for your touch screen or (interactive) whiteboard model. Markers do not leave stains on enamel steel, in contrast to lacquered steel, and we offer a 25 years warranty on the surface of an enamel steel whiteboard.

Article code	Description
152.0110-ES	Kit incl. whiteboards enamel steel for touch screen 55-70 inch, max. 1750mm x 1050mm (LxH)
152.0110-LS	Kit incl. whiteboards lacquered steel for touch screen 55-70 inch, max. 1750mm x 1050mm (LxH)
152.0120-ES	Kit incl. whiteboards enamel steel for touch screen 70-86 inch, max. 2050mm x 1250mm (LxH)
152.0120-LS	Kit incl. whiteboards lacquered steel for touch screen 70-86 inch, max. 2050mm x 1250mm (LxH)

UNIVERSAL WALL MOUNTS

UNIVERSAL WALL MOUNT, MAX. 446 x 400 MM

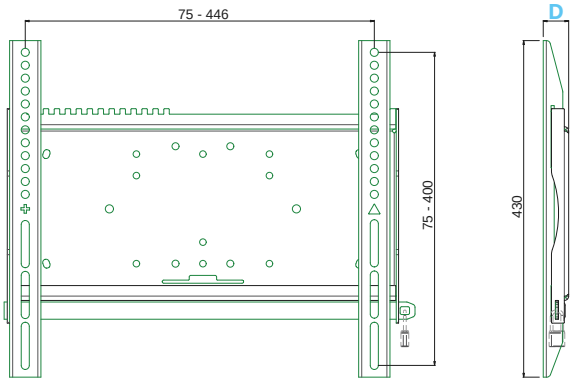

Article code	Tilt function	Depth (D)
052.1000	-	33 mm
052.1050	+12° / -12°	75 mm

Colour	●
Max. load	125 kg
Position	Landscape
VESA	Max. 400 x 400
Accessories	See page 15
Note	170 x 140 modular mounting

UNIVERSAL WALL MOUNT, MAX. 816 x 480 MM

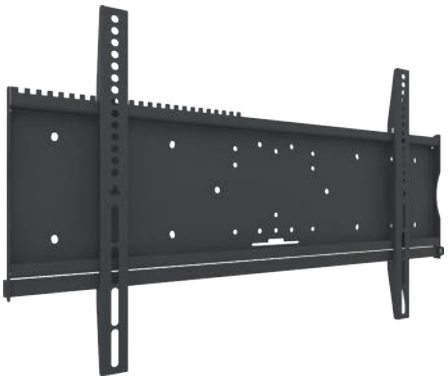

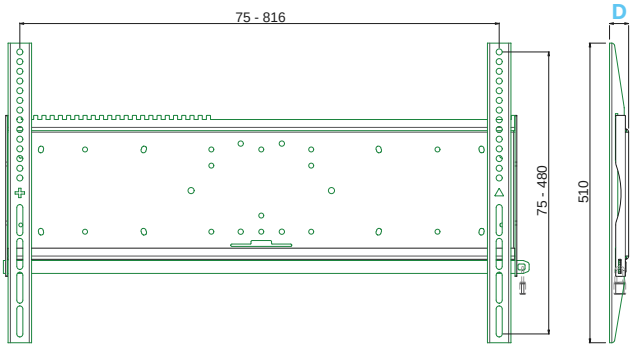

Article code	Tilt function	Depth (D)
052.2000	-	33 mm
052.2050	+12° / -12°	75 mm

Colour	●
Max. load	125 kg
Position	Landscape
VESA	Max. 800 x 400
Accessories	See page 15
Note	170 x 140 modular mounting

UNIVERSAL WALL MOUNT, MAX. 812 x 600 MM

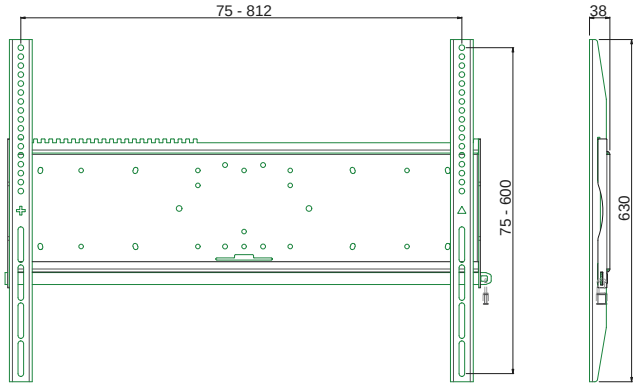

Article code
052.2010

Colour	●
Max. load	125 kg
Position	Landscape
VESA	Max. 800 x 600
Accessories	See page 15
Note	170 x 140 modular mounting

UNIVERSAL WALL MOUNT, MAX. 1110 x 600 MM

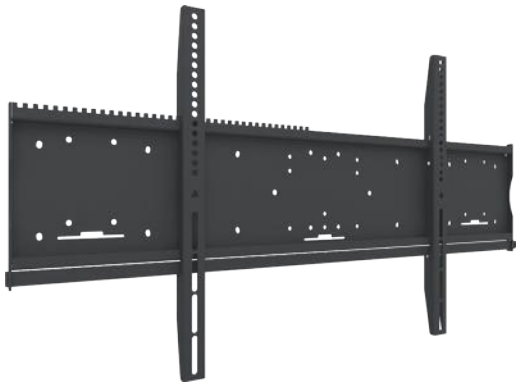

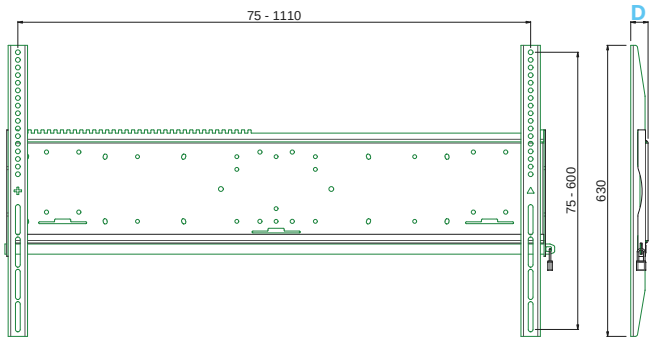

Article code	Tilt function	Depth (D)	Max. load
052.6000	-	38.0 mm	160 kg
052.6050	+12° / -12°	87.5 mm	120 kg

Colour	●
Max. load	160 / 120 kg
Position	Landscape
VESA	Max. 1000 x 600
Accessories	See page 15
Note	170 x 140 modular mounting

UNIVERSAL WALL MOUNTS

UNIVERSAL WALL MOUNT, MAX. 1244 x 600 MM

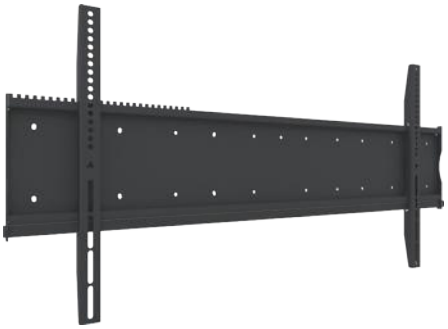

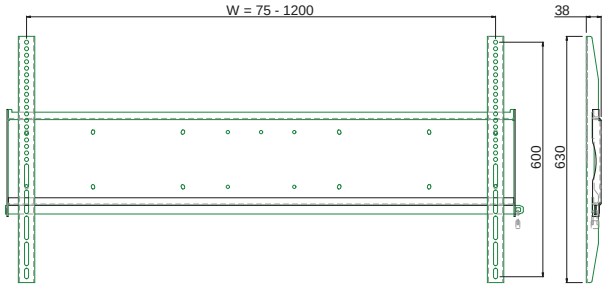

Article code
052.6100

Colour	●
Max. load	160 kg
Position	Landscape
VESA	Max. 1200 x 600
Accessories	See page 15
Note	170 x 140 modular mounting

UNIVERSAL WALL MOUNT, MAX. 1244 x 800 MM

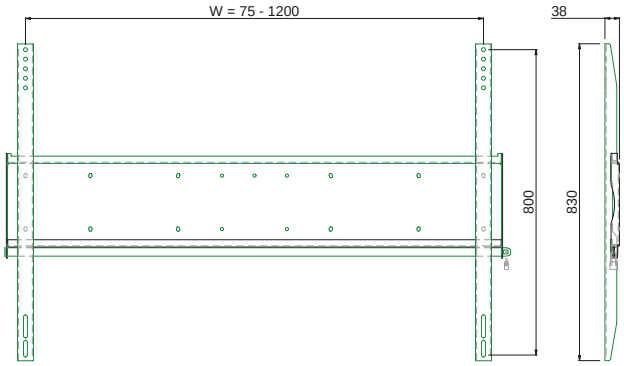

Article code
052.6200

Colour	●
Max. load	160 kg
Position	Landscape
VESA	Max. 1200 x 800
Accessories	See page 15
Note	170 x 140 modular mounting

UNIVERSAL WALL MOUNT, MAX. 444 x 600/900 MM

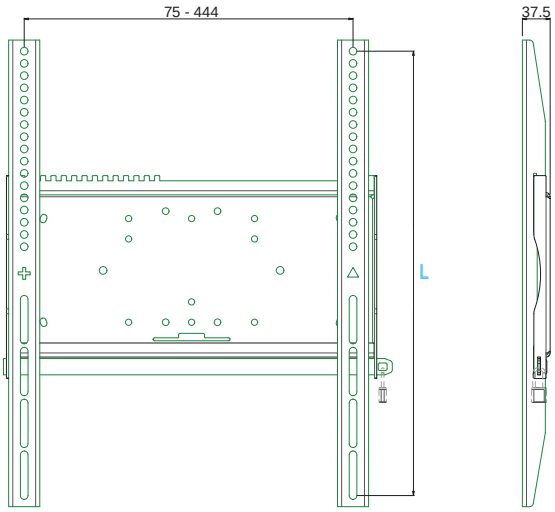

Colour	●
Max. load	125 kg
Position	Portrait
VESA	Max. 400 x 600
Accessories	See page 15
Note	170 x 140 modular mounting

Article code	Length (D)
052.1010	600 mm
052.1040	900 mm

Accessories wall mounts

PADLOCK

Padlock 20 mm for use in combination with universal wall mounts.
Secure your monitor by locking the security bar with this padlock.

Article code
000.0001

PORTRAIT MOUNTING BARS VESA 400 FOR 052.4000

Combine these mounting bars with your 052.4000 VESA wall mount when your flat panel has VESA 400 x 200.

Article code
052.4010

PORTRAIT MOUNTING BARS, MAX. H=900MM

Add these universal portrait mounting bars to your universal wall mount to install your flat panel in portrait position

Article code
052.6004

UNIVERSAL WALL MOUNTS

Project wall mount

COST EFFICIENT

Our project wall mounts, like all other wall mounts, are easy to use and install flat panels with a maximum weight of 75 kg. Particularly interesting is its budget friendly price.

This wall mount falls outside our modular system lacking the specific 170 x 140 mounting pattern neccessary for combination with our floor stands, ceiling mounts and other products.

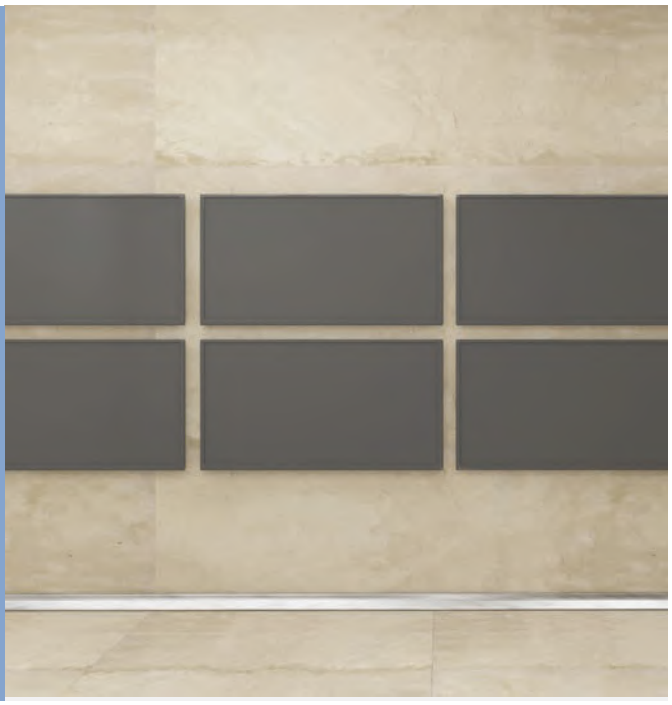

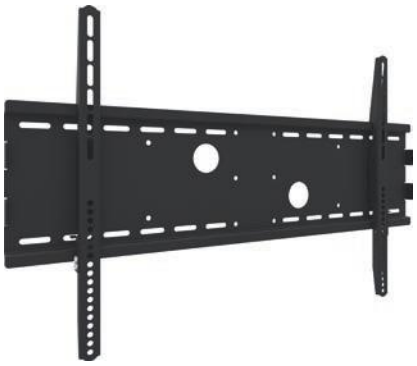

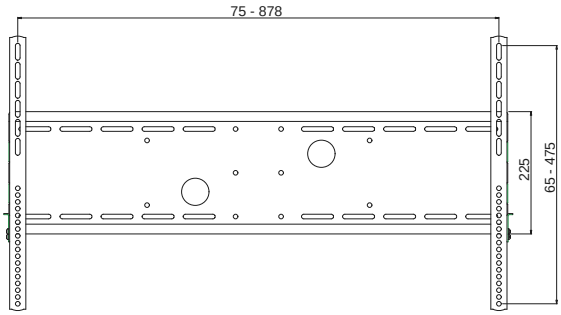

052.1200

Project wall mount: max. 878 x 475 mm

Colour	●
Max. load	75 kg
Position	Landscape
VESA	800 x 400

PANASONIC BRACKETS

MONITOR BRACKET PANASONIC TH-84LQ70W AND TH-98LQ70LW

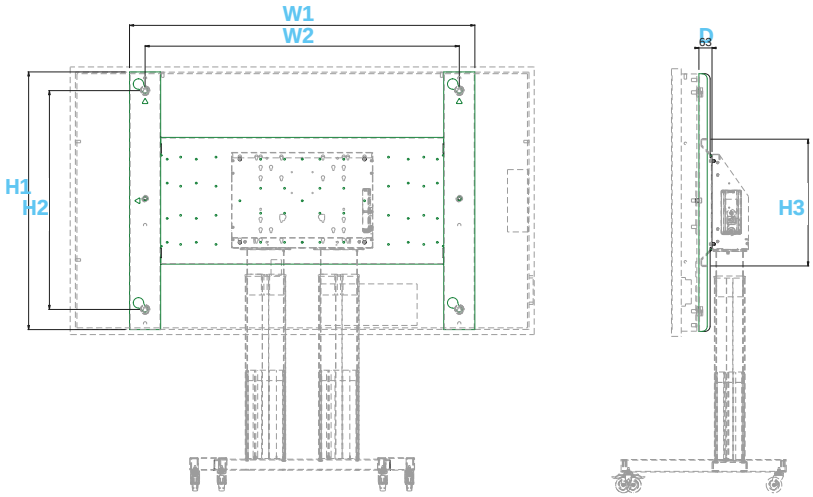

Colour	●
Max. load	125 kg
Position	Landscape & Portrait
VESA	Max. 600 x 400
Note	- 4x 170 x 140 modular mounting - For **wall mounting** Panasonic requires space between wall and monitor of at least 120 mm. The PAN.xxLQ bracket therefore ought **to be combined with the 152.0010** wall mount (see page 11).

Article code	Width 1 (W1)	Width 2 (W2)	Height 1 (H1)	Height 2 (H2)	Height 3 (H3)	Depth (D)
PAN.84LQ	1380 mm	1230 mm	1050 mm	888 mm	610 mm	63 mm
PAN.98LQ	1662 mm	1512 mm	1240 mm	1053 mm	610 mm	63 mm

CEILING MOUNTS

For flat panels max. 32 inch, 10 kg

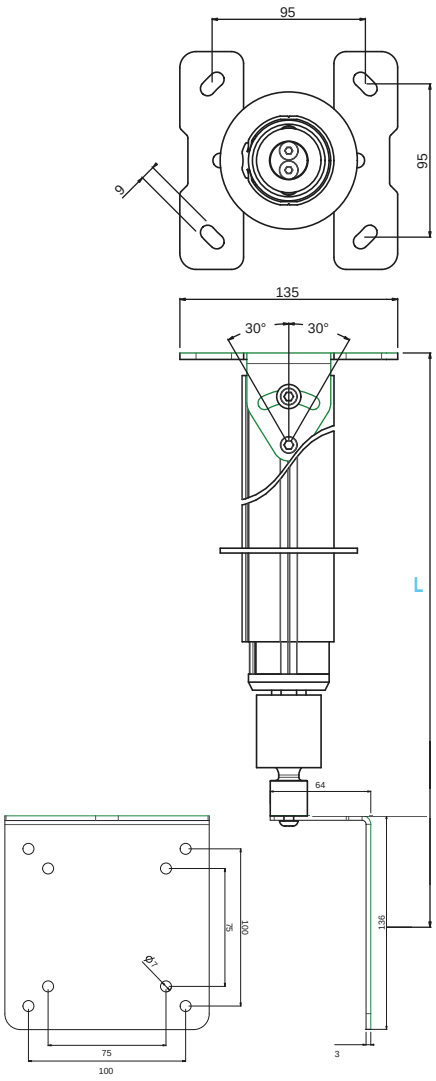

CEILING MOUNT VESA 75/100

Mount your flat panel up to 32 inch to the ceiling by combining a ceiling mount from the L3-L5 range with VESA 75/100 bracket, 003.2100.

Colours	◐
Max. load	10 kg
Max. inch	32 inch
Position	Landscape & Portrait
VESA	75, 100

Combine

ADJUSTABLE TUBE SET L3-L5

Article code	Length (L) (centre VESA)
002.2050 L3	466 - 635 mm
002.2060 L4	666 - 975 mm
002.2070 L5	1002 - 1625 mm

VESA 75/100 BRACKET

Article code
003.2100

A clear view for everyone

When your wall space is limited or the wall is too weak for mounting, you may want to consider a ceiling mount.
Ceiling mounting your flat panel with the SmartMetals Ceiling Mount Series offers a clear view for everyone in the room.

All models are telescopically adjustable in height and rotatable -90° - +90° and the ones with VESA bracket are tiltable max. 15° as well. Cables can run through the cable duct all the way up into the supplied ceiling rose or into the suspended ceiling which is neatly finished with the included ceiling finishing ring.

The biggest benefit of this range is the saving of precious installation time due to the telescopic adjustment for a price where others offer you a cuttable fixed length.

CEILING MOUNTS

Heavy Duty Series

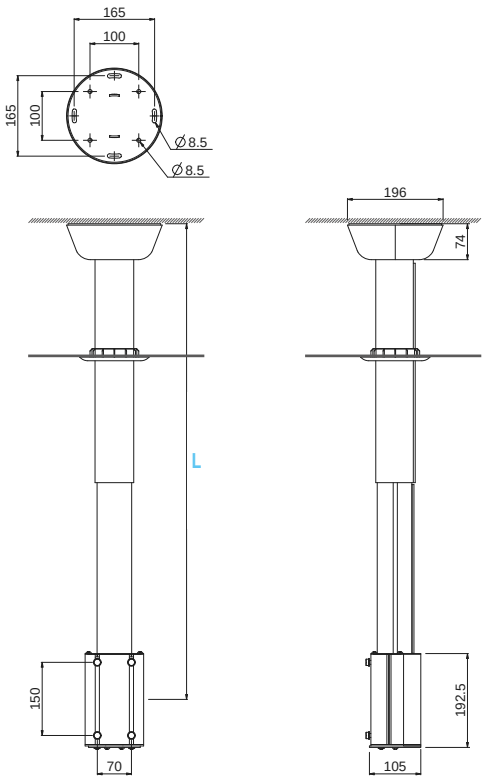

CEILING MOUNT

Telescopically adjustable and rotatable from -90° to +90°. Supplied including ceiling rose for architectural ceiling and ceiling finishing ring for a suspended ceiling. Please add a universal wall mount (which at the same time serves as a monitor bracket) to mount your flat panel to the tube set.

Colours	○●
Max. load	80 kg
Max. inch	70 inch
Position	Landscape & Portrait
Note	170 x 140 modular mounting
Required	Universal wall mount, see page 9

Article code	Colour	Length (L) (centre VESA)
072.3100B	Black	625 - 975 mm
072.3100W	White	625 - 975 mm
072.3150B	Black	890 - 1475 mm
072.3150W	White	890 - 1475 mm
072.3250B	Black	1450 - 2475 mm
072.3250W	White	1450 - 2475 mm
072.3300B	Black	1950 - 2975 mm
072.3300W	White	1950 - 2975 mm

Accessory

BACK TO BACK KIT

Simply add this kit and an additional monitor bracket to your 072.3xxx ceiling mount and mount the second monitor in a back to back configuration.

Article code
072.3000-200

CEILING MOUNTS

Heavy Duty Series with VESA bracket

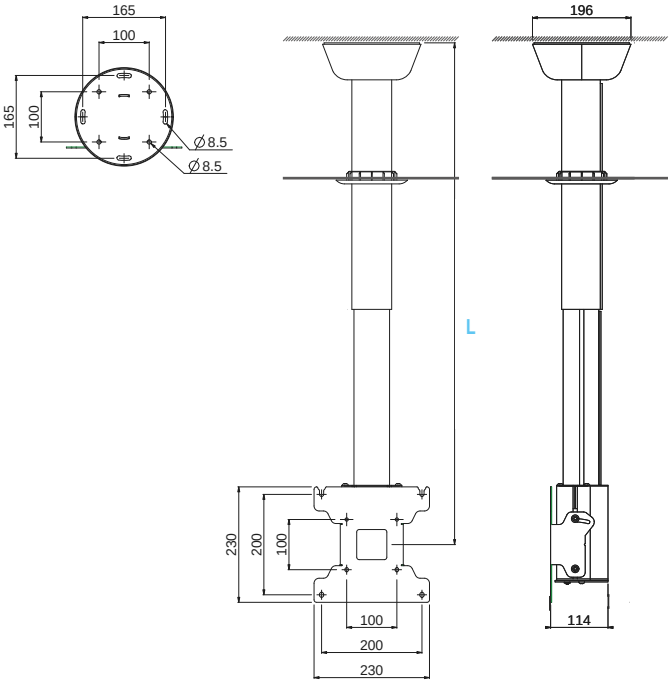

CEILING MOUNT VESA 200

Telescopically adjustable, rotatable from -90° to +90° and tiltable max. 15°. Supplied including VESA 100 x 100 / 200 x 200 bracket, ceiling rose for architectural ceiling and ceiling finishing ring for a suspended ceiling.

Colours	○●
Max. load	30 kg
Max. inch	55 inch
Position	Landscape & Portrait

Article code	Colour	Length (L) (centre VESA)
072.3100B-122	Black	650 - 1000 mm
072.3100W-122	White	650 - 1000 mm
072.3150B-122	Black	915 - 1500 mm
072.3150W-122	White	915 - 1500 mm
072.3250B-122	Black	1475 - 2500 mm
072.3250W-122	White	1475 - 2500 mm
072.3300B-122	Black	1975 - 3000 mm
072.3300W-122	White	1975 - 3000 mm

Accessory

BACK TO BACK KIT FOR -122 MODELS

Simply add this kit with VESA bracket to your 072.3xxx-122 ceiling mount and mount the second monitor in a back to back configuration.

Article code
072.3000-222

CEILING MOUNTS

Heavy Duty Series with VESA bracket

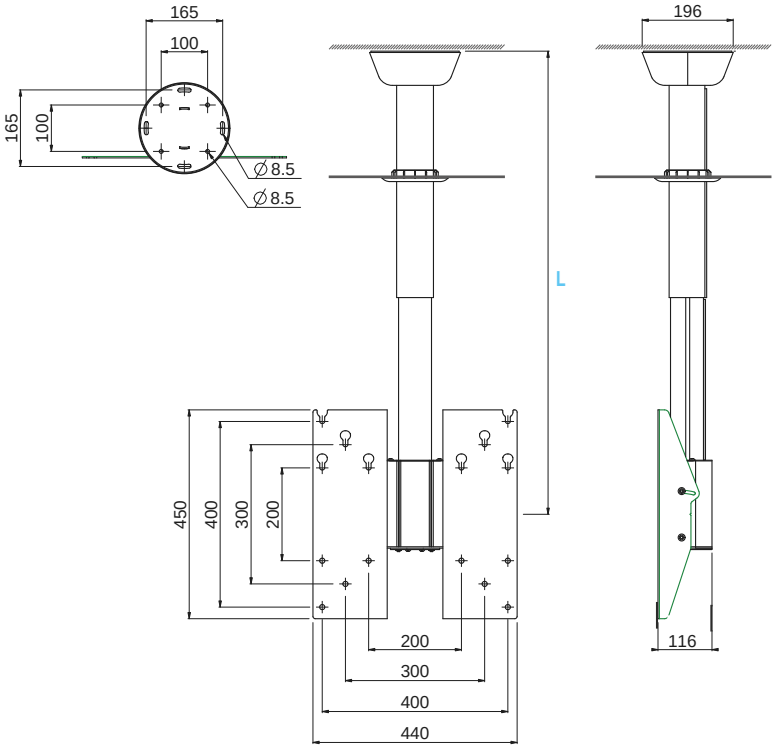

CEILING MOUNT VESA 400

Telescopically adjustable, rotatable from -90° to +90° and tiltable max. 15°. Supplied including VESA 200/300/400 bracket, ceiling rose for architectural ceiling and ceiling finishing ring for a suspended ceiling.

Colours	○●
Max. load	80 kg
Max. inch	70 inch
Position	Landscape & Portrait

Article code	Colour	Length (L) (centre VESA)
072.3100B-144	Black	650 - 1000 mm
072.3100W-144	White	650 - 1000 mm
072.3150B-144	Black	915 - 1500 mm
072.3150W-144	White	915 - 1500 mm
072.3250B-144	Black	1475 - 2500 mm
072.3250W-144	White	1475 - 2500 mm
072.3300B-144	Black	1975 - 3000 mm
072.3300W-144	White	1975 - 3000 mm

Accessory

BACK TO BACK KIT FOR -144 MODELS

Simply add this kit with VESA bracket to your 072.3xxx-144 ceiling mount and mount the second monitor in a back to back configuration.

Article code
072.3000-244

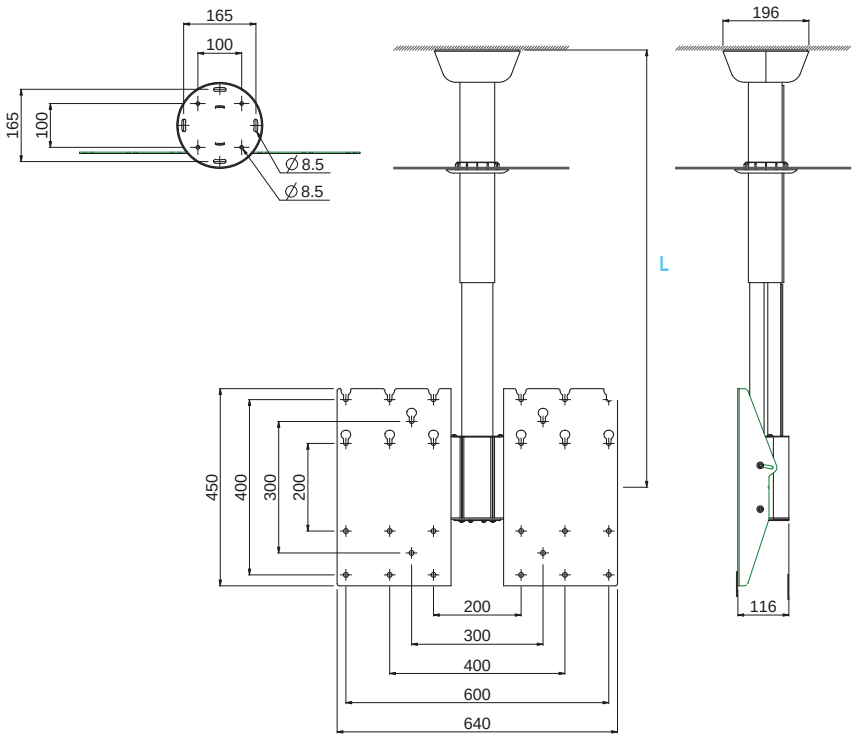

CEILING MOUNT VESA 600

Telescopically adjustable, rotatable from -90° to +90° and tiltable max. 15°. Supplied including VESA 200/300/400/600x400 bracket, ceiling rose for architectural ceiling and ceiling finishing ring for a suspended ceiling.

Colours	○●
Max. load	80 kg
Max. inch	70 inch
Position	Landscape & Portrait

Article code	Colour	Length (L) (centre VESA)
072.3100B-164	Black	650 - 1000 mm
072.3100W-164	White	650 - 1000 mm
072.3150B-164	Black	915 - 1500 mm
072.3150W-164	White	915 - 1500 mm
072.3250B-164	Black	1475 - 2500 mm
072.3250W-164	White	1475 - 2500 mm
072.3300B-164	Black	1975 - 3000 mm
072.3300W-164	White	1975 - 3000 mm

Accessory

BACK TO BACK KIT FOR -164 MODELS

Simply add this kit with VESA bracket to your 072.3xxx-164 ceiling mount and mount the second monitor in a back to back configuration.

Article code
072.3000-264

STANDS & TROLLEYS

Benefits & Applications

A MODEL FOR EVERY PURPOSE

SmartMetals offers a wide range of floor stands: with or without wheels, for one or more screens, for light or heavy weight screens.

The Light Series stands are supplied with a smart VESA bracket.

The Heavy Duty Series are fitted with the 170 x 140 modular mounting system to combine with one of our universal wall mounts (see page 9) offering clearance-free mounting.

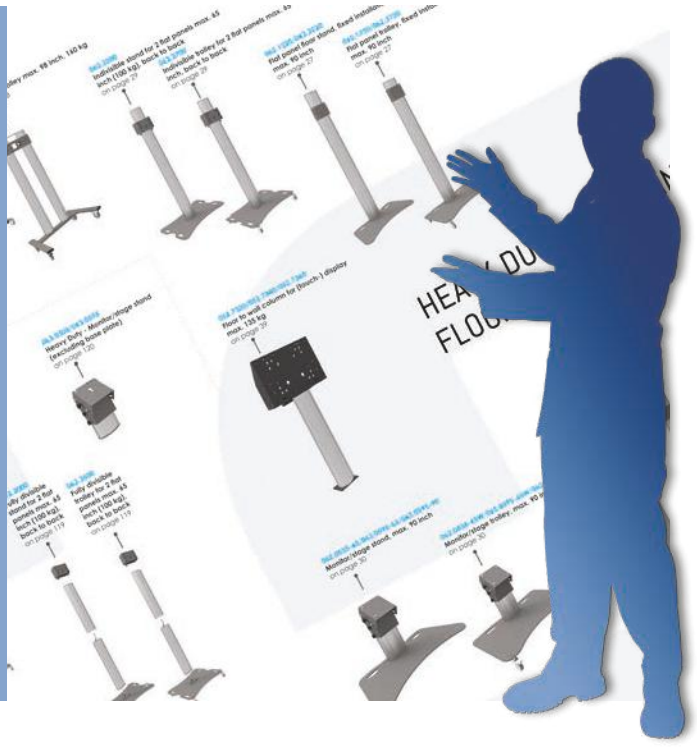

Applications

ON A BASE PLATE

For a (semi) permanent freestanding installation of your monitor a floor stand on a base plate is what you are looking for. Our extensive range offers floor stands for light weight LED screens of max. 30 kg up to the heavy weight flat panels up to 160 kg.

NEW

You might also want to take a glance at the stands and trolleys from our latest **Installation Series** on page 37:
The smart flat panel mounting you are used to, but now with maximum user friendliness.

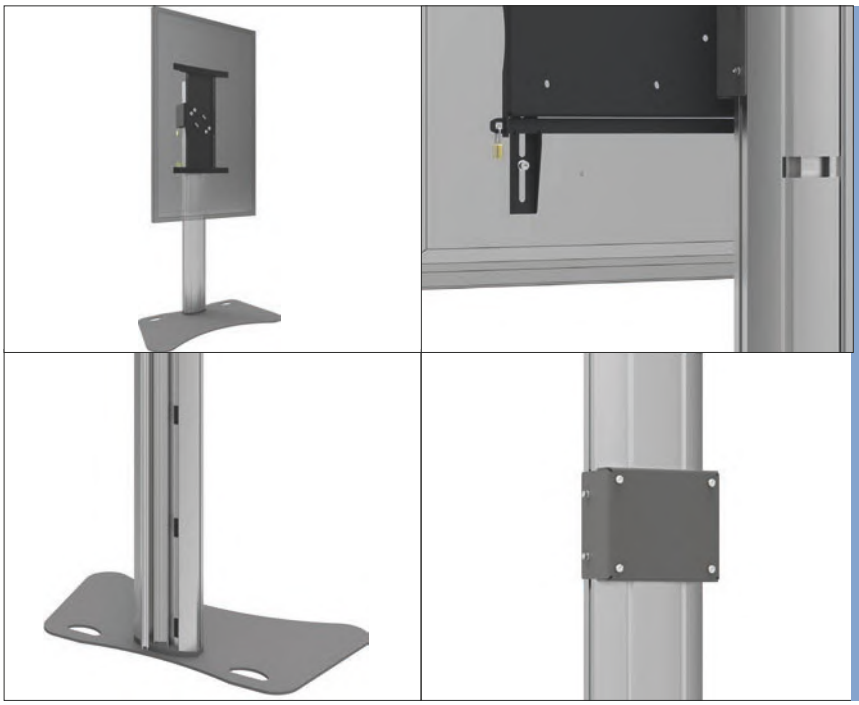

BENEFITS

- ✓ For portrait and landscape screen position
- ✓ Suitable for displays up to 98 inch, max. 160 kg
- ✓ All solutions offer the possibility to protect your flat panel against theft
- ✓ All stands come with hidden cable management
- ✓ Clearance free mounting with the 170 x 140 modular mounting system

ON WHEELS

For the most flexible use of your floor stand in different spots and/or rooms the choice for a floor stand on wheels or so called trolley is obvious. Here also applies that our trolleys are available in Light and Heavy Duty models.

BACK TO BACK

In our product range you will also find a floor stand for a freestanding back to back installation. This back to back floor stand is fitted with a stand head with three-point-coupling mounting system, to which a rental monitor bracket is easily mounted on both sides.

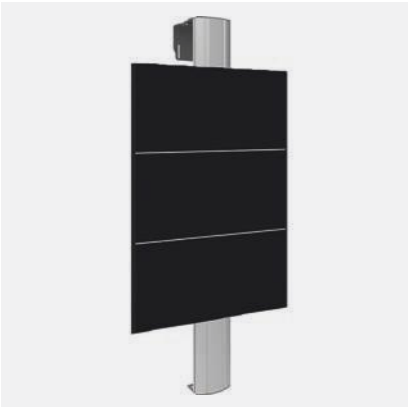

MULTIPLE MOUNTING

Just add some extra mounting heads and wall mounts to easily extend your installation from a single flat panel to multiple flat panels, one above the other.

DESK STAND

For flat panels 32 - 55 inch

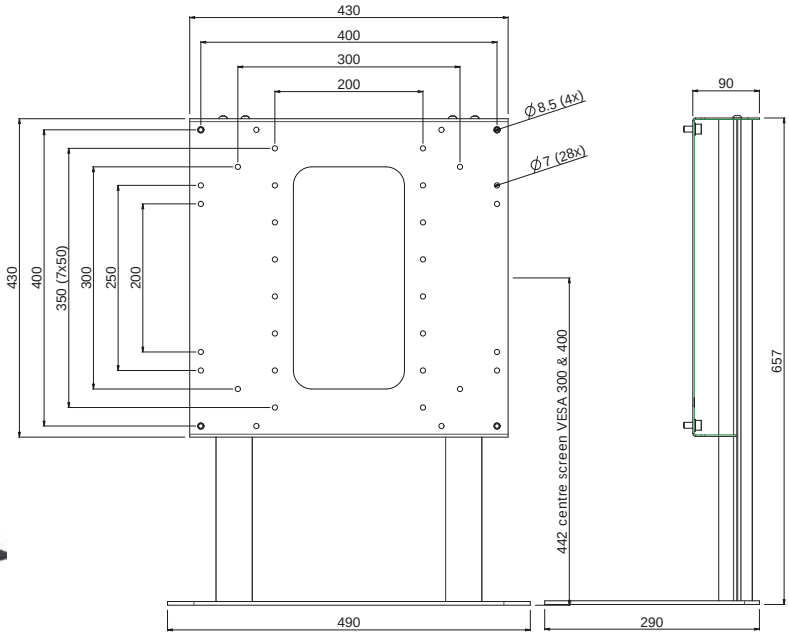

INFORMATION UPON ENTRY

This desk stand is suitable for mounting your touch or regular flat panel on a desk, side cabinet or counter to for example inform visitors immediately when they enter a hall or office.

It includes a VESA bracket with VESA 200, 300, 400 and 400 - 200 and it is suitable for flat panels 32 – 55 inch, max. 40 kg.

Colour	●
Max. load	40 kg
Position	Landscape
VESA	200, 300, 400, 400 x 200

Article code
062.0540

DESIGN STAND

For flat panels max. 55 inch, 30 kg

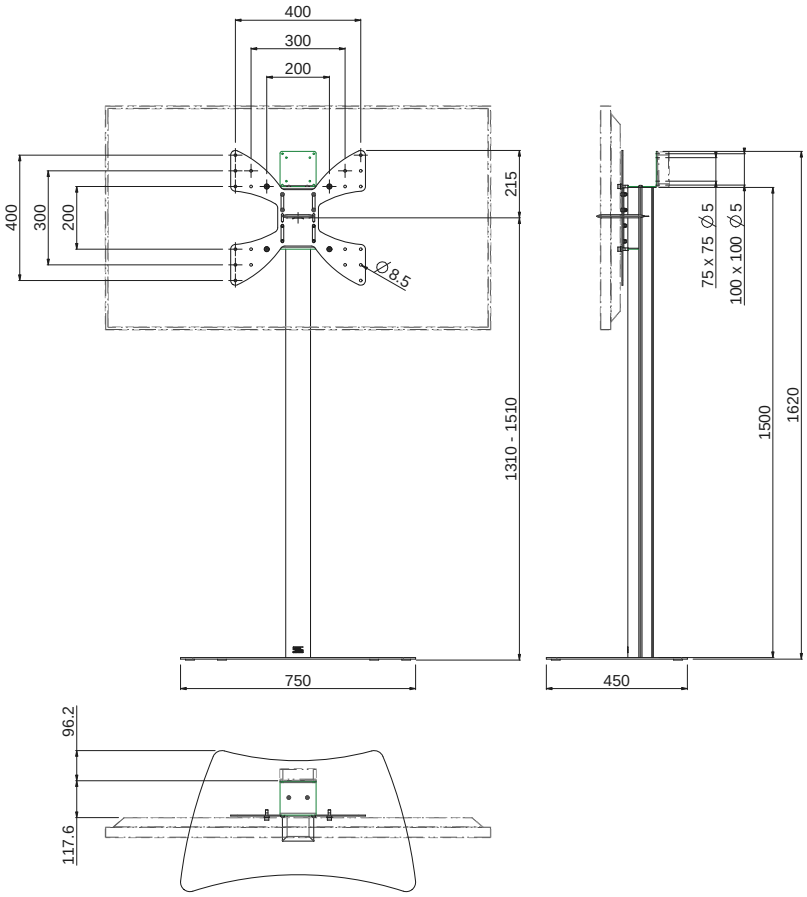

AESTHETICS IN THE BOARD ROOM

Also in a compact board room or meeting room with weak walls, it is possible to install a flat panel or monitor in an aestetic way, using this design floor stand.

The 062.0550 can be used for monitors up to 30 kg and 55 inch. The monitors position is manually in height adjustable, and offers a viewing height between 130 and 150 cm (centre panel) which is the ideal height from sitting position by the meeting table.

The inconspicuous design with black matte base plate and slim round, satin gloss white column fits in nearly any interior; other colours are available on request. The cabling can be run through the column at the back side. The mounting plate offers mounting at maximum VESA 400 and includes a fixation for a mini/NUC PC (VESA 75 and 100); to offer a quick and complete solution behind the monitor.

Colour	◐
Max. load	30 kg
Position	Landscape & Portrait
VESA	max. VESA 400

Article code
062.0550

LIGHT SERIES

Stands & Trolleys

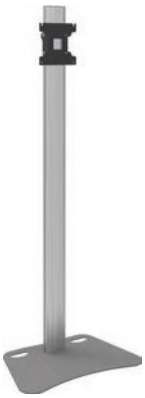

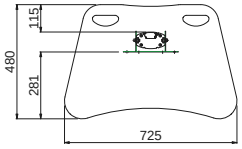

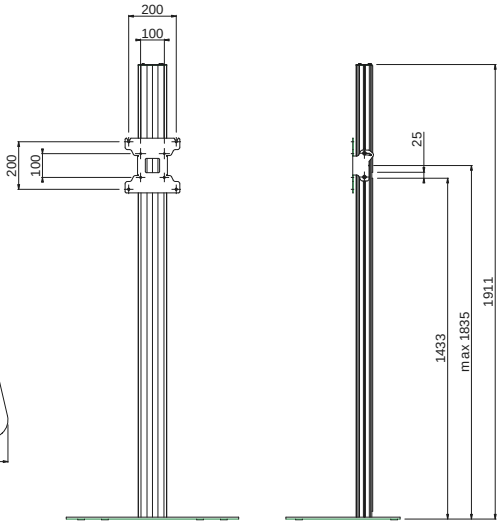

STAND INCL. BRACKET MAX. VESA 200

Colour	◐ ●
Max. load	30 kg
Max. inch	55 inch
Position	Landscape & Portrait
VESA	VESA 100, 200

Article code	Colour
062.8222	Dark-Grey & Aluminium
062.8222B	Black

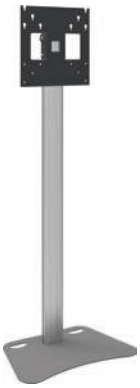

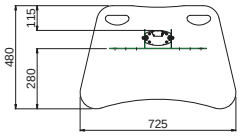

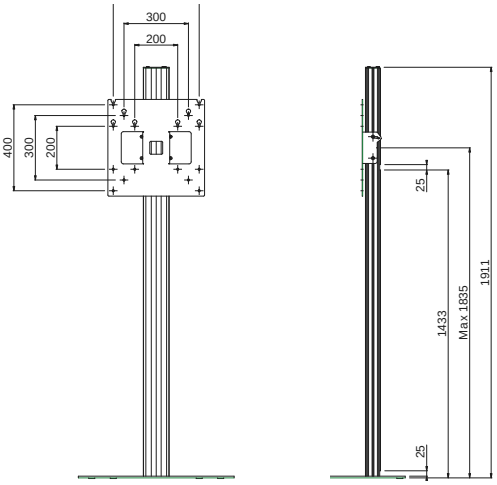

STAND INCL. BRACKET MAX. VESA 400

Colour	◐ ●
Max. load	30 kg
Max. inch	55 inch
Position	Landscape & Portrait
VESA	VESA 100, 200, 400 x 200, 400

Article code	Colour
062.8244	Dark-Grey & Aluminium
062.8244B	Black

Accessories

LAPTOP SUPPORT

Article code	Description
063.8100	Surface 386 x 308 mm
063.8110	Surface 300 x 190 mm

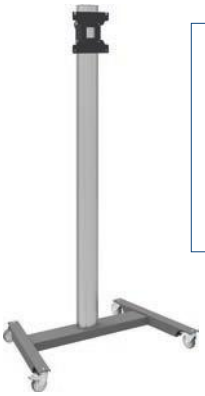

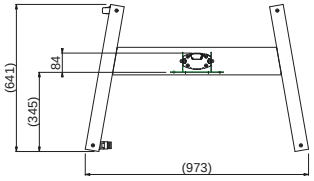

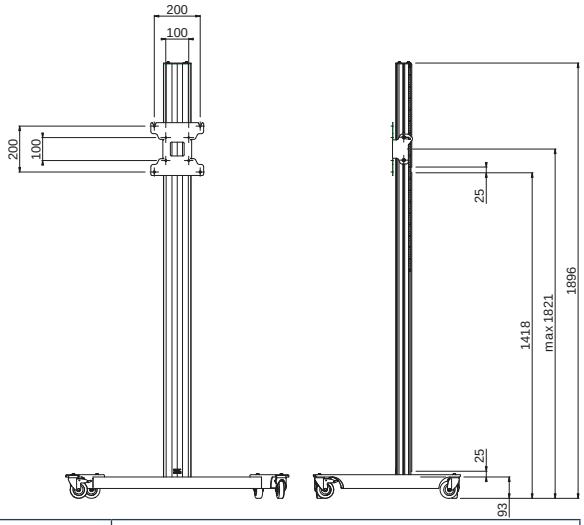

TROLLEY INCL. BRACKET MAX. VESA 200

Colour	◐ ●
Max. load	30 kg
Max. inch	55 inch
Position	Landscape & Portrait
VESA	VESA 100, 200

Article code	Colour
062.8722	Dark-Grey & Aluminium
062.8722B	Black

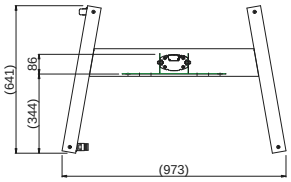

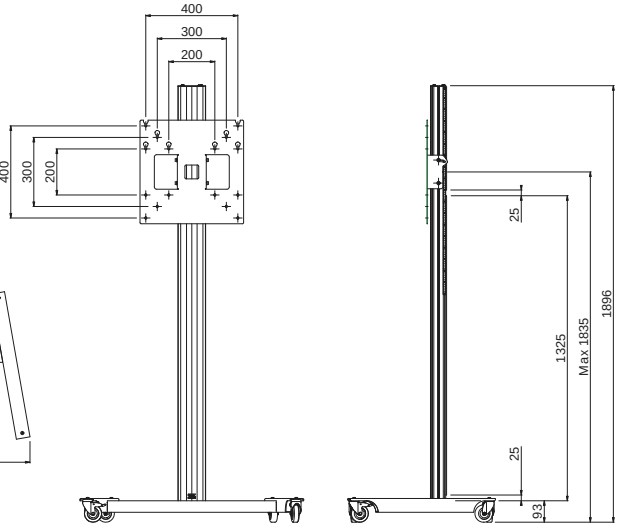

TROLLEY INCL. BRACKET MAX. VESA 400

Colour	◐ ●
Max. load	30 kg
Max. inch	55 inch
Position	Landscape & Portrait
VESA	VESA 100, 200, 400 x 200, 400

Article code	Colour
062.8744	Dark-Grey & Aluminium
062.8744B	Black

MINI-PC/THIN CLIENT HOUSING

max. 397 x 218 x 100 mm, lockable

Article code
063.0710

VESA 600 ADAPTERSTRIPS

suitable for 062.8x44

Article code
172.0008

HEAVY DUTY SERIES

Stands & Trolleys

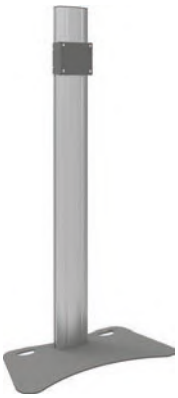

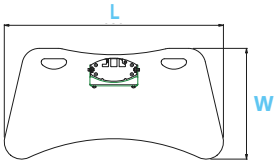

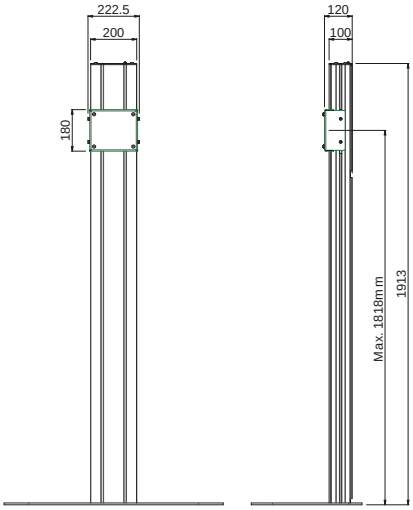

FLOOR STAND

Colour	◐
Position	Landscape & Portrait
Note	170 x 140 mod. mounting
! Required	Universal wall mount, see from page 9

Article code	Max. load	Base plate L (L) x W (W)
062.1220	70 inch, 65 kg	950 x 480 mm
062.3220	90 inch, 85 kg	1140 x 576 mm

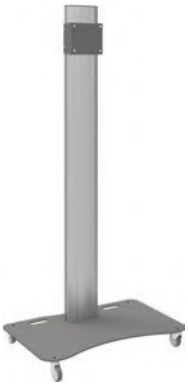

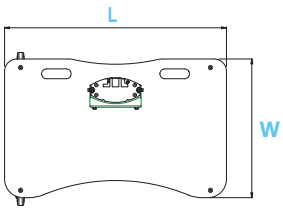

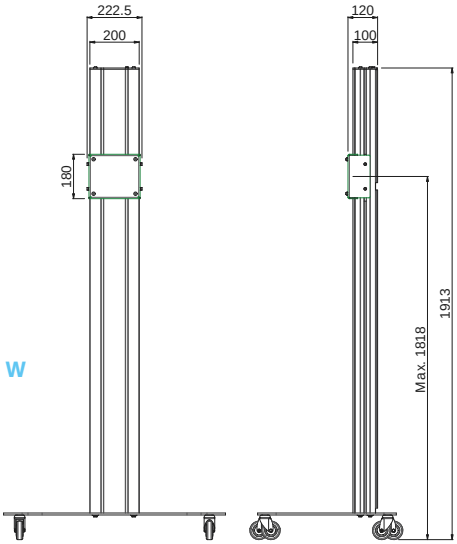

TROLLEY

Colour	◐
Position	Landscape & Portrait
Note	170 x 140 mod. mounting
! Required	Universal wall mount, see from page 9

Article code	Max. load	Base plate L (L) x W (W)
062.1720	65 inch, 60 kg	900 x 563 mm
062.3720	90 inch, 85 kg	1100 x 663 mm

Accessories

LAPTOP SUPPORT

Article code	Description
063.0100	Surface 386 x 308 mm
063.0110	Surface 300 x 189 mm

All Heavy Duty Series stands and trolleys are fitted with mounting heads that are part of our modular system. The specific 170 x 140 mounting pattern in combination with our universal wall mounts (see page 9) offers a clearance-free mounting of your monitor.

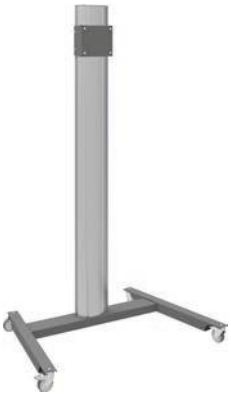

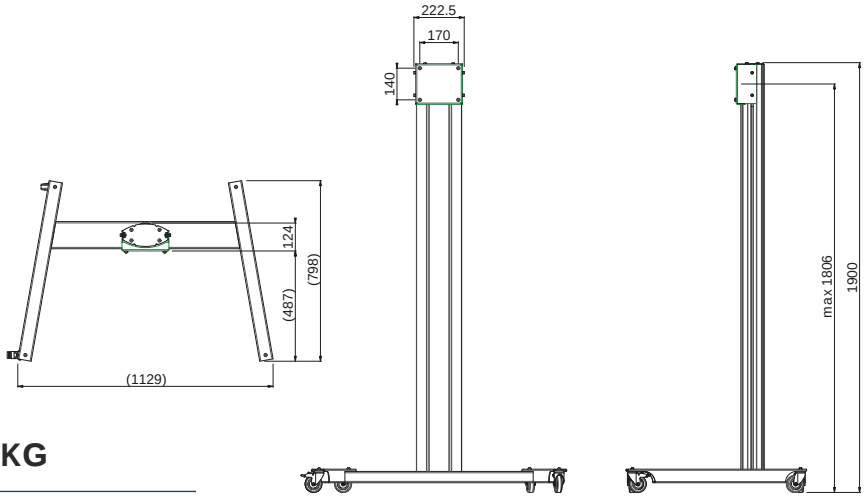

TROLLEY MAX. 90 INCH, 85 KG

Colour	◐
Max. load	85 kg
Max. inch	90 inch
Position	Landscape & Portrait
Note	170 x 140 modular mounting
Required	Universal wall mount, see from page 9

Article code
062.3905

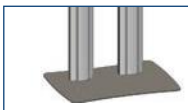

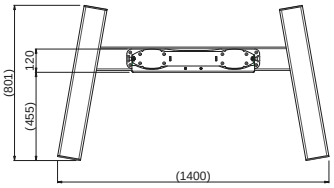

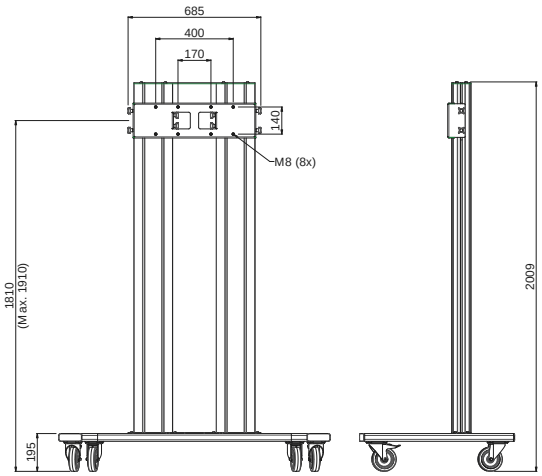

TROLLEY MAX. 98 INCH, 160 KG

Colour	◐
Max. load	160 kg
Max. inch	98 inch
Position	Landscape & Portrait
Note	170 x 140 modular mounting
Required	Wall mount 052.6000, see page 13

Article code
062.3800

MEDIA HOUSING

max. 450 x 377 x 114 mm, lockable

Article code
063.0700

MINI-PC/THIN CLIENT HOUSING

max. 397 x 218 x 100 mm, lockable

Article code
063.0710

HEAVY DUTY SERIES

Stands & Trolleys back to back

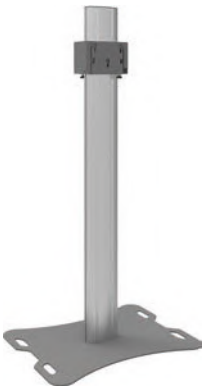

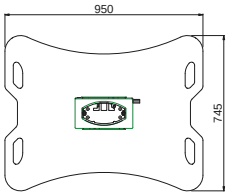

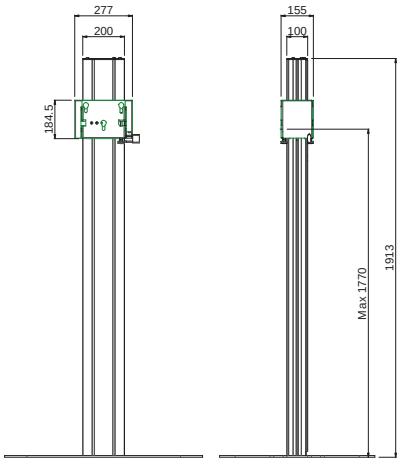

FLOOR STAND BACK TO BACK

Colour	◐
Max. load	100 kg
Max. inch	2x Max. 65 inch
Position	Landscape & Portrait
Note	170 x 140 modular mounting
Required	Monitor bracket from table on the right

Article code
062.2200

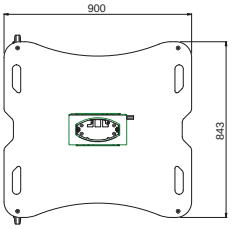

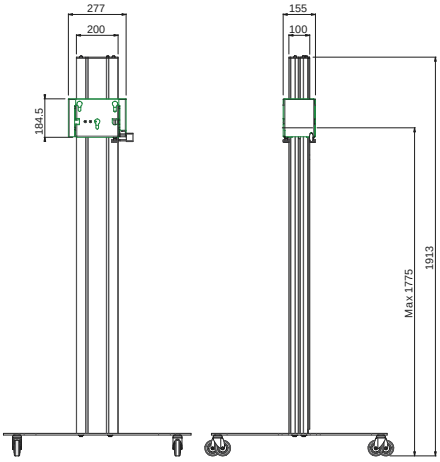

TROLLEY BACK TO BACK

Colour	◐
Max. load	100 kg
Max. inch	2x Max. 65 inch
Position	Landscape & Portrait
Note	170 x 140 modular mounting
Required	Monitor bracket from table on the right

Article code
062.2700

ACCESSORIES

For stands & trolleys back to back

MONITOR BRACKET

To easily mount your monitors a monitor bracket with three point coupling is required.

VESA BRACKETS	
Article code	**Mounting reach**
063.0300	VESA 75 x 75, 100 x 100, 200 x 200/100
063.0305	VESA 200 x 200, 400 x 200
063.0310	VESA 300 x 300/200, 400 x 400/300/200
063.0315	VESA 300 x 300, 400 x 400, 400 x 200
063.0320	VESA 600 x 400/200
063.0330	VESA 800 x 400/200
063.0335	VESA 800 x 600/500/400/300/200

UNIVERSAL BRACKETS		
Article code	**Rotation**	**Mounting reach**
052.5000	-	max. 802 x 466 mm
052.5070	With rotation 90°	max. 802 x 466 mm

PADLOCK

Padlock 20 mm for securing the mounting head of your floor stand or trolley.

000.0001

LAPTOP SUPPORTS

This laptop support can be mounted to the column over the full height and can be secured with a padlock.

Article code	Description
063.0100	Surface 386 x 308 mm
063.0110	Surface 300 x 190 mm

MEDIA HOUSING

max. 450 x 377 x 114 mm

Protect your valuable equipment by placing it in this lockable media housing. Cables can be run through the back side into the column and the position of the housing can be adjusted continuously over the full length of the column.

063.0700

MINI-PC/THIN CLIENT HOUSING

max. 397 x 218 x 100 mm

Your mini-PC is safely installed and protected from theft and vandalism in this solid steel housing. Cables can be run through the upper side into the column and the housing can be adjusted in height continuously.
Important benefit of this housing is that this housing is placed behind the flat panel.

063.0710

HEAVY DUTY SERIES

Stage Stands & Trolleys

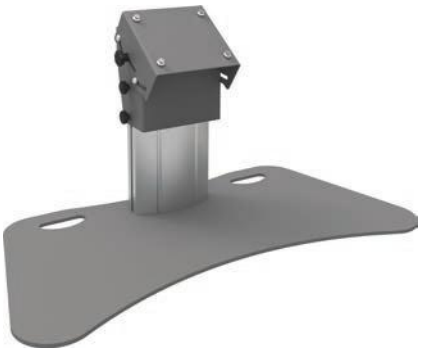

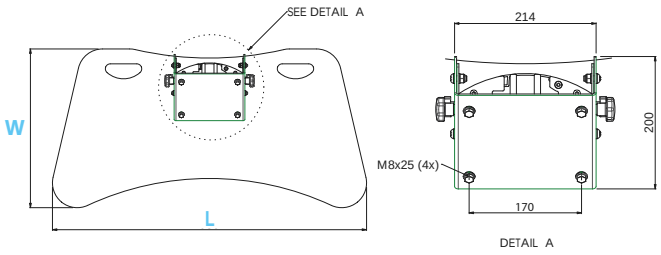

MONITOR/STAGE STAND

Colour	◐
Position	Landscape & Portrait
Note	170 x 140 mod. mounting
! Required	Universal wall mount, see page 9

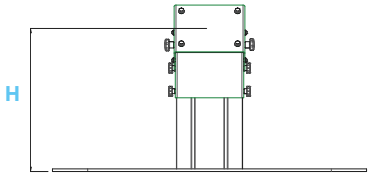

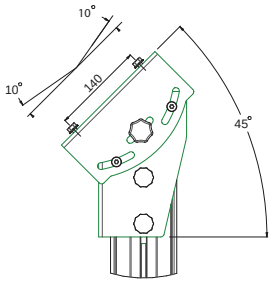

Article code	Centre screen (H)	Max. load	Max. monitor size	Base plate L (L) x W (W)
062.0535-65	433 mm	65 kg	65 inch	950 x 480 mm
062.0595-65	1033 mm	65 kg	65 inch	950 x 480 mm
062.0595-90	1033 mm	90 kg	90 inch	1140 x 576 mm

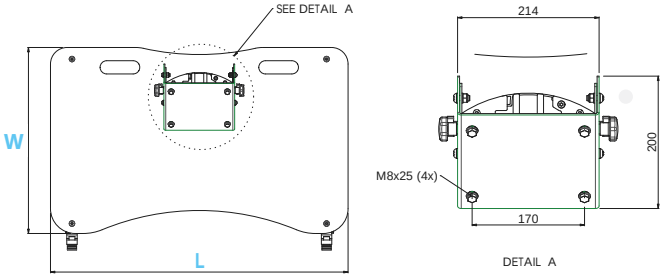

MONITOR/STAGE TROLLEY

Colour	◐
Position	Landscape & Portrait
Note	170 x 140 mod. mounting
! Required	Universal wall mount, see page 9

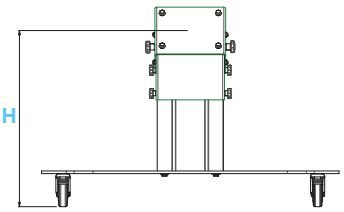

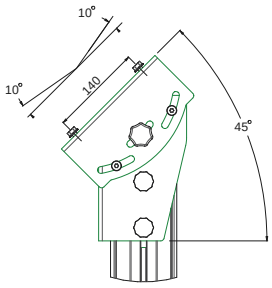

Article code	Centre screen (H)	Max. load	Max. monitor size	Base plate L (L) x W (W)
062.0535-65W	533 mm	65 kg	65 inch	900 x 563 mm
062.0595-65W	1133 mm	65 kg	65 inch	900 x 563 mm
062.0595-90W	1133 mm	90 kg	90 inch	1100 x 663 mm

Confident performance

Our monitor/stage stands and trolleys are the perfect support whenever a confident performance is required.

Whether you are a public speaker, a priest who celebrates his Mass in church, a professor who teaches his class in an auditorium, anywhere you need a confidence monitor you will find our products to be particularly useful offering a perfect viewing height and angle and stability.

All models arer available in two heights and offer an adjustable viewing angle between 35° and 55°.

INSTALLATION SERIES

Flat panel mounting with maximum user friendliness

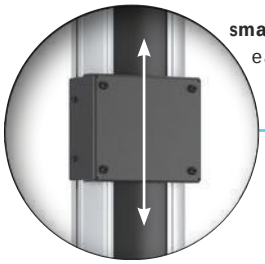

small or tall, height does not matter:
easily adjust the monitor to accomodate the best working height

fits any screen:
combine with one of our universal mounting brackets

keep everything nearby:
mount power sockets, audiovisual control panels, USB ports and more to the 4-way integration panel (universal built-in size; 60 mm)

solid or two-tone:
choose stylish black or luxurious aluminium and black

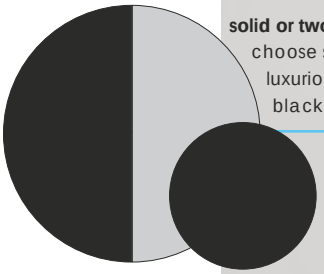

keep cables neatly organised:
hide them within the column, behind a strylish plastic cover strip that is easily cut to size

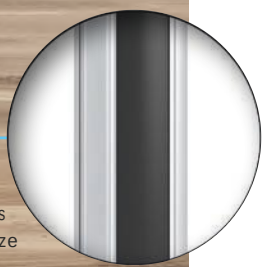

INSTALLATION SERIES

Stands and Trolleys

FLOOR STAND

NEW

Colours	◐●
Position	Landscape & Portrait
Acc.	See from page 38
Note	170 x 140 modular mounting
Required	Universal wall mount, see from page 9

Article code	Colour	Max. load
062.4420	Aluminium & Black	70 inch, 65 kg
062.4420.04	Black	70 inch, 65 kg
062.4425	Aluminium & Black	90 inch, 85 kg
062.4425.04	Black	90 inch, 85 kg

TROLLEY (base plate on wheels)

NEW

Colours	◐●
Position	Landscape & Portrait
Acc.	See from page 38
Note	170 x 140 modular mounting
Required	Universal wall mount, see from page 9

Article code	Colour	Max. load
062.4430	Aluminium & Black	65 inch, 60 kg
062.4430.04	Black	65 inch, 60 kg
062.4435	Aluminium & Black	90 inch, 85 kg
062.4435.04	Black	90 inch, 85 kg

TROLLEY (wheel frame)

NEW

Colours	◐●
Position	Landscape & Portrait
Acc.	See from page 38
Note	170 x 140 modular mounting
Required	Universal wall mount, see from page 9

Article code	Colour	Max. load
062.4450	Aluminium & Black	90 inch, 85 kg
062.4450.04	Black	90 inch, 85 kg

INSTALLATION SERIES

Floor to wall/ceiling mounted columns

FLOOR-WALL COLUMN

NEW

Colour	◐●
Max. load	100 kg
Max. inch	90 inch
Position	Landscape & Portrait
Acc.	See from page 38
Note	170 x 140 modular mounting
Required	Universal wall mount, see from page 9
Other info	Different colours and lengths on request

Article code	Colour
063.4440	Aluminium & Black
063.4440.04	Black

FLOOR-CEILING COLUMN

NEW

Colour	◐●
Max. load	100 kg
Max. inch	90 inch
Position	Landscape & Portrait
Acc.	See from page 38
Note	170 x 140 modular mounting
Required	Universal wall mount, see from page 9
Other info	Different colours and lengths on request

Article code	Colour
063.4445	Aluminium & Black
063.4445.04	Black

Accessories

INTEGRATION PANEL

for 1 to 4 sockets

Article code
063.4400

LAPTOP SUPPORT

Article code	Description
063.0100	Surface 386 x 308 mm
063.0110	Surface 300 x 189 mm

INSTALLATION SERIES

Videoconferencing floor to wall/ceiling mounted columns

FLOOR-WALL COLUMN
2x 46-55 INCH incl. 2 supports

NEW

Colour	◐●
Max. load	100 kg
Max. inch	2x 46-55 inch
Position	Landscape & Portrait
Acc.	See from page 38
Note	170 x 140 modular mounting
Required	Universal wall mount, see from page 9
Other info	Different colours and lengths on request

Article code	Colour
063.4540	Aluminium & Black
063.4540.04	Black

FLOOR-CEILING COLUMN
2x 46-55 INCH incl. 2 supports

NEW

Colour	◐●
Max. load	100 kg
Max. inch	2x 46-55 inch
Position	Landscape & Portrait
Acc.	See from page 38
Note	170 x 140 modular mounting
Required	Universal wall mount, see from page 9
Other info	Different colours and lengths on request

Article code	Colour
063.4545	Aluminium & Black
063.4545.04	Black

MEDIA HOUSING
max. 450 x 377 x 114 mm, lockable

Article code
063.0700

MINI-PC/THIN CLIENT HOUSING
max. 397 x 218 x 100 mm,lockable

Article code
063.0710

Multi purpose eye-catcher

The name already says it all, this design technically eye-catching solution can be utilized for many purposes: static flat panel mounting, flat panel mounting with electric height adjustment, with or without wheels, interactive presentations, video conferencing, single flat panel mounting (up to 98 inch!), dual flat panel mounting and VideoWall mounting.

Besides a luxurious look and feel the Multi Purpose Business Trolleys offer sufficient space to easily place your peripherals out of sight within the body. All trolleys have a standard recess for power supply and Neutric/other connection panels and various accessories are available to further extend the already very complete functionality.

MULTI PURPOSE BUSINESS STANDS AND TROLLEYS

Static stand and trolleys

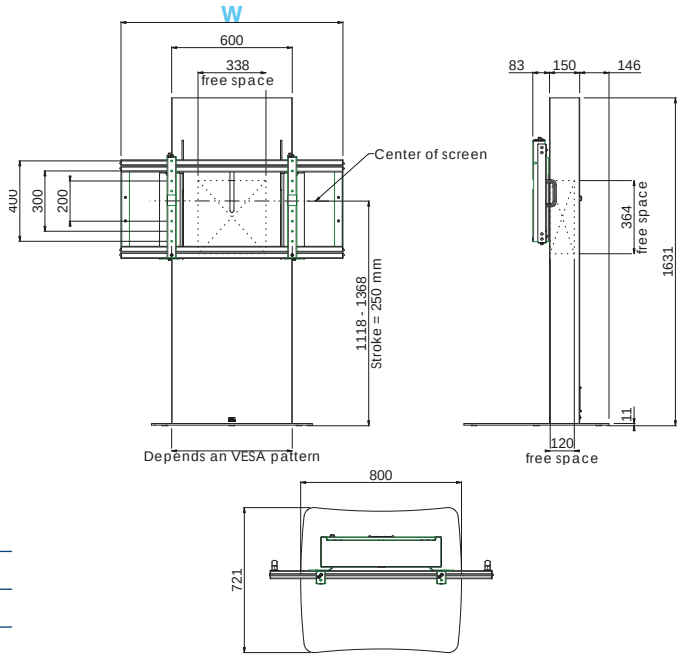

BUSINESS & VC STAND STATIC

Colour	◐
Max. load	100 kg
Position	Landscape
VESA	Max. VESA 400 high
Stroke	250 mm
Accessories	See from page 44

Article code	Inch range	Width (W)
062.2861	Max. 86 inch	1104 mm
062.2866	Max. 2x 65 inch	2194 mm

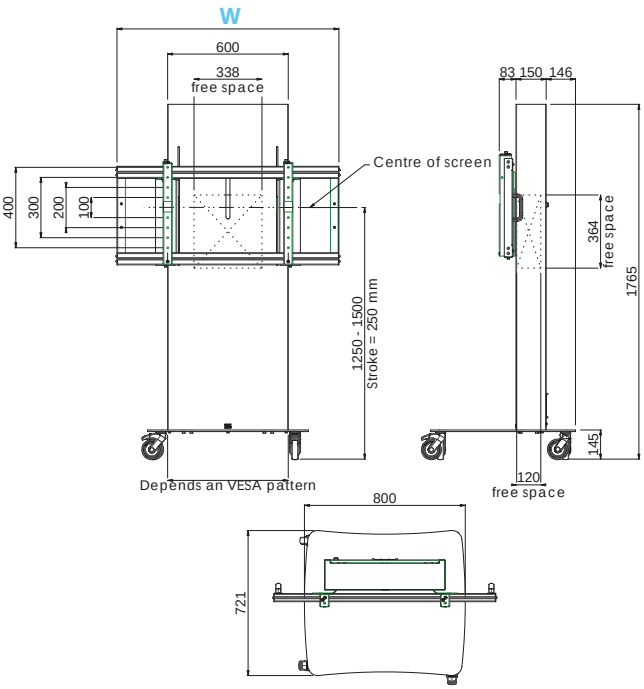

BUSINESS & VC TROLLEYS STATIC

Colour	◐
Max. load	100 kg
Position	Landscape
VESA	Max. VESA 400 high
Stroke	250 mm
Accessories	See from page 44

Article code	Inch range	Width (W)
062.2860	Max. 86 inch	1100 mm
062.2865	Max. 2x 65 inch	2201 mm

MULTI PURPOSE BUSINESS STANDS AND TROLLEYS

Electrical stand and trolleys, max. 84 inch

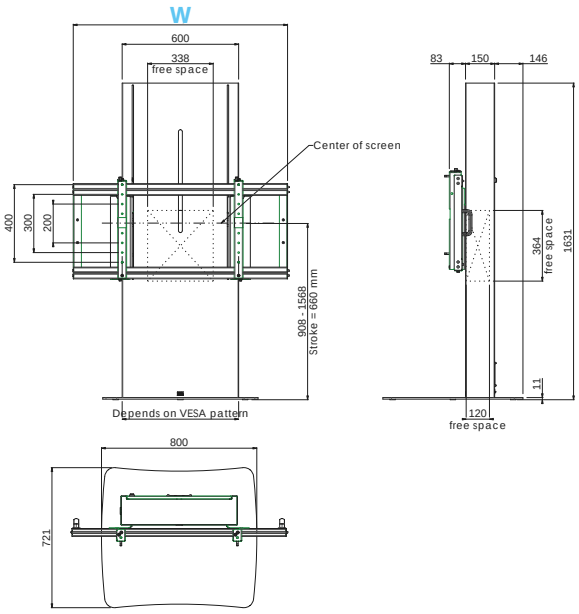

BUSINESS & VC STAND ELECTRICAL

Colour	◐
Max. load	100 kg
Position	Landscape
VESA	Max. VESA 400 high
Stroke	660 mm
Anti-collision	Included
Accessories	See from page 44

Article code	Inch range	Width (W)
062.2871	Max. 86 inch	1104 mm
062.2876	Max. 2x 65 inch	2194 mm

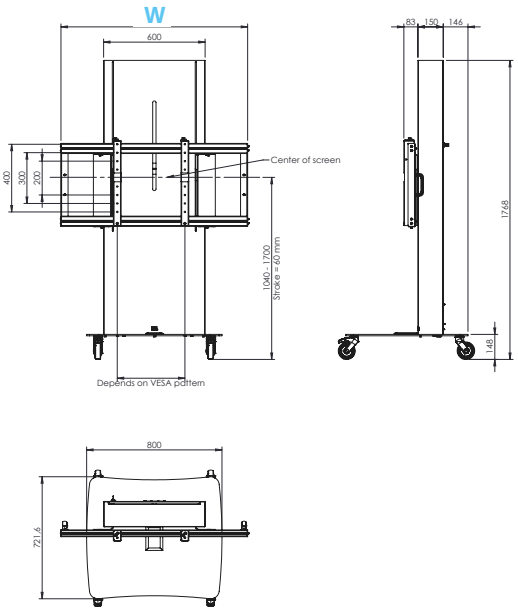

BUSINESS & VC TROLLEYS ELECTRICAL

Colour	◐
Max. load	100 kg
Position	Landscape
VESA	Max. VESA 400 high
Stroke	660 mm
Anti-collision	Included
Accessories	See from page 44

Article code	Inch range	Width (W)
062.2870	Max. 86 inch	1104 mm
062.2875	Max. 2x 65 inch	2194 mm

Electrical stand and trolley, max. 98 inch

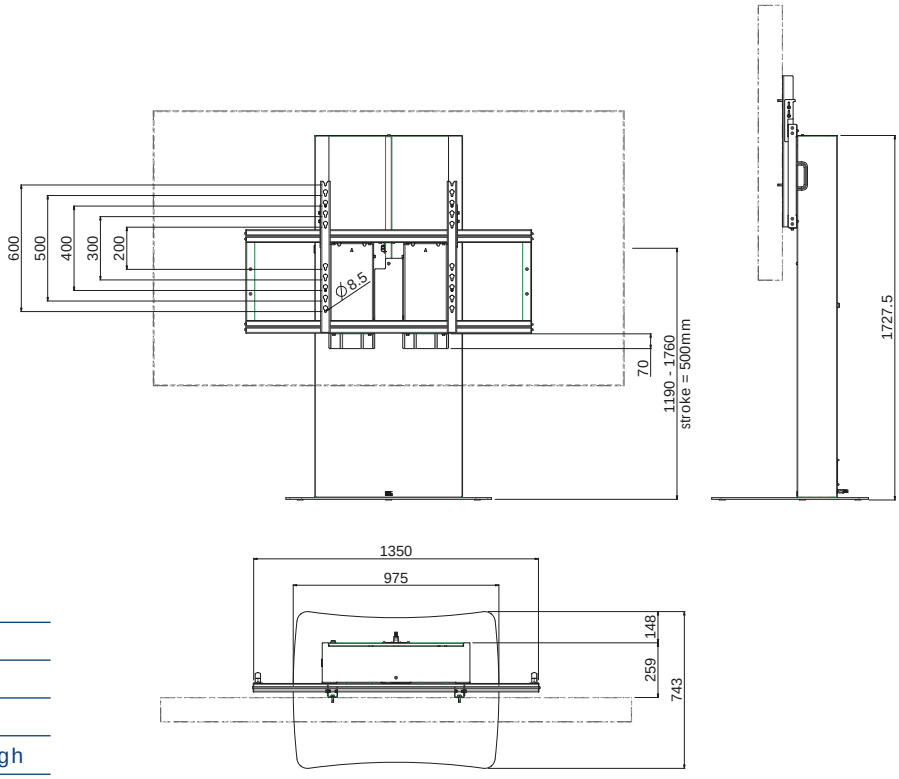

BUSINESS & VC STAND ELECTRICAL

Colour	◐
Max. load	190 kg
Position	Landscape
VESA	Max. VESA 600 high
Stroke	70 mm
Stroke	500 mm
Accessories	See from page 44

Article code
062.2905

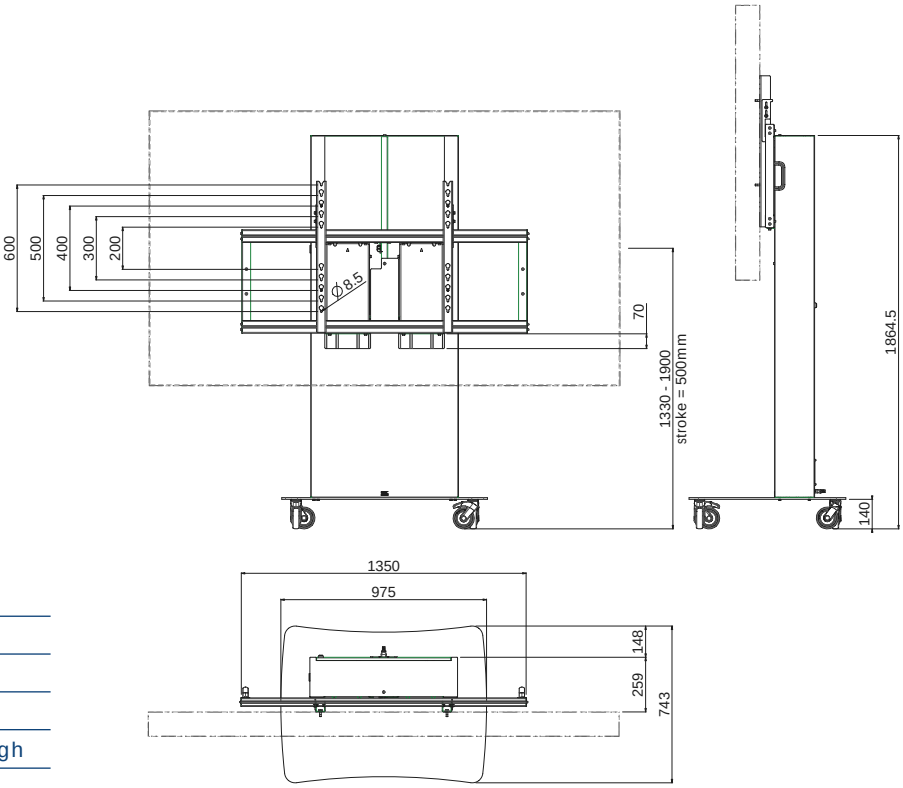

BUSINESS & VC TROLLEY ELECTRICAL

Colour	◐
Max. load	190 kg
Position	Landscape
VESA	Max. VESA 600 high
Stroke	70 mm
Stroke	500 mm
Accessories	See from page 44

Article code
062.2900

MULTI PURPOSE BUSINESS STANDS AND TROLLEYS

Electrical freestanding mobile VideoWall

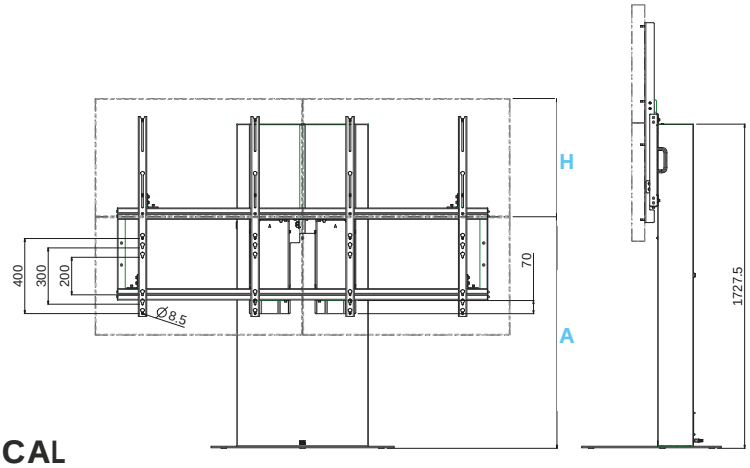

VIDEOWALL STAND 2x2 MAX. 55 INCH, ELECTRICAL

Colour	◐
Max. load	180 kg
Position	Landscape
VESA	Max. VESA 600 x 400
Stroke	70 mm
Stroke	500 mm
Accessories	See from page 44

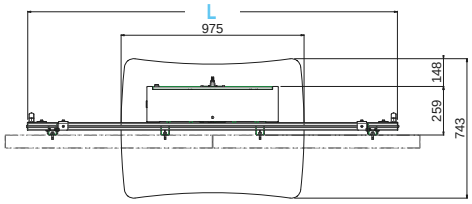

Article code	Inch range	Monitor height (H)	Profile length (L)	Height (A)
172.7122-46	2x2 46 inch	570 - 630 mm	1970 mm	1304 - 1804 mm
172.7122-55	2x2 55 inch	680 - 730 mm	2150 mm	1230 - 1730 mm

Accessories

BUSINESS LINE CISCO MOUNTS

Article code	Description
030.1030	Mount Cisco Sparkboard 55 inch & Webex Board 55S
030.1040	Mount Cisco Sparkboard 70 inch & Webex Board 70S

BASE PLATE
for accessories

Required for mounting 062.2881 or 062.2882.

062.2880

VIDEOWALL TROLLEY 2x2 MAX. 55 INCH, ELECTRICAL

	Colour	◐
	Max. load	180 kg
	Position	Landscape
	VESA	Max. VESA 600 x 400
	Stroke	70 mm
	Stroke	500 mm
	Accessories	See from page 44

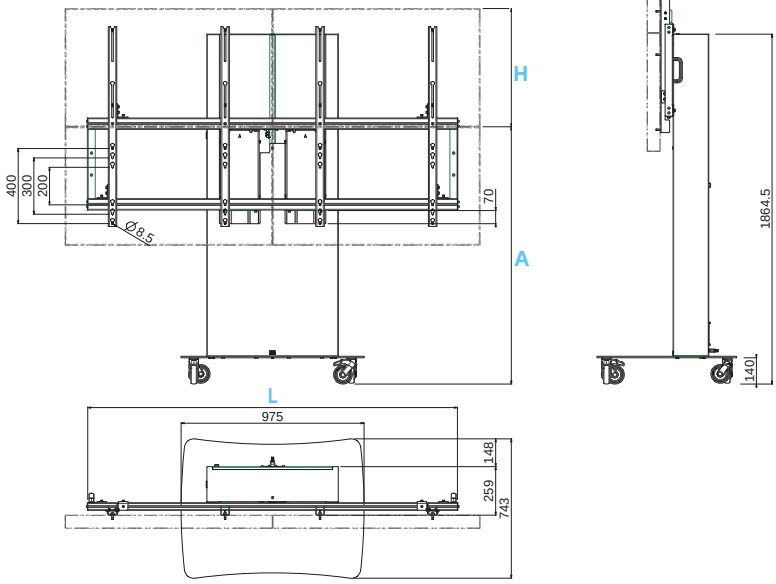

Article code	Inch range	Monitor height (H)	Profile (L)	Height (A)
172.7022-46	2x2 46 inch	570 - 630 mm	1970 mm	1370 - 1870 mm
172.7022-55	2x2 55 inch	680 - 730 mm	2150 mm	1300 - 1800 mm

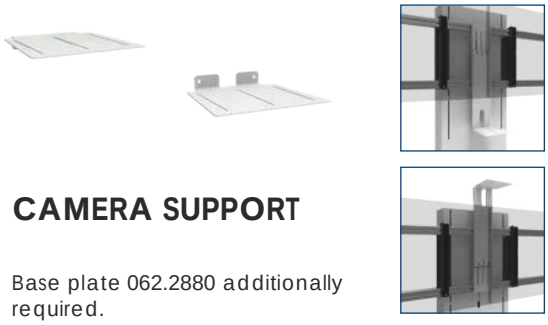

CAMERA SUPPORT

Base plate 062.2880 additionally required.

062.2881

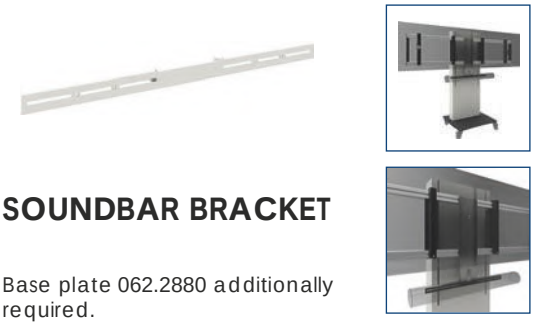

SOUNDBAR BRACKET

Base plate 062.2880 additionally required.

062.2882

PC BRACKET
VESA 75/100/200

Build-in adapter to mount your NUK/mini-pc/thin client safely out of sight.

062.2883

LAPTOP SUPPORT

To be fixed to the lower horizontal aluminum profile.

062.2885

FLAT PANEL LIFT SYSTEMS

Manual & Electrical

ANTI-THEFT

Store and safeguard your valuable peripherals by adding a lockable back cover to your lift system.

BETTER SAFE THAN SORRY

With anti-collision on electrical lift systems, also called anti-pinch protection, you rule out the risk of someone getting hurt or materials damaged when a lift bumps into an obstacle and continues its movement. Anti-collision causes a lift to stop and safely move back up again the moment it experiences resistance.

MULTI PURPOSE CABINET

- ✓ it serves as monitor mounting
- ✓ it offers ample storage for peripherals
- ✓ it has VESA 100 for NUC/mini PC mounting
- ✓ it has a cut-out for a standard flush-mounted box for mounting for example a button panel.

Work smarter

A SmartMetals lift system allows you to easily adjust your touchscreen suitable to your height, manually or electrically. Ideal in a classroom or when you need your screen to be higher up for a presentation. Our lift range is quick and easy to assemble and supplied including flat panel mounting materials. It is designed to accomodate almost all touch screens and offers both cabling and peripherals to be kept completely out of sight yet accessible where it is needed. Most of the lift systems standard come with an integrated anti-collision protection. For the ones that do not anti-collision is optionally available as well as a wide range of other accessories to further extend the functionality of the lift.

MANUAL LIFT SYSTEMS

Wall mounted

The demand for mounting solutions that allow a touchscreen to be adjusted quickly and repeatedly increases. Touchscreens are getting bigger, which means that users can not reach the upper part and therefore can not operate it.

The BalanceBox lets you quickly and effortlessly move a touchscreen to the right work and presentation height, regardless your height, or if you are in a (wheel)chair. Optimal accessibility and therefore a continuously pleasant and especially healthy posture when writing and drawing contribute to a perfect presentation.

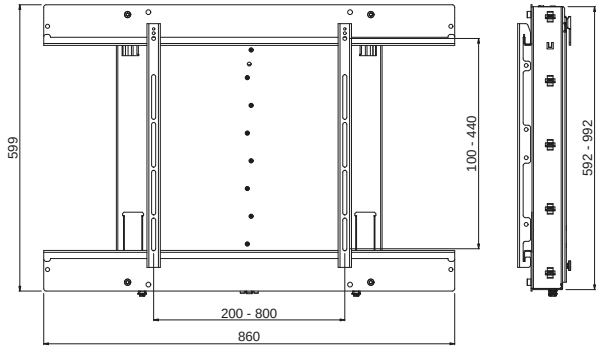

BALANCEBOX 400

For touchscreens 37 - 90 kg, including mount max. VESA 800 x 400.

Position	Landscape
VESA	800 x 400
Accessories	See next page
Stroke	400 mm

Article code	Maximum load
BBW.0400-38	19 - 38 kg
BBW.0400-65	37 - 65 kg
BBW.0400-90	62 - 90 kg

HOW DOES IT WORK?

The BalanceBox is a mounting system with a built-in spring mechanism that balances heavy weights like a touchscreen, so that it appears to be “weightless”. Manually moving up and down becomes child’s play.

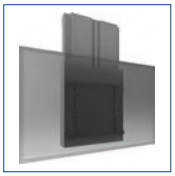

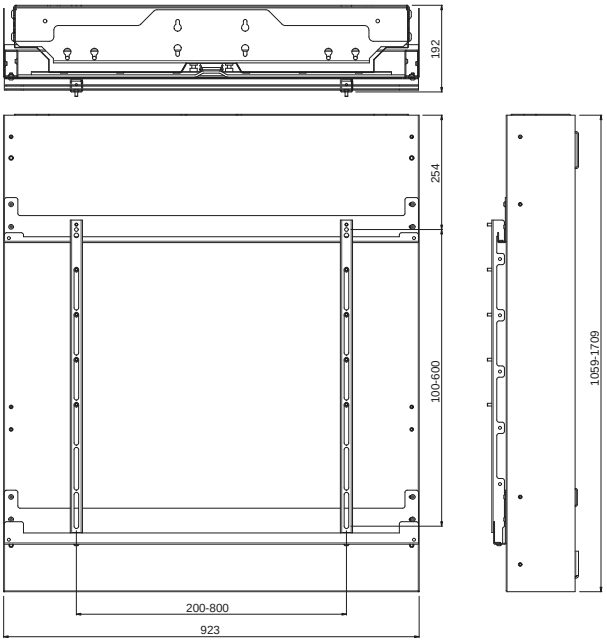

BALANCEBOX 650

For touchscreens 30 - 164 kg, including mount max. VESA 800 x 650.

Position	Landscape
VESA	800 x 650
Accessories	See below
Stroke	650 mm

Article code	Maximum load
BBW.0650-65	30 - 65 kg
BBW.0650-122	63 - 122 kg
BBW.0650-164	90 - 164 kg

Accessories

MOBILE STAND FOR BALANCEBOX

Mobile stand with integrated laptop shelve.

Colour	●
Note	No pictures nor specification sheet are available at the time this catalogue goes to press. Please contact our sales team if you have questions.

Article code	Description	Max. load
BBM.0400	Mobile stand for BalanceBox 400	125 kg
BBM.0650	Mobile stand for BalanceBox 650	180 kg

FLOOR SUPPORT FOR BALANCEBOX

For use with non-supporting walls.

Colour	○
Max. load	225 kg
Note	No pictures nor specification sheet are available at the time this catalogue goes to press. Please contact our sales team if you have questions.

Article code	Description
BBF.0400	Floor support for BalanceBox 400
BBF.0650	Floor support for BalanceBox 650

ELECTRICAL LIFT SYSTEMS

Floor supported & wall mounted

WALL LIFT XXL MAX. 86 INCH

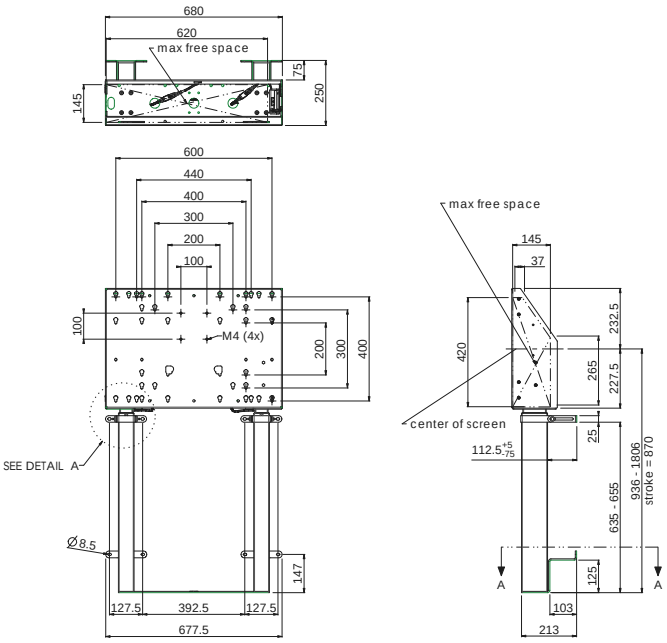

Colours	○●
Max. load	120 kg
Max. inch	86
Position	Landscape & Portrait
VESA	Max. 600 x 400
Stroke	870 mm
Accessories	See from page 58
Anti-collision	Included

Article code	Colours
052.7150W	White
052.7150B	Black

WALL LIFT XXL MAX. 98 INCH

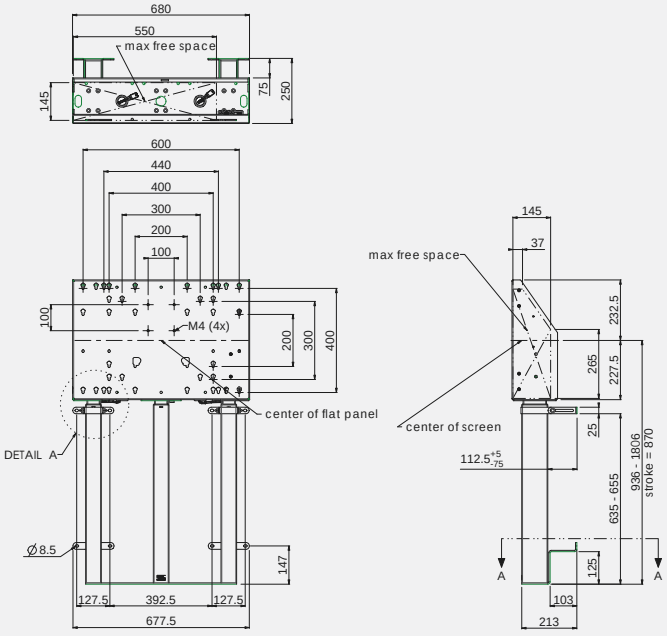

Colours	○●
Max. load	180 kg
Max. inch	98
Position	Landscape & Portrait
VESA	Max. 600 x 400
Stroke	870 mm
Accessories	See from page 58
Anti-collision	Included

Article code	Colour
052.7155W	White
052.7155B	Black

ELECTRICAL LIFT SYSTEMS

Floor & wall mounted

FLOOR LIFT XL MAX. 86 INCH

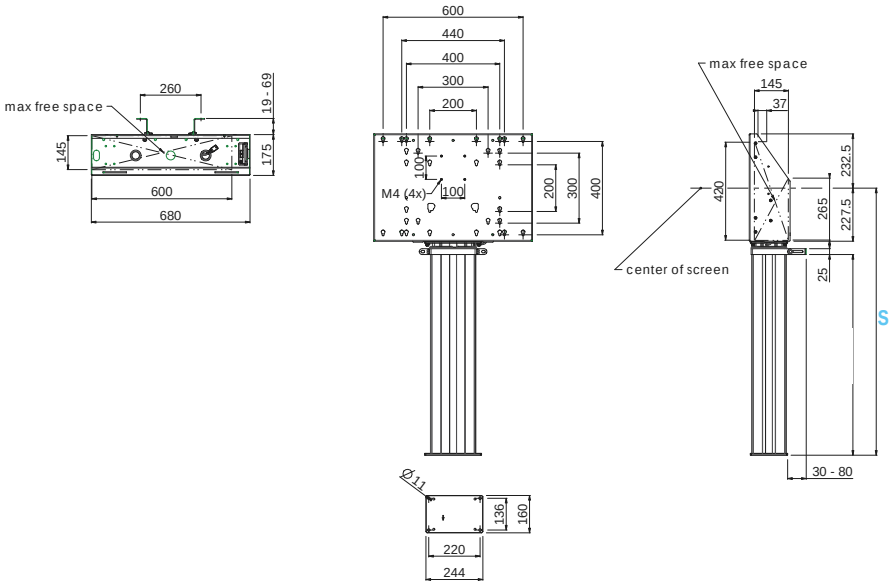

Colour	◐
Max. load	135 kg
Max. inch	86 inch
Position	Landscape, Portrait
VESA	Max. 600 x 400
Stroke	600 mm
Accessories	See from page 58

Article code	Stroke (centre screen) (S)
052.7200	1145.0 mm - 1745.0 mm (600 mm)
052.7250	882.5 mm - 1383.5 mm (500 mm)

FLOOR LIFT DOUBLE XL MAX. 98 INCH

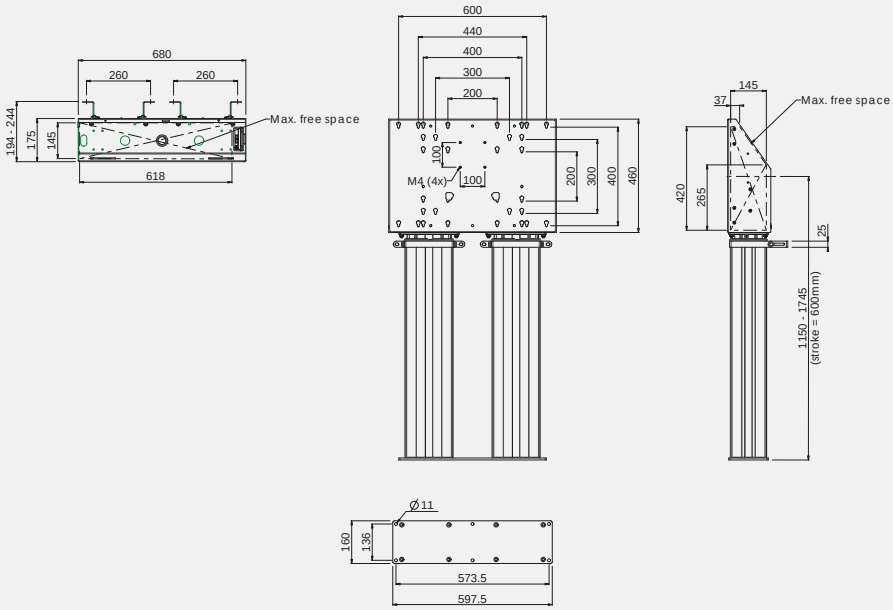

Colour	◐
Max. load	200 kg
Max. inch	98 inch
Position	Landscape, Portrait
VESA	Max. 600 x 400
Stroke	600 mm
Accessories	See from page 58

Article code	Stroke (centre screen)
052.7110	1145.0 mm - 1745.0 mm (600 mm)

ELECTRICAL LIFT SYSTEMS

Wall mounted

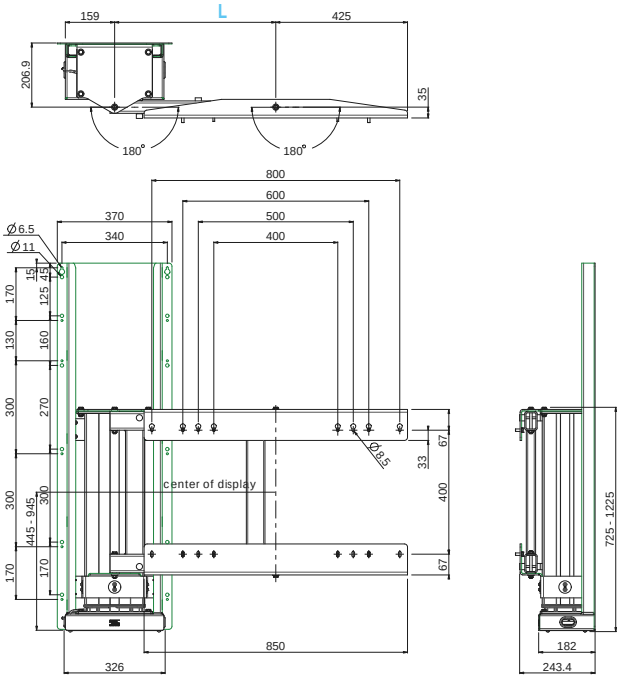

OPTIMAL FLEXIBILITY WITH 180° TURNABLE SWING

The wall mounted Swing has an electric height adjustment of 500 mm for (touch) screens up to 86 inch.
In addition to the electrical height adjustment, the monitor can be moved forward manually with a 180° turning motion and back to the wall again. When the monitor is pulled forward it can also be turned 90° to the left and right. The Swing offers the most flexibility for an optimal positioning of your (touch) screens.

Colour	○
Max. load	100 kg
Position	Landscape, Portrait
VESA	800/600/500/400 x 400
Stroke	500 mm

Benefits

- ✓ Adaptive use
- ✓ Health & Safety responsible use
- ✓ Easy to install
- ✓ Universal for all (touch) screens

Article code	Inch range	Arm length to centre screen
052.7400-65	Max. 65 inch	520 mm
052.7400-86	Max. 86 inch	740 mm

Accessory

FLOOR SUPPORT

Placed beneath the Swing the lift will be floor supported in case of weak wall. The support lends itself perfectly for branding and hiding small peripherals behind its lockable cover.

Article code	Description
052.7440	Floor support 690 mm
052.7445	Floor support 965 mm

NEW

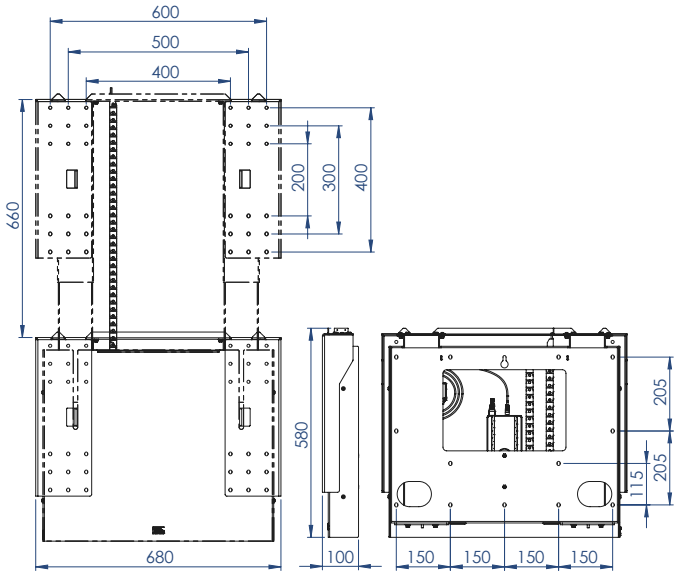

FREE FLOATING DESIGNED WALL LIFT FOR TOUCH SCREENS MAX. 86 INCH

The latest newcomer in our product range is this ultra-shallow wall lift system for touch screens of max. 86 inch: build-up between wall and touch screen is only 90 mm. With this lift your touch screen is mounted seemingly free floating in front of a wall, thus preserving aesthetics in the room. As with all lifts in our range, assembly and installation are quick and easy.

Colour	○
Max. load	100 kg
Max. inch	86 inch
Position	Landscape
VESA	Max. 600 x 400
Stroke	660 mm

Art. code
052.7500

Benefits

- ✓ Depth no more than 90 mm
- ✓ Invisibly mounted behind the monitor
- ✓ Aesthetics of the room are retained
- ✓ Easy to install

ELECTRICAL LIFT SYSTEMS

Freestanding on floor

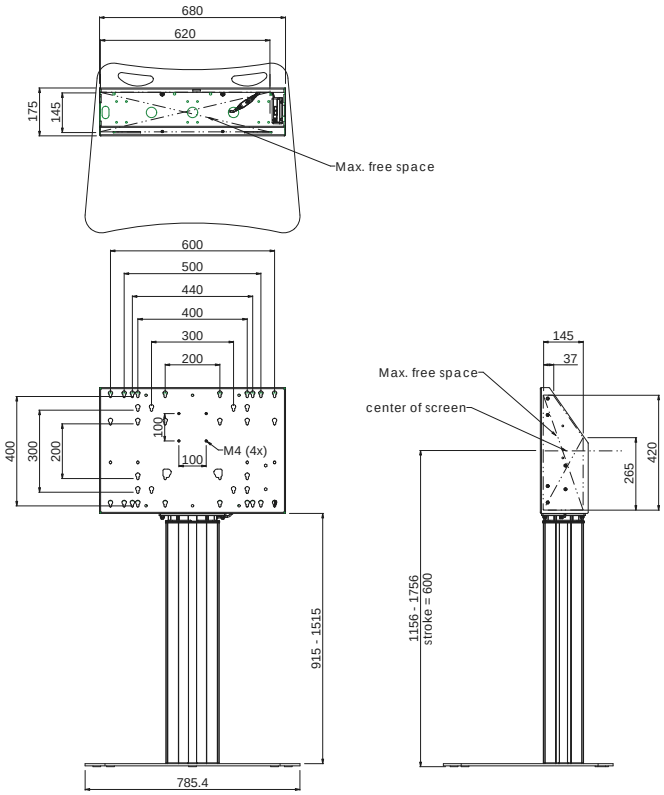

FREESTANDING FLOOR LIFT XL MAX. 135 KG, MAX. 86 INCH

For a freestanding solution, for example when drilling in the floor is not allowed, simply combine our floor lift XL with baseplate 052.7210.

Colour	◐
Max. load	135 kg
Max. inch	86 inch
Position	Landscape, Portrait
VESA	Max. 600 x 400
Accessories	See from page 58

Article code	Stroke (centre screen)
062.7410	1156.0 mm - 1756.0 mm (600 mm)

FREESTANDING FLOOR LIFT ANTI-COLLISION, MAX. 86 INCH

Colour	○●
Max. load	120 kg
Max. inch	86 inch
Position	Landscape, Portrait
VESA	Max. 600 x 400
Stroke	870 mm
Accessories	See from page 58
Anti-collision	Included

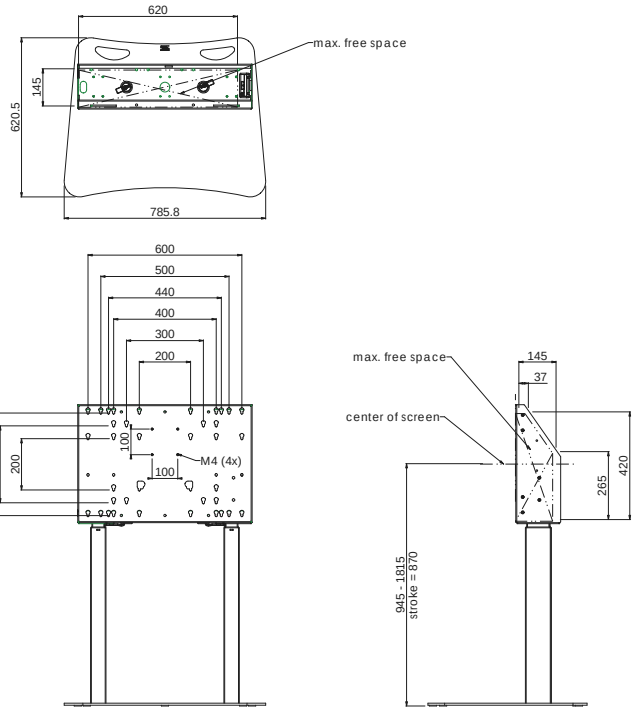

Article code	Colour
062.7420.11	White
062.7420.01	Black

FREESTANDING FLOOR LIFT ANTI-COLLISION, MAX. 98 INCH

Colour	○●
Max. load	180 kg
Max. inch	98 inch
Position	Landscape, Portrait
VESA	Max. 600 x 400
Stroke	870 mm
Accessories	See from page 58
Anti-collision	Included

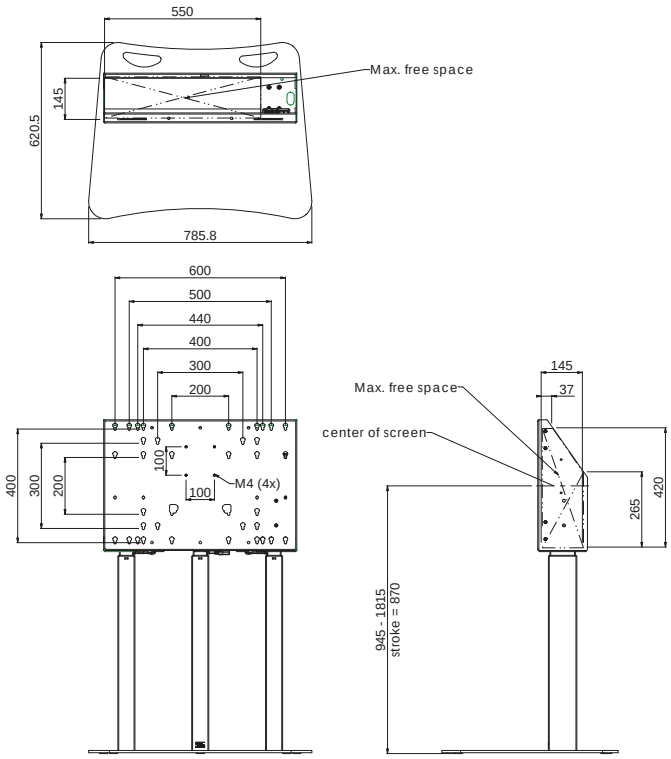

Article code	Colour
062.7430.11	White
062.7430.01	Black

ELECTRICAL LIFT SYSTEMS

On wheels

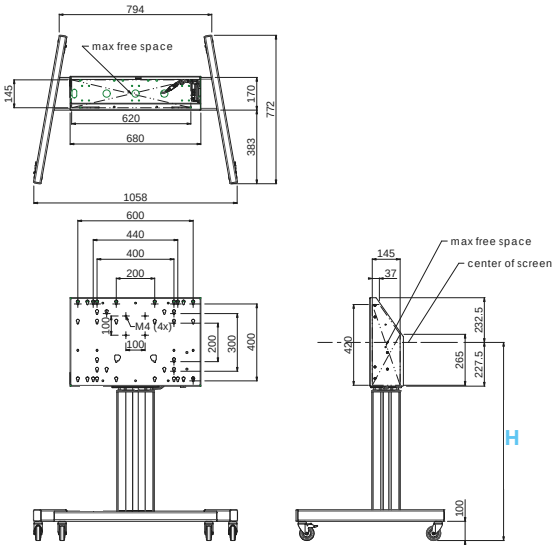

FLOOR LIFT MAX. 86 INCH

Colours	● ○
Max. load	120 kg
Max. inch	86 inch
Position	Landscape, Portrait
VESA	Max. 600 x 400
Accessories	See from page 58

Article code	Colour	Height (centre screen) (H)
062.7270	Silver grey	1030 - 1530 (500 mm)
062.7290	Silver grey	1290 - 1890 (600 mm)
062.7275	Black	1030 - 1530 (500 mm)
062.7295	Black	1290 - 1890 (600 mm)

Anti-collision

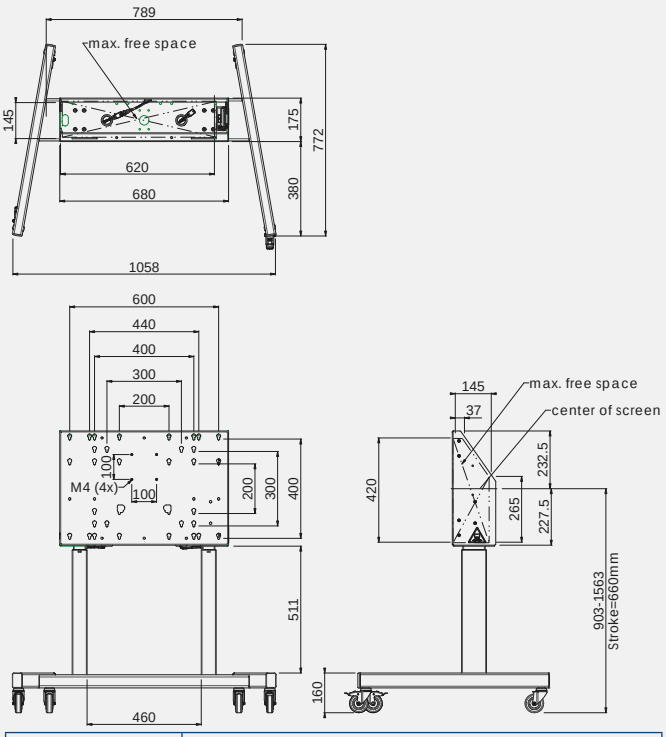

FLOOR LIFT MAX. 86 INCH

Colour	○ ●
Max. load	120 kg
Max. inch	86 inch
Position	Landscape, Portrait
VESA	Max. 600 x 400
Stroke	660 mm
Accessories	See from page 58
Anti-collision	Included

Article code	Colour
062.7205W	White
062.7205B	Black

No matter the environment or the way of use: we dare say we have a suitable lift system always.
You want to use a lift in more than just one room? Choose a lift on wheels.
All our lift systems are easy to install and safe in use due to the anti-collision feature which is included in most of our lifts and optionally available for the rest.

FLOOR LIFT DOUBLE XL MAX. 98 INCH

Colour	●
Max. load	160 / 200 kg* ** sturdier wheels (same height), pls contact us*
Max. inch	98 inch
Position	Landscape
VESA	Max. 600 x 400
Accessories	See from page 58

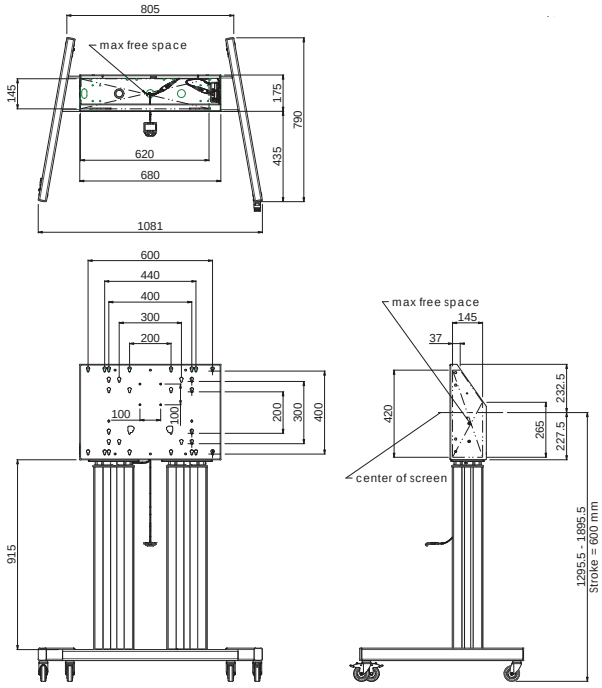

Article code
062.7105

FLOOR LIFT MAX. 98 INCH

Colour	○●
Max. load	180 kg
Max. inch	98 inch
Position	Landscape, Portrait
VESA	Max. 600 x 400
Stroke	660 mm
Accessories	See from page 58
Anti-collision	Included

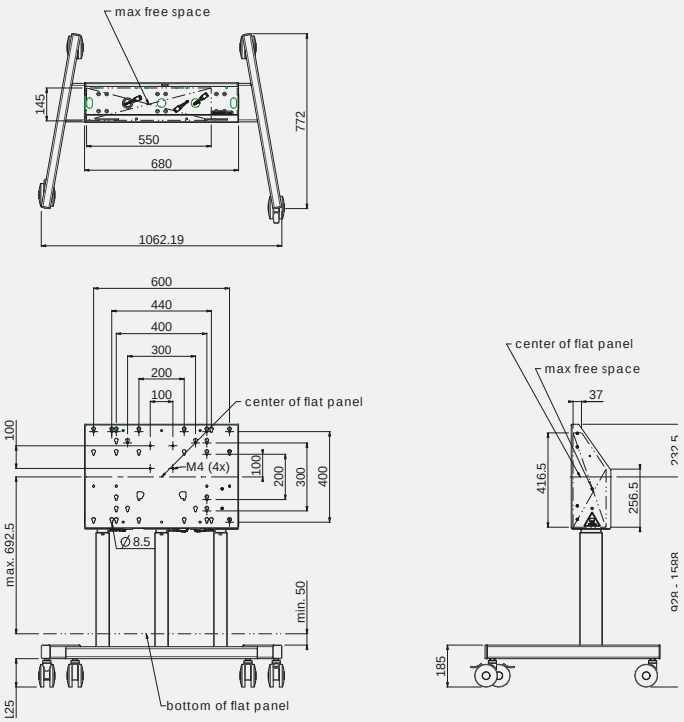

Article code	Colour
062.7225W	White
062.7225B	Black

ACCESSORIES

For lift systems

LIFT MOUNT WITH ROTATION
max. 800 x 600 mm, max. load 100 kg

052.5080

LARGE WALL PLATE
for 052.7110

052.7130

LAPTOP SUPPORT
for 2-column lifts with anti-collision

With 2x recess for Neutrik connectors and hidden cable entry.

052.7145

WALL BRACKET
for 052.7200 & 052.7250

To support floor lifts 052.7200 and 052.7250 against a wall.
Combined with the large wall plate (052.7235) you create a sturdy fixation to a weak wall.
Combine it with the wall fixation kit (052.7230), in case you cannot bolt to the floor.
One piece of this wall bracket is standard included with our lift systems.

052.7227

FLOOR SUPPORT
for 052.72x0, 062.727x & 062.729x

When you need to place your lift system higher this support takes care of it. Also ideal for branding purposes.

Article code	Description
052.7255	Support 410 mm
052.7255-27	Support 270 mm

LARGE WALL PLATE
for 052.7150

052.7135

CAMERA SUPPORT
for 2-column lifts with anti-collision

052.7147

CAMERA SUPPORT
for lift systems without anti-collision

052.7247

BASE PLATE
for 052.7200 and 052.7250

To install floor lifts freestanding.

052.7210

ADAPTER SET
VESA 800/600 x 400/200

Suitable for 052.7110, 052.72x0, 062.73x0, 062.7x05, 062.727x & 062.729x.

052.7265

ADAPTER SET
VESA 800/600 x 500/600

Suitable for 052,7110, 052.72x0, 062,73x0, 062.7x05, 062.727x & 062.729x.

052.7280

WALL FIXATION KIT
for 052.7200 and 052.7250

When drilling in the floor is not an option.

052.7230

LARGE WALL PLATE
for 052.7200 and 052.7250

To create additional mounting surface on a weak wall.

052.7235

ANTI-COLLISION MODULE
incl. 200 mm cable

Two pcs required for 052.7110, 062.7105 and 172.7022-45/55.

052.7217

UNIVERSAL SOUNDBAR ADAPTER

052.7285

LAPTOP SUPPORT
for 052.72x0, 062.72xx & 062.7105

052.7245

SET OF 2 HANDLES
for 062.72xx & 062.7105

063.7207

ACCESSORIES

For lift systems

LOCKABLE BACK COVER
for 052.72x0, 062.727x & 062.729x

063.7260

KEYBOARD SUPPORT
for 052.72x0 & 062.72xx

To combine with flat panels of max. 70 inch.

063.7240

MOUNTING KIT INCL. WHITEBOARDS FOR TOUCH SCREENS

Our whiteboard mounting kits come with enamel or laquered steel whiteboards custom-made for your touch display or (interactive) whiteboard model. Compared to lacquered steel, enamel steel offers no usage stains of the markers on the whiteboard and we offer 25 years warranty on the surface of an enamel steel whiteboard. Combine this mounting kit with a wall mount, floor lift or floor lift trolley and you have an educational tool with optimal ease of use.

Article code	Description
152.0110-ES	Mounting kit incl. whiteboards enamel steel for touch screen 55-70 inch, max. 1750mm x 1050mm (LxH)
152.0110-LS	Mounting kit incl. whiteboards lacquered steel for touch screen 55-70 inch, max. 1750mm x 1050mm (LxH)
152.0120-ES	Mounting kit incl. whiteboards enamel steel for touch screen 70-86 inch, max. 2050mm x 1250mm (LxH)
152.0120-LS	Mounting kit incl. whiteboards lacquered steel for touch screen 70-86 inch, max. 2050mm x 1250mm (LxH)

“SmartMetals: The Smarter Way of Mounting”

SmartMetals Mounting Solutions

ELECTRICAL LIFT SYSTEMS

On wheels with table & tip function

Our Tip & Touch Series for flat panels and touch screens offer the most flexible way of use:
The trolley can be safely moved from one room to another, it has a table function and from there can be tilted 90° to an upright position to then be adjusted 660 mm in height electrically.
The Tip & Touch offers perfect usabilty for example in a classroom or anywhere where users vary in length.

BENEFITS

- ✓ Easily and safely movable
- ✓ Monitor to be used in both a table and upright position
- ✓ Also available in models specifically designed for little children (lower) and wheelchair users (wider)
- ✓ Perfect usability for users with different lengths

TIP & TOUCH STAND

Stand on wheels with anti-collision for touchscreens max. 75 inch. Supplied including mount max. VESA 600 x 400.

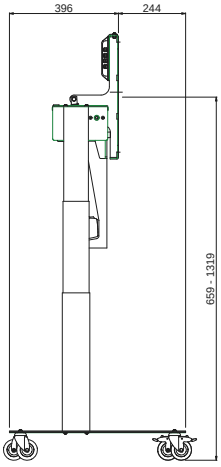

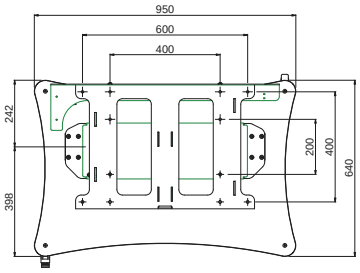

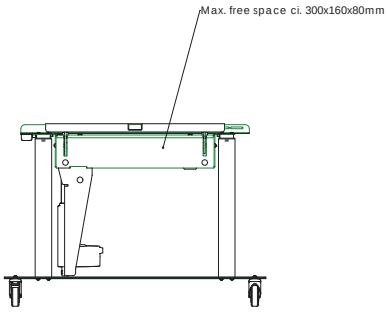

	Colour	●
	VESA	Max. 600 x 400
	Stroke	660 mm
	Anti-collision	Included

Article code	Max. load	Max. inch	H base plate
062.7650	60 kg	Max. 65 inch	6 mm
062.7650-95	95 kg	Max. 75 inch	12 mm

SPECIAL MODEL

TIP & TOUCH EXTRA LOW

This model has been developed especially for the smaller children.

Colour	●
Max. load	60 kg
Max. inch	65 inch
VESA	Max. 600 x 400
Stroke	660 mm
Anti-collision	Included

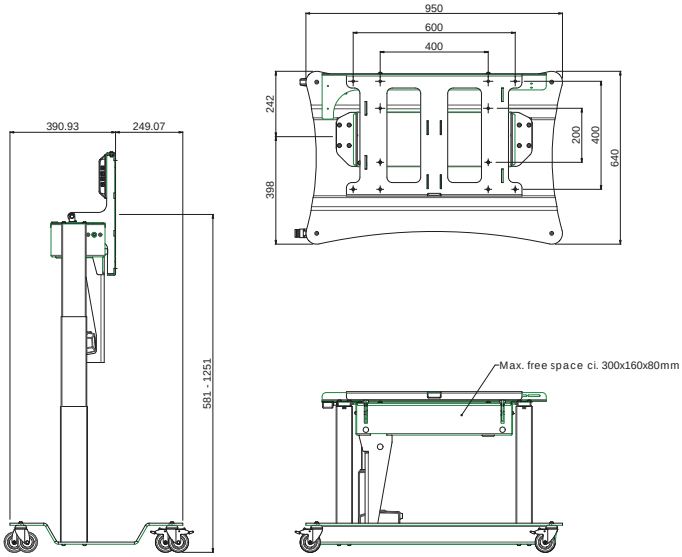

Article code
062.7660

SPECIAL MODEL

TIP & TOUCH EXTRA WIDE

This model has been developed especially for users in wheelchair.

Colour	●
Max. load	60 kg
Max. inch	65 inch
VESA	Max. 600 x 400
Stroke	660 mm
Anti-collision	Included

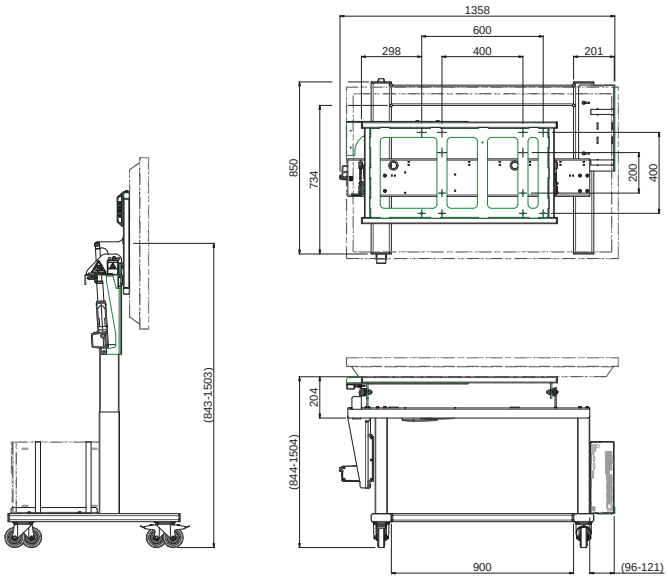

Article code
062.7700

Accessories

COMPUTER CABINET

Article code
063.7670

ELECTRICAL LIFT SYSTEMS

Cabinet mounted

By implementing a cabinet mounted lift system you elevate the integration of your flat panel. Whether dedicated to a meeting room or cozy interior, the cabinet mounted lift systems on these pages are a must for collaborative or fun use and the smartest solution combining functionality and design to retain interior aesthetics.

BENEFITS

- ✓ Interior aesthetics are retained by hiding the flat panel when not in use
- ✓ The flat panel is raised to desired height with a simple push of a button
- ✓ The cabinet lift offers ultimately safety due to integrated anti-collision

FLAT PANEL CABINET LIFT MAX. 65 INCH

Colour	●
Max. load	45 kg
Max. inch	65 inch
Position	Landscape
VESA	Max. 600 x 400
Stroke	160 mm
Stroke	182.7020: 660 mm 182.7025: 1000 mm
Anti-collision	Included
Other info	RF remote optionally available

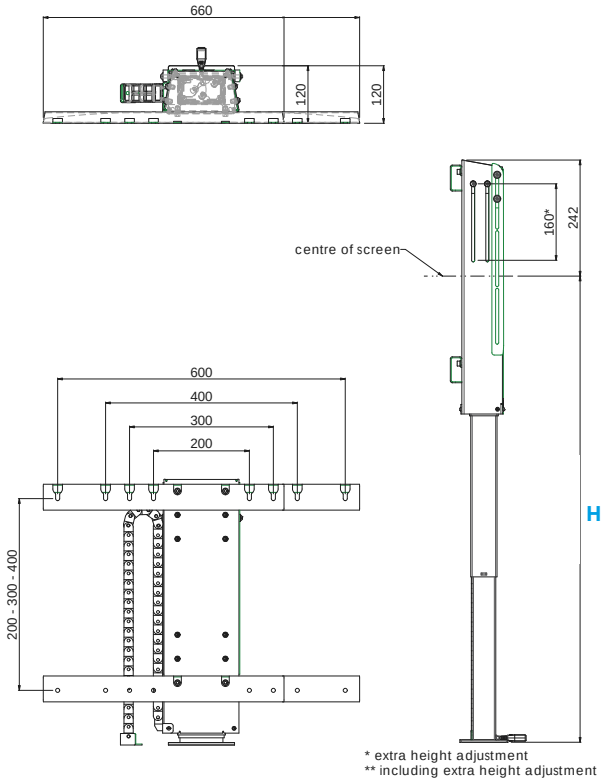

Art. code	Max. mon. height	Height (centre screen) (H)
182.7020	620 mm (46 inch)	315 - 1135 (incl. *) mm
182.7025	960 mm (65 inch)	500 - 1660 (incl. *) mm

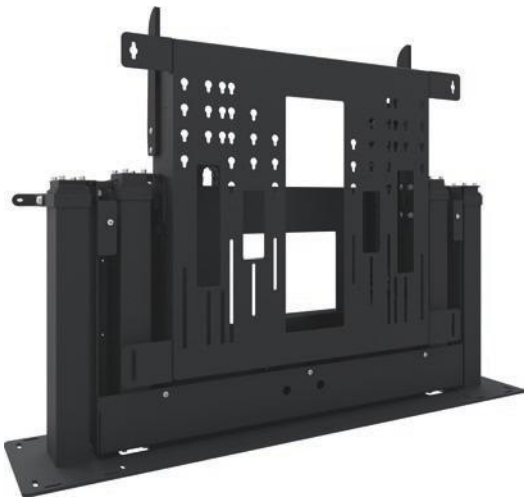

FLAT PANEL CABINET LIFT MAX. 86 INCH

Colour	●
Max. load	70 kg
Max. inch	86 inch
Position	Landscape
VESA	Max. 600 x 400
Stroke	50 mm
Stroke	1320 (incl. *) mm
Note	Specifications are preliminary due to the product being in development at the time this catalogue goes to press. Please contact our sales team for current information.

Art. code
182.7030

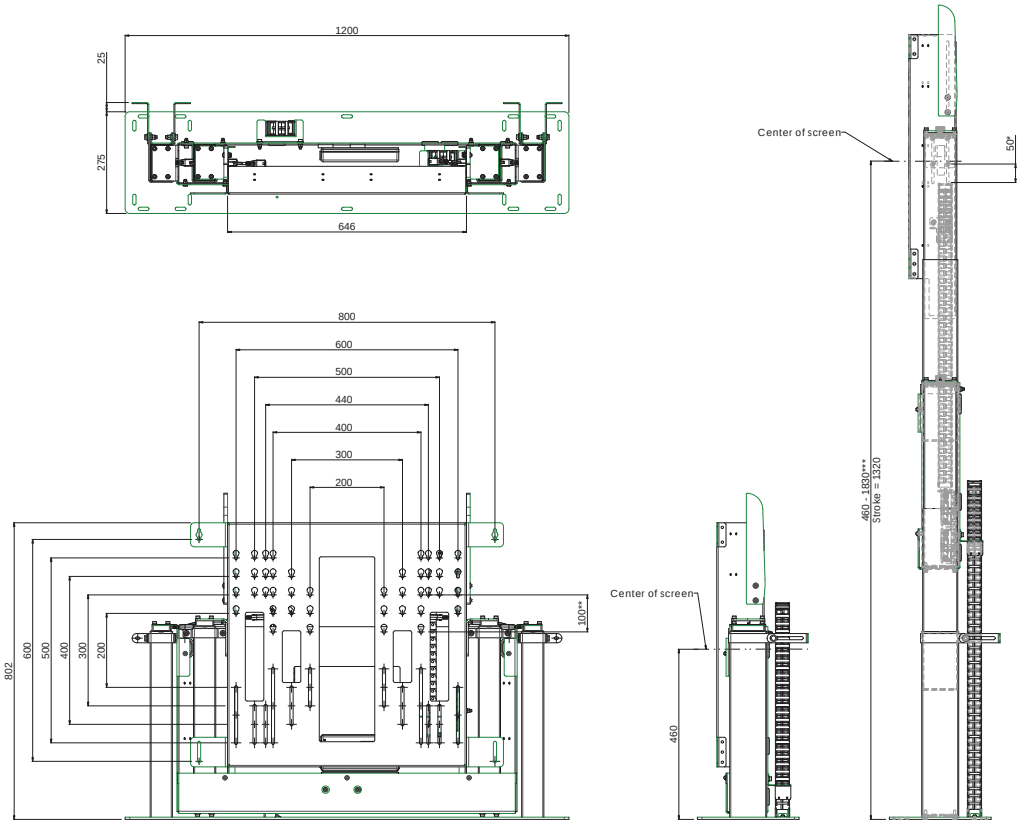

* extra height adjustment
** extra height adjustment for VESA up to 600x400
*** including extra height adjustment of 50 mm

FLOOR, FLOOR TO CEILING & FLOOR TO WALL COLUMNS

It happens quite often that a fixed installation of one or more monitors in a room is desired while the wall or ceiling are not strong enough to mount the monitor(s) or in window enclosed rooms.
For these situations we have developed a wide range of solutions, based on our standard floor stands, that can be mounted to the wall and floor or between floor and ceiling. Depending on the size and weight of your monitor(s) we offer the choice between the Light Series or the standard Heavy Duty Series. Also a fixed mounting to the floor only is an option we can offer you.
The Light Series models are supplied as a complete package deal, including a VESA bracket. The standard Heavy Duty Series should be combined with one of the monitor brackets as mentioned from page 9.

All the in this chapter mentioned solutions have an invisible duct for organised cable management and are supplied including a trim ring to easily and neatly finish the cut out in a suspended ceiling or computer floor.

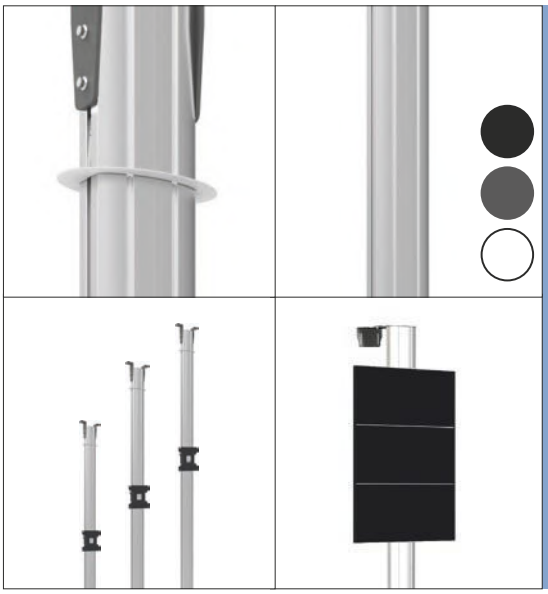

BENEFITS

- ✓ Enables mounting in places difficult to access
- ✓ Stable solution
- ✓ Supplied complete with ceiling and/or floor trim ring
- ✓ Other lengths up to 6000 mm possible
- ✓ Other colours possible to perfectly fit the interior
- ✓ With additional mounting heads you can mount multiple screens above one another
- ✓ Because of the multiple custom options always a suitable solution to every situation

NEW

You might also want to take a glance at the floor to wall/ceiling columns from our latest **Installation Series** on page 38:
The smart flat panel mounting you are used to, but now with maximum user friendliness.

FLOOR COLUMNS

Floor mounted

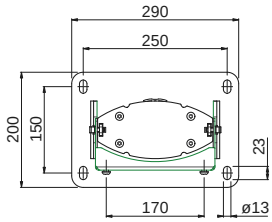

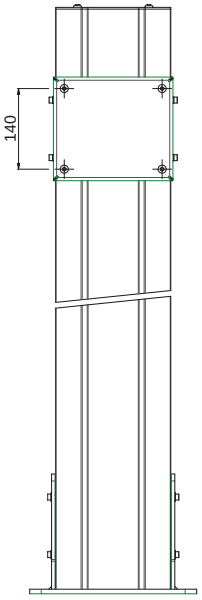

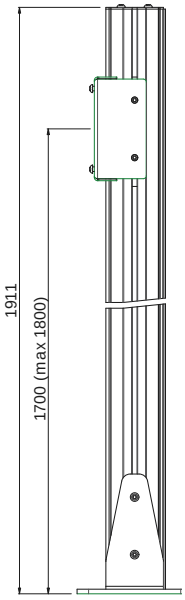

WHEN FLOOR SPACE IS MINIMAL

Sometimes there just is not enough room to install a freestanding floor stand with a floor plate. That is where this column for fixed mounting to the floor could be the perfect solution:
It has a small floor plate that can be bolted to the floor.
With its slim looks this column blends in in every interior.

This column also forms the base of our VideoWall VW2.
Without floor plates it is possible to build VideoWalls with monitors smaller than 950 mm as well.
Read more about our VideoWalls from page 76.

Colour	⚪
Max. load	100 kg
Max. inch	90 inch
Position	Landscape & Portrait
Acc.	See from page 71
Note	170 x 140 modular mounting
Required	Universal wall mount, see page 9
Other info	Different colours and lengths on request

Article code
063.0860

FLOOR TO WALL COLUMNS

Floor and wall mounted

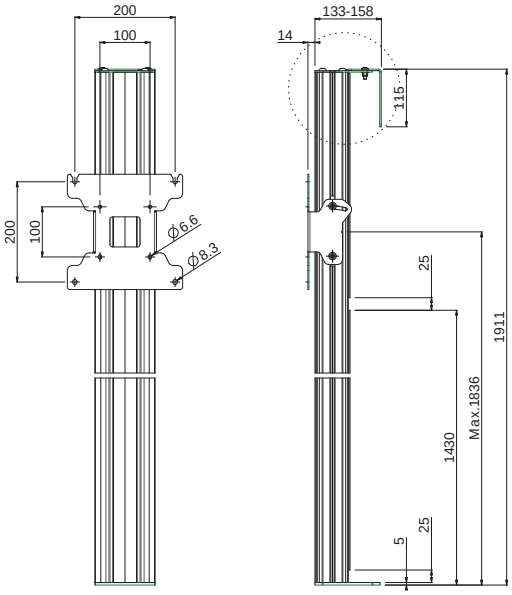

LIGHT SERIES COLUMN, INCL. BRACKET MAX. VESA 400

Colour	○
Max. load	50 kg
Position	Landscape & Portrait
Acc.	See page 71
Other info	Different colours and lengths on request

Article code	VESA bracket
063.8800-122	VESA 100, 200
063.8800-144	VESA 200, 300, 400 x 200, 400

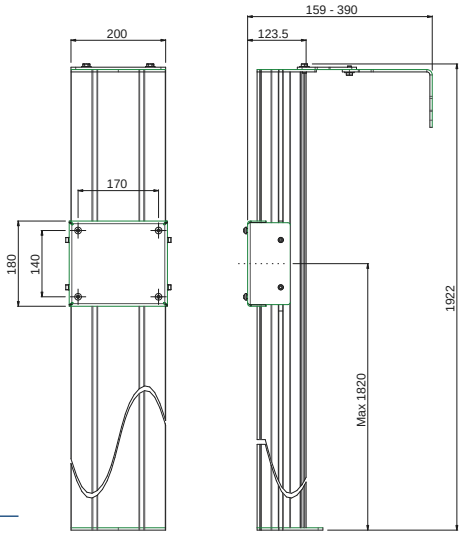

HEAVY DUTY SERIES COLUMN MAX. 90 INCH, 100 KG

Colour	○
Max. load	100 kg
Max. inch	90 inch
Position	Landscape & Portrait
Acc.	See from page 71
Note	170 x 140 modular mounting
Required	Universal wall mount, see from page 9
Other info	Different colours and lengths on request

Article code
063.0800

FLOOR TO CEILING COLUMNS

Floor and ceiling mounted

LIGHT SERIES COLUMN, INCL. BRACKET MAX. VESA 400

	Colour	○
	Max. load	50 kg
	Position	Landscape & Portrait
	Acc.	See page 71
	Other info	Different colours and lengths on request

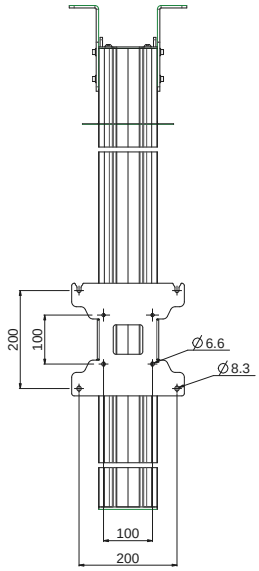

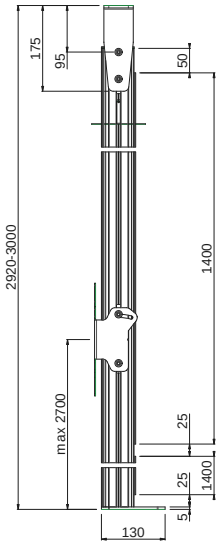

Article code	VESA bracket
063.8850-122	VESA 100, 200
063.8850-144	VESA 200, 300, 400 x 200, 400

HEAVY DUTY SERIES COLUMN MAX. 90 INCH, 100 KG

	Colour	○
	Max. load	100 kg
	Max. inch	90 inch
	Position	Landscape & Portrait
	Acc.	See from page 71
	Note	170 x 140 modular mounting
	Required	Universal wall mount, see from page 9
	Other info	Different colours and lengths on request

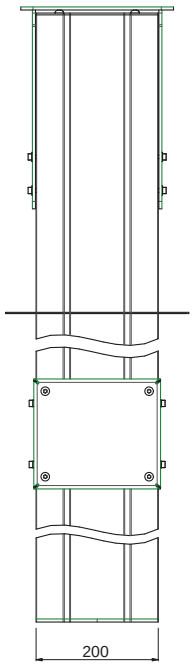

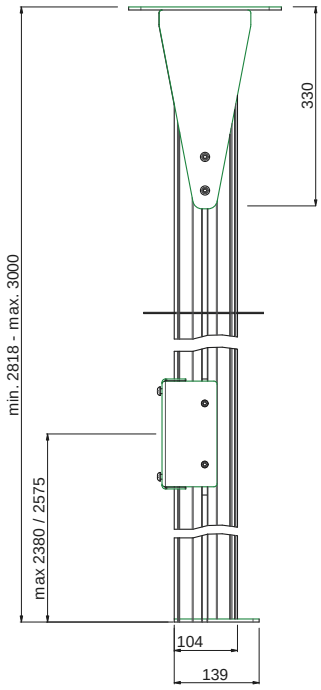

Article code
063.0850

FLOOR MOUNTS

Floor and wall mounted

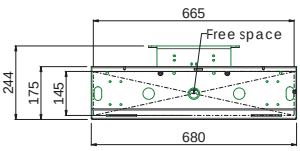

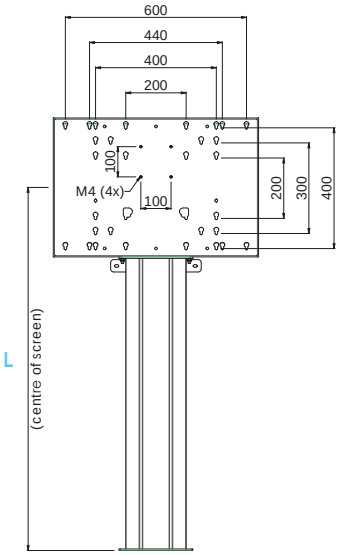

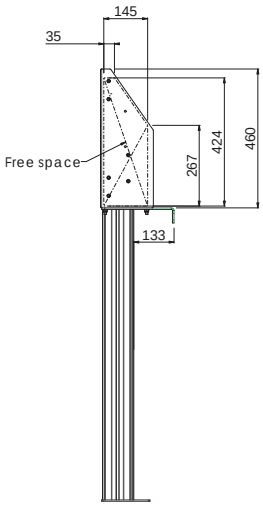

FLOOR TO WALL COLUMN

This solution is installed fixed to the floor, near and connected to a wall for an extra stable solution for your touchscreen. VESA mounting is integrated as well as ample storage space for placing a mini PC or other peripherals.

Colour	◐
Max. load	135 kg
Max. inch	86 inch
Position	Landscape
VESA	Max. 600 x 400
Acc.	See from page 72

Article code	Length (centre screen) (L)
052.7320	1200 mm
052.7340	1400 mm
052.7360	1600 mm

ACCESSORIES

For Light Series columns (063.88x0)

LAPTOP SUPPORT

Article code	Description
063.8100	Surface 386 x 308 mm
063.8110	Surface 300 x 190 mm

MINI-PC/THIN CLIENT HOUSING

max. 397 x 218 x 100 mm, lockable

063.0710

VESA 600 ADAPTERSTRIPS

172.0008

For Heavy Duty Series columns (063.08x0)

LAPTOP SUPPORTS

Article code	Description
063.0100	Surface 386 x 308 mm
063.0110	Surface 300 x 190 mm

MEDIA HOUSING

max. 450 x 377 x 114 mm

Protect your valuable equipment by placing it in this lockable media housing. Cables can be run through the back side into the column and the position of the housing can be adjusted continuously over the full length of the column.

063.0700

STAND HEAD

170 x 140 mm mounting

To install more screens to a 063.08x0 column you need this additional stand head(s). Also add an additional wall mount(s) 052.1000/.2000/.6000, which can be found from page 9.

063.0820

more on next page

ACCESSORIES

For Heavy Duty Series columns (063.08x0)

MINI-PC/THIN CLIENT HOUSING
max. 397 x 218 x 100 mm

Your mini-PC is safely installed and protected from theft and vandalism in this solid steel housing. Cables can be run through the upper side into the column and the housing can be adjusted in height continuously.
Important benefit of this housing is that this housing is placed behind the flat panel.

063.0710

For floor mounts (052.73x0)

LAPTOP SUPPORTS

This laptop support can be mounted to the column over the full height and can be secured with a padlock.

Article code	Description
063.0100	Surface 386 x 308 mm
063.0110	Surface 300 x 190 mm

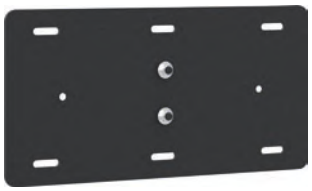

LARGE WALL PLATE

To create additional mounting surface on a weak wall.

052.7235

For floor mounts (052.73x0)

ADAPTER SET
VESA 800/600 x 400/200

052.7265

ADAPTER SET
VESA 800/600 x 500/600

052.7280

SOUNDBAR ADAPTER

Universally applicable.

052.7285

WALL MOUNT KIT
for 052.73x0 series

When drilling in the floor is not an option.

052.7330

BACK COVER
lockable

063.7260

KEYBOARD SUPPORT

To combine with flat panels max. 70 inch.

063.7240

MOUNTING KIT INCL. WHITEBOARDS FOR TOUCH SCREENS

Our whiteboard mounting kits come with enamel or laquered steel whiteboards custom-made for your touch display or (interactive) whiteboard model. Compared to lacquered steel, enamel steel offers no usage stains of the markers on the whiteboard and we offer 25 years warranty on the surface of an enamel steel whiteboard. Combine this mounting kit with a wall mount, floor lift or floor lift trolley and you have an educational tool with optimal ease of use.

Article code	Description
152.0110-ES	Kit incl. whiteboards enamel steel for touch screen 55-70 inch, max. 1750mm x 1050mm (LxH)
152.0110-LS	Kit incl. whiteboards lacquered steel for touch screen 55-70 inch, max. 1750mm x 1050mm (LxH)
152.0120-ES	Kit incl. whiteboards enamel steel for touch screen 70-86 inch, max. 2050mm x 1250mm (LxH)
152.0120-LS	Kit incl. whiteboards lacquered steel for touch screen 70-86 inch, max. 2050mm x 1250mm (LxH)

VIDEOCONFERENCING

Trolleys for 1 flat panel

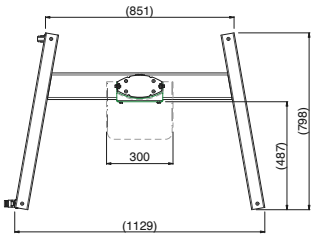

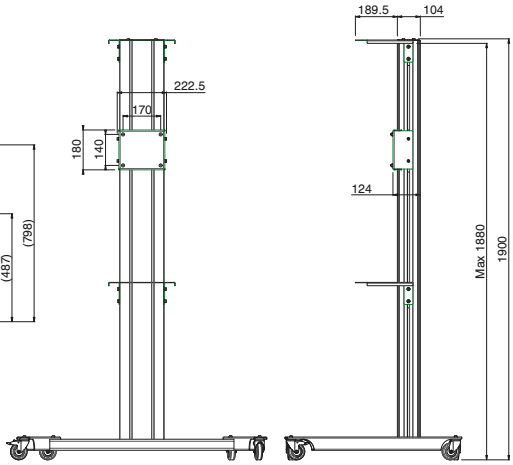

VC TROLLEY MAX. 90 INCH INCL. 2 SUPPORTS

Colour	◐
Max. load	85 kg
Max. inch	90 inch
Position	Landscape & Portrait
Note	170 x 140 modular mounting
Required	Universal wall mount, see from page 9

Article code
INT.1015

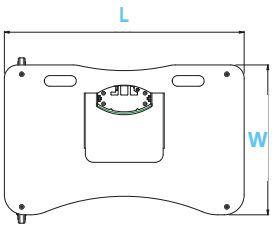

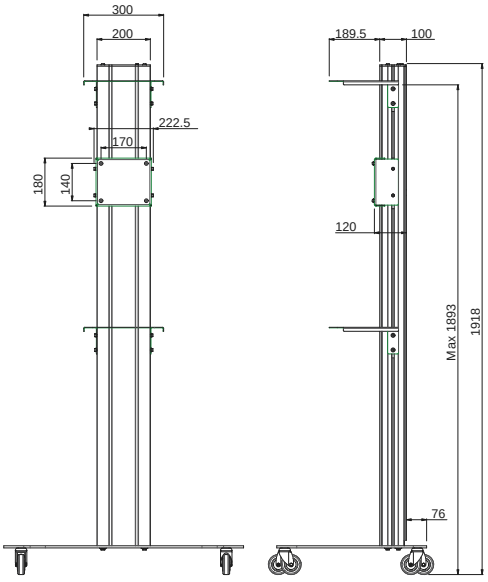

VC TROLLEY MAX. 90 INCH INCL. 2 SUPPORTS

Colour	◐
Position	Landscape & Portrait
Note	170 x 140 modular mounting
Required	Universal wall mount, see from page 9

Article code	Max. load	Inch range	Base plate L (L) x W (W)
INT.1030	60 kg	50 - 65 inch	900 x 562 mm
INT.1040	85 kg	Max. 90 inch	1100 x 662 mm

Uncluttered conferencing

The best decor for a videoconferencing room is plain and simple with the camera's field of view as uncluttered as possible. But not just, an uncluttered view for participants within the room keeps their focus optimal as well.

Based on our standard floor stands we offer a varity of video conference solutions. For one or two screens, with wheels or fixed to floor and wall and they all come with a small support for the camera and/or codec.

For locations where aesthetics of the room need to be retained consider our video conferencing furniture. It offers ample storage space for equipment and other peripherals.

VIDEOCONFERENCING

Trolleys for 2 flat panels

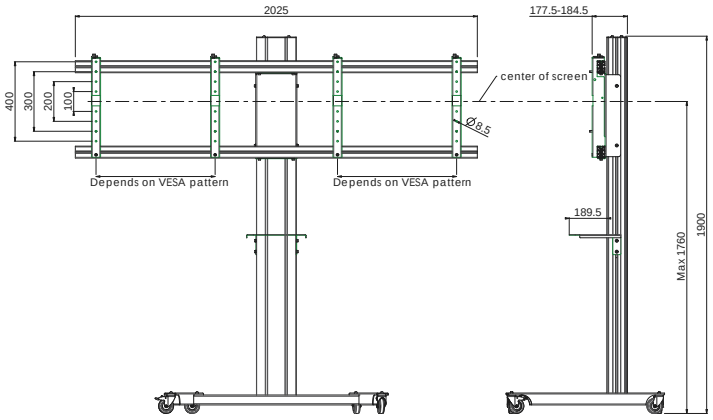

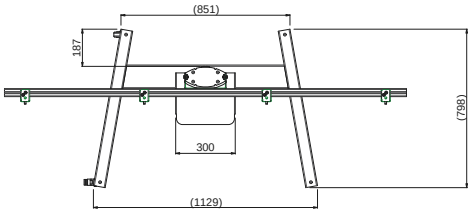

VC TROLLEY 2x 46-55 INCH INCL. 1 SUPPORT

Colour	◐
Max. load	100 kg
Max. inch	Max. 2x 55 inch
Position	Landscape & Portrait

Article code	Other info
062.2805	-
INT.1025	with 2nd support

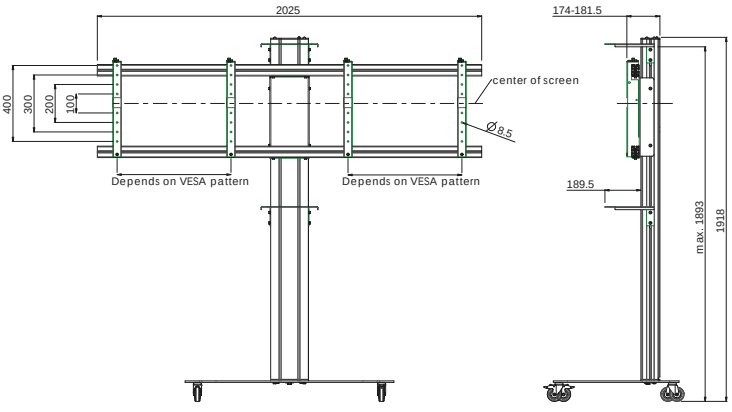

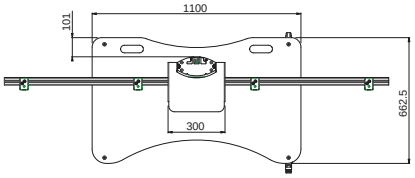

VC TROLLEY 2x 46-55 INCH INCL. 2 SUPPORTS

Colour	◐
Max. load	100 kg
Max. inch	2x max. 55 inch
Position	Landscape & Portrait

Article code
INT.1055

VIDEOCONFERENCING

Floor to wall columns

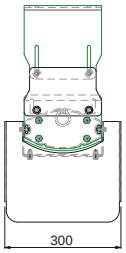

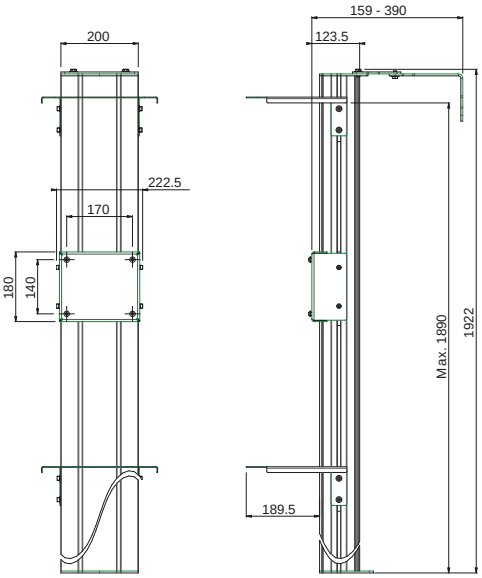

FLOOR TO WALL COLUMN MAX. 90 INCH INCL. 2 SUPPORTS

Colour	◐
Max. load	85 kg
Max. inch	90 inch
Position	Landscape & Portrait
Note	170 x 140 modular mounting
Required	Universal wall mount, see from page 9

Article code
INT.1060

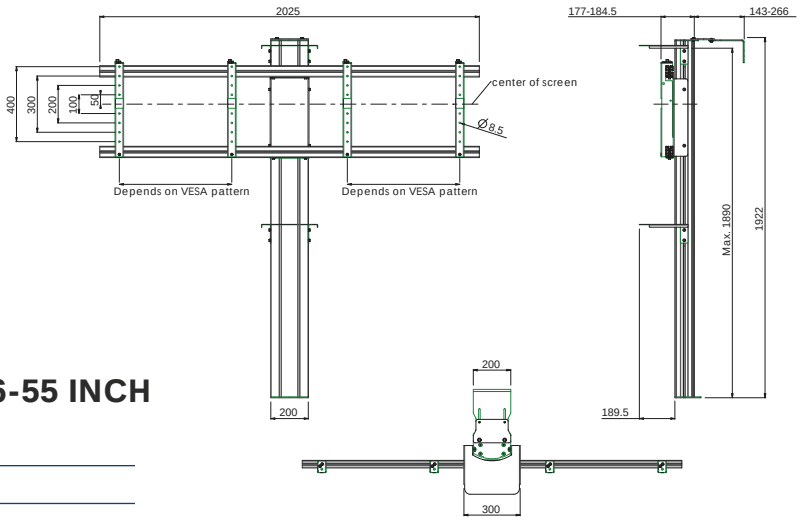

FLOOR TO WALL COLUMN 2x 46-55 INCH INCL. 2 SUPPORTS

Colour	◐
Max. load	100 kg
Max. inch	2x max. 55 inch
Position	Landscape & Portrait

Article code
INT.1075

NEW

You might also want to take a glance at the videoconferencing floor to wall/ceiling columns from our latest **Installation Series** on page 39:
The smart flat panel mounting you are used to, but now with maximum user friendliness.

“There is more to our mounts than just metal.”

SmartMetals Mounting Solutions

VIDEOCONFERENCING

Furniture

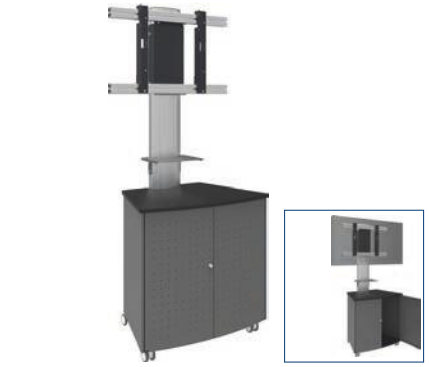

FURNITURE FOR FLAT PANELS INCL. 1 SUPPORTS

Benefits

- ✓ Less distraction with peripherals out of sight
- ✓ Peripherals safely stored
- ✓ Aesthetics of the room are retained
- ✓ Delivered completely assembled

Colour	◐
Position	Landscape
Other info	Including lockable cabinet

Article code	Width (W)	Max. inch	Max. load
062.2850	800 mm	1x max. 70 inch	50 kg
062.2855-47	1910 mm	2x 42 - 47 inch	100 kg
062.2855-55	2025 mm	2x 52 - 55 inch	100 kg

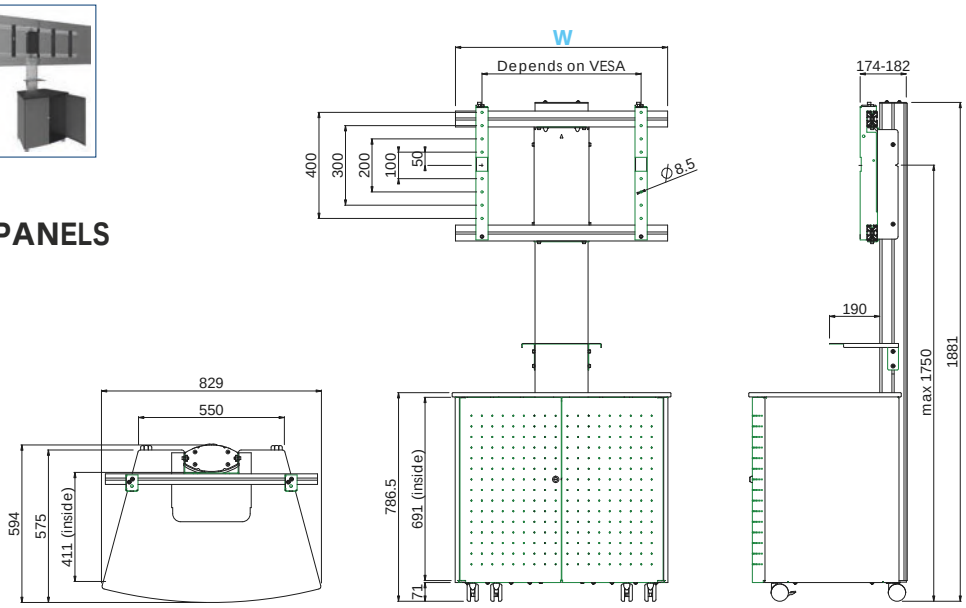

Accessories

LAPTOP SUPPORT

Article code	Description
063.0100	Surface 386 x 308 mm
063.0110	Surface 300 x 189 mm

19 INCH RACK, 7HE INCL. SHELF

Order together with furniture.

Article code
062.2851

VIDEOWALLS

From wall, to floor and ceiling mounted

A challenge when mounting a row of displays or a matrix configuration (compared to a single display installation) to a wall is that the larger the mounting surface the more chances of the wall not being 100% evened. Not to worry: the VideoWall mount serves serve as a completely level mounting surface to which the screens can be installed. Thanks to its aluminium profiles, the mounting challenge, to properly align the displays horizontally as well as vertically and in depth, is met.
Maintenance to the VideoWall is hassle free as is the replacement of the screens.

SmartMetals offers a complete package, giving installers the choice of three different types of mounting arms and a wide variety of wall or floor components, for both large and small VideoWalls.

BENEFITS

- ✓ Easy installation and adjustment
- ✓ For landscape and portrait
- ✓ Solve your mounting problems when the surface is not 100% levelled
- ✓ Push to open mounts for easy and quick service access
- ✓ Custom made solutions possible, even in curved configuration

VIDEOWALLS

How it works - the components of a wall mounted VideoWall

172.0080 Wall bracket

172.0010-50 Aluminium profile

172.0100 Mounting arms
172.0200 Mounting arms
172.0300 Mounting arms

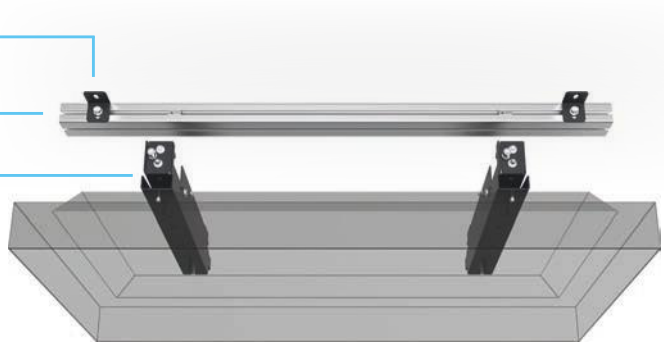

VIDEOWALL - SET OF MOUNTING ARMS PUSH TO OPEN

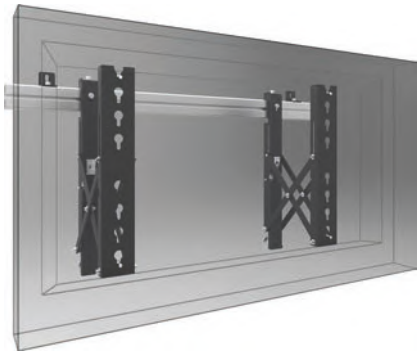

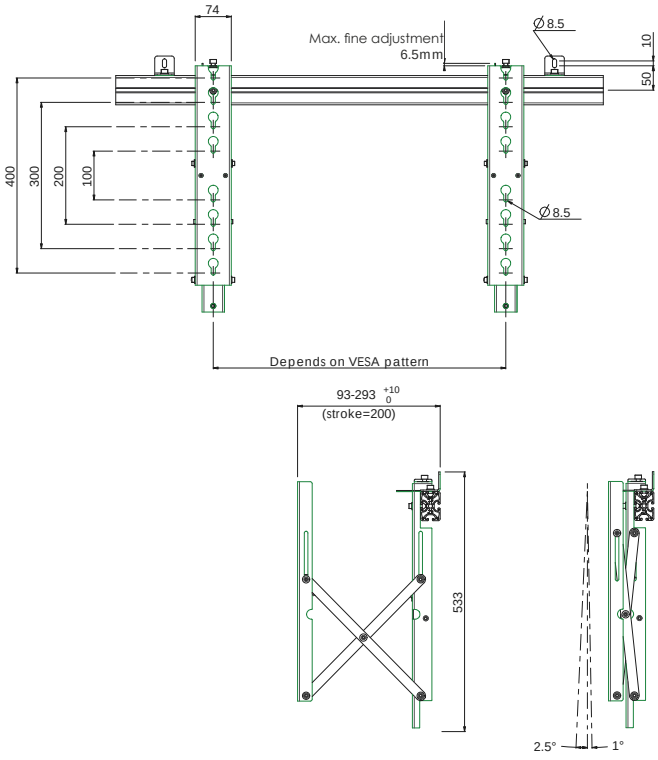

	Colour	●
KG	**Max. load**	80 kg
	Max. inch	From 46 inch
	Position	Landscape & Portrait
	VESA	Max. 800 x 400

Article code
172.0100

VIDEOWALLS

Wall mounted

VIDEOWALL - SET OF MOUNTING ARMS ALIGNMENT MECHANISM

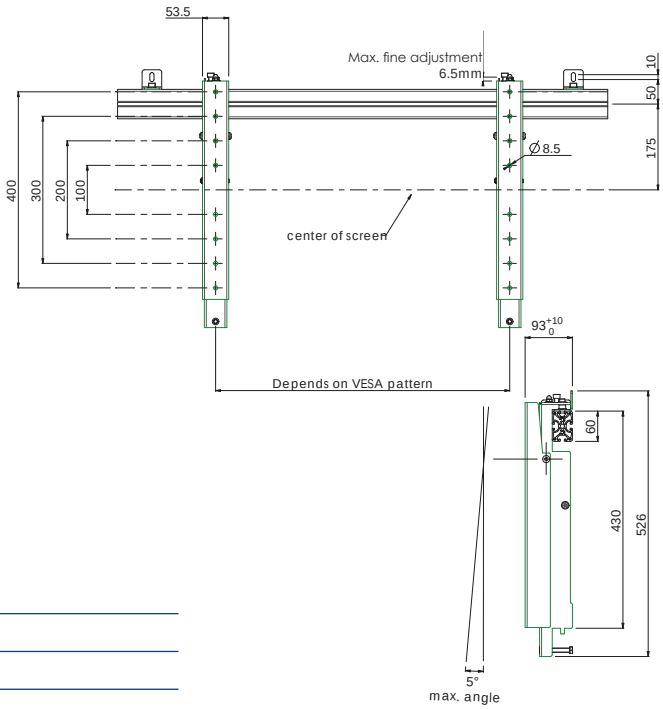

Colour	●
Max. load	80 kg
Max. inch	From 46 inch
Position	Landscape & Portrait
VESA	Max. 800 x 400

Article code
172.0200

VIDEOWALL - SET OF MOUNTING ARMS ECONOMY VERSION

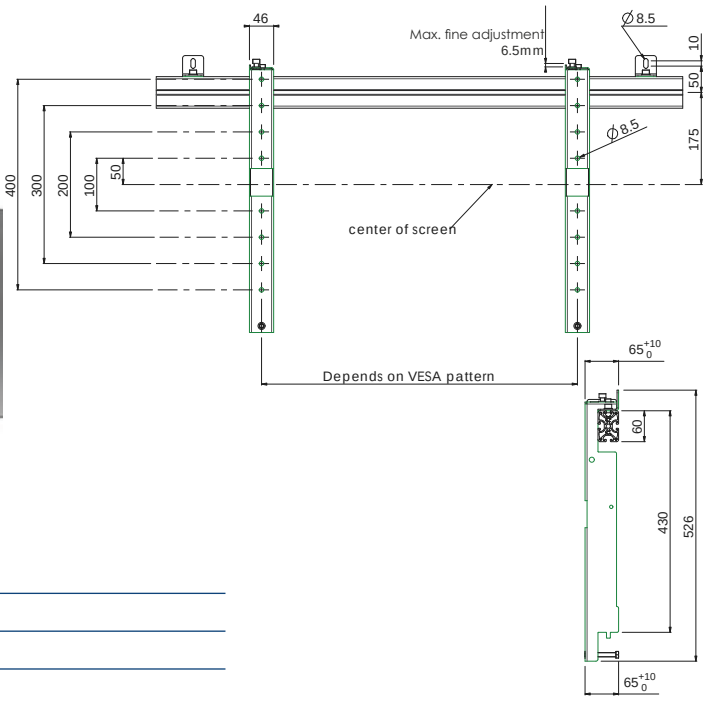

Colour	●
Max. load	80 kg
Max. inch	From 46 inch
Position	Landscape & Portrait
VESA	Max. 800 x 400

Article code
172.0300

VIDEOWALLS

Wall mounted configurations

+	**Accessories**	See from page 94
!	**Required**	Minimum flat panel height: 533 mm
ⓘ	**Other info**	Other lengths on request

Article code	Configuration	Wall brackets	Aluminium	Length	Mounting arms
172.1111	1 x 1	2 x 172.0080	1 x 172.0010	800 mm	1 x 172.0100
172.1122-46	2 x 2	6 x 172.0080	2 x 172.0020	1825 mm	4 x 172.0100
172.1122-55	2 x 2	6 x 172.0080	2 x 172.0030	2017 mm	4 x 172.0100
172.1122-60	2 x 2	6 x 172.0080	2 x 172.0030	2136 mm	4 x 172.0100
172.1133-46	3 x 3	12 x 172.0080	3 x 172.0030	2850 mm	9 x 172.0100
172.1133-55	3 x 3	12 x 172.0080	3 x 172.0040	3234 mm	9 x 172.0100
172.1133-60	3 x 3	12 x 172.0080	3 x 172.0040	3472 mm	9 x 172.0100
172.1154-46	5 x 4	28 x 172.0080	8 x 172.0030	2450 mm	20 x 172.0100
172.1154-55	5 x 4	28 x 172.0080	8 x 172.0030	2834 mm	20 x 172.0100
172.1154-60	5 x 4	28 x 172.0080	8 x 172.0040	3072 mm	20 x 172.0100
172.1211	1 x 1	2 x 172.0080	1 x 172.0010	800 mm	1 x 172.0200
172.1222-46	2 x 2	6 x 172.0080	2 x 172.0020	1825 mm	4 x 172.0200
172.1222-55	2 x 2	6 x 172.0080	2 x 172.0030	2017 mm	4 x 172.0200
172.1222-60	2 x 2	6 x 172.0080	2 x 172.0030	2136 mm	4 x 172.0200
172.1233-46	3 x 3	12 x 172.0080	3 x 172.0030	2850 mm	9 x 172.0200
172.1233-55	3 x 3	12 x 172.0080	3 x 172.0040	3234 mm	9 x 172.0200
172.1233-60	3 x 3	12 x 172.0080	3 x 172.0040	3472 mm	9 x 172.0200
172.1254-46	5 x 4	28 x 172.0080	8 x 172.0030	2450 mm	20 x 172.0200
172.1254-55	5 x 4	28 x 172.0080	8 x 172.0030	2834 mm	20 x 172.0200
172.1254-60	5 x 4	28 x 172.0080	8 x 172.0040	3072 mm	20 x 172.0200
172.1311	1 x 1	2 x 172.0080	1 x 172.0010	800 mm	1 x 172.0300
172.1322-46	2 x 2	6 x 172.0080	2 x 172.0020	1825 mm	4 x 172.0300
172.1322-55	2 x 2	6 x 172.0080	2 x 172.0030	2017 mm	4 x 172.0300
172.1322-60	2 x 2	6 x 172.0080	2 x 172.0030	2136 mm	4 x 172.0300
172.1333-46	3 x 3	12 x 172.0080	3 x 172.0030	2850 mm	9 x 172.0300
172.1333-55	3 x 3	12 x 172.0080	3 x 172.0040	3234 mm	9 x 172.0300
172.1333-60	3 x 3	12 x 172.0080	3 x 172.0040	3472 mm	9 x 172.0300

VIDEOWALLS

Floor mounted

SmartMetals offers 6 different floor mounted VideoWalls as can be seen in the pictures below.

All VideoWall solutions have their own maximum horizontal and vertical rows of displays; depending on size, weight and distance from floor to bottom first row of screens. In this catalogue we present the most popular configurations of each solution, with variations in mounting arms for the displays (explained in the previous chapter).

Composition of the article code: VW1.12246-080

1 2 3 4 5

1.	VW 1-6	type VideoWall
2.	1-2- or 3	type mounting arm 172.0**1**00 / 172.0**2**00 / 172.0**3**00
3.	11, 22, 33 or 54	display configuration: 2 x 2, 3 x 3 or 4 x 2
4.	46, 55 or 60	inch size
5.	-080	distance in cm between floor to bottom first row of screens

If you need a different VideoWall configuration, please do not hesitate to contact us to help with your enquiry.

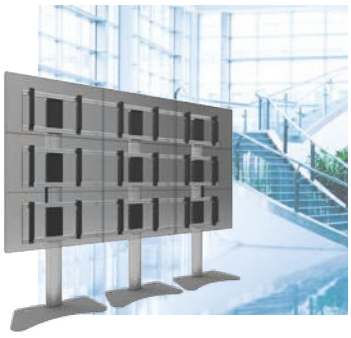

VIDEOWALL 1

With large base plates free standing on the floor

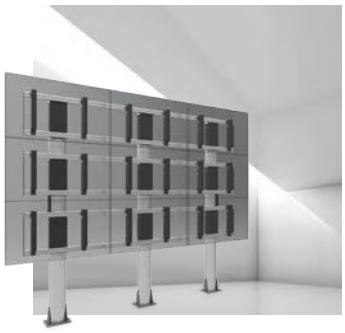

VIDEOWALL 2

With small base plates fixed mounted on the floor

VIDEOWALL 3

With small floor and wall plates, fixed mounted on he floor and to the wall

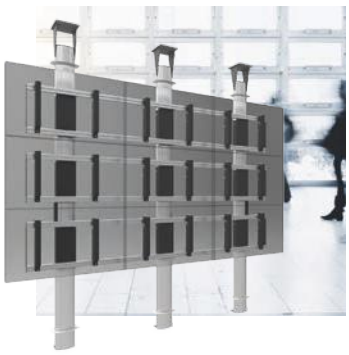

VIDEOWALL 4

With small floor and ceiling plates, fixed mounted on the floor and to the ceiling

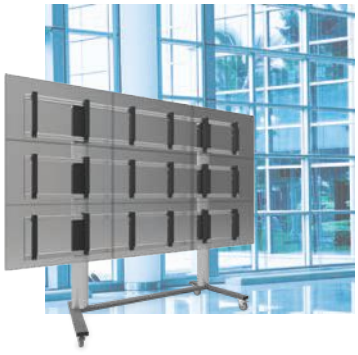

VIDEOWALL 5

With open frame on wheels

VIDEOWALL 6

With closed frame and cover on wheels

VIDEOWALLS

VideoWall 1: Free standing configurations

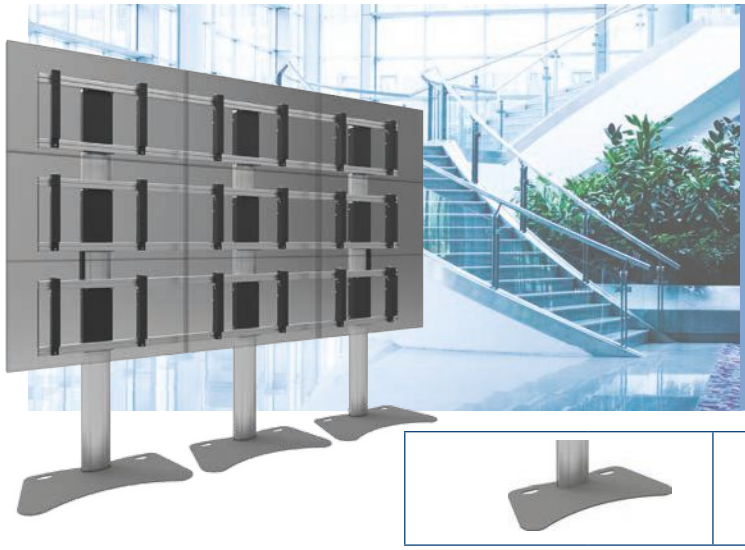

+	**Accessories**	See from page 94
ⓘ	**Other info**	Other lengths on request

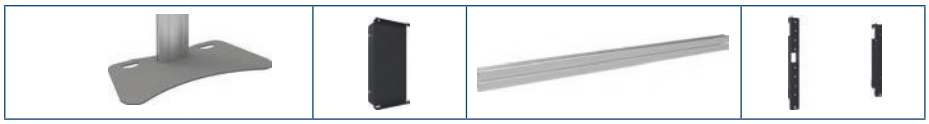

Article code	Configuration	Column + base	Length	Stand head	Aluminium	Length	Mounting arms
VW1.12246-080	2 x 2	2 x VW1.0005	1866 mm	4 x 172.0090	4 x 172.0020	1825 mm	4 x 172.0100
VW1.12255-080	2 x 2	2 x VW1.0010	2120 mm	4 x 172.0090	4 x 172.0030	2017 mm	4 x 172.0100
VW1.12260-080	2 x 2	2 x VW1.0010	2258 mm	4 x 172.0090	4 x 172.0030	2136 mm	4 x 172.0100
VW1.13346-080	3 x 3	2 x VW1.0010	2424 mm	6 x 172.0090	6 x 172.0030	2850 mm	9 x 172.0100
VW1.13355-080	3 x 3	3 x VW1.0010	2805 mm	9 x 172.0090	6 x 172.0040	3234 mm	9 x 172.0100
VW1.13360-080	3 x 3	3 x VW1.0010	3012 mm	9 x 172.0090	6 x 172.0040	3472 mm	9 x 172.0100
VW1.14246-080	4 x 2	3 x VW1.0010	1866 mm	6 x 172.0090	4 x 172.0040	3875 mm	8 x 172.0100
VW1.14255-080	4 x 2	4 x VW1.0010	2120 mm	8 x 172.0090	4 x 172.0050	4451 mm	8 x 172.0100
VW1.14260-080	4 x 2	4 x VW1.0010	2258 mm	8 x 172.0090	4 x 172.0050	4808 mm	8 x 172.0100
VW1.22246-080	2 x 2	2 x VW1.0005	1866 mm	4 x 172.0090	4 x 172.0020	1825 mm	4 x 172.0200
VW1.22255-080	2 x 2	2 x VW1.0010	2120 mm	4 x 172.0090	4 x 172.0030	2017 mm	4 x 172.0200
VW1.22260-080	2 x 2	2 x VW1.0010	2258 mm	4 x 172.0090	4 x 172.0030	2136 mm	4 x 172.0200
VW1.23346-080	3 x 3	2 x VW1.0010	2424 mm	6 x 172.0090	6 x 172.0030	2850 mm	9 x 172.0200
VW1.23355-080	3 x 3	3 x VW1.0010	2805 mm	9 x 172.0090	6 x 172.0040	3234 mm	9 x 172.0200
VW1.23360-080	3 x 3	3 x VW1.0010	3012 mm	9 x 172.0090	6 x 172.0040	3472 mm	9 x 172.0200
VW1.24246-080	4 x 2	3 x VW1.0010	1866 mm	6 x 172.0090	4 x 172.0040	3875 mm	8 x 172.0200
VW1.24255-080	4 x 2	4 x VW1.0010	2120 mm	8 x 172.0090	4 x 172.0050	4451 mm	8 x 172.0200
VW1.24260-080	4 x 2	4 x VW1.0010	2258 mm	8 x 172.0090	4 x 172.0050	4808 mm	8 x 172.0200
VW1.32246-080	2 x 2	2 x VW1.0005	1866 mm	4 x 172.0090	4 x 172.0020	1825 mm	4 x 172.0300
VW1.32255-080	2 x 2	2 x VW1.0010	2120 mm	4 x 172.0090	4 x 172.0030	2017 mm	4 x 172.0300
VW1.32260-080	2 x 2	2 x VW1.0010	2258 mm	4 x 172.0090	4 x 172.0030	2136 mm	4 x 172.0300
VW1.33346-080	3 x 3	2 x VW1.0010	2424 mm	6 x 172.0090	6 x 172.0030	2850 mm	9 x 172.0300
VW1.33355-080	3 x 3	3 x VW1.0010	2805 mm	9 x 172.0090	6 x 172.0040	3234 mm	9 x 172.0300
VW1.33360-080	3 x 3	3 x VW1.0010	3012 mm	9 x 172.0090	6 x 172.0040	3472 mm	9 x 172.0300
VW1.34246-080	4 x 2	3 x VW1.0010	1866 mm	6 x 172.0090	4 x 172.0040	3875 mm	8 x 172.0300
VW1.34255-080	4 x 2	4 x VW1.0010	2120 mm	8 x 172.0090	4 x 172.0050	4451 mm	8 x 172.0300
VW1.34260-080	4 x 2	4 x VW1.0010	2258 mm	8 x 172.0090	4 x 172.0050	4808 mm	8 x 172.0300

VIDEOWALLS

VideoWall 2: Fixed floor mounted configurations

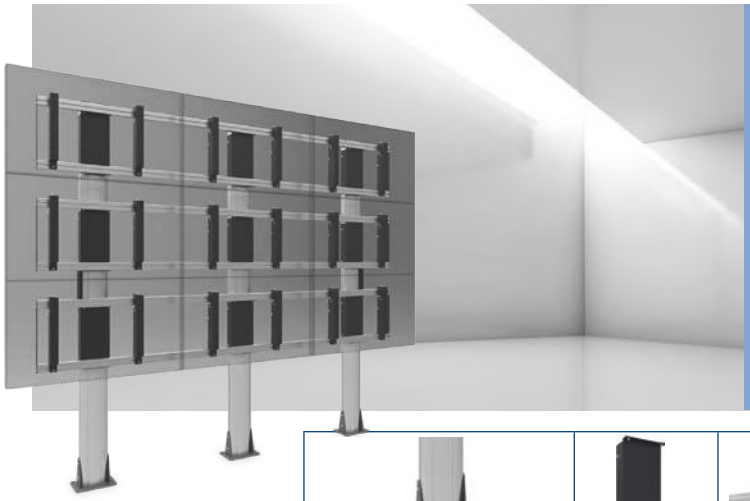

Accessories

See from page 94

Other info

Other lengths on request

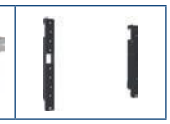

Article code	Conf.	Col. + base	Length	Stand head	Aluminium	Length	Mnt. arms
VW2.12246-080	2 x 2	2x VW2.0010	1866 mm	4 x 172.0090	4 x 172.0020	1825 mm	4 x 172.0100
VW2.12255-080	2 x 2	2x VW2.0010	2120 mm	4 x 172.0090	4 x 172.0030	2017 mm	4 x 172.0100
VW2.12260-080	2 x 2	2x VW2.0010	2258 mm	4 x 172.0090	4 x 172.0030	2136 mm	4 x 172.0100
VW2.13346-080	3 x 3	2x VW2.0010	2424 mm	6 x 172.0090	6 x 172.0030	2850 mm	9 x 172.0100
VW2.13355-080	3 x 3	3x VW2.0010	2805 mm	9 x 172.0090	6 x 172.0040	3234 mm	9 x 172.0100
VW2.13360-080	3 x 3	3x VW2.0010	3012 mm	9 x 172.0090	6 x 172.0040	3472 mm	9 x 172.0100
VW2.14246-080	4 x 2	3x VW2.0010	1866 mm	6 x 172.0090	4 x 172.0040	3875 mm	8 x 172.0100
VW2.14255-080	4 x 2	4x VW2.0010	2120 mm	8 x 172.0090	4 x 172.0050	4451 mm	8 x 172.0100
VW2.14260-080	4 x 2	4x VW2.0010	2258 mm	8 x 172.0090	4 x 172.0050	4808 mm	8 x 172.0100
VW2.22246-080	2 x 2	2x VW2.0010	1866 mm	4 x 172.0090	4 x 172.0020	1825 mm	4 x 172.0200
VW2.22255-080	2 x 2	2x VW2.0010	2120 mm	4 x 172.0090	4 x 172.0030	2017 mm	4 x 172.0200
VW2.22260-080	2 x 2	2x VW2.0010	2258 mm	4 x 172.0090	4 x 172.0030	2136 mm	4 x 172.0200
VW2.23346-080	3 x 3	2x VW2.0010	2424 mm	6 x 172.0090	6 x 172.0030	2850 mm	9 x 172.0200
VW2.23355-080	3 x 3	3x VW2.0010	2805 mm	9 x 172.0090	6 x 172.0040	3234 mm	9 x 172.0200
VW2.23360-080	3 x 3	3x VW2.0010	3012 mm	9 x 172.0090	6 x 172.0040	3472 mm	9 x 172.0200
VW2.24246-080	4 x 2	3x VW2.0010	1866 mm	6 x 172.0090	4 x 172.0040	3875 mm	8 x 172.0200
VW2.24255-080	4 x 2	4x VW2.0010	2120 mm	8 x 172.0090	4 x 172.0050	4451 mm	8 x 172.0200
VW2.24260-080	4 x 2	4x VW2.0010	2258 mm	8 x 172.0090	4 x 172.0050	4808 mm	8 x 172.0200
VW2.32246-080	2 x 2	2x VW2.0010	1866 mm	4 x 172.0090	4 x 172.0020	1825 mm	4 x 172.0300
VW2.32255-080	2 x 2	2x VW2.0010	2120 mm	4 x 172.0090	4 x 172.0030	2017 mm	4 x 172.0300
VW2.32260-080	2 x 2	2x VW2.0010	2258 mm	4 x 172.0090	4 x 172.0030	2136 mm	4 x 172.0300
VW2.33346-080	3 x 3	2x VW2.0010	2424 mm	6 x 172.0090	6 x 172.0030	2850 mm	9 x 172.0300
VW2.33355-080	3 x 3	3x VW2.0010	2805 mm	9 x 172.0090	6 x 172.0040	3234 mm	9 x 172.0300
VW2.33360-080	3 x 3	3x VW2.0010	3012 mm	9 x 172.0090	6 x 172.0040	3472 mm	9 x 172.0300
VW2.34246-080	4 x 2	3x VW2.0010	1866 mm	6 x 172.0090	4 x 172.0040	3875 mm	8 x 172.0300
VW2.34255-080	4 x 2	4x VW2.0010	2120 mm	8 x 172.0090	4 x 172.0050	4451 mm	8 x 172.0300
VW2.34260-080	4 x 2	4x VW2.0010	2258 mm	8 x 172.0090	4 x 172.0050	4808 mm	8 x 172.0300

VIDEOWALLS

VideoWall 3: Fixed floor + wall mounted configurations

Accessories	See from page 94
Other info	Other lengths on request

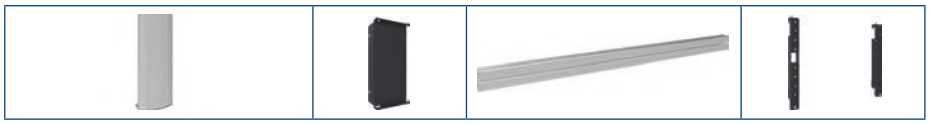

Article code	Configuration	Column + base	Length	Stand head	Aluminium	Length	Mounting arms
VW3.12246-080	2 x 2	2x VW3.0010	1866 mm	4 x 172.0090	4 x 172.0020	1825 mm	4 x 172.0100
VW3.12255-080	2 x 2	2x VW3.0010	2120 mm	4 x 172.0090	4 x 172.0030	2017 mm	4 x 172.0100
VW3.12260-080	2 x 2	2x VW3.0010	2258 mm	4 x 172.0090	4 x 172.0030	2136 mm	4 x 172.0100
VW3.13346-080	3 x 3	2x VW3.0010	2424 mm	6 x 172.0090	6 x 172.0030	2850 mm	9 x 172.0100
VW3.13355-080	3 x 3	2x VW3.0010	2805 mm	6 x 172.0090	6 x 172.0040	3234 mm	9 x 172.0100
VW3.13360-080	3 x 3	2x VW3.0010	3012 mm	6 x 172.0090	6 x 172.0040	3472 mm	9 x 172.0100
VW3.14246-080	4 x 2	3x VW3.0010	1866 mm	6 x 172.0090	4 x 172.0040	3875 mm	8 x 172.0100
VW3.14255-080	4 x 2	3x VW3.0010	2120 mm	6 x 172.0090	4 x 172.0050	4451 mm	8 x 172.0100
VW3.14260-080	4 x 2	3x VW3.0010	2258 mm	6 x 172.0090	4 x 172.0050	4808 mm	8 x 172.0100
VW3.22246-080	2 x 2	2x VW3.0010	1866 mm	4 x 172.0090	4 x 172.0020	1825 mm	4 x 172.0200
VW3.22255-080	2 x 2	2x VW3.0010	2120 mm	4 x 172.0090	4 x 172.0030	2017 mm	4 x 172.0200
VW3.22260-080	2 x 2	2x VW3.0010	2258 mm	4 x 172.0090	4 x 172.0030	2136 mm	4 x 172.0200
VW3.23346-080	3 x 3	2x VW3.0010	2424 mm	6 x 172.0090	6 x 172.0030	2850 mm	9 x 172.0200
VW3.23355-080	3 x 3	2x VW3.0010	2805 mm	6 x 172.0090	6 x 172.0040	3234 mm	9 x 172.0200
VW3.23360-080	3 x 3	2x VW3.0010	3012 mm	6 x 172.0090	6 x 172.0040	3472 mm	9 x 172.0200
VW3.24246-080	4 x 2	3x VW3.0010	1866 mm	6 x 172.0090	4 x 172.0040	3875 mm	8 x 172.0200
VW3.24255-080	4 x 2	3x VW3.0010	2120 mm	6 x 172.0090	4 x 172.0050	4451 mm	8 x 172.0200
VW3.24260-080	4 x 2	3x VW3.0010	2258 mm	6 x 172.0090	4 x 172.0050	4808 mm	8 x 172.0200
VW3.32246-080	2 x 2	2x VW3.0010	1866 mm	4 x 172.0090	4 x 172.0020	1825 mm	4 x 172.0300
VW3.32255-080	2 x 2	2x VW3.0010	2120 mm	4 x 172.0090	4 x 172.0030	2017 mm	4 x 172.0300
VW3.32260-080	2 x 2	2x VW3.0010	2258 mm	4 x 172.0090	4 x 172.0030	2136 mm	4 x 172.0300
VW3.33346-080	3 x 3	2x VW3.0010	2424 mm	6 x 172.0090	6 x 172.0030	2850 mm	9 x 172.0300
VW3.33355-080	3 x 3	2x VW3.0010	2805 mm	6 x 172.0090	6 x 172.0040	3234 mm	9 x 172.0300
VW3.33360-080	3 x 3	2x VW3.0010	3012 mm	6 x 172.0090	6 x 172.0040	3472 mm	9 x 172.0300
VW3.34246-080	4 x 2	3x VW3.0010	1866 mm	6 x 172.0090	4 x 172.0040	3875 mm	8 x 172.0300
VW3.34255-080	4 x 2	3x VW3.0010	2120 mm	6 x 172.0090	4 x 172.0050	4451 mm	8 x 172.0300
VW3.34260-080	4 x 2	3x VW3.0010	2258 mm	6 x 172.0090	4 x 172.0050	4808 mm	8 x 172.0300

VIDEOWALLS

VideoWall 4: Fixed floor + ceiling mounted configurations

Accessories

See from page 94

Other info

Other lengths on request

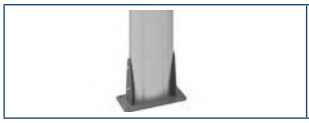

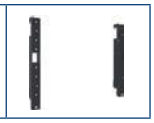

Article code	Conf.	Col. + base	Length	Stand head	Aluminium	Length	Mnt. arms
VW4.12246-080	2 x 2	2x VW4.0010	2800-3000 mm	4 x 172.0090	4 x 172.0020	1825 mm	4 x 172.0100
VW4.12255-080	2 x 2	2x VW4.0010	2800-3000 mm	4 x 172.0090	4 x 172.0030	2017 mm	4 x 172.0100
VW4.12260-080	2 x 2	2x VW4.0010	2800-3000 mm	4 x 172.0090	4 x 172.0030	2136 mm	4 x 172.0100
VW4.13346-080	3 x 3	2x VW4.0010	2800-3000 mm	6 x 172.0090	6 x 172.0030	2850 mm	9 x 172.0100
VW4.13355-080	3 x 3	2x VW4.0010	2800-3000 mm	6 x 172.0090	6 x 172.0040	3234 mm	9 x 172.0100
VW4.13360-080	3 x 3	2x VW4.0010	2800-3000 mm	6 x 172.0090	6 x 172.0040	3472 mm	9 x 172.0100
VW4.14246-080	4 x 2	3x VW4.0010	2800-3000 mm	6 x 172.0090	4 x 172.0040	3875 mm	8 x 172.0100
VW4.14255-080	4 x 2	3x VW4.0010	2800-3000 mm	6 x 172.0090	4 x 172.0050	4451 mm	8 x 172.0100
VW4.14260-080	4 x 2	3x VW4.0010	2800-3000 mm	6 x 172.0090	4 x 172.0050	4808 mm	8 x 172.0100
VW4.22246-080	2 x 2	2x VW4.0010	2800-3000 mm	4 x 172.0090	4 x 172.0020	1825 mm	4 x 172.0200
VW4.22255-080	2 x 2	2x VW4.0010	2800-3000 mm	4 x 172.0090	4 x 172.0030	2017 mm	4 x 172.0200
VW4.22260-080	2 x 2	2x VW4.0010	2800-3000 mm	4 x 172.0090	4 x 172.0030	2136 mm	4 x 172.0200
VW4.23346-080	3 x 3	2x VW4.0010	2800-3000 mm	6 x 172.0090	6 x 172.0030	2850 mm	9 x 172.0200
VW4.23355-080	3 x 3	2x VW4.0010	2800-3000 mm	6 x 172.0090	6 x 172.0040	3234 mm	9 x 172.0200
VW4.23360-080	3 x 3	2x VW4.0010	2800-3000 mm	6 x 172.0090	6 x 172.0040	3472 mm	9 x 172.0200
VW4.24246-080	4 x 2	3x VW4.0010	2800-3000 mm	6 x 172.0090	4 x 172.0040	3875 mm	8 x 172.0200
VW4.24255-080	4 x 2	3x VW4.0010	2800-3000 mm	6 x 172.0090	4 x 172.0050	4451 mm	8 x 172.0200
VW4.24260-080	4 x 2	3x VW4.0010	2800-3000 mm	6 x 172.0090	4 x 172.0050	4808 mm	8 x 172.0200
VW4.32246-080	2 x 2	2x VW4.0010	2800-3000 mm	4 x 172.0090	4 x 172.0020	1825 mm	4 x 172.0300
VW4.32255-080	2 x 2	2x VW4.0010	2800-3000 mm	4 x 172.0090	4 x 172.0030	2017 mm	4 x 172.0300
VW4.32260-080	2 x 2	2x VW4.0010	2800-3000 mm	4 x 172.0090	4 x 172.0030	2136 mm	4 x 172.0300
VW4.33346-080	3 x 3	2x VW4.0010	2800-3000 mm	6 x 172.0090	6 x 172.0030	2850 mm	9 x 172.0300
VW4.33355-080	3 x 3	2x VW4.0010	2800-3000 mm	6 x 172.0090	6 x 172.0040	3234 mm	9 x 172.0300
VW4.33360-080	3 x 3	2x VW4.0010	2800-3000 mm	6 x 172.0090	6 x 172.0040	3472 mm	9 x 172.0300
VW4.34246-080	4 x 2	3x VW4.0010	2800-3000 mm	6 x 172.0090	4 x 172.0040	3875 mm	8 x 172.0300
VW4.34255-080	4 x 2	3x VW4.0010	2800-3000 mm	6 x 172.0090	4 x 172.0050	4451 mm	8 x 172.0300
VW4.34260-080	4 x 2	3x VW4.0010	2800-3000 mm	6 x 172.0090	4 x 172.0050	4808 mm	8 x 172.0300

VIDEOWALLS

VideoWall 5: Mobile open frame configurations

+	**Accessories**	See from page 94
ⓘ	**Other info**	Other lengths on request

Article code	Configuration	Column + base	Length	Stand head	Aluminium	Length	Mounting arms
VW5.12246-080	2 x 2	1x 172.1022	1671 mm	4 x 172.0090	4 x 172.0020	1825 mm	4 x 172.0100
VW5.12255-080	2 x 2	1x 172.1022	1925 mm	4 x 172.0090	4 x 172.0030	2017 mm	4 x 172.0100
VW5.12260-080	2 x 2	1x 172.1022	2063 mm	4 x 172.0090	4 x 172.0030	2136 mm	4 x 172.0100
VW5.13346-080	3 x 3	1x 172.1033	2229 mm	6 x 172.0090	6 x 172.0030	2850 mm	9 x 172.0100
VW5.13355-080	3 x 3	1x 172.1033	2610 mm	6 x 172.0090	6 x 172.0040	3234 mm	9 x 172.0100
VW5.13360-080	3 x 3	1x 172.1033	2817 mm	6 x 172.0090	6 x 172.0040	3472 mm	9 x 172.0100
VW5.22246-080	2 x 2	1x 172.1022	1671 mm	4 x 172.0090	4 x 172.0020	1825 mm	4 x 172.0200
VW5.22255-080	2 x 2	1x 172.1022	1925 mm	4 x 172.0090	4 x 172.0030	2017 mm	4 x 172.0200
VW5.22260-080	2 x 2	1x 172.1022	2063 mm	4 x 172.0090	4 x 172.0030	2136 mm	4 x 172.0200
VW5.23346-080	3 x 3	1x 172.1033	2229 mm	6 x 172.0090	6 x 172.0030	2850 mm	9 x 172.0200
VW5.23355-080	3 x 3	1x 172.1033	2610 mm	6 x 172.0090	6 x 172.0040	3234 mm	9 x 172.0200
VW5.23360-080	3 x 3	1x 172.1033	2817 mm	6 x 172.0090	6 x 172.0040	3472 mm	9 x 172.0200
VW5.32246-080	2 x 2	1x 172.1022	1671 mm	4 x 172.0090	4 x 172.0020	1825 mm	4 x 172.0300
VW5.32255-080	2 x 2	1x 172.1022	1925 mm	4 x 172.0090	4 x 172.0030	2017 mm	4 x 172.0300
VW5.32260-080	2 x 2	1x 172.1022	2063 mm	4 x 172.0090	4 x 172.0030	2136 mm	4 x 172.0300
VW5.33346-080	3 x 3	1x 172.1033	2229 mm	6 x 172.0090	6 x 172.0030	2850 mm	9 x 172.0300
VW5.33355-080	3 x 3	1x 172.1033	2610 mm	6 x 172.0090	6 x 172.0040	3234 mm	9 x 172.0300
VW5.33360-080	3 x 3	1x 172.1033	2817 mm	6 x 172.0090	6 x 172.0040	3472 mm	9 x 172.0300

VIDEOWALLS

VideoWall 6: Mobile closed frame configurations

Accessories

See from page 94

Other info

Other lengths on request

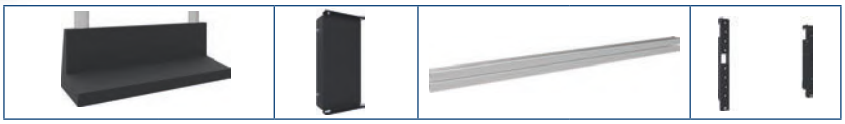

Article code	Conf.	Col. + base	Length	Stand head	Aluminium	Length	Mnt. arms
VW6.13246	3 x 2	1x 172.2032	1798 mm	4 x 172.0090	4 x 172.0030	2850 mm	6 x 172.0100
VW6.13255	3 x 2	1x 172.2032	2052 mm	4 x 172.0090	4 x 172.0040	3234 mm	6 x 172.0100
VW6.13260	3 x 2	1x 172.2032	2190 mm	4 x 172.0090	4 x 172.0040	3472 mm	6 x 172.0100
VW6.13346	3 x 3	1x 172.2033	2356 mm	6 x 172.0090	6 x 172.0030	2850 mm	9 x 172.0100
VW6.13355	3 x 3	1x 172.2033	2737 mm	6 x 172.0090	6 x 172.0040	3234 mm	9 x 172.0100
VW6.13360	3 x 3	1x 172.2033	2944 mm	6 x 172.0090	6 x 172.0040	3472 mm	9 x 172.0100
VW6.14246	4 x 2	1x 172.2042	1798 mm	6 x 172.0090	4 x 172.0040	3875 mm	8 x 172.0100
VW6.14255	4 x 2	1x 172.2042	2052 mm	6 x 172.0090	4 x 172.0050	4451 mm	8 x 172.0100
VW6.14260	4 x 2	1x 172.2042	2190 mm	6 x 172.0090	4 x 172.0050	4808 mm	8 x 172.0100
VW6.23246	3 x 2	1x 172.2032	1798 mm	4 x 172.0090	4 x 172.0030	2850 mm	6 x 172.0200
VW6.23255	3 x 2	1x 172.2032	2052 mm	4 x 172.0090	4 x 172.0040	3234 mm	6 x 172.0200
VW6.23260	3 x 2	1x 172.2032	2190 mm	4 x 172.0090	4 x 172.0040	3472 mm	6 x 172.0200
VW6.23346	3 x 3	1x 172.2033	2356 mm	6 x 172.0090	6 x 172.0030	2850 mm	9 x 172.0200
VW6.23355	3 x 3	1x 172.2033	2737 mm	6 x 172.0090	6 x 172.0040	3234 mm	9 x 172.0200
VW6.23360	3 x 3	1x 172.2033	2944 mm	6 x 172.0090	6 x 172.0040	3472 mm	9 x 172.0200
VW6.24246	4 x 2	1x 172.2042	1798 mm	6 x 172.0090	4 x 172.0040	3875 mm	8 x 172.0200
VW6.24255	4 x 2	1x 172.2042	2052 mm	6 x 172.0090	4 x 172.0050	4451 mm	8 x 172.0200
VW6.24260	4 x 2	1x 172.2042	2190 mm	6 x 172.0090	4 x 172.0050	4808 mm	8 x 172.0200
VW6.33246	3 x 2	1x 172.2032	1798 mm	4 x 172.0090	4 x 172.0030	2850 mm	6 x 172.0300
VW6.33255	3 x 2	1x 172.2032	2052 mm	4 x 172.0090	4 x 172.0040	3234 mm	6 x 172.0300
VW6.33260	3 x 2	1x 172.2032	2190 mm	4 x 172.0090	4 x 172.0040	3472 mm	6 x 172.0300
VW6.33346	3 x 3	1x 172.2033	2356 mm	6 x 172.0090	6 x 172.0030	2850 mm	9 x 172.0300
VW6.33355	3 x 3	1x 172.2033	2737 mm	6 x 172.0090	6 x 172.0040	3234 mm	9 x 172.0300
VW6.33360	3 x 3	1x 172.2033	2944 mm	6 x 172.0090	6 x 172.0040	3472 mm	9 x 172.0300
VW6.34246	4 x 2	1x 172.2042	1798 mm	6 x 172.0090	4 x 172.0040	3875 mm	8 x 172.0300
VW6.34255	4 x 2	1x 172.2042	2052 mm	6 x 172.0090	4 x 172.0050	4451 mm	8 x 172.0300
VW6.34260	4 x 2	1x 172.2042	2190 mm	6 x 172.0090	4 x 172.0050	4808 mm	8 x 172.0300

SmartMetals has a technical drawing available of all VideoWall solutions in a 3x3 configuration.
We can create a custom technical drawing of the VideoWall of your choice.
Ask us for more information.

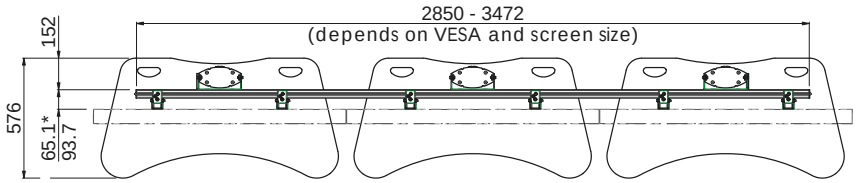

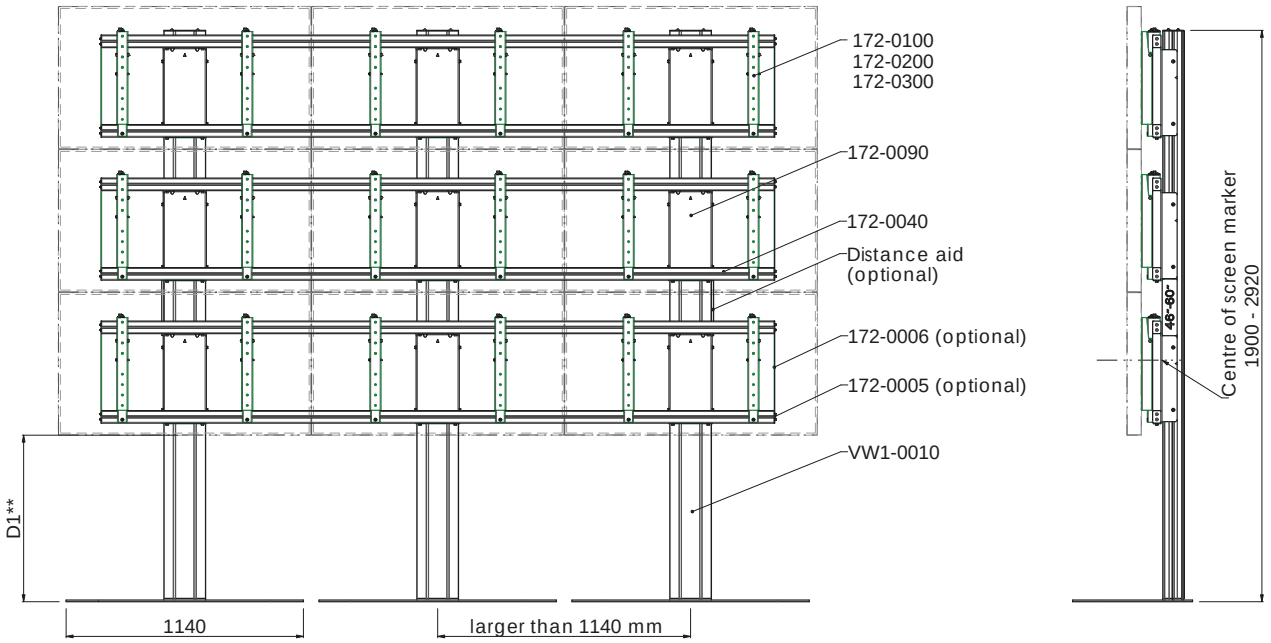

VIDEOWALLS

Ceiling mounted Lightweight VideoWall

SmartMetals has a modular mounting system for flat panel VideoWalls, that can be freely composed as wall or floor solution of any configuration.

The compositions are made with aluminium profiles over the full width of the VideoWall, to offer an easy horizontal alignment of the flat panels. Furthermore a selection of economy, full alignment or push to open mounting arms can be made to fit the maintenance requirements on location. As for the model we offer a wide choice between various floor supports to meet the design wishes of the architect or end user: models range from freestanding to between floor and wall/ceiling to mobile.

With accessory 172.0082, custom configurations can be made to install multiple monitors to the ceiling. For example a configuration of two monitors to a single ceiling mount in landscape, or 3 monitors to two ceiling mounts in portrait.

Please feel free to contact us with the configuration of your preference and we will help you with an offer to suit your demand.

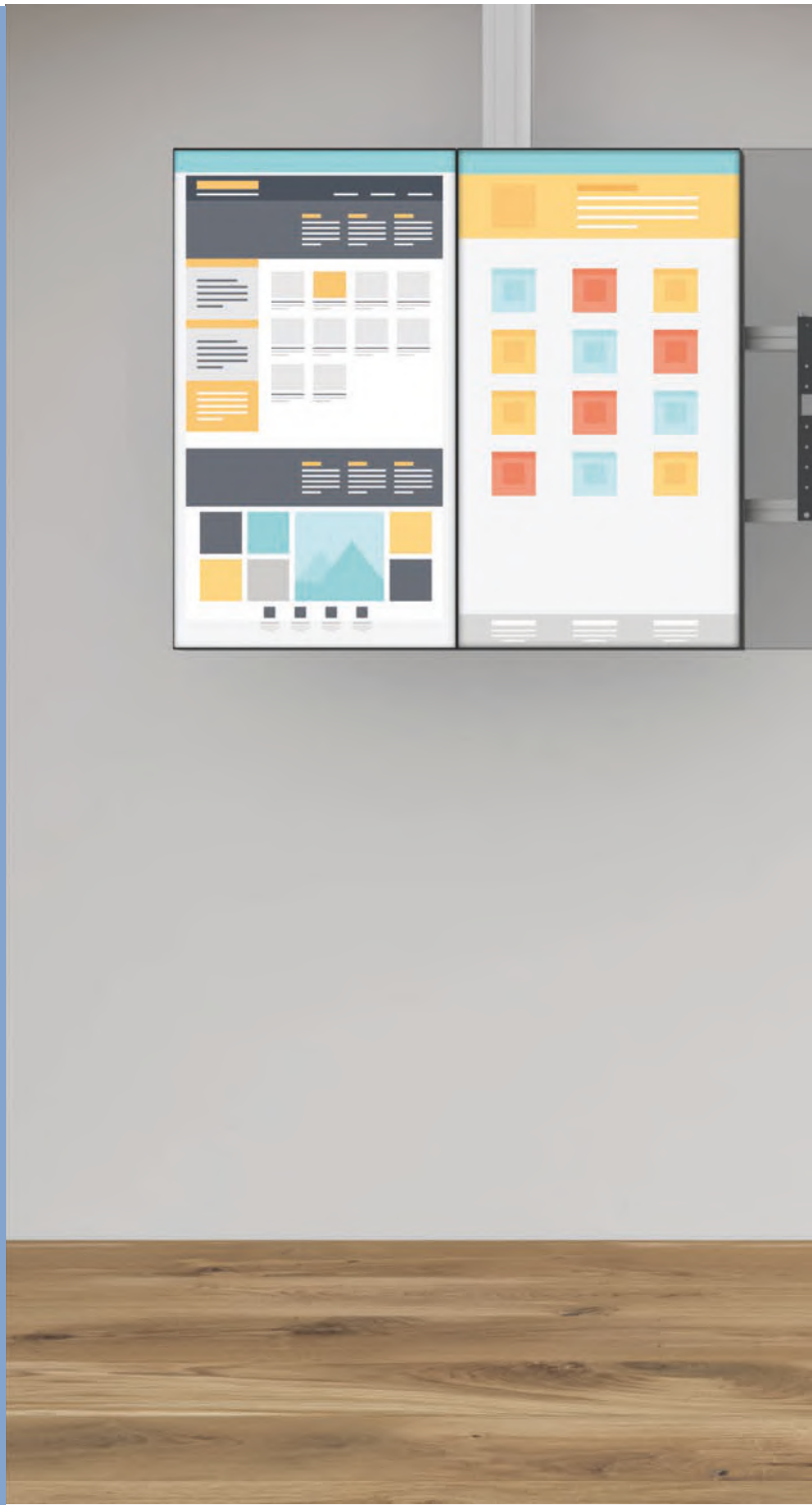

ACCESSORIES

For VideoWalls

SET FINISHING PLATES
for aluminium profile

172.0005

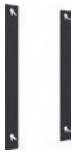

PORTRAIT ADAPTER SET
VESA 600

172.0008

SET CONNECTOR BRACKETS
for aluminium profiles

The connector brackets are an addition for the SmartMetals VideoWall - Floor solutions for fixed installation.
With the brackets the aluminium construction becomes more rigid and they prevent twisting. Besides that, they create a nice finishing on the sides of the profiles.

172.0006

ADJUST. ANGLE HINGES
for aluminium profiles

With these hinges curved VideoWall are created. They allow angular adjustment between the floor stands and rigidify the construction. For an ultimate gain in installation time we also offer custom made alignment aids and curved brackets (see next page).

172.0007

Article code
172.0010 - 172.0050

ALUMINIUM PROFILE, STANDARD LENGTHS 1000 - 5000 MM

The aluminium extruded profile is supplied in the length required for each row of displays; in one piece or multiple pieces joined by connector pins. For weak or uneven walls you could use two aluminium profiles per row of displays (with additional wall brackets) to create a perfect flat mounting surface for your VideoWall with an extra rigid construction.
The profile has slots through which the wall brackets and display mounting arms easily slide from left to right, to simply obtain horizontal alignment.

COUPLING PIN
for aluminium profiles

172.0015

COUPLING SET
for aluminium profiles

172.0017

WALL BRACKET

172.0080

ANGLE BRACKETS
for Light Series

To create a Light Series VideoWall.

172.0082

STAND HEAD
for 2 aluminium profiles

To hold two aluminium profiles to mount a row of displays to.

172.0090

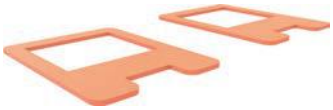

LOCKING PLATES
set, for 172.0100

To lock monitors installed with the push-to-open mounting arms.

172.0110

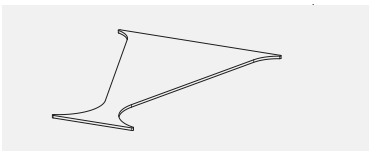

ALIGNMENT AID
for curved VideoWalls

To gain installation time we offer a custom made (fabricated to your monitor brand and type and required angle) alignment aid helping you to correctly position your floor stands.

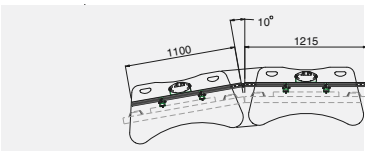

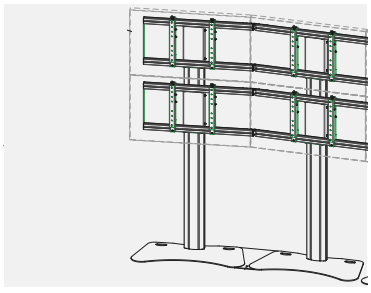

CUSTOM

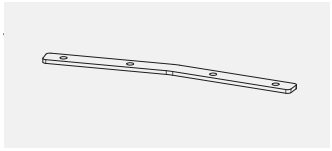

CURVE BRACKET
for curved VideoWalls

With custom made (fabricated to your monitor brand and type and required angle) curve brackets, to use instead of the angle hinges you save precious installation tme.

CUSTOM

We've got you covered!

One time you just want to cover up your flat panel, protect it the other time. If you want your flat panel to blend in nicely in the interior, you are looking for a cover. If you want to install a flat panel outdoors you are looking for 24/7 protection from wheather, vandalism and theft.

We supply covers, housings and kiosks for any purpose and any size.

IPAD STANDS & HOUSINGS

For indoor use

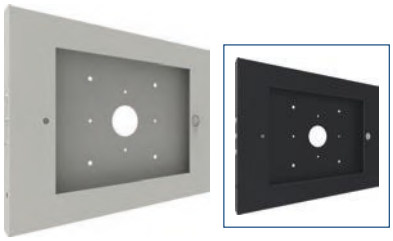

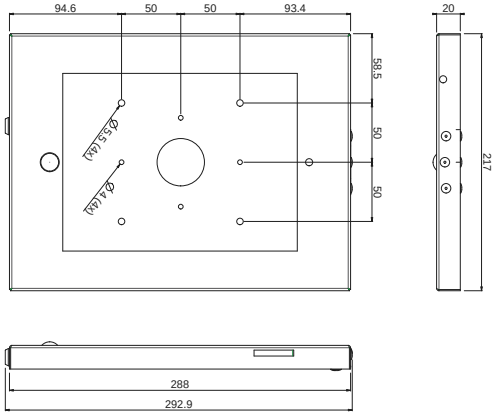

LOCKABLE WALL MOUNTED IPAD HOUSING

Suitable for iPAD 2/3/4, AIR 1/2 and iPad Pro 9.7 inch.

Colour	○ ●
Max. load	3 kg
Position	Landscape & Portrait

Article code	Colour
142.0120	White
142.0125	Black

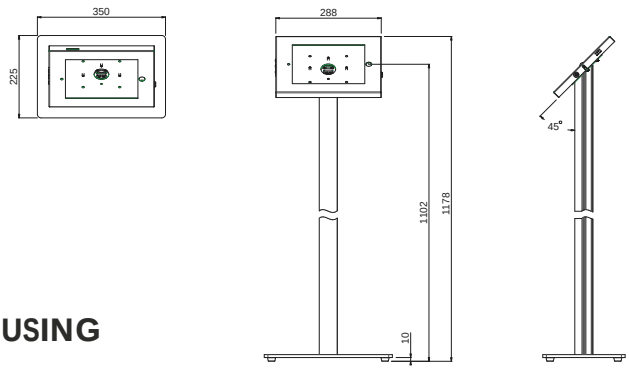

IPAD STAND 1100 MM INCL. LOCKABLE HOUSING

Suitable for iPAD 2/3/4, AIR 1/2 and iPad Pro 9.7 inch.

Colour	○ ●
Max. load	10 kg
Position	Landscape & Portrait

Article code	Colour
142.0110	White
142.0115	Black

FLAT PANEL COVER
MAX. 52 INCH

No more boring monitor bezels or visible cabling: cover it all up with this elegant flat panel cover. With its round corners it takes all the sharp edges off and it lends itself perfectly for branding.

Colour	○
Max. load	50 kg
Position	Landscape & Portrait
Required	Wall mount, see from page 9
Note	Other colours on request

Article code	Inch range
092.3100	36 - 37 inch
092.3200	40 - 42 inch
092.3300	46 - 47 inch
092.3400	50 - 52 inch

HOUSINGS

For indoor use

INDOOR HOUSINGS
092.1500 SERIES

Fitted with a hinged door with toughened safety glass for extra clarity.

Colour	○
Position	Landscape & Portrait
VESA	Multi VESA
Other info	Wall bracket included Other colours on request

Note: carefully consider the maximum admissable monitor dimensions and VESA center offset in determining the requiired model.		**Max. monitor dimensions in mm**			**Housing dimensions in mm**			**Bracket dimensions in mm**		
Art. code	**Screen size**	**W**	**H**	**D**	**W1**	**H1**	**D**	**W2**	**H2**	**D**
FLAT PANEL INDOOR HOUSINGS, MAX. 700CD										
092.1500.1	46 inch - 49 inch	1118	713	95	1330	875	197	728	736	43
092.1500.2	50 inch - 55 inch	1243	768	95	1455	930	197	791	786	43
092.1500.3	56 inch - 65 inch	1468	903	95	1680	1065	197	926	926	43
092.1500.4	66 inch - 75 inch	1678	1018	95	1890	1180	197	1041	1064	43

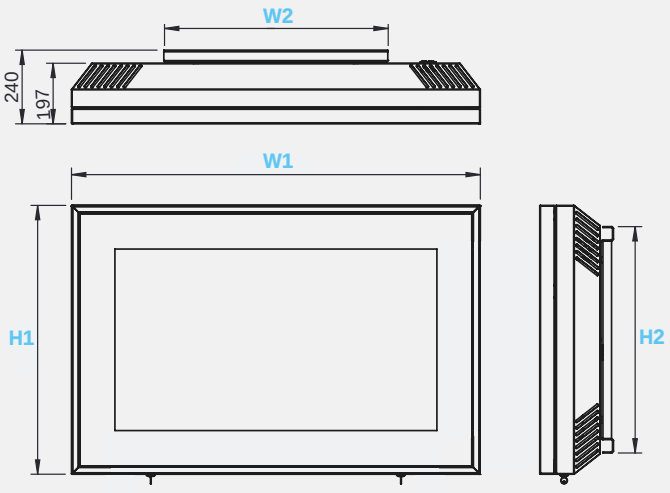

VESA center offset

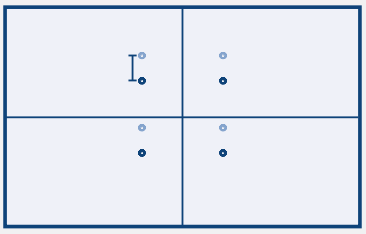

VESA	Max. VESA center offset
600 x 600	13 mm
400 x 400	113 mm

HOUSINGS

For outdoor use - flat panels up to 700 cd

IP55 OUTDOOR HOUSINGS
092.1600 SERIES

With hinged door with toughened safety glass, active ventilation, thermostatically controlled heating and a filter.

Colour	○
Position	Landscape & Portrait
VESA	Multi VESA
Other info	Wall bracket included Other colours on request

Note: carefully consider the maximum admissable monitor dimensions and VESA center offset in determining the requiired model.		**Max. monitor dimensions in mm**			**Housing dimensions in mm**			**Bracket dimensions in mm**		
Art. code	**Screen size**	**W**	**H**	**D**	**W1**	**H1**	**D**	**W2**	**H2**	**D**
FLAT PANEL OUTDOOR HOUSINGS, MAX. 700CD										
092.1600.1	46 inch - 49 inch	1118	713	95	1330	875	197	728	736	43
092.1600.2	50 inch - 55 inch	1243	768	95	1455	930	197	791	786	43
092.1600.3	56 inch - 65 inch	1468	903	95	1680	1065	197	926	926	43
092.1600.4	66 inch - 75 inch	1678	1018	95	1890	1180	197	1041	1064	43

Accessories & Options

Article code	Description
092.1605.1 ~ 092.1605.4	UV foil for for 092.1600 & 1700 outdoor series
092.1620.1 ~ 092.1620.4	Layered instead of toughened glass for 092.1600 & 1700 series
092.1625.1.01 ~ 092.1625.4.01	Layered ánd toughened glass for 092.1600 & 1700 series
092.1630.1 ~ 092.1630.4	Digital- instead of frame printing for 092.1500 & 1600 & 1700 housings Required with i.e. IR control (an opening for the receiver eye will be made)
092.1705	Airconditioning for 092.1600 & 1700 outdoor series
092.1710	Hygrometer for 092.1600 & 1700 outdoor series

HOUSINGS

For outdoor use - flat panels up to 2500 cd

IP55 OUTDOOR HOUSINGS
092.1700 SERIES

With hinged door with toughened safety glass, active ventilation, thermostatically controlled heating and a filter.

Colour	○
Position	Landscape & Portrait
VESA	Multi VESA
Other info	Wall bracket included Other colours on request

		Max. monitor dimensions in mm			Housing dimensions in mm			Bracket dimensions in mm		
Art. code	**Screen size**	**W**	**H**	**D**	**W1**	**H1**	**D**	**W2**	**H2**	**D**
HIGH NIT FLAT PANEL OUTDOOR HOUSINGS, MAX. 2500CD										
092.1700.1	46 inch - 49 inch	**Please note following:** Because of the many types of high nit monitors and the diversity of their ventilations positions it appeared not opportune to develop a universal housing. All models in these series will therefore be custom manufactured upon order; please mention the brand and type of your monitor. In case your monitor has deviant characteristics, extra drawing costs of maximum 4 hours could apply in addition to the standard price. Please ask the SmartMetals Sales Team for an offer beforehand.								
092.1700.2	50 inch - 55 inch									
092.1700.3	56 inch - 65 inch									
092.1700.4	66 inch - 75 inch									

Accessories & Options

Article code	Description
092.1605.1 ~ 092.1605.4	UV foil for for 092.1600 & 1700 outdoor series
092.1620.1 ~ 092.1620.4	Layered instead of toughened glass for 092.1600 & 1700 series
092.1625.1.01 ~ 092.1625.4.01	Layered ánd toughened glass for 092.1600 & 1700 series
092.1630.1 ~ 092.1630.4	Digital- instead of frame printing for 092.1500 & 1600 & 1700 housings Required with i.e. IR control (an opening for the receiver eye will be made)
092.1705	Airconditioning for 092.1600 & 1700 outdoor series
092.1710	Hygrometer for 092.1600 & 1700 outdoor series

TOUCHTABLE

For indoor use

POS/POI STATIONS

Whether you are aiming for more brand awareness or would like to improve customer experience, our TouchTable, in combination with a touch screen, is just the solution you would benefit from in a Point of Information or Point of Sale.

This solid but elegant solution holds your flat panel under a fixed angle of 35° and has ample storage space for your a media player or other peripherals which are easily accessible through the rear lockable hatch.

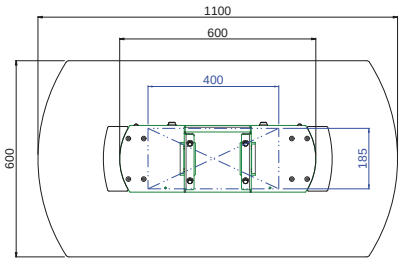

Dimensions in blue indicate the maximum available space for peripherals.

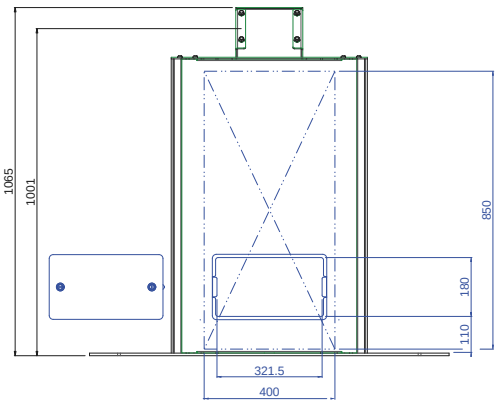

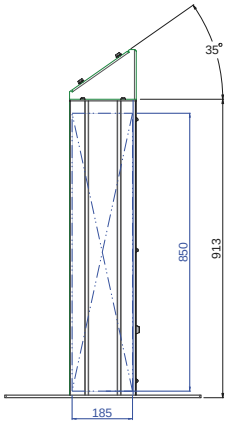

Colour	- White body - Dark-grey base and top plate and mounting head - Aluminium sides
Max. load	90 kg (screen + mount)
Position	Landscape
Required	Screen mount (052.1000, 052.2000 or 052.6000), see from page 9
Notes	- Make sure your flat panel is suitable for positioning under a fixed 35° angle - Other colours and branding on request

Article code	Description
132.1000	TouchTable for flat screens (supplied excl. mount), max. load 90 kg

KIOSKS

For indoor use

Our SmartKiosk was designed for Digital Signage and informational purposes in public areas.

The kiosk is fitted with a universal mounting bracket which is adjustable in depth and height. Within the body of the kiosk there is room to store your media player or other peripherals which are easily accessible via a lockable service hatch in the back.

The standard colour of the kiosk is RAL 9006 silvergrey but can be supplied in other RAL colours as well.

Customization options

- logo placement
- full wrapping of the kiosk
- back-to-back kiosk
- window of toughened glass
- kiosk on wheels
- UV foil

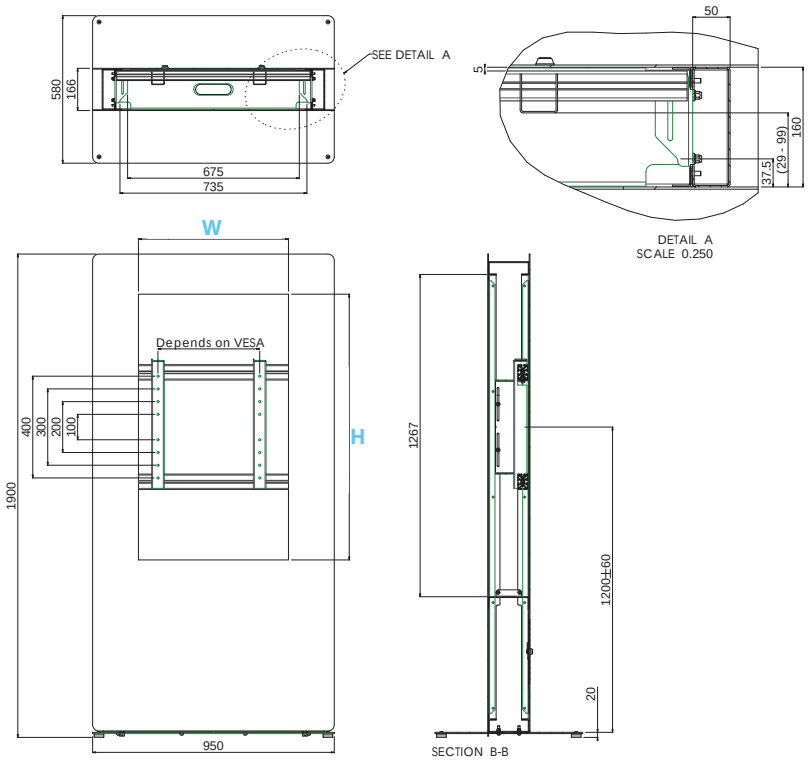

	Colour	
	Max. load	40 kg
	Max. inch	65
	Position	Portrait
	Other info	Your peripherals can be stored within the SmartKiosk

Article code	Inch range	Recess width (W)	Recess height (H)
102.1040	40 inch	To be determined: depends on the clear width of your monitor, specifications required upon order	
102.1042	42 inch		
102.1046	46 inch		
102.1047	47 inch		
102.1048	48 inch		
102.1050	50 inch		
102.1055	55 inch		
102.1060	60 inch		
102.1065	65 inch		

Looking for more customized solutions?

Check the **Digital Signage** chapter (from page 130) for inspiration.

BRAND RELATED SOLUTIONS

Samsung OMN-D mounting

fixed to floor	free standing on floor	fixed to ceiling	fixed to ceiling and floor

MULTIPLE PURPOSE MOUNTING SOLUTION

The double-sided Samsung OMN-D display is an innovative product that deserves an elegant and smart mounting solution. The 102.2010 mounting system is designed in such a way that it can be used for ceiling mounting, floor mounting and if you combine two you also create a floor to ceiling mounting. If drilling in the floor is not an option, combine this solution with the optionally available base plate.

This Samsung mounting solution is easy to install and has an integrated cable management system. SmartMetals designed the product in such a way that it is a perfect addition to the unique Samsung OMN-D display.

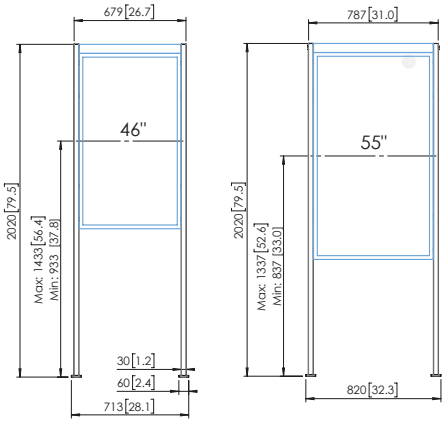

Colour	●
Max. inch	46 and 55 inch
Position	Portrait

Article code	Description
102.2010	Mount for floor or ceiling Samsung OMN-D Series

Accessories

BASE PLATES

For a freestanding solution, when drilling in the floor is not an option.

Article code	Description
102.2015	For OMN-D 46 inch
102.2020	For OMN-D 55 inch

Powerful communication

To optimize powerful communication in shop windows SmartMetals developed a mounting solution for Samsung OMN-D Series dual sided display, both for 46 inch and 55 inch displays. Whether you need a floor mounted solution (fixed and freestanding), a ceiling mounted solution or a floor-to-ceiling mounted solution, you can create any configuration with just 3 components and installation is clear and simple.

LED WALL & CURVED OLED MOUNTING

SUPERIOR VISUAL TECHNOLOGY DESERVES SMART MOUNTING

With visual technology taking a flight with LED and Curved OLED as a result we stepped in offering smart mounting solutions as flexible as the flexibility in application of LED and Curved OLED of itselves. Based on our proven VideoWall concept we can supply any solution you need, no matter the size or curvatures.

BENEFITS

- ✓ Quick and easy installation
- ✓ Accurate adjustment
- ✓ Flexibility in placement:
  - to the wall
  - freestanding on the floor
  - fixed mounted to the floor
  - floor and wall mounted
  - floor and ceiling mounted
  - movable on wheels
  - hanging
  - curved
  - etcetera
- ✓ Height and configuration can easily be adapted to special customer requirements.
- ✓ Based on standard materials which result in short lead times.

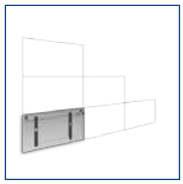

WALL MOUNTED

FREESTANDING ON THE FLOOR

FLOOR MOUNTED

FLOOR-WALL MOUNTED

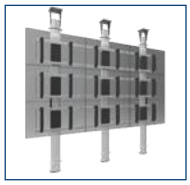

FLOOR-CEILING MOUNTED

MOVABLE ON WHEELS

Representation of a wall mounted Samsung 27x3 LED wall in a control room environment.

WALL MOUNTS

Universal wall mounts

OPTIMAL POSITIONING

When you carefully choose your projector for perfect projection performance you should want equal quality for the way of mounting to be able to perfectly align your image.
Our wall mounts offer optimal alignment features starting from the moment you are installing to the moment you are projecting:

- ✓ Wall plate with slotted holes for perfect positioning
- ✓ Tubes are adjustable in length
- ✓ Projector tiltable +20° - -20°
- ✓ Ball joint offers 360° rotation

WALL MOUNT WITH BRACKET

This wall mount has a continuous length adjustment, in-tube cable management and comes with a universal bracket to mount your projector (mounting reach Ø 410 mm).

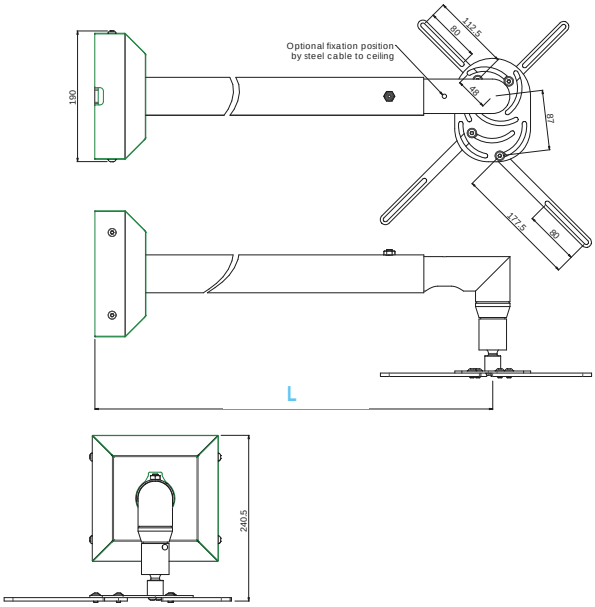

	Colour	○
KG	**Max. load**	25 kg
	Accessories	See page 111

Article code	Length (L)
002.1565	600 - 900 mm
002.1570	850 - 1350 mm
002.1575	1100 - 1750 mm

WALL MOUNTS

Projector-specific wall mounts

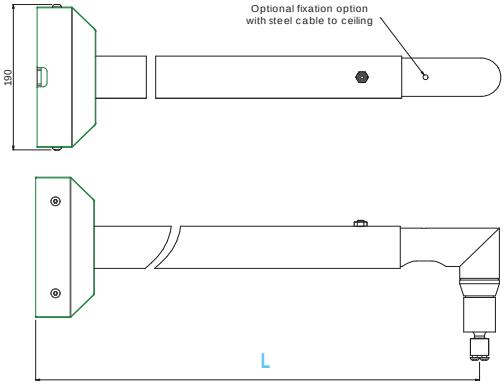

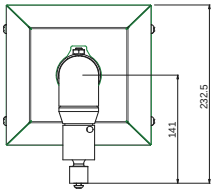

WALL MOUNT
CONTINUOUSLY ADJUSTABLE

This wall mount has a continuous length adjustment, in-tube cable management and by adding a projector-specific bracket, custom-made for your brand and type of projector, you will save valuable time and money.

Colour	○
Max. load	25 kg
Accessories	See page 111
Required	See page 111

Article code	Length (L)
002.1065	600 - 900 mm
002.1070	850 - 1350 mm
002.1075	1100 - 1750 mm

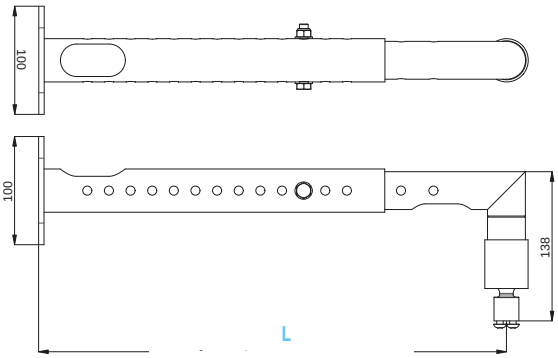

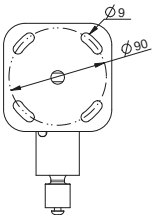

WALL MOUNT
STEPWISE ADJUSTABLE

This wall mount has a stepwise length adjustment, in-tube cable management and by adding a projector-specific bracket, custom-made for your brand and type of projector, you will save valuable time and money.
A universal bracket is available as well.

Colour	●
Max. load	30 kg
Accessories	See page 111
Required	See page 111

Article code	Length (L)
002.1560	350 - 630 mm
002.1561	600 - 1000 mm

WALL MOUNTS

Short throw wall mounts

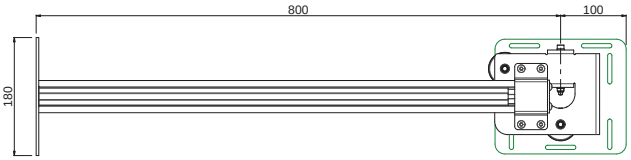

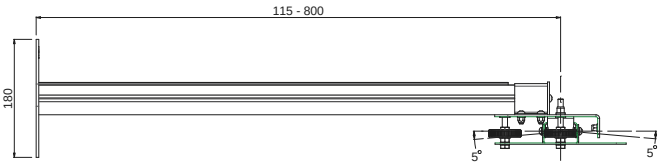

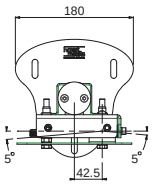

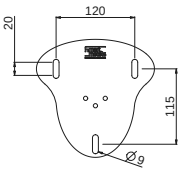

SHORT THROW WALL MOUNT
WITH FINE ADJUSTMENT 800 MM

Combine this short throw wall mount with a projector-specific bracket which has been developed especially to adjust the projector from the centre of the lens. The mount has an in-tube cable management and allows a tilt of +5° / -5°.

	Colour	○
KG	**Max. load**	10 kg
	Accessories	See page 111
!	**Required**	See page 111

Article code
002.1850

PORTRAIT MOUNTING KIT
(for 002.156x wall mount)

Combine this kit with a wall mount from the 002.156x series mounts to use your projector in portrait position mounted to the ceiling. The kit allows a perfect alignment of your projector by just adjusting the nuts on the mounting kit.

Additionally required: projector-specific bracket (art. no.: 002.1001).

002.1550

STAINLESS STEEL MIRROR KIT
(for 002.156x wall mount)

This mirror kit allows a neat installation by positioning the projector above the ceiling, projecting via a mirror mounted directly underneath the suspended ceiling; the ball joint ensures projection in the proper angle. All visible parts below the ceiling are made of stainless steel.

Additionally required: projector-specific bracket (art. no.: 002.1001).

002.2000

ACCESSORIES

For wall mounts

PROJECTOR BRACKET
projector-specific, for 002.15xx and 002.10xx

The projector-specific bracket is custom-made for your brand and type of projector. With the design, we have taken into account the position of the lens and the projectors centre of gravity. Valuable time and money will be saved with the use of projector-specific brackets.

Please mention projector brand and type upon order.

002.1001

PROJECTOR BRACKET
universal, for 002.156x

This universal projector bracket fits every projector with mounting holes within a reach of max. 385 mm Ø.

Please mention projector brand and type upon order.

002.1000

PROJECTOR BRACKET
short-throw projector-specific, for 002.1850

The projector-specific bracket is custom-made for your brand and type of projector. With the design, we have taken into account the position of the lens and the projectors centre of gravity. Valuable time and money will be saved with the use of projector-specific brackets.

Please mention projector brand and type upon order.

152.1030-0x

ANTI-THEFT BUSHES
M6, to secure projector

002.1159

ANTI-THEFT BUSHES
M8, to secure wall/ceiling plate

002.1160

PADLOCK 2 CM
to secure anti-theft bushes

000.0001

- ✓ Suitable for sloped ceilings
- ✓ Tubes adjustable in length
- ✓ Projector tiltable +20° - -20°
- ✓ Ball joint offers 360° rotation
- ✓ In-tube cable management

Solid & safe

Our universal tube sets fit virtually any projector up to 25 kg. They are fitted with a mechanical stop (the two parts of the tube cannot be separated) ensuring optimal safety for the people below.

Ceiling mounting is very straightforward as is mounting and orienting the projector thereafter. Cables are neatly managed in a cable duct which is accessible from the outside.

CEILING MOUNTS

Lightweight ceiling mounts including bracket

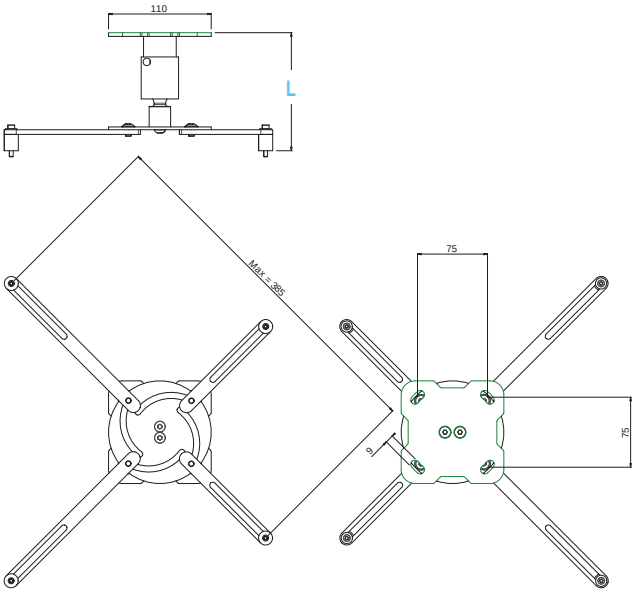

CEILING MOUNT FIXED
WITH UNIVERSAL BRACKET

This ceiling mount comes with a universal projector bracket to mount your projector (mounting reach Ø 385 mm).

Colour	○
Max. load	25 kg
Accessories	See from page 118

Article code	Description	Length (L)
002.2440	L1	127 mm
002.2445	L2	276 mm

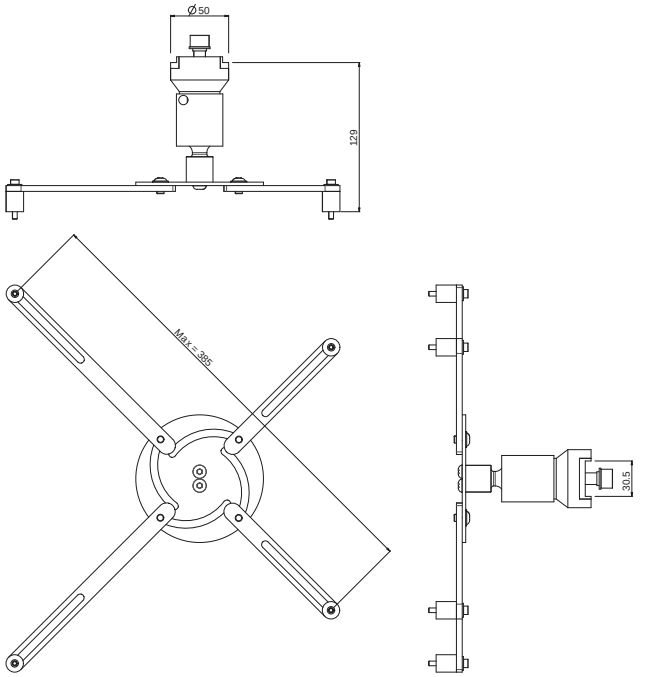

L1T CEILING MOUNT FIXED
WITH UNIVERSAL BRACKET

This ceiling mount is intended for use with a Doughty trigger clamp and comes with a universal projector bracket to mount your projector (mounting reach Ø 385 mm).

Colour	○
Max. load	25 kg
Accessories	See from page 118
Other info	Electrically insulated, excl. Doughty trigger clamp (003.1128)

Article code
002.2441

CEILING MOUNTS

Lightweight ceiling mounts including bracket

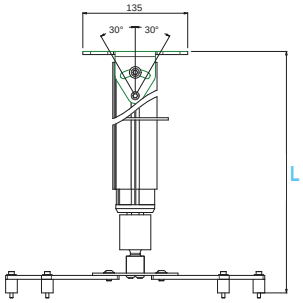

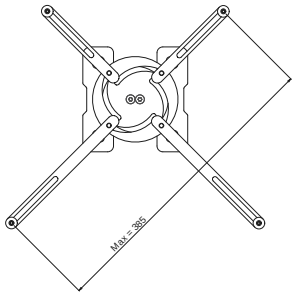

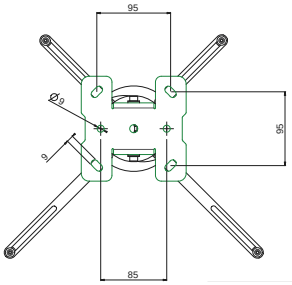

CEILING MOUNT ADJUSTABLE
WITH UNIVERSAL BRACKET

This ceiling mount is adjustable in length and comes with a universal projector bracket to mount your projector (mounting reach Ø 385 mm).

	Colour	○
	Max. load	25 kg
	Accessories	See from page 118

Article code	Descr.	Length (L)	Stabilizer kit
002.2450	L3	423 - 592 mm	-
002.2460	L4	593 - 932 mm	-
002.2470	L5	933 - 1582 mm	-
002.2480	L6	1582 - 2787 mm	integrated

CEILING MOUNTS

Lightweight ceiling mounts excluding bracket

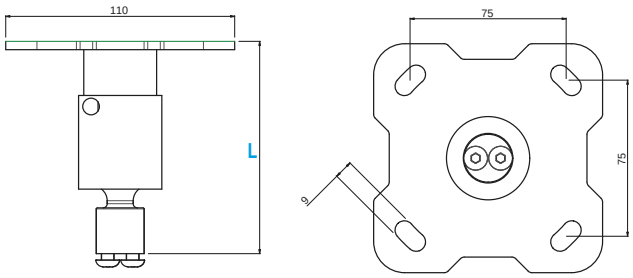

CEILING MOUNT FIXED
EXCLUDING BRACKET

By adding a projector-specific bracket, custom-made for your brand and type of projector, you will save valuable time and money.

Colour	○
Max. load	25 kg
Required	002.1002 Projector specific bracket, mention brand and type projector upon order
Accessories	See from page 118

Article code	Description	Length (L)
002.2040	L1	127 mm
002.2045	L2	276 mm

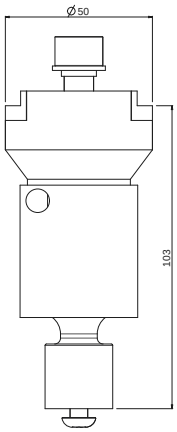

L1T CEILING MOUNT FIXED
WITH UNIVERSAL BRACKET

This ceiling mount is intended for use with a Doughty trigger clamp and comes with a universal projector bracket to mount your projector (mounting reach Ø 385 mm).

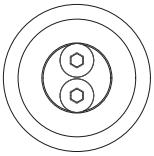

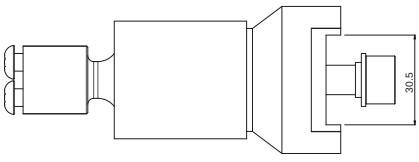

Colour	○
Max. load	25 kg
Required	002.1002 Projector specific bracket, mention brand and type projector upon order
Accessories	See from page 118
Other info	Electrically insulated, excl. Doughty trigger clamp (003.1128)

Article code
002.2041

CEILING MOUNTS

Lightweight ceiling mounts excluding bracket

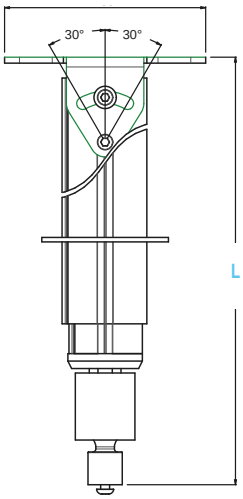

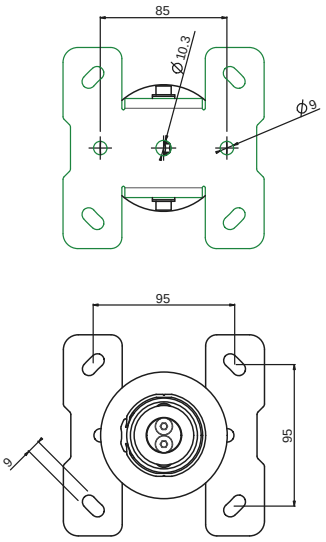

CEILING MOUNT ADJUSTABLE
EXCLUDING BRACKET

This ceiling mount has a continuous length adjustment, in-tube cable management and by adding a projector-specific bracket, custom-made for your brand and type of projector, you will save valuable time and money.

	Colour	○
KG	**Max. load**	25 kg
!	**Required**	002.1002 Projector specific bracket, mention brand and type projector upon order
+	**Accessories**	See from page 118

Article code	Description	Length (L)	Stretching set
002.2050	L3	423 - 592 mm	-
002.2060	L4	593 - 932 mm	-
002.2070	L5	933 - 1582 mm	-
002.2080	L6	1582 - 2787 mm	integrated

CEILING MOUNTS

Lightweight ceiling mounts fine adjustment

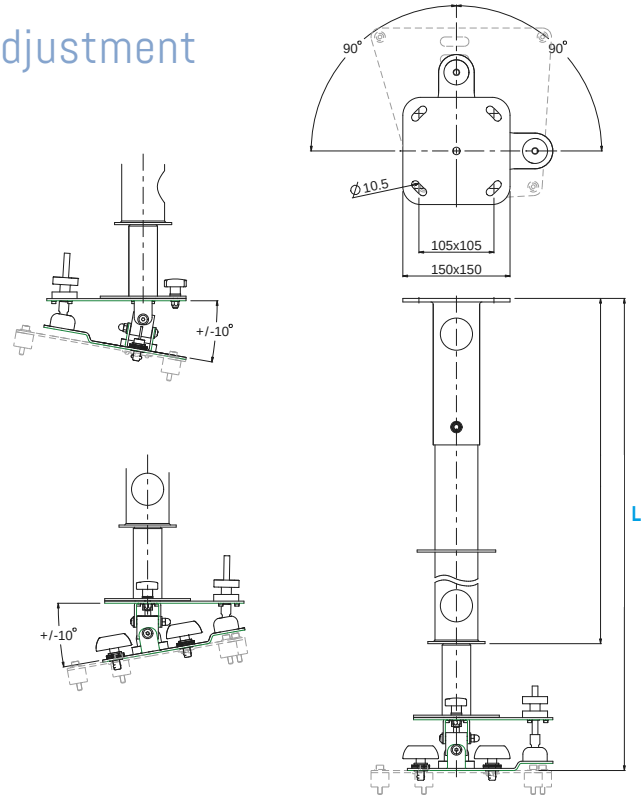

CEILING MOUNT WITH FINE ADJUSTMENT
EXCLUDING BRACKET

Colour	●
Max. load	25 kg (- 40 kg, check with Sales Team)
Required	002.1002 Projector specific bracket, mention brand and type projector upon order
Accessories	See from page 118
Other info	Can be shortened till 452 mm

Article code	Length (L)
002.1670	452 - 1230.5 mm
002.1680	452 - 2230.5 mm
002.1690	452 - 3230.5 mm

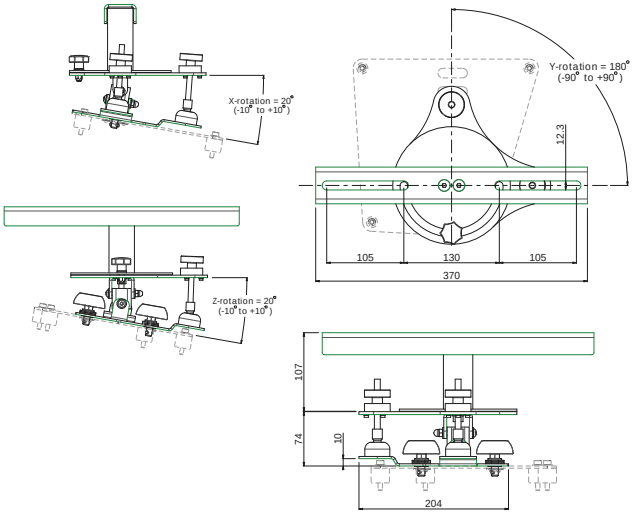

PROJECTOR FINE ADJUSTMENT
EXCLUDING BRACKET

Colour	●
Max. load	25 kg (- 40 kg, check with Sales Team)
Required	002.1002 Projector specific bracket, mention brand and type projector upon order
Accessories	See from page 118
Other info	Electrically insulated, excl. Doughty trigger clamp (003.1128)

Article code
002.1650

ACCESSORIES

For ceiling mounts

PROJECTOR BRACKET
projector-specific

The projector-specific bracket is custom-made for your brand and type of projector. With the design, we have taken into account the position of the lens and the projectors centre of gravity. Valuable time and money will be saved with the use of projector-specific brackets.

Please mention projector brand and type upon order.

002.1001

PROJECTOR BRACKET
universal

This universal projector bracket fits every projector with mounting holes within a reach of max. 385 mm Ø.

Please mention projector brand and type upon order.

002.1000

PADLOCK 2 CM
to secure anti-theft bushes

000.0001

ANTI-THEFT BUSHES
M6, to secure projector

002.1159

ANTI-THEFT BUSHES
M8, to secure wall/ ceiling plate

002.1160

SET OF LONG ARMS
increases reach with 64.5 mm Ø

Article code	Colour
002.1002.01	Black
002.1002.11	White

RENTAL PLATE WITH QUARTER TURN LATCHES

A product typically used in the audiovisual rental business but very useful for educational purposes as well in case you need to use one projector in more than one room: Mount a ceiling or wall mount in each room in combination with this rental plate and combine the projector with a projector-specific bracket.
This rental plate allows a quick installation as you only need to loosen and fasten the quarter turn latches without the further need of tools.

003.1121

WOODEN BEAM ADAPTER

For mounting a standard ceiling mount to a wooden beam which is smaller than the ceiling mounting plate.

003.2126

RENTAL BALL JOINT LOCKING RING

A product typically used in the audiovisual rental business but very useful for educational purposes as well. Easily fixate the ball joint by just turning the wing, no tools needed.

003.1151

STABILIZER KIT

for tube sets over 2000 mm

Attaches to tube set and structure to stabilize projector. Kit includes anchor wires, eye bolts, wire strainers and conduit clamps.

003.1250

DOUGHTY TRIGGER CLAMP

003.1128

ANGULAR ADJUSTMENT

For mounting a ceiling mount to a slope ceiling. Tilt function: +90° / -90°.

003.1180

CEILING PLATE

for sheet-pile profile

Suitable for mounting a standard tube set to the sheet pile profile at the top floors of buildings.

003.2124

FIXED SPACERS

stainless steel

A product typically used in the audiovisual rental business but very useful for educational purposes as well: it is the perfect solution to keep all materials together in situations where you have to regularly detach the projector from the projector mount.

003.1125

SHOCK ABSORBER

for L1-L6, max. 30 kg

With the shock absorber attached between ceiling mount and structure vibrations are isolated to keep your projected image as still as possible.

003.2130

ANTI-THEFT KIT WHITE

With this anti-theft kit, theft of a projector is made considerably more difficult. The suspension points of the projector are shielded with a heavy steel cable. The steel cable runs through the cable duct to the ceiling where it is secured in a special module. This module is then closed with a disc lock. This set can be used with both universal and projector-specific brackets.

003.2220

I-BEAM MOUNTS

To mount SmartMetals ceiling mounts (projector and flat screens) to an I-beam.

Article code	Model	Description
072.2010	small	Adjustable 80 - 180 mm
072.2020	large	Adjustable 160 - 310 mm

Untouchable & secure

At all time you want your valuable projector secured against theft or vandalism. At the same time you care about hasslefree installation and maintenance. SmartMetals projector housings got your back.

PROJECTOR HOUSINGS

Universal projector housing

PROTECT YOUR VALUABLE PROJECTOR

Our projector housings keep your projector protected against theft and damage. Because of the smart design, the housings accommodate about any projector whether the lens is positioned on the left, middle or right and they come in three different sizes. They are supplied with a universal bracket and combined with our ceiling or wall mount you obtain flexibility in orientation.

Projector housings are installed easily, and allow quick access to the projector when maintenance is required: just remove the lock set and lower cover of the housing. During maintenance the projector remains aligned to the projection surface.

Colour ○

Required Wall mounts, see from page 109
Ceiling mounts, see from page 115

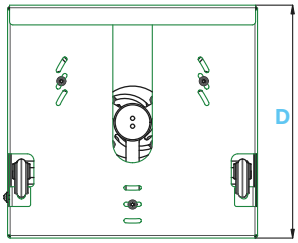

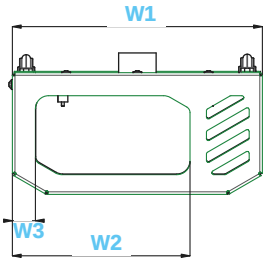

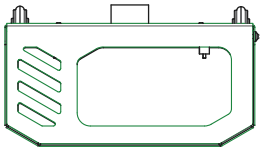

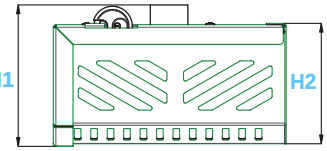

			Housing dimensions in mm					
Article code	**Model**	**Max. projector size incl. cables (WxDxH)**	**(D)**	**(W1)**	**(W2)**	**(W3)**	**(H1)**	**(H2)**
002.3010	S	350 x 330 x 110 mm	354	380	270	35	215	183
002.3030	M	400 x 330 x 150 mm	354	430	295	35	255	223
002.3020	L	490 x 430 x 180 mm	454	520	355	35	285	253
002.3040	XL	600 x 530 x 200 mm * *Note: for this housing a projector-specific bracket is required. Please contact us for a bracket for your brand and type of projector.*	554	635	397,5	62,5	294	263

Accessories

LOCK SET

For projector housing with L3-L6 ceiling mounts.

Article code
000.3100

LOCK SET

For projector housing with L1-L2 ceiling mounts and wall mounts.

Article code
000.3200

Ultimate engagement

With interactive whiteboards being a game changer in classrooms, allowing teachers to engage more directly with interactive content, another need arose: an easily in height adjustable solution to accomodate both teacher and students, suitable for mounting any short throw projector and stable enough when the whiteboard is touched or written on. We fulfilled this need with following (interactive) whiteboard liftsystems, for both fixed and mobile use.

ELECTRICAL LIFT SYSTEMS

(Interactive) whiteboard lift systems

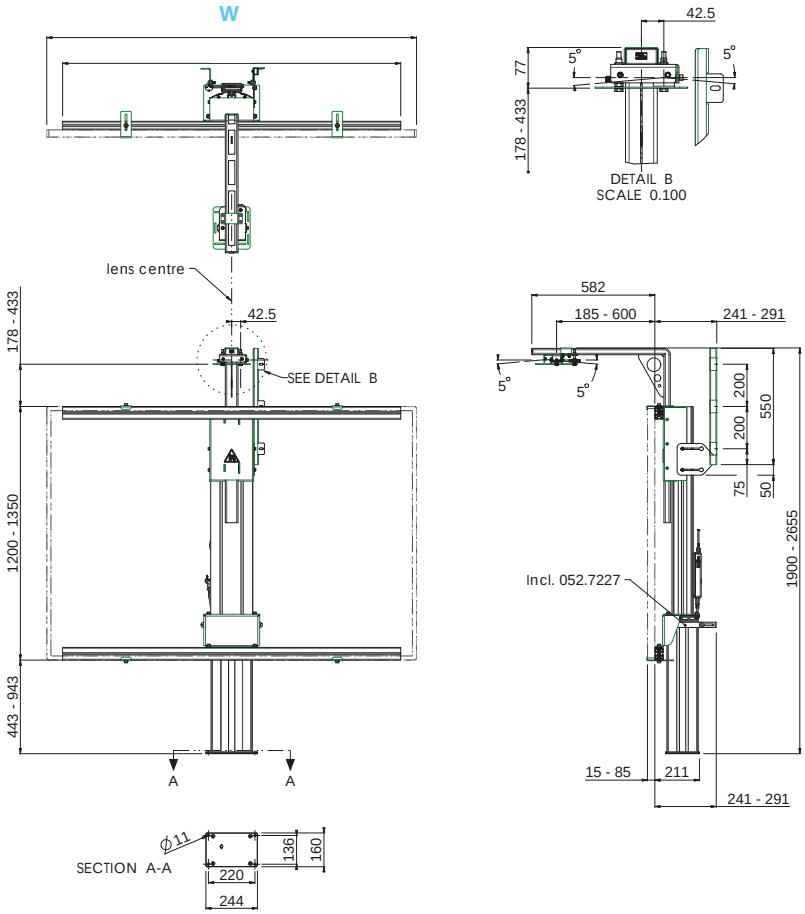

FLOOR LIFT FOR INTERACTIVE WHITEBOARD

This lift is a quick and easy to install floor lift, allowing electrical height adjustment of your interactive whiteboard and projector. The lifts are fitted with universal whiteboard fitting, making it suitable for almost every IWB.

The lift requires positioning close to a wall to which it can be attached with its adjustable wall bracket.
The floor lift comes with a remote control to adjust the whiteboard 500 mm in height.

Please specify your whiteboard and projector upon order.

Colour	◐
Max. load	80 kg
Position	Landscape
Stroke	500 mm
Accessories	See page 125
Required	Projector mount (excl.), pls contact us

Benefits

- ✓ Adaptive use
- ✓ Extra stable because of floor and wall mounting
- ✓ Quick and easy to install
- ✓ Universal whiteboard fitting

Article code	Whiteboard width (W)	Inch size
152.1000-77	1600 - 1899 mm	77 inch
152.1000-87	1900 - 2099 mm	87 inch
152.1000-101	2100 - 2299 mm	101 inch

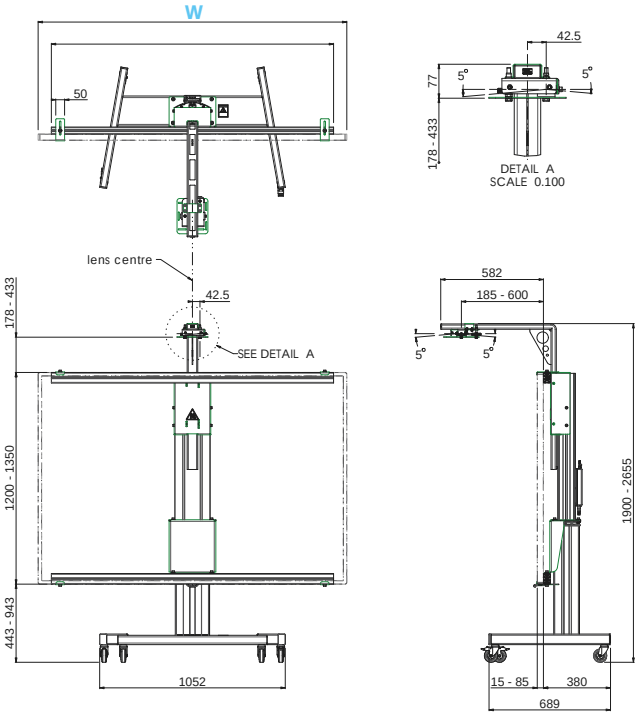

FLOOR LIFT ON WHEELS FOR INTERACTIVE WHITEBOARD

This is the same lift as the floor model but with wheels for flexible use in more than just one location.
When the lift is in it's lowest position and projector is in withdrawn position you can ride this lift through a door size 2315 x 930 mm.

	Colour	◐
KG	**Max. load**	80 kg
	Max. inch	77 inch
	Position	Landscape
	Stroke	500 mm
	Accessories	See page 125
!	**Required**	Projector mount (excl.), pls contact us

Benefits

- ✓ Adaptive and flexible use
- ✓ Fits through door
- ✓ Quick and easy to install
- ✓ Universal whiteboard fitting

Article code	Whiteboard width (W)	Inch size
152.2000-77	1600 - 1899 mm	77 inch
152.2000-87	1900 - 2099 mm	87 inch
152.2000-101	2100 - 2299 mm	101 inch

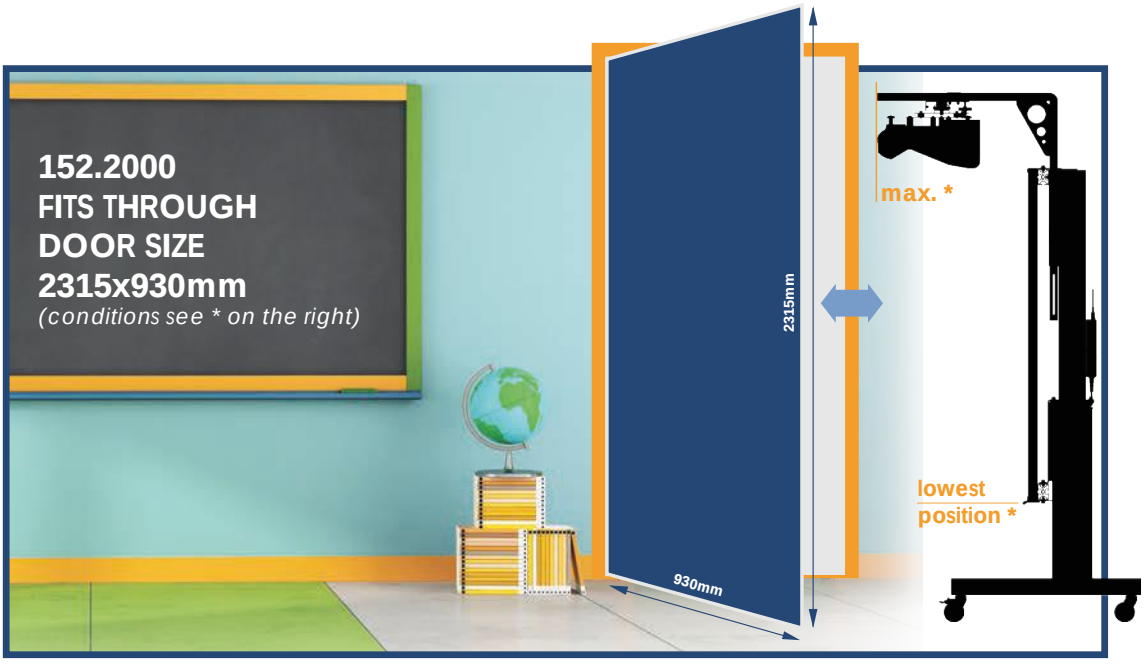

ACCESSORIES

For (interactive) whiteboard lift systems

PEN TRAY 350 MM
for 152.1000/2000 Series

To place pens and markers underneath your whiteboard.

152.1010

PROJECTOR BRACKET

For Benq, Epson, Hitachi, NEC, Panasonic, Sony, Vivitek, i3.

152.1030-0x

WALL FIXATION KIT
for 152.1000-77/87/101

When drilling in the floor is not an option.

152.1040

ANTI-COLLISION MODULE
incl. 200 mm cable

052.7217

ACTIVEBOARD MOUNT

Required to mount an ActiveBoard digiboard, which can not be clamped due to its plastic bezel.

152.1045

MOUNTING KIT INCLUDING WHITEBOARDS

Our whiteboard mounting kits come with enamel or laquered steel whiteboards custom-made for your touch display or (interactive) whiteboard model. Compared to lacquered steel, enamel steel offers no usage stains of the markers on the whiteboard and we offer 25 years warranty on the surface of an enamel steel whiteboard. Combine this mounting kit with a wall mount, floor lift or floor lift trolley and you have an educational tool with optimal ease of use.

Article code	Description
152.1070-ES	Kit incl. enamel steel whiteboards for IWB 77-79 inch
152.1070-LS	Kit incl. lacq. steel whiteboards for IWB 77-79 inch
152.1080-ES	Kit incl. enamel steel whiteboards for IWB 87-89 inch
152.1080-LS	Kit incl. lacq. steel whiteboards for IWB 87-89 inch
152.1100-ES	Kit incl. enamel steel whiteboards for IWB 100-101 inch
152.1100-LS	Kit incl. lacq. steel whiteboards for IWB 100-101 inch

LARGE WALL PLATE
for 152.1000 Series

To create additional mounting surface on a weak wall.

052.7235

CUSTOM-MADE SOLUTIONS

Get inspired

INVENTORY

You contact us with your request for a custom-made product. Together we determine product requirements and we provide you with an offer. Upon order we move on to the next step.

CONCEPT

After inventory and order we enter the stage of product engineering.
We will convert your request into a concept, carefully taking into account requirements, practicabilty, location, suitable aesthetics and last but not least ease of installation.

COMPLETION

A project never ends at the delivery of the finished product. It speaks for it self that we are available for 100% after care even after installation.
Make sure to contact us in case of questions.

You ask, we deliver

Not every project benefits from our standard solutions, nor does every customer settle for standard. When you are involved in a project where demands go beyond what our standard products have to offer, please contact us:
We hear what you ask, listen to what you need and supply you with a solution that embodies just that.

On the following pages you will find a few prominent projects to get you inspired.

‘IN CONTROL’ WITH LED

Inspiration: 27x3 LED wall in a control room environment

SmartMetals participates at a high level in the upcoming market of LED walls. Our solutions are based entirely on our VideoWall concept that has extensively proven itself in practice in the past years. The advantage is that we are not only able to realize a standard LED mounting system to the wall, but also are we able to convert the construction simply and cost efficiently to freestanding, or hanging from the ceiling or mounted to our standard floor/ wall columns.

There always will be situations where we cannot implement our standard solutions. As was the case for a project with SAMSUNG indoor LED (1.5 mm) where a LED wall had to be realized of approx. 13 x 1.5 meter. This particular wall could only be mounted to the existing structural columns. The distance between these columns was approximately 5.5 meter. We have created special supports that were mounted to these columns. Of course, due to the large distance between them, the deflection of the construction has been taken into account, so that optimal and accurate installation of the LED modules was assured.

Of course we can help you with your LED wall mounting projects, of any brand and in any way possible.

Labels
Terrain
Weather
FINLAND
SWEDEN
ALAND
ESTONIA
LATVIA
LITHUANIA
BELARUS
Moscow
KAZAKHSTAN
NETHERLANDS
GERMANY
POLAND
CZECH REP.
SLOVAKIA
UKRAINE
HUNGARY
MOLDOVA
ROMANIA
FRANCE
SLOVENIA
SERBIA
BULGARIA
GEORGIA
AZERBAIJA
MONACO
ANDORRA
ITALY
ALBANIA
Istanbul
TURKEY
GREECE
MALTA
GIBRALTAR
ALTITUDE 37992 ft

ANGLE IS KEY FOR CREATIVITY

Inspiration: Flat panel FoldUp Lift in an atelier

For a prominent fashion brand, we have been asked by the AV System integrator to develop a solution to raise a monitor from a tabletop at an angle so that an ideal working position is created for the use of a touch screen. In this case, the back of the monitor had to be finished neutrally and in colour, to entirely hide cables and such.

Based on this enquiry, we have offered a flat panel FoldUp lift of which the design was approved of almost immediately by the user. This FoldUp lift became the fundamental solution for virtually all brands of monitors up to a size of no less than 70 inches.

Besides the use during a creative process of a fashion brand, for example, this product is also ideal for use in boardrooms, meeting rooms. Even in courts where the judge should see both the monitor and the suspect, the SmartMetals FoldUp lift can be perfectly implemented.
The concept has been standardized but is always custom-made to fit your monitor brand and type and application, matching your interior perfectly.

Feel free to ask us about the possibilities.

GRAND COMMUNICATION

Inspiration: 5x4 back-to-back VideoWall in a public venue

The end customer's need was to create communication on a large format screen.
Given the desired location of the object and specific environmental characteristics a back-to-back configuration has been chosen.
The final solution we developed is a 5x4 back-to-back VideoWall which is fully mounted to the ceiling.

In collaboration with several parties, a highly secure situation has been realised as required in public venues.
During the approach of the project, the choice was made to optimise the viewing angle for the visitors. As a result, both sides of the VideoWall have a 10° tendency.

Are you interested in our solutions for your project? Please feel free to contact us.

Mounting construction

STEDELIJK
MUSEUM
AMSTERDAM
STUDIO DRIFT

‘SUITABLE’ KIOSKS MAKE CONVINCING MANNEQUINS

Inspiration: Flat panel kiosks in retail

A fast growing Dutch suits brand wanted to work, besides its traditional mannequins, with digital mannequins in new to be opened international establishments. Together with the supplier of the monitors they approached the right size by placing two monitors on top of one another (in portrait position) of 55 inch with a very narrow bezel.

Since such ‘bare’ monitors on a simple stand are not that pretty in the attractive new interiors, SmartMetals was called upon to design a kiosk that fits the interior design. In close cooperation with the interior architect we have come to a fitting design that meets the following requirements:

- High level of finishing level of stainless steel with mirror plinth
- As minimalistic as possible to retain the thin edge of the monitor
- To be implemented as back to back and singe sided solution
- Able to be shipped in compact parts all over the world
- Quick and easy to assemble and install by interior builders
- Sufficient alignment options in the foot to absorb unevenness
- To provide space for a media player and a voltage distributor

Based on above demands, SmartMetals has developed the product as shown alongside. By supplying compact pre-assembled parts, the interior builder can suffice by mounting just 3 parts as base frame. In the base frame the monitors are hung with supplied spacers for the correct positioning. Finally, the two stainless steel side panels are fitted and the top plate with ventilation is mounted. All composed of just 6 parts to guarantee a short installation time on location.

COMMUNICATION AT ITS LARGEST

Inspiration: Easy to install LED wall solutions

In the past period we have contributed with various system integrators to beautiful, easy-to-install LED wall solutions. Our mounting solutions are located in various control rooms, showrooms, presentation/ meeting rooms, stores and TV studios.

We do not limit ourselves to one brand, we have recently done installations for the LED solutions of, among others, Absen, LG and Samsung. For the latter we have made the solution for the Experience Store in Utrecht (the Netherlands). The challenge was to create a seamless 26x4 LED wall with an outside angle of 105 degrees. The result is satisfactory as you can see in the picture on the right. We do a lot of this kind of customized solutions, but of course we also offer standard solutions.

SAMSUNG
Service

DIGITAL SIGNAGE

Customized solutions

IT IS ALL ABOUT EFFECTIVE PRESENTATION

Get inspired by our Digital Signage solutions for wall, ceiling and floor installation on following pages.

With Digital Signage opportunities are infinite for promotional, informational and entertainment purposes. Not just strong, attractive and pursuasive content is important. At least just as much important is the 'package' it all is presented in. And that is where SmartMetals happily steps in. We offer customized solutions like kiosks and housings for in- and outdoor applications to give your digital content even more cachet.

Not one project is the same: our solutions characterize by an eye for detail. We do not just focus on requirements and objective given by our customer, keeping in mind practicability, but also do we focus on the environment of application and proper aesthetics. Last but not least our goal for every project is ease of installation. All this is what we believe what makes a mounting solution a smart one.

Inspiration

1

Touch Kiosk C-TOUCH 46 inch
White/Black

2

Touch Kiosk C-TOUCH 46 inch
White

3

Portrait KioskPanasonic 47 inch
Silver-Grey

4

Matrix 1x4 Samsung 46 inch

5

Portrait Kiosk Panasonic 47 inch
Black

6

Internet Kiosk ELO 22 inch

7

Check-In point ELO 19 inch

8

Giant-iTab C-TOUCH 55 inch

9

Matrix 4x4 Samsung 46 inch

10

Flat Panel Housing Sharp 37 inch

11

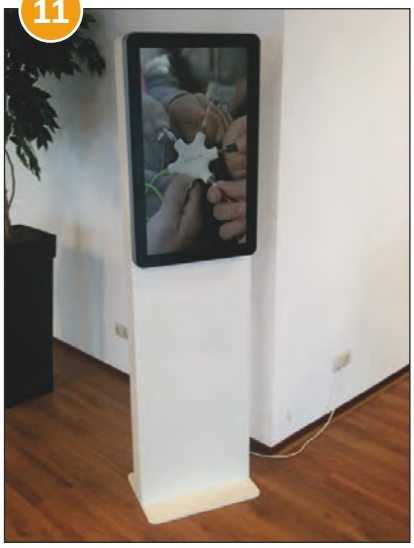

Touch Kiosk ELO 40 inch

Inspiration

12

Flat Panel Housing LG 42 inch

13

Flat Panel Cover Samsung 40 inch

14

Touch Kiosk Hyundai 46 inch

15

Back to Back Kiosk Hyundai 46 inch

16

CableCover implementation

17

Concept:
Outdoor kiosk Conrac 40 inch

18

Concept:
Outdoor kiosk Conrac 40 inch

19

Concept:
Internet stand LG 22 inch

20

Concept:
Lectern Laptop 15 inch

21

Concept:
Mobile furniture ELO 42 inch

22

Concept:
Window display LG 38 inch

23

Concept:
Flatscreen housing 46 inch

24

Concept:
iDesk ELO 22 inch

25

Concept:
Flatscreen cover ELO 32 inch

Inspiration

26

Concept:
Shelf display for Tablet 10 inch

27

Concept:
Diamond matrix LG 19 inch

28

Concept:
Diamond matrix Samsung 46 inch

29

Concept:
Matrix 2x1 Samsung 46 inch

28

Concept:
Outdoor kiosk Conrac 40 inch

31

Concept:
Presentation stand LG 19 inch

SMART STRONG & SAFE

SmartMetals Mounting Solutions

WALL-TRUSS MOUNTS

The SmartMetals flat panel wall and truss solutions can be implemented in several ways: as a temporary installation of one flat panel, as a VideoWall solution with multiple flat panels, to a wall, in a truss or flying.

All solutions have been developed with focus on practicality and ease of use.

BENEFITS

- ✓ For portrait and landscape
- ✓ Quick and easy to install
- ✓ Easy alignment

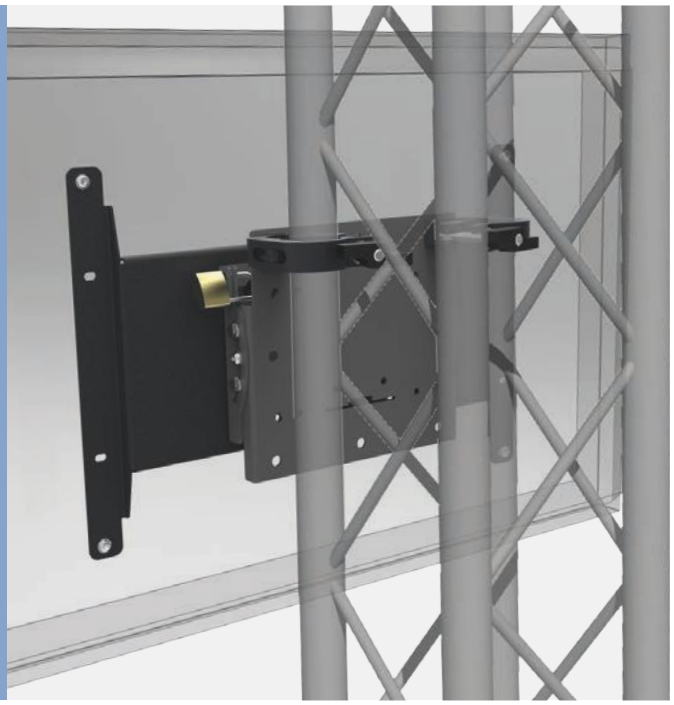

FIXED WALL-TRUSS MOUNT

FOR BRACKETS WITH THREE-POINT COUPLING

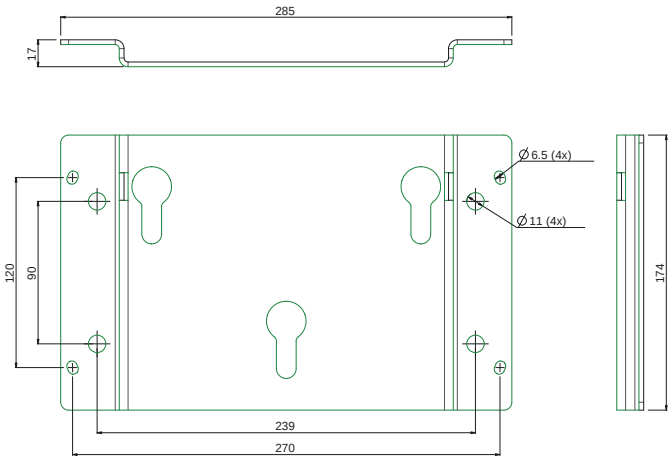

Article code
063.0465

	Colour	●
	Max. load	80 kg
	Position	Landscape & Portrait
	Required	Bracket, see from page 162
	Other info	Not suitable for use with 052.5050

TILTABLE WALL-TRUSS MOUNT
FOR BRACKETS WITH THREE-POINT COUPLING

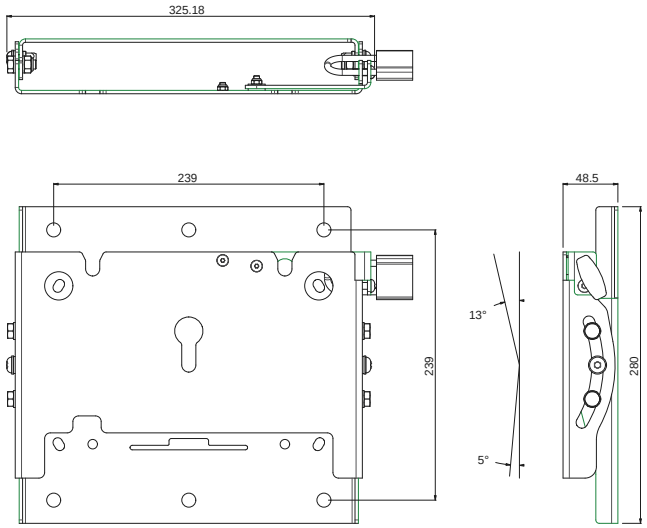

Article code
063.0460

Colour	
Max. load	80 kg
Position	Landscape & Portrait
Other info	Excl. Doughty trigger clamps (2x 003.1128)

Accessories

PADLOCK 60MM

To secure wall-truss module, housing and stand heads.

Article code
000.0013

DOUGHTY TRIGGER CLAMP, MAX. 51 MM Ø

The Doughty Trigger Clamp is used for truss mounting with the SmartMetals rental mounts (002.16xx, 002.2441, 002.2041) and the wall/truss module (art. nr.: 063.0460).

Article code
003.1128

STANDS & TROLLEYS

Benefits & Applications

SmartMetals offers a wide range of floor stands for rental purposes.

All stands and trolleys are fully divisible. Assembly is done without any tools and the stands are easily stored in a flightcase together with the flat panel for compact, practical and safe transportation.

All stand heads have three integrated keyholes which correspond to the three coupling bolts on our monitor brackets. The flat panel therefore is easily hung into the stand head.

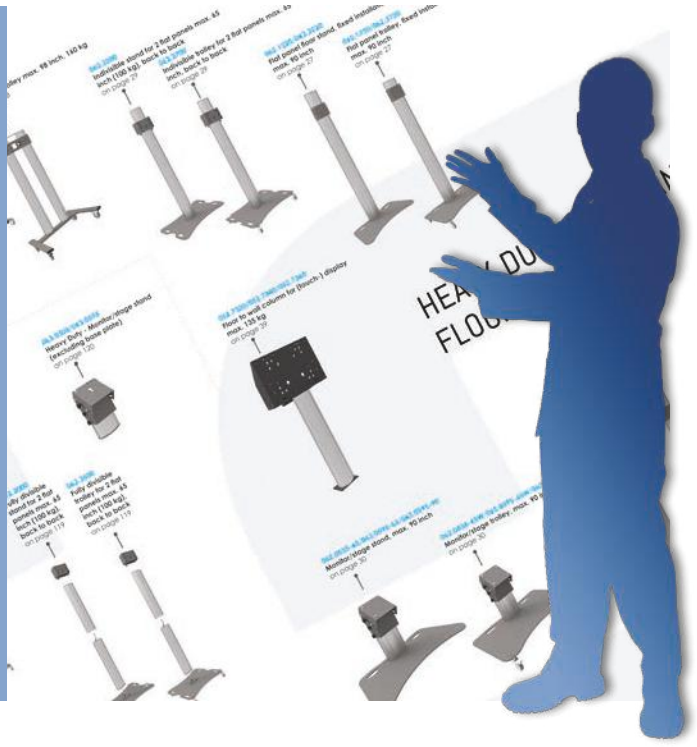

Applications

ON A BASE PLATE

For a freestanding installation of your monitor a floor stand on a base plate is what you are looking for. Our extensive range offers floor stands for light weight LED screens of max. 30 kg up to the heavy weight flat panels up to 160 kg.

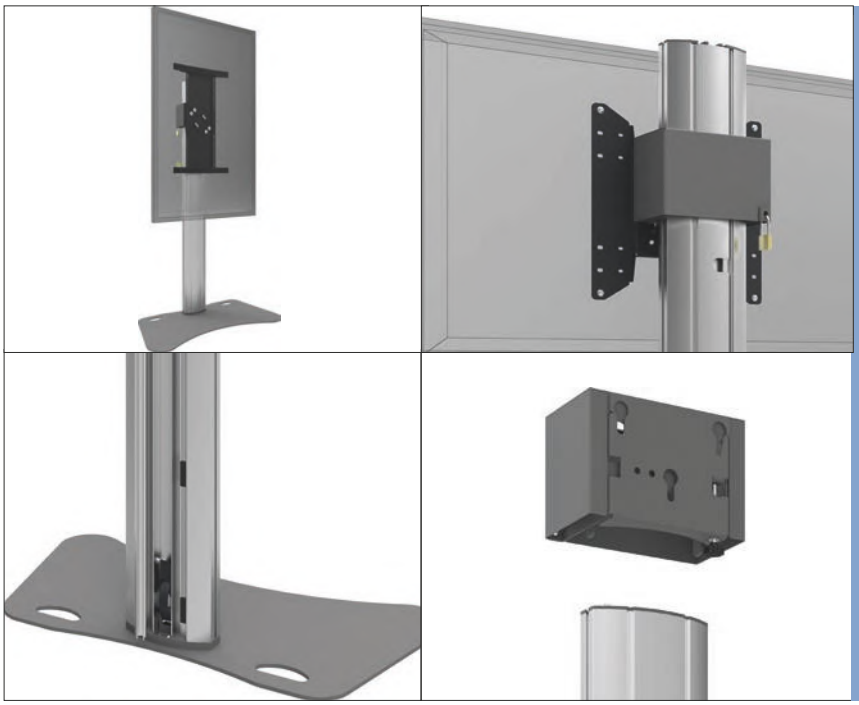

BENEFITS

- ✓ For portrait and landscape screen position
- ✓ Suitable for flat panels up to 98 inch, max. 160 kg
- ✓ All solutions offer the possibility to protect your flat panel against theft
- ✓ All stands come with hidden cable management
- ✓ Short installation time thanks to three-point coupling
- ✓ Easy to level

ON WHEELS

For the most flexible use of your floor stand in different spots and/or rooms the choice for a floor stand on wheels or so called trolley is obvious. Here also applies that our trolleys are available in Light and Heavy Duty models.

BACK TO BACK

In our product range you will also find a floor stand for a freestanding back to back installation. This back to back floor stand is fitted with a stand head with three-point-coupling mounting system, to which a rental monitor bracket is easily mounted on both sides.

LIGHT SERIES

Stands & Trolleys

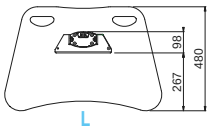

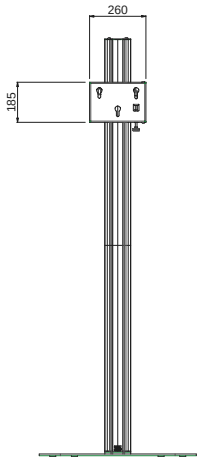

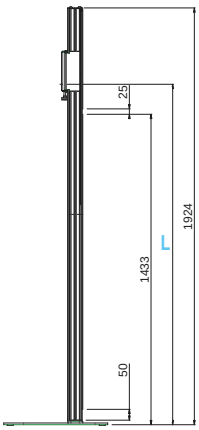

DIVISIBLE STAND
MAX. 55 INCH, 30 KG

Colour	◐
Max. load	30 kg
Max. inch	55 inch
Position	Landscape & Portrait
Required	Bracket, see from page 26
Accessories	See page 157

Article code	L (L) max. (centre screen)	Base plate L (L) x W
062.8050	1766 mm	725 x 480 mm
062.8050-225	2116 mm	950 x 480 mm

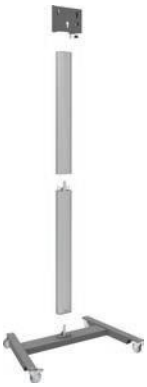

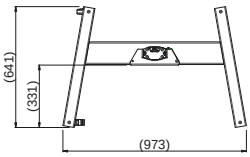

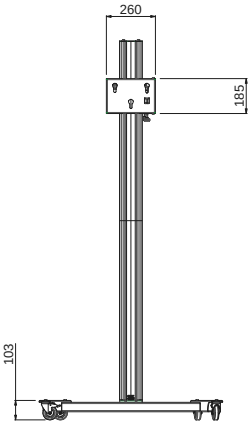

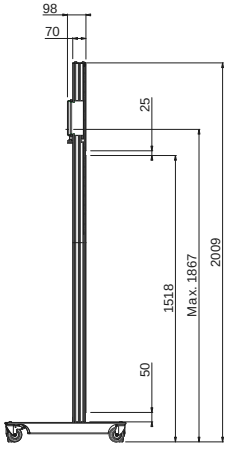

DIVISIBLE TROLLEY
MAX. 55 INCH, 30 KG

Colour	◐
Max. load	30 kg
Max. inch	55 inch
Position	Landscape & Portrait
Required	Bracket, see from page 26
Accessories	See page 157

Article code
062.8550

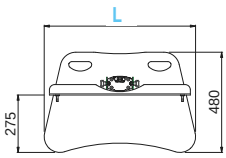

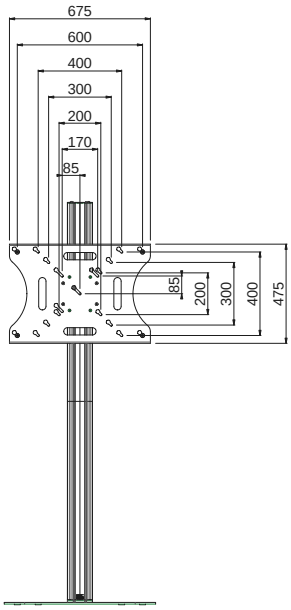

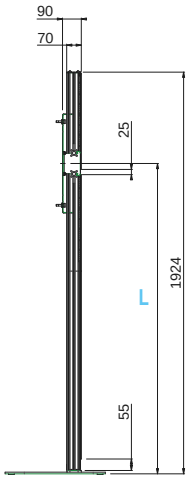

DIVISIBLE STAND INCL. BRACKET MAX. VESA 600 X 400

Colour	◐
Max. load	30 kg
Max. inch	55 inch
Position	Landscape & Portrait
VESA	Max. VESA 600 x 400
Accessories	See page 157

Article code	L (L) max. (centre screen)	Base plate L (L) x W
062.8045	1486.5 mm	725 x 480 mm
062.8045-225	1836.5 mm	950 x 480 mm

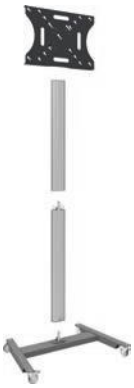

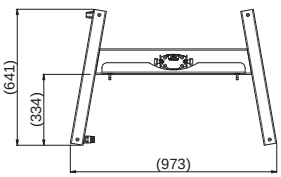

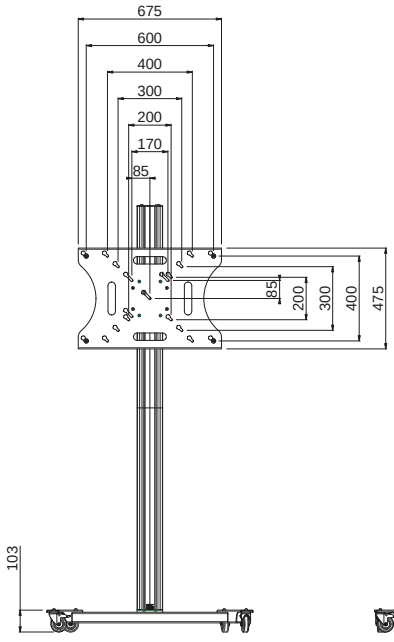

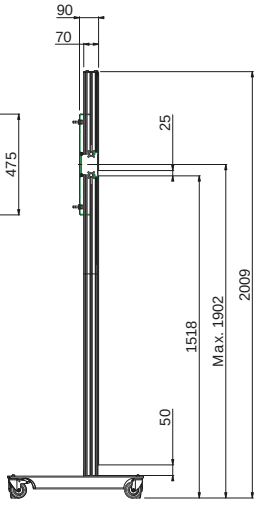

DIVISIBLE TROLLEY INCL. BRACKET MAX. VESA 600 X 400

Colour	◐
Max. load	30 kg
Max. inch	55 inch
Position	Landscape & Portrait
VESA	Max. VESA 600 x 400
Accessories	See page 157

Article code
062.8545

HEAVY DUTY SERIES

Stands & Trolleys

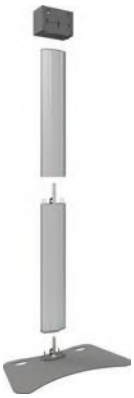

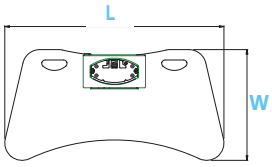

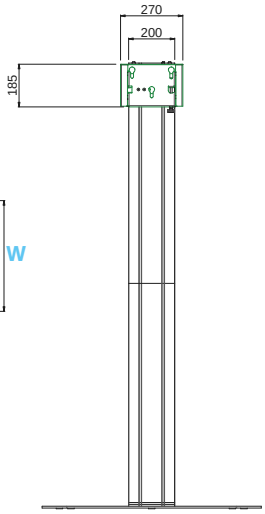

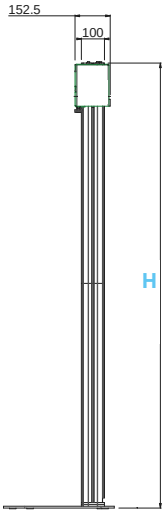

DIVISIBLE FLOOR STAND

Colour	◐
Position	Landscape & Portrait
Required	Bracket, see from page 26
Accessories	See from page 158

Article code	Max. load	Height (H)	Base plate L (L) x W (W)	Inch range
062.1000	60 kg	1929 mm	950 x 480 mm	max. 65 inch
062.3000	85 kg	1929 mm	1140 x 576 mm	max. 90 inch
062.3000-225	85 kg	2279 mm	1140 x 576 mm	max. 90 inch

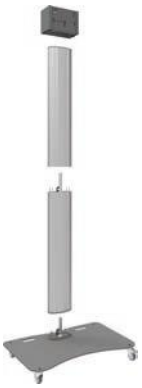

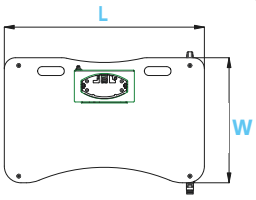

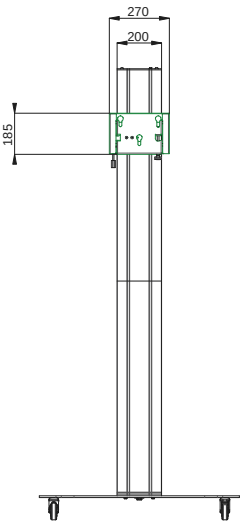

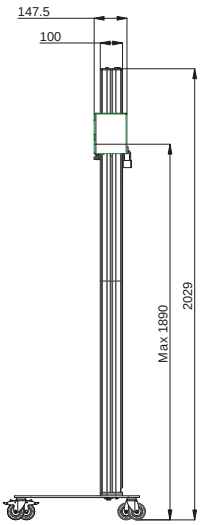

DIVISIBLE TROLLEY

Colour	◐
Position	Landscape & Portrait
Required	Bracket, see from page 26
Accessories	See from page 158

Article code	Max. load	Base plate L (L) x W (W)	Inch range
062.1500	60 kg	900 x 563 mm	max. 65 inch
062.3500	85 kg	1100 x 663 mm	max. 90 inch

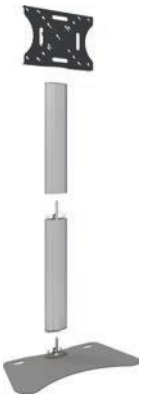

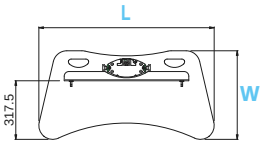

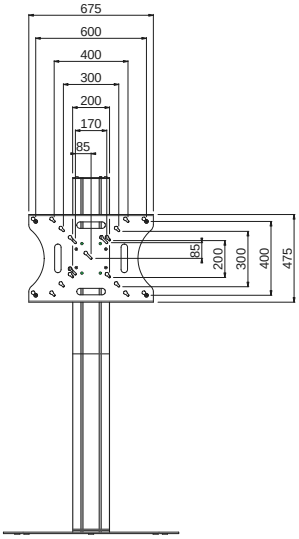

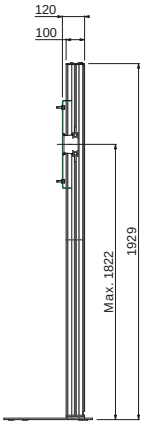

DIVISIBLE STAND INCL. BRACKET MAX. VESA 600 X 400

Colour	
Position	Landscape & Portrait
VESA	Max. VESA 600 x 400
Accessories	See from page 158

Article code	Max. load	Base plate L (L) x W (W)	Inch range
062.1040	60 kg	950 x 480 mm	max. 65 inch
062.3040	85 kg	1140 x 576 mm	max. 90 inch

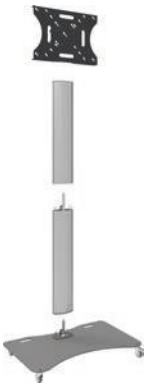

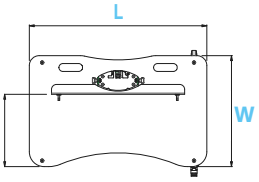

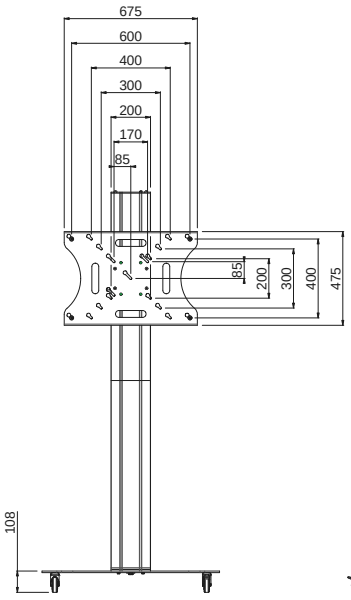

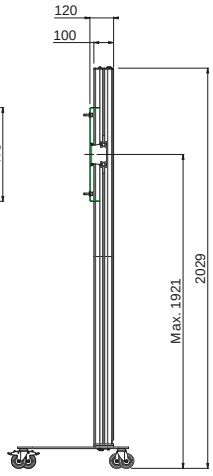

DIVISIBLE TROLLEY INCL. BRACKET MAX. VESA 600 X 400

Colour	
Position	Landscape & Portrait
VESA	Max. VESA 600 x 400
Accessories	See from page 158

Article code	Max. load	Base plate L (L) x W (W)	Inch range
062.1540	60 kg	900 x 563 mm	max. 65 inch
062.3540	85 kg	1100 x 663 mm	max. 90 inch

HEAVY DUTY SERIES

Stands & Trolleys back to back

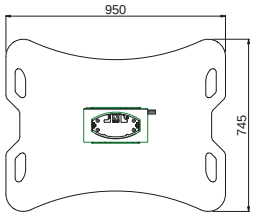

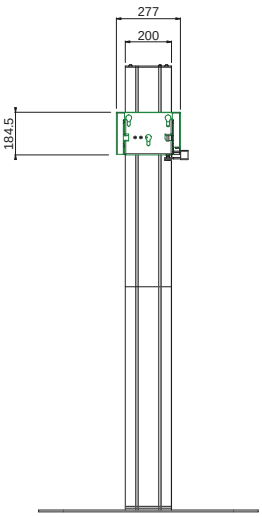

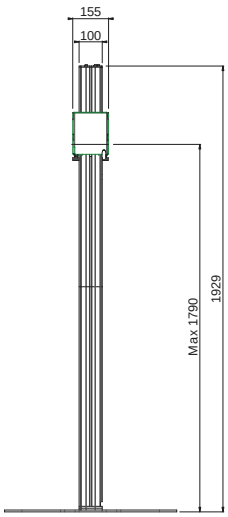

FLOOR STAND BACK TO BACK

Colour	◐
Max. load	100 kg
Max. inch	2x Max. 65 inch
Position	Landscape & Portrait
Required	Bracket, see from page 26
Accessories	See from page 158

Article code
062.2000

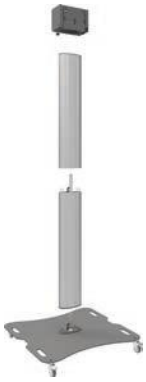

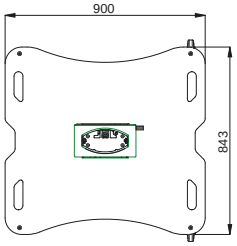

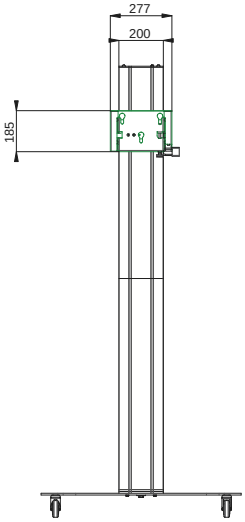

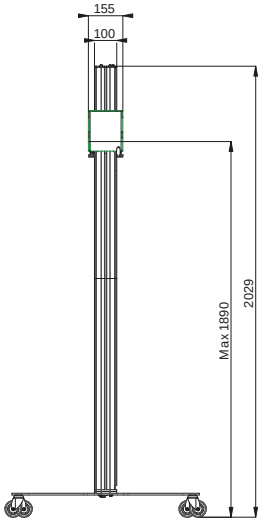

TROLLEY BACK TO BACK

Colour	◐
Max. load	100 kg
Max. inch	2x Max. 65 inch
Position	Landscape & Portrait
Required	Bracket, see from page 26
Accessories	See from page 158

Article code
062.2500

“SMART & SOLID & SAFE”

SmartMetals Mounting Solutions

LIGHT & HEAVY DUTY SERIES

Stage Stands

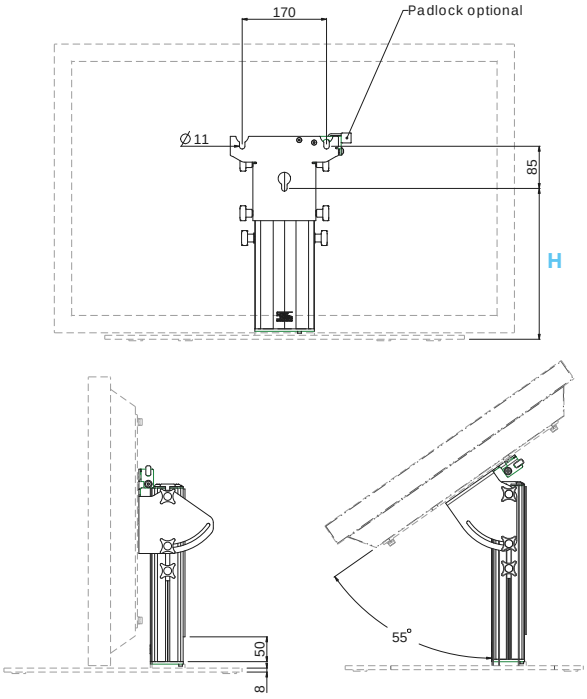

LIGHT SERIES - STAGE STAND
(EXCL. BASE PLATE)

Colour	◐
Max. load	30 kg
Max. inch	Max. 55 inch
Position	Landscape & Portrait
Required	Bracket, see from page 26
Accessories	See from page 157

Article code	Centre screen (H)
063.8635	304 mm
063.8695	904 mm

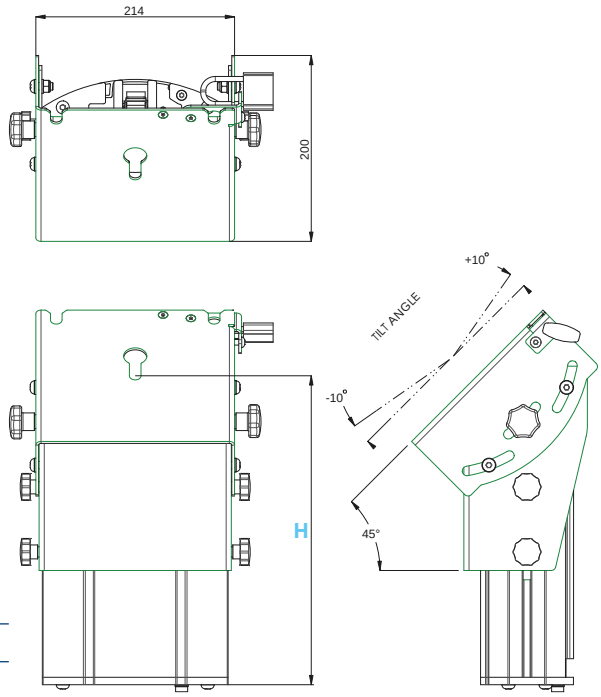

HEAVY DUTY SERIES - STAGE STAND
(EXCL. BASE PLATE)

Colour	◐
Max. load	80 kg
Max. inch	Max. 65 inch
Position	Landscape & Portrait
Required	Bracket, see from page 26
Accessories	See from page 158

Article code	Centre screen (H)
063.0500	333 mm
063.0595	1033 mm

Confident performance

Our monitor/stage stands and trolleys are the perfect support whenever a confident performance is required.

Whether you are a public speaker, a priest who celebrates his Mass in church, a professor who teaches his class in an auditorium, anywhere you need a confidence monitor you will find our products to be particularly useful offering a perfect viewing height and angle and stability.

All models are available in two heights and offer an adjustable viewing angle between 35° and 55°.

ELECTRICAL DIVISIBLE STAND

Smart Screen Hoister with flightcase

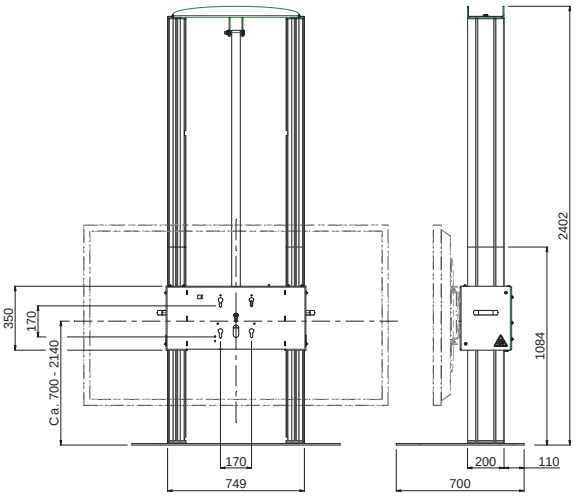

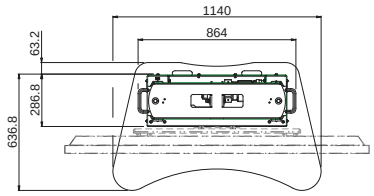

USE AND TRANSPORT OF LARGE FORMAT DISPLAYS MADE EASY

This fully divisible stand with its flightcase is the perfect aid to transport and electrically hoist flat panels with a maximum weight of 120 kg.
With the integrated electrical hoist system it is very easy to hoist the monitor out of the flightcase up to the preferred height.
Add product 052.5075 with rotation function and you will also be able to rotate the screen from landscape to portrait position.

Benefits

- ✓ Easy to install
- ✓ Health & Safety responsible use
- ✓ Effortless hoisting up to 120 kg
- ✓ Perfect aid to transport up to 120 kg load

	Colour	◐
KG	**Max. load**	120 kg
	Position	Landscape, Portrait
!	**Required**	Bracket below

Article code	Inch range
062.7300-70	65 - 70 inch
062.7300-86	86 inch
062.7300-98	98 inch

Accessory

BRACKET WITH ROTATION

Universal rental bracket with rotation function and four point coupling. Max. load 160 kg.

Article code
052.5075

ACCESSORIES

For Light Series Stands & Trolleys

PADLOCK

Padlock 20 mm for securing the mounting head of your floor stand or trolley.

000.0001

MINI-PC/THIN CLIENT HOUSING

max. 397 x 218 x 100 mm, lockable

063.0710

STAND HEAD

WITH THREE-POINT COUPLING

063.8020

BASE PLATE

with pin

063.8055

FLOOR FRAME

on wheels with pin

063.8555

LAPTOP SUPPORT

Article code	Description
063.8100	Surface 386 x 308 mm
063.8110	Surface 300 x 190 mm

For Heavy Duty Series Stands & Trolleys

EXTENSION PIECES

for fully divisible stands

Article code	Description
063.0200	Stand extension piece 350 mm
063.0295	Stand extension piece 950 mm

ACCESSORIES

For Heavy Duty Series Stands & Trolleys

HOIST SYSTEM
for divisible stand

This hoist system enables just one person to hoist a flat panel up to 90 kg out of a flightcase.
After it is taken out of the flightcase, the monitor is mounted to a fully divisible stand and the the hoist system is removed.

063.0600

EXTENSION SET HOIST SYSTEM
set of mounting bars

063.0615

EXTENSION SET HOIST SYSTEM
hoist plate and roller-bar

In combination with the 063.0615 mounting bars this set is enables the use of hoist system 063.0600 on multiple stands.
This set can also be used as additional support for heavier screens (fitted with rental brackets) on the SmartMetals stands.

063.0610

PADLOCK 60 MM
for wall-truss module, housing, stand head

000.0013

front view

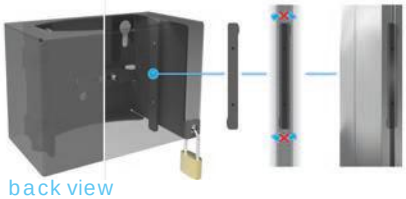

back view

STAND HEADS

For mounting more flat panels to your stand you need an additional stand head and flat panel bracket (see page 26).

Stand head contains two clamping strips, designed to offer a perfect fit in the T-slots on both sides of the column, preventing the monitor from sagging.

Article code	Description
063.1020	For 1 flat panel
063.2020	For 2 flat panels back to back

COUPLING BOLT
15 mm, M8x30, ring and nut

063.1039-M8

BASE PLATE
Back to back 2x 65 inch, max. 100 kg (with pin)

063.2010

BASE PLATE WHEELS
Back to back 2x 65 inch, max. 100 kg (with pin)

063.2510

BASE PLATES

Article code	Description
063.1010	Base plate for one flat panel up to 65 inch, max. 60 kg (with pin)
063.3010	Base plate for one flat panel up to 90 inch, max. 85 kg (with pin)

BASE PLATES ON WHEELS

Article code	Description
063.1510	Base plate on wheels for one flat panel up to 65 inch, max. 60 kg (with pin)
063.3510	Base plate on wheels for one flat panel up to 90 inch, max. 85 kg (with pin)

LAPTOP SUPPORTS

This laptop support can be mounted to the column over the full height and can be secured with a padlock.

Article code	Description
063.0100	Surface 386 x 308 mm
063.0110	Surface 300 x 190 mm

MEDIA HOUSING
max. 450 x 377 x 114 mm

Protect your valuable equipment by placing it in this lockable media housing. Cables can be run through the back side into the column and the position of the housing can be adjusted continuously over the full length of the column.

063.0700

MINI-PC/THIN CLIENT HOUSING
max. 397 x 218 x 100 mm

Your mini-PC is safely installed and protected from theft and vandalism in this solid steel housing. Cables can be run through the upper side into the column and the housing can be adjusted in height continuously.
Important benefit of this housing is that this housing is placed behind the flat panel.

063.0710

- ✓ TÜV Certified
- ✓ DGUV Certified (former BGV-C1)
- ✓ Installation without tools
- ✓ Perfect alignment
- ✓ Compact transport in custom developed flightcases

Safe & flexible

Besides VideoWall solutions for permanent installation, we also offer solutions with flexibility to install a VideoWall in rental applications.
First of all a matrix construction can be built from divisible stands; where we offer connector bars, tiltable stand heads and a wider mounting pattern to allow utmost stability.

In case a rental company requires to be even more flexible and wishes to select from its rental fleet per location, a wall, truss or floor solution, the Smart Rental Frame offers most flexibility. This frame is available in a 46 or 55 inch ultra narrow bezel solution, with flat panel specific mounting sets. The frame can work as small as a 2 flat panel wide/high solution, to as large as a 4 panel wide/high solution. Of course fully TÜV certified to guarantee a safe installation.

VIDEOWALLS

Freestanding on the floor

The accessories below offer the possibility to build a VideoWall configuration from your fully divisible stands.
The stand extension piece of 950 mm (063.0295) is available to extend the fully divisible stands to 2850 mm. Ideal to raise your flat panel above the public, or to use it for a 3x3 VideoWall configuration. By connecting the stands with our stabilizing bars (063.0900) the set will offer a strong and easy to build up VideoWall construction. Always use two bars between two stands.
A stand head with five-point coupling mounting system (063.1025) is especially developed for our fully divisible stands which are used in a VideoWall configuration. A bracket with three point coupling (063.03xx) can be added, which by adding the additional coupling bolts can be used as five-point coupling mounting system. A tilt function of +1° till -4° is integrated which helps to align the displays on the stand.

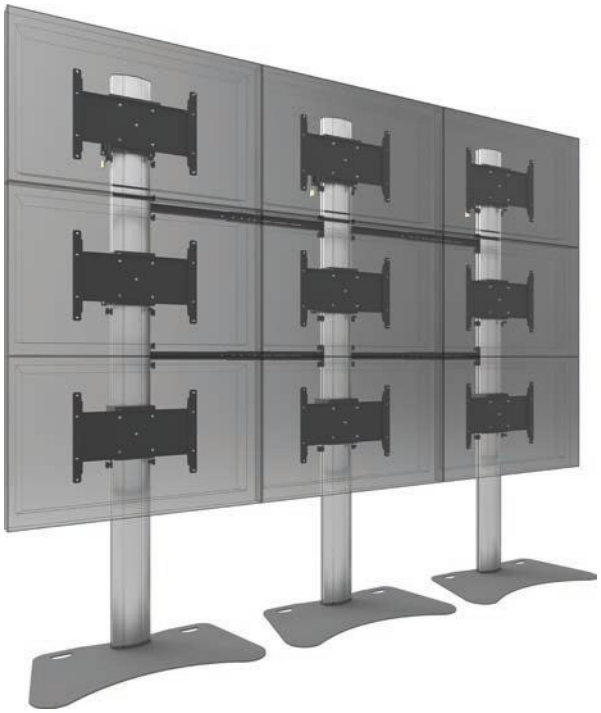

063.1025 Stand head

063.0900 Stabilising bar

063.0295 Extension piece

Rental bracket

Colour	◐
Max. inch	42 - 55 inch
Position	Landscape
Note	Three point coupling
Required	Brackets, see from page 162

FLAT PANEL BRACKETS

With three point coupling

All our rental brackets are developed with quick and easy installation in mind.
By means of a three-point coupling system all brackets are easily combined with our truss/wall models and floor stands.

✓Effortless installation

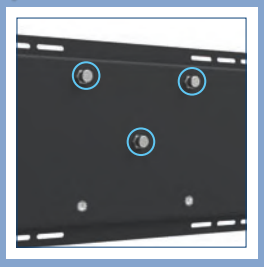

✓Landscape & portrait

VESA 200 RENTAL BRACKET

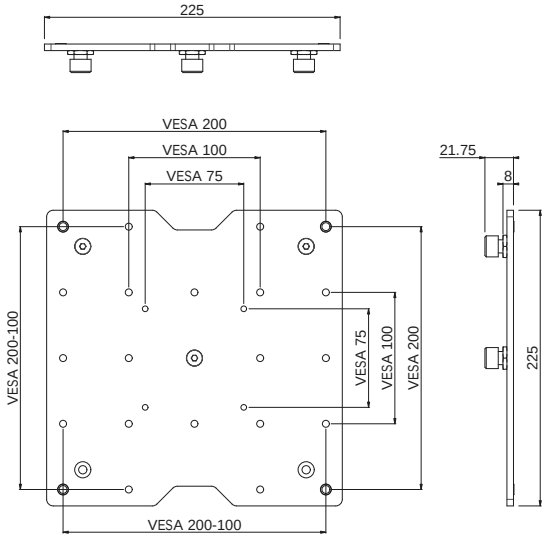

Colour	●
Max. load	50 kg
Position	Landscape & Portrait
VESA	VESA 75, 100, 200 x 100, 200
Note	Three point coupling

Article code
063.0300

VESA 200, 400 X 200 RENTAL BRACKET

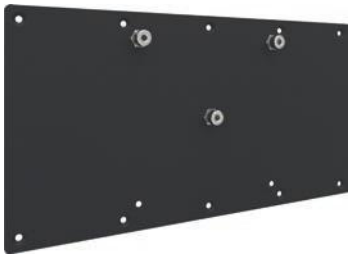

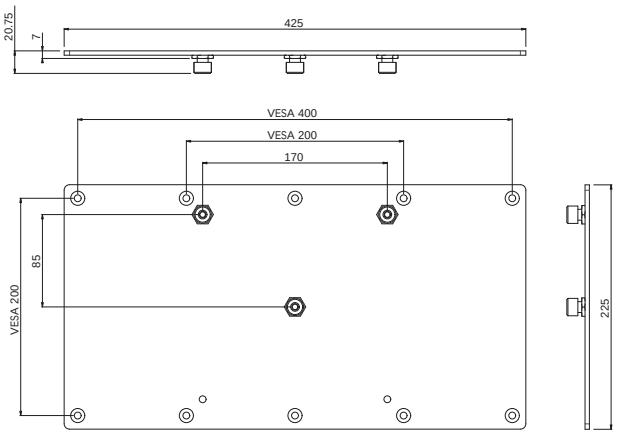

Colour	●
Max. load	50 kg
Position	Landscape & Portrait
VESA	VESA 200, 400 x 200
Note	Three point coupling

Article code
063.0305

VESA 300(-200), 400(-300/-200) RENTAL BRACKET

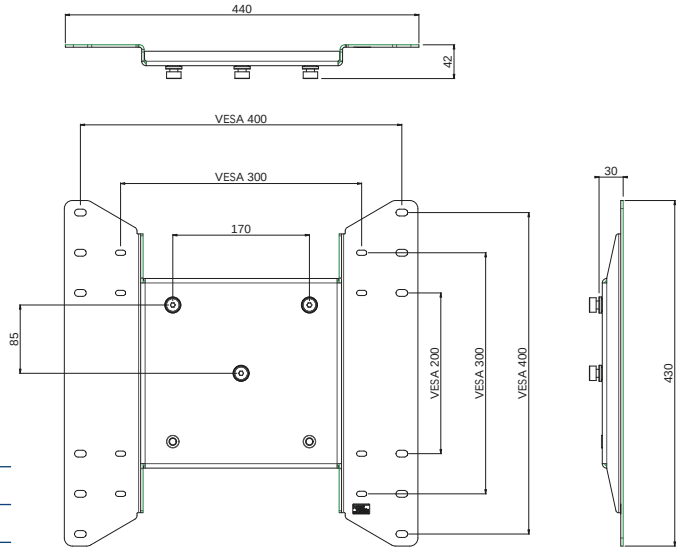

Colour	●
Max. load	80 kg
Position	Landscape & Portrait
VESA	VESA 300 x 300/200, 400 x 400/300/200
Note	Three point coupling
Accessories	See page 165

Article code
063.0310

FLAT PANEL BRACKETS

With three point coupling

VESA 300, 400(-200)
RENTAL BRACKET

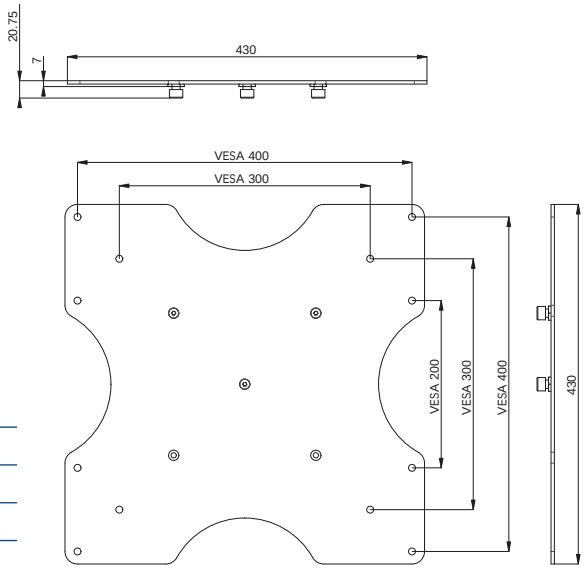

Colour	●
Max. load	80 kg
Position	Landscape & Portrait
VESA	VESA 300 x 300, 400 x 400/200
Note	Three point coupling
Other info	Does not combine with 063.0600 hoist system
Accessories	See page 165

Article code
063.0315

VESA 600/800 x 400/200
RENTAL BRACKET

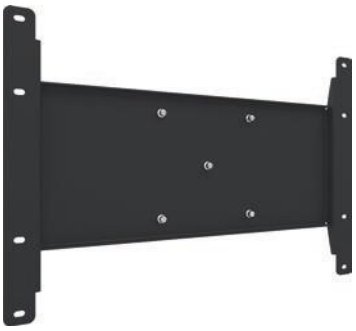

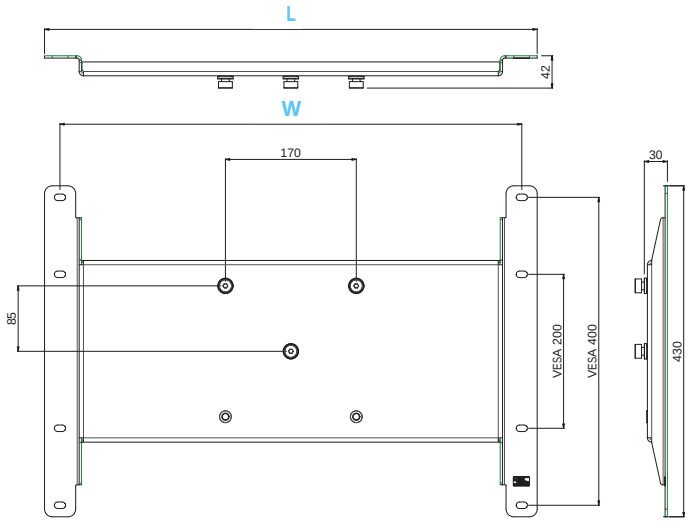

Colour	●
Max. load	80 kg
Position	Landscape & Portrait
VESA	VESA 600/800 x 400/200
Note	Three point coupling
Accessories	See page 165

Article code	Width (W)	Length (L)
063.0320	600 mm	640 mm

VESA MAX. 800 X 600 RENTAL BRACKET

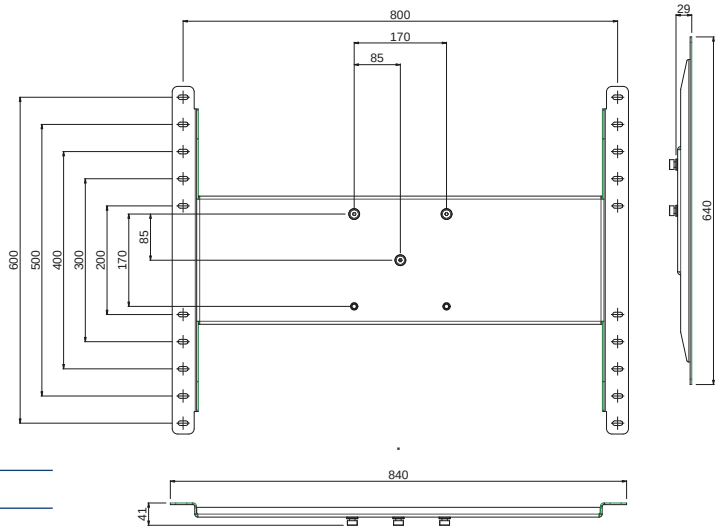

Colour	●
Max. load	160 kg
Position	Landscape & Portrait
VESA	VESA 800 x 600/500/400/300/200
Note	Three point coupling

Article code
063.0335

UNIVERSAL RENTAL BRACKET 800 X 600 MM

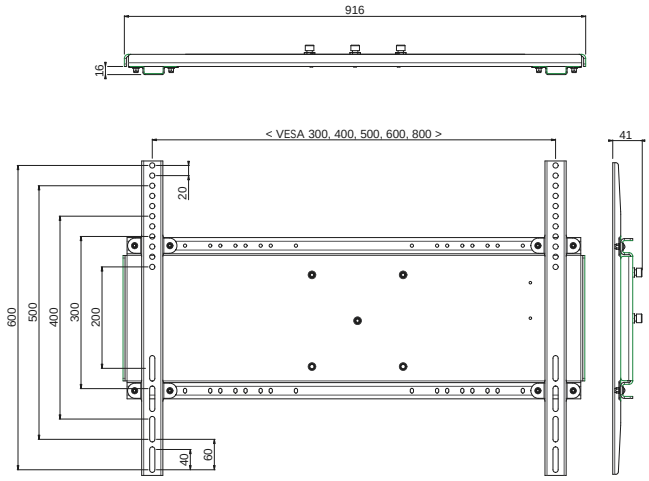

Colour	●
Max. load	100 kg
Position	Landscape & Portrait
VESA	Max. 800 x 600 mm
Note	Three point coupling

Article code
052.5005

Accessory for
063.0310/.0315/.0320 &.0330

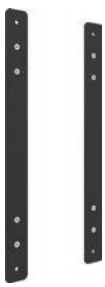

ADAPTERSTRIPS VESA 400 -> VESA 500 HIGH

Article code
063.0306

FLAT PANEL BRACKETS

With three point coupling

VESA MOUNT WITH ROTATION

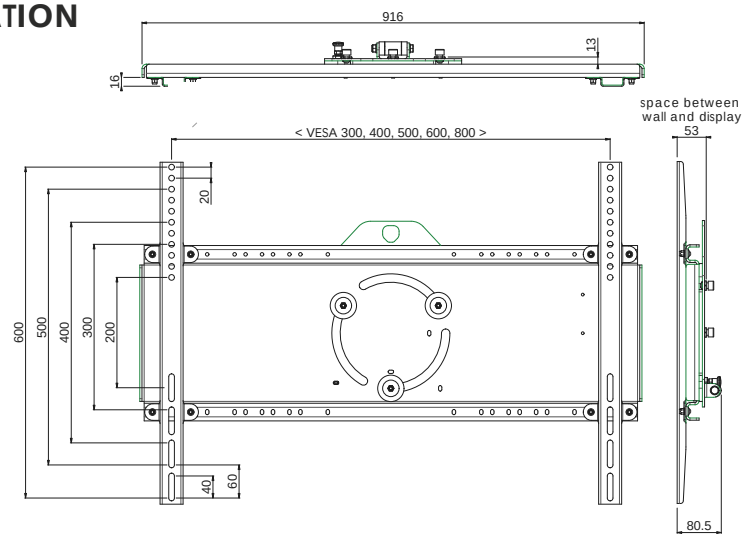

Colour	●
Max. load	160 kg
Position	Landscape & Portrait
VESA	Max. 800 x 600 mm
Note	Three point coupling

Article code	Rotation	Other information
052.5070	With rotation 90°	Does not combine with 063.0465 wall-truss module

PANASONIC LF SERIES VESA 400 RENTAL BRACKET

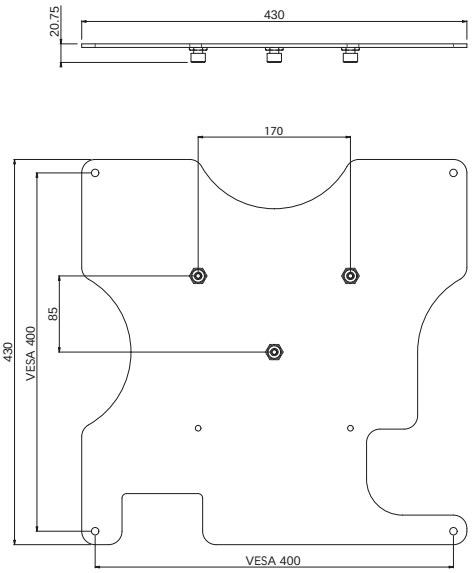

Colour	●
Max. load	80 kg
Max. inch	up to 65 inch
Position	Landscape & Portrait
VESA	VESA 400
Note	Three point coupling
Other info	Also suitable for Sharp PN-Y425, Y475 & Y555

Article code
PAN.0315-LF

FLAT PANEL BRACKETS

Direct mounted bracket

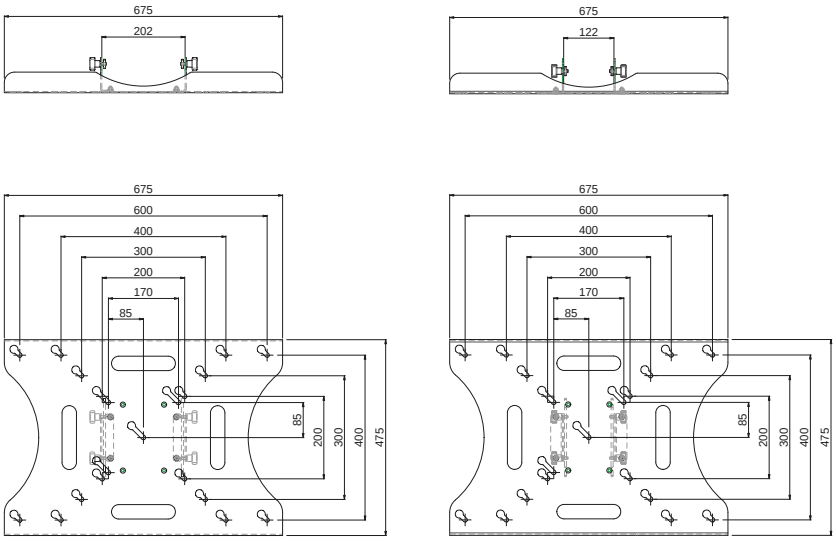

ONE BRACKET FOR VESA 200, 300, 400 AND 600

This rental bracket is suitable for direct mounting (no stand head required), in portrait and landscape position, to all rental floor stands, light series as well as the heavy duty ones.

Colour	●
Max. load	120 kg
Position	Landscape & Portrait
VESA	200, 300, 400, 600

Benefits

- ✓ Suitable for Lightweight as well as Heavy Duty Series floor stands
- ✓ No stand head required
- ✓ VESA 200, 300, 400 and 600 in one bracket

TRUSS MOUNTS

Our product assortment includes several solutions to hang a projector from a truss.

The solutions for projectors up to 25 kg include a ball joint, a ball joint clamp incl. handles to fasten without using tools and a bracket with quarter-turn latches. These components together allow a quick and easy installation of a projector. To mount the projector a projector-specific bracket or a universal bracket (rental version) is required. The tube sets are electrically insulated, meaning the truss does not need to be taped to prevent screen problems. Furthermore the tube set is fitted with lifting eyes for safety lines.

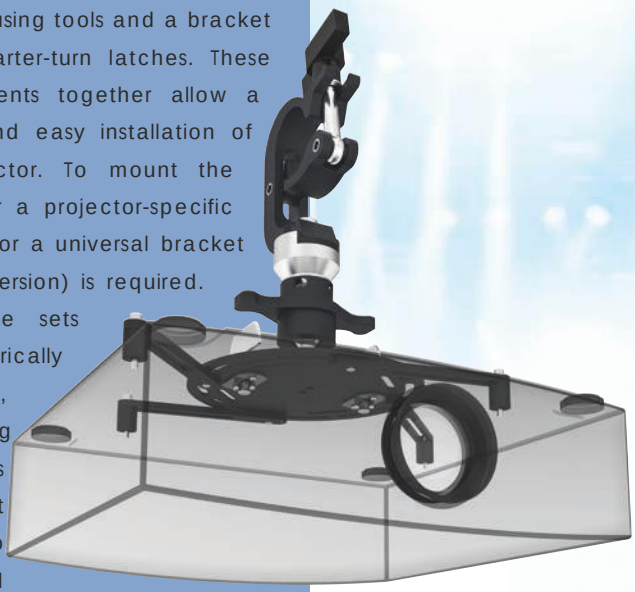

A projector fine adjustment is added to our assortment for accurate installation.This solution allows a fine adjustment (-20° till +20°) and a 90° degrees rotation is included. With our threaded fine adjustment it is possible to continuously pan and tilt the projector. This set allows direct mounting of the projector with its projector-specific bracket or using a bracket with quarter-turn latches in between. The projector fine adjustment can be mounted to a truss using two trigger clamps.

TRUSS MOUNTS

With ball joint

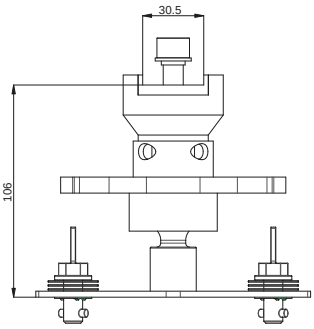

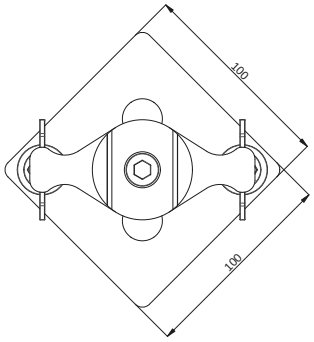

RENTAL SET 1, 130 MM FIXED
FOR TRIGGER CLAMP, EXCLUDING BRACKET

Colour	●
Max. load	30 kg
Note	Tilt +20° / -20°, rotation 360°
Required	Projector-specific/universal mount
Accessories	See from page 172
Other info	Electrical insulation excluding Doughty Trigger Clamp (003.1128)

Article code
002.1641

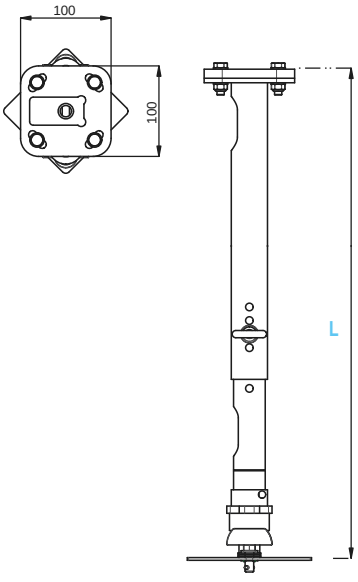

RENTAL SET 2 - 4, ADJUSTABLE
EXCLUDING BRACKET

Colour	●
Max. load	30 kg
Note	Tilt +20° / -20°, rotation 360°
Required	Projector-specific/universal mount
Accessories	See from page 172
Other info	Electrical insulation excluding Doughty Trigger Clamp (003.1128)

Article code	Description	Length (L)
002.1660	Set 2	463 - 713 mm
002.1661	Set 3	713 - 1163 mm

LIGHTWEIGHT TRUSS MOUNTS

With fine adjustment

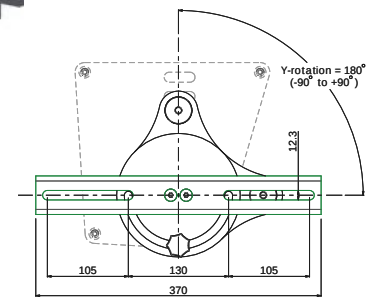

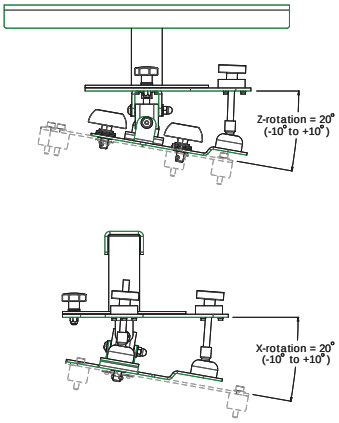

PROJECTOR FINE ADJUSTMENT

EXCL. BRACKET, EXCL 2X TRIGGER CLAMP

Colour	●
Max. load	25 kg
Required	Projector-specific mount
Accessories	See from page 172
Other info	Electrical insulation excluding Doughty Trigger Clamp (003.1128)

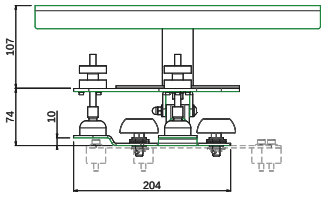

Article code
002.1650

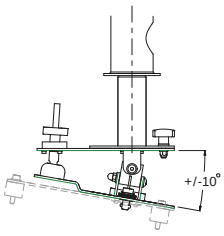

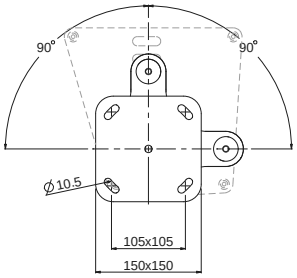

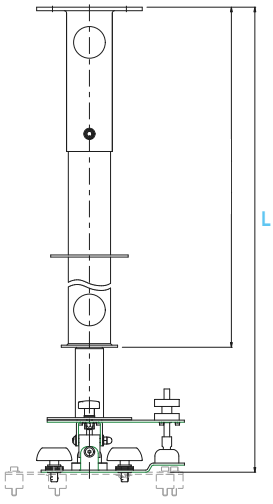

TUBE SET FINE ADJUSTMENT

EXCL. BRACKET

Colour	●
Max. load	25 kg
Required	Projector-specific mount
Accessories	See from page 172

Article code	Length (L)
002.1670	452 - 1230.5 mm
002.1680	452 - 2230.5 mm
002.1690	452 - 3230.5 mm

HEAVY DUTY TRUSS MOUNTS

With fine adjustment

TÜV & DGUV Certified

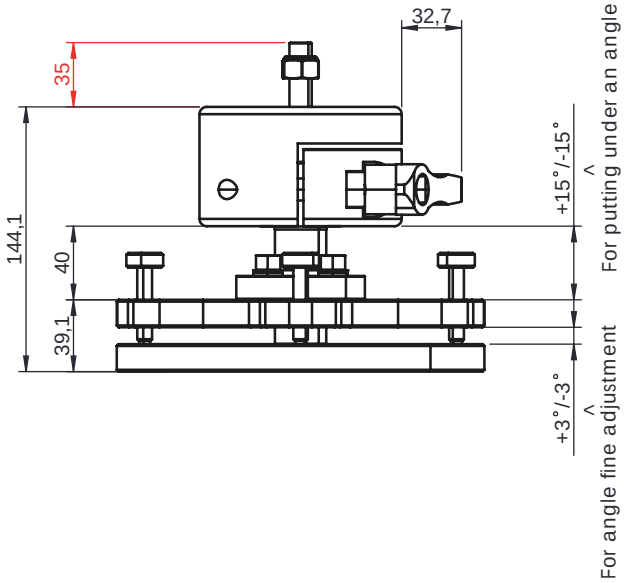

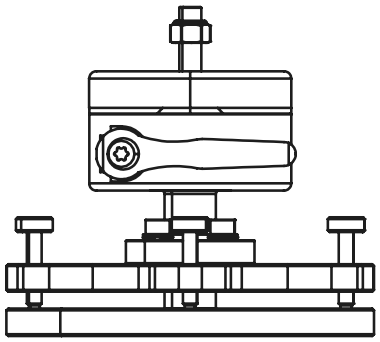

RENTAL MOUNT 150 MM FOR PROJECTOR MAX. 250 KG

Our rental mounts ensure a quick and easy installation of projectors in rental situations. The 002.4600 is a heavy duty projector mount for installation of projectors with a maximum weight of 250 kg in a truss.
It offers a tilt function of +15° until -15° and a further fine adjustment +3° until -3°. The rental mount has to be combined with a projector-specific bracket, please contact us for the one that fits your projector.
The mounting pattern 100 x 100 mm makes it standard suitable to the most Panasonic and Barco stack frames.

This rental mount is thoroughly tested and has TÜV certification.

Colour	●
Max. load	250 kg
Required	Projector-specific mount
Note	Rotation 360°
Accessories	See from page 172

Article code
002.4600

ACCESSORIES

For truss mounts

FIXED MOUNTED SPACERS
for rental set 1-4

The perfect solution for keeping all material together in situations where you have to regularly detach the projector from the mount.

003.1125

DOUGHTY TRIGGER CLAMP
for rental set 1-4, 002.1650 and 002,1670-90 series

This Doughty Trigger Clamp can be used for truss mounting with the SmartMetals rental mounts (002.16xx, 002.2441, 002.2041) and the wall/truss module (art. nr.: 063.0460).

003.1128

PROJECTOR-SPECIFIC BRACKET
for rental set 1-4, 002.1650 and 002.1670-90 series

The projector-specific bracket is custom-made for your type and brand of projector. With the design, we have taken into account the position of the lens and the projector's centre of gravity. Valuable time and money will be saved with the use of projector-specific brackets.

002.1001

UNIVERSAL BRACKET
for rental set 1-4, max. Ø 378 mm

Besides the projector specific bracket (custom-made to projector brand and type) a universal bracket is available as well.

002.1003

TÜV & DGUV Certified

TRUSS MOUNTING BAR
for rental mount 002.4600

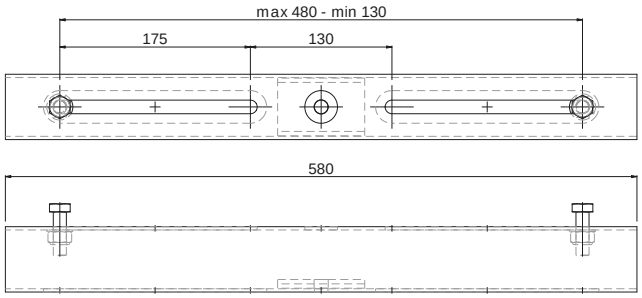

002.4610

BRACKET FOR BARCO HDX AND HDF SERIE FRAMES (MAX. 250 KG)
for rental mount 002.4600

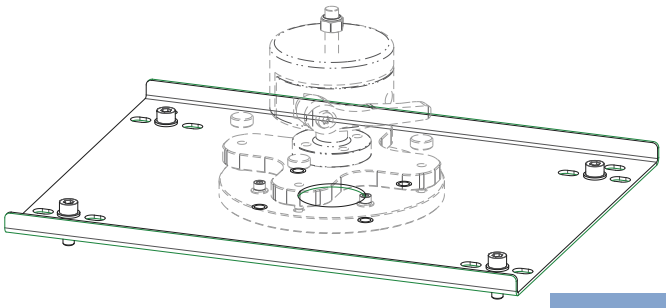

002.4620

LARGE UNIVERSAL BRACKET
for frames mounted to 002.4600

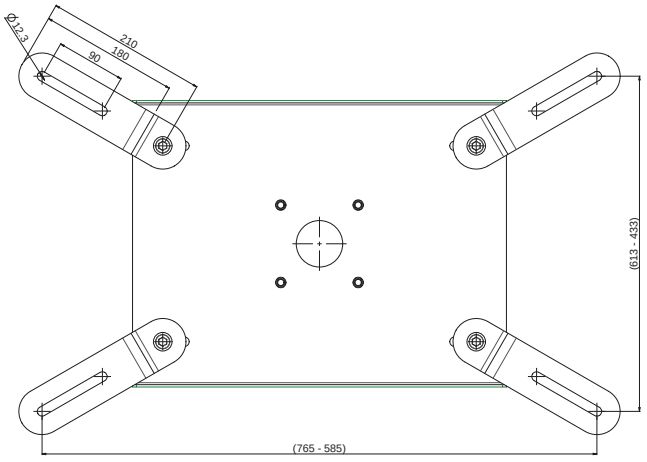

002.4621

- ✓ TÜV Certified
- ✓ DGUV Certified (former BGV-C1)
- ✓ Lightweight
- ✓ Better manageable
- ✓ Easier to transport
- ✓ Also available for the Epson L and NEC PA Series

Stacking 2.0

Aluminium, lightweight, solid, fitted with a removable front, fine adjustment over 3 axes and still the most affordable frame on the market. This is the summary of a new line SmartMetals stack frames. The stack frames are available in different standard sizes and can be used independantly with a projector specific mount. By means of the removable front, all models can be combined with projectors which are fitted with ultra-short throw or wide angle lenses. The frames are connected easily and are fitted with a 100x100mm mounting pattern for an adjustable truss adapter (002.4600). Using the 112.1019 truss mounts the stack frames can also be installed for a floor as well as portrait projection.

STACK FRAMES

Small Series

TÜV & DGUV Certified

	Colour	●
	Max. load	100 kg
	Required	Projector mount (excl.), pls contact us
	Accessories	See page 176
	Other info	Max. stacked weight under top frame 275 kg

Article code	Description	Max. projector size (W x L x H)
112.4160	Small 160	500 x 560 x 160 mm
112.4200	Small 200	500 x 560 x 200 mm
112.4210	Small 210	590 x 500 x 210 mm *(deviating specifications, please see below)*
112.4270	Small 270	500 x 560 x 270 mm

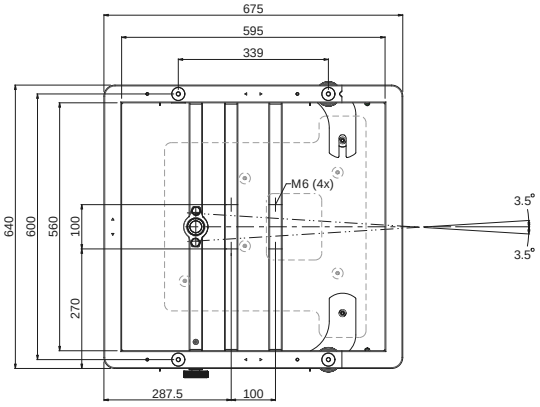

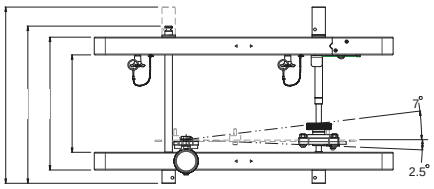

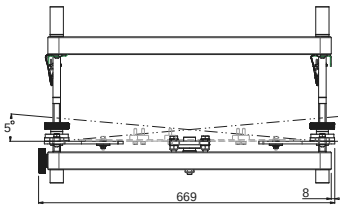

Specifications for 112.4210 only:

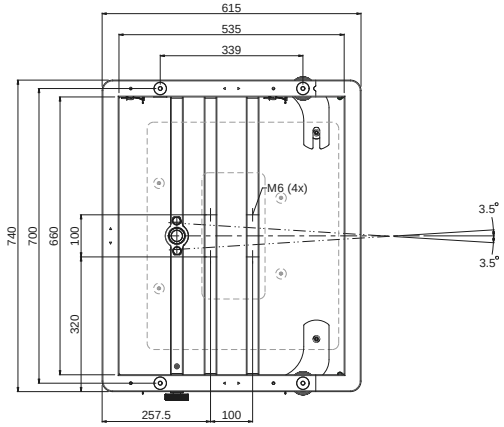

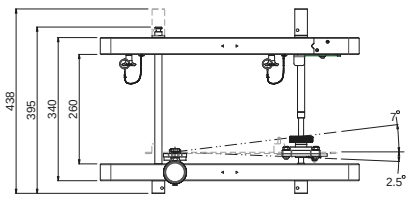

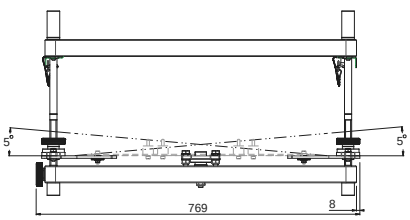

STACK FRAMES

Medium Series

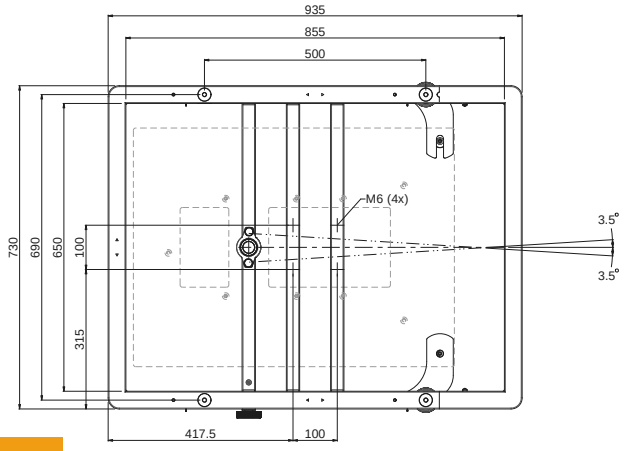

TÜV & DGUV Certified

Colour	●
Max. load	100 kg
Required	Projector mount (excl.), pls contact us
Accessories	See page 176
Other info	Max. stacked weight under top frame 275 kg

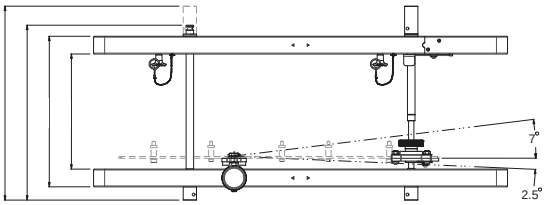

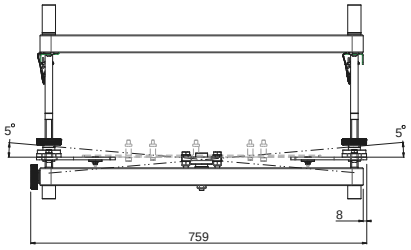

Article code	Description	Max. projector size (W x L x H)
112.5200	Medium 200	590 x 820 x 200 mm
112.5270	Medium 270	590 x 820 x 270 mm
112.5350	Medium 350	590 x 820 x 350 mm

Accessories for stack frames

DOUGHTY TRIGGER CLAMP

003.1128

PROJECTOR SPECIFIC BRACKET

112.1001

TRIGGER CLAMP COUPLING SET

112.1018

STACK FRAMES

Large Series

TÜV & DGUV Certified

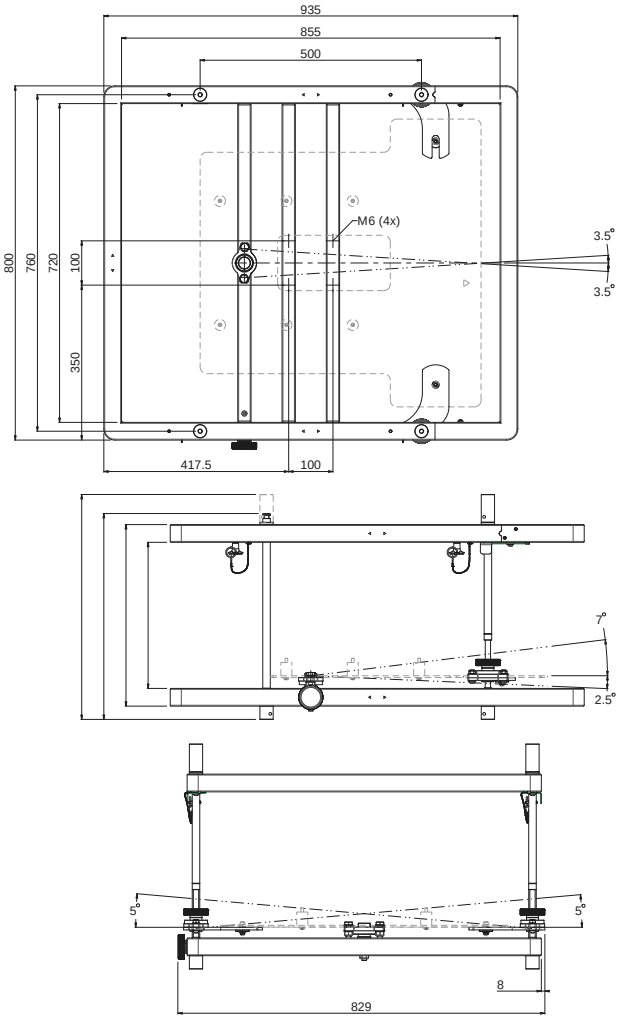

	Colour	●
	Max. load	100 kg
	Required	Projector mount (excl.), pls contact us
	Accessories	See page 176
	Other info	Max. stacked weight under top frame 275 kg

Article code	Description	Max. projector size (W x L x H)
112.6270	Large 270	660 x 820 x 270 mm
112.6350	Large 350	660 x 820 x 350 mm
112.6425	Large 425	660 x 820 x 425 mm

TÜV & DGUV Certified

STACKFRAME CLAMP
(40 x 40 tubes)

112.1019

SCAFF PIPES, Ø 48 mm

This tube with a diameter of 48 mm can be mounted to the trigger clamps and then with a double truss clamp to most trusses.

Article code	Description
112.1015	Scaff pipe small 600 mm
112.1016	Scaff pipe large 1000 mm

PROJECTOR FLOOR STAND

The projector support 063.0150 has a tilt function from -15° till + 15° and dimensions 600 x 600 mm, making it suitable for most projectors with a maximum weight up to 30 kg.

Combined with a SmartMetals back to back stand (062.2200 for fixed installations or 062.2000 for rental purposes) the support becomes a projector floor stand.

Through the cable entry in the support the cables are ran into the hidden cable ducts of the floor stand.
After installation the projector can be secured to the platform with straps.

The support and stand 062.2000 can be stored in a flightcase for compact, easy and safe transport.

BENEFITS

- ✓ Anti slip surface
- ✓ Projector support is tiltable -15° / + 15°
- ✓ Projector descured to support
- ✓ Stable floor solution

COMBINE 063.0150 & 062.2000

TILTABLE PROJECTOR SUPPORT 600 X 600 MM

Colour	●
Max. load	30 kg

Article code
063.0150

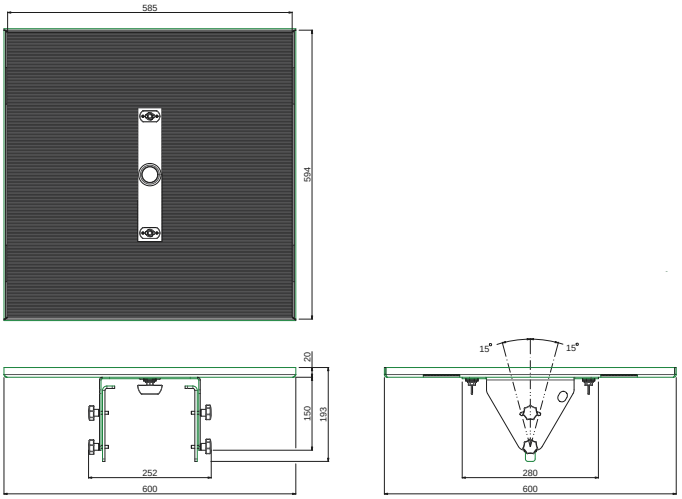

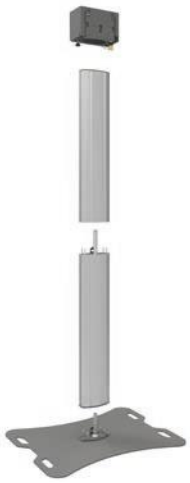

DIVISIBLE STAND BACK TO BACK

Colour	◐
Max. load	100 kg
Max. inch	2x Max. 65 inch
Position	Landscape & Portrait

Article code
062.2000

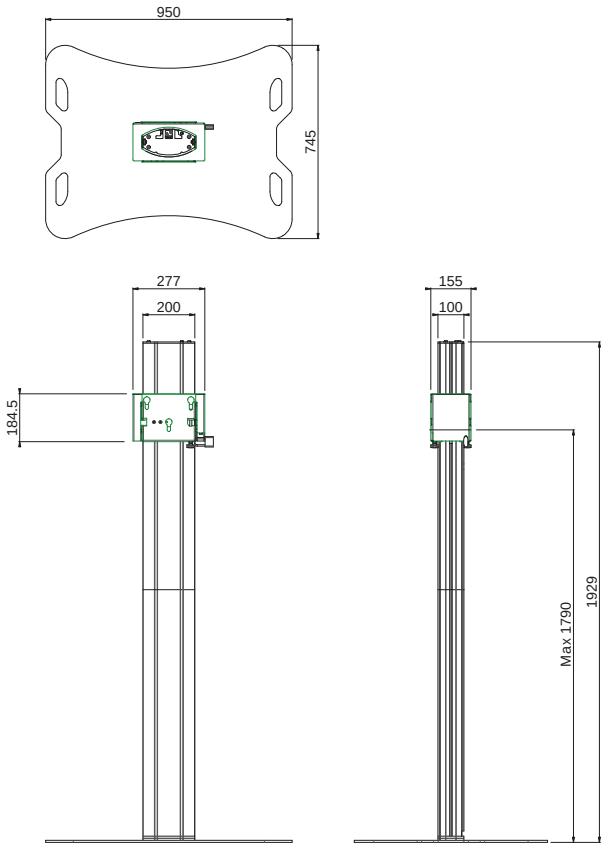

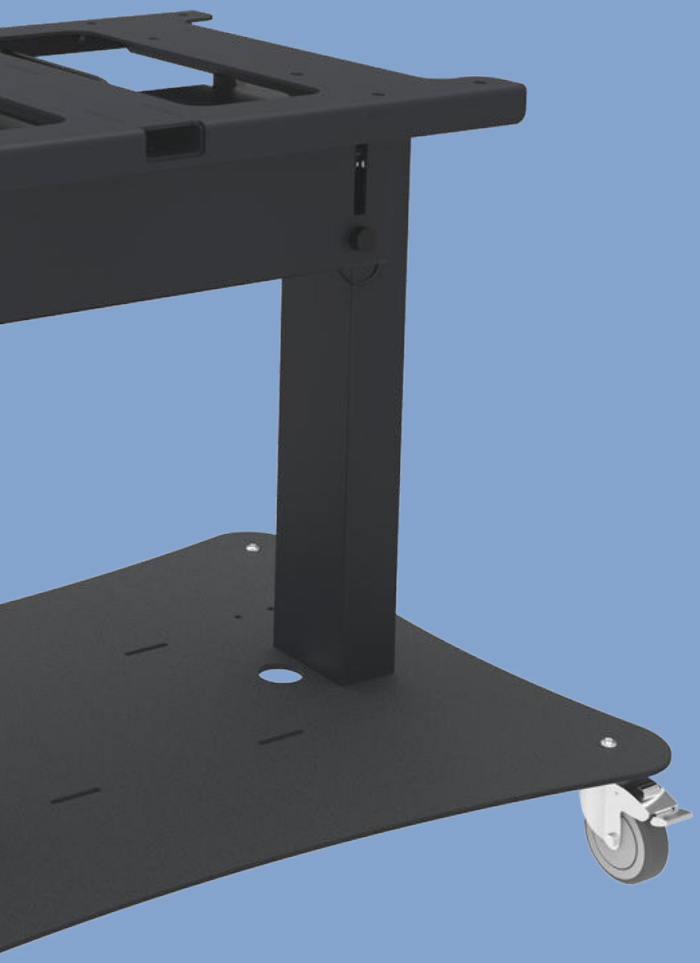

GENERAL

Address

SmartMetals Mounting Solutions B.V.
Pascalweg 13
4104 BE CULEMBORG
The Netherlands

Telephone

+ 31 (0)88 70 60 100

Email & Website

info@smartmetals.nl
www.smartmetals.nl

2020 - 2021 Product Catalogue - General

The information contained in this catalogue is to be used only as a guide to assist with product selection. The products features and technical drawings set forth in this catalogue are subject to change due to product innovations. Please consider information on our website www.smartmetals.nl in any case leading.

V2021.1