PRACTICAL TELEVISION

3/6

APRIL 1970

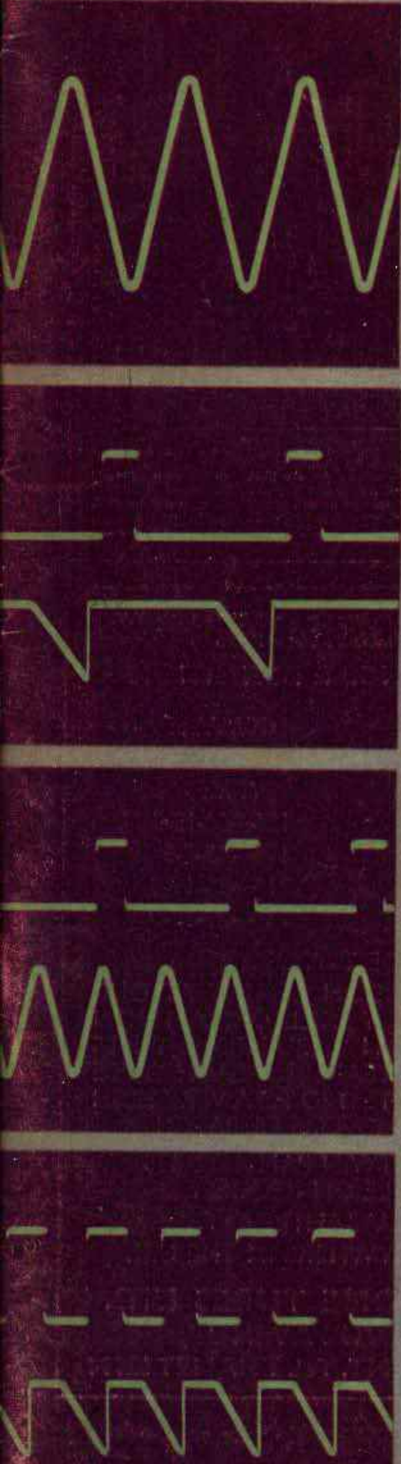

STROBE-TRIGGER TIMEBASE UNIT

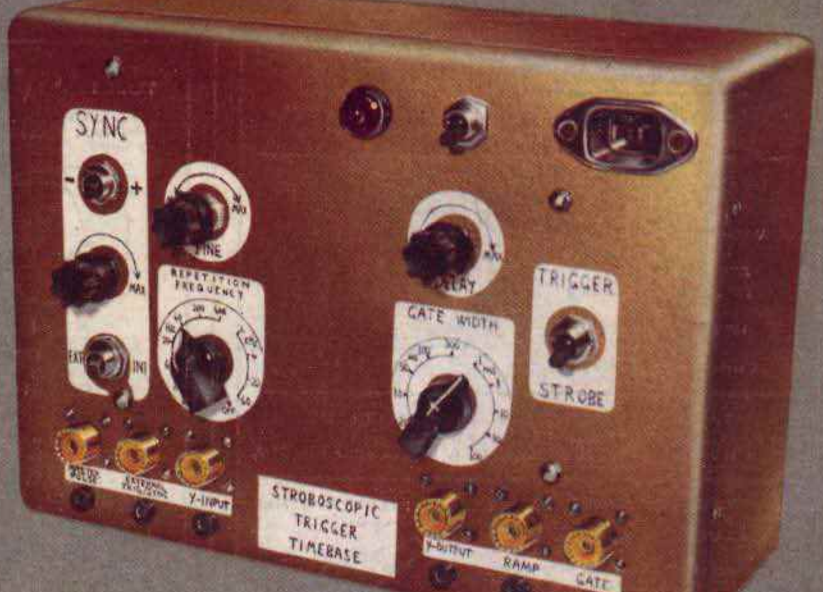

also:

REGULAR LONG-DISTANCE RECEPTION
EHT MULTIPLIERS • SERVICING THE
BUSH-MURPHY TV161U-V1910U SERIES

BENTLEY ACOUSTIC CORPORATION LTD.

38 CHALCOT ROAD, CHALK FARM, LONDON, N.W.1
THE VALVE SPECIALISTS *Telephone 01-722 9090*
SAVE POSTAL COSTS! CASH AND CARRY BY CALLERS WELCOME

OA2	5/9
OB2	6/-
OZ4	4/6
1A3	4/6
1A5	5/-
1A7GT	7/3
1C5	4/9
1D5	6/9
1D6	9/6
1FD1	6/6
1FD9	4/3
1G6	6/-
1H5GT	7/-
1L4	2/6
1LD5	5/-
1LN5	8/-
1N5GT	7/9
1R5	5/6
1S4	4/9
1S5	4/3
1U4	5/9
1U5	6/9
2D21	5/6
3A4	3/6
3A5	10/-
3B7	5/-
3D6	3/9
3Q4	6/6
3Q5GT	6/-
3S4	5/9
3V4	5/9
5R4GY	8/9
5U4G	8/6
5V4G	7/6
5Y3GT	5/6
5Z3	8/-
5Z4G	7/-
6/30L2	12/6
6A8G	5/6
6AC7	3/-
6AG5	8/6
6AK5	5/-
6AK6	6/-
6AL5	2/3
6AM6	3/3
6AQ5	5/6
6AR6	20/-
6AT6	4/-
6AU6	5/-
6AV6	5/6
6B8G	2/6
6BA6	4/6
6BE6	4/9
6BH6	7/6
6HJ6	8/6
6BQ5	4/9
6BQ7A	7/-
6BR7	8/6
6BR8	8/-
6BS7	16/6
6BW6	12/9
6BW7	11/-
6BZ6	6/-
6C6	3/9
6C9	14/6
6CD6G	19/6
6CH6	6/-
6CL6	8/6
6CW4	12/-
6D3	7/6
6D6	8/-
6F1	8/9
6F6	12/6
6F6G	4/-
6F12	3/3
6F13	3/6
6F15	10/-
6F18	7/6
6F23	13/3
6F24	11/9
6F25	13/-
6F28	14/-
6F32	3/-
6G6G	2/6
6H6GT	1/9
6J5G	3/9
6J6	3/-
6J7G	4/9
6J7GT	6/6
6K7G	2/-
6K7GT	4/6
6L1	19/4
6L6GT	7/9
6L7GT	12/6
6L18	6/-
6L19	19/-
6LD20	9/6
6N7GT	6/6
6P1	12/-
6P25	12/-
6P26	12/-
6P28	25/-
6Q7	8/6
6Q7G	6/-
6R7	11/-
6R7G	7/-
6SA7GT	7/-
6SC7GT	6/6
6SG7	6/-
6SH7	3/-
6SJ7	6/6
6SK7GT	4/6
6SQ7GT	7/6
6U4GT	12/-
6U7G	7/-
6V6G	3/6
6X4	4/3
6X5GT	5/-
6Y7G	12/6
7B6	10/9
7B7	7/-
7C6	6/-
7F8	12/6
7H7	5/6
7R7	12/-
7V7	5/-
7Y4	6/6
9BW6	7/-
9D7	9/-
10C1	12/6
10C2	10/-
10D1	8/-
10D2	14/7
10F1	15/-
10F9	9/-
10F18	7/-
10LD11	10/-
10P13	13/-
10P14	12/6
12A6	3/6
12AC6	7/-
12AD6	6/-
12AE6	7/6
12AT6	4/6
12AT7	3/9
12AU6	4/9
12AU7	4/6
12AV6	5/6
12AX7	4/6
12AY7	9/9
12BA6	6/-
12BE6	5/9
12BH7	6/-
12E1	17/-
12J7GT	6/6
12K5	10/-
12K7GT	5/9
12Q7GT	4/6
12SA7GT	6/9
12SC7	4/-
12SG7	3/-
12SH7	3/-
12SJ7	4/6
12SK7	4/9
12SQ7GT	7/6
14H7	9/6
14S7	15/-
18	12/6
19AQ5	4/9
19H1	40/-
20D1	18/-
20D4	20/5
20F2	14/-
20L1	13/-
20P1	17/6
20P3	18/-
20P4	18/6
20P5	18/-
25L6GT	5/6
25Y5	6/-
25Y5G	8/6
25Z4G	6/-
25Z5	7/-
25Z6G	8/6
30C1	6/6
30C15	13/-
30C17	16/-
30C18	11/6
30F5	16/-
30FL1	15/-
30FL12	16/-
30FL14	12/6
30L1	6/3
30L15	13/9
30L17	15/6
30P4	12/-
30P4MR	17/6
30P12	13/9
30P19	12/-
30PL1	15/-
30PL13	15/6
30PL14	15/-
30PL15	15/-
35A3	9/-
35A5	15/-
35D5	12/6
35L6GT	8/6
35W4	4/6
35Z3	10/-
35Z4GT	4/9
35Z5GT	6/-
50B5	6/3
50C5	6/3
50CD6G	43/3
50L6GT	9/-
72	6/6
85A2	8/6
85A3	8/-
90AG	67/6
90AV	67/6
90CG	34/-
90CV	33/6
90C1	16/-
150B2	14/6
150C2	5/9
301	20/-
302	16/6
303	15/-
305	16/6
306	13/-
807	11/9
956	2/-
1821	10/6
5763	10/-
6060	5/6
7193	10/6
7475	4/-
A1834	20/-
A2134	10/-
A3042	15/-
AC2PEN	19/6
AC2PEN/DD	19/6
AC6PEN	4/9
AC/PEN (5)	19/6
AC/PEN (7)	19/6
AC/TH1	10/-
AC/TP	19/6
AC/VP2	10/6
AL60	15/6
ARP3	7/-
ATP4	2/3
AZ1	8/-
AZ31	9/6
AZ41	7/6
B36	6/6
BL63	10/-
CL33	18/6
CV6	10/6
CY1C	10/6
CY31	7/6
D63	5/-
D77	2/3
DAC32	7/-
DAF91	4/3
DAF96	6/6
DCC90	10/-
DD4	10/6
DF33	7/9
DF91	2/9
DF96	6/6
DF97	10/-
DH63	6/-
DH76	4/6
DH77	4/-
DH81	10/9
DH101	25/-
DH107	17/11
DK32	7/3
DK40	10/-
DK91	5/6
DK92	9/-
DK96	7/-
DL33	6/-
DL35	4/9
DL92	5/9
DL94	5/9
DL96	7/-
DL810	9/6
DM70	6/-
DM71	7/6
DW4/350	8/6
DW4/500	8/6
DY86	5/9
DY87	5/9
E80F	24/-
E83F	24/-
E88CC	12/-
E180F	17/6
E1148	10/6
EA50	1/6
EA76	13/-
EABC80	6/-
EAC91	3/-
EAF42	8/9
EB34	3/-
EB41	4/6
EB91	2/3
EBC41	9/6
EBC81	5/9
EBC90	4/-
EBC91	5/6
EBF80	6/9
EBF83	8/-
EBF89	6/3
EBL21	11/-
EC53	12/6
EC54	6/-
EC70	4/9
EC86	12/6
EC88	12/-
EC92	6/6
ECC31	15/6
ECC32	4/6
ECC33	31/6
ECC34	29/6
ECC40	9/6
ECC81	3/9
ECC82	4/6
ECC83	4/6
ECC84	5/6
ECC85	5/6
ECC86	8/-
ECC88	7/-
ECC189	9/6
ECC804	12/6
ECC807	27/-
ECF80	6/6
ECF82	6/6
ECF86	9/-
ECF804	42/-
ECH21	12/6
ECH35	5/9
ECH42	10/-
ECH81	5/9
ECH83	8/-
ECH84	7/6
ECL80	6/6
ECL82	6/-
ECL83	9/-
ECL84	12/-
ECL85	11/-
ECL86	8/-
ECLL800	30/-
EF22	12/6
EF36	3/6
EF37A	7/-
EF39	5/-
EF40	8/9
EF41	10/-
EF42	3/6
EF54	10/-
EF73	6/6
EF80	4/6
EF83	9/6
EF85	5/3
EF86	6/3
EF89	5/-
EF91	3/3
EF92	2/6
EF97	10/-
EF98	10/6
EF183	6/-
EF184	6/-
EFP60	10/-
EH90	7/6
EL32	3/6
EL33	12/-
EL34	9/6
EL37	17/3
EL41	10/3
EL42	9/9
EL81	8/-
EL83	6/9
EL84	4/9
EL85	7/6
EL86	8/-
EL91	2/6
EL95	5/3
EM71	14/-
EM80	7/-
EM81	7/6
EM84	6/6
EM85	11/-
EM87	7/6
EY51	7/6
EY81	7/-
EY83	8/3
EY84	7/6
EY86	6/6
EY87	6/6
EY88	7/6
EY91	3/-
EZ35	5/-
EZ40	7/6
EZ41	8/6
EZ80	4/6
EZ81	4/9
EZ90	4/3
FW4/500	6/6
FW4/800	10/-
GZ30	7/-
GZ32	9/-
GZ33	12/6
GZ34	10/-
GZ37	14/6
HABC80	8/-
HL41DD	19/6
HL42DD	8/-
HN309	27/4
HVR2	8/9
HVR2A	8/9
1W3	5/6
1W4/350	5/6
1W4/500	6/-
KT2	5/-
KT8	34/6
KT41	19/6
KT44	20/-
KT61	12/-
KT63	4/-
KT66	17/3
KT74	12/6
KT76	12/6
KT88	29/-
KTW61	8/6
KTW62	10/-
KTW63	5/9
L63	3/9
LN152	6/6
LN309	9/-
LN319	15/-
LN339	15/-
LZ329	6/6
ME1400	14/9
MHL4	12/6
MHLD6	7/6
MU12/14	4/-
MX40	12/6
N78	40/3
N108	27/10
N308	17/6
N339	25/-
P61	2/6
PABC80	7/3
PC86	10/3
PC88	10/3
PC95	8/3
PC97	8/6
PC900	8/3
PCC84	6/3
PCC85	6/6
PCC88	9/9
PCC89	9/6
PCC189	10/6
PCF80	6/6
PCF82	6/3
PCF84	8/-
PCF86	9/-
PCF801	7/-
PCF802	9/-
PCF805	11/6
PCF806	11/6
PCF808	12/6
PCL82	7/-
PCL83	9/-
PCL84	7/6
PCL85	9/-
PCL86	8/6
PCL88	15/-
PEN36C	15/-
PEN45	7/-
PEN45DD	12/-
PEN46	4/-
PEN453DD	19/6
PENA4	19/6
PEN/DD 4020	17/6
PFL200	12/6
PL33	19/6
PL36	9/6
PL81	7/3
PL81A	10/6
PL82	6/6
PL83	6/6
PL84	6/6
PL302	12/-
PL500	13/-
PL504	13/6
PL508	27/10
PL509	28/9
PL802	15/-
PM84	7/9
PX4	14/-
PY32	10/-
PY33	10/-
PY80	6/-
PY81	5/3
PY82	5/-
PY83	5/9
PY88	6/9
PY301	12/6
PY800	7/6
PY801	6/9
PZ30	9/6
QQVO3/10	27/6
QS75/20	10/6
QS150/15	9/6
QVO4/7	8/-
R10	15/-
R11	19/6
R16	34/11
R17	17/6
R18	9/6
R19	6/6
R20	11/9
R52	7/6
RK34	7/6
SP42	12/6
SP61	3/3
TH4B	10/-
TH233	7/-
TP2620	8/9
UABC80	6/-
UAF42	9/6
UB41	6/6
UBC41	8/6
UBC81	7/-
UBF80	5/9
UBF89	6/9
UBL21	9/-
UC92	5/6
UCC84	8/-
UCC85	6/9
UCF80	8/3
UCH21	9/-
UCH42	13/-
UCH81	6/6
UCL82	7/-
UCL83	10/-
UF41	10/-
UF42	9/-
UF80	6/9
UF85	6/9
UF86	9/-
UF89	6/9
UL41	10/6
UL46	12/6
UL84	6/6
UM80	6/6
UR1C	10/6
UU5	7/-
UU8	14/-
UU9	7/3
UU12	4/9
UY1N	9/-
UY21	9/6
UY41	7/-
UY85	5/9
U10	9/-
U12/14	7/6
U16	15/-
U17	5/-
U18/20	10/-
U19	34/6
U22	7/9
U25	13/-
U26	11/9
U31	6/-
U33	29/6
U35	16/6
U37	34/11
U45	15/6
U47	13/-
U49	11/9
U50	5/6
U52	5/6
U76	4/9
U78	4/3
U107	18/3
U191	12/6
U251	14/6
U281	8/-
U282	8/-
U301	11/-
U329	14/6
U403	6/6
U404	7/6
U801	19/6
U4020	6/9
VP4B	10/6
VP13C	7/-
VP41	7/6
VR75	24/-
VR105	5/-
VR150	5/-
VT61A	7/-
VU111	7/3
VU120	12/-
VU120A	12/-
VU133	7/-
W76	5/9
W101	26/2
W107	7/-
W729	10/-
X41	10/-
X61	5/9
X65	5/-
X66	7/6
X101	30/6
XE3	£5
XFY12	9/6
YH1.5	9/6
Z329	16/-
Z759	45/-

All goods are new and subject to the standard 90-day guarantee. We do not handle manufacturers' seconds, nor rejects, which are often described as "new and tested" but have a limited and unreliable life. Business hours Mon.-Fri. 9-5.30 p.m. Sats. 9-1 p.m.
Terms of business. Cash with order only. Post/packing 6d. per item. Orders over £5 post/packing free. Same day despatch by first class mail. Any parcel insured against damage in transit for only 6d. extra. Complete catalogue of valves, transistors and components with conditions of sale, price 10d. post free. No enquiries answered unless S.A.E. enclosed for reply.

EX-RENTAL TELEVISIONS

TWO-YEAR GUARANTEE

FREE ILLUSTRATED LIST OF TELEVISIONS
17"—19"—21"—23"
WIDE RANGE OF MODELS, SIZES AND PRICES
DEMONSTRATIONS DAILY
17" SLIMLINE 405 only
£11 10 0
19" SLIMLINE 405/625
39 Gns.
Carriage and Insurance 30/-

TWO-YEAR GUARANTEED TUBES 100% REGUNNED
Slim Line Tubes 110° 17" and 19" **109/6**, 21" and 23" **129/6**.
Normal Tubes 70° and 90° 17" **79/6**, 21" **119/6**, 14" and other sizes **79/6**.

SPEAKERS 10/-, 2½" 8Ω, 3½" 25Ω, 4" 10Ω, 3" × 5" 8Ω, 7" × 4" 3Ω, 8" × 3" 3Ω. BRAND NEW. P. & p. 2/-.

Transistors: Mullard matched output kit **7/6**, OC81D—2 OC81's. P. & P. FREE.

Ferrite Rods 3/6: 6" and 8" complete with LW/MW Coils. P. & P. FREE.

STRIP LIGHT TUBES 3/9 each. 11" (284 mm). 230/240 volts, 30 watts. Ideal for cocktail cabinets, illuminating pictures, diffused lighting, etc. 6 for £1. P. & P. free.

RECORD PLAYER CABINET
49/6.

Cloth covered. Size 16¾" × 14¼" × 7½". Takes any modern auto-changer. P. & P. 7/6.

DUKE & CO. (LONDON) LTD.

621/3 Romford Road, London, E12
Tel. 01-478 6001/2/3

T.V. TUBES **"VIDEOCHROME"** T.V. TUBES

FOR **BRILLIANCE & DEFINITION**

CASH OR CHEQUE WITH ORDER

COMPARE OUR PRICES
17"—£4-15-0
19"—£5-5-0
21"—£6-10-0
23"—£7-10-0

TRADE SUPPLIED

ALL TUBES PRECISION REBUILT AT OUR OWN FACTORY BY SKILLED CRAFTSMEN WHO HAVE BEEN REBUILDING TUBES FOR OVER 10 YEARS ● EACH TUBE BENCH AND SET TESTED TO A VERY HIGH STANDARD BEFORE DISPATCH

PRICES FOR TWIN PANEL TUBES AVAILABLE ON REQUEST

2 YEARS GUARANTEE ● FREE DELIVERY ANYWHERE IN THE U.K.

VIDEOCHROME TUBES LTD.

25 BELLEVUE AVENUE,
RAMSGATE, KENT. Tel. THANET 52914

NEW RANGE U.H.F. - TV - AERIALS

All U.H.F. aerials now fitted with tilting bracket and 4 element grid reflectors.
Loft Mounting Arrays, 7 element, **40/-:** 11 element, **47/6:** 14 element, **55/-;** 18 element, **62/6. Wall Mounting** with **Cranked Arm,** 7 element, **60/-:** 11 element, **67/6;** 14 element, **75/-;** 18 element, **82/6. Mast Mounting** with 2in. clamp, 7 element, **42/6;** 11 element, **55/-;** 14 element, **62/-;** 18 element, **70/-. Chimney Mounting Arrays, Complete** 7 element, **72/6;** 11 element, **80/-;** 14 element, **87/6;** 18 element, **95/-.** Complete assembly instructions with every unit. **Low Loss Cable, 1/6** yd. **U.H.F. Pre-amps** from **75/-.** State clearly channel number required on all orders.

BBC - ITV AERIALS

BBC (Band 1). Loft **25/-.** External S D, **30/-.** "H", **£2.15.0.**
ITV (Band 3), 3 element loft array, **30/-.** 5 element, **40/-.** 7 element, **50/-.** Wall mounting, 3 element, **50/-.** 5 element, **55/-. Combined BBC/ITV.** Loft 1 + 3, **40/-;** 1 + 5, **50/-;** 1 + 7, **60/-;** Wall mounting 1 + 3, **60/-;** 1 + 5, **70/-;** Chimney 1 + 3, **70/-;** 1 + 5, **80/-. VHF** transistor pre-amps, **75/-.**

COMBINED BBC 1—ITV—BBC2 AERIALS 1+3+9, **70/-,** 1+5+9, **80/-,** 1+5+14, **90/-.** 1+7+14, **100/-.** Loft mounting only.
F.M. (Band 2). Loft S D, **17/6.** "H", **35/-,** 3 element, **57/6.** External units available. Co-ax. cable, **8d.** yd. Co-ax. plugs, **1/6.** Outlet boxes, **5/-.** Diplexer Crossover Boxes, **17/6.** C.W.O. or C.O.D. P. & P. 6/6. Send 6d. stamps for illustrated lists.

CALLERS WELCOME
OPEN ALL DAY SATURDAY

K.V.A. ELECTRONICS (Dept.P.T.)

40-41 Monarch Parade
London Road, Mitcham, Surrey
01-648 4884

NEW VALVES

Guaranteed and Tested
24 HOUR SERVICE

1R5	5/6	ECC82	4/-	PCL84	7/-
1S5	4/3	ECC83	4/9	PCL85	8/6
1T4	2/9	ECC85	5/-	PCL86	8/-
3S4	5/9	ECH35	5/6	PFL200	11/-
3V4	6/6	ECH81	5/9	PL36	9/3
6/30L2	11/6	ECL80	6/6	PL81	8/-
6AQ5	4/3	ECL82	6/3	PL82	5/9
6BW6	12/6	ECL83	8/-	PL83	6/3
6V6G	3/-	ECL86	7/6	PL84	6/-
25L6GT	4/6	EF37A	6/-	PL500	12/9
30FL1	13/6	EF39	4/6	PL504	13/3
30FL12	14/3	EF80	4/6	PY32	10/-
30P4	11/6	EF85	4/9	PY33	10/-
30P19	11/6	EF86	6/3	PY81	5/-
30PL1	13/6	EF89	4/9	PY82	5/-
30PL13	14/11	EF183	5/6	PY83	5/6
CCH35	13/-	EF184	5/3	PY88	6/6
CL33	17/6	EH90	6/-	PY800	6/6
DAC32	6/9	EL33	9/3	PY801	6/6
DAF91	4/3	EL84	4/9	R19	6/3
DAF96	6/9	EY51	7/6	U25	12/9
DF33	7/6	EY86	6/3	U26	11/6
DF91	2/9	EZ80	4/3	U191	12/-
DF96	6/9	EZ81	4/6	U193	8/6
DK32	6/9	KT61	9/3	U251	14/-
DK91	5/6	KT66	16/6	U301	10/-
DK92	8/3	N78	17/-	U329	14/-
DK96	7/3	PABC80	6/9	UABC80	6/-
DL35	4/9	PC86	10/3	UBC41	8/3
DL92	5/9	PC88	10/3	UBF89	6/3
DL94	5/6	PC97	8/3	UCC85	7/3
DL96	7/-	PC900	7/-	UCH81	6/-
DY86	4/9	PCC84	6/3	UCL82	6/9
DY87	4/9	PCC89	8/11	UF41	10/6
EABC80	5/9	PCF80	5/11	UF89	6/-
EBC33	7/9	PCF801	6/6	UL41	10/3
EBC41	9/3	PCF802	8/9	UL84	6/3
EBF89	5/9	PCL82	6/9	UY41	7/-
ECC81	3/6	PCL83	9/9	UY85	5/3

Postage on 1 valve 9d. extra. On 2 valves or more. postage 6d. per valve extra. Any parcel insured against damage in transit 6d. extra.
Office address, no callers.

GERALD BERNARD

83 OSBALDESTON ROAD
STOKE NEWINGTON
LONDON, N.16

Learn at home... First Class Radio and TV Courses

After brief, intensely interesting study—undertaken at home in your spare time—**YOU** can secure a recognised qualification or extend your knowledge of Radio and TV. Let us show you how.

FREE GUIDE

The New Free Guide contains 120 pages of information of the greatest importance to both the amateur and the man employed in the radio industry. Chambers College provides first rate postal courses for Radio Amateurs' Exam., R.T.E.B. Servicing Cert., C. & C. Telecoms., A.M.I.E.R.E. Guide also gives details of range of certificate courses in Radio/TV Servicing. Electronics and other branches of engineering, together with particulars of our remarkable terms of

Satisfaction or refund of fee

Write now for your copy of this valuable publication. It may well prove to be the turning point in your career.

Founded 1885 Over 150,000 successes

CHAMBERS COLLEGE

(Incorp. National Inst. of Engineering)
(Dept. 844V) 148 Holborn, London, E.C.1.

VALVES SAME DAY SERVICE

NEW! TESTED! GUARANTEED!

SETS 1R5, 1S5, 1T4, 3S4, 3V4, DAF91, DF91, DK91, DL92, DL94. Set of 4 for 18/6. DAF96, DF96, DK96, DL96, 4 for 27/-.

0Z4	4/6	12K8GT	7/3	DK91	5/9	EF184	5/6	PCL82	7/3	UBF80	5/9
1A7GT	7/6	12SN7GT	6/6	DK92	8/6	EH90	6/3	PCL83	10/-	UBF89	6/9
1H5GT	7/3	19BG6G	17/6	DK96	7/3	EL33	9/9	PCL84	7/6	UCC84	7/-
1N5GT	7/9	20F2	13/6	DL35	5/-	EL34	9/6	PCL85	9/-	UCC85	7/3
1R5	5/9	20P3	11/9	DL92	5/9	EL41	11/-	PCL86	8/3	UCF80	7/3
1S5	4/3	20P4	18/6	DL94	6/9	EL84	4/9	PENA4	12/6	UCH42	12/-
1T4	2/9	25L6GT	5/-	DL96	7/3	EL90	4/6	PFL200	11/9	UCH81	6/3
3S4	5/9	25U4GT	11/6	DY86	5/9	EL500	12/6	PL36	9/9	UCL82	7/-
3V4	6/9	30C1	6/6	DY87	5/9	EM80	7/6	PL81	8/9	UCL83	11/9
5Y3GT	5/9	30C15	13/-	EABC80	6/6	EM81	7/6	PL81A	8/9	UF41	10/6
5Z4G	7/6	30C17	16/-	EAF42	10/-	EM84	6/9	PL82	6/6	UF80	7/-
6/30L2	12/-	30C18	14/-	EB91	2/3	EM87	7/6	PL83	6/6	UF85	6/9
6AL5	2/3	30F5	16/-	EBC33	8/-	EY51	7/9	PL84	6/6	UF89	6/9
6AM6	2/9	30FL1	13/9	EBC41	9/6	EY86	6/6	PL500	13/-	UL41	10/9
6AQ5	4/6	30FL12	14/6	EBF80	6/9	EZ40	8/-	PL504	13/6	UL44	20/-
6AT6	4/3	30FL14	14/9	EBF89	6/3	EZ41	8/-	PL508	23/6	UL84	7/-
6AU6	4/6	30L1	6/6	ECC81	3/9	EZ80	4/6	PM84	7/6	UM84	6/6
6BA6	4/6	30L15	14/-	ECC82	4/9	EZ81	4/9	PX25	10/6	UY41	7/6
6BE6	4/9	30L17	15/6	ECC83	7/-	GZ32	8/9	PY32	10/-	UY85	5/9
6BJ6	8/6	30P4	12/-	ECC85	5/-	GZ34	9/9	PY33	10/-	VP4B	10/-
6BW6	13/-	30P12	13/9	ECC91	3/-	KT61	9/9	PY81	5/3	W119	7/-
6F13	3/6	30P19	12/-	ECC804	12/-	KT66	16/9	PY82	5/3	Z77	2/9
6F14	9/-	30PL1	13/9	ECF80	6/6	N78	17/6	PY83	5/9		
6F23	14/3	30PL13	15/6	ECF82	6/6	PABC80	7/-	PY88	6/9	**Transistors**	
6F25	13/-	30PL14	16/6	ECH35	6/-	PC86	10/3	PY800	7/6	AC107	3/6
6J6	3/-	35L6GT	8/6	ECH42	13/6	PC88	10/3	PY801	6/9	AC127	2/6
6K7G	2/6	35W4	4/6	ECH81	5/9	PC96	8/6	R19	6/6	AD140	7/6
6K8G	2/9	35Z4GT	5/-	ECH83	8/3	PC97	8/6	R20	12/6	AF115	3/-
6L18	6/-	6063	12/6	ECH84	7/6	PC900	7/6	U25	13/-	AF116	3/-
6SN7GT	4/3	AC/VP2	10/-	ECL80	7/-	PCC84	6/6	U26	12/-	AF117	4/-
6V6G	3/3	AZ31	9/6	ECL82	6/9	PCC85	6/-	U47	13/6	AF125	3/6
6V6GT	6/6	B729	12/6	ECL83	8/6	PCC88	9/-	U49	13/6	AF127	3/6
6X4	4/3	CCH35	13/6	ECL86	8/-	PCC89	10/6	U78	4/3	OC26	5/6
6X5GT	5/9	CL33	18/6	EF37A	6/6	PCC189	11/6	U191	12/6	OC44	2/3
7B7	7/-	CY31	6/9	EF39	4/9	PCF80	6/6	U193	8/6	OC45	2/3
7C6	6/9	DAC32	7/3	EF41	10/9	PCF82	6/6	U251	14/6	OC71	2/6
10F1	14/-	DAF91	4/3	EF80	4/6	PCF86	13/-	U301	10/6	OC72	2/6
10F18	7/-	DAF96	7/3	EF85	5/3	PCF200	13/6	U329	14/6	OC75	2/6
10P13	12/-	DF33	7/9	EF86	6/3	PCF800	13/6	U801	19/6	OC81	2/3
12AT7	3/9	DF91	2/9	EF89	5/3	PCF801	6/9	UABC80	6/6	OC81D	2/3
12AU6	4/9	DF96	7/3	EF91	2/9	PCF802	9/-	UAF42	10/3	OC82	2/3
12AU7	4/9	DH77	4/3	EF94	4/6	PCF805	14/-	UB41	6/6	OC82D	2/6
12AX7	4/9	DK32	7/6	EF183	5/9	PCF808	14/9	UBC41	9/-	OC170	2/6

READERS RADIO

85 TORQUAY GARDENS, REDBRIDGE, ILFORD, ESSEX. **Tel. 01-550 7441**

Postage on 1 valve 9d. extra. On 2 valves or more, postage 6d. per valve extra. Any Parcel Insured against Damage in Transit 6d. extra.

REBUILT TUBES!

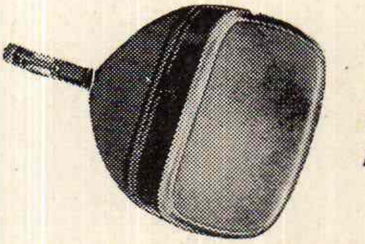

YOU'RE SAFE WHEN YOU BUY FROM RE-VIEW!

HERE IS WHAT YOU PAY:

12in.	**£4.15.0**	19in.	**£5.15.0**
14in.	**£5. 0.0**	21in.	**£7. 5.0**
15in.	**£5. 5.0**	23in.	**£8.10.0**
17in.	**£5. 5.0**	19in. Twin Panel	**£7.10.0**

23in. Twin Panel **£10. 0.0**

Cash or cheque with order, or cash on delivery

Discount for Trade

★ Each tube is rebuilt with a completely new gun assembly **and** the correct voltage heater.

★ Each tube comes to you with a guarantee card covering it for two years against all but breakage.

★ Each tube is delivered **free** anywhere in the U.K. and insured on the journey.

★ Each tube is rebuilt with experience and know-how. We were amongst the very first to pioneer the technique of rebuilding television tubes.

RE-VIEW ELECTRONIC TUBES

237 London Road, West Croydon, Surrey.
Tel. 01-689/7735

NEW LINE OUTPUT TRANSFORMERS

ALBA 655, 656, 717, 721e **75/-.**
BUSH TV53 to TUG69 **30/-.**
DECCA DM1, DM3C, DM4C (70°) **78/-.**
DYNATRON TV30, TV35 **48/6,** TV36, TV37, TV38, TV40, TV46, TV49F **70/-.**
EKCO T231, T284, TC267, T283, T293, T311, T326, T327, T330 **48/6.** TMB272 **68/6.** T344, T344F, T345, TP347, T348, T348F, TC347, TC349, TC356, T368, T370, TC369, T371, T372, TP373, TC374, T377A, T393, T394, 433, 434, 435, 436, 437 all at **70/-.** 503, 504, 505, 506 **95/-.**
FERGUSON 306T, 308T **48/6** each. 406T, 408T, 416, 436, 438, 506, 508, 516, 518, 536, 546, 604, 606, 608, 616, 619, 636, 646, 648, 725, 726, 727, 3600, 3601, 3602, 3604, 3611, 3612, 3614, 3617, 3618, 3619, 3620, 3621, 3622, 3623, 3624, 3625, 3626, 3627, 3629 **65/-.**
FERRANTI T1001, T1002, T1002/1, T1004, T1005 **48/6.** T1023, T1024, T1027, T1027F, TP1026, T1071, T1072, T1121, TC1122, TC1124, T1125, TC1126 **70/-.** 1154, 1155 **95/-.**
G.E.C. BT302, BT304 **62/6.** BT454DST-456DST, 2010, 2013, 2014, 2012, 2000DS, 2001DS, 2002DS **85/-.**
H.M.V. 1865, 1869 **48/6.** 1870, 1872, 1874, 1876, 1890, 1892, 1894, 1896 **65/-.**
KB OV30, NF70, NV40, PV40, QV10, QV30, PVP20 **90/-.** Featherlight **90/-.**
PILOT PT450, 452, 455, 650, PT651 **70/-.**
PHILCO 1019, 1020, 2021 **82/6.** 1029, 1030, 1035, 1036, 1040, 1050, 1060 **82/6.**
PYE V200, V400, 200LB, 210, 220, 300F, 300S, 310, 210S, 410 **70/-.** **PYE** 11U P/No. AL21003 **70/-.**
REGENTONE TV403.
R.G.D. RV203.
ULTRA 1770, 2170, 1772, 1782, 2172, 1771, 2171, 1775, 2175, 1774, 2174, 1773, 2137, 1980c, 1984c, 100c, 200c, 2380, 2384, 1984, 1985, 1986, 1980, 1980a, 1780, 2180, 2181, 2183, 2182, 1871, 1783 **78/-.**

LINE OUTPUT TRANSFORMER INSERTS

BUSH TV92, TV93, TV94, TV95, TV96, TV97, TV98, TV99, TV100, TV101, TV103, TV104, TV105, TV106, TV108, TV109, TV110, TV113, TV115, TV115R, TV115c **55/-.** Complete with heater windings.
DECCA DR95, DR100, DR101, DR202, DR303, DR404, DR505, DR606 **55/-.**
EMERSON E700, E701, E704, E707, E708, E709, E710, E711, Portarama **32/6.**
FERGUSON 204T, 205T, 206T, 214T, 235T, 236T, 244T, 245T, 246T **30/-.**
FERRANTI 14T2, 14TC, 14T3F, 14T4, 14T4F, 14T5, 14T6, 17K3, 17K3F, 17T3, 17T3F, 17K4F, 17K6, 17SK6, 17T4, 17T4F, 17T5, 17T6, 21K6, 21K6V **32/6.**
INVICTA T118, T119, T120 **40/-.**
K.B. PV40, MV100, OF100, PV100, NV40, NF70, OV30, QV10, QV30 VV80, VV30, VV20, VV10, WV05, WV20, RV30, RV70, QUP20, KT001, KT405A **32/6** pair.
PETO SCOTT 1416, 1418, 1419, 1422, 1423, 1716, 1719, 1720, 1922, 1723, 1724, 1725 **29/6.**
PYE V4, VT7, CTM4, TCM7 **40/-.**
REGENTONE 10-4, 10-6, 1021, 17-18, 10-12 **30/-.** T176, TT7, 191, 192 **32/6.**
R.G.D. Deep 17, The 17, 590, 600, 606, 611, 710, 723 **32/6.**
Guarantee. *Post and Package 4/6. C.O.D. 6/-.* CALLERS WELCOME.

All new components inserts are guaranteed for three months from the date of invoice subject to the breakdown being due to faulty manufacture or materials. S.A.E. all enquiries.

RETURN OF POST SERVICE

Dept. "R" D. & B. TELEVISION (Wimbledon) LTD
80 MERTON HIGH STREET, S.W.19
01-540 3513 01-540 3955

PADGETTS RADIO STORE

OLD TOWN HALL,
LIVERSEDGE, YORKS.
Tel. Heckmondwike 4285

AW48-80 TV Tubes good picture—no guarantee **£1** plus 12/- carriage.

Aircraft Sighting Head with Gyro Unit. Condition Fair **18/6,** carriage B.R.S. 12/-.

Small 12-way Plug and Socket, 1/6 each, p.p. 1/-, **15/-** doz., p.p. 3/6 Ex unit.

Panel of 19 mixed pots, 5/- post paid. Ex unit.

Panels of Resistors and Condensers 8/- per doz., post paid. Ex unit.

Bombsight—Computers containing a large selection of gears. A delight for the Model Maker. **55/-** carriage paid.

Complete untested 17 inch TV Sets 12 channel 50/-, 15/- carriage.

Small Sub Chassis containing small 12-way Plug and Socket. Few Resistors and Condensers, **5/-,** p.p. 1/6.

Speakers removed from T.V. Sets. All PM and 3 ohm. 6in. round **3/-,** p. & p. 3/-; 6 for **24/-,** post paid 6×4in. **3/-,** p. & p. 3/-; 6 for **24/-,** post paid, 5in. round **3/-,** p. & p. 3/-; 6 for **24/-** post paid. 7+4in. **5/-,** p. & p. 3/-; 6 for **34/-** post paid. Slot Speakers 8×2¼in. **5/-,** p. & p. 3/-; 6 for **30/-** post paid.

Reclaimed T.V. Tubes, with 6 months' guarantee 17in. Type AW43/80, AW43/88 **40/-,** MW43/69 **30/-,** 14in. Type **17/-.** All Tubes 12/- carriage.

Silicon Rectifier 500mA 800 PIV, **2/6** post paid **24/-** per dozen, post paid.

Jap Earpiece. Magnetic 8 ohm. Small and Large Plug **1/11** post paid.

G.P. Diodes 3/6 per dozen, post paid.

Top Grade Mylar Tapes, 7in. Standard **11/6,** 7in. Long Play **14/-,** 5in. Standard **7/9.** 5in. Long Play **10/-,** plus post on any tape 1/9.

VALVE LIST—Ex Equipment, 3 months' guarantee. Single Valves Post 7d., over 3 Valves p. & p. paid.

ARP12	1/6	PCL82	4/-	6B8	1/8
EB91	9d.	PCL83	5/-	6BW7	2/6
EF85	3/-	PL36	5/-	6K7	1/9
EBF80	3/-	PL38	6/-	6U4	5/-
ECC81	3/-	PL81	4/-	6P28	5/-
ECC82	3/-	PY33	5/-	10P13	2/6
		PY81	1/6	185BT	8/6
ECC83	4/-	PY82	1/6	20D1	3/-
ECL80	1/6	PZ30	5/-	20P1	5/-
EF50	1/-	U191	5/-	20P3	2/6
EF80	1/6	U281	5/-	30PL1	5/-
EF91	9d.	U282	5/-	30P12	5/-
EY86	5/-	U301	5/-	30F5	2/6
PCC84	2/-	U329	5/-	30FL1	5/-
PCF80	2/-	U251	5/-	6/30L2	5/-

YOUR PERSONAL INTRODUCTION to the wonderful world of LASKY'S. Send at once for our AUDIO-TRONICS '70 catalogue—available FREE on request. Everything for the Hi-Fi and Radio enthusiast, electronics hobbyist, serviceman, communications ham, etc. ALL at Lasky's unbeatable prices **PLUS our fantastic MONEY VOUCHERS worth over £25.** 1,000's of items comprehensively arranged for you to select in the comfort of your own home. Just send your name, address and 2/- to cover post only, and the inclusion on our regular mailing list, to **Lasky's Radio Ltd., Dept. PT., 3-15 Cavell Street, London E1 2BN.**

Please mention
PRACTICAL TELEVISION
when replying to
ADVERTISEMENTS

DON'T BE CAUGHT OUT!

Colour Television is already here, but 1970 is a big year for colour television with a number of single standard colour sets coming on to the market, engineers with a knowledge of colour television will obviously be in great demand.

SO DON'T DELAY We have developed a colour television course geared for the service engineer which will enable him to tackle any problem in colour television.

The course consists of 10 lessons on colour mixing, Pal colour system, colour receivers, decoders, IF circuits, time-bases, convergence, waveforms, set-up procedures, test equipment, fault finding, typical circuits. Fee for complete course 10 gns. *Write for details without obligation to:*

DAYLIN ELECTRONICS (Dept. A) 32 Parkstone Drive, Southend, Essex

PRACTICAL
TELEVISION

VOL 20 No 7
ISSUE 235

APRIL 1970

SERVICE AND ALL THAT

IN the January issue of Mullard *Outlook* a conversation piece between Norman Lewis (head of Mullard Distributor Sales Division) and Brian Proffitt (immediate past-president of the RTRA) brought forth one or two comments worth noting.

Both gentlemen agreed that in their opinion there has been a marked change in dealers' attitudes to technical service and that "the days when the retailer regarded service as a necessary evil are all but over". One of the reasons given for this supposed metamorphosis (well, we can all dream can't we!) was that dealers are costing their service much more effectively since the abolition of RPM has meant more vigorous price competition and dealers can no longer afford to let the service department be subsidised by sales.

With regard to the last point, all we can say is "about time, too", for we have been plugging this for many years in these pages. We are all for conubial bliss but it has long been obvious that a divorce of sales from service is decades overdue. A service department run on a shoestring, on sufferance, and with unrealistic charges has been a bane for longer than we can remember. Service should be real service, with all equipment properly overhauled and not just patched up, and with returned receivers restored to as good a general condition as possible and a proper charge made for what is, or should be, specialised treatment.

The point was raised that with the increasing complexity of modern apparatus, such as colour TV, and the sophisticated test gear needed, many small dealers are inadequately equipped. A suggested remedy was for co-operation between local dealers to provide between them an efficient overall service. One difficulty here is that a dealer with a highly organised service department can be excused for not wanting to pool his resources with a less efficient service department. Which, if we can again mount a pet hobby horse, is a convincing case for an absolute divorce—for the setting up of service organisations entirely separate from the retail trade.

W. N. STEVENS, *Editor*

THIS MONTH

THE NEXT ISSUE DATED MAY WILL BE PUBLISHED APRIL 17

All correspondence intended for the Editor should be addressed to Fleetway House, Farringdon Street, London, E.C.4. Address correspondence regarding advertisements to Advertisement Manager, Fleetway House, Farringdon Street, London, E.C.4. Address enquiries about back numbers to Back Numbers Dept., Carlton House, Great Queen Street, London, W.C.2.

TELETOPICS

COLOUR BONANZA?

WITH colour set deliveries rising sharply, setmakers announcing plant expansion plans and making other optimistic noises, talk in the trade of set shortages and rationing and now price increases it looks as if a colour boom is at last on the way—thanks presumably to three programme colour.

The latest BREMA figures, for November, show deliveries of colour sets for the month up to 28,000. Deliveries of monochrome sets at 165,000 on the other hand were 9% down on the same month in the previous year.

Last month the Thorn group announced plans to double colour set production. Now Bush-Murphy are to restart production of their dual-standard colour models—the Bush CTV174D at £313 19s. and the Murphy CV2210 at £292 19s.—to help meet demand.

Most setmakers have now announced price increases. The Thorn group intends to make increases in price of around 5% and the GEC group 3% on all models, colour and monochrome. The Pye group is increasing monochrome set prices by £1-2 and colour set prices by £9-12. Bush have increased the price of their 22in. colour Model CTV184S by £13 16s. to £289 19s. and their 25in. Model CTV187CS by £16 to £329 19s. According to Philips financial expert K. W. Cook price reductions will come but are "a long way off". He suggests a fall in price to around £190 in 1975 when colour set production should be from 1 to 1·3 million.

But that will be a long way behind Japan whose colour set output for 1969 is now claimed to have exceeded 4·9 million sets. NTSC receivers of course —no Japanese manufacturer so far has obtained the necessary agreements to produce PAL receivers.

WIDEBAND UHF SET-TOP AERIAL

Panorama Radio Co. Ltd., 73 Wadham Road, London, S.W.15, have introduced a wideband, all-channel u.h.f. set-top aerial which can be stood on or near the set or wall-mounted. The aerial, type MCA11, has a price of around £1 17s. 6d. and is based on the use of two tightly-coupled multichannel elements.

THREE-DIMENSIONAL CCTV

A new technique devised at the Bell Telephone Laboratories enables three-dimensional scenes in motion to be viewed on a CCTV system. The 3D scene is transmitted as a series of 2D images conveying depth information. These 2D images are combined at the receiving end to reconstruct the original 3D scene. Special viewing glasses are not required.

The new system is based on the use of a pair of spherical mirrors called varifocal mirrors. These are made of flexible Mylar so that their centres can be made to move rapidly in and out—from concave to convex in shape. As the mirror at the transmitting end moves it reflects portions of the scene to a short focal-length lens which focuses the different views or "depth planes" one at a time so that they can be shown to the camera on a rear-projection screen and transmitted. At the receiving end the monitor displays the 2D images to a second varifocal mirror for viewing. The system requires several times the bandwidth used in normal transmission but has potential applications in specialised scientific fields. Entertainment applications are limited by the "phantom imaging" phenomenon associated with the varifocal mirrors which means that images in the foreground do not totally obstruct those in the background.

INEXPENSIVE VIDEOTAPE RECORDERS

A new range of videotape recorders, known as the "New Teacher" range, is announced by Pye TVT Ltd. of Cambridge. The basic videotape recorder (see photograph) will market at £275 complete with one reel of tape—approximately 20% less than previous conventional videotape recorders. The intention is to bring the videotape recorder within the range of educational establishments working on restricted budgets. The instrument weighs only 26½lbs. and uses an eddy-current drive motor to avoid the need for direct mechanical drive linkages or belts. For maximum reliability and length of life ½in. chromium dioxide tape is used. Simplicity of operation has been aimed at and in this respect the "New Teacher" is similar to a standard sound

recorder. Separate video and sound level meters are fitted to enable even amateurs to obtain the correct levels for best sound and picture quality.

LATEST TRANSMITTERS

The **Saddleworth** BBC-2 relay station is now in operation on channel 45 with vertical polarisation (group E aerial). The other channels assigned to the station are 42, 49 and 52.

The ITA announces that building work has now started on its u.h.f. extension at the BBC Tapton Hill (Crosspool) site at **Sheffield.** This relay station is planned to come into operation in the autumn carrying Yorkshire Television on channel 24.

NO MORE STELLA SETS

The Stella brand which has been used in conjunction with Philips since 1951 is now officially no more. Stocks have been systematically run down and now no merchandise is left with the wholesalers. The end of Stella is a part of the Philips group rationalisation programme. The brand names Cossor and Peto Scott were previously discontinued. Brands remaining are Philips, Pye, Ekco, Ferranti and Invicta. Stella Lamps continues as a separate entity.

SLIMLINE COLOUR SETS?

Mullard are now supplying sample 110-degree 25in. shadowmask tubes to the setmakers, indicating that we may see slimline colour sets before long. We understand however that there are scanning and convergence problems involved with 110-degree colour tubes that have yet to be satisfactorily solved, so there is no suggestion yet of large-scale production of 110-degree colour tubes. A report from Tokyo says that Hitachi plan to introduce 15 and 19in. colour sets in Japan this year using 110-degree tubes.

LIGHT BEAM MODULATED BY TV SIGNAL

Scientists at the Mullard research laboratories have demonstrated the transmission of TV pictures by modulating a light beam. The modulator consists of a single crystal rod of yttrium iron garnet (YIG) through which a plane polarised light beam is shone. The YIG crystal is mounted in a transverse bias magnetic field provided by two small permanent magnets. A small coil fed with the drive signal is wound on the rod and induces a component of magnetisation parallel to the light direction. This results in rotation of the plane of polarisation of the light passing through the rod, and this polarisation modulation is converted to amplitude modulation by passing the beam through a polariser.

The modulator operates at light wavelengths in the range 1·1 to 5·5 microns (11,000 to 55,000Å) with best performance for wavelengths 1·1 to 2 microns. Its attractive features include the low drive power (12mW per MHz bandwidth) at low voltages (12 volt at 100MHz). Whilst the bandwidth required by the TV signal is only 5MHz the modulator has been tested at frequencies up to 100MHz and bandwidths of several hundred MHz are possible. A tungsten lamp is used as a source of radiation. Lasers operating in the near infra-red region may also be modulated using this device.

The YIG light modulator makes feasible line-of-sight optical transmission techniques and opens up a completely new frequency spectrum for information transmission. A distant possibility is the transmission of laser signals via satellites.

EHT TESTERS

Our photograph shows an addition to the Eagle Products range (available through B. Adler & Sons (Radio) Ltd., Coptic Street, London, W.C.1.), a high-voltage test probe with integral 30kV voltmeter at £10 5s. Type number is KHP30. A 30kV probe, type DC30, is also available at £3 10s.

NEW MAZDA COLOUR TUBE FACTORY

Thorn Colour Tubes have acquired a 25-acre factory site at Skelmersdale New Town, Lancashire for the construction of a new £10 million factory for the mass-production of Mazda shadowmask colour tubes. Production capacity will initially be 300,000 tubes a year and the first stage of building is scheduled for completion in late 1971.

TV MEASURING TECHNIQUES CONFERENCE

A conference organised by the I.E.E., I.E.R.E., I.E.E.E., and the R.T.S. is to be held at the Middlesex Hospital Medical School from May 11-13th. The conference is of importance in view of the increasing use of u.h.f. and colour, requiring equipment and circuits to operate within very much tighter performance limits than previously. This has necessitated the development of advanced measuring techniques which will form the theme of the conference.

COLOUR SERVICING FILM

A 16mm. instructional film on the installation and servicing of colour receivers is being produced by Donald Blakey Ltd., St. Annes-on-Sea, Lancashire and is expected to be available in May. Assistance is being given by BREMA and the intention is to make the film available on a rental basis at 15s. a day or £75 for outright purchase.

NEW SETS

Several new models have been announced by the Pye group. These are the **Ekco** single-standard colour Models CT107 (22in., price £268) and CT108 (19in., £239), both fitted with the 691 chassis. New 24in. dual-standard monochrome Ekco models are the T535 at £89 and T536 at £86, both fitted with the 368 chassis. Under the **Invicta** brand name is the 20in. single-standard monochrome Model 7353 priced at about £72 and fitted with the 169 chassis.

Joining the **Standard** range from Telerenters Ltd., Highview House, 167 Station Road, Edgware, is a 3in. single-standard mains/battery portable model with dimensions $7\frac{1}{8} \times 6\frac{3}{4} \times 3\frac{1}{2}$in.

REGULAR LONG-RANGE TV RECEPTION

PART 1

K.E.G. PITT, B.Sc.

THE transmitters of the national television networks have been located to cover specific areas but there are many places in which satisfactory signals may be obtained from more than one transmitter in the same network. A list of transmitters and a physical map of an area can be studied to see whether or not multiple reception is possible or worthwhile. There are two different reasons that make a study of alternatives useful.

Additional Programmes

First an alternative additional programme may be available at certain times. This particularly applies to ITA transmitters where programme company areas often overlap. It is of less value on BBC-1 except for rather rare regional variations. BBC-2 shows no regional differences but the duplication of BBC-1 and ITV on u.h.f. make the study of alternatives of interest here also. Incidentally in a number of areas the ITV region on u.h.f. is different from that on v.h.f. while in other regions there is more overlap than previously. This is due to the fact that not all Band III and u.h.f. transmitters are co-sited and that the coverage is different on the two Bands, necessitating more u.h.f. than v.h.f. stations.

Poor Local Conditions

The second reason is that in a number of places—particularly hilly areas—propagation conditions are unfavourable for what would normally be the local transmitter. It may be that hills surrounding the site obscure the nearby station or cause its reception to be very ghost-ridden, while a more distant one is not at all obstructed. A word of caution is however necessary here. In many cases local transmitters have been installed not because the main one is completely unobtainable but because it is susceptible at certain times of settled weather conditions to co-channel interference. (It is this co-channel interference, often Continental in origin, that the DX enthusiast is always waiting for.)

In this article we shall examine the conditions necessary for reliable long-distance reception and discuss how to come to conclusions as to its practicability in a given area. Band I as well as Band III is dealt with in detail because it may help to make a choice between several available BBC-1 stations where none is actually local.

Dual ITV Reception

Two examples of areas where more than one ITA station may be received are Mid-Sussex (Southern and London) and West Hants and East Dorset (Southern and Westward). Viewers in certain Midland areas will be able to receive one or more of Winter Hill, Emley Moor and Belmont in addition to Lichfield. The year book of the Independent Television Authority *ITA 1970* gives details of all present and planned v.h.f. transmitters together with their programme companies and full service areas. It will be seen from this book that there are many areas of overlap of coverage similar to the above examples. In a similar way the BBC's year book gives details of its own network.

Signal Strength

PRACTICAL TELEVISION has regularly given details of how terrain affects v.h.f. and u.h.f. propagation so this article will only outline briefly the factors determining the signal strength at a given site. Signal strength is directly proportional to the square root of the radiated power and inversely proportional to the square of the transmitter distance. In practice this means that only the high-power stations are very strong at distances over fifty miles. Coverage is improved by increasing the height of both transmitting and receiving aerials. Signals are greatly attenuated when the receiving aerial is beyond the radio horizon of the transmitter, and attenuation increases rapidly with increasing frequency. Thus ranges of hills may completely obscure a u.h.f. station while its co-sited Band I companion gives fully acceptable results. The location and height of the receiving aerial is critical because careful positioning may avoid shadowing by hills or high buildings.

Many of the sites at which large numbers of transmissions are receivable are on hills, thus giving relatively clear optical paths to the broadcasting stations. The radio horizon distance from a given point is given approximately in miles by

$$\mathrm{D_H} = 1\tfrac{1}{3}\sqrt{\text{Height}}\ (\text{feet}).$$

A further convenient approximation (not strictly true mathematically but good enough for our purposes) is to calculate DH for both transmitting and receiving aerials and to add the results. This result is only true for an unobstructed path, such as over a plain or the sea. It does however help to decide which transmissions it may be possible to receive and which are extremely unlikely.

Very Distant Reception

While signal strengths in practice decline very rapidly with increasing distance beyond the optical horizon, in many cases quite acceptable pictures are obtained regularly at phenomenal distances. Most parts of Dublin receive fully acceptable signals from Divis (BBC-1) and Black Mountain (ITV) in Ulster at more than one hundred miles. The radio horizon in this case is between seventy and eighty miles. On high ground BBC-2 colour from Divis is also received relatively satisfactorily. In such cases it is of course

ITV VHF COVERAGE
405 LINE TRANSMISSIONS

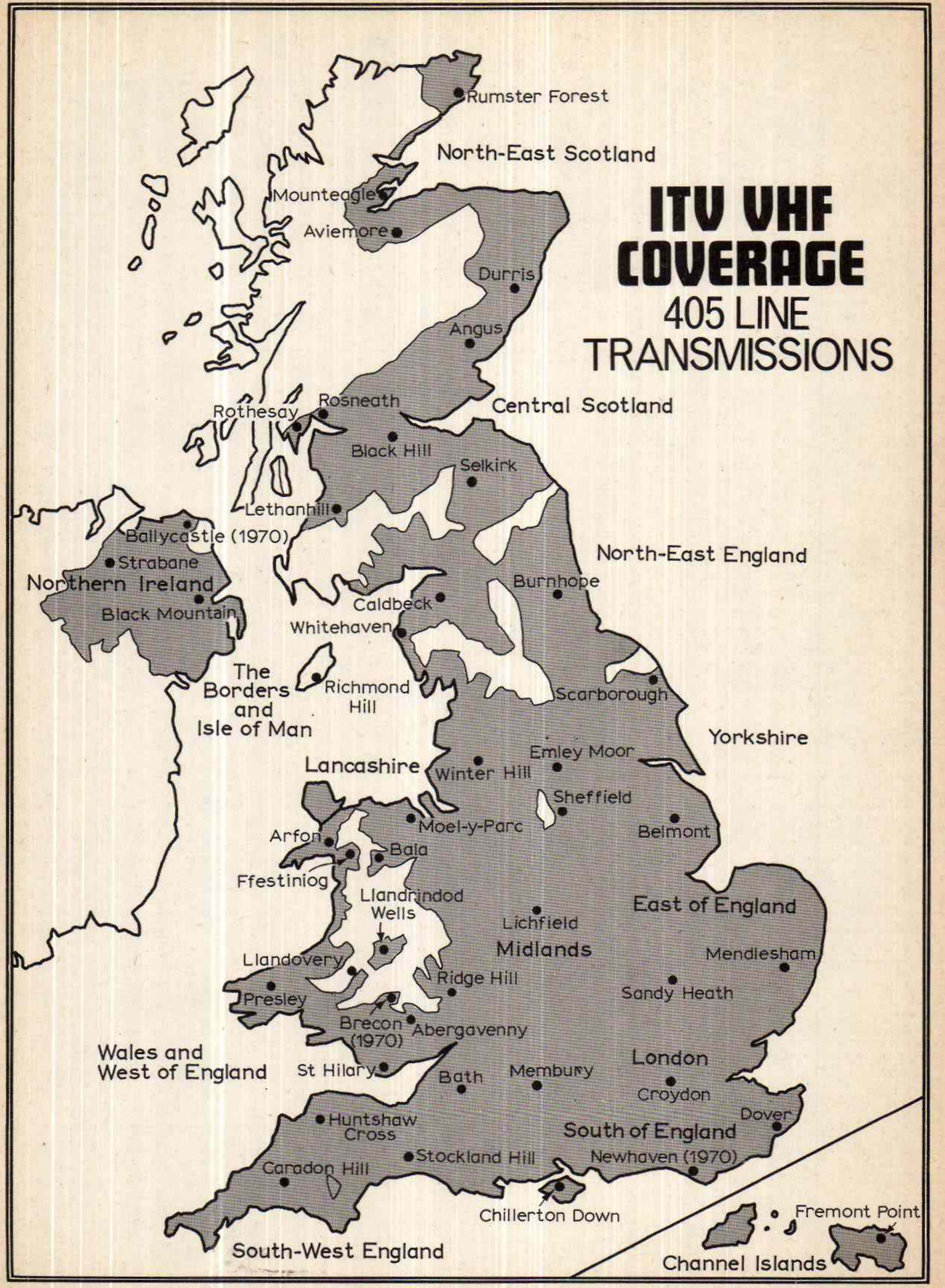

Table 1—Reception conditions at Site A (South Coast)

Channel		*Programme*	*Transmitter*	*Miles*	*Power*	*Terrain*	*Polarisation*	*Prediction*
Band I	1	BBC–1 (S.E.)	Crystal Palace	40	High	Very hilly	V	Poor
	2	BBC–1 (S & W)	Whitehawk (Brighton)	4	Low	Clear	V	Local
	3	BBC–1 (S & W)	Rowridge	55	High	Clear	V	Very good
Band III	6	ITV (Southern)	Newhaven	11	Low medium	Fairly clear	V	Moderate*
	8	BBC–1	Newhaven	11	Very low	Fairly clear	V	Very weak
	9	ITV (London)	Croydon	40	High	Very hilly	V	Very weak
	10	ITV (Southern)	Dover	70	High	Very hilly	V	Very weak
	11	ITV (Southern)	Chillerton Down	55	High	Clear	V	Very good
	12	ITV (M)	Membury	80	Medium high	Very hilly	H	Nil
U.H.F.	24	BBC–2	Rowridge	55	High	Clear	H	Very good
	33	BBC–2	Crystal Palace	40	High	Very hilly	H	Nil
	63	BBC–2	Whitehawk (Brighton)	4	Medium	Clear	V	Local*

* Not yet in operation.

Table 2—Reception conditions at Site B (North London)

Channel		*Programme*	*Transmitter*	*Miles*	*Power*	*Terrain*	*Polarisation*	*Prediction*
Band I	1	BBC–1 (S.E.)	Crystal Palace	20	High	Clear	V	Local
	2	BBC–1 (S.E.)	Swingate	70	Low medium	Fairly clear	V	Very poor
	2	BBC–1 (M)	Oxford	45	Low	Hilly	H	Nil
	3	BBC–1 (Anglia)	Tacolneston	85–90	Medium high	Fairly clear	H	Possible
	3	BBC–1 (S & W)	Rowridge	85–90	High	Fairly clear	V	Possible
	4	BBC–1 (M)	Sutton Coldfield	100	High	Hilly	V	Unlikely
	4	BBC–1 (Anglia)	Manningtree	55	Medium	Fairly clear	H	Possible
Band III	6	ITV (Anglia)	Sandy Heath	35	Medium	Fairly hilly	H	Possible
	9	ITV (London)	Croydon	20	High	Clear	V	Local
	10	ITV (Southern)	Dover	70	High	Fairly clear	V	Probable
	11	ITV (Southern)	Chillerton Down	85	High	Fairly clear	V	Unlikely
	11	ITV (Anglia)	Mendlesham	70	High	Fairly clear	H	Probable
	12	ITV (M)	Membury	55	Medium	Hilly	H	Poor
U.H.F.	24	BBC–2	Rowridge	85–90	High	Fairly clear	H	Nil
	27	BBC–2	Sandy Heath	35	High	Fairly Hilly	H	Poor
	33	BBC–2	Crystal Palace	20	High	Clear	H	Local
	44	BBC–2	Sudbury	55	High	Fairly clear	H	Probable
	56	BBC–2	Dover	70	High	Fairly clear	H	Possible

With the advent of BBC–1 and ITV duplication in Bands IV and V much adjacent or co-channel interference is likely to prevent use of some of the transmissions that might otherwise be possible. For example Sudbury ITV is likely to be spoilt by co-channel interference from the fill-in station at Hemel Hempstead and Sandy Heath may be overlapped by some spread from ITA channel 23 at Crystal Palace. For simplicity the tables only show one u.h.f. transmitter (BBC–2) at each site. Stations on the higher channels are in general less likely to be received well at long distances than those at lower frequencies.

necessary to use a very high multielement aerial array.

Analysing a Given Site

In order to analyse a given site it is necessary to know the distances from all possible transmitters, the hills in the appropriate directions and the height above sea level of the receiving aerial. Transmitter details may be found in the ITA handbook or by enquiry from the BBC (whose year book gives only the powers, not the heights, of their transmitters). Armed with this information we can prepare a list of transmitters within 100 miles, with comments on power, channel and terrain between station and receiver. Low-power relays at greater than about twenty miles can usually be ignored. Most local BBC boosters are only 50-100W and are not received well beyond 5-10 miles even under favourable conditions. If two transmitters on the list share the same channel neither is likely to be very good unless one is relatively local.

We will illustrate the procedure by examining the reception conditions in two quite different areas. Site A is on the South Coast, on the southern slopes of the South Downs, with hills of 400-500 feet in all inland directions, i.e. in all directions except the arc from South East to South West. Site B is in North London on the top of a hill with a clear view round from South West to North East and with hills no more than 100 feet higher in the remaining directions.

Site A—South Coast

Only stations on the surrounding hills or to the South and West are likely to be received at all well because of the presence of the South Downs. In practice the South is the sea and only stations to the South West will have a clear transmission path. (This site is outstandingly good for DX reception of French Band III and u.h.f. stations. Band I is blocked by local BBC transmissions. The reason is the smooth path over the sea.) Table 1 shows the possible British Bands I, III and u.h.f. stations.

Experimental results follow these predictions very closely. Crystal Palace on channel 1 gives a grainy picture liable to fading and tropospheric interference. Although channel 3 is quite strong, being within the radio horizon, in many cases it is completely unusable due to the poor selectivity of commercial sets which permits the break through of the relatively strong local channel 2 signal from Whitehawk. Most local installations employ a channel 2 dipole as part of a combined Band I/Band III chimney-mounted aerial array. This permits reasonably good signals to be obtained on channels 1 or 3 in emergency or when Crystal Palace shows regional variations from the local South West programme.

A similar pattern is seen on Bands III and IV. In practice Croydon channel 9 signals are almost nil as are those from Dover on channel 10 while the Chillerton Down transmitter includes the area in its primary service coverage. No other Band III signals are obtainable (apart from the boosters at Newhaven). On high ground however signals are obtainable from Croydon, and the higher parts of Brighton and Hove have a choice of Band I or Band III channels not open to the majority of the area. Rowridge u.h.f. gives a good and better than originally predicted service while no signals are obtained from Crystal Palace due to hill attenuation.

At site A therefore only local transmitters can be usefully received and there is no alternative programme available. An emergency BBC at Rowridge is present and has been used when the unmanned local relay breaks down. At this site there is thus no scope for the DX or other enthusiast to turn his interest into a useful increase in programmes available.

Site B—North London

This is a completely different proposition and a very large number of transmitters come within the bounds of possibility. The ground to the North although higher than the site is not high enough to eliminate all signals from that quarter and all transmitters within 80-100 miles must be considered. Table 2 shows the main stations within this range. All low-power relay transmitters are excluded including the London u.h.f. fill-in stations.

It will be seen that seven Band I, six Band III and five u.h.f. stations are listed. Certain of these can be eliminated immediately. Two stations at equal distance on channel 3 are likely to be present in roughly equal strength and thus to interfere (showing up as line pairing and even field jump). This was found to be the case in practice even though the polarisations are different. No usable signal was obtained on this channel. On channel 11 the Mendlesham transmitter is very much closer than Chillerton Down and the terrain is similar. The latter was thus eliminated but occasionally it interferes in the form of line pairing and background sound. Two low-power channel 2 transmissions were also eliminated.

On Band I only channel 1 appeared likely to provide a regular entertainment-value signal. This was borne out in practice, although a lockable but very poor signal is found regularly from Manningtree and could provide BBC Anglia regional news if needed with the appropriate outside aerial. None of the others were found able to provide a significant signal strength other than on freak occasions. This leaves Band I clear for DX reception.

On Band III the predictions were also found to be quite accurate. Calculations had suggested a greater signal from Mendlesham than Dover or Sandy Heath. In practice Dover gave entertainment-value signals with very little grain for most of the time and is in regular use as an alternative to London ITV. It is somewhat susceptible to tropospheric interference from Emley Moor and St. Hilary but is otherwise very good. Mendlesham fluctuates a little but is usually up to entertainment value although the grain is sometimes noticeable. Sandy Heath is nearly as strong as Mendlesham. Either of these will provide a regular Anglia programme and are used in practice when required. Chillerton Down only occasionally gives significant co-channel interference on Mendlesham. Sound only is obtainable from Membury. As expected this is thus not a further choice for ITV.

Reference to the ITV service maps shows that the site is well outside even the fringe area of all these transmitters. This suggests that many areas may well be able to receive signals which would not normally be considered, especially on Band III with its network of high-power stations.

U.H.F. Conditions

On u.h.f., weak signals are obtained from all the London u.h.f. fill-in stations but viewable signals are only obtained from Crystal Palace itself. Sudbury gives a good clear picture with an outside aerial but is attenuated severely in the roof at the same height. Dover u.h.f. at the high end of Band V is very much weaker than Dover ITV. It too is attenuated inside the roof but gives a very grainy, sub-entertainment signal with an outside aerial. It is unlikely that Dover u.h.f. will provide a source of Southern ITV at this site on 625 lines. This illustrates the greater propagation losses at u.h.f. compared with Bands 1 or III. The results from ITV Dover on channel 66 have since borne out this prediction and unless a high and expensive outside array is used will not provide an entertaiment-value picture in black-and-white or colour.

We thus find that two additional ITV programmes may be added at viewable strength to the local BBC-1, 2 and ITV, giving five choices. At this site on high ground installing facilities for receiving channels other than the local ones gives a worthwhile addition to the programme choice available. Incidentally the location is ideal for DX studies and virtually the whole of Band I other than channel 1 (which is not used for TV outside Britain) is clear for this purpose. Only a limited region of Band III is free in this way.

In Part 2 some of the ways in which this can be done are described.

TO BE CONTINUED

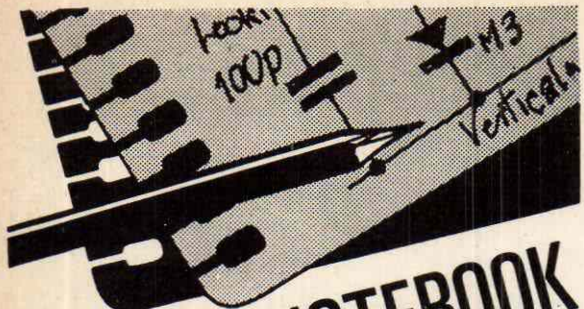

SERVICE NOTEBOOK

G. R. WILDING

Hum-Bars

VALVE heater-cathode insulation must be of a high order and this is particularly true of the boost rectifier where a very substantial cathode voltage is developed by the line flyback pulses. As the boost rectifier is generally first in the heater chain, if it develops a strong heater-cathode leak a very heavy mains current will flow. This should blow the set fuse immediately but so often in practice a dropper resistor section burns out or badly overheats instead.

Any valve can develop a heater-cathode short or leak and if it is anywhere in the vision signal path from the r.f. stage to the video stage a raster hum-bar of intensity depending on the valve's circuit position and the value of the leak will be produced. If the hum-bar is accompanied by excessive speaker hum naturally a tuner or common i.f. valve will be at fault. Tuner valves seem fairly susceptible to this defect and as they are first in the signal path the effect of even a slight leakage is amplified by the following stages.

The usual practice when confronted with a hum-bar is to lightly tap all suspect valves and in most cases this will identify the culprit by markedly changing the hum-bar severity. As the a.c. heater current is bypassed to chassis via the cathode components it always pays to check them for possible damage or value change.

On occasion the hum-bar may be in the narrow part of a wasp-waisted raster and in such cases the line output pentode or boost rectifier will almost certainly be at fault, the valve leakage only causing reduction in output during the high voltage section of the a.c. cycle.

Reduction in reservoir capacitor value results in a lowering of the h.t. This usually shows up mainly in decreased raster width and may also result in a longer wait for picture appearance due to reduced heater supply to the e.h.t rectifier. A reduced value smoothing capacitor on the other hand would most likely be first noticed by increased hum level and poor line or field sync long before capacitance reduction is sufficient to cause marked visual effect on a plain raster. The only real exception to this is when receiving asynchronous transmissions: impaired h.t. rail smoothing can then result in a slow vertical movement of a light hum-bar.

Additional but more remote possibilities are (a) shorted turns in the main smoothing choke or (b) a replacement series resistor in receivers with multiple h.t. rails being of smaller value than specified.

At one time heater-cathode leakage was quite a common fault in ageing tubes, resulting in symptoms ranging from impaired h.f. definition and sync to complete picture loss depending on receiver circuitry and the severity of the leak. Ageing present-day tubes are more apt to develop interelectrode leakage which usually results in inability to fully blackout the raster and makes it impossible to obtain a well contrasted picture.

Field Jitter

A FERGUSON Model 3648 (Thorn 950 chassis) came in for service recently with bad field jitter that couldn't be cured by replacement of the PCL85 oscillator-output valve. Bench tests showed that the fault could be eliminated if the height was reduced to no more than two thirds of the full size. This seemed to indicate that the fault was in the triode anode circuit, for as is almost always the case the height is controlled by means of a high-value (2·5MΩ) potentiometer rheostat-connected and supplying the anode h.t. from the boost rail.

Both this component and a 330kΩ series limiter were perfect, however, so we then disconnected one side of the height stabiliser VDR which is connected from the junction of the series limiter and the boost h.t. smoothing capacitor to chassis. Although the maximum available height naturally increased—due to removal of the VDR's shunting effect—the fault persisted.

We then made sure that both linearity preset controls were perfect, because bad slider contact causes many instances of field jump or spasmodic variations in top or bottom raster size. Both tracks were in perfect order, however, with smoothly increasing effect from one extreme to the other.

Although VDRs are reliable we decided to replace the one (Z2, see Fig. 1) shunted across the field

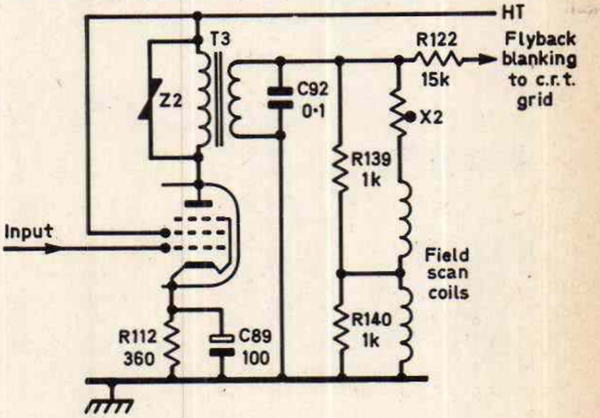

Fig. 1: Ferguson 3648 (BRC 950 chassis) field output stage. Z2 is a v.d.r. to limit field flyback pulses across the output transformer and X2 a miniature thermistor to maintain constant height as the temperature of the scan coils rises and their winding resistance increases. R139 and R140 provide suppression of the line pulses. The complaint was bad field jitter unless the height was reduced to about two-thirds normal and was caused (unusually) by a component in the output stage.

output transformer to limit the field flyback potential (by reducing in resistance during the high reverse voltage and loading the transformer primary). This VDR is in the output circuit but as both sections of the PCL85 are cross-coupled in a multivibrator arrangement faults in the pentode half can cause generator faults.

Results were still the same so it began to appear that there was a defective capacitor in the circuit which could probably only be identified by replacement and test. We tend to be most suspicious of electrolytics so we first replaced C89, the 100μF decoupler shunted across the pentode cathode resistor, as it seemed to be a little dried up. Although replacement resulted in slight improvement in height —especially towards the base of the raster—the fault still persisted.

The raster then started to collapse intermittently, but to a wavy horizontal line instead of the more usual dead straight line, so it seemed that the defective component was starting to completely break down. Now when a raster collapses to a wavy horizontal line you can be fairly sure that the cause is in the output circuit, either an open-circuit-field output transformer secondary or a break in the connecting leads or plugs between the transformer and the scan coils.

Our first suspect is always the miniature thermistor (X2) mounted close to the scan coil windings. The resistance of this falls as the scan coils warm up and thus increase in resistance, the picture height in this way remaining constant. To measure its continuity it is of course necessary to isolate one end since the ohmmeter current will otherwise flow through the shunting scan coils and the transformer secondary. Where possible however it is much quicker simply to short it out. In our case we found that this restored full height with complete freedom from the previous bad jitter and on replacing the component no further trouble was experienced.

EY86 Pin Connections

Sound but no vision on a Bush 23in. model was reported, the lack of vision proving to be due to absence of e.h.t. A larger than normal arc could be drawn from the EY86 anode, but nothing discernible from the c.r.t. anode connector. Replacing the EY86 produced no change but it was found that slightly pushing it over to one side would result in the heater beginning to glow.

Obviously the valveholder was defective. In these models it is secured by a central screw to the bottom of a hollow bakelite fitting mounted on the line output transformer. Both heater leads from the transformer and the e.h.t. cable to the c.r.t. anode run down inside the moulding and under the valveholder.

On carefully removing the valveholder we could see that socket 5, to which one of the heater leads was soldered, had become very wide. We managed to prise it together with a strong needle but to make doubly sure of good heater contact decided to additionally wire the heater feed to pin 8.

It is perhaps not always realised that although in practically all B9A valves the heater is from pin 4 to pin 5, in e.h.t. rectifiers of the EY86, DY86, DY802 and U26 type pins 1, 4, 6 and 9 are connected to one side of the heater and cathode with pins 2, 5 and 8 being connected to the other end of the heater. To ensure good heater contact some makers wire each feed to two or more contacts.

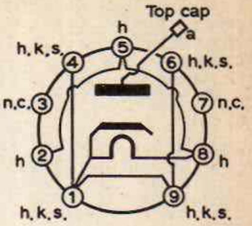

Fig. 2: Pin connections of e.h.t. rectifier types EY86 and EY87, DY86 and DY87, DY802 and U26, illustrating the multiple heater connections. Do not earth pins 3 and 7: connect to pins 4 and 6 respectively.

Anyway, while we had the valveholder out we also wired pin 4 to pin 1. On reassembly we obtained a good picture but after about ten minutes a violent field jitter developed. In most instances field jitter or bounce is due to a defective generator valve, but this time after trying the two ECC82 multivibrator sections we found the PL84 output pentode to be the cause.

HT Rectifier Replacement

Every now and then we come across an older receiver with a finned or contact-cooled metal rectifier which has gone high-resistance and is giving very much less than the rated d.c. output. In such cases we replace it with a silicon power rectifier of the BY100 or BY114 type and due to the much lower forward resistance of these we obtain a very significant increase in h.t. output.

Particularly in these older receivers the increased h.t. boosts the e.h.t. which gives a welcome boost to an ageing tube, but assuming that the increased e.h.t. does not cause sparkovers you will often find that old valves which have been operating quite well on a sub-standard h.t. supply subsequently break down on full voltage. For example we replaced the finned rectifier with a silicon type in a Bush Model TV118L the other day and the customer was immediately impressed with the all-round increase in contrast and brilliance as well as full picture width, which was the only original complaint. After a short while, however, we noticed that the cathode of the PY800 was beginning to overheat. We hastily switched off, replaced it and obtained normal results again.

Then after running for about 20 minutes the sound became distorted, we found the PCL82 unduly hot and had to replace that. Subsequently the bottom of the picture started to curl up and we had to replace the PL84 field output pentode following which there was a tendency to field jitter which was only curable by changing the ECC82 field oscillator. Fortunately this servicing occurred in the customer's home and he could see the symptoms develop, but it is the kind of situation that makes customers ask dealers why it was necessary to change sound and field valves when the fault complained of was purely lack of width.

I have known the same kind of effect develop when surge limiter sections have been replaced by others of lower value resulting in an increased h.t., so especially in old sets with valves conditioned to low h.t. expect side effects when the h.t. is restored to full value.

TO BE CONTINUED

SINGLE-STANDARD 625-LINE RECEIVER FOR THE CONSTRUCTOR

PART 2

KEITH CUMMINS

THE first article in this series dealt with the basic design considerations, chassis construction and the major components required. Next we will consider the power supply arrangements in detail. The complete circuit is shown in Fig. 4.

Power Supply Circuits

The mains transformer, T1, has a primary winding to suit the standard 50Hz 240V mains supply. A tapping for 200V working is provided on the prototype but obviously need not be regarded as essential. The mains supply is applied via SW1 and F1 to the primary winding. The reader will note that the sections of the mains switch are connected in parallel to switch the live input line only. Such operation can only be adopted when a three-pin mains plug is fitted; if a two-pin plug is to be used the switch should be wired conventionally so that both live and neutral are switched. Three-pin operation is recommended however for the obvious safety reasons and the adoption of this method enables the two switch sections to be paralleled to reduce the load on the individual sections.

The four secondary windings provide power for different basic purposes. The 240V secondary winding feeds a full-wave diode bridge. Fuse F2 is included to prevent damage to the transformer in the event of diode breakdown in the reverse direction. The output from the bridge is taken to the current limiting resistor R1 and a thermistor TH1 employed to prevent excessive voltage rise on the h.t. rail at the time of switch-on. The resistance of TH1 is high when cold and because of the lack of conduction of the valves immediately on switch-on little current flows. As the valves warm up the load on the h.t. line increases so increasing the current through TH1. TH1 then heats and its resistance falls thus allowing more current to flow. The effect is cumulative so that TH1 reaches a stable working temperature with the h.t. line at its normal operating voltage.

C1a is the reservoir capacitor, R2 and R3 are smoothing resistors and the 230V supply smoothed by C1c forms the main h.t. rail for the receiver, R3 with C1b for smoothing supplying the sound output and amplifier stages. By keeping these supplies separate, interaction between sound and vision at high volume levels is absolutely minimised. C1d provides additional smoothing for the line oscillator.

The 75V secondary winding on T1 provides a supply at 300mA for four valves, the boost diode PY800, line output PL36, video amplifier PCL84 and field output valve PCL805. The heater voltages add up to a total of 75V. In order to keep the heater-to-cathode voltages to the minimum the centre of the series heater chain in earthed. This approach is the same as using a centre-tapped transformer winding but is more economical and convenient.

The 16V secondary winding performs a dual function, supplying the heaters of the audio amplifier, sync separator and line oscillator valves and a bridge rectifier for a 12V supply to the transistor circuits. The winding supplies 16V to feed the PCL82 audio valve heater directly while the line oscillator PCF80 and sync separator ECH84 heaters are connected in series across this supply. A protection resistor R4 is included in series with the feed to the diode bridge. This low-rating component will burn out should a diode go short-circuit. Under normal conditions the resistor behaves as a peak current limiter. Capacitors C2, C3 and C42 are included to prevent transients affecting either the diodes or valves since no part of the circuit is directly earthed. Smoothing for the +12V supply is provided by the combined filter and dropper circuit consisting of C4, R5 and C5.

The 6·3V secondary winding supplies the cathode-ray tube heater. The supply is completely floating and thus eliminates the problem of a cathode-ray tube heater short under voltage stress.

The components having been mounted as mentioned in the first article, wiring of the heaters and d.c. supply circuits can be undertaken. Note that the smoothing resistors R2 and R3 are mounted on a tagstrip on top of the chassis adjacent to a lead-through hole as shown in the top photograph on page 265 last month.

It is useful to mention at this point that some form of colour coding of the leads is useful (e.g. red for h.t., black for earth, etc.). The constructor may of course devise his own coding.

Positive and Negative Modulation

It is next proposed to deal with the valve part of the receiver, starting with the video amplifier and sync separator stages, but before dealing with the circuit in detail it is necessary to consider the differences between the positive-modulation system used for 405-line transmissions and the negatively-modulated 625-line system.

Most 405-line detector circuits employ d.c. coupling from the detector to the video amplifier. This arrangement is simple and provides a signal—usually positive-going—with zero output representing the sync pulses (i.e. carrier cut off), 30% modulation representing black and peak white at maximum carrier power. It follows from this that the video stage is turned on progressively by the output from the detector as the signal swings towards peak white.

Under no signal conditions the video valve passes minimum current and its anode, which is coupled to the picture tube cathode, is at its maximum positive voltage. Under these conditions the picture tube is cut off, but brightens as a signal is introduced from the detector into the video stage.

The conditions with a negatively-modulated system are rather different. Peak carrier power represents sync pulses, with 77% modulation representing black level. Further downward modulation represents picture brightening. Because of the use of intercarrier sound the carrier is never modulated down to zero. This ensures that a reference signal for the beating of the sound and vision carriers is always available. The beat signal contains a video content in the form of amplitude modulation which is removed in the limiting process employed for the demodulation of the f.m. sound signal.

Coupling for Negative Modulation

The simplest arrangement for the detector of a negative-modulation receiver involves reversing the sense of the detector diode compared with the well-known positive-modulation system. The output from the detector then consists of a negative pedestal voltage representing the sync level with the video moving positively towards earth. By this means the sense of the signal driving the video amplifier is maintained correctly. The biasing of the video amplifier has to be altered however since the pedestal voltage appears to the valve to be a negative grid bias: so alteration of the cathode biasing is necessary.

This situation appears to be quite satisfactory until we consider what happens under no signal conditions when our convenient source of bias for the video valve—the negative pedestal voltage—disappears. The valve then passes maximum current and its anode voltage falls, so turning the cathode-ray tube gun on. The conditions are not at all healthy for the video valve and the picture tube screen shows peak white. Even if by careful design we can avoid damage to the video amplifier, peak white during no signal conditions is unnatural to the viewer.

AC Coupling with DC Restoration

The problem can be overcome by the use of a.c. coupling from the video detector with d.c. restoration at the video amplifier grid. The coupling capacitor blocks the d.c. voltage from the detector allowing only the video signal to pass. The video can then be d.c. restored by a diode circuit which refers the signal to earth instead of an arbitrary datum. The video amplifier receives a positive-going signal at its grid and can be cathode biased in the normal way with low current flowing under no signal conditions.

Looking at the complete circuit, Fig. 4, the video from the detector is coupled into the video amplifier grid via C6, which is rather larger than usual—1μF. The use of a large coupling capacitor enables a lower-value grid resistor to be used for a given time-constant. The lower-value grid resistor keeps the effects of grid current in the valve to a minimum. At this stage it is better to imagine that the lower ends of R7 and R64 are connected to earth. R7 provides a d.c. return path for V1a grid while R64 limits D9 forward current so avoiding degradation of the sync pulses. The negative-going sync pulses drive D9 into conduction so that the video signal is entirely positive-going with respect to earth.

As the modulation sense is negative, interference pulses produce a negative output from the detector which drives V1a towards cut-off. As a result the video stage output provides a positive pulse which when applied to the picture tube cathode cuts the tube off. A small black spot appears on the screen and this is far less objectionable than the white spots which appear with a positive-modulation system.

Noise-cancelled Sync Separator

We now come to V2a, the sync separator. Instead of the familiar pentode a heptode is employed. The video signal from the video cathode-follower V1b is applied via C8 to its second control grid. Under conditions of severe interference the positive output from the video stage is applied to this grid and could turn the valve hard on, with disastrous effects to the synchronisation of the picture. We now come to the connection between the lower ends of R7 and R64 and the first control grid of V2a. Normally this grid is held at earth level by grid current flow through R13 from the 20V screen grid supply, and the d.c. restoration circuit is connected to this apparently earthed point.

Under conditions of heavy interference large negative pulses are applied to the cathode of D9 causing a larger than normal current to flow in R64. This current is in opposition to the grid one current of V2a and when large enough completely overcomes it. When this occurs the low-impedance grid one to earth path of V2a becomes an open-circuit. So instead of a low impedance being seen by D9 the high impedance of R13 becomes apparent and the effect of R64 is negligible. Thus V2a grid one is driven negatively below earth. As the valve is designed to have an extremely short grid-base (grids two and four being operated at +20V) V2a is cut off. The large positive interference pulse appearing at grid three now has no effect and the disturbance to the synchronisation is minimal. This technique is known as noise-cancelling. When the interference has passed the circuit reverts to normal operation.

Video Circuits

The video stage itself is very simple. Its simplicity results from the use of a cathode-follower output section which reduces the loading on the pentode amplifier stage. Physically the wiring should be kept very short so that the capacitance around the anode circuit of the pentode is kept to an absolute minimum.

Because the receiver is required to maintain good black-level stability it is best if the video amplifier bias is kept as constant as possible. This is achieved by using the current in the cathode of the field output valve to swamp any current changes in the video amplifier. The cathode of the video amplifier is tapped up the cathode bias network of the field output valve—R10 and R11. The voltage at the field output cathode is also used to supply the sync separator screen grids. Cathode compensation of the video stage is employed and the value of C7 represents the apparent optimum without introducing overshoot on transients.

It will be noticed that no inductive components are employed in the video stage, an advantage brought about by the use of the cathode-follower. Inductive components always present difficulties, particularly for the constructor who may not easily be able to wind the coils necessary. Peaking coils also introduce a potential difficulty in that unwanted peaking can occur within the video passband if stray capacitances differ from chassis to chassis. Another snag that can arise is "ringing", i.e. resonance of the peaking coil causing a damped oscillation. Transients in the video signal cause the coil to ring and a succession of repeated edges appears to the right of any sharply defined object on the screen. Damping the peaking coil is necessary to overcome this problem. Where no peaking coils are fitted these problems do not arise.

When the video stage sees a purely resistive load at its anode its response will be flat. Unfortunately stray capacitance also exists so that the video amplifier is terminated in a complex impedance. When the capacitive reactance of the stray capacitances in parallel with the load resistor is equal to the value of the load resistor the response of the video stage is 6dB down. It is obvious that the choice of anode load resistor value must depend on two factors, the gain required and the bandwidth necessary. Obviously these two factors are in conflict with one another, for while a low value of anode resistor implies that the effect of stray capacitance will be low it also means that the stage gain must be low. Where the anode load resistor is very much lower in value than the anode a.c. impedance of the video valve the stage gain can be reckoned as $A = gmR$ where gm is the slope of the valve in amperes per volt and R is the effective load resistance. We say "effective" here because the reactive impedance of the stray capacitances is in parallel with the load resistor.

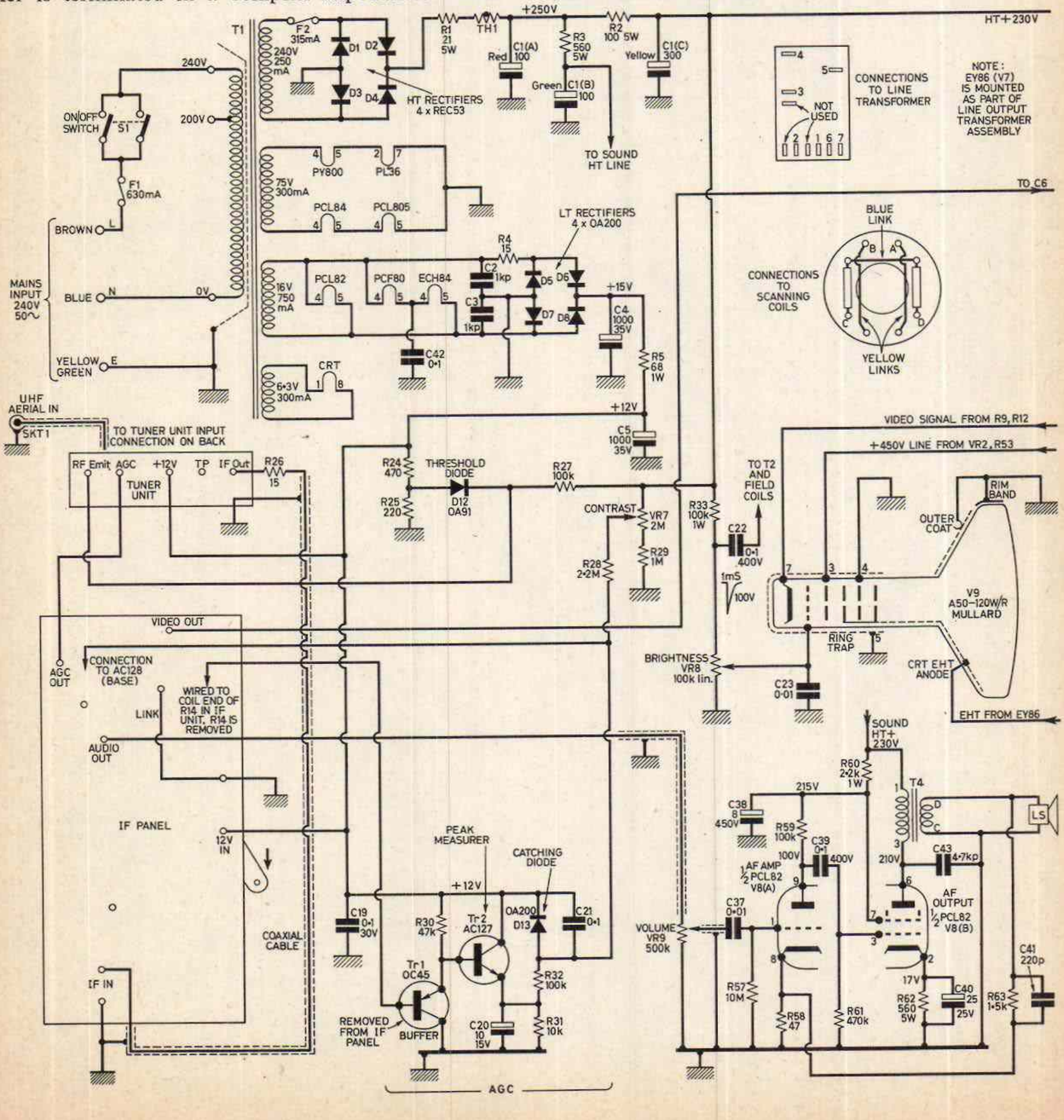

Use of Cathode-follower

It is obvious that if we are to achieve a high stage gain and adequate bandwidth using a simple amplifier the stray capacitances must be kept as low as possible. It is here that the use of a cathode-follower can solve the problem. The input impedance of a cathode-follower is high and so it presents very little load to the stage driving it. The PCL84 valve contains both a video pentode and triode. Since the two valve sections are contained within the one envelope a simple link across the base pins is all that is necessary to couple the cathode-follower to the amplifier. By keeping this lead short and not earthing the centre spigot of the valve base the capacitance is kept to the minimum. A fairly high value of anode load can then be used while retaining adequate bandwidth.

In order to compensate for the remaining effects of capacitance the cathode bias resistor of the video amplifier is partially decoupled by a compensating capacitor. The time-constant of the cathode circuit is thereby adjusted to be the same as that of the anode circuit, a condition implying optimum compensation without overshoot. The resulting response of the video stage is substantially flat, slowly rolling off toward the maximum bandwidth end. There can be no doubt that this form of response provides a most pleasing picture. Definition is good, the edges are clean, overshoot is negligible and there is no ringing.

Switch-off Spot Suppression

It will be noticed that the cathode-follower load resistor R9 is instead of being taken directly to earth connected to the collector of Tr3, a transistor type BSX21, the emitter of which is earthed and the base taken to the 20V line derived from the cathode circuit of V3b via R6. Under normal conditions Tr3 is turned on hard by the current flowing in R6 and appears as a very low impedance in series with R9. When the receiver is switched off however the 20V supply collapses and Tr3 is turned off. The lower end of R9 is now no longer earthed and as V1b is then non-conductive it will be seen that the cathode of the picture tube is open-circuited. By this means the bright spot which would otherwise appear at the centre of the screen when switching off

—*continued on page* 327

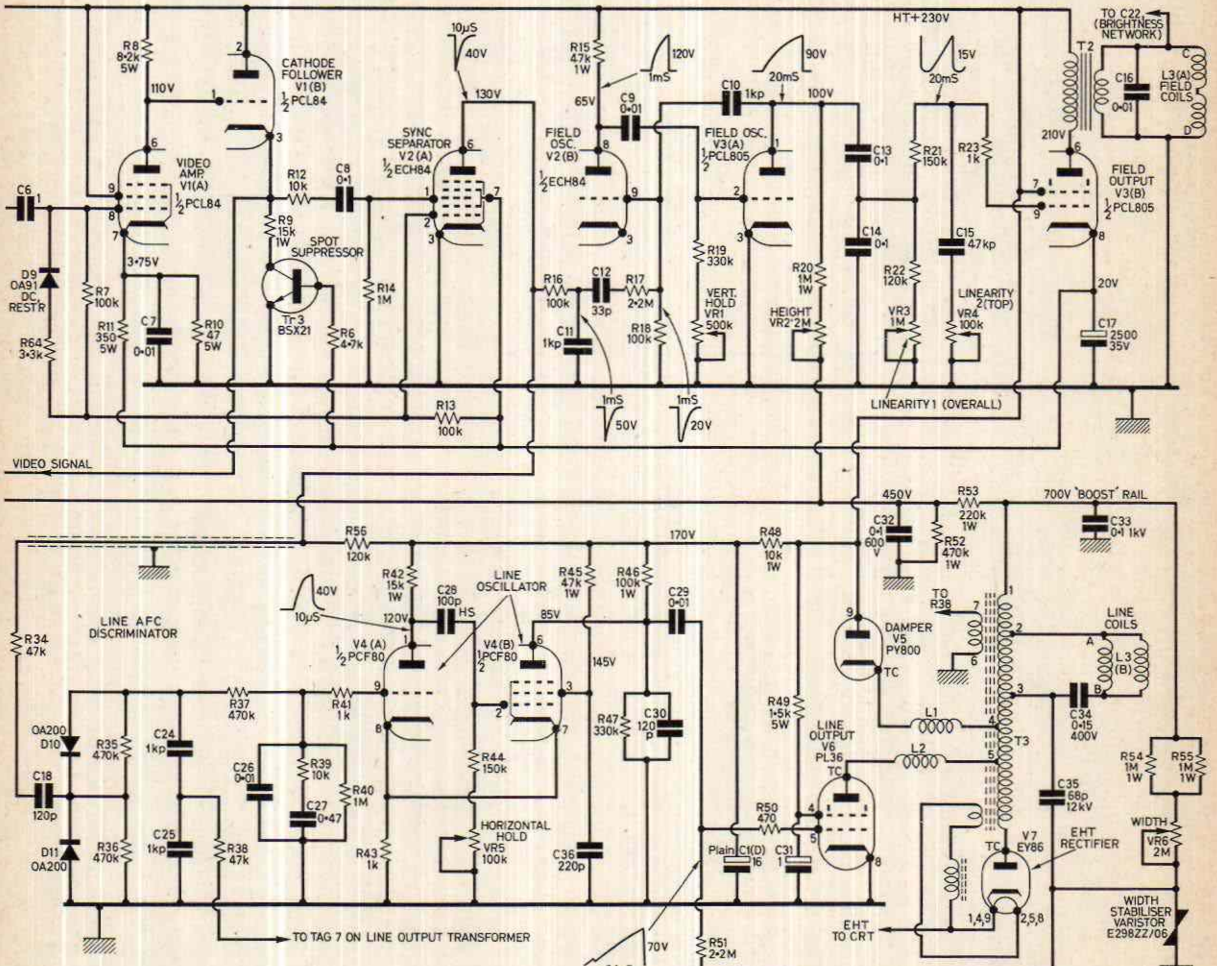

Fig. 4: Circuit diagram of the single-standard 625-line monochrome receiver. Details of the i.f. and tuner circuits will be given in a later instalment.

UNDERNEATH THE DIPOLE

MULTIPLY by three! That is a rough figure concerning many different aspects of colour television as compared with black-and-white. Three (or four) tubes (for dissecting the colours) in the camera, three guns in the shadowmask receiver tube (for adding them together again), three times the manufacturing costs, three times the TV studio production costs and three, four or five times the total amount of taxation and licence fees exacted as a result of the very existence of colour television. These are the basic complexities of colour TV.

THE THREE-BUTTON MIRACLE

Yet British colour television emerges through these hazards with ease and leads the world artistically as well as technically, with *three times the impact* on those viewers who possess a good colour receiver which has been properly installed. Pressing any of the three u.h.f. buttons on my own set the test cards look much the same apart from the words BBC-1, BBC-2 and ITA. What a magnificent achievement this has been, thanks to the joint contributions of BBC, ITA and Post Office engineers together with the enormous contributions made by each one of the fifteen independent commercial television companies and not forgetting the radio and television manufacturers of cameras and receiving sets. Special mention should be made of the part played in all the discussions by the Independent Television Companies Association, which is often overlooked. If only the Post Office telephone department was as efficient as their broadcasting division colleagues the ordinary P.O. telephone service would be far better than it is now.

COLOUR ADVERTISING

The revenue from television advertising is high and supports the ITA's transmitters, the ITV companies' studios and the costly colour productions. They are however not allowed to increase their advertising rates and are further discouraged by the penal levy, imposed by the present Government, which discourages all further progressive developments and turns the clock back.

The probable influence of colour television commercials has not however been overlooked by the several film companies who have been making commercials in black-and-white for years. Production costs in this field have trebled too, further increased by actors and actresses whose faces "fit" the product they are advertising. Agents have rocketed the fees for these commercials' advertising stars—and some of the national soap, food, cosmetic and toothpaste manufacturers have flinched at the astronomic costs while proudly appreciating the vastly increased sales of their products.

The impact of colour commercials in London, Southern and the Northern areas doesn't reach a huge number of colour receivers at the moment, but nevertheless the impact of well-made colour commercials on the colour viewers is terrific. If only 100,000 viewers actually see a *good* colour commercial its impact and influence is equivalent to three or four times that number. Managing directors of the companies whose products are advertised on colour television like to see their expensive commercials on their home television sets—especially when they are entertaining personal friends or business colleagues. Call it "snob value" if you like, but such a domestic evaluation should result in the raising of technical and artistic standards.

COMMERCIAL FILMS AND SLIDES

The technical committee and sub-committees of the Independent Television Companies Association (ITCA) had anticipated some time ago that there might be variable results in the photography and prints of colour commercial films from different studios and laboratories. These it was first considered might be improved by various devices which automatically correct faults when replayed on telecine machines at studios. In this manner ingenious electronic grading for correcting the colour balance and potential luminance (as well as sound) might be achieved.

However, the filmed TV commercial producers and advertising agents all have their own ideas of the correct colour balance as shown in their own film projection theatres or on their own colour monitors (if they possess their own telecine play-off). Another factor is that all of them have their own ideas of the amount of ambient lighting required in their theatres to simulate home room conditions. This led to a number of colour commercials looking good in the advertiser's own theatre but poor as seen in the home on television. The solution is to apply technical discipline and to lay down standards, called "recommended practices", for leaders, film gauge, contrast range, safe action area, recording characteristics, colour telecine response, preview theatre characteristics, etc.

It didn't take long for the advertisers to toe the line—and this column applauds the ITCA for taking the disciplinary step, tacitly approved by the ITA. The steady improvement in technical qualities over the last month or so has been quickly followed up with new ideas in scripting, music, cutting, optical work and technical gimmicks. Technical gimmicks and kaleidoscopic gadgetry can be overdone. The personal magnetism and human touch is far more important. The use (or absence) of make-up, exotic hairdos and correct flesh-tones is far more important than kinky zooms. But even these factors can be lost if the technical parameters so clearly set out in ITCA's *Guidance on Television Advertising* are not observed.

HORSES AND HISTORY

It is many years ago that the first attempts were made to popularise colour photography in film and still. The first real public interest was restricted to home movies because the systems offered were reversal processes and quality was lost when prints were made.

In due course the Technicolor process was evolved, the early camera of which used a single lens which with a beam-splitter in the optical system fed a filtered image to three separate negatives at the same time. From these three filtered black-and-white negatives Technicolor were able to make separate printing "facilities" for combining and transferring yellow, cyan and magenta dyes on to the final print. The first attempts seemed hopeless but persistence won out in the end. Technicolor today is marvellous and colour prints for the cinema, television, home and schools are printed on 65mm., 35mm., 16mm., Super 8 and what have you motion-picture films. Transfers from colour videotape are first class for the smaller television screens. or transferred from a new medium to be known as Technivision that everyone is waiting for but seems to be still on the industrial secret list. Will it be electronic printing?

The early success of Technicolor was due to the appeal of horses of different colours in Cowboy-and-Indian film productions. Men's faces were all heavily sunburnt, like lobsters, but the chestnut, grey and dun-coloured horses looked marvellous. History repeats itself now on British television: the human face may be pale or florid, delicate or weather-beaten but the horse always seems to look good. The marriage of videotape (interiors) to film (exteriors) was expertly carried out in the historic series *The Borderers* and in that other highly successful subject *The Wives of Henry VIII*. Both were delightfully scripted, produced, acted and edited and their impact was four times as good in colour than when seen on TV in black-and-white.

A COMBAT CAMERA

The large and cumbersome professional motion-picture cameras used in the main film studios of Los Angeles (including its suburb of Hollywood) and of London (including Elstree and Pinewood) were on the designers' drawing boards of the Mitchell Camera Corporation, Glendale, California in about 1932. The Mitchell camera claw mechanism and register pins have not changed much over the years, though refinements have been introduced and camera noise reduced—though not eliminated. Excellent television reflex aids have been added with the British Add-a-Vision system by Prowest Electronics, a subsidiary of Westward Television and already a world-wide supplier of high-grade television studio monitors. There is also the splendid Arriflex "Electronic Cam" system.

Casler's "pinch-roll" intermittent film-transport mechanism of 1897. Reinvented in 1967 for American "Combat" cameras and now in 1970 — with refinements — for TV newsreel use.

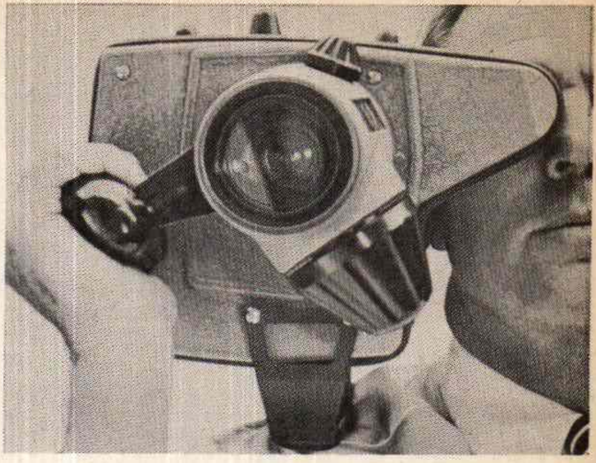

The MitchellMatic, the new 16mm. cordless casette-loading action camera.

Suddenly the Mitchell Corporation have announced a professional camera with an entirely new intermittent film-transport mechanism—the MitchellMatic cordless cassette-loading "Action" 16mm. camera. It carries its own battery, a zoom lens (6 to 1) with beam splitter reflex system, variable or crystal speed control, and rests gently on the operator's shoulder. The shutter opens up to 310°, thanks to the rapid film pull-down of a new type of *pinch-roll* on the film edges instead of claws, but retains register pins on the perforations for steadiness. After reading about the pinch-roll system I turned to my bookshelf and found references to two American patents in 1894 and 1897 which used such a method of intermittent film-transport in very, very early motion-picture cameras. The 1897 one was used on Casler's Mutograph system, which pulled down unperforated film 2¾ inches wide—which corresponds with the modern Todd-AO and similar 65mm. wide film cameras of today, prints of which, with magnetic sound tracks, are released on 70mm. width film.

PROTOTYPES

The new MitchellMatic camera, originally embarked on for "combat" filming by the American Navy, is claimed to be a rugged instrument built for one-hand operation and ideal for filming sporting events, TV newsreels, documentary educational and industrial use apart from front-line combat-area documentation. I look forward to seeing this 16mm. TV "quick load" magazine camera in a few weeks' time when it is being tested by Westward Television at Plymouth. Extraordinary how the first trials in Britain of worthwhile technical developments of new and unconventional television equipment find their way to this small but highly active regional ITV station. This was where the very first M-R "upside down" telescope-supporting lighting grid was introduced and installed. That particular form of TV lighting grid has now become a world standard. Carry on, Westward!

Iconos

waveforms in COLOUR receivers

PART 10

GORDON J. KING

LAST month we saw in some detail how the 7·8kHz ripple signal arises in the phase detector circuit as a result of the swinging bursts. We also saw how the change from pure ripple (squarewave) to the quasi-sinewave ident signal—also at 7·8kHz of course—is achieved. This month the plan is to investigate the various controls provided by the ripple and ident signals, and to examine the signals in and around the controlled stages.

Identifying the V Phase

The first and foremost job of the processed ripple or ident signal is to identify the phase of the V chroma signal as it changes from +V to −V on alternate lines, and to arrange for either the locally generated 4·43MHz subcarrier applied to the V synchronous detector or the V signal itself to be phase shifted by 180° on alternate lines in synchronism with the transmitted signal so that the detector output applied to the colour-difference stages is always the same as that at the camera, i.e. before the alternate line phase alternation carried out at the transmitter.

We can see this better from Fig. 1, where it is the locally generated 4·43MHz subcarrier that is switched line-by-line. The subcarrier is here fed to a diode switch and thence to the V detector. If the switch is inactive the phase of the subcarrier applied to the V detector will remain constant and the R−Y colour-difference stages will receive +(R−Y) and −(R−Y) signals on alternate lines. The result is the display of complementary colours on the screen on alternate lines, i.e. severe Hanoverian bars will be present.

The American NTSC system requires no V detector switch because the phase of the transmitted V chroma signal remains constant. However as will be recalled the PAL system uses the technique of alternating the phase of the V chroma signal line-by-line as a means of overcoming the sensitivity of the quadrature modulation system used in the transmission of the V and U signals to spurious phase shifts. Thus as the V chroma signal is phase alternated line-by-line at the transmitter, the phase must be likewise alternated at the receiver.

The Bistable Circuit

It is not difficult to get the diode phase-alternating switch to operate at line speed. This is generally done by a bistable circuit, which is something like a multivibrator. However while a multivibrator switches automatically due to inbuilt positive feedback between the two halves, a bistable does not switch or oscillate by itself. When a multivibrator is running one transistor (or valve) is switched on while its partner is switched off. The feedback then automatically reverses the conditions so that the switched-on transistor switches off and the switched-off transistor switches on. This action continues at a rate established by the circuit time-constants.

Like the multivibrator, the bistable circuit employs a pair of valves or transistors. However once it is powered one transistor will switch on and remain conducting while the other will remain switched off. To reverse the conditions a suitable pulse must be applied to the circuit to trigger one of the transistors. It will then remain in the alternate condition, with one transistor on and the other off, needing a further pulse to switch it back to its original state. Clearly then a series of suitable pulses will switch the bistable in the same way as the multivibrator but at a rate governed by the frequency of the pulses applied.

This is just the job for operating the diode phase-alternating switch at line speed either from the line timebase or from processed line sync pulses. That is, the bistable circuit is triggered by the line pulses and one of its transistors is arranged to operate the diode switch so that on one line the switch is on and on the next line it is off and so on. In practice the switch employs two diodes and a special transformer with two secondary windings, one reversing the subcarrier phase relative to the other, so that on one line of signal one of the diodes switches the subcarrier through one winding, while on the next line of signal the other diode switches the signal through the phase-reversing winding. The subcarrier output to the V detector thus alternates in phase line-by-line, just as required. The general scheme is depicted in Fig. 1. (Where the V signal itself instead of the subcarrier is switched line-by-line a similar technique is used.)

Ident Operation

This is all very well, but what if the bistable starts up so that the V detector is switched to say the positive phase when the V chroma input is on the

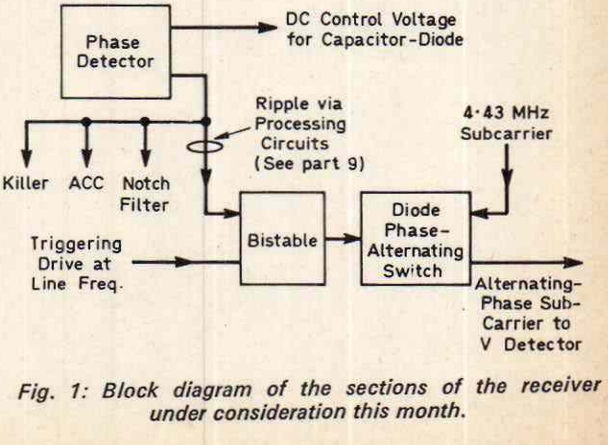

Fig. 1: Block diagram of the sections of the receiver under consideration this month.

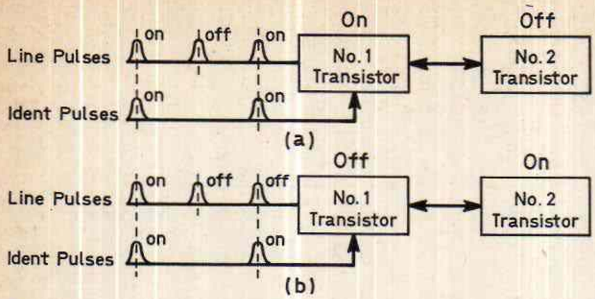

Fig. 2: How the ident signal synchronises the bistable circuit in the PAL V-phase inverter circuit. The correctly synchronised state is shown in (a) while (b) shows the incorrect starting condition followed by the correct condition when the "on" line pulse coincides with the ident "on" pulse.

negative phase? The displayed colours will then be incorrect: they will veer towards the reverse of the correct hues, that is towards the complementary hues. The viewer could combat the error by switching off the set and trying again, hoping that this time the bistable will start so that the subcarrier phase at the V detector matches that of the V signal at the transmitter. Indeed there is a fifty-fifty chance of this happening, so it should not take all that long—by switching the set off and then on again or, better, by operating the tuner press-buttons—to establish the correct phasing.

However, after spending several hundred pounds on a colour set the viewer can hardly be expected to sync manually in this somewhat hit-or-miss manner! This is where the ident signal comes in: it does the synchronising automatically. We have seen that a pulse is required to switch the bistable and hence the subcarrier phase. Now if a second pulse is applied to the bistable, possibly to a different point in the circuit, we can get the bistable to latch on to the correct phase.

It is not intended in this series to delve too deeply into the exact operation of the various circuits (a subsequent series will do this), but let us suppose as a means of sketching in the general idea that No. 1 transistor of the bistable is on and No. 2 is off, and that to No. 1 transistor is fed a switch-on pulse derived from the ident signal. Since No. 1 transistor is already on the ident pulse will do nothing and the bistable will continue switching at line speed. This is the correctly synchronised condition.

However should the synchronisation be wrong, that is No. 1 transistor off when it should be on while No. 2 instead is on, the ident pulse will this time switch on No. 1 transistor and thus put the switching into correct sync. The line pulses will keep the switching phase going correctly, while the ident pulses will simply tend to aid the line switching pulses on every other line pulse, bearing in mind that the ident signal frequency is half the line frequency.

The diagrams in Fig. 2 will help to clarify the basic action. At (a) No. 1 transistor has been switched on by the "on" line pulse, an action which is aided by the "on" ident pulse fed into the circuit elsewhere. This is the correctly synchronised condition. At (b) No. 1 transistor is off due to the action of the "off" line pulse, but the condition is corrected by the simultaneous arrival of the "on" ident pulse.

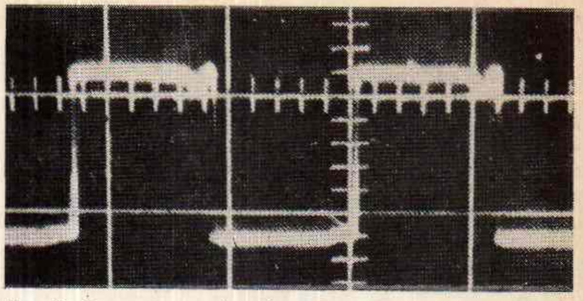

Fig. 3: Squarewave signal at the collector of one of the transistors in the bistable circuit.

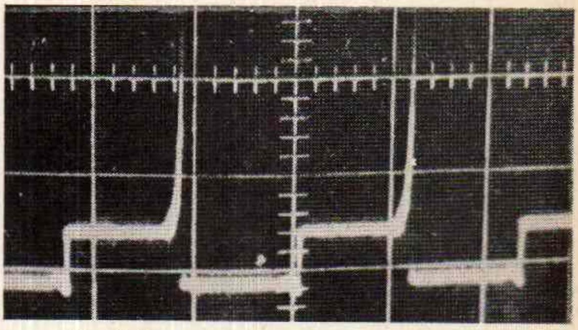

Fig. 4: Base waveform of a bistable transistor.

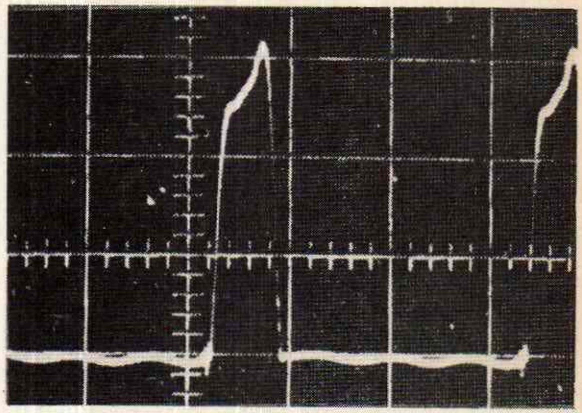

Fig. 5: Line frequency bistable switching pulse.

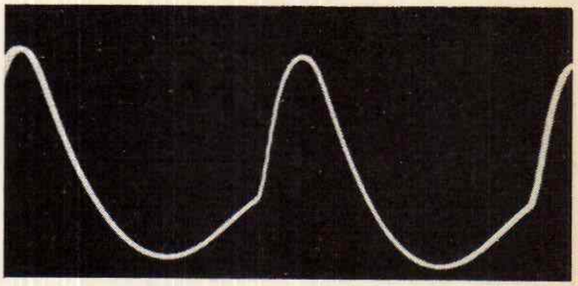

Fig. 6: The half line-frequency ident signal applied to the bistable circuit to synchronise it.

In other words the ident pulse switches transistor No. 1 on in spite of the bistable starting up with transistor No. 1 off. The next line pulse will then switch No. 1 off and the next ident "on" pulse will arrive at the same time as the next line "on" pulse

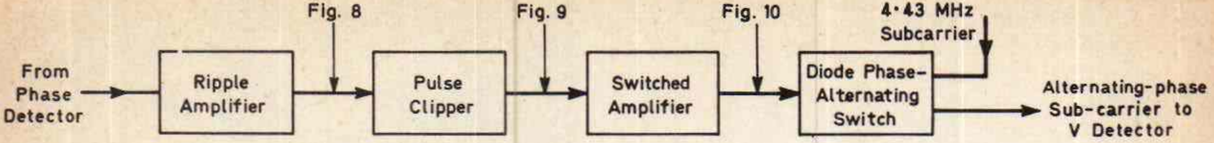

Fig. 7: Block diagram showing how the PAL switch is sometimes operated from the ripple signal direct.

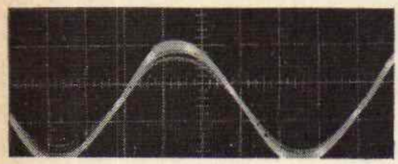

Fig. 8: Ripple signal at the output of the ripple amplifier stage in Fig. 7.

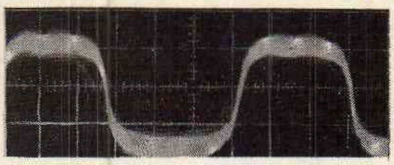

Fig. 9: Signal at the output of the pulse clipper stage shown in Fig. 7.

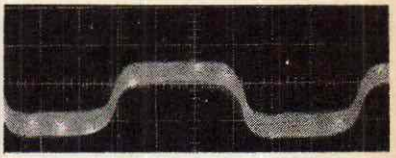

Fig. 10: Signal at the output of the switched amplifier stage, Fig. 7.

so that the switching pattern changes to that at (a).

There are various other ways of describing this synchronising action and readers conversant with computer theory will observe some similarity between the two basic requirements. Indeed the phase-switching bistable of PAL colour sets has much in common with the bistable circuits used in computers, including the use of binary diodes. A bistable circuit has an output repetition rate from either transistor which is half that of the pulse input rate, and this is the basis of binary counting.

Waveforms in the Bistable Circuit

Now let us have a look at one or two signal waveforms. Fig. 3 shows the squarewave signal at the collector of one of the bistable transistors, where the amplitude is scaled to 5V/cm. and the time to 50μsec/cm. The signal thus has an overall amplitude of about 7V and a total duration (complete cycle) of a shade over 100μsec. This signal switches one of the phase-alternating diodes while that from the collector of the other transistor switches the other diode of the pair.

The signal at the base of one of the bistable pair is shown in Fig. 4. Time scale is the same as in Fig. 3 but the amplitude is based on 1V/cm., showing that the squarewave part of the waveform is about 0·6V while the spikes stretch to about 2V. These signals were taken with the bistable correctly synchronised to a colour signal.

A bistable line-by-line switching pulse is shown in Fig. 5. This is positive-going with a peak amplitude of around 30V since the amplitude is based on 10V/cm. Duration is about 18μsec (since X is scaled to 20μsec/cm.).

The waveform in Fig. 6 shows the nature of the ident signal applied to the bistable circuit. The peaky half cycles are responsible for the sync action while the flatter half cycles result from d.c. restoration, necessary for correct working of the system. Overall amplitude is about 8V and the duration of the whole signal shown works out to about 200μsec.

The advent of the single-standard colour set has encouraged circuit simplifications, these improving the general reliability without detracting from the performance in any way. One scheme for reducing the complications around the ident circuits is shown in block form in Fig. 7. Here the ripple signal from the phase detector is amplified and then applied to a pulse clipper whose output operates a switched amplifier. This latter takes the place of the more conventional bistable circuit but is less involved because it employs only one transistor against the two of a bistable circuit (for further details see Fig. 5, page 76, November 1969).

In other words in this arrangement the ripple signal proper is processed to operate the PAL switch directly and because of this the line identification is automatic. The waveforms in this type of circuit are interesting. Fig. 8 shows the half line frequency processed ripple at 10V and 20μsec/cm. Fig. 9 shows the signal after emerging from the pulse clipper at 0·5V and 20μsec/cm. while the signal which actually operates the switching diodes is shown in Fig. 10 at 5V and 20μsec/cm.

Other Ripple Controls

Now what about the other controls provided by the ripple signal? These are not very difficult and the basic scheme of things is shown in the block diagram in Fig. 11. The essential function is rectification of the ripple signal to give a d.c. bias. Now although the phase detector is at all times fed with a sample locally-generated subcarrier signal, a ripple output is only created when the set is tuned to a colour transmission since as we have seen this arises from the bursts. Thus the bias required for the colour killer action is conveniently obtained by rectification of the ripple signal since this is present only on a colour transmission. This bias thus disappears on monochrome transmissions. On mono the requirement is for the chroma channel to be muted to avoid noise being processed by the chroma detectors and appearing as coloured snow on the black-and-white picture. The chroma channel is therefore designed so that one amplifier stage is always biased-off on mono and the channel thus open-circuit.

When the ripple signal appears on colour due to the swinging bursts, a d.c. bias is produced by the

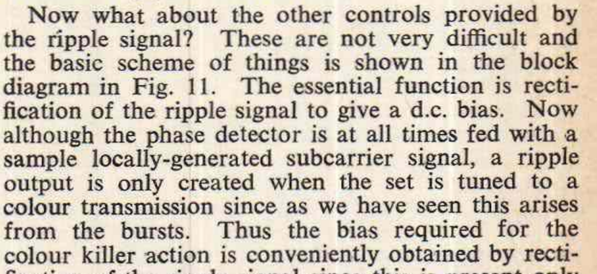

Fig. 11: Controls operated by the ripple signal.

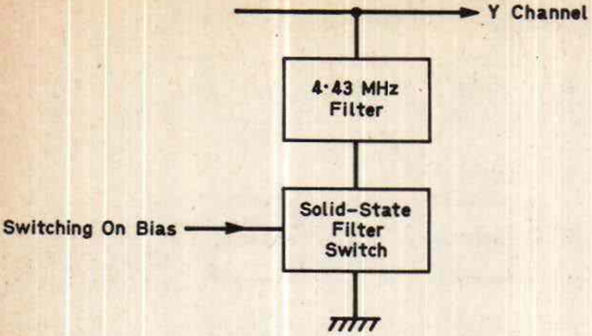

Fig. 12: Solid-state 4·43MHz luminance channel notch filter switch operated by rectified ripple.

colour killer rectifier and this is of such a polarity as to bias-on the chroma channel, allowing the chroma signals to pass through for processing by the detectors and PAL delay-line circuitry.

This same bias can also be used to operate a transistor or diode switch connected in the 4·43MHz notch filter circuit in the luminance channel. On mono this filter is undesirable since it removes some of the high definition Y information, while on chroma the filter is essential to avoid chroma-sound beat patterns as was explained in an earlier part. Thus the solid-state switch is connected in series with the filter as shown in Fig. 12. The switch is designed so that it is off (non-conducting) when there is no bias input. When bias is applied from the colour killer rectifier (that is when the set is tuned to a colour-encoded transmission) the switch conducts and the filter in the Y channel becomes active.

A separate rectifier—with a different time-constant output—can be used for the a.c.c., and since the ripple output is geared to the amplitude of the colour bursts the rectifier output rises and falls with chroma signal amplitude. This is just like an a.g.c. bias and is applied to an early stage in the chroma channel. The chroma channel also incorporates a manual gain control: this is the colour intensity or saturation control.

It is noteworthy that the ripple signal can fail at source (that is at the phase detector) due to severe mistuning of the local subcarrier generator tank circuit. This will give the symptom of total colour failure owing to the stage controlled by the colour killer failing to change from its biased-off state. Some colour killer circuits have a threshold preset control which regulates the chroma switch-on sensitivity. If this is too far advanced therefore a relatively weak colour-encoded signal will fail to yield colour at the set because it will not be strong enough to overcome the muting bias applied to the controlled stage. Should the preset be too far retarded on the other hand the chroma channel may switch on due to noise signals filtered by the 4·43MHz tuned circuits, giving coloured snow on monochrome reception. It may be necessary to find a compromise setting for this preset depending on the prevailing signal conditions.

RBM sets using the passive subcarrier generator system referred to in the previous two articles (Parts 8 and 9) obtain the necessary d.c. control potentials from a rectifier following the passive filter. A long time-constant is used for the colour killer and a shorter time-constant for the bistable inhibitor.

TO BE CONTINUED

NEXT MONTH IN

Practical TELEVISION

AERIALS FOR THE '70s

Aerials for the '70s are wideband u.h.f. ones and are already supplanting the familiar Band 1 and III arrays. Wideband working at u.h.f. brings a new set of problems: design techniques are changing and novel arrangements appearing. Front-to-back ratio is particularly important with the large number of u.h.f. stations sharing a limited number of frequencies, and it is essential that the set should see a resistive input over the bandwidth. The problems and solutions evolved are fully described.

FOCUS ON CHROMA CIRCUITS

Do you know exactly how a.c.c. circuits, colour-killers and burst-blanking arrangements operate? Next month a detailed look is taken at some representative colour TV chroma channels.

A SURPLUS I.F. PANEL FOR THE CONSTRUCTOR

An i.f. panel that is readily available on the surplus market is described—with full circuit—and suggestions given on how to use it and modify the a.f. and v.f. stages to obtain improved performance.

TRANSISTOR FIELD OSCILLATORS

The number of receivers using transistorised field timebases is steadily increasing and a number of new circuit techniques are found here. Next month we shall be taking a detailed look at transistor field oscillators including one using a device new to TV sets, the silicon controlled switch.

PLUS ALL THE REGULAR FEATURES

ORDER YOUR COPY ON THE FORM BELOW

TO.......................................
(Name of Newsagent)

Please reserve/deliver the MAY issue of PRACTICAL TELEVISION (3/6), on sale APRIL 17th, and continue every month until further notice.

NAME ....

ADDRESS..............................

....

EHT MULTIPLIERS

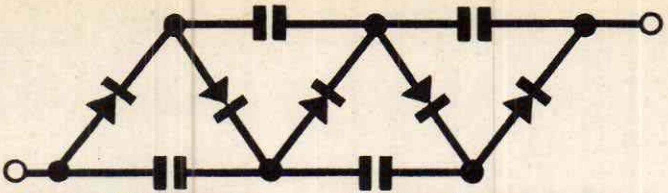

TELEGENIC

THERE are a number of advantages in using a voltage multiplier circuit for the derivation of the e.h.t. voltage for a television receiver—particularly a colour receiver. These however will be better understood after the operation of such circuits has been described.

Operation of a Voltage Multiplier

The simplest multiplier circuit of the type we are considering is the voltage doubler, the basic circuit of which is shown in Fig. 1. The input is a high-voltage pulse—the pulse present in the line output stage of a television receiver during line flyback. If the voltage pulse is positive, D1 conducts and C2 is charged to the peak voltage of the pulse. During the following scan period the input point is almost at chassis potential: as the potential at the junction of D1 and D2 is positive D2 then conducts and the full d.c. voltage appears across C1 which charges.

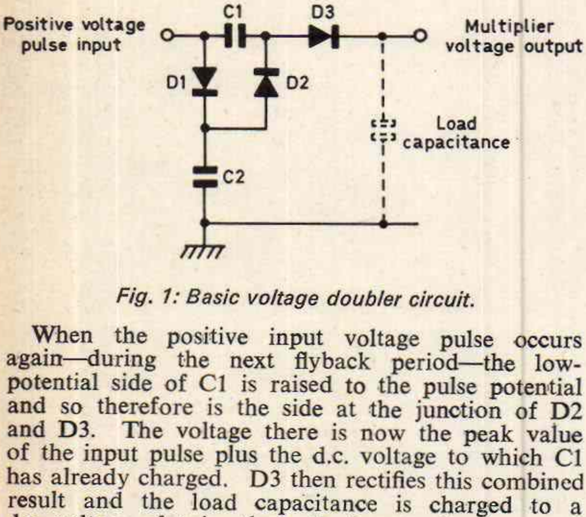

Fig. 1: Basic voltage doubler circuit.

When the positive input voltage pulse occurs again—during the next flyback period—the low-potential side of C1 is raised to the pulse potential and so therefore is the side at the junction of D2 and D3. The voltage there is now the peak value of the input pulse plus the d.c. voltage to which C1 has already charged. D3 then rectifies this combined result and the load capacitance is charged to a d.c. voltage of twice the pulse input voltage.

The construction of a voltage tripler is exactly similar except that a further stage is added, see Fig. 2.

Components Required

It is important to note that the process of producing the higher voltage is a process of *addition*, of adding the original voltage to itself. One stage will therefore give double the original voltage and two stages will give three times the original voltage, *not* four times as the name "voltage multiplier" might suggest. For this type of multiplier, using a voltage pulse as the driving source, a simple rule for the number of diodes required is $(2n-1)$ where n is the multiplication required. For a doubler then $n=2$ and the number of diodes required is 3. For a tripler $n=3$ and the number of diodes required is 5. The same law applies to the number of charging capacitors needed, but it must be remembered that the load capacitance in a television receiver is provided by the picture tube, either a monochrome or shadowmask c.r.t.

Practical Tripler Circuit

In the basic circuit shown in Fig. 2 the peak voltage across C1, C2 and C3 is the pulse input voltage while the peak voltage across C4 is twice this voltage. This is undesirable in a practical circuit because of the increased expense and the break from component standardisation. It is also desirable to have some form of control over the e.h.t. to allow for manufacturing tolerances and to simplify width control, and this is not readily available in the basic circuit.

E.H.T. Control

The simplest way of reducing the peak voltage across C4 is simply to return it to the junction of D1 and D2. The voltage then becomes just the pulse input voltage. E.H.T. control can be achieved by returning C2 not directly to earth but to a choice of tapping points on the line output transformer where either positive or negative voltage pulses are available which add to or subtract from the e.h.t. by a factor of two. Such a modified circuit is shown in Fig. 3.

Focus Potential

It is also generally convenient to derive the focus potential required for the picture tube from the tripler circuit. This can be taken from a potential divider connected to either the first multiplier (point X on Fig. 3) or the e.h.t. rail (point Y in Fig. 3). The former is more convenient and gives satisfactory focusing over the range of c.r.t. beam currents.

Circuit for a Colour Receiver

The shadowmask tube in a colour receiver usually has an e.h.t. rating of 25kV and with most tubes the absolute maximum e.h.t. permissible is 27·5kV. To generate 25kV the input pulse to the voltage tripler must have a peak value of about 8·4kV (to allow for small inefficiencies in the circuit). This puts the voltage rating of the charging capacitors (allowing for mains variation and regulation) in the tripler at say 10kV. The diodes used must also have this voltage capability and a forward current rating corresponding to the

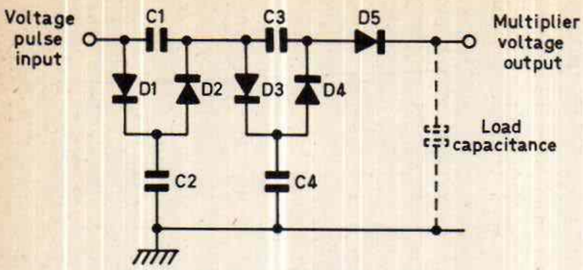

Fig. 2: Basic voltage tripler circuit.

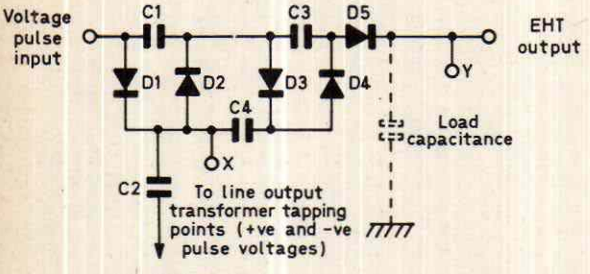

Fig. 3: Practical e.h.t. voltage tripler.

average beam current in the picture tube, which is about 1·5mA.

All this practical circuit has been combined by Mullard into a module for colour television receivers with the serial number LP1174/1. The circuit is as in Fig. 3, with capacitor values of 1·5kpF rated at 10kV and diodes type BY182.

Some receivers already use circuits of this type and it is expected that all eventually will. The Baird 700 series and the Sobell-GEC 1028-2028 series use modified versions. In both these latter chassis the diodes used are type BY140 and the capacitors in the multiplier are 1kpF. The Sobell-GEC receivers take the focus potential from the e.h.t. rail instead of from the first stage.

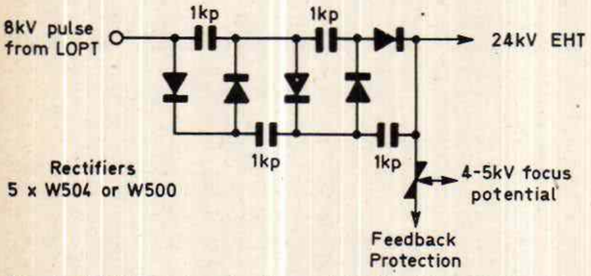

Fig. 4: E.H.T. tripler circuit used in the BRC 2000 series colour chassis.

A slightly different circuit is in use in the BRC colour chassis series 2000. Here (Fig. 4) the shunt capacitors are rearranged. The focus potential is again derived from the e.h.t. rail. The rearrangement of the capacitors has no effect on the basic circuit operation.

Monochrome Receiver E.H.T. Tripler

Except for the value of the e.h.t. voltage required, e.h.t. tripler arrangements for monochrome receivers are essentially the same as for colour. The e.h.t. is reduced by using a lower-voltage pulse from the line output transformer. Fig. 5 shows the BRC circuit used in receivers employing the BRC 970 and 1400 series chassis (i.e. a large range of Baird, Ferguson, HMV, Marconiphone and Ultra models). It can be seen that the circuit differs from the one used in the 2000 series colour chassis only in the type of diode used and the value of the capacitors. These change because of the lower current requirements from the e.h.t. supply.

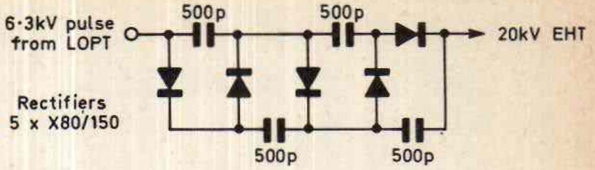

Fig. 5: E.H.T. tripler used in the BRC 970 and 1400 series monochrome chassis

Advantages of E.H.T. Triplers

The main advantage in using an e.h.t. multiplier circuit in a colour receiver is the removal of the need for shunt regulation of the e.h.t. supply since this involves the problem of screening the line output stage completely to prevent X-ray radiation. This screening also brings problems of spacing to prevent flashovers and ventilation problems, over 100W being dissipated within the screening can.

Next because of the lower peak voltages appearing on the line output transformer the e.h.t. overwind can be reduced in size and the core dimensions can also be reduced. This together with the fact that there is no e.h.t. valve rectifier and therefore no heater winding simplifies the construction of the transformer considerably, making it a compact item. And because the voltages on the line output transformer are considerably reduced it is less of a safety hazard.

The need for third harmonic tuning is also removed but as seen in *Line Output Stage Harmonic Tuning* (PRACTICAL TELEVISION—February 1970) fifth harmonic tuning is needed to ensure good e.h.t. regulation.

Servicing E.H.T. Tripler Assemblies

The effects of a failing diode in an e.h.t. tripler circuit are usually shown at high brightness levels. Line tearing on the raster takes place and often a "frying" noise can be heard. Blooming too can take place with changes in brightness and picture levels. The faulty diode *can* be replaced in such assemblies but this is usually a false economy, the current strain on the remaining diodes often being excessive so that failure of the other diodes follows shortly afterwards.

Capacitor breakdown will normally cause low e.h.t. and if allowed to persist may break down one or more of the diodes as well. Capacitor failure is less common than diode failure, and this may be fortunate since very few workshops are equipped to test high-voltage capacitors at their full working voltage

Because of these servicing problems it is common practice to replace the complete tripler assembly containing all the diodes and capacitors. In most receivers, e.g. the BRC chassis, the assembly or tray is easily detached for replacement. ■

STROBE-TRIGGER TIME

PART 1

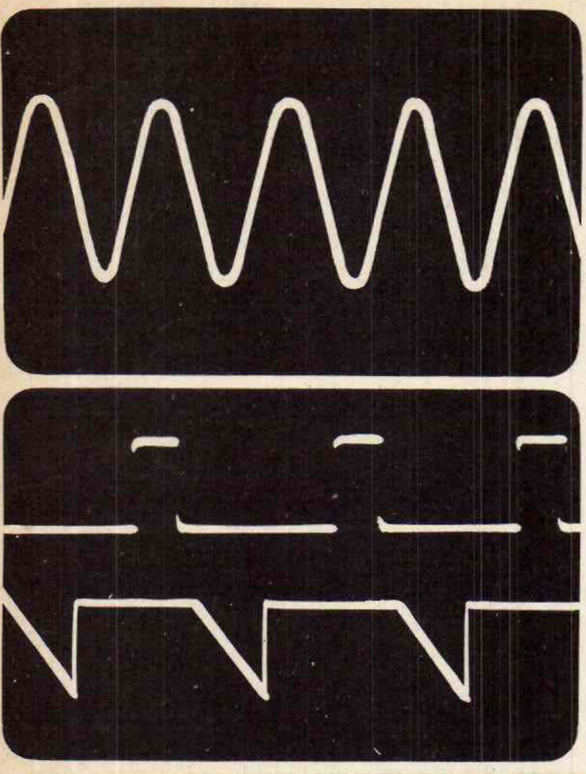

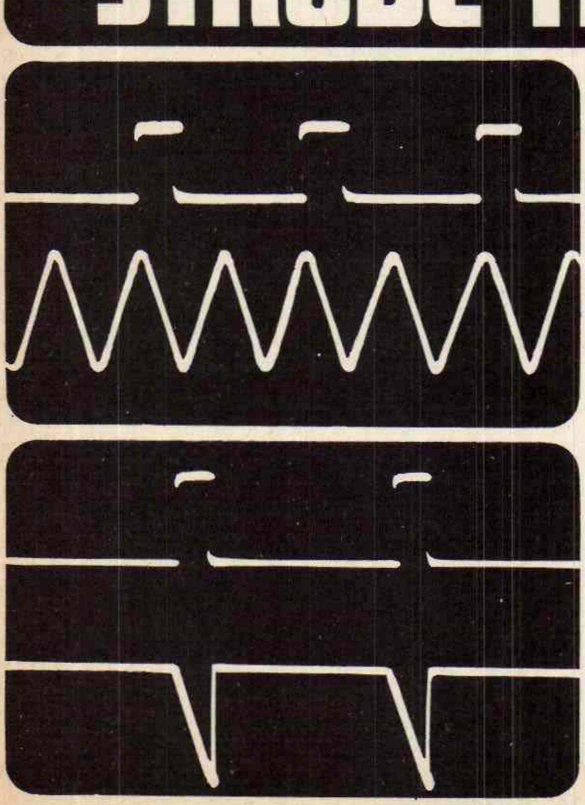

EVERY oscilloscope possesses a built-in timebase whose basic purpose is to deflect the spot at a variable steady rate from left to right across the screen. When the spot reaches the right-hand side of the screen it abruptly flies back to the left-hand side and then commences a new run across the screen. A simple free-running oscillator with sawtooth waveform fulfils this function. The frequency of this oscillator is adjusted so that it completes one cycle in a time very slightly longer than some small whole number of cycles of the waveform to be examined, which is applied as the vertical deflection signal. A small sample of this waveform is suitably amplified and distorted in the synchronising circuit whose output is applied to the sawtooth oscillator so that the flyback is made to take place slightly earlier than would otherwise have been the case automatically. This locks the period of the sawtooth oscillator to an *exact* whole number multiple of the signal waveform so that the latter now appears as a stationary trace. A synchronising circuit of this kind is also an essential feature of every oscilloscope. Facilities are usually provided for internal synchronisation on positive or negative flanks of the displayed signal. Often, as in the Videoscope MV3, facilities are also provided for synchronising with the mains frequency or with any independent external signal fed to a separate input socket.

The ordinary timebase as described is eminently suitable for a wide range of work with the oscilloscope but there are many instances where the serious user of an oscilloscope will feel the need for a more versatile timebase. To appreciate this it is first of all necessary to point out the basic limitations of the ordinary timebase.

The ordinary timebase is ideal as long as two basic conditions are satisfied. First the waveform to be examined must be strictly periodic, i.e. all successive cycles thereof must be identical in amplitude and timing. Secondly the briefest detail which happens to be of interest must be a reasonably large fraction of one cycle. Otherwise we are unable to resolve it properly as at least one complete cycle of the waveform must be displayed across the screen.

If either one or both of these conditions is not satisfied the ordinary timebase proves inadequate or incapable of displaying the event in question. Television waveforms are normally strictly periodic—at least as far as their pulse sections are concerned—but as these pulse sections are small fractions of the repetition period we run into difficulties with the second condition when trying to obtain detailed television pulse waveform displays with an ordinary synchronised timebase. We are then forced to include the much larger rest of at least one cycle in the display so that the pulse section is inevitably very small. It would be much better if we could choose the duration of the timebase sweep independently of the period of the signal waveform so that we can make it much shorter and thus display a correspondingly small portion of one cycle magnified across the full screen.

TRIGGER AND STROBE OPERATION

This can be achieved by either trigger or strobe operation. Strobe operation calls for much more complicated circuitry but is more versatile. The trigger function is realised with quite simple circuitry because it merely demands that the timebase oscillator must be incapable of running free of its own accord. The synchronising circuit is then designed to produce a series of jolts (trigger pulses) and in response to each one the timebase performs just one run from left to right on the screen and one flyback thereafter waiting for the next trigger pulse.

The transients occupying small phase angles of the waveform being examined are either on the flanks from which the trigger pulses are derived in the synchronising circuit or separated therefrom by a large fraction of a cycle. In the first case a large part of the transient has finished before the timebase stroke gets moving in response to the trigger pulse. In the second we are back to the same trouble as encountered with the ordinary synchronised timebase because we must make the duration of the triggered timebase run at least as long as the time from the trigger flank to the end of the transient.

BASE UNIT

Martin L. Michaelis M.A.

Many oscilloscopes in the medium price range incorporate switch facilities for synchronised or triggered operation of the internal timebase and the better class instruments use a delay line for the vertical signal so that the triggered timebase can get fully started before the transient sitting on it arrives at the vertical deflection plates. This certainly gets round the problem of early transients but is quite incapable of coping with late transients.

The method of dealing properly with all these situations is to employ a strobe timebase. This is basically a trigger timebase, in that the timebase oscillator is incapable of running alone, requiring one trigger pulse for each single stroke and flyback. However this trigger pulse is not taken directly from the synchronising circuit but via a continuously variable time delay. Thus we obtain primary synchronisation in the normal manner from prominent flanks of the signal being examined but are now free to make a timebase run of any desired brevity take place at any desired phase position in relation to the synchronising flank. Actuation of the trigger delay control (called the *strobe gate delay* control) moves the brief timebase sweep (called the *ramp*) to any desired phase position on the signal waveform. Thus any transient on this waveform, regardless of its position, can be brought to coincide with the strobe gate used to form the ramp so that it is magnified over the full screen (by choosing the duration of the strobe gate and ramp to correspond to the transient duration).

It is clear from this description that the basic function of a strobe timebase is one of *signal sampling*. This is exactly what an ordinary optical stroboscope does. It produces brief pulses of light, one for each revolution of the observed machinery, but of duration small compared to one revolution. This makes the rapidly rotating machinery appear stationary because we actually view it only for the same brief phase angle in each cycle. For convenience, the stroboscopic timebase is usually abbreviated to "strobe".

Before we can properly understand the design of the particular strobe timebase presented here it is necessary to consider the special problems and limitations of strobe operation in general practical terms.

An obvious restriction is imposed by the maximum available intensity of the c.r.t., because the strobe action takes place during a small fraction of the total time and the actual trace intensity is reduced accordingly. Most of the time the spot is waiting at the left side of the screen until the next delayed ramp arrives at the X-deflection plates. If the signal waveform is sinusoidal or devoid of sharp flanks a more or less uniform vertical line will be traced at the left of the screen. This must be turned up to such high intensity in order that the brief transient display during the ramp assumes sufficient intensity that halo-effects obscure the transient display again. Worse still, if the signal waveform is pulsed, as is mostly the case in television work, one or more brilliant spots appear in a vertical row at the left of the screen. These soon burn the screen and even if they are moved off the screen with the horizontal shift control this greatly aggravates the halo-effect through general electron scatter in the region of the c.r.t. screen.

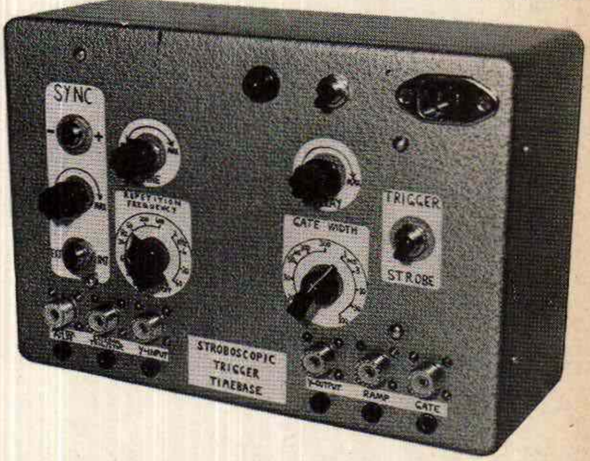

Thus an oscilloscope must be fitted with an intensity-modulation system for strobe timebase operation. The strobe timebase unit must supply a *strobe gate pulse* in addition to the ramp. The strobe gate pulse possesses exactly the same duration as the ramp and is accurately coincident with it so that it can be applied to the c.r.t. grid to produce maximum intensity only whilst the ramp is present, the beam resting below cut-off at all other times. Thus the basic requirements for strobe operation of the oscilloscope

★ components list

Capacitors:

C1a	0·68 μF 60V microfoil
C1b	0·22 μF 60V microfoil
C1c	0·068 μF 250V microfoil
C1d	0·022 μF 250V microfoil
C1e	6800pF 250V microfoil
C1f	2200pF 250V microfoil
C1g	680pF 500V ceramic
C1h	220pF 500V ceramic
C1i	47pF 500V ceramic
C1j	22pF 500V ceramic
C2a	3·3 μF 60V microfoil
C2b	1 μF 60V microfoil
C2c	0·33 μF 60V microfoil
C2d	0·1 μF 250V microfoil
C2e	0·033 μF 250V microfoil
C2f	0·01 μF 250V microfoil
C2g	3300pF 250V microfoil
C2h	1000pF 250V microfoil
C2i	220pF 500V ceramic
C2j	100pF 500V ceramic
C3	100 μF 35V El.
C4	100 μF 35V El.
C5	100pF 500V ceramic
C6	100 μF 35V El.
C7	0·1 μF 400V microfoil
C8	5pF 500V ceramic
C9	5-15pF ceramic trimmer
C10	1·5 μF 60V microfoil
C11	100 μF 35V El.
C12	100 μF 35V El.
C13	0·1 μF 250V microfoil
C14	0·1 μF 250V microfoil
C15	0·1 μF 250V microfoil
C16	100 μF 35V El.
C17	0·1 μF 250V microfoil
C18	3·3 μF 60V microfoil
C19	100 μF 35V El.
C20a	1000pF 250V microfoil
C20b	2200pF 250V microfoil
C20c	3300pF 250V microfoil
C20d	4700pF 250V microfoil
C20e	0·01 μF 250V microfoil
C20f	0·033 μF 250V microfoil
C20g	0·1 μF 250V microfoil
C20h	0·33 μF 60V microfoil
C20i	1 μF 60V microfoil
C20j	3·3 μF 60V microfoil
C20k	10 μF 60V microfoil
C21	0·1 μF 250V microfoil
C22	100 μF 35V El.
C23	100 μF 35V El.
C24	100 μF 35V El.
C25	0·22 μF 100V microfoil
C26a-k	as C20a-k
C27	100 μF 35V El.
C28	1 μF 100V microfoil
C29	1000 μF 35V El.
C30	1000 μF 35V El.
C31	1000 μF 35V El.

Resistors:

R1	100k Ω
R2	2·2k Ω
R3	4·7k Ω
R4	10k Ω
R5	33k Ω
R6	22k Ω
R7	1k Ω
R8	1k Ω
R9	68 Ω
R10	1·5k Ω
R11	220k Ω
R12	4·7k Ω
R13	27k Ω
R14	100k Ω
R15	100k Ω
R16	220 Ω
R17	22k Ω
R18	1k Ω
R19	1k Ω
R20	10k Ω
R21	22k Ω
R22	1k Ω
R23	470 Ω
R24	4·7k Ω
R25	820 Ω 1W
R26	150 Ω
R27	15k Ω
R28	100 Ω
R29	3·3M Ω 1W
R30	1·5M Ω 1W
R31	15k Ω
R32	1M Ω
R33	5·6k Ω
R34	1k Ω
R35	100k Ω 1W
R36	2·7k Ω
R37	2·2k Ω
R38	1M Ω
R39	240k Ω
R40	33k Ω
R41	100 Ω
R42	1k Ω
R43	1k Ω
R44	1M Ω
R45	4·7k Ω
R46	4·7k Ω
R47	100 Ω
R48	4·7k Ω
R49	1M Ω
R50	4·7k Ω
R51	1k Ω
R52	47k Ω
R53	2·2k Ω
R54	56k Ω
R55	2·2k Ω
R56	470 Ω
R57	220 Ω
R58	150k Ω
R59	15k Ω
R60	4·7k Ω
R61	4·7k Ω
R62	470 Ω
R63	68 Ω
R64	1k Ω
R65	1k Ω
R66	10k Ω
R67	1·5k Ω
R68	15k Ω
R69	220 Ω
R70	10k Ω
R71	10k Ω
R72	8·2k Ω
R73	68 Ω
R74	15M Ω
R75	4·7M Ω
R76	1k Ω
R77	1k Ω
R78	68 Ω
R79	1·5k Ω
R80	1k Ω
R81	3·9k Ω
R82	10k Ω
R83	100k Ω
R84	220 Ω 1W

All ½W carbon 10% unless otherwise stated

Potentiometers:

VR1	250k Ω
VR2	100k Ω
VR3	10k Ω
VR4	5k Ω skeleton
VR5	25k Ω skeleton
VR6	100k Ω skeleton

All linear

Semiconductors:

Tr1	β500
Tr2	β30
Tr3	β30
Tr4	β500
Tr5	β300
Tr6	β300
Tr7	β30
Tr8	β30
Tr9	β30
Tr10	β30
Tr11	β500
Tr12	β500
Tr13	β500
Tr14	β500
Tr15	β500
Tr16	β30
Tr17	β75
Tr18	β30
Tr19	β30
Tr20	β30
Tr21	β30
Tr22	β30
Tr23	β30
Tr24	β30
Tr25	β30
Tr26	β500
Tr27	β500

All silicon npn types with approximate β values as stated. Examples:

β30	2N1613
β75	BSY76
β300	BC107B
β500	BC108C

D1-D7	Small silicon diodes, e.g. BAY20
D8, D11	Small germanium diodes, e.g. OA95
D9, D10	As D1-D7
D12a-d	Silicon l.t. rectifiers e.g. BYY31

Miscellaneous:

F1	0·5A for printed circuit
LP1	Mains neon pilot light
S1	2 pole, 11 way rotary
S2	D.P.D.T. toggle
S3	S.P.D.T. toggle
S4	S.P.D.T. toggle
S5	2 pole, 11 way rotary
S6	D.P.S.T. toggle
Sk1-Sk6	60 Ω coaxial sockets paired with one wander plug socket each (chassis)
Sk7	Panel-mounting mains connector
T1	Mains transformer 12-0-12V 150mA or near equivalent.

Three round knobs, two pointer knobs, material for printed circuit, wiring etc., metal cabinet with front panel about 8 × 12 in. and of depth about 4in.

are an intensity-modulation input to which the strobe gate pulse is fed and an external X-deflection input to which the ramp is fed. The same requirements hold for direct trigger operation of course.

The strobe timebase is no longer subject to the minimum observable phase angle restriction of the ordinary synchronised timebase, nor to the phase position restriction of the triggered timebase, but is more than ever subject to the condition that the observed waveform must be strictly periodic. With the strobe timebase we are magnifying a small selected part of one cycle of the signal waveform to fill the screen, and if there is even slight variation between successive cycles this inevitably leads to severe jitter or blurring of the strobe display.

Thus we see that the practical limits of maximum

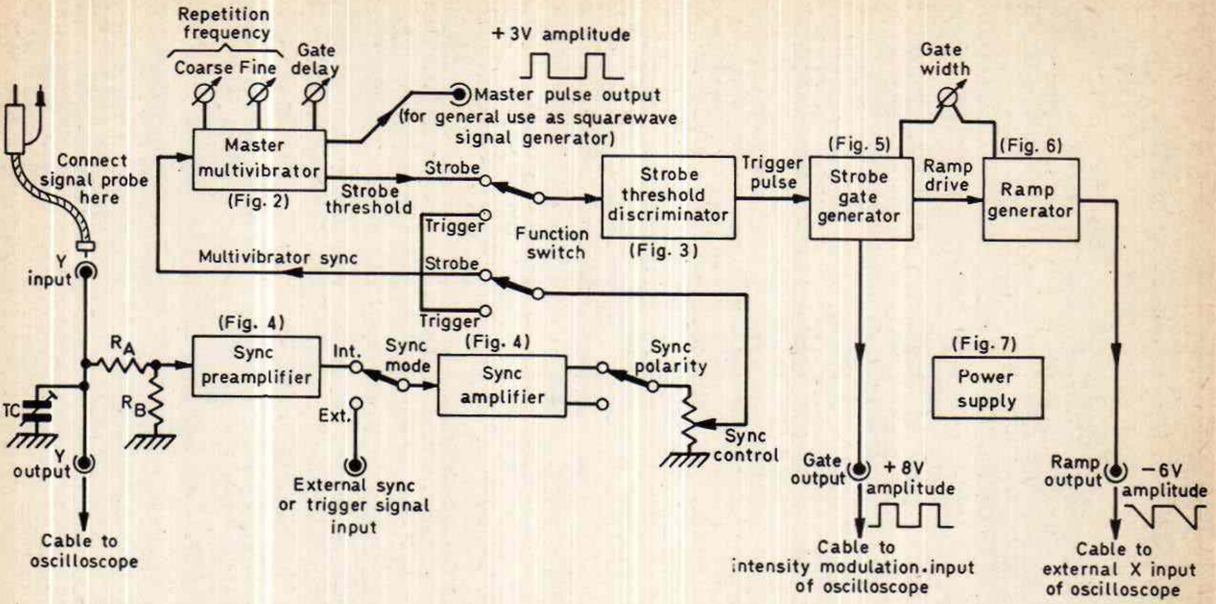

Fig. 1: Block diagram of the strobe-trigger timebase. Sensitivity (sync control at maximum) 50mV p-p at Y or external sync/trigger input. Operates on sinewave or pulse inputs equally well. Trigger 0-50kHz (trigger function); sync 10Hz to above 1MHz (strobe function).

usable magnification with a strobe timebase are set by the maximum available c.r.t. spot intensity and by the residual jitter produced above all by ripple in the power supplies. Elaborate commercial oscilloscopes with strobe timebases employ highly stabilised power supplies, low-noise circuitry (because random noise, in giving a corresponding trigger position uncertainty, is another source of jitter) and high-intensity cathode-ray tubes with large post-deflection acceleration voltages. It is sensible practice to devise a practical circuit in which jitter and intensity both impose their limitation at about the same strobe magnification factor. This turns out to be about twenty with a simple c.r.t. such as the DG7-32 used in the Videoscope MV3.

We can establish by subjective experience that a horizontal jitter of 2% of the screen width is quite acceptable with the DG7-32, so that with a strobe ratio of 20:1 being acceptable for the intensity considerations with this tube (at least 1/20 of a signal waveform cycle must appear on the ramp if the trace intensity is to remain acceptable) the total jitter must not exceed one thousandth of the signal period. It is in fact quite easy to obtain this degree of jitter stability with almost any reasonable circuit operated with a well smoothed mains power supply. It was not found necessary to stabilise the power supply nor to adopt special low-noise circuits. However a strobe ratio of about 20:1 is the largest obtainable with non-critical circuits.

As soon as we introduce high-intensity cathode-ray tubes with post-deflection acceleration, with which strobe ratios of several hundred are readily possible on intensity considerations, it becomes extremely difficult to exploit these ratios by adequate suppression of jitter. Thus it is a difficult proposition for example to obtain a jitter-free strobe ratio selecting one line at a time out of the television field. But this is hardly necessary for actual experimental needs. All we desire is to look at the blanking intervals and the various transients whose phase ratios are comparable to the blanking interval phase ratio: all are well within the realisable strobe magnification range of up to 20 with the instrument described in this article used in conjunction with the Videoscope MV3 or any similar small oscilloscope. Just pause to consider that a strobe ratio of 20 means that we obtain the same effect as if using an ordinary synchronised timebase with a mammoth cathode-ray tube whose screen diameter is twice that of the domestic television receiver! Thus the resolution of detail with this relatively simple stroboscopic timebase unit is very great and should be found to meet even rather exacting requirements in television experimenting.

NON-PERIODIC REPETITIVE WAVEFORMS

Sometimes waveforms are encountered which are repetitive, but at irregular intervals, so that the waveform is non-periodic. It may or may not possess a definite mean frequency. A typical example of a non-periodic repetitive waveform without definite mean frequency is sparking on faulty components. Typical examples where a definite mean frequency exists are pulse sequences from nuclear radiation detectors or the television waveform of a microscopic blood or pollen sample scanner used for electronic particle counting.

A strobe timebase is unsatisfactory for displaying such signals but a directly triggered timebase can cope with even grossly aperiodic waveforms. Thus simple additional switching has been added to the unit to permit straightforward trigger operation if required. In a number of cases it is immaterial whether the strobe or the trigger mode is used. This is true whenever the transients it is desired to display are relatively long compared to the sharp flank of the signal which produces them and it is tolerable if the initial portion is missed. The trigger

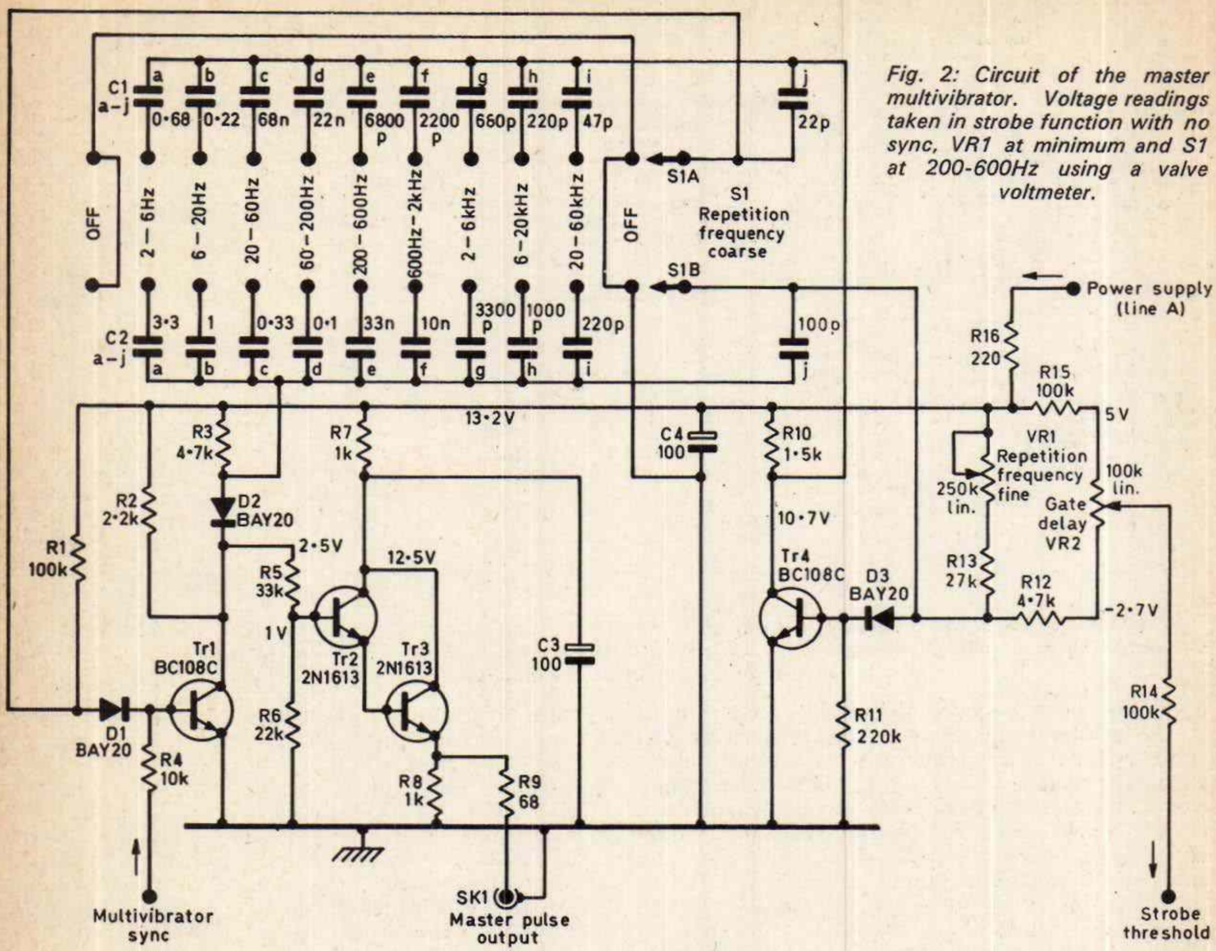

Fig. 2: Circuit of the master multivibrator. Voltage readings taken in strobe function with no sync, VR1 at minimum and S1 at 200-600Hz using a valve voltmeter.

mode is simpler to operate so that in these cases it may be desirable to switch over to direct trigger for convenience. However the instrument uses a strobe chain design giving optimum synoptical operation in the strobe mode, too.

SYNOPTICAL OPERATION

There are several possible approaches for realising the described strobe timebase function. One method is to use a strobe gate delay circuit whose delay time is quite independent of the signal waveform. This usually gives least jitter and is therefore imperative if the c.r.t. intensity permits large strobe ratios and one desires to exploit these. The disadvantage of this system, which we will call the independent strobe delay generator, is that the strobe gate delay control does not give a ramp phase independent of the signal frequency, and residual jitter is a function of frequency rather than phase angle. Both effects subjectively confuse operation because they imply a need for *mutual* adjustment of *three* manual timing controls, the primary signal synchronisation, the independent strobe gate delay and the ramp duration.

These three parameters have to be adjusted in any strobe timebase system whatever its detailed design may be, but if we dispense with an independent strobe delay generator, using instead a primary synchronised master oscillator and threshold trigger for deriving the strobe delay, the phase position of the ramp for a given setting of the strobe gate delay control is largely independent of the signal frequency. This enormously simplifies operation so that this arrangement has been adopted here. It tends to aggravate jitter, because the delayed trigger position at which the strobe gate and ramp commence lies on a rather gradually rising ramp of the primary synchronised master oscillator instead of at a sharp pulse flank of an independent strobe delay generator. Any noise or ripple clearly produces greater time spread of a given trigger threshold with a ramp compared to a steep flank. However for the maximum strobe ratio of 20 usable with the DG7-32 the difference is not decisive, so that the use of a primary synchronised master oscillator was the best choice for operating convenience.

BLOCK DIAGRAM

Fig. 1 shows the block diagram of the complete stroboscopic timebase unit. For internal synchronisation a sample of the signal being examined is taken off from a large ratio resistive voltage divider so that the signal itself cannot be distorted. A sync preamplifier provides the necessary gain to compensate for this attenuation. The output of the

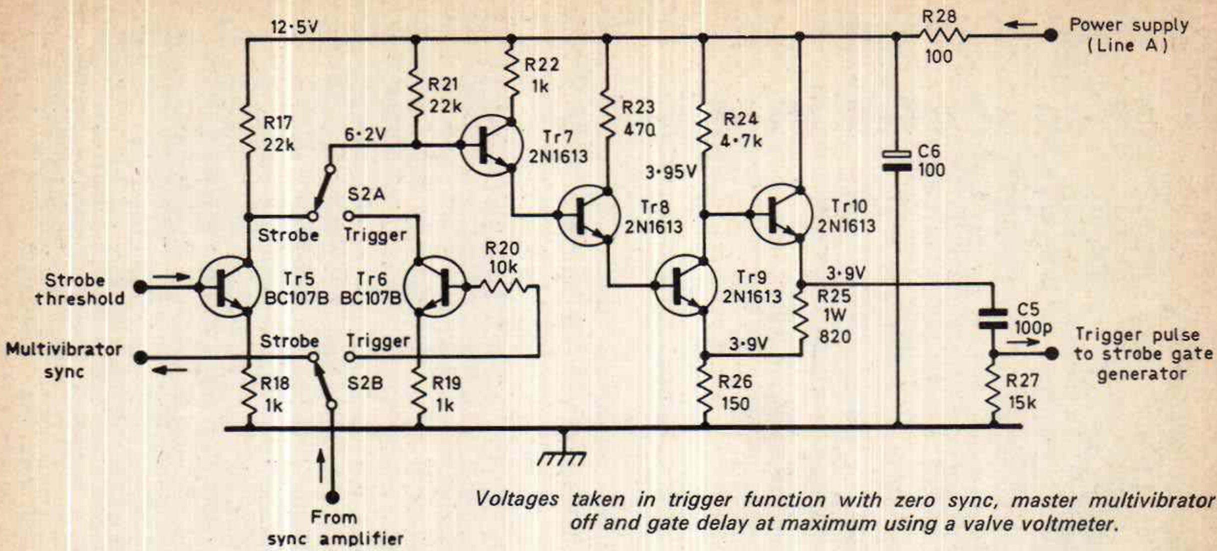

Voltages taken in trigger function with zero sync, master multivibrator off and gate delay at maximum using a valve voltmeter.

Fig. 3: Circuit of the strobe threshold discriminator.

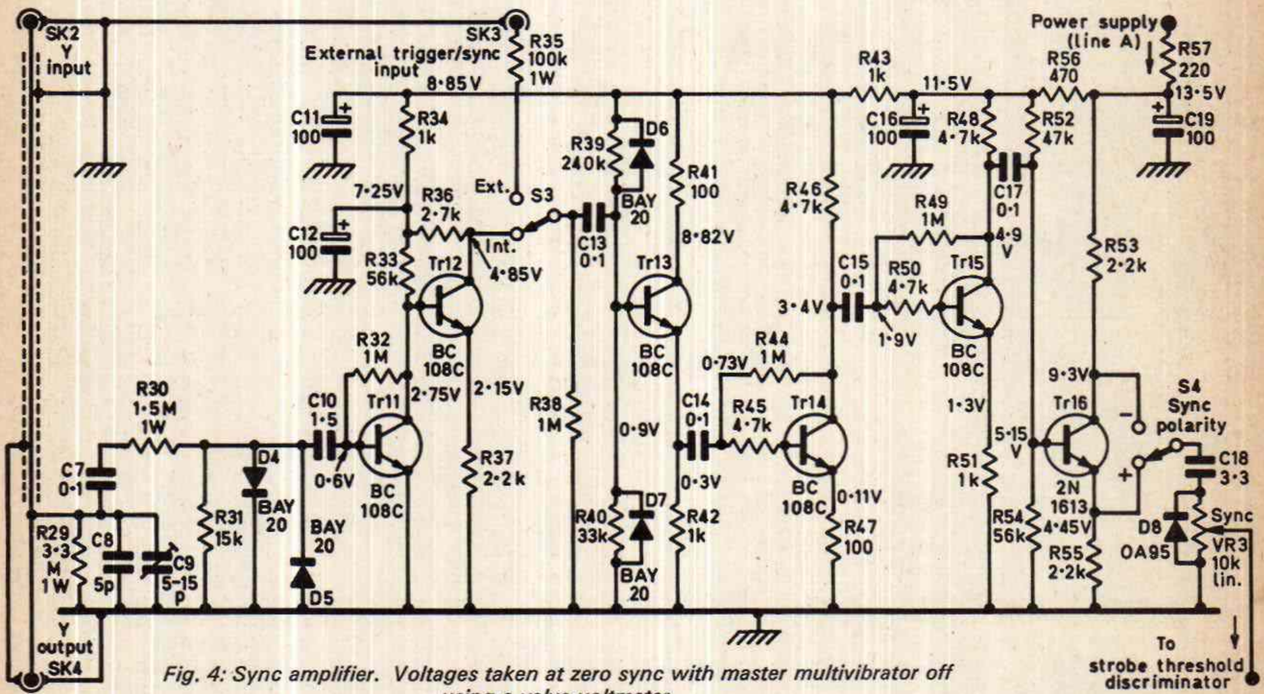

Fig. 4: Sync amplifier. Voltages taken at zero sync with master multivibrator off using a valve voltmeter.

sync preamplifier, for internal sync or external sync directly, is switch-selected as input for the main sync amplifier. The sync polarity switch and the sync amplitude control are situated at the output of the main sync amplifier, followed by the trigger/strobe function switch.

In the trigger setting the sync signal is fed straight to the strobe threshold discriminator in a manner producing a response with no significant time delay so that the strobe gate and ramp commence at once and run for the time selected by their gate width control.

In the strobe function the sync output signal is first used to synchronise a master multivibrator. The latter is free-running like an ordinary timebase and is synchronised in the same manner. It produces a squarewave as well as a form of sawtooth (ramp) waveform. The squarewave is available externally and the ramp is used to derive the variable time delay for the strobe gate. For this purpose the ramp is fed to the base of a transistor whose d.c. bias is varied with the gate delay control so that cut-on of the transistor takes place at an earlier or later stage of the ramp. When the transistor cuts on it produces the strobe trigger pulse at the output of the strobe threshold discriminator, which causes the strobe gate and ramp to commence.

TO BE CONTINUED

Getting started with CLOSED-CIRCUIT TV

PART 6

I.R.SINCLAIR

THE previous parts of this series dealt with the individual items which make up a CCTV installation typical of amateur practice. Equipment such as videotape recorders, intersync networks, split-screen effects boxes etc. has been excluded on the grounds that it belongs to the world of professional CCTV where money is rather less limited.

When the items which make up a CCTV system are put together however troubles inevitably arise despite the tests which may have been carried out on each item, and problems appear which may have been given no previous thought. One such problem is that of *illumination*.

Illumination

If the CCTV operation is to take place outdoors in daylight then problems of illumination are purely problems of excessive illumination, that the lens cannot be stopped down enough to avoid a "peeling" effect in the white areas of the picture. This peeling effect is caused by the inability of the electron beam to charge the vidicon target, the result in turn of the very low resistance of the target in conditions of high illumination. The remedy is to fit a neutral grey filter in front of the lens to cut down the amount of light. Such filters, available from photographic suppliers, are calibrated according to the factor by which they attenuate the light, a 4X filter allowing a quarter of the light through, a 10X one only a tenth and so on. On overcast days less attenuation will be required so that at least two filters should be carried. If the camera is fitted with automatic target (contrast) control this should be switched off during setting up as the automatic control makes it difficult to decide whether or not a filter is suitable (compare the effect of shorting out the a.g.c. when aligning a radio receiver).

For indoor televising however some form of artificial lighting is generally necessary. For most purposes it is unnecessary to have a detailed knowledge of illumination theory, but two basic laws must be understood. One is that the amount of light given out by a lamp is proportional to its wattage (other things being equal), so that a 200W bulb gives out twice as much light as a 100W one. If one is frosted the other is assumed to be frosted etc. This is upset if we try to compare frosted bulbs with clear ones, or bulbs in a reflector with bulbs in an ordinary holder. The use of fluorescent lighting is inadvisable because of the flicker at mains frequency which will not be in phase, unless accidentally, with the field scan of the camera.

The other law is that the amount of light falling on a surface from a lamp decreases as the square of the distance, so that if a certain light level is achieved with a lamp 4ft. from an object the light level will be only a quarter of that amount if the lamp is moved to 8ft. away and will fall to a ninth with the lamp 12ft. away.

This can be summed up in the formula

$$I=C/r^2$$

where I is the illumination, C is the illuminating power of the lamp and r is the distance from lamp to object. If the object is a flat sheet and the line drawn from the lamp to the centre of the sheet is not at right angles to the sheet but at some angle θ degrees then the formula becomes

$$I=C \cos \theta/r^2.$$

This does not hold good at short distances if reflectors are used.

The snag now is to find what illumination on the object will give the illumination on the faceplate of the vidicon which the manufacturers specify, and to find what lighting is required for this level of illumination. In doing this we have to be guided partly by formulae, partly by rule of thumb and partly by good luck.

The illumination required at the faceplate of the vidicon for studio-quality pictures is 100 *lux*, the lux being the unit of illumination, although some older units are still to be found quoted in some manufacturers' leaflets. This corresponds to 100 *lumen* falling on each square metre of surface, the lumen being a unit which measures the amount of light flowing in a beam of light (as the ampere measures the amount of electrical charge flowing per second in a wire). The scene illumination required to give this amount on the faceplate of the vidicon is equal to

$$(4f^2\times 100)/KT$$

where f is the f number of the lens stop (see Part 2), K is the reflection factor for the material (0·9 for white, 0·05 for black) and T is the transmission factor of the lens, usually about 0·85. The result is the required illumination of the scene in lux.

For "industrial grade" pictures less than ⅕ of this illumination is acceptable, which is fortunate because at a lens stop of *f*5·6 the above formula requires an illumination of about 12,000 lux. By comparison if all the light given out by a 100W lamp could be focused on an area of one square metre the illumination would be about 1,000 lux—hence the impression which every visitor to a TV studio gets of a vast array of lights.

Illumination on the cheap can be provided by car headlamps, the bulbs of which have a long life even when run at a voltage rather higher than the nominal 12V. Most lamps used for studio use are arranged so that the filament runs hotter than usual so that

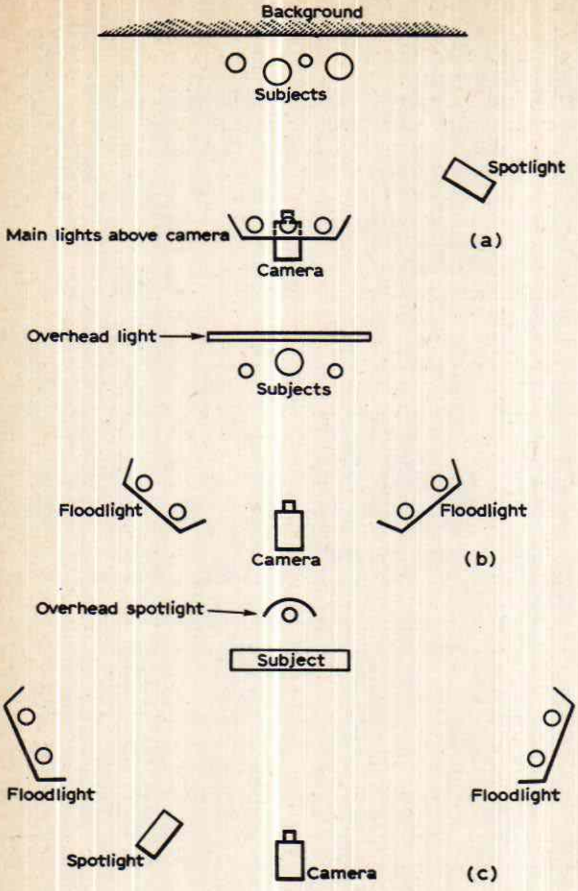

Fig. 1: Recommended lighting arrangements.

the colour of the light is more suitable, containing a higher percentage of blue and a lower percentage of red than bulbs run at ordinary temperatures. The difficulty with car headlamp bulbs is that 12V is required so that large transformers and heavy gauge wiring are needed if several lamps are to be run. This has to be balanced against the cost of reflectors for larger bulbs and the short life of alternative arrangements such as projector bulbs, though a couple of slide projectors can provide a very acceptable illumination with a bulb life of about 50 hours.

The arrangement of lighting should follow the suggested layouts of Fig. 1.

In many cases existing room lighting must be used and there is no option but to use the lens wide open and to suffer a picture of poor quality.

Scan Failure Protection

In monitors automatic scan failure protection is obtained to some degree by the dependence of the e.h.t. generating system on the line scan, but no such protection exists in a camera unless it is designed in. Protection is especially important where the camera uses driven timebases which do not operate in the absence of sync, or when the sync is generated remotely from the camera; in any case however, the vidicon is an expensive item which should be protected as far as possible.

In some designs the vidicon grid is normally biased off except during line periods (when an "unblanking" pulse is fed in) but the pulses used are often derived from the syncs rather than from the timebases and so no protection is afforded against timebase failure not caused by sync failure.

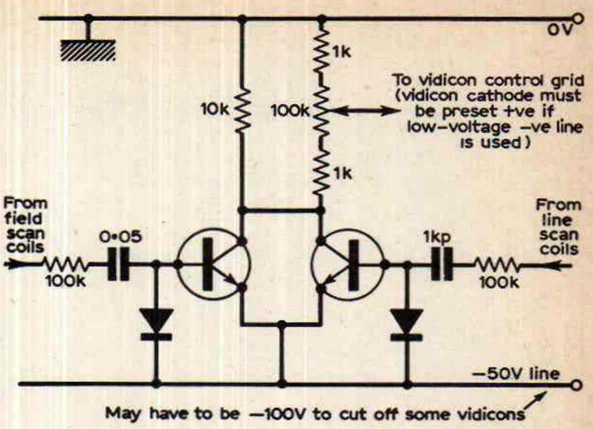

Fig. 2: Typical scan protection circuit. The transistors must have a high Vce rating—BSY79 or similar.

One method of scan failure protection is outlined in Fig. 2. The scan voltages are rectified and each used to bias off a transistor, the two collectors being connected to a common load resistor. In the event of failure of one scan one transistor will conduct, sending the collector voltage negative. Thus if the collector load is part of the vidicon grid bias network the vidicon will be biased off when failure of either or both scans occurs. This scheme requires that all blanking or bright-up pulses should be fed to the cathode of the vidicon—where they are more efficient anyway.

Checking Out the System

If the monitor is a modified TV set its operation can be checked using received TV signals. If a video monitor is being used it may be possible to isolate the chassis of another TV set from the mains and wire the output of its detector to the monitor, thus providing a video signal from a transmitted programme. Fig. 3 shows the set-up required. Either way the performance of the monitor should be checked without having to use the output of the

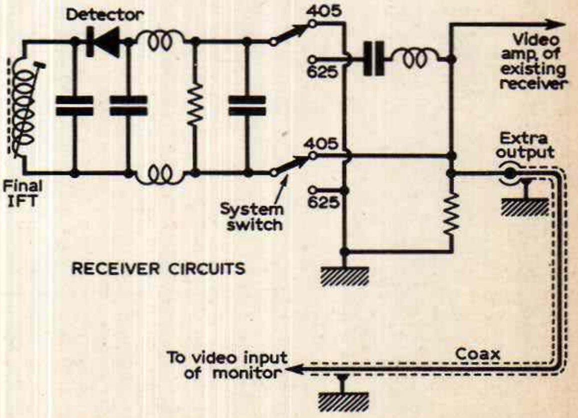

Fig. 3: Typical means of connecting a 405/625-line receiver (isolated from the mains) to a monitor.

CHART 1: NO IMAGE

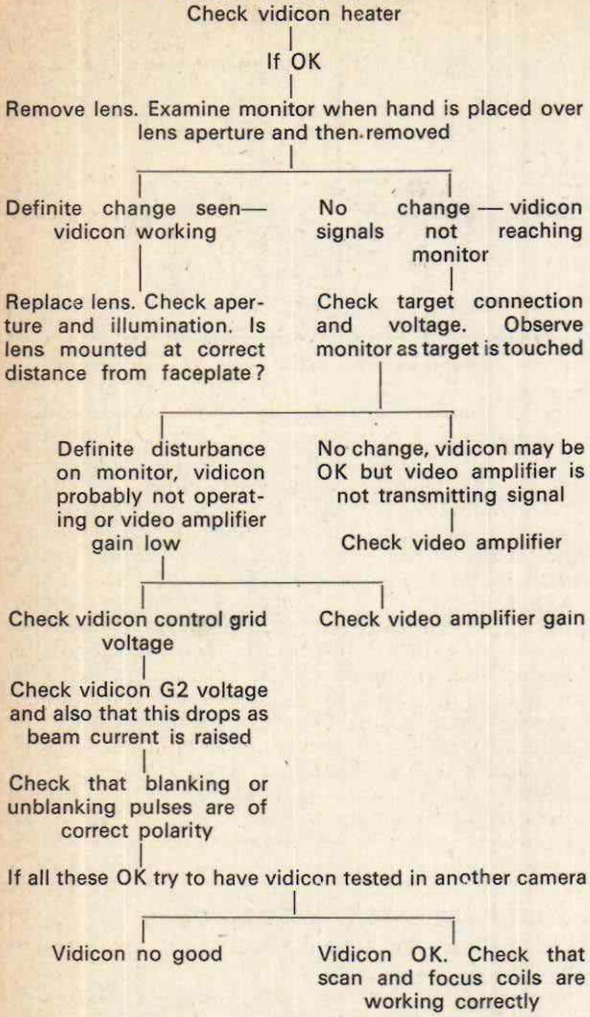

Check vidicon heater

If OK

Remove lens. Examine monitor when hand is placed over lens aperture and then removed

Definite change seen—vidicon working

Replace lens. Check aperture and illumination. Is lens mounted at correct distance from faceplate?

No change — vidicon signals not reaching monitor

Check target connection and voltage. Observe monitor as target is touched

Definite disturbance on monitor, vidicon probably not operating or video amplifier gain low

Check vidicon control grid voltage

Check vidicon G2 voltage and also that this drops as beam current is raised

Check that blanking or unblanking pulses are of correct polarity

If all these OK try to have vidicon tested in another camera

Vidicon no good

Vidicon OK. Check that scan and focus coils are working correctly

Check video amplifier gain

No change, vidicon may be OK but video amplifier is not transmitting signal

Check video amplifier

Note: The above assumes that the monitor is working correctly and that all cables are correctly connected.

camera. If dot-and-bar generators are available of course such expedients are not necessary.

Checking a newly built or newly acquired camera takes considerably longer. The first golden rule is never on any account put a vidicon in a camera until every circuit has been proved. With the vidicon still safely in its box, switch the camera on (sync also if separate syncs are used) and check the following:

(a) Vidicon heater voltage.

(b) Scans, using an oscilloscope to check the scan time and amplitude.

(c) Other vidicon operating voltages, especially the control grid bias. Check that the variable voltages vary smoothly over their range; a high-resistance meter or valve voltmeter is needed.

(d) Video amplifier, using the oscilloscope and any convenient signal source such as the output of an oscillator attenuated to about 0·1V and with 100kΩ in series.

This done the camera can be switched off, the vidicon inserted with the beam current (control grid bias) control set to lens cut-off, the target voltage set as low as the control permits and the lens capped. The camera is then connected to the monitor, switched on and allowed to warm up for five minutes during which it should be watched carefully for any signs of distress. This warm up period is to stabilise conditions in the vidicon and in its scan and focus coils and is well worth observing even if it is possible to operate a vidicon camera from cold in a much shorter time.

While the system is warming up the oscilloscope should be connected to the video output so that the video waveform can be monitored and set to the standard value of 1V peak-to-peak (plus 0·3V of sync if this is mixed with video) and the monitor set so that the raster is just visible with the contrast control about three-quarters turned up. At this stage the oscilloscope should show sync pulses if composite video is being used. If separate syncs are used the oscilloscope should be temporarily unhooked to check that sync pulses are arriving at the monitor. Check in either case that the monitor is locking by waggling both the hold controls in turn and checking that the monitor goes in and out of sync.

If all is well set the camera lens wide open and work in normal room lighting. Uncap the lens and raise the target volts to about three-quarter of maximum voltage (this control may be labelled "sensitivity"). Bring up the beam current by the control grid bias control, often labelled "beam", until an image of some sort appears on the monitor.

If there is no image at this stage, see Chart 1.

Adjust the lens focus and beam focus controls alternately until the picture is as clear as possible and check the monitor focus. Turn the beam control down so that any further decrease causes white areas to peel, looking grey. Adjust the target control so that satisfactory contrast is obtained without excessive noise. If good contrast can be obtained only with excessive noise and the lens aperture is wide open, more illumination is needed.

Chart 2 is for fault-finding image defects at this stage.

Using Test Cards

Ideally the whole system should be checked against a well-illuminated test card consisting of a 10 × 8in. slide in an illuminated holder or a well lit poster reproduction of the test chart. A good substitute for amateur use is a newspaper, illuminated by two 150W lamps in reflectors each about 3ft. away, placed at a distance from the camera such that the monitor picture is life size, i.e. the length of a line of print on the monitor is the same as its length on the paper. The small print of front page stories then gives a resolution test (if you use *The Guardian*!) of about 350 lines per picture height and enables linearity to be tested as well. White-after-black or black-after-white due to video amplifier ringing or unmatched cables shows up on the large print of the headlines, and any CCTV system should be able to transmit a newspaper photograph without noticeable loss of definition.

For systems using a wide bandwidth one ingenious method consists of taking a photograph on 35mm. film of any object with regular spacing (teeth of a comb, a fence etc.). The negative is mounted in a slide frame and a projector used to throw the image

CHART 2: PICTURE FAULTS

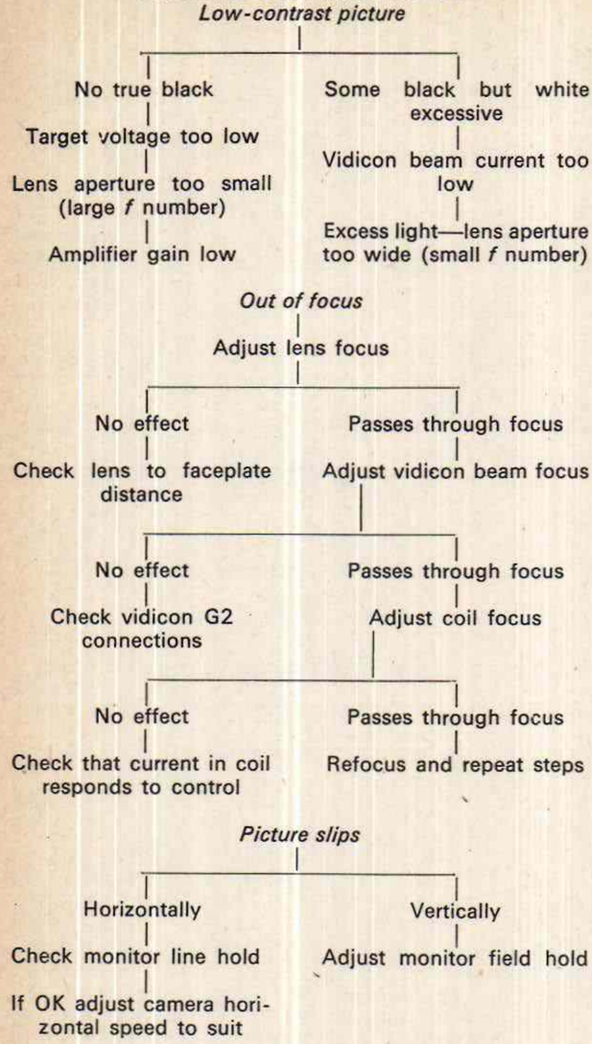

on a screen. The image should be of some standard size, perhaps 25 × 30in., and the screen should be matt white, not reflective. Looking at the projected image, count the number of teeth, fence posts etc. per inch and calculate the number in 25in., this being the picture height. If the image is now televised so that the 25 × 30in. just fills the screen the resolution is given by the number of lines per picture height, assuming that the "line" objects can be resolved. If the image is now shrunk by moving the projector nearer the screen the resolution required to see the objects is greater. If we started at 200 lines per picture height and then made the image half-size, we now need 400 lines per picture height for resolution, and so on. When the limiting resolution of the camera channel is found, the projection conditions can be marked on the slide so that the resolution can be quickly checked again.

Common Faults

The most common faults in CCTV systems are poor contrast and low resolution, and they frequently go together. Very frequently this is caused simply by poor lighting. If no improvement in lighting is possible the quality of the picture must be tolerated, but in many cases the use of a couple of spotlamps will make an immense difference. When a vidicon works at low light levels a high voltage must be applied across the target. This has the effect of increasing the dark current—the current which flows even when the target is not illuminated—and also to some extent increases the temperature sensitivity of the target. The result is a picture with no true dark level, and also with poor resolution due to the "spreading out" of charge carriers (actually the creation of new carriers by collision) during their journey. In addition moving objects cannot be resolved due to the long storage time or *lag* of the target which is aggravated by operating the target under conditions of low light and high potential difference. Thus before any electrical faults are looked for in a CCTV system it is advisable to check that enough light is actually reaching the target of the vidicon.

If increased light levels have no great effect and the vidicon voltages are within the manufacturer's tolerances, the video amplifier gain may be suspected. A "clip-on" transistor preamplifier may be useful here, a circuit with a gain of about 10 and a large bandwidth, not less than 15MHz, is ideal: several suitable circuits have been described in the past. If this greatly improves the picture, it may be built in permanently. The need for more video signal will of course have been noted from the oscilloscope reading of video signal. If the video signal is adequate according to the 'scope reading at the camera output, then the video amplifier of the monitor may be at fault.

Turning to the problem of lack of definition, the bandwidth of the amplifier is of importance here, again assuming good lighting. Examine the video amplifier to see that time-constants are correct and that any negative feedback loops are correctly connected. Where adjustment is provided for high frequency response this should be tweaked to give the best resolution with a tolerable amount of ringing. 75Ω cables should be correctly matched; remember that long lengths of cable require additional frequency correction as detailed in Part 4.

Reliability

CCTV cameras are in general trouble-free components once the bugs have been ironed out. When all-transistor circuitry of good design has been used there is little to go wrong. The vidicon is made with considerably more care than any receiving-type tube—hence its price!

The following precautions are worthwhile:

(1) Never allow a bright light to shine on the faceplate of a vidicon and always cap the lens when the camera is not in use.

(2) Allow the monitor to warm up and settle down before switching on the camera.

(3) Secure all plugs and sockets before switching a system on and avoid unplugging live video lines. The use of screw-in coax fittings such as the "F & E" plugs will avoid accidental disconnection.

(4) Use interference filters in the mains supply to avoid voltage spikes being fed into the equipment.

There's only one thing left—good luck! ■

DX TV

CHARLES RAFAREL

A MONTHLY FEATURE FOR DX ENTHUSIASTS

WE have reverted to very poor SpE conditions after the unusually good conditions of December 1969. Alas January 1970 here has been an all time low for both SpE and Trop reception. The only significant thing has been an upsurge in F2 reception which was quite unexpected. Apart from this it must rate as a most depressing period.

This month there were hardly any SpE openings and I have had to search very carefully to find anything to report. All I can say is that the end of the month was marginally an improvement on the rest of it, so it is a question of further patience. The happier times will return and I am still convinced that this year will be better for SpE than last. Now to the current SpE log, period 1 to 31/1/1970:

1/1/1970 Poland R1.
3/1/1970 USSR R1, Czechoslovakia R1 and Poland R1 (short bursts ? Quadrantid meteor shower).
9/1/1970 Poland R1 and Sweden E2.
14/1/1970 USSR R1.
25/1/1970 Sweden E2.
30/1/1970 Poland R1 and West Germany E2.

Tropospheric reception for the same period was limited to weak French "local" signals.

F2 propagation: The USSR forward scatter network 38-41MHz was around on the 2nd, 12th, 13th, 16th, 20th, 23rd, 26th, 27th and 29th and the USA paging stations on the 20th and 28th at fairly good strength.

The current sun-spot count is I understand in excess of 100. This will drop slowly in the next two to three months but whilst it is about we could get some further F2 results as above. But do not expect too much.

In conclusion I would mention that I have been laid low with flu for a large part of this period and have therefore perhaps not been quite as vigilant as usual. Even so I am sure that conditions have been just terrible and this opinion is borne out by other DX friends who are complaining bitterly too.

NEWS

With the prevailing poor conditions this would seem to be a suitable moment for an introduction to a relatively "new" method of reception which is neither SpE nor Tropospheric but rather an extension of the meteor shower method and as such is less affected by conditions.

We are indebted to Ferdy Dombrowski of the VHF-UHF Digest and the World-Wide TV-FM DX Association, PO Box 5001, Harbor Station, Milwaukee, Wisconsin, USA—you will recall that we gave details of this admirable organisation a little while ago—and to an article in the Digest by Robert Cooper of Oklahoma City who is a very experienced DXer.

Basically it seems that we must reassess the possibilities of meteor-reflected signals. As with SpE reception, I feel that this has been widely considered as being applicable only to Band I, to a lesser extent to Band II, and never to Band III. But there is now evidence that it can apply here as well. Before going into detail however I would like to request your help on behalf of the World-Wide TV-FM DX Association—and ourselves—by asking you to report to me any reception in Bands II/III of the type described below and in a following article. I will be most pleased to send this information via the Association to Robert Cooper on your behalf. Now for a summary of Robert Cooper's article.

HIGH-BAND METEOR-SCATTER DX

"The recently passed (August 10th-14th) Perseid meteor shower, an annual event, provided this writer with an opportunity and inducement to plan a serious programme of chasing high-band channel A7 to A13 (E5 to E10 approximately or R6 to **R10**) meteor-scatter reception.

"The preliminary mathematical exercise into the probability and feasibility of there being high-band m.s. indicated that it was indeed possible, even probable, and over the time span of the past 12 years or so—since TV DXers first encountered m.s. reception in the low channels in Band I—there has been a handful of m.s. long-distance reception reports in Bands II/III suggesting that the high bands might produce some results. However, the past high-band loggings do not correlate properly with known meteor shower results."

He goes on to report on the meteor shower period as follows:

"For channel A7 (i.e. E5 or R6), signals were of the following types: "pings," that is bursts too short to be identifiable; "bursts" of up to one second duration; and "super bursts" of over one second duration. Most of the "bursts" could not be identified but all the "super bursts" could."

His identified signals on A7 during the Perseid shower included WTRF Wheeling West Virginia at 967 miles, WITN Washington, North Carolina at 1142 miles and KTVB Boise Idaho at 1,137 miles. He continues:

"Given the definite channel A7 results during the Perseid shower period another mathematical study was prepared on the chances of random meteor scatter on this channel. Very little hard data is available in any place on the frequency of occurrence of meteor bursts on v.h.f. *except* during meteor shower periods. However a most excellent table of visual random meteor counts taken by human observers

—continued on page 327

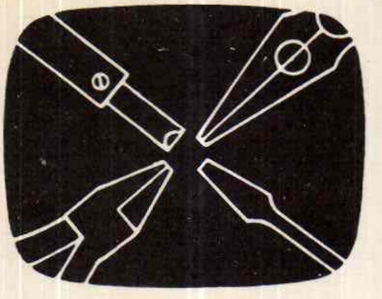

SERVICING television receivers

L. LAWRY-JOHNS

BUSH-MURPHY TV161U-V1910U SERIES

THE Rank-Bush-Murphy receivers which are the subject of this article are the Bush models TV161U, TV165, TV166U and T166C, and the equivalent Murphy models V1910U, V1913, V2310U and V2311C. Some of these notes are applicable to both earlier and later models and may prove helpful when dealing with these and other variants.

Probably the most often asked question is in relation to the channel selectors or push buttons as these are normally set for four v.h.f. 405 settings and two u.h.f. 625 ones. Now that BBC-2, BBC-1 and ITV are generally available on 625 lines u.h.f. if the button set up is not changed, one of the two top buttons will have to be rotated each time to receive the alternative channel.

To avoid this and to change the Band and system of any other button, remove the tuner from the cabinet and examine the push-button assembly. Each button has a keyplate etched with the Band and system which it will operate. Withdraw the keyplate from the spring loaded slot of the button which is to be reset; you will then find that the legend may read for example B3, 405. When turned over it should say u.h.f. 625, which is what is required in most situations. Insert the keyplate in this manner and thereafter this particular button will operate over this Band and system. Keyplates for v.h.f.-625 relay operation are available from Bush-Murphy agents.

In the manufacturer's service literature components mounted on the i.f. unit are prefixed 2 and those on the timebase unit 3, and the text here follows suit. However to simplify drafting the prefixes 2 and 3 have been omitted from the layouts and main circuit diagram. We hope this will not confuse. Just remember for example that 2R43 is R43 on the i.f. board and 3R43 is R43 on the timebase board.

Points of Interest

At first glance it may appear that there are two supply rectifiers, one for h.t. and one for the heater

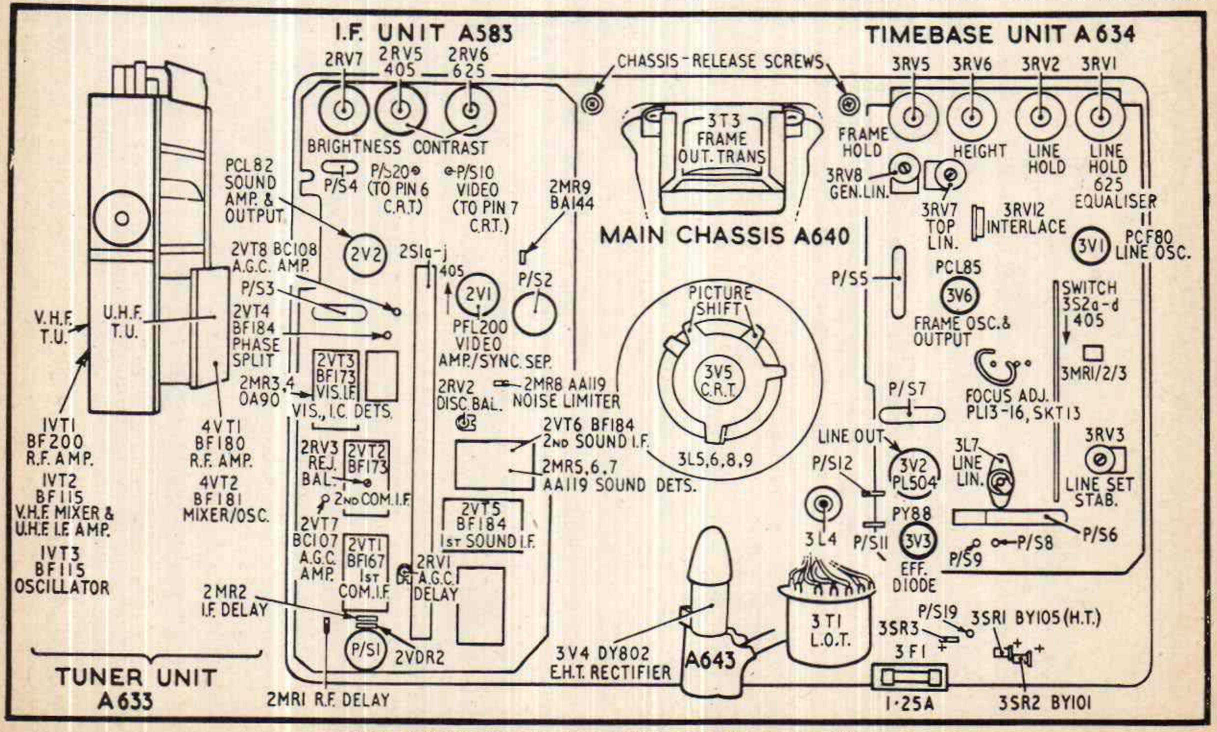

Fig. 1: Rear chassis view of the complete assembly.

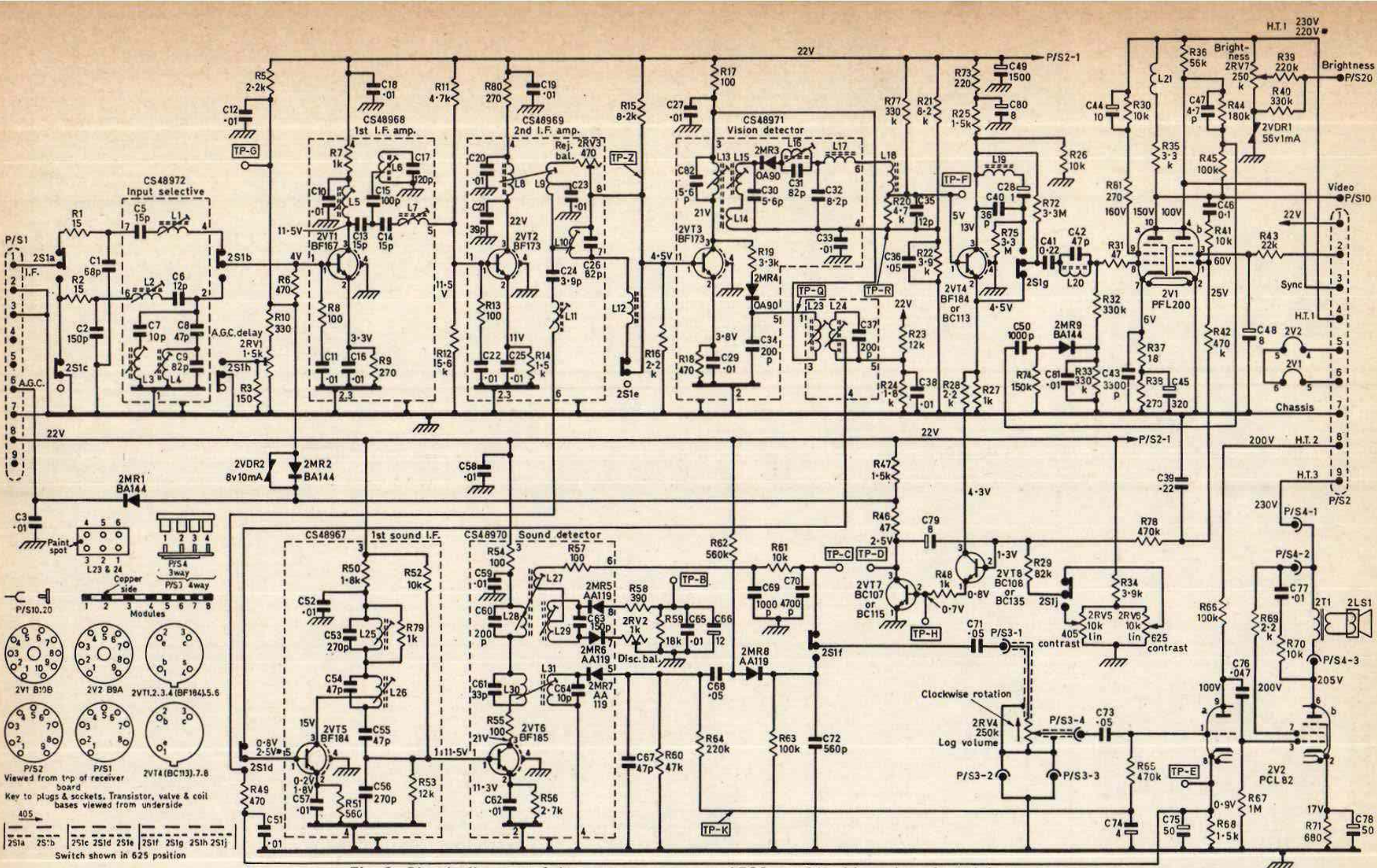

Fig. 2: Circuit diagram of the receiver unit type A583 used in this series of models.

Modifications and Notes; Early versions of tuner unit A633 may not be fitted with the ferrite bead between 1R19 and 1C31 to prevent spurious oscillation on Band III. Note that 1R2, 1C6 and 1C27 are mounted outside the screening box.

Some models may not have 2R80 and 2R81 (2V1a screen circuit)—fitted to prevent failure of 2VT2 or 2VT4 due to c.r.t. or valve flashover—on receiver unit A583. On early models 2R3 (see Fig. 3) was mounted on the printed side of the panel: on later models 2R27, 2R72, 2R75 and 2R77 are mounted in approximately the same positions as shown but on the component side of the board. 2RV1 was 1k Ω. 2MR1 may be type BA146. 2C7 was 18pF and 2L3 a different type, changed to increase sound output on 405.

In the timebase unit A634 (circuit next month) 3R21 and 3R24 were 2·2M Ω. The changed values increase the range of the line stability control. 3R68 was 470 Ω, changed to 680 Ω to improve line phasing. 3C21 was 0·22μF, changed to 0·18μF to improve line linearity on 405.

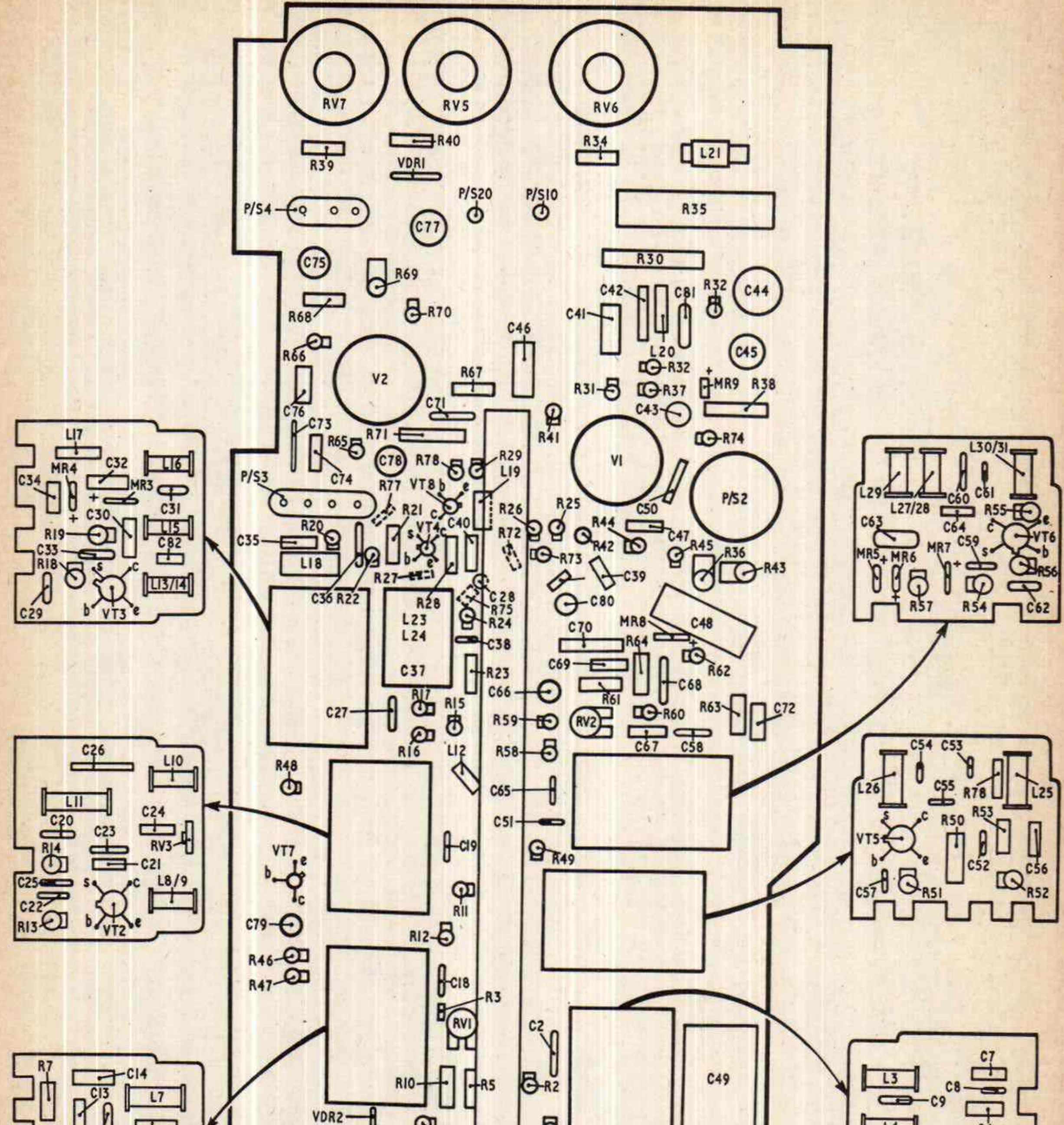

Fig. 3: Layout of the component side, receiver unit type A583.

line. In fact there are three. The third (3SR3) is for a 22V supply for the transistors in the i.f. and tuner stages. This 22V supply is derived from the line output transformer so that a no-picture condition caused by a failure in the line timebase will result also in complete loss of vision and sound signals. Bear that one in mind and couple with it the fact that the right-side system switch operation is not always what it should be: complete loss of sound and vision may be an adjustment required to the V of the system switch link on the right-side panel!

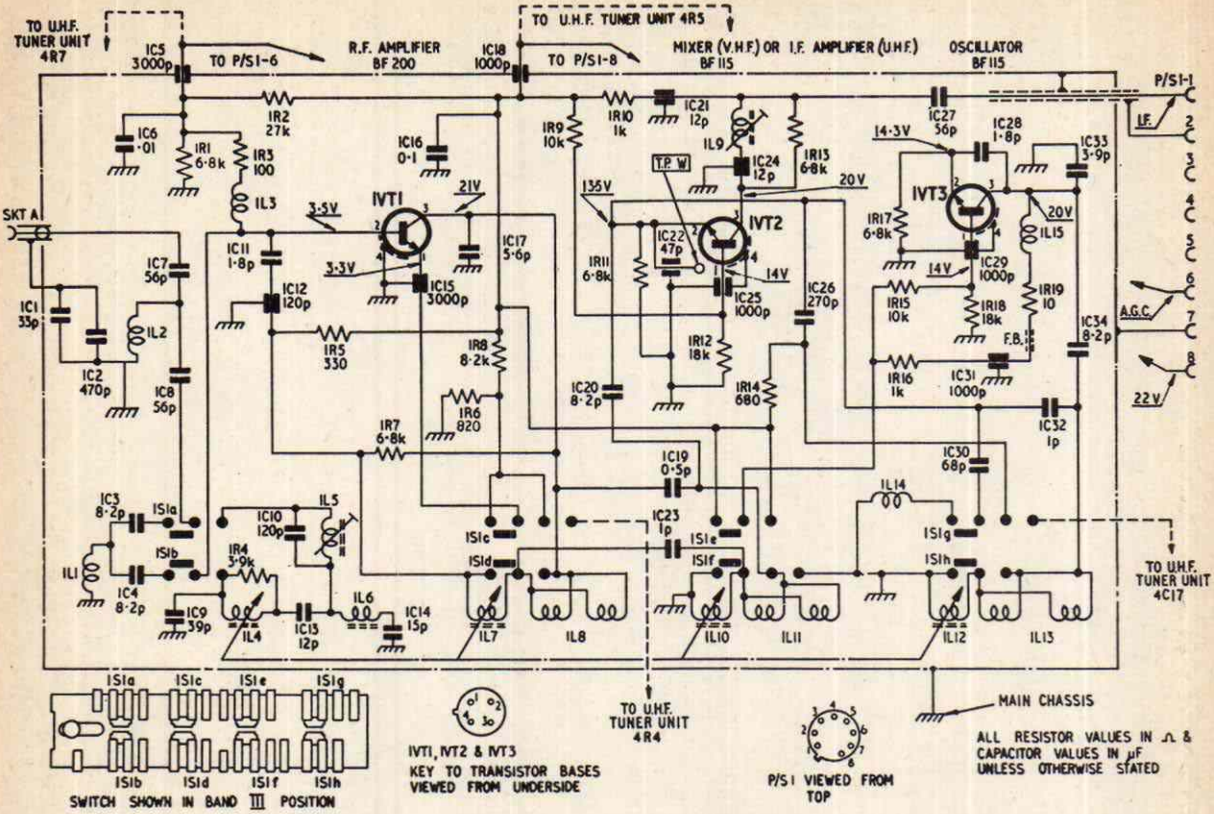

Fig. 4: Circuit diagram of the v.h.f. section of the multiband tuner unit type A633.

Note also the use of a PY88 efficiency diode. This has a 30V heater. Fitting a PY800-PY801 as a replacement is not on as there is a 13V difference in heater rating.

The heater circuit rectifier is wired so that the line is positive (d.c.) with respect to chassis. After filtering (2R43, 2C48) this line supplies the screen of the sync separator (2V1B) so that complete loss of sync should call attention to the heater supply rectifier. Observe the polarity marking on a replacement rectifier.

Note that 3MR1-2-3 is a single unit with five legs half-way up the right side. It is a double unit for line sync discrimination and a separate diode for field pulse clipping. The line sync section tends to be troublesome.

Common Faults

The one certain fault condition which will be encountered is complete loss of operation, i.e. receiver dead except for the fact that all heaters continue to glow. This is invariably due to the 14Ω section (surge limiter) of the dropper 3R57 becoming open-circuit. This means that one tag is alive (d.c.) but not the next (to the left). A replacement section should be wired on neatly as well as soldered, and presented so as not to cause a heat hazard to the components above. If this is not quite clear, it is only necessary to follow the positive end of the h.t. diode (3SR1) to one tag of the surge limiter which should show clear indication of being alive on a d.c. voltmeter or neon tester, the next tag being dead or showing a very feeble glow on a neon.

In the event of the 1·25A fuse (3F1) being found shattered the BY105 h.t. rectifier should be the first suspect and a back-to-front resistance check will soon reveal if this is in fact shorted.

Field Faults

The arch-fiend in the field timebase is undoubtedly the PCL85 (PCL805) valve. Previous articles in this series have listed the faults which can be laid at the door of this oscillator-output valve, ranging from complete field collapse to top and bottom compression, apparently even loss of height (top and bottom) and loss of vertical hold. Quite often however the valve is a blushing innocent and the following components contribute their quota to the premature greying of a busy service engineer's furrowed brows.

Complete Loss of Field Scan

There is an 0·01μF (3C52) capacitor across the primary winding of the top centre output transformer. This may in fact consist of two 0·02μF capacitors in series. Whichever is fitted, it or they may be found shorted and a replacement 0·01μF capacitor of 1·5kV rating should be fitted. The next item is 3C33 (0·022μF). This also tends to short causing severe bottom compression and foldover.

When investigating non-linearity in these receivers do not omit to check the preset linearity controls: these can drastically change value or go open-circuit at one end. Also check 3C32 and 3C34 (feedback circuit from the output pentode anode), and 3C35 which can short as well or become open-circuit.

CONTINUED NEXT MONTH

SINGLE-STANDARD 625-LINE RECEIVER

—*continued from page* 303

the receiver is eliminated, since no current can flow through the picture tube.

Sync Feeds

As mentioned earlier the screen grids of the heptode section of V2a are fed with a 20V supply from the cathode of V3b the field output stage. The anode of V2a is fed via R56 its anode load resistor from the line oscillator h.t. line which has extra decoupling in the form of R48 and C1d. Negative-going sync pulses appear at V2a anode and are fed to the line and field timebases.

Field Timebase

The field timebase consists of three valves V2b, V3a and V3b. The two triodes V2b and V3a form a multivibrator of conventional form. The field repetition rate is adjusted by the field hold control VR1, which in conjunction with R19 and C9 determines the grid circuit time-constant of V3a. Synchronisation is introduced at the grid of V2b which is driven negative during the flyback period.

The field sync circuit consists of R16, C11, C12 and R17. It will be noticed that no sync (or "interlace") diode is used. Such a diode is essential on the 405-line system to obtain good interlace of the fields since no equalising pulses are included in the transmission. The 625-line system contains equalising pulses before and after the main field sync pulse so that the total pulse time is equal for odd and even fields. Because this technique is employed a simple integrator circuit R16 and C11 can be employed to attenuate the line sync pulses, the output from this network consisting of a negative-going field sync pulse which when differentiated and attenuated by C12 and R17 can be introduced at the grid of V2b to initiate the timebase flyback.

Multivibrator Action

Except during flyback V3a is cut off and capacitors C13 and C14 charge from the boost positive supply via VR2 and R20. The negative charge on V3a grid is decaying during this time and ultimately reaches a sufficiently low level to allow V3a to conduct. C13 and C14 commence to discharge through V3a anode path to earth. The falling potential is conveyed via C10 to V2b grid which moves negatively cutting the valve off. V2b anode voltage rises, and the positive excursion is coupled to V3a grid. V3a is turned on hard and runs into grid current while at the same time completing the discharge of C13 and C14.

As soon as V3a anode stops moving towards earth the negative voltage coupled via C10 to V2b grid no longer exists and V2b turns on again. Its anode voltage falls and since C9 has charged via the grid current of V3a, the grid of V3a is driven hard negative when the anode of V2b reverts to its normal voltage so that V3a is cut off. The cycle then repeats. The timebase is synchronised by application of the negative-going sync pulse to the grid of V2b thus turning it off and initiating the events described above.

Linearity Circuits

From the foregoing description it will be seen that the waveform developed at V3a anode is approximately sawtooth in form. An output is taken from the junction of C13 and C14. Directly across C14 is the resistive network R22 and VR3: variation of the resistance at this point modifies the current flow in C14 relative to C13 over the charging cycle, so adjusting the overall linearity of the picture in the vertical direction. A second network R21, C15 and VR4 can be adjusted to vary the rate of the start of the scan and so affects the linearity at the top of the picture.

Output Stage

The output from the two variable shaping networks is taken directly to the field output valve V3b. The cathode circuit of this valve has already been mentioned as a 20V supply and a source of bleed current for the video stage bias network. Because of the multiple applications of this source a large decoupling capacitor C17 is employed which introduces negligible degeneration in the cathode circuit of V3b while also providing ample decoupling.

The anode circuit of the field output valve contains the field output transformer T2 which connects to the scanning coils and a field retrace blanking arrangement. T2 secondary is shunted by C16 which serves to bypass line pulses which can be coupled in from the line scan coils and cause striations. An $0{\cdot}1\mu F$ capacitor C22 is connected from the field output to the top end of the brightness control VR8 and a negative-going 100V pulse is thus applied to the brilliance control during flyback to suppress the flyback lines.

CONTINUED NEXT MONTH

DX-TV

—*continued from page* 322

belonging to the American Meteor Society does appear in the reference book 'Meteors, Comets, and Meteorites.'

"This table shows the long-term (several years) average visual meteors as counted by A.M.S. observers across the USA for each date of the year. Since the random meteors are known to be quite even over a time span of several hours (except in the case of meteor showers in which case the meteors can no longer be considered as random) these tables provide a useful insight into what could be expected on Ch. A7 or other high-band channels including the f.m./TV in Band II throughout the year.

"Since the Perseid meteor shower period has been over many random morning checks have been made on Ch. A7, and WTRF Wheeling at 967 miles has been logged virtually every day when the predicted count was over 21 according to the table, and WITN Washington N.C. more often than not!"

To be continued next month with the table of meteor counts together with further information about results of experiments here and suggestions for future tests.

CAPACITOR TESTER

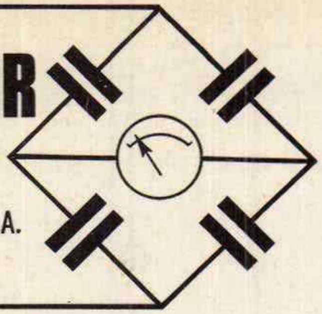

MARTIN L. MICHAELIS, M. A.

PART 3

In this final instalment on the Capacitor Tester full details of capacitor matching and calibration are given.

IF financial outlay is not the major consideration it is simplest to procure close-tolerance capacitors of the specified values for C1 to C4 and C6 to C8 and then to calibrate VR1 according to the balance condition formula given previously in the description of the bridge principle, using an ohmmeter (ohms range of a good multimeter) to take the readings between the slider of VR1 and the top and bottom end of the track. It is not necessary to use a close-tolerance potentiometer or close-tolerance component for R2 and R3, but the stability of these three components should be good, i.e. avoid small types of dubious appearance.

USING PRECISION CAPACITORS

If accurate capacitors graded from 1000pF to 1μF are available or can be borrowed (e.g. precision decade capacitor boxes) the scale of VR1 can be calibrated directly which saves a lot of time. In this case remember to work with the metal case attached and closed to take hum conditions into account as previously explained. If calibrating by taking resistance readings it does not matter that the case has to be open because this is an indirect procedure. However, mark the scale lightly in pencil and then check with at least one reasonably accurately known small capacitor to see what scale shift if any will be finally necessary to take residual hum into consideration. This affects only the extreme low end of each scale.

. . . OR A BORROWED BRIDGE

Another alternative is given if an existing capacitor bridge can be borrowed from a friend. In this case first of all devise suitable parallel combinations of available normal-tolerance capacitors for C1 to C4 and C6 to C8 with the borrowed bridge, then devise other such parallel combinations with the borrowed bridge to give accurate calibration points and mark these in by taking direct balance readings with the case closed.

It is advisable to calibrate in the lowest range but one, which covers 500pF to 10μF in one sweep, as this range contains all the most frequently needed values. Stray capacitances affect only the lowest range, and only the low end of that range. The correction is made by judicious choice of C5 after having completed the scale calibration. The nominal value is 1000pF but the actual value will have to be less by an amount equal to the strays. The zero points of the other three ranges should coincide exactly if the matching of the other capacitors on S1A has been carried out accurately. If there are slight differences in the zero points of the three upper ranges, pad C7 and/or C8 accordingly to bring the zero points of these ranges exactly into line with the calibrated range, then judiciously select C5 to bring the zero point of this range too to the same position on the scale. The metal case must be closed for every check but if desired a trimmer may be used in parallel with a fixed capacitor for C5 with a small screwdriver access hole for the trimmer drilled in the metal case. Use a non-metallic trimming tool for making adjustments.

SELF-ALIGNMENT

If an existing bridge cannot be borrowed, no accurate reference capacitors are available and it is not desirable to purchase close-tolerance capacitors, the bridge may be used to align itself. The only essential instrument for this purpose is a reliable multimeter with good a.c. volts and ohms ranges.

Take a non-inductive 2W carbon resistor of value about 300Ω and measure its exact value *R* with the ohms range. Connect this resistor in series with the nominal 10μF capacitor to be used for C1 across the 6·3V a.c. secondary of the mains transformer. Measure the voltage Vr across *R* and the voltage Vc across the capacitor using the a.c. volts range of the multimeter. Calculate $R \times V\text{c}/V\text{r}$ values in ohms and volts, result in ohms. This is the actual reactance of the capacitor at 50Hz so that its capacitance value is $1/314X$ Farad where *X* is the reactance as just calculated. Then calculate the necessary correcting capacitor to be connected in parallel with C1. Proceed in the same manner for C2 using a series resistor of about 3kΩ in this case. It is convenient to use capacitors with actual values on the low side initially so that correction is possible by parallel connection. If this is not possible all final values of C1 to C4 may be greater than the specified values by the *same* smallest factor necessary. This also applies if matching the capacitors with a borrowed bridge.

Next disconnect R1 and the lead to the positive *C*x terminal, transfer the lead from the negative *C*x terminal from S1B direct to chassis and disconnect all capacitors C1 to C4 at the end joined to R2 (in as far as these capacitors have been installed at all yet). Otherwise complete the construction of the bridge. Connect the already matched C2 from R2, R4 junction straight to the positive *C*x terminal and return C12 to this terminal too. Connect the capacitor intended for C3 to the *C*x terminals. Using the ohms range of the multimeter, find and temporarily mark the scale point of VR1 for which the resistance from the slider to chassis is *exactly* ten times the resistance from the slider to the top of R2. Now augment C3 as at present connected to the *C*x terminals with a suitable parallel capacitor to bring the balance point to the marked position on VR1 scale.

Next transfer the correct C3 in place of C2 (which is laid aside for the moment) between R2, R4 junction and the positive *C*x terminal. Connect the capacitor intended for C4 to the *C*x terminals and adjust it to bring the balance point to the already determined position on the scale of VR1. We have now derived a properly matched bank C1 to C4 in exact decimal ratios and either with the exact decimal values or values greater than these by a common factor slightly greater than unity.

Continue the procedure adopted for matching C3 and C4 to match the bottom bank. C6, C7 and C8 are connected in turn to the *C*x terminals, using C1, C2, C3 as respective references between R2, R4 junction and the positive *C*x terminal. Always correct the capacitor at *C*x with a small selected parallel capacitor to bring the balance reading exactly to the 10:1 ratio point previously located on the scale of VR1. If one or more of the capacitors C6 to C8 first selected is already too large, select another sample which is on the low side. If this is not possible, locate the actual balance point for the offending capacitor and then adjust the other two to bring their balance points to the new position too. Measure the resistance ratio on VR1 for this new point so that the actual values of C6 to C8 can be calculated from the formula for the balance condition.

We have now obtained a complete double bank of matched capacitors except for C5. The set C1 to C4 is exactly decimally graded, and so is the set C6 to C8. These are the conditions for a common scale to hold for all ranges. The pairs for each range bear a common ratio which is exactly or nearly ten. This is the condition for obtaining the proper range sweeps and a common zero point. The actual values of all the capacitors are known accurately so that the scale can be calibrated by making progressive resistance measurements at VR1 and using the formula for the balance condition. Finally C5 is chosen and adjusted in the manner already described. Some patience is required to complete this entire procedure, but it is quite straightforward.

MAKING RESISTANCE AND INDUCTANCE MEASUREMENTS

More capacitance ranges are hardly necessary but if resistance ranges are desired S1 should be provided with further positions and appropriate reference resistors used on the new positions of the C1 to C4 bank. The corresponding positions on the C5 to C8 bank should be left blank since the resistor scales cannot be brought to start from zero. However a common resistance scale for all resistance ranges is obtained by the same process of decimal grading.

It is not conveniently possible to effect inductance measurements with this simple bridge arrangement because a.f. inductances are virtually never free from comparable resistance and r.f. inductors are too small for measurement with 50Hz. The best method of measuring r.f. inductors in the commonly required range from about 0·6μH to 6mH—or small-value capacitors from zero to about 500pF—is to use a calibrated tuned circuit and grid-dip meter. For the low-*C* measurement a calibrated tuning capacitor (about standard 500pF) is connected in parallel with a medium-wave coil. The unknown capacitor is added in parallel as well and the grid-dip resonance point of the assembly found. The unknown capacitor is then disconnected and the calibrated tuning capacitor turned up to restore resonance, at which point the value of the unknown capacitor can be read off directly. For *L*-measurements of r.f. coils the unknown coil is connected to the tuning capacitor in place of the medium-wave coil. The tuning capacitor is swept for resonance with predetermined fixed grid dip meter frequencies and carries corresponding *L*-scales too.

A calibrated tuned circuit unit for all these measurements, named the *LC* Picometer, was published in PRACTICAL TELEVISION April/May 1966. The above remarks will help readers without back copies to hand. The bridge described in the present article is intended to be a complement to the *LC* Picometer since the two together cater for all *L* and *C* measurements normally required in television servicing. It is common practice to use the ohms ranges of ordinary multimeters for resistance measurements so that resistance measuring facilities were omitted in the present design. This unit caters only for capacitance measurements since only these are made with a bridge in average service shops. It is difficult to measure small *L* and *C* values as used in r.f. tuned circuits with a simple bridge but the bridge described in this article is very good down to 1000pF and usable down to 50pF so that there is considerable overlap with the *LC* Picometer which covers accurate measurements from 0·2pF to 430pF.

TYPICAL VOLTAGE READINGS

The voltage readings given below were measured on the prototype using a valve voltmeter with a 20MΩ per volt internal resistance on all a.c. and d.c. ranges and with a mains input of 230V. The transformer secondary voltages are high with respect to the nominal ratings because of the very low load. Tolerances for the voltages are ±10 to 20% according to the components used and the mains voltage, but the *relationships* should be preserved.

Test Point	*VR3 at zero, meter zero*	*VR3 at maximum, meter 80-100% f.s.d.*
Tr1 emitter	2·05	2
Tr1 base	2·65	2·6
Tr1 collector	5·1	5·1
Tr2 emitter	1·95	1·75
Tr2 base	2·55	1·4
Tr2 collector	5·85	5·8
Tr3 emitter	5·15	5·2
Tr3 base	5·85	5·8
Tr3 collector	6·85	6·85
D6 cathode	0	3
C19+	15·9	15·9
C18+	7·72	7·7
C13+	7·25	7·2

D3 cathode 345V; C10+ 300V; top of VR3 slider 154V; C9+ 242V; S2b 1 141V, 2 47V, 3 10·8V, 4 2·7V

A.C. voltages measured using meter with peak rectifier and scale calibrated in r.m.s. for sinusoidal waveforms (actual reading peak/√2 for any waveform), on range 1 with no *C*x and Vr3 at zero (meter reads zero): mains 230V; D3 anode 274V; D5 anode 11·4V; R4 at transformer side 6·9V; D1 cathode 4·6V.

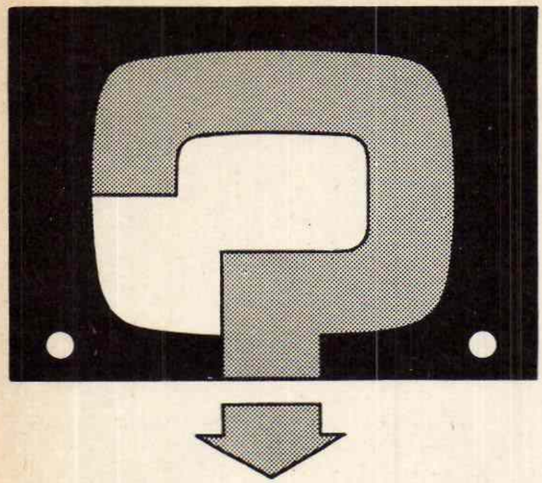

YOUR PROBLEMS SOLVED

Whilst we are always pleased to assist readers with their technical difficulties, we regret that we are unable to supply service data or provide instructions for modifying equipment. We cannot supply alternative details for constructional articles which appear in these pages. WE CANNOT UNDERTAKE TO ANSWER QUERIES OVER THE TELEPHONE. The coupon from page 331 must be attached to all Queries, and a stamped and addressed envelope must be enclosed.

HMV 2637

The set works normally for three or four minutes after switching on, then the line whistle becomes much louder and the picture breaks up into light and dark dashes which change as the picture content changes.

The picture can be regained for a minute or so by switching off and on again. After about half an hour the picture will come back and with occasional lapses remain OK for hours. I have tested valves PCF808, PFL200, PCL85, EF80 and PL500 and all were found to be in good order. When I remove the aerial lead the raster goes darker when the fault develops.—A. Gorling (Nottingham).

There is either a change in line frequency or the line output stage develops a fault as the temperature of the receiver rises. If the picture can be restored by readjusting the line hold control suspect change in frequency. This is often caused by the line oscillator valve characteristics changing even though it may register all right on a valve checker. If necessary check the line output valve and booster diode by substitution—not on a valve tester which would fail to subject the valves to a full load.

PHILIPS G19T210A

This set gives perfect reception on both sound and vision. The only trouble is that when cars go by the vision breaks up. It seems to be cars without suppressors or with bad ones that affect it. Before this fault occurred I used to get little lines like stars across the picture. Sound is also affected.—E. Groves (Essex).

There are three possibilities for the ignition interference you are getting. The most likely is that your signal strength has reduced making the receiver more susceptible to interference. Check the aerial connections to the feeder and at the receiver input. There is also the chance that some of this interference is breaking through on the mains—check C1501 (0·1μF) across the mains input.

The other possibility is that an isolation component has changed in value or become disconnected between the aerial input socket and the input to the tuner, or that the tuner itself is faulty. The manufacturers have not released any information about the integrated tuner in this receiver and they recommend its return to their servicing depot if it goes faulty. You may feel this is not worthwhile for such an intermittent condition.

To improve conditions you may find that readjusting the line stabilisation is worthwhile. To do this you need a high-impedance voltmeter with a 1000V d.c. range. This is connected to the boost test point (indicated on the component side of the printed panel by a red disc just in front of the line hold control, or see Fig. 3 page 213 of the February issue). Turn the brightness control to minimum on a well-locked raster. Adjust R2170 and R2171 to give a voltmeter reading of 930V on 625 and 405 lines respectively. (R2170 and R2171 are the presets just beside the line hold control on the chassis.)

GEC VU3504

Both sound and picture have disappeared on this receiver. I have had all the valves tested and renewed the PCC84 and U25 but with no results.—G. Sadler (Newport, Monmouthshire).

Loss of both sound and vision often means that the h.t. supply has failed. In this case there would be no line whistle and the valves, although lighting, would be cold. If the valves run normally hot and there is line whistle then the trouble is more likely to lie in the tuner or aerial system, although a fault in the first common sound-and-vision i.f. stage could be responsible.

BAIRD M652

The picture collapses into a single bright horizontal line across the screen whilst sound remains perfect. This happens at irregular intervals and is less frequent if the back of the set is removed. I have changed the PCL85 valve but this has made no difference.—P. Ford (Staffordshire).

This field collapse could be due to a number of things. Check the electrolytic capacitor in the cathode circuit of the PCL85—C234 100μF—the v.d.r. across the primary of the field output transformer and the boost capacitor C129 0·25μF. Look especially for dry-joints, cracked components, poor connections on the scan coil leads, dirty valve pins and bases in the area of the field oscillator—anything in fact that could cause an intermittent fault such as this.

MURPHY V873U

On 405 lines the line hold is very unstable but can be locked. On pressing the 625-line button a picture made up from three horizontally overlapping images is obtained momentarily before the hold is completely lost and a 4in. long bright vertical line appears in the centre of the tube face. This decays in about two seconds, becoming shorter and finally resulting in a blank screen.

On pressing the 405-line button both raster and signal appear as normal. This fault occurs each time the 625 mode is engaged. Sound is perfect all the time and adjustment of preset controls does not clear the fault.

There is also lack of contrast on both 405 and 625 which cannot be rectified by replacing the tuner valves or the video amplifier. Brightness seems sufficient.—A. Silver (Glasgow).

Check the PL36 line output valve and the system switch. Make sure that the 10kΩ video amplifier anode load resistor has not changed value. Weak line hold could also be due to faulty discriminator diodes in the line oscillator stage.

BUSH T100C

The raster has reduced to a bright wavy horizontal line. The sound remains normal. I have changed valves PL84, ECC82 and ECC83.—A. J. Coker (Hertfordshire).

If the line is very wavy, suspect the field deflection coils. Check the fine wire connections as one may have fractured. Otherwise check the PL84 etc. valve base voltages.

STELLA ST1039A

This set suffers from line tearing, picture roll and the screen is split into two by a vertical broad line. In addition the contrast control has no effect. I have checked the sync separator V402B which registered 70% on an Avo tester. The anode voltage is 55-60V and the only way I can get it to read 105V is by reducing R446 to about 300Ω.

I feel that the trouble is around V402B. The screen voltage is normal (17V) and V402A is approximately 100V. I have replaced R446 (68kΩ) but the fault remains.—T. Parkes (Berkshire).

The sync voltage reading will depend on the sensitivity of the voltmeter used for the measurement. This should be 20,000 ohms/volt. It seems that yours is significantly less than this, in which case the lower voltage reading would be normal. The sync separator stage most certainly seems at fault; but check the control grid input capacitor and associated resistor for value. Also make sure that the set is receiving adequate aerial signals as both symptoms would be caused by this.

QUERIES COUPON

This coupon is available until April 17, 1970, and must accompany all Queries sent in accordance with the notice on page 330.

PRACTICAL TELEVISION, APRIL 1970

89

Each month we provide an interesting case of television servicing to exercise your ingenuity. These are not trick questions but are based on actual practical faults.

? *A KB Model VC11 originally came in for service with the symptom of low width. Tests were made of the line timebase valves, boost diode and boost reservoir capacitor but to no avail. It was found that the boost h.t. line potential was 100V or so below normal and subsequent checks indicated that the screen grid potential of the line output valve was 20V or so below normal. Both the width and the low boost voltage were cured by replacing the screen feed resistor which had increased in value.*

On a final test it was noticed that the heaters of most of the valves were significantly brighter than normal and a voltage test across some of the heaters revealed that they were all being over-run by about 75 per cent.

What could have been the cause of this secondary symptom and what steps would the technician have taken to locate the faulty component? See next month's Practical Television *for the solution to this problem and for a further Test Case item.*

SOLUTION TO TEST CASE 88
Page 283 (last month)

Because the chroma signal is fed to the grids of the picture tube via circuits with a bandwidth about one-fifth of that of the circuits which carry the Y or luminance signal to the tube cathodes, the chroma signal would take longer to arrive at the tube than the Y signal unless the circuit is suitably compensated. The compensation takes the form of a luminance delay line (not to be confused with the PAL delay line) and in the Test Case in question this was faulty thus allowing the Y information to appear on the screen ahead of the chroma information.

The luminance delay line in this particular set consists of a piece of coaxial cable carrying a helix winding, the screen connection being made from a copper strip to a tag fitted into a plastic cap at the end. It was found that the copper strip had broken thus disconnecting the line from its "earthy" circuit. Soldering across the break completely cured the trouble.

Published approximately on the 22nd of each month by IPC Magazines Limited, Fleetway House, Farringdon Street, London, E.C.4. Printed in England by Fleetway Printers, 17 Sumner Street, London, S.E.1. Sole Agents for Australia and New Zealand—Gordon and Gotch (A/sia) Ltd.; South Africa—Central News Agency Ltd.; Rhodesia, Malawi and Zambia—Kingstons Ltd.; East Africa—Stationery and Office Supplies Ltd. Subscription Rate (including postage): for one year to any part of the world, £2 5s. 0d. "Practical Television" is sold subject to the following conditions, namely, that it shall not, without the written consent of the Publishers first being given, be lent, resold, hired out or otherwise disposed of by way of Trade at more than the recommended selling price shown on the cover, and that it shall not be lent, resold, hired out or otherwise disposed of in a mutilated condition or in any unauthorised cover by way of Trade, or affixed to or as part of any publication or advertising, literary or pictorial matter whatsoever.

WILLOW VALE ELECTRONICS

LIMITED

The Service Department Wholesalers

4 THE BROADWAY, HANWELL, LONDON, W.7

Telephones: 01-567 5400 01-567 2971 01-579 3582

Compare our prices

e.g. NEW **19" C.R.T's . . .** OUR PRICE **£5-19-0** Plus 10/6 carriage

Normal trade £7-13-4 SAVE **£1-3-8** per tube

All 14, 16, 17, 19, 21, 23 and 25 inch C.R.T's in stock at really good discounts to you as the above example shows.

Please note: Components are sold in packs, quantities per pack are shown under each heading. Prices are per piece of each value.

TUBULAR CAPACITORS (3's)

·001	400v.	9d.
·0022	600v.	9d.
·0033	600/1500v.	9d.
·0047	600/1500v.	9d.
·01	400v.	10d.
·022	600v.	11d.
·033	600v.	11d.
·047	600v.	11d.
·1	600v.	1/-d.
·22	600v.	2/-d.
·47	600v.	2/10d.
·01	1000v.	1/1d.
·022	1000v.	1/1d.
·047	1000v.	1/8d.
·1	1000v.	1/8d.
·22	1000v.	2/8d.
·47	1000v.	3/8d.
·001	1500v.	1/6d.

WIRE-WOUND RESISTORS (3's)

10 watt rating, suitable for mains dropper sections.

1	Ohm	1/9d.
10	Ohms	1/9d.
13	,,	1/9d.
25	,,	1/9d.
33	,,	1/9d.
50	,,	1/9d.
87	,,	1/9d.
100	,,	1/9d.
150	,,	1/9d.
220	,,	1/9d.
330	,,	1/9d.
1K	,,	1/9d.
2·2K	,,	1/9d.
3·3K	,,	1/9d.
4·7K	,,	1/9d.

PULSE CERAMICS (3's) 12KV

100pf	22pf	1/1d.
120pf	47pf	1/1d.
180pf	68pf	1/1d.
250pf		1/1d.

Tubular type for use in Scan correction circuits and Line Outputs.

CERAMICS (6's)

500pf	22pf	8d.
680pf	47pf	8d.
820pf	68pf	8d.
1000pf	100pf	8d.
1500pf	120pf	8d.
3000pf	180pf	8d.
5000pf		8d.

BIAS ELECTROLYTICS (3's)

25mfd	25v.	1/6d.
50mfd	25v.	1/8d.
100mfd	25v.	1/11d.
250mfd	25v.	3/0d.
500mfd	25v.	3/8d.
1000mfd	12v.	6/0d.
1000mfd	30v.	5/9d.
2000mfd	25v.	7/0d.
2500mfd	30v.	9/0d.
3000mfd	30v.	9/6d.
5000mfd	30v.	10/0d.
25mfd	50v.	1/8d.
50mfd	50v.	2/0d.
100mfd	50v.	2/6d.
250mfd	50v.	3/8d.
500mfd	50v.	4/6d.
2000mfd	50v.	9/0d.
2500mfd	50v.	10/6d.

SMOOTHING ELECTROLYTICS

Wire ended, 450v. working.

1mfd	1/6d.
2mfd	1/6d.
4mfd	2/3d.
8mfd	2/6d.
16mfd	3/0d.
32mfd	4/6d.
50mfd	5/0d.
8/8mfd	4/0d.
8/16mfd	5/0d.
16/16mfd	5/0d.
16/32mfd	5/0d.
32/32mfd	5/0d.
50/50mfd	8/0d.
50/50/50mfd	10/0d.

CANNED ELECTROLYTICS

100/200mfd	12/6d.
100/400mfd	16/6d.
200/200mfd	16/0d.
200/200/100mfd	18/6d.
200/400/32mfd	18/6d.
100/300/100/16	18/6d.
100/400/32mfd	18/6d.
100/400/64/16	21/0d.

SKELETON PRE-SETS (3's)

25K	Vertical	1/4d.
50K	,,	1/4d.
100K	,,	1/4d.
250K	,,	1/4d.
500K	,,	1/4d.
1 meg	,,	1/4d.
2 meg	,,	1/4d.
500K	Horizontal	1/4d.
680K	,,	1/4d.
1 meg	,,	1/4d.

SUB-MINIATURE ELECTROLYTICS (3's)

1mfd	18v.	1/8d.
2mfd	18v.	1/8d.
4mfd	18v.	1/8d.
5mfd	18v.	1/8d.
8mfd	18v.	1/8d.
10mfd	18v.	1/8d.
16mfd	18v.	1/8d.
25mfd	18v.	1/8d.
32mfd	18v.	1/10d.
50mfd	18v.	1/10d.
100mfd	18v.	1/10d.
200mfd	18v.	2/3d.

THERMISTORS (3's)

Miniature	1/6d.
TH1	2/4d.

RECTIFIERS

Silicon Mains (3's)

Westinghouse S10AR2	6/6d.
BY127 Mullard	5/3d.
BY105 Mazda	7/0d.
BY327	5/6d.

CONTACT COOLED FULL WAVE

75ma	12/8d.
100ma	13/8d.
150ma	16/8d.

CO-AXIAL PLUGS

Bakelite top	10d.
Egen metal	1/4d.
Single point (car radio)	2/0d.

SLIDER PRE-SETS (3's)

100K	1/6d.
1 Meg	1/6d.
2·2 Meg	1/6d.

JACK PLUGS

Chrome standard	4/0d.
Standard	3/0d.
3·5mm. metal	3/0d.

DIN PLUGS (3's)

3-pin	1/10d.
5-pin	2/2d.
Sockets	1/0d.

DOUBLE DIODE RECTIFIERS (3's)

Bush/Murphy/BRC etc.
Line/frame timebases etc.

3 leg	6/3d.
4 leg	6/3d.
5 leg	6/3d.

RADIO/TV GLASS FUSES

1 amp, 1·5 amp, 2 amp, 3 amp.
Per dozen 3/0d.

MAINS FUSES

2 amp, 3 amp, 5 amp, 13 amp.
Per dozen 5/0d.

TERMINAL STRIPS

2 amp	2/3d.
5 amp	2/10d.
15 amp	5/9d.

CARBON FILM RESISTORS

½ watt and 1 watt.

The following values are packed in cartons of *six of each value.* Price 2/6d. per carton.

10	ohm	1·2K	150K
12	,,	1·5K	180K
15	,,	1·8K	220K
18	,,	2·2K	270K
22	,,	2·7K	330K
27	,,	3·3K	390K
33	,,	3·9K	430K
39	,,	4·3K	470K
43	,,	4·7K	560K
47	,,	5·6K	680K
56	,,	6·8K	820K
68	,,	8·2K	1M
82	,,	10K	1·2M
100	,,	12K	1·5M
120	,,	15K	1·8M
150	,,	18K	2·2M
180	,,	22K	2·7M
220	,,	27K	3·3M
270	,,	33K	3·9M
330	,,	39K	4·3M
390	,,	43K	4·7M
430	,,	47K	5·6M
470	,,	56K	6·8M
560	,,	68K	8·2M
680	,,	82K	10M
820	,,	100K	12M
1K		120K	15M

All the above values are available in both ½ watt and 1 watt versions.

***Special for Philips TV's:**
8·2M 2-watt, 4/6d. per pack.

VOLUME CONTROLS

Standard spindle with flat.

Double pole switch	4/7d.
Without switch	3/6d.

(One per pack)

5K, 10K, 25K, 50K, 100K, 250K, 500K, 1 meg, 2 meg.

RECORD PLAYER CARTRIDGES

ACOS: GP67/2g. High gain general purpose Mono	16/8d.
GP91/SC. Stereo-compatible replacement	22/0d.
GP91/3SC. High gain version of above	22/0d.
GP94/1SS. Stereo cartridge	37/9d.
GENERAL PURPOSE REPLACEMENT FOR TC8 s etc.	
High gain, plenty of output (Jap.)	19/10d.
Stereo version	37/9d.

SERV'SOL AND ELECTROLUBE PRODUCTS (Nett trade)

Servisol aerosol can	12/6d. nett
Electrolube 2AX aerosol	14/0d. nett
Servisol Freezit	9/6d. nett
Electrolube No. 1 Snorkel	18/0d. nett
Electrolube 2GX Grease	8/4d. nett
Servisol Aero-Clene for tape heads	10/6d. nett
Servisol Aero-Duster	10/6d. nett

REPLACEMENT STYLI

TC8	4/6d.
GC8	4/6d.

REBUILT AND NEW TUBES—*TWO YEARS GUARANTEE*

		RE-BUILT	BRAND NEW	A FEW SAMPLE TYPES, REMEMBER WE STOCK EVERY TUBE
17″	@	£4 14 6	£5 10 0	CME1702, AW43-80, CRM173, MW43-80, MW43-69*, CRM172*, AW43-88, AW43-89, CME1705, CME1703, C17AF, C17SM etc.
19″	@	£4 17 6	£5 19 0	CME1903, CME1902, CME1901, AW47-90, AW47-91, A47-14W C19AH, C19AF, C19A.
21″	@	£6 5 0	£8 10 0	CME2101, AW53-88, AW53-89, CRM211*, CRM212*, MW53-20*, MW53-80*.
23″	@	£6 5 0	£8 19 0	CME2303, CME2301, AW59-90, AW59-91.

ALL PRICES ARE NETT.

* NEW ONLY. NO REBUILDS

TWIN PANELS 19″ CME1906 / A47-13W } £10 1 0 23″ CME2306 / A59/13W } £14 1 0

HOT-LINE ORDERS
Tel: 01-567 5400/2971
TRADE ONLY

EVERY TUBE IN STOCK INCLUDING 11″, 12″, 16″ PORTABLES, PANORAMA & RMGUARDS + Philips Tvette and KB Featherlight etc. TERMS: CASH WITH ORDER. CARRIAGE ANYWHERE IN GT. BRITAIN 10/6 per Tube

e.g. New VALVES . . . **33⅓** plus **13**% plus quantity discounts **6**%

RADIO AND TELEVISION VALVES SMALL SELECTION

British made valves normally supplied. EVERY TYPE IN STOCK

DY86/7	10/–	EY86/7	10/–	PCL86	11/4
DY802	9/1	EZ80	10/10	PD500	31/7
EABC80	12/8	EZ81	8/2	PFL200	15/9
EB91	8/2	EZ90	9/3	PL36	16/4
EBC90	10/10	GZ34	13/7	PL81	13/7
EBF80	10/10	GY501	15/9	PL81A	14/6
EBF89	10/10	PC86	14/6	PL82	10/10
ECC81	10/0	PC88	14/6	PL83	13/8
ECC82	10/0	PC97	10/10	PL84	12/8
ECC83	10/0	PC900	12/8	PL302	13/7
ECC804	15/4	PCC84	10/0	PL504	20/–
ECH81	14/6	PCC88	16/8	PL508	20/4
ECH84	12/8	PCC89	13/7	PL509	31/7
ECL80	9/6	PCC189	13/7	PY33	12/2
ECL82	12/8	PCC806	15/9	PY81	10/10
ECL83	13/4	PCF80	11/4	PY800	10/10
ECL84	11/4	PCF86	13/7	PY801	10/10
ECL86	12/8	PCF87	18/1	PY82	8/4
EF80	9/6	PCF801	13/7	PY83	13/7
EF85	12/8	PCF802	13/7	PY500	20/4
EF86	16/4	PCF805	14/11	UABC80	13/7
EF89	10/10	PCF806	13/7	UCH81	13/7
EF183	12/8	PCF808	14/11	UCL82	12/8
EF184	12/8	PCL82	11/4	UCL83	14/6
EH90	13/7	PCL83	13/4	UL41	14/6
EL34	10/0	PCL84	13/7	UL84	12/8
EY51	13/7	PCL85	13/7	UY85	9/0

ALL MAZDA/BRIMAR TYPES IN STOCK.

TRADE & SERVICE ENGINEERS ONLY SUPPLIED
Cash with order. 10% MAY BE DEDUCTED FROM THE ADVERTISED PRICES EXCEPT FOR NETT ITEMS, C.O.D., OR TUBES

All orders must exceed 50/0d. in value otherwise postage and packing will be charged at 5/0d. per invoice. Components must be ordered in multiples as packed.

SEE WHAT YOU SAVE AT WILLOW VALE, THE SERVICE DEPT. WHOLESALERS, 4 THE BROADWAY, HANWELL, LONDON, W.7. 01-567/5400-2971, 01-579 3582.

Send 2/6d in loose stamps for our comprehensive catalogues listing valves, components, tubes, transistors, mikes, aerials, Line output transformers. BY RETURN SERVICE ANYWHERE.

L.O.P.T.'s

LINE OUTPUT TRANSFORMERS

ALL MAKES SUPPLIED

EXCHANGE UNITS AND NEW REPLACEMENTS

EVERY MAKE SUPPLIED
(EXCEPT MURPHY OIL-FILLED)

REWIND SERVICE FOR OBSOLETE MODELS

FRAME OUTPUT, SOUND OUTPUT AND MAINS TRANSFORMERS REWOUND

REMEMBER . . . We are the Service department Wholesalers *and supply only the Service Engineers requirements and can therefore carry large stocks, and also we know and understand your problems regarding getting the right spares QUICKLY and the RIGHT PRICE. HOT-LINE Orders: 01/567 5400–2971. 01/579–3582.*

Practical Television Classified Advertisements

The pre-paid rate for classified advertisements is 4/- per line (minimum order 12/-), box number 1/- extra. Semi-display setting £2 10s. 0d. per single column inch. All cheques, postal orders, etc., to be made payable to PRACTICAL TELEVISION and crossed "Lloyds Bank Ltd." Treasury notes should always be sent *registered post*. Advertisements, together with remittance, should be sent to the Classified Advertisement Manager, PRACTICAL TELEVISION IPC Magazines Ltd., Fleetway House, Farringdon Street, London, EC4, for insertion in the next available issue.

SITUATIONS VACANT

ENGINEERS. A TECHNICAL CERTIFICATE or qualification will bring you security and much better pay. Elem. and adv. private postal courses for C. Eng., A.M.I.E.R.E., A.M.S.E. (Mech. & Elec.). City & Guilds, A.M.I.M.I., A.I.O.B., and G.C.E. Exams. Diploma courses in all branches of Engineering—Mech., Elec., Auto., Electronics, Radio, Computers, Draughts, Buildings, etc. For full details write for FREE 132 page guide: BRITISH INSTITUTE OF ENGINEERING TECHNOLOGY, (Dept. 171K), Aldermaston Court, Aldermaston, Berks.

RADIO AND TV Exams and Courses by Britain's finest home study School. Coaching for Brit.I.R.E., City and Guilds Amateur's Licence, R.T.E.B., P.M.G. Certificate etc. Free brochure from British National Radio School, Russel Street, Reading.

ELECTRONICS OFFICER required to run C.C.T.V. and Audio Section of the Department of Audio-Visual Communication, British Medical Association. He will be required to give information and advise on equipment to medical teachers. His responsibilities will include establishing contact with manufacturers, ordering equipment and materials, maintaining, modifying and operating equipment for demonstration and experimental purposes. Applicants should be able to present evidence of formal training, and practical experience will be essential. The starting salary will be up to £1,550 p.a. according to qualifications and experience. Write briefly, in the first instance, stating age, education, qualifications and experience to the Director, Department of Audio Visual Communication, The British Medical Association, B.M.A. House, Tavistock Square, London, W.C.1.

APPOINTMENTS

TECHNICAL OFFICER

Home Office Police Scientific Development Group

Unestablished vacancy for a Technical Officer Grade III with knowledge and experience of workshop practice and electronic equipment. The successful candidate will work in the equipment section, which is concerned with assessment, trials and development of a wide range of equipment for police use, and will carry out construction, modification and test work in co-operation with police officers.

The post is based initially in Central London, but the section will move to Sandridge, near St. Albans, later in the year.

Qualifications: Ordinary National Certificate or evidence of an equivalent standard of technical education, together with a five year apprenticeship and at least three years' practical experience.

Salary: £1,355 (age 25)—£1,485 (age 28 or over on appointment)—£1,675.

Applications should be made to the Principal Establishment Officer (T.O.), Room 324, Home Office, Whitehall, London, S.W.1 by 31st March, 1970.

TECHNICAL TRAINING

CITY & GUILDS (electrical, etc.) on "Satisfaction or Refund of Fee" terms. thousands of passes. For details of modern courses in all branches of electrical engineering, electronics, radio, TV, automation, etc., send for 132-page handbook—FREE. B.I.E.T. (Dept. 173K), Aldermaston Court, Aldermaston, Berks.

EDUCATIONAL

BECOME "Technically Qualified" in your spare time guaranteed diploma and exam. Home-study courses in radio TV servicing and maintenance. T.T.E.B. City and Guilds, etc., highly informative 120-page Guide—FREE. CHAMBERS COLLEGE (Dept. 858K), 148 Holborn, London, E.C.1.

TV and RADIO, A.M.I.E.R.E., City & Guilds, R.T.E.B., Certs., etc. on "Satisfaction or Refund of Fee" terms. Thousands of passes. For full details of exams and home training courses (including practical equipment) in all branches of Radio, TV, Electronics, etc., write for 132-page Handbook—FREE. Please state subject.
BRITISH INSTITUTE OF ENGINEERING TECHNOLOGY (Dept. 172K), Aldermaston Court, Aldermaston, Berks.

TRAIN FOR SUCCESS WITH ICS

Study at home for a progressive post in Radio, TV and Electronics. Expert tuition for City & Guilds (Telecoms Techn's Cert. and Radio Amateurs') R.T.E.B., etc. Many non-exam courses incl. Closed circuit TV, Numerical control & Computers. Also self-build kit courses—valve and transistor.

Write for FREE prospectus and find out how ICS can help you in your career.

ICS, DEPT. 560, INTERTEXT HOUSE, STEWARTS ROAD, LONDON, S.W.8.

FOR SALE

COLOUR TV. 21-inch experimental, some spares and drawings. Best offer around £60. Phone evenings 01-940 8232.

NEW TELEVISION VALVES

All BVA and Guaranteed.

Example: PCL85 **8/-** each;
PEL200 **10/-** each.
Post free.

Taylor Electronic Supplies Ltd.
535 Millbrook Road, Southampton
Tel. Soton 74828.

FOR SALE, 15 vols. Newnes Radio & TV Servicing from 1955 to 1968—good condition—best offer—Butler, 33 Pennyland Drive, Thurso, Caithness.

FOR SALE

(*continued*)

VALVE CARTONS at keen prices. Send 1/- for sample and list. J. & A. BOXMAKERS, 75a Godwin Street, Bradford 1.

WANTED

SERVICE SHEETS AND MANUALS PURCHASED. Highest prices paid. Sultan Radio, 29 Church Road, Tunbridge Wells, Kent. 'Phone: T.W. 22093.

WANTED, Lopt for Murphy V250C, ISMAY, 96 Leggatts Way, Watford. WDS 6BH.

CASH PAID for New Valves. Payment by return. WILLOW VALE ELECTRONICS, 4 The Broadway, Hanwell, London, W.7. 01-567 5400/2971.

SERVICE SHEETS purchased, HAMILTON RADIO 54 London Road, Bexhill.

WANTED new valves, television, radiograms, transistors, etc. STAN WILLETTS 37 High Street, West Bromwich, Staffs. Tel: WES 0186.

AERIALS

BAKER AND BAINES

BBC dipole 30/-. H 42/-. 3 ele 89/-. **ITA** 3 ele 26/-. 5 ele 34/-. 8 ele 47/5. 11 ele 57/6. **ITA doubles** 8 ele 112/-. 11 ele 140/-. 13 ele 159/-. **Combined BBC/ITA** D 5 45/-. D 8 52/-. H 5 69/-. X 5 75/-. **Combined Loft Special** D 5 with loft pole and fixings 37/-. **UHF Aerials BBC-ITA** 14 ele 37/-. 18 ele 54/-. 22 ele 63/-. Double 22 ele 142/-. **CO-AX** low loss at 1/3 and 2/3. Co-Ax plugs 1/4.

Diplexers — Triplexers-Matched UHF/VHF Diplexers.

Poles, Lashings, Clamps, Couplers, etc. Postage paid on all aerials. Extra on accessories.

Please state channels when ordering.

11 Dale Cres., Tupton, Chesterfield.

SETS & COMPONENTS

R & R RADIO

51 Burnley Road, Rawtenstall
Rossendale, Lancs.
Tel.: Rossendale 3152

VALVES BOXED, TESTED & GUARANTEED

EF80	3/–	PCC84	3/–	PY81	3/6
EBF89	3/6	PCF80	3/–	PY82	3/–
ECC82	3/–	PCF82	3/6	U191	4/6
ECL80	3/–	PCL82	4/–	6F23	5/–
EF80	1/6	PCL83	4/–	30F5	2/6
EF85	3/–	PL36	5/–	30L15	5/–
EY86	4/–	PL81	4/–	30P12	4/6
EZ40	4/6	PL83	4/–	30C15	5/–
EBC41	4/6	PY33	5/–		

POST: ONE VALVE **9d.** TWO TO SIX **6d.**
OVER SIX POST PAID.

TELEVISION TUBE SHOP

ALL THE LATEST NEW TUBES AT REDUCED PRICES

A28-14W	**£11. 0.0**
A47-11W	**£9 19.6**
A47-13W	**£11.15.0**
A47-14W	**£7.12.6**
A59-11W	**£12.19.6**
A59-13W	**£14.15.0**
A59-15W	**£9.10.0**
A59-16W	**£14.15.0**
AW21-11	**£10.10.0**
AW36-20, 21	**£5.12.6**
AW36-80	**£5. 7.6**
AW43-80	**£6. 7.6**
AW43-88, 43-89	**£6.12.6**
AW47-90, 91	**£7.10.0**
AW53-80	**£8.17.6**
AW53-88, 53-89	**£8. 5.0**
AW59-90, 59-91	**£8.15.0**
C17BM, FM, HM	**£6. 7.6**
C17LM, PM, SM	**£6.12.6**
C21HM, SM, TM	**£8.17.6**
CME1201	**£12.10.0**
CME1101	**£11.19.6**
CME1601	**£10. 5.0**
CME1702, 1703	**£6.12.6**
CME1705	**£7. 7.0**
CME1901, 1903	**£7.10.0**
CME2101, 2104	**£8. 5.0**
CME2301, 2302	**£8.15.0**
CME2306	**£14.15.0**
CRM93	**£5.10.0**
CRM124	**£5.10.0**
CRM141, 2, 3, 4	**£5. 2.6**
CRM171, 2, 3	**£6. 7.6**
CRM211, 212	**£8.17.6**
MW36-24, 44	**£5. 2.6**
MW43-64, 69	**£6. 7.6**
MW43-80	**£6. 7.6**
MW53-20	**£8.17.6**
MW53-80	**£8.17.6**
7405A	**£6.12.6**
TSD217, 282	**£11.10.0**

All tubes tested before despatch and guaranteed for 12 months.

Re-processed tubes also available at reduced prices.

CARRIAGE 10/-, via B.R.S. or 15/- via Passenger train. Add 2/6 for Comprehensive insurance.

Midland Stockists:—

Amateur Electronics,
518/520 Alum Rock Road,
Birmingham 8

TELEVISION TUBE SHOP

48 BATTERSEA BRIDGE ROAD
LONDON, S.W.11. BAT 6859

WE GIVE GREEN SHIELD STAMPS

LOOK! Nearly every type in stock now ! !

NEW TELEVISION TUBES !

TWO YEAR FULL REPLACEMENT GUARANTEE

SEE THE DIFFERENCE A NEW TUBE CAN MAKE TO YOUR VIEWING—LATEST SCREENING TECHNIQUES INCLUDING TINTED SCREENS ON 19″ & 23″ TYPES

Large stocks by Cathodeon & other leading manufacturers so why buy ordinary rebuilds? Colour 25″ £60!

Special offer! 19″ rebuilds, 2 year guarantee £5 10s.! 23″ £7 10 0.

12″ £3 0 0 (not 110°) 14″ to 16″ (not 110°) £4 15 0
17″ £5 17 6 19″ 1901 & 19AH £7 10 0

Other 19″ mono tubes—all £6 17 6. Carriage all 12/-. All 21″ mono tubes—£7 17 6, 23″ mono tubes £9 10 0. Carriage 15/–

RIMBANDS, 19″ £8 10 0; 23″ £11 10 0
TWIN PANELS, 19″ £9 17 6; 23″ £15 0 0
Carriage 20/-

Bulk enquiries welcomed, special terms.

PHILIP H. BEARMAN

(Suppliers to H.M. Govt. etc.)

6 POTTERS ROAD, NEW BARNET, HERTS.
Closed Thurs & Sat afternoons TEL. 449/1934 (Robophone) & 7873

AERIAL BOOSTERS 59/- EACH

Three types of high gain transistorized pre-amplifiers to work off PP3 battery or 210-250 D.C.

1. **U.H.F. 625 Type L45** this will tune the complete U.H.F. band.
2. **V.H.F. 405 Type L12** with separate tuning for band I and III. Please state band I Channel No. required.
3. **F.M. V.H.F. Radio Type L11** with bandwidth for the complete band. **All pre-amplifiers are complete and ready to use. Size 3½x3½ colour ivory.**

The 210-240 DC unit is 7/- extra.

VALVE BARGAINS

Any 1-2/-, 5-9/-, 10-14/- 100-£5.10.0.
EB91, EBF80, EBF89, ECC82, EY86, EF80 EF85, EF183, EF184, PCC84, PCC89, PCF80 PCF86, PCL82, PCL83, PCL84, PL36, PL81 P732, P733, P781, P782, P7800, P7801, PY32 PY33, PY81, PY82, PY8000, 30PL1, 30FL1 30F5, 6F23, 6-30L2, 10F1.

Many other types in stock. BY100 Type Rectifiers 2/6 each

MAINS DROPPER SECTIONS
40Ω, 52Ω, 60Ω, 75Ω, 87Ω, 100Ω.
All at—3 amp., 3/6 each.
P. & P. on all goods 1/6.

Money refunded if not satisfied, if returned within 7 days.

VELCO ELECTRONICS

62 Bridge Street, Ramsbottom, Bury, Lancs. Tel. 3036

NEW BVA VALVES! Huge range by return postal service well known to the trade. Brief list of television types herewith, full list S.A.E. All types ex stock!

DY86/7	8/-	PCF86	12/3	PY82	7/-	20L1	19/6
EB91	5/-	PCF801/2	12/3	PY800/1	8/3	20P4	20/–
ECC82	8/6	PCF805	13/-	R19	13/-	30C15	13/9
ECL80	8/-	PCF808	13/6	U25	15/-	30C17	15/9
EF80	8/-	PCL82	10/3	U26	15/-	30F5	16/6
EF85	8/3	PCL83	12/3	U37	15/-	30FL1	12/9
EF183/4	11/3	PCL84	10/3	U191	14/6	30L15	15/3
EH90	10/3	PCL85	10/6	U193	8/3	30L17	14/6
EY51	7/6	PCL86	10/3	U251	17/3	30P12	15/6
EY86/7	7/9	PL36/8	12/9	U301	17/-	30PL1	12/9
PC86/8	10/3	PL81	10/3	U801	24/-	30P4MR	20/–
PC97	8/3	PL83	10/3	6/30L2	15/6	30P19	12/9
PC900	10/3	PL84	8/3	6AT6	9/9	30PL13	18/6
PCC84	9/3	PL500	16/6	6BW7	13/9	30PL14	18/6
PCC89	12/3	PL504	17/-	6CD6G	28/-		
PCF80	10/3	PY81	8/3	6F23	15/6	etc., etc.	

POST FREE OVER £3—LATEST ENCAPSULATED BY 100 & 33 ohm res, 4/-!

SEE SEPARATE TUBE LIST etc.

PHILIP H. BEARMAN

CALLERS WELCOME

Tel. 449/1934 & 7873
(Robophone)

(Suppliers to HM Govt. etc.)
6 Potters Road, New Barnet, Herts.

Closed Thursday &
Saturday afternoons

SETS & COMPONENTS *(continued)*

BOB'S BARGAINS. 10 assorted your choice 14/6. 100 assorted £5-10-0. PCF80 PCC84 PL81 PL36 PY81 PCL82 PCL83 EF85 U191 U301 30F5 30P12 PY33 PY32 PY82 EB91 ECL80 ECC82 EBF80 EBF89 6BW7. The following valves only at 12/6 per doz. EF80 EY86. All valves tested. 3 BY100 type rec. with surge res. 9/- p. & p. 6d. New 25k ohm w.w. controls 2/- p. & p. 6d. EKCO U25 type plastic l.o.p.t. housings 12/6 p. & p. 2/-. Mail Order Only. 2 St. James St., Rawtenstall, Rossendale, Lancs.

TOWERBY LTD

For Line Outputs and Deflector Coils

We have the Country's largest stock of Manufacturer's Original (or Authorised Replacement) Line Output Transformers for many "difficult" makes, including **Ambassador, Baird, Cossor, Decca, Dynatron, Ekco, Ferguson, G.E.C., H.M.V., K.B., Masteradio, Peto-Scott, Philips, Regentone, RGD, Sobell, Ultra,** etc. Also deflector coils output and oscillator transformers, inc. **Alba, Bush, Murphy,** Examples, L.O.P.T. **Murphy** 350/410/540/659/759, **147/-; Bush** TV80, TV95, TV96, **147/-; Cossor** 950, **77/6; Ferguson** 306/308, **79/6; Philips** 1768U L.O.P.T. assembly, **135/-; Ultra** 1984-200c, **101/3.**

Rewind most L.O.P.T., **90/-.**

SPECIAL OFFER

Ekco improved type for Models T221, 231, 310, all at **45/-; Ferranti** 14T4 series inserts, **25/-; Philco** 1019/1021, **52/6.** Terms: C.W.O. or C.O.D. (**3/6**) post/packing **6/-**; 2 or more L.O.P.T.s post/packing free.

All enquiries answered but regret no lists available. Same day delivery on most types.

TOWERBY LTD

MAIL ORDER DIVISION OF T.C.S. LTD.
70 STREATHAM HILL, LONDON, SW2.
Tel: 01-674 2185.

BAKER AND BAINES
Cathode Ray Tubes—Full 2 years guarantee —Mail Order only

14in. £6. 17in. £6. 19in. £7.15.0. 21in. £7.15.0. 23in. £9. Twin Panel 19in. £12. 23in. £15.7.6. Rimguard 19in. £10.9.0. 23in. £13.14.0.
Carriage 12/6. Insurance 5/-.

Television Valves
Most valves available Brand New for extra performance, three months guarantee. 15% off standard price.

UHFSignal Boosters
High gain transistor pre-amplifiers from 75/-. Postage 3/-. These units are powered by small 9v battery. Mains unit available from 117/6. Please state channel when ordering.

11 Daie Cres., Tupton, Chesterfield.

WITWORTH TRANSFORMERS LTD.

Dept. P.T., 26 All Saints Road,
North Kensington, W.11
Telephone: 01-229 9071. 9 a.m. till 5 p.m.

TELEVISION LINE OUTPUT TRANSFORMERS

PRACTICALLY ANY MAKE OR MODEL SUPPLIED OR REWOUND

EKCO, FERRANTI, DYNATRON
Replacement cases **16/-** each, please state model.

S.A.E. for return of post quotation.
TERMS: Cash with order or C.O.D., please add **4s.** for postage.

C.O.D. orders will be charged **6s.**
Transformers fully guaranteed. (98

TELEVISION SALES, 1 Smallbrook Lane, Warminster, Wilts., Phone Warminster 8156. Valves, boxed, tested and guaranteed. PCF80, PCC84, PL81, PY81, EY86, EF80, 30F5, EB91, ECC82, PCL83, 30FL1, ECL80, PCL82, PY82, 30L15, 6-30-L2, you select 8 for 20/-, p. & p. 2/-. S.A.E., other types, several CRTs cheap, tested, for callers only.

EX N.E.V. C.C.T.V. Camera and Monitor Circuits, S.A.E. for list. LOWE, 35 Hensley Point, Hackney, London, E.9.

NEW! All-range (40-860 MHz) pre Amplifier. High gain T/V all channels, inc UHF, colour, FM/VHF Radio, Stereo, etc., built-in power unit. Precision job, *superb* value at £7 12s. 6d. p.p. and ins. paid to any address in U.K. or s.a.e. for literature. Johnsons (Radio) St. Martins Gate, Worcester, (Est. 1943).

150 NEW ASSORTED Capacitors, Resistors, Silvered Mica, Ceramic, etc. Carbon, Hystab, Vitreous ½-20 watt, **15/-.** Post Free. WHITSAM ELECTRICAL, 33 Drayton Green Road, West Ealing, London, W.13.

TO HELP THE HOME CONSTRUCTOR Heathkit now make available our surplus Resistors, Capacitors, etc., at Bargain Prices. Send for lists. E. Moyle, Daystrom Ltd., Gloucester.

CONSISTENT LARGE QUANTITIES OF EX-RENTAL T/V's

Ideal for Slot or Re-sale
DELIVERY CAN BE ARRANGED
Ring: 061-872 3709 and 061-445 9091

SERVICE SHEETS

TRADER SERVICE SHEETS

5/- each plus postage

We can supply Trader Service Sheets for most makes and types of Radios, Tape Recorders and Televisions—Manuals for some.

Cheques and open P.O.s returned if sheets not available.

OAKFIELD ENTERPRISES

LIMITED
30 CRAVEN STREET, STRAND
LONDON WC2

Make	*Model*	*Radio/TV*

1970 List now available at 2/- plus postage

If list is required indicate with X ☐

From ....

Address ....

....

enclose remittance of..................
(and a stamped addressed envelope)
s.a.e. with enquiries please
MAIL ORDER ONLY (April PT)

SERVICE SHEETS *(continued)*

SERVICE SHEETS (1925-1970) for Televisions, Radios, Transistors, Tape Recorders, Record Players etc., by return post, with free Fault-finding Guide. Prices from 1/-. Over 8,000 models available. Catalogue 2/6. Please send S.A.E. with all orders/enquiries. Hamilton Radio, 54 London Road, Bexhill, Sussex

LARGE SUPPLIER OF SERVICE SHEETS

(T.V., RADIO,
TAPE RECORDERS,
RECORD PLAYERS,
TRANSISTORS,
STEREOGRAMS,
RADIOGRAMS,
CAR RADIOS)

FREE. Fault Tracing Guide or TV list on request with order.

10/- each, plus large S.A.E.

(Uncrossed P.O.s please, original returned if service sheets not available.)

C. CARANNA

71 BEAUFORT PARK
LONDON, N.W.11

We have the largest supplies of Service Sheets (strictly by return of post). Please state make and model number/alternative.

Mail order only.

SERVICE SHEETS. Radio, TV etc. 8,000 models. List 2/-. S.A.E. enquiries. TELRAY, 11 Maudland Bank, Preston.

SERVICE SHEETS with Free Fault Finding Chart, 4/6. S.A.E. Lesmar, 15 Conholt Rd., Andover, Hants. (Mail only).

MISCELLANEOUS

TELEKINESIS, hyperspace, time-reversal, fingervision (U.S.S.R.). Send S.A.E.: Paraphysical Laboratory, Downton, Wilts.

Be well-equipped

You need not worry about the painful and lingering minor burns that occur from time to time in leisure pursuits if you keep BURNEZE close to hand. This unique new scientific aerosol cools and anaesthetizes BURNEZE takes the heat out o a burn in just 8 seconds, then controls the blistering and pain that steal skill from nimble fingers. Be well-equipped - buy BURNEZE, from chemists.

Potter & Clarke Ltd Croydon
CR9 3LP

Please mention
PRACTICAL TELEVISION
when replying to
ADVERTISEMENTS

LAWSON BRAND NEW TELEVISION TUBES

SPECIFICATION: *The Lawson range of new television tubes are designed to give superb performance, coupled with maximum reliability and very long life. All tubes are the products of Britain's major C.R.T. manufacturers, and each tube is an exact replacement. Tubes are produced to the original specifications but incorporate the very latest design improvements such as: High Brightness Maximum Contrast Silver Activated Screens, Micro-Fine Aluminising, Precision Aligned Gun Jigging, together with Ultra Hard R.F. High Vacuum Techniques.*

DIRECT REPLACEMENTS FOR MULLARD-MAZDA BRIMAR GEC, ETC.

A47-11W (P)
A47-13W (T)
A47-14W
A47-17W (P)
A47-18W (P)
A59-11W (P)
A59-12W (P)
A59-13W (T)
A59-14W (T)
A59-15W
A59-16W (T)
AW36-80
AW43-80
AW43-88
AW43-89
AW47-90
AW47-91
MW43-69
MW43-64
MW43-80
MW53/20
MW53/80
AW-47-97
AW-53-80
AW53-88
AW53-89
AW59-90
AW59-91
C17/1A
C17/4A
C17/5A
C17/7A
C17/AA
C17/AF
C17/FM
C17/HM
C17/SM
MW/53-80
T908
T911
T914
C19/10A
C19/10AP (T)
C19/AK
C21/1A
C21/7A
C21/AA
C21/AF
C21/KM
C21/SM
C21/TM
C23/7A
C23/10A
C23/AK
C23/AKT (T)
CME1402
CME1702
CME1703
CME1705
CME1706
CME1901
CME1902
CME1903
CME1905
CME1906 (T)
CME1908
CME2101
CME2104
CME2301
CME2302
CME2303
CME2305 (P)
CME2306 (T)
CME2308
CRM173
CRM212
CRM211
17ARP4
17ASP4
17AYP4
21C2P4
21DKP4
23SP4
171K
172K
173K
212K
7205A
7405A
7406A
7502A
7503A
7504A
7601A
7701A
CRM121
MW31-74

FOR YOUR INFORMATION

Experience of supplying CRTs over many years has shown us that when a customer requires a new CRT he means **Immediately.** We at Lawsons are geared to give a by-return service. Tubes are sent fully insured by passenger train. Goods or Road Services are not used delivery taking far too long for customer satisfaction.

		Carr. Insur.
12-14" Types	£4.10.0	10/–
16-17" "	£5.19.0	12/6
19" "	£6.19.0	12/6
21" "	£7.19.0	12/6
19" Panorama	£8.10.0	12/6
23" Mono	£9.10.0	15/–
23" Panorama	£11.10.0	15/–
19" Twin panel	£9.17.6	15/–
23" Twin panel	£12.10.0	15/–

LAWSON TUBES

STATION ESTATE, MALVERN

Offices
18 CHURCHDOWN ROAD,
MALVERN, WORCS. MALVERN 2100

2 YEARS' FULL REPLACEMENT GUARANTEE

Complete tube fitting instructions are supplied with each tube.

A NEW "KING TELEBOOSTER"

THE M4
DUAL BAND
V.H.F. UNIT

KING . . .

the name you can depend on.

- Boosts all Band III and any specified Band I Channel simultaneously.
- Still higher gain . . . nominally 17-18 d.B. both Bands.
- Very low noise third generation passivated transistor.
- Fitted fly lead . . . installed in seconds.
- Quality Case 3¼" × 3¼" × 1½" Cork base.

Specify Band I channel when ordering.

THE NEW UM4 UHF "COLOURBOOSTER"
Channels:-Group "A" Red Spot. "B" Yellow Spot, "C" Green Spot. Prices: Both types:—75/- Battery Model OR £5.17.6 Self Contained Mains Model. P/P 2/6d.

TRANSISTOR DEVICES LIMITED

Bridge House, Newton Abbot, South Devon
Literature on request.

UHF, COLOUR AND TELEVISION SPARES

COLOUR. Leading Brit. makers surplus time base units incl. frame o/p, line o/p and EHT transfs. **£5.0.0,** p.p. 10/-. Scan coils **£3.10.,** p.p. 6/-.
UHF/625 conversion kits and tuners at reduced prices. Lists available.
UHF integrated transistd. 6 position push button tuners, leading Brit. maker surplus, **£4.10.0,** UHF/VHF transistd. IF panels **£3.10.0** incl. circuits, p.p. 4/6.
MURPHY 600/700 series UHF conversion kits in cabinet plinth assy, can be used as separate UHF receiver **£8.10.0,** p.p. 10/-. 625 IF amplifier incl. 5 valves and circuit **58/6,** p.p. 6/-.
SOBELL/GEC dual 405/625 IF amp. and o/p chassis incl. circuit **32-6 ULTRA** 1980C to 2384 625 IF amp. chassis and switch incl. circuits **30/-,** p.p. 4/6.
UHF TUNERS transistd. incl. circuit **50/-,** Cyldon valve type **58/6,** p.p. 4/6.
TV SIGNAL BOOSTER UNITS Sens. gain all stations. **PYE/LABGEAR** trans'd. BB1/ITA or UHF Battery "plug in", **75/-** UHF Masthead **£5.5.0.**
FIREBALL TUNERS. Ferg., HMV, Marconi new **37/6,** other types salvaged 18/6, p.p. 4/6. **PUSH BUTTON.** Plessey. Ekco incl. valves **58/6,** p.p. 4/6.
TURRET TUNERS PETO SCOTT 960, COSSOR 1964, **DECCA** DR 95, 101/606 **50/- CYLDON C 20/- EKCO** 283/330 **25/-** KB Featherlight, Philips 19TG170 Series, Sobell 1010 **35/-,** p.p. 4/6. Large selection ch. coils.
LINE OUTPUT TRANSFS. Popular types available, brand new replacements fully guar. A selection which can be supplied, p.p. 4/6, C.O.D. 3/6.

PHILIPS 17TG100 range, **STELLA** 1011/1029	70/–
BUSH TV53 to 69	32/6
EKCO 221 to 331 (U25 or U26 types) ..	42/6
FERRANTI 1001 to 1019 (U25 or U26 types)	42/6
EKCO 342 to 394, **FERRANTI** 1021 to 1065	75/–
EKCO/FERRANTI 418, 1093, etc.	62/6
DECCA DM17, 3, 4(70°) DR95, 101/606 ..	78/6
FERG 305 to 436, **42/6;** 505 to 727 ..	55/–
FERG HMV/MARCONI ULTRA PHILCO 3600, 2600, 4600, 6600, 1100 ranges, Jellypot	55/–
KB QVP20, QV20/1 to SV20 **55/–,** VC1 to VC11	78/6
MARCONI VT157 to 172	55/–
GEC 302 to 346, **45/–;** 448, 2000 series ..	89/6
HMV 1865/9, 1870, **42/6;** 1980 to 1924 ..	55/–
PYE VT17, CS, CTM, CW17, 17/21, 17/S, 110 to 510, 700, 830, 11U to 40F	62/6
PAM INVICTA equiv. LOPTS to above Pye	62/6
PETO SCOTT 1419 to 1725, **35/–;** 733 to 738	78/6
SOBELL/McMICH TPS173, 180, T23, 24, 178 278, SC24, 270, MP17, 18, M72, 74	45/–
TPS781, T279, SC34, 370, MP27, M75, 76, 93	65/–
195, 282, 1000, 762, 3000 series	89/6
PHILCO 1010 to 1021, **45/–;** 1029 to 1060 ..	55/–
ULTRA 1770 to 2384, **PILOT** PT450 to 650	72/6

LOPT Inserts p.p. 2/- ..	**35/–**
Alba 655, 656	**35/–**
Bush TV32, 46, 43 ..	**45/–**
Cossor 933 to 950 ..	**35/–**
Ekco TP308	**38/6**
Emerson 700 range ..	**35/–**
Ferguson 203 to 246 ..	**35/–**
Ferranti 14T5 to 21K6	**35/–**
KB NF70, OV30, PV40 PVP20, QV10, 20, 30	**35/–**
KB/RGD Featherlight	**50/–**
KB/RGD VC1, 2, 3, 4..	**35/–**
PETO SCOTT 733/738..	**35/–**
Philco 1961 series ..	**35/–**
Philips 17TG100 range	**35/–**
Pye VT4, VT7	**42/6**
RGD D17, 590 to 619..	**35/–**
REG 10-4, 10-17 to 192	**35/–**
Ultra 1770 1780 range	**35/–**

SCAN COILS, Frame O/P, frame/line osc. trans. mains dropper, controls, etc. **NEW SCAN COILS** 110° types surplus special offer, **PYE, EKCO, ULTRA,** PILOT, MURPHY, **30/-,** FRAME O/P TRANS, SOBELL **17/6,** p.p. 4/6.
ENQUIRIES invited, quotations given, C.O.D. despatch available.

MANOR SUPPLIES

64 GOLDERS MANOR DRIVE, LONDON, N.W.11
Callers: 589b HIGH ROAD (nr. Granville Road) N. Finchley N.12
HIL 9118 (01-445 9118)

VALUABLE NEW HANDBOOK FREE TO AMBITIOUS ENGINEERS

Have you had *your* copy of "Engineering Opportunities"?

The new edition of **"ENGINEERING OPPORTUNITIES"** is now available—without charge—to all who are anxious for a worthwhile post in Engineering. Frank, informative and completely up to date, the new **"ENGINEERING OPPORTUNITIES"** should be in the hands of every person engaged in any branch of the Engineering industry, irrespective of age, experience or training.

On ' SATISFACTION or REFUND of FEE ' terms

This remarkable book gives details of examinations and courses in every branch of Engineering, Building, etc., outlines the openings available and describes our Special Appointments Department.

WHICH OF THESE IS YOUR PET SUBJECT?

TELEVISION ENG.
Advanced Television Eng.—Gen. Television Eng.—Television Servicing and Maintenance.

ELECTRONIC ENG.
Advanced Electronic Eng. Gen. Electronic Eng.—Applied Electronics—Practical Electronics—Radar Tech.—Frequency Modulation—Transistors.

MECHANICAL ENG.
Advanced Mechanical Eng. Gen. Mechanical Eng.—Maintenance Eng.—Diesel Eng.—Press Tool Design—Sheet Metal Work—Welding—Eng. Pattern Making—Inspection—Draughtsmanship—Metallurgy—Production Eng.

RADIO ENG.
Advanced Radio—Gen. Radio—Radio Servicing—Telecommunications—Sound Recording—Automation—Practical Radio—Radio Amateurs' Exam.

ELECTRICAL ENG.
Advanced Electrical Eng.—Gen. Electrical Eng.—Installations—Draughtsmanship—Illuminating Eng.—Refrigeration—Elem. Electrical Science—Electrical Supply—Mining Electrical Eng.

CIVIL ENG.
Advanced Civil Eng.—Municipal Eng.—Structural Eng.—Sanitary Eng.—Road Eng.—Hydraulics—Mining—Water Supply—Petrol Tech.

WE HAVE A WIDE RANGE OF COURSES IN OTHER SUBJECTS INCLUDING CHEMICAL ENG., AERO ENG., MANAGEMENT, INSTRUMENT TECHNOLOGY, WORKS STUDY, MATHEMATICS, ETC.

Which qualification would increase your earning power?
B.Sc. (Eng.), A.M.S.E., C.Eng., A.M.I.E.R.E., R.T.E.B., A.M.I.P.E., A.M.I.M.I., A.M.I.E.D., A.R.I.B.A., A.I.O.B., P.M.G., A.R.I.C.S., M.R.S.H., A.M.I.Mun.E., CITY & GUILDS, GEN. CERT. OF EDUCATION, ETC.

British Institute of Engineering Technology
445A ALDERMASTON COURT, ALDERMASTON, BERKSHIRE

THIS BOOK TELLS YOU

- ★ **HOW to get a better paid, more interesting job.**
- ★ **HOW to qualify for rapid promotion.**
- ★ **HOW to put some letters after your name and become a key man . . . quickly and easily.**
- ★ **HOW to benefit from our free Advisory and Appointment Dept.**
- ★ **HOW you can take advantage of the chances you are now missing.**
- ★ **HOW, irrespective of your age, education or experience, YOU can succeed in any branch of Engineering.**

164 PAGES OF EXPERT CAREER-GUIDANCE

PRACTICAL EQUIPMENT

Basic Practical and Theoretic Course for beginners in TV, Radio, Electronics etc.
A.M.I.E.R.E. City & Guilds
Radio Amateurs' Exam.
R.T.E.B. Certificate
P.M.G. Certificate
Practical Radio
Television & Radio Servicing
Practical Electronics
Electronics Engineering
Automation

INCLUDING TOOLS

The specialist Electronics Division of B.I.E.T. NOW offers you a real laboratory training at home with practical equipment. Ask for details.

B.I.E.T.

You are bound to benefit from reading **"ENGINEERING OPPORTUNITIES"**, and you should send for your copy *now*—FREE and without obligation.

POST COUPON

TO B.I.E.T., 445A ALDERMASTON COURT,
ALDERMASTON, BERKSHIRE

Please send me a FREE copy of "ENGINEERING OPPORTUNITIES." I am interested in (state subject, exam., or career).

....

NAME ....

ADDRESS ....

....

....

WRITE IF YOU PREFER NOT TO CUT THIS PAGE

THE B.I.E.T. IS THE LEADING INSTITUTE OF ITS KIND IN THE WORLD