HX-EP SERIES
DIGITAL OUTPUT

Utilizing an incremental encoder as the sensor, the **UniMeasure HX-EP Series** position transducer provides a two channel square wave current sinking output signal in quadrature. The standard output is a single-ended TTL compatible square. The resolution values shown in the specifications table indicate resolution for times 1 counting mode where a count is registered for one up transition in channel A. With interface electronics capable of times 2 or times 4 counting mode, a true resolutional increase of 2 or 4 may be obtained. For example, the HX-EP-50 has a resolution of approximately .004" per count in times 1 counting mode whereas the resolution is approximately .001" per count in times 4 counting mode.

The actual resolution of a HX-EP transducer differs from unit to unit because of tolerances associated with the wire rope diameter and the capstan upon which the wire rope winds. The nylon jacketed wire rope option will have the effect of slightly reducing the resolution. Linearity and repeatability remain independent of resolution.

In applications where the output count is interpreted as a percentage of total travel, resolutional differences from unit to unit are not critical. However, in applications where the digital output is to be interfaced to a digital display to give an output in engineering units, the calibration constant supplied with the transducer may be used to calculate a suitable scale multiplier to produce the correct engineering units. Alternative outputs shown in the Electrical Outputs table below are available to facilitate interfacing to a variety of different types of equipment.

SPECIFICATIONS

GENERAL
- Connector MS3102E-14S-6P
- Mating Connector MS3106E-14S-6S
- Available Measurement Ranges..... See Supplemental Data[1], Table 12

PERFORMANCE
- Linearity..... ±0.03% Full Scale
- Repeatability ..... ±0.015% Full Scale
- Resolution ..... See Table 9

ENVIRONMENTAL
- Operating temperature..... -20°C to +95°C
- Storage temperature ..... -40°C to +100°C
- Operating humidity..... 100%
- Vibration ..... 15 G's 0.1 ms max.
- Shock ..... 50 G's 0.1 ms max.

INGRESS PROTECTION (Exclusive of Wire Rope Area)
- Standard..... IP-65 (NEMA 4)
- Optional..... IP-68 (NEMA 6)

ELECTRICAL
- Input Voltage ..... +5 VDC ±5% or 8-28 VDC
- Input Current ..... 125 mA Maximum
- Output ..... Two channel TTL square wave
- Phase Quadrature ..... 90°±20°

TABLE 9–RESOLUTION

MODEL	RANGE inch	RANGE metric	RESOLUTION[2] counts/inch	RESOLUTION[2] counts/mm	RESOLUTION TOLERANCE[2]
HX-EP-10	10	250 mm	500.0	19.69	±0.30%
HX-EP-25	25	640 mm	250.0	9.84	±0.20%
HX-EP-50	50	1250 mm	250.0	9.84	±0.20%
HX-EP-60	60	1.5 m	205.8	8.10	±0.20%
HX-EP-80	80	2.0 m	155.2	6.11	±0.20%
HX-EP-100	100	2.5 m	82.9	3.26	±0.20%
ALL RANGES GREATER THAN 100"	100	2.5 m	82.9	3.26	±0.20%

ELECTRICAL OUTPUT

For electrical output description, waveform and wiring, See **Standard Series Supplemental Data, TABLE 8, Page 29.**

FOOTNOTES TO SPECIFICATIONS
1. Supplemental Data section located at end of HX Series pages.
2. The resolution shown is a calculated number based upon the capstan diameter, wire rope diameter and line count of the encoding device. The tolerance on the resolution accounts for resolutional differences from unit to unit due to manufacturing tolerances on the capstan and wire rope. In practice, the output count in a given unit of travel is an integer.

MODEL NUMBER CONFIGURATION

HX-EP- _ - _ - _ - _

(0) (1) (2) (3) (4) (5) (7) (8) (9)

BASIC CONFIGURATION (FOR ALL RANGES)

HX-EP-50-S10-N10-1BC

(0) RANGE
Select Measurement Range From Supplemental Data Table 12 (next page), Insert Corresponding Measurement Range Designator

(1) WIRE ROPE
- **S** ..... Stainless Steel (See Supplemental Data, Table 12)
- **N** ..... Ø.018 (0,45 mm) Nylon Jacketed Stainless Steel Ranges to 80" (2m) only. (formerly NJC)
- **J**..... Ø.037 (0,94 mm) Nylon Jacketed Stainless Steel Ranges 100" (2.5m) to 500" (12.7m) only.

(2) WIRE ROPE TENSION
- **1**..... Standard
- **2**..... Reduced (Ranges to 80" only)

(3) WIRE ROPE EXIT DIRECTION
Use Number designators shown

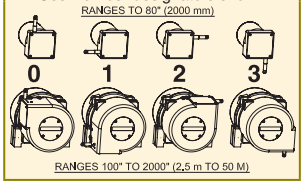

(4) **N**.....Required Designator

(5) ELECTRICAL OUTPUT
- **10**.....5 VDC TTL Compatible, Two Channel
- **30**.....5 VDC Push-Pull Differential Line Drive
- **50**.....8 to 28 VDC Current Sinking Two Channel
- **70**.....8 to 28 VDC Push-Pull Differential Line Drive

For Description See TABLE 8 on next page

NOTES FOR OPTION BOXES (7), (8), and (9)

IP-65 (NEMA 4): Transducer equipped with body mounted connector and with or without mating connector. Mating connector with electrical cable available separately as part number **10119-xM** where 'x' is length of electrical cable in meters.

IP-68 (NEMA 6): Transducer equipped with bulkhead fitting and length of electrical cable. Remote end of electrical cable may be outfitted with water proof connector. Mating connector with electrical cable available separately as part number **10424-xM** where 'x' is length of electrical cable in meters.

(7) INGRESS PROTECTION
- **1**..... IP-65 (NEMA 4)
- **2**..... IP-68 (NEMA 6)
- **3**..... IP-68 (NEMA 6) Corrosion Resistant Construction

(8) IP-65–NEMA 4 CONNECTOR
- **B**..... 6 Pin 3102E Body Mounted Connector

IP-68–NEMA 6 ELECTRICAL CABLE
- **P**..... Bulkhead Fitting w/ 0.3m (12") Electrical Cable
- **3**..... Bulkhead Fitting w/ 3m (10') Electrical Cable
- **4**..... Bulkhead Fitting w/ 4m (13.5') Electrical Cable
- **5**..... Bulkhead Fitting w/ 5m (16.5') Electrical Cable
- **6**..... Bulkhead Fitting w/ 6m (20') Electrical Cable
- **7**..... Bulkhead Fitting w/ 7m (23') Electrical Cable

(9) IP-65–NEMA 4 MATING CONNECTOR
- **C**..... IP-65 Mating Connector Included
- **K**..... IP-65 Mating Connector Omitted*

*Electrical cable with mating connector may be ordered separately as part number **10119-xM** where 'x' is the length required in meters.

IP-68–NEMA 6 CABLE MOUNTED CONNECTOR
- **N**.....No connector on end of electrical cable
- **K**.....IP-68 Cable to cable connector with ***NO*** mating connector**

Electrical cable with mating connector may be ordered separately as part number **10424-xM where 'x' is the length required in meters. Mating connector alone unavailable.

UniMeasure, Inc. 4175 SW Research Way, Corvallis, Oregon 97333 U.S.A. | Tel: 541-757-3158 | Fax: 541-757-0858 | Email: sales@unimeasure.com

ADDITIONAL OPTIONS

TABLE 8

EP, HX-EP SERIES OPTIONAL ELECTRICAL OUTPUTS

OPTION	OUTPUT DESCRIPTION	OUTPUT STAGE	WAVEFORM	CONNECTOR WIRING
10	**5 VDC Current Sinking** 5 VDC TTL compatible output. Input Voltage: 5 VDC.	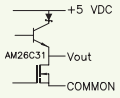		A +Vin B COMMON C CHANNEL A D CHANNEL B E F
50	**8 to 28 VDC Current Sinking** Current sinking output with 10KΩ internal pullup resistors. Input Voltage: 8 to 28 VDC.	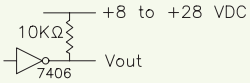		
30	**5 VDC Push-Pull Differential Line Drive** Push-Pull, current sourcing and current sinking output. Output is compliant with requirements of TIA/EIA-422-B. Input Voltage: 5 VDC input.	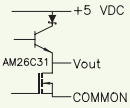	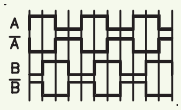	A +Vin B COMMON C CHANNEL A D CHANNEL Ā E CHANNEL B F CHANNEL B̄
70	**8 to 28 VDC Push-Pull Differential Line Drive** Push-Pull, current sourcing and current sinking output. Input Voltage: 8 to 28 VDC.	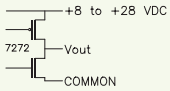		

MECHANICAL SPECIFICATIONS

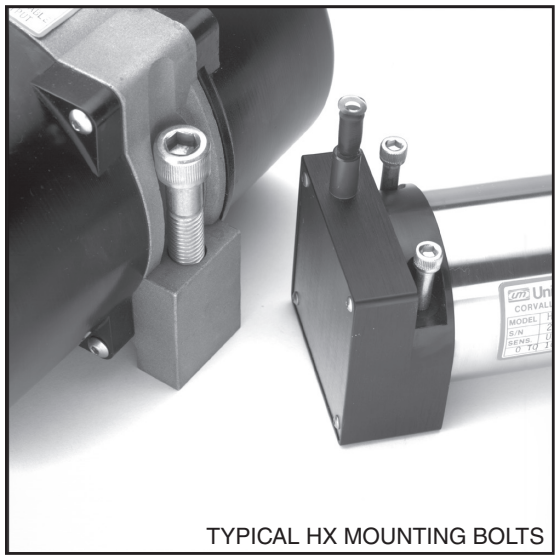

TYPICAL HX MOUNTING BOLTS

AVAILABLE MEASUREMENT RANGES .... See Table 12

CONSTRUCTION

Ranges 80" (2 m) and under ..... Anodized Aluminum Mounting Base
Stainless Steel & Anodized Aluminum Housing

Ranges 100" (2.5 m) and greater ..... Stainless Steel Mounting Base
High Impact, Corrosion Resistant
Thermoplastic Housings

Wire Rope Tension..... See Table 12
Wire Rope Diameter ..... See Table 12
Weight ..... See Table 12
Connector MS3102A-14S-6P
Mating Connector MS3106E-14S-6S
Optional NEMA 6 Capability ..... Bulkhead fitting with shielded twisted pair cable

Life[1]

Ranges 2" to 6" ..... 5,000,000 full stroke cycles
Ranges 10" to 25" ..... 500,000 full stroke cycles
Ranges 30" to 400" ..... 250,000 full stroke cycles
Ranges 500" to 2000" ..... 200×10^6 lineal inches

NOTES:
1. With 1K ohm potentiometer, wire rope misalignment 2° maximum at full stroke, relatively dust free environment, nylon jacketed wire rope on units with ranges 80" and less.

ADDITIONAL OPTIONS

TABLE 12

Use value from this column to indicate overall measurement range

Check mark indicates available measurement range

MEASUREMENT RANGE DESIGNATOR	STANDARD MEASUREMENT RANGES (in)	STANDARD MEASUREMENT RANGES (mm)	APPLICABLE SERIES: HX-PA HX-PB HX-P420 HX-P510	APPLICABLE SERIES: HX-EP	APPLICABLE SERIES: HX-V HX-VP	WIRE ROPE TENSION (NOMINAL) (oz)	WIRE ROPE TENSION (NOMINAL) (N)	WIRE ROPE DIAMETER (in)	WIRE ROPE DIAMETER (mm)	TRANSDUCER WEIGHT (lb)	TRANSDUCER WEIGHT (Kg)	Product Photo
2	2	50	✔	-	✔	34	9.4	.016	0.4	2	0.9	
3	3	75	✔	-	✔	24	6.7	.016	0.4	2	0.9	
4	4	100	✔	-	✔	24	6.7	.016	0.4	2	0.9	
5	5	125	✔	-	✔	19	5.3	.016	0.4	2	0.9	
6	6	150	✔	-	✔	24	6.7	.016	0.4	2	0.9	
10	10	250	✔	✔	✔	34	9.4	.016	0.4	2	0.9	
15	15	390	✔	-	✔	24	6.7	.016	0.4	2	0.9	
20	20	500	✔	-	✔	24	6.7	.016	0.4	2	0.9	
25	25	640	✔	✔	✔	19	5.3	.016	0.4	2	0.9	
30	30	750	✔	-	✔	24	6.7	.016	0.4	2	0.9	
40	40	1000	✔	-	✔	24	6.7	.016	0.4	2	0.9	
50	50	1250	✔	✔	✔	19	5.3	.016	0.4	2	0.9	
60	60	1500	✔	✔	✔	24	6.7	.016	0.4	2	0.9	
80	80	2.0m	✔	✔	✔	21	5.8	.016	0.4	2	0.9	
100	100	2.5m	✔	✔	✔	36	10.0	.024	0.6	6.8	3.1	
120	120	3.0m	✔	✔	✔	36	10.0	.024	0.6	6.8	3.1	
150	150	3.8m	✔	✔	✔	36	10.0	.024	0.6	6.8	3.1	
200	200	5.0m	✔	✔	✔	36	10.0	.024	0.6	6.8	3.1	
250	250	6.3m	✔	✔	✔	36	10.0	.024	0.6	6.8	3.1	
300	300	7.5m	✔	✔	✔	36	10.0	.024	0.6	6.8	3.1	
350	350	8.8m	✔	✔	✔	36	10.0	.024	0.6	6.8	3.1	
400	400	10.0m	✔	✔	✔	36	10.0	.024	0.6	6.8	3.1	
500	500	12.5m	✔	✔	✔	36	10.0	.024	0.6	8.6	3.9	
600	600	15.2m	✔	✔	✔	36	10.0	.024	0.6	8.6	3.9	
800	800	20.3m	✔	✔	✔	36	10.0	.024	0.6	8.6	3.9	
1000	1000	25.4m	✔	✔	-	36	10.0	.024	0.6	12.0	5.4	
1200	1200	30.4m	✔	✔	-	36	10.0	.024	0.6	12.3	5.6	
1600	1600	40.6m	✔	✔	-	36	10.0	.024	0.6	14.1	6.4	
1800	1800	45.7m	✔	✔	-	36	10.0	.021	0.6	15.9	7.2	
2000	2000	50.8m	✔	✔	-	36	10.0	.021	0.5	16.3	7.4	

Specifications subject to change without notice

OPTION DESCRIPTIONS

OPTION	OPTION DESIGNATOR	DESCRIPTION
NYLON JACKETED WIRE ROPE *RANGES TO 80" ONLY*	**N**	Replaces standard stainless steel wire rope with Ø.018 nylon jacketed wire rope. This option increases wire rope life dramatically but may increase non-linearity by as much as ±.05% of full scale.
NYLON JACKETED WIRE ROPE *RANGES 100" TO 500" ONLY*	**J**	Replaces standard stainless steel wire rope with Ø.037 nylon jacketed wire rope.
ALTERNATE WIRE ROPE EXIT *RANGES TO 80" (2.0 m)*	**1, 2, 3**	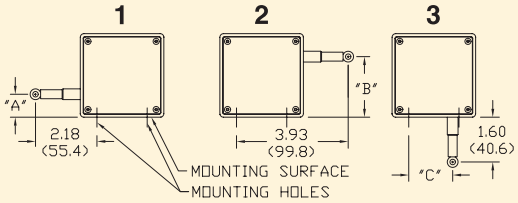
ALTERNATE WIRE ROPE EXIT *RANGES 100" (2.5 m) and GREATER*	**1, 2, 3**	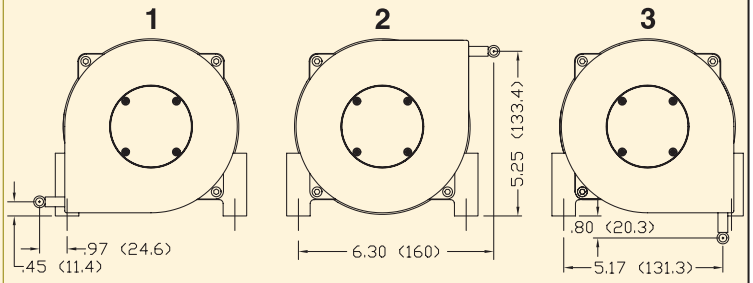
NON-STANDARD POTENTIOMETER *APPLIES TO HX-PA & HX-VPA ONLY*	**3, 4**	Non-standard potentiometer linearity is as follows:
REVERSED OUTPUT	**R**	Output is at a maximum when wire rope is fully retracted. Output decreases as wire rope is extended. Does not apply to velocity signal.
IP-68, (NEMA 6) CAPABILITY	**2**	 Connector is replaced with a bulkhead fitting and a designated length of urethane jacketed, shielded, twisted pair cable. Retraction mechanism and electrical components are sealed to IP-68, (NEMA 6) capability.
CORROSION RESISTANT CONSTRUCTION	**3**	All external anodized aluminum parts of transducer are replaced with stainless steel and corrosion resistant plastic. Transducer is sealed to IP-68 (NEMA 6) capability. Urethane jacketed, shielded, twisted pair cable exits unit. No connector on unit. 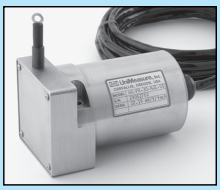

RANGE	"A"	"B"	"C"
2", 10"	1.12 (28.4)	1.79 (45.5)	1.21 (30.7)
3", 15", 30"	.96(24.4)	1.95 (49.5)	1.37 (34.8)
4", 20", 40"	.80 (20.3)	2.11 (53.6)	1.53 (38.9)
5", 25", 50"	.64 (16.3)	2.27 (57.7)	1.69 (42.9)
6", 60"	.49 (12.4)	2.42 (61.5)	1.84 (46.7)
80"	.25 (6.4)	2.66 (67.6)	2.08 (52.8)

Dimensions in brackets are millimeters

Dimensions in brackets are millimeters

RANGE	LINEARITY
5" and Below	±1.00% of full scale
10" to 25"	±0.50% of full scale
30" and above	±0.25% of full scale

Note: *This option is subject to potentiometer availability.*

DIMENSIONAL INFORMATION

HX SERIES – RANGES TO 80" (2 m)

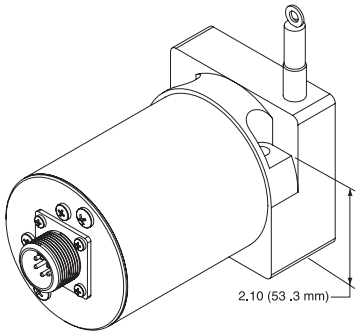

FIG. 1

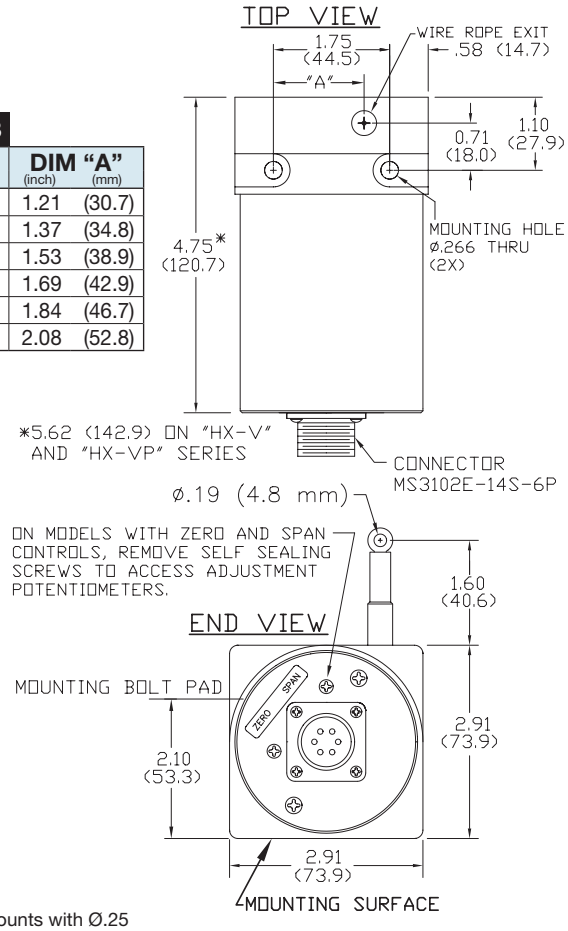

TABLE 13

RANGE	DIM "A" (inch)	(mm)
2", 10"	1.21	(30.7)
3", 15", 30"	1.37	(34.8)
4", 20", 40"	1.53	(38.9)
5", 25", 50"	1.69	(42.9)
6", 60"	1.84	(46.7)
80"	2.08	(52.8)

NOTES:
1. Transducer mounts with Ø.25 or M6 Socket head cap bolts.

Dimensions in brackets are millimeters

HX SERIES – RANGES GREATER THAN 80" (2 m)

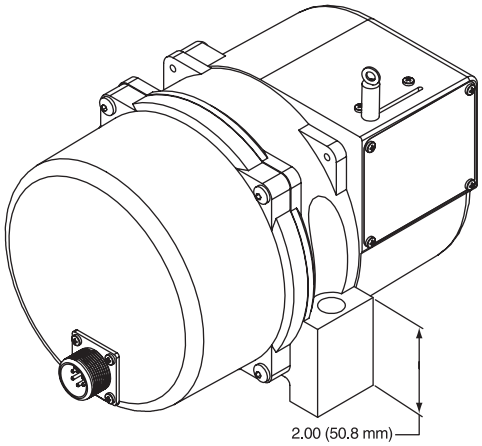

FIG. 2

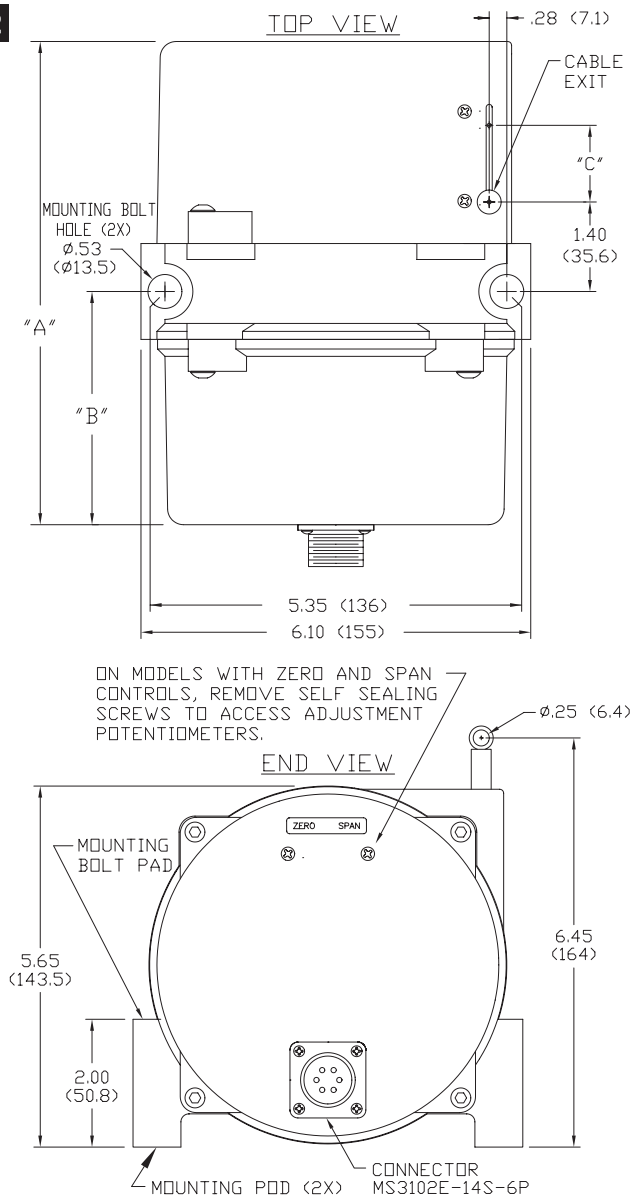

TABLE 14

RANGE	DIM "A" (inch)	(mm)	DIM "B" (inch)	(mm)
Ranges to 800"	7.70	(196)	3.80	(97)
1000" to 2000"	11.0	(280)	5.60	(142)

NOTES:
1. Transducer mounts with Ø.50 or M12 socket head cap bolts.
2. Dimension "C" is the cable offset that occurs as the cable is extended from the transducer. For "C" in inches, C = .0016 x E where E = extension in inches. For "C" in millimeters, C = .0016 x E where E = extension in mm.

Dimensions in brackets are millimeters