COMMONWEALTH OF MASSACHUSETTS
DEPARTMENT OF CONSERVATION AND RECREATION
DIVISION OF PLANNING AND ENGINEERING

MASS CENTRAL RAIL TRAIL
IN THE TOWNS OF HUDSON, STOW, MARLBOROUGH & SUDBURY
MASSACHUSETTS
MIDDLESEX COUNTY

THESE PLANS ARE SUPPLEMENTED BY THE OCTOBER 2017 CONSTRUCTION STANDARD DETAILS, THE 2015 OVERHEAD SIGNAL STRUCTURE AND FOUNDATION STANDARD DRAWINGS, MASSDOT TRAFFIC MANAGEMENT PLANS AND DETAIL DRAWINGS, THE 1990 STANDARD DRAWINGS FOR SIGNS AND SUPPORTS, THE 1968 STANDARD DRAWINGS FOR TRAFFIC SIGNALS AND HIGHWAY LIGHTING, AND THE LATEST EDITION OF THE AMERICAN STANDARD FOR NURSERY STOCK.

DCR CONTRACT NO. P19-3295-D1A

CHARLES D. BAKER, GOVERNOR

KARYN E. POLITO, LT. GOVERNOR

KATHLEEN A. THEOHARIDES , SECRETARY
EXECUTIVE OFFICE OF ENERGY & ENVIRONMENTAL AFFAIRS

JIM MONTGOMERY, INTERIM COMMISSIONER
DEPARTMENT OF CONSERVATION & RECREATION

INDEX

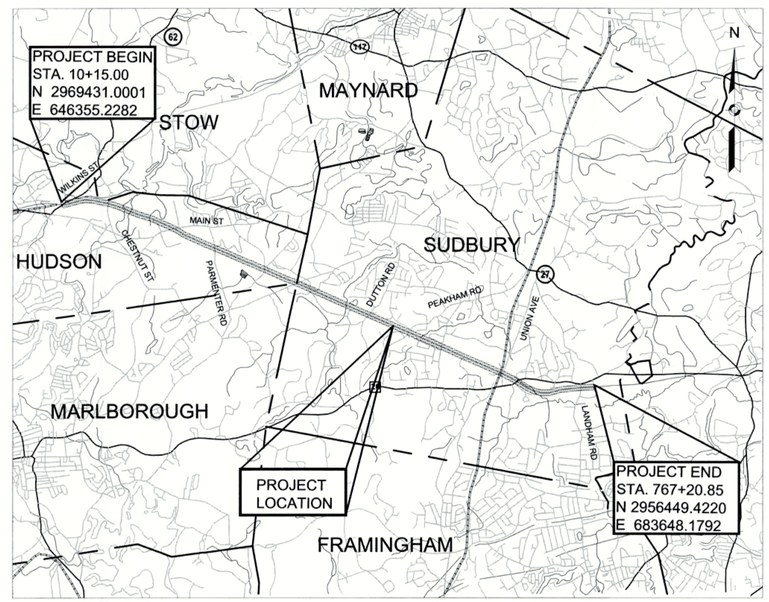

0 2000 4000 6000 8000
SCALE: 1" = 2000'

LENGTH OF PROJECT = 40,410.06 FEET = 7.653 MILES

SUDBURY NOTICE OF INTENT SUBMISSION
NOT APPROVED FOR CONSTRUCTION

REV.	DATE	DESCRIPTION	BY

COMMONWEALTH OF MASSACHUSETTS
TRACIE A. LENHARDT
CIVIL
No. 47612
REGISTERED PROFESSIONAL ENGINEER
3.4.20

vhb
Transportation Land Development
Environmental Services
101 Walnut St., P.O. Box 9151
Watertown, MA 02472
617 924 1770 FAX 617 924 2286

COMMONWEALTH OF MASSACHUSETTS
DEPARTMENT OF CONSERVATION AND RECREATION
DIVISION OF PLANNING AND ENGINEERING

MASS CENTRAL RAIL TRAIL - WAYSIDE

MASS CENTRAL RAIL TRAIL
HUDSON, STOW, MARLBOROUGH & SUDBURY, MA

DESIGNER: JCR
CHECKED: SHK
DRAWN: JCR
CHECKED: TAL

TITLE SHEET & INDEX

CONT. P19-3295-D1A
ACC. XXXXXXx
SCALE: AS NOTED
DATE: MAR 2020

SHEET NO. G-01
1 OF 1

14424_HD(COV).DWG Plotted on 3-Mar-2020 2:00 PM

GENERAL SYMBOLS

EXISTING	PROPOSED	DESCRIPTION
JB	JB	JERSEY BARRIER
CB	CB	CATCH BASIN
		CATCH BASIN CURB INLET
FP	FP	FLAG POLE
GP	GP	GAS PUMP
MB	MB	MAIL BOX
		POST SQUARE
		POST CIRCULAR
WELL	WELL	WELL
EHH	EHH	ELECTRIC HANDHOLE
		FENCE GATE POST
GG	GG	GAS GATE
BHL #	BHL #	BORING HOLE
MW #	MW #	MONITORING WELL
TP #	TP #	TEST PIT
		HYDRANT
		LIGHT POLE
CB CB/DH		CONCRETE BOUND/DRILL HOLE
		GPS POINT
C	C	CABLE MANHOLE
D	D	DRAINAGE MANHOLE
E	E	ELECTRIC MANHOLE
G	G	GAS MANHOLE
M	M	MISC MANHOLE
S	S	SEWER MANHOLE
T	T	TELEPHONE MANHOLE
W	W	WATER MANHOLE
MHB	MHB	MASSACHUSETTS HIGHWAY BOUND
MON		MONUMENT
SB		STONE BOUND
TB		TOWN OR CITY BOUND
		TRAVERSE OR TRIANGULATION STATION
TPL or GUY	TPL or GUY	TROLLEY POLE OR GUY POLE
HTP		TRANSMISSION POLE
UFB	UFB	UTILITY POLE W/ FIREBOX
UPDL	UPDL	UTILITY POLE WITH DOUBLE LIGHT
ULT	ULT	UTILITY POLE W / 1 LIGHT
UPL	UPL	UTILITY POLE
		BUSH
SIZE & TYPE		TREE
		STUMP
		SWAMP / MARSH
WF-X-XXX		WETLAND FLAG
WG	WG	
PM	PM	PARKING METER
		OVERHEAD CABLE/WIRE
		CURBING
100 99		CONTOURS (ON-THE-GROUND SURVEY DATA)
100 99		CONTOURS (PHOTOGRAMMETRIC DATA)
12" RCP D		UNDERGROUND DRAIN PIPE (DOUBLE LINE 24 INCH AND OVER)
E		UNDERGROUND ELECTRIC DUCT (DOUBLE LINE 24 INCH AND OVER)
4" HP G		UNDERGROUND GAS MAIN (DOUBLE LINE 24 INCH AND OVER)
8" VCP S		UNDERGROUND SEWER MAIN (DOUBLE LINE 24 INCH AND OVER)
T		UNDERGROUND TELEPHONE DUCT (DOUBLE LINE 24 INCH AND OVER)
8" C.I. W		UNDERGROUND WATER MAIN (DOUBLE LINE 24 INCH AND OVER)
		BALANCED STONE WALL
		GUARD RAIL - STEEL POSTS
		WOOD GUARD RAIL
X	X	CHAIN LINK OR METAL FENCE
		WOOD FENCE
		TREE LINE
		SAWCUT LINE
		TOP OR BOTTOM OF SLOPE
		LIMIT OF EDGE OF PAVEMENT OR COLD PLANE AND OVERLAY
		BANK OF RIVER OR STREAM
		BORDER OF WETLAND
100'BZ		100 FT WETLAND BUFFER
200'RA		200 FT RIVERFRONT AREA BUFFER
APX 200'RA		APPROX 200 FT RIVERFRONT BUFFER
100'RA		100 FT RIVERFRONT AREA BUFFER
APX 100'RA		APPROX 100 FT RIVERFRONT AREA BUFFER
AURA		AURA BUFFER
100'BZ-AURA		100 FT AURA BUFFER
100'VPBZ		100 FT VERNAL POOL AREA BUFFER
		STATE HIGHWAY LAYOUT/STATE OWNED LAND
		TOWN OR CITY LAYOUT
		COUNTY LAYOUT
		RAILROAD SIDELINE
		TOWN OR CITY BOUNDARY LINE
		PROPERTY LINE OR APPROXIMATE PROPERTY LINE
		EASEMENT
		COMPOST FILTER TUBE
		TRAVERSE OR TRIANGULATION STATION
		CHECK DAM
		SITE BENCH W/ CONCRETE PAD

ABBREVIATIONS

GENERAL

AADT	ANNUAL AVERAGE DAILY TRAFFIC
ABAN	ABANDON
ADJ	ADJUST
APPROX.	APPROXIMATE
A.C.	ASPHALT CONCRETE
ACCM PIPE	ASPHALT COATED CORRUGATED METAL PIPE
BIT.	BITUMINOUS
BC	BOTTOM OF CURB
BD.	BOUND
BL	BASELINE
BLDG	BUILDING
BM	BENCHMARK
BO	BY OTHERS
BOS	BOTTOM OF SLOPE
BR.	BRIDGE
CB	CATCH BASIN
CBCI	CATCH BASIN WITH CURB INLET
CC	CEMENT CONCRETE
CCM	CEMENT CONCRETE MASONRY
CEM	CEMENT
CI	CURB INLET
CIP	CAST IRON PIPE
CLF	CHAIN LINK FENCE
CL	CENTERLINE
CMP	CORRUGATED METAL PIPE
CSP	CORRUGATED STEEL PIPE
CO.	COUNTY
CONC	CONCRETE
CONT	CONTINUOUS
CONST	CONSTRUCTION
CR GR	CROWN GRADE
DHV	DESIGN HOURLY VOLUME
DI	DROP INLET
DIA	DIAMETER
DIP	DUCTILE IRON PIPE
DW	STEADY DON'T WALK - PORTLAND ORANGE
DWY	DRIVEWAY
ELEV (or EL.)	ELEVATION
EMB	EMBANKMENT
EOP	EDGE OF PAVEMENT
EXIST (or EX)	EXISTING
EXC	EXCAVATION
F&C	FRAME AND COVER
F&G	FRAME AND GRATE
FDN.	FOUNDATION
FLDSTN	FIELDSTONE
GAR	GARAGE
GD	GROUND
GG	GAS GATE
GI	GUTTER INLET
GIP	GALVANIZED IRON PIPE
GRAN	GRANITE
GRAV	GRAVEL
GRD	GUARD
HDW	HEADWALL
HMA	HOT MIX ASPHALT
HOR	HORIZONTAL
HYD	HYDRANT
INV	INVERT
JCT	JUNCTION
L	LENGTH OF CURVE
LB	LEACH BASIN
LP	LIGHT POLE
LST	LANDSCAPE TIMBER
LT	LEFT
MAX	MAXIMUM
MB	MAILBOX
MH	MANHOLE
MHB	MASSACHUSETTS HIGHWAY BOUND
MIN	MINIMUM
NIC	NOT IN CONTRACT
NO.	NUMBER
PC	POINT OF CURVATURE
PCC	POINT OF COMPOUND CURVATURE
P.G.L.	PROFILE GRADE LINE
PI	POINT OF INTERSECTION
POC	POINT ON CURVE
POT	POINT ON TANGENT
PRC	POINT OF REVERSE CURVATURE
PROJ	PROJECT
PROP	PROPOSED
PSB	PLANTABLE SOIL BORROW
PT	POINT OF TANGENCY
PVC	POINT OF VERTICAL CURVATURE
PVI	POINT OF VERTICAL INTERSECTION
PVT	POINT OF VERTICAL TANGENCY
PVMT	PAVEMENT

ABBREVIATIONS (cont.)

GENERAL

PWW	PAVED WATER WAY
R	RADIUS OF CURVATURE
R&D	REMOVE AND DISPOSE
RCP	REINFORCED CONCRETE PIPE
RD	ROAD
RDWY	ROADWAY
REM	REMOVE
RET	RETAIN
RET WALL	RETAINING WALL
ROW	RIGHT OF WAY
RR	RAILROAD
R&R	REMOVE AND RESET
R&S	REMOVE AND STACK
RT	RIGHT
SB	STONE BOUND
SHLD	SHOULDER
SMH	SEWER MANHOLE
ST	STREET
STA	STATION
SSD	STOPPING SIGHT DISTANCE
SHLO	STATE HIGHWAY LAYOUT LINE
SW	SIDEWALK
T	TANGENT DISTANCE OF CURVE/TRUCK %
TAN	TANGENT
TEMP	TEMPORARY
TC	TOP OF CURB
TMA	TELEPHONE MAST ARM
TOS	TOP OF SLOPE
TYP	TYPICAL
UP	UTILITY POLE
VAR	VARIES
VERT	VERTICAL
VC	VERTICAL CURVE
WCR	WHEEL CHAIR RAMP
WG	WATER GATE
WIP	WROUGHT IRON PIPE
WM	WATER METER/WATER MAIN
X-SECT	CROSS SECTION

PAVEMENT MARKINGS SYMBOLS

EXISTING	PROPOSED	DESCRIPTION
	SL	STOP LINE
	CW	CROSSWALK
	SWL	SOLID WHITE LINE
	SYL	SOLID YELLOW LINE
	BWL	BROKEN WHITE LINE
	BYL	BROKEN YELLOW LINE
	DWL	DOTTED WHITE LINE
	DYL	DOTTED YELLOW LINE
	DWLEx	DOTTED WHITE LINE EXTENSION
	DYLEx	DOTTED YELLOW LINE EXTENSION
	DBWL	DOUBLE WHITE LINE
	DBYL	DOUBLE YELLOW LINE

GENERAL NOTES:

1. THE PROPERTY LINES SHOWN ON THIS PLAN OF THE PARCELS AT 44 FOREST AVENUE IN HUDSON, 163 BOSTON POST ROAD IN SUDBURY AND THE FORMER RAILROAD RIGHT-OF-WAY ARE BASED UPON AN ACTUAL FIELD SURVEY CONDUCTED BY VHB, INC. IN 2015 AND FROM DEEDS AND PLANS OF RECORD.

2. THE EXISTING CONDITIONS SHOWN ON THIS PLAN WERE DEVELOPED FROM A COMBINED EFFORT OF AERIAL PHOTOGRAMMETRIC MAPPING BY EASTERN TOPOGRAPHICS, INC., BASED ON AERIAL PHOTOGRAPHS TAKEN ON FEBRUARY 22, 2013, AND AUGMENTED BY AN ON-THE-GROUND SURVEY PERFORMED BY VHB DURING 2015 AND 2017.

3. THE HORIZONTAL CONTROL IS BASED ON THE MASSACHUSETTS MAINLAND STATE PLANE COORDINATE SYSTEM AND THE NATIONAL GEODETIC SURVEY (NAD83). ALL ELEVATION IS US FEET, REFERENCED TO THE NORTH AMERICA VERTICAL DATUM OF 1988 (NAVD88).

4. THE CONTRACTOR SHALL VERIFY ALL EXISTING DIMENSIONS AND GRADES IN THE FIELD BEFORE COMMENCING WORK AND PROMPTLY NOTIFY THE ENGINEER OF ANY DISCREPANCIES.

3. THE LOCATIONS OF EXISTING UNDERGROUND UTILITIES SHOWN ON THIS PLAN ARE BASED ON FIELD OBSERVATIONS AND INFORMATION OF RECORD. THEY HAVE NOT BEEN INDEPENDENTLY VERIFIED BY THE OWNER OR ITS REPRESENTATIVE. THE CONTRACTOR SHALL DETERMINE THE EXACT LOCATION OF ALL EXISTING UTILITIES BEFORE COMMENCING WORK, AND SHALL BE FULLY RESPONSIBLE FOR ANY AND ALL DAMAGES WHICH MIGHT BE OCCASIONED BY THE CONTRACTOR'S FAILURE TO EXACTLY LOCATE AND PRESERVE ANY AND ALL UNDERGROUND UTILITIES.

4. THE DELINEATED WETLANDS SHOWN ON THIS PLAN WERE FLAGGED BY THE VHB ENVIRONMENTAL DEPARTMENT AND FIELD SURVEYED BY THE VHB SURVEY DEPARTMENT IN SEPTEMBER AND OCTOBER 2017 AND WERE UPDATED IN MAY 2018 (SUDBURY ONLY). IN HUDSON, ADDITIONAL WETLANDS WERE DELINEATED AND SURVEYED BY VHB IN JANUARY 2019.

5. THE APPROXIMATE WETLANDS AND STREAMS, AND THEIR ASSOCIATED BUFFERS AND RIVERFRONT AREAS, WHERE APPLICABLE, WERE TAKEN FROM AVAILABLE MASSGIS DATA. THESE WERE NOT FIELD DELINEATED OR FIELD VERIFIED.

6. WHERE AN EXISTING UTILITY IS FOUND TO CONFLICT WITH THE PROPOSED WORK, THE LOCATION, ELEVATION AND SIZE OF THE UTILITY SHALL BE ACCURATELY DETERMINED WITHOUT DELAY BY THE CONTRACTOR, AND THE INFORMATION FURNISHED TO THE ENGINEER FOR RESOLUTION OF THE CONFLICT.

7. THE CONTRACTOR SHALL ALTER THE MASONRY OF THE TOP SECTION OF ALL EXISTING DRAINAGE AND SEWER STRUCTURES AS NECESSARY FOR CHANGES IN GRADE, AND RESET ALL WATER AND DRAINAGE FRAMES, GRATES AND BOXES TO THE PROPOSED FINISH SURFACE GRADE. REQUIRED NEW MASONRY SHALL BE CLAY BRICK.

8. THE CONTRACTOR SHALL MAKE ALL ARRANGEMENTS FOR THE ALTERATION AND ADJUSTMENT OF GAS, ELECTRIC, TELEPHONE AND ANY OTHER PRIVATE UTILITIES BY THE UTILITY COMPANIES.

9. EXISTING UTILITY POLES WILL BE RELOCATED BY OTHERS IF REQUIRED.

10. TREES AND SHRUBS WITHIN THE LIMITS OF GRADING SHALL BE REMOVED ONLY UPON APPROVAL OF THE ENGINEER.

11. AREAS OUTSIDE THE LIMITS OF PROPOSED WORK DISTURBED BY THE CONTRACTOR'S OPERATIONS SHALL BE RESTORED BY THE CONTRACTOR TO THEIR ORIGINAL CONDITION AT NO EXPENSE TO THE OWNER.

12. THE TERM "PROPOSED" (PROP) MEANS WORK TO BE CONSTRUCTED USING NEW MATERIALS OR, WHERE APPLICABLE, RE-USING EXISTING MATERIALS IDENTIFIED AS "REMOVE AND RESET" (R&R).

13. JOINTS BETWEEN NEW ASPHALT CONCRETE ROADWAY PAVEMENT AND SAWCUT EXISTING PAVEMENT SHALL BE SEALED WITH BITUMEN AND BACKSANDED.

14. EXISTING SIGNS WITHIN THE PROJECT LIMITS SHALL BE RETAINED UNLESS INDICATED OTHERWISE ON THE DRAWINGS.

15. IF SUITABLE, ALL EXISTING GRANITE CURB & EDGING SHALL BE RE-USED IN THE PROPOSED WORK, EXCEPT CURVED STONES OF A DIFFERENT RADIUS THAN PROPOSED CURB.

16. ALL PROPOSED HOT MIX ASPHALT CURB SHALL BE MASSDOT TYPE 3 UNLESS STATED OTHERWISE ON THE PLANS.

17. ALL EXISTING STATE, COUNTY, CITY, AND TOWN LOCATION LINES AND PRIVATE PROPERTY LINES HAVE BEEN ESTABLISHED FROM AVAILABLE INFORMATION AND THEIR EXACT LOCATIONS ARE NOT GUARANTEED.

18. DISPOSAL OF ALL SURPLUS MATERIAL SHALL BE AS APPROVED BY THE ENGINEER AND OWNER.

19. ALL EXISTING EROSION CONTROL BARRIER, CONSTRUCTION FENCING AND SILT SACKS SHALL BE MAINTAINED THROUGHOUT CONSTRUCTION ACTIVITIES AND REMOVED AFTER CONSTRUCTION ACTIVITIES ARE COMPLETE.

REV.	DATE	DESCRIPTION	BY

vhb
Transportation Land Development
Environmental Services
101 Walnut St., P.O. Box 9151
Watertown, MA 02472
617 924 1770 FAX 617 924 2286

COMMONWEALTH OF MASSACHUSETTS
DEPARTMENT OF CONSERVATION AND RECREATION
DIVISION OF PLANNING AND ENGINEERING

MASS CENTRAL RAIL TRAIL - WAYSIDE

MASS CENTRAL RAIL TRAIL
HUDSON, STOW, MARLBOROUGH & SUDBURY, MA

DESIGNER: JCR
CHECKED: SHK
DRAWN: JCR
CHECKED: TAL

LEGEND ABBREVIATIONS & GENERAL NOTES

CONT. P19-3295-D1A
ACC. XXXXXXx

SCALE: NTS
DATE: MAR 2020

SHEET NO.
L-01
1 OF 1

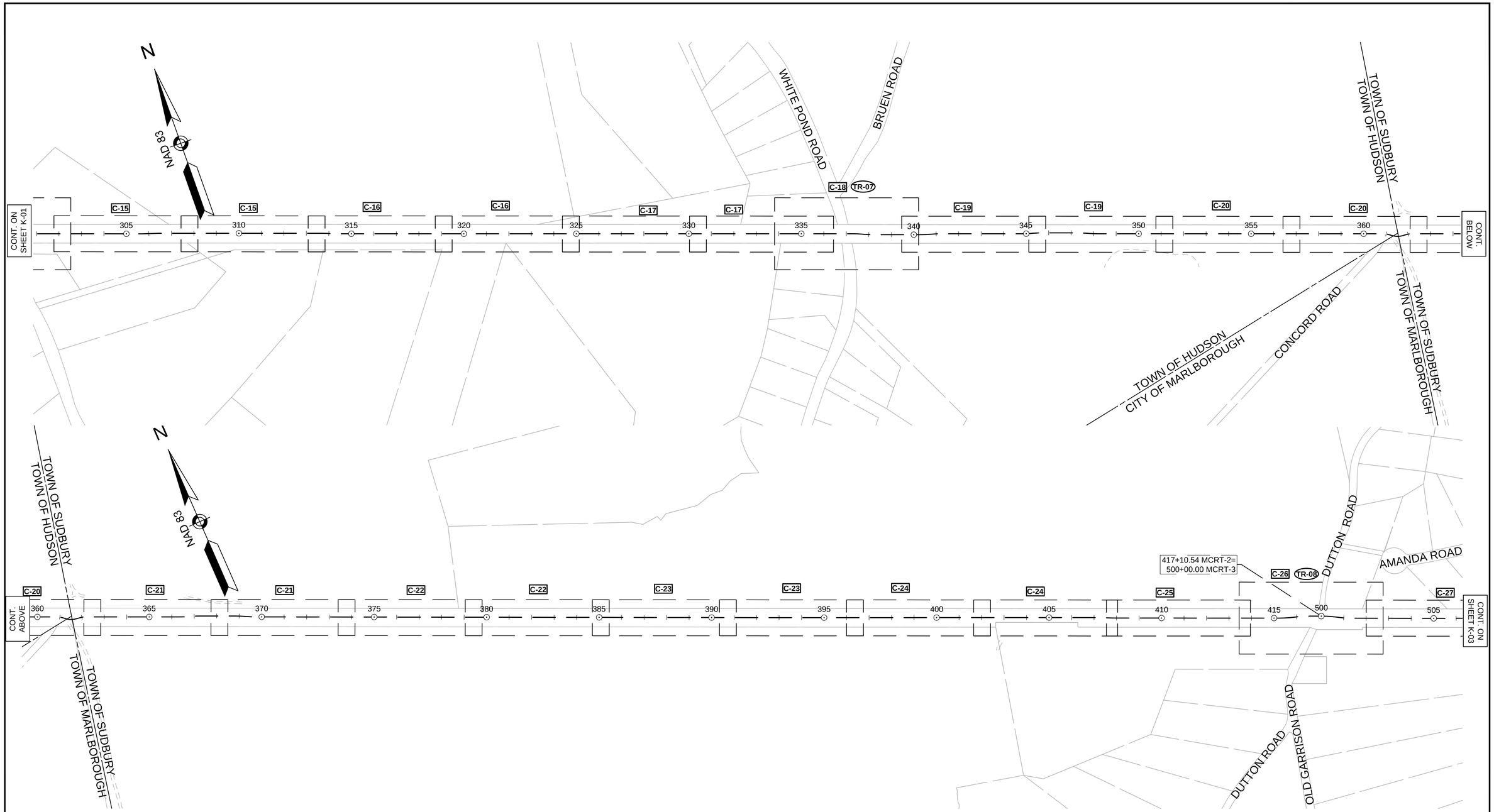

LEGEND

C-XX CONSTRUCTION PLANS

TR-XX TRAFFIC PLANS

200 0 200 400

SCALE IN FEET

REV.	DATE	DESCRIPTION	BY

vhb
Transportation Land Development
Environmental Services
101 Walnut St., P.O. Box 9151
Watertown, MA 02472
617 924 1770 FAX 617 924 2286

COMMONWEALTH OF MASSACHUSETTS
DEPARTMENT OF CONSERVATION AND RECREATION
DIVISION OF PLANNING AND ENGINEERING

MASS CENTRAL RAIL TRAIL - WAYSIDE

MASS CENTRAL RAIL TRAIL
HUDSON, STOW, MARLBOROUGH & SUDBURY, MA

DESIGNER: JCR
CHECKED: SHK
DRAWN: JCR
CHECKED: TAL

KEY PLAN

CONT. P19-3295-D1A
ACC. XXXXXXx

SCALE: NTS
DATE: MAR 2020

SHEET NO.
K-02
2 OF 4

14424_HD(KEY).DWG Plotted on 2-Mar-2020 12:16 PM

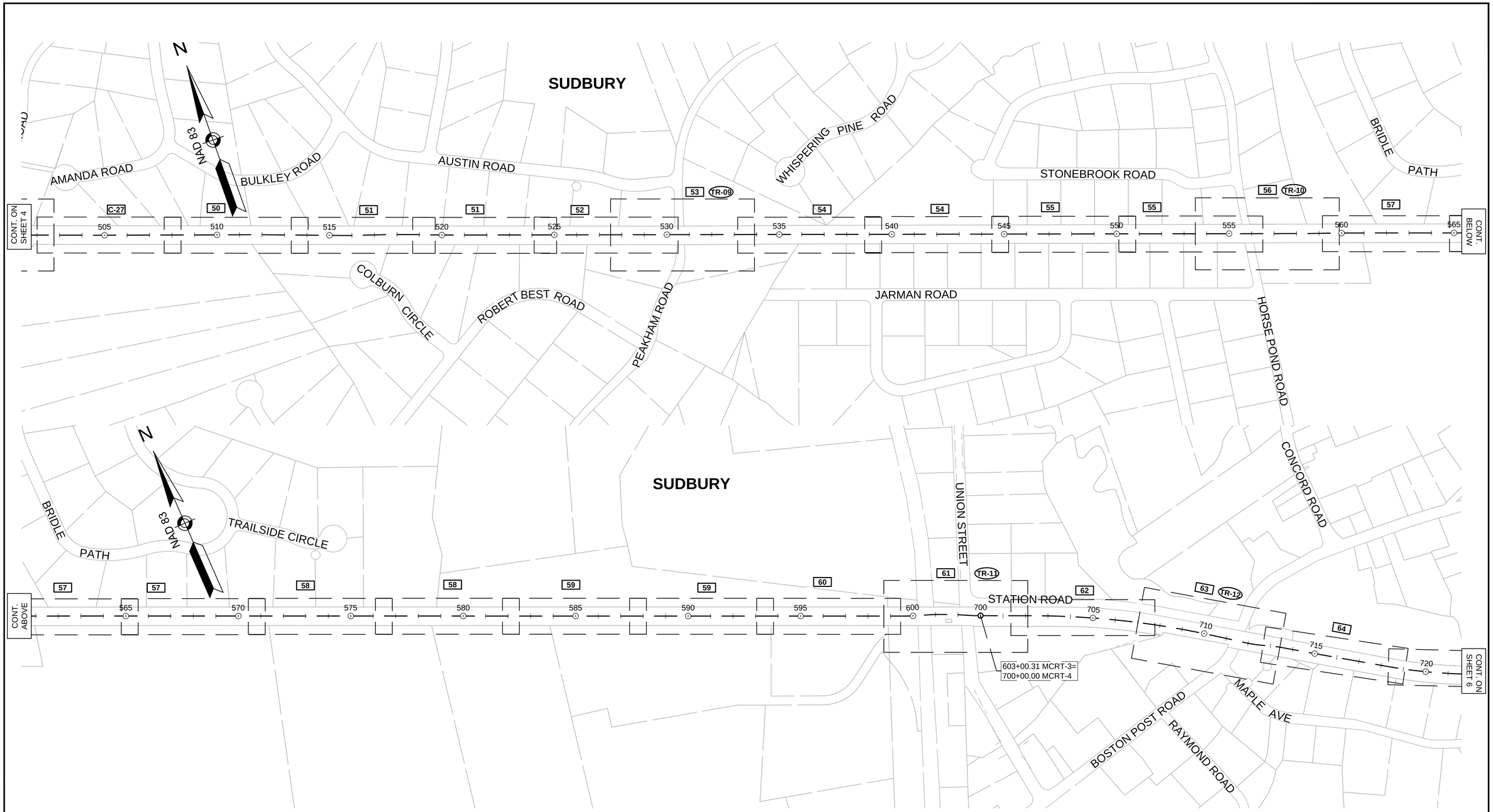

LEGEND

C-XX CONSTRUCTION PLANS

TR-XX TRAFFIC PLANS

200 0 200 400
SCALE IN FEET

REV.	DATE	DESCRIPTION	BY

vhb
Transportation Land Development
Environmental Services
101 Walnut St., P.O. Box 9151
Watertown, MA 02472
617 924 1770 FAX 617 924 2286

COMMONWEALTH OF MASSACHUSETTS
DEPARTMENT OF CONSERVATION AND RECREATION
DIVISION OF PLANNING AND ENGINEERING

MASS CENTRAL RAIL TRAIL - WAYSIDE

MASS CENTRAL RAIL TRAIL
HUDSON, STOW, MARLBOROUGH & SUDBURY, MA

DESIGNER: JCR
CHECKED: SHK
DRAWN: JCR
CHECKED: TAL

KEY PLAN

CONT. P19-3295-D1A
ACC. XXXXXXx

SCALE: NTS
DATE: MAR 2020

SHEET NO.
K-03
3 OF 4

14424_HD(KEY).DWG Plotted on 2-Mar-2020 12:16 PM

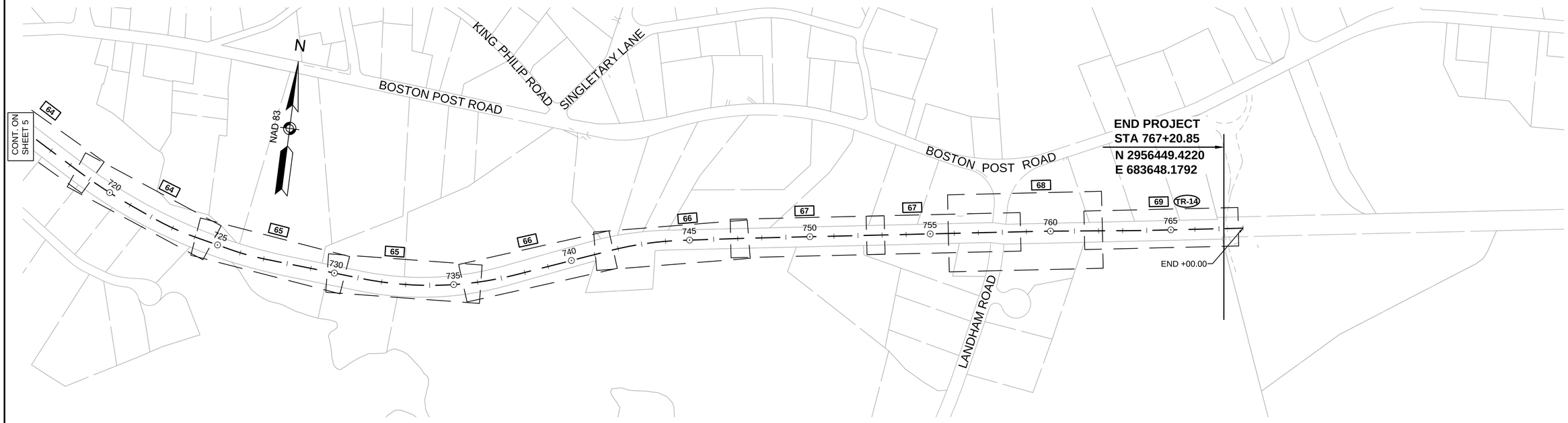

LEGEND

C-XX CONSTRUCTION PLANS

TR-XX TRAFFIC PLANS

200 0 200 400

SCALE IN FEET

REV.	DATE	DESCRIPTION	BY

vhb
Transportation Land Development
Environmental Services
101 Walnut St., P.O. Box 9151
Watertown, MA 02472
617 924 1770 FAX 617 924 2286

COMMONWEALTH OF MASSACHUSETTS
DEPARTMENT OF CONSERVATION AND RECREATION
DIVISION OF PLANNING AND ENGINEERING

MASS CENTRAL RAIL TRAIL - WAYSIDE

MASS CENTRAL RAIL TRAIL
HUDSON, STOW, MARLBOROUGH & SUDBURY, MA

DESIGNER: JCR
CHECKED: SHK
DRAWN: JCR
CHECKED: TAL

KEY PLAN

CONT. P19-3295-D1A
ACC. XXXXXXx

SCALE: NTS
DATE: MAR 2020

SHEET NO.
K-04
4 OF 4

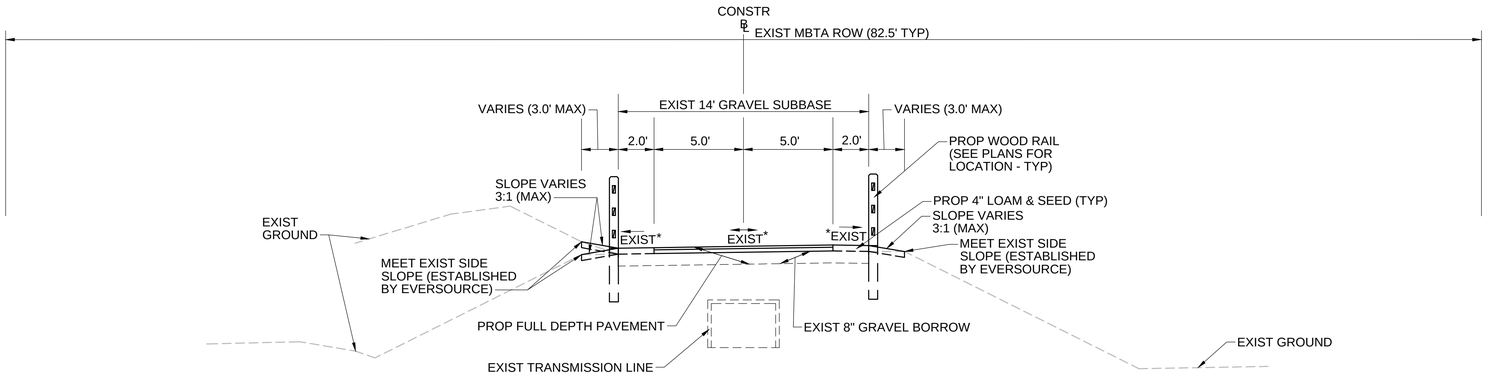

TYPICAL SECTION - TRANSMISSION LINE IN CENTER

NTS

*SEE EVERSOURCE SUDBURY-HUDSON TRANSMISSION RELIABILITY PROJECT CROSS SECTIONS FOR EXISTING CROSS SLOPE INFORMATION

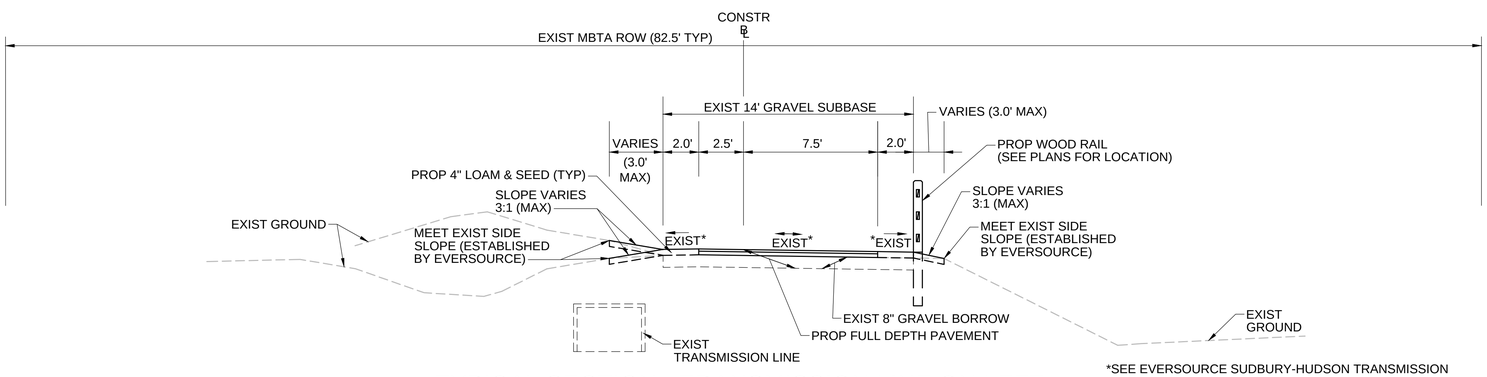

TYPICAL SECTION - TRANSMISSION LINE ON LEFT

NTS

*SEE EVERSOURCE SUDBURY-HUDSON TRANSMISSION RELIABILITY PROJECT CROSS SECTIONS FOR EXISTING CROSS SLOPE INFORMATION

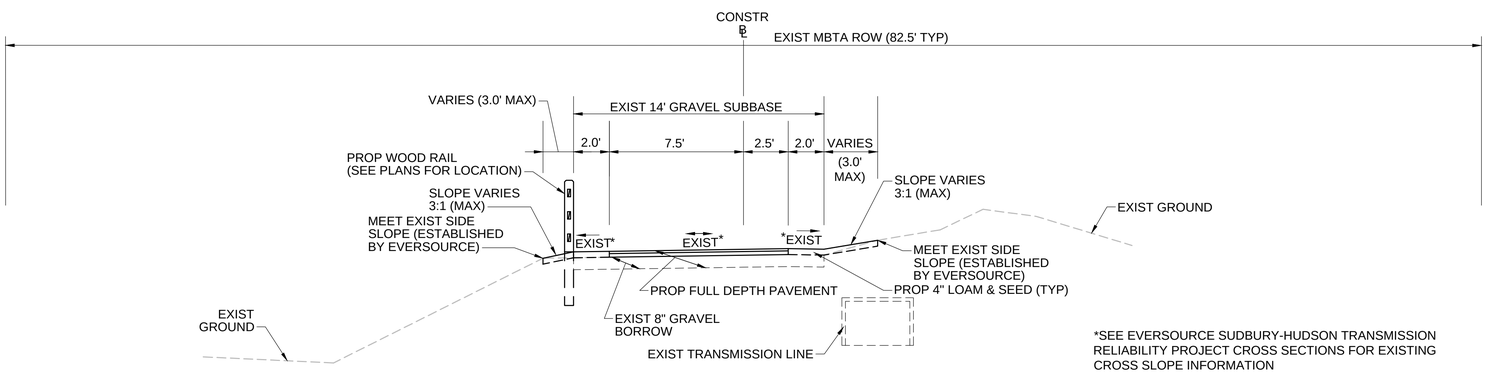

TYPICAL SECTION - TRANSMISSION LINE ON RIGHT

NTS

*SEE EVERSOURCE SUDBURY-HUDSON TRANSMISSION RELIABILITY PROJECT CROSS SECTIONS FOR EXISTING CROSS SLOPE INFORMATION

PAVEMENT NOTES

PROPOSED PATH PAVEMENT

SURFACE: 1.5" SUPERPAVE SURFACE COURSE - 9.5 (SSC - 9.5)

INTERMEDIATE: 2.5" SUPERPAVE INTERMEDIATE COURSE - 19.0 (SIC - 19.0)

SUBBASE:* 8" GRAVEL BORROW, TYPE b

*NOTE:
FROM STA 100+00± TO STA 767+20± EXIST GRAVEL FROM EVERSOURCE ACCESS ROAD SHALL BE USED FOR SUBBASE MATERIAL.

PROPOSED CATTLE CROSSING PAVEMENT

SURFACE: 1.5" SUPERPAVE SURFACE COURSE - 9.5 (SSC - 9.5)

INTERMEDIATE:* 2.5" SUPERPAVE INTERMEDIATE COURSE - 19.0 (SIC - 19.0)

*NOTE:
2.5" SUPERPAVE INTERMEDIATE COURSE TO BE INSTALLED AS PART OF EVERSOURCE SUDBURY-HUDSON TRANSMISSION LINE RELIABILITY PROJECT.

PROPOSED CEMENT CONCRETE WHEELCHAIR RAMP

SURFACE: 6" CEMENT CONCRETE
AIR ENTRAINED 4000 PSI, 3/4", 610

SUBBASE:* 8" GRAVEL BORROW, TYPE b

*NOTE:
EXIST GRAVEL FROM EVERSOURCE ACCESS ROAD SHALL BE USED FOR SUBBASE MATERIAL.

PROPOSED CEMENT CONCRETE PULL OFF/TURN AROUND

SURFACE: 4" CEMENT CONCRETE
AIR ENTRAINED 4000 PSI, 3/4", 610

SUBBASE:* 8" GRAVEL BORROW, TYPE b

*NOTE:
EXIST GRAVEL FROM EVERSOURCE ACCESS ROAD SHALL BE USED FOR SUBBASE MATERIAL.

PROPOSED HOT MIX ASPHALT WALK

SURFACE: 1" SUPERPAVE SURFACE COURSE - 9.5 (SSC-9.5)
1.5" SUPERPAVE INTERMEDIATE COURSE 12.5 (SIC-12.5)

SUBBASE: 8" GRAVEL BORROW, TYPE b

NOTES:

1. ALL HOT MIX ASPHALT SHALL BE PRODUCED WITH A WARM-MIX ASPHALT ADDITIVE.
2. ALL HOT MIX ASPHALT PAVEMENTS SHALL BE CONSTRUCTED AND PRODUCED IN ACCORDANCE WITH SECTION 450 HOT MIX ASPHALT PAVEMENT.
3. ASPHALT EMULSION FOR TACK COAT (RS-1H) SHALL BE SPRAY APPLIED FOR DOUBLE OVERLAP COVERAGE AT 0.05 GALLONS PER SQUARE YARD OVER SMOOTH SURFACES.
4. HMA JOINT SEALANT (ASPHALT RUBBER) SHALL BE APPLIED IN SURFACE COURSE AT ALL VERTICAL COLD JOINTS PRIOR TO PAVING.
5. ALL HOT MIX ASPHALT WALKS SHALL BE MEASURED AND PAID FOR UNDER ITEM 702 OF STANDARD SPECIFICATIONS FOR HIGHWAYS AND BRIDGES.

REV.	DATE	DESCRIPTION	BY

vhb
Transportation Land Development
Environmental Services
101 Walnut St., P.O. Box 9151
Watertown, MA 02472
617 924 1770 FAX 617 924 2286

COMMONWEALTH OF MASSACHUSETTS
DEPARTMENT OF CONSERVATION AND RECREATION
DIVISION OF PLANNING AND ENGINEERING

MASS CENTRAL RAIL TRAIL - WAYSIDE

MASS CENTRAL RAIL TRAIL
HUDSON, STOW, MARLBOROUGH & SUDBURY, MA

DESIGNER: JCR
CHECKED: SHK
DRAWN: JCR
CHECKED: TAL

TYPICAL SECTIONS & PVMT NOTES

CONT. P19-3295-D1A
ACC. XXXXXXx

SCALE: 1" = 20'-0"
DATE: MAR 2020

SHEET NO.
TS-01
1 OF 2

14424_HD(TYP).DWG Plotted on 2-Mar-2020 12:17 PM

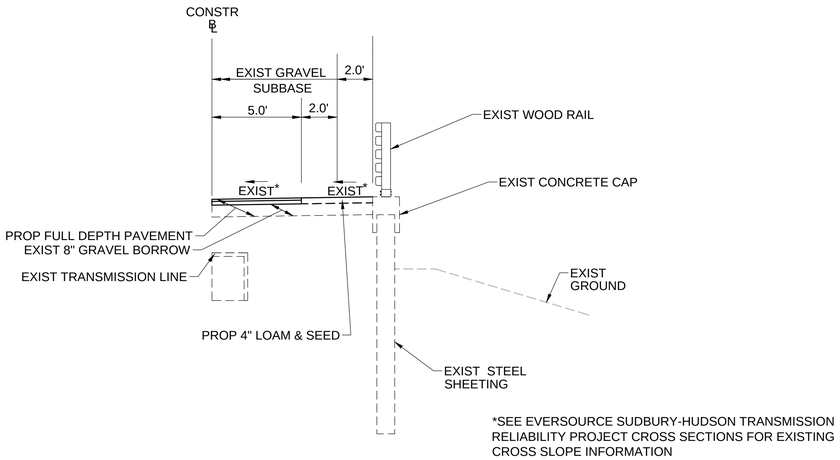

*SEE EVERSOURCE SUDBURY-HUDSON TRANSMISSION RELIABILITY PROJECT CROSS SECTIONS FOR EXISTING CROSS SLOPE INFORMATION

SHEETING SECTION RT

STA 148+25± TO STA 148+49±, STA 149+13± TO STA 149+75±, STA 399+91± TO STA 400+07±, STA 400+58± TO STA 401+25±, STA 724+73± TO STA 725+03±, STA 725+59± TO STA 725+96±, STA 731+00± TO STA 734+25±

NTS

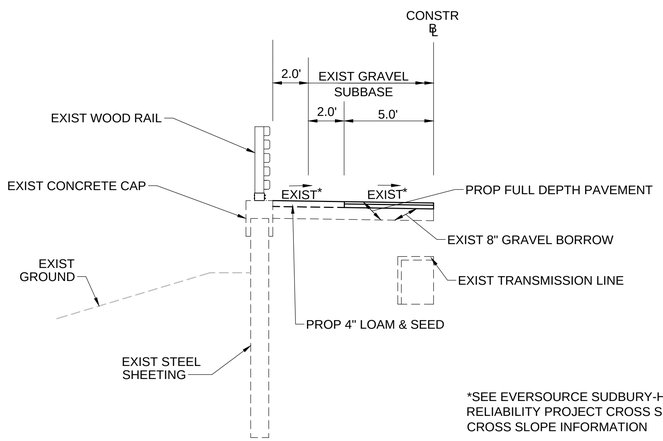

*SEE EVERSOURCE SUDBURY-HUDSON TRANSMISSION RELIABILITY PROJECT CROSS SECTIONS FOR EXISTING CROSS SLOPE INFORMATION

SHEETING SECTION LT

STA 119+00± TO STA 119+38±, STA 119+52± TO STA 125+00±, STA 148+25± TO STA 148+49±, STA 149+13± TO STA 149+75±, STA 300+50± TO STA 400+07±, STA 400+58± TO STA 401+25±, STA 724+73± TO STA 725+03±, STA 725+59± TO STA 725+96±

NTS

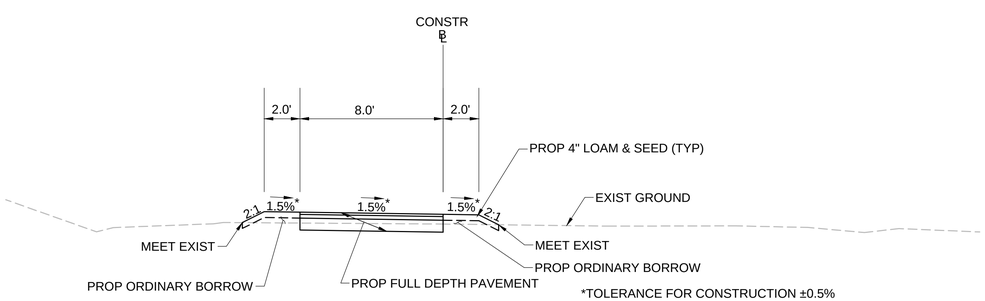

*TOLERANCE FOR CONSTRUCTION ±0.5%

TYPICAL SECTION - MCRT CONNECTION

STA 10+15± TO STA 12+40±

NTS

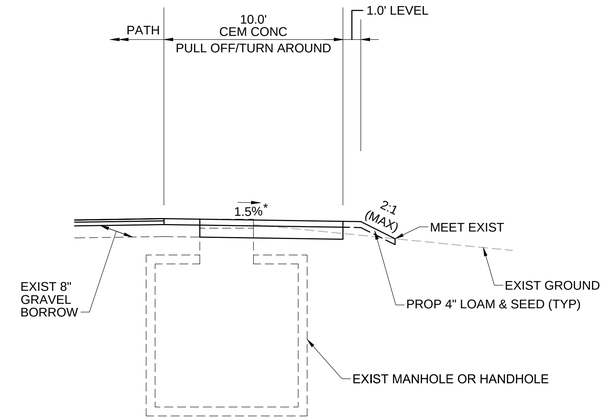

*TOLERANCE FOR CONSTRUCTION ±0.5%

TYPICAL SECTION - PULL OFF/TURN AROUND

NTS

PAVEMENT NOTES

*SEE SHEET TS-01

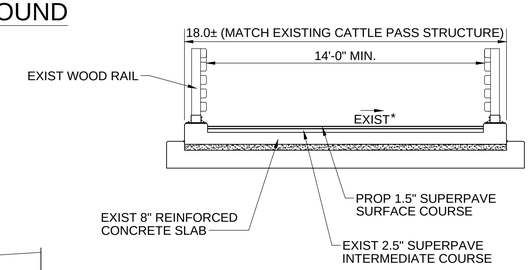

CATTLE CROSSING

STA 119+38± TO STA 119+52±

NTS

*SEE EVERSOURCE SUDBURY-HUDSON TRANSMISSION RELIABILITY PROJECT CROSS SECTIONS FOR EXISTING CROSS SLOPE INFORMATION

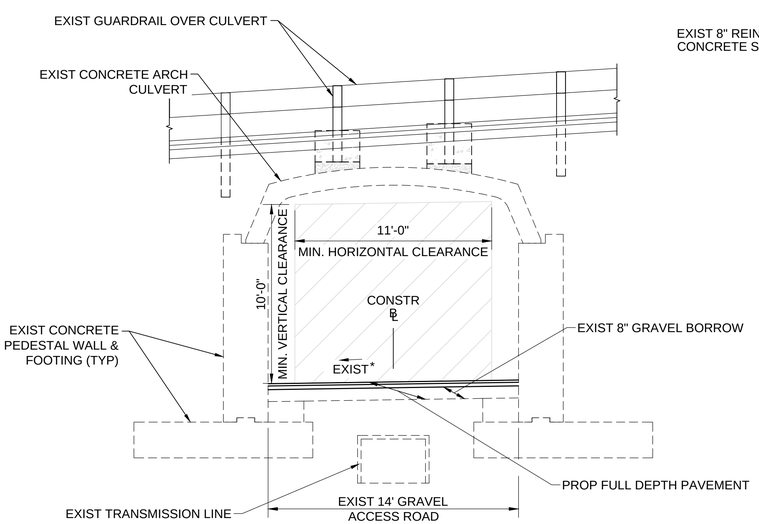

*SEE EVERSOURCE SUDBURY-HUDSON TRANSMISSION RELIABILITY PROJECT CROSS SECTIONS FOR EXISTING CROSS SLOPE INFORMATION

CHESTNUT STREET CULVERT

STA 132+44± TO STA 132+84±

NTS

REV.	DATE	DESCRIPTION	BY

vhb
Transportation Land Development
Environmental Services
101 Walnut St., P.O. Box 9151
Watertown, MA 02472
617 924 1770 FAX 617 924 2286

COMMONWEALTH OF MASSACHUSETTS
DEPARTMENT OF CONSERVATION AND RECREATION
DIVISION OF PLANNING AND ENGINEERING

MASS CENTRAL RAIL TRAIL - WAYSIDE

MASS CENTRAL RAIL TRAIL
HUDSON, STOW, MARLBOROUGH & SUDBURY, MA

DESIGNER: JCR
CHECKED: SHK
DRAWN: JCR
CHECKED: TAL

TYPICAL SECTIONS & PVMT NOTES

CONT. P19-3295-D1A
ACC. XXXXXXx
SCALE: 1" = 20'-0"
DATE: MAR 2020

SHEET NO.
TS-02
2 OF 2

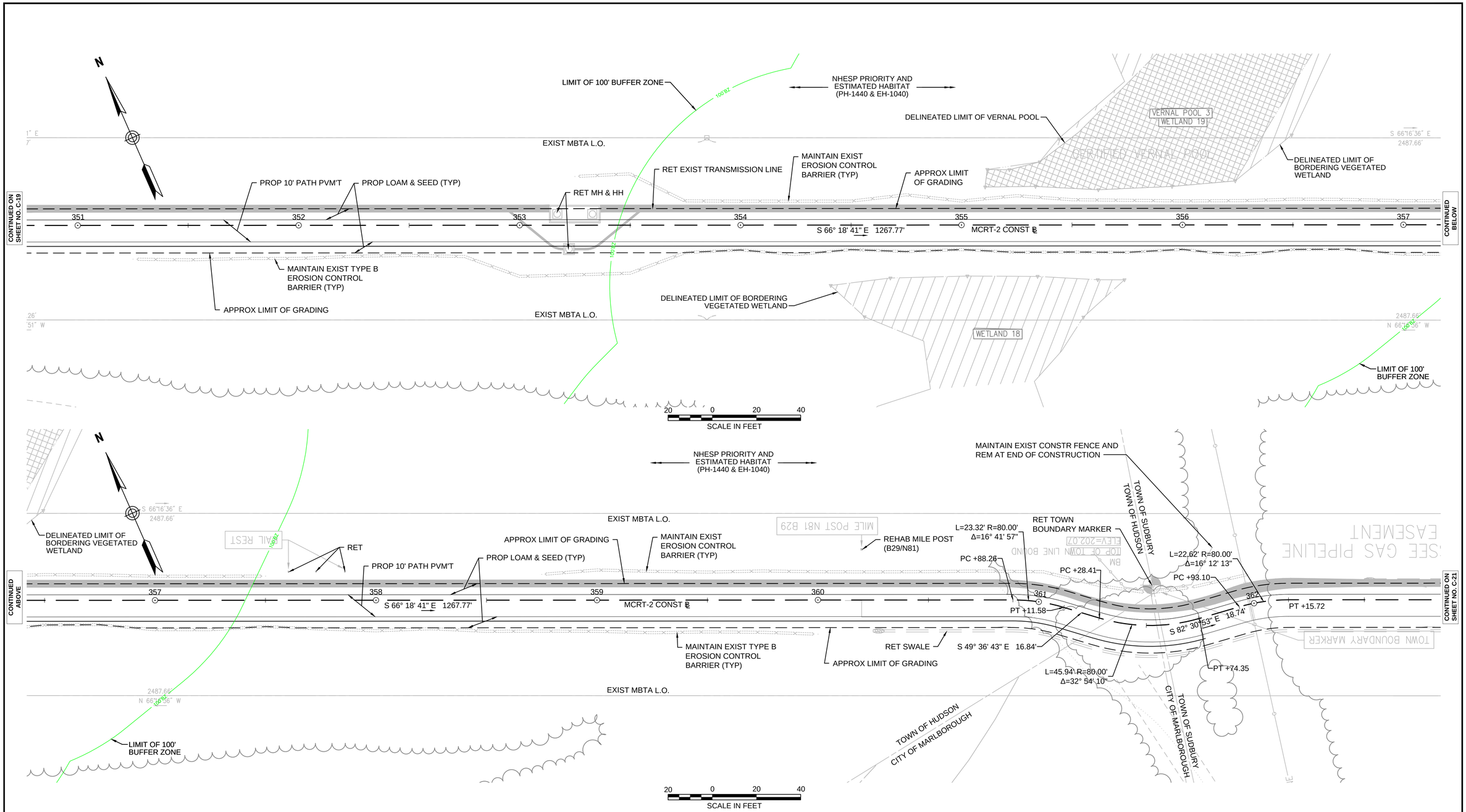

ENVIRONMENTAL IMPACTS LEGEND			
HATCH	DESCRIPTION	HATCH	DESCRIPTION
	ISOLATED VEGETATED WETLAND		DISTURBANCE TO WPA 200' RIVERFRONT AREA (WPA 200' RA)
	BORDERING VEGETATED WETLAND		DISTURBANCE TO SUDBURY 200' RIVERFRONT AREA (SUD 200' RA)
	LAND UNDER WATER		DISTURBANCE TO WPA 100' RIVERFRONT AREA (WPA 100' RA)
	VERNAL POOL		DISTURBANCE TO SUDBURY 100' RIVERFRONT AREA (SUD 100' RA)
	PERMANENT DISTURBANCE TO VEGETATED WETLAND		DISTURBANCE TO 100' BUFFER ZONE (100' BZ-AURA)
	DISTURBANCE TO 100' VERNAL POOL BUFFER ZONE (100' VP BZ)		DISTURBANCE TO BLSF
			EXISTING TREE LINE
			LIMIT OF GRADING

REV.	DATE	DESCRIPTION	BY

vhb
Transportation Land Development
Environmental Services
101 Walnut St., P.O. Box 9151
Watertown, MA 02472
617 924 1770 FAX 617 924 2286

COMMONWEALTH OF MASSACHUSETTS
DEPARTMENT OF CONSERVATION AND RECREATION
DIVISION OF PLANNING AND ENGINEERING

MASS CENTRAL RAIL TRAIL - WAYSIDE

MASS CENTRAL RAIL TRAIL
HUDSON, STOW, MARLBOROUGH & SUDBURY, MA

DESIGNER: JCR
CHECKED: SHK
DRAWN: JCR
CHECKED: TAL

CONSTRUCTION PLANS

CONT. P19-3295-D1A
ACC. XXXXXXX
SCALE: 1" = 20'-0"
DATE: MAR 2020

SHEET NO.
C-20
20 OF 46

14424_HD(CONST-2).DWG Plotted on 2-Mar-2020 12:19 PM

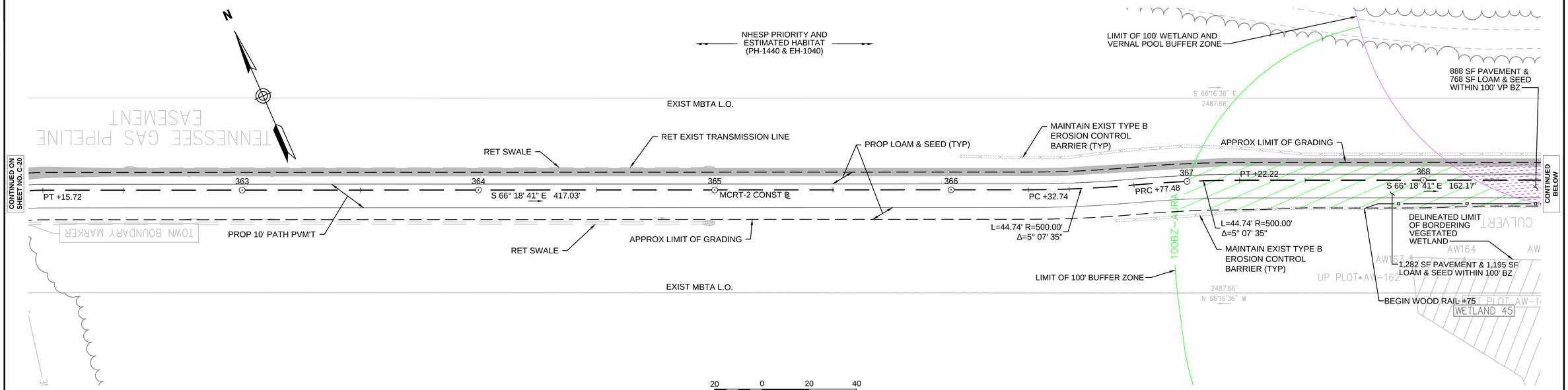

NOTE:

1. WETLAND RESOURCE AREA BOUNDARIES SHOWN HEREIN WERE APPROVED IN AN ORAD DATED AUGUST 27, 2018 (MADEP FILE NO. 301-1227).

ENVIRONMENTAL IMPACTS LEGEND

HATCH	DESCRIPTION	HATCH	DESCRIPTION
	ISOLATED VEGETATED WETLAND		DISTURBANCE TO WPA 200' RIVERFRONT AREA (WPA 200' RA)
	BORDERING VEGETATED WETLAND		DISTURBANCE TO SUDBURY 200' RIVERFRONT AREA (SUD 200' RA)
	LAND UNDER WATER		DISTURBANCE TO WPA 100' RIVERFRONT AREA (WPA 100' RA)
	VERNAL POOL		DISTURBANCE TO SUDBURY 100' RIVERFRONT AREA (SUD 100' RA)
	PERMANENT DISTURBANCE TO VEGETATED WETLAND		DISTURBANCE TO 100' BUFFER ZONE (100' BZ-AURA)
	DISTURBANCE TO 100' VERNAL POOL BUFFER ZONE (100' VP BZ)		DISTURBANCE TO BLSF
			EXISTING TREE LINE
			LIMIT OF GRADING

REV.	DATE	DESCRIPTION	BY

vhb
Transportation Land Development
Environmental Services
101 Walnut St., P.O. Box 9151
Watertown, MA 02472
617 924 1770 FAX 617 924 2286

COMMONWEALTH OF MASSACHUSETTS
DEPARTMENT OF CONSERVATION AND RECREATION
DIVISION OF PLANNING AND ENGINEERING

MASS CENTRAL RAIL TRAIL - WAYSIDE

MASS CENTRAL RAIL TRAIL
HUDSON, STOW, MARLBOROUGH & SUDBURY, MA

DESIGNER: JCR
CHECKED: SHK
DRAWN: JCR
CHECKED: TAL

CONSTRUCTION PLANS

CONT. P19-3295-D1A
ACC. XXXXXXx
SCALE: 1" = 20'-0"
DATE: MAR 2020

SHEET NO.
C-21
21 OF 46

14424_HD(CONST-2).DWG Plotted on 2-Mar-2020 12:19 PM

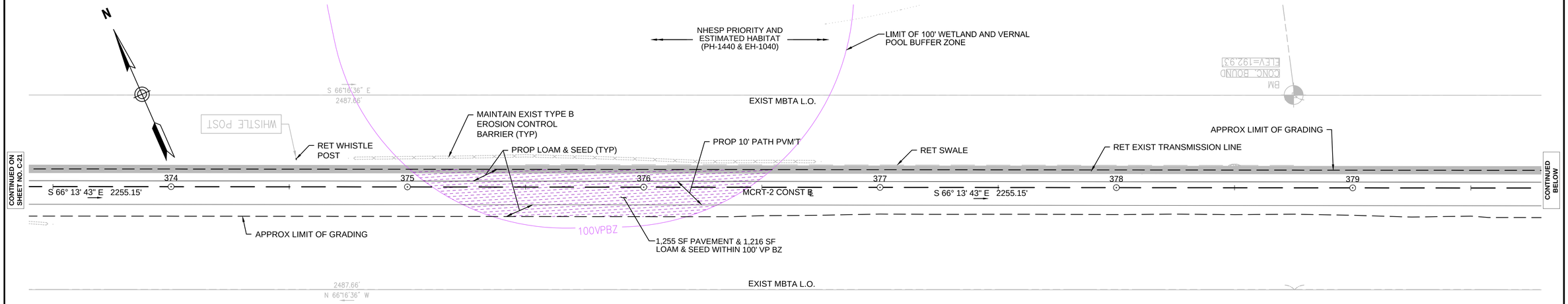

20 0 20 40
SCALE IN FEET

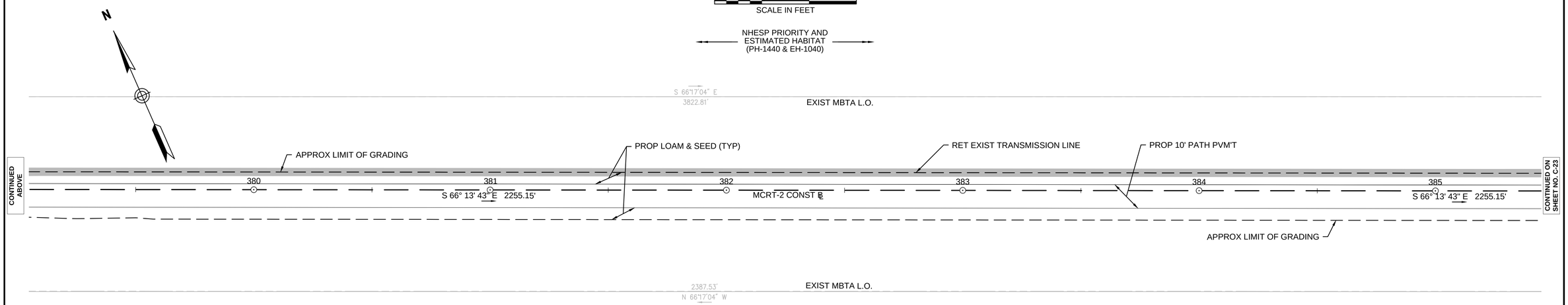

20 0 20 40
SCALE IN FEET

NOTE:
1. WETLAND RESOURCE AREA BOUNDARIES SHOWN HEREIN WERE APPROVED IN AN ORAD DATED AUGUST 27, 2018 (MADEP FILE NO. 301-1227).

ENVIRONMENTAL IMPACTS LEGEND

HATCH	DESCRIPTION
	ISOLATED VEGETATED WETLAND
	BORDERING VEGETATED WETLAND
	LAND UNDER WATER
	VERNAL POOL
	PERMANENT DISTURBANCE TO VEGETATED WETLAND
	DISTURBANCE TO 100' VERNAL POOL BUFFER ZONE (100' VP BZ)
	DISTURBANCE TO WPA 200' RIVERFRONT AREA (WPA 200' RA)
	DISTURBANCE TO SUDBURY 200' RIVERFRONT AREA (SUD 200' RA)
	DISTURBANCE TO WPA 100' RIVERFRONT AREA (WPA 100' RA)
	DISTURBANCE TO SUDBURY 100' RIVERFRONT AREA (SUD 100' RA)
	DISTURBANCE TO 100' BUFFER ZONE (100' BZ-AURA)
	DISTURBANCE TO BLSF
	EXISTING TREE LINE
	LIMIT OF GRADING

REV.	DATE	DESCRIPTION	BY

vhb
Transportation Land Development
Environmental Services
101 Walnut St., P.O. Box 9151
Watertown, MA 02472
617 924 1770 FAX 617 924 2286

COMMONWEALTH OF MASSACHUSETTS
DEPARTMENT OF CONSERVATION AND RECREATION
DIVISION OF PLANNING AND ENGINEERING

MASS CENTRAL RAIL TRAIL - WAYSIDE

MASS CENTRAL RAIL TRAIL
HUDSON, STOW, MARLBOROUGH & SUDBURY, MA

DESIGNER: JCR
CHECKED: SHK
DRAWN: JCR
CHECKED: TAL

CONSTRUCTION PLANS

CONT. P19-3295-D1A
ACC. XXXXXXx

SCALE: 1" = 20'-0"
DATE: MAR 2020

SHEET NO.
C-22
22 OF 46

14424_HD(CONST-2).DWG Plotted on 2-Mar-2020 12:20 PM

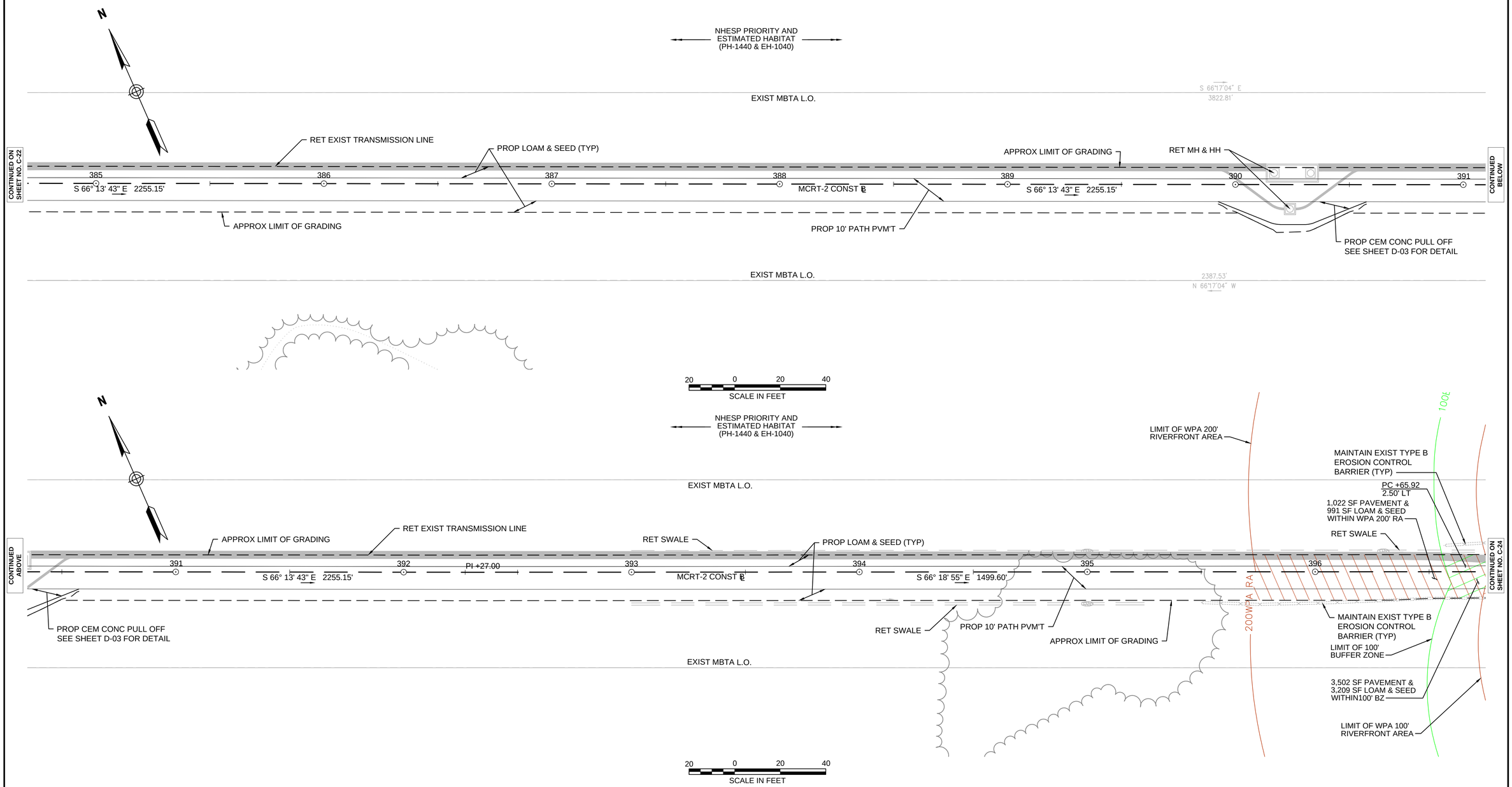

NOTE:

1. WETLAND RESOURCE AREA BOUNDARIES SHOWN HEREIN WERE APPROVED IN AN ORAD DATED AUGUST 27, 2018 (MADEP FILE NO. 301-1227).

ENVIRONMENTAL IMPACTS LEGEND

HATCH	DESCRIPTION
	ISOLATED VEGETATED WETLAND
	BORDERING VEGETATED WETLAND
	LAND UNDER WATER
	VERNAL POOL
	PERMANENT DISTURBANCE TO VEGETATED WETLAND
	DISTURBANCE TO 100' VERNAL POOL BUFFER ZONE (100' VP BZ)

HATCH	DESCRIPTION
	DISTURBANCE TO WPA 200' RIVERFRONT AREA (WPA 200' RA)
	DISTURBANCE TO SUDBURY 200' RIVERFRONT AREA (SUD 200' RA)
	DISTURBANCE TO WPA 100' RIVERFRONT AREA (WPA 100' RA)
	DISTURBANCE TO SUDBURY 100' RIVERFRONT AREA (SUD 100' RA)
	DISTURBANCE TO 100' BUFFER ZONE (100' BZ-AURA)
	DISTURBANCE TO BLSF
	EXISTING TREE LINE
	LIMIT OF GRADING

REV.	DATE	DESCRIPTION	BY

vhb
Transportation Land Development
Environmental Services
101 Walnut St., P.O. Box 9151
Watertown, MA 02472
617 924 1770 FAX 617 924 2286

COMMONWEALTH OF MASSACHUSETTS
DEPARTMENT OF CONSERVATION AND RECREATION
DIVISION OF PLANNING AND ENGINEERING

MASS CENTRAL RAIL TRAIL - WAYSIDE

MASS CENTRAL RAIL TRAIL
HUDSON, STOW, MARLBOROUGH & SUDBURY, MA

DESIGNER: JCR
CHECKED: SHK
DRAWN: JCR
CHECKED: TAL

CONSTRUCTION PLANS

CONT. P19-3295-D1A
ACC. XXXXXXx

SCALE: 1" = 20'-0"
DATE: MAR 2020

SHEET NO.
C-23
23 OF 46

14424_HD(CONST-2).DWG Plotted on 2-Mar-2020 12:21 PM

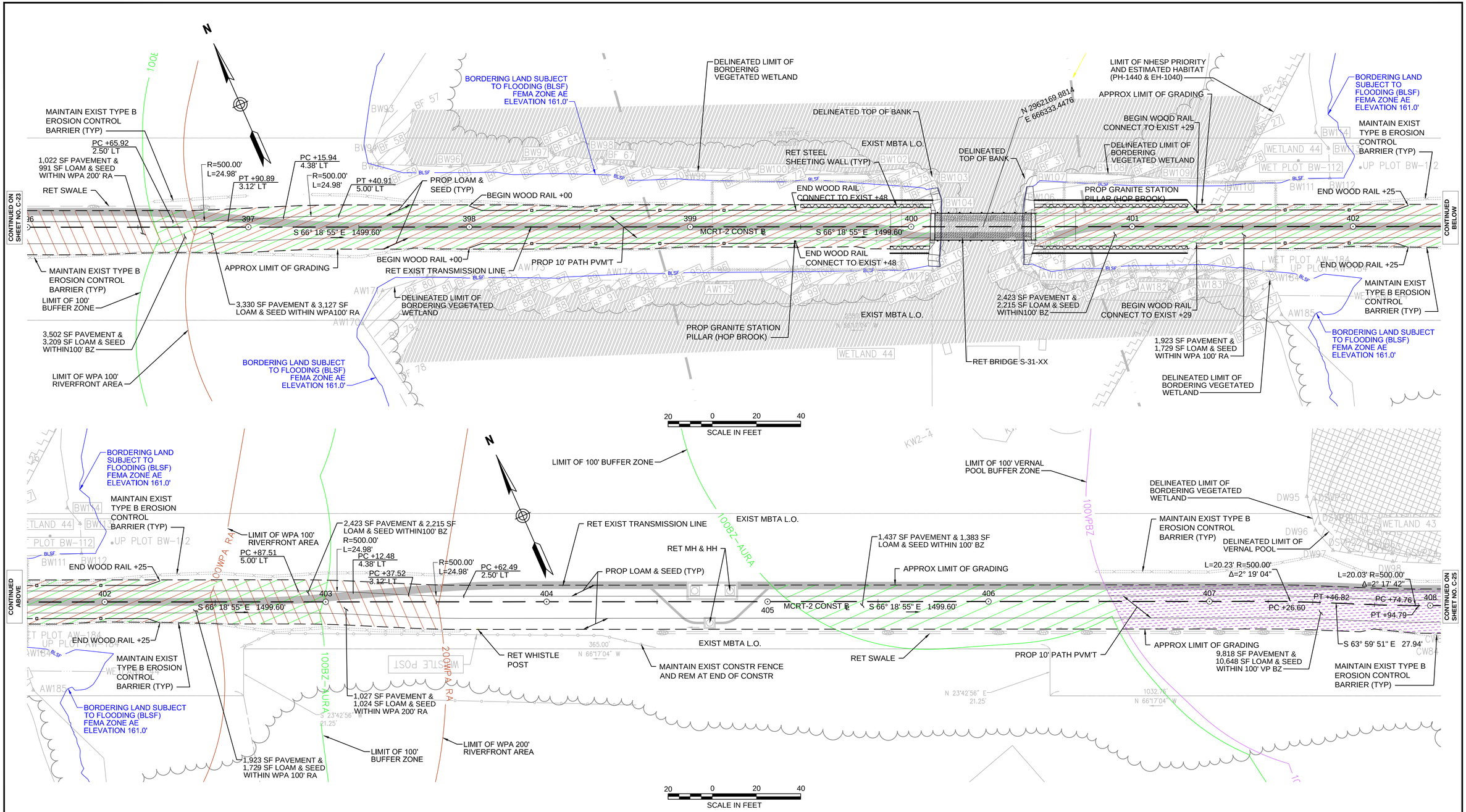

NOTE:

1. WETLAND RESOURCE AREA BOUNDARIES SHOWN HEREIN WERE APPROVED IN AN ORAD DATED AUGUST 27, 2018 (MADEP FILE NO. 301-1227).

ENVIRONMENTAL IMPACTS LEGEND

HATCH	DESCRIPTION	HATCH	DESCRIPTION
	ISOLATED VEGETATED WETLAND		DISTURBANCE TO WPA 200' RIVERFRONT AREA (WPA 200' RA)
	BORDERING VEGETATED WETLAND		DISTURBANCE TO SUDBURY 200' RIVERFRONT AREA (SUD 200' RA)
	LAND UNDER WATER		DISTURBANCE TO WPA 100' RIVERFRONT AREA (WPA 100' RA)
	VERNAL POOL		DISTURBANCE TO SUDBURY 100' RIVERFRONT AREA (SUD 100' RA)
	PERMANENT DISTURBANCE TO VEGETATED WETLAND		DISTURBANCE TO 100' BUFFER ZONE (100' BZ-AURA)
	DISTURBANCE TO 100' VERNAL POOL BUFFER ZONE (100' VP BZ)		DISTURBANCE TO BLSF
			EXISTING TREE LINE
			LIMIT OF GRADING

REV.	DATE	DESCRIPTION	BY

vhb
Transportation Land Development
Environmental Services
101 Walnut St., P.O. Box 9151
Watertown, MA 02472
617 924 1770 FAX 617 924 2286

COMMONWEALTH OF MASSACHUSETTS
DEPARTMENT OF CONSERVATION AND RECREATION
DIVISION OF PLANNING AND ENGINEERING

MASS CENTRAL RAIL TRAIL - WAYSIDE

MASS CENTRAL RAIL TRAIL
HUDSON, STOW, MARLBOROUGH & SUDBURY, MA

DESIGNER: JCR
CHECKED: SHK
DRAWN: JCR
CHECKED: TAL

CONSTRUCTION PLANS

CONT. P19-3295-D1A
ACC. XXXXXXX
SCALE: 1" = 20'-0"
DATE: MAR 2020

SHEET NO. C-24

14424_HD(CONST-2).DWG Plotted on 2-Mar-2020 12:22 PM

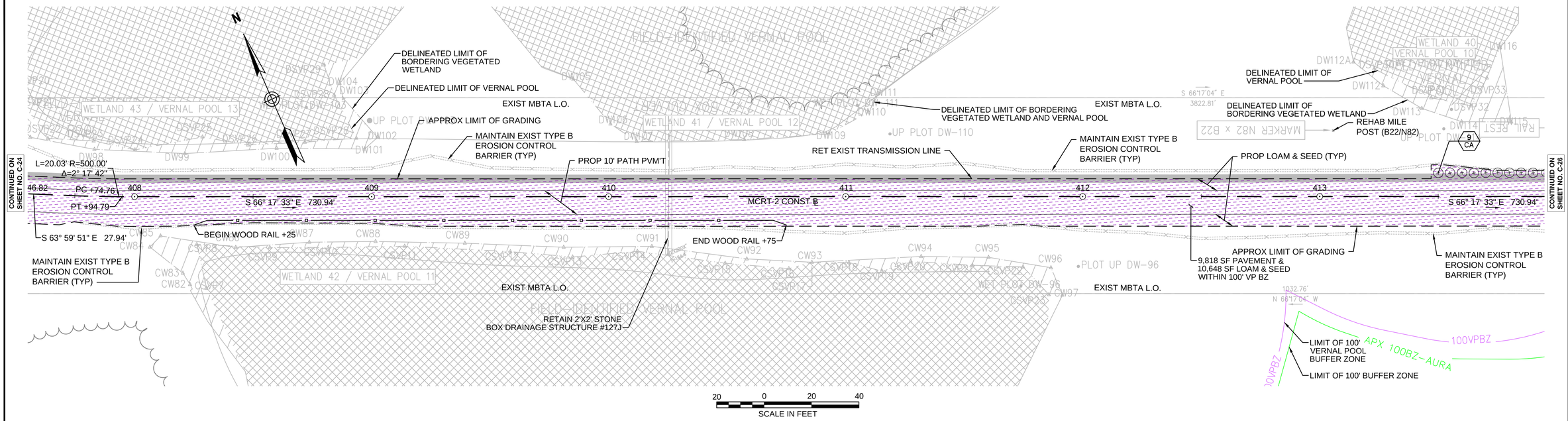

NOTE:

1. WETLAND RESOURCE AREA BOUNDARIES SHOWN HEREIN WERE APPROVED IN AN ORAD DATED AUGUST 27, 2018 (MADEP FILE NO. 301-1227).

ENVIRONMENTAL IMPACTS LEGEND

HATCH	DESCRIPTION	HATCH	DESCRIPTION
	ISOLATED VEGETATED WETLAND		DISTURBANCE TO WPA 200' RIVERFRONT AREA (WPA 200' RA)
	BORDERING VEGETATED WETLAND		DISTURBANCE TO SUDBURY 200' RIVERFRONT AREA (SUD 200' RA)
	LAND UNDER WATER		DISTURBANCE TO WPA 100' RIVERFRONT AREA (WPA 100' RA)
	VERNAL POOL		DISTURBANCE TO SUDBURY 100' RIVERFRONT AREA (SUD 100' RA)
	PERMANENT DISTURBANCE TO VEGETATED WETLAND		DISTURBANCE TO 100' BUFFER ZONE (100' BZ-AURA)
	DISTURBANCE TO 100' VERNAL POOL BUFFER ZONE (100' VP BZ)		DISTURBANCE TO BLSF
			EXISTING TREE LINE
			LIMIT OF GRADING

REV.	DATE	DESCRIPTION	BY

vhb
Transportation Land Development
Environmental Services
101 Walnut St., P.O. Box 9151
Watertown, MA 02472
617 924 1770 FAX 617 924 2286

COMMONWEALTH OF MASSACHUSETTS
DEPARTMENT OF CONSERVATION AND RECREATION
DIVISION OF PLANNING AND ENGINEERING

MASS CENTRAL RAIL TRAIL - WAYSIDE

MASS CENTRAL RAIL TRAIL
HUDSON, STOW, MARLBOROUGH & SUDBURY, MA

DESIGNER: JCR
CHECKED: SHK
DRAWN: JCR
CHECKED: TAL

CONSTRUCTION PLANS

CONT. P19-3295-D1A
ACC. XXXXXXx
SCALE: 1" = 20'-0"
DATE: MAR 2020

SHEET NO.
C-25
24 OF 46

14424_HD(CONST-2).DWG Plotted on 2-Mar-2020 12:22 PM

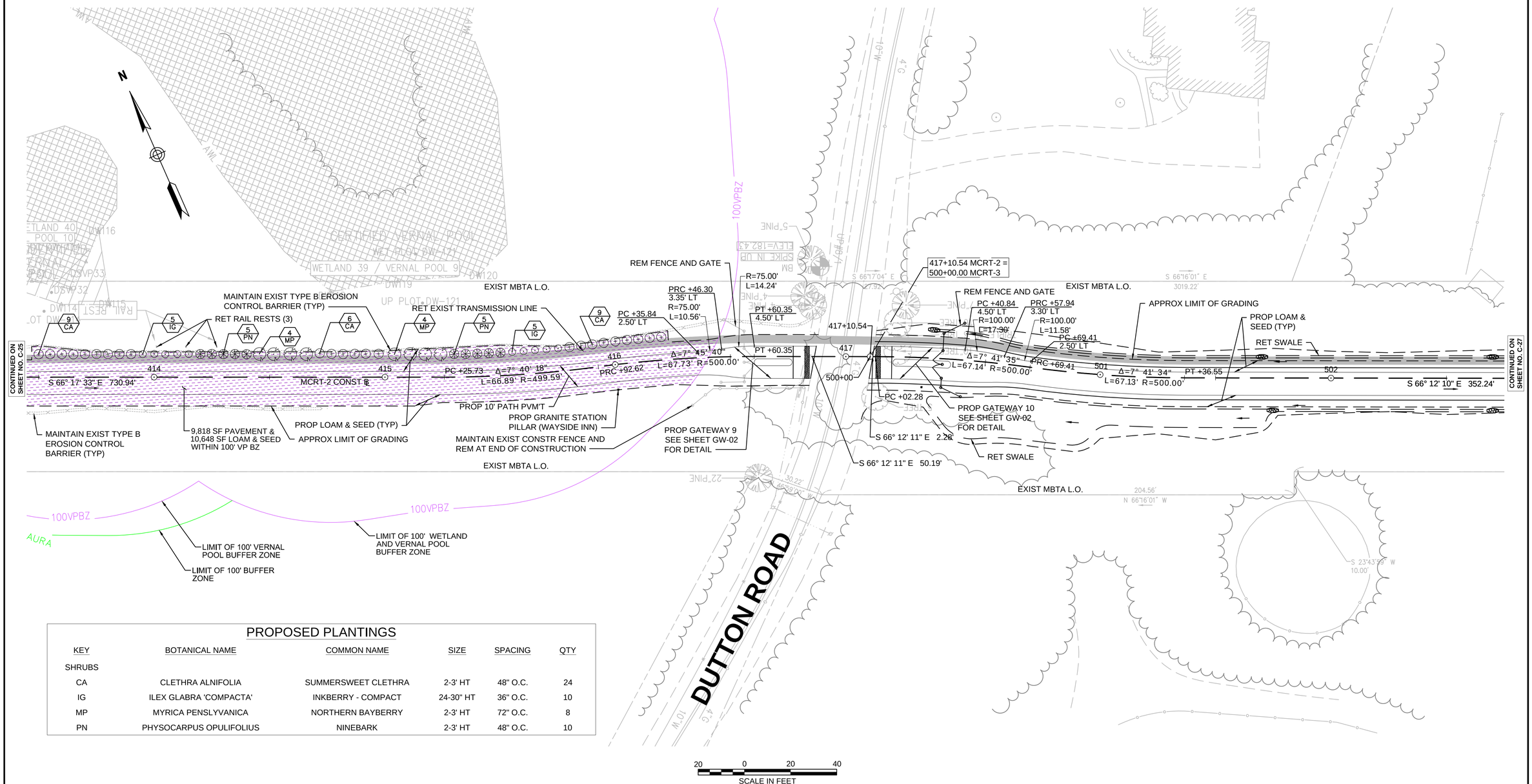

PROPOSED PLANTINGS

KEY	BOTANICAL NAME	COMMON NAME	SIZE	SPACING	QTY
SHRUBS					
CA	CLETHRA ALNIFOLIA	SUMMERSWEET CLETHRA	2-3' HT	48" O.C.	24
IG	ILEX GLABRA 'COMPACTA'	INKBERRY - COMPACT	24-30" HT	36" O.C.	10
MP	MYRICA PENSLYVANICA	NORTHERN BAYBERRY	2-3' HT	72" O.C.	8
PN	PHYSOCARPUS OPULIFOLIUS	NINEBARK	2-3' HT	48" O.C.	10

20 0 20 40
SCALE IN FEET

NOTE:
1. WETLAND RESOURCE AREA BOUNDARIES SHOWN HEREIN WERE APPROVED IN AN ORAD DATED AUGUST 27, 2018 (MADEP FILE NO. 301-1227).

ENVIRONMENTAL IMPACTS LEGEND

HATCH	DESCRIPTION	HATCH	DESCRIPTION
	ISOLATED VEGETATED WETLAND		DISTURBANCE TO WPA 200' RIVERFRONT AREA (WPA 200' RA)
	BORDERING VEGETATED WETLAND		DISTURBANCE TO SUDBURY 200' RIVERFRONT AREA (SUD 200' RA)
	LAND UNDER WATER		DISTURBANCE TO WPA 100' RIVERFRONT AREA (WPA 100' RA)
	VERNAL POOL		DISTURBANCE TO SUDBURY 100' RIVERFRONT AREA (SUD 100' RA)
	PERMANENT DISTURBANCE TO VEGETATED WETLAND		DISTURBANCE TO 100' BUFFER ZONE (100' BZ-AURA)
	DISTURBANCE TO 100' VERNAL POOL BUFFER ZONE (100' VP BZ)		DISTURBANCE TO BLSF
			EXISTING TREE LINE
			LIMIT OF GRADING

REV.	DATE	DESCRIPTION	BY

vhb
Transportation Land Development
Environmental Services
101 Walnut St., P.O. Box 9151
Watertown, MA 02472
617 924 1770 FAX 617 924 2286

COMMONWEALTH OF MASSACHUSETTS
DEPARTMENT OF CONSERVATION AND RECREATION
DIVISION OF PLANNING AND ENGINEERING

MASS CENTRAL RAIL TRAIL - WAYSIDE

MASS CENTRAL RAIL TRAIL
HUDSON, STOW, MARLBOROUGH & SUDBURY, MA

DESIGNER: JCR
CHECKED: SHK
DRAWN: JCR
CHECKED: TAL

CONSTRUCTION PLANS

CONT. P19-3295-D1A
ACC. XXXXXXx
SCALE: 1" = 20'-0"
DATE: MAR 2020

SHEET NO. C-26
26 OF 46

14424_HD(CONST-2).DWG Plotted on 2-Mar-2020 12:23 PM

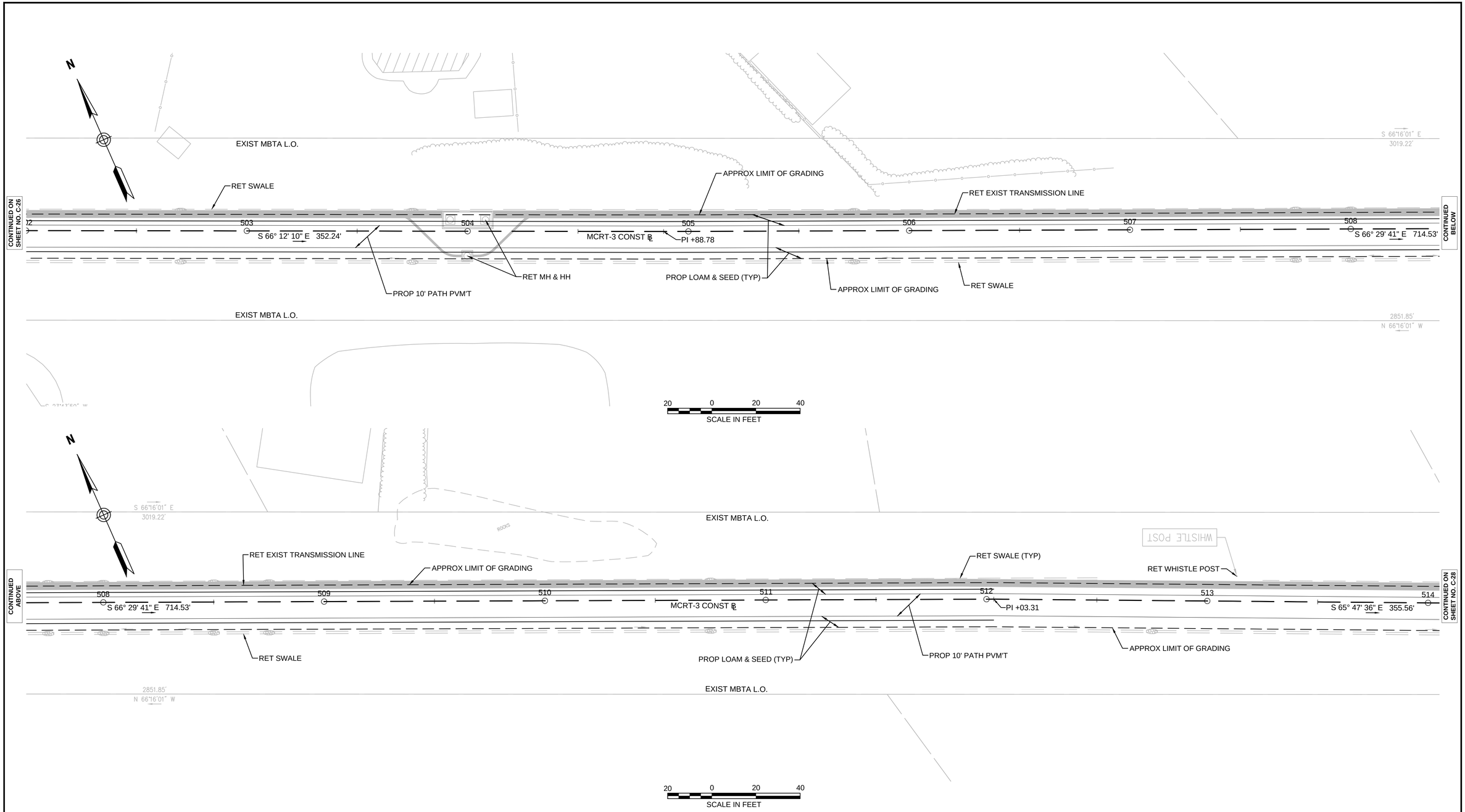

NOTE:

1. WETLAND RESOURCE AREA BOUNDARIES SHOWN HEREIN WERE APPROVED IN AN ORAD DATED AUGUST 27, 2018 (MADEP FILE NO. 301-1227).

ENVIRONMENTAL IMPACTS LEGEND

HATCH	DESCRIPTION	HATCH	DESCRIPTION
	ISOLATED VEGETATED WETLAND		DISTURBANCE TO WPA 200' RIVERFRONT AREA (WPA 200' RA)
	BORDERING VEGETATED WETLAND		DISTURBANCE TO SUDBURY 200' RIVERFRONT AREA (SUD 200' RA)
	LAND UNDER WATER		DISTURBANCE TO WPA 100' RIVERFRONT AREA (WPA 100' RA)
	VERNAL POOL		DISTURBANCE TO SUDBURY 100' RIVERFRONT AREA (SUD 100' RA)
	PERMANENT DISTURBANCE TO VEGETATED WETLAND		DISTURBANCE TO 100' BUFFER ZONE (100' BZ-AURA)
	DISTURBANCE TO 100' VERNAL POOL BUFFER ZONE (100' VP BZ)		DISTURBANCE TO BLSF
			EXISTING TREE LINE
			LIMIT OF GRADING

REV.	DATE	DESCRIPTION	BY

vhb
Transportation Land Development
Environmental Services
101 Walnut St., P.O. Box 9151
Watertown, MA 02472
617 924 1770 FAX 617 924 2286

COMMONWEALTH OF MASSACHUSETTS
DEPARTMENT OF CONSERVATION AND RECREATION
DIVISION OF PLANNING AND ENGINEERING

MASS CENTRAL RAIL TRAIL - WAYSIDE

MASS CENTRAL RAIL TRAIL
HUDSON, STOW, MARLBOROUGH & SUDBURY, MA

DESIGNER: JCR
CHECKED: SHK
DRAWN: JCR
CHECKED: TAL

CONSTRUCTION PLANS

CONT. P19-3295-D1A
ACC. XXXXXXx

SCALE: 1" = 20'-0"
DATE: MAR 2020

SHEET NO.
C-27
27 OF 46

14424_HD(CONST-3).DWG Plotted on 2-Mar-2020 12:25 PM

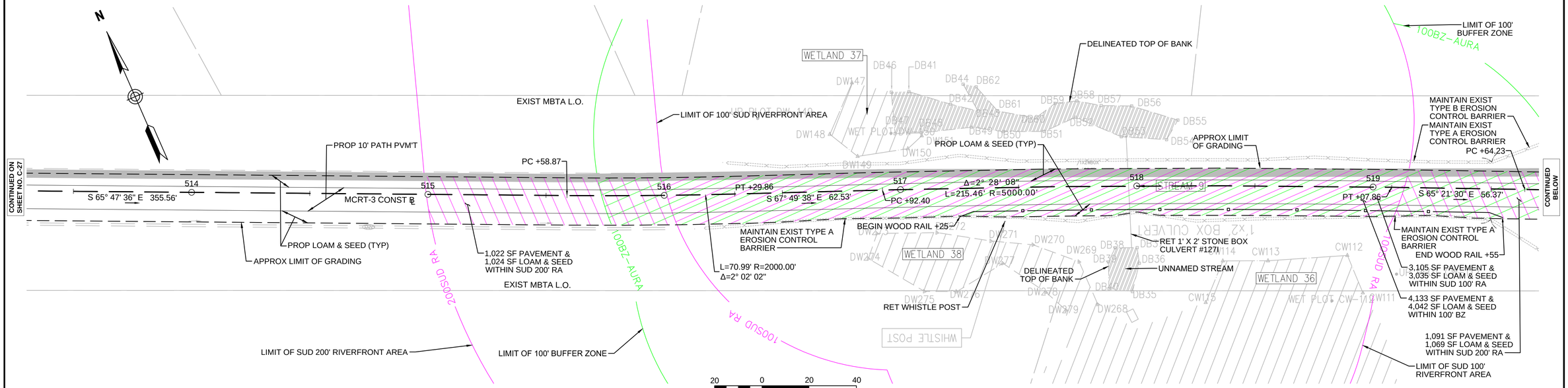

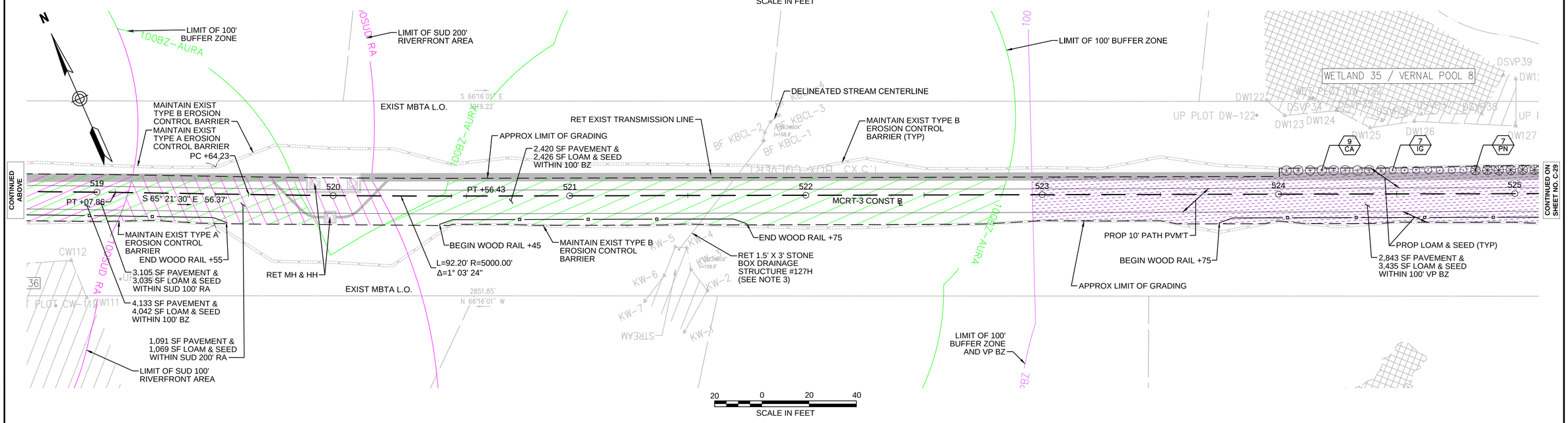

NOTE:

1. WETLAND RESOURCE AREA BOUNDARIES SHOWN HEREIN WERE APPROVED IN AN ORAD DATED AUGUST 27, 2018 (MADEP FILE NO. 301-1227).

ENVIRONMENTAL IMPACTS LEGEND

HATCH	DESCRIPTION	HATCH	DESCRIPTION
	ISOLATED VEGETATED WETLAND		DISTURBANCE TO WPA 200' RIVERFRONT AREA (WPA 200' RA)
	BORDERING VEGETATED WETLAND		DISTURBANCE TO SUDBURY 200' RIVERFRONT AREA (SUD 200' RA)
	LAND UNDER WATER		DISTURBANCE TO WPA 100' RIVERFRONT AREA (WPA 100' RA)
	VERNAL POOL		DISTURBANCE TO SUDBURY 100' RIVERFRONT AREA (SUD 100' RA)
	PERMANENT DISTURBANCE TO VEGETATED WETLAND		DISTURBANCE TO 100' BUFFER ZONE (100' BZ-AURA)
	DISTURBANCE TO 100' VERNAL POOL BUFFER ZONE (100' VP BZ)		DISTURBANCE TO BLSF
			EXISTING TREE LINE
			LIMIT OF GRADING

REV.	DATE	DESCRIPTION	BY

vhb
Transportation Land Development
Environmental Services
101 Walnut St., P.O. Box 9151
Watertown, MA 02472
617 924 1770 FAX 617 924 2286

COMMONWEALTH OF MASSACHUSETTS
DEPARTMENT OF CONSERVATION AND RECREATION
DIVISION OF PLANNING AND ENGINEERING

MASS CENTRAL RAIL TRAIL - WAYSIDE

MASS CENTRAL RAIL TRAIL
HUDSON, STOW, MARLBOROUGH & SUDBURY, MA

DESIGNER: JCR
CHECKED: SHK
DRAWN: JCR
CHECKED: TAL

CONSTRUCTION PLANS

CONT. P19-3295-D1A
ACC. XXXXXXx
SCALE: 1" = 20'-0"
DATE: MAR 2020

SHEET NO. C-28

14424_HD(CONST-3).DWG Plotted on 2-Mar-2020 12:26 PM

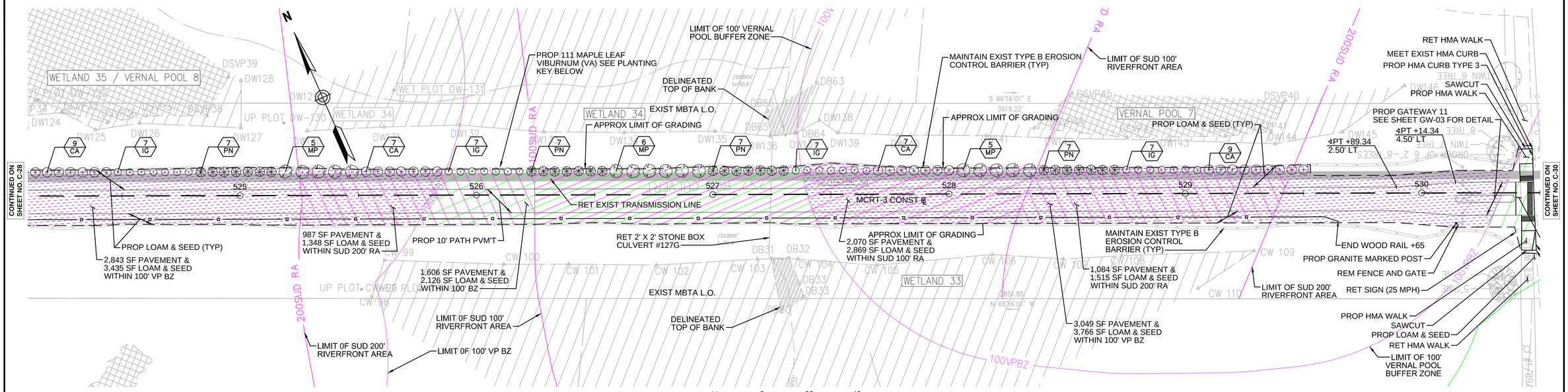

PROPOSED PLANTINGS

KEY	BOTANICAL NAME	COMMON NAME	SIZE	SPACING	QTY
SHRUBS					
CA	CLETHRA ALNIFOLIA	SUMMERSWEET CLETHRA	2-3' HT	48" O.C.	32
IG	ILEX GLABRA 'COMPACTA'	INKBERRY - COMPACT	24-30" HT	36" O.C.	28
MP	MYRICA PENSLYVANICA	NORTHERN BAYBERRY	2-3' HT	72" O.C.	16
PN	PHYSOCARPUS OPULIFOLIUS	NINEBARK	2-3' HT	48" O.C.	28

NOTE:
1. WETLAND RESOURCE AREA BOUNDARIES SHOWN HEREIN WERE APPROVED IN AN ORAD DATED AUGUST 27, 2018 (MADEP FILE NO. 301-1227).

ENVIRONMENTAL IMPACTS LEGEND

HATCH	DESCRIPTION	HATCH	DESCRIPTION
	ISOLATED VEGETATED WETLAND		DISTURBANCE TO WPA 200' RIVERFRONT AREA (WPA 200' RA)
	BORDERING VEGETATED WETLAND		DISTURBANCE TO SUDBURY 200' RIVERFRONT AREA (SUD 200' RA)
	LAND UNDER WATER		DISTURBANCE TO WPA 100' RIVERFRONT AREA (WPA 100' RA)
	VERNAL POOL		DISTURBANCE TO SUDBURY 100' RIVERFRONT AREA (SUD 100' RA)
	PERMANENT DISTURBANCE TO VEGETATED WETLAND		DISTURBANCE TO 100' BUFFER ZONE (100' BZ-AURA)
	DISTURBANCE TO 100' VERNAL POOL BUFFER ZONE (100' VP BZ)		DISTURBANCE TO BLSF
			EXISTING TREE LINE
			LIMIT OF GRADING

REV.	DATE	DESCRIPTION	BY

vhb
Transportation Land Development
Environmental Services
101 Walnut St., P.O. Box 9151
Watertown, MA 02472
617 924 1770 FAX 617 924 2286

COMMONWEALTH OF MASSACHUSETTS
DEPARTMENT OF CONSERVATION AND RECREATION
DIVISION OF PLANNING AND ENGINEERING

MASS CENTRAL RAIL TRAIL - WAYSIDE

MASS CENTRAL RAIL TRAIL
HUDSON, STOW, MARLBOROUGH & SUDBURY, MA

DESIGNER: JCR
CHECKED: SHK
DRAWN: JCR
CHECKED: TAL

CONSTRUCTION PLANS

CONT. P19-3295-D1A
ACC. XXXXXXx
SCALE: 1" = 20'-0"
DATE: MAR 2020

SHEET NO. C-29
29 OF 46

14424_HD(CONST-3).DWG Plotted on 2-Mar-2020 12:27 PM

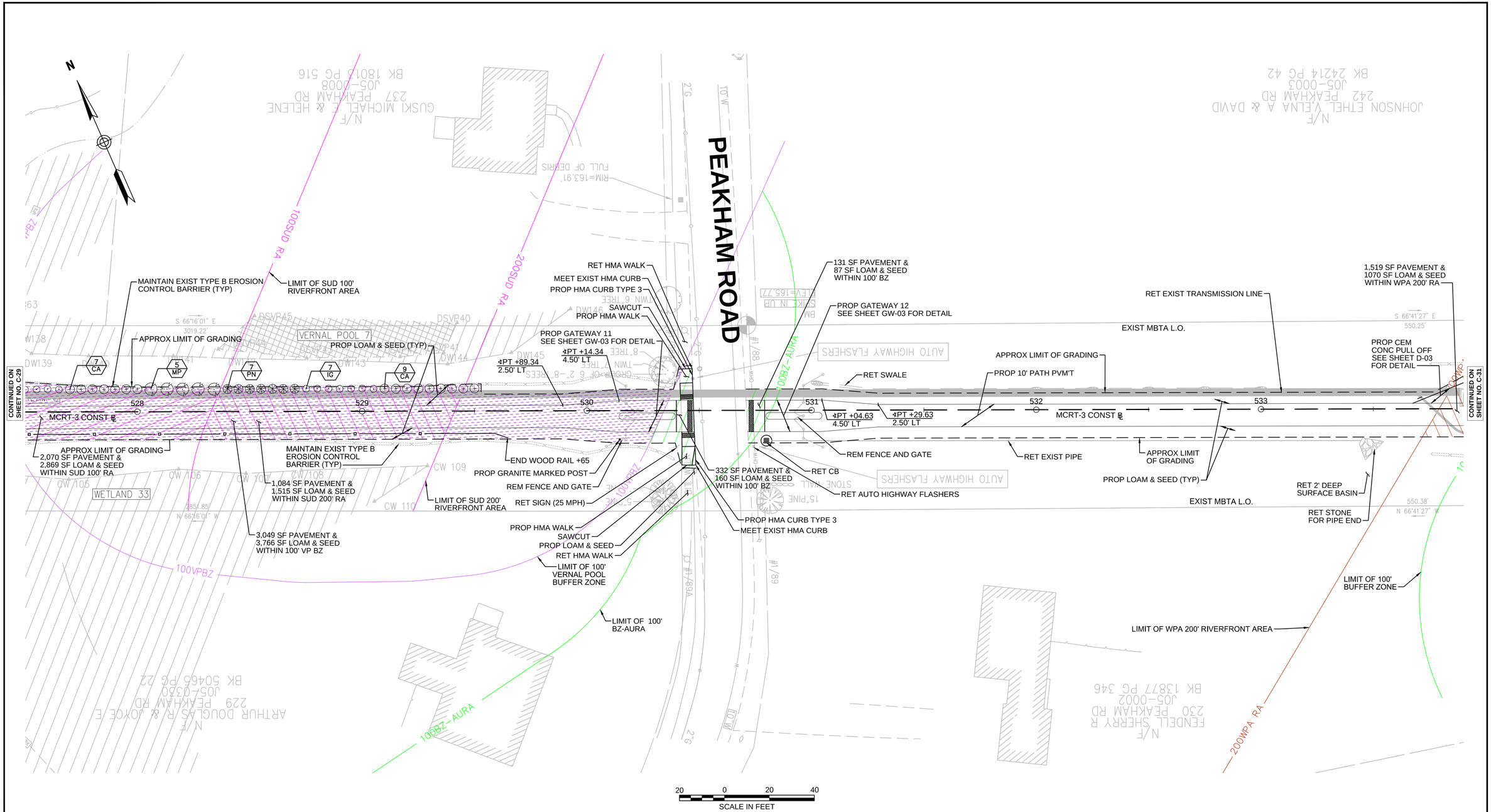

NOTE:

1. WETLAND RESOURCE AREA BOUNDARIES SHOWN HEREIN WERE APPROVED IN AN ORAD DATED AUGUST 27, 2018 (MADEP FILE NO. 301-1227).

ENVIRONMENTAL IMPACTS LEGEND

HATCH	DESCRIPTION
	ISOLATED VEGETATED WETLAND
	BORDERING VEGETATED WETLAND
	LAND UNDER WATER
	VERNAL POOL
	PERMANENT DISTURBANCE TO VEGETATED WETLAND
	DISTURBANCE TO 100' VERNAL POOL BUFFER ZONE (100' VP BZ)
	DISTURBANCE TO WPA 200' RIVERFRONT AREA (WPA 200' RA)
	DISTURBANCE TO SUDBURY 200' RIVERFRONT AREA (SUD 200' RA)
	DISTURBANCE TO WPA 100' RIVERFRONT AREA (WPA 100' RA)
	DISTURBANCE TO SUDBURY 100' RIVERFRONT AREA (SUD 100' RA)
	DISTURBANCE TO 100' BUFFER ZONE (100' BZ-AURA)
	DISTURBANCE TO BLSF
	EXISTING TREE LINE
— — — —	LIMIT OF GRADING

REV.	DATE	DESCRIPTION	BY

vhb
Transportation Land Development
Environmental Services
101 Walnut St., P.O. Box 9151
Watertown, MA 02472
617 924 1770 FAX 617 924 2286

COMMONWEALTH OF MASSACHUSETTS
DEPARTMENT OF CONSERVATION AND RECREATION
DIVISION OF PLANNING AND ENGINEERING

MASS CENTRAL RAIL TRAIL - WAYSIDE

MASS CENTRAL RAIL TRAIL
HUDSON, STOW, MARLBOROUGH & SUDBURY, MA

DESIGNER: JCR
CHECKED: SHK
DRAWN: JCR
CHECKED: TAL

CONSTRUCTION PLANS

CONT. P19-3295-D1A
ACC. XXXXXXx
SCALE: 1" = 20'-0"
DATE: MAR 2020

SHEET NO. C-30
30 OF 46

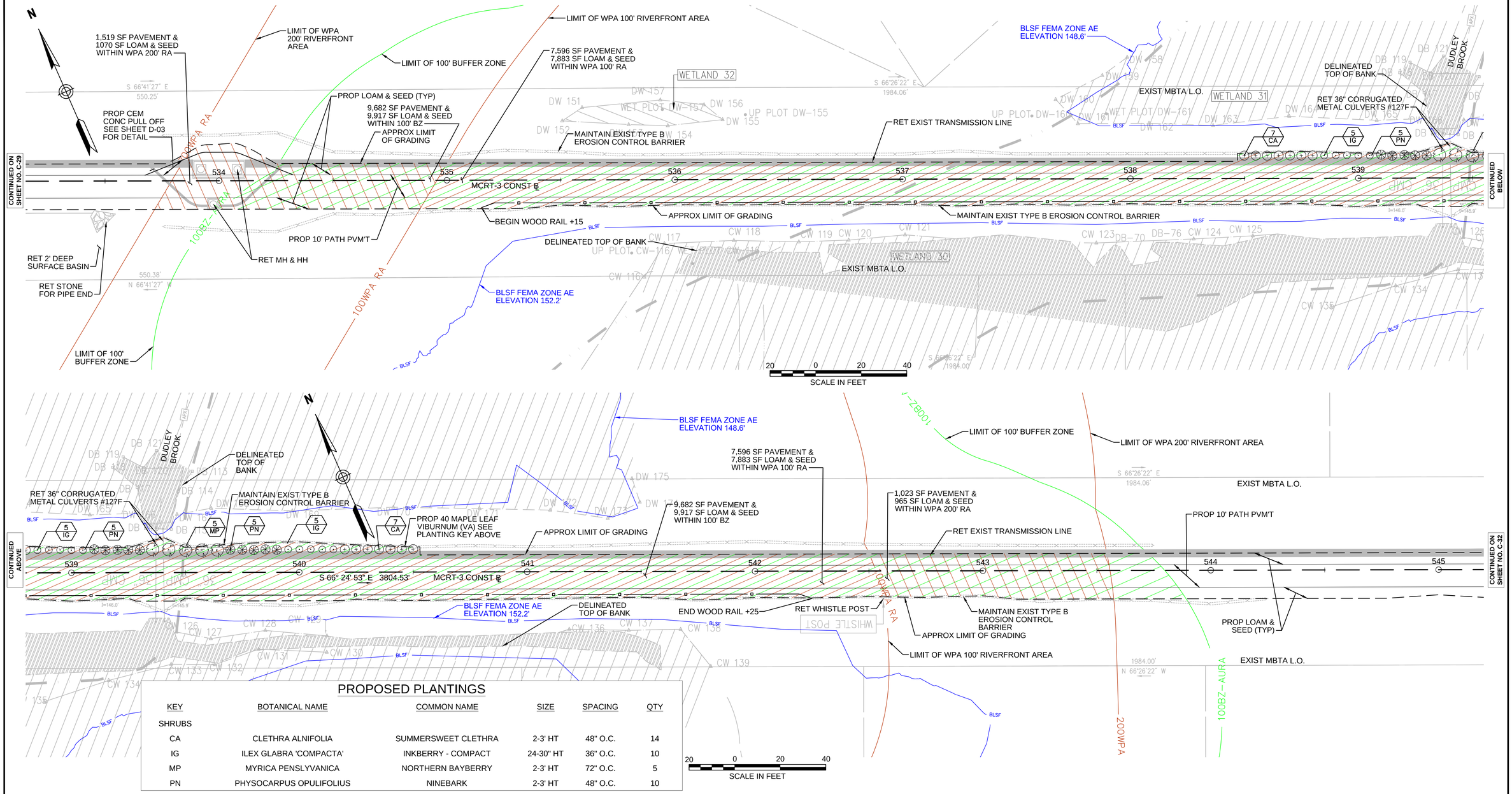

PROPOSED PLANTINGS

KEY	BOTANICAL NAME	COMMON NAME	SIZE	SPACING	QTY
SHRUBS					
CA	CLETHRA ALNIFOLIA	SUMMERSWEET CLETHRA	2-3' HT	48" O.C.	14
IG	ILEX GLABRA 'COMPACTA'	INKBERRY - COMPACT	24-30" HT	36" O.C.	10
MP	MYRICA PENSLYVANICA	NORTHERN BAYBERRY	2-3' HT	72" O.C.	5
PN	PHYSOCARPUS OPULIFOLIUS	NINEBARK	2-3' HT	48" O.C.	10

NOTE:
1. WETLAND RESOURCE AREA BOUNDARIES SHOWN HEREIN WERE APPROVED IN AN ORAD DATED AUGUST 27, 2018 (MADEP FILE NO. 301-1227).

ENVIRONMENTAL IMPACTS LEGEND

HATCH	DESCRIPTION
	ISOLATED VEGETATED WETLAND
	BORDERING VEGETATED WETLAND
	LAND UNDER WATER
	VERNAL POOL
	PERMANENT DISTURBANCE TO VEGETATED WETLAND
	DISTURBANCE TO 100' VERNAL POOL BUFFER ZONE (100' VP BZ)
	DISTURBANCE TO WPA 200' RIVERFRONT AREA (WPA 200' RA)
	DISTURBANCE TO SUDBURY 200' RIVERFRONT AREA (SUD 200' RA)
	DISTURBANCE TO WPA 100' RIVERFRONT AREA (WPA 100' RA)
	DISTURBANCE TO SUDBURY 100' RIVERFRONT AREA (SUD 100' RA)
	DISTURBANCE TO 100' BUFFER ZONE (100' BZ-AURA)
	DISTURBANCE TO BLSF
	EXISTING TREE LINE
	LIMIT OF GRADING

REV.	DATE	DESCRIPTION	BY

vhb
Transportation Land Development
Environmental Services
101 Walnut St., P.O. Box 9151
Watertown, MA 02472
617 924 1770 FAX 617 924 2286

COMMONWEALTH OF MASSACHUSETTS
DEPARTMENT OF CONSERVATION AND RECREATION
DIVISION OF PLANNING AND ENGINEERING

MASS CENTRAL RAIL TRAIL - WAYSIDE

MASS CENTRAL RAIL TRAIL
HUDSON, STOW, MARLBOROUGH & SUDBURY, MA

DESIGNER: JCR
CHECKED: SHK
DRAWN: JCR
CHECKED: TAL

CONSTRUCTION PLANS

CONT. P19-3295-D1A
ACC. XXXXXXx
SCALE: 1" = 20'-0"
DATE: MAR 2020

SHEET NO. C-31

14424_HD(CONST-3).DWG Plotted on 2-Mar-2020 12:28 PM

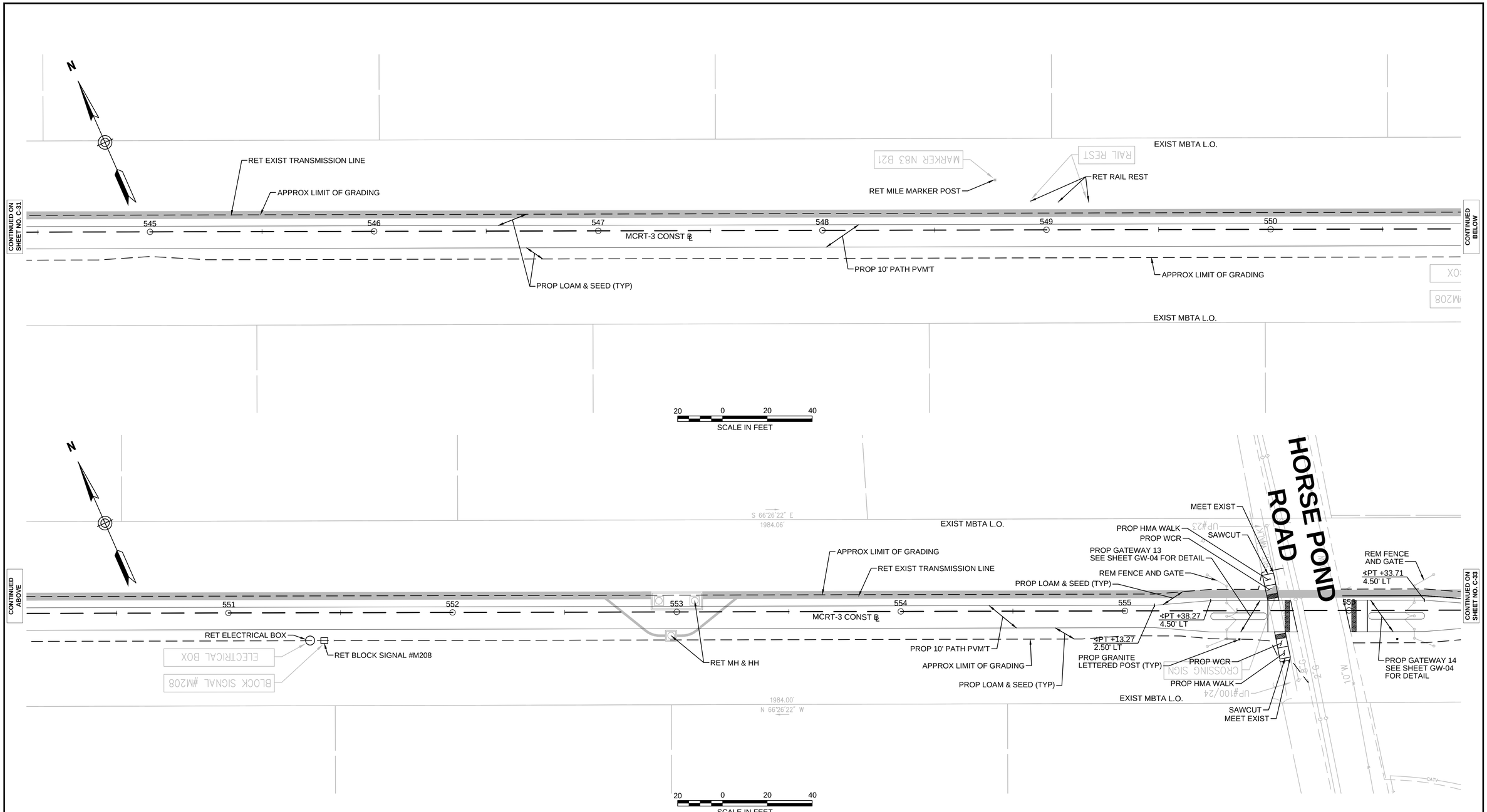

NOTE:

1. WETLAND RESOURCE AREA BOUNDARIES SHOWN HEREIN WERE APPROVED IN AN ORAD DATED AUGUST 27, 2018 (MADEP FILE NO. 301-1227).

ENVIRONMENTAL IMPACTS LEGEND

HATCH	DESCRIPTION
	ISOLATED VEGETATED WETLAND
	BORDERING VEGETATED WETLAND
	LAND UNDER WATER
	VERNAL POOL
	PERMANENT DISTURBANCE TO VEGETATED WETLAND
	DISTURBANCE TO 100' VERNAL POOL BUFFER ZONE (100' VP BZ)
	DISTURBANCE TO WPA 200' RIVERFRONT AREA (WPA 200' RA)
	DISTURBANCE TO SUDBURY 200' RIVERFRONT AREA (SUD 200' RA)
	DISTURBANCE TO WPA 100' RIVERFRONT AREA (WPA 100' RA)
	DISTURBANCE TO SUDBURY 100' RIVERFRONT AREA (SUD 100' RA)
	DISTURBANCE TO 100' BUFFER ZONE (100' BZ-AURA)
	DISTURBANCE TO BLSF
	EXISTING TREE LINE
	LIMIT OF GRADING

REV.	DATE	DESCRIPTION	BY

vhb
Transportation Land Development
Environmental Services
101 Walnut St., P.O. Box 9151
Watertown, MA 02472
617 924 1770 FAX 617 924 2286

COMMONWEALTH OF MASSACHUSETTS
DEPARTMENT OF CONSERVATION AND RECREATION
DIVISION OF PLANNING AND ENGINEERING

MASS CENTRAL RAIL TRAIL - WAYSIDE

MASS CENTRAL RAIL TRAIL
HUDSON, STOW, MARLBOROUGH & SUDBURY, MA

DESIGNER: JCR
CHECKED: SHK
DRAWN: JCR
CHECKED: TAL

CONSTRUCTION PLANS

CONT. P19-3295-D1A
ACC. XXXXXXx
SCALE: 1" = 20'-0"
DATE: MAR 2020

SHEET NO. C-32

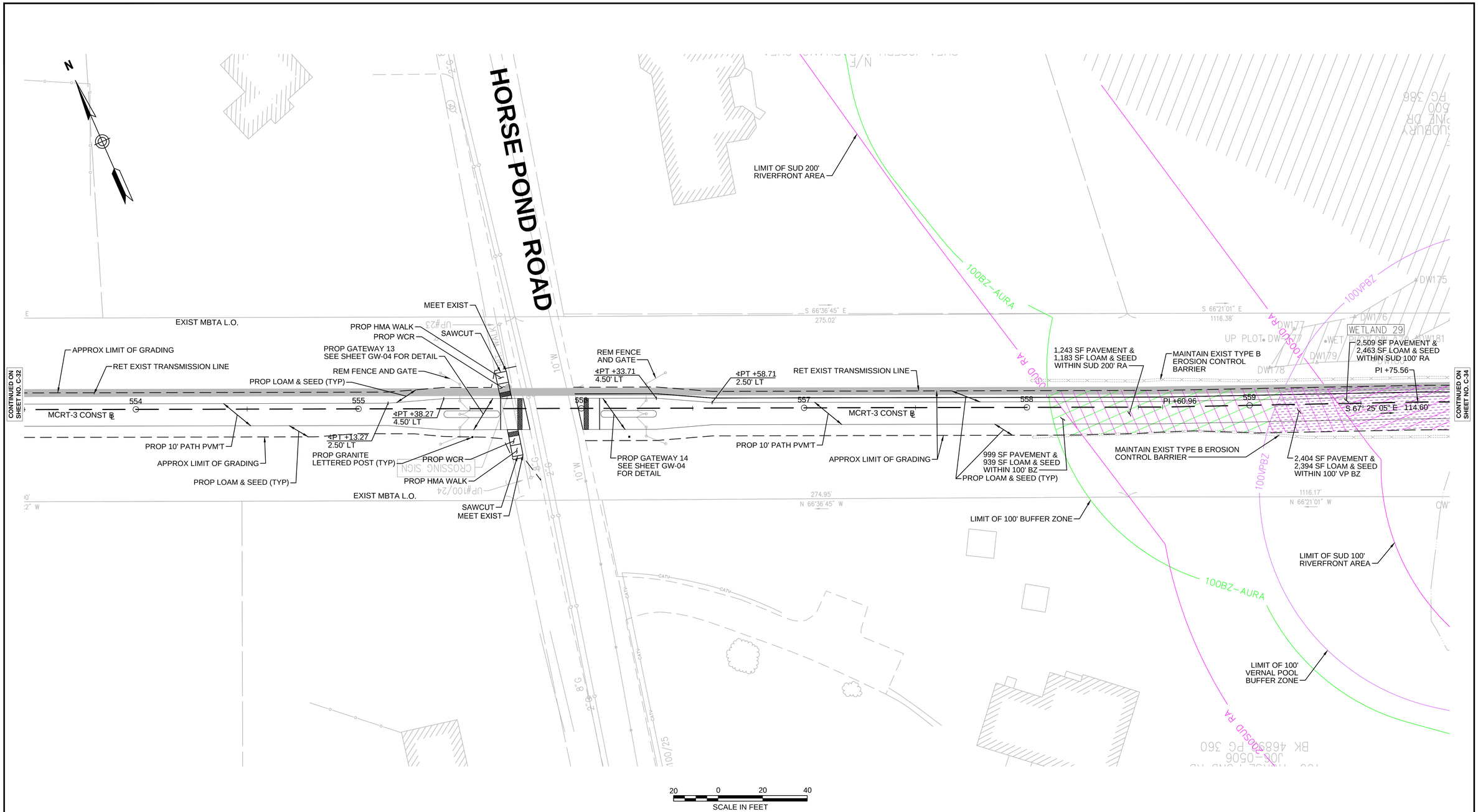

NOTE:

1. WETLAND RESOURCE AREA BOUNDARIES SHOWN HEREIN WERE APPROVED IN AN ORAD DATED AUGUST 27, 2018 (MADEP FILE NO. 301-1227).

ENVIRONMENTAL IMPACTS LEGEND

HATCH	DESCRIPTION
	ISOLATED VEGETATED WETLAND
	BORDERING VEGETATED WETLAND
	LAND UNDER WATER
	VERNAL POOL
	PERMANENT DISTURBANCE TO VEGETATED WETLAND
	DISTURBANCE TO 100' VERNAL POOL BUFFER ZONE (100' VP BZ)
	DISTURBANCE TO WPA 200' RIVERFRONT AREA (WPA 200' RA)
	DISTURBANCE TO SUDBURY 200' RIVERFRONT AREA (SUD 200' RA)
	DISTURBANCE TO WPA 100' RIVERFRONT AREA (WPA 100' RA)
	DISTURBANCE TO SUDBURY 100' RIVERFRONT AREA (SUD 100' RA)
	DISTURBANCE TO 100' BUFFER ZONE (100' BZ-AURA)
	DISTURBANCE TO BLSF
	EXISTING TREE LINE
	LIMIT OF GRADING

REV.	DATE	DESCRIPTION	BY

vhb
Transportation Land Development
Environmental Services
101 Walnut St., P.O. Box 9151
Watertown, MA 02472
617 924 1770 FAX 617 924 2286

COMMONWEALTH OF MASSACHUSETTS
DEPARTMENT OF CONSERVATION AND RECREATION
DIVISION OF PLANNING AND ENGINEERING

MASS CENTRAL RAIL TRAIL - WAYSIDE

MASS CENTRAL RAIL TRAIL
HUDSON, STOW, MARLBOROUGH & SUDBURY, MA

DESIGNER: JCR
CHECKED: SHK
DRAWN: JCR
CHECKED: TAL

CONSTRUCTION PLANS

CONT. P19-3295-D1A
ACC. XXXXXXx
SCALE: 1" = 20'-0"
DATE: MAR 2020

SHEET NO.
C-33
33 OF 46

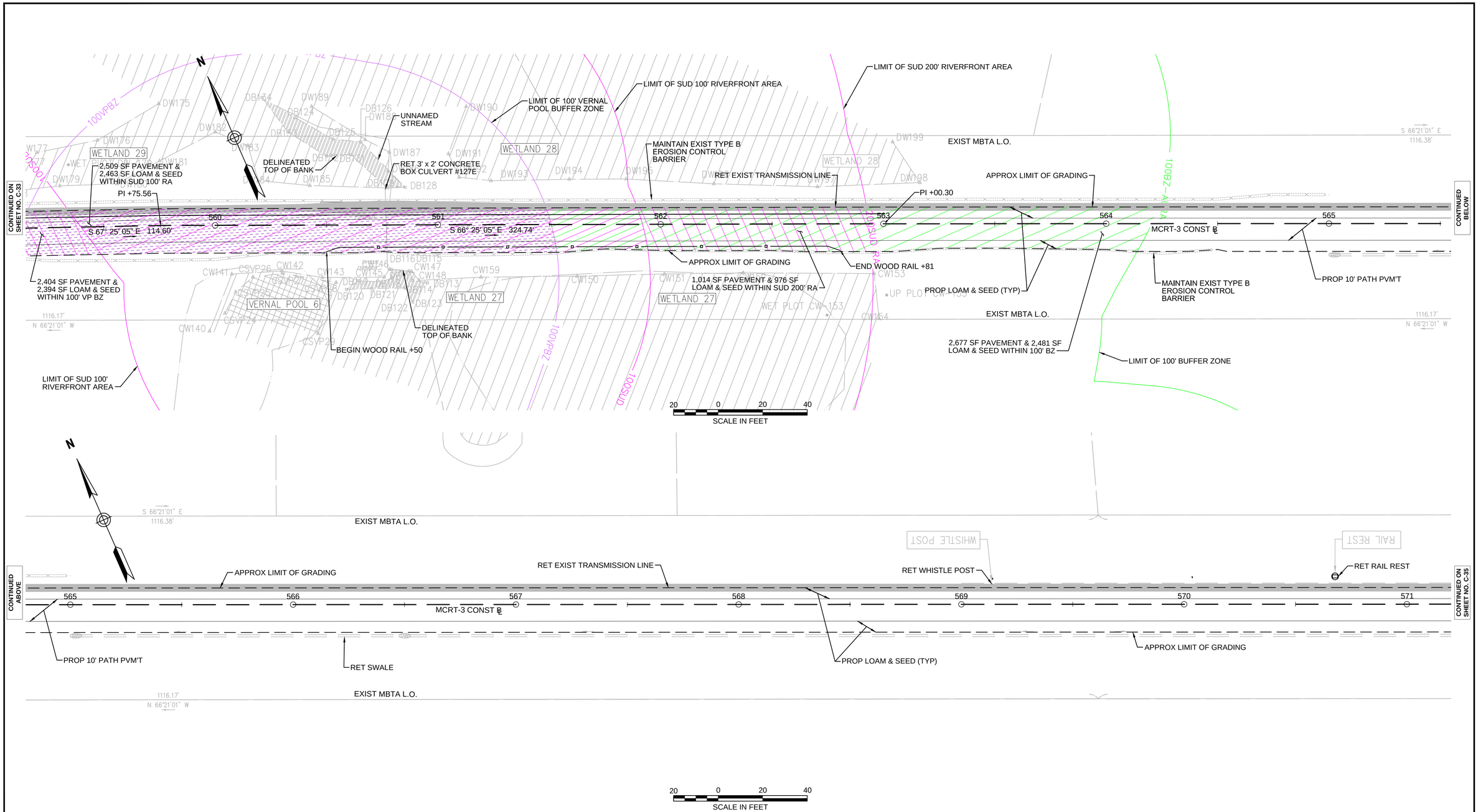

NOTE:

1. WETLAND RESOURCE AREA BOUNDARIES SHOWN HEREIN WERE APPROVED IN AN ORAD DATED AUGUST 27, 2018 (MADEP FILE NO. 301-1227).

ENVIRONMENTAL IMPACTS LEGEND

HATCH	DESCRIPTION
	ISOLATED VEGETATED WETLAND
	BORDERING VEGETATED WETLAND
	LAND UNDER WATER
	VERNAL POOL
	PERMANENT DISTURBANCE TO VEGETATED WETLAND
	DISTURBANCE TO 100' VERNAL POOL BUFFER ZONE (100' VP BZ)
	DISTURBANCE TO WPA 200' RIVERFRONT AREA (WPA 200' RA)
	DISTURBANCE TO SUDBURY 200' RIVERFRONT AREA (SUD 200' RA)
	DISTURBANCE TO WPA 100' RIVERFRONT AREA (WPA 100' RA)
	DISTURBANCE TO SUDBURY 100' RIVERFRONT AREA (SUD 100' RA)
	DISTURBANCE TO 100' BUFFER ZONE (100' BZ-AURA)
	DISTURBANCE TO BLSF
	EXISTING TREE LINE
	LIMIT OF GRADING

REV.	DATE	DESCRIPTION	BY

vhb
Transportation Land Development
Environmental Services
101 Walnut St., P.O. Box 9151
Watertown, MA 02472
617 924 1770 FAX 617 924 2286

COMMONWEALTH OF MASSACHUSETTS
DEPARTMENT OF CONSERVATION AND RECREATION
DIVISION OF PLANNING AND ENGINEERING

MASS CENTRAL RAIL TRAIL - WAYSIDE

MASS CENTRAL RAIL TRAIL
HUDSON, STOW, MARLBOROUGH & SUDBURY, MA

DESIGNER: JCR
CHECKED: SHK
DRAWN: JCR
CHECKED: TAL

CONSTRUCTION PLANS

CONT. P19-3295-D1A
ACC. XXXXXXx

SCALE: 1" = 20'-0"
DATE: MAR 2020

SHEET NO.
C-34
34 OF 46

14424_HD(CONST-3).DWG Plotted on 2-Mar-2020 12:30 PM

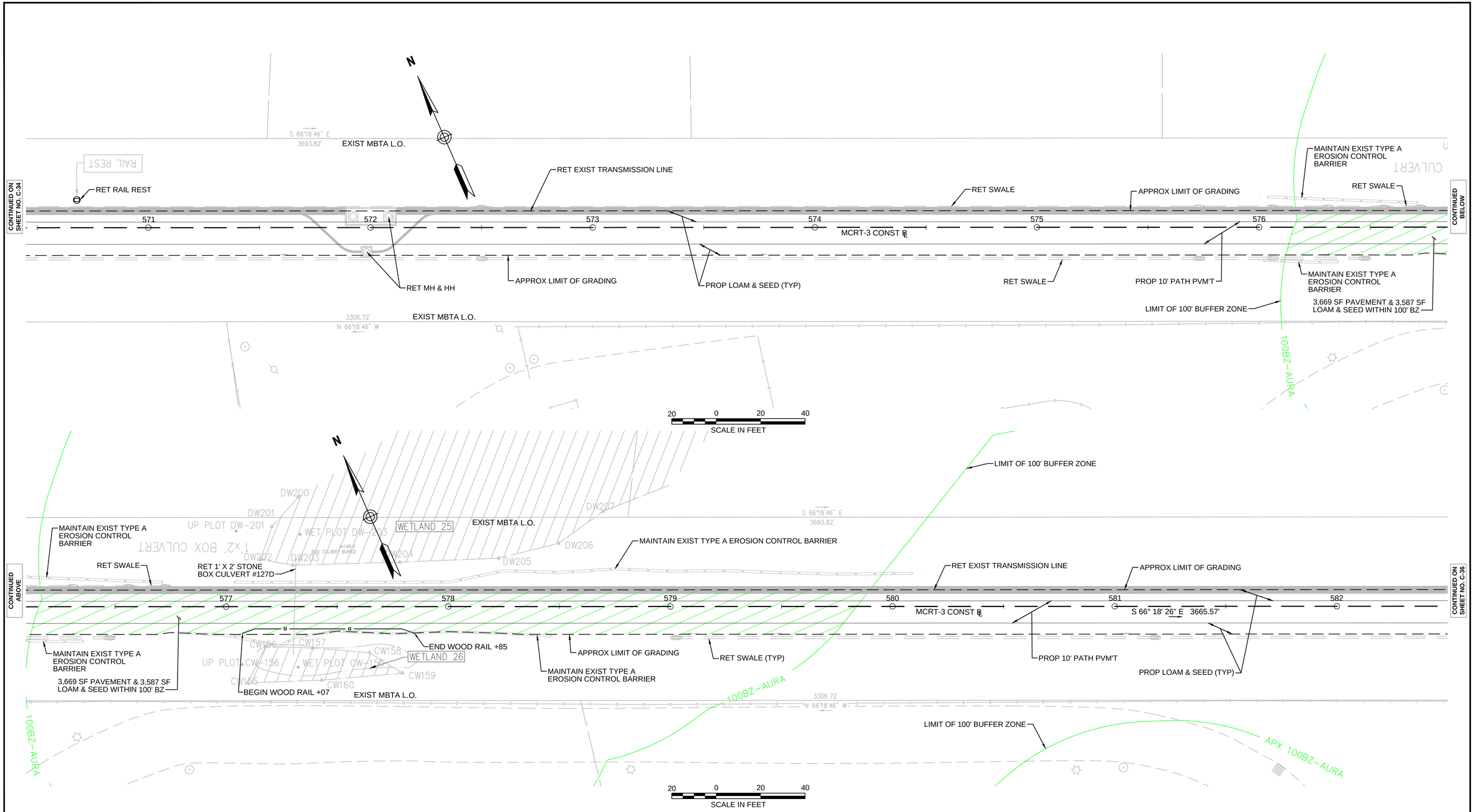

NOTE:

1. WETLAND RESOURCE AREA BOUNDARIES SHOWN HEREIN WERE APPROVED IN AN ORAD DATED AUGUST 27, 2018 (MADEP FILE NO. 301-1227).

ENVIRONMENTAL IMPACTS LEGEND

HATCH	DESCRIPTION	HATCH	DESCRIPTION
	ISOLATED VEGETATED WETLAND		DISTURBANCE TO WPA 200' RIVERFRONT AREA (WPA 200' RA)
	BORDERING VEGETATED WETLAND		DISTURBANCE TO SUDBURY 200' RIVERFRONT AREA (SUD 200' RA)
	LAND UNDER WATER		DISTURBANCE TO WPA 100' RIVERFRONT AREA (WPA 100' RA)
	VERNAL POOL		DISTURBANCE TO SUDBURY 100' RIVERFRONT AREA (SUD 100' RA)
	PERMANENT DISTURBANCE TO VEGETATED WETLAND		DISTURBANCE TO 100' BUFFER ZONE (100' BZ-AURA)
	DISTURBANCE TO 100' VERNAL POOL BUFFER ZONE (100' VP BZ)		DISTURBANCE TO BLSF
			EXISTING TREE LINE
			LIMIT OF GRADING

REV.	DATE	DESCRIPTION	BY

vhb
Transportation Land Development
Environmental Services
101 Walnut St., P.O. Box 9151
Watertown, MA 02472
617 924 1770 FAX 617 924 2286

COMMONWEALTH OF MASSACHUSETTS
DEPARTMENT OF CONSERVATION AND RECREATION
DIVISION OF PLANNING AND ENGINEERING

MASS CENTRAL RAIL TRAIL - WAYSIDE

MASS CENTRAL RAIL TRAIL
HUDSON, STOW, MARLBOROUGH & SUDBURY, MA

DESIGNER: JCR
CHECKED: SHK
DRAWN: JCR
CHECKED: TAL

CONSTRUCTION PLANS

CONT. P19-3295-D1A
ACC. XXXXXXx

SCALE: 1" = 20'-0"
DATE: MAR 2020

SHEET NO.
C-35
35 OF 46

14424_HD(CONST-3).DWG Plotted on 2-Mar-2020 12:30 PM

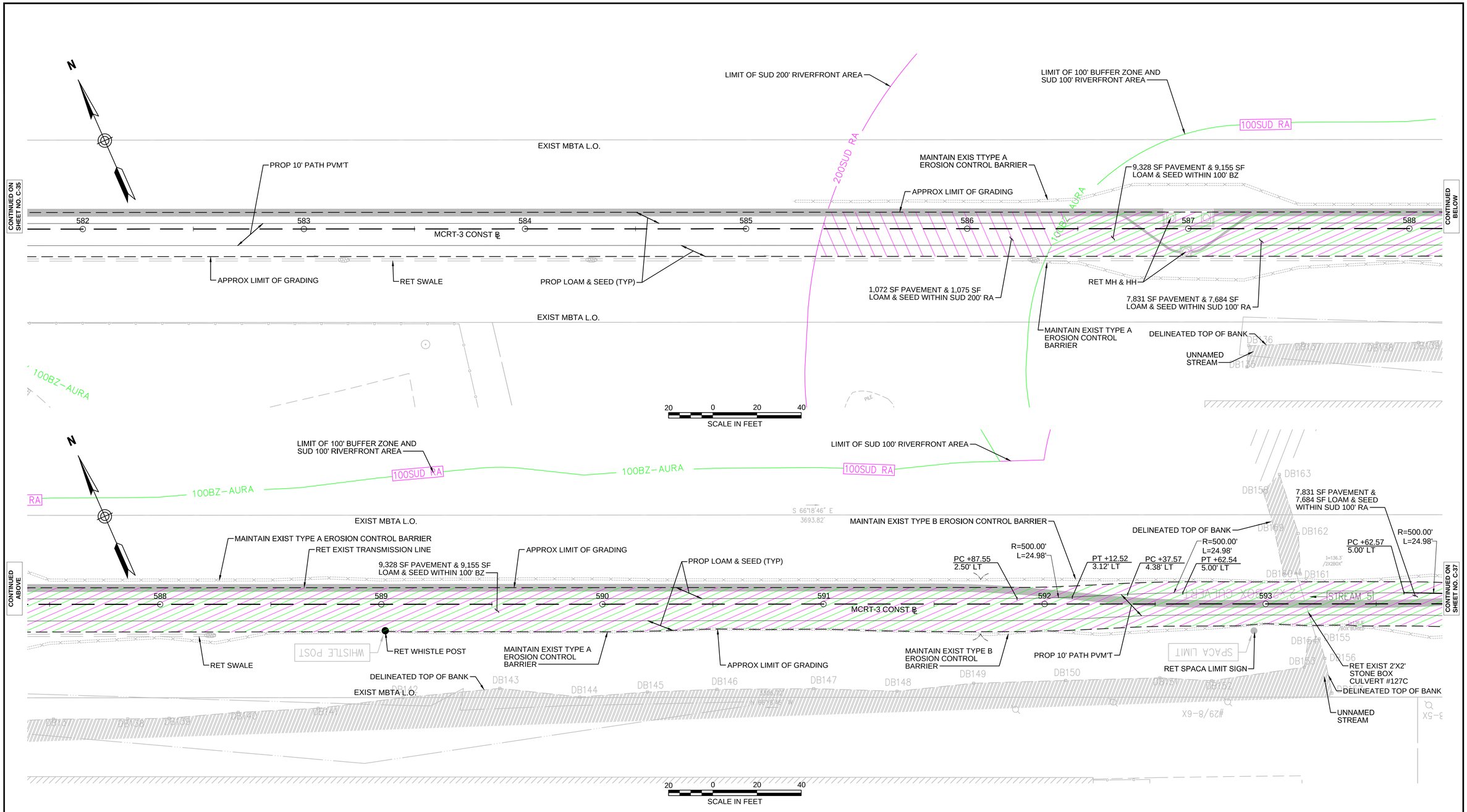

NOTE:

1. WETLAND RESOURCE AREA BOUNDARIES SHOWN HEREIN WERE APPROVED IN AN ORAD DATED AUGUST 27, 2018 (MADEP FILE NO. 301-1227).

ENVIRONMENTAL IMPACTS LEGEND

HATCH	DESCRIPTION
	ISOLATED VEGETATED WETLAND
	BORDERING VEGETATED WETLAND
	LAND UNDER WATER
	VERNAL POOL
	PERMANENT DISTURBANCE TO VEGETATED WETLAND
	DISTURBANCE TO 100' VERNAL POOL BUFFER ZONE (100' VP BZ)

HATCH	DESCRIPTION
	DISTURBANCE TO WPA 200' RIVERFRONT AREA (WPA 200' RA)
	DISTURBANCE TO SUDBURY 200' RIVERFRONT AREA (SUD 200' RA)
	DISTURBANCE TO WPA 100' RIVERFRONT AREA (WPA 100' RA)
	DISTURBANCE TO SUDBURY 100' RIVERFRONT AREA (SUD 100' RA)
	DISTURBANCE TO 100' BUFFER ZONE (100' BZ-AURA)
	DISTURBANCE TO BLSF
	EXISTING TREE LINE
	LIMIT OF GRADING

REV.	DATE	DESCRIPTION	BY

vhb
Transportation Land Development
Environmental Services
101 Walnut St., P.O. Box 9151
Watertown, MA 02472
617 924 1770 FAX 617 924 2286

COMMONWEALTH OF MASSACHUSETTS
DEPARTMENT OF CONSERVATION AND RECREATION
DIVISION OF PLANNING AND ENGINEERING

MASS CENTRAL RAIL TRAIL - WAYSIDE

MASS CENTRAL RAIL TRAIL
HUDSON, STOW, MARLBOROUGH & SUDBURY, MA

DESIGNER: JCR
CHECKED: SHK
DRAWN: JCR
CHECKED: TAL

CONSTRUCTION PLANS

CONT. P19-3295-D1A
ACC. XXXXXXx
SCALE: 1" = 20'-0"
DATE: MAR 2020

SHEET NO.
C-36
36 OF 46

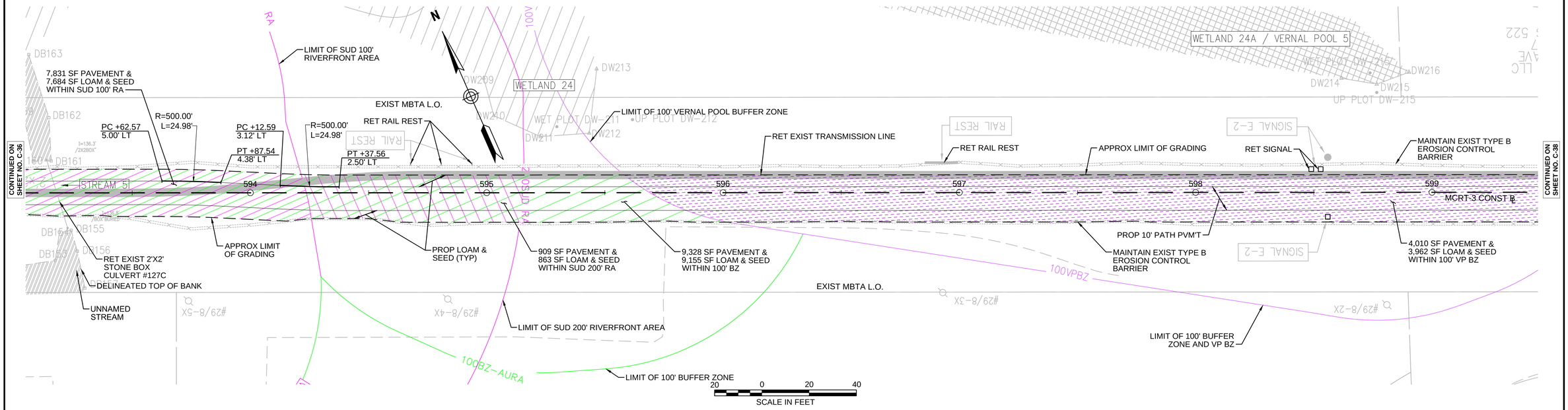

NOTE:

1. WETLAND RESOURCE AREA BOUNDARIES SHOWN HEREIN WERE APPROVED IN AN ORAD DATED AUGUST 27, 2018 (MADEP FILE NO. 301-1227).

ENVIRONMENTAL IMPACTS LEGEND

HATCH	DESCRIPTION	HATCH	DESCRIPTION
	ISOLATED VEGETATED WETLAND		DISTURBANCE TO WPA 200' RIVERFRONT AREA (WPA 200' RA)
	BORDERING VEGETATED WETLAND		DISTURBANCE TO SUDBURY 200' RIVERFRONT AREA (SUD 200' RA)
	LAND UNDER WATER		DISTURBANCE TO WPA 100' RIVERFRONT AREA (WPA 100' RA)
	VERNAL POOL		DISTURBANCE TO SUDBURY 100' RIVERFRONT AREA (SUD 100' RA)
	PERMANENT DISTURBANCE TO VEGETATED WETLAND		DISTURBANCE TO 100' BUFFER ZONE (100' BZ-AURA)
	DISTURBANCE TO 100' VERNAL POOL BUFFER ZONE (100' VP BZ)		DISTURBANCE TO BLSF
			EXISTING TREE LINE
			LIMIT OF GRADING

REV.	DATE	DESCRIPTION	BY

vhb
Transportation Land Development
Environmental Services
101 Walnut St., P.O. Box 9151
Watertown, MA 02472
617 924 1770 FAX 617 924 2286

COMMONWEALTH OF MASSACHUSETTS
DEPARTMENT OF CONSERVATION AND RECREATION
DIVISION OF PLANNING AND ENGINEERING

MASS CENTRAL RAIL TRAIL - WAYSIDE

MASS CENTRAL RAIL TRAIL
HUDSON, STOW, MARLBOROUGH & SUDBURY, MA

DESIGNER: JCR
CHECKED: SHK
DRAWN: JCR
CHECKED: TAL

CONSTRUCTION PLANS

CONT. P19-3295-D1A
ACC. XXXXXXx
SCALE: 1" = 20'-0"
DATE: MAR 2020

SHEET NO.
C-37
37 OF 46

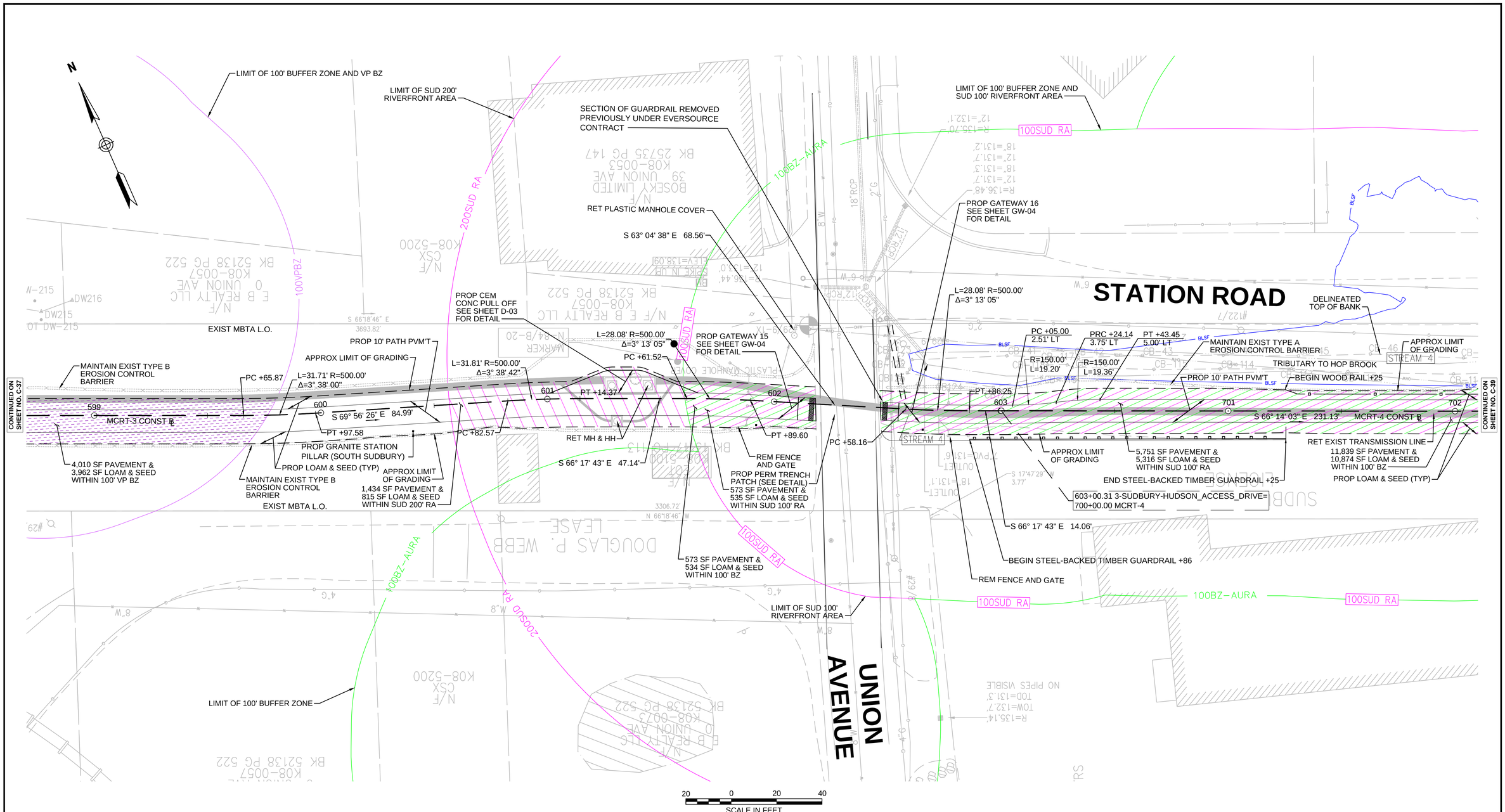

NOTE:

1. WETLAND RESOURCE AREA BOUNDARIES SHOWN HEREIN WERE APPROVED IN AN ORAD DATED AUGUST 27, 2018 (MADEP FILE NO. 301-1227).

ENVIRONMENTAL IMPACTS LEGEND

HATCH	DESCRIPTION	HATCH	DESCRIPTION
	ISOLATED VEGETATED WETLAND		DISTURBANCE TO WPA 200' RIVERFRONT AREA (WPA 200' RA)
	BORDERING VEGETATED WETLAND		DISTURBANCE TO SUDBURY 200' RIVERFRONT AREA (SUD 200' RA)
	LAND UNDER WATER		DISTURBANCE TO WPA 100' RIVERFRONT AREA (WPA 100' RA)
	VERNAL POOL		DISTURBANCE TO SUDBURY 100' RIVERFRONT AREA (SUD 100' RA)
	PERMANENT DISTURBANCE TO VEGETATED WETLAND		DISTURBANCE TO 100' BUFFER ZONE (100' BZ-AURA)
	DISTURBANCE TO 100' VERNAL POOL BUFFER ZONE (100' VP BZ)		DISTURBANCE TO BLSF
			EXISTING TREE LINE
			LIMIT OF GRADING

REV.	DATE	DESCRIPTION	BY

vhb
Transportation Land Development
Environmental Services
101 Walnut St., P.O. Box 9151
Watertown, MA 02472
617 924 1770 FAX 617 924 2286

COMMONWEALTH OF MASSACHUSETTS
DEPARTMENT OF CONSERVATION AND RECREATION
DIVISION OF PLANNING AND ENGINEERING

MASS CENTRAL RAIL TRAIL - WAYSIDE

MASS CENTRAL RAIL TRAIL
HUDSON, STOW, MARLBOROUGH & SUDBURY, MA

DESIGNER: JCR
CHECKED: SHK
DRAWN: JCR
CHECKED: TAL

CONSTRUCTION PLANS

CONT. P19-3295-D1A
ACC. XXXXXXx
SCALE: 1" = 20'-0"
DATE: MAR 2020

SHEET NO. C-38
38 OF 46

14424_HD(CONST-3).DWG Plotted on 2-Mar-2020 12:32 PM

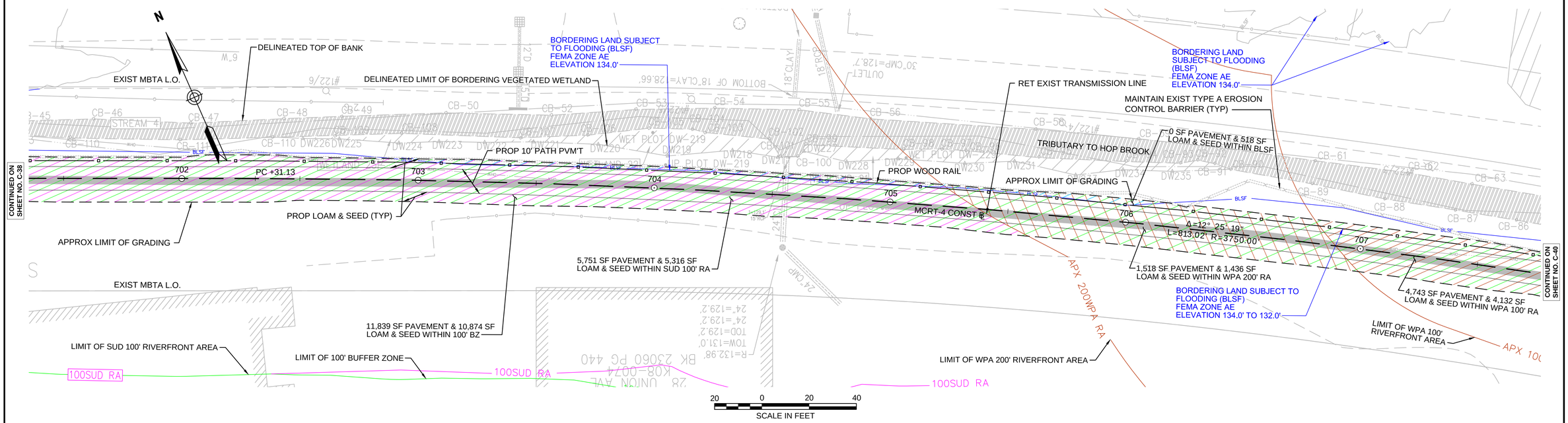

NOTE:

1. WETLAND RESOURCE AREA BOUNDARIES SHOWN HEREIN WERE APPROVED IN AN ORAD DATED AUGUST 27, 2018 (MADEP FILE NO. 301-1227).

ENVIRONMENTAL IMPACTS LEGEND

HATCH	DESCRIPTION	HATCH	DESCRIPTION
	ISOLATED VEGETATED WETLAND		DISTURBANCE TO WPA 200' RIVERFRONT AREA (WPA 200' RA)
	BORDERING VEGETATED WETLAND		DISTURBANCE TO SUDBURY 200' RIVERFRONT AREA (SUD 200' RA)
	LAND UNDER WATER		DISTURBANCE TO WPA 100' RIVERFRONT AREA (WPA 100' RA)
	VERNAL POOL		DISTURBANCE TO SUDBURY 100' RIVERFRONT AREA (SUD 100' RA)
	PERMANENT DISTURBANCE TO VEGETATED WETLAND		DISTURBANCE TO 100' BUFFER ZONE (100' BZ-AURA)
	DISTURBANCE TO 100' VERNAL POOL BUFFER ZONE (100' VP BZ)		DISTURBANCE TO BLSF
			EXISTING TREE LINE
			LIMIT OF GRADING

REV.	DATE	DESCRIPTION	BY

vhb
Transportation Land Development
Environmental Services
101 Walnut St., P.O. Box 9151
Watertown, MA 02472
617 924 1770 FAX 617 924 2286

COMMONWEALTH OF MASSACHUSETTS
DEPARTMENT OF CONSERVATION AND RECREATION
DIVISION OF PLANNING AND ENGINEERING

MASS CENTRAL RAIL TRAIL - WAYSIDE

MASS CENTRAL RAIL TRAIL
HUDSON, STOW, MARLBOROUGH & SUDBURY, MA

DESIGNER: JCR
CHECKED: SHK
DRAWN: JCR
CHECKED: TAL

CONSTRUCTION PLANS

CONT. P19-3295-D1A
ACC. XXXXXXx
SCALE: 1" = 20'-0"
DATE: MAR 2020

SHEET NO.
C-39
39 OF 46

14424_HD(CONST-4).DWG Plotted on 2-Mar-2020 12:33 PM

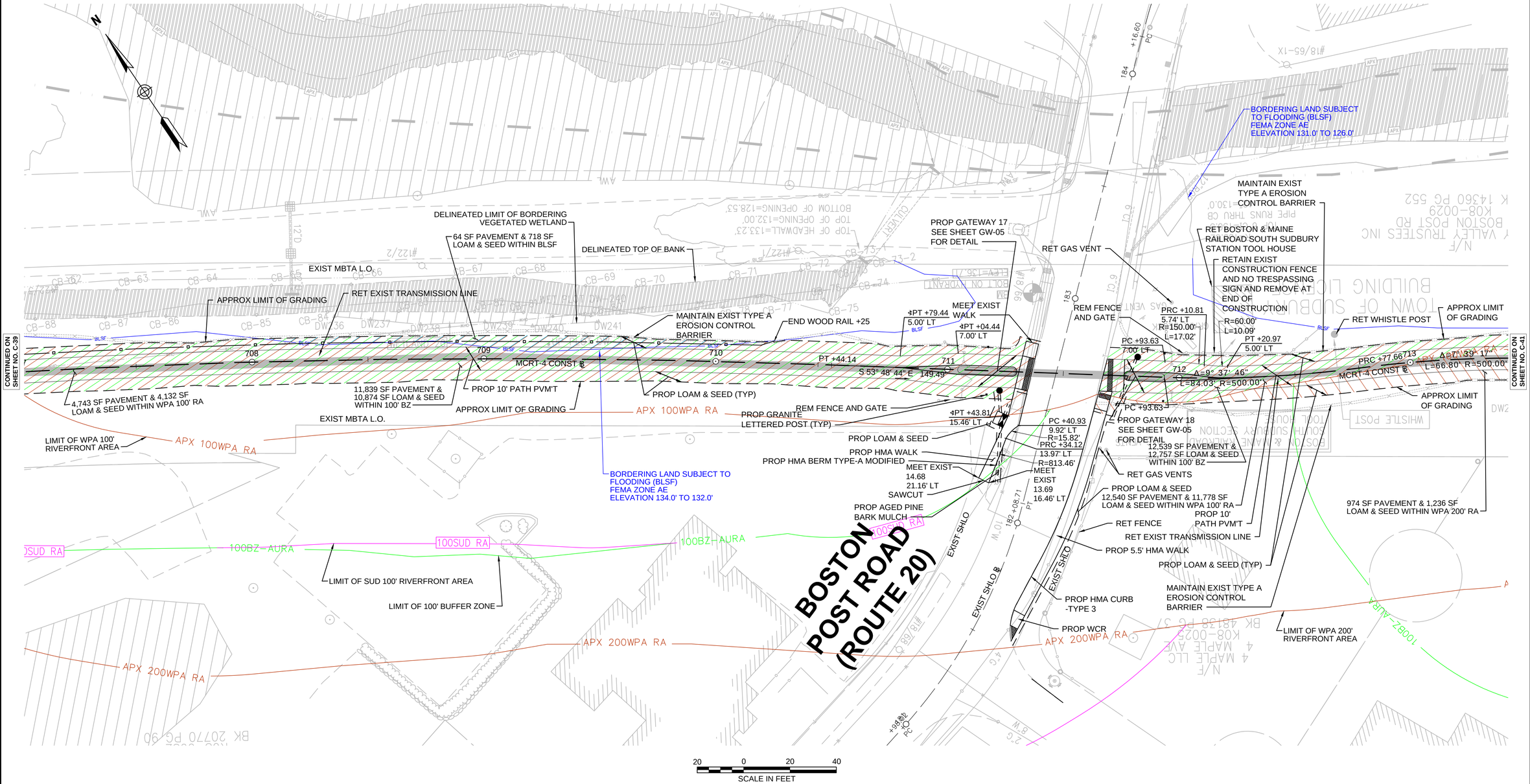

NOTE:

1. WETLAND RESOURCE AREA BOUNDARIES SHOWN HEREIN WERE APPROVED IN AN ORAD DATED AUGUST 27, 2018 (MADEP FILE NO. 301-1227).

ENVIRONMENTAL IMPACTS LEGEND

HATCH	DESCRIPTION
	ISOLATED VEGETATED WETLAND
	BORDERING VEGETATED WETLAND
	LAND UNDER WATER
	VERNAL POOL
	PERMANENT DISTURBANCE TO VEGETATED WETLAND
	DISTURBANCE TO 100' VERNAL POOL BUFFER ZONE (100' VP BZ)
	DISTURBANCE TO WPA 200' RIVERFRONT AREA (WPA 200' RA)
	DISTURBANCE TO SUDBURY 200' RIVERFRONT AREA (SUD 200' RA)
	DISTURBANCE TO WPA 100' RIVERFRONT AREA (WPA 100' RA)
	DISTURBANCE TO SUDBURY 100' RIVERFRONT AREA (SUD 100' RA)
	DISTURBANCE TO 100' BUFFER ZONE (100' BZ-AURA)
	DISTURBANCE TO BLSF
	EXISTING TREE LINE
— — — —	LIMIT OF GRADING

REV.	DATE	DESCRIPTION	BY

vhb
Transportation Land Development
Environmental Services
101 Walnut St., P.O. Box 9151
Watertown, MA 02472
617 924 1770 FAX 617 924 2286

COMMONWEALTH OF MASSACHUSETTS
DEPARTMENT OF CONSERVATION AND RECREATION
DIVISION OF PLANNING AND ENGINEERING

MASS CENTRAL RAIL TRAIL - WAYSIDE

MASS CENTRAL RAIL TRAIL
HUDSON, STOW, MARLBOROUGH & SUDBURY, MA

DESIGNER: JCR
CHECKED: SHK
DRAWN: JCR
CHECKED: TAL

CONSTRUCTION PLANS

CONT. P19-3295-D1A
ACC. XXXXXXx

SCALE: 1" = 20'-0"
DATE: MAR 2020

SHEET NO. C-40
40 OF 46

14424_HD(CONST-4).DWG Plotted on 2-Mar-2020 12:33 PM

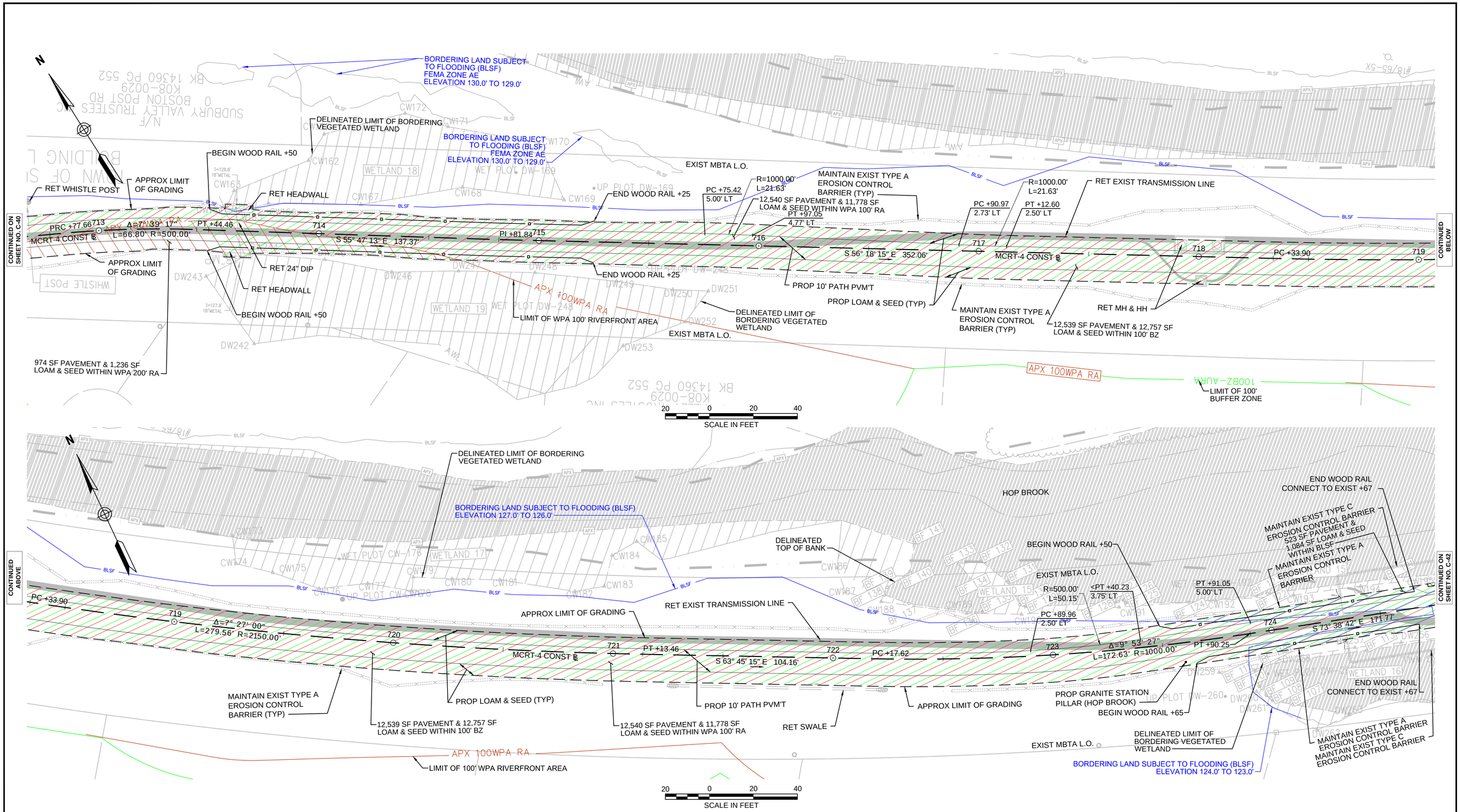

NOTE:

1. WETLAND RESOURCE AREA BOUNDARIES SHOWN HEREIN WERE APPROVED IN AN ORAD DATED AUGUST 27, 2018 (MADEP FILE NO. 301-1227).

ENVIRONMENTAL IMPACTS LEGEND

HATCH	DESCRIPTION
	ISOLATED VEGETATED WETLAND
	BORDERING VEGETATED WETLAND
	LAND UNDER WATER
	VERNAL POOL
	PERMANENT DISTURBANCE TO VEGETATED WETLAND
	DISTURBANCE TO 100' VERNAL POOL BUFFER ZONE (100' VP BZ)
	DISTURBANCE TO WPA 200' RIVERFRONT AREA (WPA 200' RA)
	DISTURBANCE TO SUDBURY 200' RIVERFRONT AREA (SUD 200' RA)
	DISTURBANCE TO WPA 100' RIVERFRONT AREA (WPA 100' RA)
	DISTURBANCE TO SUDBURY 100' RIVERFRONT AREA (SUD 100' RA)
	DISTURBANCE TO 100' BUFFER ZONE (100' BZ-AURA)
	DISTURBANCE TO BLSF
	EXISTING TREE LINE
	LIMIT OF GRADING

REV.	DATE	DESCRIPTION	BY

vhb
Transportation Land Development
Environmental Services
101 Walnut St., P.O. Box 9151
Watertown, MA 02472
617 924 1770 FAX 617 924 2286

COMMONWEALTH OF MASSACHUSETTS
DEPARTMENT OF CONSERVATION AND RECREATION
DIVISION OF PLANNING AND ENGINEERING

MASS CENTRAL RAIL TRAIL - WAYSIDE

MASS CENTRAL RAIL TRAIL
HUDSON, STOW, MARLBOROUGH & SUDBURY, MA

DESIGNER: JCR
CHECKED: SHK
DRAWN: JCR
CHECKED: TAL

CONSTRUCTION PLANS

CONT. P19-3295-D1A
ACC. XXXXXXXx
SCALE: 1" = 20'-0"
DATE: MAR 2020

SHEET NO. C-41

14424_HD(CONST-4).DWG Plotted on 2-Mar-2020 12:34 PM

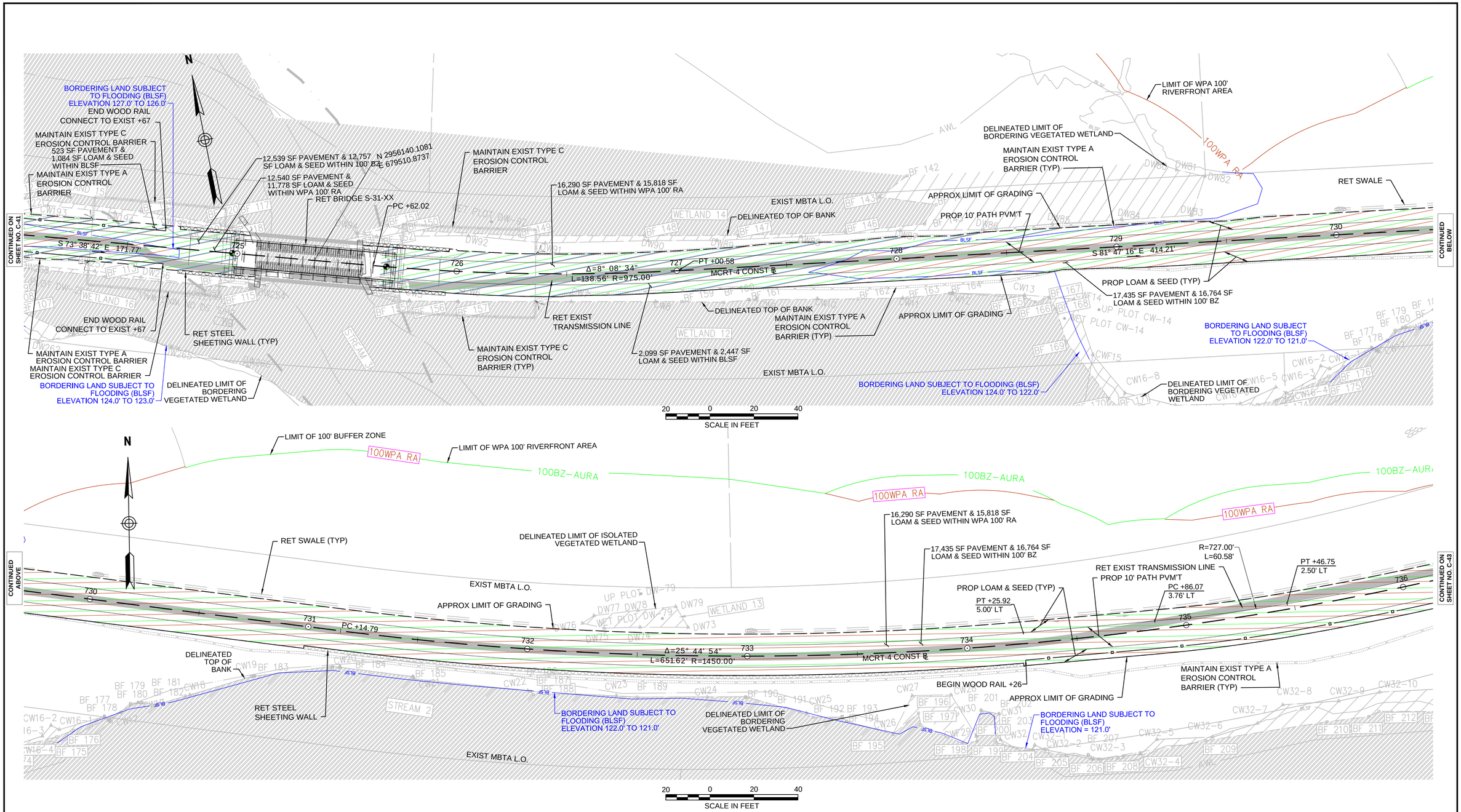

NOTE:

1. WETLAND RESOURCE AREA BOUNDARIES SHOWN HEREIN WERE APPROVED IN AN ORAD DATED AUGUST 27, 2018 (MADEP FILE NO. 301-1227).

ENVIRONMENTAL IMPACTS LEGEND

HATCH	DESCRIPTION	HATCH	DESCRIPTION
	ISOLATED VEGETATED WETLAND		DISTURBANCE TO WPA 200' RIVERFRONT AREA (WPA 200' RA)
	BORDERING VEGETATED WETLAND		DISTURBANCE TO SUDBURY 200' RIVERFRONT AREA (SUD 200' RA)
	LAND UNDER WATER		DISTURBANCE TO WPA 100' RIVERFRONT AREA (WPA 100' RA)
	VERNAL POOL		DISTURBANCE TO SUDBURY 100' RIVERFRONT AREA (SUD 100' RA)
	PERMANENT DISTURBANCE TO VEGETATED WETLAND		DISTURBANCE TO 100' BUFFER ZONE (100' BZ-AURA)
	DISTURBANCE TO 100' VERNAL POOL BUFFER ZONE (100' VP BZ)		DISTURBANCE TO BLSF
			EXISTING TREE LINE
			LIMIT OF GRADING

REV.	DATE	DESCRIPTION	BY

vhb
Transportation Land Development
Environmental Services
101 Walnut St., P.O. Box 9151
Watertown, MA 02472
617 924 1770 FAX 617 924 2286

COMMONWEALTH OF MASSACHUSETTS
DEPARTMENT OF CONSERVATION AND RECREATION
DIVISION OF PLANNING AND ENGINEERING

MASS CENTRAL RAIL TRAIL - WAYSIDE

MASS CENTRAL RAIL TRAIL
HUDSON, STOW, MARLBOROUGH & SUDBURY, MA

DESIGNER: JCR
CHECKED: SHK
DRAWN: JCR
CHECKED: TAL

CONSTRUCTION PLANS

CONT. P19-3295-D1A
ACC. XXXXXXX
SCALE: 1" = 20'-0"
DATE: MAR 2020

SHEET NO.
C-42
42 OF 46

14424_HD(CONST-4).DWG Plotted on 2-Mar-2020 12:34 PM

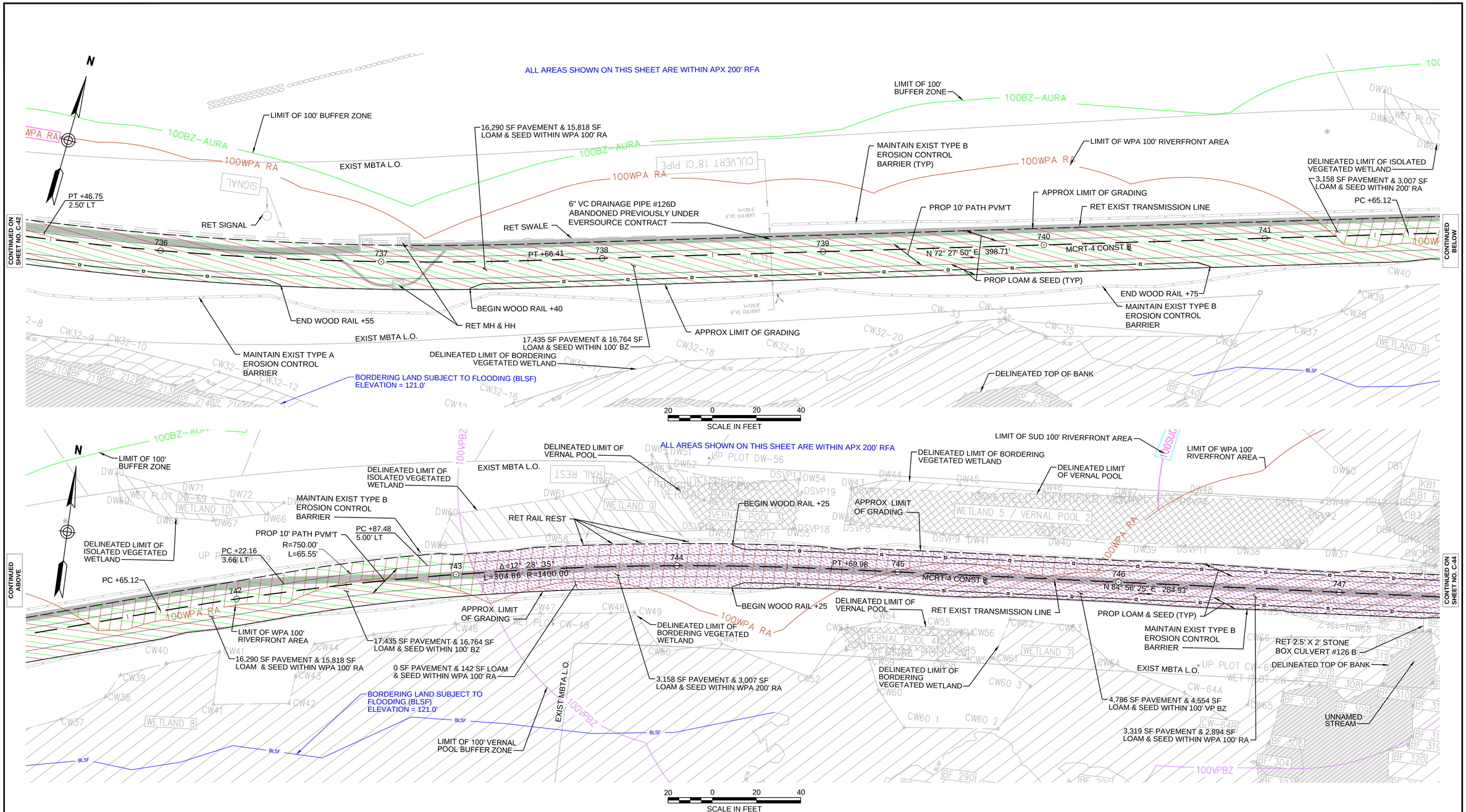

NOTE:

1. WETLAND RESOURCE AREA BOUNDARIES SHOWN HEREIN WERE APPROVED IN AN ORAD DATED AUGUST 27, 2018 (MADEP FILE NO. 301-1227).

ENVIRONMENTAL IMPACTS LEGEND

HATCH	DESCRIPTION	HATCH	DESCRIPTION
	ISOLATED VEGETATED WETLAND		DISTURBANCE TO WPA 200' RIVERFRONT AREA (WPA 200' RA)
	BORDERING VEGETATED WETLAND		DISTURBANCE TO SUDBURY 200' RIVERFRONT AREA (SUD 200' RA)
	LAND UNDER WATER		DISTURBANCE TO WPA 100' RIVERFRONT AREA (WPA 100' RA)
	VERNAL POOL		DISTURBANCE TO SUDBURY 100' RIVERFRONT AREA (SUD 100' RA)
	PERMANENT DISTURBANCE TO VEGETATED WETLAND		DISTURBANCE TO 100' BUFFER ZONE (100' BZ-AURA)
	DISTURBANCE TO 100' VERNAL POOL BUFFER ZONE (100' VP BZ)		DISTURBANCE TO BLSF
			EXISTING TREE LINE
			LIMIT OF GRADING

REV.	DATE	DESCRIPTION	BY

vhb
Transportation Land Development
Environmental Services
101 Walnut St., P.O. Box 9151
Watertown, MA 02472
617 924 1770 FAX 617 924 2286

COMMONWEALTH OF MASSACHUSETTS
DEPARTMENT OF CONSERVATION AND RECREATION
DIVISION OF PLANNING AND ENGINEERING

MASS CENTRAL RAIL TRAIL - WAYSIDE

MASS CENTRAL RAIL TRAIL
HUDSON, STOW, MARLBOROUGH & SUDBURY, MA

DESIGNER: JCR
CHECKED: SHK
DRAWN: JCR
CHECKED: TAL

CONSTRUCTION PLANS

CONT. P19-3295-D1A
ACC. XXXXXXx
SCALE: 1" = 20'-0"
DATE: MAR 2020

SHEET NO. C-43

14424_HD(CONST-4).DWG Plotted on 2-Mar-2020 12:35 PM

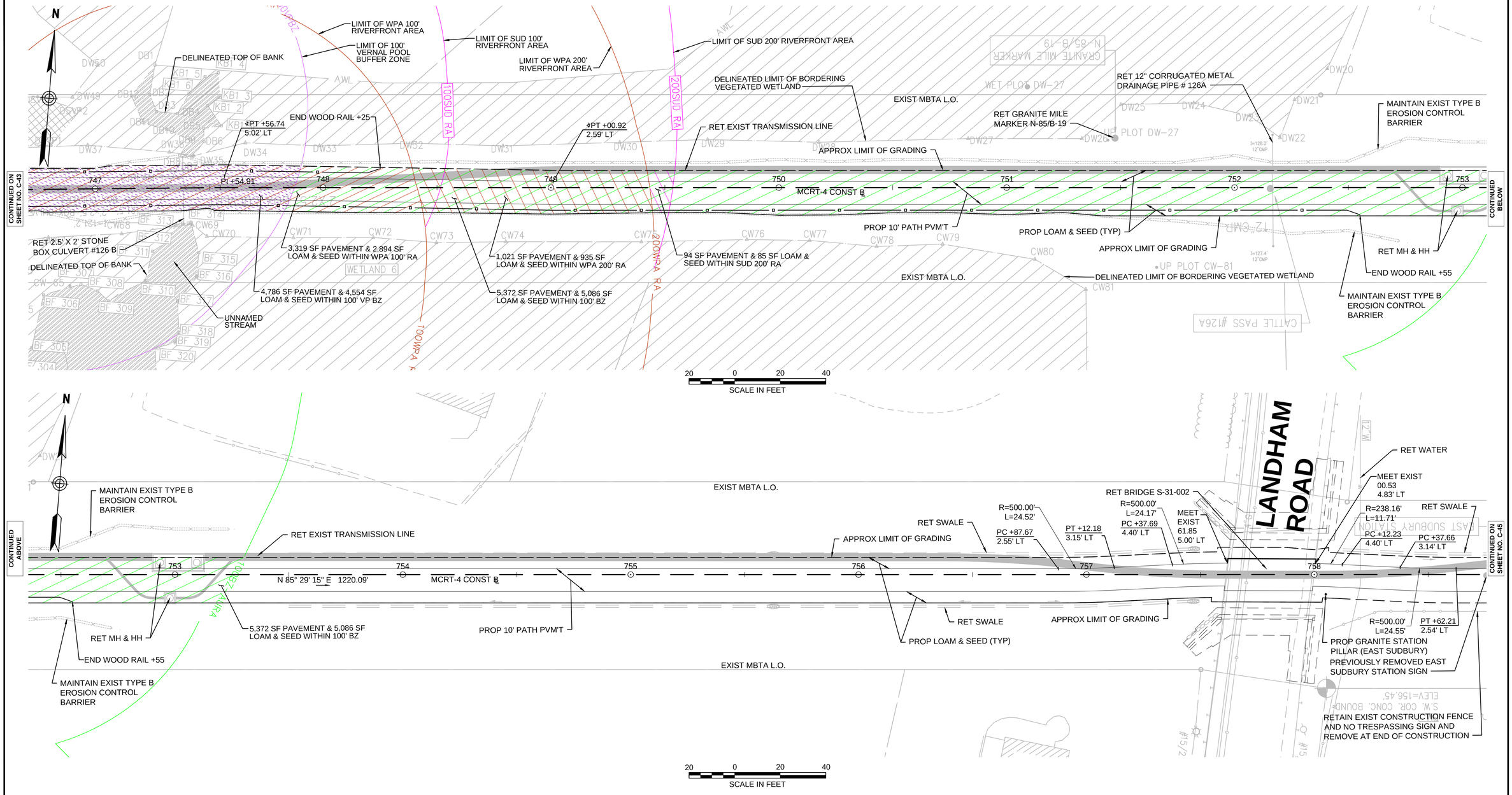

NOTE:

1. WETLAND RESOURCE AREA BOUNDARIES SHOWN HEREIN WERE APPROVED IN AN ORAD DATED AUGUST 27, 2018 (MADEP FILE NO. 301-1227).

ENVIRONMENTAL IMPACTS LEGEND

HATCH	DESCRIPTION
	ISOLATED VEGETATED WETLAND
	BORDERING VEGETATED WETLAND
	LAND UNDER WATER
	VERNAL POOL
	PERMANENT DISTURBANCE TO VEGETATED WETLAND
	DISTURBANCE TO 100' VERNAL POOL BUFFER ZONE (100' VP BZ)
	DISTURBANCE TO WPA 200' RIVERFRONT AREA (WPA 200' RA)
	DISTURBANCE TO SUDBURY 200' RIVERFRONT AREA (SUD 200' RA)
	DISTURBANCE TO WPA 100' RIVERFRONT AREA (WPA 100' RA)
	DISTURBANCE TO SUDBURY 100' RIVERFRONT AREA (SUD 100' RA)
	DISTURBANCE TO 100' BUFFER ZONE (100' BZ-AURA)
	DISTURBANCE TO BLSF
	EXISTING TREE LINE
	LIMIT OF GRADING

REV.	DATE	DESCRIPTION	BY

vhb
Transportation Land Development
Environmental Services
101 Walnut St., P.O. Box 9151
Watertown, MA 02472
617 924 1770 FAX 617 924 2286

COMMONWEALTH OF MASSACHUSETTS
DEPARTMENT OF CONSERVATION AND RECREATION
DIVISION OF PLANNING AND ENGINEERING

MASS CENTRAL RAIL TRAIL - WAYSIDE

MASS CENTRAL RAIL TRAIL
HUDSON, STOW, MARLBOROUGH & SUDBURY, MA

DESIGNER: JCR
CHECKED: SHK
DRAWN: JCR
CHECKED: TAL

CONSTRUCTION PLANS

CONT. P19-3295-D1A
ACC. XXXXXXx

SCALE: 1" = 20'-0"
DATE: MAR 2020

SHEET NO.
C-44
44 OF 46

14424_HD(CONST-4).DWG Plotted on 2-Mar-2020 12:35 PM

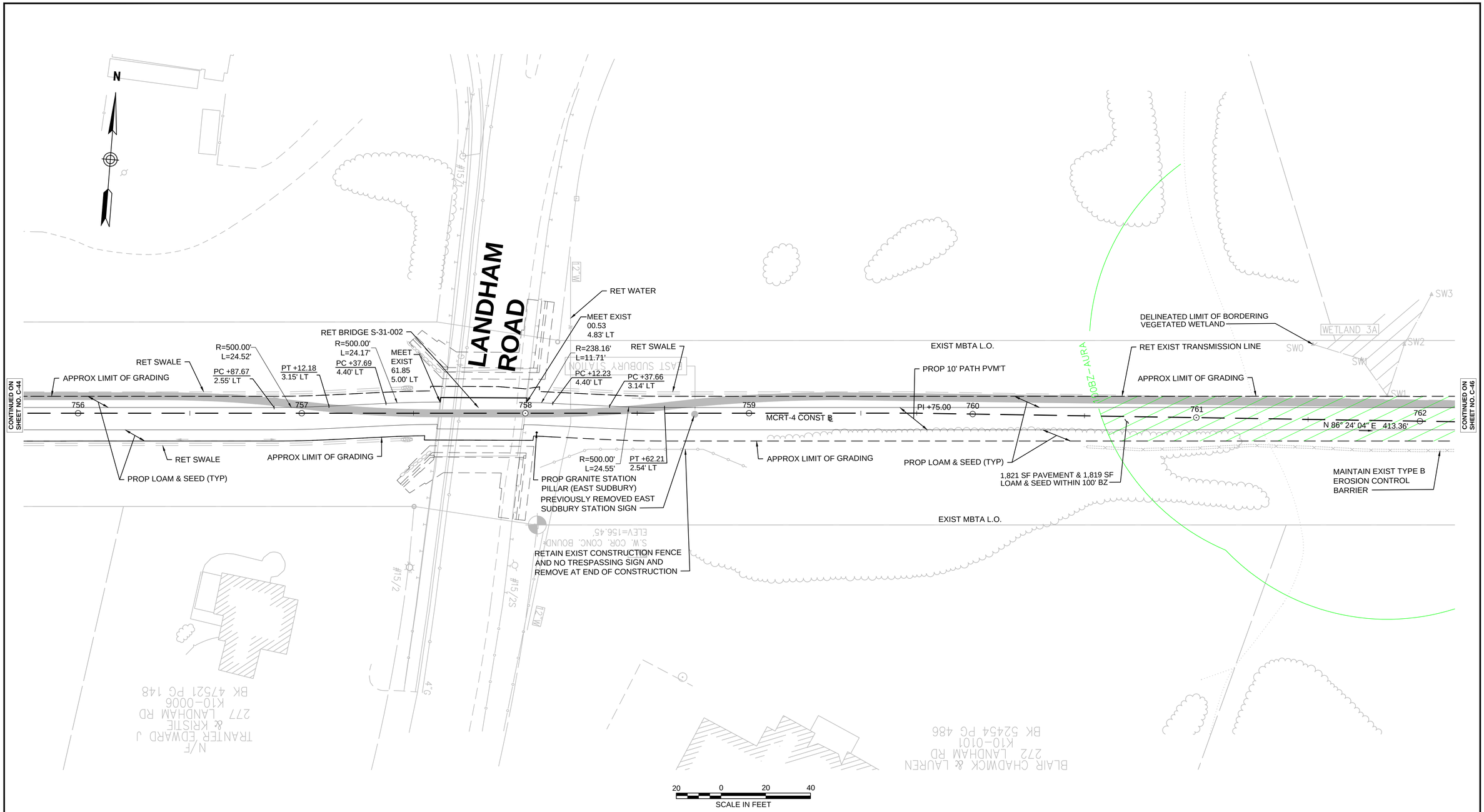

NOTE:

1. WETLAND RESOURCE AREA BOUNDARIES SHOWN HEREIN WERE APPROVED IN AN ORAD DATED AUGUST 27, 2018 (MADEP FILE NO. 301-1227).

ENVIRONMENTAL IMPACTS LEGEND

HATCH	DESCRIPTION	HATCH	DESCRIPTION
	ISOLATED VEGETATED WETLAND		DISTURBANCE TO WPA 200' RIVERFRONT AREA (WPA 200' RA)
	BORDERING VEGETATED WETLAND		DISTURBANCE TO SUDBURY 200' RIVERFRONT AREA (SUD 200' RA)
	LAND UNDER WATER		DISTURBANCE TO WPA 100' RIVERFRONT AREA (WPA 100' RA)
	VERNAL POOL		DISTURBANCE TO SUDBURY 100' RIVERFRONT AREA (SUD 100' RA)
	PERMANENT DISTURBANCE TO VEGETATED WETLAND		DISTURBANCE TO 100' BUFFER ZONE (100' BZ-AURA)
	DISTURBANCE TO 100' VERNAL POOL BUFFER ZONE (100' VP BZ)		DISTURBANCE TO BLSF
			EXISTING TREE LINE
			LIMIT OF GRADING

REV.	DATE	DESCRIPTION	BY

vhb
Transportation Land Development
Environmental Services
101 Walnut St., P.O. Box 9151
Watertown, MA 02472
617 924 1770 FAX 617 924 2286

COMMONWEALTH OF MASSACHUSETTS
DEPARTMENT OF CONSERVATION AND RECREATION
DIVISION OF PLANNING AND ENGINEERING

MASS CENTRAL RAIL TRAIL - WAYSIDE

MASS CENTRAL RAIL TRAIL
HUDSON, STOW, MARLBOROUGH & SUDBURY, MA

DESIGNER: JCR
CHECKED: SHK
DRAWN: JCR
CHECKED: TAL

CONSTRUCTION PLANS

CONT. P19-3295-D1A
ACC. XXXXXXx
SCALE: 1" = 20'-0"
DATE: MAR 2020

SHEET NO.
C-45
45 OF 46

14424_HD(CONST-4).DWG Plotted on 2-Mar-2020 12:36 PM

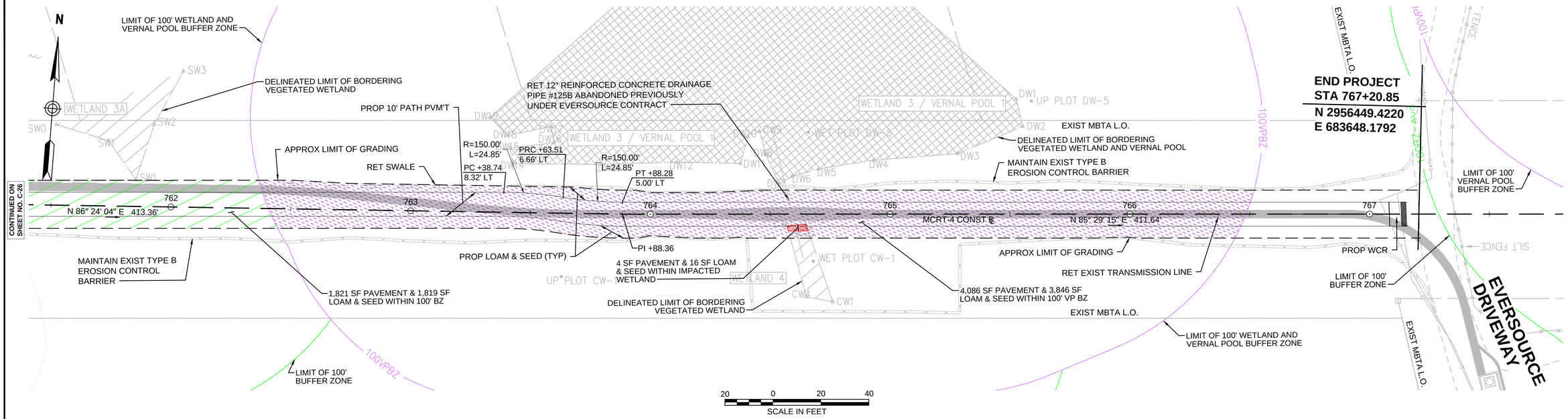

NOTE:

1. WETLAND RESOURCE AREA BOUNDARIES SHOWN HEREIN WERE APPROVED IN AN ORAD DATED AUGUST 27, 2018 (MADEP FILE NO. 301-1227).

ENVIRONMENTAL IMPACTS LEGEND

HATCH	DESCRIPTION	HATCH	DESCRIPTION
	ISOLATED VEGETATED WETLAND		DISTURBANCE TO WPA 200' RIVERFRONT AREA (WPA 200' RA)
	BORDERING VEGETATED WETLAND		DISTURBANCE TO SUDBURY 200' RIVERFRONT AREA (SUD 200' RA)
	LAND UNDER WATER		DISTURBANCE TO WPA 100' RIVERFRONT AREA (WPA 100' RA)
	VERNAL POOL		DISTURBANCE TO SUDBURY 100' RIVERFRONT AREA (SUD 100' RA)
	PERMANENT DISTURBANCE TO VEGETATED WETLAND		DISTURBANCE TO 100' BUFFER ZONE (100' BZ-AURA)
	DISTURBANCE TO 100' VERNAL POOL BUFFER ZONE (100' VP BZ)		DISTURBANCE TO BLSF
			EXISTING TREE LINE
			LIMIT OF GRADING

REV.	DATE	DESCRIPTION	BY

vhb
Transportation Land Development
Environmental Services
101 Walnut St., P.O. Box 9151
Watertown, MA 02472
617 924 1770 FAX 617 924 2286

COMMONWEALTH OF MASSACHUSETTS
DEPARTMENT OF CONSERVATION AND RECREATION
DIVISION OF PLANNING AND ENGINEERING

MASS CENTRAL RAIL TRAIL - WAYSIDE

MASS CENTRAL RAIL TRAIL
HUDSON, STOW, MARLBOROUGH & SUDBURY, MA

DESIGNER: JCR
CHECKED: SHK
DRAWN: JCR
CHECKED: TAL

CONSTRUCTION PLANS

CONT. P19-3295-D1A
ACC. XXXXXXx
SCALE: 1" = 20'-0"
DATE: MAR 2020

SHEET NO.
C-46
46 OF 46

14424_HD(CONST-4).DWG Plotted on 2-Mar-2020 12:36 PM

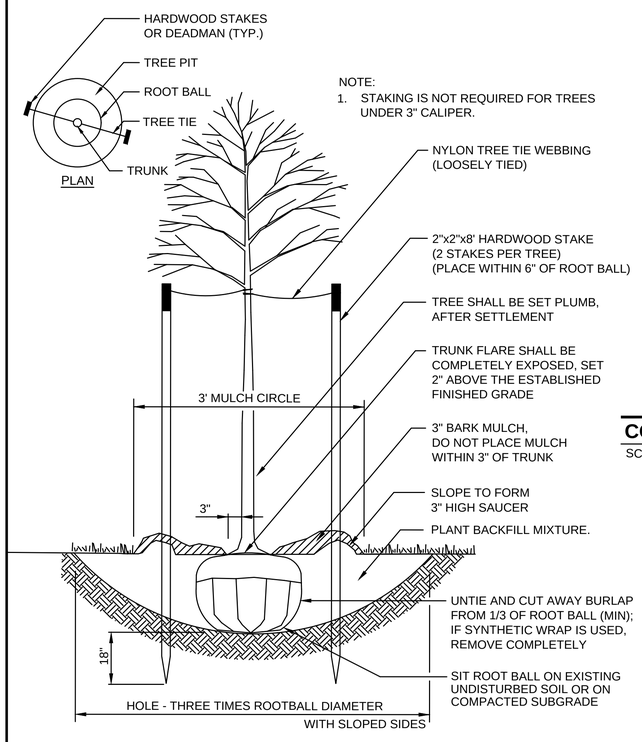

NOTE:
1. STAKING IS NOT REQUIRED FOR TREES UNDER 3" CALIPER.

TREE PLANTING

SCALE: N.T.S.

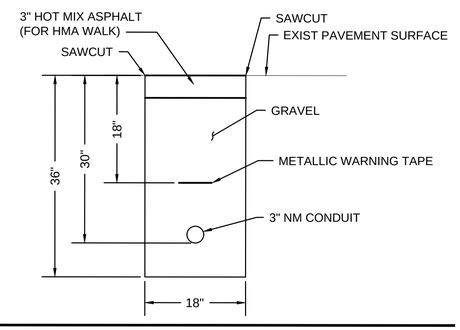

CONDUIT IN SIDEWALK

SCALE: N.T.S.

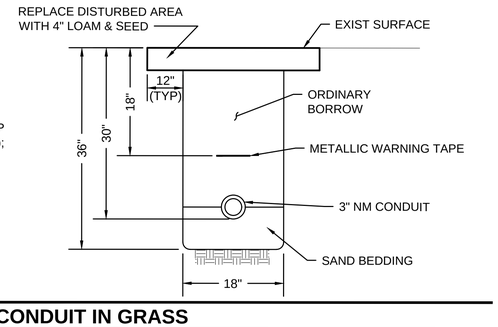

CONDUIT IN GRASS

SCALE: N.T.S.

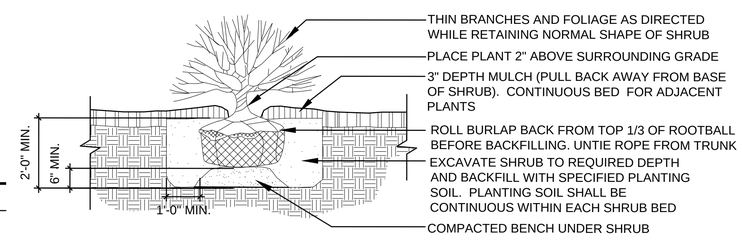

SHRUB PLANTING

SCALE: N.T.S.

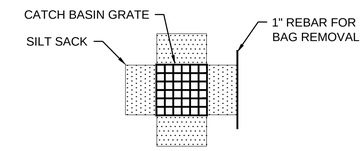

PLAN VIEW

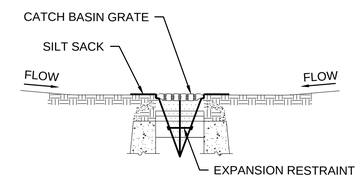

SECTION VIEW

NOTES:
1. INSTALL SILT SACK IN EXISTING CATCH BASINS, BEFORE COMMENCING WORK, AND IN NEW CATCH BASINS IMMEDIATELY AFTER INSTALLATION OF STRUCTURE. MAINTAIN UNTIL SURFACE COURSE PAVING IS COMPLETE OR A PERMANENT STAND OF GRASS HAS BEEN ESTABLISHED.
2. GRATE TO BE PLACED OVER SILT SACK.
3. SILT SACK SHALL BE INSPECTED PERIODICALLY AND AFTER ALL STORM EVENTS AND CLEANING OR REPLACEMENT SHALL BE PERFORMED

INLET PROTECTION - SILT SACK IN CATCH BASIN

SCALE: N.T.S.

REV.	DATE	DESCRIPTION	BY

vhb
Transportation Land Development
Environmental Services
101 Walnut St., P.O. Box 9151
Watertown, MA 02472
617 924 1770 FAX 617 924 2286

COMMONWEALTH OF MASSACHUSETTS
DEPARTMENT OF CONSERVATION AND RECREATION
DIVISION OF PLANNING AND ENGINEERING

MASS CENTRAL RAIL TRAIL - WAYSIDE

MASS CENTRAL RAIL TRAIL
HUDSON, STOW, MARLBOROUGH & SUDBURY, MA

DESIGNER: JCR
CHECKED: SHK
DRAWN: JCR
CHECKED: TAL

CONSTRUCTION DETAILS

CONT. P19-3295-D1A
ACC. XXXXXXx
SCALE: 1" = 20'-0"
DATE: MAR 2020

SHEET NO. D-02
2 OF 8

NOTE:
ALL LETTERING TO BE ½" "V"
SUNK LETTER IN TACOMA TEXT

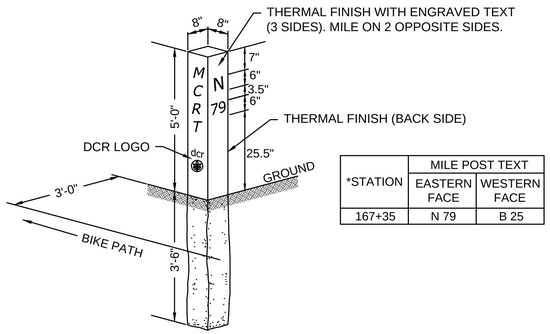

*STATION	MILE POST TEXT	
	EASTERN FACE	WESTERN FACE
167+35	N 79	B 25

*STATIONING IS APPROXIMATE.
CONTRACTOR SHALL VERIFY
LOCATIONS PRIOR TO INSTALLATION

GRANITE MILE POST

SCALE: N.T.S.

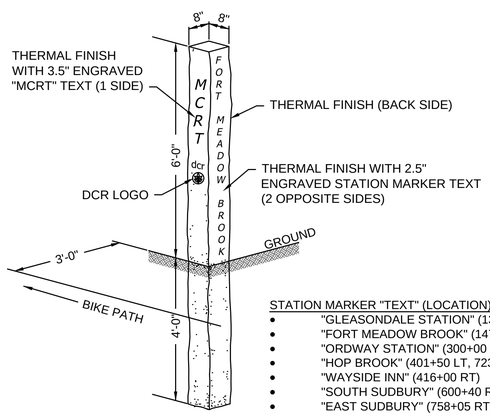

STATION MARKER "TEXT" (LOCATION):

- "GLEASONDALE STATION" (133+85 LT)
- "FORT MEADOW BROOK" (147+20 LT)
- "ORDWAY STATION" (300+00 RT)
- "HOP BROOK" (401+50 LT, 723+60 RT)
- "WAYSIDE INN" (416+00 RT)
- "SOUTH SUDBURY" (600+40 RT)
- "EAST SUDBURY" (758+05 RT)

GRANITE STATION PILLAR

SCALE: N.T.S.

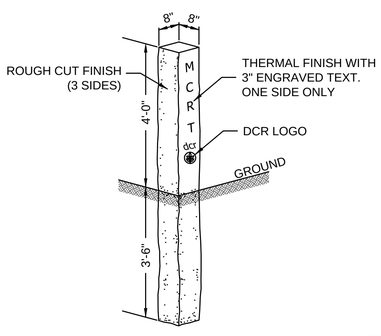

GRANITE LETTERED POST

SCALE: N.T.S.

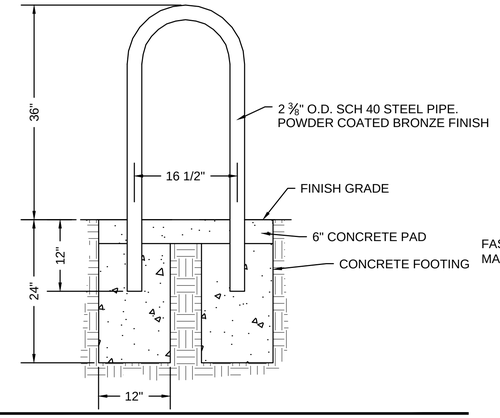

BICYCLE RACK

SCALE: N.T.S.

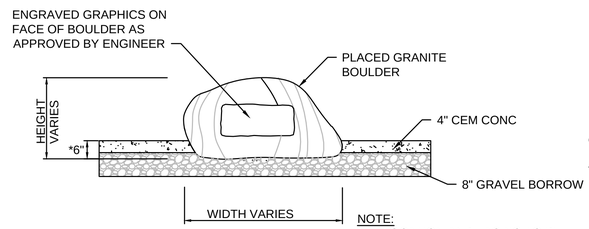

*ADEQUATE BURIAL DEPTH SHALL BE
PROVIDED AS TO CREATE A STABLE
STRUCTURE FREE OF MOVEMENT

NOTE:
1. LOCATION AND FACING TO BE APPROVED BY ENGINEER IN THE FIELD.
2. STANDARD BOULDERS TO BE INSTALLED IN SAME MANOR.

INTERPRETIVE BOULDER

SCALE: N.T.S.

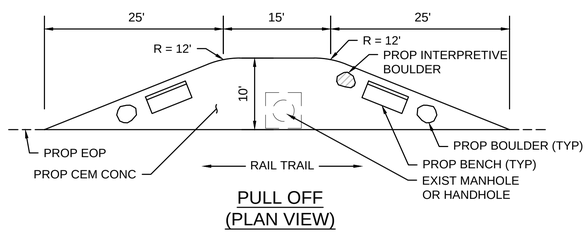

PULL OFF
(PLAN VIEW)

CEMENT CONCRETE PULL OFF

SCALE: N.T.S.

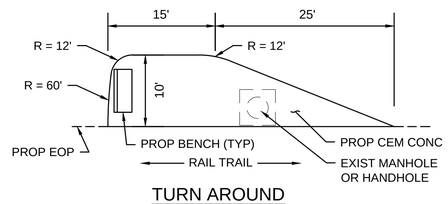

TURN AROUND
(PLAN VIEW)

CEMENT CONCRETE TURN AROUND

SCALE: N.T.S.

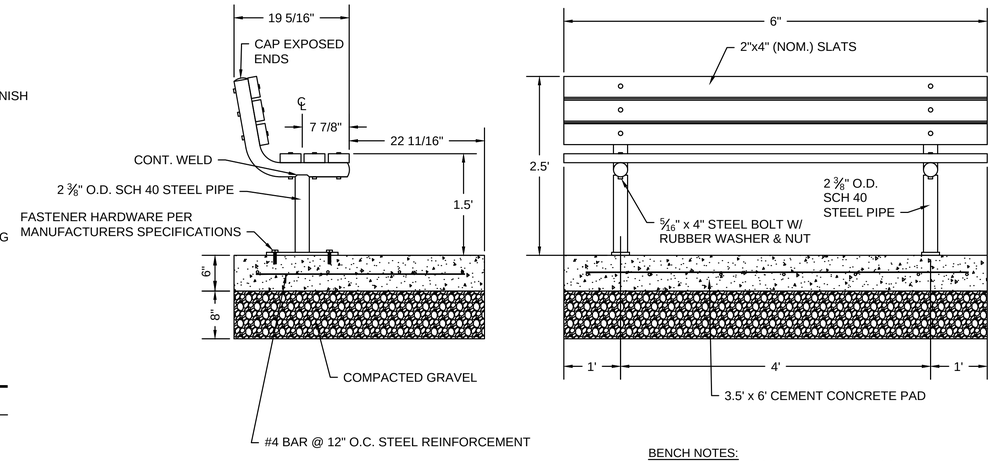

BENCH NOTES:
1. STEEL PIPING SHALL BE POWDER COATED BRONZE FINISH
2. SLATS SHALL BE 2x4 (NOM.). MATERIAL AND FINISH TO BE PER SPECIAL PROVISIONS.
3. ALL HARDWARE SHALL BE STAINLESS STEEL UNLESS OTHERWISE NOTED.

BENCH

SCALE: NTS

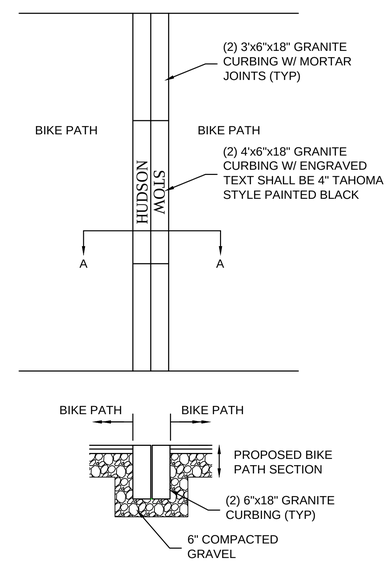

INLAID GRANITE TOWN LINE MARKER

SCALE: NTS

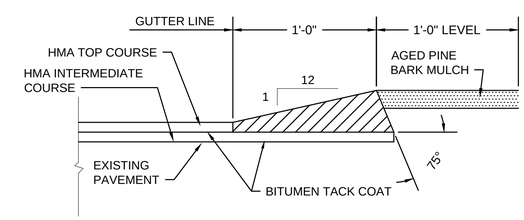

HMA BERM TYPE A-MODIFIED

SCALE: N.T.S.

REV.	DATE	DESCRIPTION	BY

vhb
Transportation Land Development
Environmental Services
101 Walnut St., P.O. Box 9151
Watertown, MA 02472
617 924 1770 FAX 617 924 2286

COMMONWEALTH OF MASSACHUSETTS
DEPARTMENT OF CONSERVATION AND RECREATION
DIVISION OF PLANNING AND ENGINEERING

MASS CENTRAL RAIL TRAIL - WAYSIDE

MASS CENTRAL RAIL TRAIL
HUDSON, STOW, MARLBOROUGH & SUDBURY, MA

DESIGNER: JCR
CHECKED: SHK
DRAWN: JCR
CHECKED: TAL

CONSTRUCTION DETAILS

CONT. P19-3295-D1A
ACC. XXXXXXx
SCALE: 1" = 20'-0"
DATE: MAR 2020

SHEET NO.
D-03
3 OF 8

14424_HD(DET).DWG Plotted on 3-Mar-2020 2:01 PM

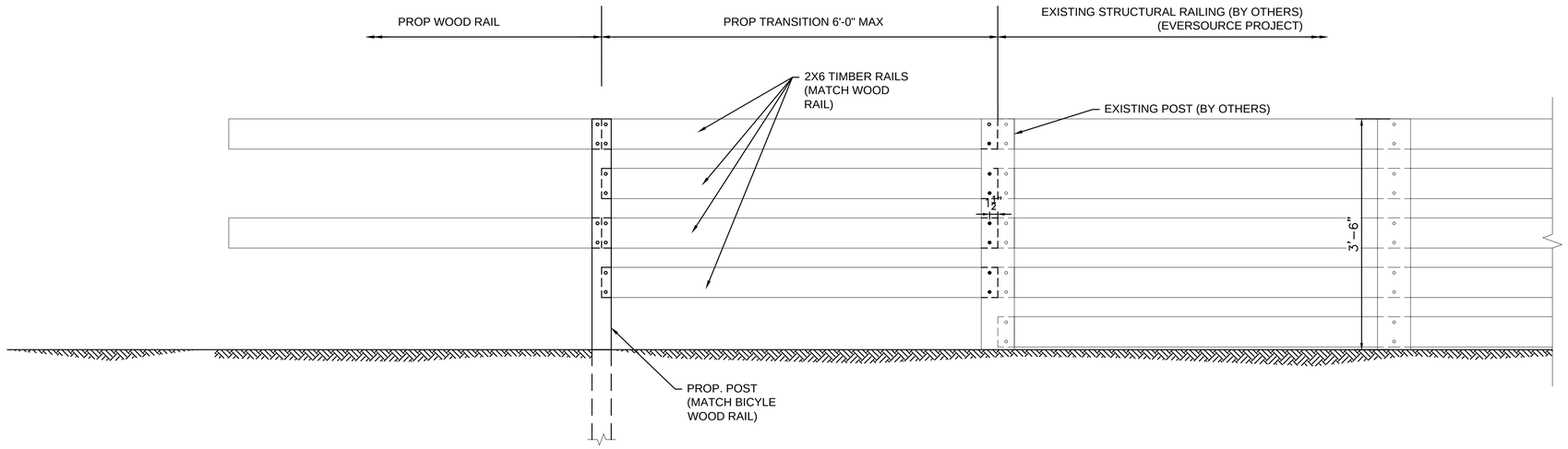

WOOD RAIL TRANSITION DETAIL AT EXISTING STRUCTURAL RAILING

SCALE: NTS

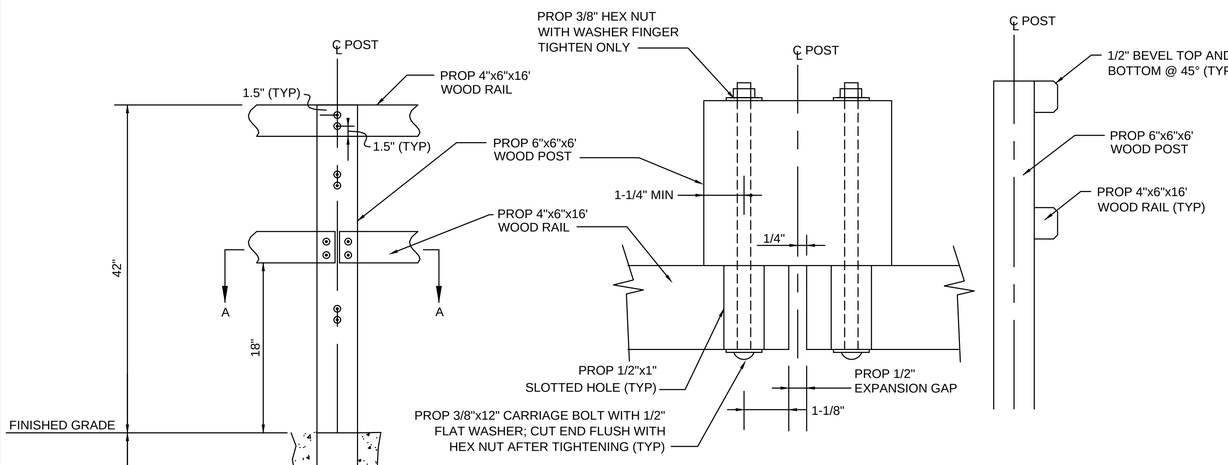

SECTION A-A

NOTES

1. POSTS SHALL BE PLACED 8'-0" ON CENTER.
2. THE FACE OF RAIL SHALL BE SET OFF THE EDGE OF SHARED USE PATH PAVEMENT, AS SHOWN ON THE PLANS, AND AS DIRECTED BY THE ENGINEER.
3. ALL HARDWARE SHALL BE GALVANIZED.
4. ALTERNATE JOINTS IN RAILING BETWEEN POSTS
5. CONTRACTOR SHALL SET POST IN 4,000 PSI, 1-1/2IN, 565 CEMENT CONCRETE FOR ALL POSTS UNABLE TO BE SET AT REQUIRED DEPTH.
6. BOLTS SHALL BE SIZED AND INSTALLED SO THAT THEY EXTEND NO MORE THAN ONE ADDITIONAL NUT LENGTH BEYOND THE SECURED SURFACE.

WOOD RAIL - ELEVATION AND SECTION VIEWS

SCALE: NTS

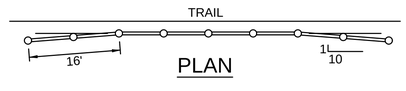

PLAN

WOOD RAIL TERMINAL END - PLAN VIEW

SCALE: NTS

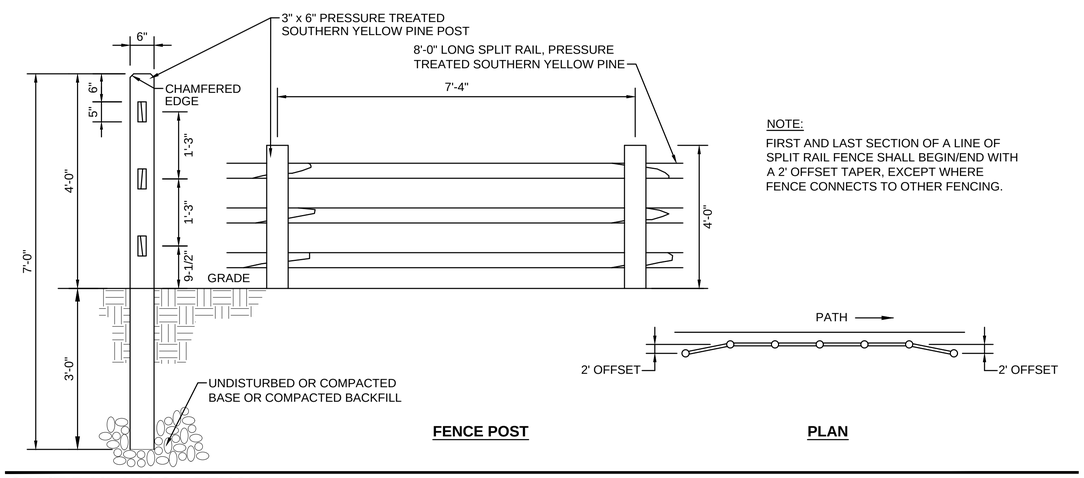

NOTE:
FIRST AND LAST SECTION OF A LINE OF SPLIT RAIL FENCE SHALL BEGIN/END WITH A 2' OFFSET TAPER, EXCEPT WHERE FENCE CONNECTS TO OTHER FENCING.

FENCE POST **PLAN**

SPLIT RAIL WOOD FENCE

SCALE: NTS

REV.	DATE	DESCRIPTION	BY

vhb
Transportation Land Development
Environmental Services
101 Walnut St., P.O. Box 9151
Watertown, MA 02472
617 924 1770 FAX 617 924 2286

COMMONWEALTH OF MASSACHUSETTS
DEPARTMENT OF CONSERVATION AND RECREATION
DIVISION OF PLANNING AND ENGINEERING

MASS CENTRAL RAIL TRAIL - WAYSIDE

MASS CENTRAL RAIL TRAIL
HUDSON, STOW, MARLBOROUGH & SUDBURY, MA

DESIGNER: JCR
CHECKED: SHK
DRAWN: JCR
CHECKED: TAL

CONSTRUCTION DETAILS

CONT. P19-3295-D1A
ACC. XXXXXXx
SCALE: 1" = 20'-0"
DATE: MAR 2020

SHEET NO.
D-04
4 OF 8

STATE	PROJECT	SHEET NUMBER

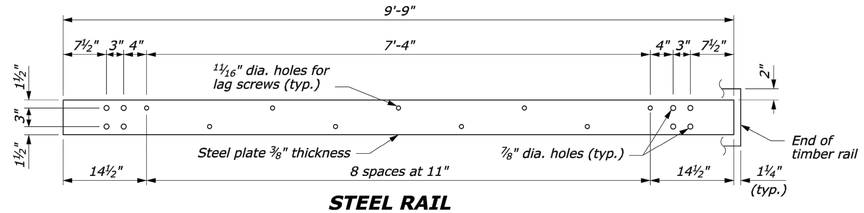

STEEL RAIL

PLATE WASHER

NOTES:

1. EXTEND THE FILL WIDENING A MINIMUM OF 5 FEET BEHIND THE GUARDRAIL, UNLESS OTHERWISE DIRECTED BY THE ENGINEER.
2. THE GUARDRAIL SHALL BE TYPE A, BLOCKED-OUT GUARDRAIL.

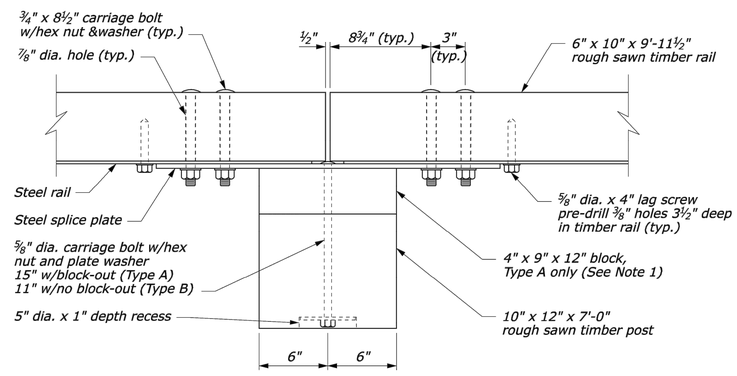

PLAN

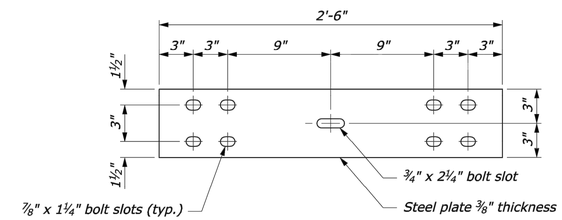

STEEL SPLICE PLATE

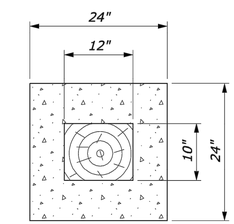

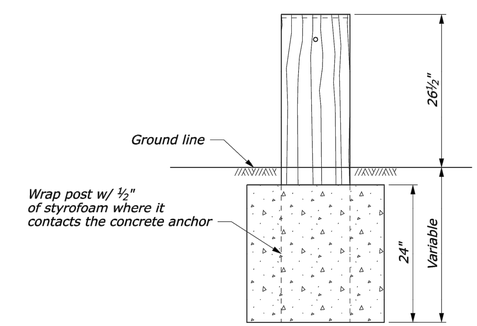

24" dia. round anchor is an acceptable alternative.
Reduced size acceptable in solid rock.

CONCRETE ANCHOR FOR SHORT GUARDRAIL POST

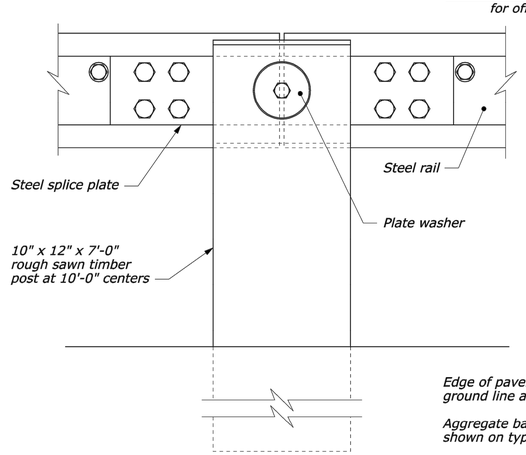

ELEVATION

POST CONNECTION

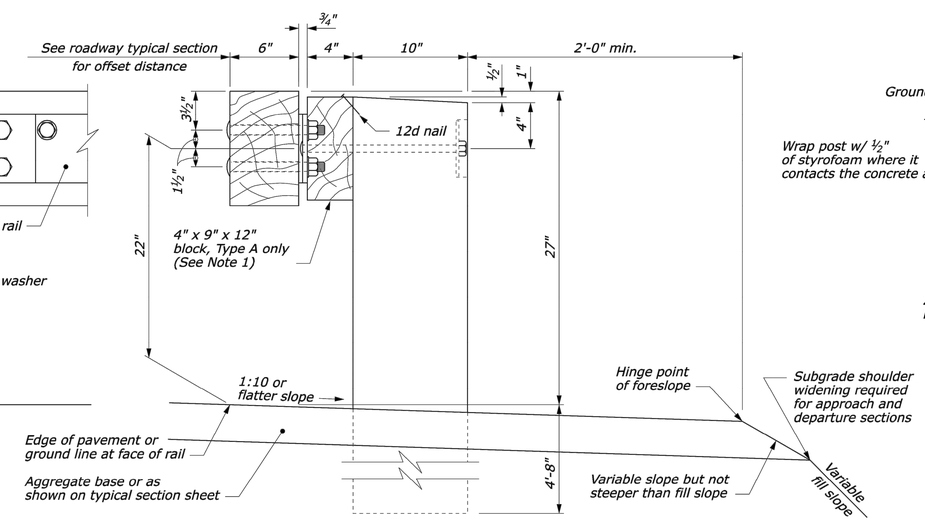

TYPICAL GUARDRAIL CROSS SECTION

NO SCALE

U.S. DEPARTMENT OF TRANSPORTATION
FEDERAL HIGHWAY ADMINISTRATION
FEDERAL LANDS HIGHWAY

U.S. CUSTOMARY STANDARD

STEEL-BACKED TIMBER GUARDRAIL
TYPE A & TYPE B

STANDARD APPROVED FOR USE 3/1990
REVISED: 4/1994 6/2005

STANDARD 617-60

F:\StanDraw\st61760.dgn [US Customary] 20-Sep-2007 06:42 AM

14424_HD(DET).DWG Plotted on 3-Mar-2020 2:01 PM

STEEL-BACKED TIMBER GUARDRAIL

SCALE: NTS

REV.	DATE	DESCRIPTION	BY

vhb
Transportation Land Development
Environmental Services
101 Walnut St., P.O. Box 9151
Watertown, MA 02472
617 924 1770 FAX 617 924 2286

COMMONWEALTH OF MASSACHUSETTS
DEPARTMENT OF CONSERVATION AND RECREATION
DIVISION OF PLANNING AND ENGINEERING

MASS CENTRAL RAIL TRAIL - WAYSIDE

MASS CENTRAL RAIL TRAIL
HUDSON, STOW, MARLBOROUGH & SUDBURY, MA

DESIGNER: JCR
CHECKED: SHK
DRAWN: JCR
CHECKED: TAL

CONSTRUCTION DETAILS

CONT. P19-3295-D1A
ACC. XXXXXXx
SCALE: 1" = 20'-0"
DATE: MAR 2020

SHEET NO. D-05
5 OF 8

STATE	PROJECT	SHEET NUMBER

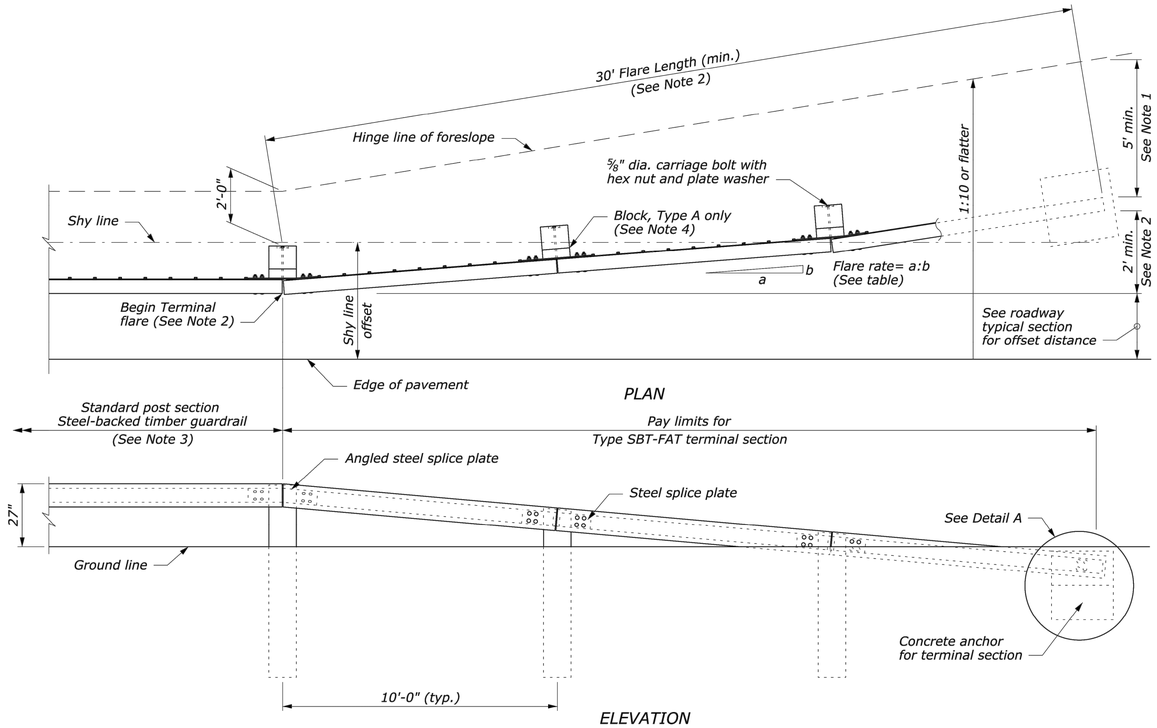

APPROACH & DEPARTURE FLARE WITH FLARED ANCHOR TERMINAL (FAT)

NOTES:

1. EXTEND THE FILL WIDENING A MINIMUM OF 5 FEET BEHIND THE GUARDRAIL, UNLESS OTHERWISE DIRECTED BY THE ENGINEER.
2. SEE STANDARD 617-60, STEEL BACKED TIMBER GUARDRAIL, TYPE SBTA AND SBTB, FOR TIMBER, STRUCTURAL STEEL AND HARDWARE.
3. ON THE TYPE A, BLOCKED-OUT GUARDRAIL, INCLUDE THE BLOCKS IN THE TERMINAL SECTION, EXCEPT ON THE CONCRETE ANCHOR.

GUARDRAIL FLARE RATE TABLE			
Design Speed (mph)	Shy line offset (ft)	Flare rate inside shy line (a:b)	Flare rate outside shy line (a:b)
60	8.0	26:1	14:1
50	6.5	21:1	11:1
40	5.0	16:1	8:1
30 and less	3.5	13:1	7:1

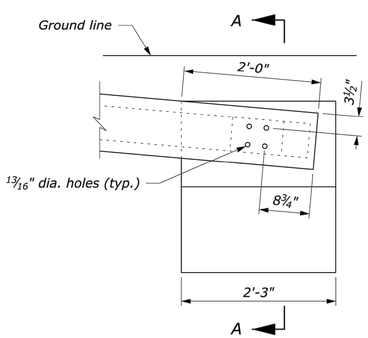

DETAIL A

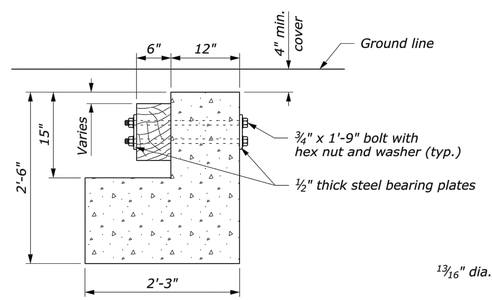

SECTION A-A

CONCRETE ANCHOR

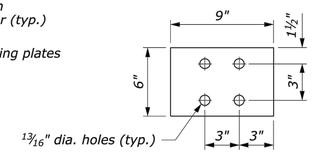

STEEL BEARING PLATE

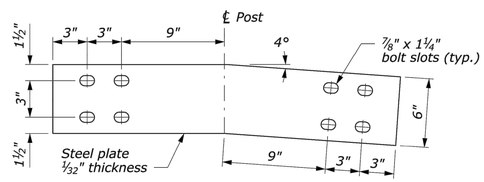

ANGLED STEEL SPLICE PLATE

NO SCALE

U.S. DEPARTMENT OF TRANSPORTATION
FEDERAL HIGHWAY ADMINISTRATION
FEDERAL LANDS HIGHWAY

U.S. CUSTOMARY STANDARD

STEEL-BACKED TIMBER GUARDRAIL TERMINAL SECTION TYPE SBT-FAT

STANDARD APPROVED FOR USE 1/1990
REVISED: 4/1994 6/2005
DRAFT: 12/2013

STANDARD 617-61

24 December 2013 6:54 AM c:\myfiles\pw_production\dms67487\Standard_617-61.DRAFT.dgn [USC]

14424_HD(DET).DWG Plotted on 3-Mar-2020 2:01 PM

STEEL-BACKED TIMBER GUARDRAIL - TERMINAL SECTION TYPE SBT-FAT

SCALE: NTS

REV.	DATE	DESCRIPTION	BY

vhb
Transportation Land Development
Environmental Services
101 Walnut St., P.O. Box 9151
Watertown, MA 02472
617 924 1770 FAX 617 924 2286

COMMONWEALTH OF MASSACHUSETTS
DEPARTMENT OF CONSERVATION AND RECREATION
DIVISION OF PLANNING AND ENGINEERING

MASS CENTRAL RAIL TRAIL - WAYSIDE

MASS CENTRAL RAIL TRAIL
HUDSON, STOW, MARLBOROUGH & SUDBURY, MA

DESIGNER: JCR
CHECKED: SHK
DRAWN: JCR
CHECKED: TAL

CONSTRUCTION DETAILS

CONT. P19-3295-D1A
ACC. XXXXXXx
SCALE: 1" = 20'-0"
DATE: MAR 2020

SHEET NO. D-06
6 OF 8

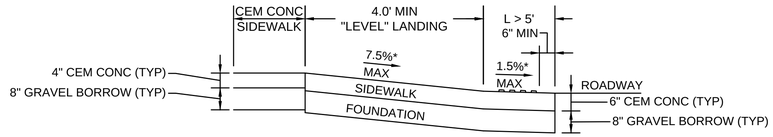

SECTION A-A

LEGEND

LIMITS OF CEM CONC RAMP

DETECTABLE WARNING PANEL

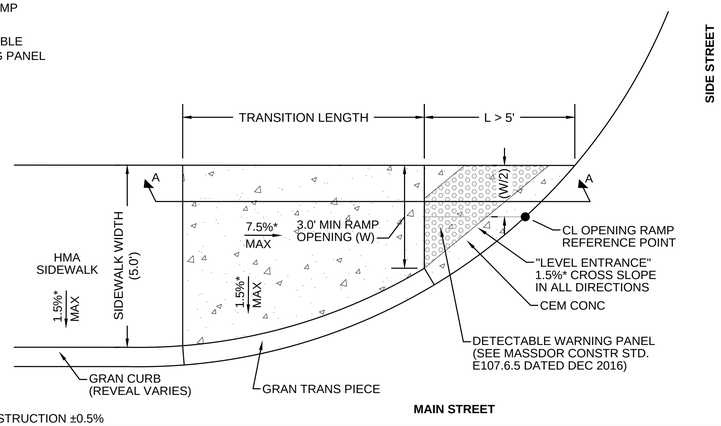

*TOLERANCE FOR CONSTRUCTION ±0.5%

WHEELCHAIR RAMP - 'L' IS GREATER THAN 5'

SCALE: NTS

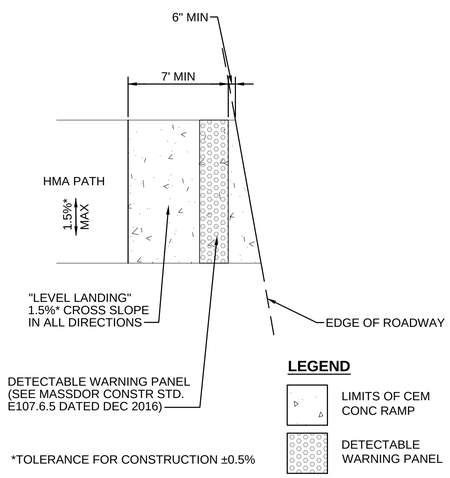

*TOLERANCE FOR CONSTRUCTION ±0.5%

WHEELCHAIR RAMP - PATH

SCALE: N.T.S.

REV.	DATE	DESCRIPTION	BY

vhb
Transportation Land Development
Environmental Services
101 Walnut St., P.O. Box 9151
Watertown, MA 02472
617 924 1770 FAX 617 924 2286

COMMONWEALTH OF MASSACHUSETTS
DEPARTMENT OF CONSERVATION AND RECREATION
DIVISION OF PLANNING AND ENGINEERING

MASS CENTRAL RAIL TRAIL - WAYSIDE

MASS CENTRAL RAIL TRAIL
HUDSON, STOW, MARLBOROUGH & SUDBURY, MA

DESIGNER: JCR
CHECKED: SHK
DRAWN: JCR
CHECKED: TAL

CONSTRUCTION DETAILS

CONT. P19-3295-D1A
ACC. XXXXXXx
SCALE: 1" = 20'-0"
DATE: MAR 2020

SHEET NO.
D-07
7 OF 8

14424_HD(DET).DWG Plotted on 3-Mar-2020 2:01 PM

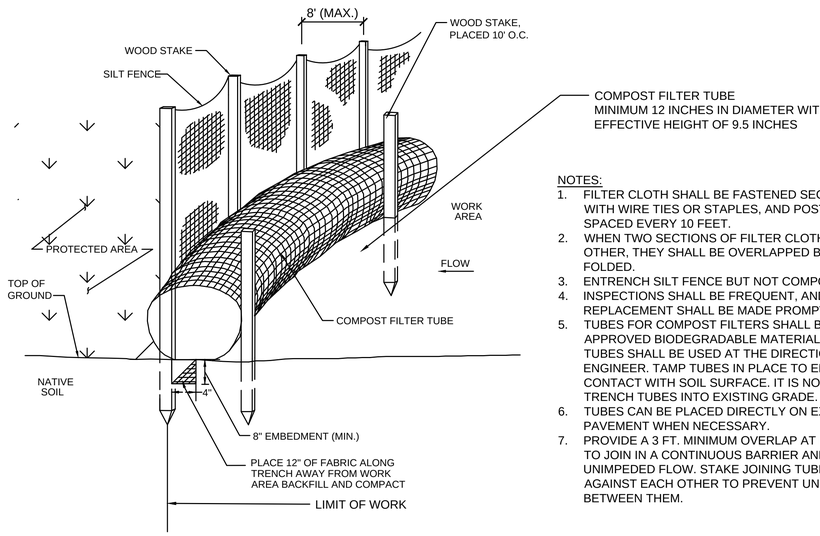

NOTES:
1. FILTER CLOTH SHALL BE FASTENED SECURELY TO POSTS WITH WIRE TIES OR STAPLES, AND POSTS SHALL BE SPACED EVERY 10 FEET.
2. WHEN TWO SECTIONS OF FILTER CLOTH ADJOIN EACH OTHER, THEY SHALL BE OVERLAPPED BY 6 INCHES AND FOLDED.
3. ENTRENCH SILT FENCE BUT NOT COMPOST FILTER TUBE.
4. INSPECTIONS SHALL BE FREQUENT, AND REPAIR OR REPLACEMENT SHALL BE MADE PROMPTLY.
5. TUBES FOR COMPOST FILTERS SHALL BE JUTE MESH OR APPROVED BIODEGRADABLE MATERIAL. ADDITIONAL TUBES SHALL BE USED AT THE DIRECTION OF THE ENGINEER. TAMP TUBES IN PLACE TO ENSURE GOOD CONTACT WITH SOIL SURFACE. IT IS NOT NECESSARY TO TRENCH TUBES INTO EXISTING GRADE.
6. TUBES CAN BE PLACED DIRECTLY ON EXISTING PAVEMENT WHEN NECESSARY.
7. PROVIDE A 3 FT. MINIMUM OVERLAP AT ENDS OF TUBES TO JOIN IN A CONTINUOUS BARRIER AND MINIMIZE UNIMPEDED FLOW. STAKE JOINING TUBES SNUGLY AGAINST EACH OTHER TO PREVENT UNFILTERED FLOW BETWEEN THEM.

COMPOST FILTER TUBE AND SILT FENCE DETAIL - TYPE A EROSION CONTROL BARRIER

SCALE: NTS

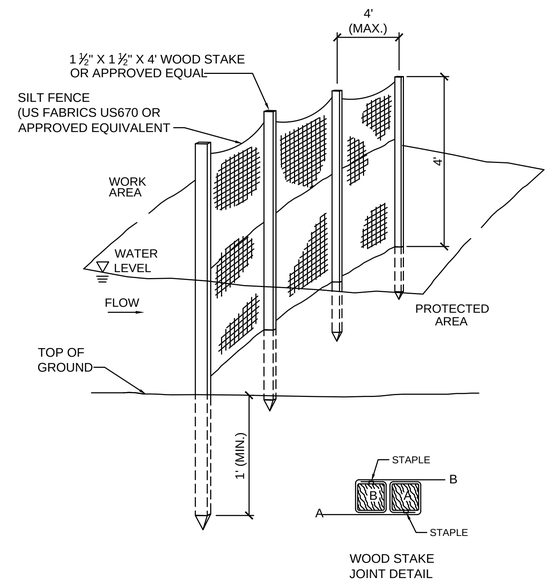

4' HIGH SILT FENCE BARRIER DETAIL - EROSION CONTROL BARRIER TYPE C (OPTION 1)

SCALE: N.T.S.

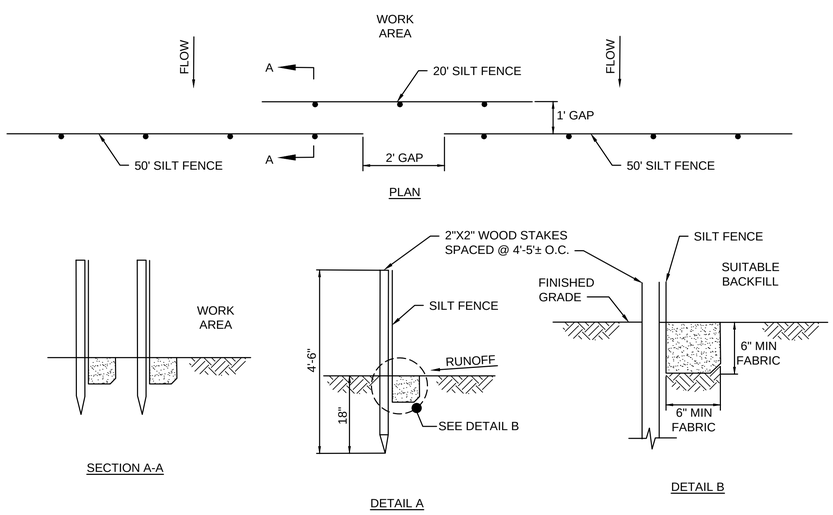

NOTES:
1. SYNCOPATED SILT FENCE SHALL BE USED WITHIN ALL PRIORITY HABITAT AREAS AND WITHIN 450' OF VERNAL POOLS.
2. INSTALL GAP AFTER EVERY 50' OF EROSION CONTROL BARRIER.

SYNCOPATED SILT FENCE DETAIL - TYPE B EROSION CONTROL BARRIER

SCALE: N.T.S.

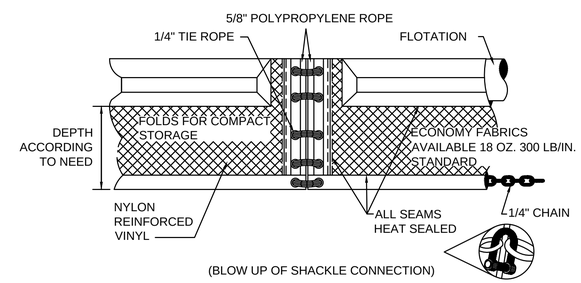

TURBIDITY CURTAIN DETAIL - EROSION CONTROL BARRIER TYPE C (OPTION 2)

SCALE: N.T.S.

REV.	DATE	DESCRIPTION	BY

vhb
Transportation Land Development
Environmental Services
101 Walnut St., P.O. Box 9151
Watertown, MA 02472
617 924 1770 FAX 617 924 2286

COMMONWEALTH OF MASSACHUSETTS
DEPARTMENT OF CONSERVATION AND RECREATION
DIVISION OF PLANNING AND ENGINEERING

MASS CENTRAL RAIL TRAIL - WAYSIDE

MASS CENTRAL RAIL TRAIL
HUDSON, STOW, MARLBOROUGH & SUDBURY, MA

DESIGNER: JCR
CHECKED: SHK
DRAWN: JCR
CHECKED: TAL

CONSTRUCTION DETAILS

CONT. P19-3295-D1A
ACC. XXXXXXx
SCALE: 1" = 20'-0"
DATE: MAR 2020

SHEET NO. D-08
8 OF 8