MCR-75-389
Contract NAS8-28956
Control No. DCN8-1-4-40-23110-RSG

Copy No. 12

Final
Report

October 1975

Thermal Control of Power Supplies with Electronic Packaging Techniques

(NASA-CR-144068) THERMAL CONTROL OF POWER SUPPLIES WITH ELECTRONIC PACKAGING TECHNIQUES Final Report (Martin Marietta Corp.) 65 p HC $4.50
CSCL 09C
N76-12274
Unclas
G3/33 03891

MARTIN MARIETTA

MCR-75-389
Contract NAS8-28956
Control No. DCN8-1-4-40-23110-RSG

Final Report

October 1975

THERMAL CONTROL OF POWER SUPPLIES WITH ELECTRONIC PACKAGING TECHNIQUES

MARTIN MARIETTA CORPORATION
P.O. Box 179
Denver, Colorado 80201

FOREWORD

This report was prepared by the Martin Marietta Corporation, Denver Division, under Contract NAS8-28956, "Lightweight Housing Study for Batteries and Electronic Packaging," for the George C. Marshall Space Flight Center of the National Aeronautics and Space Administration.

ABSTRACT

This report summarizes analysis, design, and development by the Martin Marietta Corporation to reduce the weight and size of a NASA candidate standard modular power supply with a 350-watt output. By integrating low-cost commercial heat pipes in the redesign of this power supply, weight was reduced 30% from that of the previous design. Part temperatures were also appreciably reduced, increasing the environmental capability of the unit. A demonstration unit containing a working 100-watt output, 15-volt regulator module, plus simulated output modules, was built and tested to evaluate thermal performance of the redesigned supply.

CONTENTS

Figure

Table

I. INTRODUCTION

Increasing demands for more sophistication in space-flight hardware, plus the need to obtain more value for R&D dollars spent in these days of reduced resources, has provided the incentive for agencies such as NASA's Marshall Space Flight Center (MSFC) to seek out and develop new ways to improve performance, reduce weight and size, and make multiple use of housekeeping electronic systems through standardization of items such as power conversion equipment, batteries, and communications equipment. Recent developments in heat-pipe technology and materials engineering have suggested heat pipes for significantly increasing packaging efficiency by more efficient removal of internally generated heat. Their use improves performance and reduces size and weight, enabling increasingly complex vehicles to perform deep space exploration. Through the use of heat pipes, multimission vehicles such as Space Shuttle and Tug can also perform a wide variety of useful science-oriented tasks more economically.

For this study, Martin Marietta applied its background in space hardware design and analysis to improving packaging performance for a NASA standardized modular 350-W power supply by employing low-cost commercial heat pipes for more effective temperature control.

Available from Hughes Aircraft Company and other sources, these devices have a proven history of reliable performance and long life. They have been used in Skylab and DOD satellite systems where concentrated heat loads had to be handled efficiently with minimum size and weight effects.

This report describes the analysis of a NASA prototype power supply design and the repackaging of the unit to incorporate heat pipes to reduce weight and size, and improve thermal performance.

II. PROTOTYPE POWER SUPPLY EVALUATION AND REDESIGN APPROACH

Recognizing the need for standardized low-cost power supplies suitable for a variety of spacecraft applications, MSFC (in conjunction with Teledyne Brown Engineering) has established design requirements and developed a prototype modular power supply capable of providing regulated dc power to meet the anticipated needs of most users in future NASA space programs.

In this study, Martin Marietta was given the task of applying packaging and thermal analysis techniques and evaluating the prototype design for possible heat-pipe technology application to reduce the weight and size of this modularized power supply and improve thermal characteristics if the analysis indicated its practicability. The design study thus undertaken was performed in three phases.

Phase I - Thermal Analysis - Based on drawings and data supplied by MSFC, a definitive study of thermal characteristics was performed on the 350-W prototype power supply. The environment assumed for this analysis was that predicted for power supplies to be used in the Space Tug. Results of the analysis were reported to MSFC (Appendix A) before proceeding with the study to redesign power-supply packaging.

Phase II - Power Supply Packaging Redesign - After consultation with technical managers at MSFC, power supply packaging was redesigned to reduce size and weight and correct certain thermal and mounting problems determined in Phase I. Due to funding limitations, only selected portions of the power supply assembly (output regulator modules and main frame chassis) were to be redesigned.

Phase III - Fabrication and Testing - The redesigned power supply was fabricated, assembled, and tested using a thermal vacuum chamber to simulate Space Tug environments. Where applicable, GFE parts were obtained from the original prototype and incorporated. Simulated modules were built for three of the four output modules. These simulators were designed to dissipate the same amount of thermal energy as the real modules and have the same mass properties. One working output regulator and mainframe distribution chassis were built and assembled with the GFE input module and output simulators to complete the redesigned prototype supply.

A. PROTOTYPE THERMAL ANALYSIS AND PACKAGING EVALUATION

The prototype NASA power supply constituting the baseline design for the Martin Marietta study is shown in Figure 1. The assembly consists of four physically identical pulse-width-modulated switching regulators capable of delivering a total of 350 W at approximately 80% efficiency. The isolated outputs adaptable to operate from 4 to 108 Vdc were built to deliver the following powers and voltages:

50 W @ +5 Vdc
100 W @ +15 Vdc
100 W @ -15 Vdc
100 W @ +28 Vdc

An input module, somewhat larger than the others, contains the input filter circuits and a housekeeping supply consisting of four isolated +15-V outputs, clock signals required by each of the regulator modules, failure monitoring circuitry for detection and identification of failure conditions on the input power line, and buffer circuits for the overvoltage and undervoltage detectors in the output regulators. As shown in the figure, the five modules are mounted on a plate structure and interconnected by a main-frame distribution chassis. Under full load, the power supply dissipates 98.4 W, most of which is distributed to spacecraft supporting structure via the module carrier baseplate. Thermal dissipation breakdown is:

Input Module (A1)	23.8 W
+5-V output regulator (A2)	13.7 W
+15-V output regulator (A3)	21.1 W
-15-V output regulator (A4)	21.1 W
+28-V output regulator (A5)	18.7 W

In accordance with Phase I of the study contract, a detailed thermal analysis was performed on this baseline design. Environmental temperatures taken from study predictions (Appendix A) for Space Tug were considered to represent a typical application for this power supply. In the Tug mission, the temperature extremes are:

Isothermal panel (spacecraft equipment mounting surface)	+4.4 to +32.2°C
Radiation environment	-173 to +22°C

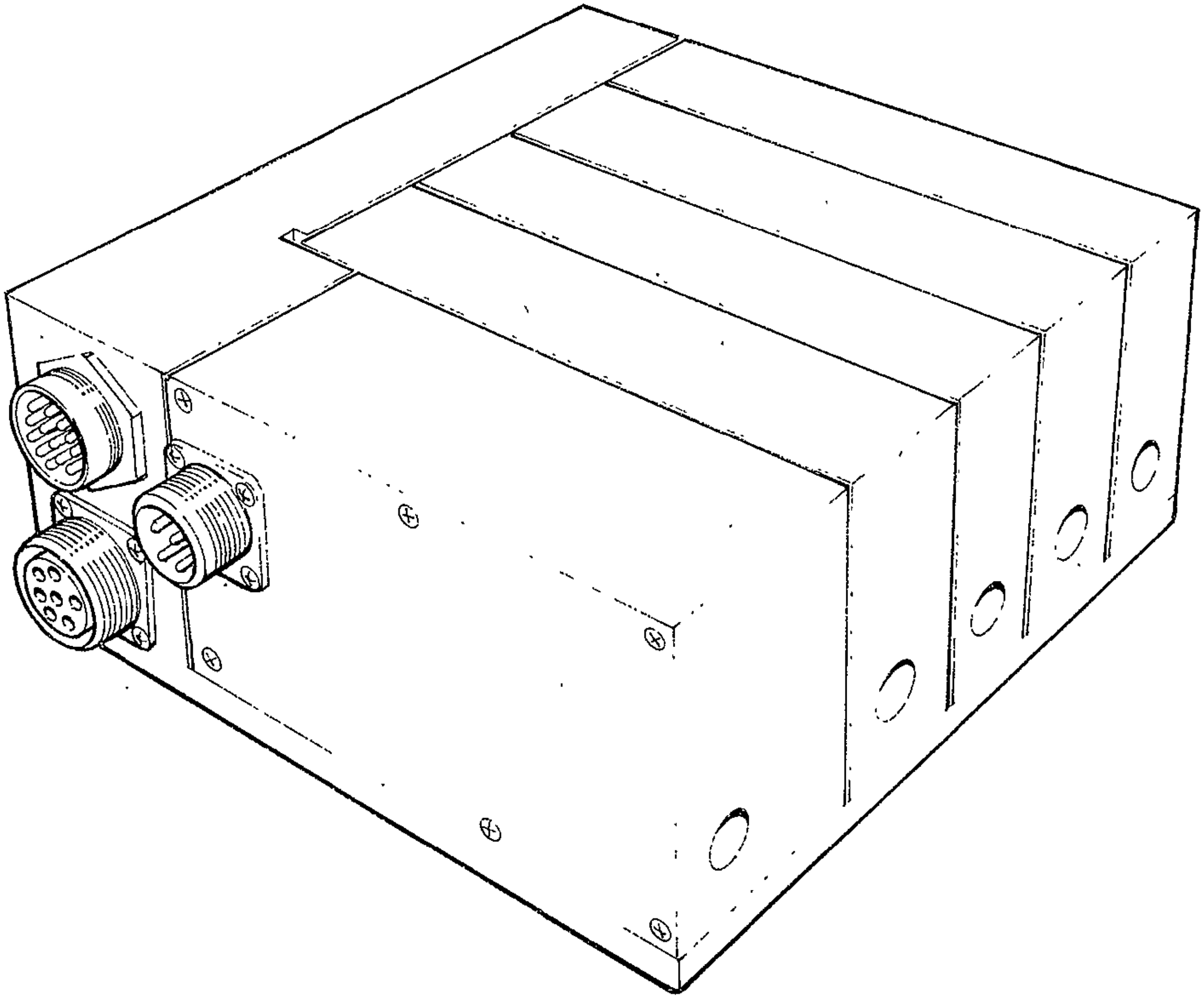

Figure 1 NASA Prototype 350-W Power Supply

A mathematical model was devised to represent physical interrelationships in terms of conductivity, surface finish, view factors, and internal heat generation. Internal temperatures were computed for 371 nodes. Table 1 summarizes some of these results, which are shown in more detail in Appendix A.

Analysis results show marginal or excessive temperatures at several places in the power supply, especially in the input module, where the combination of high power dissipation of printed circuit (PC) board mounted parts and inadequate thermal paths to the baseplate resulted in temperatures above 160°C. This temperature prediction is for the maximum average PC-board temperature under hot ambient environmental conditions. Excessive case temperatures were also predicted for capacitors and chokes embedded in the input filter module in the input module assembly. This situation could be ameliorated by improving conduction paths to the baseplate by various means.

The output regulator modules exhibited better temperature control, with relatively few instances of marginally hot conditions for circuit-board-mounted parts.

A review of the overall prototype packaging has led to the following conclusions:

1) Output regulator packaging density is nearly optimum, considering part geometry, cost factors related to fabrication and assembly, and thermal and structural requirements. About 85% of the enclosed volume is structure, parts, wiring, or clearance space. Attempts to repackage existing circuits saved little volume, without resorting to expensive high-density packaging for PC-board-mounted parts.

2) The input module could be repackaged with some volume savings because it contains spare room for PC boards and unused chassis volume. Because of excessive temperatures predicted by the thermal analysis, any redesign must lower the temperatures by redistributing major dissipators and better heat sinks.

3) The carrier baseplate to which the modules and main-frame chassis are bolted distributes structural and thermal loads to the power supply/spacecraft mounting interface. The plate is machined with numerous grooves or slots on its outside surface, which improves conduction to the air for ground operation and reduces the weight of the 0.98-cm (3/8-in.) plate. However, its structural and thermal load-distribution efficiency is poor from a weight standpoint, especially for spacecraft applications. By combining the main frame with the carrier plate in a manner that minimized thermal gradients from the spacecraft structure to power supply modules, a significant weight savings might be realized without penalizing thermal performance.

Table 1 Baseline-Design Temperature-Prediction Summary

	Ref Desig	Dissipation, W	Predicted Temperatures, C° (F°)	
			Hot Ambient	Cold Ambient
INPUT MODULE A1				
PC Board	A1	2.046	163 (325)	152 (306)
PC Board	A2	2.046	171 (340)	161 (322)
PC Board	A4	4.123	173 (343)	163 (325)
Filter	FL1	1.6	60 (140)	31 (88)
Filter	FL2	1.6	58 (136)	29 (84)
Transformer	T1	0.6	52 (126)	23 (73)
Transistor	Q1	7.9	58 (136)	30 (86)
Input Filter:	A5			
Choke	L3	1.2	107 (225)	79 (174)
Choke	L2	1.2	106 (223)	78 (172)
Choke	L1	1.2	99 (210)	71 (160)
Capacitors	C1→C4	0.8	102 (216)	74 (165)
OUTPUT MODULE A3				
PC Board	A1	2.173	80 (176)	58 (136)
PC Board	A2	0.956	72 (162)	48 (118)
Transistor	Q1	4.56	63 (145)	34 (93)
Transistor	Q2	4.65	59 (138)	31 (88)
Transformer	T1	0.15	56 (133)	28 (82)
Transformer	T2	0.15	54 (129)	26 (79)
Transformer	T3	1.8	59 (138)	31 (88)
Choke	L1	0.95	56 (133)	27 (81)
Diode	CR1	2.8	74 (165)	46 (115)
Diode	CR2	2.8	74 (165)	46 (115)

4) With the placement of modules and main frame over the carrier plate, it is necessary to disassemble the power supply to bolt the carrier to its spacecraft mounting surface and then reattach the modules individually. This is an unnecessary burden on spacecraft integration and increases the probability of inadvertent interchange of output modules or improper alignment of the modules as installed on the spacecraft. For spacecraft integration and maintainability, a mounting scheme in which the power-supply assembly represents the lowest replaceable unit (LRU), with shop-replaceable individual modules, appears to be more desirable.

B. REPACKAGING APPROACH

Based on the evaluations and influenced by budget constraints that precluded reconfiguration of the input module, the initial approach to repackaging the modular power supply was to seek more efficient heat removal by concentrating the output regulator module heat sources and integrating low-cost heat pipes for direct thermal paths to the mounting interface. This would allow maximum use of structural materials required in the module and main-frame chassis and offered the most promise for reducing weight and size and improving thermal performance.

Characteristic of transistor switching power regulators of this type, dissipated thermal energy originates from a few sources--output transistors, diodes, chokes, and transformers. For the 15-V output regulator, some 18 W, or about 86% of the total dissipated power under full load conditions, comes from these sources. Most other parts in the control logic, driver, and error amplifier circuits are insignificant dissipators. The usual practice is to chassis mount the major dissipators, providing a high-conductance path to some ultimate heat sink, which in most cases entails additional metal for heat transfer beyond that required solely for structural purposes, thus incurring a weight burden for thermal reasons.

Thanks to recent developments and increased use of heat-pipe technology, heat pipes are commercially available at reasonable cost and offer a convenient and more efficient means for transporting heat than solid materials. By properly employing a heat pipe in place of heavy chassis sections, parts can be maintained at lower temperatures with less weight penalty.

In employing heat pipes, careful attention must be given to obtaining a low thermal impedance at heat-pipe interfaces--getting the heat into and away from the device efficiently. For this specific power supply application, a saddle arrangement (Fig. 2a) was

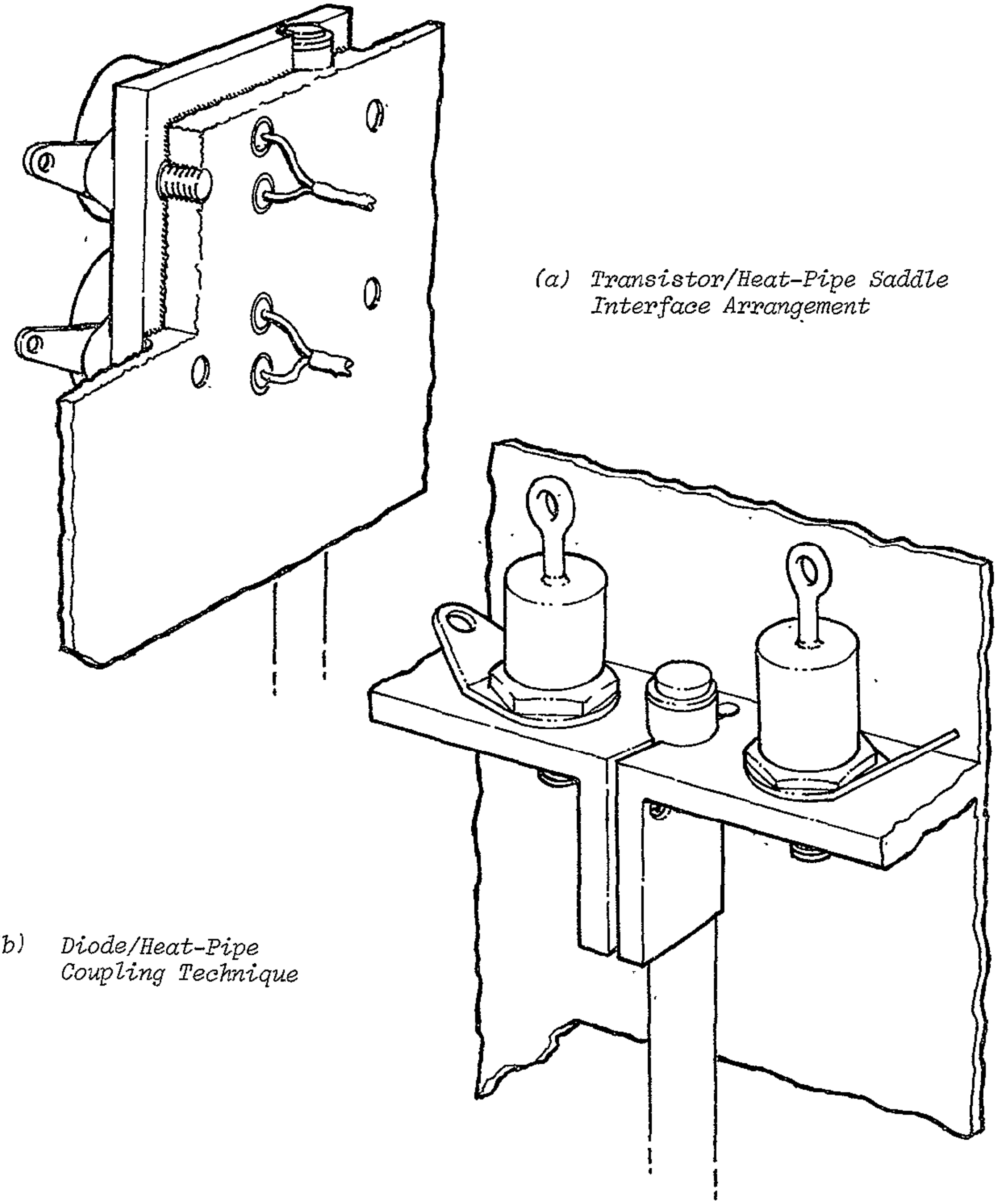

(a) Transistor/Heat-Pipe Saddle Interface Arrangement

(b) Diode/Heat-Pipe Coupling Technique

Figure 2 Heat-Pipe Dissipator Mounting Techniques devised for effecting a low thermal impedance between the TO-3 transistor case and the heat-pipe evaporator. The particular geometry of the TO-3 case, with its base and emitter leads positioned asymmetrically, allowed sufficient room for close coupling the transistor and heat pipe via the saddle arrangement. A similar scheme was used for coupling the stud-mounted power diodes to the heat pipes (Fig. 2b).

C. HEAT-PIPE OPERATION

To emphasize its simplicity and inherent potential for reliable space applications, a brief discussion of heat-pipe operation is offered. The basic heat-pipe structure (Fig. 3) consists of a sealed tubular container enclosing a wick structure for capillary flow of the liquid added to saturate the wick. With the application of heat, some liquid vaporizes and flows to a cooler region, where it condenses. The wick returns the condensate through capillary pumping action. Evaporation, condensation, and pumping of the liquid in a capillary wick are used to continuously transfer latent heat of vaporization from one region to another without external aids. Furthermore, due to the heat pipe's uniform construction, it doesn't matter which region is used for evaporation or condensation.

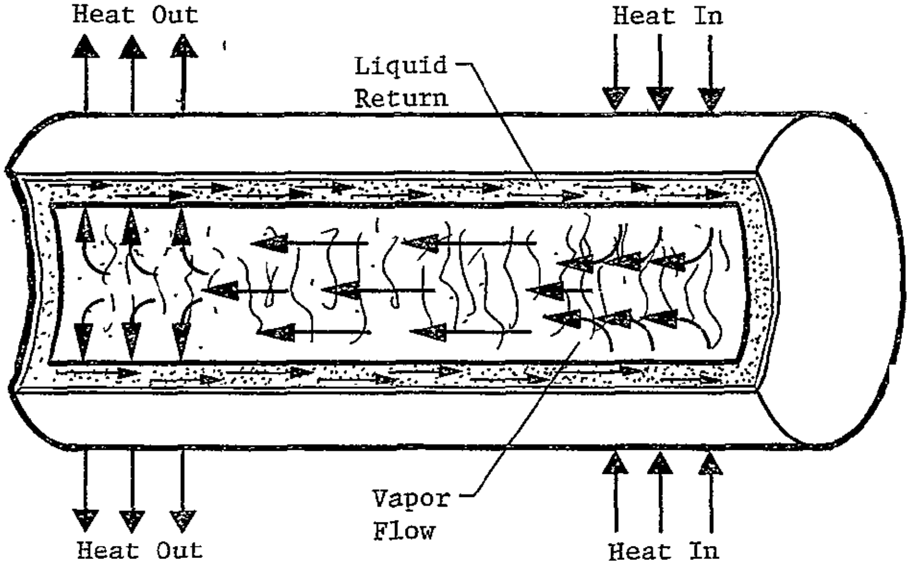

Figure 3 Basic Heat-Pipe Structure

The process is essentially isothermal for moderate lengths because the vapor pressure drop between the evaporator and condenser is small. With a properly designed heat pipe, the temperature gradient between the heat source and heat sink can be very low, especially when compared with solid-metal conduction methods. Conduction of the 0.64-cm (0.250-in.) diameter heat pipe considered for integration in the modular power supply design is about 20 times greater than that of a solid copper rod of the same size, yet weighs only about one-fourth as much.

Depending largely on the compatibility of materials employed, heat pipes are potentially very reliable devices. For the power supply application, we selected a heat pipe constructed of 300 series stainless-steel, a stainless-steel felt wicking structure, and methanol working fluid. Heat pipes using this combination of materials have been successfully life tested by Hughes Aircraft for continuous perios of more than 22,000 hours at ∿110°C and are considered prime candidates for use on current space programs. Similar constructions using ammonia as a working fluid have been operated without failure for more than 44,000 hours.[1]

Heat pipes have been successfully employed in many spacecraft applications, including the EREP S-191 experiment on Skylab and communication equipment cooling on classified DOD spacecraft. Hughes has developed a traveling-wave-tube amplifier (TWTA) under NASA Contract NAS1-10417 for use on the Space Shuttle program that employs several stainless-steel/methanol heat pipes to advantage to distribute concentrated heat loads of 146 W to the baseplate thermal interface.[2]

Because of its inherent reliability, simplicity of operation, high thermal efficiency in terms of weight burden, and potential for low-cost production, we are confident that the heat pipe will become increasingly used to solve thermal control problems, not only in space applications, but also in Earth-bound engineering projects such as the Alaska pipeline. Here, heat pipes are being considered for maintaining the permafrost in its frozen state by controlling heat leakage from oil pipe-line support structures.

---

[1] "Compatibility and Reliability of Heat Pipe Materials", AIAA Paper No. 75-660, by A. Basiulis, R. C. Prager, Hughes Aircraft Company, Torrance, CA; presented at the 10th Thermophysics Conference, Denver, CO, May 1975.

[2] "Heat Pipe System for Space Shuttle TWTA", AIAA Paper No. 73-755, by A. Basiulis and C. M. Eallonardo, Hughes Aircraft Company, and B. M. Kendall, NASA Langley Research Center; presented at the 8th AIAA Thermophysics Conference, Palm Springs, CA, July 1973.

III. REVISED PACKAGING DESIGN

To evaluate the effectiveness of heat pipes as a means of reducing weight and size of the modular power supply and correct deficiencies noted in Phase I of the study, the unit was reconfigured with the major dissipators in the output regulator grouped together close to a heat pipe arranged to conduct the heat to mounting structure adjacent to power-supply mounting bolts. Figure 4 shows the overall arrangement with the modules supported by the main-frame chassis, which functions as a structural and thermal interface as well as providing power distribution for the modules. Drawings are shown in Appendix C.

A. HEAT-PIPE INTEGRATION

The output regulator was redesigned to the configuration shown in Figure 5. The two PC-board assemblies remained unchanged because they followed good economical packaging practice and had relatively low power dissipation. The chassis-mounted components were repositioned in two columns flanking a 0.64-cm (0.25-in.) diameter heat pipe that extended from the top of the output regulator down through a hole in the chassis base and into a grooved boss in the main-frame support chassis adjacent to the mounting boss that is the primary thermal interface for the power supply.

To reduce the thermal gradient at the interface, a quick-release pivoted clamping device was provided in the main-frame support chassis to increase contact pressure between the heat pipe and main-frame chassis. The clamp was actuated by tightening a machine screw adjacent to the output-regulator-module mounting screw. To distribute forces more uniformly and preclude damage to the heat pipe, the heat-pipe clamp was faced with an elastomer.

In the output regulator module, the two power diodes and output transistors, which together dissipate close to 15 W, were placed on a grooved mounting bracket that serves as a saddle clamp for transferring thermal energy into the heat pipe. Clamping forces were provided by eight fasteners tying the semiconductors and mounting bracket securely to the module chassis and ensuring a high-pressure thermal interface joint with the heat pipe. The chassis and mounting bracket grooves were sized to ensure an interference fit for the heat pipe. Clamping forces caused elastic deformation of the bracket that allowed good thermal contact between the mounting bracket and chassis structure, providing redundant thermal paths for the major dissipators. Thermal

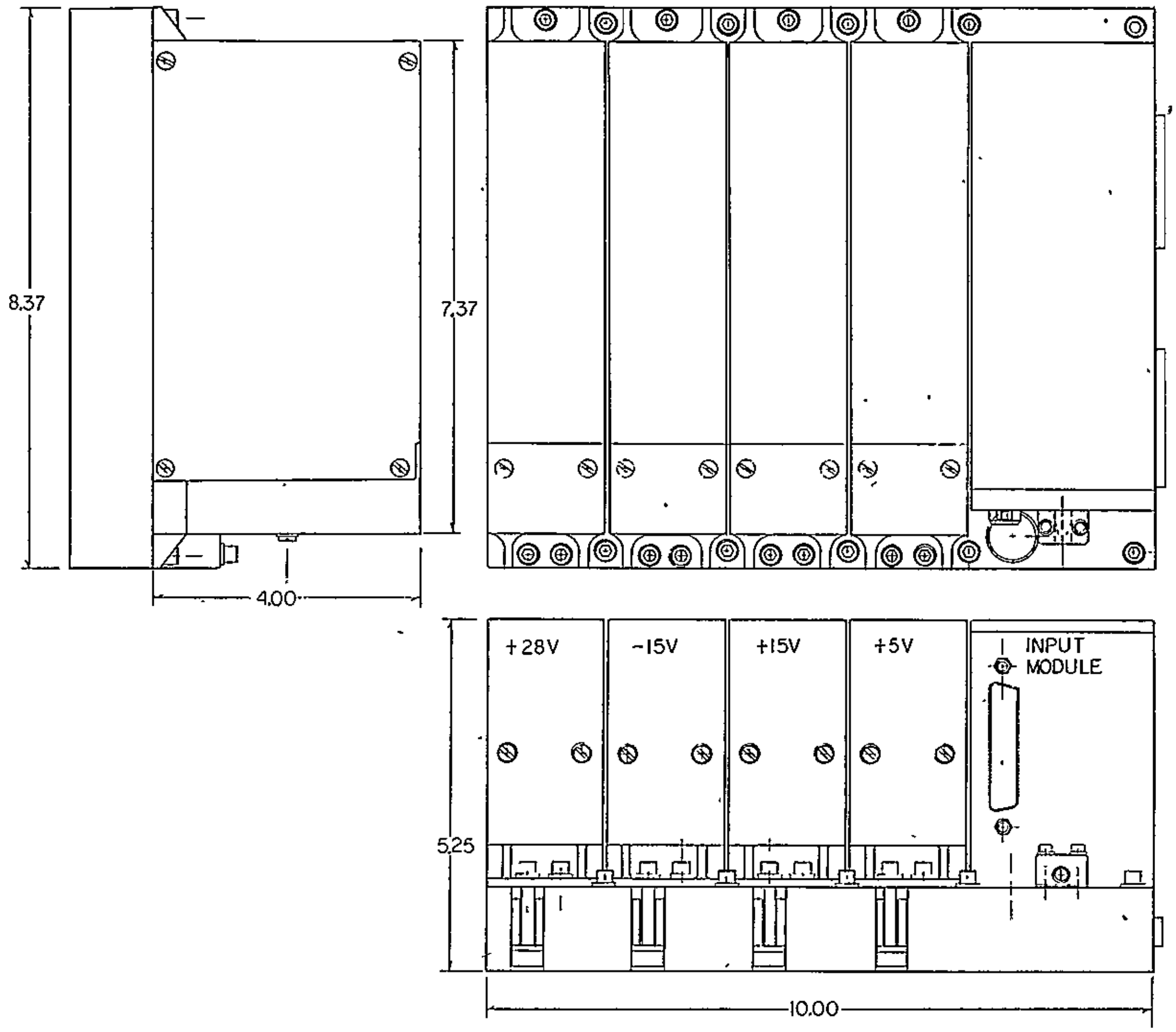

Figure 4 Multivoltage Modular Power-Supply Assembly Layout

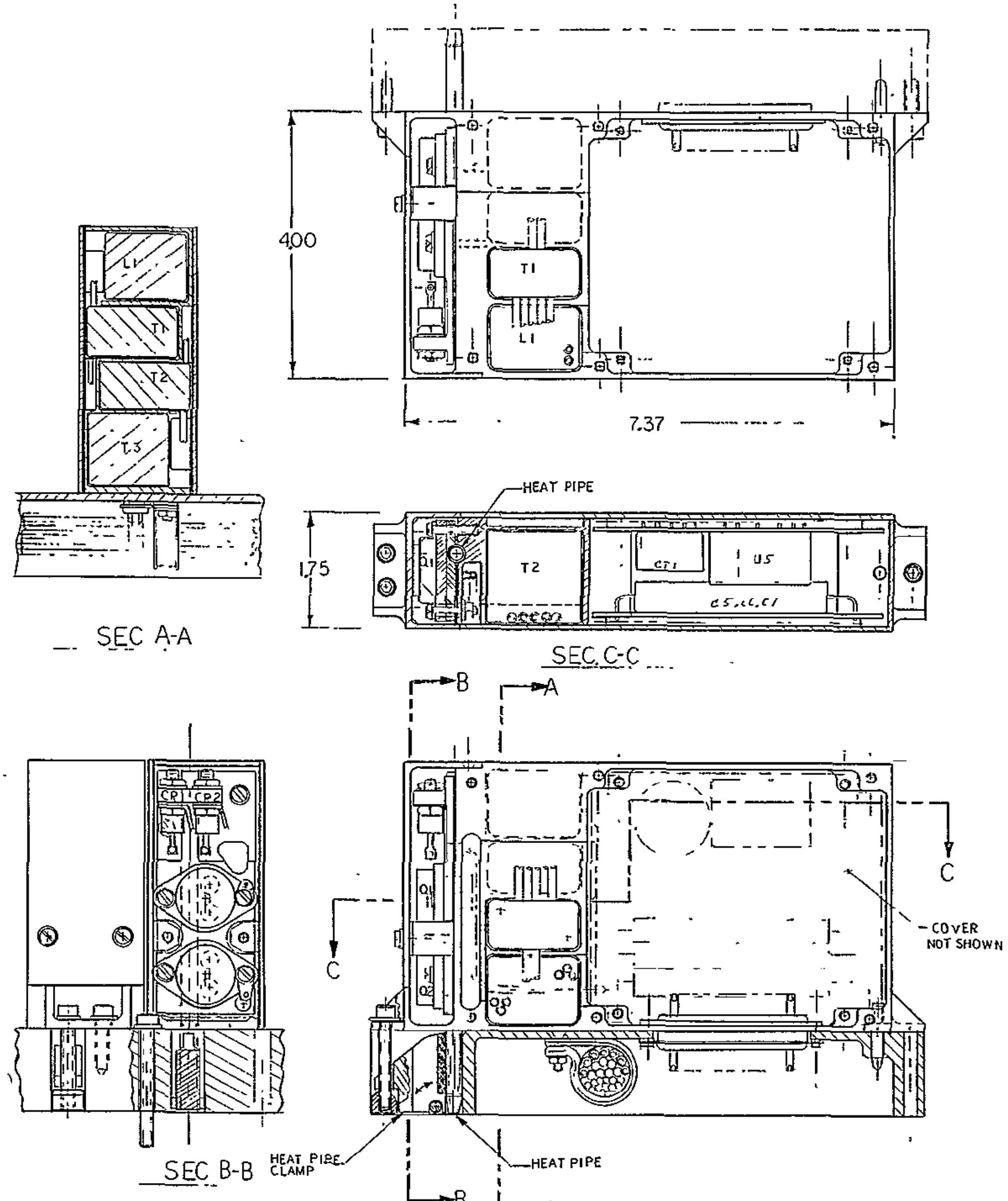

Figure 5 Output Regulator Module Layout

analysis indicates that even with a failed heat pipe the redundant conduction paths were sufficient to maintain safe part temperatures. The degree of redundancy could be adjusted by design to maximize use of the heat pipe, reduce structural weight, and still provide adequate backup for the heat pipe in terms of thermal conduction paths.

Joint conductance was enhanced by using a thin film of thermal interface compound such as Dow Corning DC-340 in areas of high thermal flux density such as heat pipe interfaces. This reduces thermal resistance to about one half that of the dry joint. With the heat pipe positioned between the chassis-mounted magnetics and the output semiconductors, temperature gradients were effectively reduced. Test results indicated a maximum gradient of only 1°C for the mounting bracket surfaces. With the heat pipe inoperative, the analysis predicted an 8°C gradient on this surface. The major effect of adding the heat pipe to this particular design was to reduce maximum part temperatures through more effective removal of generated heat and provide more uniform temperature distribution in parts near the heat pipe.

B. OTHER THERMAL CONSIDERATIONS

The aluminum chassis and covers were given a black anodized finish to improve thermal radiation and provide a durable protective finish. The design requires a chemical film (irridite) treatment followed by anodizing. After irriditing, mechanical interface areas such as cover/chassis faying surfaces were masked off to preserve the electrically conductive finish for RFI control bonding. Due to the relatively poor thermal conduction paths to supporting structure, the use of black anodize to increase the emissivity for better radiant heat transfer is particularly helpful for PC-board-mounted parts. The Phase I thermal analysis predicted a decrease in average PC-board temperature of about 8°C for the output regulator boards and 70°C for the input module boards by merely changing to a high-emmisivity surface finish such as black anodize.

C. MAIN-FRAME REDESIGN

The main-frame chassis with bottom cover was sized to accommodate four redesigned output modules plus the NASA prototype input module. Cannon rectangular power and control connectors at the forward end of the main-frame chassis allowed a significant weight saving over round connectors, not only due to their lighter weight, but also because they are easily accommodated in the 3.18-cm (1.25-in.) chassis depth, whereas the round style connector would require a chassis extension of about 6.35 cm (2.5-in.) for mounting, with a significant impact on chassis weight and volume. This connector is qualified for spacecraft usage and has been employed extensively on NASA and DOD space programs over the past decade.

The main-frame bottom cover was recessed slightly and placed between rows of mounting bosses so that it did not add a thermal interface between the power supply and spacecraft structure.

The structural load paths were maintained as short as possible, with inertial loads carried directly from module mounting pads into the main-frame side rails and to adjacent fasteners for mounting the whole assembly to the spacecraft structure. Five No. 10 fasteners were used per side, primarily for thermal considerations, although test results indicated very low-level heat conduction to the mounting bosses on the side opposite the heat pipes, and a more reasonable design would reduce the number of fasteners to three on one side and five on the other. Heat-pipe-conducted thermal loads were applied directly to main-frame structure at the grooved interfaces adjacent to the mounting bosses. Other thermal conduction paths, in the vicinity of module mounting pads, followed the structural load paths, assuring minimum thermal gradients afforded by the relatively heavy chassis sections and clamped interfaces.

D. THERMAL ANALYSIS SUMMARY FOR REVISED DESIGN

A thermal model was developed for the reconfigured power supply and analyzed in the same manner as during Phase I. Environmental conditions were again assumed to be those predicted for Space Tug equipment; i.e., isothermal panel mounting surface, +32.2°C, hot case; radiation environment, +22°C, hot case. Table 2 compares predicted temperatures for the baseline prototype design and the repackaged version for the 350-W total load condition. For this comparison, the +15-V output regulator module A3 is summarized because it represents the worst-case output module from a temperature standpoint.

Based on the analysis predictions, the redesigned power supply showed significant improvement in thermal performance, reducing temperatures as much as 14°C (25°F) in several areas.

Table 2 Temperature Predictions for Baseline Design and Redesign

Part Type	Ref Desig	Heat Dissipation, W	Predicted Temp °C (°F)*	
			Baseline Des	Redesign
OUTPUT REGULATOR A3				
PC Board (avg)	A1	2.173	80 (176)	66 (151)
PC Board (avg)	A2	0.956	72 (162)	61 (142)
Power Transistor	Q1	4.65	63 (145)	55 (131)
Power Transistor	Q2	4.65	59 (138)	55 (131)
Transformer	T1	0.15	56 (133)	47 (117)
Transformer	T2	0.15	54 (129)	48 (118)
Transformer	T3	1.80	59 (138)	49 (120)
Choke	L1	0.95	56 (133)	48 (118)
Power Diode	CR1	2.8	74 (165)	60 (140)
Power Diode	CR2	2.8	74 (165)	60 (140)

*Part case temperatures except for PC boards, which are average surface temperatures.

IV. FABRICATION AND TEST RESULTS

A. FABRICATION AND ASSEMBLY

The 15-V output regulator chassis parts were fabricated in the model shop using conventional machining processes. Approximately 40 hours were required to machine the module chassis and associated details. In increased quantities, the module fabrication costs could be reduced 60 to 80% by going to an investment of die-cast structure requiring minimal machining. Chassis-mounted parts were removed from the original prototype module supplied as GFE and repackaged into the revised configuration without difficulty. To improve heat transfer, thermal interface compound was applied under the magnetics and output semiconductors.

Three simulated output modules, designed to the same size, mass properties, and thermal dissipation as their operating counterparts, were also fabricated to provide a realistic simulation of power dissipation and inertial loading during testing. Fabrication labor for three of the simulators totaled about 10 hours. Thermal dissipation was obtained by selecting appropriate power resistors and bonding these to the inside surfaces of the simulators. Power for the simulators was taken directly from the 28-V input power line.

The main-frame chassis was fabricated and wired to accept the modules and provide proper power distribution from the input module to the 15-V output regulators, simulators, and external loads. Photographs of the hardware built and tested are shown in Figures 6 through 10.

B. TESTING

With the power supply assembled and connected to an external resistive load, a bench test was performed to assure proper operation before testing in the environmental chamber. It was necessary to replace a failed diode, CR22 in the remote shutdown circuit, which was shorting out the relay coil in the output regulator. Nominal operation of the power supply was observed after correcting the fault. A change was noted in load regulation from the original test data, which reported <0.001% load regulation. In bench testing, the output voltage dropped 0.14 V (-1%) from no load to full load $\left(I_{OUT} = 6.6\ A\right)$.

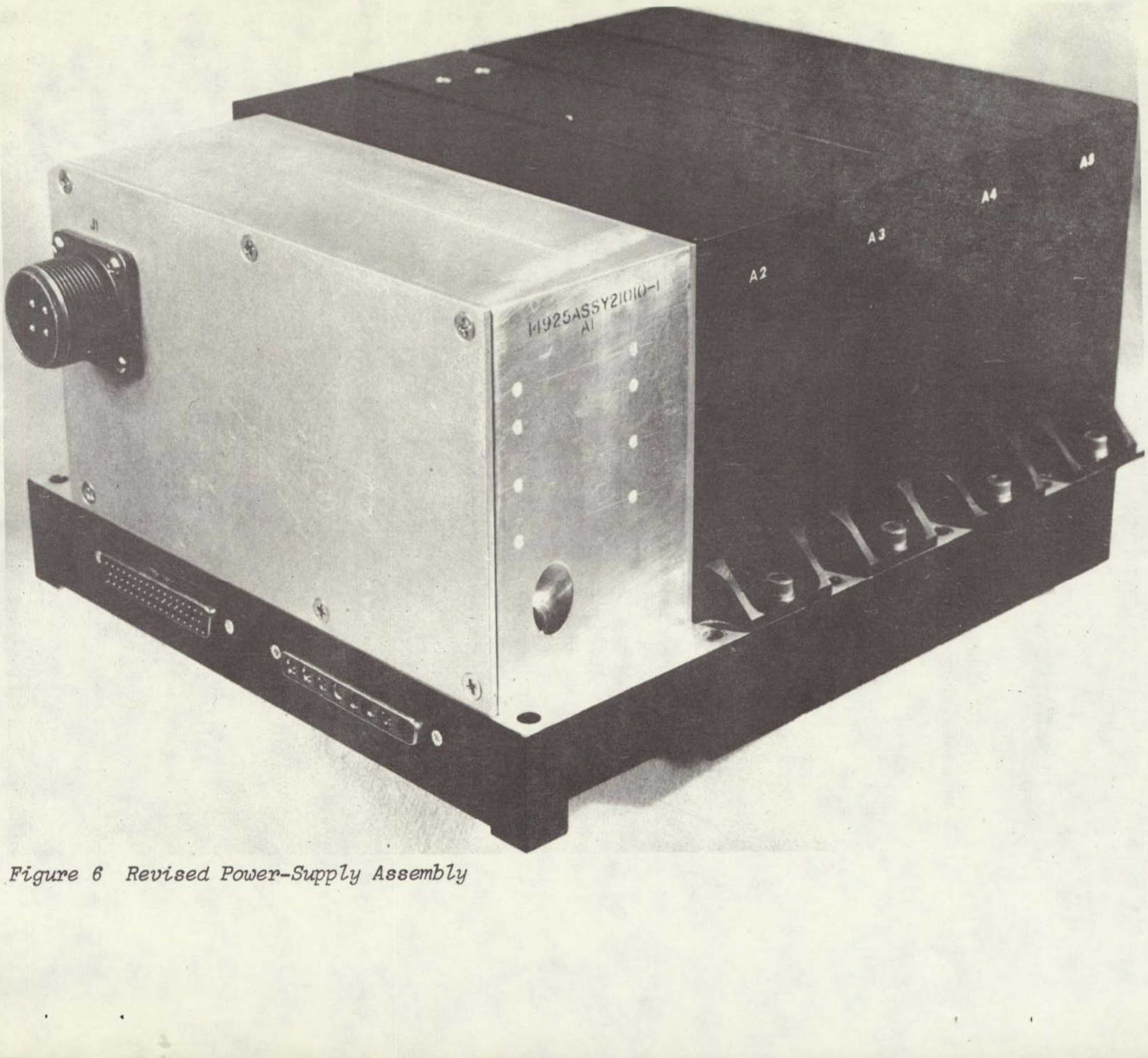

Figure 6 Revised Power-Supply Assembly

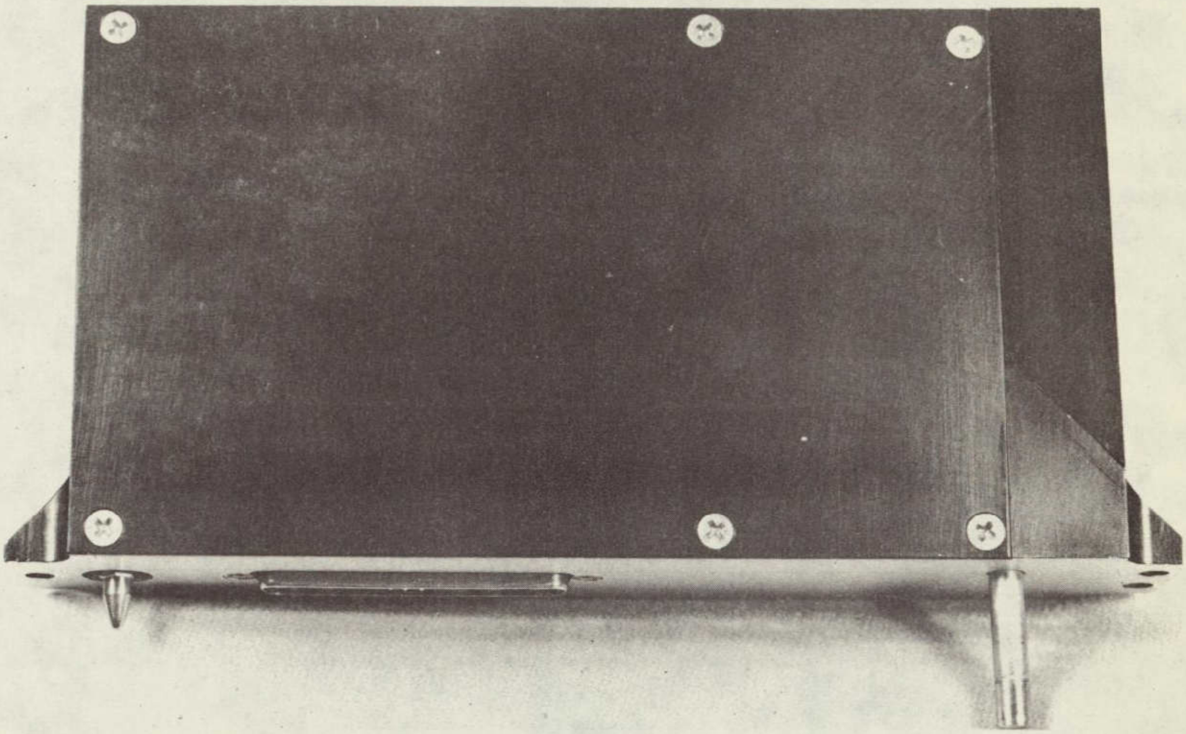

Figure 7 Output Regulator Module

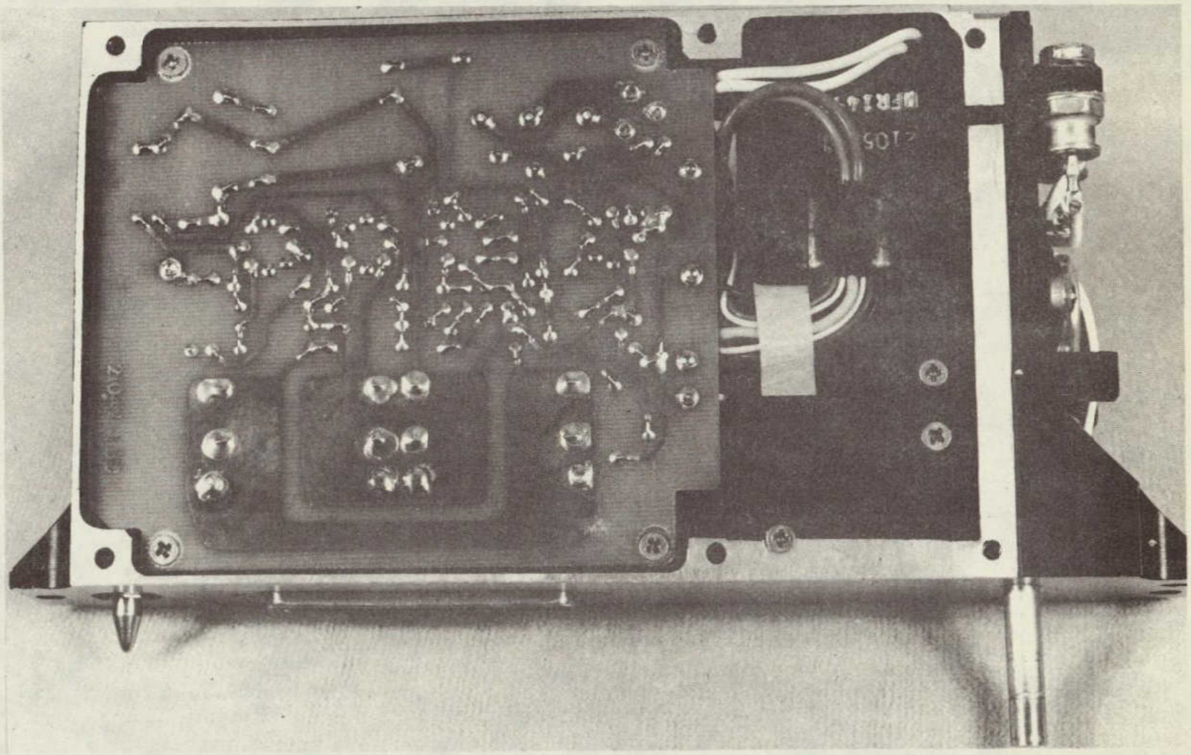

Figure 8 Module with Covers Removed

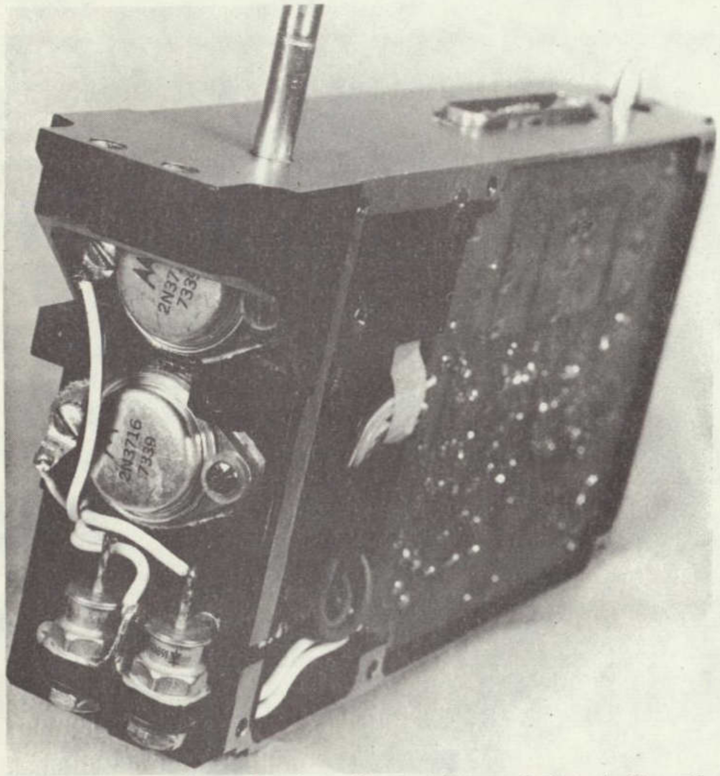

Figure 9 Semiconductor Mounting, Output Regulator

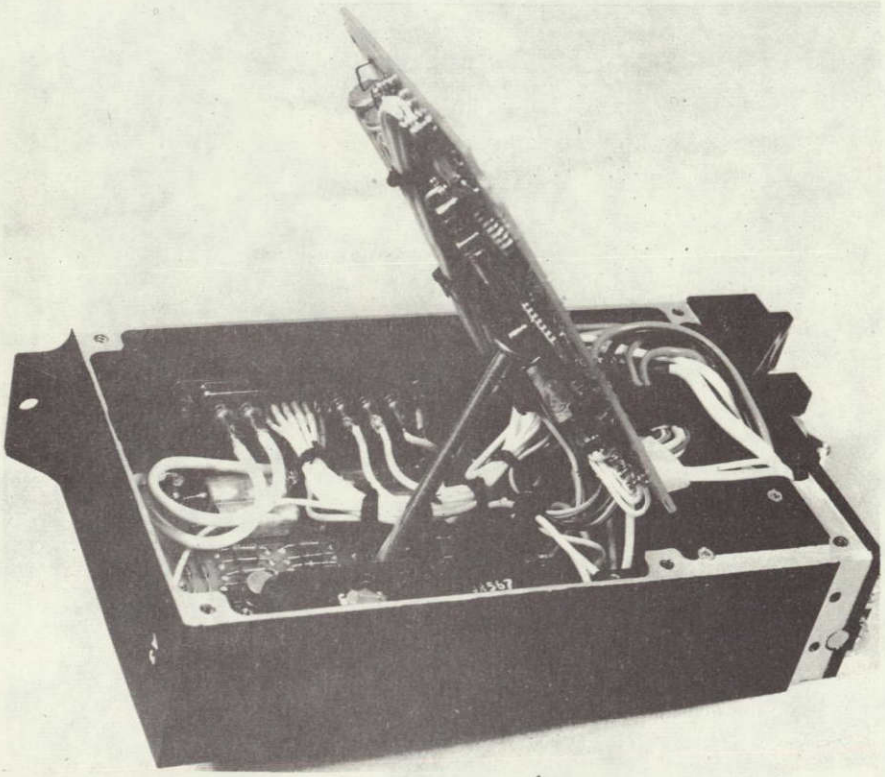

Figure 10 Circuit-Board Assemblies, Output Regulator

Before installing the power supply in the thermal vacuum chamber, thermocouples were attached at the following eight locations for temperature measurement:

1) Mainframe chassis between modules A2 and A3, adjacent to mounting boss;

2) Output module A3 mounting flange farthest from heat pipe;

3) Input module chassis end surface near Q1;

4) Voltage reference module top surface in output regulator A3, error amplifier board;

5) Control logic board adjacent to Q3 in module A3;

6) Semiconductor mounting bracket adjacent to CR1 and CR2 in output module A3;

7) Semiconductor mounting bracket adjacent to Q2 in module A3;

8) Transformer T1 mounting surface in module A3.

Additional thermocouples were located on the cold plate and shroud in the environmental chamber.

For the initial run, the power supply was mounted on a vertical cold plate that positioned the heat pipes horizontally to simulate 0-g operation. The chamber was pumped down to 10^{-5} torr and the power supply allowed to stabilize under full load. Temperature measurements were recorded and are summarized in Table 3.

The unit was repositioned in the chamber with the heat pipes oriented vertically, evaporator section above the condenser as in normal bench-test position. After stabilization at 10^{-5} torr, temperatures were again recorded.

A third test was run to evaluate performance under an overload. Input voltage was increased to 33.6 V and output current for the A3 regulator module adjusted to 7.8 A at 14.2 V. Under these conditions, the 15-V output module was delivering 111% of rated power and, due to the fixed resistor loads, the module simulators were dissipating about 145% of normal thermal energy. Overall power-supply thermal dissipation was increased by roughly 25%.

Table 3 Temperature Measurement Summary

Location	Observed Temperatures, °C (°F)		
	Horizontal Heat Pipe	Vertical Heat Pipe	Overload, Vertical Heat Pipe
Shroud	27 (80)	27 (80)	27 (80)
Cold Plate	32 (90)	32 (90)	32 (90)
Mainframe Chassis (1)	38 (100)	37 (99)	40 (104)
Module A3 Flange (2)	37 (99)	37 (99)	39 (103)
Input Module (3)	35 (95)	35 (95)	36 (97)
Voltage Ref Module (4)	54 (129)	52 (125)	58 (137)
Control Logic Board (5)	58 (136)	56 (132)	69 (156)
Mounting Brkt, CR1 & CR2 (6)	53 (128)	52 (126)	61 (142)
Mounting Brkt, Q2 (7)	53 (127)	52 (125)	61 (141)
T1 Mounting Surface (8)	53 (127)	53 (127)	61 (141)

The data in Table 3 reveal several interesting characteristics of this power-supply configuration:

1) Reorientation of the heat pipe from horizontal to vertical with evaporator up actually showed a slight improvement in heat transfer, contrary to expectations. This may have been caused by a slight overfill of liquid in the heat pipe, which would tend to puddle in a 1-g field, causing changes in thermal resistance, depending on its position. In any case, the heat load being transported by the pipe was within the design capability of the heat pipe and low enough to allow capillary flow to act against gravity without measurable degradation of performance.

2) The data illustrated the importance of providing adequate conduction paths for heat removal when comparing the PC-board temperatures (5) with 2-W dissipation with the output semiconductor bracket temperatures (6) and (7) dissipating almost 15 W but operating cooler.

3) Temperature gradients in the vicinity of the heat-pipe evaporator section were about 1°C, indicating efficient operation of the heat pipe. Major gradients appeared at the module/mainframe interface and PC-board/module interfaces.

In general, test results supported the analysis prediction of significant thermal performance improvements with the integrated heat-pipe design. In most cases, measured temperatures were lower than anticipated. A thermal analysis summary for this design is presented in Appendix B.

C. WEIGHT AND VOLUME SAVINGS

As tested, the redesigned power supply weighed 7.82 kg (17.25 lb) and represented a complete 350-W output power supply, except for additional interconnecting wiring not included in the test version, estimated to weigh 227 g (0.5 lb). This brought the design weight to 8.05 kg (17.75 lb).

For equivalent thermal performance, the previous prototype design approach would have weighed an estimated 11.34 kg (25 lb). Incorporation of heat pipes and reconfiguration effected in this study achieved a weight reduction of almost 30%.

Power-supply volume was reduced 229 cm^3 (14 $in.^3$) from the previous design. Further size reduction was considered impractical because of cost and maintainability without total redesign of the input module, which was beyond the scope of this study contract.

V. CONCLUSIONS AND RECOMMENDATIONS

This design study, undertaken to evaluate and improve the packaging design of a prototype standard spacecraft power supply, has shown that, with careful integration of low-cost heat pipes, both improved thermal performance and significant weight savings can be realized. Part temperatures were reduced throughout the unit by an average of 14°C (25°F), which offers advantages in reliability and expanded environmental capability. Weight savings, attributed in large part to the use of heat pipes, amounted to almost 30% compared to a design of equivalent thermal performance using conventional heat-transfer techniques.

The modest volume reduction of 229 cm^3 (14 in^3) was less than originally hoped for, but by repackaging the input module circuits in the mainframe chassis, it appears reasonable that a further 25% volume reduction is possible.

Figure 11 illustrates a proposed reconfiguration that would eliminate the separate input module chassis, yielding significant weight and volume savings. This design is estimated to weigh about 6.8 kg (15 lb) and occupy 4916 cm^3 (300 $in.^3$). If achieved, this would represent a packaging density of 1.38 g/cm^3 (0.05 $lb/in.^3$) and a power/weight ratio of 23.3 W/lb, which compares very favorably with high-density packaging practice employed in spaceborne power systems.

We recommend that the redesign of the 350-W standard power supply be completed to encompass the above changes and to further optimize the use of heat pipes and save weight by reducing redundant heat paths in the output regulator module. The main-frame chassis should also be redesigned, not only to accommodate input module circuitry but also to trim weight from the side sections where thermal and structural load considerations allow further chassis reduction.

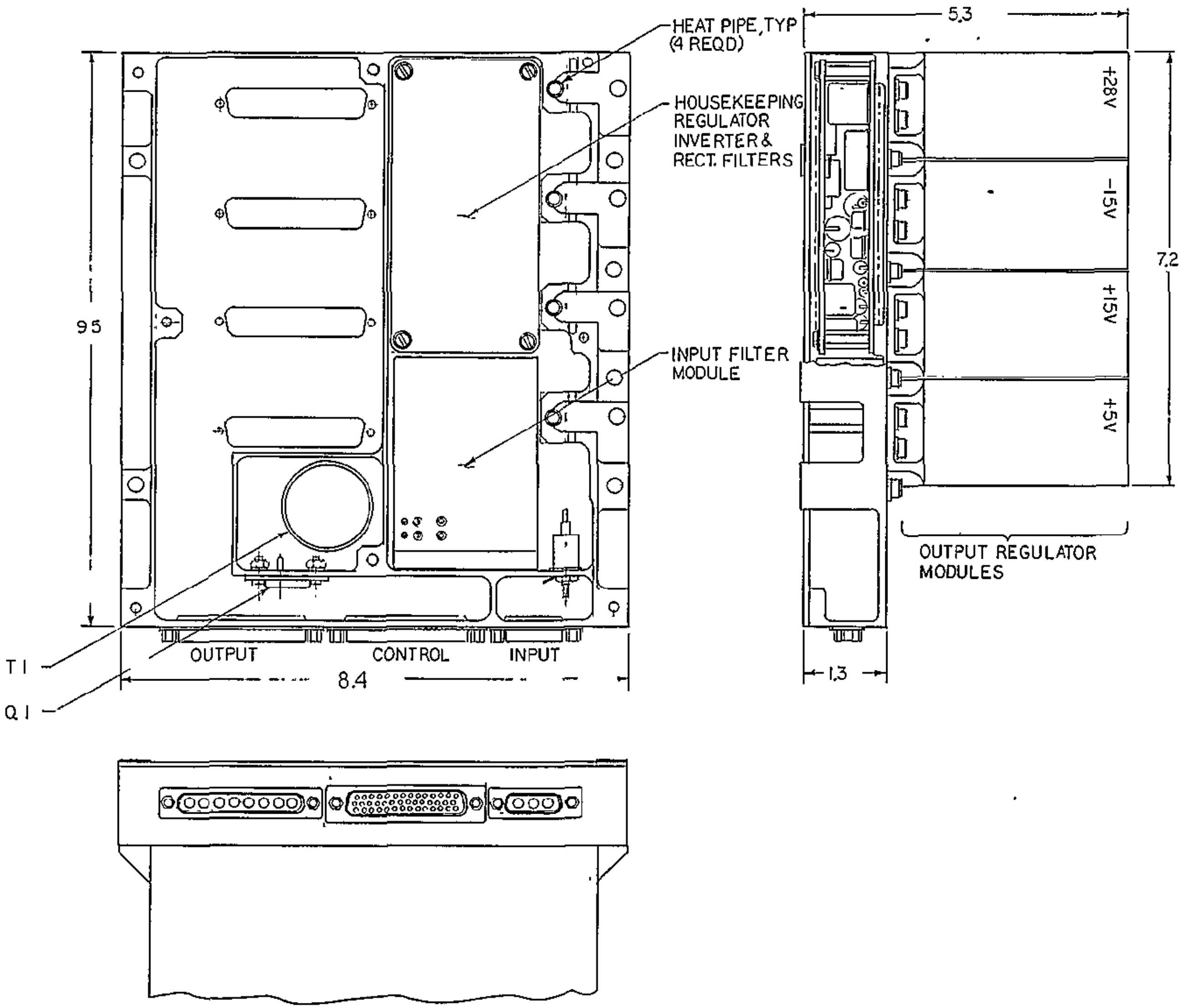

Figure 11 Recommended Configuration for 350-MW Modular Power Supply

Appendix A

Thermal Analysis, NASA Prototype Design

MARTIN MARIETTA CORPORATION

THERMAL ANALYSIS
FOR THE
NASA POWER SUPPLY

21002

JANUARY 6, 1975

PREPARED BY:

W H McCandliss

W. H. McCandliss
Product Development Technology
Electronics Department

APPROVED BY:

W T Perreault

W. T. Perreault
Product Development Technology
Electronics Department

FOREWORD

This report summarizes the technical analysis performed and includes sketches, curves, and tabulated data necessary to describe predicted operating temperatures of critical parts within the NASA Power Supply, 21002.

TABLE OF CONTENTS

1.0 SUMMARY

1.1 Purpose - The purpose of this report is to document the thermal analysis performed on the NASA Power Supply Assembly, 21002, for Space Tug application. The analysis was done to provide a baseline from which to persue packaging optimization work on the O/R Module portion of the Power Supply.

1.2 Scope - This report contains results of the analyses conducted to determine the thermal characteristics of the NASA Power Supply in Space Tug. The thermal performance is evaluated at application level temperatures, both hot and cold. Some very high temperatures were found in the Input Module, and some temperatures in the O/R Modules were slightly high, so the metal finish of the modules was changed to a high emissivity (from Iridite to anodize or paint), and the analyses were rerun.

1.3 Results - A summary of part temperatures for the Input Module and for the O/R Modules is contained in Appendix C. This includes temperature results for both hot and cold ambient and for both high and low emissivity metal finishes on the modules.

A complete listing of temperatures for the hot environment with low emissivity metal finish is contained in Appendix D, and a complete listing for the corresponding cold environment is contained in Appendix E.

1.4 Power Dissipation - Total power dissipation is 98.373 watts. A breakdown of dissipations used in the thermal model is included in Appendix C. Listed below are the total dissipations for the individual modules.

Input Module	A1	23.755 Watts
O/R Module (+5V)	A2	13.721 Watts
O/R Module (±15V)	A3	21.099 Watts
O/R Module (±15V)	A4	21.099 Watts
O/R Module (+28V)	A5	18.699 Watts

1.5 Environment - The temperatures for the environment were taken from a study that was reported in Space Tug Thermal Control, document number MCR74147 (Contract NAS 8-2960), September 1974. The system thermal control that was used in this study included isothermal panels with heat pipes and thermal control shutters. The power supply mounts on an isothermal panel.

Maximum temperatures occur while Tug is still inside Shuttle, preparing to be unloaded. Minimum temperatures occur about 30 hours later. The extreme temperatures are:

Isothermal panel:	$4.44^{\circ}C$ to $32.2^{\circ}C$
Radiation Environment:	$-173^{\circ}C$ to $22^{\circ}C$

1.6 Thermal Model - In order to solve for internal temperatures within the several modules, a 371 mode math model was generated to mathematically duplicate the physical relationships in terms of conductance, surface finish, view factor, and internal heat generated. See Appendix A for sketches of the Nodal Breakdown and see Appendix B for a description of the Conductors.

1.6 Thermal Model (cont'd)

The following information illustrates how the conductance parameters were programmed

Solid Conduction

20,	8,9,	96. * .375 * 0.9/2.8/41.
Node #	Node Linkages	KTW/L/C

Where: K = Thermal Conductivity (BTU-Ft/Ft^2-Hr-$^\circ$F)
T = Thickness (in)
W = Width (in)
L = Path Length (in)
C = Conversion Factor (BTU-Ft/Hr to Watt-in)

Clamped Joint Conduction

149, 166, 108, .625
G

Where: G = Contact Conductance (Watts /$^\circ$F)

Radiation

-151, 117, 161, .19 * .68 * 4.55 * 2.5/144./3.413
E * F * H * W/C$_1$/C$_2$

Where: E = Emissity
F = View Factor
H = Height (in)
W = Width (in)
C$_1$ = Conversion factor (in^2 to ft^2)
C$_2$ = Conversion factor (BTU/Hr to Watts)

NOTE: Sigma =Stephan-Boltzman radiation constant (0.171×10^{-8}) is input as a constant elsewhere in the program.

1.7 Discussion of Results - The power supply design results in excessive board temperatures primarily as a result of module design. The thermal interfaces between modules and mounting plate is adequate but may be improved by additional screw clamping. Thermal design of the input and output modules is discussed below.

1.7.1 Input Module - The Input Module dissipation 23.755 watts. Of this total, 8.215 watts is on printed circuit boards, with 2.046 watts on both the A1 and the A2 board and 4.123 watts on the A4 board. The temperatures calculated for the boards were very high, a maximum of 173°C for the hot environment with the module housing having an Iridite finish.

1.7.1 (cont'd)

The emissivity of the module housing was increased, corresponding to a black anodize or paint finish, and the analysis was re-run. The maximum average board temperature was reduced to 106°C - a significant improvement, but still too hot. High power parts on the boards will require heat sinks to reduce board temperature to acceptable levels.

In the Input Filter (A5) the part temperatures are somewhat high in the hot environment. Maximum choke temperature was 107°C and maximum capacitor temperature was 104°C. A small amount of heat sinking within the potted module could reduce these temperatures considerably.

The power transistor, Q1, a 2N4900 has a case temperature of 58°C and a junction temperature of 113°C. This is using a thermally conductive grease at the mounting interfaces. With a 125°C derated limit on the junction temperature, this part would be a little too hot in a thermal margin test, such as a Qualification Thermal Test.

1.7.2 <u>O/R Modules</u> - The maximum power dissipated in an O/R module is 21.099 watts in A3 and in A4, the ±15V modules, with temperatures in A4 being slightly higher. As the A4 module is the hottest of the O/R modules, only this module will be discussed. All temperatures in the cold ambient are satisfactory, therefore only the hot ambient analysis results will be discussed.

In an analysis with the module housing metal finish being Iridite, all chassis mounted part temperatures look good. The junction temperature of Q1, a 2N3716, is 69°C without grease at the mounting interfaces. The maximum average temperatures of the printed circuit boards were, however, somewhat high, the maximum being 80°C on the A1 board. The emissivity of the module housing was increased, corresponding to a black anodize or paint finish, and the analysis was re-run. The maximum average board temperature was reduced to 73°C. This is still a little high if the worst case circuit analysis was run for a 75°C board temperature, because the board would be a little too hot in a thermal margin test, such as a Qualification Test. Some additional reduction in board temperature could be achieved by heat sinking the higher power parts on both the A1 and the A2 boards.

APPENDIX A

Thermal Model - Nodal Breakdown

NODE PREFIX	MODULE
2xx	A2 (+5V)
3xx	A3 (±15V)
4xx	A4 (±15V)
5xx	A5 (+28V)

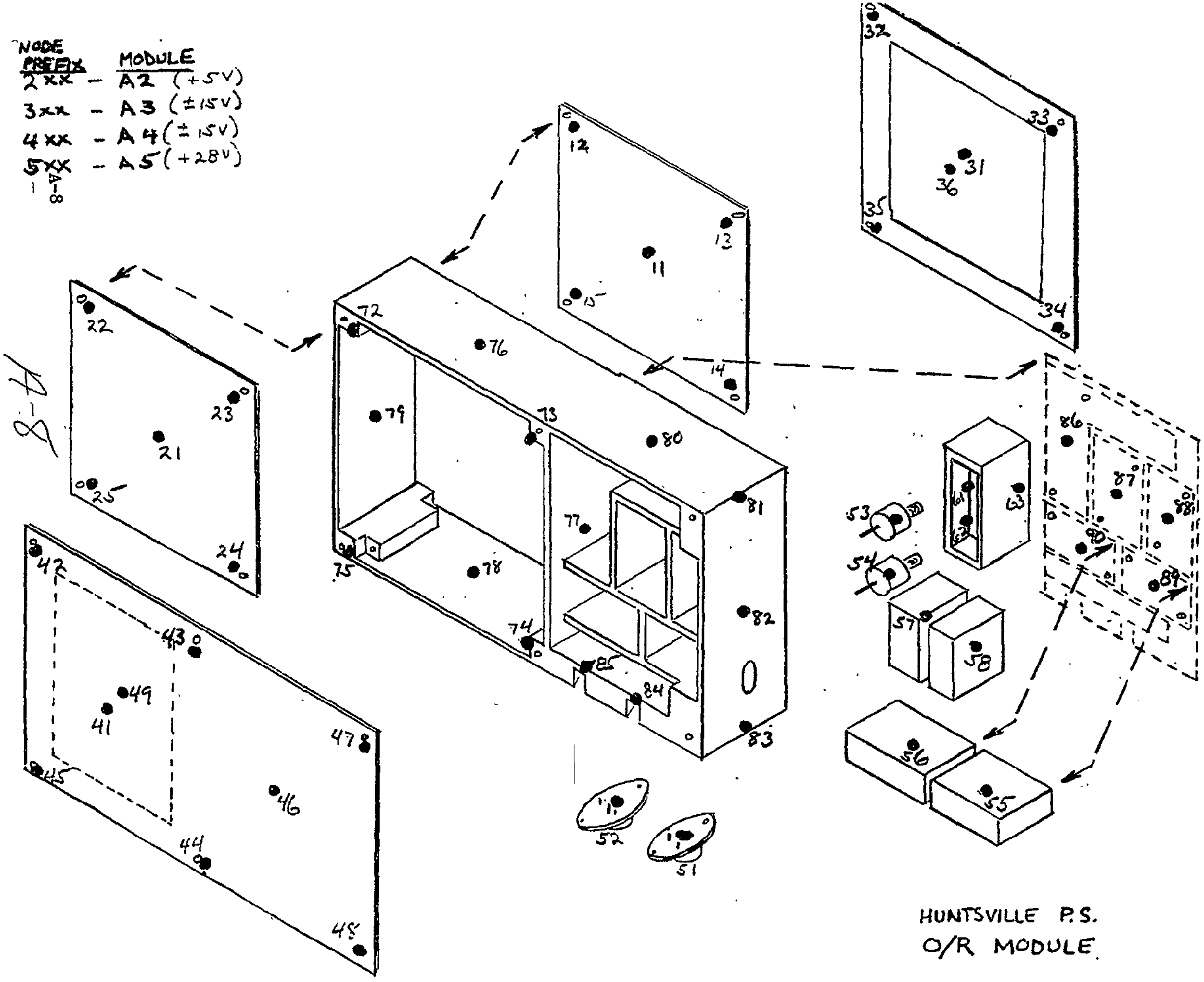

HUNTSVILLE P.S.
O/R MODULE

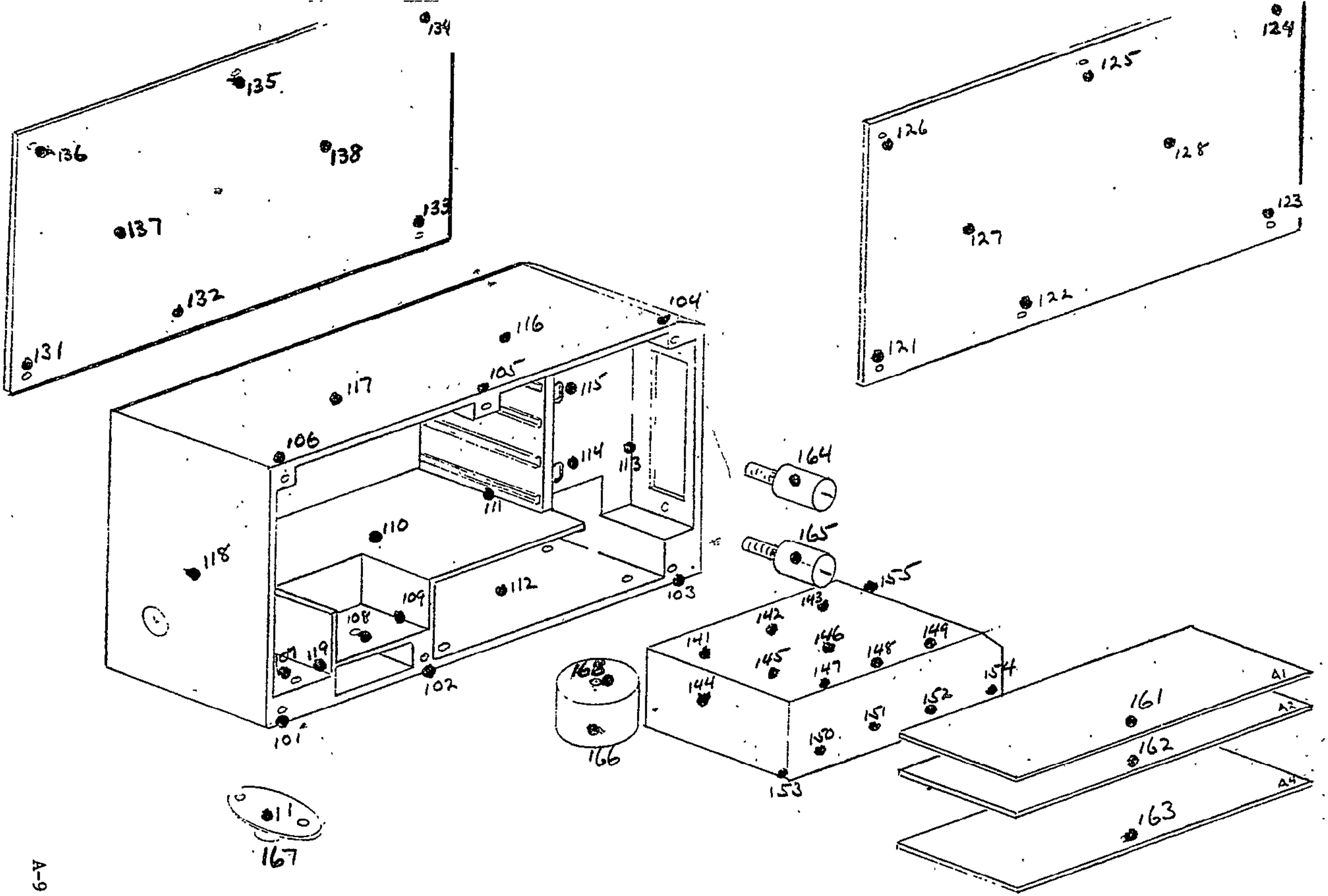

HUNTSVILLE RS.
INPUT MODULE

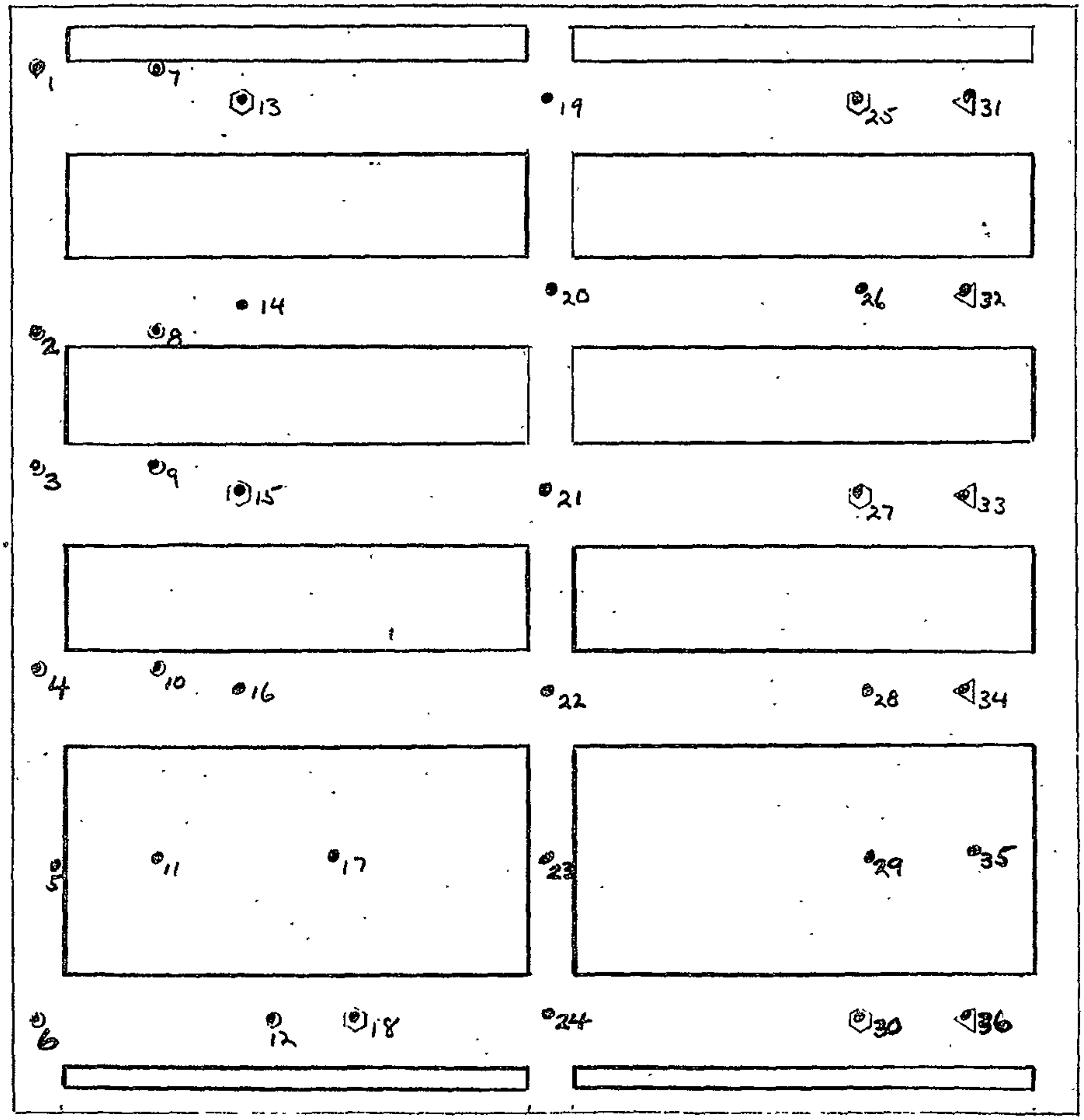

○ SCREWS – CHASSIS TO PLATE
⬡ BOLTS – PLATE TO ISOTHERMAL PLATE
◁ SCREWS – MODULE TO PLATE

PLATE

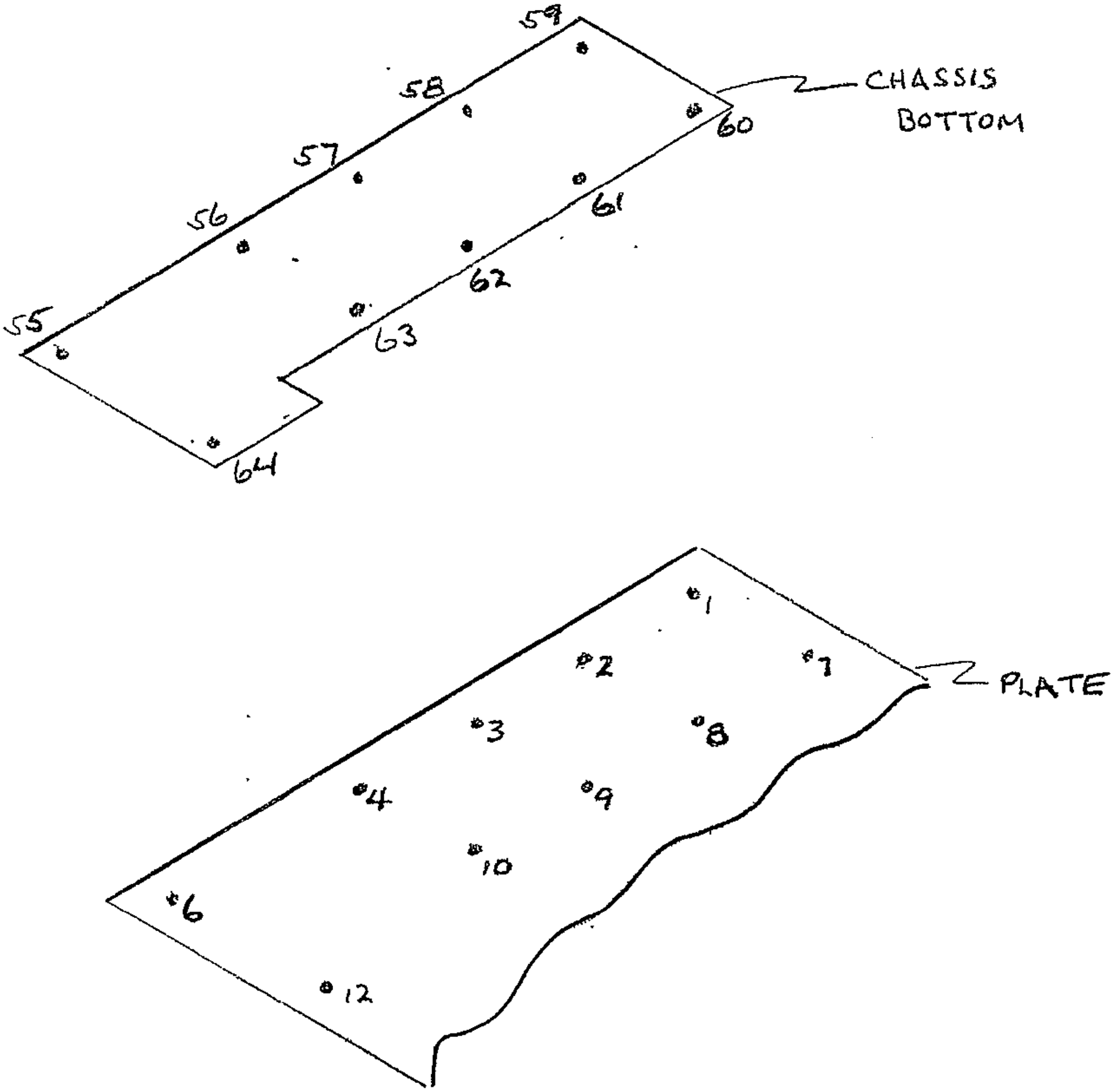

ATTACH CHASSIS TO PLATE

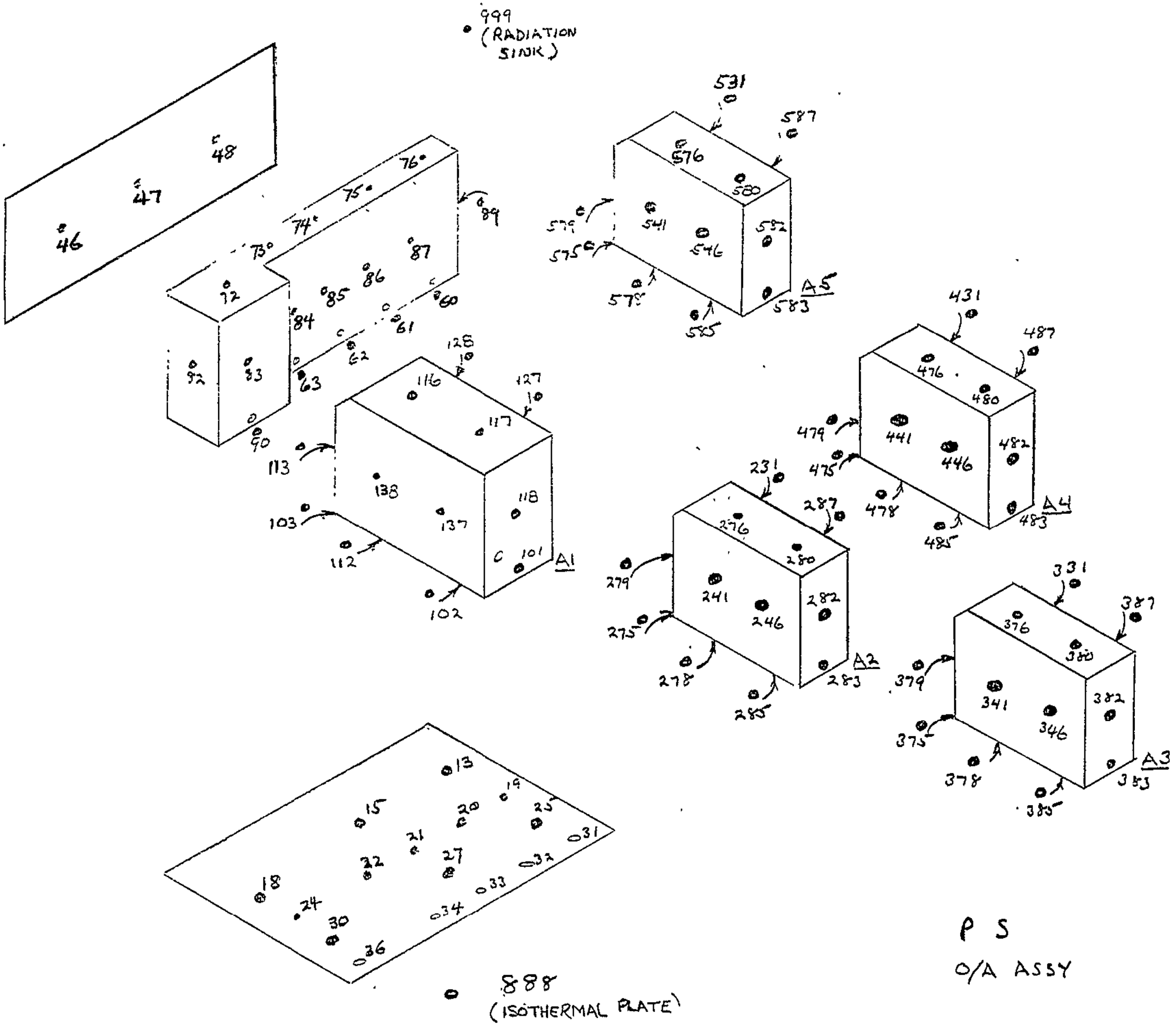
999
(RADIATION SINK)
46
47
48
73
74
75
76
89
72
84
85
86
87
60
61
62
63
82
83
90
531
587
576
580
579
575
541
546
582
578
585
583
A5
128
127
116
117
113
138
137
118
103
112
101
A1
102
431
487
476
480
479
475
441
446
482
478
485
483
A4
231
287
276
280
279
275
241
246
282
278
285
283
A2
331
387
376
380
379
375
341
346
382
378
385
383
A3
13
19
15
20
25
21
31
22
27
32
18
24
33
30
34
36
888
(ISOTHERMAL PLATE)

P S

O/A ASSY

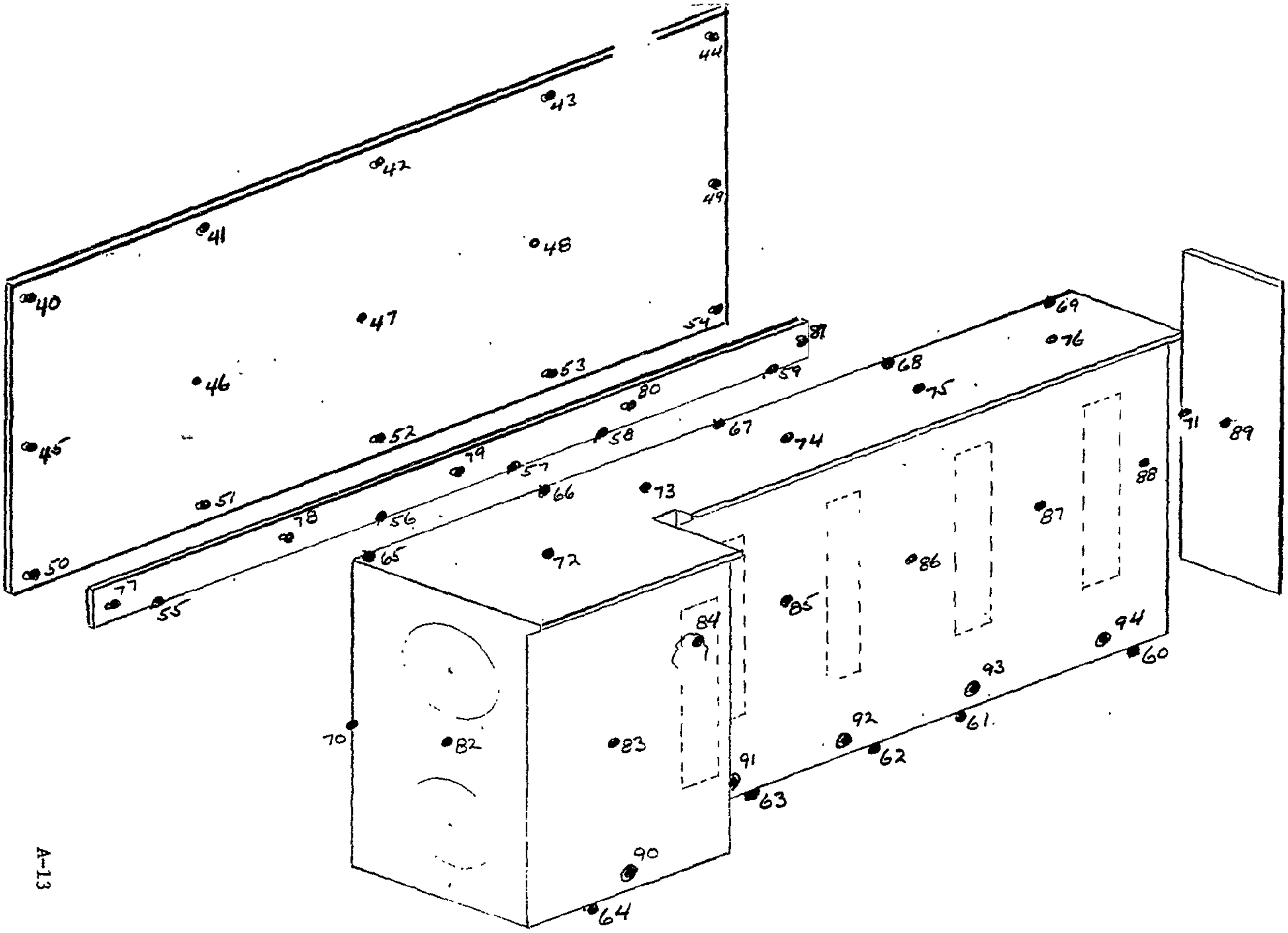

CHASSIS & COVER

APPENDIX B

Conductors

Preceding page blank

```
BCD 3CONDUCTOR DATA
GEN 1,4,0,1,1,7,1,    96.,.375,1.425,1.04*41.
GEN 2,4,0,25,1,31,1,  96.,.375,1.425,1.04*41.
3, 5,11, 29,35,       96.*.625*1.1*.375/1.04/41.
4, 6,12,              96.*.375*1.425/2.10/41.
5, 30,36,             96.*.375*1.425/1.04/41.
GEN 6,4,0,7,1,13,1,   96.,.375,1.425,0.70*41.
7, 11,17,             96.*.625*1.1*.375/1.6/41.
8, 12,18,             96.*.375*1.425/0.70/41.
GEN  9,4,0 ,13,1,19,1,96.,.375,1.425,2.70*41.
GEN 10,4,0 ,19,1,25,1,96.,.375,1.425,2.70*41.
11, 17,23,            96.*.625*1.1*.375/1.80/41.
12, 23,29,            96.*.625*1.1*.375/2.70/41.
13, 18,24,            96.*.375*1.425/1.7/41.
14, 24,30,            96.*.375*1.425/2.7/41.
15, 1,2,              96.*.375*0.6/2.3/41.
16, 2,3,              96.*.375*0.6/1.2/41.
17, 3,4, 4,5,         96.*.375*0.6/1.7/41.
18, 5,6,              96.*.375*0.7/1.9/41.
19, 7,8,              96.*.375*0.9/4.1/41.
20, 8,9,              96.*.375*0.9/2.8/41.
21, 9,10,             96.*.375*0.9/3.5/41.
22, 10,11,            96.*.375*0.9/3.6/41.
23, 11,12,            96.*.375*1.3/3.4/41.
GEN 24,5,0 ,31,1,32,1,96.,.375,1.3,1.*41.
GEN 25,3,0 ,13,1,14,1,96.,.375,1.8,3.6*41.
26, 16,17,            96.*.375*1.7/3.4/41.
27, 17,18,            96.*.375*1.3/1.8/41.
GEN 28,3,0 ,25,1,26,1,96.,.375,1.8,3.6*41.
29, 28,29,            96.*.375*1.8/3.4/41.
30, 29,30,            96.*.375*1.8/1.8/41.
GEN 31,3,0 ,19,1,20,1,96.,.375,.889,1.*41.
32, 22,23,            96.*.375*1.13/1./41.
33, 23,24,            96.*.375*.484/1./41.
CHASSIS AND COVER
GEN 40,4,0 ,40,1,41,1, 96.,.09,1.32,2.375*41.
GEN 41,4,0 ,45,1,46,1, 96.,.09,1.32,2.375*41.
GEN 42,4,0 ,50,1,51,1, 96.,.09,1.32,2.375*41.
GEN 43,5,0 ,40,1,45,1, 96.,.09,1.97,1.812*41.
GEN 44,5,0 ,45,1,50,1, 96.,.09,1.97,1.812*41.
45, 77,55,             96.*.38*.38/0.5/41.
46, 55,78, 80,59,      96.*.38*.38/1.7/41.
47, 78,56,             96.*.38*.38/1.4/41.
48, 56,79,             96.*.38*.38/1.0/41.
49, 79,57,             96.*.38*.38/0.8/41.
50, 57,58,             96.*.38*.38/1.2/41.
51, 58,80,             96.*.38*.38/0.4/41.
52, 59,81,             96.*.38*.38/0.3/41.
53, 77,70, 70,65,      96.*.09*0.4/1.8/41.
54, 81,71, 71,69,      96.*.09*0.4/1.8/41.
GEN 55,4,0 ,65,1,66,1, 96.,.09,0.4,2.375*41.
56, 72,73,             96.*.09*2.59/1.7/41.
GEN 57,3,0 ,73,1,74,1, 96.,.09,2.10,1.8/41.
58, 76,89,             96.*.09*1.80/2.9/41.
59, 71,89, 89,88,      96.*.09*4.00/1.8/41.
60, 89,60, 89,81,      96.*.09*0.90/2.0/41.
61, 65,72,             96.*.09*2.40/1.3/41.
62, 66,73, 67,74,      96.*.09*1.80/0.5/41.
63, 68,75, 69,76,      96.*.09*1.80/0.5/41.
GEN 64,5,0 ,84,1,72,1, 96.,.09,.65,2.7*41.
GEN 65,4,0 ,84,1,73,1, 96.,.09,.65,2.7*41.
GEN 66,5,0 ,84,1,90,1, 96.,.09,.65,2.7*41.
GEN 67,4,0 ,84,1,63,1, 96.,.09,.65,2.7*41.
```

```
68, 77,64,               96.*.09*0.6/2.4/41.
69, 82,77, 82,64,        96.*.09*0.8/2.4/41.
70, 82,72, 82,72,        96.*.09*0.8/3.3/41.
71, 70,82,               96.*.09*1.3/1.1/41.
72, 82,83,               96.*.09*3.0/2.6/41.
73, 90,83,               96.*.09*2.7/1.7/41.
74, 83,72,               96.*.09*2.7/3.2/41.
75, 90,91,               96.*.09*1.1/3.7/41.
76, 91,92,92,93,93,94,96.*.09*1.1/1.7/41.
77, 63,91,62,92,60,94,96.*.38*.38/.25/41.
78, 64,90,               96.*.38*.38/.55/41.
79, 61,93,               96.*.38*.38/.25/41.
GEN 80,5,0,40,1,65,1, .625
GEN 81,5,0,50,1,77,1, .625
82, 45,70, 49,71,      .625
ATTACH CHASSIS TO PLATE
GEN 90,4,0,1,1,59,-1, .647
GEN 91,4,0,7,1,60,1,  .647
92, 6,55, 12,64,       .647
101, 121,127, 122,127, 131,137, 132,137, 96.*.09*2.0/2.5/41.
102, 125,127, 126,127, 135,137, 136,137, 96.*.09*2.0/2.5/41.
GEN 103,4,0,122,1,128,0, 96.,.09,3.0,2.5*41.
GEN 104,4,0,132,1,138,0, 96.,.09,3.0,2.5*41.
105, 127,128, 137,138,   96.*.09*3.0/3.1/41.
106, 101,102, 96.*.09*2.76/1.5/41.
107, 102,112, 96.*.09*2.76/2.0/41.
108, 112,103, 96.*.09*2.76/2.0/41.
109, 103,113, 96.*.12*2.10/1.6/41.
110, 113,104, 96.*.12*2.10/1.6/41.
111, 104,116, 96.*.09*2.56/1.4/41.
112, 116,105, 96.*.09*2.56/1.5/41.
113, 105,117, 96.*.09*2.56/1.5/41.
114, 117,106, 96.*.09*2.56/1.5/41.
115, 106,118, 96.*.12*2.56/1.6/41.
116, 118,101, 96.*.12*2.56/0.9/41.
117, 101,107, 96.*.09*1.40/0.2/41.
118, 107,119, 96.*.09*1.10/0.2/41.
119, 108,109, 96.*.09*2.56/0.8/41.
120, 109,102, 96.*.35*2.56/0.3/41.
121, 109,110, 96.*.09*2.56/0.7/41.
122, 119,108, 96.*.09*2.56/0.7/41.
123, 101,119, 96.*.45*1.10/1.0/41.
124, 110,118, 96.*.09*2.50/1.6/41.
125, 110,111, 96.*.09*3.00/2.4/41.
126, 111,116, 96.*.12*2.06/2.6/41.
127, 111,114, 96.*.09*1.00/0.5/41.
128, 116,114, 96.*.09*1.00/0.5/41.
129, 115,104, 96.*.09*1.00/1.0/41.
130, 114,113, 96.*.09*0.80/1.3/41.
131, 114,103, 96.*.09*0.40/2.1/41.
132, 114,115, 96.*.09*1.70/1.7/41.
133, 155,143,  .8*.50*0.75/0.4/41.
134, 153,150,  .8*.40*0.30/0.2/41.
135, 154,152,  .8*.40*0.30/0.2/41.
136, 141,142,  .8*.80*0.6/.12/41.
137, 142,143,  .8*.80*0.6/.12/41.
138, 141,142,  .8*.72    /.60/41.
139, 142,143,  .8*.72    /.60/41.
GEN 140,3,0,141,1,144,1, .8,.9,1.3,.25*41.
GEN 141,3,0,141,1,147,1, .8,.8,0.4,0.1*41.
GEN 142,3,0,141,1,147,1, .8,.5,0.8,0.3*41.
GEN 143,3,0,147,1,150,1, 200.,4.*1.,.005,1.1*41.
144,147;148, 148,149, 150,151, 151,152, 200.*.0019/1./2./41.
GEN 145,6,0,101,1,121,1, .625
```

```
GEN 146,6,0,101,1,131,1, .625
147, 164,115, 165,114, .15
148, 167,107, .53
149, 166,108, .625
150, 153,102, 154,103, 155,108, .625
164, 166,168,             .8*1.5*.7/.7/41.
201, 241,249, 231,236, 341,349, 331,336, 441,449, 531,536
     541,549, 431,436,              0.18*3.31*2.81/0.025/41.
GEN 202,4,0,231,0,232,1,96.,.09,3.0,2.7*41.
GEN 302,4,0,331,0,332,1,96.,.09,3.0,2.7*41.
GEN 402,4,0,431,0,432,1,96.,.09,3.0,2.7*41.
GEN 502,4,0,531,0,532,1,96.,.09,3.0,2.7*41.
GEN 203,4,0,241,0,242,1,96.,.09,3.0,2.7*41.
GEN 303,4,0,341,0,342,1,96.,.09,3.0,2.7*41.
GEN 403,4,0,441,0,442,1,96.,.09,3.0,2.7*41.
GEN 503,4,0,541,0,542,1,96.,.09,3.0,2.7*41.
GEN 204,2,0,246,0,243,1,96.,.09,3.0,2.4*41.
GEN 205,2,0,246,0,247,1,96.,.09,3.0,2.4*41.
GEN 304,2,0,346,0,343,1,96.,.09,3.0,2.4*41.
GEN 305,2,0,346,0,347,1,96.,.09,3.0,2.4*41.
GEN 404,2,0,446,0,443,1,96.,.09,3.0,2.4*41.
GEN 405,2,0,446,0,447,1,96.,.09,3.0,2.4*41.
GEN 504,2,0,546,0,543,1,96.,.09,3.0,2.4*41.
GEN 505,2,0,546,0,547,1,96.,.09,3.0,2.4*41.
GEN 206,4,0,241,100,246,100,96.,.09,4.0,3.6*41.
GEN 207,4,0,261,100,262,100,96.,.04,1.0,.82*41.
GEN 208,4,0,261,100,263,100,96.,.20,.89,.42*41.
GEN 209,4,0,262,100,263,100,96.,.20,.89,.42*41.
GEN 210,4,0,211,0,212,1,200.,.0027,.02,2.5*41.
GEN 310,4,0,311,0,312,1,200.,.0027,.02,2.5*41.
GEN 410,4,0,411,0,412,1,200.,.0027,.02,2.5*41.
GEN 510,4,0,511,0,512,1,200.,.0027,.02,2.5*41.
GEN 211,4,0,221,0,222,1,200.,.0027,.02,2.5*41.
GEN 311,4,0,321,0,322,1,200.,.0027,.02,2.5*41.
GEN 411,4,0,421,0,422,1,200.,.0027,.02,2.5*41.
GEN 511,4,0,521,0,522,1,200.,.0027,.02,2.5*41.
GEN 212,4,0,275,100,278,100,96.,.09,1.66,1.7*41.
GEN 213,4,0,278,100,274,100,96.,.09,1.66,1.7*41.
GEN 214,4,0,272,100,276,100,96.,.09,1.66,1.7*41.
GEN 215,4,0,276,100,273,100,96.,.09,1.66,1.7*41.
GEN 216,4,0,275,100,279,100,96.,.12,1.66,1.7*41.
GEN 217,4,0,279,100,272,100,96.,.12,1.66,1.7*41.
GEN 218,4,0,273,100,280,100,96.,.09,1.66,1.5*41.
GEN 219,4,0,280,100,281,100,96.,.09,1.66,1.5*41.
GEN 220,4,0,281,100,282,100,96.,.09,1.66,1.5*41.
GEN 221,4,0,282,100,283,100,96.,.30,1.66,1.5*41.
GEN 222,4,0,283,100,284,100,96.,.59,1.66,1.4*41.
GEN 223,4,0,284,100,285,100,96.,.09,2.50,1.1*41.
GEN 224,4,0,285,100,274,100,96.,.59,1.66,.60*41.
GEN 225,4,0,274,100,277,100,96.,.06,1.66,1.5*41.
GEN 226,4,0,277,100,273,100,96.,.06,1.66,1.5*41.
GEN 227,4,0,277,100,286,100,96.,.06,2.00,1.5*41.
GEN 228,4,0,274,100,290,100,96.,.06,1.50,1.2*41.
GEN 229,4,0,282,100,288,100,96.,.09,2.00,1.2*41.
GEN 230,4,0,282,100,289,100,96.,.09,1.50,1.6*41.
GEN 231,4,0,289,100,290,100,96.,.09,2.50,1.5*41.
GEN 232,4,0,286,100,287,100,96.,.09,2.30,1.0*41.
GEN 233,4,0,287,100,288,100,96.,.09,2.00,1.1*41.
GEN 234,4,0,286,100,280,100,96.,.09,1.30,1.8*41.
GEN 235,4,0,287,100,280,100,96.,.09,1.40,2.0*41.
GEN 236,4,0,288,100,281,100,96.,.09,1.40,1.8*41.
GEN 237,4,0,290,100,286,100,96.,.09,1.80,1.5*41.
GEN 238,4,0,289,100,288,100,96.,.09,2.00,1.1*41.
GEN 239,4,0,285,100,290,100,96.,.09,1.50,1.0*41.
```

```
GEN 240,4,0,284,100,289,100,96.,.09,1.50,1.0*41.
GEN 241,4,0,222,1,  272,1,.625
GEN 341,4,0,322,1,  372,1,.625
GEN 441,4,0,422,1,  472,1,.625
GEN 541,4,0,522,1,  572,1,.625
GEN 242,4,0,212,1,  272,1,.625
GEN 342,4,0,312,1,  372,1,.625
GEN 442,4,0,412,1,  472,1,.625
GEN 542,4,0,512,1,  572,1,.625
GEN 243,4,0,232,1,  272,1,.647
GEN 343,4,0,332,1,  372,1,.647
GEN 443,4,0,432,1,  472,1,.647
GEN 543,4,0,532,1,  572,1,.647
GEN 244,4,0,242,1,  272,1,.647
GEN 344,4,0,342,1,  372,1,.647
GEN 444,4,0,442,1,  472,1,.647
GEN 544,4,0,542,1,  572,1,.647
GEN 245,2,0,247,1,  281,1,.647
GEN 345,2,0,347,1,  381,1,.647
GEN 445,2,0,447,1,  481,1,.647
GEN 545,2,0,547,1,  581,1,.647
GEN 446,2,0,451,1,  484,1,0.35
GEN 346,2,0,351,1,  384,1,0.35
GEN 246,2,0,251,1,  284,1,0.35
GEN 546,2,0,551,1,  584,1,0.35
GEN 247,2,0,253,1,  261,1,0.15
GEN 347,2,0,353,1,  361,1,0.15
GEN 447,2,0,453,1,  461,1,0.15
GEN 547,2,0,553,1,  561,1,0.15
GEN 248,4,0,263,100,286,100,2.,.625,1.,1.
GEN 249,4,0,257,100,287,100,2.,.625,1.,1.
GEN 250,4,0,258,100,288,100,2.,.625,1.,1.
GEN 251,4,0,255,100,289,100,2.,.625,1.,1.
GEN 252,4,0,256,100,290,100,2.,.625,1.,1.
601, 13,888, 15,888, 18,888, 25,888, 27,888, 30,888, 2.95
602, 36,101, 34,283, 33,383, 32,483, 31,583, 1.25
603, 90,103, 63,275, 62,375, 61,475, 60,575, 1.25
-151, 117,161,             .19*.68*4.55*2.5/144./3.413             $E*F
-152, 161,162,             .66*.68*4.55*2.5/144./3.413
-153, 162,163,             .66*.52*4.55*2.5/144./3.413
-154, 163,110,             .19*1.0*4.55*2.2/144./3.413
-155, 163,168,             .66*1.0*1.50*1.0/144./3.413
-156, 161,127, 161,137,  .19*.20*4.55*2.5/144./3.413
-157, 162,127, 162,137,  .19*.25*4.55*2.5/144./3.413
-158, 163,127, 163,137,  .19*.15*4.55*2.5/144./3.413
-159, 161,118, 161,111,  .19*.10*4.55*2.5/144./3.413
-160, 162,118, 162,111,  .19*.13*4.55*2.5/144./3.413
-161, 163,118, 163,111,  .19*.08*4.55*2.5/144./3.413
GEN -162,3,0,144,1,112,0,.19*1.0,1.,1.,144.*3.413
GEN -163,3,0,150,1,112,0,.19*1.0,1.,.9,144.*3.413
GEN -260,4,0,221,100,211,100, 0.56*.66,3.7,4.4,144.*3.413 $F*E
GEN -261,4,0,221,100,276,100, 0.12*.19,3.7,4.4,144.*3.413
GEN -262,4,0,221,100,277,100, 0.10*.19,3.7,4.4,144.*3.413
GEN -263,4,0,221,100,278,100, 0.12*.19,3.7,4.4,144.*3.413
GEN -264,4,0,221,100,279,100, 0.10*.19,3.7,4.4,144.*3.413
GEN -265,4,0,211,100,276,100, 0.10*.19,3.7,4.4,144.*3.413
GEN -266,4,0,211,100,277,100, 0.12*.19,3.7,4.4,144.*3.413
GEN -267,4,0,211,100,278,100, 0.10*.19,3.7,4.4,144.*3.413
GEN -268,4,0,211,100,279,100, 0.12*.19,3.7,4.4,144.*3.413
GEN -269,4,0,211,100,236,100, 1.00*.66,3.7,4.4,144.*3.413
GEN -270,4,0,221,100,249,100, 1.00*.66,3.7,4.4,144.*3.413
-604,24,888,                    .19*2.75*9.5/144./3.413
GEN -605,4,0,19,1,888,0,        .19,1.75,9.5,144.*3.413
-606, 24,112, 24,102,           .11*2.75*3.5/144.*3.413
```

```
GEN -607,4,0,22,-1,278,100,  .11,1.75,4.0,144.*3.413
GEN -608,4,0,22,-1,285,100,  .11,1.75,4.0,144.*3.413
-609, 83,113,                .11*2.75*4.0/144./3.413
GEN -610,4,0,84,1,279,100,   .11,1.75,4.0,144.*3.413
-611, 128,241, 127,246,      .11*4.00*3.5/144./3.413
GEN -612,3,0,231,100,341,100,      .11,4.00,4.00,144.*3.413
GEN -613,3,0,287,100,346,100,      .11,4.00,4.00,144.*3.413
-614, 72,999,                      .20*2.75*2.59/144./3.413
GEN -615,4,0,73,1,999,0,           .20,1.77,1.59,144.*3.413
-616, 116,999, 117,999,            .20*2.75*3.50/144./3.413
GEN -617,4,0,276,100,999,0,        .20,1.75,4.00,144.*3.413
GEN -618,4,0,280,100,999,0,        .20,1.75,4.00,144.*3.413
GEN -619,3,0,46,1,888,0,        .2*.19,3.28,4.00,144.*3.413
GEN -620,3,0,46,1,999,0,        .8*.19,3.28,4.00,144.*3.413
-621, 82,888,                  .18*.19*2.41*4.00/144./3.413
-622, 82,999,                  .82*.19*2.41*4.00/144./3.413
-623, 89,888,                  .14*.19*1.41*4.00/144./3.413
-624, 89,999,                  .86*.19*1.41*4.00/144./3.413
-625, 138,888, 137,888,        .21*.19*3.50*4.00/144./3.413
-626, 138,999, 137,999,        .79*.19*3.50*4.00/144./3.413
-627, 531,888, 587,888,        .22*.19*4.00*4.00/144./3.413
-628, 531,999, 587,999,        .78*.19*4.00*4.00/144./3.413
-629, 118,888,                 .19*.19*2.75*4.00/144./3.413
-630, 118,999,                 .81*.19*2.75*4.00/144./3.413
GEN -631,4,0,282,100,868,0,    .15*.19,1.75,4.00,144.*3.413
GEN -632,4,0,282,100,999,0,    .85*.19,1.75,4.00,144.*3.413
END
```

APPENDIX C

Temperature Summary

UNIT – P.S. – HUNTSVILLE
INPUT MODULE A1

MAX. AV. BD. TEMP °C (°F)
RUN
NODE

AVERAGED BD DISSIP — 8.215
HEAT SUNK DISSIP —
TOTAL DISSIPATION — 23.755

					PREDICTED TEMPERATURE (°C)				
					HOT AMBIENT		COLD AMBIENT		
PART TYPE	REF DES	NODE NO.	AMBIENT SINK OR JUNCTION TEMP	HEAT DISSIP (WATTS)	CHASSIS IRIDITE	ANODIZE	IRIDITE	ANODIZE	
BOARD	A1	161	AMB	2.046	163	90	152	69	
BOARD	A2	162	AMB	2.046	171	100	161	81	
BOARD	A4	163	AMB	4.123	173	106	163	87	
FILTER	FL1	164	CASE	1.6	60	56	31	23	
FILTER	FL2	165		1.6	58	55	29	22	
XFORMER	T1	166		0.6	52	48	23	17	
2N4900	Q1	167		7.9	58	56	30	25	WITH GREASE
INPUT FILTER	A5	—		(TOTAL 3.84)					
CHOKE	L3	141		1.2	107	95	79	66	
"	L2	142		1.2	106	94	78	65	
"	L1	143		1.2	99	88	71	59	
CAPS	C1 – C4	147		.08	102	90	74	61	
"		148		.08	104	92	77	63	
"		149	CASE	.08	95	84	67	55	

HIGH POWER PARTS ON PC BOARDS

BD A1, A2		
K1 & K2		.6
BD. A4		
2N 5682	Q2	.393
2N 5680	Q5	.425
"	Q7	.425
RWR 89	R4	.64
RCR 07	R14	.342

81-3388-036

UNIT – P.S. – HUNTSVILLE
O/R MODULE A2 +5V

MAX. AV. BD. TEMP °C (°F)
RUN
NODE

AVERAGED BD DISSIP — 3.031
HEAT SUNK DISSIP —
TOTAL DISSIPATION — 13.721

							PREDICTED TEMPERATURE (°C)						
							HOT AMBIENT		COLD AMBIENT				
PART TYPE	REF DES	NODE NO.	AMBIENT SINK OR JUNCTION TEMP	HEAT DISSIP (WATTS)			CHASSIS IRIDITE	ANODIZE	IRIDITE	ANODIZE			
BOARD	A1	211	AMB	2.173			77	70	55	46			
BOARD	A2	221	AMB	.858			68	62	44	35			
	Q1	252	CASE	2.56			54	53	26	22		No Grease	
	Q2	251		2.56			52	51	24	20		" "	
	T1	256		.075			51	49	22	18			
	T2	255		.075			50	48	21	17			
	T3	257		1.4			53	52	25	20			
	L1	258		.6			51	49	22	18			
	CR1	253		1.7			62	61	34	29			
	CR2	254	CASE	1.7			62	61	34	29			
	R1	284	AMB	.01			48	47	19	16			
	R2	285	AMB	.01			51	48	22	18			
HIGH POWER PARTS ON PC BOARDS													
BOARD A2													
REF MODULE	U5			.35									

UNIT – P.S. – HUNTSVILLE
O/R MODULE .A3

± 15V

AVERAGED BD DISSIP	— 3.129
HEAT SUNK DISSIP	—
TOTAL DISSIPATION	— 21.099

MAX. AV. BD. TEMP °C (°F)
RUN
NODE

							PREDICTED TEMPERATURE (°C) HOT AMBIENT		PREDICTED TEMPERATURE (°C) COLD AMBIENT				
PART TYPE	REF DES	NODE NO.	AMBIENT SINK OR JUNCTION TEMP	HEAT DISSIP (WATTS)			CHASSIS IRIDITE	ANODIZE	IRIDITE	ANODIZE			
BOARD	A1	311	AMB	2.173			80	73	58	48			
BOARD	A2	321	AMB	.956			72	65	48	39			
	Q1	352	CASE	4.65			63	61	34	30		NO GREASE	
	Q2	351	|	4.65			59	57	31	27		" "	
	T1	356	|	.15			56	54	28	23			
	T2	355	|	.15			54	52	26	22			
	T3	357	|	1.8			59	57	31	26			
	L1	358	|	.95			56	53	27	23			
	CR1	353	|	2.8			74	72	46	41			
	CR2	354	CASE	2.8			74	72	46	41			
	R1	384	AMB	.01			52	50	23	20			
	R2	385	AMB	.01			55	53	27	23			
HIGH POWER PARTS ON PC BOARDS													
BOARD A2													
REF MODULE	U5			.35									

81-3388-036

UNIT – P.S. – HUNTSVILLE
O/R MODULE A4 ± 15V

MAX. AV. BD. TEMP °C (°F)
RUN
NODE

AVERAGED BD DISSIP — 3.129
HEAT SUNK DISSIP —
TOTAL DISSIPATION — 21.099

							PREDICTED TEMPERATURE (°C)						
							HOT AMBIENT		COLD AMBIENT				
PART TYPE	REF DES	NODE NO.	AMBIENT SINK OR JUNCTION TEMP	HEAT DISSIP (WATTS)			CHASSIS IRIDITE	ANODIZE	IRIDITE	ANODIZE			
BOARD	A1	411	AMB	2.173			80	73	58	49			
BOARD	A2	421	AMB	.956			72	66	49	39			
	Q1	452	CASE	4.65			63	61	35	31		NO GREASE	
	Q2	451		4.65			60	58	32	28		" "	
	T1	456		.15			57	54	28	24			
	T2	455		.15			55	53	27	22			
	T3	457		1.8			61	57	32	26			
	L1	458		.95			57	54	28	23			
	CR1	453		2.8			76	73	47	42			
	CR2	454	CASE	2.8			76	73	47	42			
	R1	484	AMB	.01			53	51	24	20			
	R2	485	AMB	.01			56	54	27	23			
HIGH POWER PARTS ON PC BOARDS													
BOARD A2													
REF MODULE	U5			.35									

81-3388-036

UNIT – P.S. – HUNTSVILLE
O/R MODULE A5

+28V

AVERAGED BD DISSIP — 3.159
HEAT SUNK DISSIP —
TOTAL DISSIPATION — 18.699

.MAX. AV. BD. TEMP °C (°F)
RUN
NODE

					PREDICTED TEMPERATURE (°C)				
					HOT AMBIENT		COLD AMBIENT		
PART TYPE	REF DES	NODE No.	AMBIENT SINK OR JUNCTION TEMP	HEAT DISSIP (WATTS)	CHASSIS IRIDITE	ANODIZE	IRIDITE	ANODIZE	
BOARD	A1	511	AMB	2.173	78	70	56	44	
BOARD	A2	521	AMB	.986	70	63	46	35	
2N3716	Q1	552	CASE	4.7	60	57	31	25	NO GREASE
"	Q2	551		4.7	57	55	28	24	" "
	T1	556		.16	53	50	24	17	
	T2	555		.16	52	49	22	17	
	T3	557		1.8	55	51	26	17	
	L1	558		1.0	53	49	23	17	
	CR1	553		1.5	63	59	33	26	
	CR2	554	CASE	1.5	63	59	33	26	
	R1	584	AMB	.01	50	48	21	16	
	R2	585	AMB.	.01	53	50	23	18	
HIGH POWER PARTS ON PC BOARDS									
BOARD A2									
REF MODULE	U5			.35					

APPENDIX D

Temperatures
Hot Environment
Low Emissivity Modules

```
                                                                              ARITHME
   T      1=   98.7146        T      2=   100.496        T      3=   99.8009
   T      7=   97.9333        T      8=   101.223        T      9=   99.2810
   T     13=   93.7576        T     14=   98.8896        T     15=   94.6398
   T     19=   96.7082        T     20=   98.7773        T     21=   97.8561
   T     25=   96.0551        T     26=   103.582        T     27=   97.0041
   T     31=   107.904        T     32=   110.581        T     33=   109.069
   T     40=   102.210        T     41=   101.116        T     42=   100.769
   T     46=   100.881        T     47=   100.320        T     48=   100.303
   T     52=   100.236        T     53=   100.187        T     54=   100.168
   T     58=   100.249        T     59=   99.5379        T     60=   107.039
   T     64=   103.907        T     65=   102.534        T     66=   101.150
   T     70=   102.353        T     71=   101.234        T     72=   103.058
   T     76=   100.993        T     77=   100.609        T     78=   100.248
```

```
TIC NODES
   T      4=   100.398        T      5=   98.7995        T      6=   98.3678
   T     10=   101.017        T     11=   98.1854        T     12=   96.8121
   T     16=   99.2746        T     17=   96.8160        T     18=   93.4675
   T     22=   99.2737        T     23=   98.3888        T     24=   96.3586
   T     28=   103.528        T     29=   100.681        T     30=   95.9789
   T     34=   108.647        T     35=   106.400        T     36=   107.059
   T     43=   100.740        T     44=   100.906        T     45=   101.870
   T     49=   100.876        T     50=   100.938        T     51=   100.436
   T     55=   99.5881        T     56=   100.302        T     57=   100.012
   T     61=   110.846        T     62=   109.683        T     63=   108.550
   T     67=   100.886        T     68=   100.884        T     69=   100.964
   T     73=   100.974        T     74=   100.986        T     75=   100.993
   T     79=   100.184        T     80=   100.141        T     81=   99.9047
```

```
DATE 12/17/74 TIME 11.51.28. MARTIN MARIETTA THERMAL ANALYZER S

   POWER SUPPLY - HUNTSVILLE

 T    82=   103.869       T    83=   107.195       T    84=   106.161
 T    88=   102.265       T    89=   101.877       T    90=   111.678
 T    94=   107.163       T   101=   118.326       T   102=   121.888
 T   106=   122.927       T   107=   122.477       T   108=   122.575
 T   112=   118.865       T   113=   121.324       T   114=   126.797
 T   118=   121.137       T   119=   120.944       T   121=   119.427
 T   125=   123.416       T   126=   123.050       T   127=   123.509
 T   133=   118.397       T   134=   123.158       T   135=   123.208
 T   141=   224.880       T   142=   222.082       T   143=   210.464
 T   147=   215.324       T   148=   219.403       T   149=   203.001
 T   153=   123.410       T   154=   118.489       T   155=   119.734
 T   164=   139.744       T   165=   137.463       T   166=   125.043
 T   212=   119.223       T   213=   122.174       T   214=   122.326
 T   223=   122.171       T   224=   122.323       T   225=   112.501
 T   234=   122.078       T   235=   114.865       T   236=   122.399
 T   244=   121.648       T   245=   114.640       T   246=   120.961
 T   251=   125.862       T   252=   129.879       T   253=   144.446
 T   257=   128.355       T   258=   123.452       T   261=   133.112
 T   273=   122.165       T   274=   122.318       T   275=   112.494
 T   279=   115.994       T   280=   124.047       T   281=   121.652
 T   285=   122.565       T   286=   128.679       T   287=   127.235
 T   311=   175.866       T   312=   124.815       T   313=   129.612
 T   322=   124.812       T   323=   129.610       T   324=   130.757
 T   333=   129.043       T   334=   129.885       T   335=   118.549
 T   343=   128.672       T   344=   129.321       T   345=   118.383
 T   349=   127.541       T   351=   138.437       T   352=   144.596
 T   356=   132.989       T   357=   139.180       T   358=   132.247
 T   372=   124.806       T   373=   129.604       T   374=   130.752
 T   378=   123.139       T   379=   120.187       T   380=   132.975
 T   384=   125.152       T   385=   131.310       T   386=   140.509
 T   390=   132.869       T   411=   176.867       T   412=   126.078
 T   421=   162.151       T   422=   126.076       T   423=   130.922
 T   432=   126.774       T   433=   130.333       T   434=   131.201
 T   442=   126.652       T   443=   130.023       T   444=   130.691
 T   448=   127.460       T   449=   128.936       T   451=   139.866
 T   455=   130.921       T   456=   134.353       T   457=   140.507
 T   463=   146.314       T   472=   126.073       T   473=   130.920
 T   477=   135.546       T   478=   124.414       T   479=   121.419
 T   483=   121.141       T   484=   126.580       T   485=   132.668
 T   489=   130.799       T   490=   134.232       T   511=   172.163
 T   515=   112.022       T   521=   157.619       T   522=   120.276
 T   531=   122.444       T   532=   120.848       T   533=   123.627
 T   541=   122.386       T   542=   120.832       T   543=   123.538
 T   547=   123.809       T   548=   121.725       T   549=   123.071
 T   554=   144.872       T   555=   124.607       T   556=   127.080
 T   562=   134.872       T   563=   133.361       T   572=   120.270
 T   576=   121.965       T   577=   127.396       T   578=   119.087
 T   582=   121.089       T   583=   116.865       T   584=   121.698
 T   588=   125.837       T   589=   124.479       T   590=   126.952
                                                                HEATER
                                                                    ++
                                                               BOUNDAR

 T   888=   90.0000       T   999=   71.6000       T
```

```
YSTEM (MITAS II-FD363) CDC6000 SCOPE3.4 VERSION  PAGE    3


 T    85=  103.778      T    86=  103.668      T    87=  103.462
 T    91=  108.598      T    92=  109.455      T    93=  110.210
 T   103=  117.079      T   104=  123.766      T   105=  123.910
 T   109=  122.152      T   110=  124.179      T   111=  126.314
 T   115=  129.078      T   116=  124.952      T   117=  124.949
 T   122=  122.208      T   123=  118.535      T   124=  123.296
 T   128=  122.134      T   131=  119.305      T   132=  122.000
 T   136=  122.929      T   137=  122.936      T   138=  121.655
 T   144=  224.107      T   145=  221.335      T   146=  209.820
 T   150=  204.679      T   151=  216.902      T   152=  193.795
 T   161=  325.678      T   162=  339.813      T   163=  344.484
 T   167=  137.383      T   168=  157.254      T   211=  170.415
 T   215=  112.503      T   221=  153.809      T   222=  119.220
 T   231=  121.417      T   232=  119.800      T   233=  121.967
 T   241=  120.571      T   242=  119.575      T   243=  121.562
 T   247=  121.452      T   248=  119.487      T   249=  121.208
 T   254=  144.446      T   255=  121.515      T   256=  123.709
 T   262=  133.112      T   263=  131.399      T   272=  119.215
 T   276=  120.496      T   277=  124.822      T   278=  117.537
 T   282=  118.887      T   283=  115.243      T   284=  118.548
 T   288=  122.972      T   289=  121.455      T   290=  123.649
 T   314=  130.759      T   315=  115.324      T   321=  160.993
 T   325=  115.321      T   331=  127.491      T   332=  125.520
 T   336=  128.488      T   341=  126.865      T   342=  125.353
 T   346=  127.989      T   347=  128.941      T   348=  126.036
 T   353=  166.477      T   354=  166.477      T   355=  129.523
 T   361=  147.811      T   362=  147.811      T   363=  144.989
 T   375=  115.313      T   376=  126.957      T   377=  134.214
 T   381=  129.329      T   382=  125.241      T   383=  119.686
 T   387=  137.740      T   388=  131.487      T   389=  129.403
 T   413=  130.924      T   414=  132.106      T   415=  116.527
 T   424=  132.104      T   425=  116.525      T   431=  128.722
 T   435=  119.760      T   436=  129.719      T   441=  128.261
 T   445=  119.638      T   446=  129.413      T   447=  130.344
 T   452=  145.952      T   453=  167.797      T   454=  167.797
 T   458=  133.630      T   461=  149.132      T   462=  149.132
 T   474=  132.101      T   475=  116.519      T   476=  128.236
 T   480=  134.312      T   481=  130.721      T   482=  126.662
 T   486=  141.840      T   487=  139.062      T   488=  132.869
 T   512=  120.279      T   513=  124.064      T   514=  125.928
 T   523=  124.061      T   524=  125.926      T   525=  112.020
 T   534=  124.996      T   535=  114.784      T   536=  123.447
 T   544=  124.592      T   545=  114.769      T   546=  123.291
 T   551=  135.127      T   552=  139.989      T   553=  144.872
 T   557=  131.157      T   558=  126.637      T   561=  134.872
 T   573=  124.056      T   574=  125.921      T   575=  112.012
 T   579=  116.280      T   580=  126.263      T   581=  124.021
 T   585=  126.560      T   586=  130.961      T   587=  129.717
 T
 NODES
NONE++
Y NODES
```

APPENDIX E

Temperatures
Cold Environment
Low Emissivity Modules

```
                                                                          ARITHME
   T     1=   47.8370      T     2=   49.6195      T     3=   48.9874
   T     7=   47.2379      T     8=   50.4587      T     9=   48.6567
   T    13=   43.4577      T    14=   48.2929      T    15=   44.3283
   T    19=   46.3049      T    20=   48.2766      T    21=   47.3949
   T    25=   45.7500      T    26=   52.9771      T    27=   46.6937
   T    31=   56.9968      T    32=   59.7180      T    33=   58.2939
   T    40=   49.9114      T    41=   48.7828      T    42=   48.4263
   T    46=   47.9679      T    47=   47.5795      T    48=   47.7418
   T    52=   48.4587      T    53=   48.5198      T    54=   48.6049
   T    58=   49.1222      T    59=   48.3210      T    60=   55.6106
   T    64=   52.6205      T    65=   50.2102      T    66=   48.9376
   T    70=   50.1275      T    71=   49.2534      T    72=   50.6203
   T    76=   48.8621      T    77=   48.9690      T    78=   48.5845
```

```
TIC NODES
   T     4=   49.4663      T     5=   47.9466      T     6=   47.3823
   T    10=   50.1792      T    11=   47.4498      T    12=   46.1403
   T    16=   48.5884      T    17=   46.2631      T    18=   43.1354
   T    22=   48.6901      T    23=   47.7981      T    24=   45.7098
   T    28=   52.8603      T    29=   50.1120      T    30=   45.6341
   T    34=   57.7789      T    35=   55.5760      T    36=   56.1514
   T    43=   48.4665      T    44=   48.8063      T    45=   49.6747
   T    49=   48.8960      T    50=   49.0779      T    51=   48.4942
   T    55=   48.2441      T    56=   49.0988      T    57=   48.9452
   T    61=   59.7420      T    62=   58.6843      T    63=   57.3560
   T    67=   48.6632      T    68=   48.6887      T    69=   48.8489
   T    73=   48.8472      T    74=   48.8566      T    75=   48.8616
   T    79=   48.7632      T    80=   48.8012      T    81=   48.5140
```

```
DATE 12/17/74 TIME 11.58.27. MARTIN MARIETTA THERMAL ANALYZER

   POWER SUPPLY - HUNTSVILLE

  T    82=   51.4674       T    83=   55.0623       T    84=   54.2645
  T    88=   50.2821       T    89=   49.8480       T    90=   59.9311
  T    94=   55.7404       T   101=   66.7996       T   102=   70.1331
  T   106=   70.5220       T   107=   70.9353       T   108=   70.9317
  T   112=   67.2577       T   113=   69.1394       T   114=   74.3520
  T   118=   69.1156       T   119=   69.3825       T   121=   67.7805
  T   125=   70.9955       T   126=   70.7122       T   127=   71.4173
  T   133=   66.2929       T   134=   70.6761       T   135=   70.5739
  T   141=   175.130       T   142=   172.270       T   143=   160.395
  T   147=   165.478       T   148=   169.658       T   149=   152.863
  T   153=   71.6886       T   154=   66.6315       T   155=   67.8975
  T   164=   87.3120       T   165=   85.0186       T   166=   73.4277
  T   212=   67.4327       T   213=   70.3329       T   214=   70.8540
  T   223=   70.3294       T   224=   70.8506       T   225=   61.1814
  T   234=   70.5715       T   235=   63.4705       T   236=   70.8005
  T   244=   70.1068       T   245=   63.2350       T   246=   69.3293
  T   251=   74.5818       T   252=   78.4246       T   253=   92.7424
  T   257=   76.6586       T   258=   71.8797       T   261=   81.4288
  T   273=   70.3206       T   274=   70.8436       T   275=   61.1704
  T   279=   64.4426       T   280=   72.0368       T   281=   69.9602
  T   285=   71.1107       T   286=   76.9895       T   287=   75.5407
  T   311=   136.634       T   312=   73.2627       T   313=   77.9697
  T   322=   73.2597       T   323=   77.9666       T   324=   79.4621
  T   333=   77.4605       T   334=   78.5588       T   335=   67.3471
  T   343=   77.1266       T   344=   77.9721       T   345=   67.1846
  T   349=   76.1430       T   351=   87.3040       T   352=   93.3175
  T   356=   81.6463       T   357=   87.6815       T   358=   80.8439
  T   372=   73.2535       T   373=   77.9604       T   374=   79.4560
  T   378=   71.9538       T   379=   68.8542       T   380=   81.1676
  T   384=   74.0186       T   385=   80.0321       T   386=   89.0074
  T   390=   81.5265       T   411=   137.495       T   412=   74.4435
  T   421=   119.538       T   422=   74.4405       T   423=   79.1932
  T   432=   75.1767       T   433=   78.6670       T   434=   79.7902
  T   442=   75.0355       T   443=   78.3718       T   444=   79.2364
  T   448=   75.9769       T   449=   77.3740       T   451=   88.6398
  T   455=   79.5118       T   456=   82.9169       T   457=   88.9083
  T   463=   94.7293       T   472=   74.4331       T   473=   79.1865
  T   477=   83.9807       T   478=   73.1335       T   479=   69.9912
  T   483=   69.9916       T   484=   75.3543       T   485=   81.3007
  T   489=   79.3920       T   490=   82.7971       T   511=   132.380
  T   515=   60.2546       T   521=   114.740       T   522=   67.6901
  T   531=   69.6325       T   532=   68.2004       T   533=   70.8534
  T   541=   70.0415       T   542=   68.3091       T   543=   70.9507
  T   547=   71.3623       T   548=   69.5513       T   549=   70.7231
  T   554=   92.1282       T   555=   72.4466       T   556=   74.7828
  T   562=   82.1306       T   563=   80.6180       T   572=   67.6821
  T   576=   68.7909       T   577=   74.8201       T   578=   67.1264
  T   582=   68.9972       T   583=   65.3371       T   584=   69.9648
  T   588=   73.4141       T   589=   72.3186       T   590=   74.6537
                                                                  HEATE
                                                                      +
                                                                 BOUNDA

  T   888=   40.0000       T   999= -279.000       T
```

```
 T   85=  52.0506     T   86=  51.7177     T   87=  51.5221
 T   91=  57.3772     T   92=  58.3975     T   93=  59.0581
 T  103=  65.1902     T  104=  71.3469     T  105=  71.2879
 T  109=  70.3887     T  110=  72.2330     T  111=  73.9588
 T  115=  76.6454     T  116=  72.2801     T  117=  72.0461
 T  122=  70.3057     T  123=  66.5732     T  124=  70.9564
 T  128=  69.9918     T  131=  67.5347     T  132=  69.8841
 T  136=  70.4664     T  137=  70.2604     T  138=  69.0184
 T  144=  174.516     T  145=  171.677     T  146=  159.886
 T  150=  154.731     T  151=  167.247     T  152=  143.572
 T  161=  305.956     T  162=  321.110     T  163=  325.903
 T  167=  85.8409     T  168=  106.226     T  211=  131.322
 T  215=  61.1848     T  221=  111.081     T  222=  67.4293
 T  231=  69.8191     T  232=  68.0589     T  233=  70.1888
 T  241=  68.9327     T  242=  67.8234     T  243=  69.8122
 T  247=  69.7779     T  248=  67.9425     T  249=  69.5671
 T  254=  92.7424     T  255=  70.0361     T  256=  72.1985
 T  262=  81.4306     T  263=  79.7117     T  272=  67.4307
 T  276=  68.1730     T  277=  73.1515     T  278=  66.1565
 T  282=  67.3775     T  283=  64.0550     T  284=  67.2691
 T  288=  71.3967     T  289=  69.9800     T  290=  72.1348
 T  314=  79.4651     T  315=  64.1985     T  321=  118.576
 T  325=  64.1955     T  331=  76.0810     T  332=  74.0038
 T  336=  77.0769     T  341=  75.4694     T  342=  73.8412
 T  346=  76.5576     T  347=  77.4533     T  348=  74.6627
 T  353=  114.975     T  354=  114.975     T  355=  78.2149
 T  361=  96.3085     T  362=  96.3085     T  363=  93.4873
 T  375=  64.1865     T  376=  74.8631     T  377=  82.7384
 T  381=  77.8186     T  382=  73.8918     T  383=  68.6290
 T  387=  86.2416     T  388=  80.0844     T  389=  78.0943
 T  413=  79.1962     T  414=  80.7256     T  415=  65.2994
 T  424=  80.7226     T  425=  65.2964     T  431=  77.2319
 T  435=  68.4613     T  436=  78.2282     T  441=  76.7007
 T  445=  68.3201     T  446=  77.8565     T  447=  78.7446
 T  452=  94.5864     T  453=  116.218     T  454=  116.218
 T  458=  82.1264     T  461=  97.5510     T  462=  97.5510
 T  474=  80.7162     T  475=  65.2886     T  476=  76.0574
 T  480=  82.4108     T  481=  79.1053     T  482=  75.2119
 T  486=  90.2495     T  487=  87.4685     T  488=  81.3661
 T  512=  67.6931     T  513=  71.3055     T  514=  73.7288
 T  523=  71.3025     T  524=  73.7259     T  525=  60.2516
 T  534=  72.6331     T  535=  62.7376     T  536=  70.6363
 T  544=  72.3208     T  545=  62.8463     T  546=  70.9129
 T  551=  83.3932     T  552=  87.8328     T  553=  92.1281
 T  557=  78.1883     T  558=  74.2139     T  561=  82.1304
 T  573=  71.2960     T  574=  73.7196     T  575=  60.2423
 T  579=  64.1063     T  580=  73.2891     T  581=  71.5455
 T  585=  74.4050     T  586=  78.2180     T  587=  76.7487
 T
R NODES
+NONE++
RY NODES
```

Appendix B

Thermal Analysis, Redesigned Power Supply

FOREWORD

This report summarizes the technical analysis performed and includes sketches, curves, and tabulated data necessary to describe predicted operating temperatures of critical parts within the NASA Power Supply, 28956050.

MARTIN MARIETTA CORPORATION

THERMAL ANALYSIS
FOR THE
NASA POWER SUPPLY

28956050

OCTOBER 1, 1975

PREPARED BY:

W H M'Candliss

W. H. McCandliss
Product Development Technology
Electronics Department

APPROVED BY:

W. T. Perreault
Product Development Technology
Electronics Department

TABLE OF CONTENTS

1.0 SUMMARY

1.1 Purpose - This report documents the thermal analysis performed on the NASA Power Supply Assembly, 28956050.

1.2 Scope - This report contains results of the analyses conducted to determine the thermal characteristics of the 28956050 Power Supply in Space Tug. This Power Supply is a re-packaging design of the Output (O/R) Modules and base plate for another NASA Power Supply Assembly, 21002. The re-design incorporates heat pipes in the O/R Modules, but did not include them in the Input Module. This was done so that comparisons could be made between this analysis and a test model that was to be built.

1.3 Results - A summary of part temperatures for the Input Module and for the O/R Modules is contained in Appendix D. This includes temperature results for the redesigned O/R Modules both with the heat pipes operating, and with them inoperative. The environment in both cases is the application hot ambient.

All temperatures in the O/R Modules are acceptable. Some temperatures in the Input Module are excessive. These would be reduced somewhat by taking power out of the math model that was included as failure mode in 4 relays.

1.4 Power Dissipation - Total power dissipation is 95.973 watts. A breakdown of dissipations used in the thermal model is included in Appendix D. Listed below are the total dissipations for the individual modules.

Input Module	A1	23.755 Watts
O/R Module (+5V)	A2	13.121 Watts
O/R Module (±15V)	A3	20.499 Watts
O/R Module (±15V)	A4	20.499 Watts
O/R Module (+28V)	A5	18.099 Watts

1.5 Environment - The temperatures for the environment were taken from a study that was reported in Space Tug Thermal Control, document number MCR74147 (Contract NAS 8-2960), September 1974. The system thermal control that was used in this study included isothermal panels with heat pipes and thermal control shutters. The power supply mounts on an isothermal panel.

Maximum temperatures occur while Tug is still inside Shuttle, preparing to be unloaded. Minimum temperatures occur about 30 hours later. The extreme temperatures are:

Isothermal panel: 4.44°C to 32.2°C
Radiation Environment: -173°C to 22°C

For the analyses, the radiation environment was changed to 26.7°C to make it compatible with a vacuum test chamber.

1.6 Thermal Model - In order to solve for internal temperatures within the several modules, a 372 mode math model was generated to mathematically duplicate the physical relationships in terms of conductance, surface finish, view factor, and internal heat generated. See Appendix A for sketches of the Nodal Breakdown and see Appendix B for a description of the Conductors. Appendix C contains program control and power dissipation data.

The following information illustrates how the conductance parameters were programmed.

Solid Conduction

```
20,      8,9,          96.  *  .375  *  0.9/2.8/41.
Node     Node          KTW/L/C
#       Linkages
```

Where: K = Thermal Conductivity (BTU-Ft/Ft^2-Hr-F^o)
T = Thickness (in)
W = Width (in)
L = Path Length (in)
C = Conversion Factor (BTU-Ft/Hr to Watt-in)

Clamped Joint Conduction

```
149, 166,   108,     .625
                      G
```

Where: G = Contact Conductance (Watts/^{o}F)

Radiation

```
-151,   117,   161,   .19 * .68 * 4.55 * 2.5/144./3.413
```

$E * F * H * W/C_1/C_2$

Where: E = Emissity
F = View Factor
H = Height (in)
W = Width (in)
C_1 = Conversion factor (in^2 to ft^2)
C_2 = Conversion factor (BTU/Hr to Watts)

NOTE: Sigma = Stephan-Boltzman radiation constant (0.171×10^{-8}) is input as a constant elsewhere in the program.

1.7 Discussion of Results - The current power supply design incorporates heat pipes in all the O/R Modules. The heat pipes provide thermal shunts between the heat sinks for high power parts in the O/R Modules and the mounting plate. Thermal analyses were made both with the heat pipes operating, and with them non-operating. With the heat pipes operating, all I/O Module temperatures are relatively cool. Making the heat pipes inoperative causes significant increases in temperatures, but they are still acceptable. This indicates that more weight could be taken out of the O/R Module housings and still provide good thermal performance. How marginal, thermally, a module might be permitted to become if a heat pipe should fail is a trade-off that would have to be made in deciding how much housing material to remove.

The Input Module does not incorporate a heat pipe in the thermal model, because this is the case in the assembly to be tested. This module showed high predicted temperatures. These would be reduced, somewhat, by turning off the power to 4 relays that represent failure modes. In a re-design effort, however, thermal paths should be provided to maintain acceptable temperatures if these relays are energized.

APPENDIX A

Thermal Model - Nodal Breakdown

NODE PREFIX	MODULE
2XX	— A2 (+5V)
3XX	— A3 (±15V)
4XX	— A4 (±15V)
5XX	— A5 (+28V)

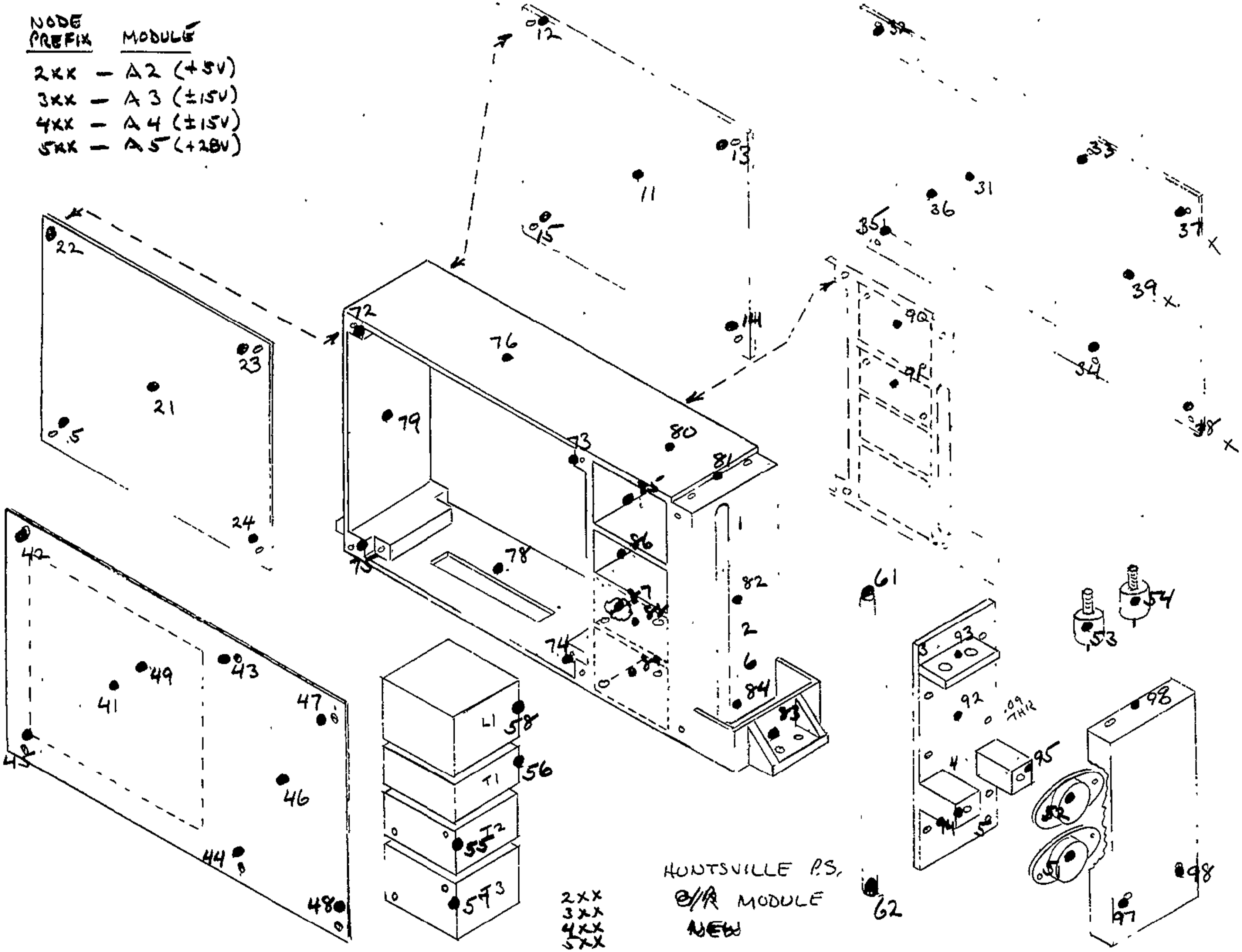

2XX
3XX
4XX
5XX

HUNTSVILLE P.S.
B/A MODULE
NEW

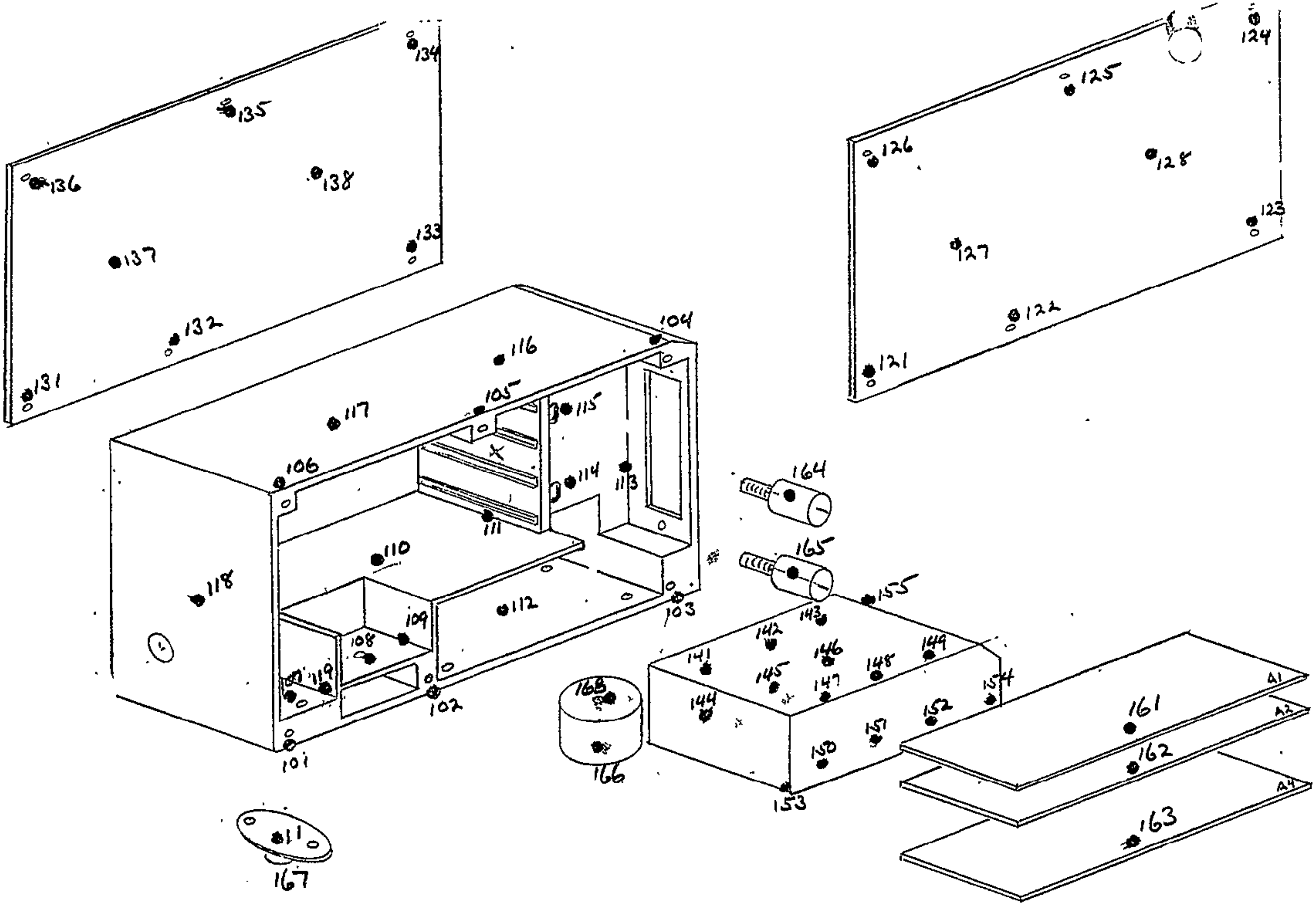

HUNTSVILLE P.S.
INPUT MODULE

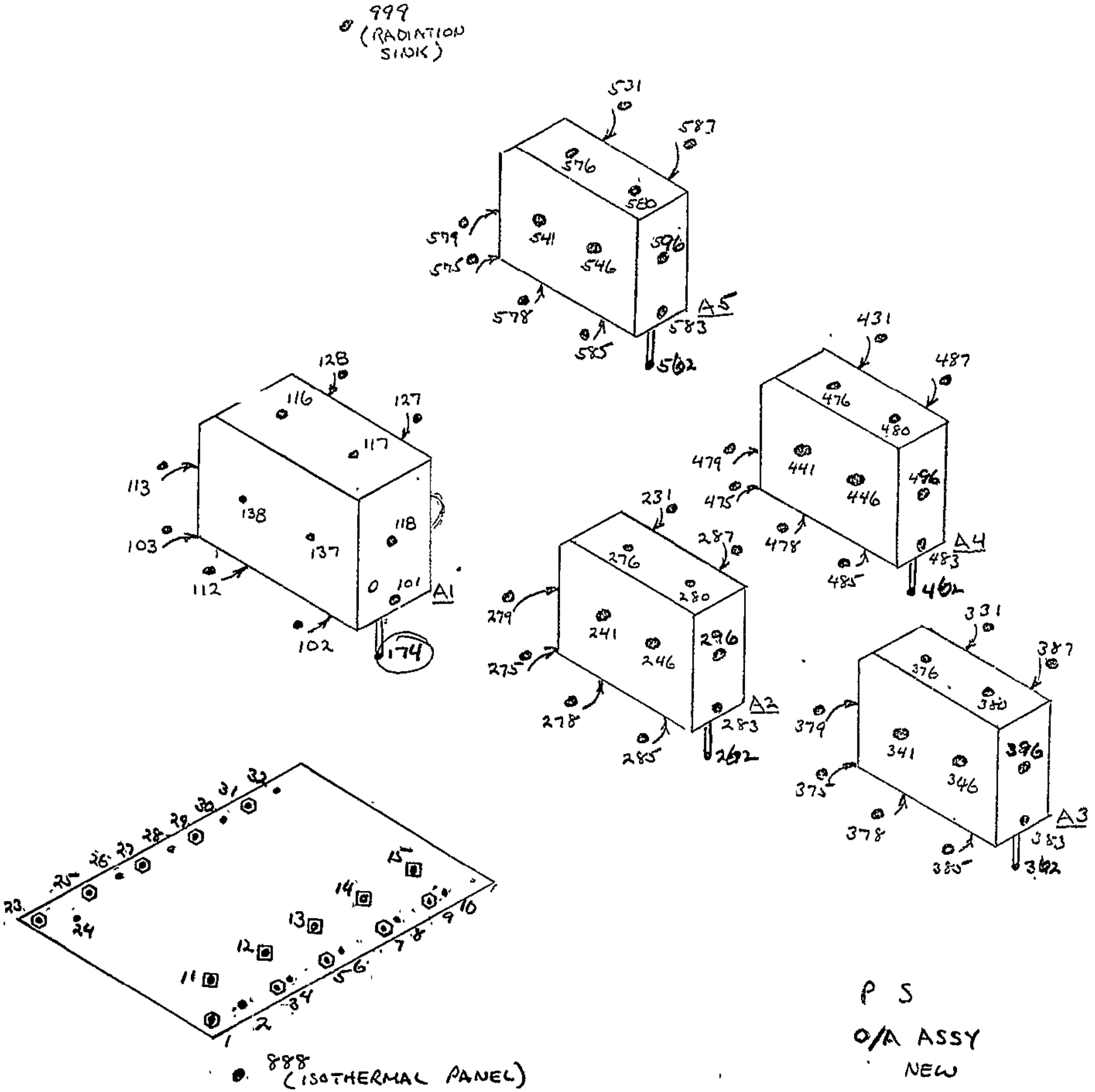

P S

O/A ASSY

NEW

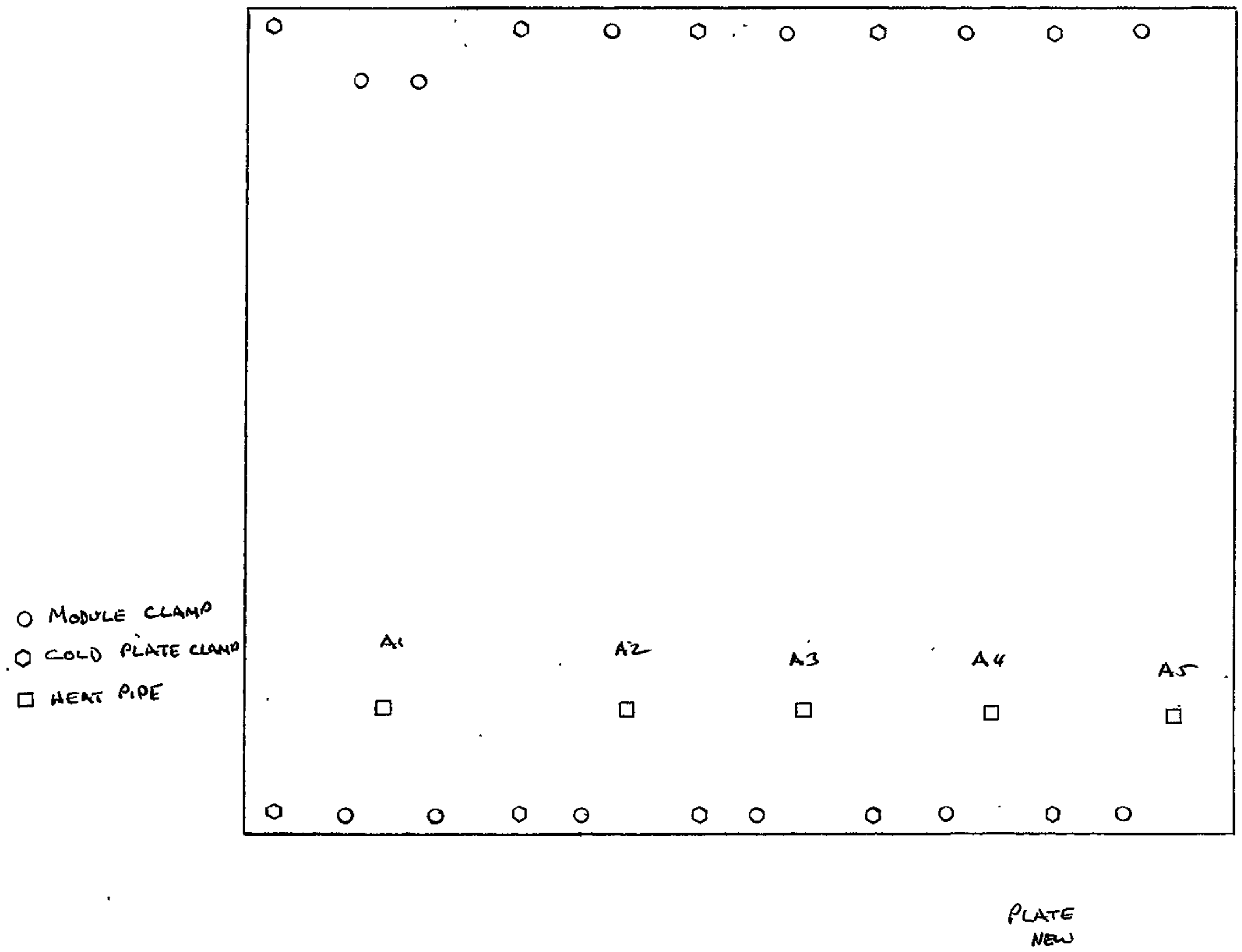
○ MODULE CLAMP
⬡ COLD PLATE CLAMP
□ HEAT PIPE
A1
A2
A3
A4
A5
PLATE
NEW

```
BCD 3CONDUCTOR DATA
GEN  1, 2,0, 1,1, 2,1, 96.,1.00,.06,0.6*41.
GEN  2, 3,0, 4,2, 5,2, 96.,0.60,.06,0.6*41.
GEN  3, 3,0, 5,2,12,1, 96.,1.15,.13,.85*41.
GEN 4,4,0,4,2,12,1,     96.,1.10,.13,.85*41.
GEN  5, 1,0, 2,0,11,0, 96.,1.25,0.6,1.2*41.
GEN  6, 4,0, 3,2, 4,2, 96.,1.20,0.6,0.7*41.
GEN  7, 1,0,11,0,12,0, 96.,1.25,.06,1.4*41.
GEN  8, 3,0,12,1,13,1, 96.,1.22,.06,1.2*41.
GEN  9, 7,0,25,1,26,1, 96.,1.22,.55,0.9*41.
GEN 10, 1,0,16,0,17,0, 96.,6.40,.06,1.9*41.
GEN 11, 1,0,21,0,22,0, 96.,6.40,.06,1.9*41.
GEN 12, 4,0,17,1,18,1, 96.,3.40,.06,1.8*41.
GEN 13, 5,0,11,1,17,1, 96.,2.00,.06,3.2*41.
GEN 14, 4,0,18,1,25,2, 96.,2.00,.06,3.2*41.
GEN 15, 1,0,17,0,24,0, 96.,2.00,.06,2.8*41.
GEN 16, 2,0,23,1,24,1, 96.,1.00,.06,0.3*41.
17, 1,16, 16,23, 15,22, 22,32, 96.*.09*1.22/4.0/41.
101, 121,127, 122,127, 131,137, 132,137, 96.*.09*2.0/2.5/41.
102, 125,127, 126,127, 135,137, 136,137, 96.*.09*2.0/2.5/41.
GEN 103,4,0,122,1,128,0, 96.,.09,3.0,2.5*41.
GEN 104,4,0,132,1,138,0, 96.,.09,3.0,2.5*41.
105, 127,128, 137,138,   96.*.09*3.0/3.1/41.
106, 101,102, 96.*.09*2.76/1.5/41.
107, 102,112, 96.*.09*2.76/2.0/41.
108, 112,103, 96.*.09*2.76/2.0/41.
109, 103,113, 96.*.12*2.10/1.6/41.
110, 113,104, 96.*.12*2.10/1.6/41.
111, 104,116, 96.*.09*2.56/1.4/41.
112, 116,105, 96.*.09*2.56/1.5/41.
113, 105,117, 96.*.09*2.56/1.5/41.
114, 117,106, 96.*.09*2.56/1.5/41.
115, 106,118, 96.*.12*2.56/1.6/41.
116, 118,101, 96.*.12*2.56/0.9/41.
117, 101,107, 96.*.09*1.40/0.2/41.
118, 107,119, 96.*.09*1.10/0.2/41.
119, 108,109, 96.*.09*2.56/0.8/41.
120, 109,102, 96.*.35*2.56/0.3/41.
121, 109,110, 96.*.09*2.56/0.7/41.
122, 119,108, 96.*.09*2.56/0.7/41.
123, 101,119, 96.*.45*1.10/1.0/41.
124, 110,118, 96.*.09*2.50/1.6/41.
125, 110,111, 96.*.09*3.00/2.4/41.
126, 111,116, 96.*.12*2.06/2.6/41.
127, 111,114, 96.*.09*1.00/0.5/41.
128, 116,114, 96.*.09*1.00/0.5/41.
129, 115,104, 96.*.09*1.00/1.0/41.
130, 114,113, 96.*.09*0.80/1.3/41.
131, 114,103, 96.*.09*0.40/2.1/41.
132, 114,115, 96.*.09*1.70/1.7/41.
133, 155,143,  .8*.50*0.75/0.4/41.
134, 153,150,  .8*.40*0.30/0.2/41.
135, 154,152,  .8*.40*0.30/0.2/41.
136, 141,142,  .8*.80*0.6/.12/41.
137, 142,143,  .8*.80*0.6/.12/41.
138, 141,142,  .8*.72    /.60/41.
139, 142,143,  .8*.72    /.60/41.
GEN 140,3,0,141,1,144,1, .8,.9,1.3,.25*41.
GEN 141,3,0,141,1,147,1, .8,.8,0.4,0.1*41.
GEN 142,3,0,141,1,147,1, .8,.5,0.8,0.3*41.
GEN 143,3,0,147,1,150,1, 200.,4.*1.,.005,1.1*41.
144,147,148, 148,149, 150,151, 151,152, 200.*.0019/1./2./41.
GEN 145,6,0,101,1,121,1, .625
```

```
GEN 146,6,0,101,1,131,1, .625
147, 164,115, 165,114, .15
148, 167,107, .53
149, 166,108, .625
150, 153,102, 154,103, 155,103, .625
164, 166,168,            .8*1.5*.7/.7/41.
201, 241,249, 231,236, 341,349, 331,336, 441,449, 531,536
     541,549, 431,436,            0.18*3.31*2.81/0.025/41.
GEN 202,4,0,231,0,232,1,96.,.06,3.0,2.7*41.
GEN 302,4,0,331,0,332,1,96.,.06,3.0,2.7*41.
GEN 402,4,0,431,0,432,1,96.,.06,3.0,2.7*41.
GEN 502,4,0,531,0,532,1,96.,.06,3.0,2.7*41.
GEN 203,4,0,241,0,242,1,96.,.06,3.0,2.7*41.
GEN 303,4,0,341,0,342,1,96.,.06,3.0,2.7*41.
GEN 403,4,0,441,0,442,1,96.,.06,3.0,2.7*41.
GEN 503,4,0,541,0,542,1,96.,.06,3.0,2.7*41.
GEN 204,2,0,246,0,243,1,96.,.06,1.0,2.0*41.
GEN 205,2,0,246,0,247,1,96.,.06,1.0,2.0*41.
GEN 304,2,0,346,0,343,1,96.,.06,1.0,2.0*41.
GEN 305,2,0,346,0,347,1,96.,.06,1.0,2.0*41.
GEN 404,2,0,446,0,443,1,96.,.06,1.0,2.0*41.
GEN 405,2,0,446,0,447,1,96.,.06,1.0,2.0*41.
GEN 504,2,0,546,0,543,1,96.,.06,1.0,2.0*41.
GEN 505,2,0,546,0,547,1,96.,.06,1.0,2.0*41.
GEN 206,4,0,241,100,246,100,96.,.06,4.0,3.2*41.
GEN 207,4,0,231,100,239,100,96.,.06,4.0,3.2*41.
GEN 208,2,0,239,000,233,001,96.,.06,1.0,2.0*41.
GEN 308,2,0,339,000,333,001,96.,.06,1.0,2.0*41.
GEN 408,2,0,439,000,433,001,96.,.06,1.0,2.0*41.
GEN 508,2,0,539,000,533,001,96.,.06,1.0,2.0*41.
GEN 209,2,0,239,000,237,001,96.,.06,1.0,2.0*41.
GEN 309,2,0,339,000,337,001,96.,.06,1.0,2.0*41.
GEN 409,2,0,439,000,437,001,96.,.06,1.0,2.0*41.
GEN 509,2,0,539,000,537,001,96.,.06,1.0,2.0*41.
GEN 210,4,0,211,0,212,1,200.,.0027,.02,2.5*41.
GEN 310,4,0,311,0,312,1,200.,.0027,.02,2.5*41.
GEN 410,4,0,411,0,412,1,200.,.0027,.02,2.5*41.
GEN 510,4,0,511,0,512,1,200.,.0027,.02,2.5*41.
GEN 211,4,0,221,0,222,1,200.,.0027,.02,2.5*41.
GEN 311,4,0,321,0,322,1,200.,.0027,.02,2.5*41.
GEN 411,4,0,421,0,422,1,200.,.0027,.02,2.5*41.
GEN 511,4,0,521,0,522,1,200.,.0027,.02,2.5*41.
GEN 212,4,0,275,100,278,100,96.,.12,1.00,1.7*41.
GEN 213,4,0,278,100,274,100,96.,.12,1.00,1.7*41.
GEN 214,4,0,272,100,276,100,96.,.06,1.66,1.7*41.
GEN 215,4,0,276,100,273,100,96.,.06,1.66,1.7*41.
GEN 216,4,0,275,100,279,100,96.,.06,1.66,1.7*41.
GEN 217,4,0,279,100,272,100,96.,.06,1.66,1.7*41.
GEN 218,4,0,273,100,280,100,96.,.06,1.66,0.8*41.
GEN 219,4,0,280,100,281,100,96.,.06,1.66,0.8*41.
GEN 220,4,0,281,100,201,100,96.,0.4,1.00,1.0*41.
GEN 221,4,0,282,100,202,100,96.,.406,1.0,.65*41.
GEN 222,4,0,274,100,284,100,96.,.06,1.6,1.4*41.
GEN 223,4,0,274,100,287,100,96.,.06,1.6,0.8*41.
GEN 224,4,0,287,100,286,100,96.,.06,1.6,0.8*41.
GEN 225,4,0,286,100,285,100,96.,.06,1.6,0.8*41.
GEN 226,4,0,285,100,273,100,96.,.06,1.6,0.8*41.
GEN 227,4,0,288,100,289,100,96.,.06,1.6,0.8*41.
GEN 228,4,0,290,100,291,100,96.,.06,1.6,0.8*41.
GEN 229,4,0,290,100,280,100,96.,.06,1.6,0.8*41.
GEN 230,4,0,285,100,290,100,96.,.06,1.0,1.5*41.
GEN 231,4,0,286,100,291,100,96.,.05,0.8,1.5*41.
GEN 232,4,0,287,100,288,100,96.,.05,0.8,1.5*41.
GEN 233,4,0,290,100,201,100,96.,.06,1.1,.75*41.
GEN 234,4,0,291,100,282,100,96.,.05,0.8,1.5*41.
GEN 235,4,0,288,100,282,100,96.,.05,0.8,.75*41.
```

```
GEN 236,4,0,289,100,284,100,96.,.05,0.8,.75*41.
GEN 237,4,0,289,100,274,100,96.,.05,0.8,.75*41.
GEN 238,4,0,284,100,283,100,96.,.06,2.8,1.0*41.
GEN 241,4,0,222,1,  272,1,.625
GEN 341,4,0,322,1,  372,1,.625
GEN 441,4,0,422,1,  472,1,.625
GEN 541,4,0,522,1,  572,1,.625
GEN 242,4,0,212,1,  272,1,.625
GEN 342,4,0,312,1,  372,1,.625
GEN 442,4,0,412,1,  472,1,.625
GEN 542,4,0,512,1,  572,1,.625
GEN 243,4,0,232,1,  272,1,.647
GEN 343,4,0,332,1,  372,1,.647
GEN 443,4,0,432,1,  472,1,.647
GEN 543,4,0,532,1,  572,1,.647
GEN 244,4,0,242,1,  272,1,.647
GEN 344,4,0,342,1,  372,1,.647
GEN 444,4,0,442,1,  472,1,.647
GEN 544,4,0,542,1,  572,1,.647
GEN 245,2,0,247,1,  281,3,.647
GEN 345,2,0,347,1,  381,3,.647
GEN 445,2,0,447,1,  481,3,.647
GEN 545,2,0,547,1,  581,3,.647
GEN 246,4,0,252,100,292,100, 0.35
GEN 346,4,0,251,100,205,100, 0.35
GEN 247,2,0,253,1,  293,0,0.15
GEN 347,2,0,353,1,  393,0,0.15
GEN 447,2,0,453,1,  493,0,0.15
GEN 547,2,0,553,1,  593,0,0.15
GEN 249,4,0,257,100,289,100,2.,.625,1.,1.
GEN 250,4,0,258,100,290,100,2.,.625,1.,1.
GEN 251,4,0,255,100,288,100,2.,.625,1.,1.
GEN 252,4,0,256,100,291,100,2.,.625,1.,1.
GEN 271,2,0,237,  1,281,  3, .647
GEN 371,2,0,337,  1,381,  3, .647
GEN 471,2,0,437,  1,481,  3, .647
GEN 571,2,0,537,  1,581,  3, .647
GEN 572,4,0,296,100,297,100,96.,.06,1.5,3.5*41.
GEN 573,4,0,296,100,298,100,96.,.06,1.5,3.5*41.
GEN 574,4,0,297,100,298,100,96.,.09,1.0,1.1*41.
GEN 575,4,0,203,100,292,100,96.,.18,1.5,1.6*41.
GEN 576,4,0,204,100,294,100,96.,0.3,.37,.47*41.
GEN 577,4,0,204,100,295,100,96.,0.3,.37,.47*41.
GEN 578,4,0,282,100,261,100,16./3.
GEN 579,4,0,292,100,261,100,16./3.
GEN 580,4,0,281,100,296,100,1.25
GEN 581,4,0,294,100,297,100,.625
GEN 582,4,0,295,100,298,100,.625
GEN 583,4,0,261,100,262,100,1./.55/1.8
GEN 584,4,0,203,100,293,100, 96.*1.1*.19/0.3/41.
GEN 585,4,0,292,100,204,100, 96.*1.5*.19/.58/41.
GEN 586,4,0,204,100,205,100, 96.*1.5*.19/.58/41.
GEN 587,4,0,201,100,282,100, 96.*.406/.9/41.
GEN 588,4,0,202,100,206,100, 96.*.406/.6/41.
GEN 589,4,0,206,100,284,100, 96.*.406/.6/41.
GEN 590,4,0,201,100,203,100, .95/.17/1.8
GEN 591,4,0,282,100,292,100, .95/.17/1.8
GEN 592,4,0,206,100,205,100, .95/.17/1.8
GEN 593,4,0,201,100,261,100, 16./3.
GEN 594,4,0,203,100,261,100, 16./3.
GEN 595,4,0,206,100,261,100, 16./3.
GEN 596,4,0,205,100,261,100, 16./3.
GEN 637,2,0,1,22,888,0, .5*.5/.17/1.8
TOP ASSEMBLY
GEN 601,4,0,3,2,888,0,   1.8*.5/.17/1.8
GEN 602,4,0,25,2,888,0,  1.8*.5/.17/1.8
```

```
GEN 603,1,0, 2, 0,101, 0, 0.8*2.0/.17/1.8
GEN 604,1,0, 24, 0,103, 0, 0.8*2.0/.17/1.8
GEN 605,4,0,4,2,283,100, 1.75*1.7/.17/1.8
GEN 606,4,0, 26, 2,275,100, 0.8*1.3/.17/1.8
GEN 608,4,0, 12, 1,262,100, 3.3
-151, 117,161,           .19*.68*4.55*2.5/144./3.413
-152, 161,162,           .66*.68*4.55*2.5/144./3.413
-153, 162,163,           .66*.52*4.55*2.5/144./3.413
-154, 163,110,           .19*1.0*4.55*2.2/144./3,413
-155, 163,168,           .66*1.0*1.50*1.0/144./3.413
-156, 161,127, 161,137, .19*.20*4.55*2.5/144./3.413
-157, 162,127, 162,137, .19*.25*4.55*2.5/144./3.413
-158, 163,127, 163,137, .19*.15*4.55*2.5/144./3.413
-159, 161,118, 161,111, .19*.10*4.55*2.5/144./3.413
-160, 162,118, 162,111, .19*.13*4.55*2.5/144./3.413
-161, 163,118, 163,111, .19*.08*4.55*2.5/144./3.413
GEN -162,3,0,144,1,112,0,.19*1.0,1.,1.,144.*3.413
GEN -163,3,0,150,1,112,0,.19*1.0,1.,.9,144.*3.413
GEN -260,4,0,221,100,211,100, 0.56*.66,3.7,4.4,144.*3.413 $F*E
GEN -261,4,0,221,100,276,100, 0.12*.19,3.7,4.4,144.*3.413
GEN -262,4,0,221,100,286,100, 0.10*.19,3.7,4.4,144.*3.413
GEN -263,4,0,221,100,278,100, 0.12*.19,3.7,4.4,144.*3.413
GEN -264,4,0,221,100,279,100, 0.10*.19,3.7,4.4,144.*3.413
GEN -265,4,0,211,100,276,100, 0.10*.19,3.7,4.4,144.*3.413
GEN -266,4,0,211,100,286,100, 0.12*.19,3.7,4.4,144.*3.413
GEN -267,4,0,211,100,278,100, 0.10*.19,3.7,4.4,144.*3.413
GEN -268,4,0,211,100,279,100, 0.12*.19,3.7,4.4,144.*3.413
GEN -269,4,0,211,100,236,100, 1.00*.66,3.7,4.4,144.*3.413
GEN -270,4,0,221,100,249,100, 1.00*.66,3.7,4.4,144.*3.413
-611, 128,241, 127,246,      .11*4.00*3.5/144./3.413
GEN -612,3,0,231,100,341,100,       .11,4.00,4.00,144.*3.413
GEN -613,3,0,287,100,346,100,       .11,4.00,4.00,144.*3.413
-616, 116,999, 117,999,             .20*2.75*3.50/144./3.413
GEN -617,4,0,276,100,999,0,         .20,1.75,4.00,144.*3.413
GEN -618,4,0,280,100,999,0,         .20,1.75,4.00,144.*3.413
-625, 138,888, 137,888,         .21*.19*3.50*4.00/144./3.413
-626, 138,999, 137,999,         .79*.19*3.50*4.00/144./3.413
-627, 531,888, 587,888,         .22*.19*4.00*4.00/144./3.413
-628, 531,999, 587,999,         .78*.19*4.00*4.00/144./3.413
-629, 118,888,                  .19*.19*2.75*4.00/144./3.413
-630, 118,999,                  .81*.19*2.75*4.00/144./3.413
GEN -631,4,0,296,100,888,0,     .15*.19,1.75,4.00,144.*3.413
GEN -632,4,0,296,100,999,0,     .85*.19,1.75,4.00,144.*3.413
-633,113,888,            .19*.19*2.75*4./ 144./3.413
-634,113,999,            .81*.19*2.75*4.0/144./3.413
GEN-635,4,0,279,100,888,  0, .15*.19,1.75,4.00,144.*3.413
GEN-636,4,0,279,100,999,  0, .85*.19,1.75,4.00,144.*3.413
END
```

APPENDIX C

Program Control and Power Dissipation

```
BCD 3CONSTANTS DATA
NDSTOR=1000,ITERMX=1000
ARLXCA=.002,DRLXCA=.002
ABSZRO=-460.0,SBCNST=.171E-8
1=1.0
2=1.0
3=1.0
4=1.0
5=1.0
END
BCD 3ARRAY DATA
END
BCD 3EXECUTION
HOT
TEST CONDITION
T999=80.0
STDSTL
END
BCD 3VARIABLES1
Q141=1.2     *R1
Q142=1.2     *R1
Q143=1.2     *R1
Q147=0.08    *R1
Q148=0.08    *R1
Q149=0.08    *R1
Q161=2.046   *R1
Q162=2.046   *R1
Q163=4.123   *R1
Q164=1.6     *R1
Q165=1.6     *R1
Q166=0.6     *R1
Q167=7.9     *R1
Q211=1.573   *R2
Q221=0.858   *R2
Q251=2.56    *R2
Q252=2.56    *R2
Q253=1.7     *R2
Q254=1.7     *R2
Q255=0.075   *R2
Q256=0.075   *R2
Q257=1.4     *R2
Q258=0.6     *R2
Q284=0.01    *R2
Q285=0.01    *R2
Q311=1.573   *R3
Q321=0.956   *R3
Q351=4.65    *R3
Q352=4.65    *R3
Q353=2.8     *R3
Q354=2.8     *R3
Q355=0.15    *R3
Q356=0.15    *R3
Q357=1.8     *R3
Q358=0.95    *R3
Q384=0.01    *R3
Q385=0.01    *R3
Q411=1.573   *R4
Q421=0.956   *R4
Q451=4.65    *R4
Q452=4.65    *R4
Q453=2.8     *R4
Q454=2.8     *R4
Q455=0.15    *R4
```

```
Q456=0.15    *R4
Q457=1.8     *R4
Q458=0.95    *R4
Q484=0.01    *R4
Q485=0.01    *R4
Q511=1.573   *R5
Q521=0.986   *R5
Q551=4.7     *R5
Q552=4.7     *R5
Q553=1.5     *R5
Q554=1.5     *R5
Q555=0.16    *R5
Q556=0.16    *R5
Q557=1.8     *R5
Q558=1.0     *R5
Q584=0.01    *R5
Q585=0.01    *R5
END
BCD 3OUTPUT CALLS
      TPRINT
END
BCD 3END OF DATA
```

APPENDIX D

Temperature Summary
With and Without Heat Pipes

81-3388-036

UNIT – P.S. – HUNTS.
INPUT MODULE A1

MAX. AV. BD. TEMP °C (°F)

RUN NOTE – NO HEAT PIPES IN INPUT MODULE

NODE

AVERAGED BD DISSIP – 8.215
HEAT SUNK DISSIP –
TOTAL DISSIPATION – 23.755

PART TYPE	REF DES	NODE No.	AMBIENT SINK OR JUNCTION TEMP	HEAT DISSIP (WATTS)					S841 HOT TEST WITH HEAT PIPES	S844 HOT TEST HEAT PIPES NON-OP.			
BOARD	A1	161	AMB	2.046					324	324			
BOARD	A2	162	AMB	2.046					338	338			
BOARD	A4	163	AMB	4.123					343	343			
FILTER	FL1	164	CASE	1.6					134	134			
FILTER	FL2	165		1.6					132	132			
XFORMER	T1	166		0.6					123	122			
2N4900	Q1	167		7.9		θ=6.99			136	135		WITH GREASE	
INPUT FILTER	A5	–		(TOTAL 3.84)									
CHOKE	L3	141		1.2					218	218			
"	L2	142		1.2					215	215			
"	L1	143		1.2					203	203			
CAPS	C1 – C4	147		.08					209	209			
"		148		.08					212	212			
"		149	CASE	.08					195	195			
HIGH POWER	PARTS	ON PC	BOARDS										
BD A1, A2													
K1 & K2				.6									
BD. A4													
2N 5682	Q2			.393									
2N 5680	Q5			.425									
"	Q7			.425									
RWR 89	R4			.64									
RCR 07	R14			.342									

NIT — P.S. — HUNTS.
O/R MODULE A2 +5V

MAX. AV. BD. TEMP °C (°F)
RUN
NODE

AVERAGED BD DISSIP — 2.431
HEAT SUNK DISSIP —
TOTAL DISSIPATION — 13.121

									S 841	S 844			
PART TYPE	REF DES	NODE No.	AMBIENT SINK OR JUNCTION TEMP	HEAT DISSIP (WATTS)					HOT TEST WITH HEAT PIPES	HOT TEST HEAT PIPES NON-OP			
BOARD	A1	211	AMB	1.573					147	151			
BOARD	A2	221	AMB	.858					137	142			
2N3716	Q1.	252	CASE	2.56		ΔT = 3	°C	θ = 1.17	117	129		No Grease	
	Q2	251		2.56					117	127		" "	
	T1	256		.075					110	120			
	T2	255		.075					110	120			
	T3	257		1.4					112	121			
	L1	258		.6					110	121			
	CR1	253		1.7					123	137			
	CR2	254	CASE	1.7					123	137			
	R1	284	AMB	.01					107	114			
	R2	285	AMB	.01					108	116			
BOARD A2													
REF MODULE	U5			.35									

81-3388-036

UNIT – P.S. – HUNTS.
– O/R MODULE A3

± 15V

AVERAGED BD DISSIP – 2.529
HEAT SUNK DISSIP —
TOTAL DISSIPATION – 20.499

MAX. AV. BD. TEMP °C (°F)
RUN
NODE

PART TYPE	REF DES	NODE NO.	AMBIENT SINK OR JUNCTION TEMP	HEAT DISSIP (WATTS)					S 841 HOT TEST WITH HEAT APES	S 844 HOT TEST HEAT APES DISS-OFF		
BOARD	A1	311	AMB	1.573					151	159		
BOARD	A2	321	AMB	.956					142	151		
2N3716	Q1	352	CASE	4.65			ΔT=5.5°		131	153		NO GREASE
	Q2	351		4.65					131	149		" "
	T1	356		.15					117	136		
	T2	355		.15					118	134		
	T3	357		1.8					120	135		
	L1	358		.95					118	137		
	CR1	353		2.8					140	163		
	CR2	354	CASE	2.8					140	163		
	R1	384	AMB	.01					113	126		
	R2	385	AMB	.01					114	129		
BOARD A2												
REF MODULE	U5			.35								

81-3386-036

UNIT P.S — HUNTS
O/R MODULE A4 ±15V

MAX. AV. BD. TEMP °C (°F)
RUN
NODE

AVERAGED BD DISSIP — 2.529
HEAT SUNK DISSIP —
TOTAL DISSIPATION — 20.499

									5841	5844		
PART TYPE	REF DES	NODE NO.	AMBIENT SINK OR JUNCTION TEMP	HEAT DISSIP (WATTS)					HOT TEST WITH HEAT PIPES	HOT TEST HEAT PIPES NON-OP		
BOARD	A1	411	AMB	11.573					151	159		
BOARD	A2	421	AMB	.956					143	151		
2N3716	Q1	452	CASE	4.65			ΔT= 5,5°C	TO-3	132	153		NO GREASE
	Q2	451		4.65					131	149		" "
	T1	456		.15					118	136		
	T2	455		.15					119	134		
	T3	457		1.8					121	135		
	L1	458		.95					119	137		
	CR1	453		2.8					141	163		
	CR2	454	CASE	2.8					141	163		
	R1	484	AMB	.01					114	127		
	R2	485	AMB	.01					115	129		
BOARD A2												
REF MODULE	U5			.35								

81-3398-036

UNIT – P.S. – HUNTS
O/R MODULE A5 +28V

MAX. AV. BD. TEMP °C (°F)
RUN
NODE

AVERAGED BD DISSIP — 2.559
HEAT SUNK DISSIP —
TOTAL DISSIPATION — 18.099

S841 S844

PART TYPE	REF DES	NODE No.	AMBIENT SINK OR JUNCTION TEMP	HEAT DISSIP (WATTS)					HOT TEST WITH HEAT PIPES	HOT TEST HEAT PIPES NON-OP.			
BOARD	A1	511	AMB	11.573					152	158			
BOARD	A2	521	AMB	.986					144	150			
2N3716	Q1	552	CASE	4.7		θ_c 1.17	$\Delta T = 5.5$°C		132	147		NO GREASE	
"	Q2	551		4.7					132	144		" "	
	T1	556		.16					118	131			
	T2	555		.16					119	130			
	T3	557		1.8					121	131			
	L1	558		1.0					119	132			
	CR1	553		1.5					130	146			
	CR2	554	CASE	1.5					130	146			
	R1	584	AMB	.01					114	123			
	R2	585	AMB	.01					115	125			
BOARD A2													
REF MODULE	U5			.35									

APPENDIX E

Complete Temperature Listing With Heat Pipes

```
    POWER SUPPLY - HUNTSVILLE                                            WITH



TIMEN  = 0.                 EBALSC           = 0.                CSGMI
TSTEPU = 0.                 EBALNC(      0)  = 0.                CSGMA
                            ITERCT           =        281        DMXTC

                                                                DIFFUSI
                                                                      +
                                                                ARITHME
  T     1=  95.9052       T     2=  115.056       T     3=  93.8077
  T     7=  94.6929       T     8=  98.3337       T     9=  95.1886
  T    13=  105.867       T    14=  106.888       T    15=  110.306
  T    19=  100.132       T    20=  100.476       T    21=  101.385
  T    25=  92.7959       T    26=  93.7111       T    27=  92.1776
  T    31=  93.0053       T    32=  96.3012       T   101=  117.299
  T   105=  119.584       T   106=  120.113       T   107=  121.342
  T   111=  121.807       T   112=  114.013       T   113=  113.875
  T   117=  121.454       T   118=  119.268       T   119=  119.671
  T   124=  117.696       T   125=  119.013       T   126=  120.070
  T   132=  118.740       T   133=  110.184       T   134=  117.611
  T   138=  116.705       T   141=  218.179       T   142=  215.023
  T   146=  202.365       T   147=  208.994       T   148=  212.395
  T   152=  186.024       T   153=  120.807       T   154=  108.989
  T   163=  343.348       T   164=  134.177       T   165=  132.118
  T   201=  109.309       T   202=  109.090       T   203=  109.635
  T   211=  146.561       T   212=  103.988       T   213=  107.031
  T   222=  103.986       T   223=  107.029       T   224=  106.259
  T   233=  106.765       T   234=  106.194       T   235=  97.0695
  T   239=  106.572       T   241=  105.350       T   242=  104.247
  T   246=  106.499       T   247=  108.598       T   248=  106.702
  T   253=  123.053       T   254=  123.053       T   255=  110.385
  T   261=  109.195       T   262=  104.487       T   272=  103.981
  T   276=  105.443       T   278=  100.838       T   279=  99.5600
  T   283=  96.7939       T   284=  106.724       T   285=  107.776
  T   289=  111.158       T   290=  109.576       T   291=  109.459
  T   295=  109.378       T   296=  108.807       T   297=  109.328
  T   303=  117.644       T   304=  117.369       T   305=  117.318
  T   313=  112.610       T   314=  111.455       T   315=  95.6146
  T   324=  111.454       T   325=  95.6132       T   331=  109.957
  T   335=  98.3949       T   336=  110.710       T   337=  115.750
  T   342=  108.078       T   343=  111.958       T   344=  111.102
  T   348=  112.872       T   349=  110.059       T   351=  130.603
  T   355=  117.900       T   356=  117.191       T   357=  120.001
  T   372=  107.743       T   373=  112.604       T   374=  111.449
  T   379=  101.756       T   380=  115.170       T   381=  116.177
  T   385=  113.878       T   386=  114.007       T   387=  113.226
  T   391=  117.071       T   392=  117.524       T   393=  121.077
  T   397=  117.167       T   398=  117.167       T   401=  117.925
  T   405=  118.150       T   406=  117.301       T   411=  151.126
  T   415=  96.0779       T   421=  142.728       T   422=  108.392
  T   431=  110.612       T   432=  108.819       T   433=  112.780
  T   437=  116.552       T   438=  113.660       T   439=  112.528
  T   444=  111.811       T   445=  98.8082       T   446=  112.328
  T   451=  131.436       T   452=  131.645       T   453=  140.579
```

```
 HEAT PIPES  IN O/R MODULES



J(      0) = 0.                DRLXCC(      0) = 0.
((      0) = 0.                ARLXCC(   595) =-1.518033E-03
)(      0) = 0.                AMXTCC(      0) = 0.

)N NODES
+NONF++
TIC NODES
   T     4=  96.3921       T     5=  94.2338       T     6=  97.7715
   T    10=  99.3414       T    11=  113.507       T    12=  103.046
   T    16=  101.200       T    17=  102.637       T    18=  100.523
   T    22=  101.795       T    23=  95.9102       T    24=  105.495
   T    28=  93.9130       T    29=  92.3537       T    30=  94.3513
   T   102=  119.347       T   103=  107.546       T   104=  117.977
   T   108=  120.727       T   109=  119.648       T   110=  121.440
   T   114=  121.452       T   115=  123.510       T   116=  119.926
   T   121=  117.854       T   122=  118.871       T   123=  110.270
   T   127=  119.910       T   128=  117.003       T   131=  117.776
   T   135=  118.882       T   136=  119.993       T   137=  119.546
   T   143=  202.973       T   144=  217.440       T   145=  214.313
   T   149=  195.384       T   150=  198.754       T   151=  209.938
   T   155=  110.259       T   161=  324.338       T   162=  338.578
   T   166=  123.192       T   167=  136.248       T   168=  155.337
   T   204=  109.435       T   205=  109.395       T   206=  108.897
   T   214=  106.260       T   215=  94.9774       T   221=  136.613
   T   225=  94.9758       T   231=  105.777       T   232=  104.330
   T   236=  106.518       T   237=  108.605       T   238=  106.709
   T   243=  106.683       T   244=  106.112       T   245=  96.9865
   T   249=  105.903       T   251=  116.709       T   252=  116.844
   T   256=  109.519       T   257=  112.278       T   258=  110.056
   T   273=  107.024       T   274=  106.253       T   275=  94.9687
   T   280=  108.353       T   281=  108.826       T   282=  109.300
   T   286=  107.891       T   287=  107.427       T   288=  110.325
   T   292=  109.529       T   293=  111.720       T   294=  109.378
   T   298=  109.328       T   301=  117.092       T   302=  116.775
   T   306=  116.476       T   311=  150.585       T   312=  107.750
   T   321=  142.150       T   322=  107.749       T   323=  112.609
   T   332=  108.173       T   333=  112.068       T   334=  111.212
   T   338=  112.899       T   339=  111.819       T   341=  109.467
   T   345=  98.2996       T   346=  111.547       T   347=  115.724
   T   352=  130.810       T   353=  139.744       T   354=  139.744
   T   358=  117.971       T   361=  116.925       T   362=  108.459
   T   375=  95.6054       T   376=  110.061       T   378=  103.770
   T   382=  117.098       T   383=  98.3643       T   384=  113.016
   T   388=  117.780       T   389=  118.561       T   390=  117.211
   T   394=  117.262       T   395=  117.262       T   396=  116.182
   T   402=  117.604       T   403=  118.479       T   404=  118.202
   T   412=  108.394       T   413=  113.337       T   414=  112.159
   T   423=  113.336       T   424=  112.158       T   425=  96.0765
   T   434=  111.907       T   435=  98.8955       T   436=  111.366
   T   441=  110.163       T   442=  108.732       T   443=  112.684
   T   447=  116.532       T   448=  113.640       T   449=  110.755
   T   454=  140.579       T   455=  118.670       T   456=  117.982
```

```
  POWER SUPPLY - HUNTSVILLE                                  WITH

T  457=  120.755     T  458=  118.760     T  461=  117.762
T  474=  112.153     T  475=  96.0686     T  476=  110.737
T  481=  116.988     T  482=  117.932     T  483=  98.9345
T  487=  113.953     T  488=  118.550     T  489=  119.315
T  493=  121.912     T  494=  118.093     T  495=  118.093
T  501=  118.306     T  502=  118.090     T  503=  118.631
T  511=  151.884     T  512=  109.298     T  513=  113.934
T  522=  109.297     T  523=  113.932     T  524=  112.741
T  533=  113.368     T  534=  112.486     T  535=  100.473
T  539=  113.086     T  541=  111.103     T  542=  109.643
T  546=  113.059     T  547=  116.998     T  548=  114.249
T  553=  130.470     T  554=  130.470     T  555=  119.153
T  561=  118.244     T  562=  112.166     T  572=  109.291
T  576=  111.481     T  578=  105.557     T  579=  103.650
T  583=  99.9261     T  584=  114.379     T  585=  115.076
T  589=  119.843     T  590=  118.535     T  591=  118.370
T  595=  118.572     T  596=  117.433     T  597=  118.472
                                                            HEATE
                                                               ++
                                                           BOUNDA

T  888=  90.0000     T  999=  80.0000     T
```

```
HEAT PIPES  IN O/R MODULES

   T  462=  109.436     T  472=  108.386     T  473=  113.331
   T  478=  104.354     T  479=  102.303     T  480=  115.942
   T  484=  113.783     T  485=  114.619     T  486=  114.745
   T  490=  118.000     T  491=  117.861     T  492=  118.360
   T  496=  116.993     T  497=  117.996     T  498=  117.996
   T  504=  118.683     T  505=  118.643     T  506=  117.802
   T  514=  112.742     T  515=  97.8993     T  521=  144.063
   T  525=  97.8980     T  531=  111.180     T  532=  109.658
   T  536=  111.939     T  537=  117.001     T  538=  114.252
   T  543=  113.353     T  544=  112.470     T  545=  100.458
   T  549=  111.705     T  551=  132.072     T  552=  132.258
   T  556=  118.498     T  557=  121.283     T  558=  119.334
   T  573=  113.927     T  574=  112.736     T  575=  97.8902
   T  580=  116.463     T  581=  117.426     T  582=  118.402
   T  586=  115.038     T  587=  114.026     T  588=  119.025
   T  592=  118.830     T  593=  120.470     T  594=  118.572
   T  598=  118.472     T
 NODES
NONE++
Y NODES
```

Appendix C

Power Supply Packaging Drawings

NOTES

1. BREAK SHARP EDGES.
2. ALL RADII .12 EXCEPT AS NOTED.
3. ▷ DRILL OFF-AXIS TO CLEAR MOUNTING FOOT GUSSET
4. MATERIAL: AL ALLOY TBS

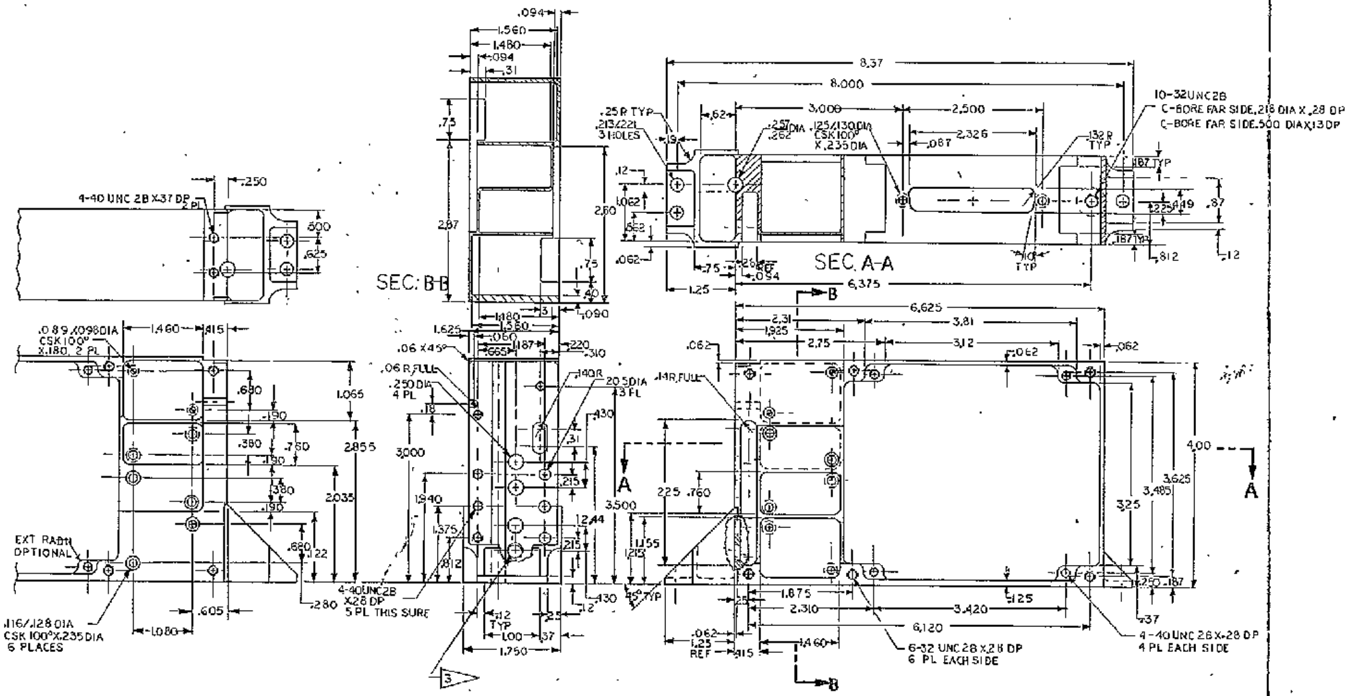

C 2

REVISIONS

UNLESS OTHERWISE SPECIFIED
DIMENSIONS ARE IN INCHES AND APPLY AFTER PLATING
TOLERANCES ON DECIMALS
FRACTIONS .X .XX .XXX ANGLES
MACHINED SURFACES
MIL-I ASSO STATUS
INTERCHANGEABLE
REPLACEABLE
UNCONTROLLED

MARTIN MARIETTA CORPORATION
DENVER DIVISION P.O. BOX 179
DENVER COLORADO, 80201

CHASSIS
OUTPUT REGULATOR
MSFC STD POWER SUPPLY

SIZE D
CODE IDENT NO. 04236
SK28956051
SCALE FULL
PERREAULT X3386
SHEET 1 OF 1

@ - 1
1 C1&C2

SK28956051

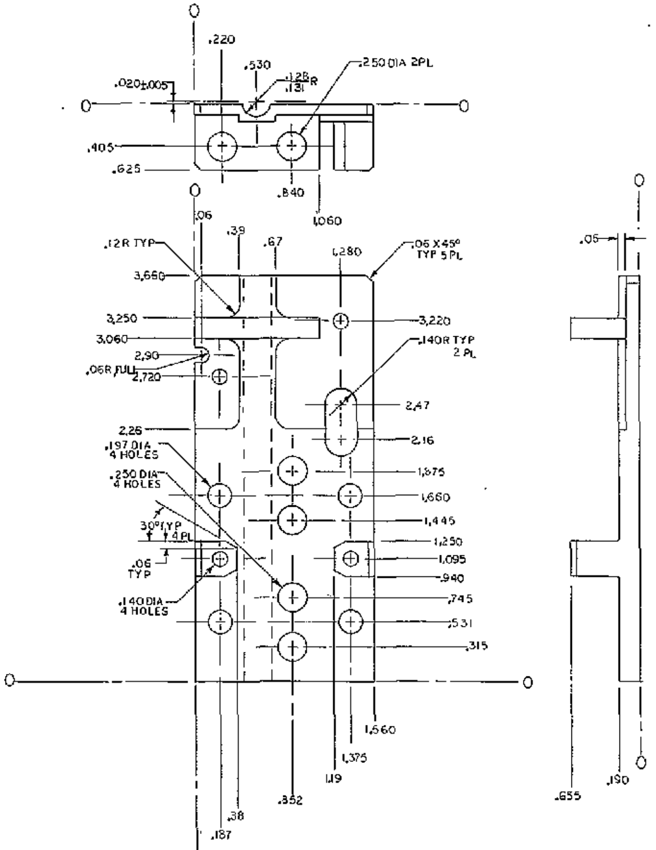

-001 MOUNTING PLATE

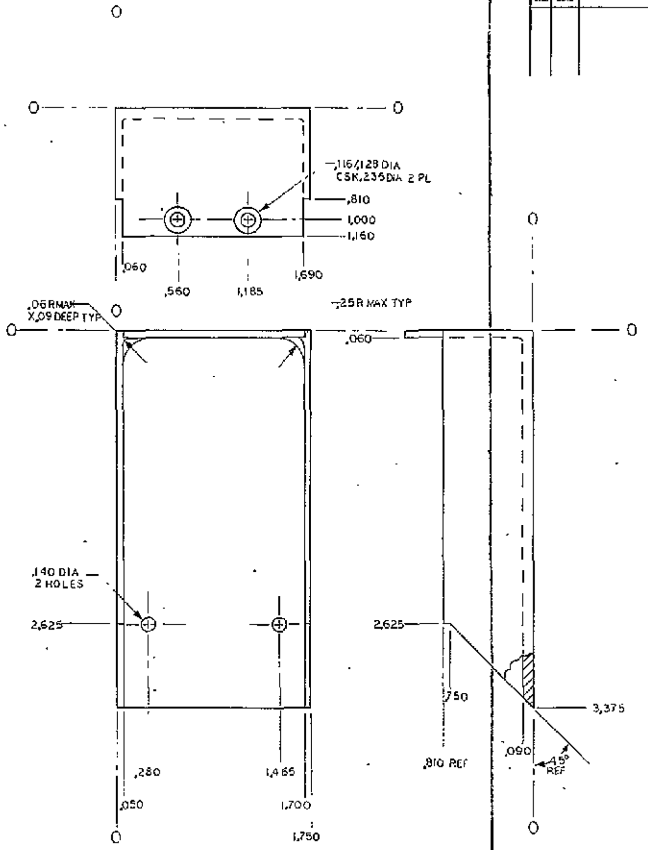

-002 END COVER

FOLDOUT FRAME 1

FOLDOUT FRAME 2

1	-002		END COVER	2X4X1.25 TH	2014-T4 ALUM	
1	-001		MOUNTING PLATE	2X4X1.00 TH	2014-T4 ALUM	
QUANTITY/DASH NO.	PART NO.	ZONE	DESCRIPTION	STOCK SIZE	MATERIAL OR VENDOR	MATERIAL SPECIFICATION

LIST OF MATERIAL

UNLESS OTHERWISE SPECIFIED

WTP 3/30/71

W PERREAULT (X3386)

MARTIN MARIETTA CORPORATION
POST OFFICE BOX 179, DENVER, COLORADO

CHASSIS DETAILS,
OUTPUT REGULATOR

SIZE D
CODE IDENT NO. 04236
SK28956052
SCALE 2X
SHEET 1 of 1

C-2 C3&C4

REVISIONS				
SYM	ZONE	DESCRIPTION	DATE	APPROVED

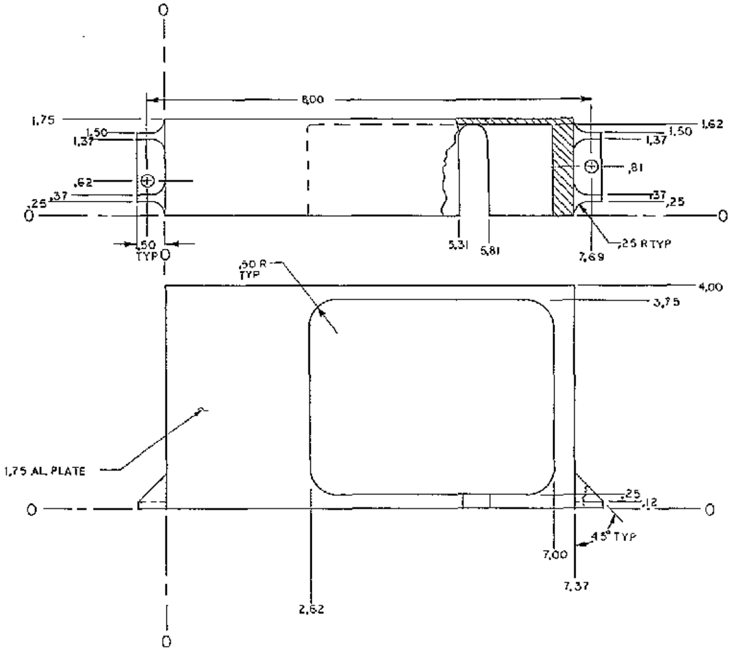

-001 MODULE SIMULATOR

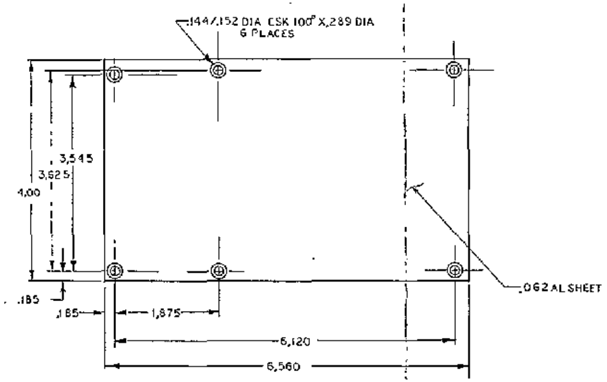

-002 COVER, SHOWN
-003 OPPOSITE

FOLDOUT FRAME 2

FOLDOUT FRAME 1

MODULE DETAILS

SIZE	CODE IDENT NO.	
D	04236	SK28956053
SCALE FULL	WTP 3386	SHEET

C-3 1 C5&C6

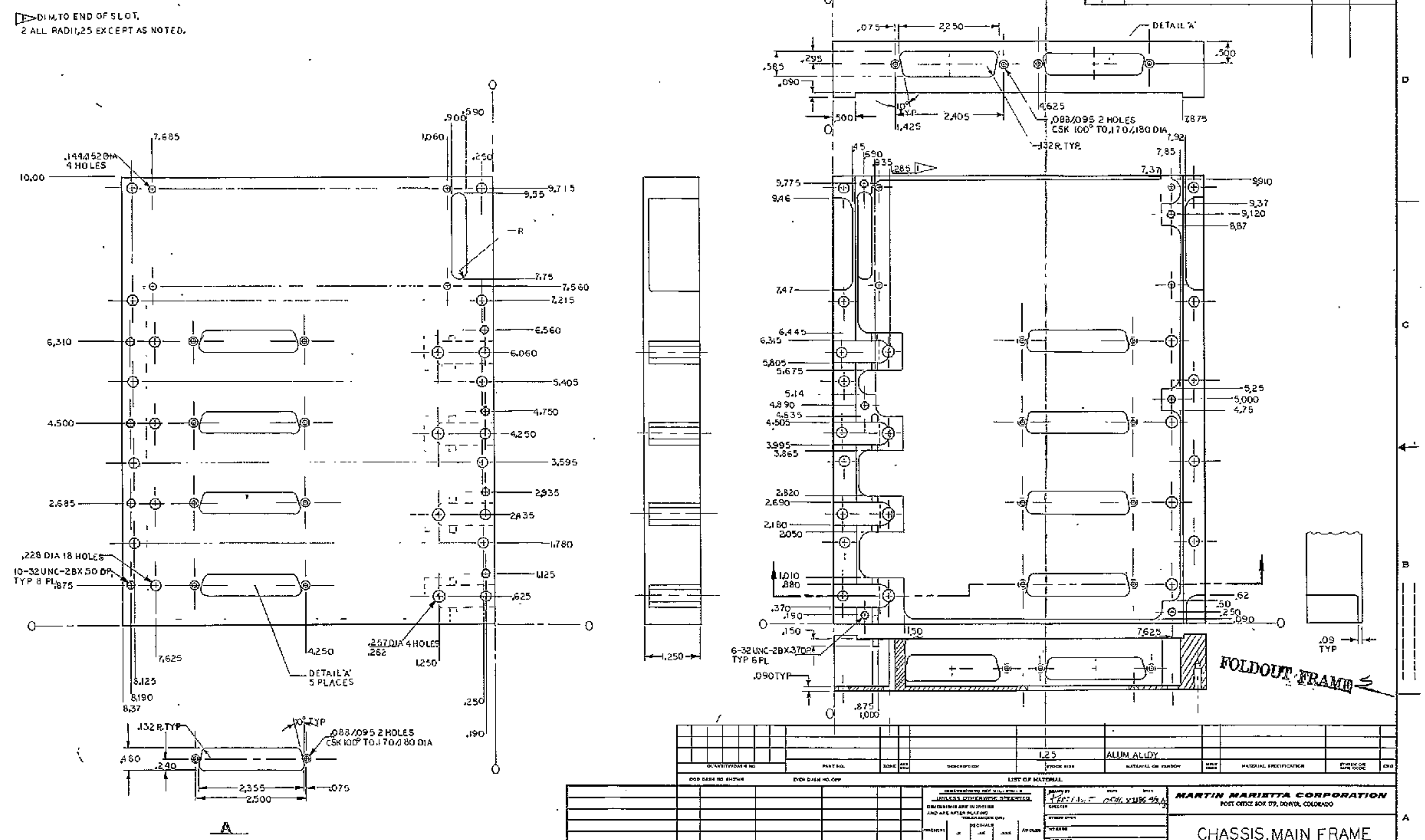

				1.25	ALUM ALLOY				
QUANTITY/DASH NO	PART NO.	ZONE		DESCRIPTION	STOCK SIZE	MATERIAL OR VENDOR		MATERIAL SPECIFICATION	

ODD DASH NO. SHOWN · EVEN DASH NO. OPP · LIST OF MATERIAL

UNLESS OTHERWISE SPECIFIED
DIMENSIONS ARE IN INCHES
AND ARE AFTER PLATING

MARTIN MARIETTA CORPORATION
POST OFFICE BOX 179, DENVER, COLORADO

CHASSIS, MAIN FRAME
MFSC STD POWER SUPPLY

SIZE D
CODE IDENT NO. 04236
SK28956055
SCALE FULL

C-4
C7&C8

FOLDOUT FRAME

REVISIONS

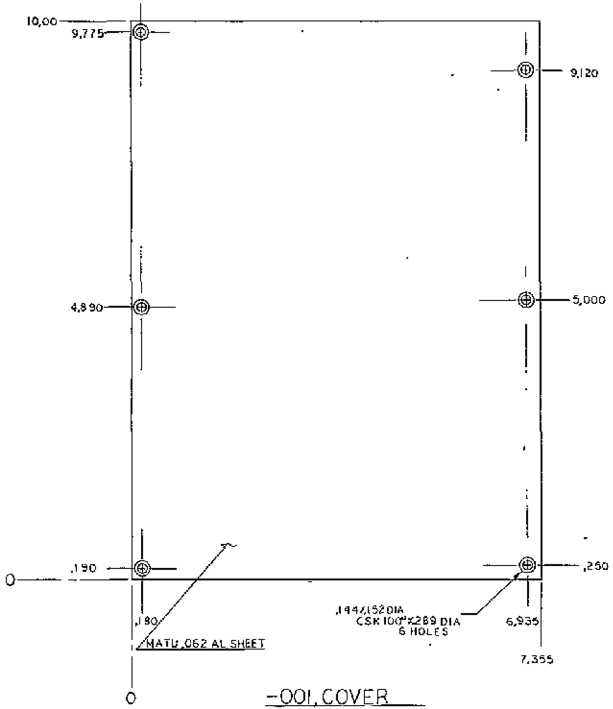

-001 COVER
SCALE: 1/1

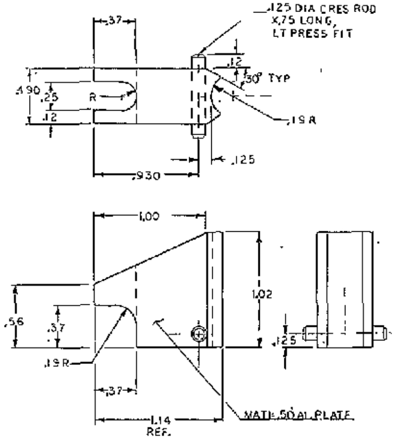

-002 CAM
SCALE: 2X

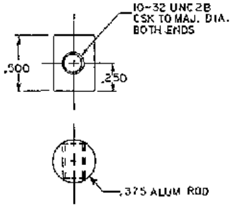

-003 NUT
SCALE: 2X

FOLDOUT FRAME

FOLDOUT FRAME

CHASSIS DETAILS, M.F.

SIZE D	CODE IDENT NO. 04236	SK28956056
SCALE	WTP X 3386	SHEET

0-5

C9&C10