M990 GCR CacheTape® Unit Technical Manual

cipher®

Federal Communications Commission (FCC) Notice

Warning: This equipment generates, uses, and can radiate radio frequency energy and if not installed and used in accordance with the instruction manual, may cause interference to radio communications. It has been tested and found to comply with the limits for a Class A computing device pursuant to Subpart J of Part 15 of FCC Rules, which are designed to provide reasonable protection against such interference when operated in a commercial environment. Operation of this equipment in a residential area is likely to cause interference in which case the user at his own expense will be required to take whatever measures may be required to correct the interference.

Cipher Data Products, Inc. provides this manual "as is," without warranty of any kind either expressed or implied. Cipher may make improvements and/or changes in the products described in this manual at any time.

All information contained in or disclosed by this document is considered proprietary by Cipher Data Products, Inc. By accepting this material the recipient agrees that this material and the information contained therein are held in confidence and in trust and will not be used, reproduced in whole or in part, nor its contents revealed to others, except to meet the purpose for which it was delivered. It is understood that no right is conveyed to reproduce or have reproduced any item herein disclosed without express permission from Cipher Data Products, Inc.

TABLE OF CONTENTS

Chapter 1. Set Up and Installation 1-1

1.1 Unpacking and Repacking Instructions 1-1
1.2 Rack Mounting 1-9
1.3 Power Connection 1-12
1.4 Interface Connection 1-15
1.5 Interface Description 1-21
1.6 Integration of the M990 GCR to the system 1-22

Chapter 2. Parts and Location 2-1

2.1 M990 GCR Tape Unit-Front View 2-1
2.2 M990 GCR Tape Unit-Front View (Unit in Service Position) 2-2
2.3 M990 GCR Tape Unit-Top View 2-3
2.4 M990 GCR Tape Unit-Rear View 2-4
2.5 M990 GCR Tape Unit-Bottom View 2-5

Chapter 3. Illustrated Parts Breakdown 3-1

Chapter 4. Diagnostic Tests and Troubleshooting 4-1

4.1 Diagnostic Test 4-1
4.2 Troubleshooting 4-17
4.3 Main Tests 4-22
4.4 Common Tests 4-31
4.5 Test Point Locations 4-43

Chapter 5. Preventive Maintenance and Replacement Procedures 5-1

5.1 Prentive Maintenance Schedule 5-1
5.2 Placing Unit in Operator Access Position 5-2
5.3 Placing Unit in Service Position 5-3
5.4 Restoring Unit to Operating Position 5-3
5.5 Front Panel 5-4
5.6 Top Cover 5-6
5.7 Operator Access Cover 5-7
5.8 Cover Lock Assembly 5-8
5.9 AC Power Switch 5-10
5.10 Switch LED Front Panel 5-11
5.11 Alphanumeric Display 5-12
5.12 Fuse 5-13
5.13 Power Supply Enclosure and PWB 5-14
5.14 Blower Motor 5-16
5.15 AC Transformer 5-17
5.16 AC Line Cord 5-18
5.17 Supply Reel Hub 5-18
5.18 Read/Write Head 5-20
5.19 Tape Scraper 5-22
5.20 Take-Up Hub 5-24

5.21	BOT/EOT Sensor	5-26
5.22	Tachometer	5-27
5.23	Tension Arm Bumper	5-28
5.24	Tension Arm/Air Capacitor Assembly	5-29
5.25	Tape-In-Path Transmitter	5-31
5.26	Tape-In-Path Sensor	5-31
5.27	Tape Guides	5-33
5.28	Manual Hub Release Assembly	5-34
5.29	Supply Reel Tab Sensor	5-35
5.30	Take-Up Motor	5-36
5.31	Supply Motor	5-37
5.32	Hub Lock Solenoid	5-39
5.33	Hub Lock Pawl	5-40
5.34	Sensor/Servo Board	5-41
5.35	CPU/MMU Board	5-43
5.36	Data Board	5-45
5.37	CIF Write	5-46
5.38	Tape Tracking Procedure	5-47

Chapter 6. Operation 6-1

6.1	Operator Display Panel	6-1
6.2	Operation	6-5
6.3	Operator Maintenance	6-13
6.4	Error Conditions	6-16
6.5	Read Extended Status	6-18

Chapter 7. Glossary 7-1

Engineering Documentation

Title	**Drawing No.**
Wiring Diagram	960956-001
Rack Mount-Interface	961167-001
Power Supply Schematic	961251-300
Sensor/Servo PWB Schematic	962832-300
Sensor/Servo PWB Pictorial	962832-000
Sensor/Servo PWB Bill of Material	962832-002
Sensor/Servo PWB Schematic	963490-300
Sensor/Servo PWB Pictorial	963490-000
Sensor/Servo PWB Bill of Material	963490-001
CPU/MMU PWB Schematic	963394-300
CPU/MMU PWB Pictorial	963394-000
CPU/MMU PWB Bill of Material	963394-001
CIF/Write PWB Schematic	962357-300
CIF/Write PWB Pictorial	962357-000
CIF/Write PWB Bill of Material	962357-001
Data PWB Schematic	963674-300
Data PWB Pictorial	963674-000
Data PWB Bill of Material	963674-001

Chapter 1. Set Up and Installation

This manual supplies set up, installation, and maintenance information for repairing the M990 GCR tape unit, adjusting internal assemblies, and replacing field replaceable units.

1.1 Unpacking and Repacking Instructions

1.1.1 Packaging

The GCR CacheTape Unit (GCRCTU) is shipped in two, double-wall corrugated cartons. It is taped initially in a polyethylene bag and then placed between the top and the bottom polyethylene foam inserts. Each corner of the inner carton is additionally enforced with "V" boards (4). There is also a single, double-wall corrugated pad at the top and the bottom. Inside is a foam protector between the tachometer and the take-up hub, and foam sheets are placed between each of the four main boards. The slides are taped to the chassis.

The slide kit assembly is located in a "U" shaped, corrugated cardboard placed in the top polyethylene foam insert. The Operation and Maintenance manuals are taped to the top of the unit. All flaps are fastened. This carton is then placed into another carton with a single double-wall corrugated pad with foam corner pieces at the bottom and top. The carton is then taped closed and banded to a skid platform for extra protection. This method of packaging minimizes the possibility of damage during shipping.

1.1.2 Unpacking

1. Place the carton upright on the floor.
2. Cut the bands securing the carton to the skid.
3. Cut the tape securing top flaps.
4. Open top flaps.
5. Remove top pad.
6. Remove inner carton and set upright on a solid support (about desk height).
7. Cut the tape securing top flaps.
8. Open top flaps.
9. Remove top pad (1). See Figure 1.
10. Remove slide kit (2) from the top foam insert (3). See Figure 1.

11. Remove the top foam insert (3). See Figure 1.

12. Remove power cord and manuals (4). See Figure 1.

13. Remove tape (5) from the bag. See Figure 1.

14. Carefully lift the unit from the carton and put on the table. See Figure 2.

15. Remove slide and door tapes (5).

16. Remove door sticker (6).

17. Open the top cover (8) and secure it with the stay arm provided (9).

18. Carefully remove the Tachometer Roller Block by pulling the tachometer away from the block, then remove the block. Gently let the tachometer arm come back to rest against the take-up hub.

CAUTION

DO NOT allow the tachometer to spring back against the take-up hub as this will damage the tachometer.

19. Loosen the two spring-loaded screws (2) on both sides of the base plate. See Figure 3.

20. Close the top cover.

21. Lift up on the two lower corners of the front panel to its maximum position. The latch mechanism locks in an upright position. Install the locking pin (4) provided.

WARNING

Insert the provided locking pin (4) into the hole (3) in the tape unit support arm. Never service the tape unit in the service position unless you install the locking pin. See Figure 3.

22. Snap the two PWB retainers outward to release the PWB rack assemblies.

23. Lift the Sensor/Servo PWB (5) and frame assembly upward and rearward to lock in the raised position.

24. Remove the center foam sheet, and the foam pads at both sides.

25. Repeat step 23 with the CPU/MMU PWB (6) and remove the foam sheet.

26. Repeat step 23 with the Data PWB (7) and remove the foam sheet.

27. Return all three boards to their original positions by lifting and gently pulling the frame assembly forward and lowering it.

28. Return front panel to its original position and tighten the two spring loaded screws (2) on the top base plate.

CAUTION

Do not attempt to operate GCRCTU until all foam sheets have been removed. Failure to do so will cause unit to overheat and could damage equipment.

The GCRCTU is ready for inspection. Check the contents of the shipping container against the packing slip and inspect for possible damage. **Notify the carrier if damage exists.**

NOTE

Save all packaging materials and the shipping carton. Should your drive ever need to be shipped again, these will provide it with the best possible protection.

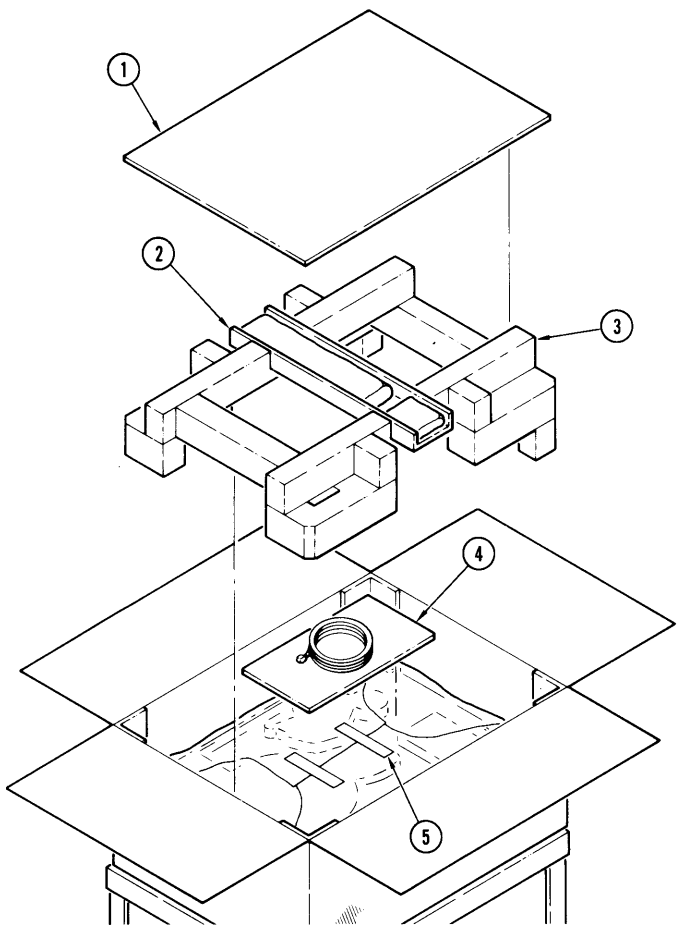

Figure 1.

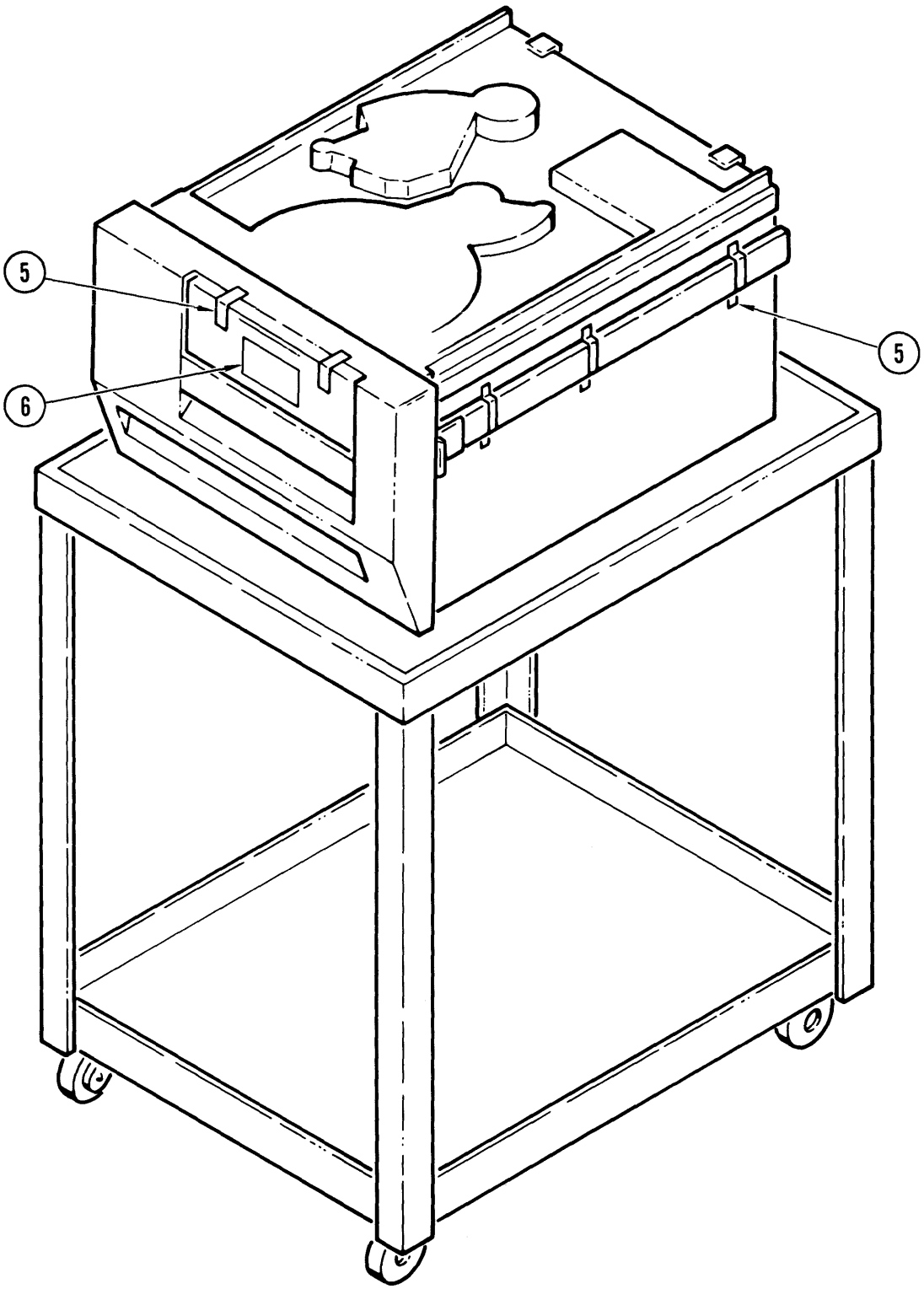

Figure 2.

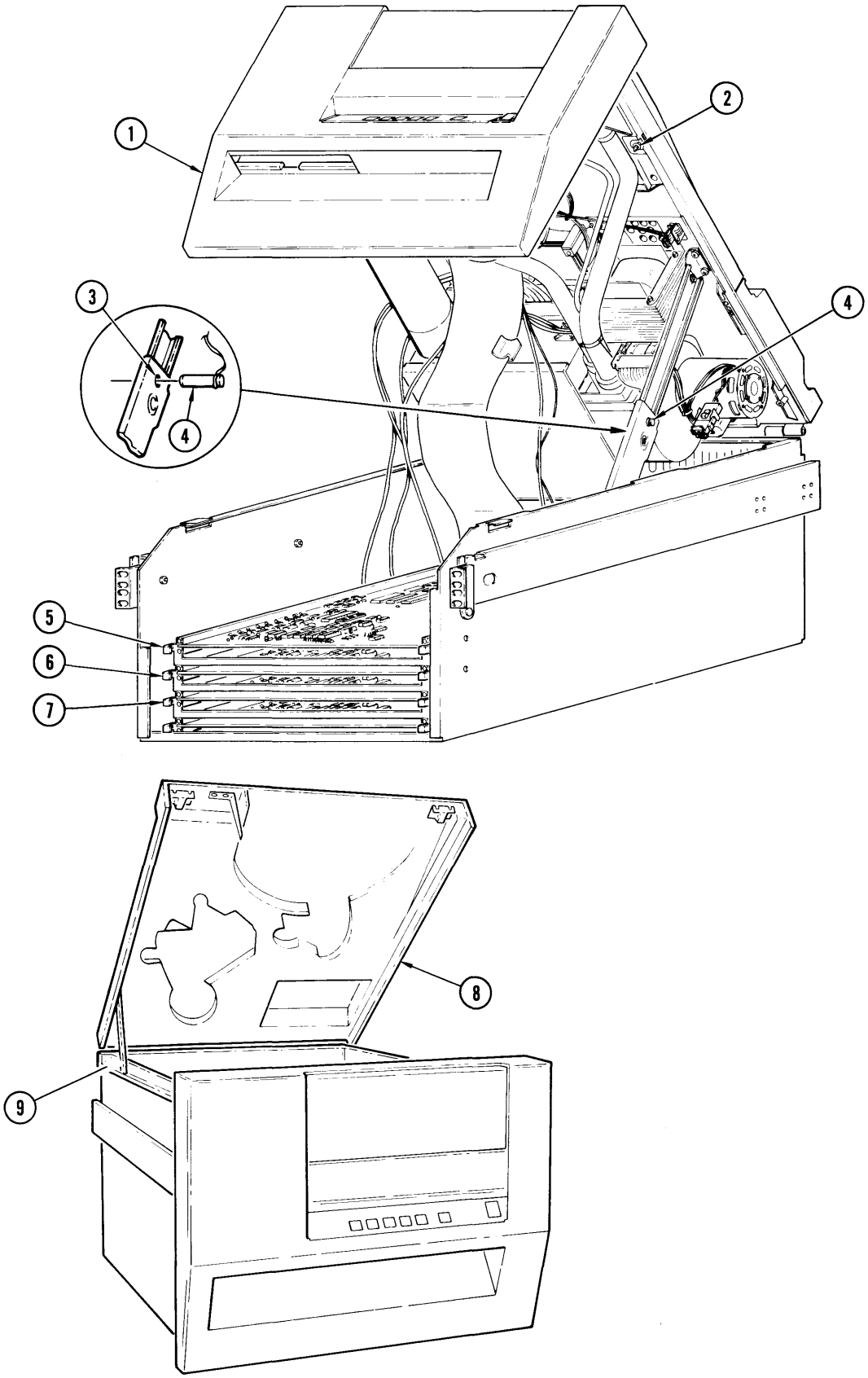

Figure 3.

1.1.3 Repacking GCRCTU

1. Using masking tape, tape the front panel door closed. Replace the front panel cover.

2. Open the top cover and install the Tach Roller Block on the take-up hub. See Figure 4. Loosen the chassis retaining screws and place the drive in the service access position. Use the support pin; see Figure 3. Insert the three thin foam pads in between the PWBs; insert the two foam blocks between the PWBs and the chassis, one on each side of the PWBs. Remove the safety pin, close the drive, and tighten the retaining screws.

3. Put the GCR into the plastic shipping bag that it originally came in. Tape bag closed.

4. Ensure that a deck pad (cardboard sheet) is in the bottom of the inner shipping carton.

5. Place the bottom frame into the bottom of the carton. Insert the V-boards into each corner of the carton. See Figure 5.

6. Carefully lift and lower GCRCTU into the shipping carton. (Be sure unit is in correct orientation with bottom frame).

7. Place power cord into a plastic bag and seal it up with tape. Set this bag on top of drive and tape in place with masking tape.

8. Place the top frame (correctly oriented) on top of the GCRCTU, and place the top deck-pad on top of the foam bars. See Figure 6.

9. Fold the short flaps into the box and the long flaps onto the short flaps. If a staple gun is available, install five staples equally spaced across the top of the box near the seam.

10. Seal the box by using reinforced tape. One piece centered across the long seam, and two pieces centered across the edge seams.

11. Insert one of the spacers that came with the outer shipping carton into this carton with the foam blocks up.

12. Place the inner shipping carton inside the outer shipping carton.

13. Fit the other spacer into the outer carton with the foam blocks down.

14. Fold the short flaps into the carton and the long flaps onto the short flaps. Install six staples equally spaced along the seam.

15. Seal the carton with reinforced tape, one piece centered along the seam, and two pieces centered along the two edge seams.

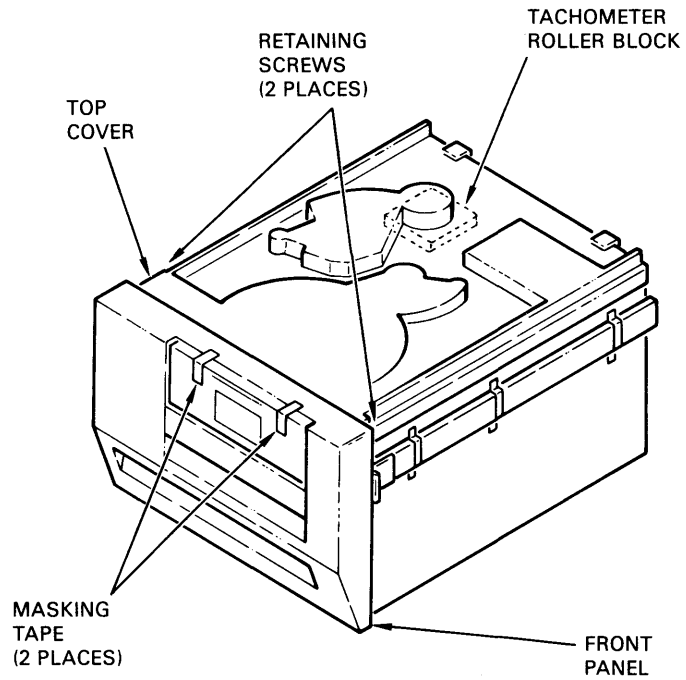

Figure 4.

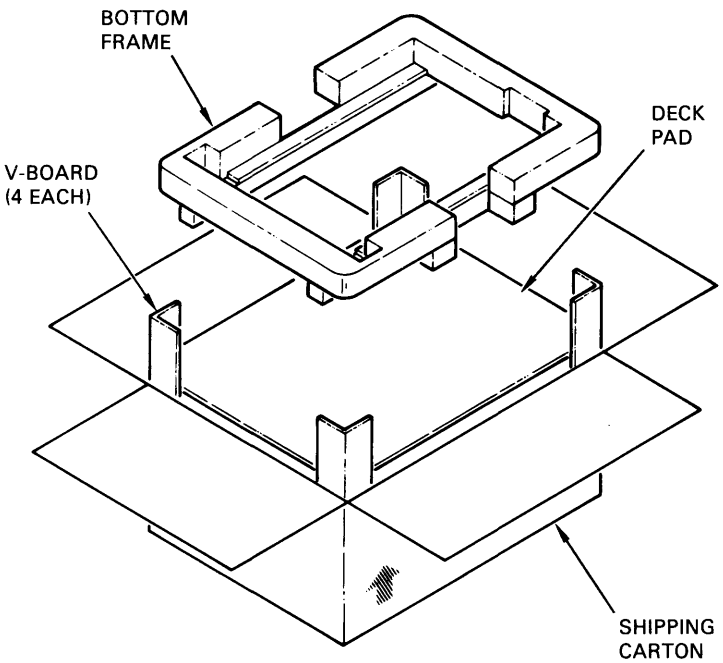

Figure 5.

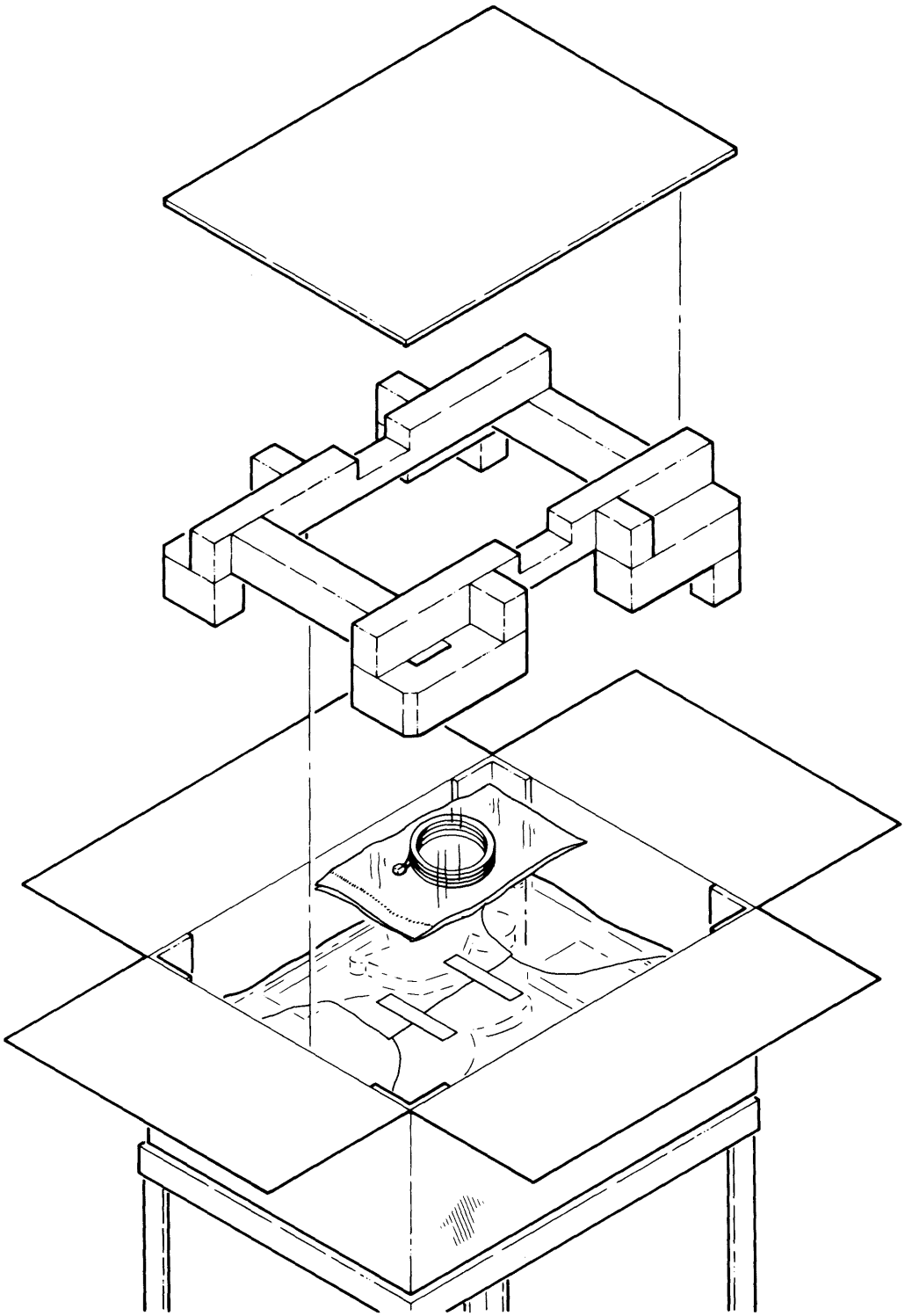

Figure 6.

1.2 Rack Mounting

The GCRCTU is designed to be mounted in a standard, 19-inch-wide, EIA equipment rack using the slides and mounting hardware provided with each unit. The tape drive must be mounted with no front panel obstructions. Refer to Figure 7 to mount the drive as follows:

1. Locate the front and rear holes to be used on the equipment rack (1, Figure 7). If they are threaded, drill them out to 0.281 inches.

2. Place the drive in service access position. Refer to paragraph 5.2.

3. Starting with either side, remove the stationary section of the slide (2) from the drive by pulling the stationary section to the rear of the drive and pushing down on the locking lever. Then pull the slide rearward another 1/2 inch, push inward on the spring lock, and remove the stationary section.

4. Determine, for the depth of the rack, the appropriate holes to use in the mounting bracket and secure it loosely to the stationary section using two screws (4) and a nut plate (5).

5. Mount the front flange of the stationary section (2) to front rail by placing flange behind rack rail holes.

6. Install two screws (6), first through front of rail, then through the stationary section flange, and secure them loosely with a nut plate (7).

7. Mount the mounting bracket to the rear by placing the flange in front of the rack rail holes.

8. Install two screws (8), first through back of rack, then through mounting bracket flange, and secure them loosely with a nut plate (9).

9. Check the alignment and correct as necessary. Tighten front, rear, and mounting bracket attachment screws.

10. Repeat steps 3 through 9 for the other slide.

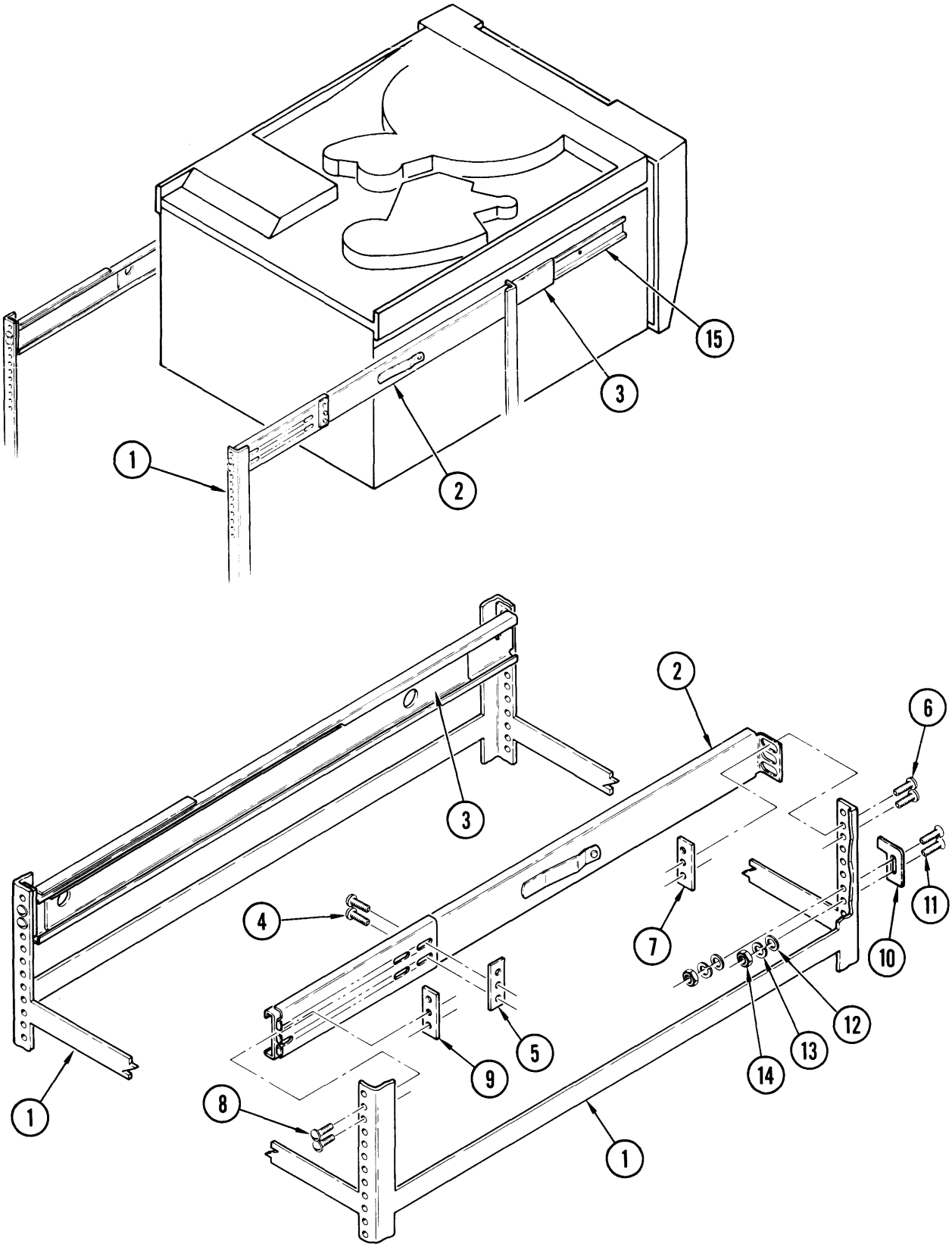

Figure 7. Rack Mounting

11. Install the bottom edge of the rack latch bracket (10) on the left rail 2.13 inches below the center-line of the slide using two screws (11), flat washers (12), split-lock washers (13), and nuts (14).

12. Carefully slide the drive into the rack-mounted slide sections while checking for binding or interference. Release the locks and, before closing fully, check that the rack latch will engage securely.

13. Adjust the rack latch bracket (10) or slides as required. To release, squeeze the rack latch plate inside the air duct opening at the lower left of the front panel.

1.2.1 Removing Slides

CAUTION
Use two people to remove the drive from the equipment rack.

1. Slide the drive outward fully from the equipment rack.

2. Push down on the locking lever of the slides, then pull the drive outward another 1/2 inch.

3. Push inward on the secondary spring lock (round button on side of slide near lever), then pull the drive out of the equipment rack and set it on a table.

4. There are two slide members still attached to the drive; both must be removed. Push inward on the leaf spring to allow the sliding member to be moved.

5. Align the access hole near the rear of the sliding member over the rear screw securing the stationary member. Remove the rear screw, then move the sliding member as necessary to remove the other two screws are secured by nuts accessible inside the chassis.

1.3 Power Connection

The a-c input voltage to the M990 is determined by a multi-position select switch located at the rear of the tape unit. The following voltages and frequencies may be selected:

NOMINAL VOLTAGE (Vac)	FREQUENCY (Hz)	AVAILABLE VOLTAGE (Vac)	OPERATING VOLTAGE RANGE (Vac)	AC SWITCH SELECTION (Hz)
127	59-61	111-137	102-158	120,60
200	49-61	190-220	170-220	200,50/60
208	59-61	180-220	170-220	200,50/60
110	49-61	96.5-119	96.5-120	120,50/60
120	49-61	104-127	102-132	120,50/60
240	49-51	210-259	204-264	240,50/60
240	59-61	208-254	204-264	240,50/60
100	49-61	85-110	85-110	100,50/60
104	49-61	88-110	88-114	100,50/60
220	49-61	193-238	187-242	220,50/60
230	49-51	202-249	187-249	220,50/60

CAUTION:
To prevent damage to the M990 and ensure proper operation, be sure the outlet voltage is correct before applying power to the tape unit.

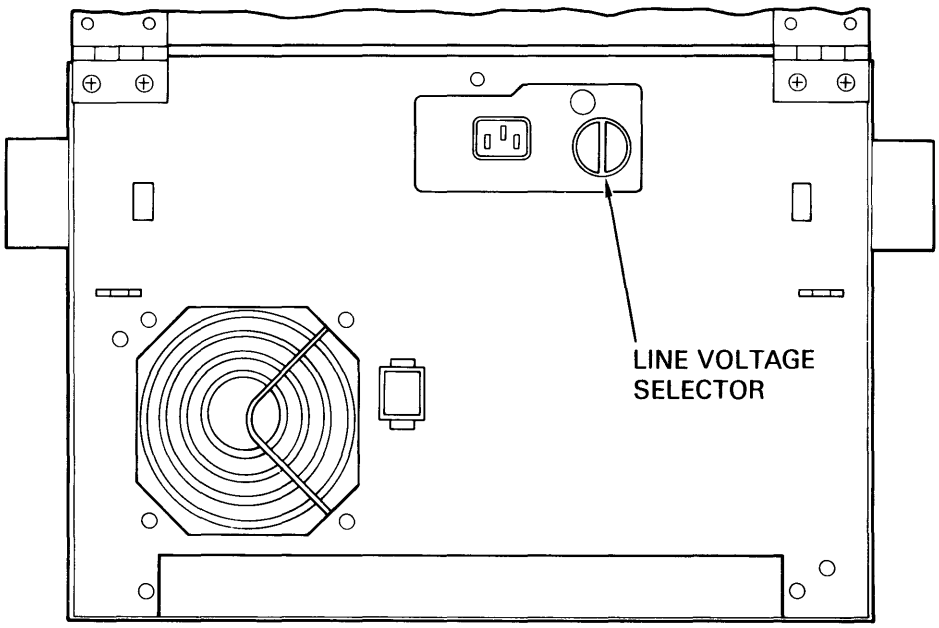

A power cord is supplied only for the voltage range indicated on the manufacturer's label.

1.3.1 Plug Connector - Power cord preparation - 3 conductor, 1-phase, 16 Amp max.

This unit may or may not have an electrically acceptable plug attached to the power cord. Select a plug from the chart on the following page that corresponds to the country in which the machine is being installed. If more than one plug is acceptable for use in your country, you must select a plug with an electrical rating equal to or greater than the machine rating.

This plug should comply with IEC Publication 83, and be marked with a safety agency mark acceptable to the country of installation.

The Power Cord wires must be prepared by stripping the outside jacket and wire insulation to make with the respective plug. Strain relief clamps on the plug must secure the outside jacket of the power/cable when finished.

1.3.2 Power Cord Connections to Plug

1. Connect the blue wire to the Neutral terminal or the plug.
2. Connect the brown wire to the line (Hot) terminal on the plug.
3. Correct the green/yellow wire to the Earth terminal on the plug.

PLUG OUTLINE:
DELINEACIONES DE CLAVIJAS (EL):

STECKER SKIZZE:
BOUCHOM DECOURANT:

1 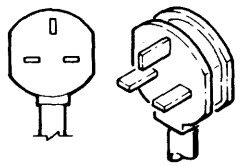 13 Amp. 250 Volt BS 1363	2 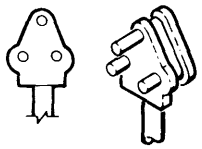 15 Amp. 250 Volt BSI 546	3 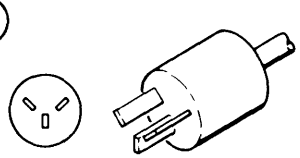 6/16 Amp. 250 Volt (Earth Pin may be round) S.I. 32
4 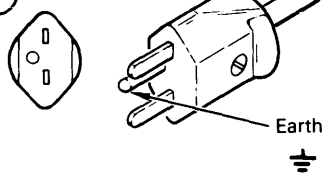 10 Amp. 250 Volt (Voltage Pins may be round) SNV 24509	5 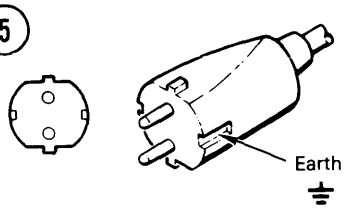 16 Amp. 250 Volt CEE7	6 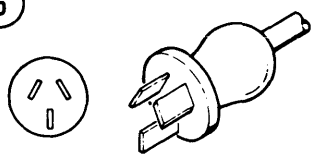 10 Amp. 250 Volt Approved as C112-1964
7 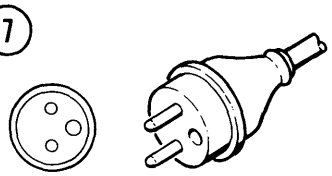 16 Amp. 250 Volt CEE7	8 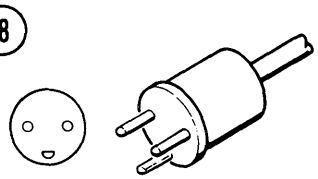 6/10 Amp. 250 Volt Approved AFSNIT 107	9 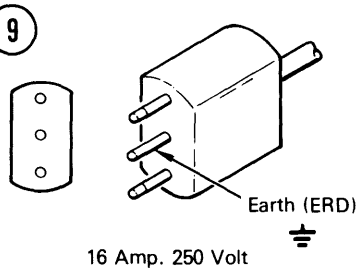 16 Amp. 250 Volt
10 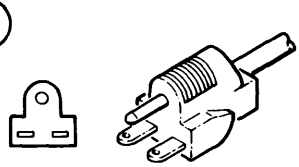 15 Amp. 250 Volt IEC 83 UL 498	11 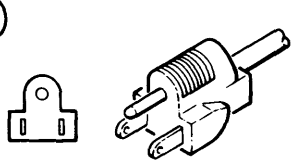 15 Amp. 125 Volt IEC 83 UL 498	12 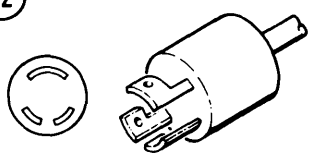 15 Amp. 125 Volt

(1) United Kingdom
Ireland
Malaysia
Singapore
Argentina

(2) South Africa

(3) Israel

(4) Switzerland

(5) Germany
Austria
Bulgaria
Finland
Iceland
Indonesia
Iran
Netherlands
Norway
Poland
Portugal
Romania
Spain
Sweden
Turkey
Bolivia

(6) Australia
New Zealand
Uruguay

(7) France
Belgium
Greece
Hungary
Yugoslavia

(8) Denmark

(9) Chile
Italy

(10) United States
Canada

(11) Bahamas
Barbados
Bermuda
Brazil
Canada
Colombia
Costa Rica
Dominican Rep.
Ecuador
Guatemala
Honduras
Jamaica

(11) Mexico
Antilles
Nicaragua
Panama
Paraguay
Peru
Phillippines
Taiwan
Trinidad
Venezuela
United States

(12) Japan

1.4 Interface Connection

Note: If the M990 is to be connected with the SCSI Interface, please refer to the SCSI Addendum, part number 799893-002, at this time.

Interconnection to the M990 and system equipment should be made with a twisted-pair shielded cable with approximately 110 ohms of characteristic impedance. To ensure reliable performance, the cables should have:

1. A maximum length of 30 feet to include service loop. The length of cable from the host to the first tape unit must not exceed 15 feet.

2. The cable length between units connected in the daisy chain harness should not exceed 10 feet.

3. 22 or 24 AWG conductors with a 0.01 inch minimum insulation thickness and not less than one twist-per-inch for twisted-pair cables.

It is important that the ground wires of twisted-pair be grounded at each end of the cable.

Note: This equipment generates, uses, and can radiate radio frequency energy and if not installed and used in accordance with the instructions included in this manual, may cause interference to radio communications. Verification of compliance with Subpart J of Part15 of FCC Rules, which are designed to provide reasonable protection against such interference, is the responsibility of the installer. Interface connectors provided on the GCR are shown in Fig. 8. Tables 1 and 2 list the pin locations for interface inputs and outputs.

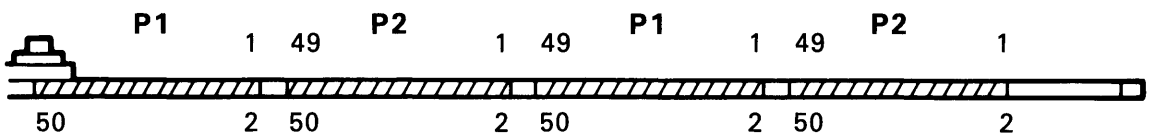

Figure 8. Interface Connectors

The M990 may be configured to allow of up to eight transports with a single controller. Use cables similar to those described above for interconnection of transports. Refer to Figures 9 and 10.

To configure the M990 to operate on a multiple transport system, proceed as follows:

1. Place M990 in service access position. (See Section 5.2.)
2. Remove the CIF/WRITE board. (See Section 5.37.)
3. Remove terminator resistor pack U1B and U3C (Figure 10) from each transport except last unit in the chain.
4. Install interconnection cables as shown in Figure 10.

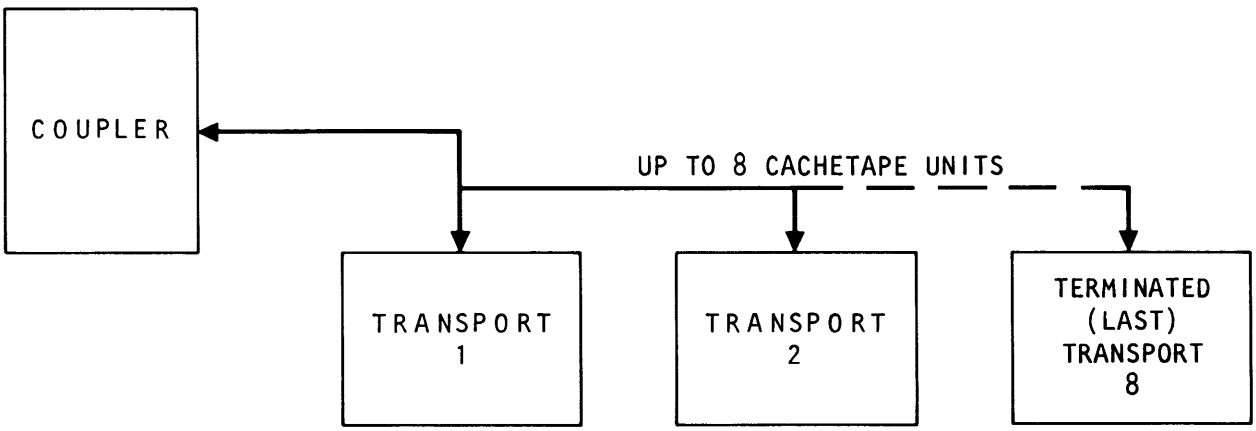

Figure 9. Daisy Chain Block Diagram

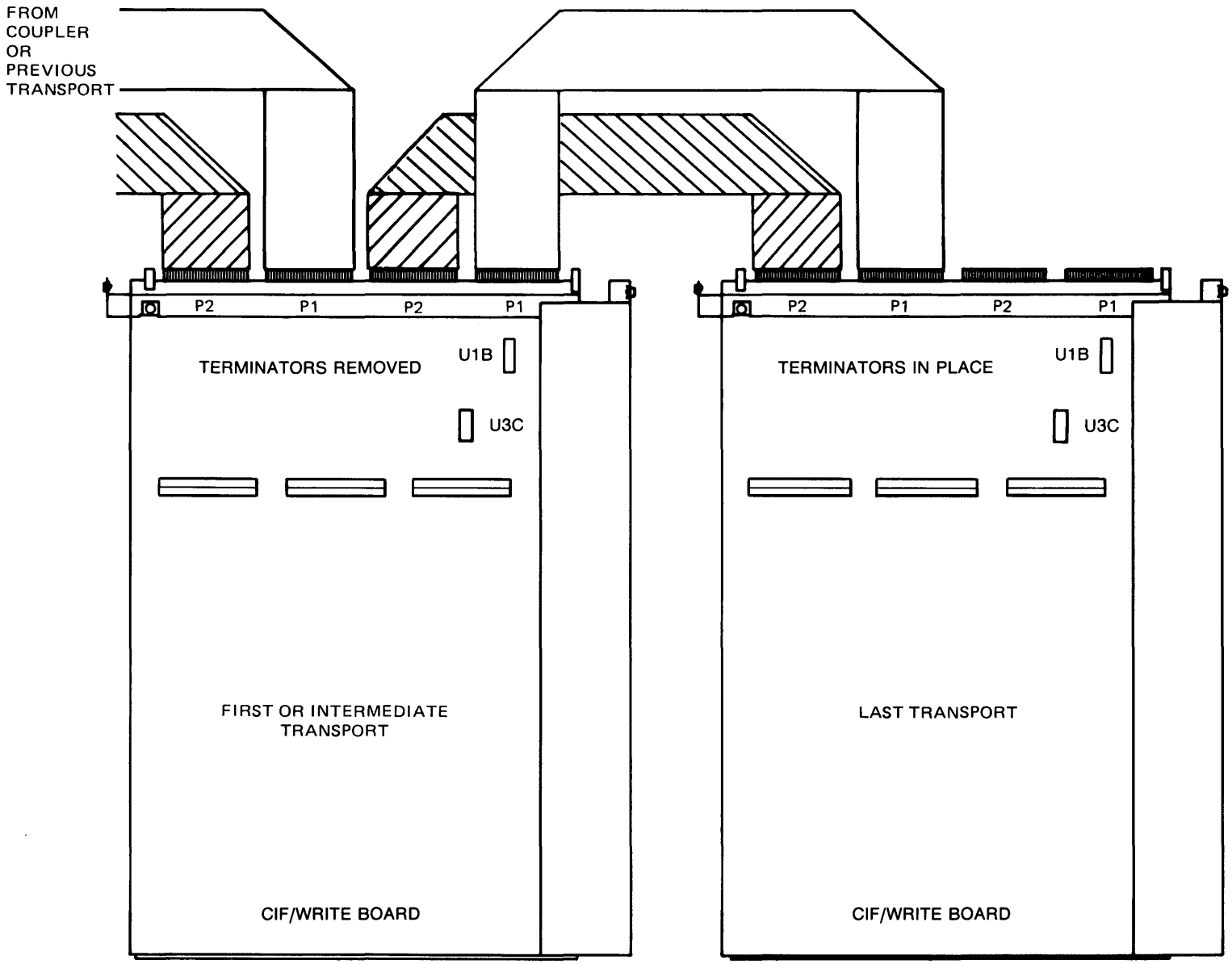

Figure 10. Daisy Chain Configuration

Plug No.	Live Pin	Ground Pin	Signal Description	Signal Name
P1	4	3	Last Word	ILWD
P1	6	5	Write Data 4	IW4
P1	8	7	Initiate Command	IGO
P1	10	9	Write Data 0	IW0
P1	12	11	Write Data 1	IWI
P1	16	15	Load On-line	ILOL
P1	18	17	Reverse	IREV
P1	20	19	Rewind	IREW
P1	22	21	Write Data Parity	IWP
P1	24	23	Write Data 7	IW7
P1	26	25	Write Data 3	IW3
P1	28	27	Write Data 6	IW6
P1	30	29	Write Data 2	IW2
P1	32	31	Write Data 5	IW5
P1	34	33	Write	IWRT
P1	36	35	Not Used*	---
P1	38	37	Edit	IEDIT
P1	40	39	Erase	IERASE
P1	42	41	Write File Mark	IWFM
P1	44	43	Not Used*	---
P1	46	45	Transport Address 0	ITADO
P2	18	17	Formatter Enable	IFEN
P2	24	23	Rewind/Unload	IRWU
P2	46	45	Transport Address 1	ITADI
P2	48	47	Formatter Address	IFAD
P2	50	49	Not Used*	---

* These are properly terminated for compatibility with other products.

Table 1. Interface Signals, Controller to Transport

Plug No.	Live Pin	Ground Pin	Signal Description	Signal Name
P1	2	1	Formatter Busy	IFBY
P1	48	47	Read Data 2	IR2
P1	50	49	Read Data 3	IR3
P2	1	--	Read Data Parity	IRP
P2	2	--	Read Data 0	IR0
P2	3	--	Read Data 1	IR1
P2	4	--	Load Point	ILDP
P2	6	5	Read Data 4	IR4
P2	8	7	Read Data 7	IR7
P2	10	9	Read Data 6	IR6
P2	12	11	Hard Error	IHER
P2	14	13	File Mark	IFMK
P2	16	15	Identification	IDENT
P2	20	19	Read Data 5	IR5
P2	22	21	End of Tape	IEOT
P2	28	27	Ready	IRDY
P2	30	29	Rewinding	IRWD
P2	32	31	File Protect	IFPT
P2	34	33	Read Strobe	IRSTR
P2	36	35	Write Strobe	IWSTR
P2	38	37	Data Busy	IDBY
P2	42	41	Corrected Error	ICER
P2	44	43	On-Line	IONL

Table 2. Interface Signals, Transport to Controller

TAPE DRIVE COMMAND LINES.

Decoding these five lines produces the commands listed below.

	IREV	IWRT	IWFM	IEDIT	IERASE
Read Forward	0	0	0	0	0
Read Reverse	1	0	0	0	0
Read Reverse Edit	1	0	0	1	0
Write Forward	0	1	0	0	0
Write Edit	0	1	0	1	0
Write File Mark	0	1	1	0	0
Erase Variable Length	0	1	0	0	1
Erase Fixed Length	0	1	1	0	1
Security Erase	0	1	1	1	1
Space Record Forward	0	0	0	0	1
Space Record Reverse	1	0	0	0	1
Space File Search Forward	0	0	1	0	0
Space File Search Forward (Ignore Data)	0	0	1	0	1
Space File Search Reverse	1	0	1	0	0
Space File Search Reverse (Ignore Data)	1	0	1	0	1
Write Sync/Status Hold	0	0	0	1	1
Select 3200 CPI	1	0	1	1	1
Select 1600 CPI	0	0	1	1	1
Select 6250 CPI	1	1	0	0	0
Select NRZI	1	1	0	0	1
Read Extended Status	0	0	0	1	0
Diagnostic Write	1	1	1	1	1

1.5 Interface Description

Commands, status, and data are exchanged between the host controller and the M990 GCR tape unit via the interface section. The interface signals are all active low.

Interface Input Signals

The following signals are received by the M990 from the host controller.

IGO Initiate Command. Used to latch the command specified on the command lines into the selected ready GCR tape unit.

IFEN Formatter Enable. Enables the GCR tape unit. With GCR tape unit on-line and IDBY true, pulse will reset a command "runaway" condition.

IREW Rewind. Interface input signal. With GCR tape unit ready, on-line, and not at BOT, causes tape to rewind in reverse direction.

IREWU Rewind/Unload. With GCR tape unit on-line, cause selected unit to go off-line, rewind to BOT marker, and then unload the tape.

IREV Reverse.

IWRT Write.

IWFM Write File Mark.

IEDIT Edit.

IERASE Erase.

ILWD Last Word. Used during a write operation to indicate that the character to be strobed into the formatter is the last character of the record.

IW0-IW7 IWP Write Data. Input lines that carry write data from the host controller to the GCR tape unit.

IFAD-(MSB) Address lines used to select a daisy-chained GCR tape unit.

ITAD0, ITAD1-LSB

TAPE DRIVE ADDRESS

IFAD	ITAD0	ITAD1	Logical Address
0	0	0	0
0	0	1	1
0	1	0	2
0	1	1	3
1	0	0	4
1	0	1	5
1	1	0	6
1	1	1	7

1.6 Integration Of The GCR To The System

To optimize performance of the GCR in the system, certain operating parameters for block size, ramp delay, simulated speed, parity, and various options need to be adjusted using diagnostic test 142. Refer to section 4.1.3.

This test is designed to be used by a knowledgeable service technician only when the GCR configuration needs to be redefined from the default values listed below.

1.	Option inactive -	
2.	Host Supplied Parity -	No
3.	Echo Read Strobes - On Write	Yes
4.	EOT Mode -	Normal
5.	Forward Hitch Enabled -	Yes
6.	Echo 3200 bpi ID Burst -	No
7.	Option inactive	
8.	Abort Active Writes on Overwrites	No
9.	Interface Transfer - Rate (kHz)	158.2
10.	Default Density on Power Up	6250 BPI
11.	Maximum Block - Size (k bytes)	9
12.	I/F Ramp Delay -	3 MS
13.	Write Sync Options -	ALL WRTS
14.	Read Error Retries -	3
15.	Write Error Retries -	15
16.	Read Error Correction on -	Yes
17.	Unit Address	0
18.	Lock Out 3200 bpi - Writes	No
19.	Remote Density - Select Enabled	Yes
20.	Report Corrected Errors - Enable	Yes
21.	Allow Single Track Write Errors -	No
22.	6250 Write Current - (read as XX.XX ma)	XXXX
23.	1600 Write Current -	XXXX
24.	3200 Write Current -	XXXX

25.	6250 RAW Threshold - (read as 0.XXX mv)	XXX
26.	1600 RAW Threshold -	XXX
27.	3200 RAW Threshold -	XXX
28.	3200/6250 BPI Select as 6250 BPI -	No
29.	Display "feet to EOT" -	No
30.	Write Error Override	No
31.	Remote Load/On-Line	No

Note: Items 22 thru 27 are not alterable by tests 142/242. If the operating parameters have not been previously established, the optimum operating configuration can be determined as follows:

1. Select a data transfer rate that you know to be compatible with the system, or try the default value of 158.2 kHz. Refer to the section 4.1.3 of this manual (test 142). The data transfer rate can be calculated using the following equation:

   Tape Speed (ips) * Density (bpi) = Data Transfer Rate (kHz)

2. Run an actual tape program or functional tape diagnostic to establish basic compatibility; e.g., measure time to backup 10 megabytes as a reference.

   Calculate the throughput using the following formulas:

   $$\frac{\text{Total Number of Bytes Written}}{\text{Total Time Required to Complete Write (seconds)}} = \text{bps}$$

   bps/1000 = kHz

   Note: Parametric diagnostics are designed for troubleshooting a particular tape transport and are not indicative of system performance. The best tests of GCR compatibility are live programs that use the tape sub-system. Functional diagnostics that measure tape system performance are another legitimate tool.

3. Select the next higher GCR burst transfer rate using test 142.

4. Repeat steps 2 and 3 until the data rate of the GCR exceeds the data rate capability of the system, as evidenced by data late flags in the host system or a substantial increase in repositioning activity in the GCR unit (caused by write retries due to incomplete data transfers).

5. Select the next lowest GCR burst transfer rate using test 142.

6. Refer to the section 4.1.3 of this manual (test 142) and modify the other variable parameters as required to complete the configuration.

1.6.1 Parameter Functions

A number of operating parameters are available to select standard and special options and make the drive performance compatible with the system. A brief description of each selectable operating parameter function follows:

Host Supplied Parity - compares the host supplied parity with the internally generated parity of the byte at the interface, and flags IHER if they do not match.

Echo Read Strobe on Writes - echoes a read strobe on write operations for systems that require an echo to know what data is being written. However, the read data lines do not transfer data during a write operation.

EOT Mode - causes the last record to be written at, or before, the EOT marker. This function supports systems that do not accept records written beyond the EOT marker. This option should be use only where necessary, because performance degradation near EOT will occur.

FWD Hitch Enabled - causes the drive to jog the tape forward, prior to any reverse operation in order to overcome static friction.

Echo 3200-BPI ID Burst - echoes, or does not echo, a 3200-BPI ID burst, depending on the requirements of the host. This function does not depend on a 3200-BPI ID burst being present on the tape.

Abort Active Writes on Overwrites - with this option enabled, a 'write-backspace-write' operation will physically execute both writes. This becomes significant, if the operation is an erase followed by a reverse operation and then a write (directory.) In this case, it is the intent of the software to have the tape erased prior to laying down the directory over that portion of tape. This option would need to be ON for this to happen. Normal operation has this option disabled, allowing command overwrite in cache memory.

Interface Transfer Rate - sets the burst rate at which data is transferred between GCR CacheTape and the host. Transfer rates from 70.3 to 632.8 kbs.

Default Density at Power Up - specifies the density to be displayed when the drive is powered up.

Maximum Block Size - sets the maximum acceptable size for a block of data. The acceptable sizes are 9K, 16K, 32K, and 64K. The actual available size of Cache depends on the specified block size, as available Cache is based on the full size of Cache, less the specified maximum block size, plus the actual size of one more block of data. (The actual size of the data blocks being sent are often less than the specified maximum size.) The selected maximum block size specifies the record size limit Cache will accept before pulsing IHER to initiate a host system retry, and expanding the specified block size to the next larger size.

Interface Ramp Delay - selects a 0 to 15 millisecond delay to be added to the standard time gap between the receipt of IGO and when IDBY is set. This delay is the command response time which, in a start/stop drive, would be the ramp time.

Auto Write Sync on Double File Marks - enables an automatic write sync, when two successive File Mark commands are received. When disabled, it prevents time outs and throughput degradation on systems sensitive to the length of time necessary to complete writing two consecutive file marks.

Read/Write Error Retries - sets the maximum number of read/write retries GCR CacheTape will perform on one record block.

Read Error Correction ON - enables, or disables, GCR software error correction.

Unit - specifies the unit number at power up.

Lock Out 3200-BPI Writes - prevents selection of the 3200-BPI density. However, the drive can still read a 3200-BPI tape, because of the normal "default to the density found" criteria in the read operation.

Remote Density Select Enabled - allows the integrator to disable the density selection sent through the interface. With this function, the operator can override a remote selection of a density that may not be available on GCR CacheTape.

Report Correct Errors Enabled - normal (yes) setting causes all read error corrections to be reported to the host at the time for data transmission by the ICER Line. Disabled (no) disables corrected error reporting.

Allow Single Track Write Errors - limits automatic write retries in the GCR mode to blocks having more than one channel in error. Use of this option should be limited to operations where error-free data is less important than sustained data throughput.

3200/6250 BPI Select as 6250 BPI - selects the 6250 BPI density through the interface, whether the drive command is for 6250 BPI or 3200 BPI. This option should be enabled when the system uses the same bit map to select the 6250 BPI density as the drive uses to select the 3200 BPI density. In this case, the 3200 BPI must be selected from the front panel.

Display Feet to EOT - displays the number of feet available before End-of-Tape when the drive is On Line. This information takes the place of the word "Active" on the alpha display.

Chapter 2. Parts and Location

2.1 M990 GCR Tape Unit - Front view

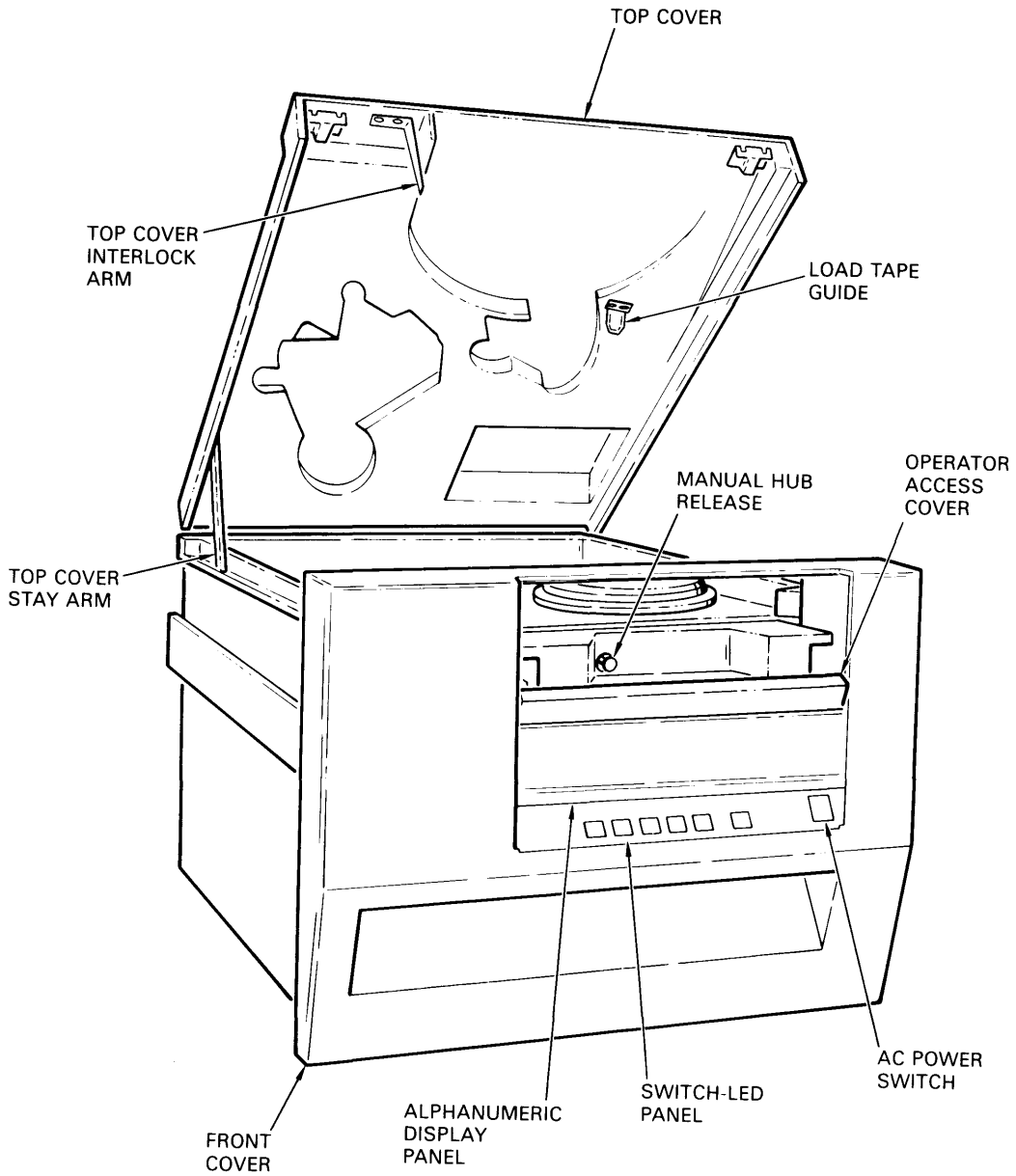

2.2 M990 GCR Tape Unit - Front View
(Unit in Service Position)

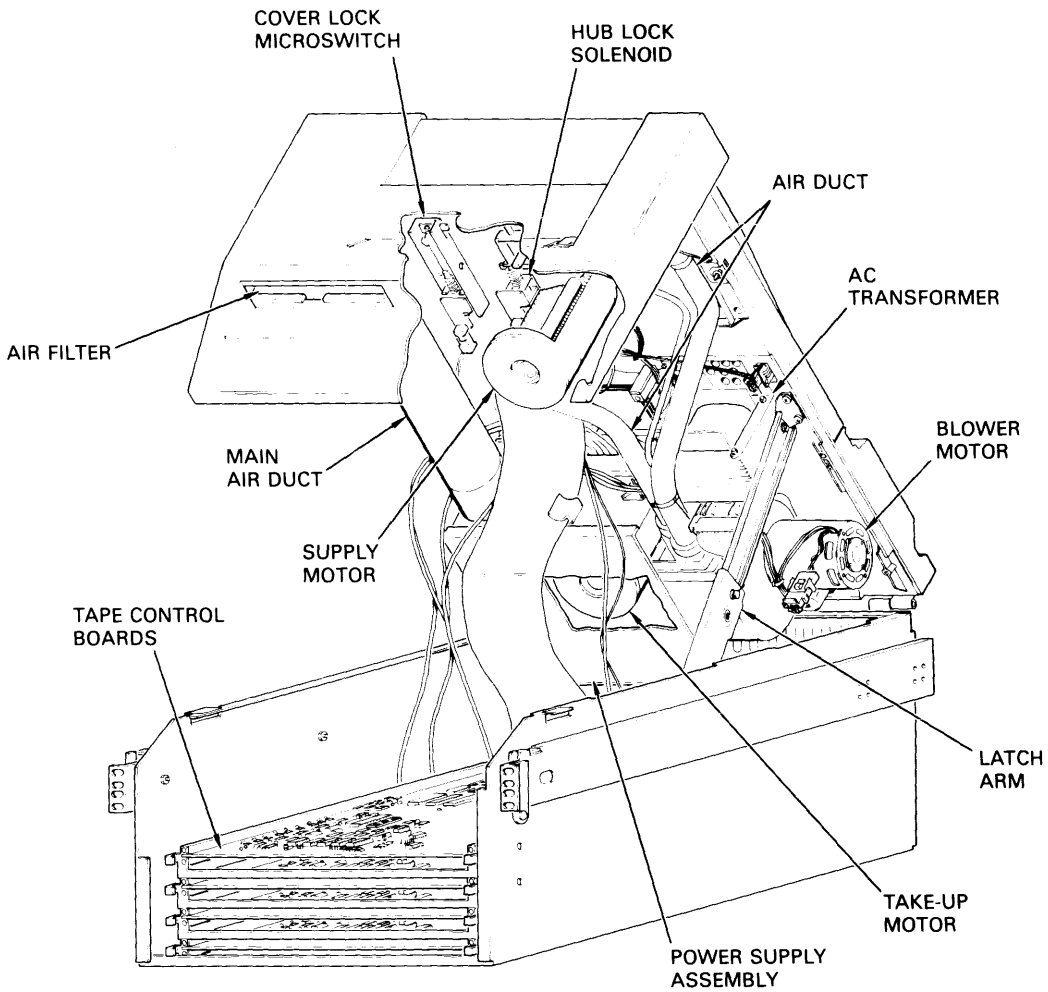

2.3 M990 GCR Tape Unit - Top View

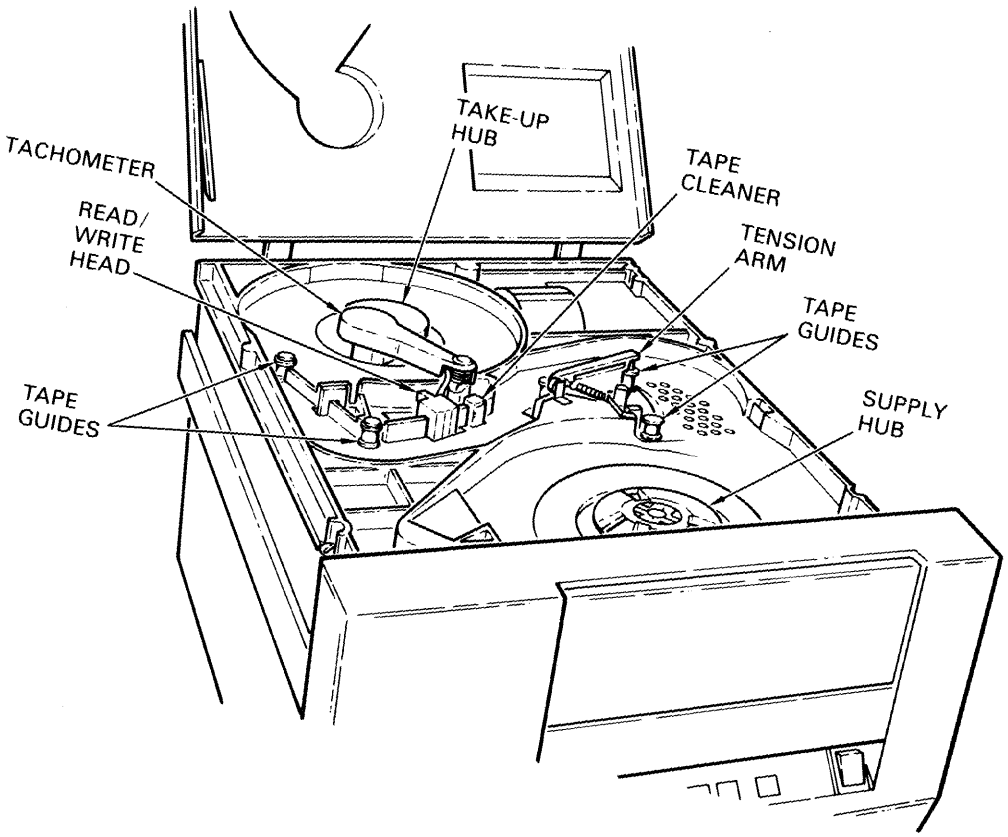

2.4 M990 GCR Tape Unit - Rear View

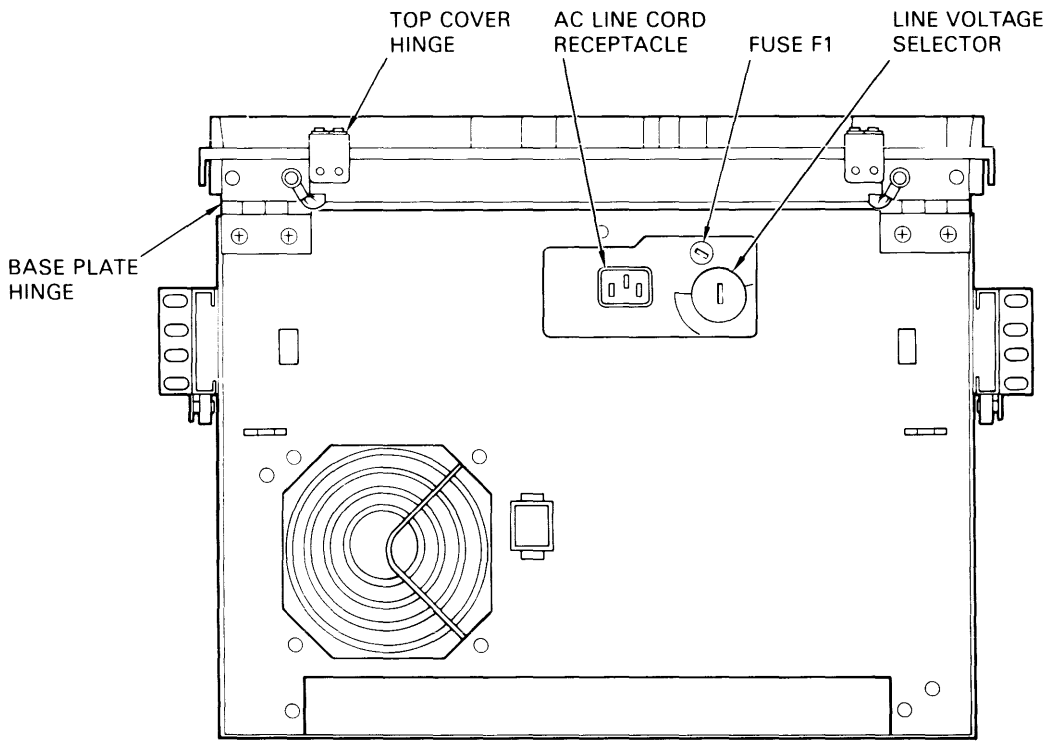

2.5 M990 GCR Tape Unit - Bottom View

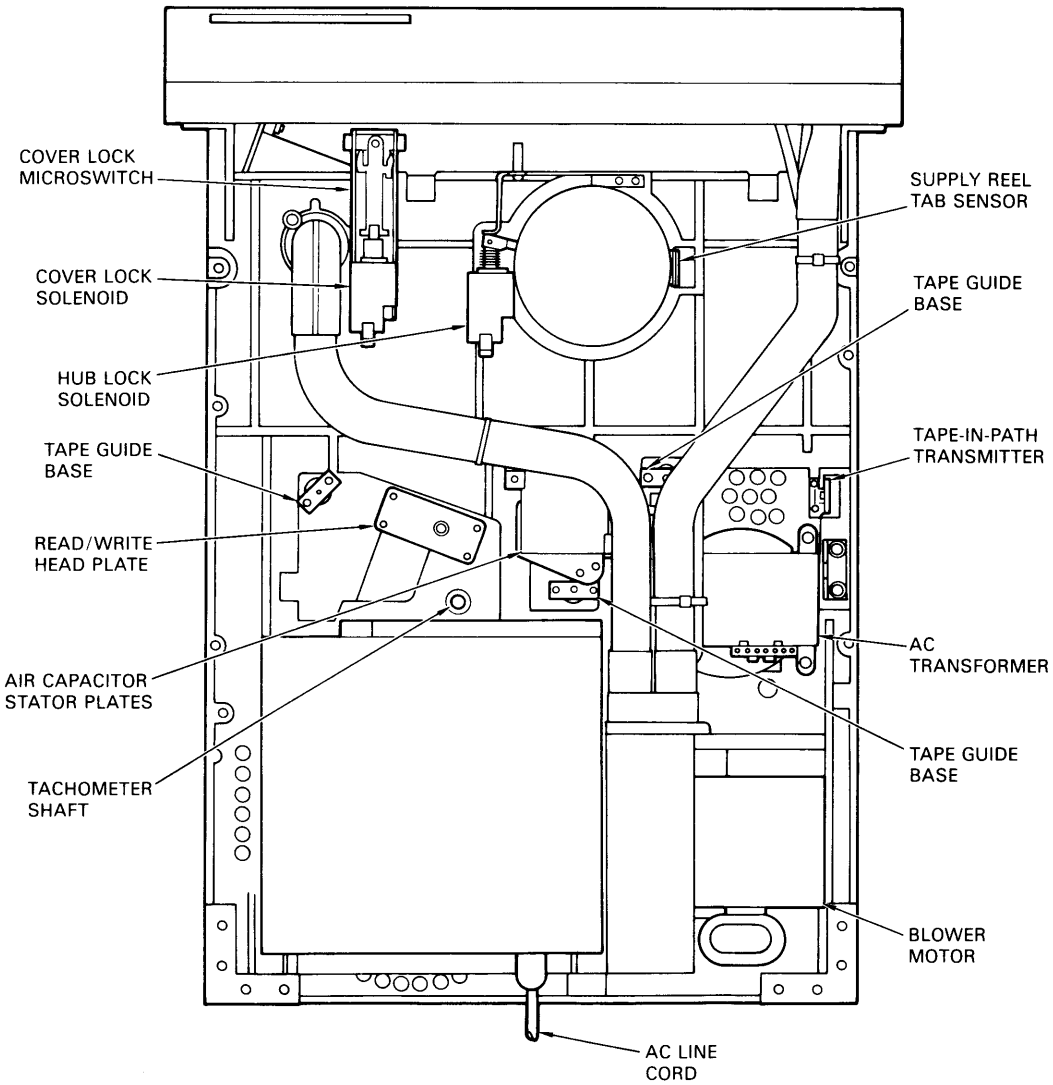

Chapter 3. Illustrated Parts Breakdown

The illustrated parts breakdown divides the Model M990 Magnetic Tape Streamer Unit into assemblies, subassemblies, and component parts.

Figure 3-1 is an overall view of the magnetic tape transport for use in identifying major assemblies. Figures 3-2 through 3-7 represent both an exploded view of these major assemblies and their relationships to the overall assembly.

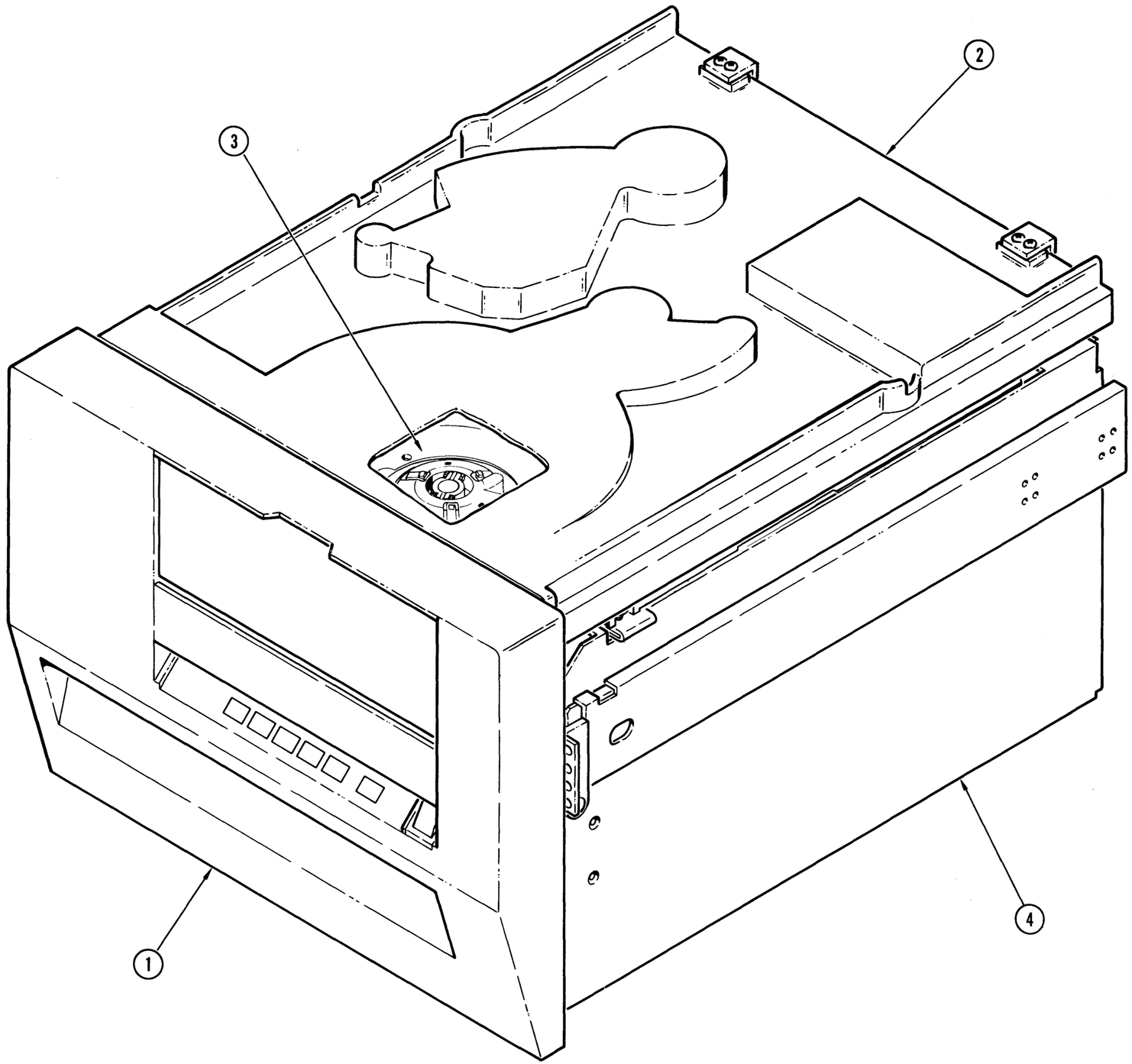

Figure 3-1. Model M990 Magnetic Tape Streamer Unit (Assembled View)

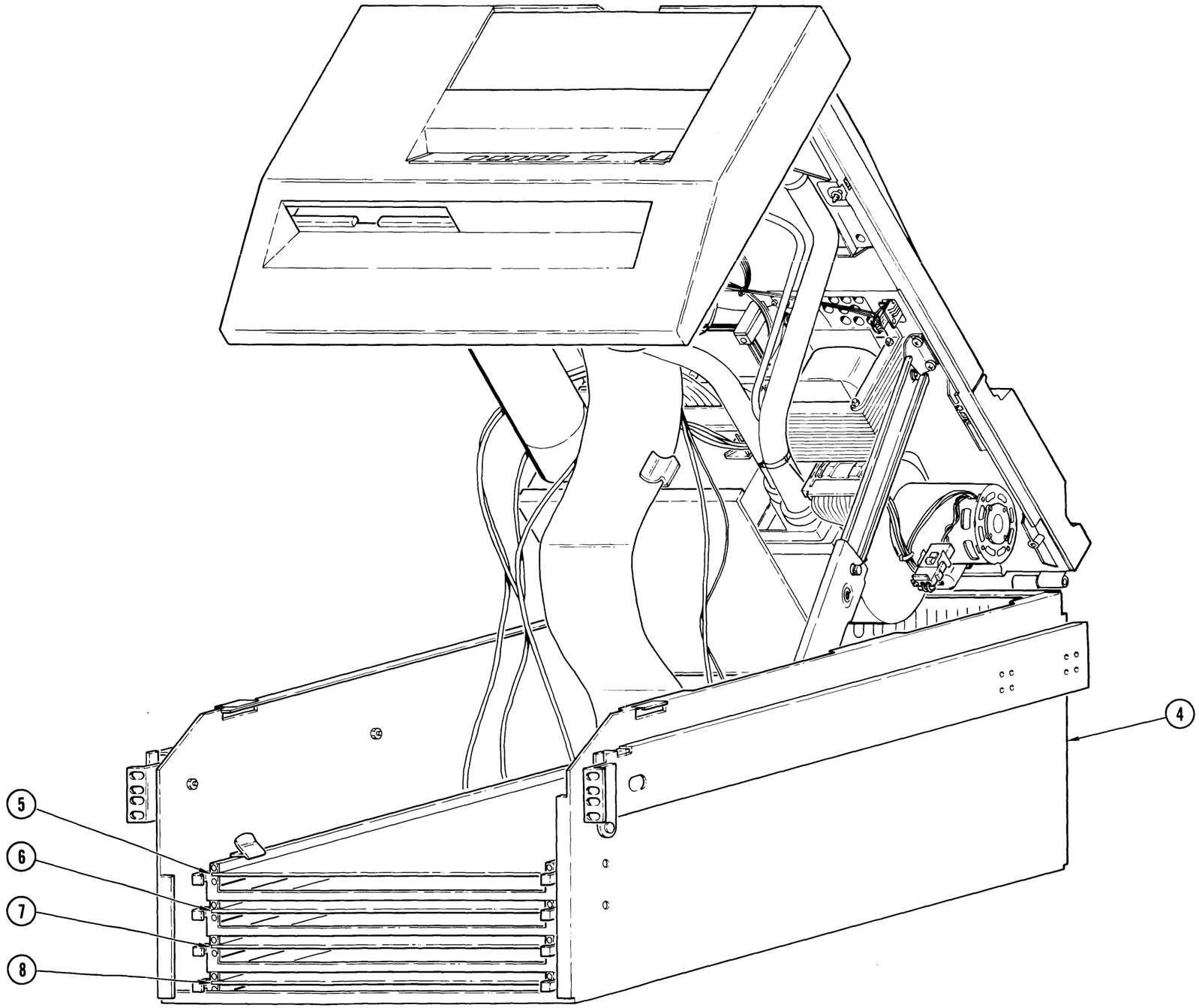

Figure 3-1. Model M990 Magnetic Tape Streamer Unit (Assembled View)

FIGURE & INDEX NO.	PART NUMBER	DESCRIPTION 1 2 3 4 5	UNITS PER ASSY	USABLE ON CODE
3-1	960954-007 963121-001	MAGNETIC TAPE STREAMER, Model M990 ..... Model M990 TUV (+37V)		
-1	964145-001	. FRONT PANEL ASSEMBLY ..... (See Figure 3-3)	1	
-2	960057-001	. TOP COVER ASSEMBLY	1	
-3	960942-004	. BASIC DRIVE ASSEMBLY ..... (See Figure 3-4)	1	
-4	960948-001	. CHASSIS ASSEMBLY ..... (See Figure 3-5)	1	
-5	963490-001	. PRINTED WIRING BOARD ASSEMBLY, ... Sensor/Servo	1	
	963491-001	. TUV (+37V) Sensor/Servo PWB		
-6	963394-001	. PRINTED WIRING BOARD ASSEMBLY, ... CPU/MMU	1	
-7	963674-001	. PRINTED WIRING BOARD ASSEMBLY, ... DATA	1	
-8	962357-001	. PRINTED WIRING BOARD ASSEMBLY, ... CIF/Write	1	
-5	962832-002	. PRINTED WIRING BOARD ASSEMBLY, ... Sensor/Servo	1	
	962810-002	TUV (+37V) Sensor/Servo		
-6	962112-001	. PRINTED WIRING BOARD ASSEMBLY, ... CPU/MMU	1	
-7	962789-001	. PRINTED WIRING BOARD ASSEMBLY, ... DATA	1	

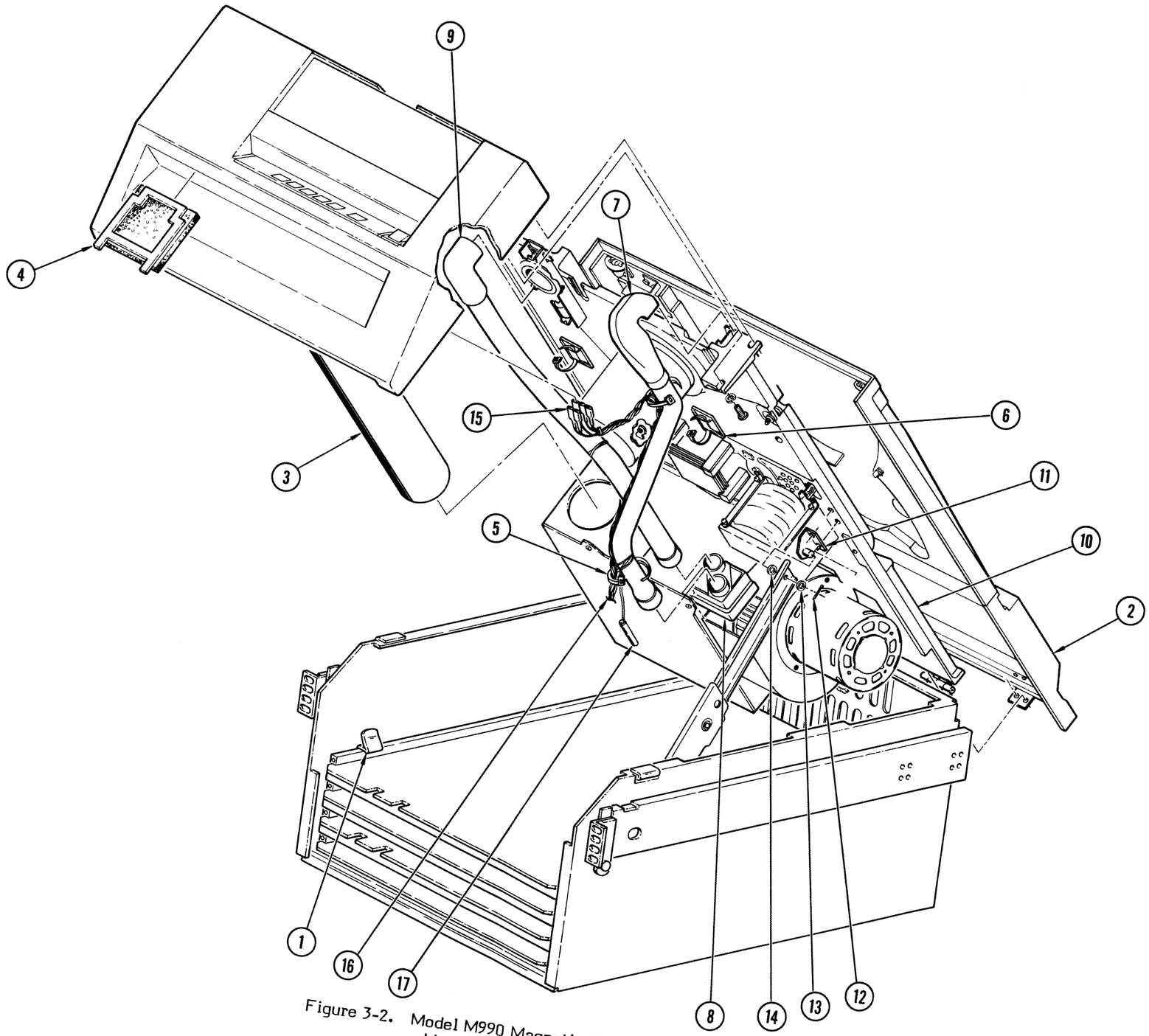

Figure 3-2. Model M990 Magnetic Tape Streamer Unit (Exploded View)

FIGURE & INDEX NO.	PART NUMBER	DESCRIPTION 1 2 3 4 5	UNITS PER ASSY	USABLE ON CODE
3-2	960954-007	MAGNETIC TAPE TRANSPORT, ...	REF	
-1	963787-001	. HOLD DOWN, card cage	2	
-2	960057-001	. TOP COVER ASSEMBLY	1	
-3	760101-795	. AIR DUCT (Tube)	1	
-4	961514-001	. FILTER, Air	1	
-5	210229-516	. TY-RAP, 8 in	2	
-6	970457-001	. CABLE CLAMP, adhesive backed	3	
-7	160107-478	. DUCT, Air, front panel	1	
-8	760101-609	. NOZZLE, Blower	1	
-9	760106-554	. DUCT, Air, top plate	1	
-10	960942-004	. BASIC DRIVE ASSEMBLY ..... (See Figure 3-4 for breakdown)	1	
-11	160105-418	. BRACKET, Assembly, top plate support	1	
-12	205042-509	. PIN, Cotter, 1/16 x $\frac{1}{2}$ in. lg	1	
-13	207104-021	. WASHER, Flat, No. 10	1	
-14	961084-001	. SPACER	1	
-15	961881-001 961832-001	. HARNESS ASSEMBLY, Power supply ..... . HARNESS ASSEMBLY, Main	1 1	
-16	970134-001	. LANYARD, Elastic	1	
-17	760105-519	. PIN, Safety	1	

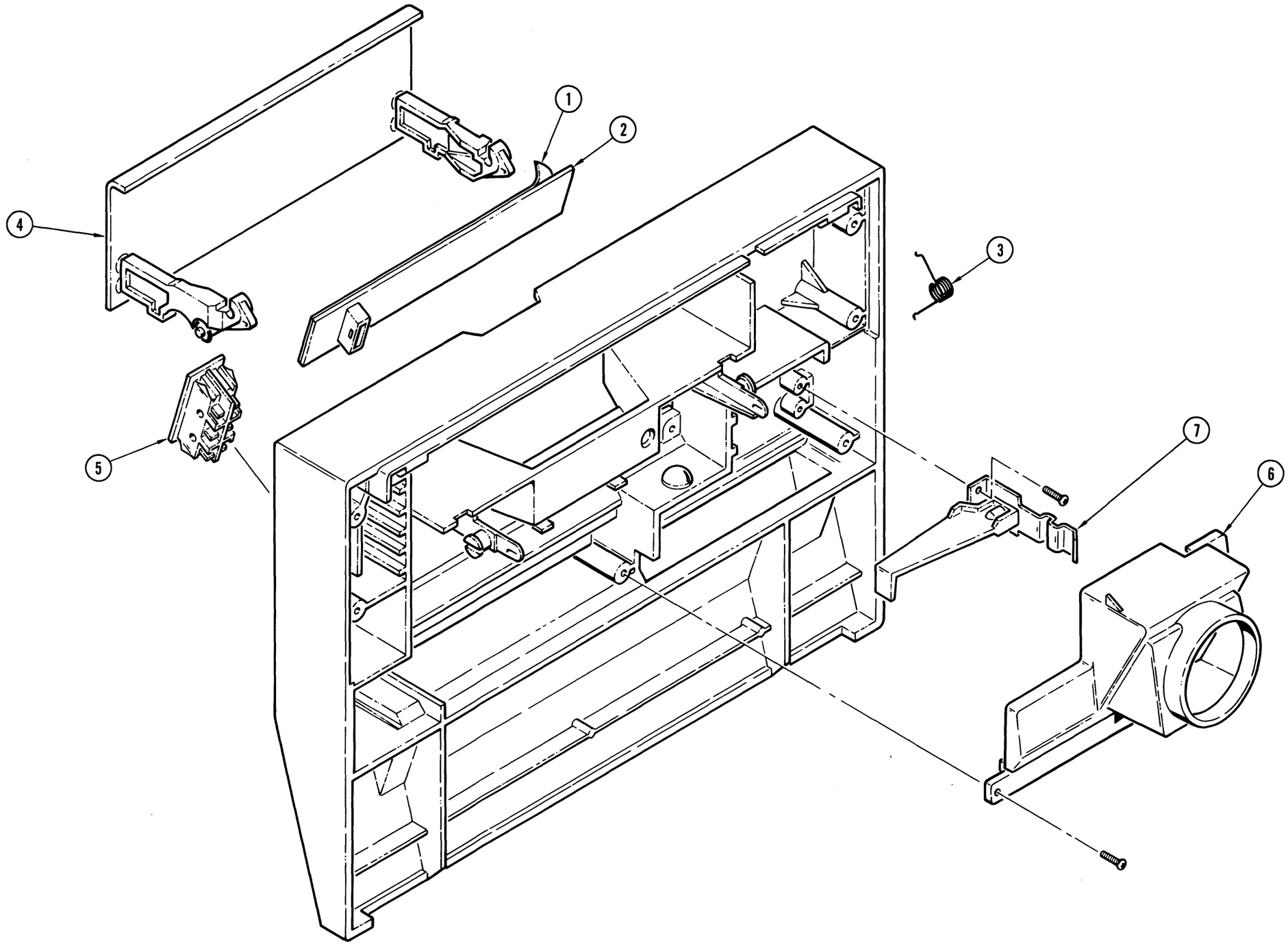

Figure 3-3. Front Panel Assembly (Exploded View)

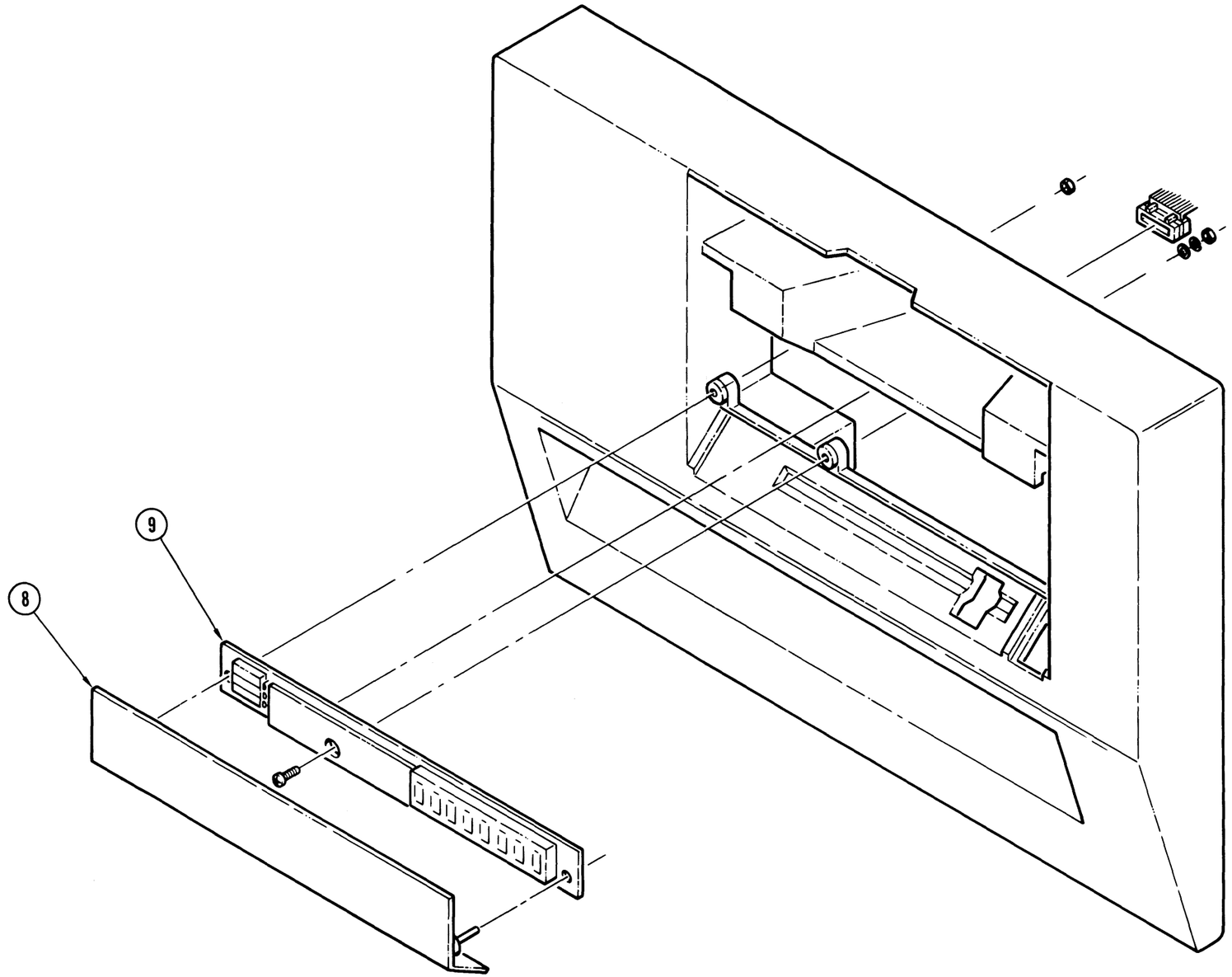

Figure 3-3. Front Panel Assembly (Exploded View)

FIGURE & INDEX NO.	PART NUMBER	DESCRIPTION 1 2 3 4 5	UNITS PER ASSY	USABLE ON CODE
3-3	964145-001	FRONT PANEL ASSEMBLY ..... (See Figure 3-1 for next higher assembly)	REF	
-1	961166-001	. FACIA, Touch Switch	1	
-2	961148-001	. TOUCH SWITCH, 6 position	1	
-3	961910-001	. SPRING, Filter side	1	
	961910-002	. SPRING, Switch side.....	1	
-4	964032-003	. DOOR ASSEMBLY	1	
-5	961348-001	. SWITCH, Power, DPDT, 16A, 250V	1	
-6	962485-001	. FILTER HOUSING.....	1	
-7	961266-001	. HANDLE, Rack latch	1	
-8	961140-001	. COVER, Display	1	
-9	961717-001	. PWB ASSEMBLY, Diagnostic display	1	

REVISED _____

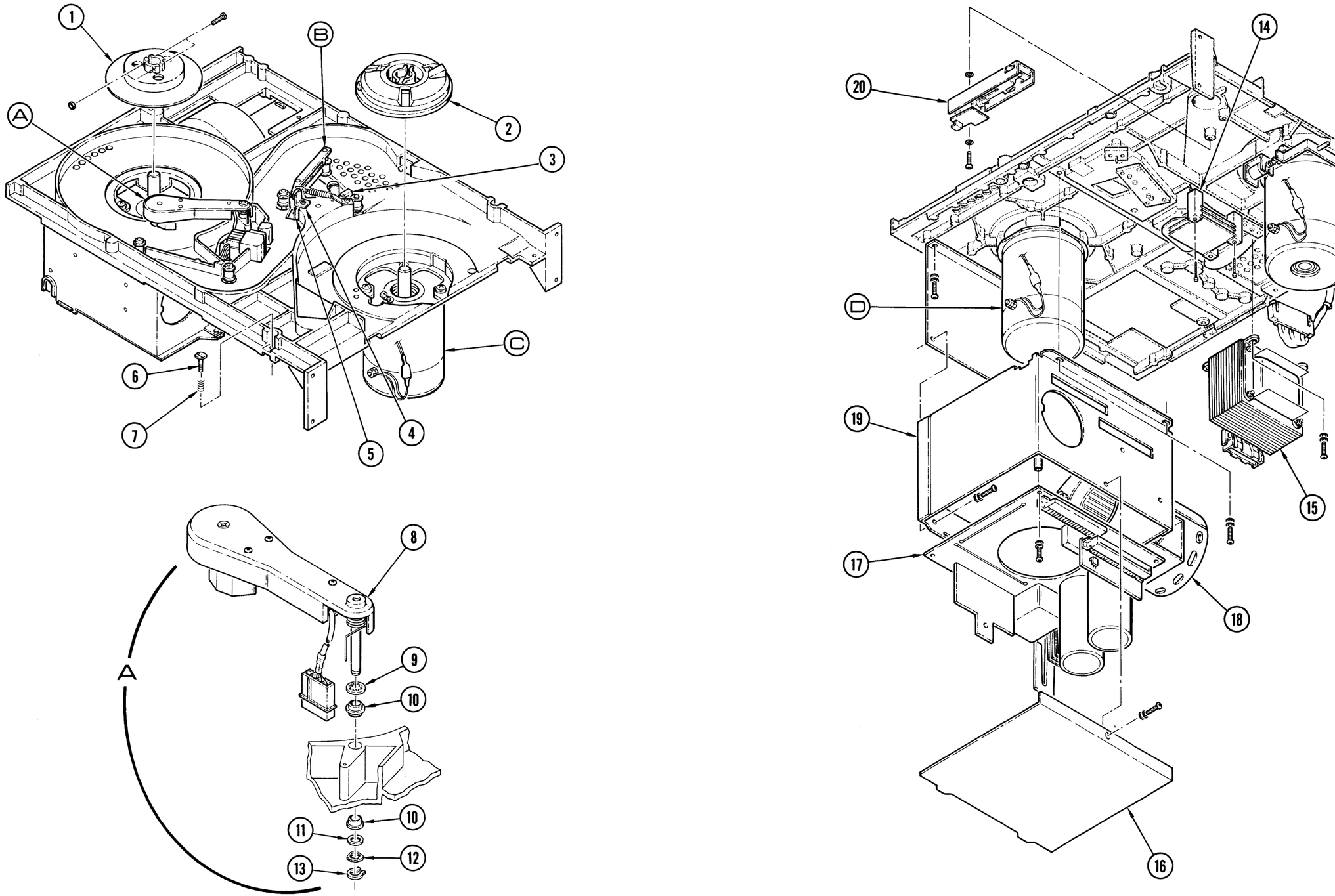

Figure 3-4. Basic Drive Assembly (Exploded View)

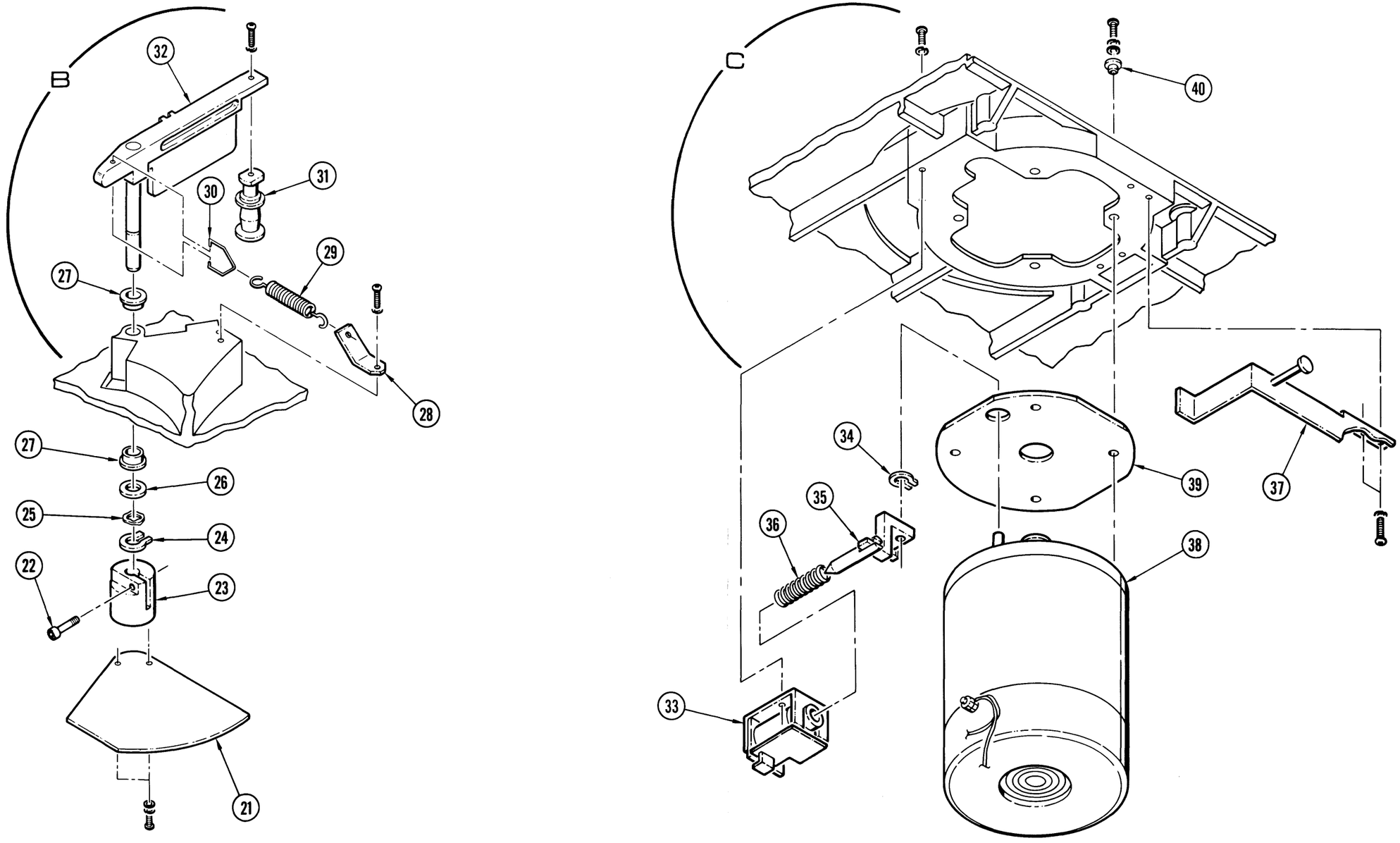

Figure 3-4. Basic Drive Assembly (Exploded View)

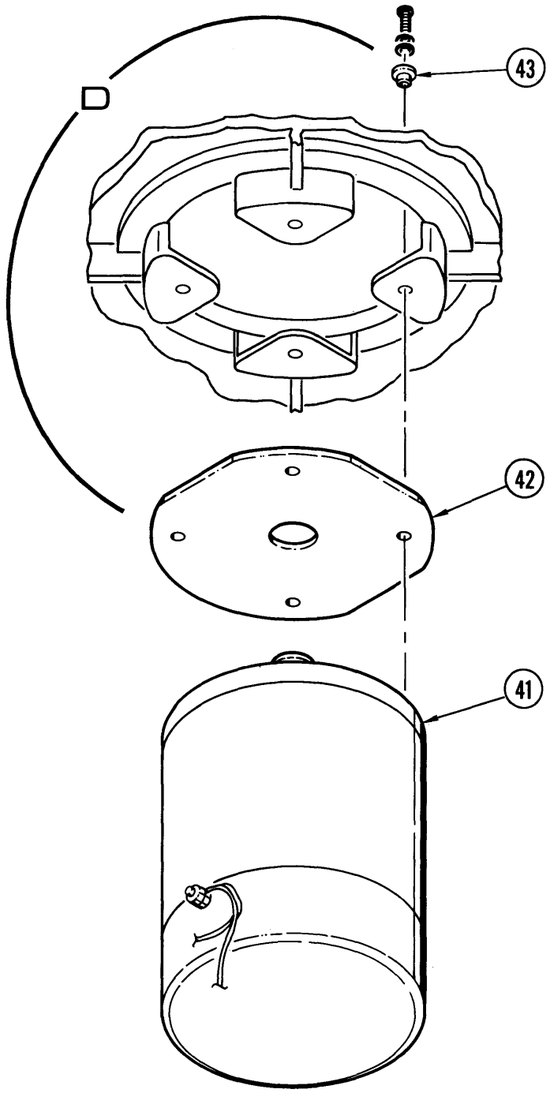

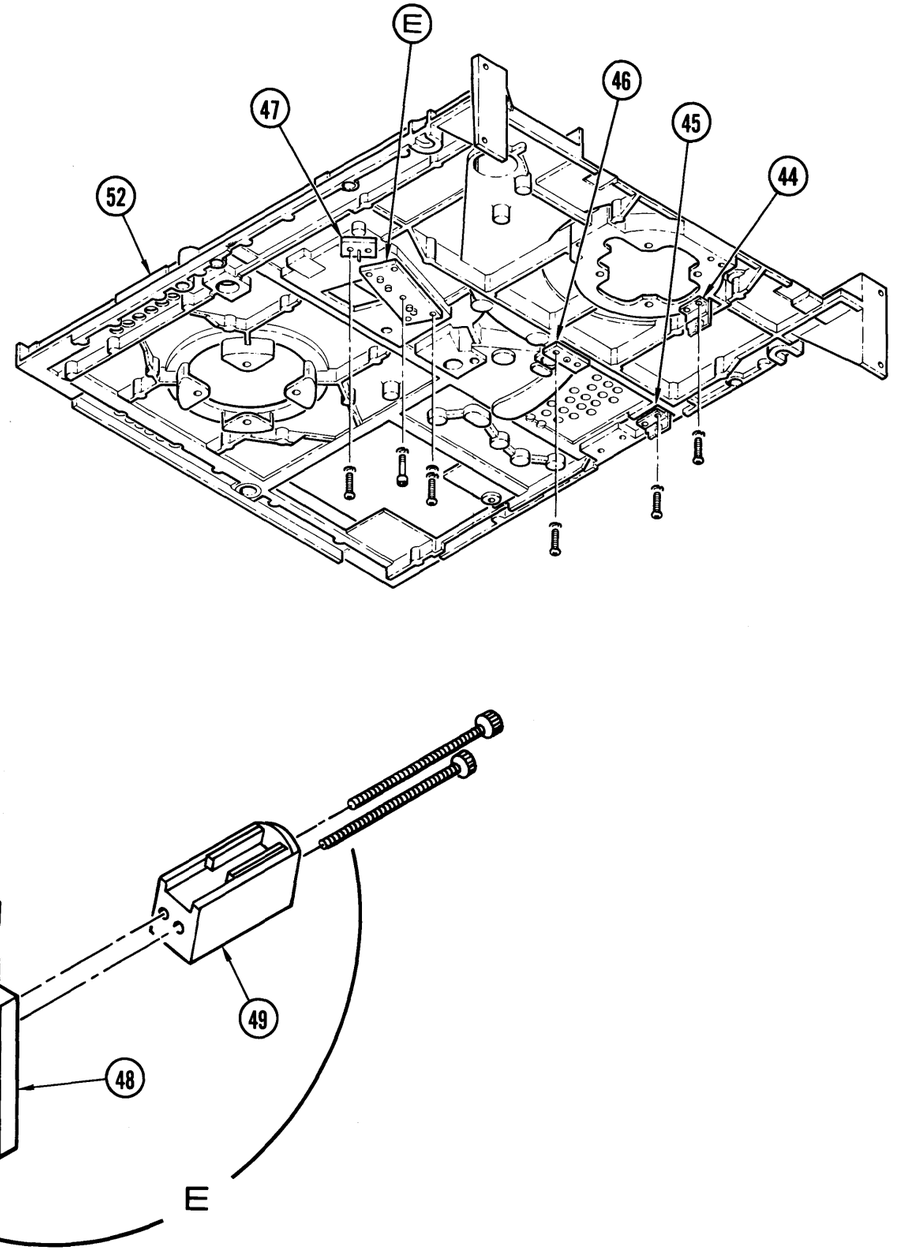

Figure 3-4. Basic Drive Assembly (Exploded View)

FIGURE & INDEX NO.	PART NUMBER	DESCRIPTION 1 2 3 4 5	UNITS PER ASSY	USABLE ON CODE
3-4	960942-004	BASIC DRIVE ASSEMBLY ..... (See Figure 3-1 for next higher assembly)	REF	
-1	760106-567	. HUB, Takeup	1	
-2	160101-406	. SUPPLY HUB ASSEMBLY	1	
-3	160103-433	. TAPE SENSOR ASSEMBLY, Molded.....	1	
-4	160106-479	. BUMPER ASSEMBLY	1	
	160106-478	. BUMPER ASSEMBLY	1	
-5	961699-001	. PRINTED WIRING BOARD ASSEMBLY..... Reflective sensor, EOT/BOT	1	
-6	962197-001	. SCREW, Captive, quick opening	2	
-7	962653-001	. SPRING, Compression, fastener	2	
-8	160105-433	. TACHOMETER ASSEMBLY.....	1	
-9	210200-032	. RING, Retaining, Push-On	1	
-10	210067-001	. BEARING, 1/4 x 3/8 in.	2	
-11	731911-102	. SHIM, .005 in. thick, 1/4 in. ID	AR	
-12	210008	. WASHER, Wave spring	1	
-13	205226-050	. RING, Grip, 1/4 in. ID	1	

FIGURE & INDEX NO.	PART NUMBER	DESCRIPTION 1 2 3 4 5	UNITS PER ASSY	USABLE ON CODE
3-4				
-14	160101-471	. CAPACITOR PLATE ASSEMBLY.....	1	
-15	961874 001	. POWER TRANSFORMER, MGCR.....	1	
	961874-002	. TUV (+37V)		
-16	961087-001	. COVER ASSEMBLY, Power supply housing.....	1	
-17	961181-002	. PWB ASSEMBLY, Power Supply	1	
-18	961604-001	. AIR PUMP ASSEMBLY.....	1	
-19	961087-001	. POWER SUPPLY HOUSING.....	1	
-20	961507-001	. DOOR LOCK ASSEMBLY	1	
-21	760102-575	. SHUTTER, Capacitor, Molded.....	1	
	160103-499	. COMPLIANCE ARM ASSEMBLY	1	
-22	970938-405	. SCREW, Torx.....	3	
-23	963430-001	. HUB, Capacitor shutter	1	
-24	210200-032	. RING, Retaining, external, 1/4 in.....	1	
-25	210008	. WASHER, Wave spring	1	
-26	731911-102	. SHIM, 0.005 in. thick x 1/4 in. ID	1	
-27	210067-001	. BEARING, 1/4 x 3/8 in.	2	

REVISED _____

FIGURE & INDEX NO.	PART NUMBER	DESCRIPTION 1 2 3 4 5	UNITS PER ASSY	USABLE ON CODE
3-4				
-28	760101-565	. . BRACKET, Spring, compliance arm	1	
-29	210006-010	. . SPRING, Extension	1	
-30	760101-554	. . CLIP, Spring.....	1	
-31	760104-500	. . TAPE GUIDE, Crowned roller, short	1	
-32	160104-492	. . ARM AND SHAFT ASSEMBLY	1	
-33	961666-001	. HUB LOCK SOLENOID ASSEMBLY	1	
-34	210200-032	. RING, Retaining	1	
-35	960745-001	. BELLCRANK, Assembly	1	
-36	963188-001	. SPRING, Compression	1	
-37	960930-001	. . BRACKET, Hub, Unlock		
-38	962747-001	. MOTOR, Permanent magnet, 4 in. ..... diameter, supply	1	
	963494-001	. MOTOR, TUV (+37V), supply		
-39	760101-756	. INSULATOR, Motor	1	
-40	760101-768	. WASHER, Shoulder, insulating	4	
-41	961510-101	. MOTOR, Permanent magnet, ... 4 in. dia, takeup	1	
	962912-001	. MOTOR, TUV (+37V), take up		

FIGURE & INDEX NO.	PART NUMBER	DESCRIPTION 1 2 3 4 5	UNITS PER ASSY	USABLE ON CODE
3-4				
-42	760101-756	. INSULATOR, Motor	1	
-43	760101-768	. WASHER, Shoulder, insulating	4	
-44	960771-001	. PRINTED WIRING BOARD ASSEMBLY, ... File protect	1	
-45	160101-010	. PRINTED WIRING BOARD ASSEMBLY, ... Reflective sensor, Tape-In-Path	1	
-46	160104-401	. ROLLER GUIDE ASSEMBLY.....	1	
-47	160104-400	. ROLLER GUIDE ASSEMBLY.....	3	
-48	961960-001	. HEAD ASSEMBLY.....	1	
-49	131047-001	. TAPE SCRAPER ASSEMBLY	1	
-50	963809-001	. HEAD CABLE, READ.....	1	
-51	963808-001	. HEAD CABLE, WRITE	1	
-52	760106-547	. TOP PLATE	1	

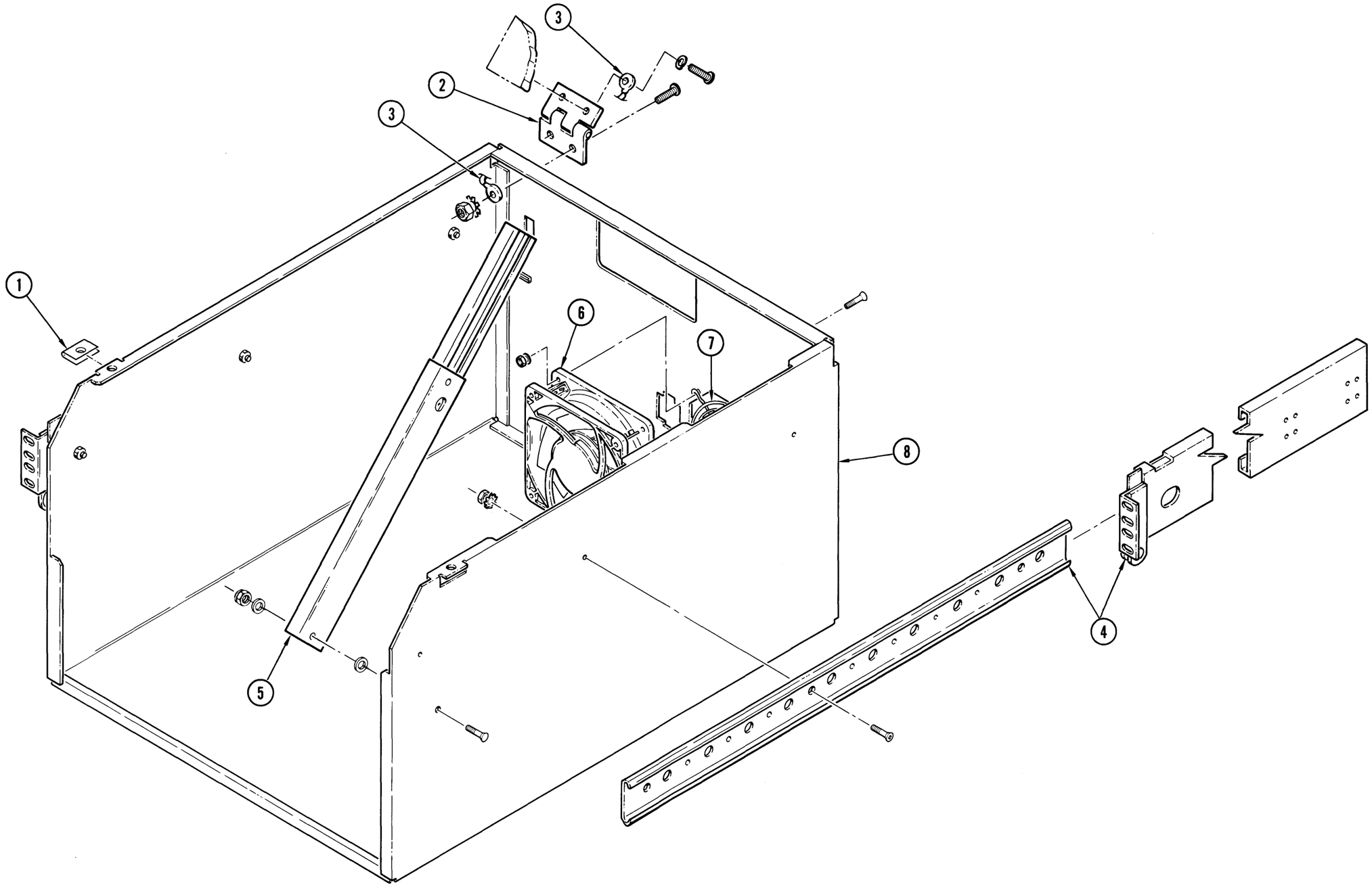

Figure 3-5. Chassis Assembly (Exploded View)

FIGURE & INDEX NO.	PART NUMBER	DESCRIPTION 1 2 3 4 5	UNITS PER ASSY	USABLE ON CODE
3-5	960948-001	CHASSIS ASSEMBLY ..... (See Figure 3-1 for next higher assembly)	REF	
-1	210116-027	. FASTENER, Clip-on	2	
-2	960238-001	. HINGE, Top Plate	2	
-3	962788-001	. GROUND STRAP, Chassis	1	
-4	961544-002	. SLIDE-CHASSIS, GCR Left	1	
	961544-001	. SLIDE-CHASSIS, GCR Right	1	
-5	963442-001	. SUPPORT MEMBERS, Assembly	1	
-6	970027-001	. FAN, AC, Axial, 4.5 sq.	1	
-7	970372-001	. GUARD, Finger, Fan	1	
-8	961078-001	. CHASSIS, MGCR	1	

Chapter 4. Diagnostic Tests and Troubleshooting

CAUTION: This unit should be serviced by qualified maintenance personnel only.

ACHTUNG: Dieses Gerat darf nur von Fachpersonal gewartet werden.

CAUTION: If either the top cover or front tape loading door are forced open, moving mechanical parts may cause injury.

ACHTUNG: Wenn der Klappdeckel oder die vordere Bandladeture mit Gewalt geoffnet werden, besteht Gefahr der Verletzung durch die beweglichen Teile.

4.1 Diagnostic Test

The M990 tape unit has three separate types of built-in diagnostic tests.

1. Power-On Confidence Tests - Automatic power-on self diagnostic tests.
2. Series 100 Tests - Diagnostic tests **WITHOUT** a tape loaded.
3. Series 200 Tests - Diagnostic tests **WITH** a tape loaded.

The alphanumeric messages displayed during the diagnostic tests are shown below along with a brief description of each test.

4.1.1 Power-On Confidence Test

The power-on confidence test mode starts when the power is first switched on. During the power-on sequence, the number of the POC test that is being executed is displayed on the front panel.

The front panel indicators also illuminate with various patterns during the RAM test.

Note: Some tests run so fast that the test name i.e., POC Ø, will not appear in the alphanumeric display unless that test fails. Normal operation will show, TESTING RAM, POC 1, POC 2, 88888, ..., *****, and POC 5.

POC 0

This test checks both data and code RAM memory using a write/read and compare sequence of four patterns (FFFF, 5555, AAAA, 0000). The code RAM is checked first.

TESTING RAM

During the POC 0 test, the TESTING RAM message is displayed and the front panel indicators illuminate with various patterns.

RAM ERR

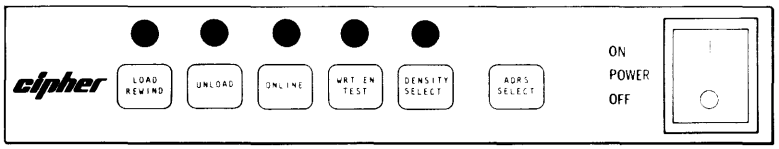

If the RAM ERR message is displayed and all of the front panel indicators remain lit, the unit failed to complete the RAM tests. Press any front panel switch to display a hex code (0000-FFFF) that indicates what area of RAM failed. The second activation of any front panel switch will display the reference designation of the faulty IC. Continue pressing the front panel switch until all faulty RAM IC reference designators are displayed. For example:

OOFF

Press any switch. Indicates that the lower bank of RAM failed.

IC U21N

Press any switch again. Indicates that U21N is one of the faulty IC's.

POC 1

This test calculates the check sum for the four PROM memories U20K, U22K, U23K, and U25K.

CSE UXXK

If the CSE UXXK message is displayed, POC 1 detected a check sum error on the indicated IC number. If more than PROM IC is faulty, its designator number will be displayed next.

POC 2

This test copies the data and code contained in the ROM's into the RAM memory, also resets the boot line.

88888888

.....

****

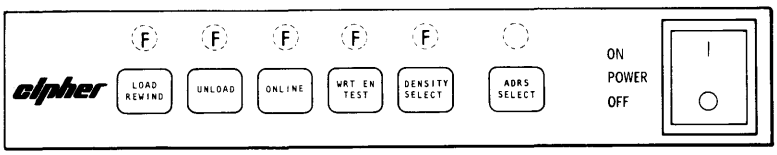

This test checks the alphanumeric display with three patterns; 88888888, ..., and ********, that alternate every 1/2 second. The front panel indicators also cycle continuously during this test.

POC 3

This test checks the contents of the NOVRAM. It performs a recall cycle on the NOVRAM, copies the information into RAM and performs an ecc check. If the ecc check fails completely, the NOVRAM is uninitialized and the default values are copied into the NOVRAM and the zero servo routine is called.

NVRM ERR

If the NVRM ERR message is displayed, the ecc routine corrected the erroneous bits. This message is displayed momentarily before the test continues.

POC 4

This test performs a fast check of the cache RAM by writing the patterns 1ff, 155, 099, and 000 in order into the first eight locations of each bank of cache RAM and then executing a read/compare operation.

CRAM ERR

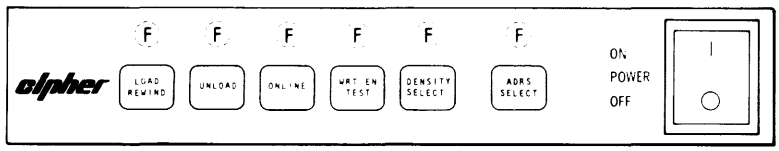

If the CRAM ERR message is displayed and all front panel indicators are flashing, the unit failed to complete the cache RAM test. Press the Load switch to display a hex code that indicates the section of cache RAM that failed. Press the Load switch again to display the reference designator of the faulty IC. Continue pressing the Load switch until all faulty IC reference designators are displayed. To exit the cache RAM test, press the Wrt En/Test switch.

POC 5

This test determines the phase quadrature of the tachometer and performs a pass/fail test by rotating the take-up hub in a clockwise direction for 200 milliseconds.

TACH ERR

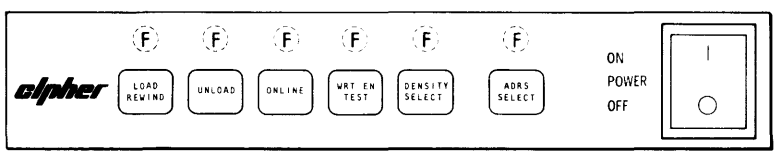

If the TACH ERR message is displayed, the take-up hub moved less than .05 inch or 10 tachometer counts were not sensed.

4.1.2 **Starting The Diagnostic Tests**

Check to see that the On-Line indicator is off. If the indicator is on, press the On-Line switch to switch the unit to an off-line mode.

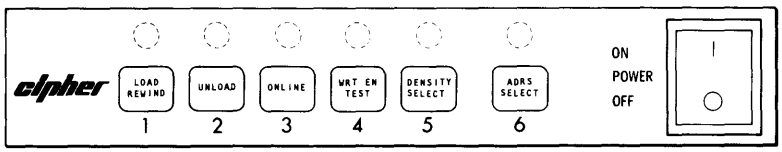

Note: Steps 2 through 5 must be accomplished within 3 seconds between keystrokes. If too much time is used, the GCR will automatically return to the normal operating mode.

1. Press the Wrt En/Test switch number 4.
2. Press the DENSITY SELECT switch number 5.
3. Press the switch numbers that represent the test to be run.
4. Press the DENSITY SELECT switch number 5 to **START** the diagnostic test.
5. Press the Wrt En/Test switch number 4 to **STOP** or cancel the diagnostic test.

   Note: Some diagnostic tests require you to stop the test from running before you cancel the diagnostic.

When a diagnostic test is first entered, specific front panel indicators are lit to indicate the options available at this point. The diagnostic tests can operate in either the test execution mode or the parameter selection mode. The parameter selection mode allows you to select the operational parameters that are used when the test is run in the execution mode.

During the test, the alphanumeric display will display information about the drive's status.

4.1.3 **Diagnostic Tests WITHOUT Tape Loaded (Series 100)**

CAUTION: Remove tape prior to running series 100 tests, failure to do so could cause damage to tape.

Test 111 (Oscillate Servos):

This test checks both the supply and take-up motors and their related servo circuits.

MODE ?

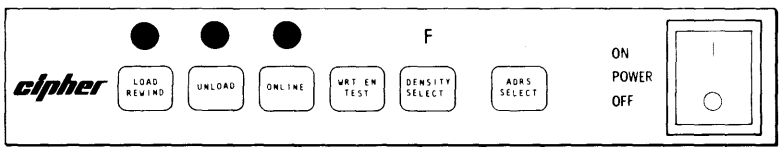

When entered, the test is in the parameter selection mode.

AUTO OSC — Press the Load switch to select the auto-oscillate option. The initial speed is about 25 ips.

MAN SPLY — Press the Unload switch to select the manual supply option with initial speed of 0 ips.

MAN TKUP — Press the On-Line switch to select the manual take-up option. The initial speed is 0 ips.

Press the DENSITY SELECT switch to access the execution mode.

Note: Press and hold the Load switch during MAN SPLY or MAN TKUP mode to steadily increase speed up to 115 ips. Press and hold the Unload switch to decrease the speed to 0 and reverse direction. A positive drive value corresponds to clockwise rotation of the hub and negative drive value corresponds to counterclockwise rotation. The sequence is identical but opposite indirection if the Unload switch is pressed first. Press the On-Line switch to reverse the direction of rotation in the MAN SPLY, MAN TKUP, or AUTO OSC mode.

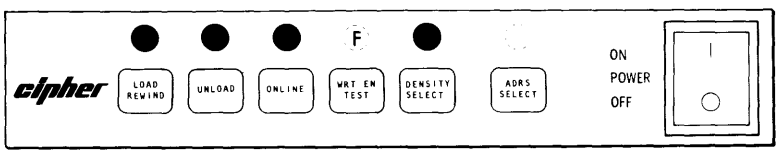

Test 124 (Voltage Display):

This test displays the analog voltage (± 20%) of the following signal:

ARM Compliance arm output voltage

ARM + X.XX

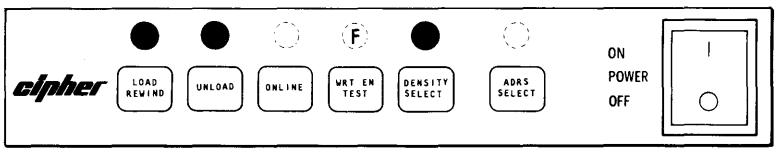

The compliance arm voltage is displayed when the test is executed.

Test 125 (PROM Revision):

XXXXXX-XXX

This test displays the part number of the PROMs installed in the unit.

Test 131 (File Protect/Reel Seat, BOT, EOT, AND Tape-in-Path):

This test checks the status and operation of the file protect/reel seat, BOT, EOT, and Tape-in-Path sensor circuits.

The test begins by rotating the supply hub very slowly to allow the sensor to detect pulses reflected from the file protect and reel seat tabs. A reel of tape, with file protect ring inserted, must be placed on the supply hub (not loaded) and must be allowed to rotate freely. The display messages and corresponding actions are listed below:

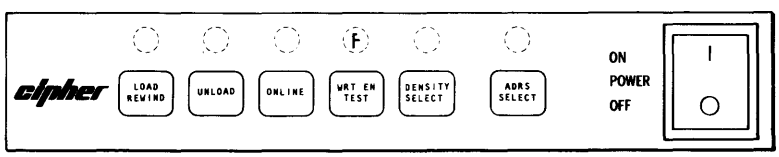

This display occurs if there is no tape reel sensed on the supply hub. Exit the test and place the unit in the Operator Access Position (see para. 5.1). Place a tape reel on the supply hub and re-enter the test.

With a reel placed on the hub, as the reel seat tab passes the sensor the unload LED will flash twice. If the reel is write enabled, the LED will flash once as the write enabled tab passes the sensor, and twice for the reel seat sensor.

For BOT, EOT, and Tape-in-Path sensor, a strip of tape about three feet long with a BOT and EOT reflective strips placed on it. Remove the reel of tape from the supply hub and manually thread the piece of tape through the tape path.

B E T — Move the tape in front of the Tape-in-Path sensor, a "T" will be displayed on the alphanumeric display. As you move the BOT and EOT reflective strips past their respective sensors, a "B" or "E" will be displayed on the alphanumeric display.

Test 132 (Door and Hub Lock):

When entered, the test cycles both door lock and hub lock solenoids.

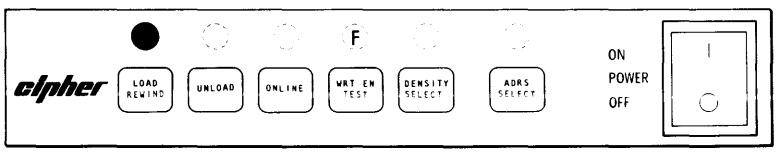

LOCKED — This display occurs when both front panel door and top cover are locked.

UNLOCKED — This display occurs if either the front panel door or top cover is open.

Press the Load switch to display the status of the door lock micro-switch.

SW OPEN — This message occurs when the solenoid is engaged.

SW CLOSED — This display indicates that the switch is in its normally closed (solenoid disengaged) position.

Test 133 (Door Open):

DR OPEN — This test deactivates the front panel and top cover lock solenoid so that the covers may be opened during the next load attempt. The DOOR OPEN message is displayed for 20 seconds.

Test 134 (Blower Motor):

BLWR ON

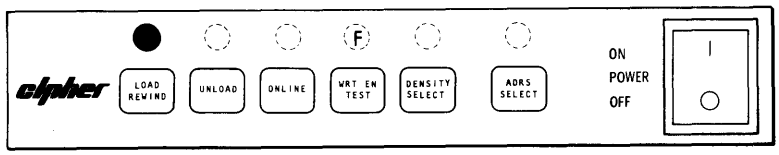

When entered, this test activates the blower motor.

BLWR OFF — Press the Load switch to turn the blower motor off.

BLWR ON — Press the Load switch again to turn the blower motor on.

To exit the test, press the Wrt En/Test switch.

Test 142 (Edit NOVRAM):

This test allows you to select the NOVRAM values to configure the M990 for efficient operation in your system. When first entered, the test will display the current value of the serial port baud rate parameter. The values of the configuration parameters can be displayed in the same order as the following list:

1.	Reserved	Option Deleted
2.	Host Supplied Parity -	Yes, No
3.	Echo Read Strobes - on Write	Yes, No
4.	EOT Mode -	Normal, T.I.
5.	Forward Hitch Enabled -	Yes, No
6.	Echo 3200 bpi ID Burst -	Yes, No
7.	Reserved -	(Option Deleted)
8.	Abort Active Writes - on Overwrites (Not active at this time)	Yes, No
9.	Interface transfer Rate - (kHz)	70.3, 79.1, 90.4, 105.5, 126.6, 158.2 211.0, 316.5, 632.8

11.	Maximum Block - Size (k bytes)	9, 16, 32, 64
12.	Interface Ramp Delay -	0 through 15
13.	Write Sync Option -	DBLE FMK, SNGL FMK, NO W/S, ALL WRTS
14.	Read Error Retries -	0, 3, 7, 11, 15
15.	Write Error Retries -	0, 3, 7, 11, 15
16.	Read Error Correction on -	Yes, No
17.	Unit -	0 through 7
18.	Lock Out 3200 bpi - Writes	Yes, No
19.	Remote Density - Select Enabled	Yes, No
20.	Report Corrected - Errors	Yes, No
21.	Allow One Track Down - on Writes	Yes, No
22.	6250 Write Current - (read as XX.XX ma)	XXXX
23.	1600 Write Current -	XXXX
24.	3200 Write Current -	XXXX
25.	6250 RAW Threshold - (read as .XXX mv)	XXX
26.	1600 RAW Threshold -	XXX
27.	3200 RAW Threshold -	XXX
28.	3200/6250 BPI Select as 6250 BPI	Yes, No
29.	Display "feet to EOT"	Yes, No
30.	Write Error Override	Yes, No
31.	Remote Load/On-Line	Yes, No

Press the Load switch to display the next parameter. If you press and hold the Load switch, the display will increment through the parameter list.

Press the Unload switch to display the previous parameter. Press and hold the Unload switch to decrement through the parameter list.

Press the On-Line switch to redisplay the current parameter.

To exit the test without changing any of the parameters, press the Wrt En/Test switch.

If you want to change a parameter value, select the appropriate number, using the Load or Unload switch, and enter the edit mode by pressing the DENSITY SELECT switch.

Note: Items 22 thru 27 are not alterable by test 142.

Press the Load switch to get a yes/no parameter value to yes, or increment a value parameter to its next higher value.

Press the Unload switch to set a yes/no parameter value to no, or decrement a value parameter to its next lower value.

To scroll the parameter name through the display, press the On-Line switch. The parameter value will remain in the display.

Press the DENSITY SELECT switch to return to the test execution mode.

To save the new parameter values and exit the test, press the Wrt En/Test and DENSITY SELECT switches together. These new values will be stored in the NOVRAM when the unit is powered down.

4.1.4 Diagnostic Tests WITH Tape Loaded (Series 200)

When entered, the diagnostic tests that move tape will default to the density/speed combinations shown below if the tape is write enabled. If the tape is write protected, the test will determine the density/speed combination that is compatible with the data written on the tape. The density is displayed on the front panel LED's.

Model M990: 1600bpi/100ips

3200bpi/50ips

6250bpi/70ips

Test 212 (Read/Write Data):

This test writes 16 bytes of data per block incrementing from 01 to 0F on the tape, if write enabled, until EOT is detected, then reads reverse to BOT. No error correction attempts are made during this test. The data is written at the density indicated by the front panel LEDs.

If the tape is write protected, the drive will read forward to EOT, then read reverse to BOT until the test is terminated.

TEST 212

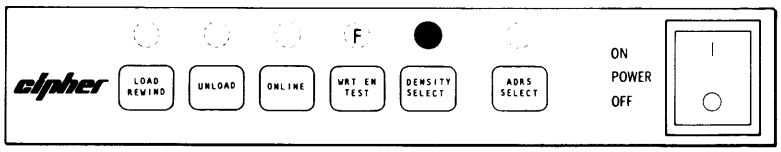

WRITING — This message is displayed if the tape is write enabled. Press the DENSITY SELECT switch to reverse direction if the tape is moving forward. Press the WRT EN/TEST switch to rewind to BOT and exit the test.

RUN FWD — The RUN FWD message is displayed if the tape is not write enabled. Press the Wrt EN/TEST switch to rewind to BOT and exit the test. Press the DENSITY SELECT switch once to stop tape movement, and a second time to cause a read reverse.

READ REV — The READ REV message is displayed if the tape is write enabled. Press the WRT EN/TEST to rewind to BOT and exit the test. Press the DENSITY SELECT switch once to stop tape movement, and a second time to cause a read forward.

RUN REV — The RUN REV message is displayed if the tape is not write enabled. Press the Wrt EN/TEST to rewind to BOT and exit the test. Press the DENSITY SELECT switch once to stop tape movement, and a second time to cause a read forward.

Note: Tape must be moving to exit this test. If the tape is not moving, press the DENSITY SELECT switch to start tape movement, then press the Wrt EN/TEST switch to exit the test.

Test 222 (Tape Shuttle):

This test runs the tape forward and reverse for the amount of time selected in the parameter selection mode. There is no data transfer during this test.

SELECT FWD/REV
TIME IN SECONDS

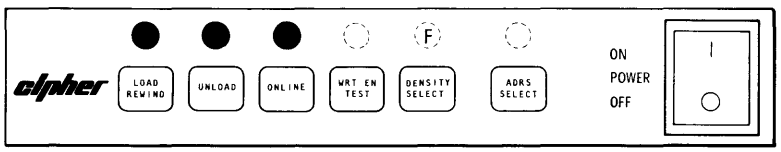

When entered, the test is in the parameter selection mode.

.5/.2 — Press the Load switch to run tape forward for .5 seconds and reverse for .2 seconds.

2/1 — Press the Unload switch to run tape forward for 2 seconds and reverse for 1 second.

10/5 — Press the On-Line switch to run tape forward for 10 seconds and reverse for 5 seconds.

Press the DENSITY SELECT switch to execute the test, if no time periods were selected, the tape will rewind to BOT and the test will terminate.

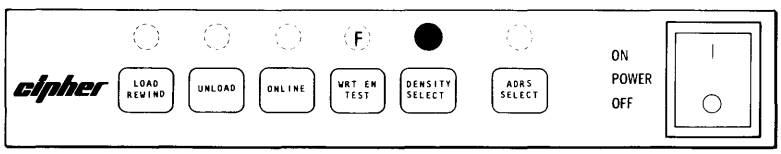

Test 223 (Read/Write Check):

This test cycles through the following sequence of operations until exited.

WRITING — The unit writes blocks of data forward to EOT. Write retries are performed and the number of write errors are recorded.

READ REV — The unit reads reverse to BOT and compares the read data with the write data of the previous operation. Read retries are performed as part of this test.

READ FWD

The unit next reads forward to EOT and performs a read/write data compare check with read retries.

REWIND'G

The unit rewinds tape to BOT.

The unit increments the density to the next higher value, i.e., if the present density is 1600 bpi it increments to 3200 bpi.

The test increments the pass count by one and repeats the above loop.

TAPE MUST BE
WRITE ENABLED

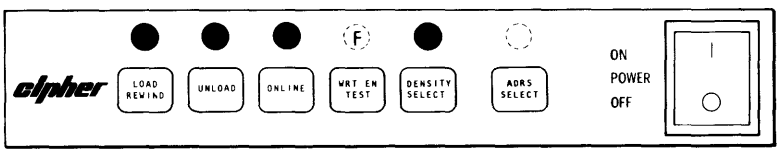

When entered, the tape loaded on the unit must be write enabled to allow test to continue.

Press the Load switch to increment to the next operation in the cycle, i.e., writing to Read Rev, Read Rev to Read Fwd, and Read Fwd to Rewind.

Press the Unload switch to abort the current operation, rewind and switch to the next density.

Press the On-line switch to lock or unlock the option to switch to the next density at the end of the read forward operation.

UNLOCKED

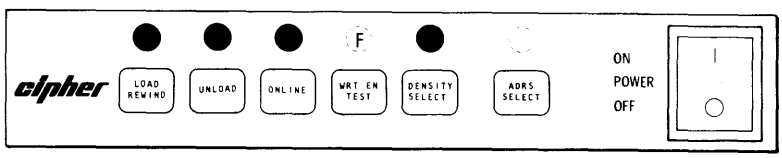

Default condition is Unlocked when entering the test. By pressing On-line once, 'LOCKED' will be displayed and you will continuously cycle in the current density until On-line is pressed again or the test is terminated.

LOCKED

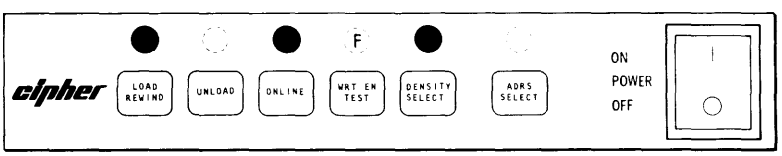

Press the Wrt En/Test switch to rewind the tape to BOT and enable the status mode.

Press the DENSITY SELECT switch to enable the status mode at any point on the tape.

STATUS

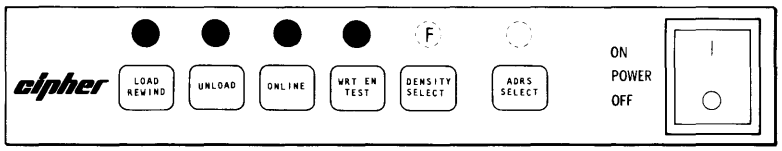

This display occurs when the test is in the status mode.

TOTAL — Press the Load switch to display the total errors that occurred during this test in all three densities.

1600 BPI — Press the Unload switch to display the errors that occurred in the 1600 bpi mode.

3200 BPI — Press the On-line switch to display the errors that occurred in the 3200 bpi mode.

6250 BPI — Press the Wrt En/Test switch to display the errors that occurred in the 6250 bpi mode.

The errors are displayed in the following sequence:

P A S S — This message represents the number of passes the test has completed.

H D E N — This message represents the number of hard errors.

C R E N — This message represents the number of corrected errors.

WT Tn — This display indicates the number of write retries.

RD Tn — This display indicates the number of read retries.

TRK ERRS

TRK tn

This message represents the error history of each track (t) 0 through 7, P.N. indicates the number of errors for each track. Only tracks with errors are displayed.

TOT 1600

TOT 3200

TOT 6250

These messages represent the sum of the previous errors that occurred with the unit operating at the indicated density. These will be displayed only if the total error display mode is selected.

Press the Wrt En/Test switch to rewind tape and enter the status mode. Press the DENSITY SELECT switch to exit the test.

Test 224 (Voltage Display): Same as test 124, but with tape loaded.

Test 233 (Door Open):

DR OPEN — This test disengages the top-cover/front-panel lock. The DR OPEN message is displayed for 20 seconds. The tape must be at BOT.

Test 242 (Edit Novram): Same as test 142 except that tape is loaded on unit during test.

Test 243 (No Write Retries):

WRT RETRIES OFF — This test disables the write retry circuit.

Note: To return the write retry circuit to normal operation, the ac power switch must be turned off then on.

Test 244 (Infinite Read/Write Retries):

WRT/RD RTRYS = 64K

This test set both the write and read retries to 64K.
Note: To return the write retry circuit to normal operation, the ac power switch must be turned off then on.

Test 255 (Display Status):

This test displays the following error history information. The error history can be compiled during on-line operation or diagnostic tests that read and write data.

STATUS

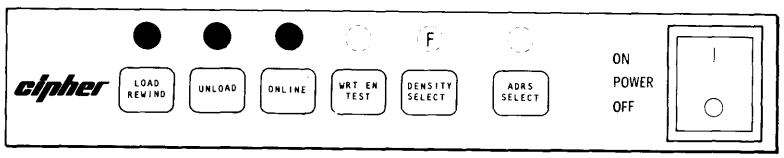

HRD ERRS
COR ERRS

Press the Load switch to display the number of hard errors and corrected errors.

WRT TRYS
RD TRYS

Press the Unload switch to display the number of write retries, then the number of read retries.

TRACK ERROR
HISTORY

Press the On-line switch to display the error history of each track as TRK (t) (n) where (t) is the track number 0 through 7, and (n) is the number of errors. (Tracks without errors are not displayed.) If no errors have occurred, the message 0 ERRORS is displayed. Press 'Test' to display clear error history, followed by Yes/No. Press Load select for Yes or Unload select for No. Pressing density will execute your selection.
Press the DENSITY SELECT switch to exit the test.

4.2 **Troubleshooting**

The purpose of this section is to assist in repairing common faults through some simple tests designed to find the field replaceable subassembly that is causing the problem. The section is divided into three sub-sections: the Troubleshooting, Main Tests and Common Tests.

Troubleshooting

This section explains how to troubleshoot the M990 using this chapter and general information which is required to be known by the technician prior to troubleshooting.

Main Tests

This section contains all the tests used to find the source of the problem. It is divided into four areas: power up failures, load faults, operational faults, and data related errors.

Common Tests

Some subassemblies can cause more than one type of error, but the test is always the same. These tests are grouped together in this section. In the main tests section, a common test is shown by enclosing it inside parenthesis as "(common test)". Some of the common tests also refer to other common tests.

It is intended that this section be used by a technically skilled person who is familiar with the GCR tape unit and the diagnostics available on the machine. For more information on the GCR diagnostics, see section 4.1.

4.2.1 **Using This Section -**

1. Before doing anything, make a thorough visual inspection of the drive. Look for loose or damaged connectors and make sure that all the boards are seated properly. Also look for any damage to the backplane connectors or cables.

2. Find the type of problem the drive is having in the list below.

Problem type	Table
Power up failures	1
Load faults	2
Operational faults	3
Data related errors	4

3. Refer to the appropriate table (see pages 4-22 and 4-23) to further classify the problem.

4. Find the symptom or error message you are seeing in the table. Error messages are shown inside double quotes, e.g., "FRONT PANEL MESSAGE".

5. Go to the page listed in the "Page" column and follow the test procedure listed under "Test".

   Example -

   Suppose the drive won't load tape and the front panel display shows "LOAD FAILURE". In the table above we find "Load faults". The right hand column refers us to Table 2. In Table 2 we find "LOAD FAILURE" close to the bottom of the table. The right hand columns tells us to turn to page 4-32 and follow test B-9 to find the failing sub-assembly.

6. If you replace or repair anything, start the test over from the beginning unless told to do otherwise. (See the following section on changing boards.)

7. If after following the test procedure the problem continues, replace the backplane.

Recording NOVRAM values -

Record the values stored in the NOVRAM somewhere so you can check them and make sure someone has not changed them accidently.

4.2.2 Changing boards

To change any of the four main boards, use the following procedures. Anytime you change a board, check the connector on the backplane before pulling the board out. If you notice the backplane is damaged, try fixing it before swapping out the board.

4.2.2.1 Sense Servo Board

1. Zero the servo offsets using procedure 5.34.4.

2. Run Test 513 to set the Read/Write threshold.

4.2.2.2 CPU Board

1. Record the current NOVRAM values.

2. Run Test 542 to set drive to Internal Mode.

3. Enter Test 525 to set the default values in the NOVRAM. The display will read "INITIALIZE NOVRAM TO". Press the UNLOAD switch and "FIELD" will be displayed. Press the DENSITY SELECT switch to exit the test.

4. Run Test 542 to set the drive back to Field Mode.

5. Edit the NOVRAM using Test 142 and insert the values recorded in step 1.

6. Zero the servo offsets using procedure 5.34.4.

7. Run Test 513 to set Read/Write threshold.

4.2.2.3 Data board

1. Run Test 513 to set Read/Write threshold.

4.2.2.4 CIF Board

1. Run Test 513 to set Read/Write threshold.

4.2.3 Notes and Cautions

1. Using a digital voltmeter may give misleading readings when measuring voltages across the motors. Use Triplett model 630 NA, Fluke Model 77 or equivalent.

2. Be sure to turn the power off and wait for 10 seconds before removing or installing any boards.

Symptom or Message	Test
No alpha dsp, power light doesn't come on	A-1
No alpha dsp, power light on steady	A-2
All front panel LED'S on steady	A-3
"POC 0"	A-4
"TESTING RAM"	A-5
"POC 1"	A-6
"POC 2"	A-7
"POC 3"	A-8
"NVRM ERR"	A-9
"POC 4"	A-10
"POC 5"	A-11

Table 1. Power up failures.

Symptom or Message	Test
"ARM FAULT DURING LOAD"	B-1
"HUB SEAT"	B-2
"NOT ENOUGH TAPE ON TAKEUP" (Man. load)	B-3
"TAPE STUCK"	B-4
"NO DOOR LOCK"	B-5
"SERVO FAILURE"	B-6
"REEL UPSIDE DOWN"	B-7
"NO BOT"	B-8
"LOAD FAILURE"	B-9
During auto load, takeup doesn't turn	B-10
Pawls don't lock	B-11
Run away during auto load	B-12

Table 2. Load faults

Symptom or Message	Test
Interface timeout	C-1
Online but won't respond to commands	C-2
Blower won't come on	C-3
"ARM FAULT DURING RU"	C-4
"NO BOT" or Misses EOT or BOT	C-5
Doesn't sense write protected tape	C-6
Breaks tape	C-7
Destroys tape	C-8
"TAPE LENGTH 3700 FT"	C-9
"18 FT PAST EOT"	C-10
"ARM FAULT DURING LOAD"	C-11
"SPEED ERROR"	C-12
"CACHE RAM PARITY ERR"	C-13
Problems with impending EOT	C-14
Won't knock pawls down	C-15
Buttons don't work	C-16
Display doesn't work	C-17
Can't sense open door	C-18

Table 3. Operation faults

Symptom or Message	Test
Mispositions	D-1
Excessive repositioning	D-2
Excessive write retries	D-3
Excessive read retries	D-4
"BLOCK SIZE ERROR"	D-5
"VRC ERR"	D-6
Record length errors	D-7
Can't interchange tapes	D-8
"WRITE EDIT ERR"	D-9
Data errors	D-10
Continuous hard errors at host	D-11
Host detected misposition	D-12
Unit selects incorrect density for read	D-13

Table 4. Data related errors

4.3 Main Tests

Note - See section 4.4 for tests that are shown inside parenthesis, "( )".

As the GCR evolved, the Printed Wiring Boards were improved, resulting in several "sets" of boards being produced. The table below identifies which PWB Set a particular board belongs to based on the first six digits of its part number. Be sure to use the appropriate instructions for the board you are troubleshooting.

PWB	PWB Set A	PWB Set B	PWB Set C
S/S-37V		962810-XXX	963491-XXX
S/S-57V	961344-XXX	962832-XXX	963490-XXX
CPU	961730-XXX	962112-XXX	963394-XXX
Data	961420-XXX	962789-XXX	963674-XXX
CIF	961346-XXX	962357-XXX	962357-XXX

4.3.1 Tests for Power Up Failures

A-1. No alpha display, power light does not turn on.

a. Check (Power supply).

A-2. No alpha display, power light on steady. Same as A-3 below.

A-3. All front panel LED's on steady.

a. Check (Harness) to front panel and all Sense Servo connectors.

b. Cycle power while monitoring the reset line on TP-14, PWB Set A, or U11C Pin 7, PWB Set B, on Sensor/Servo board. Does reset change from high to low and remain low?

Yes - Continue at step c.

No - Continue at step f.

c. Check (Power supply). Is it ok?

Yes - Continue at step d.

d. On the CPU board, monitor CPU clock TP-11, PWB Sets A, B, and C, with an oscilloscope. Is the clock toggling up and down?

Yes - Continue at step e.

No - Replace CPU board.

e. On the CPU board, check U25B pins 1 through 5, 8, 9, and 32 through 40, PWB Sets A and B; check U25C, same pins, for PWB Set C. Are the data lines going up and down?

Yes - Continue at step g.

No - Replace CPU board.

f. Check (Power supply). Is it ok?

Yes - Replace Sensor/Servo board.

g. On the CPU board, check the vectored interrupts on U25B pin 11, PWB Sets A and B; U25C Pin 11, PWB Set C. Is there a negative pulse approximately every 1 millisecond?

Yes - Continue at step h.

No - Replace CPU board.

h. Turn off power. Pull out the Data and CIF boards. Power up the drive. Does the drive power up normally now?

Yes - Continue at step i.

No - Replace Sensor/Servo board.

i. Turn off the power, and reinstall Data board. Does the drive power up normally now?

Yes - Replace the CIF board.

No - Replace the Data board.

A-4. POC 0.

a. Replace CPU board.

A-5. TESTING RAM.

a. Replace CPU board.

A-6. POC 1.

a. Replace CPU board.

A-7. POC 2.

a. Replace CPU board.

A-8. POC 3.

a. Replace CPU board.

A-9. NVRM ERR.

a. Replace CPU board.

b. Recalibrate servo using Servo Offset adjustment procedure 5.34.4 of Maintenance Manual.

c. Enter the recorded values in the NOVRAM.

A-10. POC 4.

a. Replace CPU board.

A-11. POC 5.

a. Check (Tach assembly). Is it ok?

Yes - Continue at step b.

b. Check (Takeup motor).

4.3.2 Tests for Load Faults

B-1. Arm fault during autoload.

a. Check (Arm assembly).

b. Check (Supply motor).

c. Check (NOVRAM offset).

B-2. Hub Seat Failure.

a. Check (File protect / reel seat) sensor.

b. Check (NOVRAM offset).

B-3. Not Enough Tape on Takeup (Manual load only)

a. Check (Tach assembly).

b. Check (NOVRAM offset).

B-4. Tape Stuck.

a. Check (Tape in path) sensor.

b. Check (NOVRAM offset).

B-5. No Door Lock.

a. Check (Door lock).

B-6. Servo Failure.

a. Check (Supply motor).

b. Check (NOVRAM offset).

B-7. Reel is upside down.

a. Check (Tape in pat) sensor.

B-8. No BOT.

a. Check (EOT / BOT) sensor.

B-9. Autoload failure after 4 tries.

a. Check tape leader. Is it smooth and unwrinkled, and has the end been trimmed with the tape trimmer?

Yes - Continue at step b.

No - Repair tape leader.

b. Cycle power. Do you get a POC 5 error?

Yes - See A-11.

No - Continue at step c.

c. Check (Supply motor).

d. Check (Blower motor).

e. Check (NOVRAM offset).

B-10. During autoload, Takeup Motor does not turn.

a. Check (Takeup motor).

b. Check (NOVRAM offset).

B-11. Pawls do not lock.

a. Check (Supply motor).

b. Check (Hub lock).

c. Check (NOVRAM offsets).

B-12. Run away during autoload.

a. Check (Tach assembly). Is it ok?

Yes - Replace Sensor/Servo board.

4.3.3 Tests for Operational Faults

C-1. Interface timeout.

a. Replace CIF board.

C-2. Online but does not respond to commands.

a. Replace CIF board.

C-3. Blower does not come on.

a. Check (Blower motor).

C-4. Drops tape during rewind.

a. Cycle power. Do you get POC 5 error?

Yes - See A-11.

No - Continue at step b.

b. Check (Arm assembly).

Yes - Replace Sense/Servo board.

C-5. Misses EOT or BOT.

a. Check (EOT/BOT).

C-6. Does not sense write protected tape.

a. Check (File protect / reel seat) sensor.

C-7. Breaks tape.

a. Replace Sensor/Servo board.

C-8. Destroys Tape.

a. Check tape path (Hub height, roller guides, Tach Arm).

b. Clean Head and Rollers.

c. Check head for nicks or dings.

d. If problem is finning (uneven tape pack on the takeup reel), check tach roller or roller guide near the take-up reel for damage. If roller wear looks uneven, replace tach assembly.

C-9. Tape length greater than 3700 feet.

a. Check (Tach assembly).

C-10. 18 feet past EOT.

a. Check (EOT / BOT) sensor.

C-11. Arm fault during run.

a. Check (Arm assembly).

C-12. Speed error.

a. Check (Tach assembly).

b. Check (Takeup motor).

c. Run test 212 while monitoring on the Data board Pin 13 of U5B for PWB Set A; U12B Pin 13 for PWB Sets B and C. Is there a positive pulse approximately every 7 milliseconds?

No - Replace the Data board.

Yes - Replace Sensor/Servo board.

C-13. Cache RAM parity error.

a. Replace CPU board.

C-14. Problems with impending EOT.

a. Check (File protect / reel seat) sensor.

C-15. Does not retract pawls.

a. Check (Hub lock).

b. Check (Supply motor).

C-16 Front panel switches do not work.

a. Check (Harness). Is it ok?

Yes - Continue at step b.

b. Replace Sensor/Servo board. Problem fixed?

Yes - PASS.

No - Replace front panel switches.

C-17. Display does not work.

a. Check (Harness).

b. On the Sensor/Servo board, measure +5 volts for the display board at R163 for PWB Set A; U14F-10 for PWB Set B; and U11C-10 for PWB Set C. Is it between 4.85 to 5.15 volts?

Yes - Continue at step c.

No - Replace Sensor/Servo board.

c. Run test 143. On the Sensor/Servo board, PWB Set A, trigger the scope on the negative edge of the clock pulse on U16G pin 11. Check for data at U12G pins 3, 6, 8, 11 and U13G pins 3, 6, and 11. Are they toggling up and down? On the Sensor/Servo board, PWB Set B, trigger the scope on the negative edge of the clock pulse on U12F pin 8. Check for data at U14E Pins 3, 6, 8, and 11, and U14F pins 3, 8, and 11. Are they toggling? On the Sensor/Servo board, PWB Set C, trigger the scope on the negative edge of the clock pulse at U10F pin 8. Check for data at U11C pins 3, 6, 8, and 11, and U11D pins 3, 6, and 11. Are they toggling?

Yes - Replace display board.

No - Replace Sensor/Servo board.

C-18. Does not sense open door.

a. Check (Door lock).

4.3.4. Tests for Data Related Errors

D-1. Mispositions.

a. Check (Read threshold).

b. Replace Sensor/Servo board.

D-2. Excessive repositioning.

a. Check (File protect / reel seat) sensor.

b. Replace Sensor/Servo board. Does problem go away?

Yes - Pass.

No - Continue at step c.

c. Unless the transfer rate in the NOVRAM is at its maximum value, step it to the next higher rate (refer to section 4.1.3.) When you move data through the interface, do you get VRC, record length errors, or some other type of data error?

Yes - Lower the transfer rate one step.

No - Repeat step b above.

D-3. Excessive write retries.

a. Check (Common data problems).

b. Clean the tape scraper. Repeat test with a new reel of tape.

D-4. Excessive read retries.

a. Check (Common data problems).

D-5. Block size error.

a. Are you sure that the block size on tape is less than 64K?

Yes - Replace CPU board.

No - Continue at step b.

b. Check (Common data problems).

D-6. VRC error.

a. Check (Common data problems).

b. Replace the CIF board. Does problem go away?

Yes - PASS

No - Continue at step c.

c. Replace the CIF board with the one you took out, then replace the Data board. Does this fix the problem?

Yes - PASS.

No - Continue at step d.

d. Replace the Data board with the one you took out, then replace the CPU board.

D-7. Record length errors.

a. Check (Common data problems).

b. Replace the CPU board. Does problem go away?

Yes - PASS.

No - Continue at step c.

c. Replace the CPU board with the one you took out. Replace the CIF board. Does this fix the problem?

Yes - PASS.

No - Continue at step d.

d. Replace the CIF board with the one you took out. Replace the Data board.

D-8. Cannot interchange tapes. There are two types of failures for this problem. See (1) and (2) below for the one that applies.

(1) Does not read other drives tapes.

a. Check (Common data problems).

b. Replace Data board. Does this fix the problem?

Yes - PASS.

No - Continue at step c.

c. Replace the Data board with the one you took out. Replace the CIF board.

(2) Other drives cannot read the tapes written on this drive.

a. Check (Common data problems).

b. Replace CIF board.

D-9. Write edit error.

a. This problem is most often caused by the host command sequence not matching the GCR command sequence specifications. See the installation manual for more information.

b. Replace the CIF board.

D-10. Data errors.

a. Check (Common data problems).

b. Replace the Data board. Does problem go away?

Yes - PASS

No - Continue at step c.

c. Replace the Data board with the one you took out, then replace the CPU board. Does problem go away?

Yes - PASS

No - Continue at step d.

d. Replace the CPU board with the one you took out, then replace the CIF board.

D-11. Continuous hard errors at host.

a. Check (Common data problems).

b. Replace the CIF board.

D-12. Host detected misposition or wrong record ID.

a. Replace Sensor/Servo board. Does problem go away?

Yes - PASS.

No - Continue at step b.

b. Replace the Sensor/Servo board with the one you removed, then replace the Data board.

D-13. Unit selects incorrect density for read.

a. Check (Common data problems).

b. Replace the Data board. Does problem go away?

Yes - PASS

No - Continue at step c.

c. Replace the Data board with the one you took out, then replace the Sensor/Servo board.

4.4 Common Tests

The following table identifies the common tests listed in this section along with the page number of the test.

	Test	Page
4.4.1.	Arm assembly	4-32
4.4.2.	Blower motor	4-32
4.4.3.	Door lock	4-33
4.4.4.	EOT / BOT	4-33
4.4.5.	File protect / reel seat	4-34
4.4.6.	Harness	4-34
4.4.7.	Hub lock	4-34
4.4.8.	Novram offset	4-35
4.4.9.	Power supply	4-35
4.4.10.	Supply motor	4-36
4.4.11.	Tach assembly	4-38
4.4.12.	Takeup motor	4-38
4.4.13.	Tape in path	4-39
4.4.14.	Common data problems ...	4-40
4.4.15.	Read threshold	4-40
4.4.16.	Set Internal/Field ..... Mode (test 542)	4-41
4.4.17.	Automatic Write Current Calibration (test 513)	4-42

4.4.1 **Arm assembly**

Does the arm bind when you move it?

1. Yes - Perform visual inspection for anything interfering with arm movement.

   No - Continue at step 2.

2. Enter test 124. Pull the arm back to its stop while watching voltage on front panel display. Does the voltage change?

   Yes - Continue at step 3.

   No - Continue at step 4.

3. Record the voltage at rest, record the voltage at full arm travel. Is the difference between the two at least 2 VDC, but no more than 12.5 VDC?

   Yes - PASS.

   No - Replace Sensor/Servo board.

4. Check (Harness). Is it ok?

   Yes - Replace Sensor/Servo board.

4.4.2. **Blower motor**

1. Enter test 134. Can you hear the blower come on?

   Yes - PASS.

   No - Continue at step 2.

2. Check Sensor/Servo board for blower signal at R35 for PWB Set A; J1-5 for PWB Set B and Set C. The signal drops from +12V to +5V when the motor is activated with PWB Set A, and from +5V to 0 with PWB Set B or Set C.

   Yes - Continue at step 3.

   No - Replace Sensor/Servo board.

3. Turn off the power. Check voltage from power supply to blower by unplugging the P4 connector (a small, 3 position connector next to the blower motor). Place a AC voltmeter on pins 1 and 2 (female part of connector). Do you measure 110-140 Vac?

   Yes - Replace blower motor.

   No - Replace power supply.

4.4.3. Door lock

1. Open the front door and the top cover of the drive. Enter test 132. Looking through the opening between the front panel and the top plate on the left side of the drive, can you see the door lock solenoid pulling in then releasing, and does the display show "UNLOCKED"?

   Yes - Continue step 3.

   No - Continue at step 2.

2. Check (Harness). Is it ok?

   Yes - Replace Sensor/Servo board.

3. Press load button. Display should show "SW CLSD". Close both top cover and front door. Press load. Does drive show "LOCKED"?

   Yes - PASS.

   No - Replace door lock assembly.

4.4.4. EOT/BOT

1. Enter test 131. Place a tape marker in front of the BOT sensor in approximately the same place as the tape would hold it. Does the LOAD LED come on?

   Yes - Continue at step 2.

   No - Continue at step 3.

2. Place tape marker in front of the EOT sensor. Does the UNLOAD led come on?

   Yes - PASS.

   No - Continue at step 3.

3. Check (Harness). Is it ok?

   Yes - Continue at step 4.

4. On the Sensor/Servo board, check R122 on PWB Set A, R195 on PWB Set B, or R150 on PWB Set C for +5 Vdc to sensor. Is the voltage between 4.85 and 5.15 Vdc?

   Yes - Replace EOT/BOT sensor.

   No - Replace Sensor/Servo board.

4.4.5 File protect / reel seat

1. Place a write enabled reel of scratch tape in the drive. Enter test 131. Observe the "UNLOAD INDICATOR" comes on.

   Yes - PASS.

   No - Continue at step 2.

2. Is the (Harness) ok?

   Yes - Continue at step 3.

3. Measure power to sensor on Sensor/Servo board at R118 for PWB Set A, R270 for PWB Set B, or R149 for PWB Set C. Is it between 4.85 to 5.15 Vdc?

   Yes - Replace file protect / reel seat sensor.

   No - Replace Sensor/Servo board.

4.4.6. Harness

1. Check the harness where it connects with the sub-assembly under test. Is the connection ok?

   Yes - Continue at step 2.

   No - Repair or replace harness.

2. Check the harness where it connects with the Sensor/Servo board. Is the connection ok?

   Yes - PASS.

   No - Repair or replace harness.

4.4.7. Hub lock

1. Open top cover of drive. Face the drive and turn the supply reel so that the reel seat tab is in the 10 o'clock position. Look through the hole in the top plate next to the supply reel at about 8 o'clock. Enter test 132. Does the hub lock move?

   Yes - Continue at step 2.

   No - Continue at step 3.

2. While the door lock is pulled in (Display shows "UNLOCKED"), turn the supply hub slowly by hand counterclockwise. Does the hub stop with the reel seat tab at about the 9 o'clock position?

   Yes - PASS.

   No - Remove the supply hub and repair or replace the hub or bellcrank as necessary.

3. Check (Harness). Is the connection ok?

   Yes - Continue at step 4.

4. Check power to the hublock on Sensor/Servo board at CR39 cathode for PWB Set A, CR58 cathode for PWB Set B, or CR27 cathode for PWB Set C. Does the voltage toggle between -15 and +10 volts?

   Yes - Replace the hublock.

   No - Replace the Sensor/Servo board.

4.4.8. **NOVRAM offset**

1. From Unload state. Measure voltage across Supply and Takeup motors on the Sensor/Servo board at TP-7 and 8 for PWB Set A, TP 34 and 35 for PWB Set B, and TP-37 and 38 for PWB Set C for the supply; TP-6 and 9 for PWB Set A, TP 32 and 33 for PWB Set B, and TP-35 and 36 for PWB Set C for the takeup. Are both measurements less than 50 millivolts?

   Yes - PASS.

   No - Adjust offset using procedure 5.34.4.

4.4.9. **Power supply**

1. Is this a TUV machine?

   Yes - Continue at step 2.

   No - Continue at step 3.

2. On the Sensor/Servo board is the +37 volts measured at TP-5 on PWB Set A, the positive side of C4 on PWB Set B or the positive side of C6 on PWB Set C between +31.5 and +41 volts?

   Yes - Continue at step 4.

   No - Continue at step 9.

3. On the Sensor/Servo board is the +57 volts measured at TP-5 on PWB Set A, the positive side of C4 on PWB Set B, or the positive side of C6 on PWB Set C between +48.5 and +63 volts?

   Yes - Continue at step 4.

   No - Continue at step 9.

4. On the Sensor/Servo board at TP-42 for PWB Set A, the positive side of C258 for PWB Set B, or TP-13 for PWB Set C, is the +5 Vdc between +4.85 to +5.35 Vdc?

   Yes - Continue at step 5.

   No - Continue at step 13.

5. On the Sensor/Servo board at TP-37 for PWB set A, TP-2 for PWB Set B, or TP-4 for PWB Set C, is the +6 Vdc between +5.64 to +6.36 Vdc?

Yes - Continue at step 6.

No - Continue at step 13.

6. On the Sensor/Servo board at TP-38 for PWB Set A, TP-1 for PWB Set B, or TP-1 for PWB Set C, is the -6 Vdc between -6.36 to -5.64 Vdc?

   Yes - Continue at step 7.

   No - Continue at step 13.

7. On the Sensor/Servo board at TP-39 for PWB Set A, TP-4 for PWB Set B, or TP-3 for PWB Set C, is the +12 Vdc, between +11.28 to +12.72 Vdc?

   Yes - Continue at step 5.

   No - Continue at step 13.

8. On the Sensor/Servo board at TP-40 for PWB Set A, TP-3 for PWB Set B, or TP-2 for PWB Set C, is the -12 Vdc between -12.72 to -11.28 Vdc?

   Yes - PASS.

   No - Continue at step 13.

9. Check the (Harness) where it plugs into the power supply.

10. Is the power cord ok?

    Yes - Continue at step 11.

    No - Replace power cord

11. Is the fuse at the rear of the drive ok?

    Yes - Continue at step 12.

    No - Replace fuse

12. Is the power switch ok?

    Yes - Replace power supply

    No - Replace power switch

13. Replace the Sensor/Servo board. Is the voltage ok now?

    Yes - PASS.

    No - Turn off the power and reinstall the original Sensor/Servo board. Pull out the other boards one at a time until voltage is ok. Replace the board that was causing the problem.

4.4.10. **Supply motor**

1. With power off, turn supply motor by hand. Does motor turn in both directions smoothly?

Yes - Continue at step 2.

No - Replace supply motor.

2. Enter test 111. Before selecting a test mode, does the motor spin?

   Yes - Continue at step 6.

   No - continue at step 3.

3. Select the manual supply mode in test 111. Run the supply motor up to approximately 50 counts. Does the motor move?

   Yes - Continue at step 8.

   No - Continue at step 4.

4. Check the (Harness). Is it ok?

   Yes - Continue at step 5.

5. Is the drive on the Sensor/Servo board ok?

   Yes - Replace motor.

   No - Replace Sensor/Servo board.

6. Is the motor spinning fast or slow?

   Fast - Continue at step 10.

   Slow - Continue at step 7.

7. Check (NOVRAM) offsets. Are they ok?

   Yes - Replace Sensor/Servo board.

   No - Adjust the offset using procedure 5.34.4.

8. Is the speed of the motor fairly constant?

   Yes - Continue at step 9.

   No - Replace Sensor/Servo board.

9. Reverse direction of the motor. Is the speed about the same as in the opposite direction?

   Yes - PASS.

   No - Continue at step 7.

10. Replace Sensor/Servo board. Does motor still spin fast?

    Yes - Reinstall first servo board and continue at step 7.

    No - PASS.

4.4.11. Tach assembly

1. Enter 111 auto oscillate mode. Are both tach phases on the Sensor/Servo board ok? (Use O-scope and read at U11L pin 13 and pin 14 for PWB Set A, U16H pins 13 and 14 for PWB Set B, or U12J pins 2 and 13 for PWB Set C.)

   Yes - PASS.

   No - Continue at step 2.

2. Check (Harness). Is it ok?

   Yes - Continue at step 3.

3. Is the power from the Sensor/Servo board to the tach ok?

   Yes - Replace the tach assembly.

   No - Replace the Sensor/Servo board.

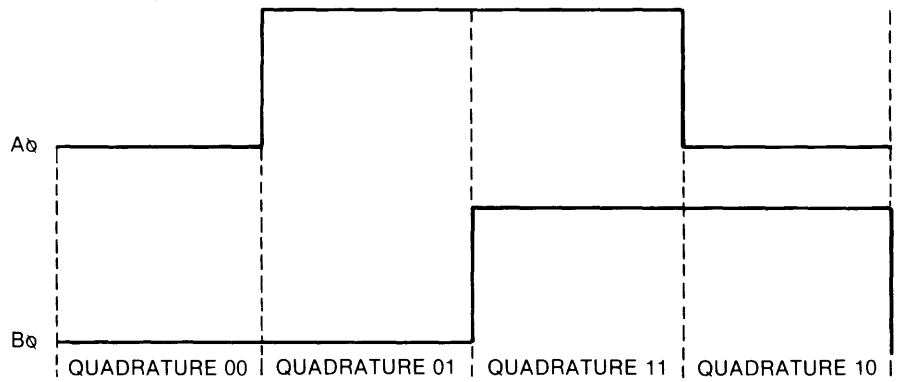

Tachometer Phase Quadrature

4.4.12. Takeup motor

1. With power off, turn takeup motor by hand. Does motor turn in both directions smoothly?

   Yes - Continue at step 2.

   No - Replace takeup motor.

2. Enter test 111. Before selecting a test mode, does the motor spin?

   Yes - Continue at step 6.

   No - continue at step 3.

3. Select the "MAN TAKE-UP" mode in test 111. Run the takeup motor up to approximately 50 counts. Does the motor move?

   Yes - Continue at step 8.

   No - Continue at step 4.

4. Check the (Harness). Is it ok?

   Yes - Continue at step 5.

5. Is the drive on the Sensor/Servo board ok?

   Yes - Replace motor.

   No - Replace Sensor/Servo board.

6. Is the motor spinning fast or slow?

   Fast - Continue at step 10.

   Slow - Continue at step 7.

7. Check (NOVRAM) offsets. Are they ok?

   Yes - Replace Sensor/Servo board.

   No - Adjust the offset using procedure 5.34.4.

8. Is the speed of the motor fairly constant?

   Yes - Continue at step 9.

   No- Replace Sensor/Servo board.

9. Reverse direction of the motor. Is the speed about the same as in the opposite direction?

   Yes - PASS.

   No - Continue at step 7.

10. Replace Sensor/Servo board. Does motor still spin fast?

    Yes - Reinstall first servo board and continue at step 7.

    No - PASS.

4.4.13. **Tape in path**

1. Enter test 131. Place your hand between the tape in path transmitter and receiver. Does the "T" in the display come on?

   Yes - PASS.

   No - Continue at step 2.

2. Is the (Harness) ok?
   Yes - Continue at step 3.

3. On the Sensor/Servo board, check R118 for PWB Set A, R270 for PWB Set B, or R149 for PWB Set C for power to the tape-in-path transmitter and receiver. Is the voltage between 4.85 to 5.35 Vdc?

   Yes - Replace the transmitter, if that does not fix the problem, replace the receiver.

   No - Replace the Sensor/Servo board.

4.4.14. Common data problems

1. Check (Read threshold).

2. Check head cables.

3. Clean head, tape scraper, and roller guides.

4. Check the NOVRAM configuration with the values that were recorded before the drive started having problems. Pay special attention to the Parity, ramp delay, and transfer rate.

4.4.15. Read threshold

1. Enter test 212. Measure and record read after write envelope on the Data board at TP-60, TP-62, and TP-64 on PWB Set A; TP-93, TP-96, and TP-99 on PWB Sets B and C. Read the value from the zero point to the positive peak of the wave form. Average these three readings together for the other calculations. Measure and record Vcom at U15U pin 7 on PWB Set A and U26U pin 7 on PWB Sets B and C. This is Vcom1. Rewind and exit test. Measure and record Vcom once more. This is Vcom2. Is the average of the read after write envelope readings between the min and max values for Vcom1 in the read threshold table at the end of this test? (If the value you get isn't in the table, the average read after write envelope times 30% should be equal to Vcom1 plus or minus 5%.)

   Yes - Continue at step 2.

   No - Run (test 513) to set read threshold.

2. Is the average of the readings between the min and max values for Vcom2 in the read threshold table at the end of this test? (If the value you get isn't in the table, the average read after write envelope times 15% should be equal to Vcom1 plus or minus 3%.)

   Yes - PASS.

   No - Run (test 513) to set read threshold.

Read Threshold Table

Peak Average	VCOM1 min	VCOM1 max	VCOM2 min	VCOM2 max
0.500	0.133	0.147	0.049	0.052
0.600	0.160	0.176	0.058	0.062
0.700	0.186	0.206	0.068	0.072
0.800	0.213	0.235	0.078	0.082
0.900	0.239	0.265	0.087	0.093
1.000	0.266	0.294	0.097	0.103
1.100	0.293	0.323	0.107	0.113
1.200	0.319	0.353	0.116	0.124
1.300	0.346	0.382	0.126	0.134
1.400	0.372	0.412	0.136	0.144
1.500	0.399	0.441	0.146	0.155
1.600	0.426	0.470	0.155	0.165
1.700	0.452	0.500	0.165	0.175
1.800	0.479	0.529	0.175	0.185
1.900	0.505	0.559	0.184	0.196
2.000	0.532	0.588	0.194	0.206

4.4.16. Set Internal/Field Mode (Test 542)

CAUTION: Care must be taken when using 500 series tests. Follow instruction to the letter. Failure to do so could render the GCR unit inoperable.

(Internal Mode)

1. Enter test 542, does display scroll "SET FIELD MODE? YES NO".

   Yes - Press the UNLOAD switch, then the DENSITY SELECT switch to exit the test.

   No - Continue to step 2.

2. "PASSWORD ?" is displayed, enter 54524. Display now reads "MODE ?", press the LOAD switch and now "INTERNAL" is displayed, press DENSITY SELECT switch to exit the test.

   You are now in the internal mode and can run test 513.

(Field Mode)

1. Enter test 542, does display show "SET FIELD MODE? YES NO".

   Yes - Press LOAD switch and "YES" is now displayed. Press DENSITY SELECT to exit the test.

   No - "PASSWORD" is displayed. Press the WRT EN/TEST switch to cancel the test.

4.4.17.A **Automatic Write Current Calibration (-006 and lower firmware)**

1. This test requires that a write enabled tape be loaded before entering.

2. Enter test 513 per instructions in 4.4.16.

3. Test will now run automatically. When test is done the display will either read "PASS" or "FAIL". Did the test pass?

   Yes - PASS Go to step 4.

   No - FAIL, Check the last component that was installed prior to running this test. Check all contacts and connections and the backplane.

4. Return the tape drive back to Field Mode (test 542).

4.4.17.B **Write Current Calibration (-007 and higher firmware)**

1. Connect a jumper between U1H Pin 1 and ground on the Data PWB.

2. Power up the tape drive, enter test 142, and record for later use the values of options 22 through 27.

3. Exit test 142.

4. Enter test 542.

CAUTION: Care must be taken when using 500-series tests. Follow instructions exactly. Failure to do so could render the tape drive inoperable.

Is "SET FIELD MODE? YES NO" displayed?

Yes - Press the UNLOAD switch; "NO" is displayed. Press the DENSITY SELECT switch; the UNLOAD LED goes on. Go to Step 6.

NO - Go to Step 5.

5. "PASS WD?" is displayed. Enter 54524; "MODE?" is displayed. Press the LOAD switch; "INTERNAL" is displayed. Press the DENSITY SELECT switch; the UNLOAD LED goes on. Go to Step 6.

6. Load a good quality 10.5-inch reel of write-enabled tape, preferably a Standard Output Tape. Data will be written to the tape.

7. Enter test 513. "HEAD CAL" is displayed for several seconds, then "READY" or "-60 MV" is displayed. If "-60 MV" is displayed, go to step 8. If "READY" is displayed, go to step 9.

8. (The +5V supply is low or the -12V supply is high; the VCOM line may have a negative offset that cannot be adjusted automatically by the tape drive.) The LOAD, UNLOAD, and ONLINE LEDs are on; the WRT EN/TEST LED is flashing.

Connect a digital volt meter to the VCOM line at pin 7 of any read amplifier chip. Set the offset to -60 ± 1.2 millivolts using the front panel switches as follows:

LOAD — Adds 2.2 millivolts of positive offset with each actuation. No more than +60 millivolts can be added. If the maximum offset is added without reaching -60 ± 1.2 millivolts, exit test 513 (press UNLOAD) and start troubleshooting with the Sense/Servo PWB.

UNLOAD — Aborts test 513 and unloads tape. NOVRAM data is not changed.

ONLINE — Same as LOAD except that a negative 2.2 millivolts is added per actuation.

WRT EN TEST — Exits this adjustment and continues at Step 9.

NOTE: If a digital volt meter is not available, press the LOAD switch twice to partially compensate for the negative offset. Press the WRT EN/TEST switch to continue to Step 9.

9. The UNLOAD and WRT EN/TEST LEDs are flashing. At this point you have the option of exiting test 513. Press the UNLOAD switch to exit the test and unload tape. Press the WRT EN/TEST switch to continue.

10. Values for the three operating densities will be entered during this step. They are found in one of two places: 1) At the top of the read/write head a tag has the values for 6250 and 3200 bpi; the lower value is the 6250 bpi current, the higher value is the 3200 bpi current. The 1600 bpi current is 4100. 2) If the tag is not there, use the NOVRAM values recorded in Step 2, options 22 (6250 bpi), and 24 (3200 bpi).

    The LOAD, UNLOAD, and DENSITY SELECT LEDs are on. The density display reads "6250 BPI" and the alphanumeric display shows tens of microamperes (e.g., 1567 equals 15.67 milliamps). Enter the appropriate values for each density using the front panel switches as follows:

    LOAD — The first actuation starts tape motion, and an all ones pattern is written to tape at the displayed density. Successive actuations increase the current value in increments of 25 on the display (equals 0.25 milliamps). Pressing the ADRS SELECT switch while actuating the LOAD switch reduces the increments to 1 on the display (0.01 milliamps). In 6250 bpi density, the drive writes to all nine tracks; in 1600 and 3200 bpi, it writes to the six file mark tracks.

    UNLOAD — Same as LOAD, except that current value is decreased. The ADRS SELECT switch reduces decreases to 1 on the display.

    ONLINE — Stops tape motion.

WRT EN TEST — Exits this step and continues at Step 11. This switch does not function until all densities have been set and tape motion stopped; the WRT EN/TEST LED then flashes.

DENSITY SELECT — Selects each density for editing or reviewing. Tape motion must be stopped.

11. This step runs automatically. The tape drive determines the correct read threshold for each density based on the values entered during Step 10 and writes to tape in each density. When this step is completed, "THR DONE" is displayed, the LOAD, ONLINE, and DENSITY SELECT LEDs are on, and WRT EN/TEST is flashing.

12. The average peak-read amplitude (EOUT) and read-after-write (RAW) voltages can now be examined or this step may be skipped by pressing the WRT EN/TEST switch. The front panel switches function as follows:

    LOAD — The first actuation causes "EOUT AVG" then the value of the selected density in millivolts to be displayed. The second actuation causes "THRESHLD" then the value of the new RAW voltage to be displayed. Used in conjuction with the DENSITY SELECT switch.

    ONLINE — Aborts the display sequence started by pressing the LOAD switch. (The LOAD switch may be pressed again.)

    WRT EN TEST — Exits this step and continues at Step 13.

    DENSITY SELECT — Changes the density of the EOUT and RAW voltages being displayed. Used in conjunction with the LOAD switch.

13. "SAVE NEW" is displayed and the LOAD and UNLOAD LEDs are flashing. This step allows the new values to be written to NOVRAM or the existing values to be retained. The front panel switches function as follows:

    LOAD — A 'yes' response. New values are written to NOVRAM.

    UNLOAD — A 'no' response. New values are discarded and the existing values remain in NOVRAM.

    After a yes or no response is entered, "NEW DATA" or "OLD DATA", respectively, is displayed for several seconds.

    NOTE: If you use tests 142 or 242 to verify values just entered, the values may differ slightly because of binary to decimal translation. Readings that vary by up to 20 counts are acceptable.

14. Enter test 542. "SET FIELD MODE? YES NO?" is displayed. Press the LOAD switch, then the DENSITY SELECT switch.

15. Unload the tape. Switch the drive power off.

16. Remove the jumper from the Data PWB.

17. Remove the safety pin from the support arm. Lower the drive to the operating position. Secure the chassis retaining screws.

Chapter 5. Preventive Maintenance and Replacement Procedures

5.1 Preventive Maintenance Schedule

Instructions for performing the maintenance listed in the table below are in section 6.3.

Part	Frequency (hours)
Tachometer Roller	40*
Hub pads	40*
Take Up Hub	40*
Roller Guides	40*
Sensors	40*
Head	20*
Tape Cleaner	40*
Filter	Quarterly

* The schedule should be performed weekly if enough hours are not accumulated in a typical week.

5.2 Placing Unit In Operator Access Position

1. Switch off ac power.

   CAUTION: If the tape unit is to be extended on its slides from the equipment rack for maintenance, ensure that the rack is stabilized. Weight of the transport in the extended position could upset an inadequately mounted equipment rack.

2. Pull the tape unit out of the rack by using the front panel at position (1).

3. Withdraw the drive on its slides. Make sure the tape unit is clear of the unit above before you open the top cover.

4. Open the top cover and support it with the stay arm (2).

5. Open the operator access cover (3).

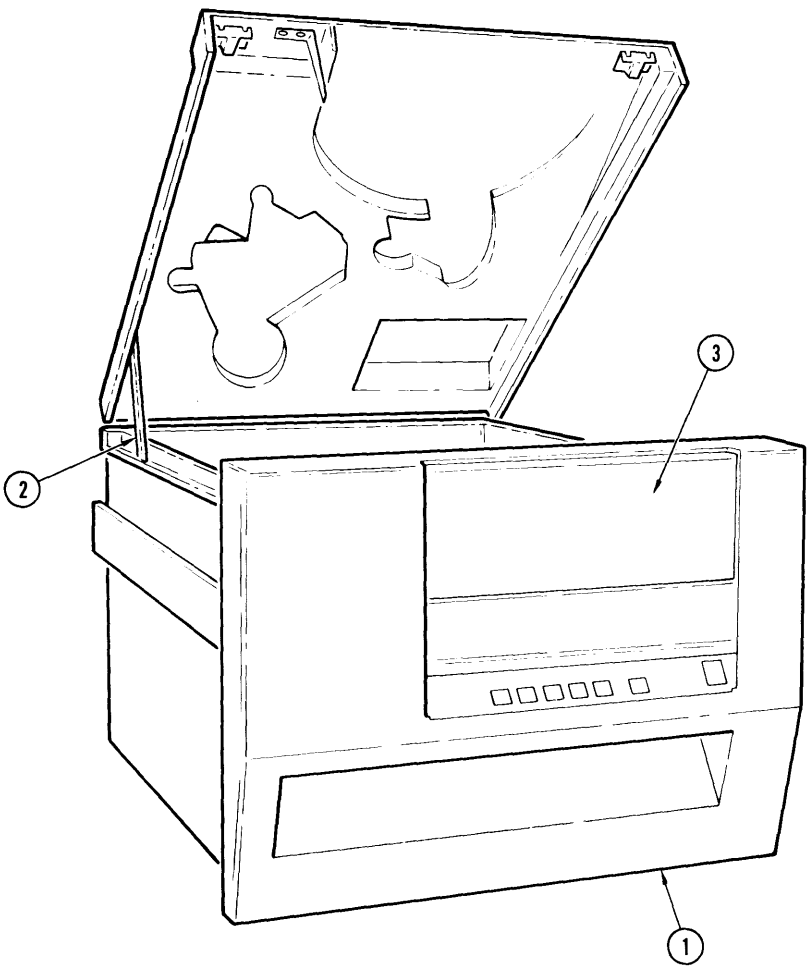

5.3 Placing Unit In Service Position

6. Switch off ac power.

   CAUTION: Before extending the drive on its slides from the equipment rack for maintenance, ensure that the rack is stabilized. Weight of the transport in the extended position could upset an inadequately mounted equipment rack.

7. Pull the tape unit out of the rack by using the front panel at position (1).

8. While holding the front panel firmly, withdraw the drive on its slides until the slide locks engage. Make sure the tape unit is clear of the unit above before opening the top cover.

9. Open the top cover and secure it with the stay arm provided.

10. Loosen the two spring-loaded screws (2) on both sides of the base plate.

11. Close the top cover.

12. Lift up on the two lower corners of the front panel to its maximum position. The latch mechanism locks in an upright position. Install the locking pin (4) provided.

    WARNING
    Insert the provided locking pin (4) into the hole (3) in the tape unit support arm. Never service the tape unit in the service position unless you install the locking pin. See Illustration.

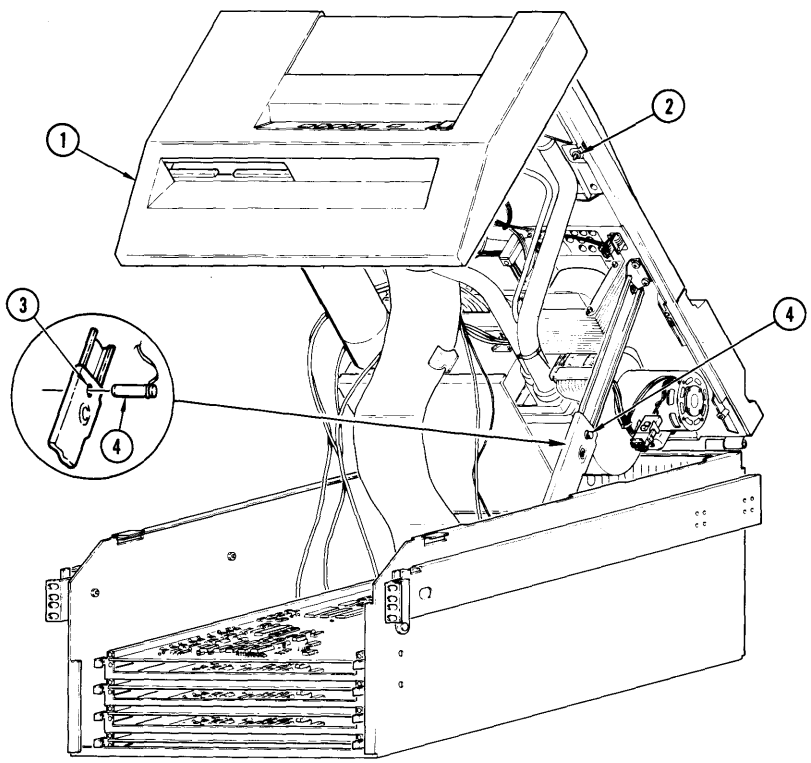

5.4 Restoring Unit To Operating Position

1. Switch off ac power.
2. Remove the lock pin (4), and pull up on the tape unit to release the latch mechanism.
3. While lowering the drive, make sure that the cables are secure and are not pinched.
4. Open the top cover and secure it with the stay arm provided.
5. Secure the spring-loaded screws (2) to lock the base unit to the frame.
6. Close the top cover.
7. Press in on the locking tabs in the slides and push the tape unit into the rack until secure.

5.5 Front Panel

5.5.1 Removal

1. Switch off ac power.
2. Disconnect the ac power cord.
3. Place the unit in the service position.
4. Note the wire positions and disconnect the ac power switch cable (1) from the ac power switch.
5. Disconnect the cable connector (2) from the switch-LED front panel.
6. Disconnect the cable connector (3) from the alphanumeric display.
7. Remove the four screws (4), flat washers (5), and lockwashers (6).

8. Lift the front panel from the unit. Note the position of the air ducts for replacement.

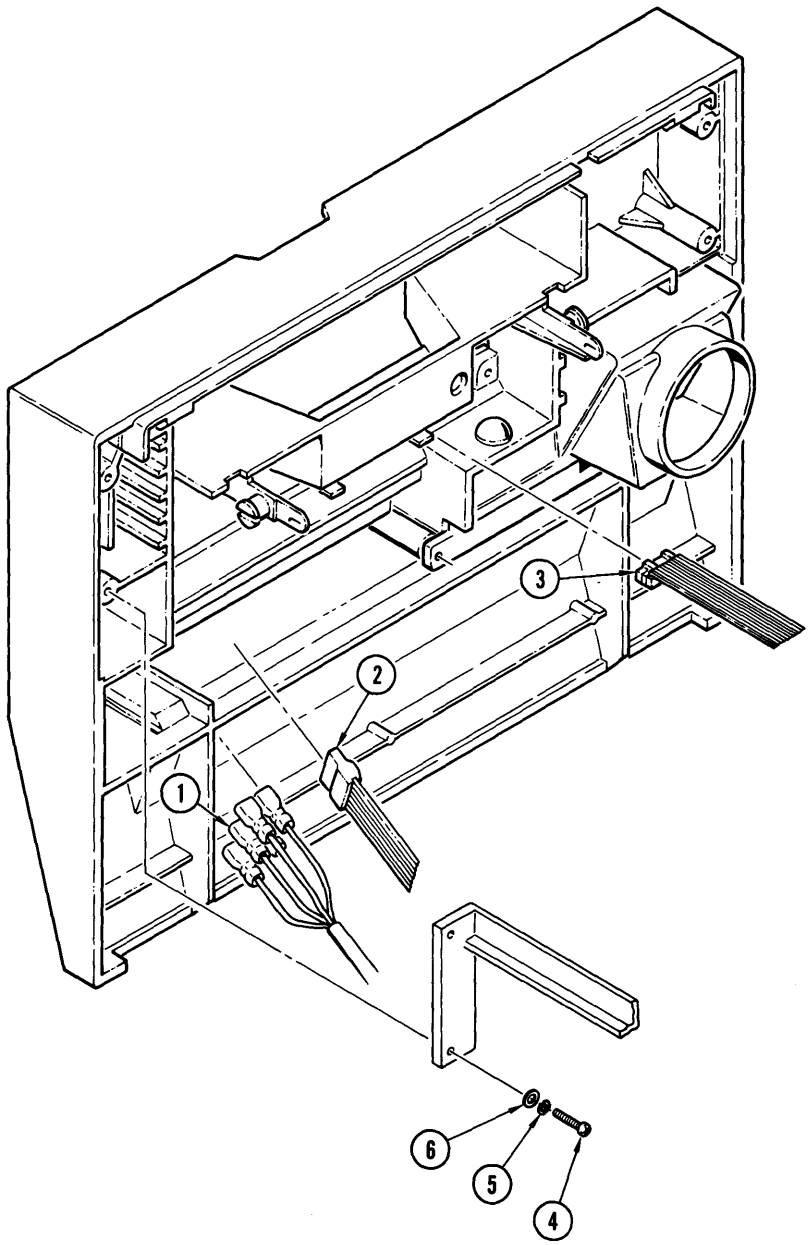

5.5.2 **Replacement**

To replace the front cover, reverse the removal procedure steps. Also, be sure to replace all air ducts.

5.6 Top Cover

5.6.1 Removal

1. Switch off ac power.

2. Place the unit in the operator access position. (See section 5.1.)

3. Remove the four screws (1), and four washers (2) to remove the cover.

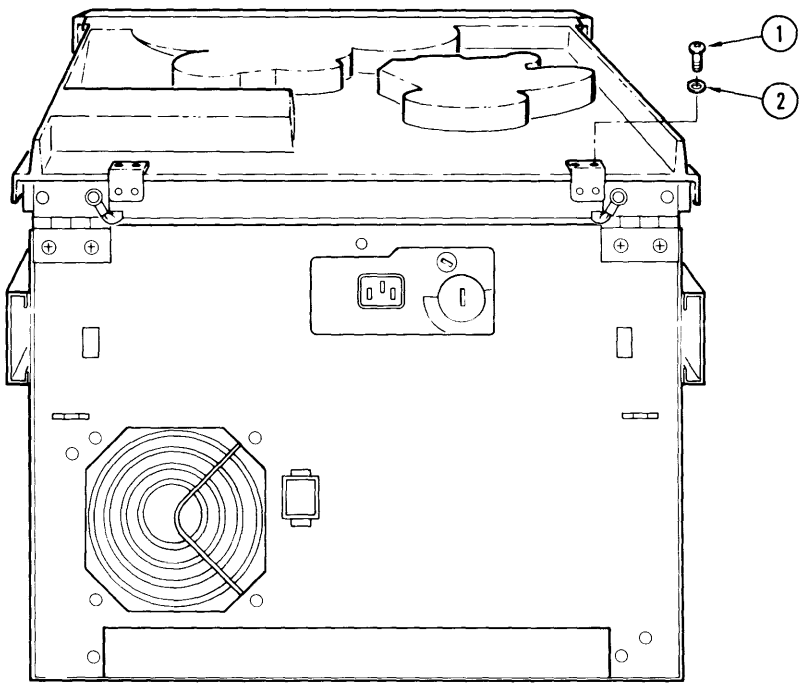

5.6.2 Replacement

To replace the top cover, reverse the removal procedure steps. Proceed to the adjustment procedure.

5.6.3 Adjustment

1. Adjust the rear hinges so that the top cover opens and closes without binding on the front cover.

2. Adjust the ball latches on the top cover to ensure that the top cover is fully closed.

5.7 Operator Access Cover

5.7.1 Removal

1. Switch off ac power.
2. Place the unit in the service position. (See section 5.2.)
3. Remove the front panel. (See section 5.5.)
4. Remove the two springs (1).

   Note: The springs are under compression. Take care when removing them.

5. Push out the operator access cover (2) from the rear of the front cover.

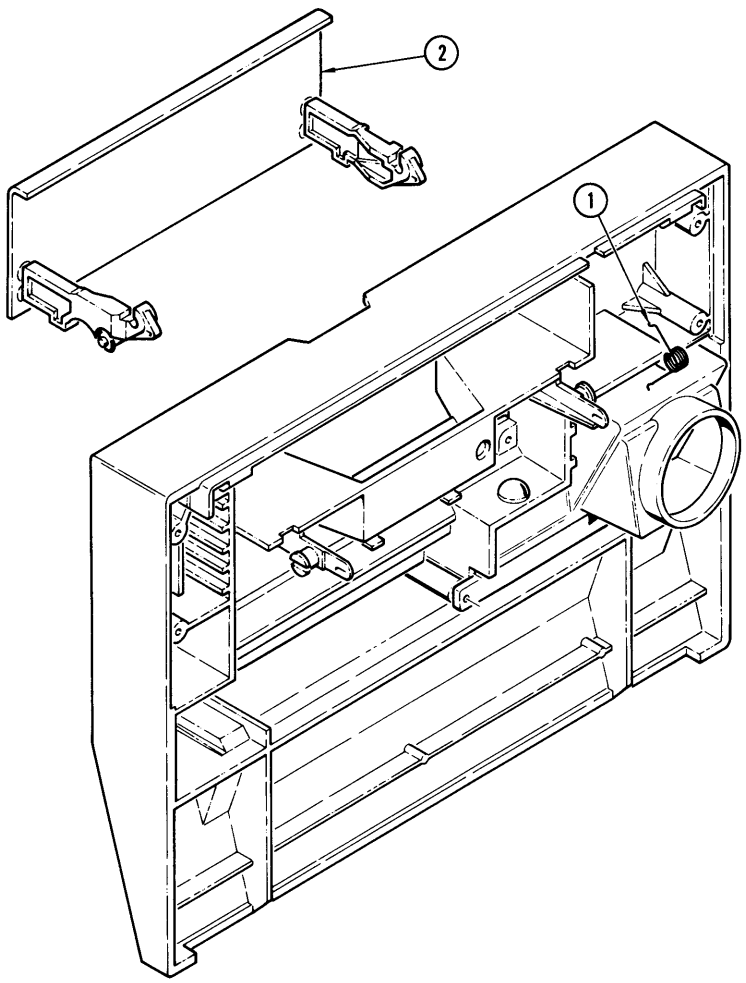

5.7.2 Replacement

To install the operator access cover, reverse the removal procedures.

1. Open and close the operator access cover.
2. Make sure that the access cover returns to the fully closed position.
3. If the access cover does not close properly, adjust the two springs (2) and repeat until the cover closes properly.

5.8 Cover Lock Assembly

5.8.1 Removal

1. Switch off ac power.
2. Place the unit in the service position. (See section 5.2.)
3. Remove the front panel. (See section 5.5.)
4. Remove the main air duct. (See section 2.2.)
5. Locate the cover lock assembly (4) next to the air duct.
6. Remove the two screws (1), two lock washers (2), and two washers (3) from the cover lock assembly.
7. Remove the connector from the lock assembly.

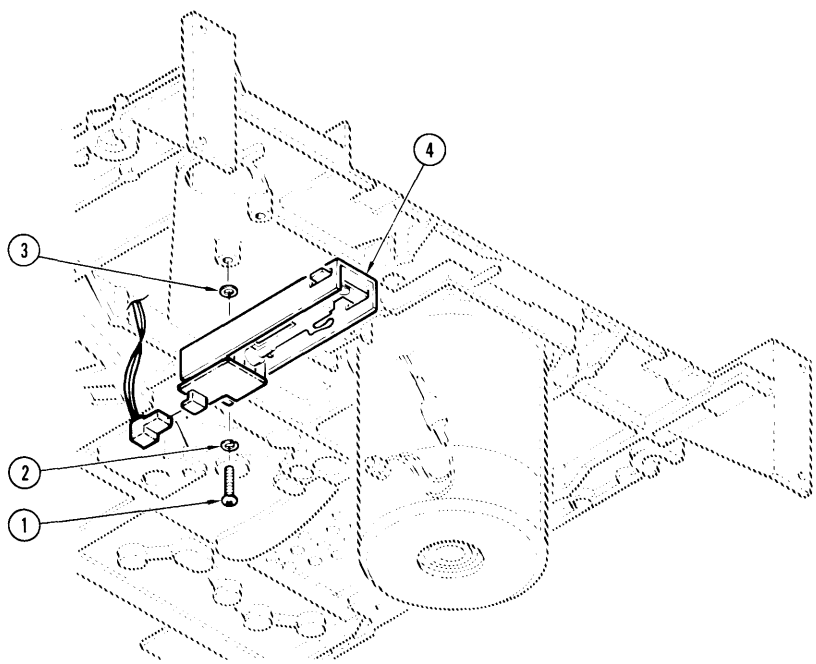

5.8.2 **Replacement**

1. Install the assembly and reverse the removal procedure.

2. Perform the adjustment procedure, 5.8.4.

5.8.3 **Service Check**

1. Enable test 132 with both of the covers closed. (See section 4.1.3 for diagnostic tests.)

2. When both of the covers and the cover lock assembly are properly adjusted, the On-line LED should be off. If not, perform the adjustment procedure 5.8.4.

5.8.4 **Adjustment**

1. Close the top cover of the tape unit.

2. Attempt to close the operator access cover with light pressure. If the access cover does not close completely, loosen the screws, and push the cover lock assembly toward the front of the unit until the access cover closes.

3. Switch on ac power and press the Load switch. If the LOADING message is displayed, cover lock assembly is properly positioned. If the NO DOOR LOCK message is displayed, loosen the screws, and push the cover lock assembly slightly forward toward the front of the tape unit.

4. Repeat step 3 until the Loading LED is flashing.

5. Restore the unit to an operating position. (See section 5.2.)

5.9 AC Power Switch

5.9.1 Removal

1. Switch off ac power.
2. Disconnect the ac power cord.
3. Place the unit in the service position. (See section 5.2.)
4. Disconnect the ac power switch cable (2) from the switch. Note the position of the wires for replacement.
5. Bend the tabs (1) that hold the switch to the panel, and push the switch out from the back.

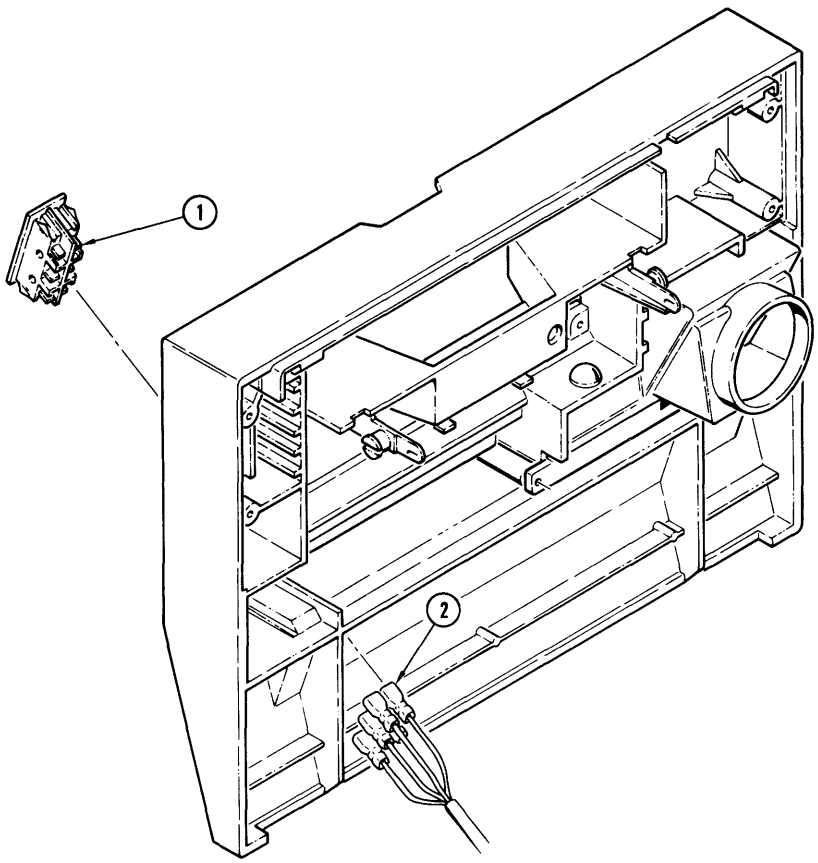

5.9.2 Replacement

1. Install the switch.
2. Bend the tabs in back of the switch as necessary for a proper fit.
3. Reinstall ac cable (2) to the switch terminals.

5.10 Switch-LED Front Panel

5.10.1 Removal

1. Switch off ac power.
2. Place the unit in the service position. (See section 5.2.)
3. Remove the connector (3) from the switch panel back.
4. Remove the front cover. (See section 5.5.)
5. Remove the switch-LED panel (1) from the front cover by peeling off from the front.

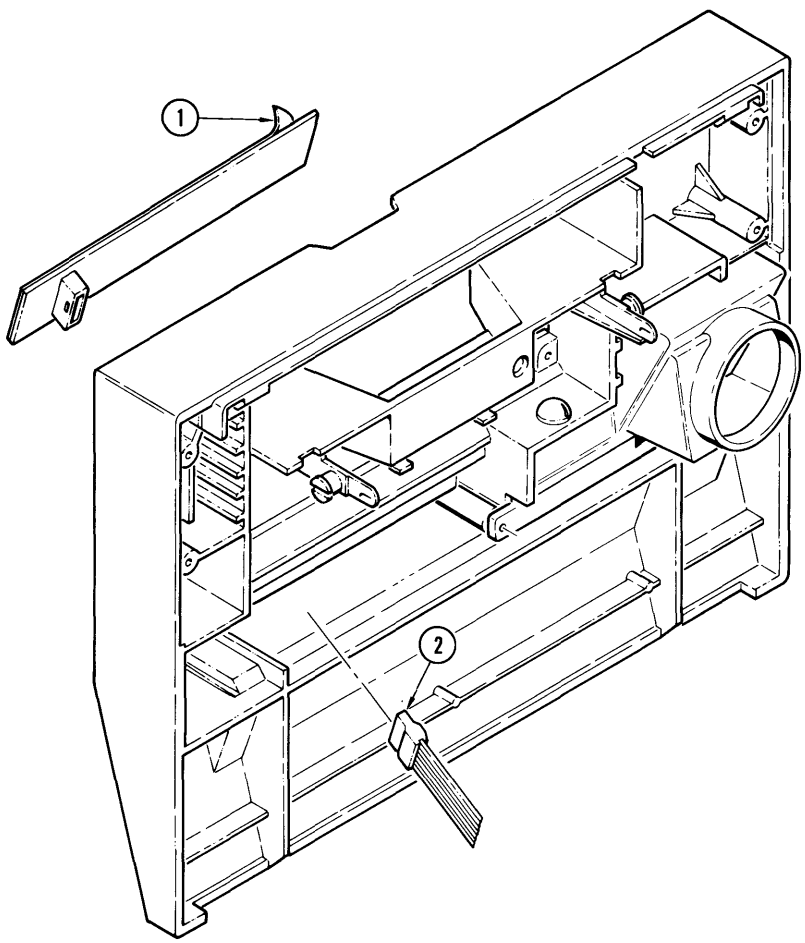

5.10.2 Replacement

Install the panel, and reverse the removal procedure.

5.11 Alphanumeric Display

5.11.1 Removal

1. Switch off ac power.
2. Place the unit in the service position. (See section 5.2.)
3. Remove connector (5) from back of display PWB.
4. Remove nut (1), lockwasher (2), and flatwasher (3).
5. Remove push-on retaining rings (4).
6. Remove cover (7) and diagnostic PWB (6) from front panel.

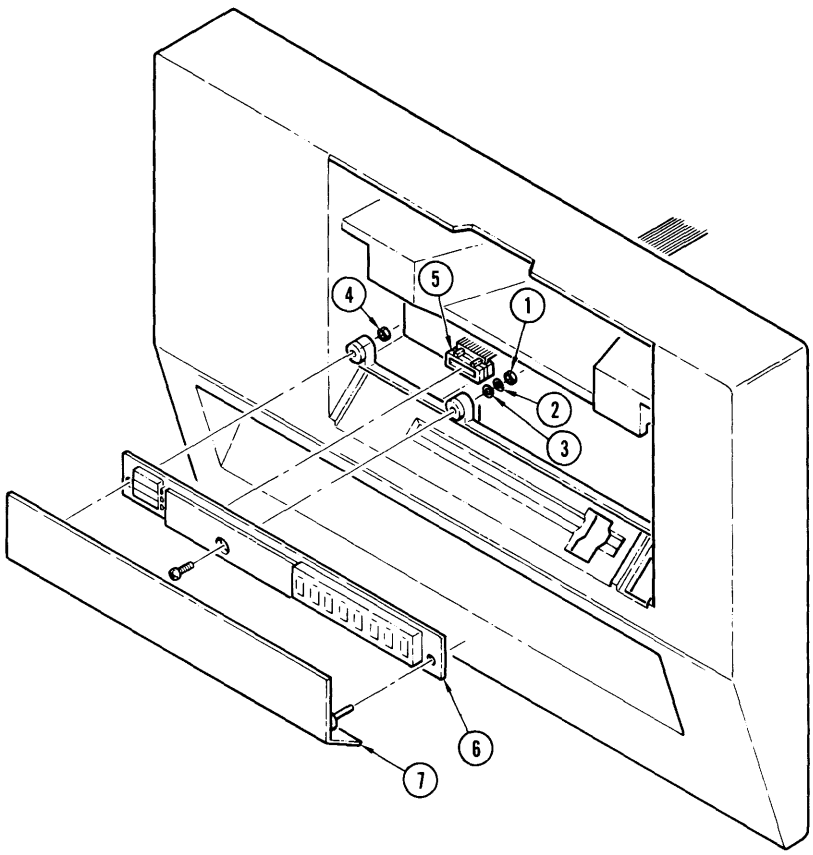

5.11.2 Replacement

Install the diagnostic PWB, and reverse the removal procedure.

5.12 Fuse

5.12.1 Removal

1. Switch off ac power.
2. Disconnect the ac power cord.
3. Locate the fuse F1 on the power supply enclosure through the rear of the chassis and remove it.
4. For 100 to 120 volt range, use a 6.25A, 3AG slow blow fuse.
5. For 200 to 240 volt range, use a 3A, 3AG slow blow fuse.

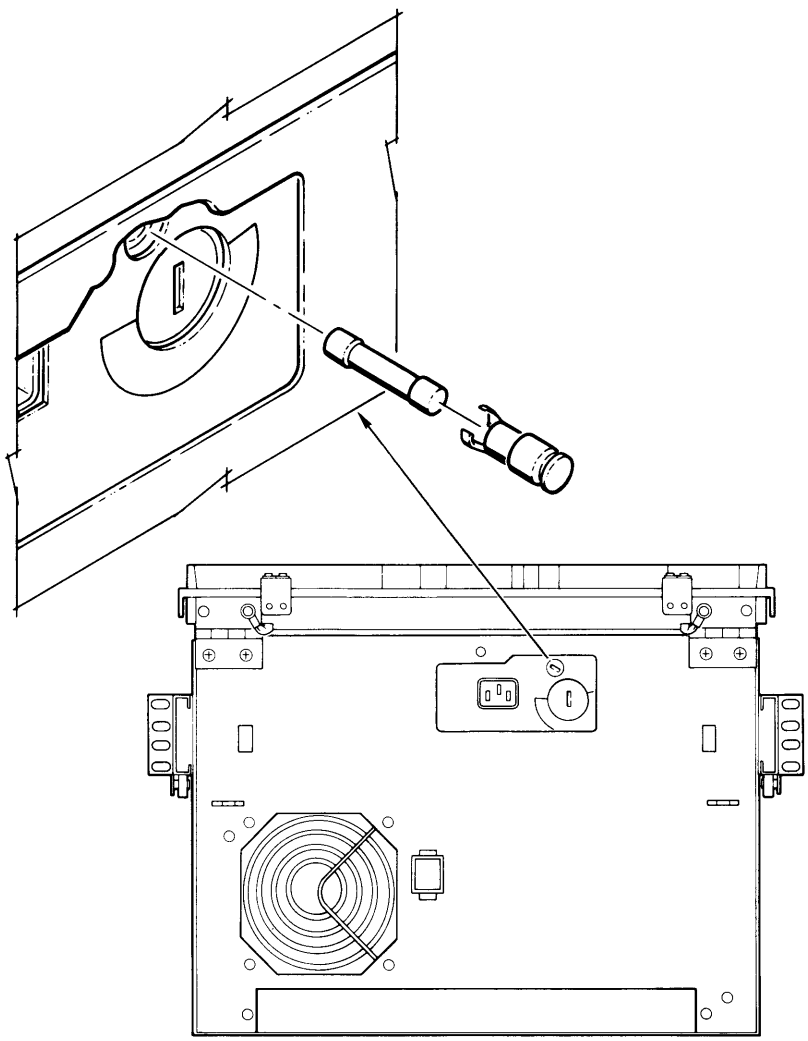

5.12.2 Replacement

To replace the fuse, reverse the removal procedure steps.

5.13 Power Supply Enclosure and PWB

5.13.1 Removal

Switch off ac power and disconnect the ac power cord.

1. Switch off ac power and disconnect the ac power cord.
2. Place the unit in the service position. (See section 5.2.)
3. Remove the four tape unit boards from the PWB rack. (See sections 5.34 through 5.37.)
4. Remove the front panel. (See section 5.5.) Remove the main and smaller air duct
5. Cut the cable ties holding the cables to the left side and front of the enclosure. Disconnect the connectors to the front of the enclosures.
6. Remove the screw attaching the ground wire to the side of the air pump assembly. Cut the cable tie around the air pump connector and disconnect the air pump from the wiring harness.
7. Remove nut (12) which secures Blower Motor to top plate.
8. Remove the power supply cover.
9. Remove the nut (1) and flatwasher (2) holding AC line filter bracket to the enclosure.
10. Remove the two socket head screws (3), two lockwashers (4), and two flatwashers (5) from the rear of the enclosure.
11. Remove the two screws (6), two lockwashers (7), and two flatwashers (8) from the front of the enclosure.
12. Disconnect the connector from the take-up motor to the power supply PWB.
13. Remove the four screws (9), lockwashers (10), and flatwashers (11) securing the power supply PWB.
14. Carefully lower the power supply enclosure and PWB from the top plate.
15. Remove the power supply PWB from the enclosure.

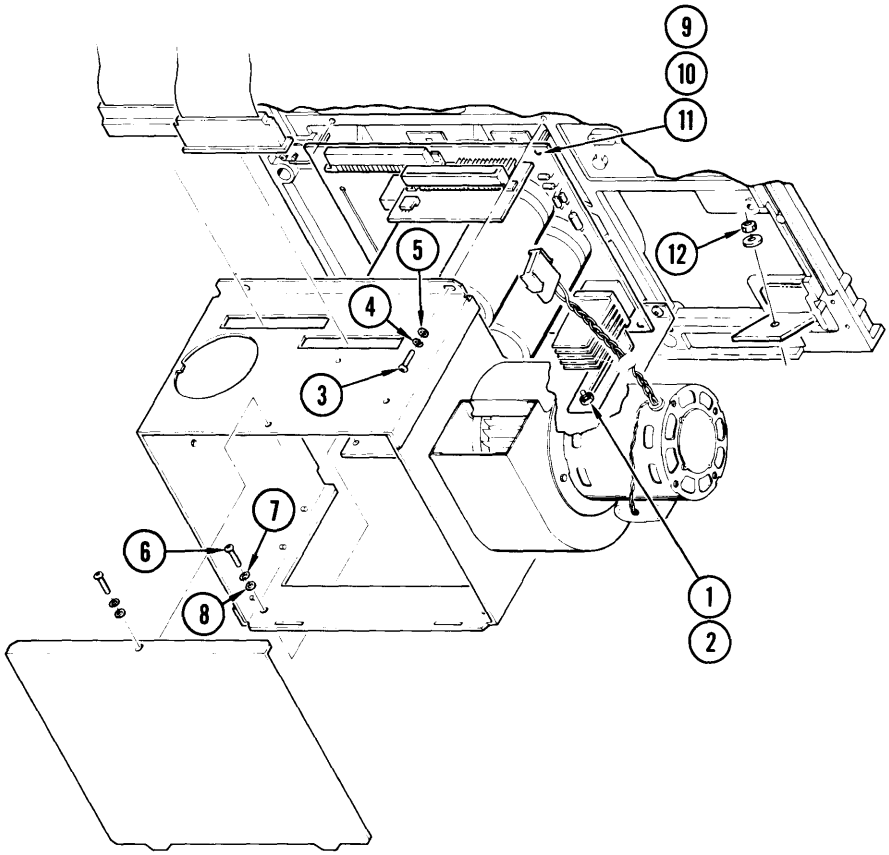

5.13.2 **Replacement**

1. To replace the power supply enclosure, reverse the removal procedure steps. Make sure not to pinch any cables when replacing the enclosure.

2. Use replacement cable ties to replace the cables.

5.14 Blower Motor

5.14.1 Removal

1. Switch off ac power.
2. Disconnect the ac power cord.
3. Place the unit in the service position. (See section 5.2.)
4. Note that a ground wire is attached to the power supply cover and remove the power supply cover.
5. Remove the cable ties on the power supply enclosure and remove the power supply enclosure. (See section 5.13.)
6. Remove the three nuts (1) that attach the blower motor to the power supply enclosure.

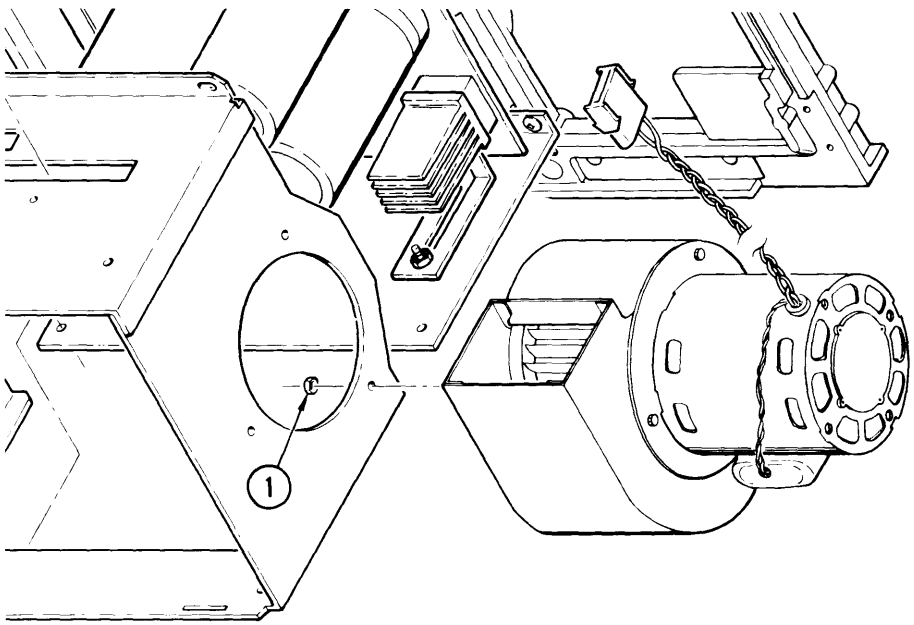

5.14.2 Replacement

Replace the blower motor by reversing the removal procedure.

5.15 AC Transformer

5.15.1 Removal

1. Switch off ac power.
2. Disconnect the ac power cord.
3. Place the unit in the service position. (See section 5.2.)
4. Remove the front cover. (See section 5.5.)
5. Remove the air duct that is in front of the transformer.
6. Remove plug from the transformer.
7. Remove the four screws (1), four lockwashers (2), and four washers (3) from the base of the transformer. Note the position of the cable ties and remove them.

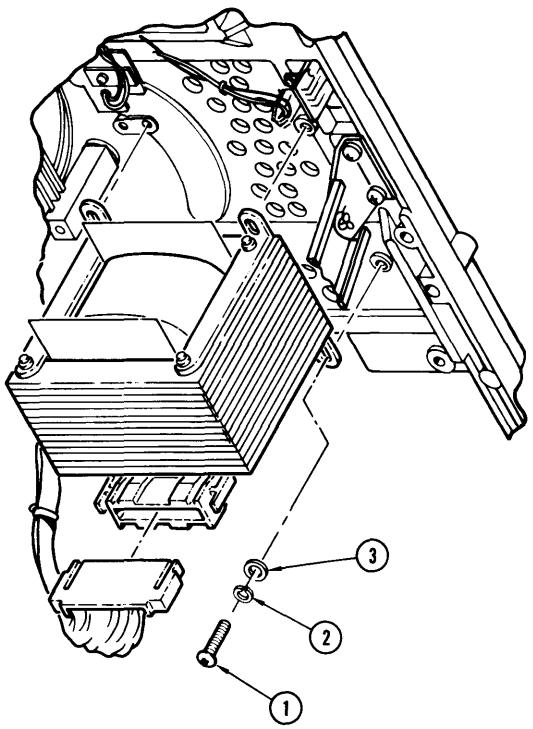

5.15.2 Replacement

Install transformer with the screws removed earlier. Reverse the removal steps for replacement.

5.16 AC Line Cord

5.16.1 Removal

1. Switch off ac power.
2. Disconnect the power cord from the ac socket.
3. Disconnect the ac power cord (1) from the back of the unit.

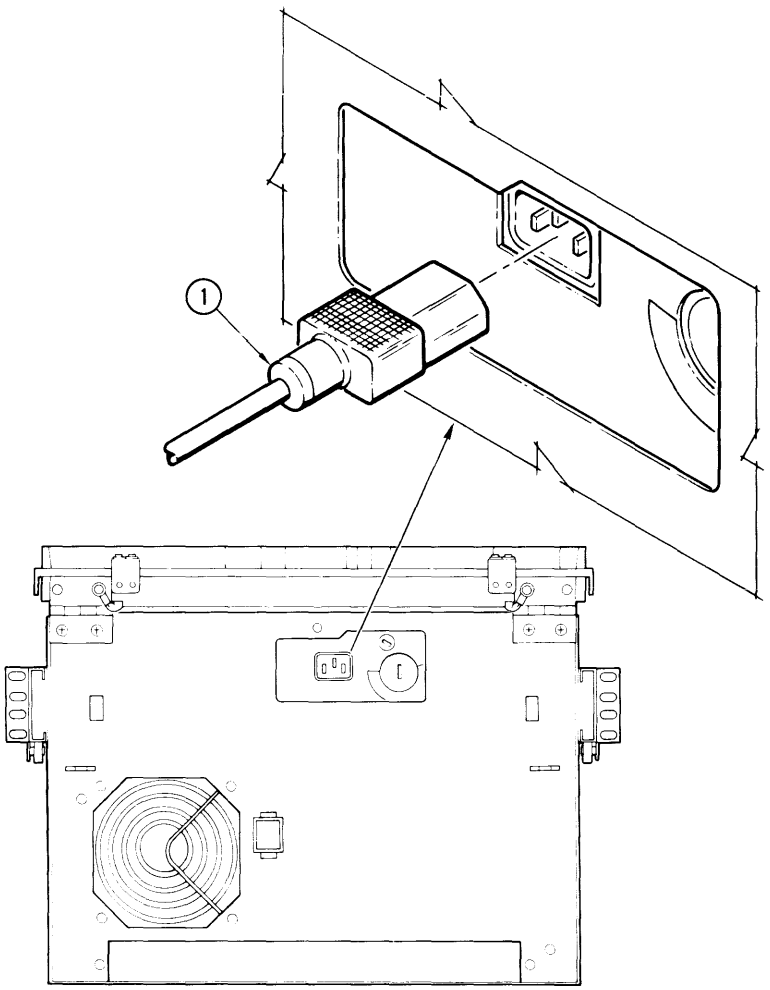

5.16.2 Replacement

Reverse the removal procedure to replace ac line cord. Replace with the same type of cord and plug.

5.17 Supply Reel Hub

5.17.1 Removal

1. Switch off ac power.
2. Place the unit in the operator access position. (See section 5.1.)

3. Open the top cover and operator access cover.

4. Measure the hub height and record the value.

5. Rotate the supply hub until the clamp screws (1) are aligned with the front cover.

6. Locate the access holes in the hub and insert the wrench from the front of the machine to loosen the two screws (1).

7. Lift the hub off the motor shaft.

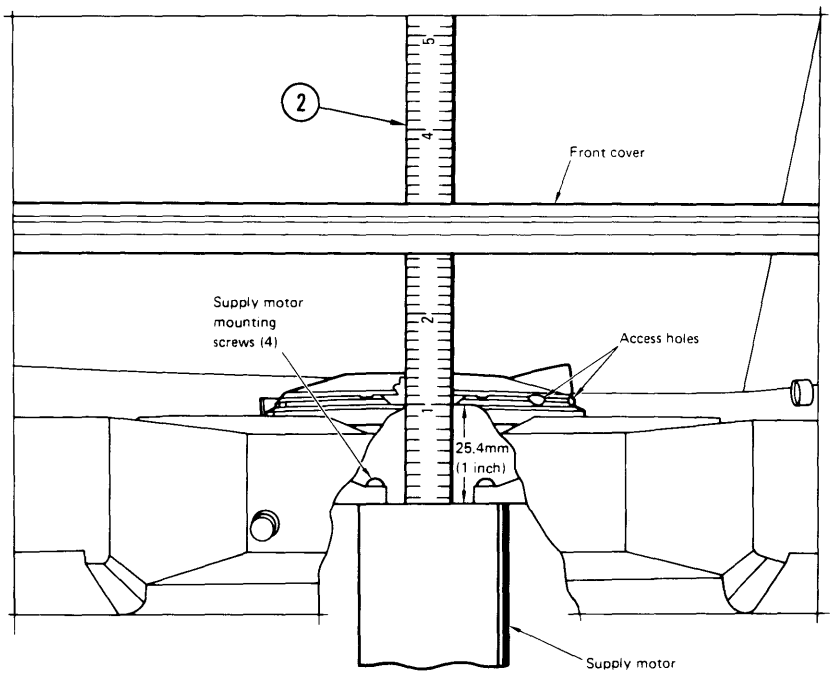

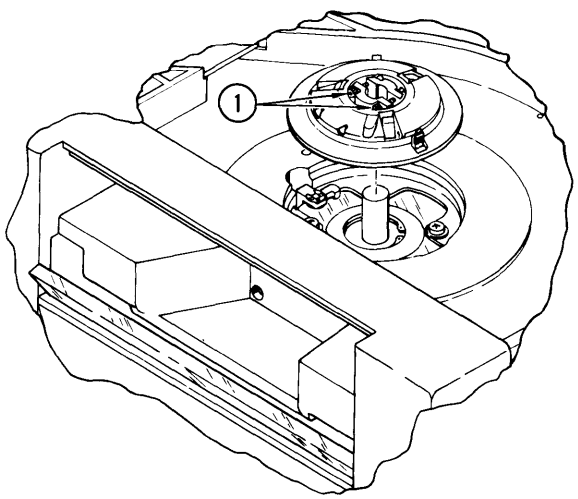

5.17.2 **Replacement**

Place the hub on the shaft. Do not tighten the screws. Proceed to the adjustment procedure.

5.17.3 Adjustment

1. With the reel hub pads down, insert the ruler scale (2) between the reel hub pad and the hub. Make sure the hub is in the position shown.

2. If only the supply hub was removed for repair or replacement, then use the hub height value recorded in the preceding removal steps and continue with step 4. If not, proceed to step 3.

3. Adjust the hub on the shaft until you obtain a gap of 25 mm (1 inch) between the motor case and edge of the hub. Tighten the screws (1).

4. Check the gap. If it is correct, proceed to step 5; if not, do step 3 until a proper gap is obtained.

5. Enable diagnostic test 131 to check the supply reel tab sensor. (See section 4.1 for diagnostic tests.) If the test is not correct, adjust the hub up or down for the proper LED results.

6. Load a tape and manually lock and unlock by running test 132, and check to see that the hub locks and unlocks properly.

7. Enable diagnostic test 212. At 100 ips, run the tape out to the EOT marker and start the test in the reverse direction. Observe the tape while it is rewinding onto the supply reel. If the tape is not centered on the hub, adjust the hub height as necessary.

8. Restore the unit to the operating position. (See section 5.3.)

5.18 Read/Write Head

5.18.1 Removal

1. Switch off ac power.

2. Place the unit in the service position. (See section 5.2.)

3. Remove the read and write cables from the head assembly.

4. Remove Azimuth adjusting screw (4).

5. While supporting the read/write head with your hand, remove four screws (2), four lockwashers (3), four washers (4) and remove the head from the tape unit.

   CAUTION: Use extreme care when removing and replacing the read/write head; do not allow ANYTHING to come in contact with the FACE of the HEAD.

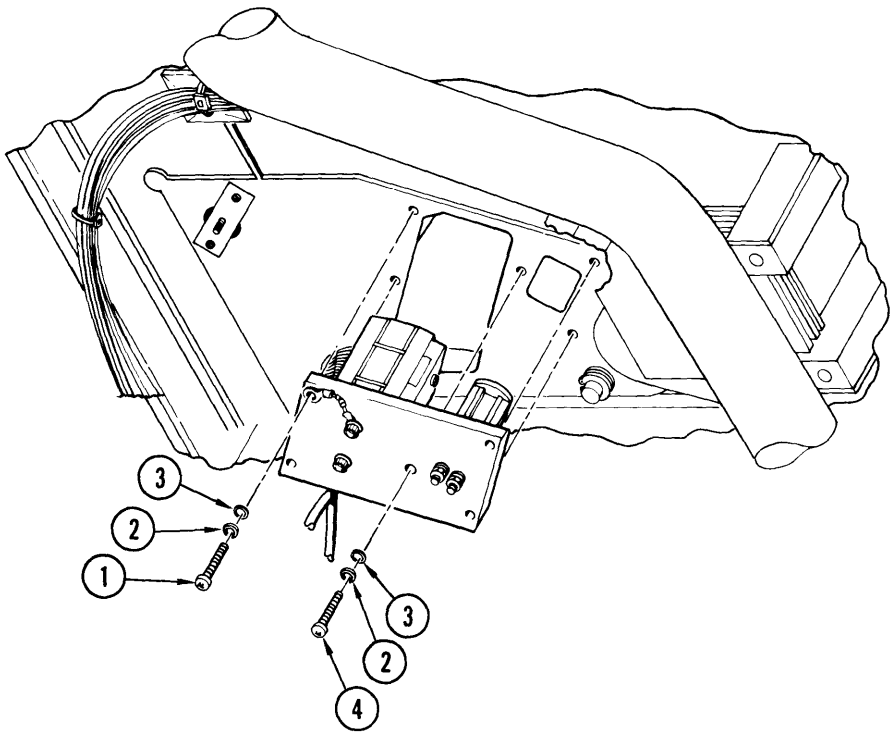

5.18.2 **Replacement**

1. Carefully install the read/write head using the four screws (1), lockwashers (2), and washers (3). Do not tighten the mounting screws.

2. Install Azimuth adjusting screw (4). Do not tighten.

3. Install the read and write cables on the head.

4. Clean the read/write head using tape path cleaner.

5. Proceed to the adjustment procedure section 5.18.3.

5.18.3 **Adjustment**

Note: Do not remove any shims from under the tape guides.

1. Place the head alignment tool (Cipher Part No. 600058-801) on the left side of the head assembly. Press firmly against head and rotate head and tool together until the tool just touches roller guide no. 4.

2. Hold the head in place and tighten the four mounting screws within equal amount of torque. Verify wrap angle adjustment after tightening screws.

3. Load a skew tape, Cipher Part No. 799019-401, **WITHOUT** a write enable ring.

5. Disable the front panel door and top cover interlock using test 133. Refer to section 4.1.3.
6. Press the Load/Rewind switch to load the tape.
7. Connect the oscilloscope to J1-19 on the Data Board.
8. Remove the center adjustment screws, and clean dried Vibratight.
9. Apply fresh Vibratight, Cipher Part No. 209990-075, to threads of adjustment screw and reinstall loosely into baseplate.
10. Use test 212 (section 4.1.4) in 1600 bpi mode to move tape forward at 100 ips.
11. Adjust azimuth screw so that outputs of all tracks fall within 12% or less of the byte-to-byte period. See Figure 5.18.3 Skew Adjustment Waveform.
12. Alternate tape direction between forward and reverse and optimize skew adjustment by minimizing the skew pulse width. Make final adjustment by optimizing forward skew (smallest skew pulse). Run forward to EOT and run reverse to BOT without stopping.
13. Apply torque seal, Cipher Part No. 209994-025 to head of adjustment screw. Run Test 513.
14. Unload the skew tape and refer to section 5.38 to check tape path alignment.
15. Perform Test 542 (section 4.4.16) and Test 513 (section 4.4.17).

5.19 Tape Scraper

5.19.1 Removal

1. Remove two socket-head screws (3), nuts (1), lockwashers (5), and flat washer (2).

5.19.2 Replacement

1. Install replacement scraper in reverse order of removal.

5.19.3 Adjustment

1. Insert and load a tape.
2. Loosen socket-head screws (3) and move tape scraper away from tape.
3. Slowly move the tape scraper toward the tape until it just barely makes contact with the tape.
4. Rotate tape scraper until both scraper blades are touching the tape, producing two vertical creases in the tape at the points of contact.

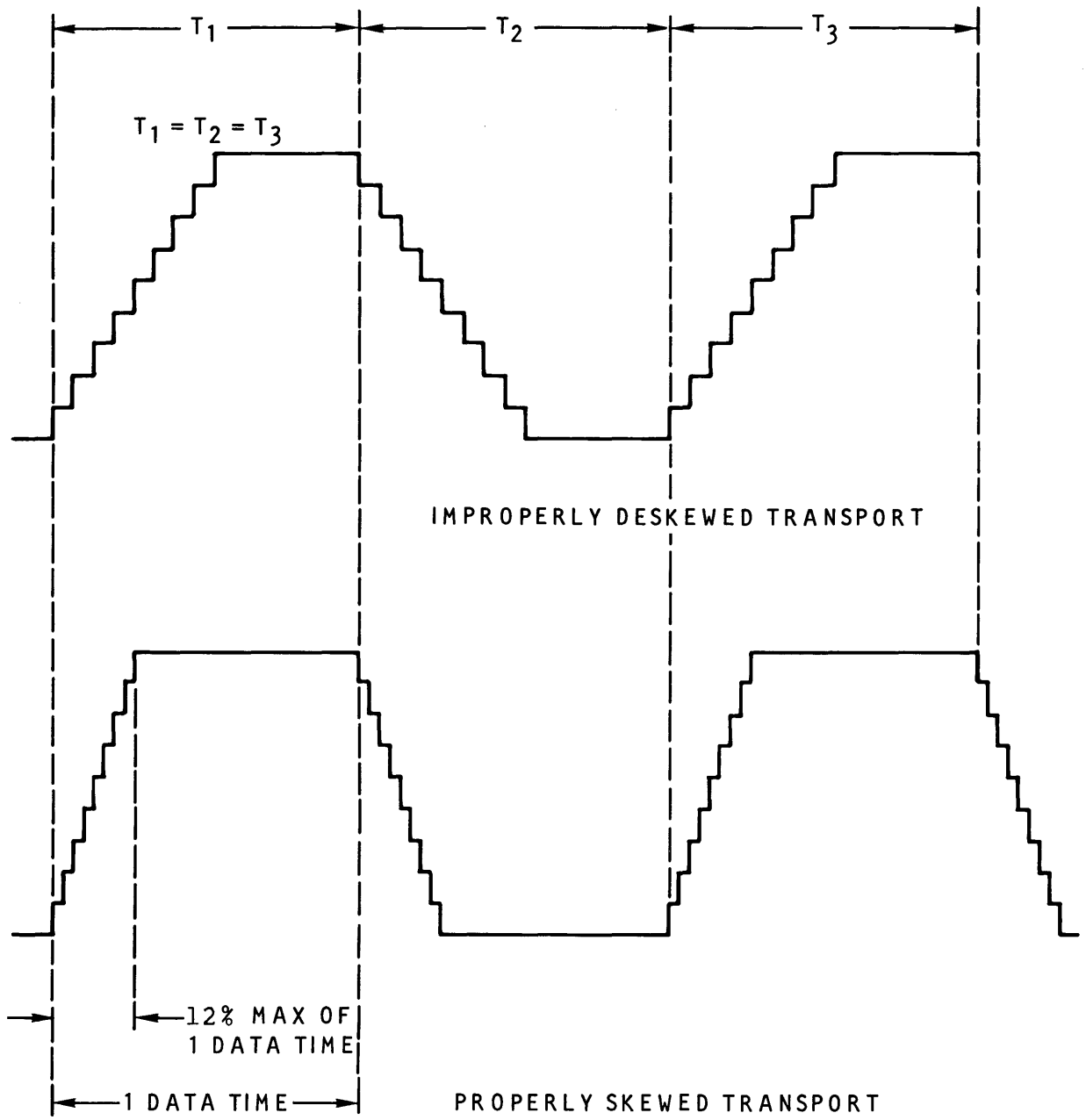

Figure 5.18.3 Skew Adjustment Waveform

5. Verify that tape is touching erase bar. Check for vertical crease in tape at the point of contact.

6. Tighten socket-head screws (3) and reverify that tape is in contact with both blades of tape scraper and the erase bar.

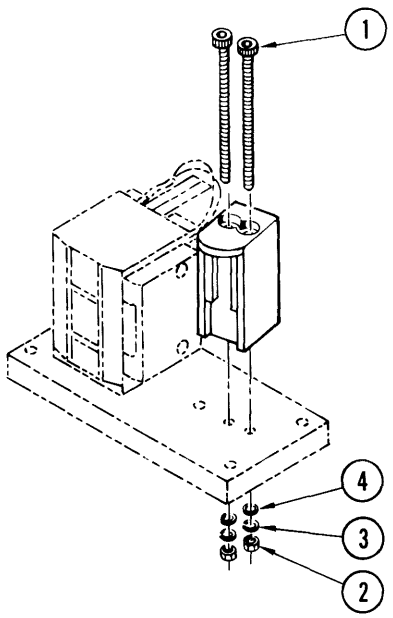

5.20 Take-Up Hub

5.20.1 Removal

1. Switch off ac power.

2. Place the tape unit in the operator access position. (See section 5.1.)

3. Open the top cover.

4. Measure the hub height and record the value.

5. Loosen the two screws (1) on the hub.

   CAUTION: Take care when moving the tachometer toward the take-up hub. Do not let the tachometer strike against the take-up hub.

6. Gently move the tachometer away from the hub and lift the hub from the motor shaft.

7. Gently rest the tachometer on the motor shaft after you remove the hub.

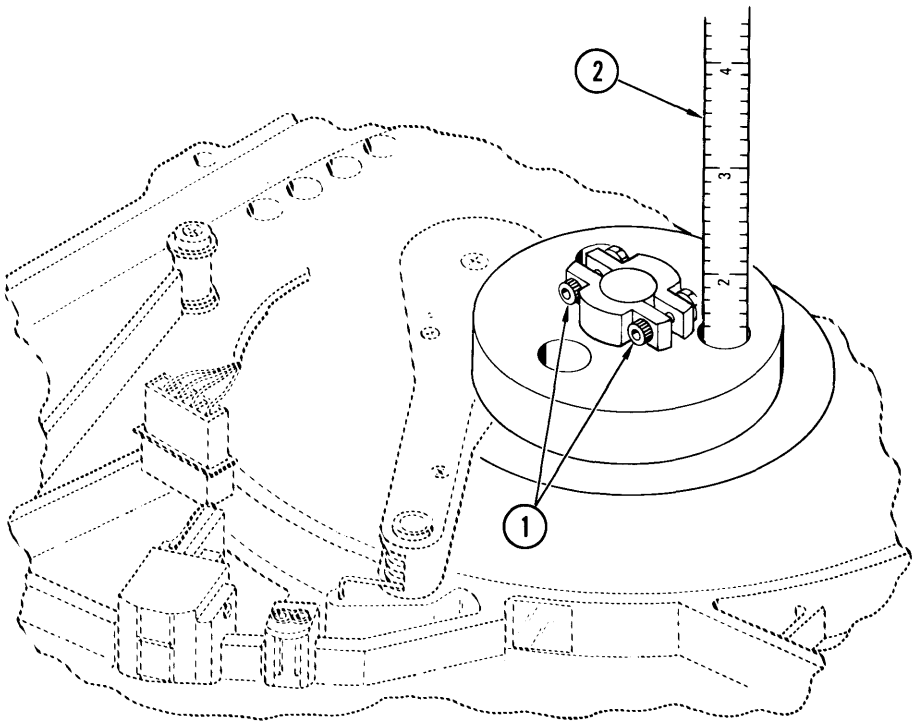

5.20.2 Replacement

CAUTION: Do not force the top cover closed with the hub removed. Damage to the tachometer will occur.

Replace the take-up hub onto the motor shaft and perform the adjustment procedure.

5.20.3 Adjustment

1. With the hub in place, insert the ruler scale (2) into the hole in the top of the hub.

2. Position the hub so that the ruler scale rests on the motor case and not on the mounting screws. If only the take-up hub was removed for repair or replacement, then use the value recorded in the previous removal steps and continue with step 4; if not, then proceed with step 3.

3. Adjust the hub for a clearance of 38 mm (1.5 inches) from the motor case to the top of the hub. Tighten the screws.

4. Check the hub height. If it is correct, load a tape and check to see if the tape is on the center of the hub. If it is not correct, loosen the screws and repeat steps 2 through 4 until it is correct.

5. Restore the unit to an operating position. (See section 5.3.)

5.21 BOT/EOT Sensor

5.21.1 Removal

1. Switch off ac power.

2. Place the tape unit in the operator access position. (See section 5.3.)

3. Remove the two screws (1) and the two lockwashers (2) attaching the sensor to the top plate.

4. Remove the EOT/BOT sensor and unplug the cable from the sensor.

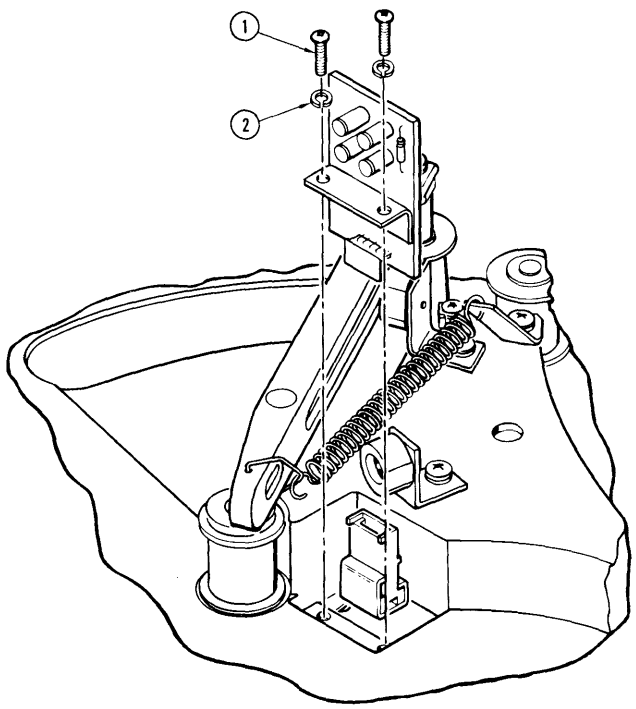

5.21.2 Replacement

1. To replace the sensor, reverse the removal procedure. Make sure that the base of the sensor is parallel to the edge of the base casting.

2. Proceed to the Service Check.

5.21.3 Service Check

1. Switch off ac power.

2. Use diagnostic test 131 to check the operation of the EOT/BOT sensor.

3. Restore the unit to an operating position. (See section 5.3.)

5.22 Tachometer

5.22.1 Removal

1. Switch off ac power.
2. Place the unit in the service position. (See section 5.2.)
3. Disconnect the tachometer signal cable (6).
4. With a retaining ring tool, remove the retaining ring (4) from the shaft. Be careful not to drop the shim(s) (3), retaining ring 4, or wave washer (5).

   CAUTION: Do not let the tachometer strike sharply against the hub.

5. Remove the tachometer (1) and the spring (7) from the top of the tape unit.
6. If the upper and lower bearings (2) are replaced, use Loctite 601 or equivalent to set in place. Be careful when you remove or replace the bearings.

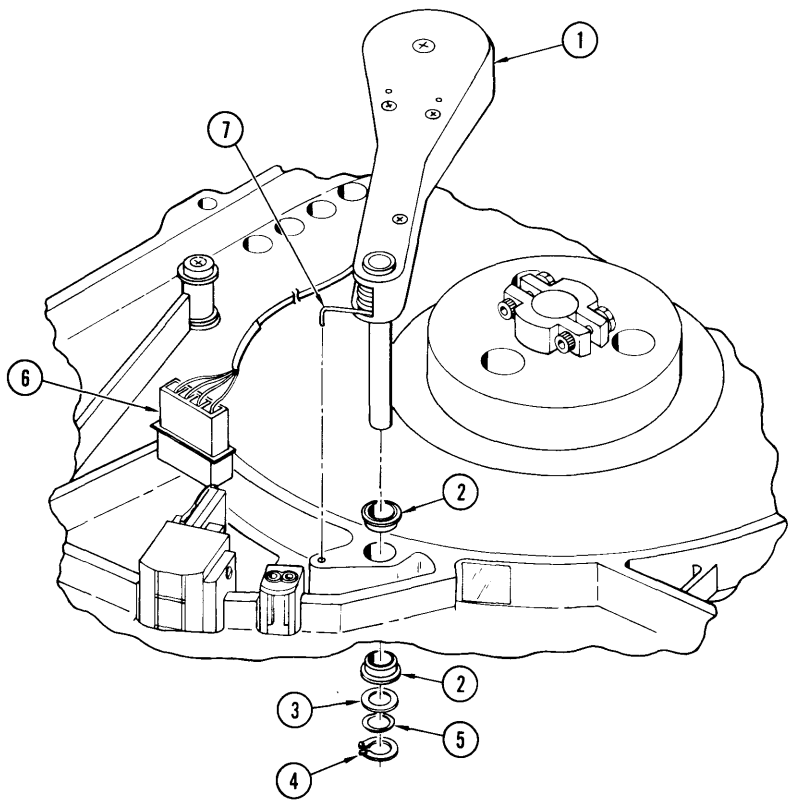

5.22.2 Replacement

1. Carefully insert the tachometer and its spring into the tape base plate.

2. Gently rest the tachometer onto the take-up hub and reverse the removal procedures.

5.22.3 Adjustment

1. After the shim(s), wave washer, and retaining ring are in place, install the retaining ring onto the shaft. The wave washer should be compressed to about half its original height with the retaining clip.

2. Restore the unit to an operating position. (See section 5.3.)

5.23 Tension Arm Bumper

5.23.1 Removal

1. Switch off ac power.

2. Place the tape unit in the operator access position. (See section 5.1.)

3. Open the top cover and remove the screw (1) and lockwasher (2) from the defective bumper.

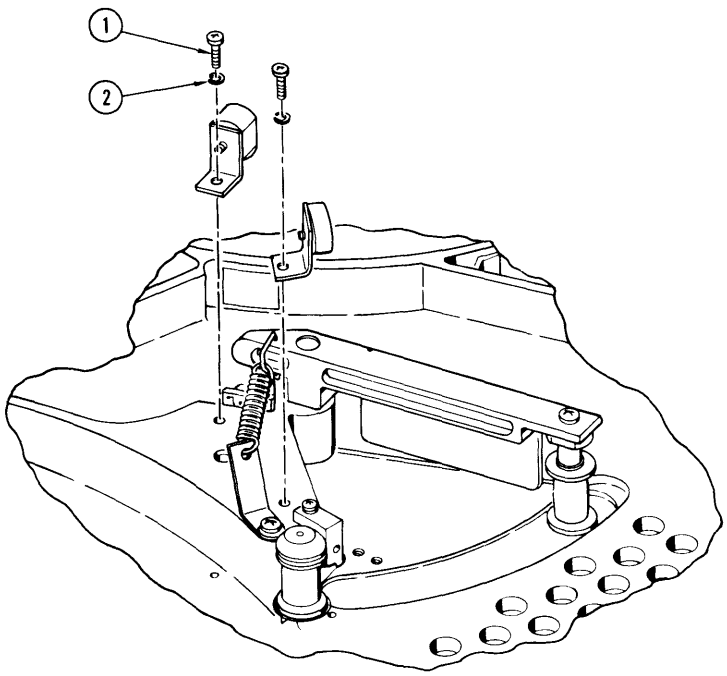

5.23.2 Replacement

1. Replace the bumper onto the unit base.

2. Position the bumpers so that each one contacts the tension arm squarely. Tighten the screws.

3. Place the unit in an operating position. (See section 5.3.)

5.24 Tension Arm/Air Capacitor Assembly

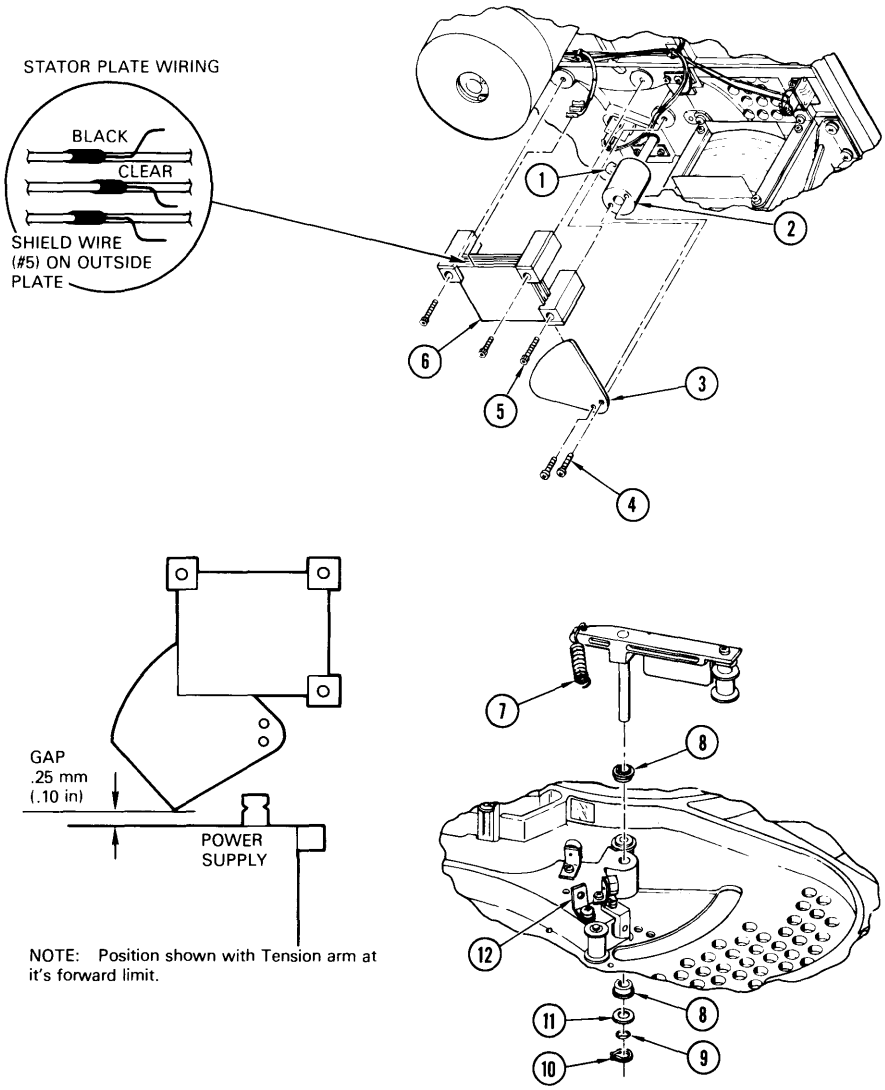

5.24.1 Removal

1. Switch off ac power.

2. Place the unit in the service position. (See section 5.2.)

3. Remove the front panel. (See section 5.5.) Remove the main air duct.

4. Remove the screw that attaches the smaller air duct to the unit. Remove the air duct.

5. Remove the two screws (4), that attach the shutter blade (3) to the hub (2). Remove the shutter blade (3).

6. Record the position of and remove the clip wires on the stator plates. See illustration.

7. Remove the three screws (5). Remove the stator plate (6).

8. Loosen the screw (1), and remove the shutter hub (2) from the tension arm shaft.

9. From the top side of the unit, remove the spring (7) from the bracket (12).

10. From the bottom side of the unit, remove the retaining ring (10), wave washer (9), and shim(s) (11) from the shaft. Be careful not to drop any springs or washers.

11. Remove the tension arm from the unit. If the upper and lower bearings (8) are to be replaced, remove them from the unit and set in place with Loctite 601.

5.24.2 Replacement

Reinstall the tension arm/air capacitor assembly by reversing the removal procedures. When you install the shim(s), washer, and wave washer, check to see if the wave washer is compressed to about half its original height with the retaining ring installed. If it is not, add or remove any shim(s) to compress the wave washer to about half its original height.

Note: Replace shutter blade between the two plates closest to the casting.

5.24.3 Adjustment

1. Loosen the clampscrew (1), and remove the spring (7) on the air capacitor arm. Secure the tension arm to the front bumper.

2. Rotate the shutter blade (3) to within 2.5 mm (.10 inch) from the power supply enclosure.

3. Check the clearance on the shutter blade. Make sure that it does not rub on the stator plates. Tighten the screw (1).

4. Swing the tension arm to both limits of travel and check for free operation. If it binds, repeat the adjustment until the arm swings free to both limits of travel.

5. Replace the clip wires on the stator plates, the air ducts and the front cover.

6. Replace the spring (7) onto the arm. Load a tape to check for proper operation and restore the unit to an operating position. (See section 5.3.)

5.24.4 Service Check

Activate test 124 to display the compliance arm voltage on the alphanumeric display. Check the voltage with the arm in the rest position, the voltage displayed should be less the +14.2 volts. Move the arm forward until it contacts front bumper, the voltage should be greater than -14.2 volts. If the voltages are not correct, perform the adjustment procedure (5.24.3).

5.25 Tape-In-Path Transmitter

5.25.1 Removal

1. Switch off ac power.
2. Place the unit in the service position. (See section 5.2.)
3. Remove the wire connector (3) from the tape-in-path transmitter.
4. Remove the two screws (2) and the two lockwashers (1) from the tape-in-path LED.

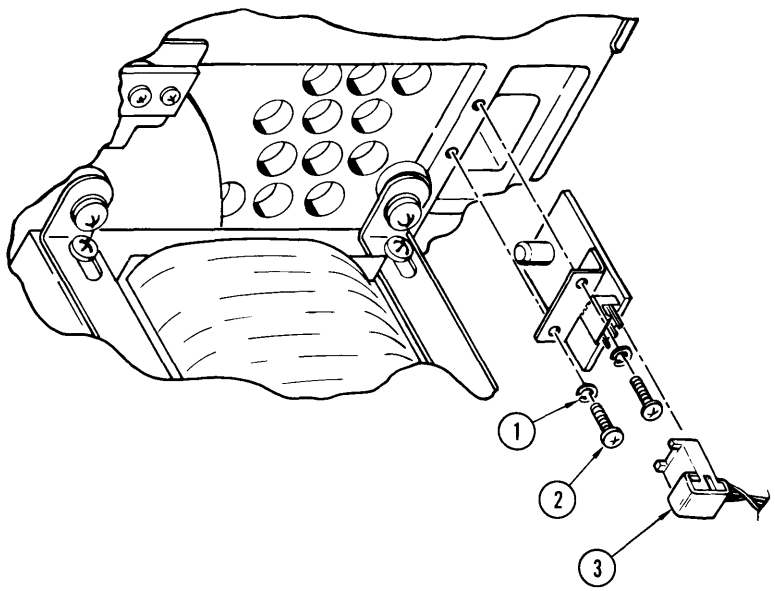

5.25.2 Replacement

For replacement, reverse the above removal procedures.

5.26 Tape-In-Path Sensor

5.26.1 Removal

1. Switch off ac power.
2. Place the unit in the operator access position. (See section 5.1.)

3. Open the top cover and remove one screw (1), one lockwasher (2), and one washer (3) from the sensor.

4. Note the position of and remove the wire cable connected to the sensor.

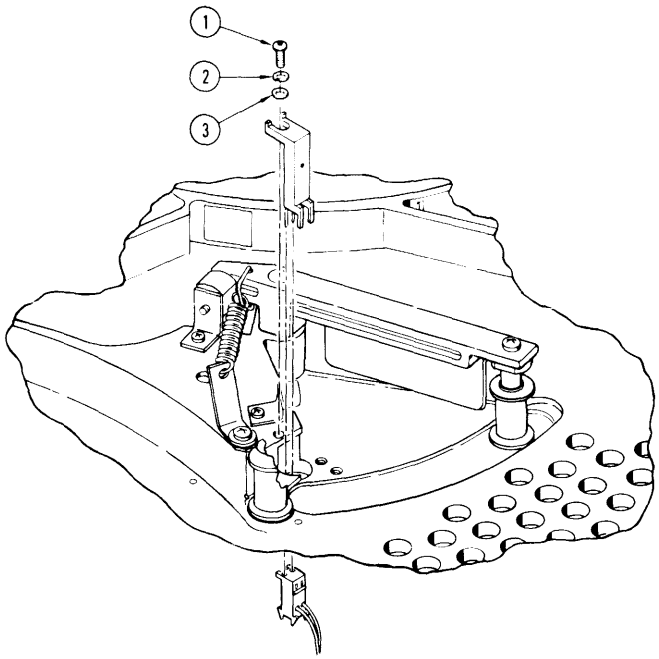

5.26.2 Replacement

1. Reverse the following procedures for the tape-in-path sensor.

2. Proceed to the adjustment procedure.

5.26.3 Adjustment

1. Place the unit in the service position. (See section 5.2.)

2. Switch on ac power.

3. Connect a volt meter to connector J9 on the Sense/Servo PWB. For PWB Sets A and B, connect the leads to pins 13 (signal) and 17 (ground). For PWB Set C, connect the leads to pins 15 (signal) and 1 (ground). You should get the following results:

CONDITION	RESULT
With tape loaded	< 0.1 Vdc
Without tape loaded	> 0.4 Vdc

4. Without any tape in front of the sensor, loosen the screw and adjust the sensor for maximum voltage. Tighten the screw.

5. Place the unit in an operating position. (See section 5.3.)

5.27 **Tape Guides**

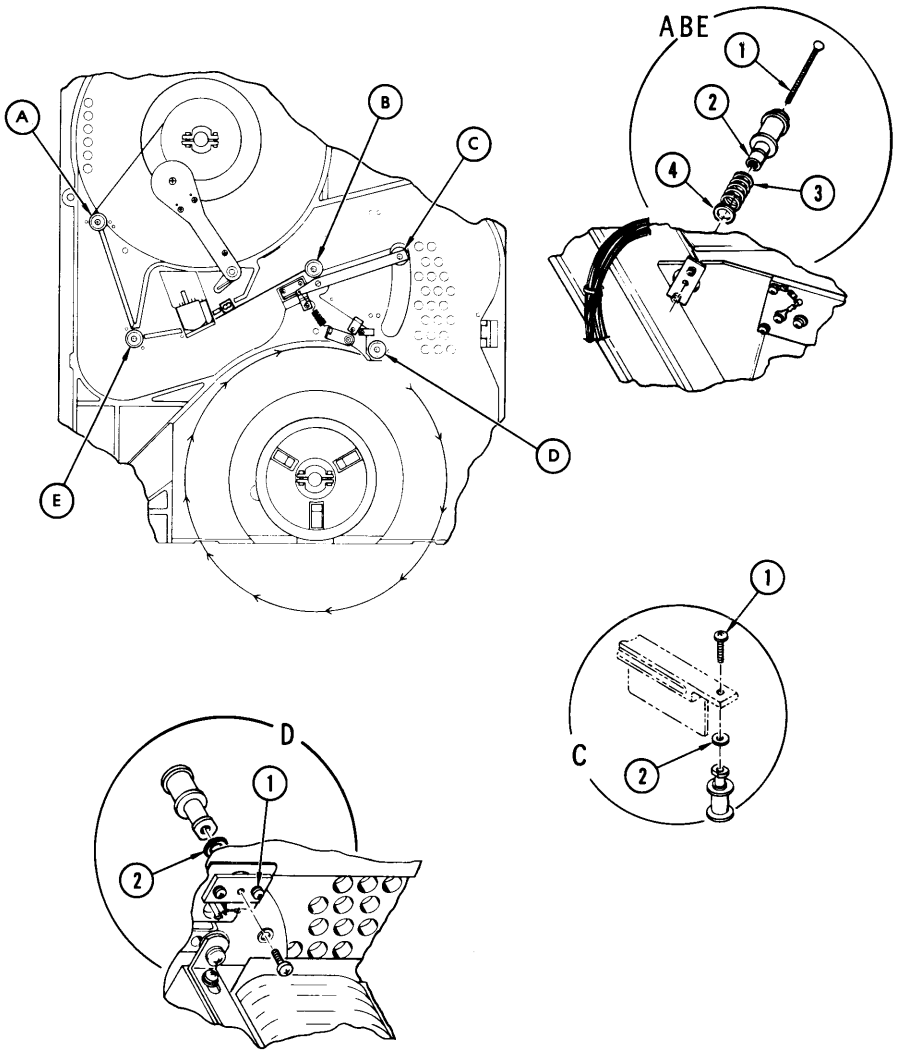

5.27.1 **Removal**

1. Switch off ac power.
2. Place the unit in the service position. (See section 5.2.)
3. Locate the guide to be removed and follow the procedures.

Tape Guide A,B & E

1. Remove attaching screw (1), leaving shims (4) and spring (3) in place.
2. Remove roller guide assembly through top of top plate.

Tape Guide C

1. Remove attaching screw (1) while holding on to tape guide.
2. Carefully remove tape guide and washer (2) from beneath tension arm.

Tape Guide D

1. Remove attaching screw (1) and lockwasher.
2. Leave shims in place.
3. Remove tape guide assembly from top of top plate.

5.27.2 **Replacement**

1. Replace the tape guide with the original shim(s) by reversing the removal procedure steps.
2. Perform the Tape Tracking Procedure. (See section 5.38.)

5.28 Manual Hub Release Assembly

5.28.1 **Removal**

1. Switch off ac power.
2. Disconnect the ac line cord.
3. Place the unit in the service position. (See section 5.2.)
4. Remove the front panel. (See section 5.5.)
5. Remove the two screws (1) and two lockwashers (2) from the assembly.

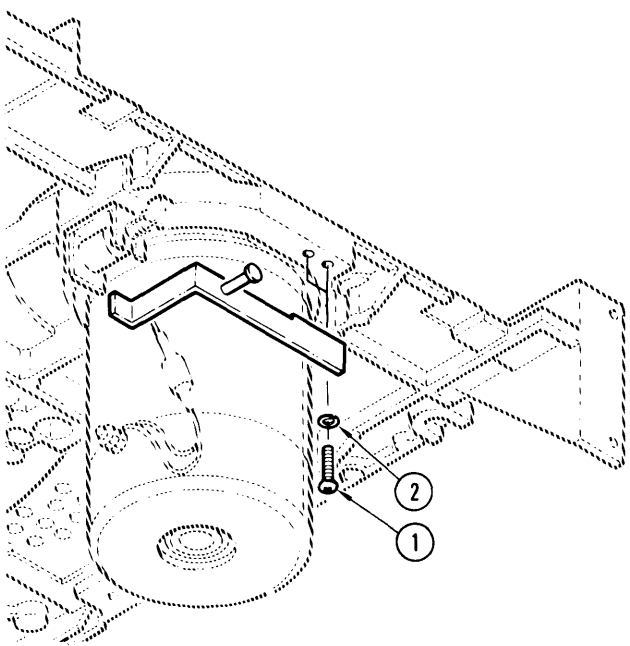

5.28.2 **Replacement**

Reverse the removal procedure for the hub release assembly.

5.29 Supply Reel Tab Sensor

5.29.1 Removal

1. Switch off ac power.
2. Place the unit in the service position. (See section 5.2.)
3. Remove the cable (1) from the sensor.
4. Remove the two screws (2) and two lockwashers (3) from the tab sensor. Carefully remove the tab sensor from the unit.

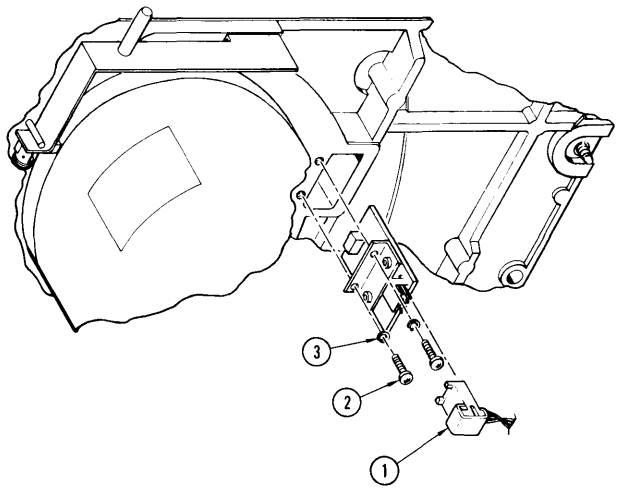

5.29.2 Replacement

1. Reverse the above removal procedures for replacement.
2. Proceed to the service check.

5.29.3 Service Check

1. Connect a volt meter to connector J9 on the Sense/Servo PWB. For PWB Sets A and B, connect the leads to pins 14 (signal) and 17 (ground). For PWB Set C, connect the leads to pins 14 (signal) and 1 (ground). You should get the following results:

CONDITIONS	RESULTS
Reflector	> 0.5 Vdc
No reflector	< 0.1 Vdc

2. Activate test 131 with no tape on the supply hub. (See section 4.1.3 for diagnostic test).

5.30 Take-Up Motor

5.30.1 Removal

1. Switch off ac power.
2. Remove the ac power cord.
3. Place the tape unit in the service position.
4. Remove the tape unit boards. (See sections 5.34 through 5.37.)
5. Remove the take-up hub. (See section 5.20.) Loosen, but do not remove, all of the screws (1) from the motor.
6. Remove the power supply cover. Label and disconnect the take-up motor wires.
7. Using one hand as a support, remove the four screws and washers; with the other hand, remove the motor. Save the motor insulator and screws for replacement.

   CAUTION: Do not force the cover with the take-up hub removed.

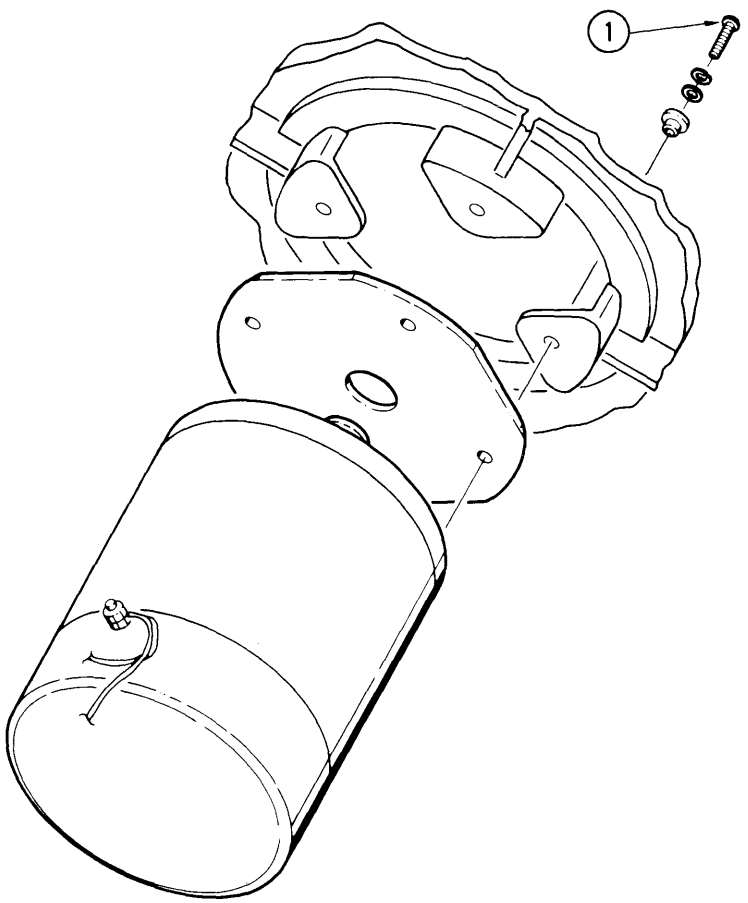

5.30.2 Replacement

1. Reverse the removal procedure for replacement with the motor insulator removed earlier.

2. Perform the take-up hub adjustment procedure. (See section 5.20.3.)

3. Perform Servo Offset adjustment procedure. (See section 5.34.4.)

5.31 Supply Motor

5.31.1 Removal

1. Switch off ac power.

2. Place the unit in the service position. (See section 5.2.)

3. Loosen the two screws on the supply hub and lift the hub off of the shaft. (See section 5.17.)

4. Remove the clip (3) on the hub lock pawl shaft.

5. Disconnect the supply motor wire cable.

   CAUTION: Do not drop the motor onto tape control board.

6. Loosen, but do not remove, the four screws (1) from the motor. With one hand as a support, remove the four screws and washers with the other hand. Lower the supply motor while simultaneously slipping the pawl off its shaft.

7. Save the motor insulator and screws for replacement. If the replacement motor does not have the hub lock pawl shaft 2, remove it from the old motor and place it on the new motor.

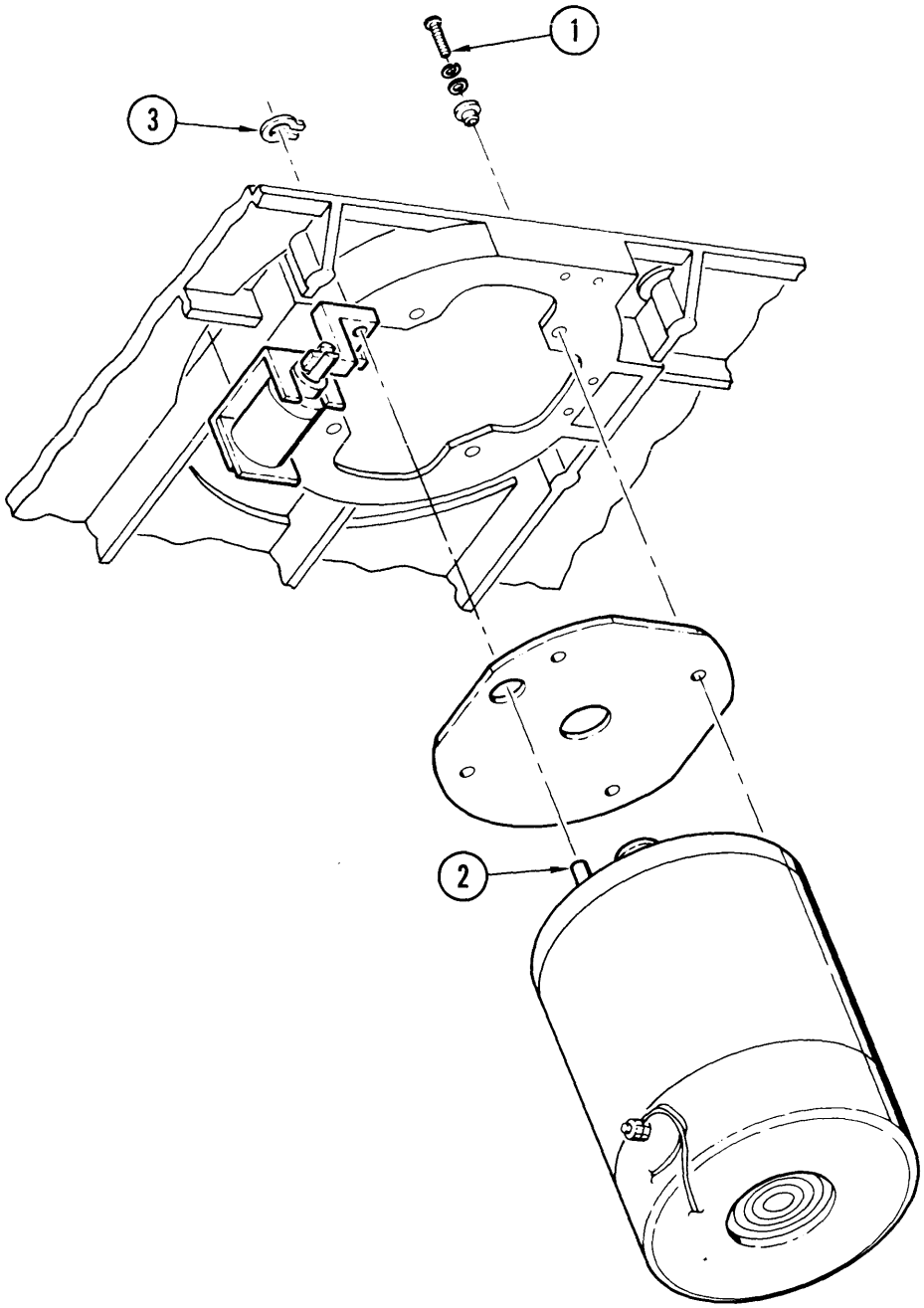

5.31.2 **Replacement**

1. Install the motor and the insulator with the screws removed earlier.

2. Tighten the screws until snug. Place the supply hub on the shaft and check to see if the motor is centered. Adjust the motor as necessary to center it.

3. Remove the hub and tighten the screws (1). Perform the supply hub adjustment. (See section 5.17.3.)

4. Perform Servo Offset adjustment procedure. (See section 5.34.4.)

5.32 Hub Lock Solenoid

5.32.1 Removal

1. Switch off ac power.
2. Place the unit in the service position. (See section 5.2.)
3. Locate and disconnect the solenoid wires. Note the position of the wires for replacement.
4. Remove the two screws (2) and the two lockwashers (1) from the top of the tape unit.
5. Remove the solenoid (3) and the plunger spring (4).

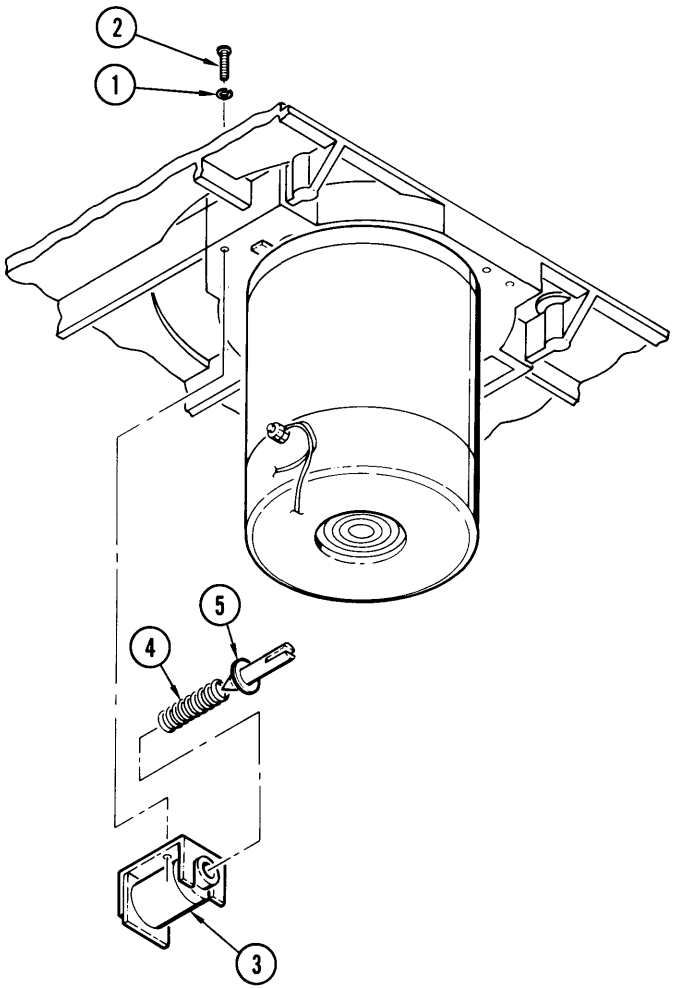

5.32.2 Replacement

Reverse the removal steps for the hub lock solenoid.

Note: Make sure that the pawl pivots freely. If not, loosen screws (2) and adjust the solenoid so that the pawl pivots freely.

5.33 Hub Lock Pawl

5.33.1 Removal

1. Switch off ac power.
2. Place the unit in the service position. (See section 5.2.)
3. Remove the supply hub. (See section 5.17.)
4. Remove the clip 1 from the pawl shaft.
5. Remove the hub lock solenoid. (See section 5.32.)
6. Lift the pawl assy. (2) up and out of the tape unit housing.

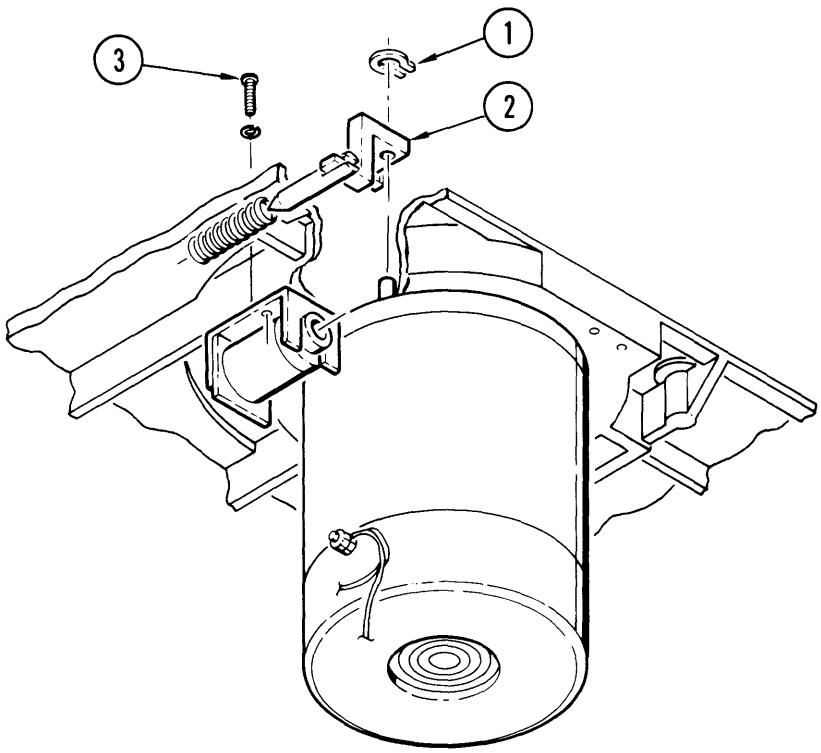

5.33.2 Replacement

1. Reverse the removal procedures for the hub lock pawl.

   Note: Make sure the pawl pivots freely. If not, loosen the two screws (3) and adjust the solenoid so that the pawl pivots freely.

2. Perform the supply hub adjustment. (See section 5.17.3.)

5.34 Sensor/Servo Board

5.34.1 Removal

1. Switch off ac power.
2. Place the unit in the service position. (See section 5.2.)
3. Remove all cables from the sensor/servo board.
4. Grasp the PWB ejection levers at the front corner of the board and pull outward to release the board from the edge connections at the rear of the PWB rack.
5. Remove the sensor/servo board from the PWB rack.

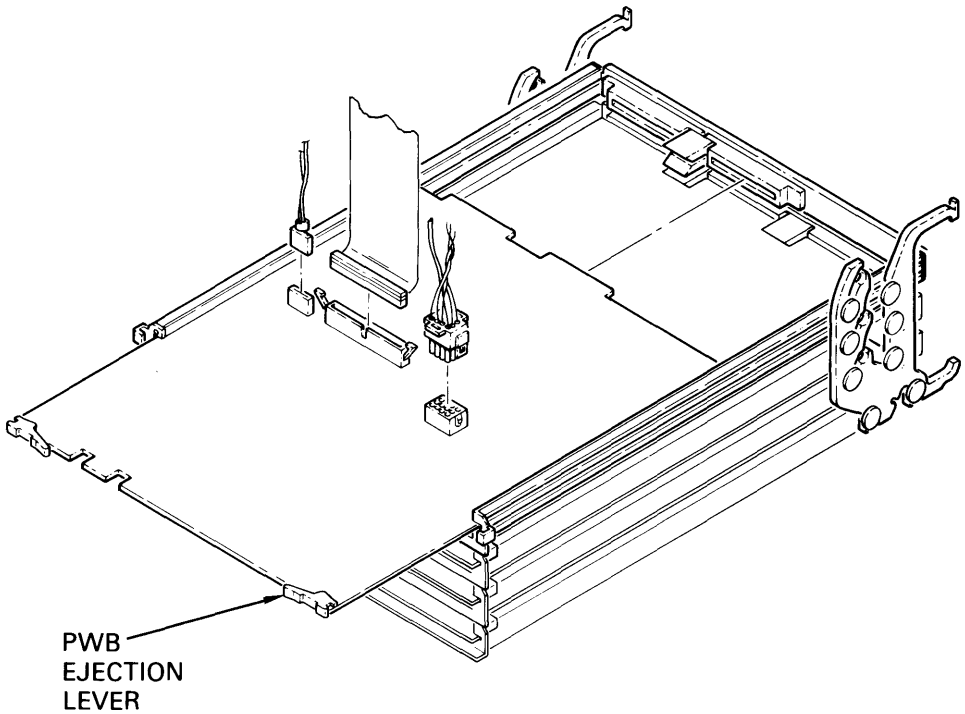

5.34.2 Replacement

Reverse the removal procedure of the sensor/servo board.

Note: Make sure that all connectors are properly replaced before turning on ac power.

5.34.3 +5Vdc Adjustment (961334-003 board only)

1. Switch on ac power.
2. Remove tape and place the unit in the service position. (See section 5.2.)
3. Connect a DVM to test point 42 (+5Vdc reference) and test point 44 (ground). Adjust R85 on the sensor/servo board for +5.1Vdc.

5.34.4 Servo Offset Adjustment

1. Switch ac power on.
2. Remove tape from unit if installed.

   CAUTION: Use a battery operated or ac ground isolated DVM when checking the servo offset voltage. Damage to the servo circuits will result if a DVM with common ac ground is used.

3. On the Sensor/Servo Board, connect the DVM leads to J-1 pins 7 and 10 for PWB Set A, the right-hand side of C194 and C197 for PWB Set B, or TP-37 and TP-38 for PWB Set C to check the supply motor offset voltage. The voltage should be 0.0 ± 0.035 volts. Use 2-volt scale.

4. Connect the DVM leads to J-1 pin 8 and pin 11 for PWB Set A, the right-hand side of C195 and C196 for PWB Set B, or TP-35 and TP-36 for PWB Set C to check the take-up motor offset voltage. The voltage should be 0.0 ± 0.035V.

5. If adjustment of either voltage is required, proceed as follows:

   CAUTION: Follow these instructions to the letter. Failure to do so could result in your GCR being inoperable.

   Note: Do not enter test 515 to check offset values without completing the entire adjustment procedure since all previously stored values are cleared upon entry.

   a. Enter diagnostic test code 455155 using the front panel switch/indicators.

   b. Enter password 54524 using the front panel switch/indicators.

   c. The O supply message will be momentarily displayed, then the SDAC +000 (supply motor DAC offset value) message will appear.

   d. Connect the DVM leads to J-1 pin 7 and pin 10 for PWB Set A, the right-hand side of C194 and C197 for PWB Set B, or TP-37 and TP-38 for PWB Set C.

   e. Press the Load switch to increase, or the Unload switch to decrease the voltage until it is as close to zero as possible. The voltage must be within the ±0.035V range.

   f. Press the Write Enable/Test switch to enable take up servo offset adjustment. The messages DONE ... 0 TAKE UP ... TDAC +000 should be displayed.

g. Connect the DVM leads to J-1 pin 8 and pin 11 for PWB Set A, the right-hand side of C195 and C196 for PWB Set B, or TP-35 and TP-36 for PWB Set C.

h. Repeat step e.

i. Press the Write Enable/Test switch again to return the unit to normal operating status and return unit to field mode by performing Test 542.

j. Switch ac power off to store the new offset values in NOVRAM. The new adjustment can be checked by repeating steps 3 and 4 of this procedure.

5.35 CPU/MMU Board

5.35.1 REMOVAL

1. Switch off ac power.
2. Place the unit in the service position.
3. Lift sensor/servo PWB and frame assembly and push toward rear of chassis to lock in the raised position.
4. Grasp the PWB ejection levers at the front corners of the CPU/MMU board and pull outward to release the board from the edge connectors at the rear of the PWB rack.
5. Remove the CPU/MMU board from the PWB rack.

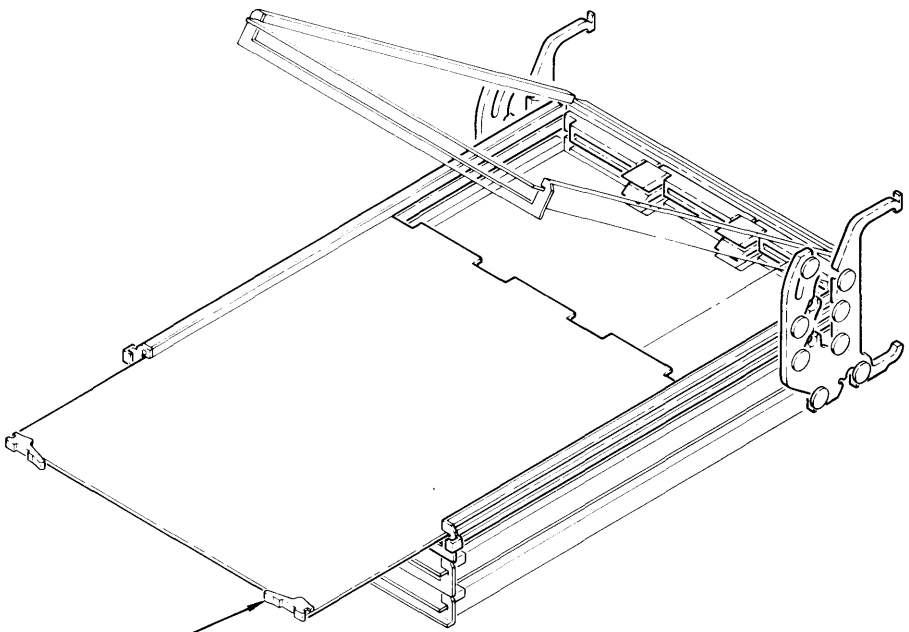

CAUTION: Caution should be used when removing the NOVRAM because it is a static sensitive device. Use proper handling procedures.

Note: By removing the NOVRAM chip (U25J) and reinstalling it into the new CPU/MMU board, the Servo Offset adjustment and NOVRAM settings do not need to be performed.

5.35.2 Replacement

1. Reverse the removal procedure for the CPU/MMU board.

2. Perform Servo Offset adjustment procedure (see section 5.34.4.), unless you keep NOVRAM from removed CPU PWB.

5.36 Data Board

5.36.1 Removal

1. Switch off ac power.
2. Place unit in the service position. (See section 5.2.)
3. Lift the sensor/servo PWB and frame assembly and push toward rear of chassis to lock in the raised position.
4. Repeat the previous step with the CPU/MMU board.
5. Remove the read head assembly cable from J2 on the data board.
6. Grasp the PWB ejection levers at the front corners of the data board and pull outward to release the board from the edge connectors at the rear of the PWB rack.
7. Remove the data board from the PWB rack.

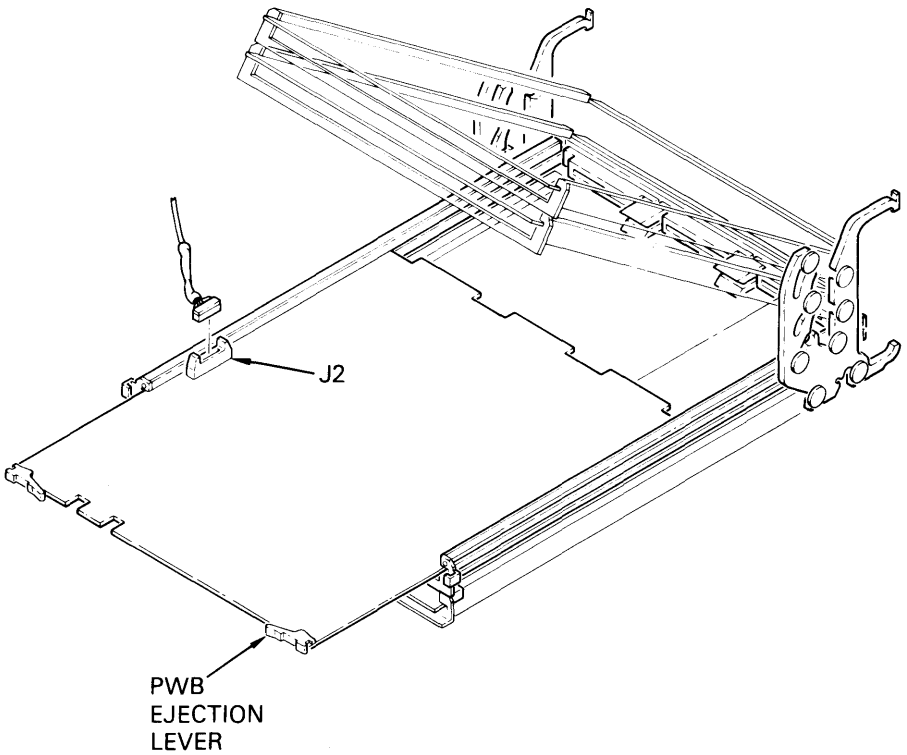

5.36.2 Replacement

Reverse the removal procedure for the data board.

1. Run Test 513 (see section 4.4.17.)

5.37 CIF Write

5.37.1 Removal

1. Switch off ac power.
2. Place unit in the service position. (See section 5.2.)
3. Lift the sensor/servo PWB and frame assembly and push toward rear of chassis to lock in the raised position.
4. Repeat the previous step with the CPU/MMU and data boards.
5. Remove the connectors from J3, J4, and J5 at the rear of the CIF/write board.
6. Remove the chassis ground straps from the back of the CIF/write board.
7. Remove the write head cable from the CIF/write board.
8. Unscrew the standoff retainer at the center front edge of the board and slide the CIF/write board out of the PWB rack.

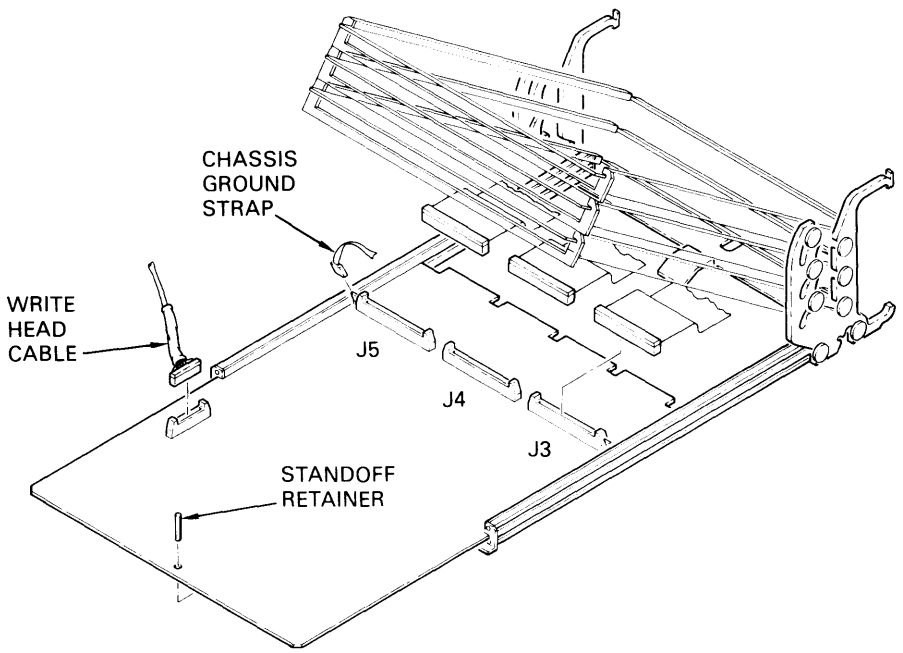

5.37.2 Replacement

Reverse the removal procedure for the CIF/write board.

1. Run Test 513 (see section 4.4.17.)

5.38 Tape Tracking Procedure

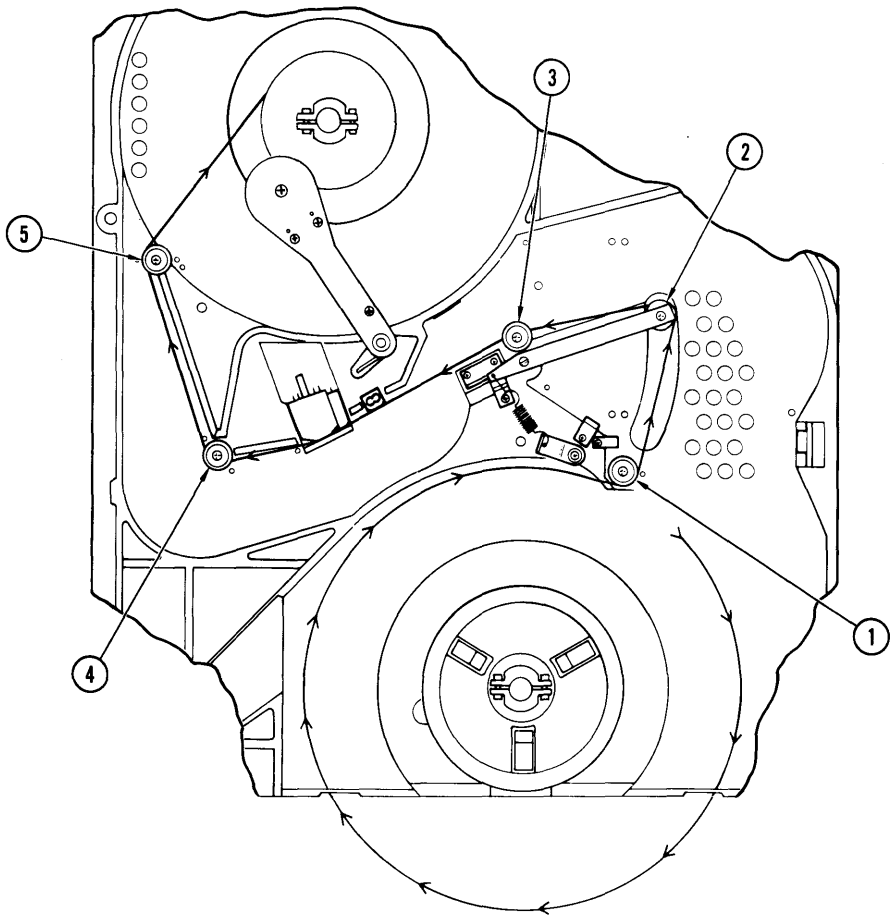

1. Switch on ac power.

2. Insert and load a new tape. Ensure that the supply reel is properly seated on the supply hub.

   Note: A used tape may have damaged or weak edges which could adversely affect its tape-path tracking characteristics.

3. Activate test 233 to disable door and top cover lock. (See section 4.4)

4. Open the top cover and front panel door.

5. Press the Density Select switch to select the 1600 bpi mode.

6. Activate test 212 to write data in the forward direction. (See section 4.1.4.)

7. Observe the tape as it unwinds from the supply tape reel. If necessary, adjust the supply hub height (5.17.3) to eliminate any interference between the tape and supply reel flanges.

8. If tape is not centered on guide, turn power switch to OFF, and remove guide (2) from compliance arm. (See section 5.27.1.)

9. Add or reduce thickness of shims as required to compensate for off-center position and reinstall guide on compliance arm. Repeat as necessary to obtain correct centering of tape on guide (2).

10. Run tape forward and check for edge curl on guide (3). If curl is present on lower washer, turn power switch to OFF and increase shims under roller guide (1). If curl is present on upper washer of guides (3), decrease shim thickness under roller guide (1). Resume forward tape motion and recheck tape position. Repeat this step until tape tracks smoothly around guide (3).

11. Depress lower washer on guide (3) and check for optimum movement of tape away from top washer of 0.005 inch. If necessary, reshim guide (2) to maintain proper tape centering.

12. Run tape in forward direction and check for edge curl on guide (4). If curl is present, turn transport power to OFF and add or remove shims on guide (5). Normally, improper alignment of guides (1) and (2) will show up as tracking problem on guide (3).

    Note: Curl on guide (4) can be caused by improper alignment on any other guide in the tape path. If tracking has been verified on guide (3), tape curl on guide (4) is probably caused by misalignment of guides (1) and (2) will show up as tracking problems on guide (3).

13. Run tape in reverse direction (test 212) and check for tape curl on all edges.

14. Depress lower washer on guides (3), (4), and (5) and check for optimum tape movement, away from top washer, of 0.005 inch.

15. Add or delete shims on guides (1), (2) and (5) as required to eliminate edge curl on all rollers and reverify forward tape path alignment by checking for maximum tape shift on guide (2) of ±0.015 inch.

16. Check head azimuth and read skew. (See section 5.18.3.)

    Select switch to select the 1600 bpi mode.

17. Activate test 212 to write data in the forward direction. (See section 4.1.4.)

18. Observe the tape as it unwinds from the supply tape reel. If necessary, adjust the supply hub height (5.17.3) to eliminate any interference between the tape and supply reel flanges.

Chapter 6. Operation

6.1 Operator Display Panel

The operator display panel contains an eight-character alphanumeric display (A) that provides information to the operator during normal operation and diagnostic testing. Error messages (B) give more specific information about problems. Indicators (C) alert the operator to any problems in the loading or unloading operation.

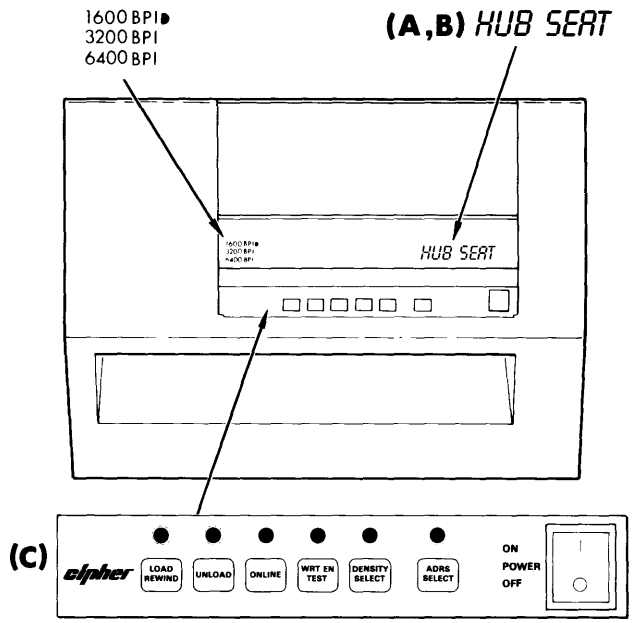

6.1.1 Switches/Indicators

Load-Rewind Switch/Indicator

Press the Load/Rewind switch to load or rewind the tape. The indicator flashes as the tape loads and remains lit when loading is complete.

Unload Switch/Indicator

Press the Unload switch to remove tape from the tape path. The indicator flashes as the tape rewinds and remains lit when the tape path is clear.

On-line Switch/Indicator

Press the On-line switch to place the tape drive under host system control. The On-line indicator then lights. Press the On-line switch a second time to remove the tape drive from system control. The On-

line indicator then shuts off. While on-line, the tape drive does not respond to other front panel switches.

Write Enable-Test Switch/Indicator

When this indicator is lit, a write-enable ring is installed on the tape reel and information can be written to or erased from the tape.

If the unit is in the off-line mode and the Test switch is pressed, the indicator flashes to signal the operator that the unit is in the diagnostic mode. Refer to section 4.1 for a description of the available tests. When the Test switch is pressed again, the unit exits the diagnostic mode.

Address Select Switch

Press the Address Select switch to determine the tape drive address for each M990 when more than one is connected to the same system. To change the address, continue to press the Address Select switch and press the On-line switch to reset the address to 0. Press the On-line switch again to increment the address until the desired number is reached. The address selected is displayed on the alphanumeric display as UNIT X, where X is 0 through 7. Each tape drive connected to the same system must have a unique address.

Density Select Switch/Indicator

Press the Density Select switch to select the operating density. The available densities are PE 1600 bpi, PE 3200 bpi, and GCR 6250 bpi. The selected density is indicated by the density LEDs. This switch can only be used when the tape is at load point.

Density LED Lights

1600 bpi
3200 bpi
6250 bpi

Found Density

This denotes the density that is currently recorded on the tape. Upon completion of the load sequence, the alpha display will reflect the found density with the message "ID XXXX." "NO ID" will be displayed if a blank tape or invalid format is detected. This found density message continuously displays until execution of an interface command or a front panel diagnostic. The message can be restored by cycling the On-Line Switch to the on-line state when the tape unit is idle.

Commanded Density

This denotes the density that has been selected for recording. The density LED lights on the left side of the display panel denote the last commanded density (1600 bpi, 3200 bpi, or 6250 bpi). Density is commanded by one of four means.

1. Power-up default: Selected by the internal processor when power is applied to the tape drive. The desired power-up density is stored as NOVRAM option 10.

2. Front Panel: Selected by the operator using the density select switch when the drive is unloaded or with tape loaded, offline, and positioned at the beginning of tape.

3. Interface: Selected remotely by the host system using the five command lines (IREV, IWRT, IWFM, IEDIT, IERASE). This method is system dependent and also requires NOVRAM option 19 enabled.

4. Internal: The tape drive internally commands the recording density under one condition. A read operation from beginning of tape, followed immediately by a write operation, switches to commanded density (if necessary) to match the density that was read. If a rewind precedes the first write operation, the commanded density is not switched. This feature ensures that an operator or system error does not create a mixed density tape.

Operating Density

This denotes the density that is read from or written to the tape. During a read operation from beginning of tape, if the commanded density does not agree with the found density, the density LED lights will automatically switch to reflect the found density. Using this approach, the LED lights always indicate the current operating density of the tape drive when active. This allows the operator to identify procedural problems that could result in tape generation in an unspecified density.

6.1.2 **Alphanumeric Display Panel**

When the drive fails to operate properly, the indicators on the front panel flash patterns to alert the operator of an error condition. Error messages are also displayed by the alphanumeric display and describe the condition that must be corrected to allow normal operation. To reset the error,

press the Load/Rewind or Unload switch. Press the Load/Rewind switch again to restart the load sequence.

6.1.3 Error Conditions

Three types of error conditions can be displayed.

1. Soft errors
2. Medium errors
3. Hard errors

Soft errors are usually caused by operator error or a slightly damaged tape that prevents completion of the autoload sequence.

Medium and hard error messages are described in Section 6.4. The following alphanumeric display messages indicate soft error conditions that can usually be corrected by the operator.

HUB SEAT

If this message is displayed, check that the tape reel is positioned properly on the supply hub. After correcting the reel alignment, press the Load/Rewind or Unload switches to reset the error.

LOAD FAILURE

If this message is displayed, the unit failed to load tape. Inspect the tape leader for damage. Refer to section 6.2.1.

Once the tape leader has been paired, press the Load/Rewind or Unload switches to reset the error. If the unit still does not load tape properly, refer to section 6.2.4.

TAPE STUCK

If this message is displayed, the unit failed to unwind tape from the supply reel into the tape path. Check the tape leader to make sure that it is properly crimped. Refer to section 6.2.1. Press the Load/Rewind, Unload, or Test switches to reset the error.

NO DOOR LOCK

If this message is displayed, you tried to load the tape reel while leaving the tape access door or the top cover open. After closing the tape access door and top cover, press the Load/Rewind or Unload switches to reset the error.

REEL UPSIDE DOWN

If this message is displayed, the tape reel was inserted upside down. Insert the tape with the write-enable ring down. Press the Load/Rewind or Unload switches to reset the error.

NO BOT

If this message is displayed, the unit could not locate the load-point marker within the first 35 feet of tape. Make sure that the marker is at least 16 feet from the leading end of the tape. Press the Load/Rewind or Unload switches to reset the error.

NOT ENOUGH TAPE ON TAKE-UP

If this message is displayed, the unit does not have any tape in path while attempting to do a manual load.

6.2 Operation

6.2.1 Preparing Magnetic Tape

Prepare the leading end of the magnetic tape using the tape leader tool (Part No. 209990-500) shown below. This tool shapes the tape so that the drive can load tape automatically.

Place the tape in the slot and squeeze the tool as shown.

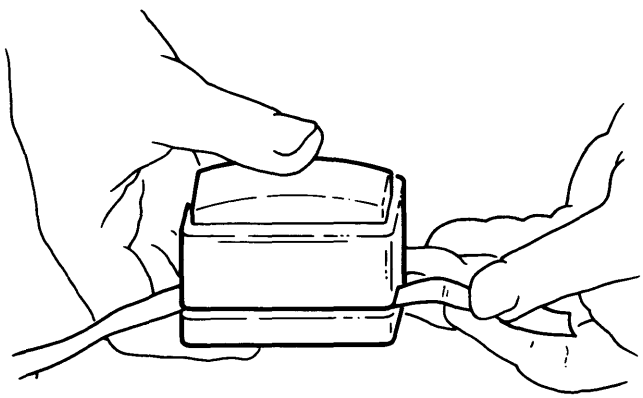

6.2.2 Loading Tape

1. If the power is off, switch it on.

2. Open the tape access door by gently pressing down on the top (center) of the door.

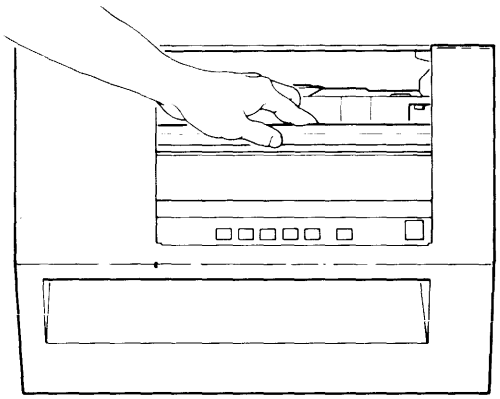

3. If you intend to write data on the tape, place a write-enable ring in the slot on the back of the tape reel.

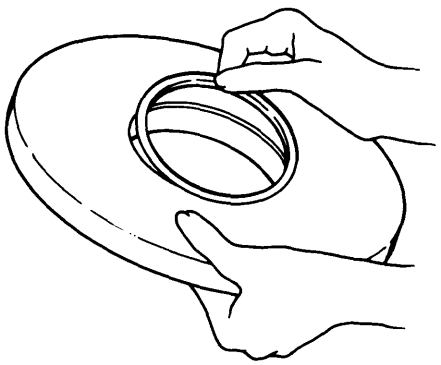

4. Make sure that the tape is wound completely onto the reel.

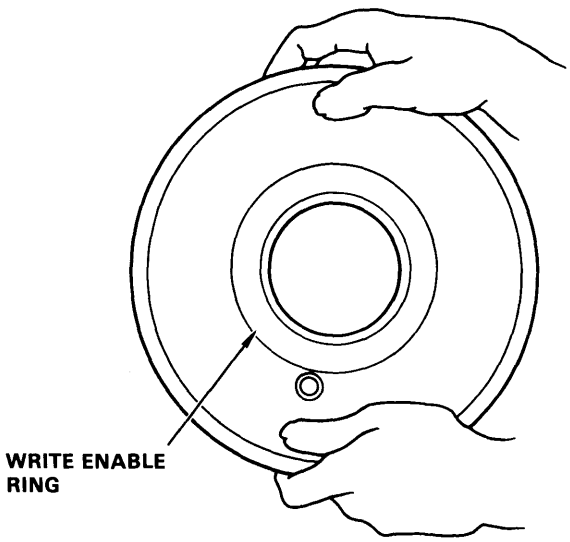

5. Hold the tape reel so that the write-enable ring is down.

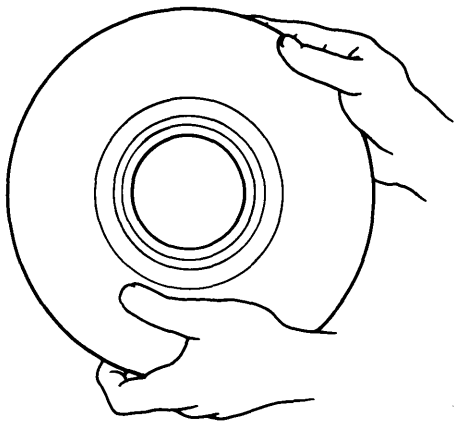

6. Insert the tape reel so that it lies flat inside the front opening. The reel should lie evenly on the hub.

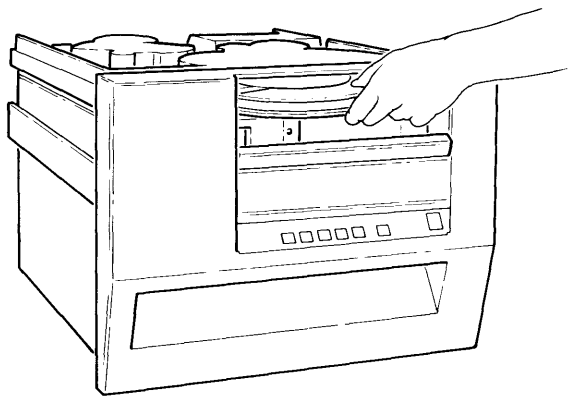

7. Close the tape access door. The drive does not load the tape if this door is open.

8. Press the Load/Rewind switch. The load indicator flashes while the tape loads and remains lit when loading is complete. During the auto-load sequence, the alphanumeric display will present the word LOADING. When the sequence is complete, the Density is displayed for 15 seconds.

   CAUTION: The top cover and front panel door are locked while the tape is loading and during operation.

6.2.3 **Unloading Tape**

1. Make sure that the tape access door and the top cover are closed.

2. Press the Unload switch.

CAUTION: The top cover and tape access door are locked while the tape is unloading.

3. Open the tape access door when the Unload indicator remains lit continuously.

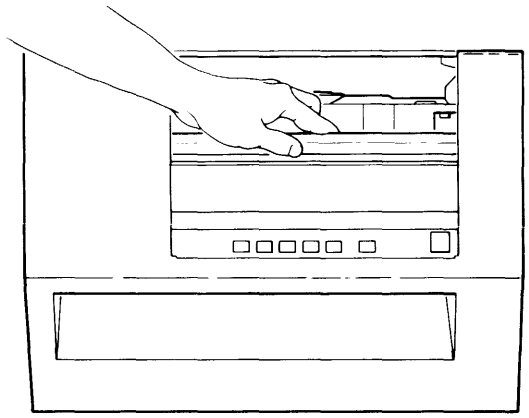

Note: If an indicator other than the Unload indicator flashes at this time, refer to section 6.1.2.

4. Remove the tape reel.

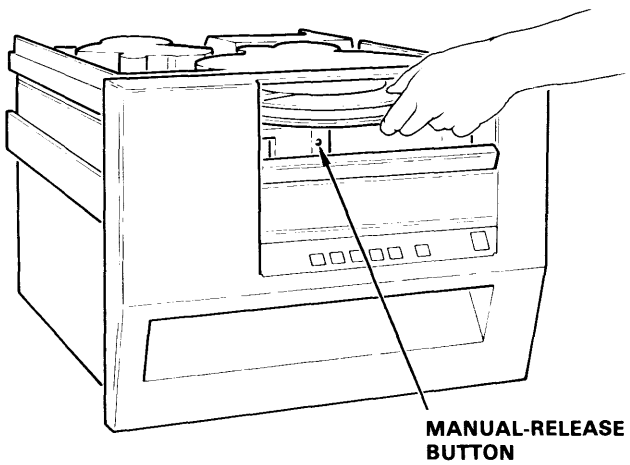

If the reel is locked to the hub, press and hold the manual release button, located behind the front panel door on bottom left-hand side of tape reel opening, while rotating the tape reel counterclockwise.

5. Close the tape access door.

6.2.4 Loading Tape Manually

Note: Do not load tape manually if any of the indicators are flashing. Refer to section 6.1.2 of the manual if any of the indicators are flashing.

1. If the power is on, press the power switch to remove power from the drive.

2. Release the rack latch just inside the lower left side at the front panel. Pull from behind the lower left-hand side of the front panel and slide the tape drive out of the rack.

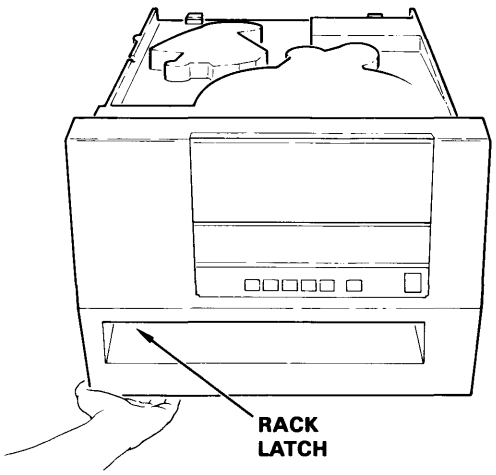

3. Slide the tape drive forward until it is fully extended from the rack.

4. Grasp the lower edges of the top cover and lift.

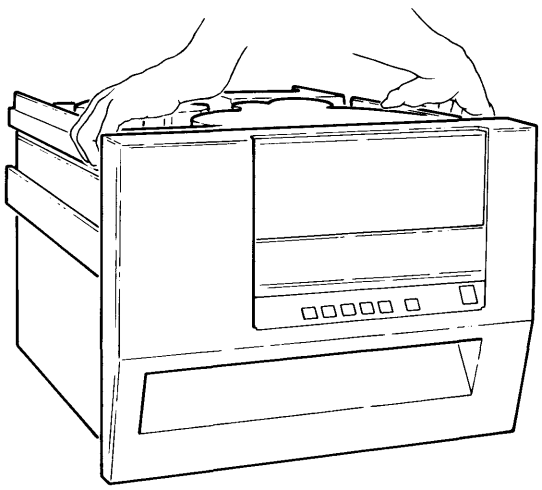

5. While holding the top cover in the raised position, place retainer bar in its slot next to the tape path.

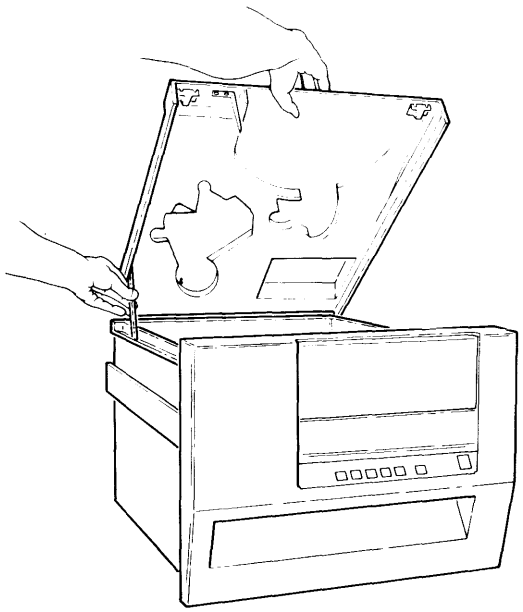

6. If you intend to write data on the tape, place a write-enable ring on the tape reel.

7. Hold the tape reel so that the write-enable ring is down.

8. Open the tape access door and insert the tape reel so that it lies flat inside the front opening.

9. Depress and hold the manual unlock button, located behind the front-panel door on the bottom left side of the tape reel opening, and simultaneously rotate the supply hub clockwise until the supply hub is locked in place.

10. Press the power switch to apply power to the drive.

11. Pull the tape around the first two roller guides.

12. Pull the tape around the third roller guide and across the read/write head.

13. Pull the tape around the next two roller guides.

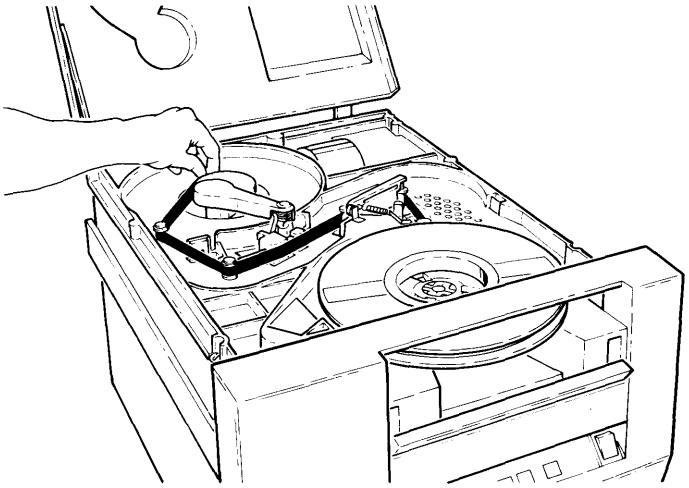

14. Pull the tachometer away from the take-up hub.

    CAUTION: Do not release the tachometer while holding it away from the take-up hub. It could be damaged if it strikes sharply against the hub.

15. While holding the tachometer away from the hub, press the end of the tape against the hub and turn the hub clockwise until the end of the tape is held by the next layer of tape. Turn the hub six revolutions clockwise.

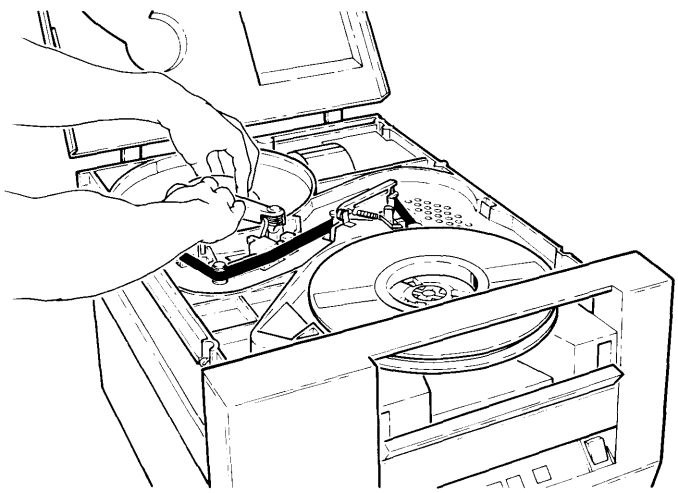

16. Gently place the tachometer against the hub.

17. Lift the top cover until the retainer bar is clear of its slot.

18. While holding the top cover in the raised position, push the retainer bar back and up so that it is flat against the underside of the top cover.

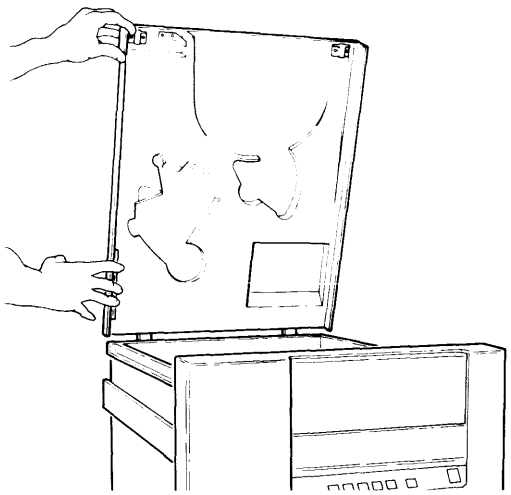

19. Close the top cover.

20. Close the tape access door.

21. Press and hold the lock buttons on both slides and slide the tape drive carefully into the rack.

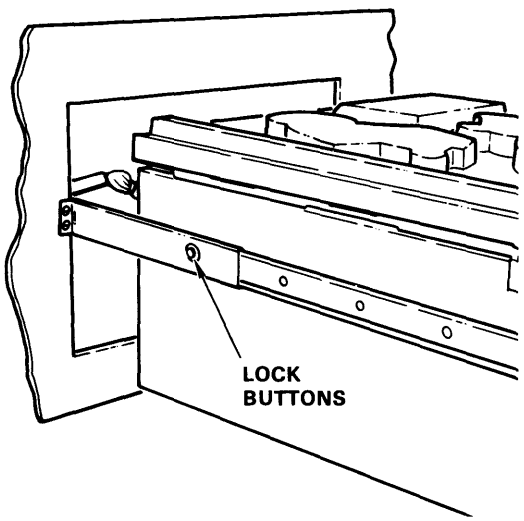

22. While pressing the Density Select switch, press the Load/Rewind switch.

    The Load indicator flashes while the tape loads and remains lit when loading is complete.

    If the ARM FAULT DURING LOAD message is displayed, you did not wrap enough tape onto the take-up hub.

After threading the tape securely onto the take-up hub, press the Load/Rewind, Unload, or Test switches to reset the error.

WARNING: If either the top cover or front tape loading door are forced open, moving mechanical parts may cause injury.

ACHTUNG: Wenn der Klappdeckel oder die vordere Bandladeture mit Gewalt geoffnet werden, besteht Gefahr der Verletzung durch die beweglichen Teile.

6.3 Operator Maintenance

6.3.1 Cleaning the Tape Drive

Use the following procedure after every eight hours of operation.

1. If the power is on, press the power switch to remove power from the tape drive.
2. Pull from behind the lower left-hand side of the front panel and slide the drive out of the rack.
3. Slide the drive forward until it is fully extended from the rack.
4. Grasp the lower edges of the top cover and lift.
5. While holding the top cover in the raised position, place the retainer bar in its slot next to the tape path.

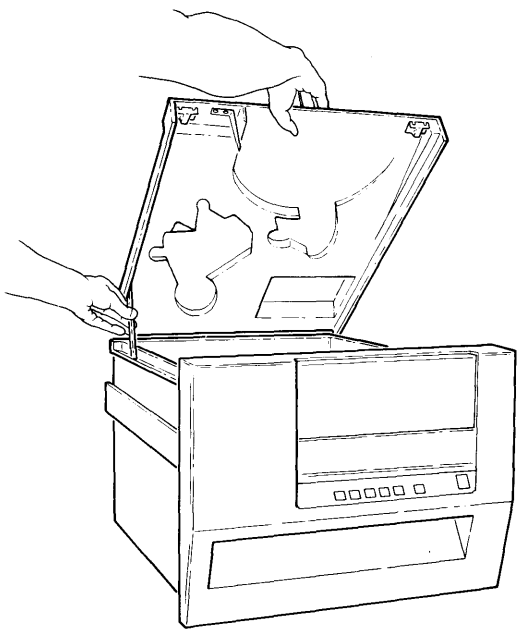

6. To clean the tape path, use the Cipher cleaning kit (Part 960855-001). Moisten a swab applicator with cleaner and carefully swab the surface of the read/write head and tape cleaner.

CAUTION: Rough or abrasive materials can scratch sensitive surfaces of the head resulting in permanent damage. Other cleaners, such as alcohol based types, can cause read/write errors or load failures. USE ONLY FREON TF (Trichlorotrifluoroethane).

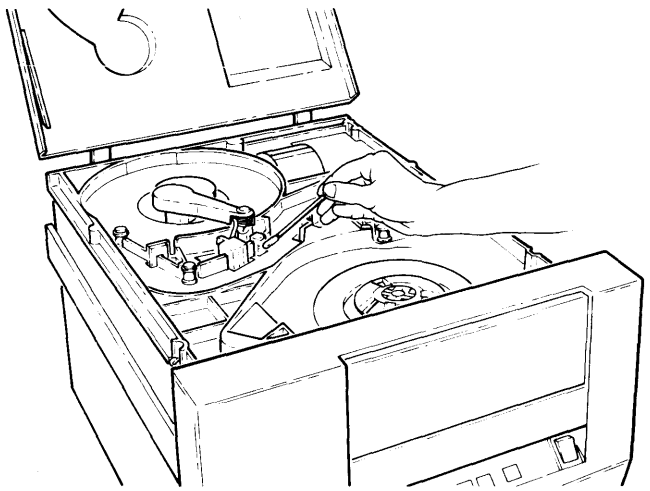

7. Clean the tachometer roller using the method described in step 6.

CAUTION: If the cleaning solvent seeps into the tachometer housing, it could damage the tachometer. Do not release the tachometer while holding it away from the take-up hub. It can be damaged if it strikes sharply against the hub.

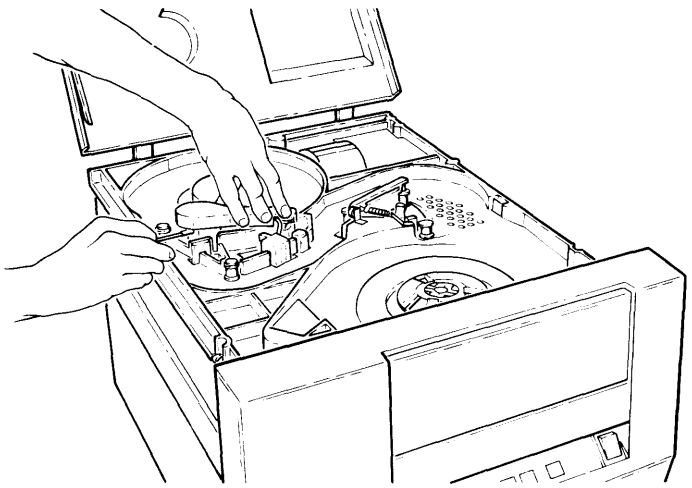

8. Use the felt pads provided in the tape cleaning kit to clean the hub pads, takeup hub, and roller guides.

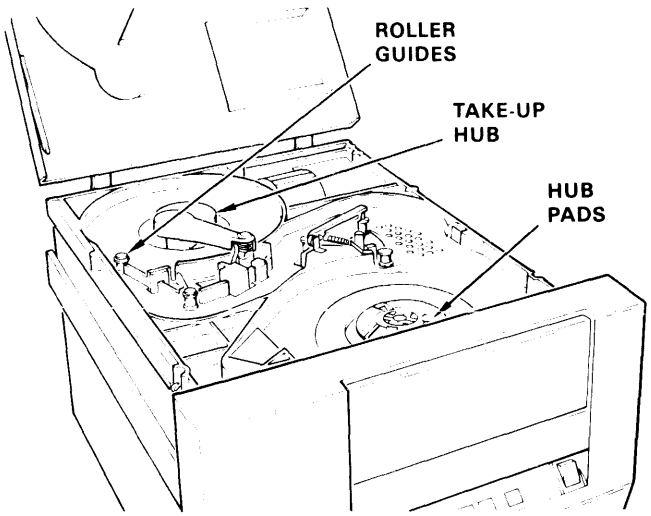

9. Lift the top cover until the retainer bar is clear of its slot.

10. While holding the top cover in the raised position, push the retainer bar back and up so that it is flat against the underside of the top cover.

11. Close the top cover.

12. Press and hold the lock buttons on both slides and slide the tape drive back into the rack.

6.3.2 Cleaning the Sensors

The EOT, BOT, and Tape in Path sensors should be cleaned every 40 hours using a dry, clean, cotton swab. Gently wipe any dust off the face of each LED lense, both the transmitter and receiver.

CAUTION: Wipe as gently as possible; the alignment of the LEDs is critical. Do not use any solvents to clean the LEDs; use only a dry swab.

6.3.3 Cleaning the Air Filter

Use the following procedure every three months of operation.

1. If the power is on, press the power switch to remove power from the tape drive.

2. The filter is located just behind the rack latch at the lower left-side of the front panel. Feel for the filter tab and gently remove the filter.

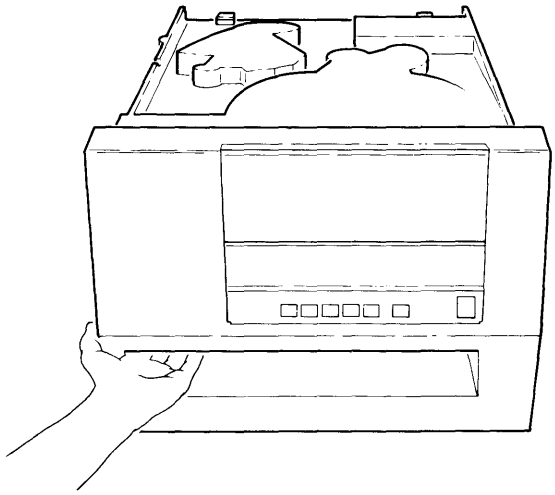

3. Shake the filter clean.

4. Replace the filter.

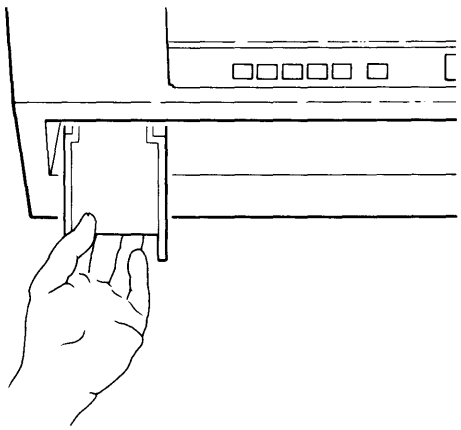

CAUTION: This unit should be serviced by qualified maintenance personnel only.

ACHTUNG: Dieses Gerat darf nur von Fachpersonal gewartet werden.

6.4 Error Conditions

When the drive fails to operate properly, the indicators on the front panel of the unit flash patterns to alert the operator of an error condition. Error messages are also displayed by the alphanumeric display and describe the condition that must be corrected to allow normal operation. To reset soft or medium errors, press the flashing indicator switches on the front panel.

Three types of error conditions can be displayed:

1. Soft errors
2. Medium errors
3. Hard errors

Soft error messages are described in Section 6.1.3.

6.4.1 **Medium Errors**

Medium errors are usually caused by interface command or format violations. Medium errors are reported to the host system via the interface and usually require a restart command from the host. An error message is displayed on the alphanumeric display to aid in identifying the problem. The indicated problem must be corrected in order to continue operation. To reset the medium error, press the Load/Rewind and Unload indicator/switches on the front panel. Press the Load/Rewind switch again to restart the load sequence.

READ ONLY TAPE

If the READ ONLY TAPE message is displayed, the unit received a write command with a write protected reel of tape loaded on the transport. Install the write protect ring or load the proper tape on the unit and press the Load/Rewind or Unload switches to reset the error.

ILLEGAL COMMAND

If the ILLEGAL COMMAND message is displayed on the alphanumeric display, an illegal or undefined command was received by the unit. Press the Load/Rewind or Unload switches to reset the error. Receipt of a valid command will also reset the error.

WRITE RETRY EXCEEDED

If the WRITE RETRY EXCEEDED message is displayed, the unit exceeded the allowable number of write retries. Press the Load/Rewind or Unload switches to reset the error.

PAST EOT

If the PAST EOT message is displayed, tape travel beyond the EOT marker exceeded 18 feet. Once the controller error has been corrected, press the Load/Rewind or Unload switches to reset the error.

BLOCK SIZE ERROR

If the BLOCK SIZE ERROR message is displayed, the data block size exceeded the NOVRAM 64K value. Press the Load/Rewind or Unload switches to reset the error.

6.4.2 **Hard Errors**

Hard errors are caused by severely damaged tape, or a serious deviation from the normal operating routine of the M990. Since these malfunctions could cause damage to the tape, the transport drive servos are disabled and tape tension is removed in a controlled manner. Hard errors are reported to the host via the interface and an error message is displayed on the alphanumeric display. To reset the hard error, switch the unit power off and on, reload the tape, and issue a restart from the host system. The hard error messages are described below.

ARM FAULT DURING LOAD

If the ARM FAULT DURING LOAD message is displayed, the tension arm swing exceeded the range of normal operation during the auto-load sequence. After correcting the problem, switch the unit power off then on and issue a restart from the host system.

ARM FAULT DURING RUN

If the ARM FAULT DURING RUN message is displayed, the tension arm exceeded its free travel limits during any operation except those functions of the load and unload sequence when tape tension is not under arm control. After correcting the problem, switch the unit power off then on and issue a restart from the host system.

SPEED ERROR

If the SPEED ERROR message is displayed, tape speed variations in excess of the ANSI maximum of ± 10% deviation from normal operating speed occurred.

6.5 **Read Extended Status**

Extended drive status is available to the host as four independently accessible records containing up to 16 bytes each. Extended status can only be read when the drive is ON-LINE. To access one of the 16-byte records, the host must first issue the Read Extended Status command, which is "00010" (EDIT). The command is accompanied by the usual IGO pulse. This command places the drive in the Extended Status Mode whereby the drive will wait for a second "ACCESS" command, accompanied by IGO. This second command, or Block Access Code, selects the appropriate 16-byte block to be transferred to the host as a normal read operation on the IR0-IR7 data lines, with read strobes. Should more than one record be desired, the Read Extended Status command/IGO pulse may be reissued and the appropriate block access code asserted on the five command lines, accompanied by the IGO pulse. The new status block is then strobed to the interface.

The Error History Block may be reset to zero if the block access code is "10011." A 16-byte block is still transferred, but the bytes have no meaning. A description of the information provided by the Read Extended Status command is given in Table 6-1.

Byte No.	Bit*	Contents
0		**Tape Status Byte #1**
	0	IIDENT
	1	IHER
	2	ICER
	3	IFMK
	4	IRDY
	5	IONL
	6	IRWD
	7	IFPT
1		**Tape Status Byte #2**
	0	ILDP
	1	IEOT
	2	Read Retries Exceeded
	3	Write Parity Error At Interface
	4	Write Hard Error
	5	Illegal Command
	6	
	7	
2		**Error Classification**
	0	Cache Auto-Expanded
	1	Block Size
	2	
		000 = 9K 001 = 16K 010 = 32K 011 = 64K 100 = Reserved
	3	Read From Tape To Cache Overrun
	4	Write From Host To Cache Overrun
	5	
	6	
	7	
3		**Track In Error**
	0	Track 7 In Error
	1	Track 6 In Error
	2	Track 5 In Error
	3	Track 4 In Error
	4	Track 3 In Error
	5	Track 2 In Error
	6	Track 1 In Error
	7	Track 0 In Error

* Bit 0 = LSB; Bit 7 = MSB, unless otherwise specified. (1 = True/Yes, 2 = False/No)

Current Status Block (Access Code = 00000)

Table 6-1. Read Extended Status

Byte No.	Bit*	Contents
4	0	**Track P In Error**
	1 Thru 7	LSB Read/Write Retry Count On Current Host Record MSB
5	0 Thru 4	**LSB** Front Panel Error Code MSB
6		**Density Code**
	0	Density Found/Operating Density (bpi):
	1	000 = Reserved 001 = 1600
	2	010 = 3200 011 = 6250
	3	Density Requested:
	4	000 = Reserved 001 = 1600
	5	010 = 3200 011 = 6250
	6	Read Density Conflict
	7	Write Density Conflict
7		**Unfixed Block Count** (includes file marks)
	0 Thru 7	Block Detectable Structures Remaining In Cache
		Fixed Block Count From BOT (includes file marks)
8		**Low Order Byte**
9		**Mid Order Byte**
10		**High Order Byte**
		Sequence Number Of Record In Hard Error
11		**Low Order Byte**
12		**Mid Order Byte**
13		**High Order Byte**

Current Status Block (Access Code = 00000)

Table 6-1. Read Extended Status (Continued)

Byte No.	Bit*	Contents
0		**Capability**
	0	Reserved
	1	1600 bpi — 0 = Does not have capability
	2	3200 bpi — 1 = Does have capability
	3	6250 bpi
	4	Other
1		**Vendor Code**
2		**Model Code**
	0	000 = Other; 011 = Reserved; 110 = M990
	1	001 = Reserved; 100 = Reserved; 111 = Reserved
	2 Thru 7	010 = Reserved; 101 = Reserved
3		**Configuration State**
	0	EOT Location-- 1 = EOT Search, 0 = STD.
	1	Parity-- 1 = External, 0 = Internal
	2	Max. Block 00 = 9K; 10 = 32K
	3	Size 01 = 16K; 11 = 64K
	4	Ramp-- 1 = Disabled, 0 = Enabled
	5	Simulated Speed Setting (LSB)
	6	Simulated Speed Setting
	7	Simulated Speed Setting (MSB)
4		**Software Configuration**
	0	
	1	
	2	
	3	EOT and Double Filemark Streaming Option
	4	3200 BPI IIDENT Status Option
	5	
	6	
	7	

Configuration Status Block (Access Code = 10000)

Table 6-1. Read Extended Status (Continued)

Byte No.	Bit*	Contents
0		**Read Retry Count - Since Unload (255 max)**
1		**Write Retry Count - Since Unload (255 max)**
		Track History - Error Counts Per Track (255 max)
2		**Track 0**
3		**Track 1**
4		**Track 2**
5		**Track 3**
6		**Track 4**
7		**Track 5**
8		**Track 6**
9		**Track 7**
10		**Track P**

Error History Block (Access Code = 00010)

Byte No.	Bit*	Contents		
		Head Position/Tach Count In Multiples Of 1.28 Inches		
0		**Low Order Byte Of Tach Count**		
1		**High Order Byte Of Tach Count**		
		Logical Command History		
2		**Previous Host Command**		
3		**2nd Previous Host Command**		
4		**3rd Previous Host Command**		
5		**4th Previous Host Command**		
6		**5th Previous Host Command**		
7		**Operating Status**		
	0	Reel Size (LSB)	00 = Unknown	01 = 7 Inch
	1	Reel Size (MSB)	10 = 8-1/2 Inch	11 = 10-1/2 Inch
	2	Door Lock Status:	0 = Unlocked	1 = Locked
8	(LSB)	Tachometer reading indicating BOT location		
9	(MSB)			
10	(LSB)	Tachometer position at impending EOT		
11	(MSB)			

Machine Status Block (Access Code = 10010)

Table 6-1. Read Extended Status (Continued)

GLOSSARY

CHAPTER 7

SIGNAL PWB	DESCRIPTION
f+ SERVO	Switching frequency + to pulse-width modulator 20 Khz sawtooth.
f- SERVO	Switching frequency - to pulse-width modulator 20 Khz sawtooth.
+12V SERVO	Used for IC operation.
+15V SERVO	Used for IC operation.
+57V SERVO	Input from power supply for operation.
+5V SERVO	Used for TTL logic circuits.
+6V SERVO	Used for IC operation.
-12V SERVO	Used for IC operation.
-15UR SERVO	Used for IC operation.
-6V SERVO	Used for IC operation.
10.85MHZ CLK CPU	Crystal frequency.
159 CLK CIF	Character clock pulse - one for each character received.
158 TC CIF	Terminal count equals 158 characters.

1600 PE CPU	Write mode, 1600 BPI.
2.71MHZ CLK CPU	Boot frequency.
5.43MHZ CLK CPU	CIO frequency.
6250 SERVO	GCR mode selected.
6250 WRT SERVO	6250 write mode selected. Changes head current.
A SERVO	Multiplexer code select A/D.
A0-A11 CPU	Channel clock (DMA).
A0-A7 CPU	DRAM address bus.
A0-A11 CIF	Write state machine input.
A0A-A7A CPU	Low order cache memory address bus.
A0B-A7B CPU	High order cache memory address bus.
ABUF CPU	DMA 'A' buffer clock.
AD0-AD15 CPU	Address/data bus.
ADC IN SERVO	Analog to digital IC select.
ADRSEL SERVO	Address switch from OCP.
ADV/H* CIF	Advance/hold DMA address logical drive.
ADV/HEN* CIF	Enable ADV/H* logic.
AFBY CIF	Formatter busy output gate enable.

AL12-AL15 SERVO	Latched address line, decoded for servo PWB control.
AMUX CPU	Dynamic RAM address multiplexer switch.
ARMCLK SERVO	20Khz compliance arm clock.
ARMDIV CIF	Compliance arm rate of change.
ARMPOS SERVO	Compliance arm position.
ARMSNS SERVO	Air capacitor output.
AS CPU	Address strobe. Rising edge indicates address on bus valid.
A to D CLK SERVO	333Khz for A/D converter.
B SERVO	Multiplexer input code BIT A/D converter.
B CLK CPU	Channel clock.
B/W CPU	Byte/word - 8 or 16 bits on Z8000 address/data bus.
B0-B1 DATA	Control inputs to master state machine.
BAD0-BAD15 CPU	Buffered address/data.
BAD0-BAD5 SERVO	Alpha display bits, front panel.
BBUF CPU	DMA 'B' buffer clock.
BDS SERVO	Alpha display strobe.
BLOCKDET DATA	Distinguishes between erased tape and recorded tape.
BLWR SERVO	Turn on blower motor.

BLWR* SERVO	Blower control from Z8000.
BLWRR SERVO	Blower relay return.
BOOT CPU	Set on Power-up Reset to allow 1/2 speed clock.
BOOTRD CPU	Enable EPROMS for boot readout.
BOT SERVO	Beginning of tape sense.
BR/W* CPU	Buffered R/W Z8000 line.
BRD0-BRDF CIF	Buffered cache read data.
BRDATA0-BRDATAP DATA	Input to data bus.
BRWLB CIF	Buffered R/W last byte.
BUF DWN DATA	Disables master state machine during power-up.
C SERVO	Multiplexer input code to A/D converter.
C CLK CPU	Channel clock.
C REFRESH CPU	Refresh cache address.
C0-C2 CIF	Write state machine outputs to data encoder.
CA0-CA2 CIF	Data character count, syncs DMA cache with formatter.
CACRC CIF	Clear auxiliary CRC.
CADD CPU	Select cache address.
CAS0-CAS# CPU	Memory address strobes for cache.

CASH CPU	Memory address strobe for high DRAM.
CASL CIF	Memory address strobe for low DRAM.
CBUF CPU	DMA 'C' buffer clock.
CC1-CC5 CIF	Data rate control bits.
CCR CIF	CPU data clock.
CCRC CIF	CRC clock.
CDATA CPU	Select cache data.
CER CIF	Corrected data error.
CH0-CH P CIF	Write data to head.
CHCLEAR DATA	Clear channel state machine.
CHERR0-CHERR P DATA	Channel drop detected.
CHRDY0-CHRDY P DATA	Deskew circuit has data in it.
CK/I CIF	Check or input parity.
CLK CIF	Clock to write data encoders.
CLK271 DATA	2.7Mhz clock.
CLK2X CIF	2 times 1600 bpi clock rate.
CLK542 DATA	5.4Mhz clock.
CLKX CIF	1600 bpi clock rate.

CN CPU	Carry-in bit to MMU.
CNT14 CIF	Reduced rate counter output.
CNT15 CIF	Reduced rate counter output.
COMV/SHIFT* CIF	GCR control signal.
CPU ADV CPU	Gate Z8000 data to cache bus.
CPU C READ CPU	Output CPU cache address.
CPU DOWN CPU	Decrement CPU cache address.
CPU LOAD CPU	Load CPU cache address.
CPU+4 CPU	Carry-out bit from MMU.
CPUCLK CPU	CPU DMA cycle.
CRSTR CIF	CIF read strobe.
CZDS CPU	Data strobe to cache.
DAC SERVO	Digital to analog IC select.
DATA+STACK CPU	Select data portion of DRAM.
DATA/CONT* CIF	Control term from write state machine.
DBY CIF	Data busy.
DDIS CIF	Data DMA strobe.
DIS CIF	Data interface strobe.

DMA0-DMA17 CPU	Input address to MMU.
DMP D0-DP CPU	Input to cache memory.
DPPE CIF	CIF logic data path parity error.
DR SERVO	Door sense.
DRAM R/W* CPU	Read/write control to DRAM.
DRDY DATA	Data in FIFO registers.
DRLK SERVO	Door lock solenoid driver.
DS CPU	Data strobe.
DS1-DS5 SERVO	Front panel (OCP) LEDS.
DSPSL SERVO	Display select.
DT CIF	Data transmission, start the state machine.
EDIT CIF	Edit command bit.
EH1 SERVO	Erase head.
EH1EN SERVO	Erase head 1 enable.
EH1R SERVO	Erase head return.
EH2EN SERVO	Erase head 2 enable.
EH2R SERVO	Erase head return.
EMK0-EMKP DATA	End of GCR data detected.

EMK1PE0 DATA	End mark or PE all zeros detected.
EN2 SERVO	Erase head.
ENA CPU	Enable CPU bus and DMA 0-15.
ENAX CPU	Enable DMA bus.
ENDATA DATA	Enable clock to gate data to bus.
ENFIFO DATA	Enable FIFO clock.
ENMASTER DATA	Enable master state machine
EOT SERVO	End of tape sensed.
ER1 CIF	Erase head.
FAD1-FAD3 CIF	Formatter address.
FB1-FB4 CIF	State machine control feedback.
FBOE1 CIF	State machine feedback enable/clear.
FEN CIF	Formatter enabled.
FGCR CIF	CDC status line indicating GCR mode.
FHMPE CPU	Force high memory parity error.
FIFO CLK DATA	Clock to FIFO register.
FLGAP CIF	Long gap instruction (N.U.).
FLMPE CPU	Force low memory parity error.

FLOL CIF	Not used.
FMK CIF	File mark detected.
FP/RSS SERVO	File protect/reel seat sensor.
FPT SERVO	File protect sensed.
FRC1-FRC4 CIF	PE carrier control.
FSEL CIF	Formatter selected.
FWD SERVO	Control to reel motor drivers.
FWD/REV DATA	Indicates direction of tape.
G0 CIF	Command strobe.
G1 CIF	Gate timing.
G2 CIF	Gate timing.
G4 CIF	Gate timing.
GCR/PE* DATA	Recording mode selection.
GN CIF	Enable pad and CRC gate.
GPAD CIF	Gate pad character to data bus.
GRESID CIF	Gate residual counter to data bus.
HBANK SERVO	MSB DRAM address.
HBLK SERVO	Hub lock solenoid driver.

HER CIF	Uncorrectable error.
HI I* SERVO	HI current detected one shot. Used mostly during start-up.
HIDEN SERVO	High density push button/LED.
HISP CIF	High speed command bit.
I/CK* CIF	Input or check parity.
I/O CPU	Input or output operation to CPU bus.
I2/4 CPU	MMU instruction bit.
I3 CPU	MMU instruction bit.
IACRC CIF	Increment ACRC.
IBLE CIF	Interface logic board enable.
ICER CIF	Indicates a correctable error has occurred during write or read operation.
ICR CIF	Cache interface clock.
ICRC CIF	Increment CRC.
IDBY CIF	Data busy, true during commands initiated by IGO.
IDENT CIF	PE ID burst detected.
IECC CIF	Increment ECC.
IEDIT CIF	Host command line.
IEI CPU	Interrupt enable in, sets interrupt priority.

IEO CPU	Interrupt enable out, sets interrupt priority.
IEOT CIF	Tape is located past the end of tape marker.
IERASE CIF	Host command line.
IES CIF	Interface early strobe.
IESUB CPU	Interface early strobe buffer.
IFAD CIF	Formatter address bit.
IFBY CIF	Formatter busy, tape motion.
IFCREAD CPU	Output logical tape address.
IFDOWM CPU	Decrement logical tape address.
IFEN CIF	Formatter enable.
IFLOAD CPU	Load logical tape address.
IFMK CIF	Pulsed to indicate a file mark has been detected.
IFPT CIF	File protect, reel does not have a write-protect ring.
IFO CIF	Latches command from host to tape drive. Minimum 1us pulse.
IHER CIF	Record being written or read contains an uncorrectable error (Hard).
IHISP CIF	High speed mode line from the controller.
IIDENT CIF	PE identification burst detected at load point.
ILDP CIF	Tape is located at load point (BOT).

ILW CIF	Write last word.
ILWD CIF	Last word terminates a write or variable length erase operation.
INFACE EARLY ST CPU	Interface early strobe.
INTO-INT5 CPU	Interrupt priority selection.
INTA CPU	Acknowledge interrupt from CIO.
INTACK CPU	Acknowledge interrupt.
INTERFACE ADV CIF	Advance cache memory address.
INTERFACE CLK CPU	Logical tape drive DMA cycle.
IO CPU	IO operation.
IONL CIF	Tape drive is on-line to host.
IORD CPU	IO read data strobe.
IOW1 CIF	Latch interface output word 1.
IOW2 CIF	Latch interface output word 2.
IOW3 CIF	Latch interface output word 3.
IOWR CPU	IO write data strobe.
IR0-IR P CIF	Read data to host.
IRDY CIF	Ready, tape tensioned, not rewinding, loading, or unloading.
IREV CIF	Initiates a rewind command minimum 1us pulse.

IREWU CIF	Rewind to load point and unload tape.
IRST CIF	Interface reset or stopped.
IRSTR CIF	Read data strobe, pulsed with each character - drive to host.
IRWD CIF	Tape drive is busy rewinding.
ISPEED CIF	Speed status.
ISU SERVO	Supply motor drive current.
ITAD0-ITAD1 CIF	Used for tape drive address.
ITC CIF	Read last word.
ITHR SERVO	Read threshold voltage.
ITU SERVO	Take-up motor drive current.
IW0-IW P CIF	Host write data.
IWFM CIF	Host write file mark command.
IWRT CIF	Host write command.
IWSTR CIF	Write strobe, pulsed with each character sent from host.
LA0-LA15 CPU	Latched address bits.
LDP CIF	Load point.
LEDSL SERVO	LED select.
LLWD CIF	Read or write last word.

LOAD SERVO	Load push button/LED.
M321-M325 CIF	Module 32 counter.
MA0-MA2 CPU	Byte sync between cache and data bus.
MAD AB SERVO	Analog to digital multiplexer select.
MDAC SERVO	Digital to analog multiplexer select.
MK2/PE1 DATA	Mark 2 or PE all ones detected.
MK2/PEP0-MK2/PE DATA	Mark 2 or postamble detected.
MRD0-MRD P CPU	Cache read data bus.
MREQ CPU	Memory request, address/data bus holds an address.
MWD0-MUD P CPU	Cache write data bus.
N CIF	Control decision to pad or not to pad CRC.
NMI CPU	Non-maskable interrupt.
OACRC CIF	Output of Aux CRC character to data bus.
OCRC CIF	Output CRC character to data bus.
OECC CIF	Out put ECC character to data bus.
ONL CIF	On-line status.
ON-LINE SERVO	On-line push button/LED.
OVERFLOW DATA	Deskew buffer full.

P/G* SERVO	Recording mode PE or GCR.
PADCNT DATA	Pads eighth character during PE read into cache.
PC CIF	Positive cycle of the CPU clock.
PCHECK CPU	Cache memory parity error.
PCHECK CLK CPU	Check cache parity.
PE/GCR DATA	Recording mode selection.
PEPAD DATA	PE preamble detected.
PFB1-PFB4 CIF	State machine control feedback.
PI CIF	Positive cycle of interface clock.
PLL RESET DATA	Reset phase lock loop.
POSTAM DATA	Postamble detected.
PROCINT DATA	Processor interrupt.
PRW CIF	Positive cycle of read/write clock.
PWR RES SERVO	Power reset (10ms).
Q0-Q P CPU	Cache memory data output.
QMP CPU	Cache memory parity bit.
R BOOT CPU	Reset boot latch.
R/W CPU	Read or write.

R/W BC CPU	Read/write byte clock.
R/W C READ CPU	Output physical tape cache address.
R/W DOWN CPU	Decrement physical tape cache address.
R/W L BUB CPU	Read or write last byte.
R/W LOAD CPU	Load physical tape to a physical address.
R/W* CIF	Transport read/write mode.
RAM DS CPU	RAM data strobe.
RAS CPU	RAM address row select.
RAS0-RAS3 CPU	Address strobe cache row address.
RCRCS CIF	Reset CRC and ACRC.
RD C DATA CPU	Gate cache data to Z8000 bus.
RD0-RD P CIF	Read data bus.
RDATA0-RDATAP DATA	Skew check data output.
RDC BIT0-BIT P DATA	Read data clock.
RDPLS0-RDPLS P DATA	Pulse for each transition from tape.
RDROP0-RDPLS P DATA	Loss of read data in channel.
RDT CIF	Reset data transmission latch (DT).
RDY CIF	Ready, not rewinding or loading.

READ ADV DATA	Advance MMU address.
READ CAS CPU	Enable column address to read from cache.
RECALL NR CPU	Recall NOVRAM.
RECC CIF	Reset ECC.
RECEIVE SERVO	Serial port receive signal.
REFRESH CPU	Selects low byte of DRAM.
RESET CPU	
RESET CIF	
RESET SERVO	
RESET DATA	
REV CIF	Motion direction command bit.
REVEN CIF	Read data parity even.
REVERSE BANKS CPU	Reverse control and data portion of DRAM.
RFBYP CIF	Reset formatter busy.
RLGP CIF	Reset long gap.
RLY EN SERVO	Enable motor shorting relay K1.
RPH CPU	RAM parity high byte.
RPL CPU	RAM parity low byte.

RSTP CIF	Reset interface logic.
RSTREN CIF	CIF read strobe enable.
RTEST CIF	Test mode, Z8000 directs output to read data latches.
RWCR CIF	Cache physical drive clock.
RWD CIF	Rewind latched.
RWLB DATA	Read or write last byte.
RWSEN CIF	Enable read strobe during WRT.
SCIO CPU	Select CIO.
SCLK SERVO	20Khz clock to serial port controller.
SD BIT0-BIT P DATA	Separated data.
SDTP CIF	Start data transmission.
SEL 2P CIF	Latch on-line status to Cipher interface.
SEL 3P CIF	Latch rewind status to Cipher interface.
SEL 8F CIF	Reset on-line status to Cipher interface.
SEL 9P CIF	Reset rewind status to Cipher interface.
SERVCLK SERVO	40Khz servo clock for motors.
SERVEN1 SERVO	Servo enable SU.
SERVEN2 SERVO	Servo enable TU.

SMCLK CIF	State machine clock determines data interface transfer rates.
SMI SERVO	Supply motor current.
SMOE2 CIF	State machine enable.
SMRST CIF	State machine reset.
SMV SERVO	Supply motor voltage.
SPECIAL IO CPU	Memory addressing mode.
SRDATAO-SRDATAP DATA	Serial read data.
STACK CPU	Memory addressing mode.
B,C STCKL A DATA	Master state machine clocks.
STEPEN 0 CIF	Write driver current step enable.
STEPEN 1 CIF	Write driver current step enable.
STORE NR CPU	Store NOVRAM.
SUD SERVO	Supply motor drive.
SUDR SERVO	Supply motor drive return.
SUPPLY FWD SERVO	Forward command to H bridge.
SUPPLY REV SERVO	Reverse command to H bridge.
SYSCLK CPU	5.4Mhz clock.
TAKE-UP FWD SERVO	Forward motion to H bridge.

TAKE-UP REV SERVO	Reverse command to H bridge.
TDREQ CIF	Test mode request.
TERMCNT/TEST DATA	Read termination count or test.
TIP SERVO	Tape in path sensed.
TMI SERVO	Take up motor current.
TMV SERVO	Take up motor voltage.
TP0 SERVO	Tachometer phase 2.
TP1 SERVO	Tachometer phase 1.
TRANSMIT SERVO	Serial port transmit signal
TRAP CIF	CIF state machine error.
TUD SERVO	Take up motor drive.
TUDR SERVO	Take up motor drive return.
UNLOAD SERVO	Unload push button/LED.
VCERR DATA	Vertical parity error.
VCOM DATA	Read threshold voltage.
VI CPU	Vectored interrupt.
VREF SERVO	Reference voltage (+5V).
VREF ADJ SERVO	Monitor point for adjustment of VREF.

WAIT CPU	Memory of IO device is not ready for data transfer.
WATCHDOG ENABLE CPU	Enable watchdog circuit.
WCL0 CIF	Write clock to write driver.
WCL1 CIF	Write clock to write driver.
WCL2 CIF	Write clock to write driver.
WCLR CIF	Clear write drivers.
WCTV SERVO	Write voltage center tap.
WDATA0-WDATA P CIF	Write data to head drivers.
WDOGEBA UB CPU	Resets watchdog if a DRAM parity error is detected.
WE0-WE3 CPU	Write control to cache memory.
WEN SERVO	Write mode selected.
WEVEN CIF	Write parity is even.
WFB3 CIF	PE/GCR* phase encode/not GCR mode.
WFB0-WFB2 CIF	Write formatter state machine control bits.
WFLC CIF	Write formatter state machine load command.
WFM CIF	Write file mark command bit.
WFWA CIF	Write formatter write advance.
WIP CIF	Write data latch output enable.

WLOE CIF	Write data latch output enable.
WR TACH SERVO	Tach pulse.
WRC ADDL CPU	Clock cache ADDR to MMU.
WRITE ADV CIF	Advance cache address.
WRITE CAS CPU	Enable address column to write to cache.
WRITE OP DATA	Write operation in progress.
WRT CIF	Write command bit.
WRTEN/TEST SERVO	Push button/LED front panel.
WSTR CIF	Interface write strobe.
WSTREN CIF	Enable CIF write strobe.
WTEST CIF	Test mode, Z8000 directs output to write data latches.
Y0-Y17 CPU	Cache address output bits from MMU.
Z2C1 SERVO	Watchdog refresh clock (10Mhz).
ZAD0-ZAD15 CPU	Z8002 address/data lines.
ZAS CPU	Z8002 address strobe.
ZCLK CPU	5.4Mhz clock to Z8002.
ZDS CPU	Z8002 data strobe.
ZI/O CPU	Z8002 IO operation.

ZIORD CPU	IO read data strobe.
ZIOWR CPU	IO write data strobe.
ZMREO CPU	Memory request. Low indicates A/D lines contain an address.
ZR/W* CPU	Indicates CPU is reading from or writing to memory or I/O.

REVISION					
LTR	DESCRIPTION	DWN	DATE	APVD	DATE
A	PROD ACC ERO ID-0360	RG	3-25-94	JAF	4-29-94

FAN B4 P7
AIR PUMP B3 P4
W10
AC INPUT VOLTAGE J3
REF DES PREFIX P51 A1 POWER SUPPLY
J1 W10-P1
J2 W10-P2
TAKE UP MOTOR B2 P1 J4
W10-P3 J1 T1 POWER XFMR
SUPPLY MOTOR B1
W10-P5 J1 SENSE/SERVO REF DES PREFIX A1 J7 W25-P1
J8 W26-P1
J5 W23-P1
J4 W22-P1
J9
W10-P9 J6
REF DES PREFIX PS2 A1 AUX 48VDC
J1 W10-P6
J2 W10-P2
AUXILIARY POWER SUPPLY
S1 PWR SWITCH
DRLK SOL L1 W25-P9
EEOT REF DES PREFIX A6 W25-P4
EOT/BOT REF DES PREFIX A7 W25-P5
L2 HBLK SOL W25-P10
TIP EMITTER REF DES PREFIX A9 W25-P8
FP/RS REF DES PREFIX A8 W25-P6
TIP SENSOR REF DES PREFIX A10 W25-P7
W25
W26
W23
W22
W21
OPERATORS CONTROL PANEL REF DES PREFIX A5 J1 W25-P2
DIAGNOSTIC DISPLAY REF DES PREFIX A13 J1 W25-P3
TACHOMETER REF DES PREFIX A11 W26-P2
COMPLIANCE ARM POSITION SENSOR REF DES PREFIX A12
ERASE BAR PU2 - +
(READ) HEAD ASSY (WRITE) PU1 W28-P1 W27-P1
W27
W27-P2 J6
CIF / WRITE REF DES PREFIX A4 W23-P4 J5 W22-P4 J4 W21-P3 J3 J1 J2
CPU/MMU REF DES PREFIX A3 W23-P3 J5 W22-P3 J4 W21-P2 J3
DATA REF DES PREFIX A2 W23-P2 J5 W22-P2 J4 W21-P1 J3 J1 J2 W28-P2
W28

960956-001 REV A

REV STATUS	REV
OF SHEETS	SH 1 2 3 4 5 6 7 8 9 10 11 12 13 14 15 16 17 18 19 20 21 22 23 24

ALL INFORMATION CONTAINED IN OR DISCLOSED BY THIS DOCUMENT IS CONSIDERED CONFIDENTIAL AND PROPRIETARY BY CYPHER DATA PRODUCTS, INC. BY ACCEPTING THIS MATERIAL THE RECIPIENT AGREES THAT THIS MATERIAL AND THE INFORMATION CONTAINED THEREIN IS HELD IN CONFIDENCE AND IN TRUST AND WILL NOT BE USED, REPRODUCED IN WHOLE OR IN PART NOR ITS CONTENTS REVEALED TO OTHERS EXCEPT TO MEET THE PURPOSE FOR WHICH IT WAS DELIVERED. IT IS UNDERSTOOD THAT NO RIGHT IS CONVEYED TO REPRODUCE OR HAVE REPRODUCED ANY ITEM HEREIN DISCLOSED WITHOUT EXPRESS PERMISSION FROM CYPHER DATA PRODUCTS, INC.

UNLESS OTHERWISE SPECIFIED DIMENSIONS ARE IN INCHES
TOLERANCES ARE
DECIMALS
.X ±
.XX ±
.XXX ±
ANGLES ±
DO NOT SCALE DRAWING

APPROVAL	DATE
DWN	3-25-94
CHK G V BODDY	3-26-94
DES ENG	3-26-94
SAFETY	4/7/94
DES MGR	4-8-94
MFG ENG	
ISSUED	4-8-94

cipher SAN DIEGO CALIF

TITLE: WIRING DIAGRAM - MGCR

CODE IDENT	SIZE	DWG NO	REV
32274	D	960956-001	A

SCALE — MOD MGCR SH OF

BRUNING 4022

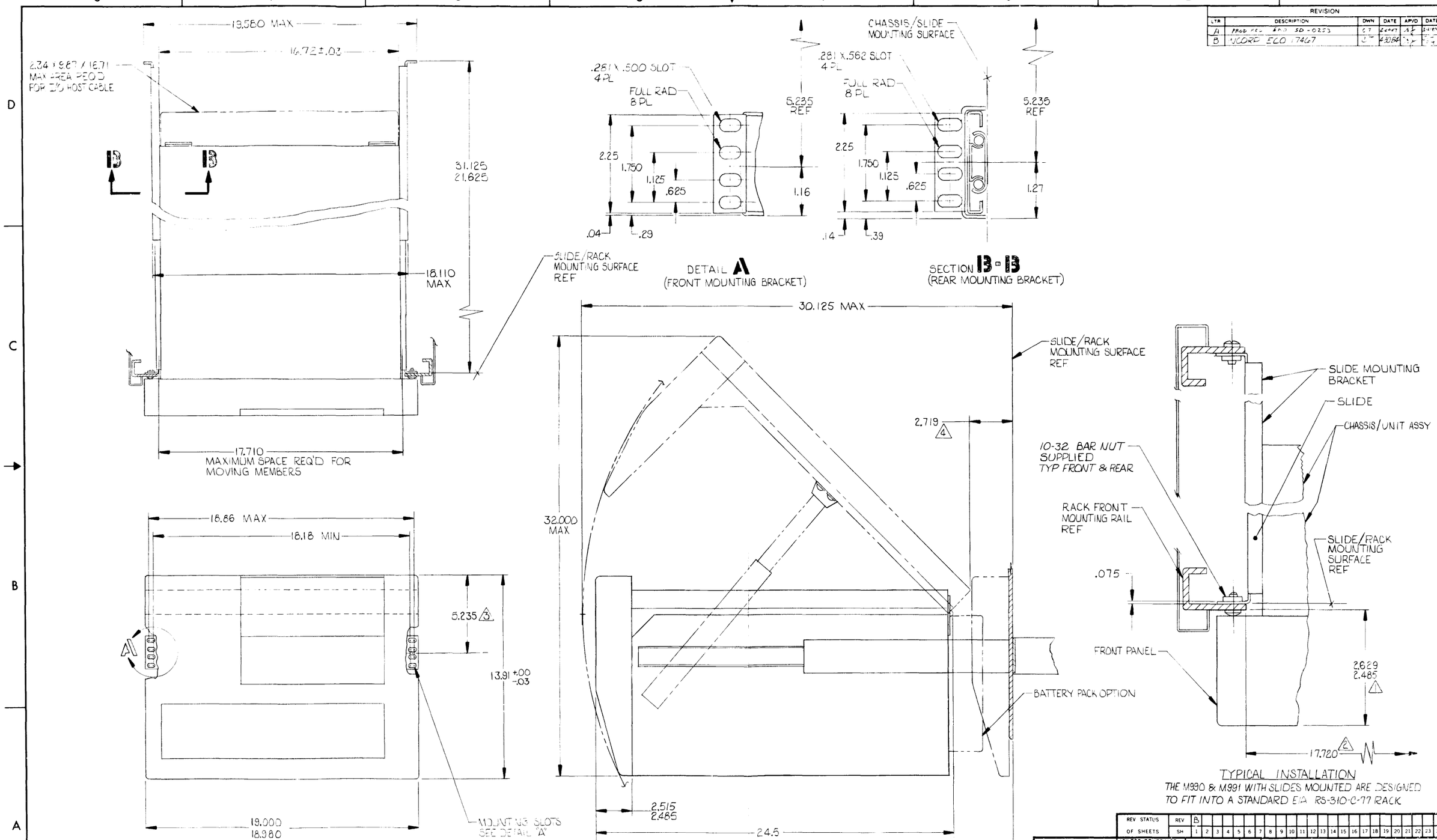

TYPICAL INSTALLATION

THE M990 & M991 WITH SLIDES MOUNTED ARE DESIGNED TO FIT INTO A STANDARD EIA RS-310-C-77 RACK

NOTES: UNLESS OTHERWISE SPECIFIED

1. DIMENSIONS SHOWN WILL VARY FROM A MAX OF 2.629 WITH A BINDER HEAD SCREW TO 2.485 WITH A FLUSH HEAD SCREW.

2. 17.720 IS THE MINIMUM CLEARANCE BETWEEN THE RACKS FRONT MOUNTING RAILS PER EIA RACK STD RS-310-C-77.

3. LOCATE UNIT IN RACK PER 5.235 DIM. AND ADJUST FOR PROPER CLEARANCE.

4. MIN DIM. AT SLIDE'S FULL EXTENSION

REVISION					
LTR	DESCRIPTION	DWN	DATE	APV'D	DATE
A	PROD REC ENG SD-0253	CT	2-24-84	[illegible]	[illegible]
B	NCORP ECO 17467	CT	4-30-84	[illegible]	[illegible]

REV STATUS OF SHEETS	REV	B
	SH	1 2 3 4 5 6 7 8 9 10 11 12 13 14 15 16 17 18 19 20 21 22 23 24

ALL INFORMATION CONTAINED IN OR DISCLOSED BY THIS DOCUMENT IS CONSIDERED CONFIDENTIAL AND PROPRIETARY BY CIPHER DATA PRODUCTS, INC. BY ACCEPTING THIS MATERIAL THE RECIPIENT AGREES THAT THIS MATERIAL AND THE INFORMATION CONTAINED THEREIN IS HELD IN CONFIDENCE AND IN TRUST AND WILL NOT BE USED, REPRODUCED IN WHOLE OR IN PART NOR ITS CONTENTS REVEALED TO OTHERS EXCEPT TO MEET THE PURPOSE FOR WHICH IT WAS DELIVERED. IT IS UNDERSTOOD THAT NO RIGHT IS CONVEYED TO REPRODUCE OR HAVE REPRODUCED ANY ITEM HEREIN DISCLOSED WITHOUT EXPRESS PERMISSION FROM CIPHER DATA PRODUCTS, INC.

UNLESS OTHERWISE SPECIFIED DIMENSIONS ARE IN INCHES
TOLERANCES ARE
DECIMALS
.X ± .1
.XX ± .02
.XXX ± .010
ANGLES ±
DO NOT SCALE DRAWING

APPROVAL		DATE
DWN	G. Dierling	2-24-84
CHK	[illegible]	[illegible]
DES ENG	[illegible]	3/1/84
SAFETY	[illegible]	3/1/84
DES MGR	—	
MFG ENG	[illegible]	3/1/84
ISSUED	[illegible]	3-21-84

cipher data products, inc. SAN DIEGO CALIF

TITLE: RACK MOUNT-INTERFACE, M990, M991

CODE IDENT	SIZE	DWG NO	REV
32274	D	961167-001	B

SCALE NONE | MOD GCR | SH 1 OF 1

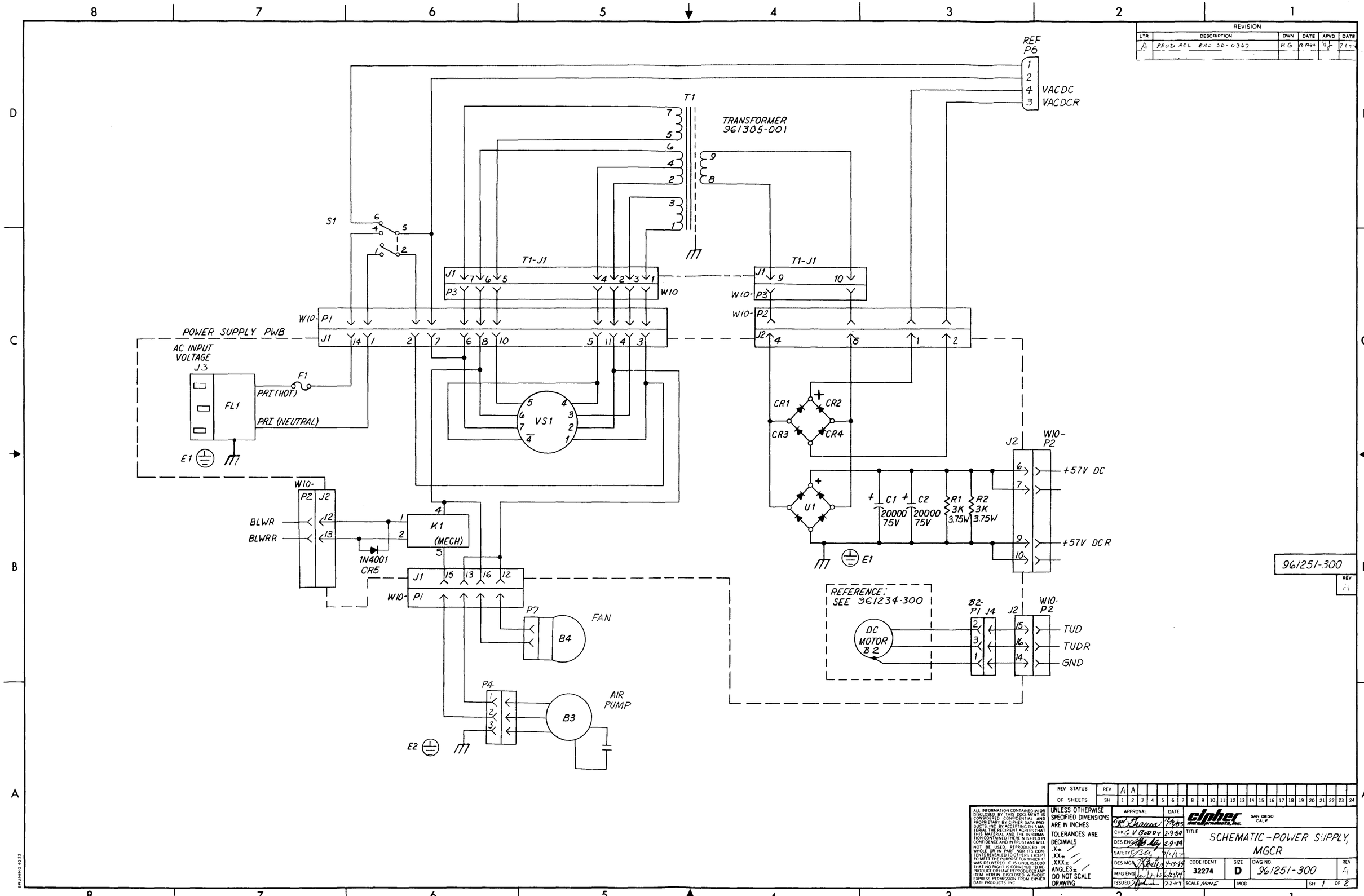
REVISION
LTR DESCRIPTION DWN DATE APVD DATE
A PROD REL ERO SD-0367 RG
REF P6
VACDC
VACDCR
T1
TRANSFORMER 961305-001
S1
T1-J1
W10
POWER SUPPLY PWB
AC INPUT VOLTAGE J3
FL1
F1
PRI (HOT)
PRI (NEUTRAL)
E1
VS1
CR1
CR2
CR3
CR4
U1
C1 20000 75V
C2 20000 75V
R1 3K 3.75W
R2 3K 3.75W
J2
W10-P2
+57V DC
+57V DCR
BLWR
BLWRR
K1 (MECH)
1N4001 CR5
P7
FAN
B4
P4
AIR PUMP
B3
E2
REFERENCE: SEE 961234-300
DC MOTOR B2
B2-P1 J4
TUD
TUDR
GND
961251-300
REV A
REV STATUS OF SHEETS
REV A A
SH 1 2 3 4 5 6 7 8 9 10 11 12 13 14 15 16 17 18 19 20 21 22 23 24
ALL INFORMATION CONTAINED IN OR DISCLOSED BY THIS DOCUMENT IS CONSIDERED CONFIDENTIAL AND PROPRIETARY BY CIPHER DATA PRODUCTS, INC. BY ACCEPTING THIS MATERIAL THE RECIPIENT AGREES THAT THIS MATERIAL AND THE INFORMATION CONTAINED THEREIN IS HELD IN CONFIDENCE AND IN TRUST AND WILL NOT BE USED, REPRODUCED IN WHOLE OR IN PART NOR ITS CONTENTS REVEALED TO OTHERS EXCEPT TO MEET THE PURPOSE FOR WHICH IT WAS DELIVERED. IT IS UNDERSTOOD THAT NO RIGHT IS CONVEYED TO REPRODUCE OR HAVE REPRODUCED ANY ITEM HEREIN DISCLOSED WITHOUT EXPRESS PERMISSION FROM CIPHER DATE PRODUCTS, INC.
UNLESS OTHERWISE SPECIFIED DIMENSIONS ARE IN INCHES
TOLERANCES ARE
DECIMALS
.X±
.XX±
.XXX±
ANGLES±
DO NOT SCALE DRAWING
APPROVAL DATE
DWN 7/9/83
CHK G V BODDY 2-9-84
DES ENG 2-9-84
SAFETY 7/2/84
DES MGR 4-13-84
MFG ENG 6/25/84
ISSUED 7-2-84
cipher SAN DIEGO CALIF
TITLE SCHEMATIC-POWER SUPPLY, MGCR
CODE IDENT 32274
SIZE D
DWG NO 961251-300
REV A
SCALE NONE
MOD
SH 1 OF 2
BRUNING 40-22

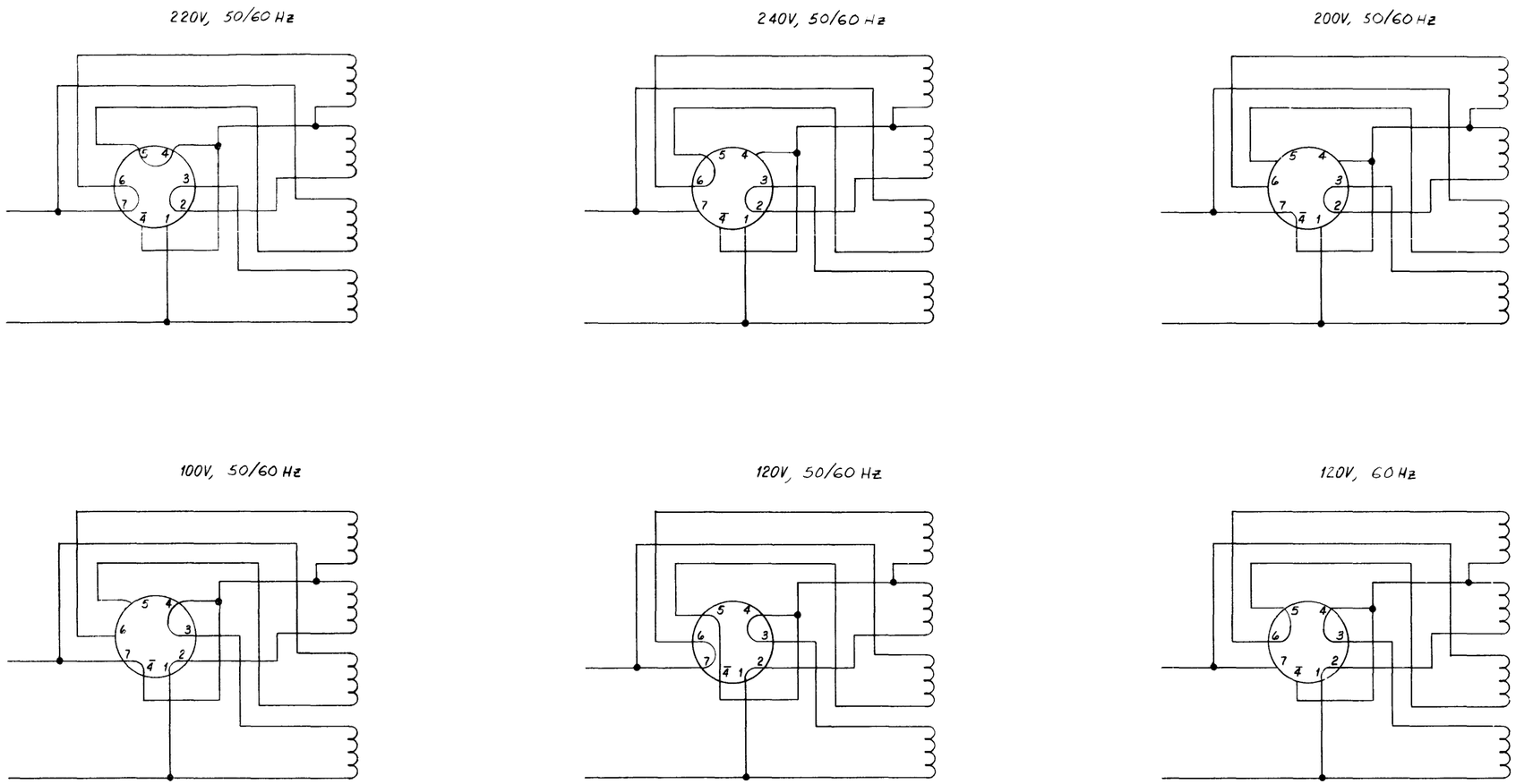

REVISION					
LTR	DESCRIPTION	DWN	DATE	APVD	DATE

961251-300

REV A

REV STATUS	REV																								
OF SHEETS	SH	1	2	3	4	5	6	7	8	9	10	11	12	13	14	15	16	17	18	19	20	21	22	23	24

ALL INFORMATION CONTAINED IN OR DISCLOSED BY THIS DOCUMENT IS CONSIDERED CONFIDENTIAL AND PROPRIETARY BY CIPHER DATA PRODUCTS, INC. BY ACCEPTING THIS MATERIAL THE RECIPIENT AGREES THAT THIS MATERIAL AND THE INFORMATION CONTAINED THEREIN IS HELD IN CONFIDENCE AND IN TRUST AND WILL NOT BE USED, REPRODUCED IN WHOLE OR IN PART NOR ITS CONTENTS REVEALED TO OTHERS, EXCEPT TO MEET THE PURPOSE FOR WHICH IT WAS DELIVERED. IT IS UNDERSTOOD THAT NO RIGHT IS CONVEYED TO REPRODUCE OR HAVE REPRODUCED ANY ITEM HEREIN DISCLOSED WITHOUT EXPRESS PERMISSION FROM CIPHER DATA PRODUCTS, INC.

UNLESS OTHERWISE SPECIFIED DIMENSIONS ARE IN INCHES
TOLERANCES ARE
DECIMALS
.X±
.XX±
.XXX±
ANGLES±
DO NOT SCALE DRAWING

APPROVAL		DATE
DWN	[signature]	12/20/83
CHK	G V BODDY	4-9-84
DES ENG		
SAFETY		
DES MGR	[signature]	4-9-84
MFG ENG		
ISSUED		

cipher data products, inc. SAN DIEGO CALIF

TITLE SCHEMATIC - POWER SUPPLY, MGCR

CODE IDENT	SIZE	DWG NO	REV
32274	D	961251-300	L

SCALE NONE | MOD | SH 2 OF 2

REVISION					
LTR	DESCRIPTION	DWN	DATE	APVD	DATE
A	PROD REL ERO SD-0788	C.W.	10-30-85	[illegible]	11-21-85
B	INCORP ECO 19080	CW	6-2-86	[illegible]	6/9/86
C	INCORP ECO 19174	CW	9-5-86	[illegible]	9/5/86
D	INCORP ECO 19191	CW	9-9-86	[illegible]	9/9/86
E	INCORP ECO 9476	CW	1-7-87	[illegible]	1/9/87
F	INCORP ECO 19429	CW	11-7-87	[illegible]	11/10/87

REFERENCE DESIGNATION		
LTR	LAST USED	NOT USED
C	285	
CR	86	
DS	1	
J	9	2,3,4,5
K	1	
L	11	
Q	51	
R	357	
T	2	
U	17V	
VR	6	
TP	37	

IC TYPE	REFERENCE DESIGNATOR	+5V	GND	+12	-12	+6	-6
74LS08	U17S, 14E, 14F	14	7				
74LS11	U17P, 17T	14	7				
74LS14	U15E	14	7				
74LS04	U13H	14	7				
74LS74	U15R	14	7				
74LS123	U16M, 17R	16	8				
74LS138	U12E	16	8				
74LS175	U11E, 12C	16	8				
74LS378	U13A, 13C	16	8				
74LS244	U11C	20	10				
74LS00	U12H	14	7				
74LS32	U12F	14	7				
74LS05	U7C	14	7				
7407	U9H 17V	14	7				
7414	U16N	14	7				
TL082	U8A 8B, 11A, 11B			8	4		
LM339	U3E, 7G, 12K, 16H, 15P, 15T, 8W, 15N			3	12		
LM3525A	U5G		12				
NE556N	U5E	14	7				
RC4136	U16K, 16L, 15S, 15V, 6W			11	7		
MD14051	U10A, 10E		8			16	7
AD7533LN	U12A	15	3	14	3		
ADC1001	U13E	20	10				
Z8036	U14A, 16A	23	7				

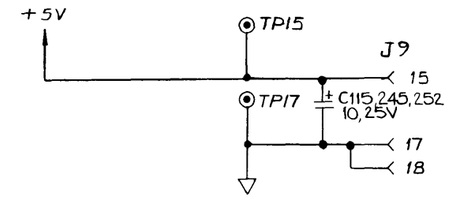

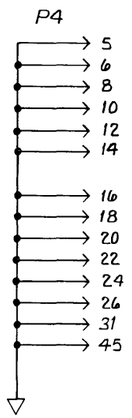

5. EACH ROW OF IC'S WILL HAVE A 10 uF, 25V CAP.
4. EACH IC HAS .1 uF, 50V FROM ITS POWER TERMINAL'S TO GROUND.
3. IC VOLTAGE AND GND ASSIGNMENTS, UNUSED GATES.
2. CAPACITOR VALUES ARE IN MICROFARADS.
1. RESISTOR VALUES ARE IN OHMS. 1/4W. 5%

NOTES: UNLESS OTHERWISE SPECIFIED.

ALL INFORMATION CONTAINED IN OR DISCLOSED BY THIS DOCUMENT IS CONSIDERED CONFIDENTIAL AND PROPRIETARY BY CIPHER DATA PRODUCTS, INC. BY ACCEPTING THIS MATERIAL THE RECIPIENT AGREES THAT THIS MATERIAL AND THE INFORMATION CONTAINED THEREIN IS HELD IN CONFIDENCE AND IN TRUST AND WILL NOT BE USED, REPRODUCED IN WHOLE OR IN PART, NOR ITS CONTENTS REVEALED TO OTHERS, EXCEPT TO MEET THE PURPOSE FOR WHICH IT WAS DELIVERED. IT IS UNDERSTOOD THAT NO RIGHT IS CONVEYED TO REPRODUCE OR HAVE REPRODUCED ANY ITEM HEREIN DISCLOSED, WITHOUT EXPRESS PERMISSION FROM CIPHER DATA PRODUCTS, INC.

REV STATUS	REV F E F A A D A'
OF SHEETS	SH 1 2 3 4 5 6 7 8 9 10 11 12 13 14 15 16 17 18 19 20 21 22 23 24

UNLESS OTHERWISE SPECIFIED DIMENSIONS ARE IN INCHES TOLERANCES ARE DECIMALS .X ± .XX ± .XXX ± ANGLES ± DO NOT SCALE DRAWING	APPROVAL	DATE
	DWN C. WRIGHT	11/21/85
	CHK [illegible]	11/21/85
	DESIGN [illegible]	11/21/85
	SAFETY [illegible]	11/26/85
	DESIGNER [illegible]	11/26/85
	MFG ENG [illegible]	11/26/85
	ISSUED [illegible]	12-1-87

cipher SAN DIEGO CALIF

TITLE SCHEM-SENSOR/SERVO,5V

CODE IDENT	SIZE	DWG NO.	REV
32274	D	962832-300	F

SCALE —— MOD MGCR SH 1 OF 7

BRUNING 40-22

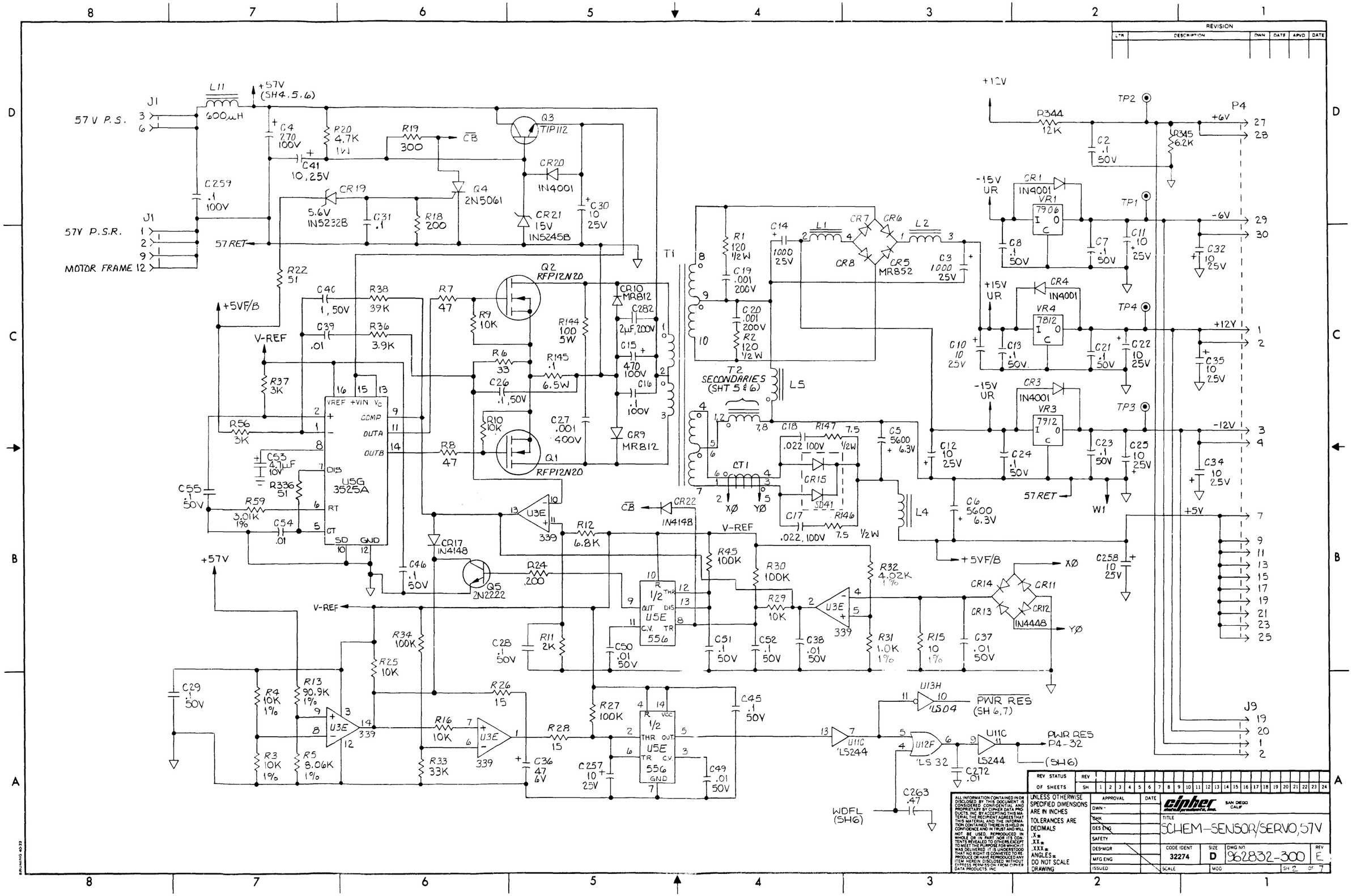

REVISION

LTR	DESCRIPTION	DWN	DATE	APVD	DATE

REV STATUS OF SHEETS — REV / SH 1 2 3 4 5 6 7 8 9 10 11 12 13 14 15 16 17 18 19 20 21 22 23 24

ALL INFORMATION CONTAINED IN OR DISCLOSED BY THIS DOCUMENT IS CONSIDERED CONFIDENTIAL AND PROPRIETARY BY CIPHER DATA PRODUCTS, INC. BY ACCEPTING THIS MATERIAL THE RECIPIENT AGREES THAT THIS MATERIAL AND THE INFORMATION CONTAINED THEREIN IS HELD IN CONFIDENCE AND IN TRUST AND WILL NOT BE USED, REPRODUCED IN WHOLE OR IN PART, NOR ITS CONTENTS REVEALED TO OTHERS EXCEPT TO MEET THE PURPOSE FOR WHICH IT WAS DELIVERED. IT IS UNDERSTOOD THAT NO RIGHT IS CONVEYED TO REPRODUCE OR HAVE REPRODUCED ANY ITEM HEREIN DISCLOSED WITHOUT EXPRESS PERMISSION FROM CIPHER DATA PRODUCTS, INC.

UNLESS OTHERWISE SPECIFIED DIMENSIONS ARE IN INCHES
TOLERANCES ARE
DECIMALS
.X±
.XX±
.XXX±
ANGLES±
DO NOT SCALE DRAWING

APPROVAL	DATE
DWN	
CHK	
DES ENG	
SAFETY	
DES MGR	
MFG ENG	
ISSUED	

cipher data products, inc. SAN DIEGO CALIF

TITLE: SCHEM-SENSOR/SERVO,57V

CODE IDENT	SIZE	DWG NO	REV
32274	D	962832-300	E

SCALE — MOD — SH 2 OF 7

REVISION					
LTR	DESCRIPTION	DWN	DATE	APVD	DATE

ERASE HEAD DRIVER

WRITE CENTER TAP HEAD DRIVER

REV STATUS	REV
OF SHEETS	SH 1 2 3 4 5 6 7 8 9 10 11 12 13 14 15 16 17 18 19 20 21 22 23 24

UNLESS OTHERWISE SPECIFIED DIMENSIONS ARE IN INCHES
TOLERANCES ARE
DECIMALS
X ±
XX ±
XXX ±
ANGLES ±
DO NOT SCALE DRAWING

APPROVAL | DATE

DWN | CHK | DES ENG | SAFETY | DES MGR | MFG ENG | ISSUED

cipher data products, inc. SAN DIEGO CALIF.

TITLE: SCHEM-SENSOR/SERVO 57V

CODE IDENT 32274 | SIZE D | DWG NO 962832-300 | REV F

SCALE | MOD MGCR | SH 3 OF 7

ALL INFORMATION CONTAINED IN OR DISCLOSED BY THIS DOCUMENT IS CONSIDERED CONFIDENTIAL AND PROPRIETARY BY CIPHER DATA PRODUCTS, INC. BY ACCEPTING THIS MATERIAL THE RECIPIENT AGREES THAT THIS MATERIAL AND THE INFORMATION CONTAINED THEREIN IS HELD IN CONFIDENCE AND IN TRUST AND WILL NOT BE USED, REPRODUCED IN WHOLE OR IN PART, NOR ITS CONTENTS REVEALED TO OTHERS EXCEPT TO MEET THE PURPOSE FOR WHICH IT WAS DELIVERED. IT IS UNDERSTOOD THAT NO RIGHT IS CONVEYED TO REPRODUCE OR HAVE REPRODUCED ANY ITEM HEREIN DISCLOSED WITHOUT EXPRESS PERMISSION FROM CIPHER DATA PRODUCTS, INC.

BRUNING A0-22

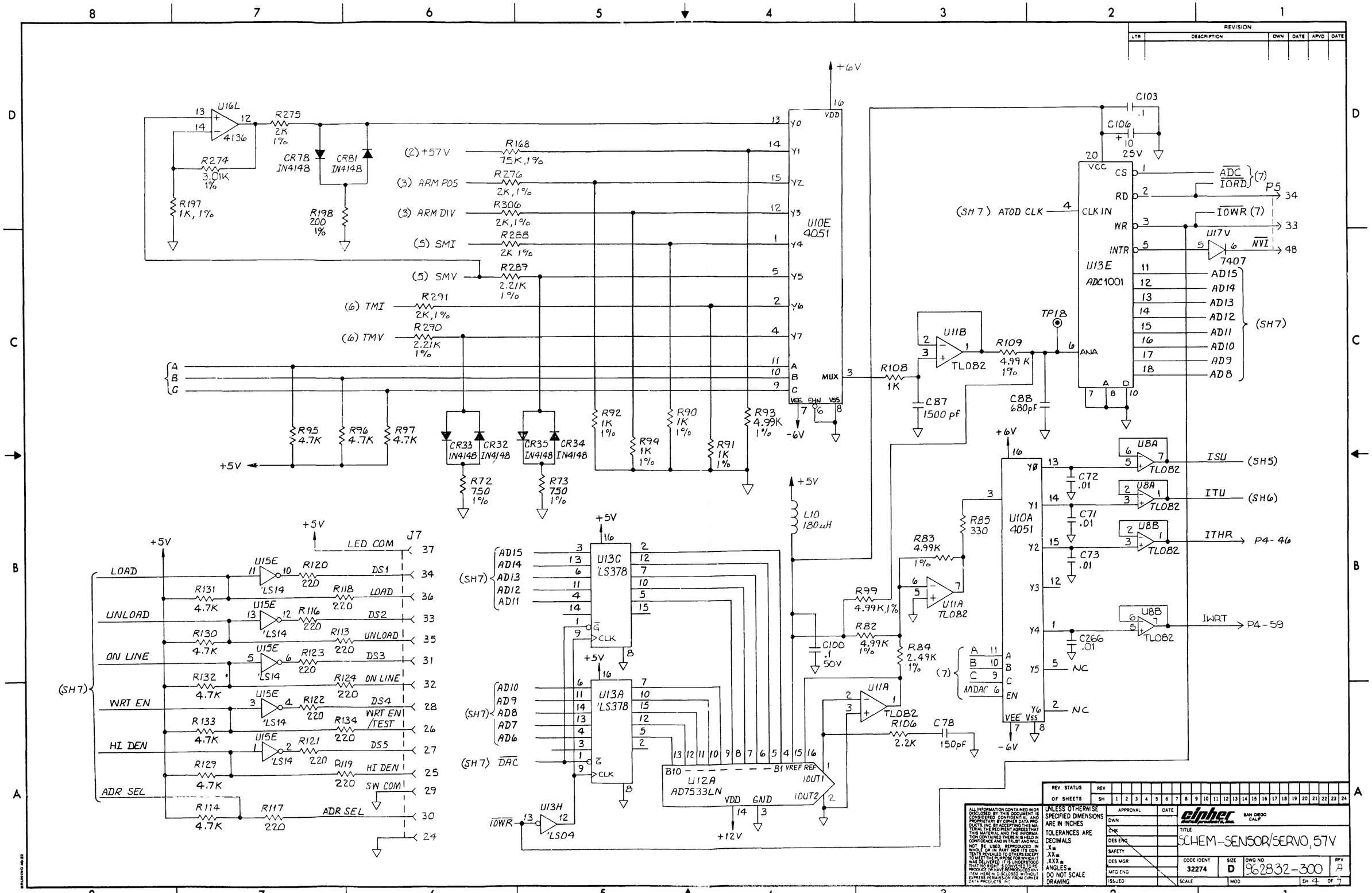

REVISION

LTR	DESCRIPTION	DWN	DATE	APVD	DATE

REV STATUS OF SHEETS

ALL INFORMATION CONTAINED IN OR DISCLOSED BY THIS DOCUMENT IS CONSIDERED CONFIDENTIAL AND PROPRIETARY BY CIPHER DATA PRODUCTS, INC. BY ACCEPTING THIS MATERIAL THE RECIPIENT AGREES THAT THIS MATERIAL AND THE INFORMATION CONTAINED THEREIN IS HELD IN CONFIDENCE AND IN TRUST AND WILL NOT BE USED, REPRODUCED IN WHOLE OR IN PART NOR ITS CONTENTS REVEALED TO OTHERS EXCEPT TO MEET THE PURPOSE FOR WHICH IT WAS DELIVERED. IT IS UNDERSTOOD THAT NO RIGHT IS CONVEYED TO REPRODUCE OR HAVE REPRODUCED ANY ITEM HEREIN DISCLOSED WITHOUT EXPRESS PERMISSION FROM CIPHER DATA PRODUCTS, INC.

UNLESS OTHERWISE SPECIFIED DIMENSIONS ARE IN INCHES
TOLERANCES ARE
DECIMALS
.X±
.XX±
.XXX±
ANGLES±
DO NOT SCALE DRAWING

APPROVAL	DATE
DWN	
CHK	
DES ENG	
SAFETY	
DES MGR	
MFG ENG	
ISSUED	

cipher data products, inc. SAN DIEGO CALIF

TITLE: SCHEM-SENSOR/SERVO, 57V

CODE IDENT	SIZE	DWG NO.	REV
32274	D	962832-300	A

SCALE | MOD | SH 4 OF 7

REVISION					
LTR	DESCRIPTION	DWN	DATE	APVD	DATE

T2 (SH2) 5 6 · CR53 IN4448 · R185 47 · C158 .001 · C153 .001 · R180 200 · Q27 2N2907 · C154 10 25V · C159 .1 50V · R182 200 1W · CR54 IN4148 · R187 200 · CR55 IN4148 · Q28 2N2907 · R181 10 · C160 .0047 · R188 10K · Q37 RFP15N12 · CR56 1302 · CR86 1302 · +57V (SH 2) · C163 470 100V · C261 .1μF 100V · C52 1302 · CR48 1302 · Q35 RFP15N12 · R174 10K · R177 10 · C148 .0047 · CR51 IN4148 · Q25 2N2907 · CR50 IN4148 · R173 200 · C149 .001 · Q26 2N2907 · R175 200 1W · R176 200 · R178 200 1/2W · C147 .1 50V · C150 10 · CR49 IN4148 · R171 47 · C255 .001 · T2 (SH2) 10 9

+12V · R259 620 · CR76 IN4148 · CR75 IN4148 · Q38 RFP15N12 · CR74 1302 · R170 47, 2W · C146 .0047 200V · R257 10 · R266 10K · C124 .1 100V · L8 600 μH · R347 10 3.75W · K1 8 10 9 · J1-10 · J1-7 · SUPPLY MOTOR · L9 600 μH · CR71 1302 · Q36 RFP15N12 · CR70 1302 · +12V · C184 .1 50V · CR73 IN4148 · CR72 IN4148 · R248 10 · R237 10K · C183 .0047 · Q43 2N2907 · R238 200 · R239 200 1W · Q44 2N2222 · +5V · Q23 2N3019 · R162 390 · C141 .1 50V

+5V · R179 200 1/2W · Q29 2N3019 · C157 .1 50V · R184 390 · Q45 2N2222 · R267 200 · C193 .1 50V · R258 200 1W · Q46 2N2907 · CR77 1302 · TP34 (SH7) · C133 .068 200V · TP35 · C135 .068 200V · CR70 1302

+12V · R249 620 · Q30 VN10KM · REV · R186 3.9K · R256 .25 3.75W · R255 .25 3.75W · R235 .25 3.75W · R236 .25 3.75W · R172 3.9K · Q24 VN10KM · TP16 · TP25 · REV · FWD / REV (SH7) · U17V 7407

R250 680 · R233 680 · R234 680 · R240 680 · R227 330 · R230 330 · C254 .047 · C185 .047 · C181 .047 · C177 .047 · C171 .0022μF · R217 40.2K 1% · R222 4.99K, 1% · R223 4.99K, 1% · C168 .0022μF · R215 40.2K 1% · TP8 · SMI (SH4) · R268 40.2K 1% · R261 40.2K 1% · C189 .01 · R251 40.2K 1% · R252 200K 1% · R264 200K 1% · C197 .022 · C194 .022 · R265 40.2K 1% · C190 .01 · TP10 · SMV (SH4) · U16W 4136

(SH4) ISU · R342 4.99K 1% · C275 .47 · R349 4.99K 1% · R280 10K, 1% · C208 2200pF · R284 5.6K · C209 .15 50V · R285 3.6K · R292 36K · U15S 4136 · U15T 339 · R324 6.8K · R326 4.7K · R323 6.8K · +5V · U17T 'LS11N · SER EN 2 (SH6,7) · (SH6) * · (SH6) f- f+

+12V · R322 3K · R321 470 · R327 470 · R320 3K · - 12V · C210 .022 · R318 220 · C236 820pF 300V · R319 47K · R315 4.7K · U15S 4136 · U11S 4136 · -12V · R287 1K · R283 2K · C207 .022

VR6 IN OUT 7805 C · C206 .1 50V · C205 .1 50V · VI (SH3,6) · ARMCLK (SH3) · R314 2.2K · U15R 'LS74 · TP19 · SERVCLK (SH7) · U18W 339 · R231 5.1K · C179 .0047 · R232 5.1K · C180 .0047 · (SH6) REF · R243 100 · (SH6)△

SUPPLY SERVO

REV STATUS	REV																							
OF SHEETS	SH	1	2	3	4	5	6	7	8	9	10	11	12	13	14	15	16	17	18	19	20	21	22	23	24

ALL INFORMATION CONTAINED IN OR DISCLOSED BY THIS DOCUMENT IS CONSIDERED CONFIDENTIAL AND PROPRIETARY BY CYPHER DATA PRODUCTS, INC BY ACCEPTING THIS MATERIAL THE RECIPIENT AGREES THAT THIS MATERIAL AND THE INFORMATION CONTAINED THEREIN IS HELD IN CONFIDENCE AND IN TRUST AND WILL NOT BE USED, REPRODUCED IN WHOLE OR IN PART NOR ITS CONTENTS REVEALED TO OTHERS EXCEPT TO MEET THE PURPOSE FOR WHICH IT WAS DELIVERED. IT IS UNDERSTOOD THAT NO RIGHT IS CONVEYED TO REPRODUCE OR HAVE REPRODUCED ANY ITEM HEREIN DISCLOSED WITHOUT EXPRESS PERMISSION FROM CYPHER DATA PRODUCTS, INC

UNLESS OTHERWISE SPECIFIED DIMENSIONS ARE IN INCHES
TOLERANCES ARE
DECIMALS
.X ±
.XX ±
.XXX ±
ANGLES ±
DO NOT SCALE DRAWING

APPROVAL	DATE
DWN	
CHK	
DES ENG	
SAFETY	
DES MGR	
MFG ENG	
ISSUED	

cipher SAN DIEGO CALIF

TITLE: SCHEM-SENSOR/SERVO STR

CODE IDENT	SIZE	DWG NO	REV
32274	D	962832-300	A

SCALE | MOD | SH 5 OF 7

BRUNING 40-22

REVISION					
LTR	DESCRIPTION	DWN	DATE	APVD	DATE

+57V (SH2)

CR43 1N4148 · R164 47 · C143 .001 · T2 (SH2) · C139 .001 · R159 200 · Q19 2N2907 · R158 200 1/2W · C140 10 25V · C144 .1 50V · R161 200 1W

CR44 4148 · R166 200 · CR45 4148 · Q20 2N2907 · R160 °C · C145 .0047 · Q33 RFP15N12 · R167 10K

CR46 1302 · C125 470 100V · C283 2µF 200V · C260 .1µF 100V · CR47 1302 · CR42 1302 · CR38 1302

Q31 RFP15N12 · R152 10K · R155 10 · C132 .0047 · CR41 4148 · Q17 2N2907 · CR40 4148 · R151 200 · R153 200 1W · Q18 2N2907 · C137 .001 · R154 200 · R157 200 1/2W · C131 50V · C138 10 25V · CR39 1N4148 · R149 47 · C130 .001 · T2 (SH2)

+5V · Q21 2N3019 · C142 .1 50V · R163 390 · +12V · R209 620 · REV · R165 3.9K · Q22 VN10KM

+12V · R221 620 · Q41 2N2222 · C176 .1 50V · R224 200 1W · R226 200 · Q42 2N2907 · CR68 4148 · CR67 4148 · R220 10 · R225 10K · C175 .0047

Q34 RFP15N12 · CR66 1302 · R156 47 2W · C128 .0047 200V · C123 .1 100V · L6 600µH · 1 6 7 · 5 6 · K1 · J1-11 · R348 4 3.75W · J1-8 · L7 600µH · 3 4 · TP33 · TAKE UP MOTOR · TP32 · C136 .068 200V · C134 .068 200V · CR69 1302 · CR61 1302

CR63 1302 · Q32 RFP15N12 · R202 10K · R208 10 · C164 .0047 · CR64 IN4148 · Q39 2N2907 · CR65 IN4148 · R203 200 · R204 200 1W · Q40 2N2222 · C165 .1 50V · +12V · +5V · Q15 2N3019 · C129 .1 50 · R148 390

TP26 · U17V 7407 · FWD (SH7) · Q16 VN10KM · R150 3.9K · REV (SH7)

TP9 · R219 .25 3.75W · R218 .25 3.75W · R200 .25 3.75W · R201 .25 3.75W · R305 47K · C253 4.7µF · R316 220K · C235 1.0 50V · DS1 FAILURE · R282 470 · TP27 · U17V 7407

C188 .01 · R247 40.2K 1% · R260 40.2K 1% · R263 40.2K 1% · R253 200K 1% · U6W 4136 · TMV (SH4) · R262 200K 1% · C195 .022 · C196 .022 · R269 40.2K 1% · C191 .01 · R228 680 · R207 680 · R205 680 · R229 680 · R211 330 · R206 330 · C172 .047 · C178 .047 · C166 .047 · C169 .047 · C167 .0022 · R214 40.2K 1%

R277 200 · R279 22K · R311 4.7K · R278 2.2K · C204 .1 50V · U15N 339 · U16M 'LS123 · NC · PWR ON (SH7) · PWR RES (SH2) · U17R 'LS123 · U15R 'LS74 · WDFL (SH2) · Y1 (SH5)

R317 4.7K · (SH7) EZCI · P5-43 WATCHDOG EN · U17S 'LS08 · U17S 'LS08 · PWR RES (SH2) · U16N 7414 · U17S 'LS08 · U16N 7414 · SERV EN1

(SH4) ITU · R343 4.99K 1% · C276 .47 · R350 4.99K 1% · C212 2200pF · R210 10K, 1% · TP7 · TMI (SH4) · U6W 4136 · R216 40.2K 1% · C170 .0022µF · R212 4.99K, 1% · R213 4.99K, 1%

R310 4.7K · U15P 339 · R309 6.8K · R307 4.7K · R308 6.8K · U15P 339 · U17P 'LS11 · FWD · REV · U17P 'LS11 · SERV EN2 (SH5)

R246 11K · U8W 339 · R245 5.1K · C187 .0047 · R312 4.7K · R313 100K · C234 1,50V · R293 5.6K · C213 .15 · U15V 4136 · R294 3.6K · R296 36K · U15V 4136 · +12V · -12V · +12V · -12V

(SH5) REF · U8W 339 · R244 5.1K · C186 .0047 · R254 3K · R242 100 · C233 .022 · (SH5) · U17R 'LS123 · HI1 · TP28 · (SH5)* · TP24 · TP23 · f+ · f-

TAKE UP SERVO

REV STATUS	REV																						
OF SHEETS	SH	1	2	3	4	5	6	7	8	9	10	11	12	13	14	15	16	17	18	19	20	21	22	23	24

ALL INFORMATION CONTAINED IN OR DISCLOSED BY THIS DOCUMENT IS CONSIDERED CONFIDENTIAL AND PROPRIETARY BY CIPHER DATA PRODUCTS, INC. BY ACCEPTING THIS MATERIAL THE RECIPIENT AGREES THAT THIS MATERIAL AND THE INFORMATION CONTAINED THEREIN IS HELD IN CONFIDENCE AND IN TRUST AND WILL NOT BE USED, REPRODUCED, IN WHOLE OR IN PART, NOR ITS CONTENTS REVEALED TO OTHERS EXCEPT TO MEET THE PURPOSE FOR WHICH IT WAS DELIVERED. IT IS UNDERSTOOD THAT NO RIGHT IS CONVEYED TO REPRODUCE OR HAVE REPRODUCED ANY ITEM HEREIN DISCLOSED WITHOUT EXPRESS PERMISSION FROM CIPHER DATA PRODUCTS, INC.

UNLESS OTHERWISE SPECIFIED DIMENSIONS ARE IN INCHES
TOLERANCES ARE
DECIMALS
.X ±
.XX ±
.XXX ±
ANGLES ±
DO NOT SCALE DRAWING

APPROVAL	DATE
DWN	
CHK	
DES ENG	
SAFETY	
DES MGR	
MFG ENG	
ISSUED	

cipher data products, inc. SAN DIEGO CALIF

TITLE: SCHEM-SENSOR/SERVO, 57V

CODE IDENT	SIZE	DWG NO.	REV
32274	D	962832-300	D

SCALE · MOD · SH 6 OF 7

BRUNING 49-22

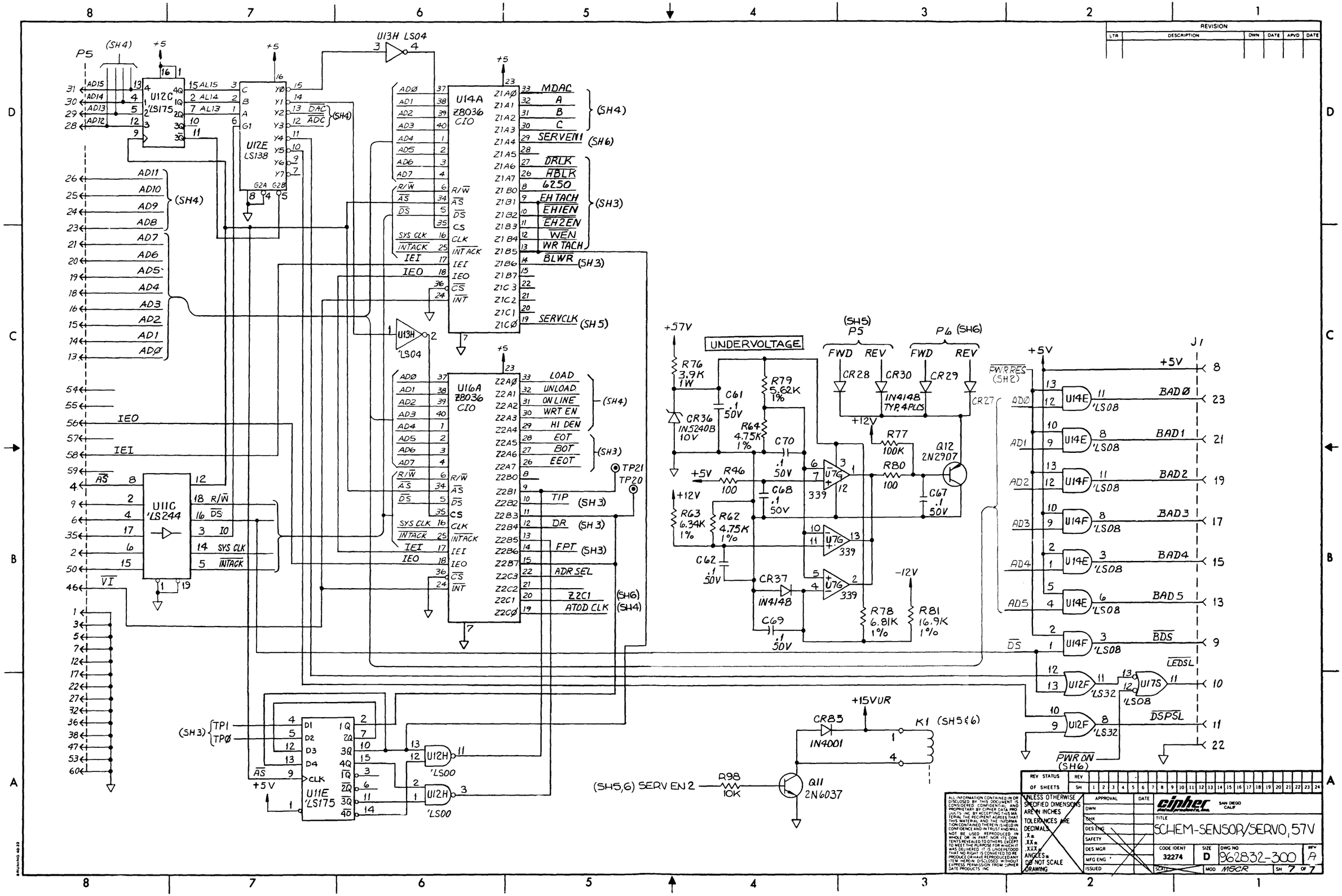

REVISION					
LTR	DESCRIPTION	DWN	DATE	APVD	DATE

REV STATUS OF SHEETS — REV — SH 1 2 3 4 5 6 7 8 9 10 11 12 13 14 15 16 17 18 19 20 21 22 23 24

ALL INFORMATION CONTAINED IN OR DISCLOSED BY THIS DOCUMENT IS CONSIDERED CONFIDENTIAL AND PROPRIETARY BY CIPHER DATA PRODUCTS INC BY ACCEPTING THIS MATERIAL THE RECIPIENT AGREES THAT THIS MATERIAL AND THE INFORMATION CONTAINED THEREIN IS HELD IN CONFIDENCE AND IN TRUST AND WILL NOT BE USED, REPRODUCED IN WHOLE OR IN PART NOR ITS CONTENTS REVEALED TO OTHERS EXCEPT TO MEET THE PURPOSE FOR WHICH IT WAS DELIVERED. IT IS UNDERSTOOD THAT NO RIGHT IS CONVEYED TO REPRODUCE OR HAVE REPRODUCED ANY ITEM HEREIN DISCLOSED WITHOUT EXPRESS PERMISSION FROM CIPHER DATA PRODUCTS INC

UNLESS OTHERWISE SPECIFIED DIMENSIONS ARE IN INCHES
TOLERANCES ARE DECIMALS
.X±
.XX±
.XXX±
ANGLES±
DO NOT SCALE DRAWING

APPROVAL	DATE
DWN	
CHK	
DES ENG	
SAFETY	
DES MGR	
MFG ENG	
ISSUED	

cipher data products, inc. SAN DIEGO CALIF

TITLE: SCHEM-SENSOR/SERVO, 57V

CODE IDENT	SIZE	DWG NO	REV
32274	D	962832-300	A

SCALE — MOD MGCR — SH 7 OF 7

REVISION					
LTR	DESCRIPTION	DWN	DATE	APVD	DATE
A	PROD RELEASE TO - 078	E.C.	10-28-81	[illegible]	2-2-82
B	INCORP ECO 18954	CW	6-27-82	[illegible]	6/28
C	INCORP ECO 19050	CW	6-27-82	[illegible]	6/28
D	INCORP ECO 19174	CW	9-28-82	[illegible]	9/28/82
E	INCORP ECO 19191	CW	9-30-82	[illegible]	9/30/82
F	INCORP ECO 19426	CW	11-5-82	[illegible]	11/17
G	INCORP ECO 19427	CW	11-5-82	[illegible]	11/18

BUS-BAR (74) R345 R344 (75) BUS BAR R336 SEE DETAIL "B" TYP. Q1,2,31-38 (4) SEE DETAIL "A" (4) (3) (22) CARD EJECTOR 2 PLCS.

SEE DETAIL "B" TYP VR3-5 (4) BUS BAR (73) F/T-AB C267 C265 (6) C266 R347 C272 C106 (+) END

2.00±.062

(T) (L) (R) (B)

COMPONENT ORIENTATION

(278) LABEL (1) (24) STIFFENER (30) ADHESIVE

(5) THIS REWORK FOR ASSY 962810-001 ONLY

(6) USE SLEEVING AS REQUIRED.

SEE DETAIL "C"

R342 R349 C275 C276 R350 R343

C263 C278 C279 C273 (6) F/T-V CUT 3 R346 C274 R348

(76) BUS BAR

SEE DETAIL "F"

COMPONENT ADDED

ASSY LEVEL	REF DES	FROM	TO	REF DES	FROM	TO
962810-001 REV C, 962832-001 REV C	R342	U16V-13	U16V-2	R349	U16V-14	U16V-3
	C275	U16V-13	U16V-4	C276	U16V-12	U16V-5
	R350	U16V-11	U16V-6	R343	U16V-10	U16V-7
	C257	C258(T)	F/T-AB	R346	U13M-2	U13M-13
	~~C274~~	~~U13M-7~~	~~U13M-8~~	C263	U12F-4	U12F-7
	C278	CR5 LOCATION		C279	CR6 LOCATION	
	~~C273~~	~~U12K-8~~	~~U12K-9~~	C272	U11C-11	U11C-10
	C266	U8B-5	C66(T)	~~C262~~	~~CR16 LOCATION~~	
	C280	R50(B)	R43(T)	C265	R41(T)	R41(B)
	R345	C1 LOCATION		R344	CR2(T)	CR2(B)
	R347	J6-7	J6-9	R348	J6-10	J6-12
	R336	U5G-5	U5G-7	R351	JMP24,25	JMP26
	R140	ORIG. LOCATION				
	R352	U15M-7	U15M-8			
962810-002 REV A, 962832-002 REV A	R194	U12K-9	U12K-14			
	C161	U12K-9	U12K-14			
962810-001 REV F, 962832-001 REV E, 962810-002 REV F, 962832-002 REV E	C282	C15(L)	C15(R)			
	C263	C125(L)	C125(R)			

(79) (REV. A)

COMPONENT DELETED

ASSY LEVEL	REFERENCE DESIGNATOR
962810-001 REV C, 962832-001 REV C	R14,17,35,41,51,53-55,57,58,107, 115,126,128,139,140, 241,281, 286,295,199 DELETE R288 FROM 37V ASSY ONLY. R337,346
	C1,9,33,42,48,77,79,116-121,126, 127,199,211,214,215,237,262, 273,274.
	CR16,25,26,59,60,2,18
	VR2
	J6
	Y1
	Q6
	U17A,17D,17E,7B

(309) NYLON, SCREW PWB, COMP SIDE (311) NUT, ACORN (310) NYLON, WASHER

DETAIL "C"

(7) SOLDERED WIRE SHOULD BE KEEP .250 BACK FROM CONNECTOR FINGER

(6) KEEP WIRES .250 AWAY FROM EDGE OF BOARD (BOTH SIDES) TO CLEAR CARD GUIDES

(5) ROUTE JUMPER WIRE AS SHOWN, TACK IN PLACE EVERY 1.5 INCHES WITH ADHESIVE (209990-700)

(4) TORQUE SCREW BETWEEN 6" & 8" LBS. AFTER SYNC NUT HAS BEEN SOLDERED IN PLACE

(3) ROLL PIN IS FURNISHED WITH EJECTOR ITEM 22

2. FOR SCHEMATIC SEE 962810-300(37V), 962832-300(57V)

(1) MARK ASSY PART NO & REV LETTER ON ASSY LABEL ITEM 278 ON AREA INDICATED

NOTES:

(19) NUT SYNC (14) HEATSINK-VR5 (15) HEATSINK-VR3,4,Q31-38 (16) HEATSINK-VR1,2,Q1,2 (20) SCREW (4) TRANSISTOR (REF) (21) INSULATOR PWB (REF)

DETAIL "F"

VR1 VR3-5 & Q1,2,31-36

(4) SCREW (2) (20) NUT SYNC (19) HEAT-SINK (18) PWB (REF.) (REF.) HEAT SINK (CUT TO SHOW DETAIL)

DETAIL "A"

FOR REWORK USE FULL SIZE PRINT

COMPONENT SIDE

REV STATUS	REV			G	F	G																	
OF SHEETS	SH	1	2	3	4	5	6	7	8	9	10	11	12	13	14	15	16	17	18	19	20	21	22	23	24

ALL INFORMATION CONTAINED IN OR DISCLOSED BY THIS DOCUMENT IS CONSIDERED CONFIDENTIAL AND PROPRIETARY BY CIPHER DATA PRODUCTS INC BY ACCEPTING THIS MATERIAL THE RECIPIENT AGREES THAT THIS MATERIAL AND THE INFORMATION CONTAINED THEREIN IS HELD IN CONFIDENCE AND IN TRUST AND WILL NOT BE USED, REPRODUCED IN WHOLE OR IN PART NOR ITS CONTENTS REVEALED TO OTHERS EXCEPT TO MEET THE PURPOSE FOR WHICH IT WAS DELIVERED. IT IS UNDERSTOOD THAT NO RIGHT IS CONVEYED TO REPRODUCE OR HAVE REPRODUCED ANY ITEM HEREIN DISCLOSED WITHOUT EXPRESS PERMISSION FROM CIPHER DATA PRODUCTS INC

	APPROVAL	DATE
UNLESS OTHERWISE SPECIFIED DIMENSIONS ARE GIVEN IN INCHES	DWN [illegible]	10/28/81
TOLERANCES SHALL BE X, XX, XXX, ANGLES	CHK [illegible]	11/4/81
DO NOT SCALE DWG	DSGN [illegible]	11/24/81
	SAFETY [illegible]	11/24/81
CAD MOD NAME	QA [illegible]	11/24/81
	MFG ENG [illegible]	11/24/81
	ISSUED [illegible]	12-3-81

cipher data products, inc. SAN DIEGO CALIF

TITLE: PICT - PWB ASSY, SENSOR/SERVO, 57V

CODE IDENT 32274 | SIZE D | DWG NO 962832-000 | REV G | SCALE | MOD LCR | SH 1 OF 5

DRAWING 46-22

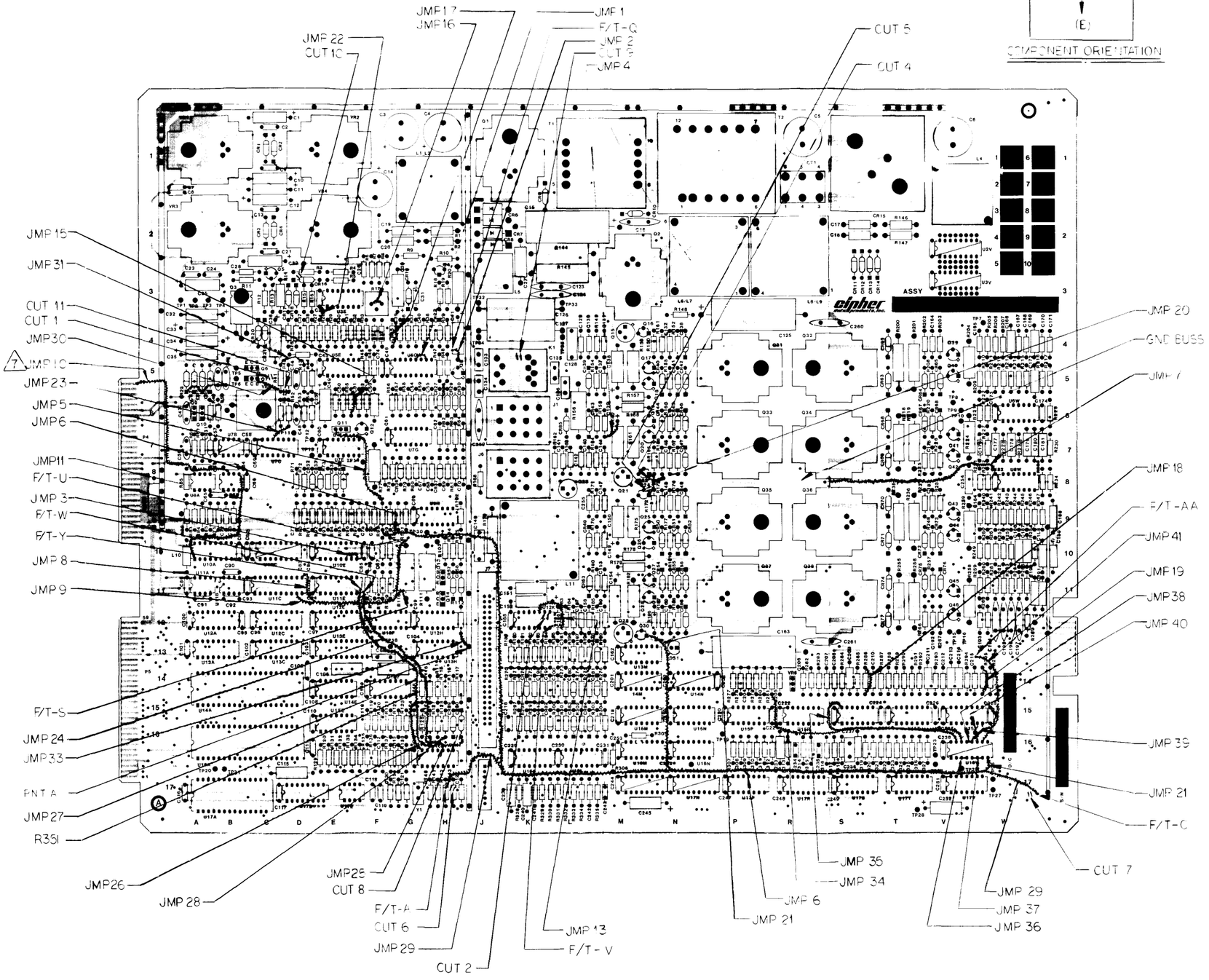

(T)
(L) (R)
(B)

COMPONENT ORIENTATION

JUMPER LIST

REWORK LEVEL	JMP NO.	FROM	TO	COMP SIDE	SLD SIDE	WIRE GA	WIRE ITEM
962810-001 REV 01 962832-001 REV 02	1	U5G-10	U5G-12	X			
	2	F/T-Q	C41(B)	X			
	3	U10E-6	U10E-8	X			
	4	C142(T)	C139(B)	X		30	303
	5	R89(T)	C11-(B)	X			
	6	R99(B)	U17B-11	X			
	7	C182(T)	GND BUSS	X		26	307
	8	U11C-11	F/T-S	X			
	9	U11C-9	F/T-U	X			
	10	U9E-7	R4-5C	X			
	11	U9E-5	U10A-1	X			
	12	C181(T)	U13M-8	X			
	13	U12K-10	R196(T)	X			
	13A	F/T-V	U13M-13	X			
	14	U13M-2	CR96(T)	X			
	15	R55(T)	R55(B)	X			
	16	R17(L)	R17(R)	X			
	17	R35(T)	R35(B)	X			
	18	R286(T)	R286(B)	X			
	19	R295(T)	R295(B)	X			
	20	Q22-1	Q44-1	X		30	303
	21	Q30-1	U16V-8	X			
	22	C29(B)	R27(T)	X			
	23	U7C-12	R52(B)	X			
	24	F/T-W	R351(T)	X			
	25	R351(T)	CR60(B)	X			
	26	R351(B)	U16H-14	X			
	27	F/T-Y	R128(B)	X			
	28	R128(B)	U16H-13	X			
	29	F/T-A	F/T-C	X			
	30	Q7-B	R41(B)	X			
	31	R41(T)	R43(T)	X			
	32	[illegible]					
	33	R112(B)	PNT A	X			
	34	R281(B)	U16V-15	X			
	35	U15S-14	U16V-14	X			
	36	U16V-2	U16V-3,4	X			
	37	U16V-5	U16V-6,7	X			
	38	U16V-12	U16V-13	X			
	39	U16V-12	C228(T)	X			
	40	U16V-11	U15V-6	X			
	41	U16V-10	F/T-AA	X			
	42	PNT B	C4(T)		X		
	43	C4(T)	PNT-C		X	22	305
	44	PNT-C	PNT-D		X		
	45	C6(T)	PNT-E		X		
	46	K1-5	J6-10		X		
	47	K1-6	J6-7		X	26	307
	48	J1-8	J6-12		X		
	49	J1-7	J6-9		X		
962810-002 REV A 962832-002 REV A	78	R353-L	J7-48	X		30	303 (10)
	79	R353-R	U12K-9	X			

CONDUCTOR CUT LIST

REWORK LEVEL	CUT NO	CUT BETWEEN FROM	CUT BETWEEN TO	COMP SIDE	SLD SIDE
962810-001 REV 01 962832-001 REV 02	1	Q7-B	C44(T)	X	
	2	U12K-8	U12K-10	X	
	3	F/T-V	R196	X	
	4	Q22-1	GND BUSS	X	
	5	Q24-1	GND BUSS	X	
	6	F/T-A	J9-4	X	
	7	F/T-C	J9-4	X	
	8	CR59(B)	CR60(B)	X	
	9	K1-5		X	
	10	CR16(L)	R4(L)	X	
	11	R41(B)	R42(B)	X	
	12	F/T-U	F/T-S		X
	13	U10E-6	F/T-F		X
	14	U16A-21	F/T-G		X
	15	U13M-8	F/T-H		X
	16	U7E-12	Q11-B		X
	17	Q7-B	U7C-12		X
	18	F/T-J	C195 B		X
	19	R126(B)	U16H-4		X
	20	F/T-K	F/T-M		X
	21	F/T-N	F/T-P		X
	22	K1-8	PNT-F		X
	23	R41(B)	R51(T)		X

COMP SIDE (CONTINUED)

CODE IDENT	SIZE	DWG NO	REV
32274	D	962832-000	E

SCALE 1/1 | MOD GCR | SH 2 OF

BRUNING 40-22

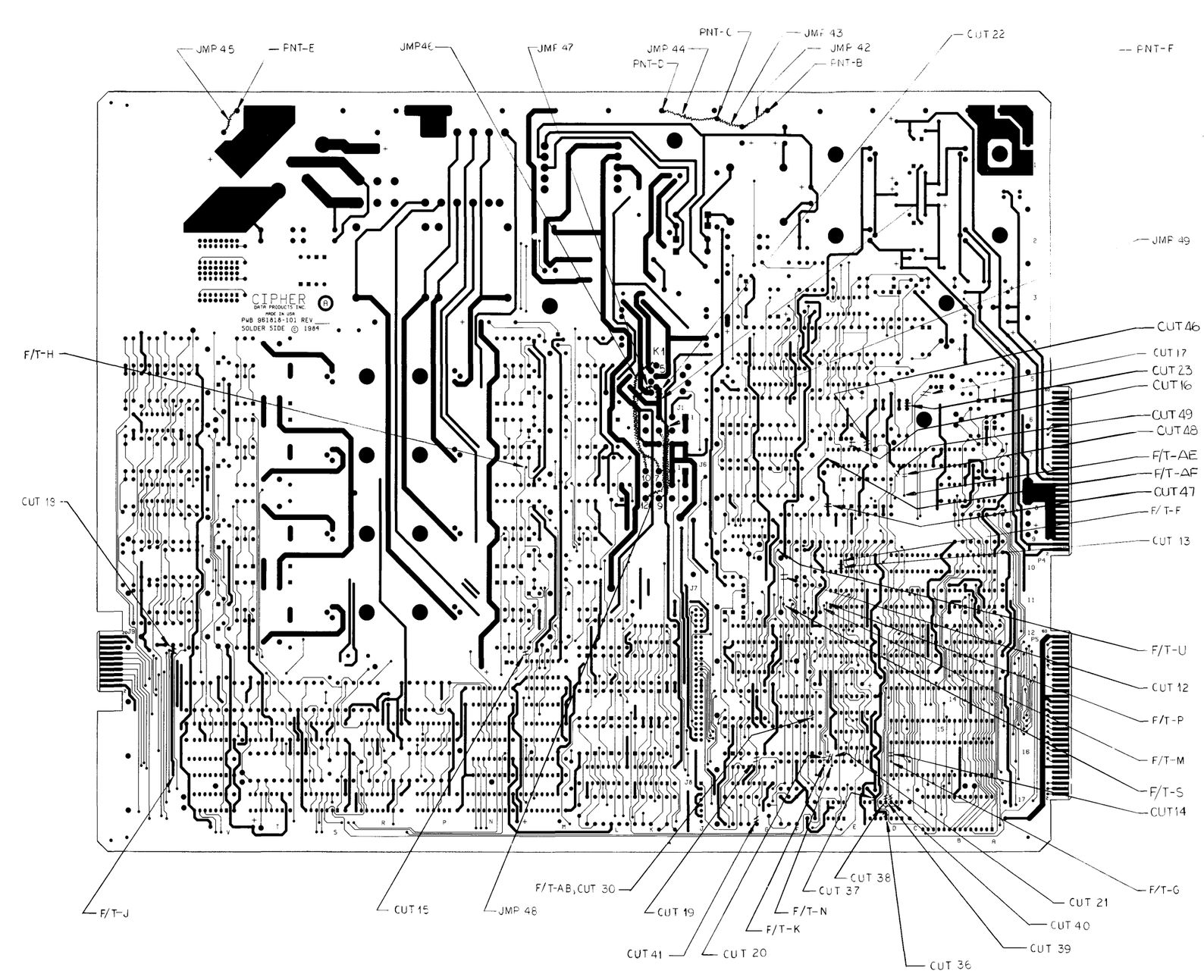

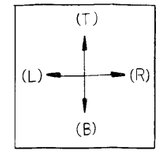

COMPONENT ORIENTATION

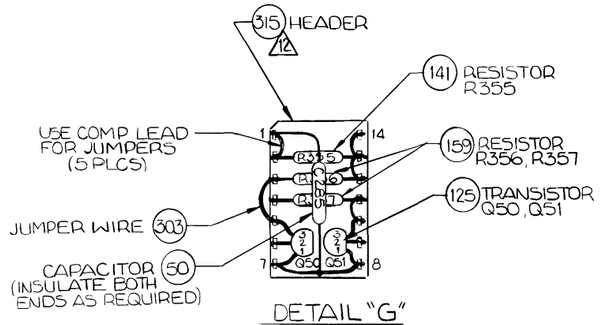

DETAIL "G"

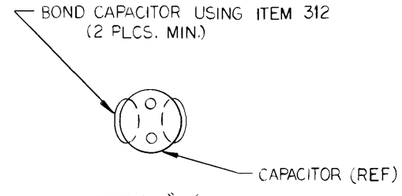

DETAIL "D"
TYP. C3-6 & 14

10 SOLDER APPROX. 3" OF JUMPER WIRE ITEM 303 TO J7-48. AT THE OTHER END OF THIS WIRE SOLDER TOGETHER ONE END EACH OF RES. R353 & C281. SOLDER APPROX. 1.5" OF JUMPER WIRE ITEM 303 TO FREE END OF RES. R353. THIS IS TO BE CONNECTED TO U12K-9. INSULATE RES. R353 SOLDERED JOINTS WITH ITEM 314, (HEAT SHRINK.) CONNECT FREE END OF C281 TO C152 END CLOSE TO J7. USE ITEM 313 (TUBING) AS REQUIRED. TACK RES. R353 IN PLACE APPROX. WHERE SHOWN AND JUMPER WIRE AS IT REQUIRED. COMPONENT SIDE ONLY.

11 LOWER END OF R44 SHOULD NOT BE SOLDER ONTO THE PWB HOLE. THIS END LIFTED OFF THE PWB. SOLDER A 30 GA. JUMPER WIRE ITEM 303, ENCLOSED SOLDER JOINT WITH HEATSHRINK ITEM 304 AND CONNECT TO R97-T.

12 USING COMPONENT CALLED OUT AS SHOWN AND LSTED IN BOM. BUILD HEADER AS SHOUWN AND INSTALL WHERE UTE LOCATED.

SOLDER SIDE

CODE IDENT	SIZE	DWG NO	REV
32274	D	962832-000	G
SCALE 1/1	MOD GCR	SH 3 OF	

BRUNING 40-22

REVISION					
LTR	DESCRIPTION	DWN	DATE	APVD	DATE

CONDUCTOR CUT LIST

REWORK LEVEL	CUT NO	CUT BETWEEN FROM	CUT BETWEEN TO	COMP SIDE	SLD SIDE
962810-001 REV A 962832-001 REV A	43	U12K-9	J1-45	X	

COMPONENT ORIENTATION

CONDUCTOR CUT LIST

REWORK LEVEL	CUT NO	CUT BETWEEN FROM	CUT BETWEEN TO	COMP SIDE	SLD SIDE
962810-001 REV A (6)	21	U14A-37	U14E-12	X	
	25	U14A-38	U14E-9	X	
	26	U14A-39	U14F-12	X	
	27	U14A-40	U14F-9	X	
	28	U14A-1	U14E-1	X	
	29	U14A-2	U14E-4	X	
	30	U14F-1	F/T-AC		X
	31	U17D-5	GND BUSS	X	
	32	U17D-6	C121(B)	X	
	33	U17D-7	C120(B)	X	
	34	U17D-9	U17A-20	X	
	35	U17D-10	U17A-25	X	
	36	U17D-4	U17D-11		X
	37	U17D-11	+5V BUSS		X
	38	U17D-12	U14A-22		X
	39	U17D-13	U14A-21		X
	40	U17D-14	U14A-20		X
	41	R140(B)	U16H-2		X
REV A 962810-001 962832-001	42	C9-R	+15V BUSS	X	

JUMPER LIST

REWORK LEVEL	JMP NO	FROM	TO	COMP SIDE	SLD SIDE	WIRE GA	WIRE ITEM
962810-001 REV A (4)	50	U17A-27	U17D-3	X		30	303
	51	U17A-28	U17D-4	X			
	52	U17A-1	U17D-6	X			
	53	U17A-2	U17D-11	X			
	54	U17A-5	U17D-13	X			
	55	U17A-6	U17D-14	X			
	56	U15M-8	R305(L)	X			
	57	U17D-1	R140(B)	X			
	58	U15M-7	U17M-1	X			
	59	U17D-2	U14E-12	X			
	60	U17D-5	U14E-9	X			
	61	U17D-7	U14F-12	X			
	62	U17D-10	U14F-9	X			
	63	U17D-12	U14E-1	X			
	64	U17D-15	U14E-4	X			
	65	U17D-9	U13H-8	X			
	66	U13H-9	U17M-4	X			
	67	U13H-9	U12H-8	X			
	68	U17M-3	U17M-5	X			
	69	U17M-2	U14F-1	X			
	70	U17M-9	U11C-14	X			
	71	U12H-9	U12H-6	X			
	72	U12H-10	U13H-6	X			
	73	U12H-4	U12F-12	X			
	74	U12H-5	U12F-10	X			
	75	U13H-5	F/T-AC	X			
962810-001 962832-001 REV A	76	C9(R)	C22(R)	X			
962810-001 962832-001 REV C	77	CR18(T)	R29(T)	X			

JMP 78
C281/10
R353
JMP 79
SEE DETAIL "E"
CUT 12, JMP 76
CUT 43
JMP 77
JMP 86
JMP 84
CUT 50
JMP 81
(1) JMP 85
JMP 83
U7E SEE DETAIL "G"
C280
CUT 44
JMP 82
F/T-AH
JMP 79
JMP 80
CUT 45
F/T-AD
JMP 67
JMP 72
JMP 71
JMP 74
JMP 73
JMP 62
JMP 61
JMP 60
JMP 59
CUT 25
CUT 26
CUT 27
CUT 24
CUT 28
CUT 29
JMP 51
JMP 50
JMP 53
JMP 52
JMP 54
JMP 55
CUT 35
CUT 31
CUT 32
CUT 33
R140 LOCATION
F/T-AC, JMP 75
JMP 57
JMP 64
JMP 63
CUT 34, JMP 65
JMP 70
JMP 68
JMP 66
JMP 69
JMP 56
JMP 58
(6)
ASSY
cipher

(51) C282 & C283
C15 & C125 (REF)
PWB (REF)
DETAIL "G"

VR6 (REF)
C205 (REF)
PWB (REF)
DETAIL "F"

(19) NUT SYNC
Q3 (REF)
(25) SCREW
DETAIL "E"

REV STATUS	REV
OF SHEETS	SH 1 2 3 4 5 6 7 8 9 10 11 12 13 14 15 16 17 18 19 20 21 22 23 24

ALL INFORMATION CONTAINED IN OR DISCLOSED BY THIS DOCUMENT IS CONSIDERED CONFIDENTIAL AND PROPRIETARY BY CIPHER DATA PRODUCTS, INC. BY ACCEPTING THIS MATERIAL THE RECIPIENT AGREES THAT THIS MATERIAL AND THE INFORMATION CONTAINED THEREIN IS HELD IN CONFIDENCE AND IN TRUST AND WILL NOT BE USED, REPRODUCED IN WHOLE OR IN PART NOR ITS CONTENTS REVEALED TO OTHERS EXCEPT TO MEET THE PURPOSE FOR WHICH IT WAS DELIVERED. IT IS UNDERSTOOD THAT NO RIGHT IS CONVEYED TO REPRODUCE OR HAVE REPRODUCED ANY ITEM HEREIN DISCLOSED WITHOUT EXPRESS PERMISSION FROM CIPHER DATA PRODUCTS, INC.

UNLESS OTHERWISE SPECIFIED DIMENSIONS ARE IN INCHES
TOLERANCES ARE
DECIMALS
.X ±
.XX ±
.XXX ±
ANGLES ±
DO NOT SCALE DRAWING

APPROVAL	DATE
DWN -	
CHK C. Conrad	9/21/82
DES ENG	
SAFETY	
DES MGR	
MFG ENG	
ISSUED	

cipher SAN DIEGO CALIF

TITLE: PICT PWB ASSY SENSOR SERVO, 57V

CODE IDENT	SIZE	DWG NO	REV
32274	D	962832-000	F

SCALE — MOD 6 OR — SH 4 OF

BRUNING 40-22

CONTINUATION FROM SHEETS 1,3,&4.

COMPONENT ADDED

962810-001 REF F 962810-002 REF A 962832-001 REF F 962832-002 REF A	REF DES	FROM	TO
	R355	SEE DETAIL "G"	
	R356		
	R357		
	Q50		
	Q51		
962810-001 REV G 962810-002 REV D 962832-001 REV G 962832-002 REV D	C285	U7C-1	GND

CONDUCTOR CUT LIST

962810-001 REF F 962810-002 REF A 962832-001 REF F 962832-002 REF A	REWORK LEVEL	CUT NO.	CUT BETWEEN FROM	CUT BETWEEN TO	COMP SIDE	SLD SIDE
		44	U7E-13	PNT-G	X	
		45	R65-(B)	F/T-AD	X	
		46	C60-(T)	C257-(T)		X
		47	R97-(T)	F/T-AF		X
		48	U7C-5	F/T-AE		X
		49	U7C-6	R71-(B)		X
		50	C53-(T)	C51-(T)	X	

JUMPER LIST

962810-001 REF F 962810-002 REF A 962832-001 REF F 962832-002 REF A	REWORK LEVEL	JMP NO.	FROM	TO	COMP SIDE	SLD SIDE	WIRE GA	WIRE ITEM
		79	F/T-AG	U7E-3	X		30	303
		80	R65-(B)	U7E-6	X			
		81	U7E-9	R71-B	X			
		82	U7E-4	F/T-AH	X			
		83	R97-(T)	R54-(T)	X			
		84	U5G-8	C53-(T)	X			
		85	R44-(B) (LIFTED)	U7E-14	X			
		86	U5G-16	C60-(T)	X			

COMPONENT DELETED

962810-001 REF F 962810-002 REF A 962832-001 REF F 962832-002 REF A	REFERENCE DES.
	U7E
	C267

REV G DWG NO 962832-000

CODE IDENT	SIZE	DWG NO	REV
32274	D	962832-000	G
SCALE		MOD	SH 5 OF 5

BRUNING 40-22

BILL OF MATERIAL

AS OF 12/31/93

CLASS CODE: 3400
GCR UNIQUE BOARD ASSY

962832-002 OPCODE: 4 REV: G PWB ASSY-SENSOR/SERVO,57V
MODEL:
ECO NO: 19667
DATE OF LAST ECO: 2/27/87

OP: ORDER POLICY CODE
REQ: Y=PART REQUIRED
N=PART OPTIONAL
PF: Y=PART PRINTS ON SALES ORDER
N=PART DOES NOT PRINT ON SO

PART NUMBER	DESCRIPTION	OP	RV	ITEM NO.	QTY PER ASSEMBLY	YIELD FACTR	UM	SC	REQ	PF	DEFAULT QUANTITY	DAYS OFF SET	SEQ	REFERENCE DESIGNATOR	EFFECTIV DATE	OBSOLETE DATE
962832-000	PICT-PWB ASSY SENSOR/SERVO 57V	3	H	1	.000	1.000	EA	F	Y	N	.000	0	0		00/00/00	99/99/99
961818-101	PWB-SENSOR/SERVO	3	E	2	1.000	1.000	EA	B	Y	N	1.000	0	0		00/00/00	99/99/99
961234-400	SPECIFICATION-TEST,	3		3	.000	1.000	EA	F	N	N	.000	0	0		00/00/00	99/99/99
962832-300	SCHEM-SENSOR/SERVO,57V	3	F	4	.000	1.000	EA	F	Y	N	.000	0	0		00/00/00	99/99/99
962905-001	INDUCTOR (+-12V)	1	A	5	1.000	1.000	EA	B	Y	N	1.000	0	0	L1,2	00/00/00	99/99/99
970440-180	INDUCTOR-180UH,+-10%,	3	B	6	1.000	1.000	EA	B	N	N	1.000	0	0	L10	00/00/00	99/99/99
962906-001	INDUCTOR-EMI FILTER	1	A	7	1.000	1.000	EA	B	Y	N	1.000	0	0	L11	00/00/00	99/99/99
962904-001	XFMR-CURRENT,SENSE	1	A	8	1.000	1.000	EA	B	Y	N	1.000	0	0	CT1	00/00/00	99/99/99
962907-001	XFMR BIAS/5V CHOKE	3	B	9	1.000	1.000	EA	B	Y	N	1.000	0	0	T2	00/00/00	99/99/99
962908-001	XFMR-POWER	3	A	10	1.000	1.000	EA	B	Y	N	1.000	0	0	T1	00/00/00	99/99/99
962903-001	CHOKE-DUAL MOTOR	3	A	11	2.000	1.000	EA	B	Y	N	2.000	0	0	L6-9	00/00/00	99/99/99
962909-001	INDUCTOR (5V,SKIM)	1	B	12	1.000	1.000	EA	B	Y	N	1.000	0	0	L4	00/00/00	99/99/99
962910-001	INDUCTOR (12V,SKIM)	1	A	13	1.000	1.000	EA	B	Y	N	1.000	0	0	L5	00/00/00	99/99/99
970388-001	HEATSINK-"U" BLACK	3	C	14	1.000	1.000	EA	B	N	N	1.000	0	0	VR5	00/00/00	99/99/99
970281-002	HEATSINK-TO-127/TO-220,	3	C	15	11.000	1.000	EA	B	Y	N	11.000	0	0	VR1,3,4,Q3 1-39	00/00/00	99/99/99
970281-001	HEATSINK-TO-127/TO-220,	3	C	16	2.000	1.000	EA	B	Y	N	2.000	0	0	Q1,2	00/00/00	99/99/99
970287-001	HEATSINK-TO-3,6.4,C/W	3	C	18	1.000	1.000	EA	B	N	N	1.000	0	0	CR15	00/00/00	99/99/99
970460-001	NUT-SYNC,6-32,HEATSINK,.220MAX	3	C	19	17.000	1.000	EA	B	Y	N	17.000	0	0		00/00/00	99/99/99
213274-605	SCREW-PNH,PHIL,6-32X5/16,ZINC	3	E	20	16.000	1.000	EA	F	Y	N	16.000	0	0	ECO#19667	2/27/87	99/99/99
210875-501	INSULATOR-THERMALLY	3	B	21	14.000	1.000	EA	B	Y	N	14.000	0	0		00/00/00	99/99/99
970083-001	INJECTOR/EJECTOR-1/16"	3	A	22	2.000	1.000	EA	B	N	N	2.000	0	0		00/00/00	99/99/99
210875-401	INSULATOR-THERMALLY	3	G	23	1.000	1.000	EA	B	N	N	1.000	0	0		00/00/00	99/99/99
961707-001	STIFFENER-EDGE,PCB	1	B	24	1.000	1.000	EA	B	Y	N	1.000	0	0		00/00/00	99/99/99
213271-603	SCREW-PHP,ZINC,6-32X3/16	3	G	25	1.000	1.000	EA	F	Y	N	1.000	0	0		00/00/00	99/99/99
970147-001	CAP-ELEC,620-830MFD,100V,ALUM	3	H	29	1.000	1.000	EA	B	Y	N	1.000	0	0	C163	7/24/86	99/99/99
201114-274	CAP-CER,2700PF,50V,10%,X7R	3	G	30	2.000	1.000	EA	B	Y	N	2.000	0	0	C278,279	00/00/00	99/99/99
201100-500	CAP-CER,5PF,600V,+-.5PF,	3	D	31	1.000	1.000	EA	B	Y	N	1.000	0	0	C161	7/24/86	99/99/99
201159-022	CAP-MYLAR,.0022MF,200V,10%	3	E	33	4.000	1.000	EA	B	Y	N	4.000	0	0	C167,168,170,171	00/00/00	99/99/99
201191-025	CAP-ELEC,10MF,25V, ,ALUM	3	H	34	20.000	1.000	EA	B	Y	N	20.000	0	0	C10,11,12,22,25,30,32,34,35,41,106,115,138,140,150,154,245,252,257,258	00/00/00	99/99/99
201244-104	CAP-CER,.1MF,50V,20%	3	E	35	32.000	1.000	EA	B	Y	N	32.000	0	0	C26,28,31,51,52,55,62,67-70,122,129,131,	00/00/00	99/99/99

BILL OF MATERIAL
AS OF 12/31/93

CLASS CODE: 3400
GCR UNIQUE BOARD ASSY

962832-002 OPCODE: 4 REV: G PWB ASSY-SENSOR/SERVO,57V
MODEL:
ECO NO: 19667
DATE OF LAST ECO: 2/27/87

OP: ORDER POLICY CODE
REQ: Y=PART REQUIRED
N=PART OPTIONAL
PF: Y=PART PRINTS ON SALES ORDER
N=PART DOES NOT PRINT ON SO

PART NUMBER	DESCRIPTION	OP	RV	ITEM NO.	QTY PER ASSEMBLY	YIELD FACTR	UM	SC	REQ	PF	DEFAULT QUANTITY	DAYS OFF SET	SEQ	REFERENCE DESIGNATOR	EFFECTIV DATE	OBSOLETE DATE
201244-104	CAP-CER,.1MF,50V,20%	3	E	35	32.000	1.000	EA	B	Y	N	32.000	0	0	141,142,144,147,156,157,159,165,176,184,193,198,200,204-206,241,280	00/00/00	99/99/99
970567-001	CAP-ELEC,270MF,100V,-20+50%	3	A	36	1.000	1.000	EA	B	Y	N	1.000	0	0	C4	00/00/00	99/99/99
970565-001	CAP-ELEC,1000MF,25V,-20+50%	3	A	37	2.000	1.000	EA	B	Y	N	2.000	0	0	C3,14	00/00/00	99/99/99
970566-001	CAP-ELEC,5600MF,6.3V,-20+50%	3	A	38	2.000	1.000	EA	B	Y	N	2.000	0	0	C5,6	00/00/00	99/99/99
970147-002	CAP-ALUM,470UF,100V	3	C	39	2.000	1.000	EA	B	Y	N	2.000	0	0	C125,15	7/24/86	99/99/99
201105-010	CAP-CER,.01MF,500V,DISC	3	H	41	4.000	1.000	EA	B	Y	N	4.000	0	0	C43,44,47,56	00/00/00	99/99/99
201114-220	CAP-CER,.022MF,50V,10%	3	G	42	8.000	1.000	EA	B	Y	N	8.000	0	0	C194-197,207,210,233,242	00/00/00	99/99/99
201123-151	CAP-DM,1500PF,100V,5%	3	E	43	1.000	1.000	EA	B	N	N	1.000	0	0	C87	00/00/00	99/99/99
201160-472	CAP-TANT,4.7MF,10V,10%	3	D	44	2.000	1.000	EA	B	Y	N	2.000	0	0	C53,253 ECO#19426	11/17/86	99/99/99
970712-002	CAP-POLY,.001MF,250-400V,5%	3	A	45	3.000	1.000	EA	B	Y	N	3.000	0	0	C19,20,27 ECO#19487	7/31/87	99/99/99
970712-004	CAP-POLYPRO,.022UF,200-250V+-*	3	A	48	2.000	1.000	EA	B	Y	N	2.000	0	0	C17,18 ECO #19487	7/31/87	99/99/99
201204-153	CAP-CER,150PF,50V,5%,NPO	3	L	49	1.000	1.000	EA	B	Y	N	1.000	0	0	C78	00/00/00	99/99/99
201114-105	CAP-CER,10000PF,50V,10%,X7R	3	G	50	19.000	1.000	EA	B	Y	N	19.000	0	0	C37-39,49,50,71-73,112,113,188-191,265,266,272,281,285 ECO#19427	11/17/86	99/99/99
201226-205	CAP-MYLAR,2MF,200V,20%	3	D	51	2.000	1.000	EA	B	Y	N	2.000	0	0	C282,C283 ECO#19191	8/18/86	99/99/99
201161-470	CAP-TANT,47MF,6V,10%	3	P	52	4.000	1.000	EA	B	N	N	4.000	0	0	C36,107,152,151	00/00/00	99/99/99
201120-500	CAP-DM,5PF,300V,+-1/2PF,	3	C	53	1.000	1.000	EA	B	N	N	1.000	0	0	C216	00/00/00	99/99/99
201148-150	CAP-PC,.15MF,50V,5%	3	J	57	2.000	1.000	EA	B	Y	N	2.000	0	0	C209,213	00/00/00	99/99/99
201149-470	CAP-PC,.047MF,50V,5%	3	G	58	9.000	1.000	EA	B	Y	N	9.000	0	0	C166,169,172,177,178,181,185,240,254	00/00/00	99/99/99

BILL OF MATERIAL

AS OF 12/31/93

CLASS CODE: 3400
GCR UNIQUE BOARD ASSY

962832-002 OPCODE: 4 REV: G PWB ASSY-SENSOR/SERVO,5/V
MODEL:
ECO NO: 19667
DATE OF LAST ECO: 2/27/87

OP: ORDER POLICY CODE
REQ: Y=PART REQUIRED
N=PART OPTIONAL
PF: Y=PART PRINTS ON SALES ORDER
N=PART DOES NOT PRINT ON SO

PART NUMBER	DESCRIPTION	OP	RV	ITEM NO.	QTY PER ASSEMBLY	YIELD FACTR	UM	SC	REQ	PF	DEFAULT QUANTITY	DAYS OFF SET	SEQ	REFERENCE DESIGNATOR	EFFECTIV DATE	OBSOLETE DATE
201105-100	CAP-CER,.1MF,100V,-20+80%	3	G	59	6.000	1.000	EA	B	Y	N	6.000	0	0	C16,123,124,259,260,261	00/00/00	99/99/99
970712-003	CAP-POLY,.068MF,200VDC,5%	3	D	60	4.000	1.000	EA	B	Y	N	4.000	0	0	C133-136	00/00/00	99/99/99
201106-107	CAP-CER,1MF,50V,10%	3	L	61	4.000	1.000	EA	B	Y	N	4.000	0	0	C40,234,235,243	00/00/00	99/99/99
201113-470	CAP-CER,.0047MF,50V,10%	3	G	62	13.000	1.000	EA	B	Y	N	13.000	0	0	C132,145,148,160,164,175,179,180,183,186,187,192,217	00/00/00	99/99/99
970712-005	CAP-POLYPRO.0047UF,200-250V,+*	3	A	63	2.000	1.000	EA	B	Y	N	2.000	0	0	C128,146 ECO#19487	7/31/87	99/99/99
201204-473	CAP-CER,470PF,50V,5%,NPO	3	L	65	1.000	1.000	EA	B	N	N	1.000	0	0	C239	00/00/00	99/99/99
201149-100	CAP-PC,.01MF,50V,5%	3	G	66	1.000	1.000	EA	B	Y	N	1.000	0	0	C54	00/00/00	99/99/99
970784-104	CAP-CER,.1UF,50V,-20+80%,AX,*	3	E	67	79.000	1.000	EA	B	Y	N	79.000	0	0	C2,7,8,13,21,23,24,29,45,46,57-61,63-66,74,80-82,84-86,89-105,108-111,114,155,162,173,174,182,201-203,218-232,238,244,246-251	00/00/00	99/99/99
201114-104	CAP-CER,1000PF,50V,10%,X7R	3	G	68	8.000	1.000	EA	B	Y	N	8.000	0	0	C130,137,139,143,149,153,158,255	00/00/00	99/99/99
201114-224	CAP-CER,2200PF,50V,10%,X7R	3	G	69	2.000	1.000	EA	B	Y	N	2.000	0	0	C208,212	00/00/00	99/99/99
970085-001	CAP-DM,680PF,300V,1%	3	B	70	1.000	1.000	EA	B	N	N	1.000	0	0	C88	00/00/00	99/99/99
201122-820	CAP-DM,820PF,300V,5%	3	D	71	1.000	1.000	EA	B	N	N	1.000	0	0	C236	00/00/00	99/99/99
201105-474	CAP-CER,.47MF,50V,10%	3	N	72	3.000	1.000	EA	B	Y	N	3.000	0	0	C263,275,276	00/00/00	99/99/99
962003-001	SPEC-8" PWR & GND BUS BAR	1	A	73	1.000	1.000	EA	B	Y	N	1.000	0	0		00/00/00	99/99/99
962002-001	SPEC-15" PWR & GND BUS BAR	1	B	74	1.000	1.000	EA	B	Y	N	1.000	0	0		00/00/00	99/99/99
970551-002	BUS BAR STIFFENER-INSULATED	3	B	75	1.000	1.000	EA	B	Y	N	1.000	0	0		00/00/00	99/99/99

BILL OF MATERIAL

AS OF 12/31/93

CLASS CODE: 3400
GCR UNIQUE BOARD ASSY

962832-002 OPCODE: 4 REV: G PWB ASSY-SENSOR/SERVO,57V
MODEL:
ECO NO: 19667
DATE OF LAST ECO: 2/27/87

OP: ORDER POLICY CODE
REQ: Y=PART REQUIRED
N=PART OPTIONAL
PF: Y=PART PRINTS ON SALES ORDER
N=PART DOES NOT PRINT ON SO

PART NUMBER	DESCRIPTION	OP	RV	ITEM NO.	QTY PER ASSEMBLY	YIELD FACTR	UM	SC	REQ	PF	DEFAULT QUANTITY	DAYS OFF SET	SEQ	REFERENCE DESIGNATOR	EFFECTIV DATE	OBSOLETE DATE
970551-001	BUS BAR STIFFENER-INSULATED	3	B	76	1.000	1.000	EA	B	Y	N	1.000	0	0		00/00/00	99/99/99
970724-001	DIODE-1N4448,FAST SWITCHING	3	A	87	8.000	1.000	EA	B	Y	N	8.000	0	0	CR11-14,39,43,49,53	00/00/00	99/99/99
202033	DIODE,RECTIFIER-	3	F	88	2.000	1.000	EA	B	N	N	2.000	0	0	CR9,10	00/00/00	99/99/99
970562-001	DIODE-RECTIFIER,POWER	3	A	89	4.000	1.000	EA	B	Y	N	4.000	0	0	CR5-8	00/00/00	99/99/99
202032-300	DIODE - ZENER	3	C	90	1.000	1.000	EA	B	Y	N	1.000	0	0	CR24	00/00/00	99/99/99
202018-100	DIODE,SWITCHING,1N4148	3	D	91	35.000	1.000	EA	B	Y	N	35.000	0	0	CR17,22,23 27-30,32-35,37,40,41 44,45,50,51,54,55,64 65,67,68,72,73,75,76 78-84	00/00/00	99/99/99
202030-900	DIODE-SILICON VOLTAGE	3	F	92	1.000	1.000	EA	B	N	N	1.000	0	0	CR19	00/00/00	99/99/99
202005-500	RECTIFIER-PWR,HI EFF,6A	3	C	93	16.000	1.000	EA	B	N	N	16.000	0	0	CR56,86,74,77,48,52,70,71,46,47,66,69,38,42,61,63	00/00/00	99/99/99
202009-999	DIODE RECTIFIER,1 AMP	3	C	95	8.000	1.000	EA	B	Y	N	8.000	0	0	CR1,3,4,20 31,57,58,85	00/00/00	99/99/99
202031	DIODE-ZENER	3	D	97	1.000	1.000	EA	B	N	N	1.000	0	0	CR36	00/00/00	99/99/99
202032	DIODE-ZENER	3	E	98	1.000	1.000	EA	B	N	N	1.000	0	0	CR21	00/00/00	99/99/99
970238-001	DIODE-RECTIFIER,DUAL	3	C	99	1.000	1.000	EA	B	N	N	1.000	0	0	CR15	00/00/00	99/99/99
202006-100	DIODE-LIGHT EMITTING	3	H	101	1.000	1.000	EA	B	N	N	1.000	0	0	DS1	00/00/00	99/99/99
970208-001	CONNECTOR HEADER SOCKET-	3	A	107	1.000	1.000	EA	B	N	N	1.000	0	0	J1	00/00/00	99/99/99
970288-001	CONN-HEADER,50 POSN,PIN,	3	A	109	1.000	1.000	EA	B	N	N	1.000	0	0	J7	00/00/00	99/99/99
970291-001	CONN-HEADER,8 POSN,PIN,	3	A	110	1.000	1.000	EA	B	N	N	1.000	0	0	J8	00/00/00	99/99/99
970581-001	RECTIFIER-.8AMP 60V	3	A	115	1.000	1.000	EA	B	Y	N	1.000	0	1	Q4	00/00/00	99/99/99
970580-001	TRANSISTOR-N-CHANNEL MOS	3	A	116	4.000	1.000	EA	B	Y	N	4.000	0	0	Q16,22,24, 30	00/00/00	99/99/99
210197-201	RELAY-2 PDT 10 AMP,12 VOLT	3	A	117	1.000	1.000	EA	B	Y	N	1.000	0	0	K1	00/00/00	99/99/99
970563-001	TRANSISTOR-NPN,SILICON	3	A	118	1.000	1.000	EA	B	Y	N	1.000	0	0	Q3	00/00/00	99/99/99
970249-001	TRANSISTOR-PNP,SILICON,	3	C	119	13.000	1.000	EA	B	N	N	13.000	0	0	Q27,28,46, 25,26,43,17-20,39,42 ,12	00/00/00	99/99/99
204007-500	TRANSISTOR-NPN SILICON	3	H	120	6.000	1.000	EA	B	N	N	6.000	0	0	Q5,8,45,44 ,41,40	00/00/00	99/99/99

BILL OF MATERIAL
AS OF 12/31/93

CLASS CODE: 3400
GCR UNIQUE BOARD ASSY

962832-002 OPCODE: 4 REV: G PWB ASSY-SENSOR/SERVO,57V
MODEL:
ECO NO: 19667
DATE OF LAST ECO: 2/27/87

OP: ORDER POLICY CODE
REQ: Y=PART REQUIRED
N=PART OPTIONAL
PF: Y=PART PRINTS ON SALES ORDER
N=PART DOES NOT PRINT ON SO

PART NUMBER	DESCRIPTION	OP	RV	ITEM NO.	QTY PER ASSEMBLY	YIELD FACTR	UM	SC	REQ	PF	DEFAULT QUANTITY	DAYS OFF SET	SEQ	REFERENCE DESIGNATOR	EFFECTIV DATE	OBSOLETE DATE
970582-001	TRANSISOR-N CHANNEL	3	A	121	2.000	1.000	EA	B	Y	N	2.000	0	0	Q1,2	00/00/00	99/99/99
204027-037	TRANSISTOR N-P-N SILICON	3	E	122	2.000	1.000	EA	B	Y	N	2.000	0	0	Q7,11	00/00/00	99/99/99
204027-034	TRANSISTOR P-N-P SILICON	3	E	123	4.000	1.000	EA	B	N	N	4.000	0	0	Q9,10,13,14	00/00/00	99/99/99
970545-001	TRANSISTOR-POWER, MOS FET	3	A	124	8.000	1.000	EA	B	Y	N	8.000	0	0	Q31-38	00/00/00	99/99/99
970399-001	TRANSISTOR-BIPOLAR,POWER	3	A	126	4.000	1.000	EA	B	N	N	4.000	0	0	Q15,21,23,29	00/00/00	99/99/99
200072-620	RES-620 OHM 1/4W 5% CF	3	AA	127	4.000	1.000	EA	F	Y	N	4.000	0	0	R209,221,249,259	00/00/00	99/99/99
200076-100	RES-1.0 MOHM 1/4W 5% CF	3	AA	129	2.000	1.000	EA	F	Y	N	2.000	0	0	R135,138	00/00/00	99/99/99
200120-400	RES-4.0 OHM 3.0W 5% WW	3	G	130	1.000	1.000	EA	F	Y	N	1.000	0	0	R348	00/00/00	99/99/99
200121-100	RES-10 OHM 3.0W 5% WW	3	G	131	1.000	1.000	EA	F	Y	N	1.000	0	0	R347	00/00/00	99/99/99
200013-562	RES-5.62 KOHM 1/8W 1% FF	3	P	135	1.000	1.000	EA	F	Y	N	1.000	0	0	R79	00/00/00	99/99/99
200013-200	RES-2.0 KOHM 1/8W 1% FF	3	P	136	5.000	1.000	EA	B	N	N	5.000	0	0	R275,291,288,306,276	00/00/00	99/99/99
200014-750	RES-75.0 KOHM 1/8W 1% FF	3	P	137	1.000	1.000	EA	B	Y	N	1.000	0	0	R168	00/00/00	99/99/99
200073-100	RES-1.0 KOHM 1/4W 5% CF	3	AA	138	16.000	1.000	EA	F	Y	N	16.000	0	0	R47,48,108 141,142,189-192,287, 329,333,104,127,41,351	00/00/00	99/99/99
200013-634	RES-6.34 KOHM 1/8W 1% FF	3	P	139	1.000	1.000	EA	F	N	N	1.000	0	0	R63	00/00/00	99/99/99
200013-100	RES-1.00 KOHM 1/8W 1% FF	3	P	140	6.000	1.000	EA	F	N	N	6.000	0	0	R197,91,90,94,92,31	00/00/00	99/99/99
200073-470	RES-4.7 KOHM 1/4W 5% CF	3	AA	141	23.000	1.000	EA	F	Y	N	23.000	0	0	R44,95-97, 100,101,114,129-133, 298,307,310-312,315, 317,325,326,331,355 ECO#19426	11/17/86	99/99/99
200016-100	RES-1.00 MOHM 1/8W 1% FF	3	P	143	1.000	1.000	EA	F	Y	N	1.000	0	0	R301	00/00/00	99/99/99
200013-499	RES-4.99 KOHM 1/8W 1% FF	3	P	144	13.000	1.000	EA	F	N	N	4.000	0	0	R99,82,83, 109,93,212,213,222,223,342,343,349,350	00/00/00	99/99/99
200072-390	RES-390 OHM 1/4W 5% CF	3	AA	145	6.000	1.000	EA	F	N	N	6.000	0	0	R50,183,162,184,163,	00/00/00	99/99/99

BILL OF MATERIAL
AS OF 12/31/93

CLASS CODE: 3400
GCR UNIQUE BOARD ASSY

962832-002 OPCODE: 4 REV: G PWB ASSY-SENSOR/SERVO,5.7V
MODEL:
ECO NO: 19667
DATE OF LAST ECO: 2/27/87

OP: ORDER POLICY CODE
REQ: Y=PART REQUIRED
N=PART OPTIONAL
PF: Y=PART PRINTS ON SALES ORDER
N=PART DOES NOT PRINT ON SO

PART NUMBER	DESCRIPTION	OP	RV	ITEM NO.	QTY PER ASSEMBLY	YIELD FACTR	UM	SC	REQ	PF	DEFAULT QUANTITY	DAYS OFF SET	SEQ	REFERENCE DESIGNATOR	EFFECTIV DATE	OBSOLETE DATE
200072-390	RES-390 OHM 1/4W 5% CF	3	AA	145	6.000	1.000	EA	F	N	N	6.000	0	0	148	00/00/00	99/99/99
200071-820	RES-82 OHM 1/4W 5% CF	3	AA	146	1.000	1.000	EA	F	N	N	1.000	0	0	R49	00/00/00	99/99/99
200013-221	RES-2.21 KOHM 1/8W 1% FF	3	P	147	2.000	1.000	EA	F	N	N	2.000	0	0	R290,289	00/00/00	99/99/99
200128-250	RES-0.25 OHM 3.75W 5% WW	3	F	148	8.000	1.000	EA	F	N	N	8.000	0	0	R256,255,235,236,219,218,200,201	00/00/00	99/99/99
970536-047	RES-47 OHM,2W,5%,CF,FIXED	3	B	149	2.000	1.000	EA	B	Y	N	2.000	0	0	R170,156	00/00/00	99/99/99
200014-402	RES-40.2 KOHM 1/8W 1% FF	3	P	150	12.000	1.000	EA	F	Y	N	12.000	0	0	R214-217,247,251,260,261,263,265,268,269	00/00/00	99/99/99
200013-402	RES-4.02 KOHM 1/8W 1% FF	3	P	151	1.000	1.000	EA	B	Y	N	1.000	0	0	R32	00/00/00	99/99/99
200013-249	RES-2.49 KOHM 1/8W 1% FF	3	P	152	1.000	1.000	EA	F	N	N	1.000	0	0	R84	00/00/00	99/99/99
200073-220	RES-2.2 KOHM 1/4W 5% CF	3	AA	153	4.000	1.000	EA	F	N	N	4.000	0	0	R302,106,314,278	00/00/00	99/99/99
200072-330	RES-330 OHM 1/4W 5% CF	3	AA	155	5.000	1.000	EA	F	Y	N	5.000	0	0	R85,206,211,227,230	00/00/00	99/99/99
200073-270	RES-2.7 KOHM 1/4W 5% CF	3	AA	156	5.000	1.000	EA	F	Y	N	5.000	0	0	R43,52,193,102,105	00/00/00	99/99/99
200071-200	RES-20 OHM 1/4W 5% CF	3	AA	157	1.000	1.000	EA	F	Y	N	1.000	0	0	R42	00/00/00	99/99/99
200071-510	RES-51 OHM 1/4W 5% CF	3	AA	158	2.000	1.000	EA	F	Y	N	2.000	0	0	R22,336	00/00/00	99/99/99
200073-150	RES-1.5 KOHM 1/4W 5% CF	3	AA	159	5.000	1.000	EA	F	Y	N	5.000	0	0	R39,60,61,356,357,EC0#194266	11/17/86	99/99/99
200073-510	RES-5.1 KOHM 1/4W 5% CF	3	AA	160	6.000	1.000	EA	F	Y	N	6.000	0	0	R65,71,231,232,244,245	00/00/00	99/99/99
200082-120	RES-120 OHM 1/2W 5% CF	3	J	161	2.000	1.000	EA	B	N	N	2.000	0	0	R1,2	00/00/00	99/99/99
200082-200	RES-200 OHM 1/2W 5% CF	3	J	162	4.000	1.000	EA	B	Y	N	4.000	0	0	R157,158,178,179	00/00/00	99/99/99
200071-470	RES-47 OHM 1/4W 5% CF	3	AA	163	6.000	1.000	EA	F	Y	N	6.000	0	0	R7,8,149,164,171,185	00/00/00	99/99/99
200072-300	RES-300 OHM 1/4W 5% CF	3	AA	164	1.000	1.000	EA	F	Y	N	1.000	0	0	R19	00/00/00	99/99/99
970568-472	RES-4.7 KOHM 1W 5% CF	3	D	165	1.000	1.000	EA	B	Y	N	1.000	0	0	R20	00/00/00	99/99/99
970271-002	RES-20 OHM 2W 5% FC	3	A	166	2.000	1.000	EA	B	N	N	2.000	0	0	R110,111	00/00/00	99/99/99
200070-560	RES-5.6 OHM 1/4W 5% CF	3	AA	167	2.000	1.000	EA	F	N	N	2.000	0	0	R195,270	00/00/00	99/99/99
200074-100	RES-10 KOHM 1/4W 5% CF	3	AA	168	17.000	1.000	EA	F	Y	N	17.000	0	0	R9,10,16,25,29,98,152,167,174,	00/00/00	99/99/99

BILL OF MATERIAL
AS OF 12/31/93

CLASS CODE: 3400
GCR UNIQUE BOARD ASSY

962832-002 OPCODE: 4 REV: G PWB ASSY-SENSOR/SERVO,57V
MODEL:
ECO NO: 19667
DATE OF LAST ECO: 2/27/87

OP: ORDER POLICY CODE
REQ: Y=PART REQUIRED
N=PART OPTIONAL
PF: Y=PART PRINTS ON SALES ORDER
N=PART DOES NOT PRINT ON SO

PART NUMBER	DESCRIPTION	OP	RV	ITEM NO.	QTY PER ASSEMBLY	YIELD FACTR	UM	SC	REQ	PF	DEFAULT QUANTITY	DAYS OFF SET	SEQ	REFERENCE DESIGNATOR	EFFECTIV DATE	OBSOLETE DATE
200074-100	RES-10 KOHM 1/4W 5% CF	3	AA	168	17.000	1.000	EA	F	Y	N	17.000	0	0	188,202,225,237,266,271,272,297	00/00/00	99/99/99
200074-220	RES-22 KOHM 1/4W 5% CF	3	AA	170	2.000	1.000	EA	F	N	N	2.000	0	0	R273,279	00/00/00	99/99/99
200073-750	RES-7.5 KOHM 1/4W 5% CF	3	AA	171	1.000	1.000	EA	F	Y	N	1.000	0	0	R332	00/00/00	99/99/99
200073-560	RES-5.6 KOHM 1/4W 5% CF	3	AA	172	2.000	1.000	EA	F	N	N	2.000	0	0	R284,293	00/00/00	99/99/99
200073-360	RES-3.6 KOHM 1/4W 5% CF	3	AA	173	2.000	1.000	EA	F	Y	N	2.000	0	0	R285,294	00/00/00	99/99/99
200080-750	RES-7.5 OHM 1/2W 5% CF	3	J	174	2.000	1.000	EA	B	N	N	2.000	0	0	R147,146	00/00/00	99/99/99
200072-430	RES-430 OHM 1/4W 5% CF	3	AA	175	2.000	1.000	EA	F	Y	N	2.000	0	0	R137,136	00/00/00	99/99/99
200074-120	RES-12 KOHM 1/4W 5% CF	3	AA	176	1.000	1.000	EA	F	Y	N	1.000	0	0	R143	00/00/00	99/99/99
200013-301	RES-3.01 KOHM 1/8W 1% FF	3	P	177	2.000	1.000	EA	F	Y	N	2.000	0	0	R59,274	00/00/00	99/99/99
200072-220	RES-220 OHM 1/4W 5% CF	3	AA	178	12.000	1.000	EA	F	Y	N	12.000	0	0	R116-124,113,134,318	00/00/00	99/99/99
970568-392	RES-3.9 KOHM 1W 5% CF	3	D	179	1.000	1.000	EA	B	Y	N	1.000	0	0	R76	00/00/00	99/99/99
200074-360	RES-36 KOHM 1/4W 5% CF	3	AA	181	2.000	1.000	EA	F	Y	N	2.000	0	0	R292,296	00/00/00	99/99/99
200075-100	RES-100 KOHM 1/4W 5% CF	3	AA	182	7.000	1.000	EA	F	Y	N	7.000	0	0	R27,30,34,45,77,313,328	00/00/00	99/99/99
200072-100	RES-100 OHM 1/4W 5% CF	3	AA	183	4.000	1.000	EA	F	Y	N	4.000	0	0	R46,80,242,243	00/00/00	99/99/99
200075-220	RES-220 KOHM 1/4W 5% CF	3	AA	184	1.000	1.000	EA	F	Y	N	1.000	0	0	R316	00/00/00	99/99/99
200072-470	RES-470 OHM 1/4W 5% CF	3	AA	185	3.000	1.000	EA	F	Y	N	3.000	0	0	R282,321,327	00/00/00	99/99/99
200074-330	RES-33 KOHM 1/4W 5% CF	3	AA	186	3.000	1.000	EA	F	N	N	3.000	0	0	R33,304,334	00/00/00	99/99/99
200076-470	RES-4.7 MOHM 1/4W 5% CF	3	AA	187	1.000	1.000	EA	F	N	N	1.000	0	0	R335	00/00/00	99/99/99
200072-200	RES-200 OHM 1/4W 5% CF	3	AA	188	15.000	1.000	EA	F	Y	N	15.000	0	0	R18,24,151,154,159,166,173,176,180,187,203,226,238,267,277	00/00/00	99/99/99
200071-150	RES-15 OHM 1/4W 5% CF	3	AA	189	2.000	1.000	EA	F	N	N	2.000	0	0	R26,28	00/00/00	99/99/99
200072-150	RES-150 OHM 1/4W 5% CF	3	AA	190	1.000	1.000	EA	F	Y	N	1.000	0	0	R112	00/00/00	99/99/99
200015-200	RES-200 KOHM 1/8W 1% FF	3	P	192	4.000	1.000	EA	B	Y	N	4.000	0	0	R252,264,253,262	00/00/00	99/99/99
200074-470	RES-47 KOHM 1/4W 5% CF	3	AA	193	3.000	1.000	EA	F	Y	N	3.000	0	0	R319,305,351	00/00/00	99/99/99
200071-120	RES-12 OHM 1/4W 5% CF	3	AA	194	1.000	1.000	EA	F	N	N	1.000	0	0	R125	00/00/00	99/99/99
200013-475	RES-4.75 KOHM 1/8W 1% FF	3	P	195	2.000	1.000	EA	F	N	N	2.000	0	0	R62,64	00/00/00	99/99/99

BILL OF MATERIAL

AS OF 12/31/93

CLASS CODE: 3400
GCR UNIQUE BOARD ASSY

962832-002 OPCODE: 4 REV: G PWB ASSY-SENSOR/SERVO,57V
MODEL:
ECO NO: 19667
DATE OF LAST ECO: 2/27/87

OP: ORDER POLICY CODE
REQ: Y=PART REQUIRED
N=PART OPTIONAL
PF: Y=PART PRINTS ON SALES ORDER
N=PART DOES NOT PRINT ON SO

PART NUMBER	DESCRIPTION	OP	RV	ITEM NO.	QTY PER ASSEMBLY	YIELD FACTR	UM	SC	REQ	PF	DEFAULT QUANTITY	DAYS OFF SET	SEQ	REFERENCE DESIGNATOR	EFFECTIV DATE	OBSOLETE DATE
200014-169	RES-16.9 KOHM 1/8W 1% FF	3	P	196	1.000	1.000	EA	B	N	N	1.000	0	0	R81	00/00/00	99/99/99
200073-300	RES-3 KOHM 1/4W 5% CF	3	AA	197	5.000	1.000	EA	F	Y	N	5.000	0	0	R56,254,320,322,37	00/00/00	99/99/99
200076-130	RES-1.3MOHM,1/4W,5%CF	3	AA	199	1.000	1.000	EA	F	Y	N	1.000	0	0	R194	7/24/86	99/99/99
200073-680	RES-6.8 KOHM 1/4W 5% CF	3	AA	200	5.000	1.000	EA	F	N	N	6.000	0	0	R12,324,323,309,308	00/00/00	99/99/99
200074-110	RES-11 KOHM 1/4W 5% CF	3	AA	201	1.000	1.000	EA	F	N	N	1.000	0	0	R246	00/00/00	99/99/99
970537-002	RES-100 OHM 5% 5W WW	3	A	202	1.000	1.000	EA	B	Y	N	1.000	0	0	R144	00/00/00	99/99/99
200071-100	RES-10 OHM 1/4W 5% CF	3	AA	204	9.000	1.000	EA	F	Y	N	9.000	0	0	R6,155,160,177,181,208,220,248,257	00/00/00	99/99/99
200148-100	RES-0.10 OHM 6.5W 5% WW	3	C	205	1.000	1.000	EA	F	N	N	1.000	0	0	R145	00/00/00	99/99/99
200074-390	RES-39 KOHM 1/4W 5% CF	3	AA	206	1.000	1.000	EA	F	N	N	1.000	0	0	R38	00/00/00	99/99/99
200073-390	RES-3.9 KOHM 1/4W 5% CF	3	AA	207	5.000	1.000	EA	F	Y	N	5.000	0	0	R36,150,165,172,186	00/00/00	99/99/99
200014-909	RES-90.9 KOHM 1/8W 1% FF	3	P	208	1.000	1.000	EA	F	N	N	1.000	0	0	R13	00/00/00	99/99/99
200011-100	RES-10.0 OHM 1/8W 1% FF	3	P	209	1.000	1.000	EA	B	Y	N	1.000	0	0	R15	00/00/00	99/99/99
200013-806	RES-8.06 KOHM 1/8W 1% FF	3	P	210	1.000	1.000	EA	F	N	N	1.000	0	0	R5	00/00/00	99/99/99
200014-100	RES-10.0 KOHM 1/8W 1% FF	3	P	211	4.000	1.000	EA	F	Y	N	4.000	0	0	R4,280,210,3	00/00/00	99/99/99
200013-681	RES-6.81 KOHM 1/8W 1% FF	3	P	212	1.000	1.000	EA	F	Y	N	1.000	0	0	R78	00/00/00	99/99/99
200073-200	RES-2 KOHM 1/4W 5% CF	3	AA	213	4.000	1.000	EA	F	Y	N	3.000	0	0	R11,103,283,303	00/00/00	99/99/99
200012-200	RES-200 OHM 1/8W 1% FF	3	P	214	1.000	1.000	EA	B	N	N	1.000	0	0	R198	00/00/00	99/99/99
970568-201	RES-200 OHM 1W 5% CF	3	D	215	8.000	1.000	EA	B	Y	N	8.000	0	0	R153,161,175,182,204,224,239,258	00/00/00	99/99/99
200072-680	RES-680 OHM 1/4W 5% CF	3	AA	216	10.000	1.000	EA	F	Y	N	10.000	0	0	R330,233,234,240,228,207,205,229,250,196	00/00/00	99/99/99
200073-330	RES-3.3 KOHM 1/4W 5% CF	3	AA	217	1.000	1.000	EA	F	N	N	1.000	0	0	R299	00/00/00	99/99/99
200076-180	RES-1.8 MOHM 1/4W 5% CF	3	AA	218	1.000	1.000	EA	B	N	N	1.000	0	0	R300	00/00/00	99/99/99
200012-750	RES-750 OHM 1/8W 1% FF	3	P	219	2.000	1.000	EA	B	N	N	2.000	0	0	R72,73	00/00/00	99/99/99
200073-620	RES-6.2 KOHM 1/4W 5% CF	3	AA	220	2.000	1.000	EA	F	Y	N	2.000	0	0	R344,345	00/00/00	99/99/99
970267-001	PIN-TEST,.040SQ X .360LG	3	A	245	35.000	1.000	EA	F	Y	N	35.000	0	0	TP1-35 205026-999	00/00/00	99/99/99
203007-700	IC-339 VOLT COMP QUAD	3	J	250	8.000	1.000	EA	B	N	N	8.000	0	0	U3E,16H,12K,8W,15T,1	00/00/00	99/99/99

BILL OF MATERIAL
AS OF 12/31/93

CLASS CODE: 3400
GCR UNIQUE BOARD ASSY

962832-002 OPCODE: 4 REV: G PWB ASSY-SENSOR/SERVO,57V
MODEL:
ECO NO: 19667
DATE OF LAST ECO: 2/27/87

OP: ORDER POLICY CODE
REQ: Y=PART REQUIRED
N=PART OPTIONAL
PF: Y=PART PRINTS ON SALES ORDER
N=PART DOES NOT PRINT ON SO

PART NUMBER	DESCRIPTION	OP	RV	ITEM NO.	QTY PER ASSEMBLY	YIELD FACTR	UM	SC	REQ	PF	DEFAULT QUANTITY	DAYS OFF SET	SEQ	REFERENCE DESIGNATOR	EFFECTIV DATE	OBSOLETE DATE
203007-700	IC-339 VOLT COMP QUAD	3	J	250	8.000	1.000	EA	B	N	N	8.000	0	0	5N,15P,7G	00/00/00	99/99/99
970554-001	IC-3525 MOD PULSE WIDT	3	C	251	1.000	1.000	EA	B	Y	N	1.000	0	0	U5G	00/00/00	99/99/99
203052-051	IC-4051 MUX 8 CH	3	C	252	2.000	1.000	EA	B	N	N	2.000	0	0	U10A,10E	00/00/00	99/99/99
970025-001	IC-556 TIMER DUAL	3	C	253	1.000	1.000	EA	B	Y	N	1.000	0	0	U5E	00/00/00	99/99/99
203130-999	IC-082 OP AMP JFET IN	3	E	254	5.000	1.000	EA	B	N	N	5.000	0	0	U11A,U8A,U8B,U11B	00/00/00	99/99/99
203550-501	IC-1001 CONV A-D 10BIT 170NS	3	E	255	1.000	1.000	EA	B	Y	N	1.000	0	0	U13E	00/00/00	99/99/99
970454-001	IC-7533 CONV D-A 10BIT	3	C	256	1.000	1.000	EA	B	N	N	1.000	0	0	U12A	00/00/00	99/99/99
970989-001	IC-74ALS05,INVERTER,OPEN COLTR	0	A	257	1.000	1.000	EA	B	Y	N	1.000	0	0	U7C ECO#19426	11/17/86	99/99/99
203082-500	IC-7407N BUF DRV HEX	3	E	258	2.000	1.000	EA	B	N	N	2.000	0	0	U9H,U17V	00/00/00	99/99/99
203012-136	IC-4136 OP AMP QUAD	3	H	259	5.000	1.000	EA	B	N	N	5.000	0	0	U16K,16L,15S,6W,15V	00/00/00	99/99/99
203555-111	IC-8036 CIO 16BIT 6MHZ	3	C	265	2.000	1.000	EA	B	N	N	2.000	0	0	U14A,U16A	00/00/00	99/99/99
970010-001	IC-74LS08 AND 2IN QUAD	3	B	266	3.000	1.000	EA	B	N	N	3.000	0	0	U14E,14F,17S	00/00/00	99/99/99
203085-001	IC-74LS14 INV SCHMITT HEX	3	J	267	1.000	1.000	EA	B	Y	N	1.000	0	0	U15E	00/00/00	99/99/99
203029-003	IC-74LS11 AND 3IN TRIP	3	F	269	2.000	1.000	EA	B	N	N	2.000	0	0	U17P,17T	00/00/00	99/99/99
203039-001	IC-74LS74 FF D DUAL	3	M	270	1.000	1.000	EA	B	N	N	1.000	0	0	U15R	00/00/00	99/99/99
970221-001	IC-74LS00 NAND 2IN POS QUAD	3	E	272	1.000	1.000	EA	B	N	N	1.000	0	0	U12H	00/00/00	99/99/99
203046-001	IC-74LS123 MLTV DUAL	3	G	273	2.000	1.000	EA	B	N	N	2.000	0	0	U17R,U16M	00/00/00	99/99/99
203051-100	IC-74LS175 FF D QUAD	3	G	274	2.000	1.000	EA	B	N	N	2.000	0	0	U11E,U12C	00/00/00	99/99/99
731006-800	LABEL-ASSY	3	B	278	1.000	1.000	EA	F	N	N	1.000	0	0		00/00/00	99/99/99
203046-148	IC-74LS138 DCDR 3-8 LINE	3	K	279	1.000	1.000	EA	B	N	N	1.000	0	0	U12E	00/00/00	99/99/99
203035-032	IC-74LS32 OR 2IN QUAD	3	J	280	1.000	1.000	EA	B	N	N	1.000	0	0	U12F	00/00/00	99/99/99
203029-500	IC-7414 INV HEX SCHMITT TRIP	3	B	281	1.000	1.000	EA	B	Y	N	1.000	0	0	U16N ECO#19426	11/17/86	99/99/99
203052-378	IC-74LS378 FF D HEX	3	D	282	2.000	1.000	EA	B	N	N	2.000	0	0	U13A,U13C	00/00/00	99/99/99
970011-001	IC-74LS04 INV HEX	3	D	284	1.000	1.000	EA	B	N	N	1.000	0	0	U13H	00/00/00	99/99/99
203052-244	IC-74LS244 BFR OCT 3S	3	K	285	1.000	1.000	EA	B	N	N	1.000	0	0	U11C	00/00/00	99/99/99
211077-999	CLIP-RELAY	3	B	290	1.000	1.000	EA	B	N	N	1.000	0	0		00/00/00	99/99/99
211078-999	SOCKET RELAY	3	A	291	1.000	1.000	EA	B	N	N	1.000	0	0	K1	00/00/00	99/99/99
203013-200	IC-7805 VOLT REG 5V 1.5A	3	D	296	1.000	1.000	EA	B	N	N	1.000	0	0	VR6	00/00/00	99/99/99
203013-210	IC-7812 VOLT REG -12V 1A	3	F	297	1.000	1.000	EA	B	N	N	1.000	0	0	VR4	00/00/00	99/99/99
203013-300	IC-7912 VOLT REG.12V,1.5AMPS	3	L	298	1.000	1.000	EA	B	N	N	1.000	0	0	VR3	00/00/00	99/99/99
970002-001	IC-7906 VOLT REG -6V	3	A	300	1.000	1.000	EA	B	N	N	1.000	0	0	VR1	00/00/00	99/99/99
970255-001	IC-7808 VOLT REG +8V 1A	3	B	301	1.000	1.000	EA	B	N	N	1.000	0	0	VR5	00/00/00	99/99/99
209990-099	ADHESIVE-HOT MELT	3	A	302	.000	1.000	EA	F	Y	N	.000	0	0		00/00/00	99/99/99
208430-900	WIRE-30AWG,KYNAR ROLL,UL	3	E	303	6.000	1.000	FT	F	Y	N	6.000	0	0	ECO#19426	11/17/86	99/99/99
210408-032	TUBING-HEAT SHRINK,	3	N	304	.100	1.000	FT	F	Y	N	.100	0	0		00/00/00	99/99/99
208415-111	WIRE-STRD,22AWG,IRPVC,WHT	3	C	305	.600	1.000	FT	F	Y	N	.600	0	0		00/00/00	99/99/99

BILL OF MATERIAL

AS OF 12/31/93

CLASS CODE: 3400
GCR UNIQUE BOARD ASSY

962832-002 OPCODE: 4 REV: G PWB ASSY-SENSOR/SERVO,57V
MODEL:
ECO NO: 19667
DATE OF LAST ECO: 2/27/87

OP: ORDER POLICY CODE
REQ: Y=PART REQUIRED
N=PART OPTIONAL
PF: Y=PART PRINTS ON SALES ORDER
N=PART DOES NOT PRINT ON SO

PART NUMBER	DESCRIPTION	OP	RV	ITEM NO.	QTY PER ASSEMBLY	YIELD FACTR	UM	SC	REQ	PF	DEFAULT QUANTITY	DAYS OFF SET	SEQ	REFERENCE DESIGNATOR	EFFECTIV DATE	OBSOLETE DATE
970534-001	SOCKET-DIP 20 CONTACTS	3	A	306	1.000	1.000	EA	B	Y	N	1.000	0	0	XU13E	00/00/00	99/99/99
208425-001	WIRE-STRD,26AWG,IR PVC OR	3	C	307	.000	1.000	FT	F	Y	N	.001	0	0		00/00/00	99/99/99
209990-071	ADHESIVE-SUPERBONDER	3	B	308	.000	1.000	EA	F	Y	N	.000	0	0		00/00/00	99/99/99
213020-605	SCREW- 6-32X5/16,BDR HD,SLOT	1	A	309	1.000	1.000	EA	F	Y	N	1.000	0	0		00/00/00	99/99/99
213700-609	WASHER-FLAT,NYLON,SM PAT	3	B	310	1.000	1.000	EA	F	Y	N	1.000	0	0		00/00/00	99/99/99
970559-001	NUT-ACORN CAP 6-32 NYLON	3	A	311	1.000	1.000	EA	B	Y	N	1.000	0	0		00/00/00	99/99/99
209990-063	ADHESIVE-DOW CORNING 3145	3	A	312	.001	1.000	EA	F	Y	N	.001	0	0	ECO#19401	11/17/86	99/99/99
970259-005	TUBING-PVC,105DEG,CLEAR,18	3	A	313	.000	1.000	EA	F	Y	N	.000	0	0		7/28/86	99/99/99
210408-004	TUBING-HT SHRK,1/4,BLK,VW-1	3	N	314	.000	1.000	FT	F	Y	N	.000	0	0		7/28/86	99/99/99
211001-101	HEADER-DIP PLUG,14PIN	3	A	315	1.000	1.000	EA	B	Y	N	1.000	0	0	ECO#19426	11/17/86	99/99/99

REVISION					
LTR	DESCRIPTION	DWN	DATE	APVD	DATE
A	PROD REL PER ED-27-0129	CW	7-7-86	[illegible]	7-10-87

UNUSED GATES		
TYPE	REF DESIG	INPUT (OUTPUT)
339		8,9(14)
339		8,9(14)
4136		1,2(3)
7406		3(4)-11(10)
7407		1(2)-3(4)-5(6)-9(8)
7407		13(12)
74LS08		1,2(3)-4,5(6)-9,10(8)
74LS14		9(8)
74LS123		6,7,9,10,11(5,12)
74LS32		1,2(3)
7414		9(8)-11(10)-13(12)

REFERENCE DESIGNATION		
LTR	LAST USED	NOT USED
C		
CR		
DS		
J		
K		
L		
Q		
R		
T		
U		
VR		
TP		

3 IC TYPE	REFERENCE DESIGNATOR	+5V	DGND	+12	-12	+6	-6	PGND	AGND
74LS08	U11D, U11C, U12B	14	7						
74LS11	U10KB, U10KA	14	7						
74LS14	U11F	14	7						
74LS04	U10EB	14	7						
74LS74	U11R								7
74LS123	U13M, U13P	16	8						
74LS138	U10CA	16	8						
74LS175	U10BA, U13D	16	8						
74LS378	U10AB, U10BB	16	8						
74LS244	U13B	20	10						
74LS00	U12CB	14	7						
74LS32	U10F	14	7						
LM339	U4D							12	
74ALS05	U7D	14	7						
7407	U10EA, U9J	14	7						
7414	U7E	14	7						
LM339			12						
LM339	U11L			3	12				
TL082	U8B, U8D, U9A, U9C			8	4				
LM339	U10J, U12J, U12K, U13R			3					12
NE556N	U4C							7	
TL084	U12F			4	11				
RC4136	U7J, U11M, U11P			11	7				
MD14051	U8C, U9E					16	7		8
AD7533LN	U10AA			14					3
ADC1001	U10CB		10						7,8
74LS174	U12CA, U13C	16	8						
Z8036	U11B, U12B	23	7						

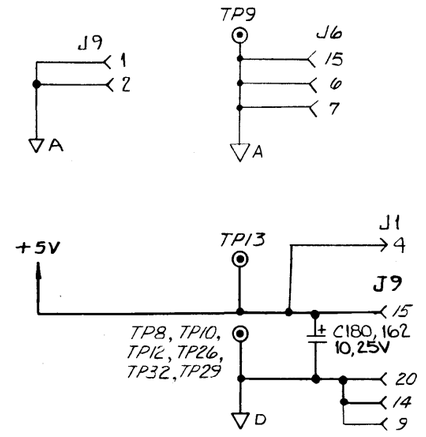

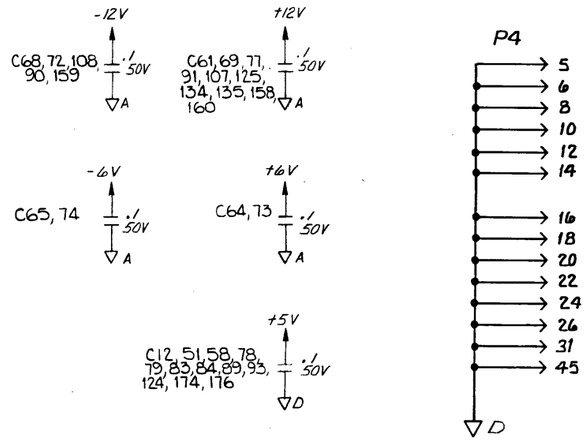

4. V8W RESISTORS ARE IDENTIFIED AS 1%.

3. IC VOLTAGE AND GND ASSIGNMENTS

2. CAPACITOR VALUES ARE IN MICROFARADS, 50V.

1. RESISTOR VALUES ARE IN OHMS. 1/4W. 5%

NOTES: UNLESS OTHERWISE SPECIFIED.

REV STATUS	REV
OF SHEETS	SH 1 2 3 4 5 6 7 8 9 10 11 12 13 14 15 16 17 18 19 20 21 22 23 24

ALL INFORMATION CONTAINED IN OR DISCLOSED BY THIS DOCUMENT IS CONSIDERED CONFIDENTIAL AND PROPRIETARY BY CIPHER DATA PRODUCTS, INC. BY ACCEPTING THIS MATERIAL THE RECIPIENT AGREES THAT THIS MATERIAL AND THE INFORMATION CONTAINED THEREIN IS HELD IN CONFIDENCE AND IN TRUST AND WILL NOT BE USED, REPRODUCED IN WHOLE OR IN PART NOR ITS CONTENTS REVEALED TO OTHERS, EXCEPT TO MEET THE PURPOSE FOR WHICH IT WAS DELIVERED. IT IS UNDERSTOOD THAT NO RIGHT IS CONVEYED TO REPRODUCE OR HAVE REPRODUCED ANY ITEM HEREIN DISCLOSED WITHOUT EXPRESS PERMISSION FROM CIPHER DATA PRODUCTS, INC

UNLESS OTHERWISE SPECIFIED DIMENSIONS ARE IN INCHES
TOLERANCES ARE
DECIMALS
.X ±
.XX ±
.XXX ±
ANGLES ±
DO NOT SCALE DRAWING

	APPROVAL	DATE
DWN	C WRIGHT	7/7/86
CHK	M [illegible]	7/8/86
DESIGN	[illegible]	7/7/86
SAFE		
DRAWING	[illegible]	7/7/86
MFG ENG		
ISSUED	[illegible]	7/7/86

cipher SAN DIEGO CALIF

TITLE: SCHEM-SENSOR/SERVO,5N

CODE IDENT	SIZE	DWG NO.	REV
32274	D	96 3490-300	A

SCALE — MOD MGCR SH 1 OF 7

BRUNING 49-93

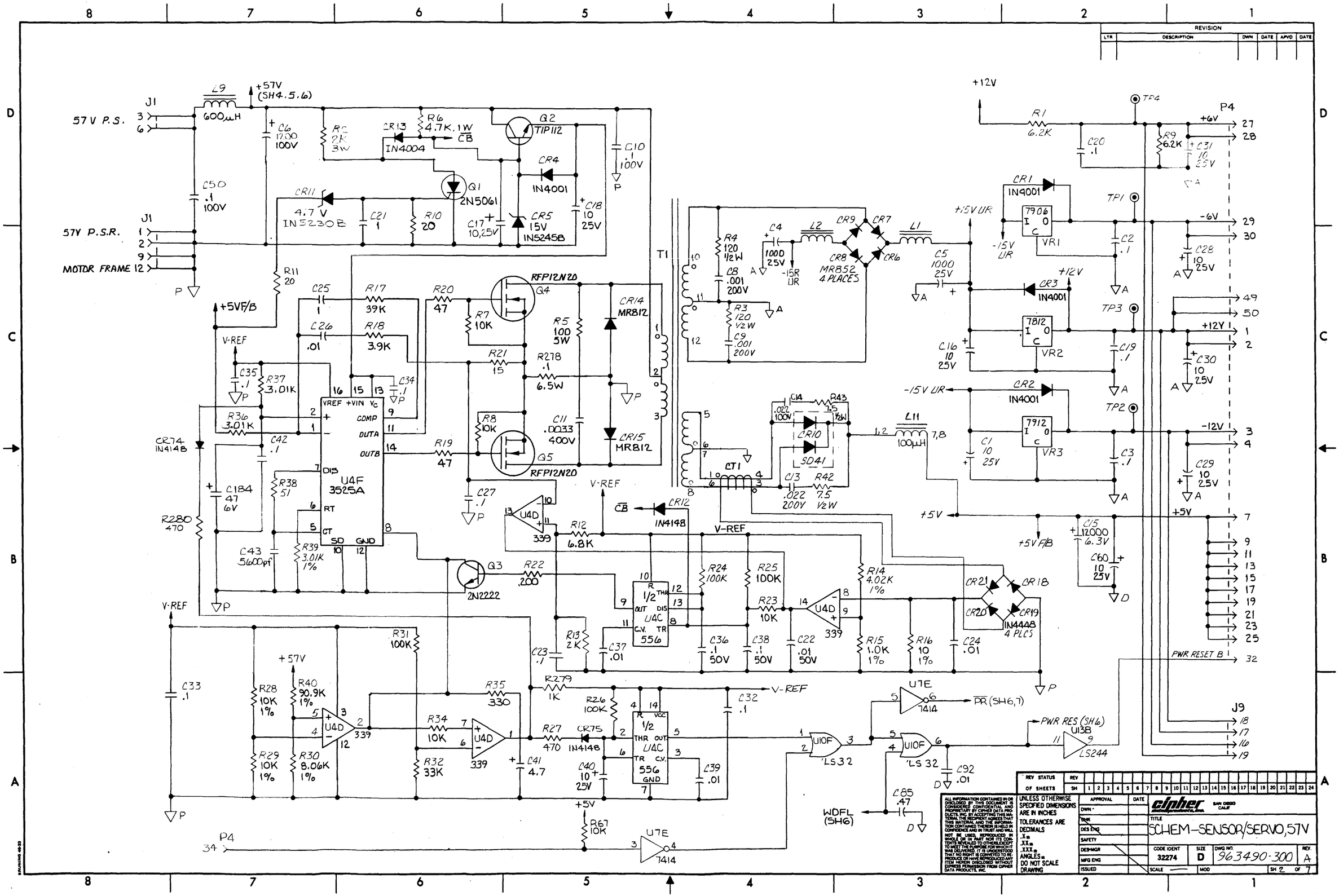

REVISION					
LTR	DESCRIPTION	DWN	DATE	APVD	DATE

REV STATUS OF SHEETS — REV / SH 1 2 3 4 5 6 7 8 9 10 11 12 13 14 15 16 17 18 19 20 21 22 23 24

ALL INFORMATION CONTAINED IN OR DISCLOSED BY THIS DOCUMENT IS CONSIDERED CONFIDENTIAL AND PROPRIETARY BY CIPHER DATA PRODUCTS, INC. BY ACCEPTING THIS MATERIAL THE RECIPIENT AGREES THAT THIS MATERIAL AND THE INFORMATION CONTAINED THEREIN IS HELD IN CONFIDENCE AND IN TRUST AND WILL NOT BE USED, REPRODUCED IN WHOLE OR IN PART NOR ITS CONTENTS REVEALED TO OTHERS, EXCEPT TO MEET THE PURPOSE FOR WHICH IT WAS DELIVERED. IT IS UNDERSTOOD THAT NO RIGHT IS CONVEYED TO REPRODUCE OR HAVE REPRODUCED ANY ITEM HEREIN DISCLOSED WITHOUT EXPRESS PERMISSION FROM CIPHER DATA PRODUCTS, INC.

UNLESS OTHERWISE SPECIFIED DIMENSIONS ARE IN INCHES
TOLERANCES ARE
DECIMALS
.X±
.XX±
.XXX±
ANGLES±
DO NOT SCALE DRAWING

APPROVAL	DATE
DWN -	
CHK	
DES ENG	
SAFETY	
DES MGR	
MFG ENG	
ISSUED	

cipher — SAN DIEGO CALIF

TITLE: SCHEM-SENSOR/SERVO,57V

CODE IDENT	SIZE	DWG NO.	REV.
32274	D	963490-300	A

SCALE — MOD — SH 2 OF 7

REVISION					
LTR	DESCRIPTION	DWN	DATE	APVD	DATE

ERASE HEAD DRIVER

WRITE CENTER TAP HEAD DRIVER

REV STATUS	REV																							
OF SHEETS	SH	1	2	3	4	5	6	7	8	9	10	11	12	13	14	15	16	17	18	19	20	21	22	23	24

ALL INFORMATION CONTAINED IN OR DISCLOSED BY THIS DOCUMENT IS CONSIDERED CONFIDENTIAL AND PROPRIETARY BY CIPHER DATA PRODUCTS INC BY ACCEPTING THIS MATERIAL THE RECIPIENT AGREES THAT THIS MATERIAL AND THE INFORMATION CONTAINED THEREIN IS HELD IN CONFIDENCE AND IN TRUST AND WILL NOT BE USED, REPRODUCED IN WHOLE OR IN PART, NOR ITS CONTENTS REVEALED TO OTHERS, EXCEPT TO MEET THE PURPOSE FOR WHICH IT WAS DELIVERED. IT IS UNDERSTOOD THAT NO RIGHT IS CONVEYED TO RE-PRODUCE OR HAVE REPRODUCED ANY ITEM HEREIN DISCLOSED WITHOUT EXPRESS PERMISSION FROM CIPHER DATA PRODUCTS INC

UNLESS OTHERWISE SPECIFIED DIMENSIONS ARE IN INCHES TOLERANCES ARE DECIMALS .X ± .XX ± .XXX ± ANGLES ± DO NOT SCALE DRAWING	APPROVAL	DATE	cipher data products SAN DIEGO CALIF
	DWN		TITLE SCHEM-SENSOR/SERVO,5TV
	CHK		
	DES ENG		
	SAFETY		
	DES MGR		CODE IDENT 32274 · SIZE D · DWG NO 963490-300 · REV A
	MFG ENG		
	ISSUED		SCALE · MOD MGCR · SH 3 OF 7

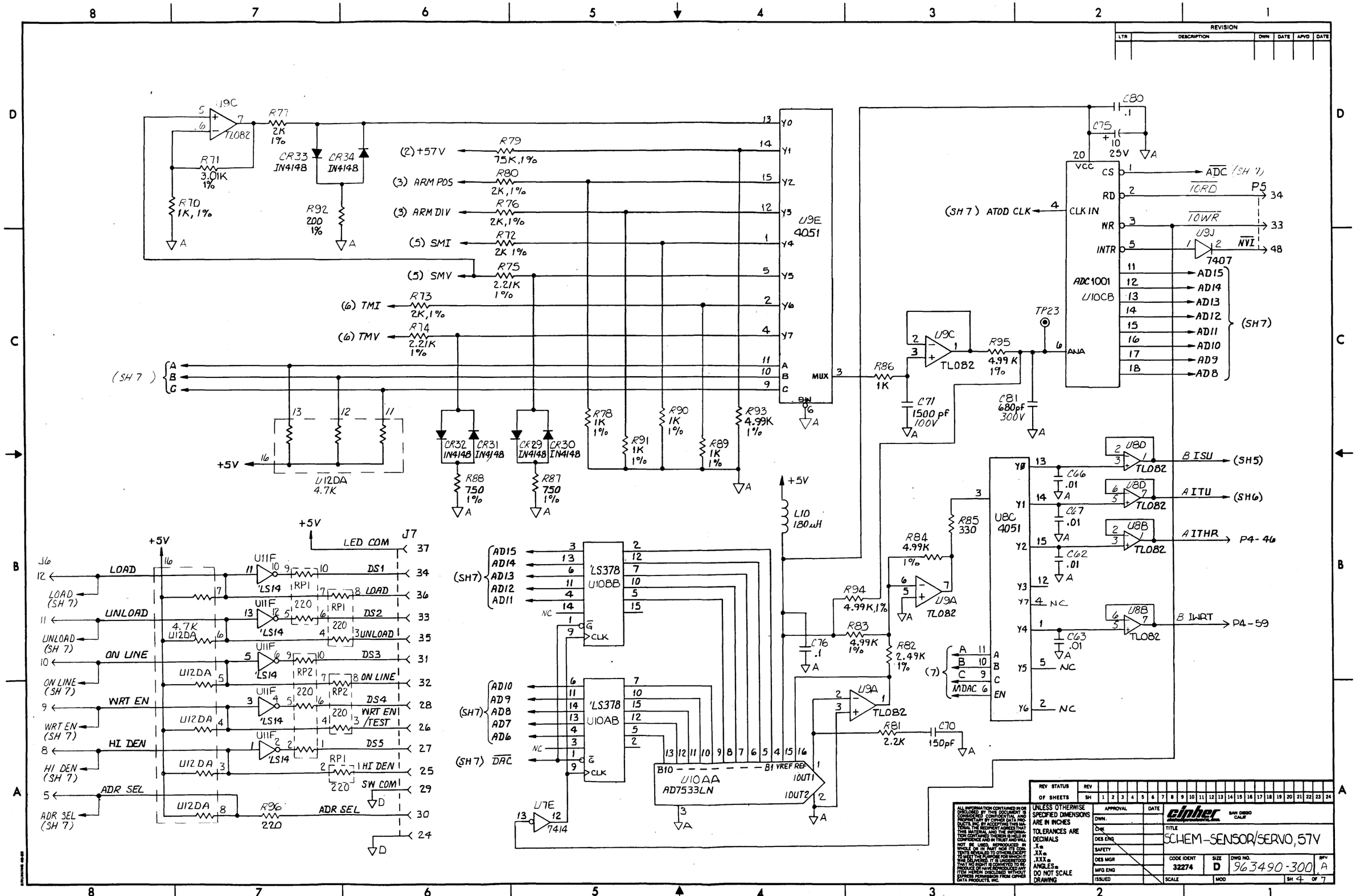

REVISION

LTR	DESCRIPTION	DWN	DATE	APVD	DATE

REV STATUS OF SHEETS

ALL INFORMATION CONTAINED IN OR DISCLOSED BY THIS DOCUMENT IS CONSIDERED CONFIDENTIAL AND PROPRIETARY BY CIPHER DATA PRODUCTS, INC. BY ACCEPTING THIS MATERIAL THE RECIPIENT AGREES THAT THIS MATERIAL AND THE INFORMATION CONTAINED THEREIN IS HELD IN CONFIDENCE AND IN TRUST AND WILL NOT BE USED, REPRODUCED IN WHOLE OR IN PART NOR ITS CONTENTS REVEALED TO OTHERS EXCEPT TO MEET THE PURPOSE FOR WHICH IT WAS DELIVERED. IT IS UNDERSTOOD THAT NO RIGHT IS CONVEYED TO REPRODUCE OR HAVE REPRODUCED ANY ITEM HEREIN DISCLOSED WITHOUT EXPRESS PERMISSION FROM CIPHER DATA PRODUCTS, INC.

UNLESS OTHERWISE SPECIFIED DIMENSIONS ARE IN INCHES
TOLERANCES ARE
DECIMALS
.X±
.XX±
.XXX±
ANGLES±
DO NOT SCALE DRAWING

APPROVAL	DATE
DWN.	
CHK	
DES ENG	
SAFETY	
DES MGR	
MFG ENG	
ISSUED	

cipher SAN DIEGO CALIF

TITLE: SCHEM-SENSOR/SERVO, 57V

CODE IDENT	SIZE	DWG NO.	REV
32274	D	963490-300	A

SCALE | MOD | SH 4 OF 7

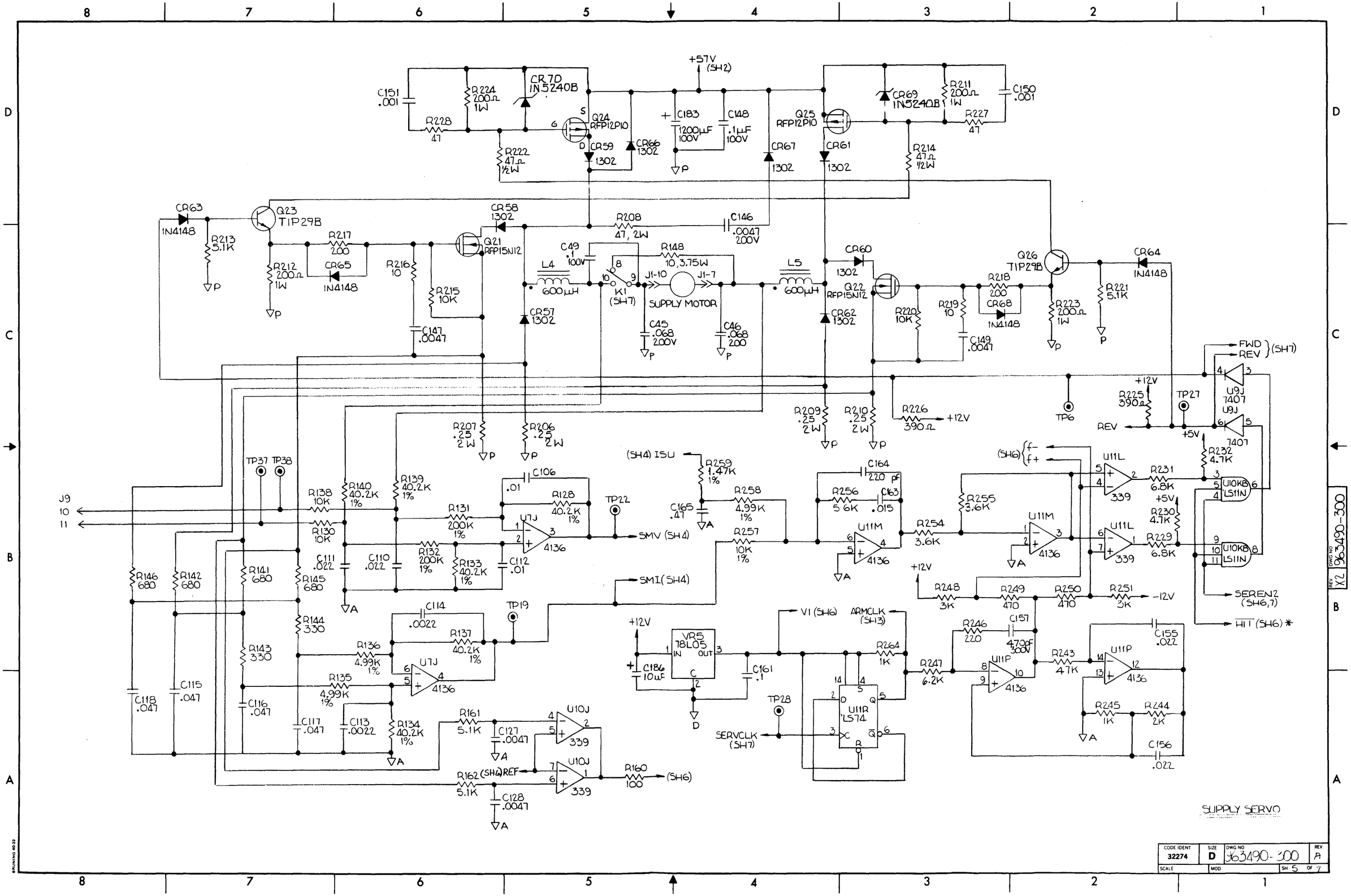

CODE IDENT	SIZE	DWG NO	REV
32274	D	963490-300	A
SCALE	MOD	SH 5 OF 7	

DWG NO 963490-300 REV X2

BRUNING 40-32

TAKE UP SERVO

CODE IDENT	SIZE	DWG NO	REV
32274	D	963490-300	A
SCALE	MOD	SH 6 OF 7	

DWG NO 963490-300 REV A

BRUNING 40-22

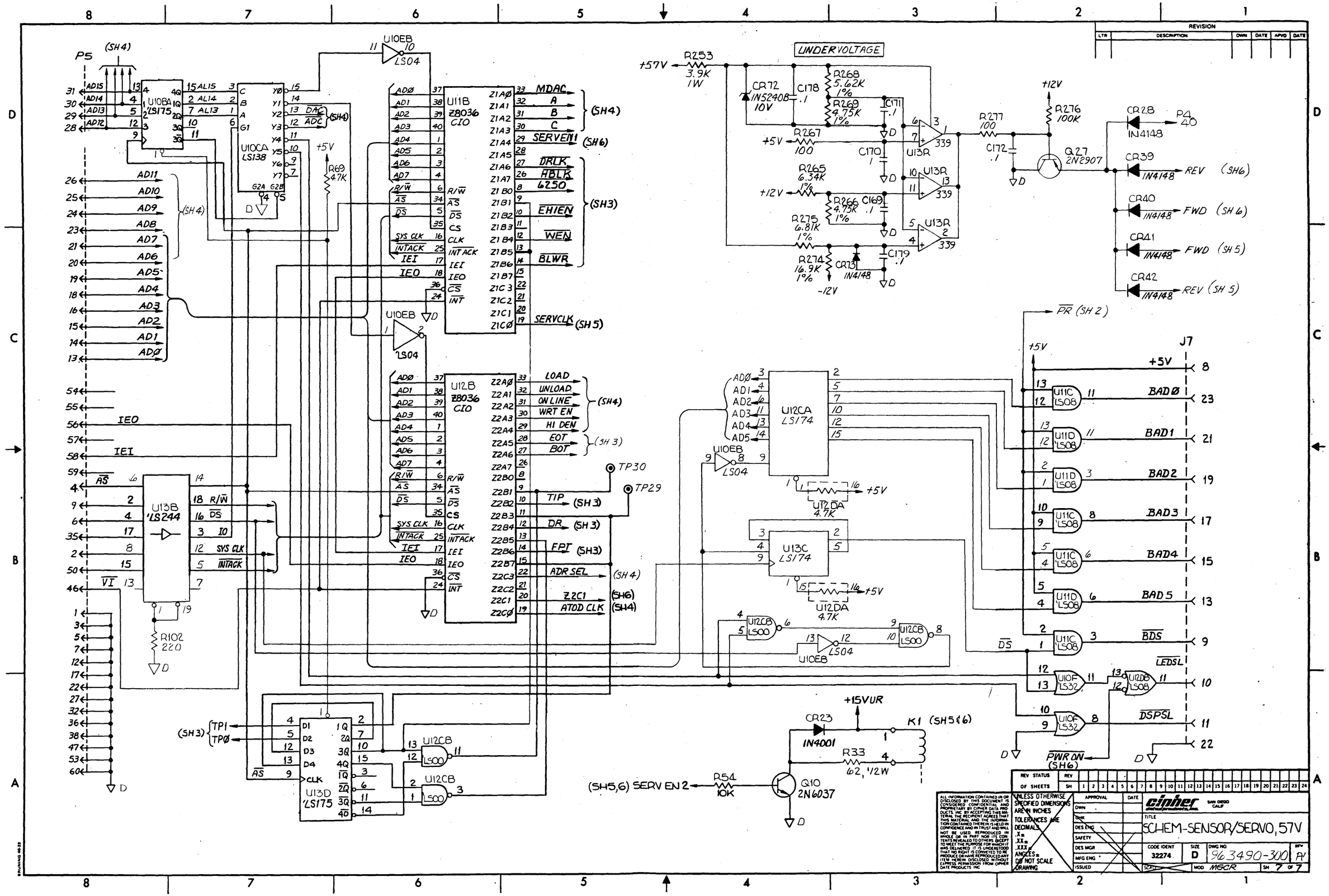

REV STATUS	REV
OF SHEETS	SH 1 2 3 4 5 6 7 8 9 10 11 12 13 14 15 16 17 18 19 20 21 22 23 24

UNLESS OTHERWISE SPECIFIED DIMENSIONS ARE IN INCHES
TOLERANCES ARE DECIMALS .X ± .XX ± .XXX ± ANGLES ± DO NOT SCALE DRAWING

APPROVAL	DATE
DWN	
CHK	
DES ENG	
SAFETY	
DES MGR	
MFG ENG	
ISSUED	

cipher SAN DIEGO CALIF

TITLE: SCHEM-SENSOR/SERVO, 57V

CODE IDENT	SIZE	DWG NO	REV
32274	D	963490-300	A1

SCALE | MOD MSCR | SH 7 OF 7

ALL INFORMATION CONTAINED IN OR DISCLOSED BY THIS DOCUMENT IS CONSIDERED CONFIDENTIAL AND PROPRIETARY BY CYPHER DATA PRODUCTS INC BY ACCEPTING THIS MATERIAL THE RECIPIENT AGREES THAT THIS MATERIAL AND THE INFORMATION CONTAINED THEREIN IS HELD IN CONFIDENCE AND IN TRUST AND WILL NOT BE USED, REPRODUCED IN WHOLE OR IN PART, NOR ITS CONTENTS REVEALED TO OTHERS (EXCEPT TO MEET THE PURPOSE FOR WHICH IT WAS DELIVERED) IT IS UNDERSTOOD THAT NO RIGHT IS CONVEYED TO REPRODUCE OR HAVE REPRODUCED ANY ITEM HEREIN DISCLOSED WITHOUT EXPRESS PERMISSION FROM CYPHER DATA PRODUCTS INC

BRUNING 40-23

REVISION					
LTR	DESCRIPTION	DWN	DATE	APVD	DATE
A	PROD REL ECO SD-87-0129	RL	6-2087	[illegible]	7-10-87

USING ITEM 312 BOND CHOKES L4/L5, L6/L7, L9, L11/L12 AS SHOWN

SEE DETAIL A (VR1 THRU VR4, Q4 & Q5)

117

SEE DETAIL B

BUS BAR (73)

TRANSISTOR

PWB REF

(26)
(27)
(10)
(9) (Q17, 20, 23 AND 26 ONLY)

DETAIL C

(74) BUS BAR

EJECTOR 2 PL (3) (22)

DETAIL B

(24) STIFFINER
(209) ADHESIVE

DETAIL D (Q15 THRU Q26)

(315) BAR CODE

PWB, COMP SIDE (REF)

(309) SCREW NYLON

(311) NUT ACORN

(310) WASHER NYLON

DETAIL G

HEATSINK (REF) (CUT TO SHOW DETAIL)

(20) (4) SCREW
(19) NUT, SYNC (2)
(18) HEATSINK

DETAIL B

BOND (CAPACITOR USING ITEM 312 (2 PL MIN.)

CAPACITOR (REF)

DETAIL D

(19) NUT SYNC
(14) HEATSINK (VR4)
(15) HEATSINK (VR1,2,3)
(16) HEATSINK (Q4, Q5)
(20) SCREW (4)
TRANSISTOR (REF)

DETAIL A

963490-000
REV A

BUS BAR (75)

(278) (1)

SEE DETAIL G

(2) PWB

(4) TORQUE SCREW BETWEEN 6 & 8 LBS AFTER SYNC NUT HAS BEEN SOLDERED IN PLACE.

(3) ROLL PIN IS FURNISHED WITH EJECTOR (ITEM 22).

2. FOR SCHEMATIC SEE 963490-300.

(1) MARK ASSY P/N & REV LETTER ON ASSY LABEL (ITEM 278) ON AREA INDICATED.

NOTES: UNLESS OTHERWISE SPECIFIED

BRUNING 40-22

REV STATUS	REV																							
OF SHEETS	SH	1	2	3	4	5	6	7	8	9	10	11	12	13	14	15	16	17	18	19	20	21	22	23	24

ALL INFORMATION CONTAINED IN OR DISCLOSED BY THIS DOCUMENT IS CONSIDERED CONFIDENTIAL AND PROPRIETARY BY CIPHER DATA PRODUCTS, INC. BY ACCEPTING THIS MATERIAL THE RECIPIENT AGREES THAT THIS MATERIAL AND THE INFORMATION CONTAINED THEREIN IS HELD IN CONFIDENCE AND IN TRUST AND WILL NOT BE USED, REPRODUCED IN WHOLE OR IN PART NOR ITS CONTENTS REVEALED TO OTHERS EXCEPT TO MEET THE PURPOSE FOR WHICH IT WAS DELIVERED. IT IS UNDERSTOOD THAT NO RIGHT IS CONVEYED TO REPRODUCE OR HAVE REPRODUCED ANY ITEM HEREIN, DISCLOSED WITHOUT EXPRESS PERMISSION FROM CIPHER DATA PRODUCTS, INC.

UNLESS OTHERWISE SPECIFIED DIMENSIONS ARE IN INCHES
TOLERANCES ARE
DECIMALS
.X ±
.XX ±
.XXX ±
ANGLES ±
DO NOT SCALE DRAWING

APPROVAL		DATE
DWN	[illegible]	6/26/87
CHK	[illegible]	7/7/87
DES ENG	[illegible]	7/7/87
SAFETY	[illegible]	7/7/87
DES MGR	[illegible]	7/9/87
MFG ENG	[illegible]	7/7/87
ISSUED	[illegible]	7-10-87

cipher data products, inc. SAN DIEGO CALIF

TITLE PICT-PWB ASSY SENSOR / SERVO 57 V

CODE IDENT	SIZE	DWG NO	REV
32274	D	963490-000	A

SCALE 1/1 MOD SH 1 OF 1

BILL OF MATERIAL
AS OF ALL DATE

CLASS CODE GROUP: 1 UNCLASSIFIED
CLASS CODE: 3400 G.C.R. UNIQUE BOARD ASSY

963490-001 OPCODE: 4 REV: B PWB ASSY-SENSOR SERVO,57V
MODEL:
ECO NO: 30189
DATE OF LAST ECO: 11/20/87

OP: ORDER POLICY CODE
REQ: N=PART OPTIONAL
Y=PART REQUIRED
PF: N=PART DOES NOT PRINT ON SALES ORDER
Y=PART PRINTS ON SALES ORDER W/O PRICE
P=PART PRINTS ON SALES ORDER WITH PRICE

PART NUMBER	DESCRIPTION	OP	RV	ITEM NO.	QTY PER ASSEMBLY	YIELD FACTR	UM	SC	REQ	PF	DEFAULT QUANTITY	DAYS OFF SET	SEQ	REFERENCE DESIGNATOR	EFFECTIV DATE	OBSOLETE DATE
963490-000	PICT-PWB ASSY,SENSOR SERVO,57V	1	A	1	0.000	1.000	EA	F	Y	N	0.000	0	0		11/14/85	99/99/99
963491-101	PWB-SENSOR/SERVO,37V,57V	1	B	2	1.000	1.000	EA	B	Y	N	1.000	0	0		11/14/85	99/99/99
961234-400	SPECIFICATION-TEST,	3	A	3	0.000	1.000	EA	F	N	N	0.000	0	0		00/00/00	99/99/99
963490-300	SCHEM-SENSOR SERVO,57V	1	B	4	0.000	1.000	EA	F	Y	N	0.000	0	0		11/14/85	99/99/99
964398-001	INDUCTOR-DUAL,1500UH	1	A	5	1.000	1.000	EA	B	Y	N	1.000	0	0	L1,2	4/02/87	99/99/99
970440-180	INDUCTOR-180UH,+-10%,	3	B	6	1.000	1.000	EA	B	N	N	1.000	0	0	L10	00/00/00	99/99/99
962906-001	INDUCTOR-EMI FILTER	1	A	7	1.000	1.000	EA	B	Y	N	1.000	0	0	L9	00/00/00	99/99/99
962904-001	XFMR-CURRENT,SENSE	1	B	8	1.000	1.000	EA	B	Y	N	1.000	0	0	CT1	00/00/00	99/99/99
971037-001	HEATSINK-STUD MOUNT	3	A	9	4.000	1.000	EA	B	Y	N	4.000	0	0	Q17,20,23,26	3/25/87	99/99/99
971037-002	HEATSINK-STUD MOUNT	3		10	8.000	1.000	EA	B	Y	N	8.000	0	0	Q15,16,18,19,21,22,24,25	3/25/87	99/99/99
962903-001	CHOKE-DUAL MOTOR	3	A	11	2.000	1.000	EA	B	Y	N	2.000	0	0	L4-7	00/00/00*	11/23/87
962903-001	CHOKE-DUAL MOTOR	3	A	11	2.000	1.000	EA	B	Y	N	2.000	0	0	L4/L5,L6/L7 ECO#30189	11/23/87	99/99/99
962908-003	XFMR-PWM,57 VOLT	1	C	12	1.000	1.000	EA	B	Y	N	1.000	0	0	T1	3/25/87	99/99/99
971015-001	HEATSINK-TO-3,TOP MOUNT GOLD	3	A	13	1.000	1.000	EA	B	Y	N	1.000	0	0	CR10	3/12/87	99/99/99
970388-001	HEATSINK-"U" BLACK	3	C	14	1.000	1.000	EA	B	N	N	1.000	0	0	VR4	00/00/00	99/99/99
970281-002	HEATSINK-TO-127/TO-220,	3	C	15	11.000	1.000	EA	B	Y	N	11.000	0	0	VR1,2,3	12/13/85*	11/23/87
970281-002	HEATSINK-TO-127/TO-220,	3	C	15	3.000	1.000	EA	B	Y	N	3.000	0	0	VR1-3 ECO#30189	11/23/87	99/99/99
970281-001	HEATSINK-TO-127/TO-220,	3	C	16	2.000	1.000	EA	B	Y	N	2.000	0	0	Q4,Q5	00/00/00	99/99/99
970287-001	HEATSINK-TO-3,6.4,C/W	3	C	18	1.000	1.000	EA	B	N	N	1.000	0	0	CR10	00/00/00	99/99/99
970460-001	NUT-SYNC,6-32,HEATSINK,.220MAX	3	D	19	8.000	1.000	EA	B	Y	N	8.000	0	0		3/27/86*	11/23/87
970460-001	NUT-SYNC,6-32,HEATSINK,.220MAX	3	D	19	9.000	1.000	EA	B	Y	N	9.000	0	0	VR1-4,Q2,4 5,CR10 ECO #30189	11/23/87	99/99/99
213271-605	SCREW-PHP,ZINC,6-32X5/16	3	G	20	6.000	1.000	EA	F	Y	N	6.000	0	0		12/13/85	99/99/99
964400-001	CHOKE-+5V	1	A	21	1.000	1.000	EA	B	Y	N	1.000	0	0	L11	3/25/87	99/99/99
970083-001	INJECTOR/EJECTOR-1/16"	3	B	22	2.000	1.000	EA	B	N	N	2.000	0	0		00/00/00	99/99/99
961707-002	STIFFENER-EDGE,PCB	3	B	24	1.000	1.000	EA	B	Y	N	1.000	0	0		00/00/00	99/99/99
213271-603	SCREW-PHP,ZINC,6-32X3/16	3	G	25	1.000	1.000	EA	F	Y	N	1.000	0	0		3/27/86	99/99/99
207602-011	WASHER,SPLIT LOCK #6	3	C	26	12.000	1.000	EA	F	Y	N	12.000	0	0		4/02/87	99/99/99
207604-081	NUT-HEX RADIO PATTERN	3	B	27	12.000	1.000	EA	F	Y	N	12.000	0	0		4/02/87	99/99/99
213271-606	SCREW-PHP,ZINC,6-32X3/8	3	G	28	2.000	1.000	EA	F	Y	N	2.000	0	0	CR10	4/02/87	99/99/99
201114-274	CAP-CER,2700PF,50V,10%,X7R	3	J	30	2.000	1.000	EA	B	Y	N	2.000	0	0	95,94	00/00/00	99/99/99
201114-224	CAP-CER,2200PF,50V,10%,X7R	3	J	33	4.000	1.000	EA	B	Y	N	4.000	0	0	105,109,113,114	00/00/00	99/99/99
201191-025	CAP-ELEC,10MF,25V, ,ALUM	3	H	34	14.000	1.000	EA	B	Y	N	14.000	0	0	C1,16-18,2	00/00/00	99/99/99

BILL OF MATERIAL

AS OF ALL DATE

CLASS CODE GROUP: 1 UNCLASSIFIED
CLASS CODE: 3400 G.C.R. UNIQUE BOARD ASSY

963490-001 OPCODE: 4 REV: B PWB ASSY-SENSOR SERVO,57V
MODEL:
ECO NO: 30189
DATE OF LAST ECO: 11/20/87

OP: ORDER POLICY CODE
REQ:N=PART OPTIONAL
Y=PART REQUIRED
PF: N=PART DOES NOT PRINT ON SALES ORDER
Y=PART PRINTS ON SALES ORDER W/O PRICE
P=PART PRINTS ON SALES ORDER WITH PRICE

PART NUMBER	DESCRIPTION	OP	RV	ITEM NO.	QTY PER ASSEMBLY	YIELD FACTR	UM	SC	REQ	PF	DEFAULT QUANTITY	DAYS OFF SET	SEQ	REFERENCE DESIGNATOR	EFFECTIV DATE	OBSOLETE DATE
201191-025	CAP-ELEC,10MF,25V, ,ALUM	3	H	34	14.000	1.000	EA	B	Y	N	14.000	0	0	8-31,40,60 75,162,180 186	00/00/00	99/99/99
201114-106	CAP-CER,100000PF,50V,10%,X7R	3	J	35	17.000	1.000	EA	B	Y	N	17.000	0	0	C23,27 36,38,42,3 1,130,137- 139,167,16 9-172,179, 185	5/30/86*	11/23/87
201114-106	CAP-CER,100000PF,50V,10%.X7R	3	J	35	17.000	1.000	EA	B	Y	N	17.000	0	0	C23,27,36, 38,42,130, 131,137-13 9,167,169- 172,179,18 5 ECO#3018 9	11/23/87	99/99/99
201158-100	CAP-MYLAR,.1MF,100V,10%	3	E	36	6.000	1.000	EA	B	Y	N	6.000	0	0	C10,48-50, 144,148	12/09/86	99/99/99
970565-001	CAP-ELEC,1000MF,25V,-20+50%	3	A	37	2.000	1.000	EA	B	Y	N	2.000	0	0	C4,5	00/00/00	99/99/99
971031-102	CAP-ELEC,1000-1200 MF,100V,LOW	3	B	38	2.000	1.000	EA	B	Y	N	2.000	0	0	C6,183	3/16/87	99/99/99
971034-103	CAP-ELEC,10000-12000 MF 6.3V*	3	B	39	1.000	1.000	EA	B	Y	N	1.000	0	0	C15	3/16/87	99/99/99
201114-564	CAP-CER,5600PF,50V,10%,X7R	3	J	41	1.000	1.000	EA	B	Y	N	1.000	0	0	C43	3/12/87	99/99/99
201114-220	CAP-CER,.022MF,50V,10%	3	J	42	8.000	1.000	EA	B	Y	N	8.000	0	0	88,101,102 110,111,12 6,155,156	00/00/00	99/99/99
201123-151	CAP-DM,1500PF,100V,5%	3	E	43	1.000	1.000	EA	B	N	N	1.000	0	0	C71	00/00/00	99/99/99
201160-472	CAP-TANT,4.7MF,10V,10%	3	D	44	2.000	1.000	EA	B	Y	N	2.000	0	0	C41,173	00/00/00	99/99/99
970712-002	CAP-POLY,.001MF,200V MIN,5%	3	C	45	2.000	1.000	EA	B	Y	N	2.000	0	0	C8,9	12/04/85	99/99/99
970712-004	CAP-POLYPRO,.022UF,200-250V+-*	3	A	48	2.000	1.000	EA	B	N	N	2.000	0	0	C13,14	00/00/00	99/99/99
201204-153	CAP-CER,150PF,50V,5%,NPO	3	P	49	1.000	1.000	EA	B	Y	N	1.000	0	0	C70	00/00/00	99/99/99
201114-105	CAP-CER,10000PF,50V,10%,X7R	3	J	50	23.000	1.000	EA	B	Y	N	23.000	0	0	C22,24,26, 37,39,53-5 7,59,62,63 66,67,92,1 03,104,106 112,129,13 3,136	12/04/85	99/99/99
970712-001	CAP-POLY,.0033MF,250-400V,5%	3	A	51	1.000	1.000	EA	B	Y	N	1.000	0	0	C11	3/12/87	99/99/99
201161-470	CAP-TANT,47MF,6V,10%	3	P	52	4.000	1.000	EA	B	N	N	4.000	0	0	C119-121,1 84	00/00/00	99/99/99
201120-500	CAP-DM,5PF,300V,+-1/2PF,	3	C	53	1.000	1.000	EA	B	N	N	1.000	0	0	C96	00/00/00	99/99/99

BILL OF MATERIAL

AS OF ALL DATE

CLASS CODE GROUP: 1 UNCLASSIFIED
CLASS CODE: 3400 G.C.R. UNIQUE BOARD ASSY

963490-001 OPCODE: 4 REV: B PWB ASSY-SENSOR SERVO,57V
MODEL:
ECO NO: 30189
DATE OF LAST ECO: 11/20/87

OP: ORDER POLICY CODE
REQ: N=PART OPTIONAL
Y=PART REQUIRED
PF: N=PART DOES NOT PRINT ON SALES ORDER
Y=PART PRINTS ON SALES ORDER W/O PRICE
P=PART PRINTS ON SALES ORDER WITH PRICE

PART NUMBER	DESCRIPTION	OP	RV	ITEM NO.	QTY PER ASSEMBLY	YIELD FACTR	UM	SC	REQ	PF	DEFAULT QUANTITY	DAYS OFF SET	SEQ	REFERENCE DESIGNATOR	EFFECTIV DATE	OBSOLETE DATE
201114-155	CAP-CER,15000PF,50V,10%,X7R	3	J	57	2.000	1.000	EA	B	Y	N	2.000	0	0	152,163	3/11/87	99/99/99
201114-475	CAP-CER,47000PF,50V,10%,X7R	3	J	58	9.000	1.000	EA	B	Y	N	9.000	0	0	115-118,97-100,166	00/00/00	99/99/99
970712-003	CAP-POLY,.068MF,200VDC,5%	3	D	60	4.000	1.000	EA	B	Y	N	4.000	0	0	C44-47	12/04/85	99/99/99
201106-107	CAP-CER,1MF,50V,10%	3	M	61	5.000	1.000	EA	B	Y	N	5.000	0	0	C21,25,87,175,177	00/00/00	99/99/99
201113-470	CAP-CER,.0047MF,50V,10%	3	H	62	9.000	1.000	EA	B	Y	N	9.000	0	0	86,122,123 127,128,141,142,149	00/00/00	99/99/99
970712-005	CAP-POLYPRO.0047UF,200-250V,**	3	A	63	2.000	1.000	EA	B	N	N	2.000	0	0	C140,146	00/00/00	99/99/99
201204-221	CAP-CER,2.2PF,50V,5%,NPO	0	P	64	1.000	1.000	EA	B	Y	N	1.000	0	0	C132	4/02/87	99/99/99
201204-473	CAP-CER,470PF,50V,5%,NPO	3	P	65	2.000	1.000	EA	B	N	N	2.000	0	0	C168,157	00/00/00	99/99/99
970784-104	CAP-CER,.1UF,50V,-20+80%,AX,*	3	E	67	44.000	1.000	EA	B	Y	N	44.000	0	0	C2.3,12,19 20,32-35,51,58,61,64 65,69,68,72-74,76-80 82-84,89-91,93,107,108,124,125 134,135,158-161,174, 176,178	1/09/87	99/99/99
201114-104	CAP-CER,1000PF,50V,10%,X7R	3	J	68	4.000	1.000	EA	B	Y	N	4.000	0	0	C143,145,150,151	00/00/00	99/99/99
201112-220	CAP-CER,220PF,50V,10%	3	E	69	2.000	1.000	EA	B	Y	N	2.000	0	0	153,164	3/11/87	99/99/99
970085-001	CAP-DM,680PF,300V,1%	3	B	70	1.000	1.000	EA	B	N	N	1.000	0	0	C81	00/00/00	99/99/99
201105-474	CAP-CER,.47MF,50V,10%	3	N	72	3.000	1.000	EA	B	Y	N	3.000	0	0	85,165,154	00/00/00	99/99/99
962003-001	SPEC-8" PWR & GND BUS BAR	1	A	73	1.000	1.000	EA	B	Y	N	1.000	0	0		00/00/00	99/99/99
962002-001	SPEC-15" PWR & GND BUS BAR	1	B	74	1.000	1.000	EA	B	Y	N	1.000	0	0		00/00/00	99/99/99
970551-002	BUS BAR STIFFENER-INSULATED	3	B	75	1.000	1.000	EA	B	Y	N	1.000	0	0		00/00/00	99/99/99
970724-001	DIODE-1N4448,FAST SWITCHING	3	A	87	4.000	1.000	EA	B	Y	N	4.000	0	0	CR18-21	00/00/00	99/99/99
202033	DIODE,RECTIFIER-	3	F	88	2.000	1.000	EA	B	N	N	2.000	0	0	CR14,15	00/00/00	99/99/99
970562-001	DIODE-RECTIFIER,POWER	3	B	89	4.000	1.000	EA	B	Y	N	4.000	0	0	CR6-9	00/00/00	99/99/99
202032-300	DIODE - ZENER	3	C	90	1.000	1.000	EA	B	Y	N	1.000	0	0	CR25	00/00/00	99/99/99
202018-100	DIODE,SWITCHING,1N4148	3	E	91	29.000	1.000	EA	B	Y	N	29.000	0	0	CR12,24,28-42,49-51,54,63-65,68,71,73-75	00/00/00	99/99/99
971049-001	DIODE-1N5230B,ZENER,4.7V,5%	3	A	92	1.000	1.000	EA	B	Y	N	1.000	0	0	CR11	5/15/87	99/99/99
202005-500	RECTIFIER-PWR,HI EFF,6A	3	C	93	16.000	1.000	EA	B	N	N	16.000	0	0	CR43-48,52	00/00/00	99/99/99

BILL OF MATERIAL

AS OF ALL DATE

CLASS CODE GROUP: 1 UNCLASSIFIED
CLASS CODE: 3400 G.C.R. UNIQUE BOARD ASSY

963490-001 OPCODE: 4 REV: B PWB ASSY-SENSOR SERVO,57V
MODEL:
ECO NO: 30189
DATE OF LAST ECO: 11/20/87

OP: ORDER POLICY CODE
REQ: N=PART OPTIONAL
Y=PART REQUIRED
PF: N=PART DOES NOT PRINT ON SALES ORDER
Y=PART PRINTS ON SALES ORDER W/O PRICE
P=PART PRINTS ON SALES ORDER WITH PRICE

PART NUMBER	DESCRIPTION	OP	RV	ITEM NO.	QTY PER ASSEMBLY	YIELD FACTR	UM	SC	REQ	PF	DEFAULT QUANTITY	DAYS OFF SET	SEQ	REFERENCE DESIGNATOR	EFFECTIV DATE	OBSOLETE DATE
202005-500	RECTIFIER-PWR,HI EFF,6A	3	C	93	16.000	1.000	EA	B	N	N	16.000	0	0	,53,57-62, 66,67	00/00/00	99/99/99
202011	DIODE-RECTIFIER 1 AMP	0	G	94	1.000	1.000	EA	B	Y	N	1.000	0	0	CR13	3/11/87	99/99/99
202009-999	DIODE RECTIFIER.1 AMP	3	D	95	8.000	1.000	EA	B	Y	N	8.000	0	0	CR1-4.22, 23,26,27	3/27/86	99/99/99
202031	DIODE-ZENER	3	D	96	5.000	1.000	EA	B	Y	N	5.000	0	0	CR55,56,69 70,72	12/09/86	99/99/99
202032	DIODE-ZENER	3	E	98	1.000	1.000	EA	B	N	N	1.000	0	0	CR5	00/00/00	99/99/99
970238-001	DIODE-RECTIFIER,DUAL	3	C	99	1.000	1.000	EA	B	N	N	1.000	0	0	CR10	00/00/00	99/99/99
202006-100	DIODE-LIGHT EMITTING	3	H	101	1.000	1.000	EA	B	N	N	1.000	0	0	DS1	00/00/00	99/99/99
970208-001	CONNECTOR HEADER SOCKET-	3	A	107	1.000	1.000	EA	B	N	N	1.000	0	0	J1	00/00/00	99/99/99
970288-001	CONN-HEADER,50 POSN,PIN,	3	B	109	1.000	1.000	EA	B	N	N	1.000	0	0	J7	00/00/00	99/99/99
970291-001	CONN-HEADER,8 POSN,PIN,	3	A	110	1.000	1.000	EA	B	N	N	1.000	0	0	J8	00/00/00	99/99/99
970581-001	RECTIFIER-.8AMP 60V	3	A	115	1.000	1.000	EA	B	Y	N	1.000	0	1	Q1	00/00/00	99/99/99
970563-001	TRANSISTOR-NPN,SILICON	3	A	118	1.000	1.000	EA	B	Y	N	1.000	0	0	Q2	00/00/00	99/99/99
970249-001	TRANSISTOR-PNP,SILICON,	3	C	119	1.000	1.000	EA	B	N	N	1.000	0	0	Q27	00/00/00	99/99/99
204007-500	TRANSISTOR-NPN SILICON	3	J	120	2.000	1.000	EA	B	N	N	2.000	0	0	Q3,9	00/00/00	99/99/99
970582-001	TRANSISOR-N CHANNEL	3	A	121	2.000	1.000	EA	B	Y	N	2.000	0	0	Q4,5	00/00/00	99/99/99
204027-037	TRANSISTOR N-P-N SILICON	3	E	122	2.000	1.000	EA	B	Y	N	2.000	0	0	Q10,11	00/00/00	99/99/99
204027-034	TRANSISTOR P-N-P SILICON	3	E	123	4.000	1.000	EA	B	N	N	4.000	0	0	Q6,7,13,14	00/00/00	99/99/99
970545-001	TRANSISTOR-POWER, MOS FET	3	A	124	4.000	1.000	EA	B	Y	N	4.000	0	0	Q15,16,21, 22	00/00/00	99/99/99
971033-001	TRANS-TIP29B,NPN TO-220	3	A	126	4.000	1.000	EA	B	Y	N	4.000	0	0	Q17,20,23, 26	3/16/87	99/99/99
204013-999	TRANSISTOR,NPN SILICON	3	E	127	2.000	1.000	EA	B	Y	N	2.000	0	0	Q8,12	3/25/87	99/99/99
970546-001	TRANSISTOR-POWER, MOS FET	3	A	128	4.000	1.000	EA	B	Y	N	4.000	0	0	Q18,19,24, 25	12/09/86	99/99/99
200076-100	RES-1.0 MOHM 1/4W 5% CF	3	AA	129	2.000	1.000	EA	F	Y	N	2.000	0	0	R165,177	00/00/00	99/99/99
200120-400	RES-4.0 OHM 3.0W 5% WW	3	G	130	1.000	1.000	EA	F	Y	N	1.000	0	0	R147	00/00/00	99/99/99
200121-100	RES-10 OHM 3.0W 5% WW	3	G	131	1.000	1.000	EA	F	Y	N	1.000	0	0	R148	00/00/00	99/99/99
200013-562	RES-5.62 KOHM 1/4W 1% FF	3	R	135	1.000	1.000	EA	F	Y	N	1.000	0	0	R268	00/00/00	99/99/99
200013-200	RES-2.0 KOHM 1/4W 1% FF	3	R	136	5.000	1.000	EA	B	N	N	5.000	0	0	R72,73,76, 77,80	00/00/00	99/99/99
200014-750	RES-75.0 KOHM 1/4W 1% FF	3	R	137	1.000	1.000	EA	B	Y	N	1.000	0	0	R79	11/14/85	99/99/99
200073-100	RES-1.0 KOHM 1/4W 5% CF	3	AA	138	17.000	1.000	EA	F	Y	N	17.000	0	0	R52,53,56, 61,86,103, 104,110,16 4,172-176, 245,264,27 9	00/00/00	*11/23/87
200073-100	RES-1.0 KOHM 1/4W 5% CF	3	AA	138	17.000	1.000	EA	F	Y	N	17.000	0	0	R52,53,56,	11/23/87	99/99/99

AS OF ALL DATE

CLASS CODE GROUP: 1 UNCLASSIFIED
CLASS CODE: 3400 G.C.R. UNIQUE BOARD ASSY

963490-001 OPCODE: 4 REV: B PWB ASSY-SENSOR SERVO,57V
MODEL:
ECO NO: 30189
DATE OF LAST ECO: 11/20/87

OP: ORDER POLICY CODE
REQ: N=PART OPTIONAL
Y=PART REQUIRED
PF: N=PART DOES NOT PRINT ON SALES ORDER
Y=PART PRINTS ON SALES ORDER W/O PRICE
P=PART PRINTS ON SALES ORDER WITH PRICE

PART NUMBER	DESCRIPTION	OP	RV	ITEM NO.	QTY PER ASSEMBLY	YIELD FACTR	UM	SC	REQ	PF	DEFAULT QUANTITY	DAYS OFF SET	SEQ	REFERENCE DESIGNATOR	EFFECTIV DATE	OBSOLETE DATE
200073-100	RES-1.0 KOHM 1/4W 5% CF	3	AA	138	17.000	1.000	EA	F	Y	N	17.000	0	0	61,86,103,104,110,164,172-176,245,264,281 ECO#30189	11/23/87	99/99/99
200013-634	RES-6.34 KOHM 1/4W 1% FF	3	R	139	1.000	1.000	EA	F	N	N	1.000	0	0	R265	00/00/00	99/99/99
200013-100	RES-1.00 KOHM 1/4W 1% FF	3	R	140	6.000	1.000	EA	F	N	N	6.000	0	0	R15,70,78,89-91	00/00/00	99/99/99
200073-470	RES-4.7 KOHM 1/4W 5% CF	3	AA	141	12.000	1.000	EA	F	Y	N	12.000	0	0	R64,66,69,163,182,230,232,234,236,262,261,272	00/00/00	99/99/99
200016-100	RES-1.00 MOHM 1/8W 1% FF	3	R	143	1.000	1.000	EA	F	Y	N	1.000	0	0	R109	00/00/00	99/99/99
200013-499	RES-4.99 KOHM 1/4W 1% FF	3	R	144	13.000	1.000	EA	F	N	N	13.000	0	0	R83,84,93-95,126,127,135,136,241,242,258,259	00/00/00	99/99/99
200072-390	RES-390 OHM 1/4W 5% CF	3	AA	145	6.000	1.000	EA	F	N	N	6.000	0	0	R41,49,184,225,226,279	00/00/00	99/99/99
200071-820	RES-82 OHM 1/4W 5% CF	3	AA	146	1.000	1.000	EA	F	N	N	1.000	0	0	R48	00/00/00	99/99/99
200013-221	RES-2.21 KOHM 1/4W 1% FF	3	R	147	2.000	1.000	EA	F	N	N	2.000	0	0	R74,75	00/00/00	99/99/99
971030-025	RES-FUSIBLE,.25 OHM,2W+5%	3	A	148	8.000	1.000	EA	B	Y	N	8.000	0	0	R185,186,188,189,206,207,209,210	3/16/87	99/99/99
970536-047	RES-47 OHM,2W,5%,CF,FIXED	3	C	149	2.000	1.000	EA	B	Y	N	2.000	0	0	R187,208	00/00/00	99/99/99
200014-402	RES-40.2 KOHM 1/4W 1% FF	3	R	150	12.000	1.000	EA	F	Y	N	12.000	0	0	R112,113,121,124,125,128,129,133,134,137,139,140	00/00/00	99/99/99
200013-402	RES-4.02 KOHM 1/4W 1% FF	3	R	151	1.000	1.000	EA	B	Y	N	1.000	0	0	R14	11/21/85	99/99/99
200013-249	RES-2.49 KOHM 1/4W 1% FF	3	R	152	1.000	1.000	EA	F	N	N	1.000	0	0	R82	00/00/00	99/99/99
200073-220	RES-2.2 KOHM 1/4W 5% CF	3	AA	153	3.000	1.000	EA	F	N	N	3.000	0	0	R81,106,180	00/00/00	99/99/99
200072-330	RES-330 OHM 1/4W 5% CF	3	AA	155	6.000	1.000	EA	F	Y	N	6.000	0	0	R35,85,116,117,143,14	00/00/00	99/99/99

BILL OF MATERIAL

AS OF ALL DATE

CLASS CODE GROUP: 1 UNCLASSIFIED
CLASS CODE: 3400 G.C.R. UNIQUE BOARD ASSY

963490-001 OPCODE: 4 REV: B PWB ASSY-SENSOR SERVO,57V
MODEL:
ECO NO: 30189
DATE OF LAST ECO: 11/20/87

OP: ORDER POLICY CODE
REQ:N=PART OPTIONAL
Y=PART REQUIRED
PF: N=PART DOES NOT PRINT ON SALES ORDER
Y=PART PRINTS ON SALES ORDER W/O PRICE
P=PART PRINTS ON SALES ORDER WITH PRICE

PART NUMBER	DESCRIPTION	OP	RV	ITEM NO.	QTY PER ASSEMBLY	YIELD FACTR	UM	SC	REQ	PF	DEFAULT QUANTITY	DAYS OFF SET	SEQ	REFERENCE DESIGNATOR	EFFECTIV DATE	OBSOLETE DATE
200072-330	RES-330 OHM 1/4W 5% CF	3	AA	155	6.000	1.000	EA	F	Y	N	6.000	0	0	4	00/00/00	99/99/99
200073-270	RES-2.7 KOHM 1/4W 5% CF	3	AA	156	6.000	1.000	EA	F	Y	N	6.000	0	0	R57-60.68, 183	00/00/00	*11/23/87
200073-270	RES-2.7 KOHM 1/4W 5% CF	3	AA	156	5.000	1.000	EA	F	Y	N	5.000	0	0	R57,58,60, 68.183 ECO #30189	11/23/87	99/99/99
200071-200	RES-20 OHM 1/4W 5% CF	3	AA	157	3.000	1.000	EA	F	Y	N	3.000	0	0	R10,11,55	00/00/00	99/99/99
200071-510	RES-51 OHM 1/4W 5% CF	3	AA	158	1.000	1.000	EA	F	Y	N	1.000	0	0	R38	00/00/00	99/99/99
200073-150	RES-1.5 KOHM 1/4W 5% CF	3	AA	159	5.000	1.000	EA	F	Y	N	5.000	0	0	R44,46,50 ,51,65	00/00/00	99/99/99
200073-510	RES-5.1 KOHM 1/4W 5% CF	3	AA	160	10.000	1.000	EA	F	Y	N	10.000	0	0	R45,47,162 ,157,158,1 61,213,221 ,192,201	00/00/00	99/99/99
200082-120	RES-120 OHM 1/2W 5% CF	3	J	161	2.000	1.000	EA	B	N	N	2.000	0	0	R3,4	00/00/00	99/99/99
970969-047	RES-FUSIBLE,47OHM,1/2W,5% MF	3	C	162	6.000	1.000	EA	B	Y	N	6.000	0	0	R19,20,193 202,214,22 2	3/16/87	99/99/99
200071-470	RES-47 OHM 1/4W 5% CF	3	AA	163	4.000	1.000	EA	F	Y	N	4.000	0	0	R197,205,2 27,228	00/00/00	99/99/99
200123-200	RES-2K OHM,3.0W,5%,WW	3	G	164	1.000	1.000	EA	B	Y	N	1.000	0	0	R2	3/25/87	99/99/99
970568-472	RES-4.7 KOHM 1W 5% CF	3	D	165	1.000	1.000	EA	B	Y	N	1.000	0	0	R6	00/00/00	99/99/99
970271-002	RES-20 OHM 2W 5% FC	3	A	166	2.000	1.000	EA	B	N	N	2.000	0	0	R62,63	00/00/00	99/99/99
200070-560	RES-5.6 OHM 1/4W 5% CF	3	AA	167	2.000	1.000	EA	F	N	N	2.000	0	0	R149,150	00/00/00	99/99/99
200074-100	RES-10 KOHM 1/4W 5% CF	3	AA	168	17.000	1.000	EA	F	Y	N	17.000	0	0	R7,8,23,34 ,54,67,111 ,120,130,1 38,153,154 ,169,194,2 00,215,220	00/00/00	99/99/99
200081-620	RES-62 OHM 1/2W 5% CF	0		169	1.000	1.000	EA	B	Y	N	1.000	0	0	R33	3/16/87	99/99/99
200074-220	RES-22 KOHM 1/4W 5% CF	3	AA	170	2.000	1.000	EA	F	N	N	2.000	0	0	R105,181	00/00/00	99/99/99
200013-750	RES-7.50 KOHM 1/4W 1% FF	0	R	171	1.000	1.000	EA	F	Y	N	1.000	0	0	R263	00/00/00	99/99/99
200074-560	RES-56 KOHM 1/4W 5% CF	3	AA	172	2.000	1.000	EA	F	Y	N	2.000	0	0	R239,256	3/11/87	99/99/99
200073-360	RES-3.6 KOHM 1/4W 5% CF	3	AA	173	4.000	1.000	EA	F	Y	N	4.000	0	0	R237,238,2 54,255	00/00/00	99/99/99
200080-750	RES-7.5 OHM 1/2W 5% CF	3	J	174	2.000	1.000	EA	B	N	N	2.000	0	0	R42,43	00/00/00	99/99/99
200072-430	RES-430 OHM 1/4W 5% CF	3	AA	175	2.000	1.000	EA	F	Y	N	2.000	0	0	R166,178	00/00/00	99/99/99
200074-120	RES-12 KOHM 1/4W 5% CF	3	AA	176	1.000	1.000	EA	F	Y	N	1.000	0	0	R168	2/21/86	99/99/99
200013-301	RES-3.01 KOHM 1/4W 1% FF	3	R	177	4.000	1.000	EA	F	Y	N	4.000	0	0	R36,37,39, 71	00/00/00	99/99/99

BILL OF MATERIAL
AS OF ALL DATE

CLASS CODE GROUP: 1 UNCLASSIFIED
CLASS CODE: 3400 G.C.R. UNIQUE BOARD ASSY

963490-001 OPCODE: 4 REV: B PWB ASSY-SENSOR SERVO,57V
MODEL:
ECO NO: 30189
DATE OF LAST ECO: 11/20/87

OP: ORDER POLICY CODE
REQ: N=PART OPTIONAL
Y=PART REQUIRED
PF: N=PART DOES NOT PRINT ON SALES ORDER
Y=PART PRINTS ON SALES ORDER W/O PRICE
P=PART PRINTS ON SALES ORDER WITH PRICE

PART NUMBER	DESCRIPTION	OP	RV	ITEM NO.	QTY PER ASSEMBLY	YIELD FACTR	UM	SC	REQ	PF	DEFAULT QUANTITY	DAYS OFF SET	SEQ	REFERENCE DESIGNATOR	EFFECTIV DATE	OBSOLETE DATE
200072-220	RES-220 OHM 1/4W 5% CF	3	AA	178	3.000	1.000	EA	F	Y	N	3.000	0	0	R96,102,246	00/00/00	99/99/99
970568-392	RES-3.9 KOHM 1W 5% CF	3	D	179	1.000	1.000	EA	B	Y	N	1.000	0	0	R253	00/00/00	99/99/99
200076-130	RES-1.3MOHM,1/4W,5%CF	3	AA	180	1.000	1.000	EA	F	Y	N	1.000	0	0	R170	12/09/86	99/99/99
200075-100	RES-100 KOHM 1/4W 5% CF	3	AA	182	7.000	1.000	EA	F	Y	N	7.000	0	0	R24,25,26,31,260,273,276	00/00/00	99/99/99
200072-100	RES-100 OHM 1/4W 5% CF	3	AA	183	4.000	1.000	EA	F	Y	N	4.000	0	0	R159,160,267,277	00/00/00	99/99/99
200075-220	RES-220 KOHM 1/4W 5% CF	3	AA	184	1.000	1.000	EA	F	Y	N	1.000	0	0	R271	00/00/00	99/99/99
200072-470	RES-470 OHM 1/4W 5% CF	3	AA	185	5.000	1.000	EA	F	Y	N	5.000	0	0	R27,249,250,252,280	00/00/00	99/99/99
200074-330	RES-33 KOHM 1/4W 5% CF	3	AA	186	3.000	1.000	EA	F	N	N	3.000	0	0	R32,98,99	00/00/00	99/99/99
200076-470	RES-4.7 MOHM 1/4W 5% CF	3	AA	187	1.000	1.000	EA	F	N	N	1.000	0	0	R100	00/00/00	99/99/99
200072-200	RES-200 OHM 1/4W 5% CF	3	AA	188	6.000	1.000	EA	F	Y	N	6.000	0	0	R22,179 179,196,198,217,218	00/00/00*	11/23/87
200072-200	RES-200 OHM 1/4W 5% CF	3	AA	188	6.000	1.000	EA	F	Y	N	6.000	0	0	R22,179,196,198,217,218 ECO#30189	11/23/87	99/99/99
200071-150	RES-15 OHM 1/4W 5% CF	3	AA	189	1.000	1.000	EA	F	N	N	1.000	0	0	R21	00/00/00	99/99/99
200072-150	RES-150 OHM 1/4W 5% CF	3	AA	190	1.000	1.000	EA	F	Y	N	1.000	0	0	R152	00/00/00	99/99/99
200015-200	RES-200 KOHM 1/4W 1% FF	3	R	192	4.000	1.000	EA	B	Y	N	4.000	0	0	R122,123,131,132	11/06/85	99/99/99
200074-470	RES-47 KOHM 1/4W 5% CF	3	AA	193	3.000	1.000	EA	F	Y	N	3.000	0	0	R171,243,270	00/00/00	99/99/99
200071-120	RES-12 OHM 1/4W 5% CF	3	AA	194	1.000	1.000	EA	F	N	N	1.000	0	0	R151	00/00/00	99/99/99
200013-475	RES-4.75 KOHM 1/4W 1% FF	3	R	195	2.000	1.000	EA	F	N	N	2.000	0	0	R266,269	00/00/00	99/99/99
200014-169	RES-16.9 KOHM 1/4W 1% FF	3	R	196	1.000	1.000	EA	B	N	N	1.000	0	0	R274	00/00/00	99/99/99
200073-300	RES-3 KOHM 1/4W 5% CF	3	AA	197	3.000	1.000	EA	F	Y	N	3.000	0	0	R156,248,251	00/00/00	99/99/99
200073-680	RES-6.8 KOHM 1/4W 5% CF	3	AA	200	5.000	1.000	EA	F	N	N	6.000	0	0	R12,233,235,229,231	00/00/00	99/99/99
200074-110	RES-11 KOHM 1/4W 5% CF	3	AA	201	1.000	1.000	EA	F	N	N	1.000	0	0	R155	00/00/00	99/99/99
970537-002	RES-100 OHM 5% 5W WW	3	A	202	1.000	1.000	EA	B	Y	N	1.000	0	0	R5	00/00/00	99/99/99
200071-100	RES-10 OHM 1/4W 5% CF	3	AA	204	4.000	1.000	EA	F	Y	N	4.000	0	0	R195,199,216,219	00/00/00	99/99/99
200148-100	RES-0.10 OHM 6.5W 5% WW	3	C	205	1.000	1.000	EA	F	N	N	1.000	0	0	R278	00/00/00	99/99/99
200074-390	RES-39 KOHM 1/4W 5% CF	3	AA	206	1.000	1.000	EA	F	N	N	1.000	0	0	R17	00/00/00	99/99/99
200073-390	RES-3.9 KOHM 1/4W 5% CF	3	AA	207	1.000	1.000	EA	F	Y	N	1.000	0	0	R18	00/00/00	99/99/99

BILL OF MATERIAL
AS OF ALL DATE

CLASS CODE GROUP: 1 UNCLASSIFIED
CLASS CODE: 3400 G.C.R. UNIQUE BOARD ASSY

963490-001 OPCODE: 4 REV: B PWB ASSY-SENSOR SERVO,57V
MODEL:
ECO NO: 30189
DATE OF LAST ECO: 11/20/87

OP: ORDER POLICY CODE
REQ: N=PART OPTIONAL
Y=PART REQUIRED
PF: N=PART DOES NOT PRINT ON SALES ORDER
Y=PART PRINTS ON SALES ORDER W/O PRICE
P=PART PRINTS ON SALES ORDER WITH PRICE

PART NUMBER	DESCRIPTION	OP	RV	ITEM NO.	QTY PER ASSEMBLY	YIELD FACTR	UM	SC	REQ	PF	DEFAULT QUANTITY	DAYS OFF SET	SEQ	REFERENCE DESIGNATOR	EFFECTIV DATE	OBSOLETE DATE
200014-909	RES-90.9 KOHM 1/4W 1% FF	3	R	208	1.000	1.000	EA	F	N	N	1.000	0	0	R40	00/00/00	99/99/99
200011-100	RES-10.0 OHM 1/4W 1% FF	3	R	209	1.000	1.000	EA	B	Y	N	1.000	0	0	R16	11/21/85	99/99/99
200013-806	RES-8.06 KOHM 1/4W 1% FF	3	R	210	1.000	1.000	EA	F	N	N	1.000	0	0	R30	00/00/00	99/99/99
200014-100	RES-10.0 KOHM 1/4W 1% FF	3	R	211	4.000	1.000	EA	F	Y	N	4.000	0	0	R28,29,240 257	00/00/00	99/99/99
200013-681	RES-6.81 KOHM 1/4W 1% FF	3	R	212	1.000	1.000	EA	F	Y	N	1.000	0	0	R235	00/00/00	99/99/99
200073-200	RES-2 KOHM 1/4W 5% CF	3	AA	213	3.000	1.000	EA	F	Y	N	3.000	0	0	R13,97,244	00/00/00	*11/23/87
200073-200	RES-2 KOHM 1/4W 5% CF	3	AA	213	4.000	1.000	EA	F	Y	N	4.000	0	0	R13,59,97, 244 ECO#30 189	11/23/87	99/99/99
200012-200	RES-200 OHM 1/4W 1% FF	3	R	214	1.000	1.000	EA	B	N	N	1.000	0	0	R92	00/00/00	99/99/99
970568-201	RES-200 OHM 1W 5% CF	3	D	215	8.000	1.000	EA	B	Y	N	8.000	0	0	R190,191,2 03,204,211 212,223,22 4	00/00/00	99/99/99
200072-680	RES-680 OHM 1/4W 5% CF	3	AA	216	10.000	1.000	EA	F	Y	N	10.000	0	0	R107,114,1 15,118,119 141,142,14 5,146,167	00/00/00	99/99/99
200073-330	RES-3.3 KOHM 1/4W 5% CF	3	AA	217	1.000	1.000	EA	F	N	N	1.000	0	0	R103	00/00/00	99/99/99
200076-180	RES-1.8 MOHM 1/4W 5% CF	3	AA	218	1.000	1.000	EA	B	N	N	1.000	0	0	R101	00/00/00	99/99/99
200012-750	RES-750 OHM 1/4W 1% FF	3	R	219	2.000	1.000	EA	B	N	N	2.000	0	0	R87,88	00/00/00	99/99/99
200073-620	RES-6.2 KOHM 1/4W 5% CF	3	AA	220	3.000	1.000	EA	F	Y	N	3.000	0	0	R1,9,247	2/21/86	99/99/99
205248-200	RES.NET-4.7 KOHM DIP	3	B	222	1.000	1.000	EA	B	Y	N	1.000	0	0	U120A	5/15/86	99/99/99
970843-001	RES NETWORK SIP-ISOLATED 220	3	B	223	2.000	1.000	EA	B	Y	N	2.000	0	0	RP1,RP2	5/16/86	99/99/99
970267-001	PIN-TEST,.040SQ X .360LG	3	A	245	39.000	1.000	EA	F	Y	N	39.000	0	0	TP1-39	00/00/00	99/99/99
970989-001	IC-74ALS05.INVERTER.OPEN COLTR	3	A	249	1.000	1.000	EA	B	Y	N	1.000	0	0	U7D	3/12/87	99/99/99
203007-700	IC-339 VOLT COMP QUAD	3	J	250	6.000	1.000	EA	B	N	N	6.000	0	0	U4D,U10J,U 11L,U12J,U 12K,U13B	00/00/00	99/99/99
970554-001	IC-3525 MOD PULSE WIDT	3	C	251	1.000	1.000	EA	B	Y	N	1.000	0	0	U4F	00/00/00	99/99/99
203052-051	IC-4051 MUX 8 CH	3	C	252	2.000	1.000	EA	B	N	N	2.000	0	0	U8C,U9E	00/00/00	99/99/99
970025-001	IC-556 TIMER DUAL	3	C	253	1.000	1.000	EA	B	Y	N	1.000	0	0	U4C	00/00/00	99/99/99
203130-999	IC-082 OP AMP JFET IN	3	F	254	4.000	1.000	EA	B	N	N	4.000	0	0	U8B,U8D,U9 A,U9C	00/00/00	99/99/99
203550-501	IC-1001 CONV A-D 10BIT 170NS	3	E	255	1.000	1.000	EA	B	Y	N	1.000	0	0	U10CB	00/00/00	99/99/99
970454-001	IC-7533 CONV D-A 10BIT	3	C	256	1.000	1.000	EA	B	N	N	1.000	0	0	U10AA	00/00/00	99/99/99
203082-500	IC-7407N BUF DRV HEX	3	E	258	2.000	1.000	EA	B	N	N	2.000	0	0	U9J,U10EA	00/00/00	99/99/99
203012-136	IC-4136 OP AMP QUAD	3	H	259	3.000	1.000	EA	B	N	N	3.000	0	0	U7J,U11M,U 11P	00/00/00	99/99/99
203555-111	IC-8036 CIO 16BIT 6MHZ	3	C	265	2.000	1.000	EA	B	N	N	2.000	0	0	U11B,U12B	00/00/00	99/99/99

BILL OF MATERIAL

AS OF ALL DATE

CLASS CODE GROUP: 1 UNCLASSIFIED
CLASS CODE: 3400 G.C.R. UNIQUE BOARD ASSY

963490-001 OPCODE: 4 REV: B PWB ASSY-SENSOR SERVO,5V
MODEL:
ECO NO: 30189
DATE OF LAST ECO: 11/20/87

OP: ORDER POLICY CODE
REQ:N=PART OPTIONAL
Y=PART REQUIRED
PF: N=PART DOES NOT PRINT ON SALES ORDER
Y=PART PRINTS ON SALES ORDER W/O PRICE
P=PART PRINTS ON SALES ORDER WITH PRICE

PART NUMBER	DESCRIPTION	OP	RV	ITEM NO.	QTY PER ASSEMBLY	YIELD FACTR	UM	SC	REQ	PF	DEFAULT QUANTITY	DAYS OFF SET	SEQ	REFERENCE DESIGNATOR	EFFECTIV DATE	OBSOLETE DATE
970010-001	IC-74LS08 AND 2IN QUAD	3	B	266	3.000	1.000	EA	B	N	N	3.000	0	0	U11C,U11D,U12DB	00/00/00	99/99/99
203085-001	IC-74LS14 INV SCHMITT HEX	3	J	267	1.000	1.000	EA	B	Y	N	1.000	0	0	U11E	00/00/00	99/99/99
203029-003	IC-74LS11 AND 3IN TRIP	3	F	269	2.000	1.000	EA	B	N	N	2.000	0	0	U10KA,U10KB	00/00/00	99/99/99
203039-001	IC-74LS74 FF D DUAL	3	M	270	1.000	1.000	EA	B	N	N	1.000	0	0	U11R	00/00/00	99/99/99
970221-001	IC-74LS00 NAND 2IN POS QUAD	3	E	272	1.000	1.000	EA	B	N	N	1.000	0	0	U12CB	00/00/00	99/99/99
203046-001	IC-74LS123 MLTV DUAL	3	G	273	2.000	1.000	EA	B	N	N	2.000	0	0	U13M,U13P	00/00/00	99/99/99
203051-100	IC-74LS175 FF D QUAD	3	G	274	2.000	1.000	EA	B	N	N	2.000	0	0	U10BA,U13D	00/00/00	99/99/99
731006-800	LABEL-ASSY	3	B	278	1.000	1.000	EA	F	N	N	1.000	0	0		00/00/00	99/99/99
203046-148	IC-74LS138 DCDR 3-8 LINE	3	K	279	1.000	1.000	EA	B	N	N	1.000	0	0	U10CA	00/00/00	99/99/99
203035-032	IC-74LS32 OR 2IN QUAD	3	J	280	1.000	1.000	EA	B	N	N	1.000	0	0	U10F	00/00/00	99/99/99
203029-500	IC-7414 INV HEX SCHMITT TRIP	3	B	281	1.000	1.000	EA	B	Y	N	1.000	0	0	U7E	00/00/00	99/99/99
203052-378	IC-74LS378 FF D HEX	3	D	282	2.000	1.000	EA	B	N	N	2.000	0	0	U10AB,U10BB	00/00/00	99/99/99
203051-174	IC-74LS174,FF,D,HEX	3	L	283	2.000	1.000	EA	B	Y	N	2.000	0	0	U12CA,U13C	5/15/86	99/99/99
970011-001	IC-74LS04 INV HEX	3	D	284	1.000	1.000	EA	B	N	N	1.000	0	0	U10EB	00/00/00	99/99/99
203052-244	IC-74LS244 BFR OCT 3S	3	L	285	1.000	1.000	EA	B	N	N	1.000	0	0	U13B	00/00/00	99/99/99
203009-005	IC-084 OP AMP BIFET	3	F	291	1.000	1.000	EA	B	Y	N	1.000	0	0	U12F	12/09/86	99/99/99
203013-317	IC-78L05 VOLT REG +5V 5%	3	E	296	1.000	1.000	EA	B	N	N	1.000	0	0	VR5	00/00/00	99/99/99
203013-210	IC-7812 VOLT REG -12V 1A	3	F	297	1.000	1.000	EA	B	N	N	1.000	0	0	VR2	00/00/00	99/99/99
203013-300	IC-7912 VOLT REG,12V,1.5AMPS	3	L	298	1.000	1.000	EA	B	N	N	1.000	0	0	VR3	00/00/00	99/99/99
970002-001	IC-7906 VOLT REG -6V	3	A	300	1.000	1.000	EA	B	N	N	1.000	0	0	VR1	00/00/00	99/99/99
970255-001	IC-7808 VOLT REG +8V 1A	3	B	301	1.000	1.000	EA	B	N	N	1.000	0	0	VR4	00/00/00	99/99/99
209990-071	ADHESIVE-SUPERBONDER	3	C	308	0.000	1.000	EA	F	Y	N	0.000	0	0		11/22/85	99/99/99
213020-605	SCREW- 6-32X5/16,BDR HD,SLOT	3	A	309	1.000	1.000	EA	F	Y	N	1.000	0	0		3/27/86	99/99/99
213700-609	WASHER-FLAT,NYLON,SM PAT	3	C	310	1.000	1.000	EA	F	Y	N	1.000	0	0		12/04/85	99/99/99
970559-001	NUT-ACORN CAP 6-32 NYLON	3	A	311	1.000	1.000	EA	B	Y	N	1.000	0	0		12/04/85	99/99/99
209990-063	ADHESIVE-DOW CORNING 3145	3	A	312	1.000	1.000	EA	F	Y	N	1.000	0	0		12/04/85	99/99/99
970548-002	RELAY-DPDT,7.5 AMP,12V,PC	3	C	313	1.000	1.000	EA	B	Y	N	1.000	0	0	K1	3/12/87	99/99/99
971041-001	LABEL-BAR CODE,1.425LX.25W,9.*	0	A	315	1.000	1.000	EA	F	Y	N	1.000	0	0		00/00/00	99/99/99

NOTES: (UNLESS OTHERWISE SPECIFIED)

1. IC V_{CC} & GND PINS WITH UNUSED PORTIONS:

IC TYPE	REFERENCE DESIGNATOR		+5V	GND	UNUSED
SN74LS00N	16N, 18H, 22D, 25E		14	7	
SN74LS01N	23H		14	7	C
SN74LS04N	23C, 12A		14	7	
SN74LS08N	22E, 27H		14	7	27H-D
SN74LS10N	18B, 14B		14	7	
SN74LS11N	14D, 6A		14	7	14D-C
SN74LS14N	3D		14	7	E,F
SN74LS28N	22H		14	7	
SN74LS32N	17D, 20D, 20J, 25H. 13A		14	7	
SN74LS42N	23D 23A		16	8	
SN74LS74N	15L, 16E, 16L, 17F, 18D, 22C		14	7	22C-A
SN74LS174	14A		8	16	
SN74LS109N	20C		16	8	
SN74LS125N	20H		14	7	
SN74LS138N	27J		16	8	
SN74LS139N	27E		16	8	
SN74LS153N	17H, 18D, 18F		16	8	
SN74LS244N	3B, 6D, 9B, 9C, 12D, 16C, 22B, 27B		20	10	16C-A 3B-G, 27A-C,E,G
SN74LS245N	23B, 25B		20	10	
SN74LS256N	14J		16	8	
SN74LS280N	22J, 23J		14	7	
SN74LS374N	17K, 17L, 17N		20	10	
74S112PC	16J		16	8	
DM74S135N	18J		16	8	
74S280N	6C, 9D		14	7	
74F32	U16B		14	7	U16B - B,C,D
74F00PC	15H		14	7	
74F04PC	17J		14	7	
74F08PC	3C		14	7	B,C,D
74F74PC	12C, 15K, 16K, 17E, 23E		14	7	15K-B
74F86PC	14		14	7	
74F109PC	15D, 16D		16	8	15B-B
74F138PC	16H		16	8	
74F191PC	16F		16	8	
74F373PC	22F, 27F		20	10	
74F374PC	6B, 6J, 9J		20	10	
27128	20K, 22K, 23K, 25K,		28	14	
AM2901CPC	3K, 6K, 9K, 12K, 14K		10	30	
AM2947PC	23F, 25F		20	10	
AM2966PC	3J 12J 15E 15F 18M 27M 27P		20	10	15E-A,C,E,G
M5K4164ANP-15	1E, 2E, 4E, 5E, 7E, 8E, 10E, 11E, 13E, 14E, 1F, 2F, 4F, 5F, 7F, 8F, 10F, 11F, 13F, 14F, 1G, 2G, 4G, 5G, 7G, 8G, 10G, 11G, 13G, 14G, 1H, 2H, 4H, 5H, 7H, 8H, 10H, 11H, 13H, 14H, 19M, 21M, 22M, 23M, 24M, 26M, 19N, 21N, 22N, 23N, 24N, 26N, 19P, 21P, 22P, 23P, 24P, 26P		8	16	
X2210D	25J		18	8	
Z8002APS	25C		10	31	
Z8036APS	20E, 20A		23	7	
Z8581PS	27D, 17C		5	14	
LM3911N	14N		–	1	
PAL20L10	15A, 18A, 17A		24	12	
PAL20X10	16A		24	12	
898-5-R220/330	12A (RESISTOR NETWORK)		16	8	PINS 5,6,7,14

2. POWER & GND ON CONNECTORS:

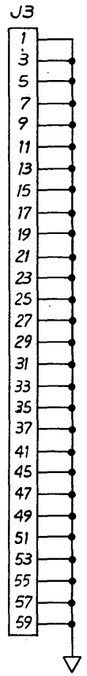

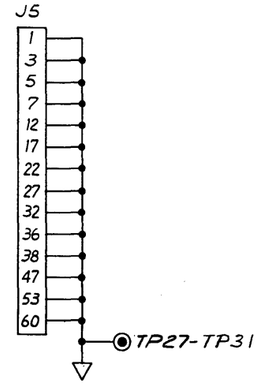

3.

REFERENCE DESIGNATOR					
LTR	LAST USED	NOT USED	LTR	LAST USED	NOT USED
C	163		TP	34	13, 14, 21, 15, 33
CR	1		Y	1	
P	5	1, 2	U	27P	
Q	2				
R	47	27, 28, 32, 40			

4. RESISTOR VALUES ARE IN OHMS. 1/4 W, 5%
5. OPTIONAL COMPONENTS FOR FUTURE USE NOT INSTALLED ON PWB.

REVISION					
LTR	DESCRIPTION	DWN	DATE	APVD	DATE
A	PROD REL ERD SD-0971	E.C.	9-15		9-22
B	INCORP ECO 13608	CWJ	4-3-81		6/16/81

REV STATUS: REV B A A B A A A
OF SHEETS: SH 1 2 3 4 5 6 7 8 9 10 11 12 13 14 15 16 17 18 19 20 21 22 23 24

ALL INFORMATION CONTAINED IN OR DISCLOSED BY THIS DOCUMENT IS CONSIDERED CONFIDENTIAL AND PROPRIETARY BY CIPHER DATA PRODUCTS, INC. BY ACCEPTING THIS MATERIAL THE RECIPIENT AGREES THAT THIS MATERIAL AND THE INFORMATION CONTAINED THEREIN IS HELD IN CONFIDENCE AND IN TRUST AND WILL NOT BE USED, REPRODUCED IN WHOLE OR IN PART NOR ITS CONTENTS REVEALED TO OTHERS, EXCEPT TO MEET THE PURPOSE FOR WHICH IT WAS DELIVERED. IT IS UNDERSTOOD THAT NO RIGHT IS CONVEYED TO REPRODUCE OR HAVE REPRODUCED ANY ITEM HEREIN, DISCLOSED WITHOUT EXPRESS PERMISSION FROM CIPHER DATA PRODUCTS, INC.

UNLESS OTHERWISE SPECIFIED DIMENSIONS ARE IN INCHES
TOLERANCES ARE DECIMALS
.X ±
.XX ±
.XXX ±
ANGLES ±
DO NOT SCALE DRAWING

APPROVAL	DATE
DWN B. Clemens	5/5/81
CHK	
DES/ENG	9/22/81
SAFETY	
DES/ENG	9/16/81
MFG ENG	9/16/81
ISSUED	9-22-81

cipher data products inc. SAN DIEGO CALIF

TITLE: SCHEM-CPU/MMU,MGCR

CODE IDENT	SIZE	DWG NO.	REV
32274	D	96227-1-300	B

SCALE: | MOD MGCR | SH 1 OF 12

BRUNING 40-22

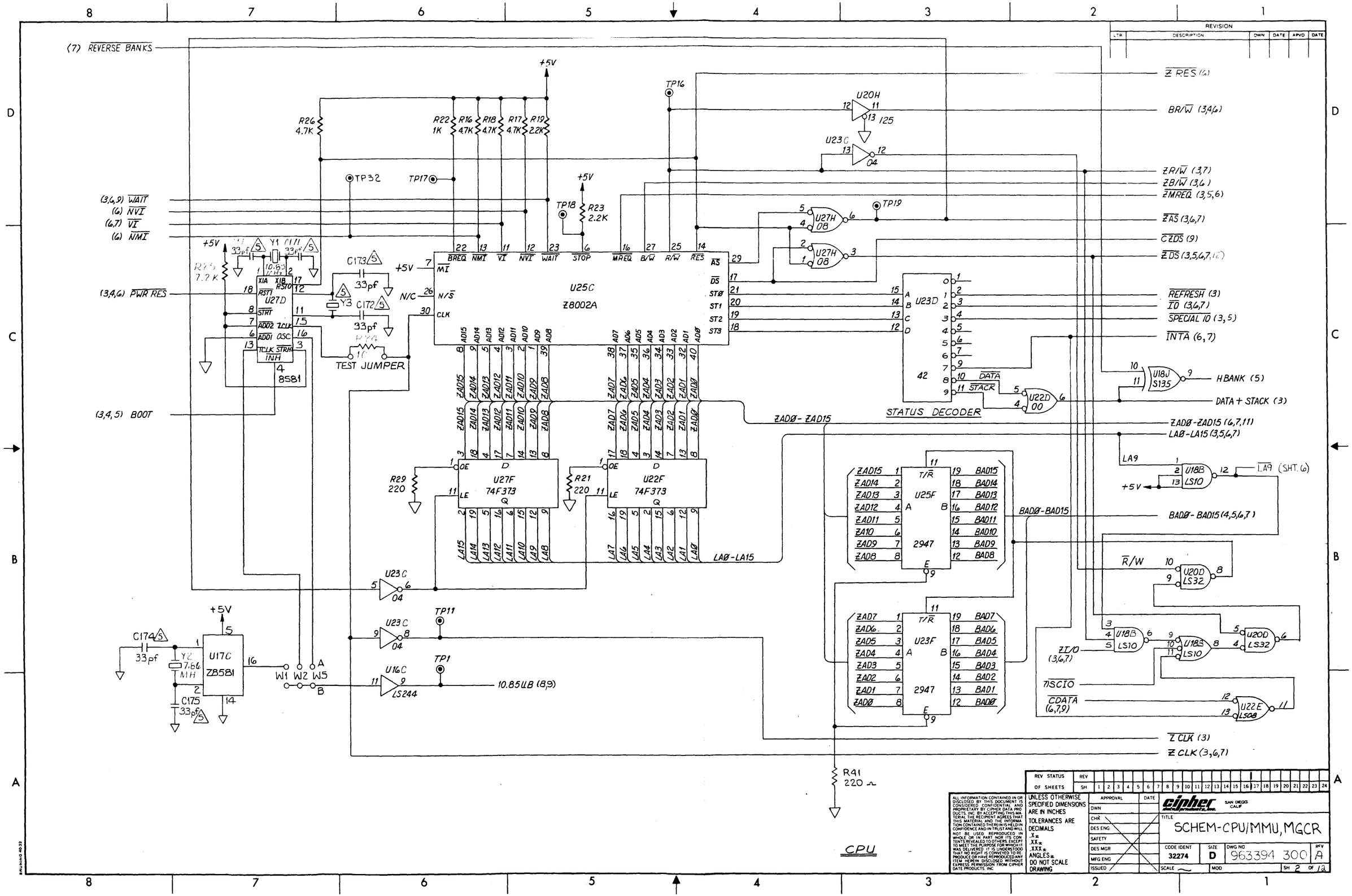

(7) REVERSE BANKS
(3,6,9) WAIT
(6) NVI
(6,7) VI
(6) NMI
(3,4,6) PWR RES
(3,4,5) BOOT
U25C
Z8002A
U27D
8581
TEST JUMPER
U27F
74F373
U22F
74F373
U23D
42
STATUS DECODER
U25F
2947
U23F
2947
U17C
Z8581
U16C
LS244
U20H
125
U23C
04
U27H
08
U18J
S135
U22D
00
U18B
LS10
U20D
LS32
U22E
LS08
Z RES (6)
BR/W (3,4,6)
ZR/W (3,7)
ZB/W (3,6)
ZMREQ (3,5,6)
ZAS (3,6,7)
CZDS (9)
ZDS (3,5,6,7,12)
REFRESH (3)
ID (3,6,7)
SPECIAL IO (3,5)
INTA (6,7)
HBANK (5)
DATA + STACK (3)
ZADØ-ZAD15 (6,7,11)
LAØ-LA15 (3,5,6,7)
LA9 (SHT. 6)
BADØ-BAD15 (4,5,6,7)
R/W
ZI/O (3,6,7)
7ISCIO
CDATA (6,7,9)
Z CLK (3)
Z CLK (3,6,7)
10.85UB (8,9)
R41 220 Ω
CPU
REVISION
LTR
DESCRIPTION
DWN
DATE
APVD
DATE
REV STATUS
OF SHEETS
REV
SH
ALL INFORMATION CONTAINED IN OR DISCLOSED BY THIS DOCUMENT IS CONSIDERED CONFIDENTIAL AND PROPRIETARY BY CIPHER DATA PRODUCTS, INC. BY ACCEPTING THIS MATERIAL THE RECIPIENT AGREES THAT THIS MATERIAL AND THE INFORMATION CONTAINED THEREIN IS HELD IN CONFIDENCE AND IN TRUST AND WILL NOT BE USED, REPRODUCED IN WHOLE OR IN PART NOR ITS CONTENTS REVEALED TO OTHERS, EXCEPT TO MEET THE PURPOSE FOR WHICH IT WAS DELIVERED. IT IS UNDERSTOOD THAT NO RIGHT IS CONVEYED TO REPRODUCE OR HAVE REPRODUCED ANY ITEM HEREIN DISCLOSED WITHOUT EXPRESS PERMISSION FROM CIPHER DATE PRODUCTS, INC.
UNLESS OTHERWISE SPECIFIED DIMENSIONS ARE IN INCHES
TOLERANCES ARE
DECIMALS
.X±
.XX±
.XXX±
ANGLES±
DO NOT SCALE DRAWING
APPROVAL
DATE
DWN
CHK
DES ENG
SAFETY
DES MGR
MFG ENG
ISSUED
cipher
SAN DIEGO CALIF
TITLE
SCHEM-CPU/MMU, MGCR
CODE IDENT
32274
SIZE
D
DWG NO
963394 300
REV
A
SCALE
MOD
SH 2 OF 12

REVISION					
LTR	DESCRIPTION	DWN	DATE	APVD	DATE

(2) DATA + STACK
(2,5,6,7) LAØ-LA15
(2,6) ZB/$\overline{W}$
(2,4,6) $\overline{PWR\ RES}$
(7) $\overline{R\ BOOT}$
(2) $\overline{REFRESH}$
(2,4,7) ZCLK
(2,7) ZR/$\overline{W}$
(2,5,6,7) $\overline{ZDS}$
(2,6) $\overline{ZMREQ}$
(2) $\overline{SPECIAL\ IO}$
(2,4,6) BR/$\overline{W}$
(2,6,7) $\overline{IO}$
(2) $\overline{ZCLK}$
(2,6,7) $\overline{ZAS}$
(2,6,7) ZI/O

U17J 04
U22E 08
U25E 00
U22D 00
U22E 08
U25H 32
U25E 00
U23E 74F74
U22D 00
U16N 00
U25E 00
U25E 00
U27P 2966
U27P 2966
U27E 139
TP20
TP22
+5V
R20 1K
U20D 32
U16J S135
U25H 32
U27P 2966
U27P 2966
TP25
TP24
U27E 139
+5V
R11 1K
(4) P.U. 2
U20C 109
U22C 74
U23H 01
R37 1K
+5V

LAØ

BOOT (2,4,5)
$\overline{BOOT\ RD}$ (5)
$\overline{BOOT}$ (5)
$\overline{AMUX}$ (5)
AMUX (5)
$\overline{CASH}$ (4)
$\overline{CASL}$ (5)
DRAM R/$\overline{W}$ (4,5)
$\overline{RAS}$ (4,5)
$\overline{WAIT}$ (2,6,9)
$\overline{ZIORD}$ (6)
$\overline{ZIOWR}$ (6,7)

READ CAS
WRITE CAS

CPU DRAM / BOOT CONTROL

REV STATUS	REV																							
OF SHEETS	SH	1	2	3	4	5	6	7	8	9	10	11	12	13	14	15	16	17	18	19	20	21	22	23	24

ALL INFORMATION CONTAINED IN OR DISCLOSED BY THIS DOCUMENT IS CONSIDERED CONFIDENTIAL AND PROPRIETARY BY CIPHER DATA PRODUCTS, INC. BY ACCEPTING THIS MATERIAL THE RECIPIENT AGREES THAT THIS MATERIAL AND THE INFORMATION CONTAINED THEREIN IS HELD IN CONFIDENCE AND IN TRUST AND WILL NOT BE USED, REPRODUCED IN WHOLE OR IN PART NOR ITS CONTENTS REVEALED TO OTHERS, EXCEPT TO MEET THE PURPOSE FOR WHICH IT WAS DELIVERED. IT IS UNDERSTOOD THAT NO RIGHT IS CONVEYED TO REPRODUCE OR HAVE REPRODUCED ANY ITEM HEREIN DISCLOSED WITHOUT EXPRESS PERMISSION FROM CIPHER DATA PRODUCTS, INC.

UNLESS OTHERWISE SPECIFIED DIMENSIONS ARE IN INCHES
TOLERANCES ARE
DECIMALS
.X ±
.XX ±
.XXX ±
ANGLES ±
DO NOT SCALE DRAWING

	APPROVAL	DATE
DWN		
CHK		
DES ENG		
SAFETY		
DES MGR		
MFG ENG		
ISSUED		

cipher data products inc. SAN DIEGO CALIF

TITLE: SCHEM-CPU/MMU, MGCR

CODE IDENT	SIZE	DWG NO	REV
32274	D	963374-300	A

SCALE | MOD | SH 3 OF 13

BRUNING 40-32

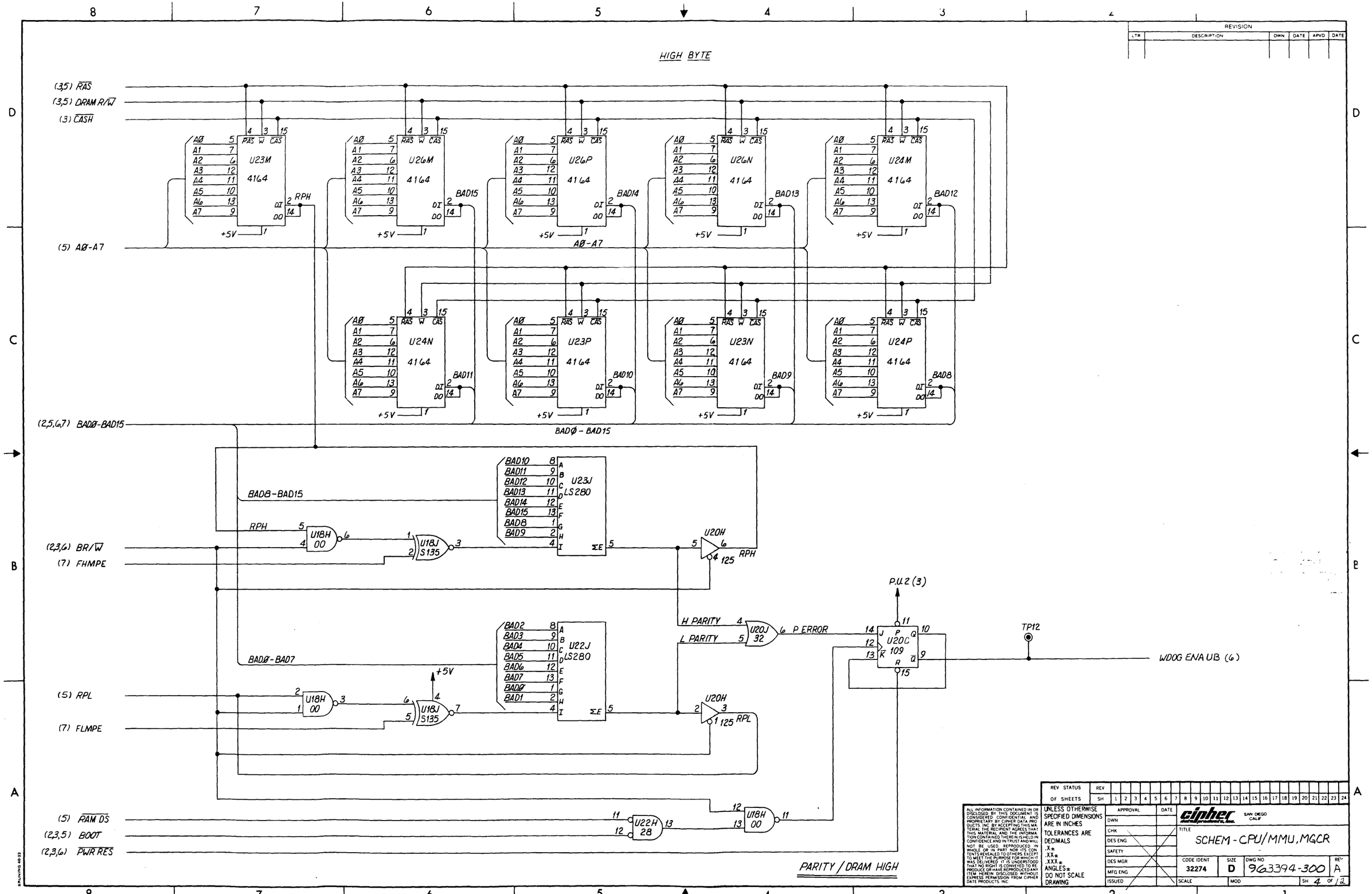
HIGH BYTE
(3,5) RAS
(3,5) DRAM R/W
(3) CASH
(5) AØ-A7
(2,5,6,7) BADØ-BAD15
(2,3,6) BR/W
(7) FHMPE
(5) RPL
(7) FLMPE
(5) RAM DS
(2,3,5) BOOT
(2,3,6) PWR RES
U23M 4164
U26M 4164
U26P 4164
U26N 4164
U24M 4164
U24N 4164
U23P 4164
U23N 4164
U24P 4164
U23J LS280
U22J LS280
U18H 00
U18J S135
U20H 125
U20J 32
U20C 109
U22H 28
RPH
RPL
BAD8-BAD15
BADØ-BAD7
H PARITY
L PARITY
P ERROR
P.U.2 (3)
TP12
WDOG ENA UB (6)
PARITY / DRAM HIGH
REVISION
LTR
DESCRIPTION
DWN
DATE
APVD
DATE
REV STATUS
OF SHEETS
REV
SH
UNLESS OTHERWISE SPECIFIED DIMENSIONS ARE IN INCHES
TOLERANCES ARE DECIMALS
.X±
.XX±
.XXX±
ANGLES±
DO NOT SCALE DRAWING
APPROVAL
DATE
DWN
CHK
DES ENG
SAFETY
DES MGR
MFG ENG
ISSUED
cipher data products, inc.
SAN DIEGO CALIF
TITLE
SCHEM - CPU/MMU, MGCR
CODE IDENT
32274
SIZE
D
DWG NO
963394-300
REV
A
SCALE
MOD
SH 4 OF 12

REVISION					
LTR	DESCRIPTION	DWN	DATE	APVD	DATE

LOW BYTE

(4) RPL
(2,4,6,7) BAD0-BAD15
(3,4) RAS
(3,4) DRAM R/W
(3) CASL

BAD0-BAD15

U19M 64K 4164 PL — RPL
U19N 4164 — BAD7
U19P 4164 — BAD6
U21M 4164 — BAD5
U21N 4164 — BAD4
U21P 4164 — BAD3
U22M 4164 — BAD2
U22N 4164 — BAD1
U22P 4164 — BAD0

A0-A7
+5V
A0-A7 (4)

DRAM ADDRESS MUX/BUFFER

(2) HBANK
(2,3,6,7) LA1-LA15
(3) AMUX

U18M 2966

LA1-LA15

U27M 2966

BAD0-BAD15

U20K 27128 — BAD0 BAD1 BAD2 BAD3 BAD4 BAD5 BAD6 BAD7
U23K 27128 — BAD8 BAD9 BAD10 BAD11 BAD12 BAD13 BAD14 BAD15
U22K 27128 — BAD0 BAD1 BAD2 BAD3 BAD4 BAD5 BAD6 BAD7
U25K 27128 — BAD8 BAD9 BAD10 BAD11 BAD12 BAD13 BAD14 BAD15

LA15
(2,3,4) BOOT
(3) BOOT
(3) BOOT RD
(2,3,6,7) ZDS
(2) SPECIAL IO
(2) ZMREQ

U18H 00
U20J 32
U20J 32
U20J 32
U22E 08

RAMDS (4)

EPROM/DRAM LOW

ALL INFORMATION CONTAINED IN OR DISCLOSED BY THIS DOCUMENT IS CONSIDERED CONFIDENTIAL AND PROPRIETARY BY CIPHER DATA PRODUCTS, INC. BY ACCEPTING THIS MATERIAL THE RECIPIENT AGREES THAT THIS MATERIAL AND THE INFORMATION CONTAINED THEREIN IS HELD IN CONFIDENCE AND IN TRUST AND WILL NOT BE USED, REPRODUCED IN WHOLE OR IN PART NOR ITS CONTENTS REVEALED TO OTHERS EXCEPT TO MEET THE PURPOSE FOR WHICH IT WAS DELIVERED. IT IS UNDERSTOOD THAT NO RIGHT IS CONVEYED TO REPRODUCE OR HAVE REPRODUCED ANY ITEM HEREIN DISCLOSED WITHOUT EXPRESS PERMISSION FROM CIPHER DATA PRODUCTS, INC.

REV STATUS	REV
OF SHEETS	SH 1 2 3 4 5 6 7 8 9 10 11 12 13 14 15 16 17 18 19 20 21 22 23 24

UNLESS OTHERWISE SPECIFIED DIMENSIONS ARE IN INCHES
TOLERANCES ARE DECIMALS .X ± .XX ± .XXX ±
ANGLES ±
DO NOT SCALE DRAWING

	APPROVAL	DATE
DWN		
CHK		
DES ENG		
SAFETY		
DES MGR		
MFG ENG		
ISSUED		

cipher data products, inc. SAN DIEGO CALIF

TITLE: SCHEM-CPU/MMU, MGCR

CODE IDENT	SIZE	DWG NO	REV
32274	D	963394-300	A
SCALE		MOD	SH 5 OF 24

BRUNING 4032

REVISION					
LTR	DESCRIPTION	DWN	DATE	APVD	DATE

J5 IN

42 — WAIT (2,3,9)
46 — VI (2,7)
48 — NVI (2)
49 — NMI (2)

54 E8 INT0
55 E7 INT1
56 E6 INT2
57 E5 INT3
58 E4 INT4
59 E3 INT5

IEO E1 — IEO (7)
IEI E2 — IEI (12)

U16N LS00 — U17J 04 — U14B LS11 — U14C F86 — U22H 28

ZAD0 - ZAD7
ZAD8 - ZAD15

U23C 04

(2,3,7) IO
(2,7,11) ZAD0-ZAD15
(2,3,7) ZCLK
(2,3) ZAS
(2,3,5,7) ZDS
(2,3) ZMREQ
(2) LA9
(12) CRSIO — 148 S10
+5V — U14C F86
U3D LS14
(2,3) ZB/W
(4) WDOG ENA UB
(2) ZRES
(2,7) INTA
+5V — R15 2.2K — W9 — U23C 04
R30 2.2K
(7,9) C DATA — U20D 32
LA1- LA6
(2,3,5,7) LA0- LA15
(7) STORE NR — U22H 28 — U23H 01
(3,7) ZIOWR
(2,3,4) BR/W
(7) RECALL NR — U25H 32
(3) ZIORD — U27H 08
(7) SNRM — U25H 32

U25B 245: ZAD0–ZAD7 → AD0–AD7
U23B 245: ZAD8–ZAD15 → AD8–AD15
U27B 244: SYS CLK, AS, DS, MREQ, R/W
U22B 244: B/W, WATCHDOG ENABLE, RESET, INT ACK, IOWR, IORD, IO

J5 OUT

13 AD0
14 AD1
15 AD2
16 AD3
18 AD4
19 AD5
20 AD6
21 AD7
23 AD8
24 AD9
25 AD10
26 AD11
28 AD12
29 AD13
30 AD14
31 AD15
2 SYS CLK
4 AS
6 DS
8 MREQ
9 R/W
37 B/W
43 WATCHDOG ENABLE
45 RESET
50 INT ACK
33 IOWR
34 IORD
35 IO

U22D LS00 — PWR RES (2,3,4)
ENA (7)
ZI/O (2,3,7)
RD CDATA (11)

R10 6.2K — +5V — W6 — U23H LS01 — 27J-14 (SH7)

U25J 2210 NOVRAM
LA1 LA2 LA3 LA4 LA5 LA6 — A0 A1 A2 A3 A4 A5
STORE RECALL WE CS
I/O I/O I/O I/O — BAD0 BAD1 BAD2 BAD3
BAD0-BAD3 — BAD0-BAD15 (2,4,5,7)

CR1 1N5228B 3.9V,5%
R35 10K — Q2 2N4401 — R36 2.2K
R34 30 — Q1 2N4401
R33 100
+5V

TP26
+5V — C8, 35, 48, 85, 122 — C1-7, 9-14, 36-47, 49-84, 86-121, 123-159, 162, 163 — 2 mfd 63V
(7) +12V

J4
7 9 11 13 15 17 19 21 23 25
1 5 6 8 10 12 14 16 18 20 22 24 26 31 45 47
32 PWR RES

(11) PRTERM — W8

J4/J5/NOVRAM

REV STATUS	REV
OF SHEETS	SH 1 2 3 4 5 6 7 8 9 10 11 12 13 14 15 16 17 18 19 20 21 22 23 24

ALL INFORMATION CONTAINED IN OR DISCLOSED BY THIS DOCUMENT IS CONSIDERED CONFIDENTIAL AND PROPRIETARY BY CIPHER DATA PRODUCTS, INC. BY ACCEPTING THIS MATERIAL THE RECIPIENT AGREES THAT THIS MATERIAL AND THE INFORMATION CONTAINED THEREIN IS HELD IN CONFIDENCE AND IN TRUST AND WILL NOT BE USED, REPRODUCED IN WHOLE OR IN PART NOR ITS CONTENTS REVEALED TO OTHERS, EXCEPT TO MEET THE PURPOSE FOR WHICH IT WAS DELIVERED. IT IS UNDERSTOOD THAT NO RIGHT IS CONVEYED TO REPRODUCE OR HAVE REPRODUCED ANY ITEM HEREIN DISCLOSED WITHOUT EXPRESS PERMISSION FROM CIPHER DATA PRODUCTS, INC.

UNLESS OTHERWISE SPECIFIED DIMENSIONS ARE IN INCHES
TOLERANCES ARE
DECIMALS
.X ±
.XX ±
.XXX ±
ANGLES ±
DO NOT SCALE DRAWING

	APPROVAL	DATE
DWN		
CHK		
DES ENG		
SAFETY		
DES MGR		
MFG ENG		
ISSUED		

cipher data products, inc. SAN DIEGO CALIF.

TITLE: SCHEM-CPU/MMU, MGCR

CODE IDENT	SIZE	DWG NO	REV
32274	D	963394-300	B

SCALE — MOD — SH 6 OF 18

BRUNING 40-22

REVISION					
LTR	DESCRIPTION	DWN	DATE	APVD	DATE

(2,4,5,6) BAD0-BAD15

BAD0-BAD15

(6) +12V

C161 .1uf

+5V

R44 3.3K

R42 7.15K 1/8W,.5%

R43 8.06K 1/8W,.5%

U14N LM3911N

R46 4.7K

R47 10K

U17J 04

R45 270K

TEMP WARNING

(3,6) Z IOWR

U22H 28

LA1

U23C 04

U16N 00

WR CADD L

WR CADD H

(2,3,5,6) LA1-LA15

(2,3,6) IO

U27J 138

LA15 LA14 LA13 LA9

R31 220Ω

CADD

SCIO (7)

U23H-8,9 (SH6)

SNRM (6)

STORE NR (6)

RECALL NR(6)

R BOOT (3)

C DATA (2,6,9)

TP23

U17L 374

BAD7 BAD6 BAD5 BAD4 BAD3 BAD2 BAD1 BAD0

DMA7 (B) DMA6 (B) DMA5 (B) DMA4 (B) DMA3 (B) DMA2 (B) DMA1 (B) DMA0 (B)

ENA (6)

U17K 374

BAD15 BAD14 BAD13 BAD12 BAD11 BAD10 BAD9 BAD8

DMA15 (B) DMA14 (B) DMA13 (B) DMA12 (B) DMA11 (B) DMA10 (B) DMA9 (B) DMA8 (B)

WR CADDL (9)

U17N * 374

BAD7 BAD6 BAD5 BAD4 BAD3 BAD2 BAD1 BAD0

SPARE

(2,6,11) ZAD0-ZAD15

ZAD0-ZAD7

U20E CIO 8036A

ZAD0 ZAD1 ZAD2 ZAD3 ZAD4 ZAD5 ZAD6 ZAD7

PA0 PA1 PA2 PA3 PA4 PA5 PA6 PA7

IF DOWN (9)
CPU DOWN (9)
R/W DOWN (9)
IF C READ (9)
CPU C READ (9)
R/W C READ (9)
DMA16 (8)
DMA17 (8)

(2,3) Z R/W
(2,3,6) ZI/O
( ) S1
(2,3,6) ZAS
(2,3,5,6) ZDS
(2,3) ZCLK
(2,6) INTA
(2,6) VI
( ) IRPT
(6) IEO

R/W
CS1
CS0
AS
DS
PCLK
INTACK
INT
IEI
IEO

PC0 PC1 PC2 PC3

FHMPE(4)
FLMPE(4)
REVERSE BANKS (2)

TP34

PB0 PB1 PB2 PB3 PB4 PB5 PB6 PB7

R/W L BUB (9)
IF LOAD(9)
CPU LOAD(9)
R/W LOAD(9)
C REFRESH (9)

(11) PCHECK
(9) R/WBC

* NOTE: THIS I.C. NOT INSTALLED

TEMP WARNING / DMA CONTROL

REV STATUS	REV																							
OF SHEETS	SH	1	2	3	4	5	6	7	8	9	10	11	12	13	14	15	16	17	18	19	20	21	22	23	24

ALL INFORMATION CONTAINED IN OR DISCLOSED BY THIS DOCUMENT IS CONSIDERED CONFIDENTIAL AND PROPRIETARY BY CIPHER DATA PRODUCTS, INC. BY ACCEPTING THIS MATERIAL THE RECIPIENT AGREES THAT THIS MATERIAL AND THE INFORMATION CONTAINED THEREIN IS HELD IN CONFIDENCE AND IN TRUST AND WILL NOT BE USED, REPRODUCED IN WHOLE OR IN PART NOR ITS CONTENTS REVEALED TO OTHERS EXCEPT TO MEET THE PURPOSE FOR WHICH IT WAS DELIVERED. IT IS UNDERSTOOD THAT NO RIGHT IS CONVEYED TO REPRODUCE OR HAVE REPRODUCED ANY ITEM HEREIN DISCLOSED WITHOUT EXPRESS PERMISSION FROM CIPHER DATA PRODUCTS, INC.

UNLESS OTHERWISE SPECIFIED DIMENSIONS ARE IN INCHES
TOLERANCES ARE DECIMALS .X± .XX± .XXX± ANGLES± DO NOT SCALE DRAWING

	APPROVAL	DATE
DWN		
CHK		
DES ENG		
SAFETY		
DES MGR		
MFG ENG		
ISSUED		

cipher data products, inc. SAN DIEGO CALIF

TITLE: SCHEM-CPU/MMU, MGCR

CODE IDENT	SIZE	DWG NO	REV
32274	D	96334-300	A

SCALE | MOD | SH 7 OF 12

BRUNING 6022

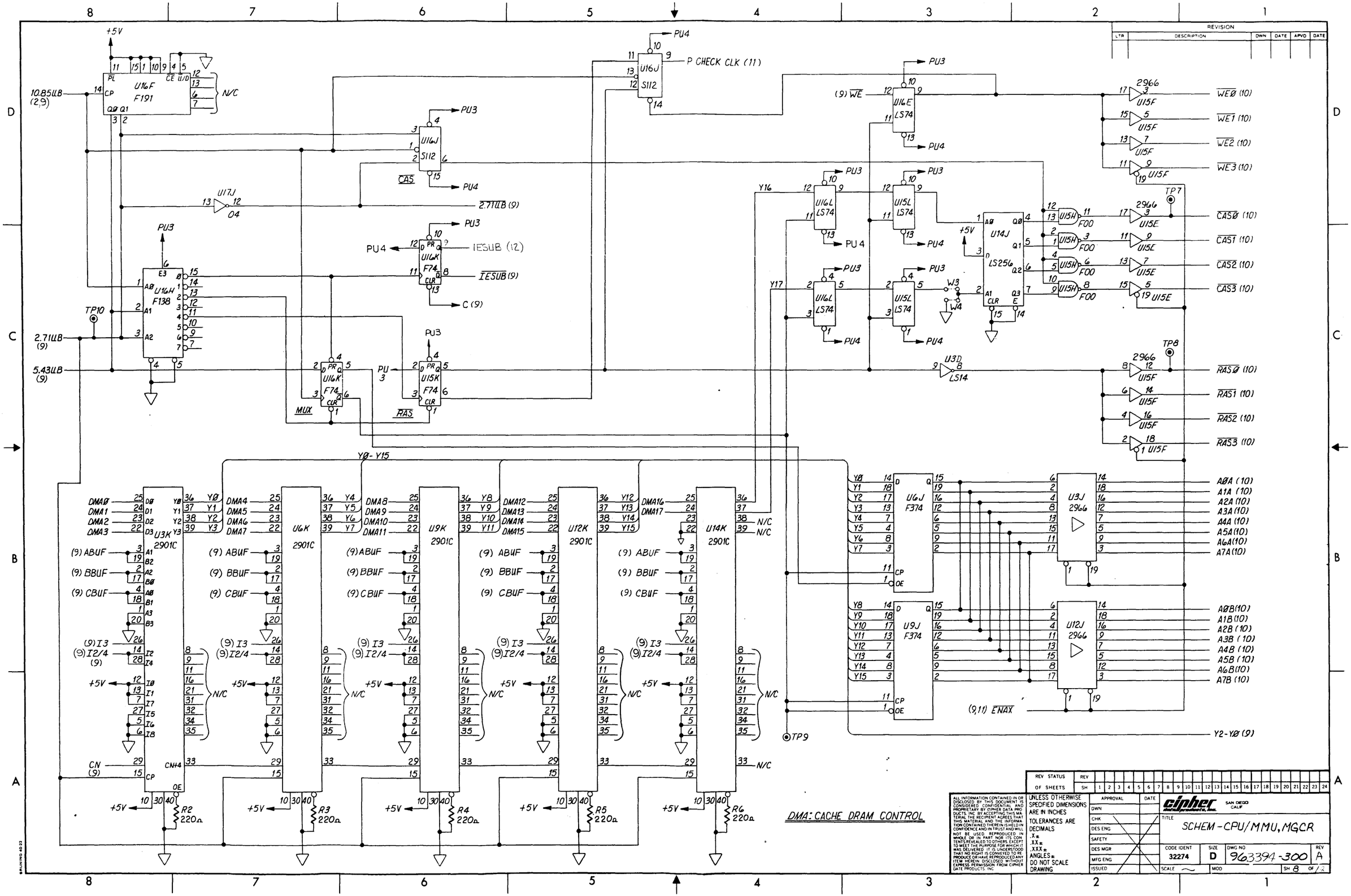

REVISION

LTR	DESCRIPTION	DWN	DATE	APVD	DATE

REV STATUS OF SHEETS	REV	SH
		1 2 3 4 5 6 7 8 9 10 11 12 13 14 15 16 17 18 19 20 21 22 23 24

ALL INFORMATION CONTAINED IN OR DISCLOSED BY THIS DOCUMENT IS CONSIDERED CONFIDENTIAL AND PROPRIETARY BY CIPHER DATA PRODUCTS, INC. BY ACCEPTING THIS MATERIAL THE RECIPIENT AGREES THAT THIS MATERIAL AND THE INFORMATION CONTAINED THEREIN IS HELD IN CONFIDENCE AND IN TRUST AND WILL NOT BE USED, REPRODUCED IN WHOLE OR IN PART NOR ITS CONTENTS REVEALED TO OTHERS, EXCEPT TO MEET THE PURPOSE FOR WHICH IT WAS DELIVERED. IT IS UNDERSTOOD THAT NO RIGHT IS CONVEYED TO REPRODUCE OR HAVE REPRODUCED ANY ITEM HEREIN DISCLOSED WITHOUT EXPRESS PERMISSION FROM CIPHER DATA PRODUCTS, INC.

UNLESS OTHERWISE SPECIFIED DIMENSIONS ARE IN INCHES
TOLERANCES ARE
DECIMALS
.X ±
.XX ±
.XXX ±
ANGLES ±
DO NOT SCALE DRAWING

APPROVAL	DATE
DWN	
CHK	
DES ENG	
SAFETY	
DES MGR	
MFG ENG	
ISSUED	

cipher data products, inc. SAN DIEGO CALIF

TITLE: SCHEM-CPU/MMU, MGCR

CODE IDENT	SIZE	DWG NO	REV
32274	D	963394-300	A

SCALE ~ MOD SH 8 OF 12

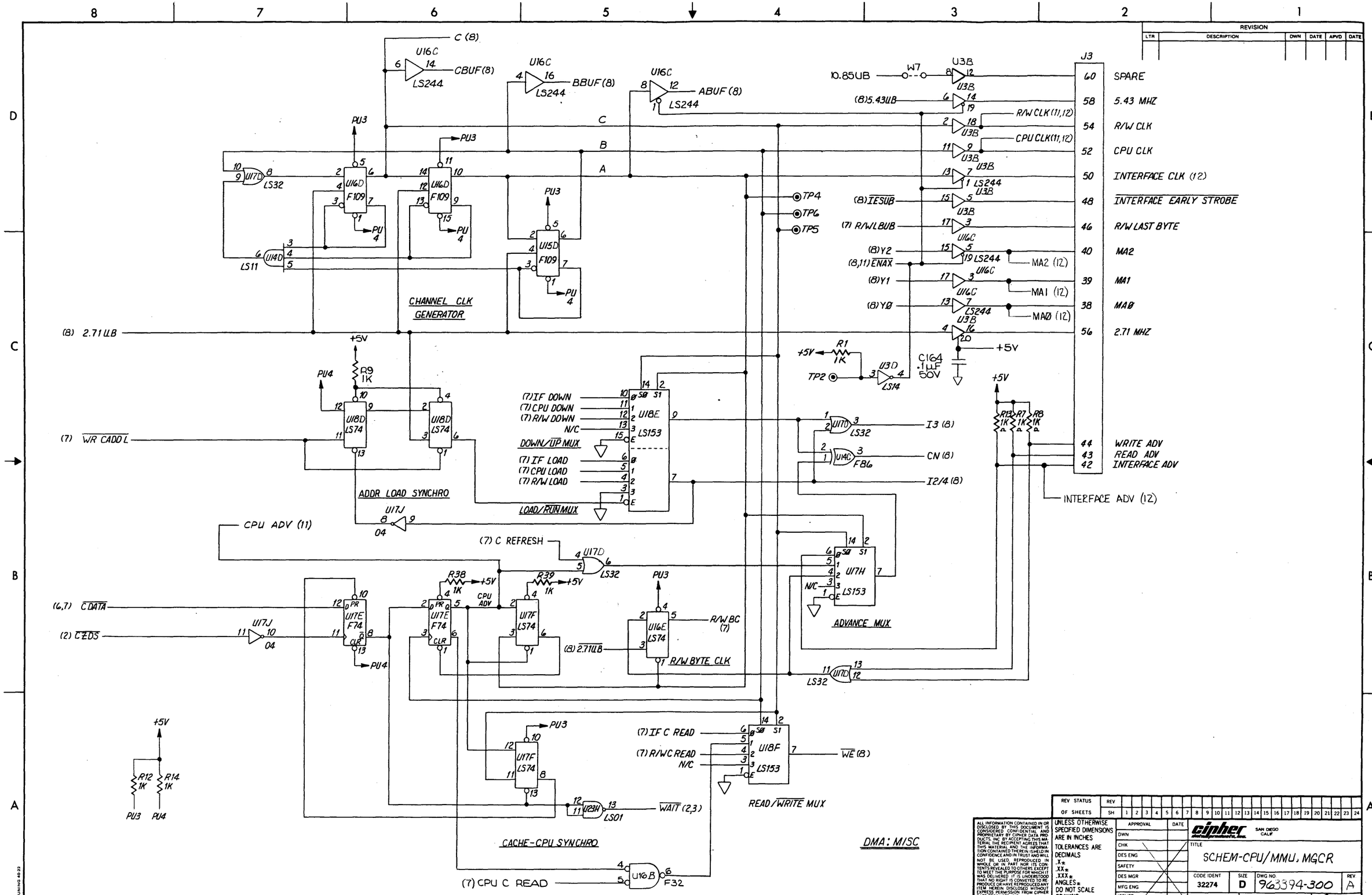

REVISION
LTR
DESCRIPTION
DWN
DATE
APVD
DATE
J3
60 SPARE
58 5.43 MHZ
54 R/W CLK
52 CPU CLK
50 INTERFACE CLK (12)
48 INTERFACE EARLY STROBE
46 R/W LAST BYTE
40 MA2
39 MA1
38 MAØ
56 2.71 MHZ
44 WRITE ADV
43 READ ADV
42 INTERFACE ADV
INTERFACE ADV (12)
10.85UB
W7
U3B
(8)5.43UB
R/W CLK (11,12)
CPU CLK (11,12)
(8) IESUB
(7) R/W LBUB
(8) Y2
(8,11) ENAX
(8) Y1
(8) YØ
MA2 (12)
MA1 (12)
MAØ (12)
+5V
R1 1K
TP2
U3D
LS14
C164 .1µF 50V
C (8)
U16C
LS244
CBUF (8)
BBUF (8)
ABUF (8)
PU3
PU4
U17D
LS32
U14D
LS11
U16D
F109
U15D
CHANNEL CLK GENERATOR
(8) 2.71UB
R9 1K
U18D
LS74
(7) WR CADD L
ADDR LOAD SYNCHRO
U17J
04
(7) IF DOWN
(7) CPU DOWN
(7) R/W DOWN
N/C
DOWN/UP MUX
(7) IF LOAD
(7) CPU LOAD
(7) R/W LOAD
U18E
LS153
LOAD/RUN MUX
I3 (8)
CN (8)
I2/4 (8)
U14C
F86
R13 1K
R7 1K
R8 1K
CPU ADV (11)
(7) C REFRESH
U17H
ADVANCE MUX
(6,7) C DATA
(2) CZDS
U17E
F74
R38 1K
R39 1K
CPU ADV
U17F
R/W BC (7)
(8) 2.71UB
R/W BYTE CLK
(7) IF C READ
(7) R/WC READ
U18F
WE (8)
READ/WRITE MUX
R12 1K
R14 1K
U23H
LS01
WAIT (2,3)
CACHE-CPU SYNCHRO
(7) CPU C READ
U16B
F32
DMA: MISC
REV STATUS
OF SHEETS
SH
ALL INFORMATION CONTAINED IN OR DISCLOSED BY THIS DOCUMENT IS CONSIDERED CONFIDENTIAL AND PROPRIETARY BY CIPHER DATA PRODUCTS, INC. BY ACCEPTING THIS MATERIAL THE RECIPIENT AGREES THAT THIS MATERIAL AND THE INFORMATION CONTAINED THEREIN IS HELD IN CONFIDENCE AND IN TRUST AND WILL NOT BE USED, REPRODUCED IN WHOLE OR IN PART NOR ITS CONTENTS REVEALED TO OTHERS EXCEPT TO MEET THE PURPOSE FOR WHICH IT WAS DELIVERED. IT IS UNDERSTOOD THAT NO RIGHT IS CONVEYED TO REPRODUCE OR HAVE REPRODUCED ANY ITEM HEREIN DISCLOSED WITHOUT EXPRESS PERMISSION FROM CIPHER DATE PRODUCTS, INC.
UNLESS OTHERWISE SPECIFIED DIMENSIONS ARE IN INCHES
TOLERANCES ARE
DECIMALS
.X±
.XX±
.XXX±
ANGLES±
DO NOT SCALE DRAWING
APPROVAL
DATE
DWN
CHK
DES ENG
SAFETY
DES MGR
MFG ENG
ISSUED
cipher
SAN DIEGO CALIF
TITLE
SCHEM-CPU/MMU, MGCR
CODE IDENT 32274
SIZE D
DWG NO. 963394-300
REV A
SCALE
MOD
SH 9 OF

REVISION					
LTR	DESCRIPTION	DWN	DATE	APVD	DATE

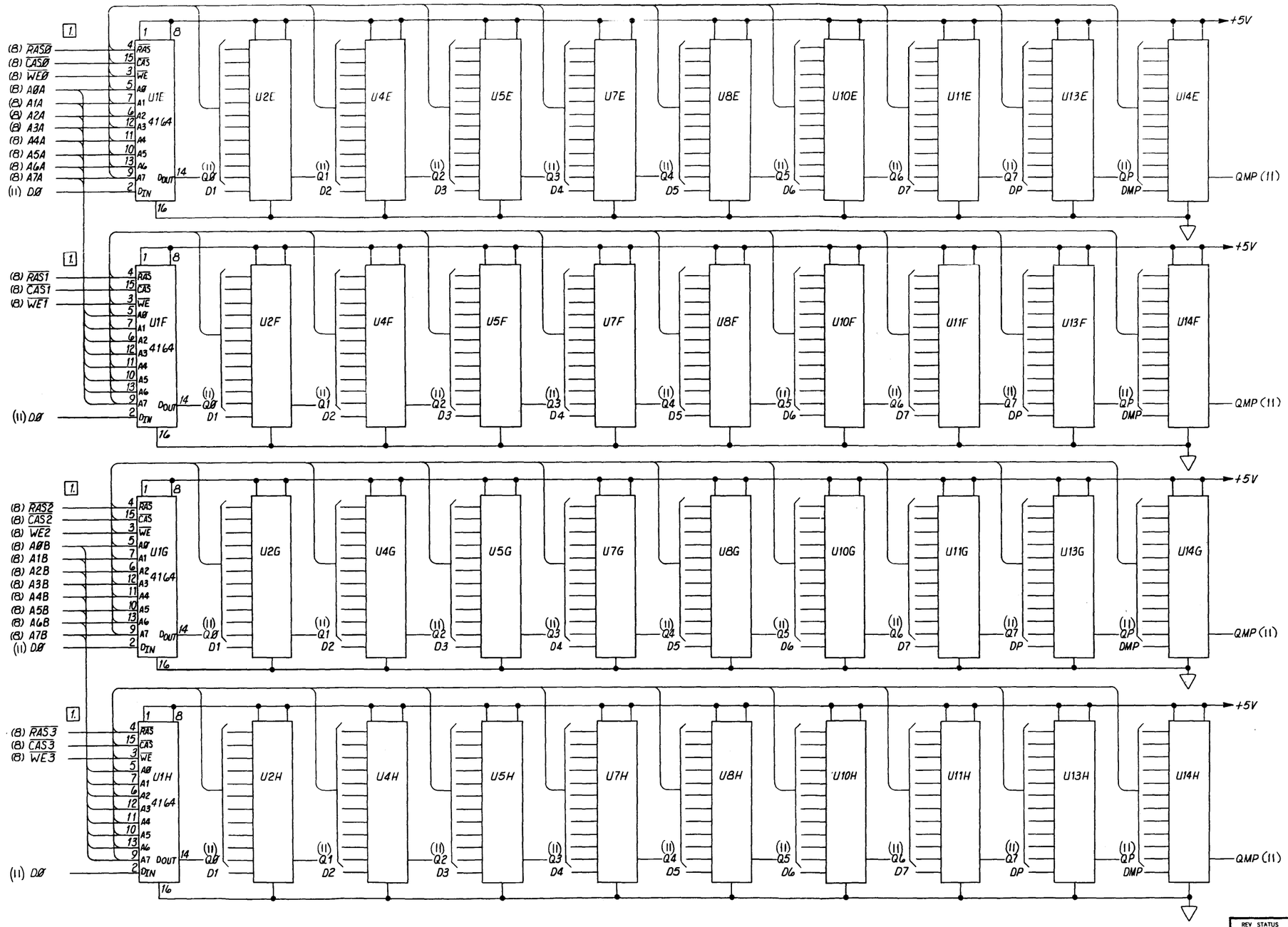

NOTES: UNLESS OTHERWISE SPECIFIED

1. ALL DEVICES, SIGNALS, AND PIN NUMBERS, IN THIS SERIES, ARE IDENTICAL.

DMA: CACHE DRAM

REV STATUS	REV																							
OF SHEETS	SH	1	2	3	4	5	6	7	8	9	10	11	12	13	14	15	16	17	18	19	20	21	22	23	24

ALL INFORMATION CONTAINED IN OR DISCLOSED BY THIS DOCUMENT IS CONSIDERED CONFIDENTIAL AND PROPRIETARY BY CIPHER DATA PRODUCTS, INC. BY ACCEPTING THIS MATERIAL THE RECIPIENT AGREES THAT THIS MATERIAL AND THE INFORMATION CONTAINED THEREIN IS HELD IN CONFIDENCE AND IN TRUST AND WILL NOT BE USED, REPRODUCED IN WHOLE OR IN PART NOR ITS CONTENTS REVEALED TO OTHERS EXCEPT TO MEET THE PURPOSE FOR WHICH IT WAS DELIVERED. IT IS UNDERSTOOD THAT NO RIGHT IS CONVEYED TO REPRODUCE OR HAVE REPRODUCED ANY ITEM HEREIN DISCLOSED WITHOUT EXPRESS PERMISSION FROM CIPHER DATA PRODUCTS, INC

UNLESS OTHERWISE SPECIFIED DIMENSIONS ARE IN INCHES TOLERANCES ARE DECIMALS .X ± .XX ± .XXX ± ANGLES ± DO NOT SCALE DRAWING	APPROVAL	DATE
	DWN	
	CHK	
	DES ENG	
	SAFETY	
	DES MGR	
	MFG ENG	
	ISSUED	

cipher data products, inc. SAN DIEGO CALIF

TITLE: SCHEM - CPU / MMU, MGCR

CODE IDENT	SIZE	DWG NO.	REV
32274	D	963394-300	A

SCALE — MOD — SH 10 OF 12

BRUNING 40-23

REVISION					
LTR	DESCRIPTION	DWN	DATE	APVD	DATE

+5V — U12B DIP TERM PAK 220/330 Ω — PRTERM(6)

PART OF J3

(10) D0
(10) D1
(10) D2
(10) D3
(10) D4
(10) D5
(10) D6
(10) D7
(10) DP
(2,6,7) ZAD0-ZAD8

U9C LS244 — CACHE IN BUFFER

U12D LS244

2 MWD0
4 MWD1
6 MWD2
8 MWD3
10 MWD4
12 MWD5
14 MWD6
16 MWD7
18 MWDP

PU3
U12C F74
U20H LS125 — ZAD8
PU4

U9D S280 — PARITY GEN
(10) DMP
U12D LS244
+5V
C165 .1μF 50V

U6C S280 — PARITY CHECK

U6B F374
R/W CLK (9)
RD C DATA(6)

ZAD7 ZAD6 ZAD5 ZAD4 ZAD3 ZAD2 ZAD1 ZAD0

U9B LS244 — CPU PORT
U12D LS244
ZAD8
U3D LS14

(10) Q0
(10) Q1
(10) Q2
(10) Q3
(10) Q4
(10) Q5
(10) Q6
(10) Q7
(9) ENAX
U6D LS244

20 MRD0
22 MRD1
24 MRD2
26 MRD3
28 MRD4
30 MRD5
32 MRD6
34 MRD7

(10) Q P
U12D LS244
36 MRDP

(10) Q MP
U12D LS244
U4C F86
PU3
U12C F74
TP3
PCHECK(7)
(TO CIO 1'S CATCHER)

(8) P CHECK CLK

CACHE OUT BUFFER

0 1 2 3 4 5 6 7 P
MRD
(12)

(12,9) CPU CLK
(9) CPU ADV
U3C F08

DMA: DATA BUS

REV STATUS	REV																							
OF SHEETS	SH	1	2	3	4	5	6	7	8	9	10	11	12	13	14	15	16	17	18	19	20	21	22	23	24

ALL INFORMATION CONTAINED IN OR DISCLOSED BY THIS DOCUMENT IS CONSIDERED CONFIDENTIAL AND PROPRIETARY BY CIPHER DATA PRODUCTS, INC BY ACCEPTING THIS MATERIAL THE RECIPIENT AGREES THAT THIS MATERIAL AND THE INFORMATION CONTAINED THEREIN IS HELD IN CONFIDENCE AND IN TRUST AND WILL NOT BE USED, REPRODUCED IN WHOLE OR IN PART NOR ITS CONTENTS REVEALED TO OTHERS EXCEPT TO MEET THE PURPOSE FOR WHICH IT WAS DELIVERED. IT IS UNDERSTOOD THAT NO RIGHT IS CONVEYED TO REPRODUCE OR HAVE REPRODUCED ANY ITEM HEREIN DISCLOSED WITHOUT EXPRESS PERMISSION FROM CIPHER DATA PRODUCTS, INC

UNLESS OTHERWISE SPECIFIED DIMENSIONS ARE IN INCHES
TOLERANCES ARE
DECIMALS
.X ±
.XX ±
.XXX ±
ANGLES ±
DO NOT SCALE DRAWING

APPROVAL	DATE
DWN	
CHK	
DES ENG	
SAFETY	
DES MGR	
MFG ENG	
ISSUED	

cipher SAN DIEGO CALIF

TITLE: SCHEM-CPU/MMU, MGCR

CODE IDENT	SIZE	DWG NO.	REV
32274	D	76374-300	A

SCALE — MOD GCR SH 11 OF 12

BRUNING 40-22

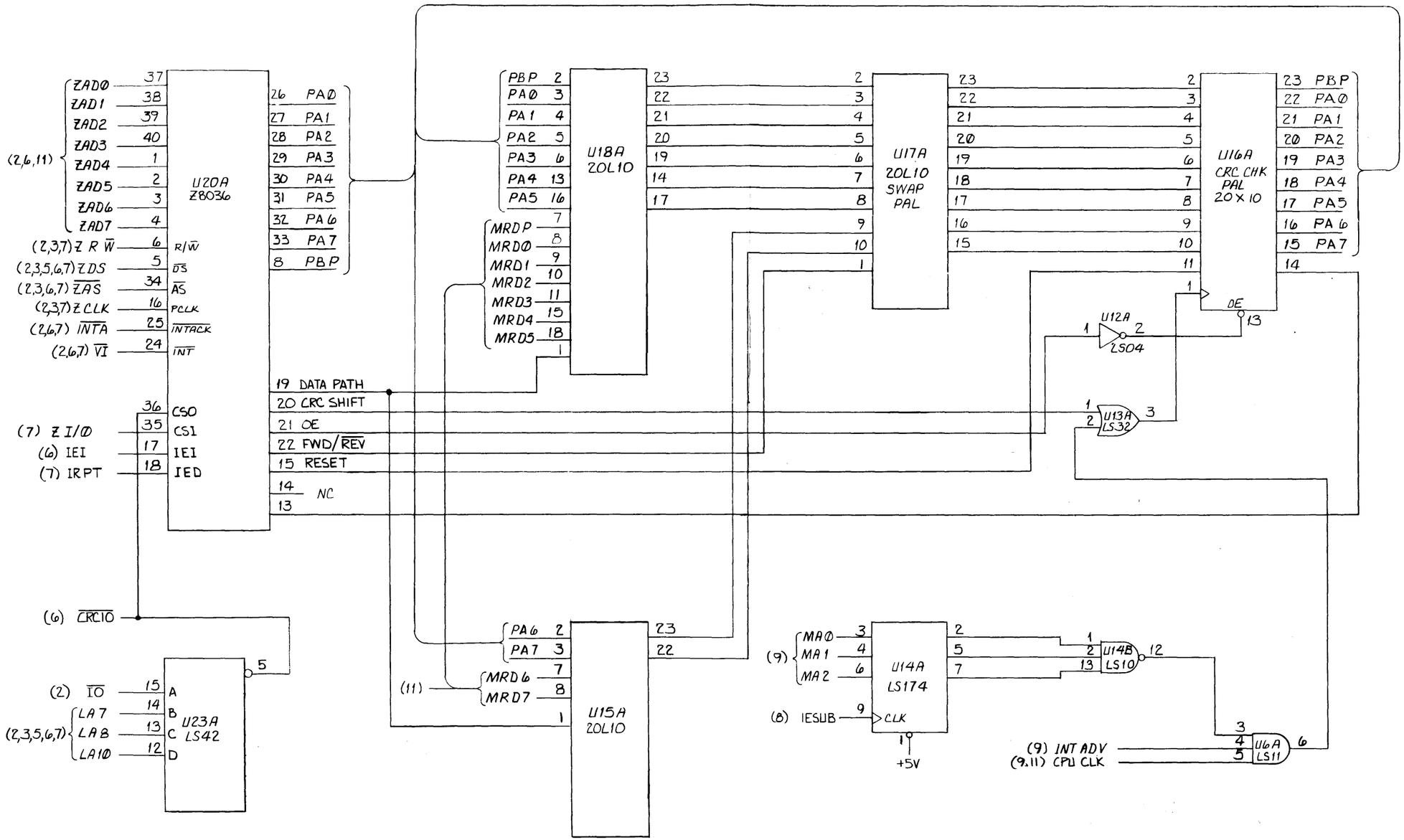

CODE IDENT	SIZE	DWG NO	REV
32274	D	963394-300	A
SCALE	MOD	SH 2 OF 14	

REVISION					
LTR	DESCRIPTION	DWN	DATE	APVD	DATE
A	PROD RCL ECO SD-0976	RL	7/26/86	[illegible]	[illegible]

PWB-CPU/MMU (1)

(2) LABEL ASSY (9)

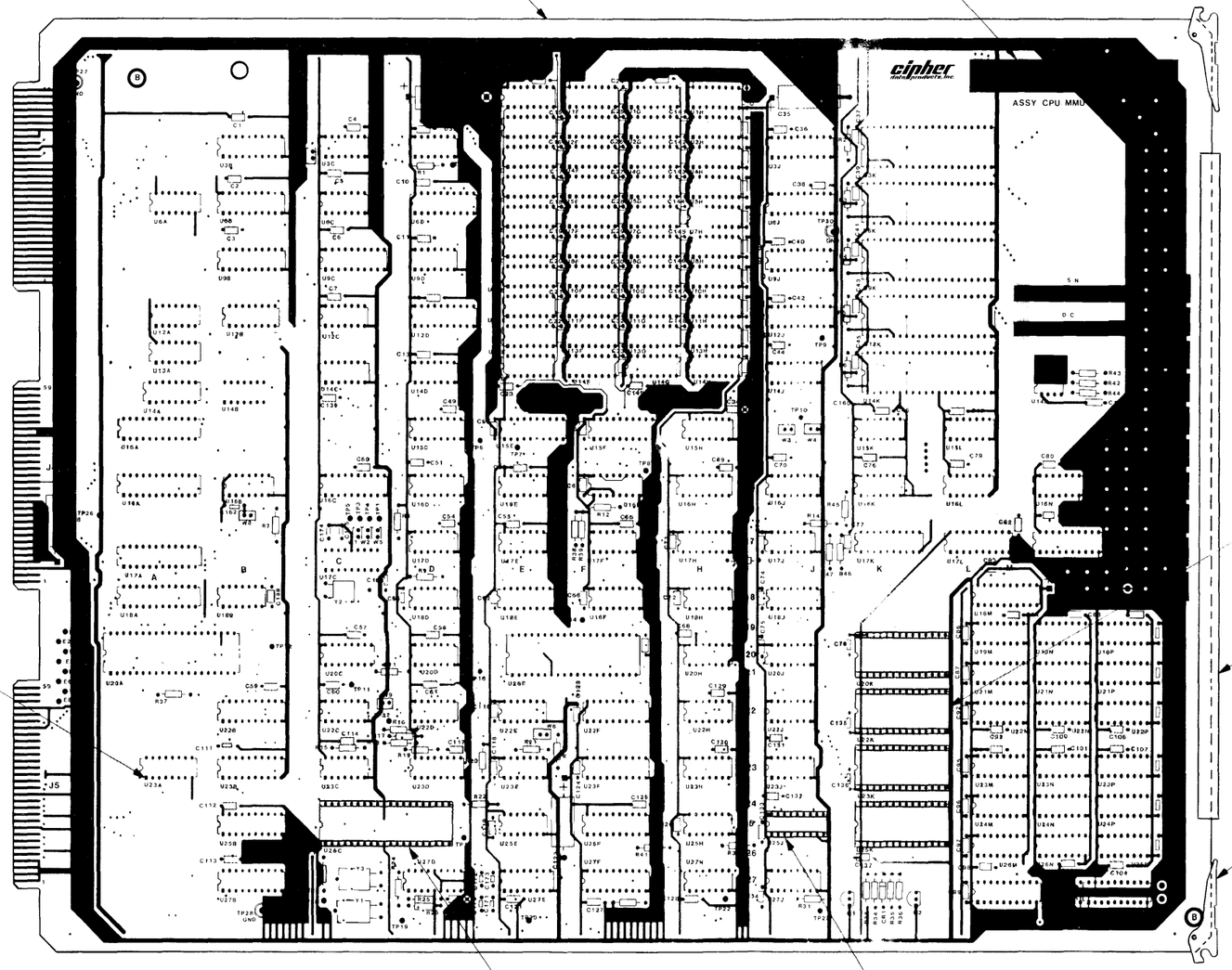

2.000 ± .062

(139) SOCKET, 28 PIN U20K, U22K, U23K & U25K

(17) STIFFENER

(147) ADHESIVE

963394-000 REV A

(18) CARD EJECTOR/INJECTOR 2 PLACES

(140) SOCKET, 40 PIN U25C

(137) SOCKET, 16 PIN U23J

(3) SQUARE PAD INDICATES PIN 1.

(2) MARK PART NUMBER AND REVISION LTR SAME AS ASSY PART NO. IN SPACE INDICATED OR USE LABEL ITEM 9, USING A PERMANENT & LEGIBLE MARKING METHOD

1. FOR SCHEMATIC SEE 963394-300.

NOTES: UNLESS OTHERWISE SPECIFIED

BRUNING 40-22

REV STATUS	REV																							
OF SHEETS	SH	1	2	3	4	5	6	7	8	9	10	11	12	13	14	15	16	17	18	19	20	21	22	23	24

ALL INFORMATION CONTAINED IN OR DISCLOSED BY THIS DOCUMENT IS CONSIDERED CONFIDENTIAL AND PROPRIETARY BY CIPHER DATA PRODUCTS, INC BY ACCEPTING THIS MATERIAL THE RECIPIENT AGREES THAT THIS MATERIAL AND THE INFORMATION CONTAINED THEREIN IS HELD IN CONFIDENCE AND IN TRUST AND WILL NOT BE USED, REPRODUCED IN WHOLE OR IN PART NOR ITS CONTENTS REVEALED TO OTHERS EXCEPT TO MEET THE PURPOSE FOR WHICH IT WAS DELIVERED. IT IS UNDERSTOOD THAT NO RIGHT IS CONVEYED TO REPRODUCE OR HAVE REPRODUCED ANY ITEM HEREIN DISCLOSED WITHOUT EXPRESS PERMISSION FROM CIPHER DATA PRODUCTS, INC

UNLESS OTHERWISE SPECIFIED DIMENSIONS ARE IN INCHES
TOLERANCES ARE
DECIMALS
.X ±
.XX ±
.XXX ±
ANGLES ±
DO NOT SCALE DRAWING

APPROVAL		DATE
DWN	[illegible]	7-26-86
CHK	[illegible]	7/26/86
DES ENG	[illegible]	7-26-86
SAFETY	[illegible]	7/29/86
DES MGR	[illegible]	7/29/86
MFG ENG	[illegible]	7/29/86
ISSUED	[illegible]	7-29-86

cipher data products, inc. SAN DIEGO CALIF

TITLE: PICT-PWB ASSY, CPU/MMU, MGCR

CODE IDENT	SIZE	DWG NO	REV
32274	D	963394-000	A

SCALE 1/1 | MOD | SH 1 OF 1

BILL OF MATERIAL

AS OF ALL DATE

CLASS CODE GROUP: 1 UNCLASSIFIED
CLASS CODE: 3400 G.C.R. UNIQUE BOARD ASSY

963394-001 OPCODE: 3 REV: E PWB ASSY-CPU/MMU,MGCR
MODEL:
ECO NO: 30163
DATE OF LAST ECO: 11/10/87

OP: ORDER POLICY CODE
REQ: N=PART OPTIONAL
Y=PART REQUIRED
PF: N=PART DOES NOT PRINT ON SALES ORDER
Y=PART PRINTS ON SALES ORDER W/O PRICE
P=PART PRINTS ON SALES ORDER WITH PRICE

PART NUMBER	DESCRIPTION	OP	RV	ITEM NO.	QTY PER ASSEMBLY	YIELD FACTR	UM	SC	REQ	PF	DEFAULT QUANTITY	DAYS OFF SET	SEQ	REFERENCE DESIGNATOR	EFFECTIV DATE	OBSOLETE DATE
963394-000	PICT-PWB ASSY,CPU/MMU,MGCR	1	A	1	0.000	1.000	EA	F	N	N	0.000	0	0		00/00/00	99/99/99
963394-101	PWB-CPU/MMU,MGCR	1	B	2	1.000	1.000	EA	B	Y	N	1.000	0	0		7/25/86	99/99/99
963394-300	SCHEM-CPU/MMU,MGCR	1	C	3	0.000	1.000	EA	F	Y	N	0.000	0	0		7/25/86	99/99/99
460700-006	TEST SPEC-CPU/,MMU PWB	3		4	0.000	1.000	EA	F	N	N	0.000	0	0		00/00/00	99/99/99
731006-800	LABEL-ASSY	3	B	9	1.000	1.000	EA	F	N	N	1.000	0	0		00/00/00	99/99/99
961707-002	STIFFENER-EDGE,PCB	3	B	17	1.000	1.000	EA	B	Y	N	1.000	0	0		7/19/85	99/99/99
970083-001	INJECTOR/EJECTOR-1/16"	3	B	18	2.000	1.000	EA	B	N	N	2.000	0	0		00/00/00	99/99/99
970337-001	CAP-ELEC,25MF,6V,-10+75%,ALUM	3	B	25	5.000	1.000	EA	B	N	N	5.000	0	0	C8,35,48,85,122	00/00/00*	4/27/87
201191-063	CAP-ELEC,22MF,6.3V,-10+50%,AL	3	H	25	5.000	1.000	EA	B	Y	N	5.000	0	0	C8,35,48,85,122 ECO# 19608	4/27/87	99/99/99
970338-001	CAP-CER.1MF,50V,-20+80%,DIP	3	B	26	157.000	1.000	EA	B	N	N	155.000	0	0	C1-7,9-34,36-47,49-84,86-121,123-159,161 162,163	00/00/00*	2/09/87
970784-104	CAP-CER,.1UF,50V,-20+80%,AX,*	3	E	26	157.000	1.000	EA	B	Y	N	157.000	0	0	C1-7,9-34,36-47,49-84,86-121,123-159,161 -163 ECO#19581	2/09/87	99/99/99
201114-105	CAP-CER,10000PF,50V,10%,X7R	3	J	27	2.000	1.000	EA	B	Y	N	2.000	0	0	C164,165 ECO#18840	2/18/86	99/99/99
202013-228	DIODE-ZENER	3	C	32	1.000	1.000	EA	B	N	N	1.000	0	0	CR1	00/00/00	99/99/99
204010-533	TRANSISTOR-NPN,SILICON	3	F	40	2.000	1.000	EA	B	N	N	2.000	0	0	Q1,2	00/00/00	99/99/99
200000-806	RES-8.06 KOHM .5% 1/8W FF	3	B	41	1.000	1.000	EA	F	N	N	1.000	0	0	R43	00/00/00	99/99/99
200000-715	RES-7.15 KOHM 1/8W .5% FF	3	B	42	1.000	1.000	EA	F	N	N	1.000	0	0	R42	00/00/00	99/99/99
200073-100	RES-1.0 KOHM 1/4W 5% CF	3	AA	43	13.000	1.000	EA	F	N	N	15.000	0	0	R1,7-9,11-14,20,22,37-39	00/00/00	99/99/99
200072-220	RES-220 OHM 1/4W 5% CF	3	AA	44	9.000	1.000	EA	F	N	N	9.000	0	0	R2-6,21,29,31,41	00/00/00	99/99/99
200073-470	RES-4.7 KOHM 1/4W 5% CF	3	AA	45	5.000	1.000	EA	F	N	N	5.000	0	0	R16-18,26,46	00/00/00	99/99/99
200073-220	RES-2.2 KOHM 1/4W 5% CF	3	AA	46	6.000	1.000	EA	F	N	N	5.000	0	0	R19,23,25,30,36,15	00/00/00	99/99/99
200071-100	RES-10 OHM 1/4W 5% CF	3	AA	48	1.000	1.000	EA	F	N	N	1.000	0	0	R24	00/00/00	99/99/99
200073-330	RES-3.3 KOHM 1/4W 5% CF	3	AA	49	1.000	1.000	EA	F	N	N	1.000	0	0	R44	00/00/00	99/99/99
200072-100	RES-100 OHM 1/4W 5% CF	3	AA	50	1.000	1.000	EA	F	N	N	1.000	0	0	R33	00/00/00	99/99/99

BILL OF MATERIAL

AS OF ALL DATE

CLASS CODE GROUP: 1 UNCLASSIFIED
CLASS CODE: 3400 G.C.R. UNIQUE BOARD ASSY

963394-001 OPCODE: 3 REV: E PWB ASSY-CPU/MMU,MGCR
MODEL:
ECO NO: 30163
DATE OF LAST ECO: 11/10/87

OP: ORDER POLICY CODE
REQ: N=PART OPTIONAL
Y=PART REQUIRED
PF: N=PART DOES NOT PRINT ON SALES ORDER
Y=PART PRINTS ON SALES ORDER W/O PRICE
P=PART PRINTS ON SALES ORDER WITH PRICE

PART NUMBER	DESCRIPTION	OP	RV	ITEM NO.	QTY PER ASSEMBLY	YIELD FACTR	UM	SC	REQ	PF	DEFAULT QUANTITY	DAYS OFF SET	SEQ	REFERENCE DESIGNATOR	EFFECTIV DATE	OBSOLETE DATE
200071-300	RES-30 OHM 1/4W 5% CF	3	AA	51	1.000	1.000	EA	B	N	N	1.000	0	0	R34	00/00/00	99/99/99
200074-100	RES-10 KOHM 1/4W 5% CF	3	AA	52	2.000	1.000	EA	F	N	N	2.000	0	0	R35,47	00/00/00	99/99/99
200075-270	RES-270 KOHM 1/4W 5% CF	3	AA	53	1.000	1.000	EA	F	N	N	1.000	0	0	R45	00/00/00	99/99/99
200073-620	RES-6.2 KOHM 1/4W 5% CF	3	AA	54	1.000	1.000	EA	F	Y	N	1.000	0	0	R10	7/19/85	99/99/99
970267-001	PIN-TEST,.040SQ X .360LG	3	A	64	29.000	1.000	EA	F	Y	N	29.000	0	0	TP1-12,16-20,22-32,34 205026-999	4/01/86	99/99/99
970627-002	HEADER-UNSH,2 P DR,STR,.100	3	C	66	9.000	1.000	EA	B	Y	N	4.000	0	0	W1-9	11/15/85	99/99/99
970227-001	JUMPER-2POS,.100CTS.	3	C	67	2.000	1.000	EA	B	N	N	2.000	0	0	W1,W3	00/00/00	99/99/99
203051-174	IC-74LS174,FF,D,HEX	3	L	68	1.000	1.000	EA	B	Y	N	1.000	0	0	U14A	3/07/86	99/99/99
970369-001	IC-4164 MEM MOS RAM 64KX1	3	F	71	58.000	1.000	EA	B	N	N	58.000	0	0	1E,2,4,5,7,8,10,11,13,14,1F,2,4,5,7,8,10,11,13,14,1G,2,4,5,7,8,10,11,13,14,1H,2,4,5,7,8,10,11,13,14,19M,21-24,26,19N,21-24,26,19P,21-24,26	00/00/00	99/99/99
203052-244	IC-74LS244 BFR OCT 3S	3	L	72	8.000	1.000	EA	B	N	N	8.000	0	0	U3B,6D,9B,9C,12D,16C,22B,27B	00/00/00	99/99/99
203085-001	IC-74LS14 INV SCHMITT HEX	3	J	73	1.000	1.000	EA	B	N	N	1.000	0	0	U3D	00/00/00	99/99/99
970324-001	IC-2966 DRVR OCTAL DYNAMI	3	A	74	7.000	1.000	EA	B	N	N	7.000	0	0	U3J,12J,15E,15F,18M,27M,27P	00/00/00	99/99/99
970322-001	IC-2901 MICROPROCESSOR 4 BIT	3	A	75	5.000	1.000	EA	B	N	N	5.000	0	0	U3K,6K,9K,12K,14K	00/00/00	99/99/99
970321-001	IC-74F374 FF D 3S OCT	3	D	76	3.000	1.000	EA	B	N	N	3.000	0	0	U6B,6J,9J	00/00/00	99/99/99
970354-001	IC-74S280 GEN/CKR PARITY 9BIT	3	B	77	2.000	1.000	EA	B	N	N	2.000	0	0	U6C,9D	00/00/00	99/99/99
970350-001	IC-74F08 AND 2IN QUAD	3	C	78	1.000	1.000	EA	B	N	N	1.000	0	0	U3C	00/00/00	99/99/99
205255-500	RES,NET-220/330 OHM 5% 1.5	3	E	79	1.000	1.000	EA	B	N	N	1.000	0	0	U12B	00/00/00	99/99/99
970224-001	IC-3911 CTRL TEMP	3	A	80	1.000	1.000	EA	B	N	N	1.000	0	0	U14N	00/00/00	99/99/99
970349-001	IC-74F32 OR 2IN QUAD	3	B	81	1.000	1.000	EA	B	N	N	1.000	0	0	U16B	00/00/00	99/99/99
970341-001	IC-74F86 EXOR	3	B	82	1.000	1.000	EA	B	N	N	1.000	0	0	U14C	00/00/00	99/99/99

BILL OF MATERIAL

AS OF ALL DATE

CLASS CODE GROUP: 1 UNCLASSIFIED
CLASS CODE: 3400 G.C.R. UNIQUE BOARD ASSY

963394-001 OPCODE: 3 REV: E PWB ASSY-CPU/MMU,MGCR
MODEL:
ECO NO: 30163
DATE OF LAST ECO: 11/10/87

OP: ORDER POLICY CODE
REQ: N=PART OPTIONAL
Y=PART REQUIRED
PF: N=PART DOES NOT PRINT ON SALES ORDER
Y=PART PRINTS ON SALES ORDER W/O PRICE
P=PART PRINTS ON SALES ORDER WITH PRICE

PART NUMBER	DESCRIPTION	OP	RV	ITEM NO.	QTY PER ASSEMBLY	YIELD FACTR	UM	SC	REQ	PF	DEFAULT QUANTITY	DAYS OFF SET	SEQ	REFERENCE DESIGNATOR	EFFECTIV DATE	OBSOLETE DATE
970325-001	IC-74F74 FF D DUAL	3	D	83	5.000	1.000	EA	B	N	N	5.000	0	0	U12C,15K,16K,17E,23E	00/00/00	99/99/99
203029-003	IC-74LS11 AND 3IN TRIP	3	F	84	2.000	1.000	EA	B	N	N	1.000	0	0	U14D,6A	00/00/00	99/99/99
970357-001	IC-74LS256 4-BIT ADDRESSABLE	3	D	85	1.000	1.000	EA	B	N	N	1.000	0	0	U14J	00/00/00	99/99/99
970344-001	IC-74F109 FF JK DUAL	3	A	86	2.000	1.000	EA	B	N	N	2.000	0	0	U15D,16D	00/00/00	99/99/99
970318-001	IC-74F00 NAND 2IN QUAD	3	B	87	1.000	1.000	EA	B	N	N	1.000	0	0	U15H	00/00/00	99/99/99
203039-001	IC-74LS74 FF D DUAL	3	M	88	6.000	1.000	EA	B	N	N	6.000	0	0	U15L,16E,16L,17F,18D,22C	00/00/00	99/99/99
970011-001	IC-74LS04 INV HEX	3	D	89	2.000	1.000	EA	B	N	N	2.000	0	0	U23C,12A	00/00/00	99/99/99
970365-001	IC-8581 GEN CLK 6 MHZ	3	B	90	2.000	1.000	EA	B	N	N	2.000	0	0	U17C,27D	00/00/00	99/99/99
970774-001	IC-74191	1	A	93	1.000	1.000	EA	B	Y	N	1.000	0	0	U16F ECO#18840	2/18/86*	11/10/87
970319-001	IC-74F191 CNTR REVERSIBLE	3	A	93	1.000	1.000	EA	B	Y	N	1.000	0	0	U16F ECO#30163	11/10/87	99/99/99
970351-001	IC-74F138 DCDR/DEMUX 3-8 LINE	3	C	94	1.000	1.000	EA	B	N	N	1.000	0	0	U16H	00/00/00	99/99/99
970353-001	IC-74S112 FF EDGE	3	A	95	1.000	1.000	EA	B	N	N	1.000	0	0	U16J	00/00/00	99/99/99
970221-001	IC-74LS00 NAND 2IN POS QUAD	3	E	96	4.000	1.000	EA	B	N	N	4.000	0	0	U16N,18H,22D,25E	00/00/00	99/99/99
203035-032	IC-74LS32 OR 2IN QUAD	3	J	97	5.000	1.000	EA	B	N	N	4.000	0	0	U17D,20D,20J,25H,13A	00/00/00	99/99/99
203046-153	IC-74LS153 SEL/MLTP 4-1 LINE	3	G	98	3.000	1.000	EA	B	N	N	3.000	0	0	U17H,18E,18F	00/00/00	99/99/99
203026-999	IC-7404 INV HEX	3	A	99	1.000	1.000	EA	B	Y	N	1.000	0	0	U17J ECO#18840	2/18/86*	11/10/87
970342-001	IC-74F04 INV HEX	3	D	99	1.000	1.000	EA	B	Y	N	1.000	0	0	U17J ECO#30163	11/10/87	99/99/99
963147-001	S/W-GCR,ASSY,SELECT	1	A	100	2.000	1.000	EA	M	Y	N	2.000	0	0	U15A,18A	3/07/86	99/99/99
962957-001	S/W-GCR, ASSY, CRC GENERATOR	1	A	101	1.000	1.000	EA	M	Y	N	1.000	0	0	U16A	3/07/86	99/99/99
963142-001	S/W-GCR,ASSY,SWAP	1	A	102	1.000	1.000	EA	M	Y	N	1.000	0	0	U17A	3/07/86	99/99/99
203102-375	IC-74LS374 FF D OCT	3	F	104	2.000	1.000	EA	B	N	N	2.000	0	0	U17K,17L	00/00/00	99/99/99
203029-002	IC-74LS10 NAND 3IN TRIP	3	J	105	2.000	1.000	EA	B	N	N	1.000	0	0	U18B,14B	00/00/00	99/99/99
970358-001	IC-74S135 EXOR/NOR QUAD	3	C	106	1.000	1.000	EA	B	N	N	1.000	0	0	U18J	00/00/00	99/99/99
203094-500	IC-74LS109 FF JK POS EDGE	3	J	107	1.000	1.000	EA	B	N	N	1.000	0	0	U20C	00/00/00	99/99/99
203555-111	IC-8036 CIO 16BIT 6MHZ	3	C	108	2.000	1.000	EA	B	N	N	1.000	0	0	U20E,20A	00/00/00	99/99/99
203036-039	IC-74LS125 BUS BUF QUAD	3	F	109	1.000	1.000	EA	B	N	N	1.000	0	0	U20H	00/00/00	99/99/99
970010-001	IC-74LS08 AND 2IN QUAD	3	B	111	2.000	1.000	EA	B	N	N	2.000	0	0	U22E,27H	00/00/00	99/99/99
970320-001	IC-74F373 LATCH OCTAL	3	B	112	2.000	1.000	EA	B	N	N	2.000	0	0	U22F,27F	00/00/00	99/99/99
970352-001	IC-74LS28 NOR BUF	3	C	113	1.000	1.000	EA	B	N	N	1.000	0	0	U22H	00/00/00	99/99/99
962666-005	S/W-GCR,ASSY,CPU/MMU,U20K,M990	3	A	114	1.000	1.000	EA	X	Y	N	1.000	0	0	U20K	7/25/86*	8/26/87
962666-007	S/W-GCR,ASSY,CPU/MMU,U20K,990	1	A	114	1.000	1.000	EA	M	Y	N	1.000	0	0	U20K ECO#3	8/26/87	99/99/99

BILL OF MATERIAL

AS OF ALL DATE

CLASS CODE GROUP: 1 UNCLASSIFIED
CLASS CODE: 3400 G.C.R. UNIQUE BOARD ASSY

963394-001 OPCODE: 3 REV: E PWB ASSY-CPU/MMU,MGCR
MODEL:
ECO NO: 30163
DATE OF LAST ECO: 11/10/87

OP: ORDER POLICY CODE
REQ: N=PART OPTIONAL
Y=PART REQUIRED
PF: N=PART DOES NOT PRINT ON SALES ORDER
Y=PART PRINTS ON SALES ORDER W/O PRICE
P=PART PRINTS ON SALES ORDER WITH PRICE

PART NUMBER	DESCRIPTION	OP	RV	ITEM NO.	QTY PER ASSEMBLY	YIELD FACTR	UM	SC	REQ	PF	DEFAULT QUANTITY	DAYS OFF SET	SEQ	REFERENCE DESIGNATOR	EFFECTIV DATE	OBSOLETE DATE
962666-007	S/W-GCR,ASSY,CPU/MMU,U20K,990	1	A	114	1.000	1.000	EA	M	Y	N	1.000	0	0	0009	8/26/87	99/99/99
962669-005	S/W-GCR,ASSY,CPU/MMU,U22K,M990	1	A	115	1.000	1.000	EA	X	Y	N	1.000	0	0	U22K	7/25/86*	8/26/87
962669-007	S/W-GCR,ASSY,CPU/MMU,U22K,990	1	A	115	1.000	1.000	EA	M	Y	N	1.000	0	0	U22K ECO#3 0009	8/26/87	99/99/99
962672-005	S/W-GCR,ASSY,CPU/MMU,U23K,M990	1	A	116	1.000	1.000	EA	X	Y	N	1.000	0	0	U23K	7/25/86*	8/26/87
962672-007	S/W-GCR,ASSY,CPU/MMU,U23K,990	1	A	116	1.000	1.000	EA	M	Y	N	1.000	0	0	U23K ECO#3 0009	8/26/87	99/99/99
962675-005	S/W-GCR,ASSY,CPU/MMU,U25K,M990	1	A	117	1.000	1.000	EA	X	Y	N	1.000	0	0	U25K	7/25/86*	8/26/87
962675-007	S/W-GCR,ASSY,CPU/MMU,U25K 990	1	A	117	1.000	1.000	EA	M	Y	N	1.000	0	0	U25K ECO#3 0009	8/26/87	99/99/99
203061-280	IC-74LS280 PARITY TREE 9IN	3	C	118	2.000	1.000	EA	B	N	N	2.000	0	0	U22J,23J	00/00/00	99/99/99
203102-245	IC-74LS245 TRANSCEIVR BUS OCT	3	E	119	2.000	1.000	EA	B	N	N	2.000	0	0	U23B,25B	00/00/00	99/99/99
203046-150	IC-74LS42 DCDR BCD-DEC	3	C	121	2.000	1.000	EA	B	N	N	1.000	0	0	U23D,23A	00/00/00	99/99/99
970323-001	IC-2947 BIDIRECT OCT 3S	3	A	122	2.000	1.000	EA	B	N	N	2.000	0	0	U23F,25F	00/00/00	99/99/99
203115-001	IC-74LS01 NAND QUAD OPEN	3	A	123	1.000	1.000	EA	B	N	N	1.000	0	0	U23H	00/00/00	99/99/99
203575-111	IC-8002 CPU 16BIT 6 MHZ	3	C	124	1.000	1.000	EA	B	N	N	1.000	0	0	U25C	00/00/00	99/99/99
970348-001	IC-2210 MEM RAM STATIC-	3	C	129	1.000	1.000	EA	B	N	N	1.000	0	0	U25J	00/00/00	99/99/99
203046-156	IC-74LS139 1-4 DUAL	3	G	131	1.000	1.000	EA	B	N	N	1.000	0	0	U27E	00/00/00	99/99/99
203046-148	IC-74LS138 DCDR 3-8 LINE	3	K	132	1.000	1.000	EA	B	N	N	1.000	0	0	U27J	00/00/00	99/99/99
970555-018	SOCKET-IC 18 PIN,.30	3	A	137	1.000	1.000	EA	B	Y	N	1.000	0	0	XU25J	00/00/00	99/99/99
205025-528	SOCKET-DIP,28 CONTACT	3	E	139	4.000	1.000	EA	B	Y	N	4.000	0	0	XU20K,22K, 23K,25K	00/00/00	99/99/99
205025-540	SOCKET-DIP,40 CONTACT	3	E	140	1.000	1.000	EA	B	Y	N	1.000	0	0	XU25C	00/00/00	99/99/99
970370-001	CRYSTAL-HC18/U QTZ,PRL	3	C	144	1.000	1.000	EA	B	N	N	1.000	0	0	Y1	00/00/00	99/99/99
210111-768	CRYSTAL-7.680MHZ,HC-18/U,	3	F	145	1.000	1.000	EA	B	N	N	1.000	0	0	Y2	00/00/00	99/99/99
209990-108	ADHESIVE CLEAR-RTV	3	A	146	0.000	1.000	EA	F	Y	N	0.000	0	0		00/00/00	99/99/99
209990-071	ADHESIVE-SUPERBONDER	3	C	147	0.000	1.000	EA	F	Y	N	0.000	0	0		11/22/85	99/99/99

IC. TYPE	REFERENCE DESIGNATOR	+5V	-12V	GND	UNUSED
74LS00	7H, 12H, 8J, 10L, 8M	14		7	
74LS02	11H	14		7	11H-C
74LS04	9J, 4L, 9L, 5P, 10K	14		7	5P-A 10K-A,C,D
74LS08	8H, 6J, 7J, 6L, 6M, 10M, 10N, 3P, 7P, 5K	14		7	5K-D
74LS10	5J, 9K, 8P	14		7	
74LS11	8K, 7L, 9M, 8N, 9P	14		7	
74LS14	3L	14		7	3L-A,B,C,D,E
74LS32	7K, 7M, 11M, 4N, 5N, 10J	14		7	
74LS38	12C.	14		7	13C-A,B,D
74LS74	4K, 6K, 5L, 8L, 11L, 4M, 5M, 7N, 6P	14		7	1F-B,4K-A
74LS86	15F, 5H, 15L, 13P	14		7	15F-A,13P-B
74LS123	14P	16		8	
74LS125	2F, 11J, 2P	14		7	11J-D,2P-D
74LS138	9H, 10H	16		8	
74LS161A	4H, 4J, 13J	16		8	
74LS244	15D, 4E, 3F, 4F, 2L, 12P, 13R, 1L	20		10	
74LS245	14E, 14F	20		10	
74LS280	12D, 3E	14		7	
74LS368	6H	16		8	
74LS373	12E, 13E, 15E, 9F, 10F, 11F, 12F	20		10	
74LS374	1N, 2N, 3N, 5E, 8E	20		10	
74F04	11K	14		7	11K-B,C,D,E,F
74F08	11P	14		7	11P-B
74F10	11N, 10P	14		7	11N-A
74F11	12J	14		7	12J-A
74F32	6N	14		7	6N-A,C
74F74	1F, 4P	14		7	4P-A
74F240	1H	20		10	
74F244	1D, 2E, 7E	20		10	
74F374	1E, 1J, 3J, 3R	20		10	
7414	4D, 5D, 6D, 7D, 8D	14		7	
7438	9D, 10D, 11D, 9E, 10E, 11E	14		7	
7474	15H, 15J, 13K, 15K, 13L, 13M, 15M, 13N, 15N	14		7	
2732A	1M, 2M, 3M	24		12	
825159	4R, 5R, 6R, 7R, 8R, 9R, 10R, 11R, 12R	20		10	
LM339	15P	3	12		15P-A,C,D
Z8036A	13F	23		7	
PAL20X8	5F	24		12	
PAL20X10	6F, 7F	24		12	
6349-2	1K, 2K, 3K	20		10	
745374	2J	20		10	

REFERENCE DESIGNATIONS					
LTR	LAST USED	NOT USED	LTR	LAST USED	NOT USED
C	85		S		
CR	903		TP	65	
DS			U	11R	
J	J6	1, 2	VR		
K			Y		
L			W	4	
P			E		
Q	902				
R	31, 908				

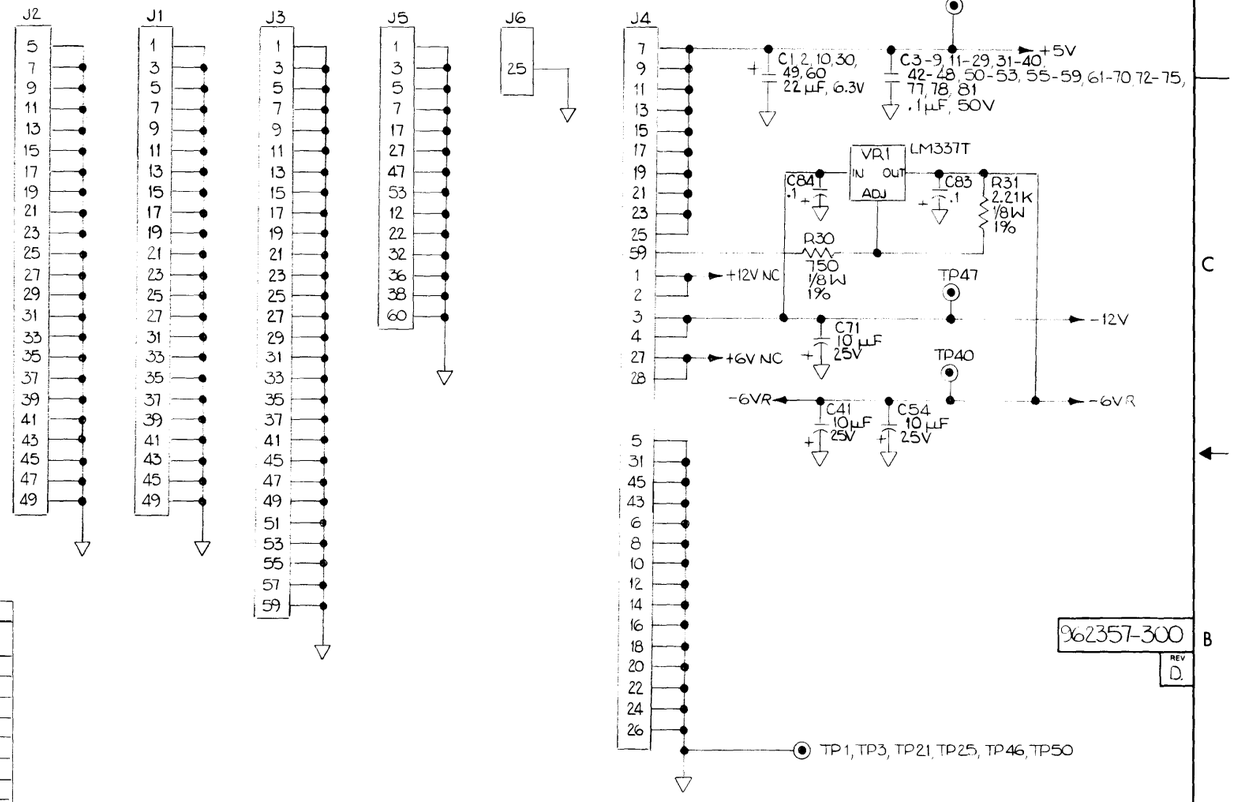

962357-300
REV D

3. VALUES FOR RX05 RX06 DIFFER AMONG M990 & M991.
SEE PARTS LIST 962357-001 FOR CORRECT VALUES FOR M991.
2. CAPACITOR VALUES ARE IN MICROFARADS.
1. RESISTOR VALUES ARE IN OHMS, 1/4W, 5%.
NOTES: UNLESS OTHERWISE SPECIFIED.

REVISION					
LTR	DESCRIPTION	DWN	DATE	APVD	DATE
A	PROD REL ERO SD-0756	[illegible]	[illegible]	[illegible]	2/84
B	INCORP. ECO 19428	CW	4-6-87	[illegible]	4/6/87
C	INCORP ECO 19429	CW	4-9-87	[illegible]	4/9/87
D	INCORP ECO 19608	CW	8-3-87	[illegible]	8/6/87

REV STATUS	REV	D	
OF SHEETS	SH	1 2 3 4 5 6 7 8 9 10 11 12 13 14 15 16 17 18 19 20 21 22 23 24	

ALL INFORMATION CONTAINED IN OR DISCLOSED BY THIS DOCUMENT IS CONSIDERED CONFIDENTIAL AND PROPRIETARY BY CIPHER DATA PRODUCTS, INC. BY ACCEPTING THIS MATERIAL THE RECIPIENT AGREES THAT THIS MATERIAL AND THE INFORMATION CONTAINED THEREIN IS HELD IN CONFIDENCE AND IN TRUST AND WILL NOT BE USED, REPRODUCED IN WHOLE OR IN PART NOR ITS CONTENTS REVEALED TO OTHERS EXCEPT TO MEET THE PURPOSE FOR WHICH IT WAS DELIVERED. IT IS UNDERSTOOD THAT NO RIGHT IS CONVEYED TO REPRODUCE OR HAVE REPRODUCED ANY ITEM SHOWN OR DISCLOSED WITHOUT EXPRESS PERMISSION FROM CIPHER DATA PRODUCTS, INC.

UNLESS OTHERWISE SPECIFIED DIMENSIONS ARE IN INCHES
TOLERANCES ARE
DECIMALS .X ± .XX ± .XXX ±
ANGLES ±
DO NOT SCALE DRAWING

APPROVAL	DATE
DWN C.WRIGHT	5-5-86
CHK [illegible]	5-7-86
QA [illegible]	5/14/86
SAFETY [illegible]	5/14/86
DES MGR [illegible]	5-14-86
MFG ENG [illegible]	5-15-86
ISSUED	2-21-86

cipher data products, inc. SAN DIEGO CALIF

TITLE SCHEM--CIF/WRITE

CODE IDENT	SIZE	DWG NO	REV
32274	D	962357-300	D

SCALE | MOD | SH 1 OF 7

BRUNING 4023

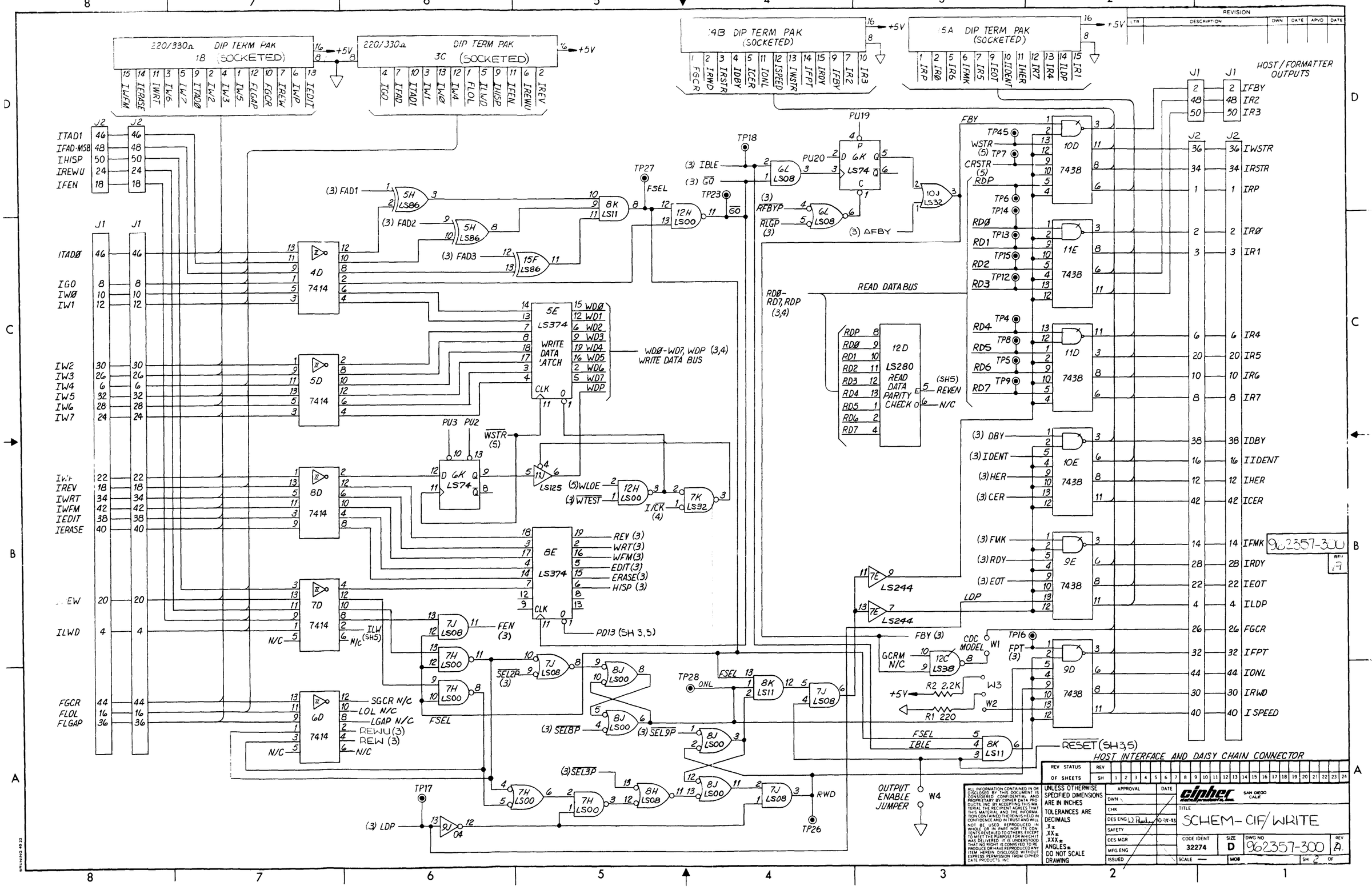

ALL INFORMATION CONTAINED IN OR DISCLOSED BY THIS DOCUMENT IS CONSIDERED CONFIDENTIAL AND PROPRIETARY BY CIPHER DATA PRODUCTS, INC. BY ACCEPTING THIS MATERIAL THE RECIPIENT AGREES THAT THIS MATERIAL AND THE INFORMATION CONTAINED THEREIN IS HELD IN CONFIDENCE AND IN TRUST AND WILL NOT BE USED, REPRODUCED IN WHOLE OR IN PART NOR ITS CONTENTS REVEALED TO OTHERS, EXCEPT TO MEET THE PURPOSE FOR WHICH IT WAS DELIVERED. IT IS UNDERSTOOD THAT NO RIGHT IS CONVEYED TO REPRODUCE OR HAVE REPRODUCED ANY ITEM HEREIN DISCLOSED WITHOUT EXPRESS PERMISSION FROM CIPHER DATA PRODUCTS, INC.

UNLESS OTHERWISE SPECIFIED DIMENSIONS ARE IN INCHES
TOLERANCES ARE
DECIMALS
.X±
.XX±
.XXX±
ANGLES±
DO NOT SCALE DRAWING

APPROVAL	DATE
DWN	
CHK	
DES ENG W. Pacher	10-28-83
SAFETY	
DES MGR	
MFG ENG	
ISSUED	

cipher data products, inc. SAN DIEGO CALIF

TITLE: SCHEM-CIF/WRITE

CODE IDENT	SIZE	DWG NO	REV
32274	D	962357-300	A

SCALE — MOB SH 2 OF

REVISION				
LTR	DESCRIPTION	DWN	DATE	APVD	DATE

220/330 DIP TERM PAK 14D

220/330 DIP TERM PAK 13D

+5V

10F LS373 — AD Ø-7, AS → LE, OE → PD2

10H LS138 — LA Ø, LA1, LA2; G1 ← (3) LA11; G2A ← LS04 (9J); G2B ← LS04 (9J)

Z8000 OUTPUT CONTROL PULSES

- IOW1
- IOW2
- IOW3
- SEL2P (SH2)
- SEL3P (SH2)

9H LS138 — G1 ← LA11; G2A ← LS04 (9J); G2B ← (SH3) DS, LS04 (9J), 12H LS00

- SEL8P (SH2)
- SEL9P (SH2)
- RLGP (SH2)
- RFBYP (SH2)
- SDTP (SH5)
- RSTP (SH5)

TP11 — DS, I/O

11H LS02 — R/W, WTEST, WLOE (SH5)

7K LS32 — WTEST, WLOE (SH5)

9F LS373 TEST WRITE DATA LATCH — AD Ø-7 → WD Ø-7, WDP (SH2,4)

12E LS373 TEST READ DATA LATCH — AD 8-15 → RD Ø-7, RDP (SH2,4); LE ← RTEST

11H LS02 — 2, 3 → 1

11F LS373 — AD Ø-7 → IBLE (SH2), TR/W (SH4,5), AFBY (SH2), RTEST (SH4,5), WTEST (SH2,5), RWSEN (SH5); LE ← PD2

LS125 (11J) — WDP

LS125 (11J) — 8 RDP

13E LS373 — AD 8-15 → CC1 (SH5), CC2 (SH5), CC3 (SH5), CC4 (SH5), CC5 (SH5), FAD1 (SH2), FAD2 (SH2), FAD3 (SH2); LE ← PD13 (SH 2.5)

12F LS373 — AD Ø-7 → IDENT (SH2), HER (SH2), CER (SH2), FMK (SH2), RDY (SH2), DBY (SH2), WIP (SH4), FPT (SH2); LE ← PD14

15E LS373 — AD 8-15 → LDP (SH2), EOT (SH2), 1600PE (SH7), WFBØ (SH6), WFB1 (SH6), WFB2 (SH6), WFB3 (SH6), WFLC (SH6); LE ← PD12

Z8000 LATCHED OUTPUT CONTROL SIGNALS

TP10 — AS, 4L LS04

12H LS00 — AD11, AD7

TP20 SYSCLK

(SOCKETED)

13F CIO Z8036

- AD Ø-7
- AS, DS, R/W
- CSØ, CS1, PCLK, INT, INTACK, IEI, IEO
- G, VCC (7, 23) → +5V
- PA7-PAØ: REV (SH2), WRT (SH2), WFM (SH2), ERASE (SH2), HISP (SH2), DT (SH 4,5), FEN (SH2)
- PC3-PCØ: FBY (SH2), NC, 158CLK (SH6), 158TC (SH6)
- PB7-PBØ: GO (SH2), REW (SH2), ITC (SH4,5), DPPE (SH5), REWU (SH2), TDREQ (SH5), TRAP (SH4)

INTA (3), IEO (3), IEI (3)

Z8000 INPUTS 158 COUNTER READ LAST WD COUNTER

(3) INTA, (3) IEI, (3) IEO → UIOK, UIOW 08, UIIN FIO

ADØ-AD15 → R26 33

14F LS245 — AD Ø-7 → ADØ-AD7; DIR ← OE ← PD14

14E LS245 — AD 8-15 → AD8-AD15; DIR ← PD12; E ← PD12

(SH3) DS, (3) LA11 → 9K LS10; UBH 08

I/O 2, R/W → 8H LS08

J5 Z8000 BUS INTERFACE

13	ADØ	23	AD8
14	AD1	24	AD9
15	AD2	25	AD10
16	AD3	26	AD11
18	AD4	28	AD12
19	AD5	29	AD13
20	AD6	30	AD14
21	AD7	31	AD15
9	R/W \		
45	RESET \		
50	INT ACK \		
35	I/O		
6	DS \		
4	AS \		
46	VI \		
54	IEO		
56	IEI		
2	SYSCLK		
42	WAIT \		

R27 47

LS244 15D — AS, DS, I/O, INTA, RESET (SH5), R/W → PD15

962357-300 REV A

U10K LS04 — (SH4,5) G1, (SH4) OECC

U5N LS32

U6J LS08 → COUNTER1 INPUT

U11P F08 — (SH5) CC5, (SH5) RSTR, (SH5) CC5, (4,5) RSTREN, (SH4) ICR

U11H LS02

U12J LS11

(NC) WAIT → 2F LS125 → PD10

LS244 7E — OE, OE ← PD3

LS244 7E — 15 → 5

LS244 7E — 4 → 16

LS244 7E — 8 → 12

Z8000 INTERFACE & I/O

REV STATUS	REV																							
OF SHEETS	SH	1	2	3	4	5	6	7	8	9	10	11	12	13	14	15	16	17	18	19	20	21	22	23	24

ALL INFORMATION CONTAINED IN OR DISCLOSED BY THIS DOCUMENT IS CONSIDERED CONFIDENTIAL AND PROPRIETARY BY CIPHER DATA PRODUCTS INC BY ACCEPTING THIS MATERIAL THE RECIPIENT AGREES THAT THIS MATERIAL AND THE INFORMATION CONTAINED THEREIN IS HELD IN CONFIDENCE AND IN TRUST AND WILL NOT BE USED, REPRODUCED IN WHOLE OR IN PART NOR ITS CONTENTS REVEALED TO OTHERS, EXCEPT TO MEET THE PURPOSE FOR WHICH IT WAS DELIVERED. IT IS UNDERSTOOD THAT NO RIGHT IS CONVEYED TO REPRODUCE OR HAVE REPRODUCED ANY ITEM HEREIN DISCLOSED WITHOUT EXPRESS PERMISSION FROM CIPHER DATA PRODUCTS INC

UNLESS OTHERWISE SPECIFIED DIMENSIONS ARE IN INCHES
TOLERANCES ARE
DECIMALS
.X ±
.XX ±
.XXX ±
ANGLES ±
DO NOT SCALE DRAWING

	APPROVAL	DATE
DWN	[signature]	9/20/83
CHK		
DES ENG	[signature]	10/20/83
SAFETY		
DES MGR		
MFG ENG		
ISSUED		

cipher data products, inc. SAN DIEGO CALIF

TITLE: SCHEM-CIF/WRITE

CODE IDENT	SIZE	DWG NO	REV
32274	D	962357-300	A

SCALE — MOD — SH 3 OF

BRUNING 40-22

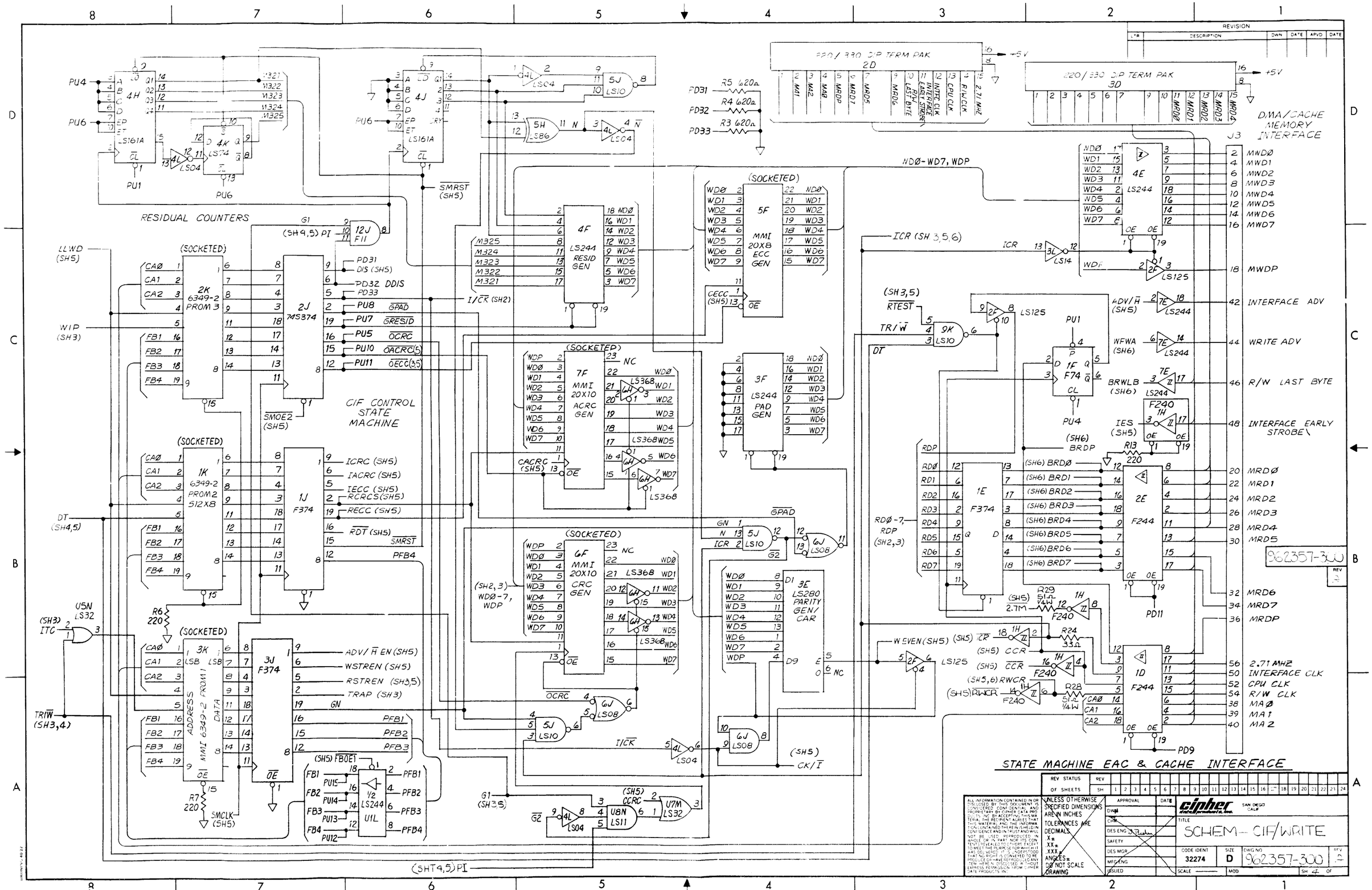

REV STATUS OF SHEETS	REV	SH 1	2	3	4	5	6	7	8	9	10	11	12	13	14	15	16	17	18	19	20	21	22	23	24

ALL INFORMATION CONTAINED IN OR DISCLOSED BY THIS DOCUMENT IS CONSIDERED CONFIDENTIAL AND PROPRIETARY BY CIPHER DATA PRODUCTS, INC. BY ACCEPTING THIS MATERIAL THE RECIPIENT AGREES THAT THIS MATERIAL AND THE INFORMATION CONTAINED THEREIN IS HELD IN CONFIDENCE AND IN TRUST AND WILL NOT BE USED, REPRODUCED IN WHOLE OR IN PART NOR ITS CONTENTS REVEALED TO OTHERS EXCEPT TO MEET THE PURPOSE FOR WHICH IT WAS DELIVERED. IT IS UNDERSTOOD THAT NO RIGHT IS CONVEYED TO REPRODUCE OR HAVE REPRODUCED ANY ITEM HEREIN DISCLOSED WITHOUT EXPRESS PERMISSION FROM CIPHER DATA PRODUCTS, INC.

UNLESS OTHERWISE SPECIFIED DIMENSIONS ARE IN INCHES
TOLERANCES ARE DECIMALS
.X ±
.XX ±
.XXX ±
ANGLES ±
DO NOT SCALE DRAWING

APPROVAL	DATE
DWN	
CHK	
DES ENG	
SAFETY	
DES MGR	
MFG ENG	
ISSUED	

cipher data products, inc. SAN DIEGO CALIF

TITLE: SCHEM – CIF/WRITE

CODE IDENT	SIZE	DWG NO	REV
32274	D	962357-300	A

SCALE — MOD — SH 4 OF

REVISION					
LTR	DESCRIPTION	DWN	DATE	APVD	DATE

REDUCED RATE COUNTER

EAC LOGIC CLOCKS

WRITE REDUCED RATE

READ REDUCED RATE

STATE MACHINE CLOCK

R OR W MAX RATE

DMA ADDRESS ADV/HOLD

DATA PATH PARITY ERROR

TEST MODE DATA REQUEST

WRITE DATA LATCH OUTPUT ENABLE

CIF WRITE STROBE

CIF READ STROBE

INTERFACE DATA TRANSMISSION

3H 220Ω RES NETWORK

2H 2.2K RES NETWORK

CIF CONTROL LOGIC

962357-300 REV A

ALL INFORMATION CONTAINED IN OR DISCLOSED BY THIS DOCUMENT IS CONSIDERED CONFIDENTIAL AND PROPRIETARY BY CIPHER DATA PRODUCTS INC BY ACCEPTING THIS MATERIAL THE RECIPIENT AGREES THAT THIS MATERIAL AND THE INFORMATION CONTAINED THEREIN IS HELD IN CONFIDENCE AND IN TRUST AND WILL NOT BE USED, REPRODUCED IN WHOLE OR IN PART NOR ITS CONTENTS REVEALED TO OTHERS, EXCEPT TO MEET THE PURPOSE FOR WHICH IT WAS DELIVERED. IT IS UNDERSTOOD THAT NO RIGHT IS CONVEYED TO REPRODUCE OR HAVE REPRODUCED ANY ITEM HEREIN DISCLOSED WITHOUT EXPRESS PERMISSION FROM CIPHER DATA PRODUCTS INC

UNLESS OTHERWISE SPECIFIED DIMENSIONS ARE IN INCHES
TOLERANCES ARE
DECIMALS
.X ±
.XX ±
.XXX ±
ANGLES ±
DO NOT SCALE DRAWING

APPROVAL	DATE
DWN	
CHK	
DES ENG	
SAFETY	
DES MGR	
MFG ENG	
ISSUED	

cipher SAN DIEGO CALIF

TITLE: SCHEM-CIF\WRITE

CODE IDENT	SIZE	DWG NO	REV
32274	D	962357-300	A

SCALE — MOD — SH 5 OF

BRUNING 40-22

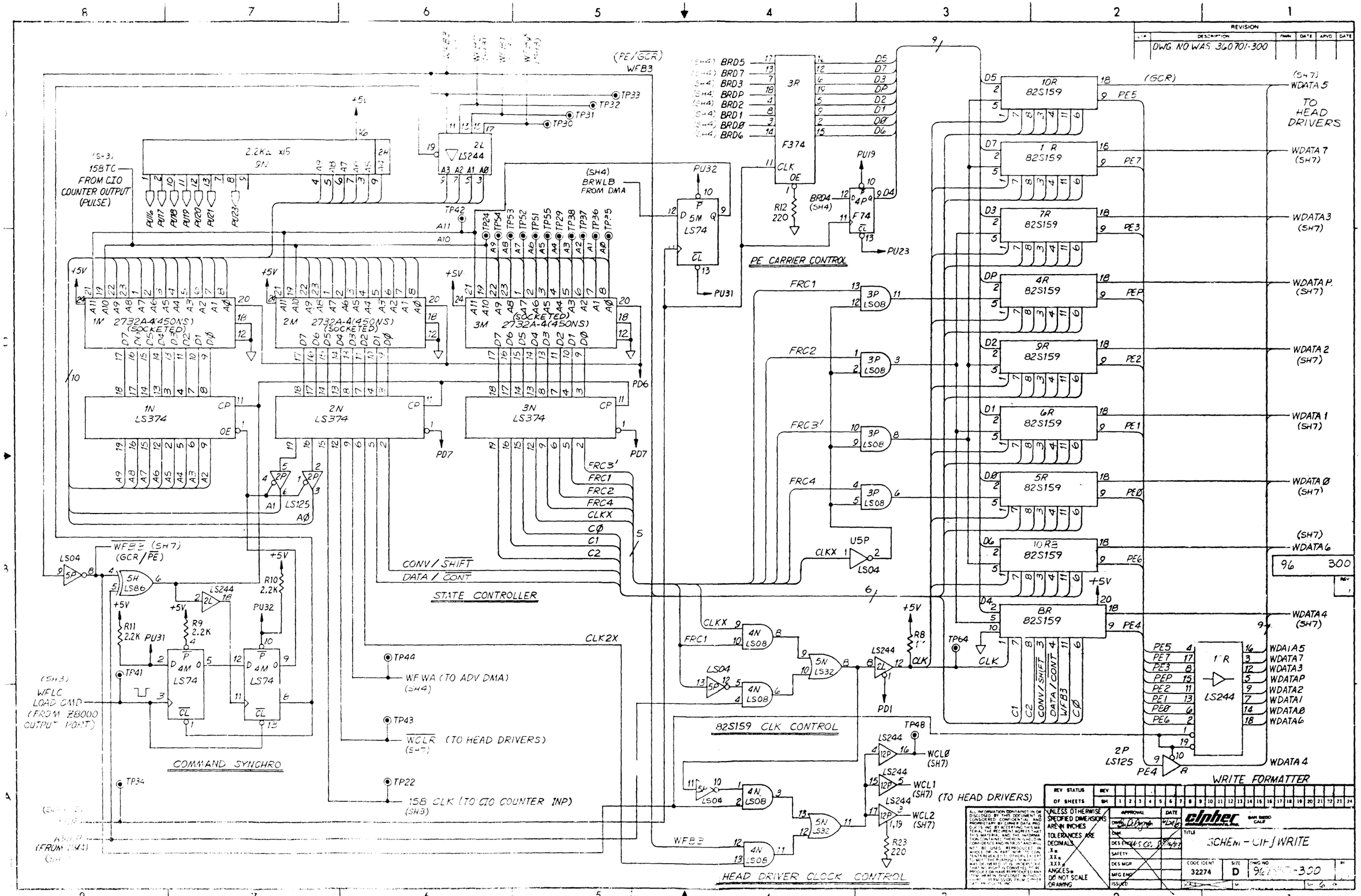

REVISION
DWG. NO WAS 360701-300
(PE/GCR)
WFB3
158TC
FROM CIO
COUNTER OUTPUT
(PULSE)
2.2KΩ x15
9N
2L
LS244
(SH4)
BRWLB
FROM DMA
PU32
5M
LS74
PU31
3R
F374
R12
220
PU19
4P
F74
PU23
PE CARRIER CONTROL
1M 2732A-4(450NS)
(SOCKETED)
2M 2732A-4(450NS)
(SOCKETED)
3M 2732A-4(450NS)
(SOCKETED)
1N
LS374
2N
LS374
3N
LS374
PD6
PD7
FRC1
FRC2
FRC3'
FRC4
CLKX
CØ
C1
C2
CONV / SHIFT
DATA / CONT
STATE CONTROLLER
LS125
LS04
5H
LS86
LS244
R10
2.2K
R11
2.2K
R9
2.2K
PU31
PU32
4M
LS74
TP41
WFLC
LOAD CMD
(FROM Z8000
OUTPUT PORT)
COMMAND SYNCHRO
TP44
WF WA (TO ADV DMA)
(SH4)
TP43
WCLR (TO HEAD DRIVERS)
(SH7)
TP22
158 CLK (TO CIO COUNTER INP)
(SH3)
TP34
CLK2X
CLKX
FRC1
4N
LS08
5N
LS32
LS04
LS244
PD1
82S159 CLK CONTROL
TP48
WCLØ
(SH7)
WCL1
(SH7)
(TO HEAD DRIVERS)
WCL2
(SH7)
R23
220
WFB3
HEAD DRIVER CLOCK CONTROL
10R
82S159
1R
82S159
7R
82S159
4R
82S159
9R
82S159
6R
82S159
5R
82S159
10RB
82S159
8R
82S159
(GCR)
PE5
PE7
PE3
PEP
PE2
PE1
PEØ
PE6
PE4
(SH7)
WDATA 5
TO
HEAD
DRIVERS
WDATA 7
(SH7)
WDATA 3
(SH7)
WDATA P.
(SH7)
WDATA 2
(SH7)
WDATA 1
(SH7)
WDATA Ø
(SH7)
(SH7)
WDATA 6
WDATA 4
(SH7)
1R
LS244
2P
LS125
WDATA 4
WRITE FORMATTER
96 300
REV STATUS OF SHEETS
UNLESS OTHERWISE SPECIFIED DIMENSIONS ARE IN INCHES
TOLERANCES ARE
DECIMALS
.X±
.XX±
.XXX±
ANGLES±
DO NOT SCALE DRAWING
APPROVAL
DATE
DES ENG
SAFETY
DES MGR
MFG ENG
ISSUED
ciphec
SAN DIEGO CALIF
TITLE
SCHEM - CIF/WRITE
CODE IDENT
32274
SIZE
D
DWG NO
96
-300
SH 6

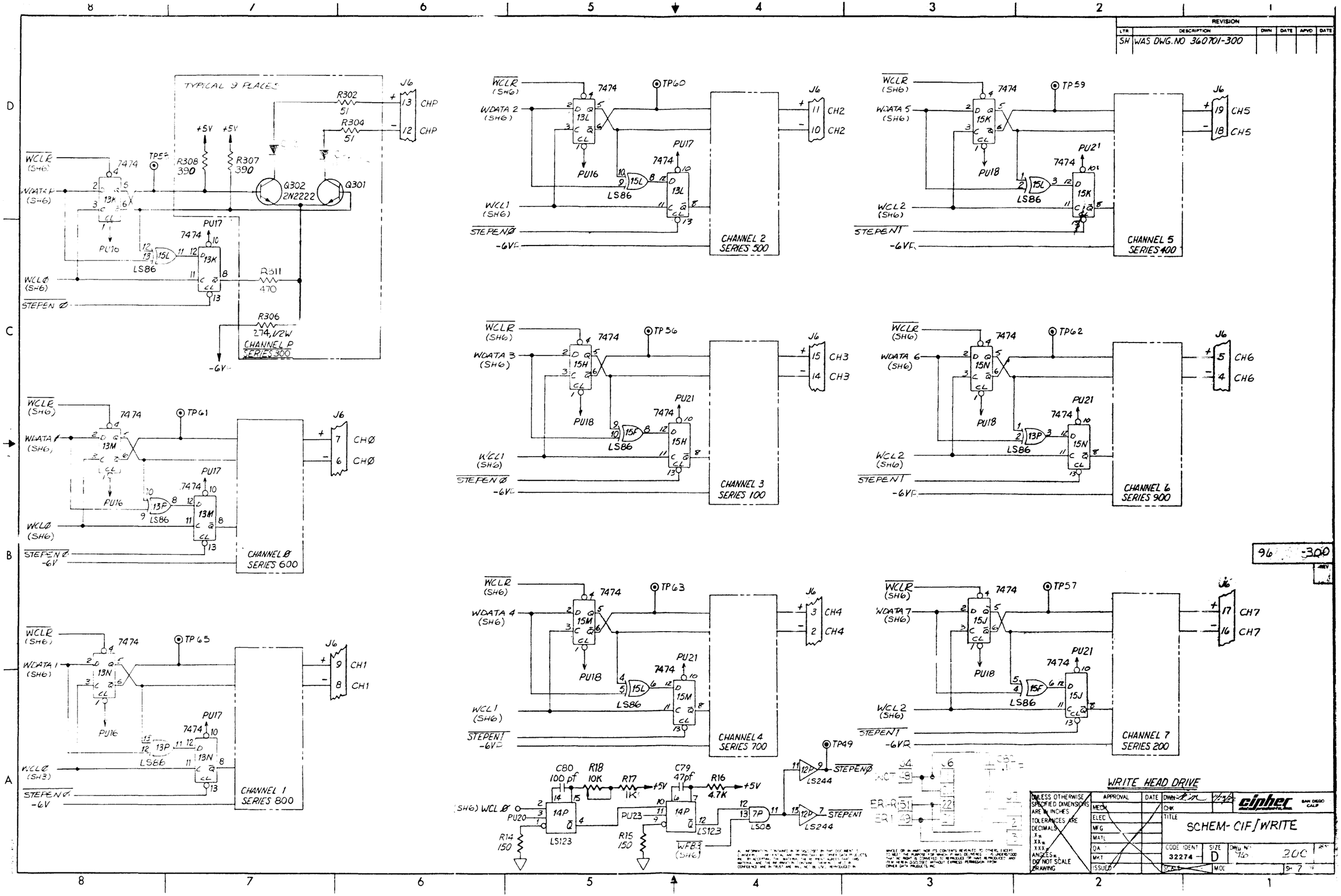

REVISION
LTR DESCRIPTION DWN DATE APVD DATE
SH WAS DWG.NO 360701-300
TYPICAL 9 PLACES
CHANNEL P SERIES 300
CHANNEL 2 SERIES 500
CHANNEL 5 SERIES 400
CHANNEL 3 SERIES 100
CHANNEL 6 SERIES 900
CHANNEL Ø SERIES 600
CHANNEL 4 SERIES 700
CHANNEL 7 SERIES 200
CHANNEL 1 SERIES 800
WRITE HEAD DRIVE
UNLESS OTHERWISE SPECIFIED DIMENSIONS ARE IN INCHES TOLERANCES ARE DECIMALS .X± .XX± .XXX± ANGLES± DO NOT SCALE DRAWING
APPROVAL DATE
MECH
ELEC
MFG
MATL
QA
MKT
ISSUED
DWN
CHK
TITLE
SCHEM- CIF/WRITE
CODE IDENT 32274
SIZE D
DWG NO 200
SH 7
cipher
SAN DIEGO CALIF

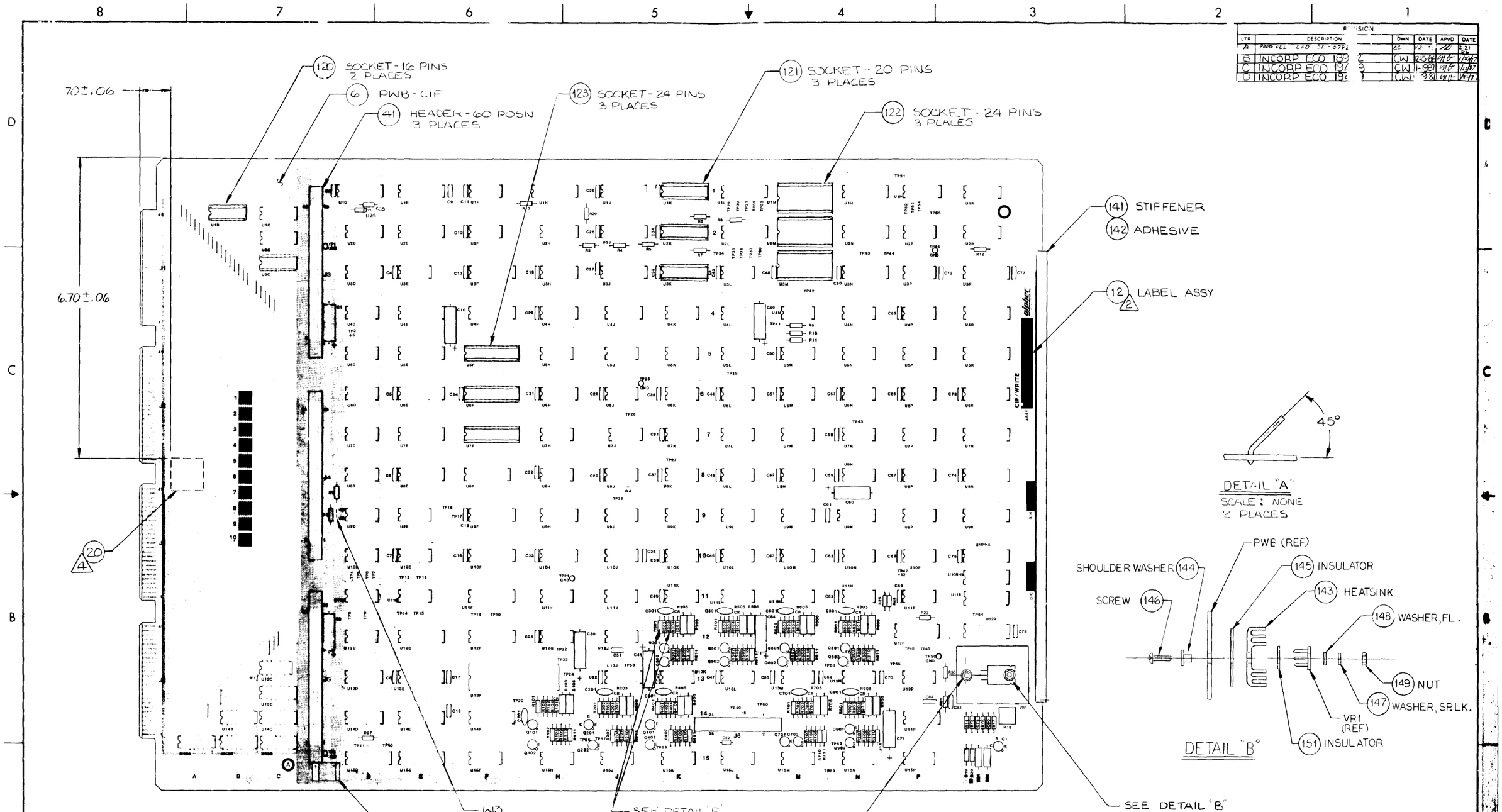

6. INSTALL ALL DIODES WITH PWB ORIENTATION CATHODE AS "B" AND ANODE "T" AS SHOWN ON DETAIL "E"
5. TORQUE SCREW BETWEEN 4 AND 6 INCH LBS. AFTER SYNC NUT HAS BEEN SOLDERED IN PLACES.
4. INSTALL ITEM 20 ON SOLDER SIDE.
3. RECTANGLE PADS INDICATE PIN 1.
2. MARK PART NUMBER & REVISION LETTER SAME AS ASSY IN SPACE INDICATED USING A PERMANENT & LEGIBLE MARKING METHOD.
1. FOR SCHEMATIC SEE DWG 962357-300.

NOTES: UNLESS OTHERWISE INDICATED.

REVISION

LTR	DESCRIPTION	DWN	DATE	APVD	DATE
A	PROD REL ECO ST-0782	EC	12-5-[illegible]	[illegible]	2-21-[illegible]
B	INCORP ECO 189[illegible]	CW	12-15-86	[illegible]	1/23/87
C	INCORP ECO 19[illegible]	CW	11-1987	[illegible]	1/23/87
D	INCORP ECO 19[illegible]	CW	9-87	[illegible]	1/23/87

REV STATUS OF SHEETS: REV D D; SH 1 2 3 4 5 6 7 8 9 10 11 12 13 14 15 16 17 18 19 20 21 22 23 24

UNLESS OTHERWISE SPECIFIED DIMENSIONS ARE IN INCHES. TOLERANCES ARE DECIMALS: .X ± .XX ± .XXX ± ANGLES ± DO NOT SCALE DRAWING

APPROVAL	DATE
DW E. Camoras	1/20/85
CHK [illegible]	11/[illegible]
DESIGN [illegible]	2/1/85
SAFETY [illegible]	12/10/85
MGR [illegible]	2-9-85
MFG ENG [illegible]	2/9/85
ISSUED [illegible]	2/21/86

cipher data products, inc. SAN DIEGO CALIF

TITLE: PICTORIAL- PWB ASSY CIF/WRITE

CODE IDENT	SIZE	DWG NO	REV
32274	D	962357-000	D

SCALE 1/1 MOD GCR SH 1 OF 2

COMPONENT ADDED					
REF LEVEL	REF DES	FROM	TO	COMP SIDE	SLD SIDE
	CR102	Q102	J6-15	X	
	CR202	Q202	J6-17	X	
	CR302	Q302	J6-13	X	
	CR402	Q402	J6-19	X	
	CR502	Q502	J6-11	X	
	CR602	Q602	J6-7	X	
	CR702	Q702	J6-3	X	
	CR802	Q802	J6-9	X	
	CR902	Q902	J6-5	X	
	CR103	Q103	J6-14	X	
	CR203	Q203	J6-16	X	
	CR303	Q303	J6-12	X	
	CR403	Q403	J6-18	X	
	CR503	Q503	J6-10	X	
	CR603	Q603	J6-6	X	
	CR703	Q703	J6-2	X	
	CR803	Q803	J6-8	X	
	CR903	Q903	J6-4	X	

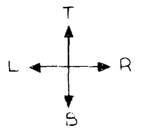

PWB ORIENTATION

DETAIL "E" 6

CODE IDENT	SIZE	DWG NO	REV
32274	D	962357-000	D
SCALE	MOD	SH 2 OF 2	

DWG NO 962357-000 REV D

BILL OF MATERIAL
AS OF 12/31/93

CLASS CODE: 3400
GCR I-P PURCH. ASSY

962357-001 OPCODE: 4 REV: G PWB ASSY-CIF/WRITE
MODEL:
ECO NO: 19608
DATE OF LAST ECO: 2/27/87

OP: ORDER POLICY CODE
REQ: Y=PART REQUIRED
N=PART OPTIONAL
PF: Y=PART PRINTS ON SALES ORDER
N=PART DOES NOT PRINT ON SO

PART NUMBER	DESCRIPTION	OP	RV	ITEM NO.	QTY PER ASSEMBLY	YIELD FACTR	UM	SC	REQ	PF	DEFAULT QUANTITY	DAYS OFF SET	SEQ	REFERENCE DESIGNATOR	EFFECTIV DATE	OBSOLETE DATE
962357-000	PICT-PWB ASSY.CIF/WRITE	3	D	1	.000	1.000	EA	F	Y	N	.000	0	0	ECO#18756	1/08/86	99/99/99
962357-300	SCHEM-CIF/WRITE	3	D	2	.000	1.000	EA	F	Y	N	.000	0	0	ECO#18756	1/08/86	99/99/99
460700-003	TEST SPEC CIF PWB	3		4	.000	1.000	EA	F	N	N	.000	0	0		00/00/00	99/99/99
962357-101	PWB-CIF/WRITE	3	A	6	1.000	1.000	EA	B	Y	N	1.000	0	0	ECO#18756	1/08/86	99/99/99
970267-001	PIN-TEST..040SQ X .360LG	3	A	10	65.000	1.000	EA	F	Y	N	65.000	0	0	TP1-65 205026-999 ECO#18952	3/27/86	99/99/99
731006-800	LABEL-ASSY	1	B	12	1.000	1.000	EA	F	Y	N	1.000	0	0		8/28/85	99/99/99
970572-001	MOUNT-CABLE TIE,SMALL	3	A	20	1.000	1.000	EA	B	Y	N	1.000	0	0		8/28/85	99/99/99
970724-001	DIODE-1N4448,FAST SWITCHING	3	A	25	18.000	1.000	EA	B	Y	N	18.000	0	0	CR102-902. 103-903 ECO#19428	11/17/86	99/99/99
204007-500	TRANSISTOR-NPN SILICON	3	H	28	18.000	1.000	EA	B	N	N	18.000	0	0	Q101-901.102-902	00/00/00	99/99/99
970652-001	IC-337 VOLT REG	3	A	29	1.000	1.000	EA	B	Y	N	1.000	0	0	VR1	4/24/85	99/99/99
201191-063	CAP-ELEC.22MF.6.3V.-10+50%.AL	3	H	31	6.000	1.000	EA	B	Y	N	6.000	0	0	C1,2.10.30.49.60 ECO#19608	4/27/87	99/99/99
970784-104	CAP-CER..1UF.50V.-20+80%.AX.*	3	D	32	69.000	1.000	EA	B	Y	N	69.000	0	0	C3-9.11-29 31-40.42-48.50-53.55-59.61-70.72-75.77.78.81.82 ECO#19031 CRA#0036	7/25/86	99/99/99
201112-100	CAP-CER.100PF.50V.10%	3	G	33	1.000	1.000	EA	B	N	N	1.000	0	0	C80	00/00/00	99/99/99
201204-472	CAP-CER.47PF.50V.5%.NPO	3	K	34	1.000	1.000	EA	B	Y	N	1.000	0	0	C79	00/00/00	99/99/99
201244-104	CAP-CER..1MF.50V.20%	3	D	35	2.000	1.000	EA	B	Y	N	2.000	0	0	C83.84	4/23/85	99/99/99
201191-025	CAP-ELEC.10MF.25V. .ALUM	3	H	36	3.000	1.000	EA	B	Y	N	3.000	0	0	C41.54.71 ECO#19608	4/27/87	99/99/99
970303-060	CONN-HEADER.60 POSN.STR.	3	C	41	3.000	1.000	EA	B	Y	N	3.000	0	0	J3.4.5	8/28/85	99/99/99
970303-026	CONN-HEADER.26 POSN.STR.	3	C	42	1.000	1.000	EA	B	N	N	1.000	0	0	J6	00/00/00	99/99/99
200072-220	RES-220 OHM 1/4W 5% CF	3	Z	43	6.000	1.000	EA	F	N	N	6.000	0	0	R1.6.7.12.13.23	00/00/00	99/99/99
200073-220	RES-2.2 KOHM 1/4W 5% CF	3	Z	44	4.000	1.000	EA	F	N	N	4.000	0	0	R2.9-11	00/00/00	99/99/99
200072-620	RES-620 OHM 1/4W 5% CF	3	Z	45	3.000	1.000	EA	F	N	N	3.000	0	0	R3-5	00/00/00	99/99/99
200073-100	RES-1.0 KOHM 1/4W 5% CF	3	Z	46	2.000	1.000	EA	F	Y	N	2.000	0	0	R8.17	00/00/00	99/99/99
200072-150	RES-150 OHM 1/4W 5% CF	3	Z	47	2.000	1.000	EA	F	N	N	2.000	0	0	R14.15	00/00/00	99/99/99
200073-470	RES-4.7 KOHM 1/4W 5% CF	3	Z	48	1.000	1.000	EA	F	N	N	1.000	0	0	R16	00/00/00	99/99/99
200215-103	RES.POT-10K	3	D	49	1.000	1.000	EA	B	N	N	1.000	0	0	R18	00/00/00	99/99/99

BILL OF MATERIAL

AS OF 12/31/93

CLASS CODE: 3400
GLR I-P PURCH. ASSY

962357-001 OPCODE: 4 REV: G PWB ASSY-CIF/WRITE
MODEL:
ECO NO: 19608
DATE OF LAST ECO: 2/27/87

OP: ORDER POLICY CODE
REQ: Y=PART REQUIRED
N=PART OPTIONAL
PF: Y=PART PRINTS ON SALES ORDER
N=PART DOES NOT PRINT ON SO

PART NUMBER	DESCRIPTION	OP	RV	ITEM NO.	QTY PER ASSEMBLY	YIELD FACTR	UM	SC	REQ	PF	DEFAULT QUANTITY	DAYS OFF SET	SEQ	REFERENCE DESIGNATOR	EFFECTIV DATE	OBSOLETE DATE
200012-750	RES-750 OHM 1/8W 1% FF	3	P	52	1.000	1.000	EA	B	Y	N	1.000	0	0	R30	4/23/85	99/99/99
200071-510	RES-51 OHM 1/4W 5% CF	3	Z	53	21.000	1.000	EA	F	Y	N	21.000	0	0	R25,28,29,102-902,104-904	00/00/00	99/99/99
200013-221	RES-2.21 KOHM 1/8W 1% FF	3	P	54	1.000	1.000	EA	F	Y	N	1.000	0	0	R31	4/23/85	99/99/99
970657-001	RES-274 OHM 1W 1% MF	3	B	55	9.000	1.000	EA	F	Y	N	9.000	0	0	R106-R906 970656-001	5/02/85	99/99/99
200072-390	RES-390 OHM 1/4W 5% CF	3	Z	56	18.000	1.000	EA	F	N	N	18.000	0	0	R107-907,108-908	00/00/00	99/99/99
200072-470	RES-470 OHM 1/4W 5% CF	3	Z	58	9.000	1.000	EA	F	Y	N	9.000	0	0	R111-911	00/00/00	99/99/99
205255-500	RES.NET-220/330 OHM 5% 1.5	3	D	59	6.000	1.000	EA	B	N	N	6.000	0	0	1B,2D,3C,3D,13D,14D	00/00/00	99/99/99
970345-001	RES.NET-2.2 KOHM DIP 16P	3	D	61	2.000	1.000	EA	B	N	N	2.000	0	0	2H,9N	00/00/00	99/99/99
970345-002	RES.NET-220 OHM DIP 16P	3	D	62	1.000	1.000	EA	B	N	N	1.000	0	0	3H	00/00/00	99/99/99
200071-470	RES-47 OHM 1/4W 5% CF	3	Z	63	1.000	1.000	EA	F	N	N	1.000	0	0	R27	00/00/00	99/99/99
200071-330	RES-33 OHM 1/4W 5% CF	3	Z	64	2.000	1.000	EA	F	N	N	2.000	0	0	R24,26	00/00/00	99/99/99
208500-300	WIRE.BUS TND COPPER 26AWG	3	B	66	.000	1.000	EA	F	Y	N	.000	0	0	W3 ECO#18952	3/27/86	99/99/99
970406-001	IC-74S374 FF D OCT	3	B	70	1.000	1.000	EA	B	N	N	1.000	0	0	U2J	00/00/00	99/99/99
203052-244	IC-74LS244 BFR OCT 3S	3	K	71	9.000	1.000	EA	B	N	N	9.000	0	0	U1L,2L,3F,4E,4F,7E,12P,12R,15D	00/00/00	99/99/99
203102-375	IC-74LS374 FF D OCT	3	F	72	5.000	1.000	EA	B	N	N	5.000	0	0	1N,2N,3N,5E,8E	00/00/00	99/99/99
203039-001	IC-74LS74 FF D DUAL	3	M	73	9.000	1.000	EA	B	N	N	9.000	0	0	U4K,4M,5L,5M,6K,6P,7N,8L,11L	00/00/00	99/99/99
970347-001	IC-74F240 INV BUF 3S OCT	3	C	74	1.000	1.000	EA	B	N	N	1.000	0	0	U1H	00/00/00	99/99/99
970346-001	IC-74F244 DRVR OCTAL BUF	3	C	77	2.000	1.000	EA	B	N	N	2.000	0	0	U1D,2E	00/00/00	99/99/99
203036-039	IC-74LS125 BUS BUF QUAD	3	F	78	3.000	1.000	EA	B	N	N	3.000	0	0	U2F,2P,11J	00/00/00	99/99/99
203061-280	IC-74LS280 PARITY TREE 9IN	3	C	79	2.000	1.000	EA	B	N	N	2.000	0	0	U3E,12D	00/00/00	99/99/99
203085-001	IC-74LS14 INV SCHMITT HEX	3	J	80	1.000	1.000	EA	B	N	N	1.000	0	0	U3L	00/00/00	99/99/99
970010-001	IC-74LS08 AND 2IN QUAD	3	B	81	11.000	1.000	EA	B	N	N	11.000	0	0	U3P,4N,5K,6L,6J,6M,7J,7P,8H,10M,10N	00/00/00	99/99/99
970321-001	IC-74F374 FF D 3S OCT	3	D	82	4.000	1.000	EA	B	N	N	4.000	0	0	U1E,1J,3J,3R	00/00/00	99/99/99
203029-500	IC-7414 INV HEX SCHMITT TRIP	3	B	83	5.000	1.000	EA	B	N	N	5.000	0	0	U4D,5D,6D,7D,8D	00/00/00	99/99/99
203048-100	IC-74LS161 CNTR 4BIT SYNC	3	L	84	3.000	1.000	EA	B	N	N	3.000	0	0	U4H,4J,13J	00/00/00	99/99/99

BILL OF MATERIAL
AS OF 12/31/93

CLASS CODE: 3400
GCR I-P PURCH. ASSY

962357-001 OPCODE: 4 REV: G PWB ASSY-CIF/WRITE
MODEL:
ECO NO: 19608
DATE OF LAST ECO: 2/27/87

OP: ORDER POLICY CODE
REQ: Y=PART REQUIRED
N=PART OPTIONAL
PF: Y=PART PRINTS ON SALES ORDER
N=PART DOES NOT PRINT ON SO

PART NUMBER	DESCRIPTION	OP	RV	ITEM NO.	QTY PER ASSEMBLY	YIELD FACTR	UM	SC	REQ	PF	DEFAULT QUANTITY	DAYS OFF SET	SEQ	REFERENCE DESIGNATOR	EFFECTIV DATE	OBSOLETE DATE
970011-001	IC-74LS04 INV HEX	3	D	85	5.000	1.000	EA	B	N	N	5.000	0	0	U4L,5P,9J,9L,10K	00/00/00	99/99/99
203035-032	IC-74LS32 OR 2IN QUAD	3	J	86	5.000	1.000	EA	B	N	N	5.000	0	0	U5N,7K,7M,10J,11M	00/00/00	99/99/99
970325-001	IC-74F74 FF D DUAL	3	D	87	2.000	1.000	EA	B	N	N	2.000	0	0	U1F,4P	00/00/00	99/99/99
203102-373	IC-74LS373 LATCH D OCT	3	G	89	7.000	1.000	EA	B	N	N	8.000	0	0	U9F,10F,11F,12E,12F,13E,15E	00/00/00	99/99/99
203042-001	IC-74LS86 XOR QUAD	3	K	91	4.000	1.000	EA	B	N	N	4.000	0	0	U5H,13P,15F,15L	00/00/00	99/99/99
203029-002	IC-74LS10 NAND 3IN TRIP	3	J	92	3.000	1.000	EA	B	N	N	3.000	0	0	U5J,8P,9K	00/00/00	99/99/99
203122-368	IC-74LS368 HEX BUS DRIVER	3	L	94	1.000	1.000	EA	B	N	N	1.000	0	0	6H	00/00/00	99/99/99
970349-001	IC-74F32 OR 2IN QUAD	3	B	95	1.000	1.000	EA	B	N	N	1.000	0	0	U6N	00/00/00	99/99/99
970221-001	IC-74LS00 NAND 2IN POS QUAD	3	E	96	5.000	1.000	EA	B	N	N	5.000	0	0	U7H,8J,8M,10L,12H	00/00/00	99/99/99
203029-003	IC-74LS11 AND 3IN TRIP	3	F	97	5.000	1.000	EA	B	N	N	5.000	0	0	U7L,8K,8N,9M,9P	00/00/00	99/99/99
203036	IC-7438 NAND 2IN BUF QUAD	3	E	99	6.000	1.000	EA	B	N	N	6.000	0	0	U9D,9E,10D,10E,11D,11E	00/00/00	99/99/99
203046-148	IC-74LS138 DCDR 3-8 LINE	3	K	100	2.000	1.000	EA	B	N	N	2.000	0	0	U9H,10H	00/00/00	99/99/99
970356-001	IC-74F10 NAND	3	C	101	2.000	1.000	EA	B	N	N	2.000	0	0	U10P,11N	00/00/00	99/99/99
203081-001	IC-74LS02 NOR 2IN POS QUAD	3	J	102	1.000	1.000	EA	B	N	N	1.000	0	0	U11H	00/00/00	99/99/99
970342-001	IC-74F04 INV HEX	3	D	103	1.000	1.000	EA	B	N	N	1.000	0	0	U11K	00/00/00	99/99/99
970350-001	IC-74F08 AND 2IN QUAD	3	C	104	1.000	1.000	EA	B	N	N	1.000	0	0	U11P	00/00/00	99/99/99
203036-038	IC-74LS38 NAND 2IN POS BUF	3	H	105	1.000	1.000	EA	B	N	N	1.000	0	0	U12C	00/00/00	99/99/99
970355-001	IC-74F11 AND TRIP	3	C	106	1.000	1.000	EA	B	N	N	1.000	0	0	U12J	00/00/00	99/99/99
203555-111	IC-8036 CIO 16BIT 6MHZ	3	B	107	1.000	1.000	EA	B	N	N	1.000	0	0	U13F	00/00/00	99/99/99
203039	IC-7474 FF D POS EDGE DUAL	3	C	108	9.000	1.000	EA	B	N	N	9.000	0	0	U13K,13L,13M,13N,15H,15J,15K,15M,15N	00/00/00	99/99/99
203102-245	IC-74LS245 TRANSCEIVR BUS OCT	3	E	109	2.000	1.000	EA	B	N	N	2.000	0	0	U14E,14F	00/00/00	99/99/99
203046-001	IC-74LS123 MLTV DUAL	3	G	110	1.000	1.000	EA	B	N	N	1.000	0	0	U14P	00/00/00	99/99/99
211011-016	SOCKET,16 PIN LOW PROFILE	3	D	120	2.000	1.000	EA	B	Y	N	2.000	0	0	XU1B,3C	8/28/85	99/99/99
970555-020	SOCKET-IC 20 PIN..30	3	A	121	3.000	1.000	EA	B	Y	N	3.000	0	0	XU1K,2K,3K	8/28/85	99/99/99
205025-524	SOCKET-DIP,24 CONTACTS	3	E	122	3.000	1.000	EA	B	Y	N	3.000	0	0	XU1M,2M,3M	8/28/85	99/99/99
970555-024	SOCKET-IC 24 PIN..30	3	A	123	3.000	1.000	EA	B	N	N	3.000	0	0	XU5F,6F,7F	00/00/00	99/99/99
961243-001	S/W-GCR,ASSY,WRITE FMTR	1	A	126	1.000	1.000	EA	B	N	N	1.000	0	0	U1M	00/00/00	99/99/99
961244-001	S/W-GCR,ASSY,WRITE FMTR	1	A	127	1.000	1.000	EA	B	N	N	1.000	0	0	U2M	00/00/00	99/99/99
961245-001	S/W-GCR,ASSY,WRITE FMTR	1	A	128	1.000	1.000	EA	B	N	N	1.000	0	0	U3M	00/00/00	99/99/99

BILL OF MATERIAL
AS OF 12/31/93

CLASS CODE: 3400
GCR I-P PURCH. ASSY

962357-001 OPCODE: 4 REV: G PWB ASSY-CIF/WRITE
MODEL:
ECO NO: 19608
DATE OF LAST ECO: 2/27/87

OP: ORDER POLICY CODE
REQ: Y=PART REQUIRED
N=PART OPTIONAL
PF: Y=PART PRINTS ON SALES ORDER
N=PART DOES NOT PRINT ON SO

PART NUMBER	DESCRIPTION	OP	RV	ITEM NO.	QTY PER ASSEMBLY	YIELD FACTR	UM	SC	REQ	PF	DEFAULT QUANTITY	DAYS OFF SET	SEQ	REFERENCE DESIGNATOR	EFFECTIV DATE	OBSOLETE DATE
961246-001	S/W-GCR.ASSY.WRITE CHAN	1	A	129	3.000	1.000	EA	X	N	N	3.000	0	0	U4R.5R.10R A	00/00/00	99/99/99
961247-001	S/W-GCR.ASSY.WRITE CHAN	1	A	130	1.000	1.000	EA	B	N	N	1.000	0	0	U6R	00/00/00	99/99/99
961248-001	S/W-GCR.ASSY.WRITE CHAN	1	A	131	2.000	1.000	EA	B	N	N	2.000	0	0	U7R.8R	00/00/00	99/99/99
961249-001	S/W-GCR.ASSY.WRITE CHAN	1	A	132	3.000	1.000	EA	B	N	N	3.000	0	0	U9R.10R8.1 1R	00/00/00	99/99/99
961373-002	S/W-GCR.ASSY.INTERFACE	1	A	133	1.000	1.000	EA	B	N	N	1.000	0	0	U1K	00/00/00	99/99/99
961375-001	S/W-GCR.ASSY.INTERFACE	1	A	134	1.000	1.000	EA	B	N	N	1.000	0	0	U2K	00/00/00	99/99/99
961376-002	S/W-GCR.ASSY.INTERFACE	1	A	135	1.000	1.000	EA	B	N	N	1.000	0	0	U3K	00/00/00	99/99/99
961377-001	S/W-GCR.ASSY.ECC	1	A	136	1.000	1.000	EA	X	N	N	1.000	0	0	U5F	00/00/00	99/99/99
961371-001	S/W-GCR.ASSY.CRC	1	A	137	1.000	1.000	EA	B	N	N	1.000	0	0	U6F	00/00/00	99/99/99
961374-001	S/W-GCR.ASSY.ACRC	1	A	138	1.000	1.000	EA	X	N	N	1.000	0	0	U7F	00/00/00	99/99/99
970058-002	TERMINAL-MALE .250 TAB	3	B	140	2.000	1.000	EA	B	N	N	4.000	0	0		00/00/00	99/99/99
961707-002	STIFFENER-EDGE.PCB	1	B	141	1.000	1.000	EA	B	N	N	1.000	0	0		00/00/00	99/99/99
209990-071	ADHESIVE-SUPERBONDER	3	B	142	.000	1.000	EA	F	N	N	.001	0	0		00/00/00	99/99/99
970281-003	HEATSINK-TO-127/TO-220.15.33*	1	C	143	1.000	1.000	EA	B	Y	N	1.000	0	0	(VR1) ECO#19167	8/04/86	99/99/99
216155-049	WASHER-SHOULDER.#4.	3	A	144	1.000	1.000	EA	F	Y	N	1.000	0	0		4/23/85	99/99/99
962933-001	INSULATOR-THERMALLY CONDUCTIVE	1	A	145	1.000	1.000	EA	B	Y	N	1.000	0	0	\	12/09/85	99/99/99
213271-409	SCREW-PAN HD.PHIL.4-40 X *	3	F	146	1.000	1.000	EA	F	Y	N	1.000	0	0		4/23/85	99/99/99
207403-011	WASHER.SPLIT LOCK #4	3	C	147	2.000	1.000	EA	F	Y	N	2.000	0	0		11/22/85	99/99/99
207403-021	WASHER-FLAT	3	C	148	2.000	1.000	EA	F	Y	N	2.000	0	0		11/22/85	99/99/99
207406-081	NUT.HEX.RADIO PAT. #4	3	B	149	2.000	1.000	EA	F	Y	N	2.000	0	0		11/22/85	99/99/99
213271-407	SCREW-PAN HD.PHIL.4-40 X *	3	F	150	1.000	1.000	EA	F	Y	N	1.000	0	0		11/22/85	99/99/99
210875-501	INSULATOR-THERMALLY	3	B	151	1.000	1.000	EA	B	Y	N	1.000	0	0	(VR1)	12/04/85	99/99/99

TYPE	REF DESG	+12V	+5V	-6V	GND
PAL 20 X 10	U1J U3J		24		12
74LS688	U1M, U3M		20		10
PAL 20X 8	U6 J		24		12
SPARE	U20M U20S U16A U16B		16		8
SPARE	U19U		14		7
C-5061	U26B, U26D, U26F, U26H, U26K, U26M, U26P, U26S, U26U	6	10	1	5
74LS373	U5R, U2R		20		10
'LS74	U21B, U22B, U23B, U22D, U23D, U22S, U20G, U22F, U23F, U22H U23H, U21J, U22K, U23K, U22M, U23M, U21P, U22P, U23P, U21U, U23U, U10E, U23S, U22V, U11M, U13M		14		7
'LS225	U20A, U21A, U20C, U21C, U20E, U21E, U20F, U21F, U20H, U21H, U21N, U20L, U20N, U21L, U20R, U21R, U20T, U21T		20		10
74LS138	U5T		16		8
'LS273	U19A, U19C, U10C, U19E, U19F, U9P U19L, U19R, U6H, U19H, U19N, U19T		20		10
'LS174	U15B U15C, U21D, U1H, U3H, U10H U12H, U21G, U21M, U21S, U15J, U10L		16		8
2732A	U18A, U18C, U18E, U18F. U18J, U18L, U18N, U18R, U18T, U5G, U10G		24		12
MC4044	U23A, U23C, U23E, U23G, U23J, U23L, U23N, U23R, U23T		14		7
CD4066	U25A, U25C, U25E, U25G, U25J, U25L, U25N, U25R, U25T		14	7	
'LS139	U19D, U19G, U19S, U19M, U18U		16		8
'LS00	U20B, U20D, U20J, U20P, U20U, U6B		14		7
'LS08	U3C, U3G, U6C. U10B, U19B, U19J, U19P,		14		7
'LS244	U10A, U12A, U3A, U3B		20		10
'LS14	U1E, U13P		14		7
'LS245	U15A		20		10
'LS02	U15E, U11L		14		7
'LS04	U6E. U12E, U11R		14		7
'LS86	U1G		14		7
'LS198	U12G		16		8
'LS109	U3F, U10F		16		8
'LS125	U1F, U13R		14		7
'LS21	U1A		14		7
'LS32	U1C, U3E		14		7
24S41	U12J, U15H, U15G		18		9
8036	U12B		23		7
339	U12F		3		12
F79	U1B, U6F		14		7
6305-1	U15F		16		8
74221	U24B, U24D, U25D, U25F U25B, U25K U24F, U24H, U25H, U25M U24P, U25P, U24S, U25S, U24U, U25U, U24K, U24M		16		8
74180	U6A		14		7
27S12	U2P, U5P		28		14
74 LS42	U2T, U11P		16		8

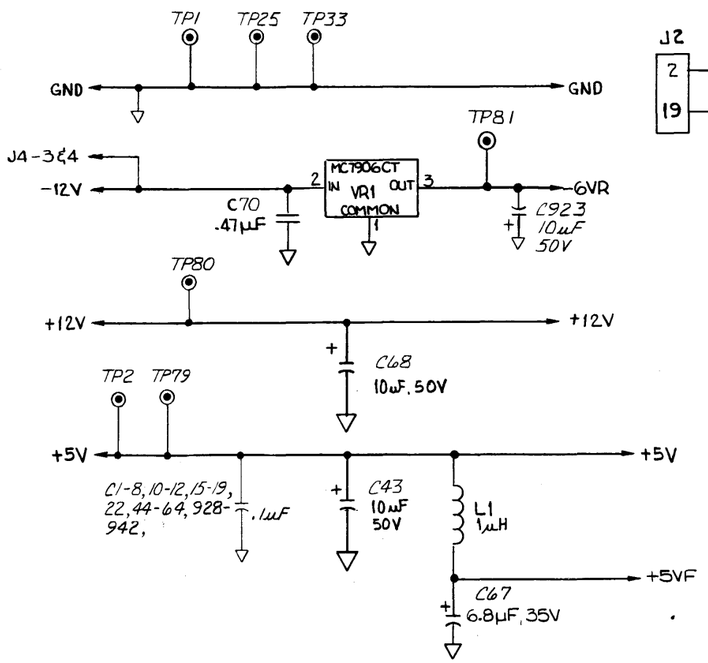

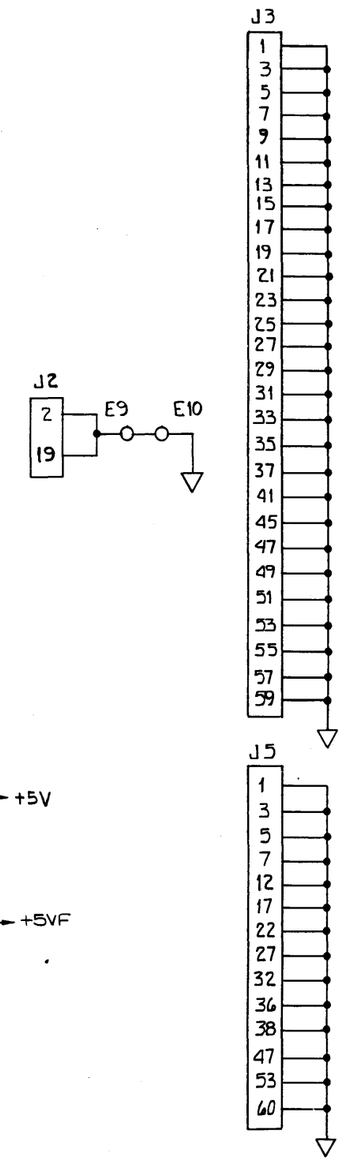

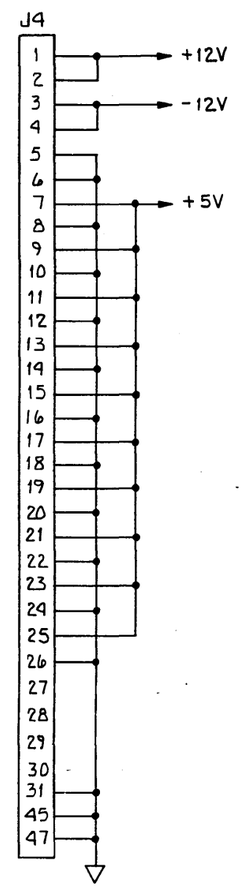

4. ALL RESISTORS 1% TO BE 1/8W, ALL 5% TO BE 1/4W
3. X= SERIES NO.(100-900) IN WHICH THE COMPONENTS APPEARS
2. ALL INDUCTORS ARE IN MICROHENRYS.
1. ALL CAPACITORS ARE IN MICROFARADS.

NOTES: UNLESS OTHERWISE SPECIFIED

REVISION					
LTR	DESCRIPTION	DWN	DATE	APVD	DATE
A	PROD REL ERO 32-0977	CW	4-4-86	JH	4-7-86
B	INCORP ECO 19919	CWJ	7-28-87	JH	8-27-87

REV STATUS	REV
OF SHEETS	SH 1 2 3 4 5 6 7 8 9 10 11 12 13 14 15 16 17 18 19 20 21 22 23 24

ALL INFORMATION CONTAINED IN OR DISCLOSED BY THIS DOCUMENT IS CONSIDERED CONFIDENTIAL AND PROPRIETARY BY CIPHER DATA PRODUCTS, INC. BY ACCEPTING THIS MATERIAL THE RECIPIENT AGREES THAT THIS MATERIAL AND THE INFORMATION CONTAINED THEREIN IS HELD IN CONFIDENCE AND IN TRUST AND WILL NOT BE USED, REPRODUCED IN WHOLE OR IN PART NOR ITS CONTENTS REVEALED TO OTHERS EXCEPT TO MEET THE PURPOSE FOR WHICH IT WAS DELIVERED. IT IS UNDERSTOOD THAT NO RIGHT IS CONVEYED TO REPRODUCE OR HAVE REPRODUCED ANY ITEM HEREON DISCLOSED WITHOUT EXPRESS PERMISSION FROM CIPHER DATA PRODUCTS, INC.

UNLESS OTHERWISE SPECIFIED DIMENSIONS ARE IN INCHES
TOLERANCES ARE
DECIMALS
.X ±
.XX ±
.XXX ±
ANGLES ±
DO NOT SCALE DRAWING

	APPROVAL	DATE
DWN	C. WRIGHT	7-28-87
CHK		
DFDENG		
SAFETY		
QUAL MGR		
MFG ENG MGR		
ISSUE		

cipher SAN DIEGO CALIF

TITLE: SCHEM- DATA

CODE IDENT	SIZE	DWG NO.	REV
32274	D	963674-300	B

SCALE — MOD SH 1 OF 17

BRUNING 4932

REVISION					
LTR	DESCRIPTION	DWN	DATE	APVD	DATE

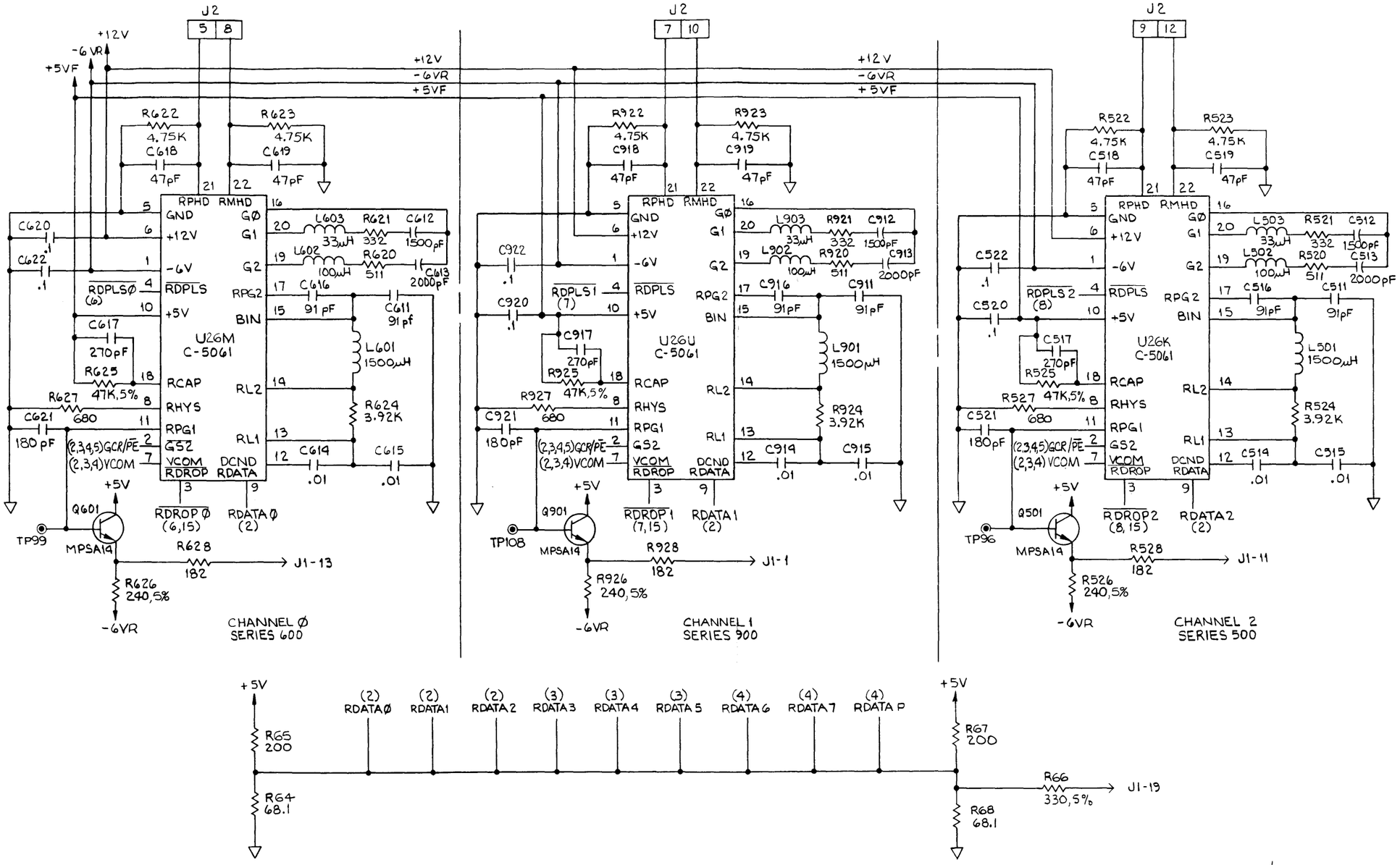

963674-300 REV A

REV STATUS	REV																							
OF SHEETS	SH	1	2	3	4	5	6	7	8	9	10	11	12	13	14	15	16	17	18	19	20	21	22	23	24

ALL INFORMATION CONTAINED IN OR DISCLOSED BY THIS DOCUMENT IS CONSIDERED CONFIDENTIAL AND PROPRIETARY BY CIPHER DATA PRODUCTS, INC. BY ACCEPTING THIS MATERIAL THE RECIPIENT AGREES THAT THIS MATERIAL AND THE INFORMATION CONTAINED THEREIN IS HELD IN CONFIDENCE AND IN TRUST AND WILL NOT BE USED, REPRODUCED IN WHOLE OR IN PART NOR ITS CONTENTS REVEALED TO OTHERS, EXCEPT TO MEET THE PURPOSE FOR WHICH IT WAS DELIVERED. IT IS UNDERSTOOD THAT NO RIGHT IS CONVEYED TO REPRODUCE OR HAVE REPRODUCED ANY ITEM HEREIN DISCLOSED WITHOUT EXPRESS PERMISSION FROM CIPHER DATA PRODUCTS, INC.

UNLESS OTHERWISE SPECIFIED DIMENSIONS ARE IN INCHES
TOLERANCES ARE
DECIMALS
.X ±
.XX ±
.XXX ±
ANGLES ±
DO NOT SCALE DRAWING

APPROVAL	DATE
DWN	
CHK	
DES ENG	
SAFETY	
DES MGR	
MFG ENG	
ISSUED	

cipher SAN DIEGO CALIF

TITLE: SCHEM- DATA

CODE IDENT	SIZE	DWG NO.	REV
32274	D	963674-300	A

SCALE | MOD | SH 2 OF 17

BRUNING 4022

REVISION					
LTR	DESCRIPTION	DWN	DATE	APVD	DATE

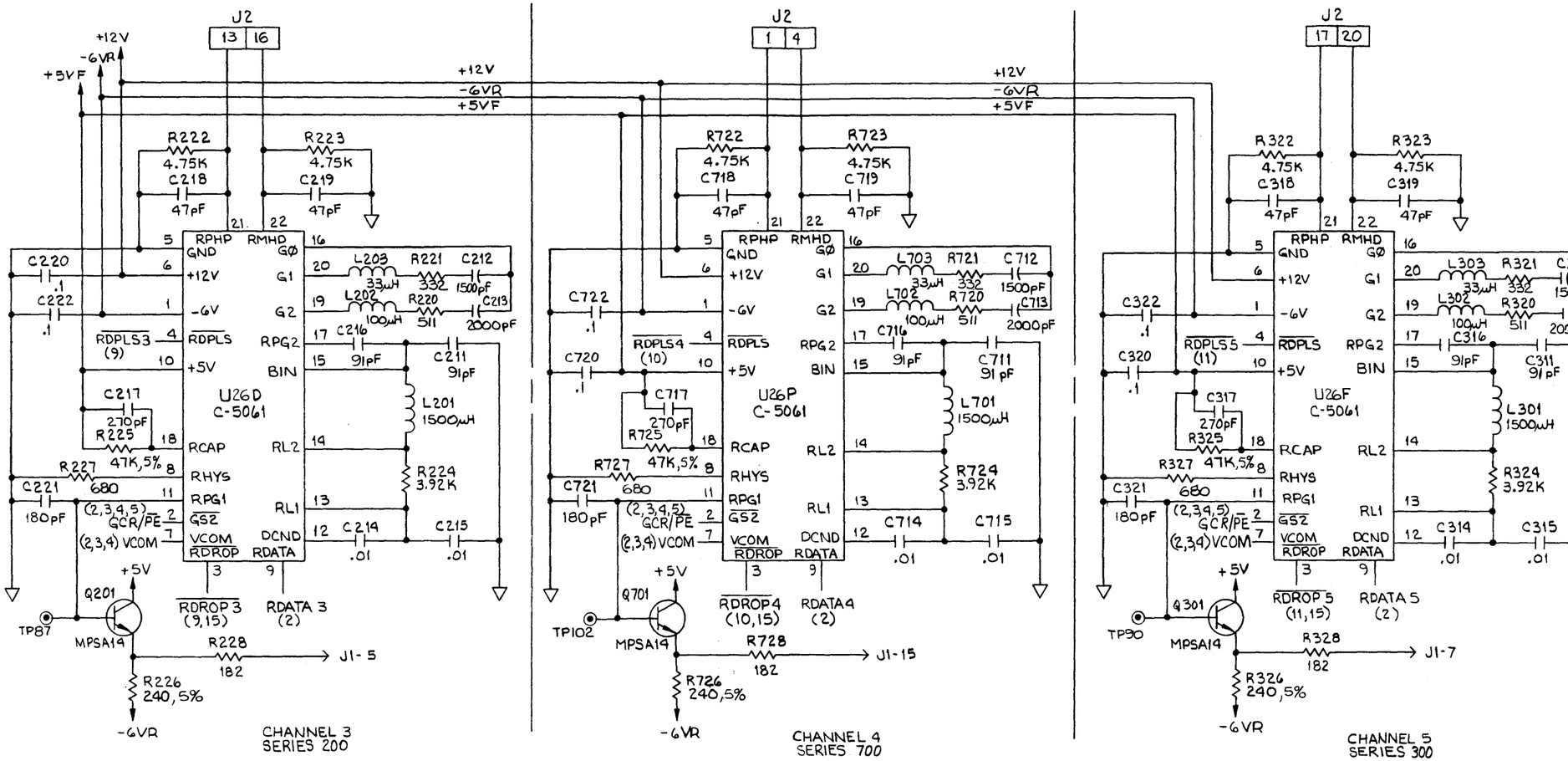

963674-300 REV A

REV STATUS	REV
OF SHEETS	SH 1 2 3 4 5 6 7 8 9 10 11 12 13 14 15 16 17 18 19 20 21 22 23 24

ALL INFORMATION CONTAINED IN OR DISCLOSED BY THIS DOCUMENT IS CONSIDERED CONFIDENTIAL AND PROPRIETARY BY CIPHER DATA PRODUCTS INC BY ACCEPTING THIS MATERIAL THE RECIPIENT AGREES THAT THIS MATERIAL AND THE INFORMATION CONTAINED THEREIN IS HELD IN CONFIDENCE AND IN TRUST AND WILL NOT BE USED, REPRODUCED IN WHOLE OR IN PART, NOR ITS CONTENTS REVEALED TO OTHERS, EXCEPT TO MEET THE PURPOSES FOR WHICH IT WAS DELIVERED. IT IS UNDERSTOOD THAT NO RIGHT IS CONVEYED TO REPRODUCE OR HAVE REPRODUCED ANY ITEM HEREIN DISCLOSED WITHOUT EXPRESS PERMISSION FROM CIPHER DATA PRODUCTS, INC

UNLESS OTHERWISE SPECIFIED DIMENSIONS ARE IN INCHES	APPROVAL	DATE
TOLERANCES ARE DECIMALS .X± .XX± .XXX± ANGLES±	DWN	
	CHK	
	DES ENG	
DO NOT SCALE DRAWING	SAFETY	
	DES MGR	
	MFG ENG	
	ISSUED	

cipher SAN DIEGO CALIF

TITLE: SCHEM- DATA

CODE IDENT	SIZE	DWG NO.	REV
32274	D	963674-300	A

SCALE | MOD | SH 3 OF 17

BRUNING 40-32

REVISION						
LTR	DESCRIPTION	DWN	DATE	APVD	DATE	

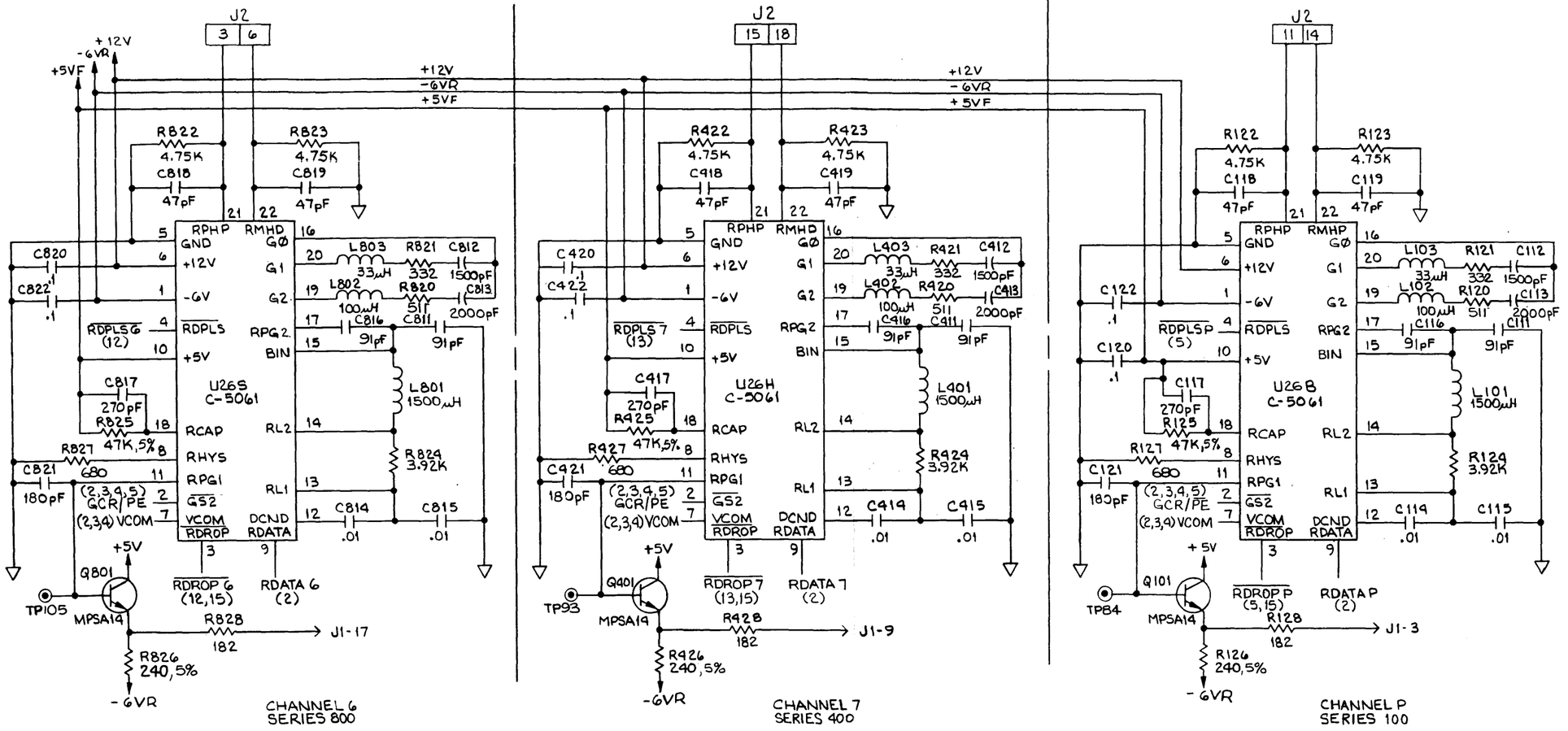

963674-300 REV A

REV STATUS	REV																							
OF SHEETS	SH	1	2	3	4	5	6	7	8	9	10	11	12	13	14	15	16	17	18	19	20	21	22	23	24

ALL INFORMATION CONTAINED IN OR DISCLOSED BY THIS DOCUMENT IS CONSIDERED CONFIDENTIAL AND PROPRIETARY BY CIPHER DATA PRODUCTS, INC. BY ACCEPTING THIS MATERIAL THE RECIPIENT AGREES THAT THIS MATERIAL AND THE INFORMATION CONTAINED THEREIN IS HELD IN CONFIDENCE AND IN TRUST AND WILL NOT BE USED, REPRODUCED IN WHOLE OR IN PART NOR ITS CONTENTS REVEALED TO OTHERS, EXCEPT TO MEET THE PURPOSE FOR WHICH IT WAS DELIVERED. IT IS UNDERSTOOD THAT NO RIGHT IS CONVEYED TO REPRODUCE OR HAVE REPRODUCED ANY ITEM HEREIN DISCLOSED WITHOUT EXPRESS PERMISSION FROM CIPHER DATA PRODUCTS, INC

UNLESS OTHERWISE SPECIFIED DIMENSIONS ARE IN INCHES
TOLERANCES ARE
DECIMALS
.X ±
.XX ±
.XXX ±
ANGLES ±
DO NOT SCALE DRAWING

APPROVAL	DATE
DWN G. Gomez	3/12/82
CHK	
DES ENG	
SAFETY	
DES MGR	
MFG ENG	
ISSUED	

cipher SAN DIEGO CALIF

TITLE: SCHEM- DATA

CODE IDENT	SIZE	DWG NO.	REV
32274	D	963674-300	A

SCALE | MOD | SH 4 OF 17

BRUNING 69-88

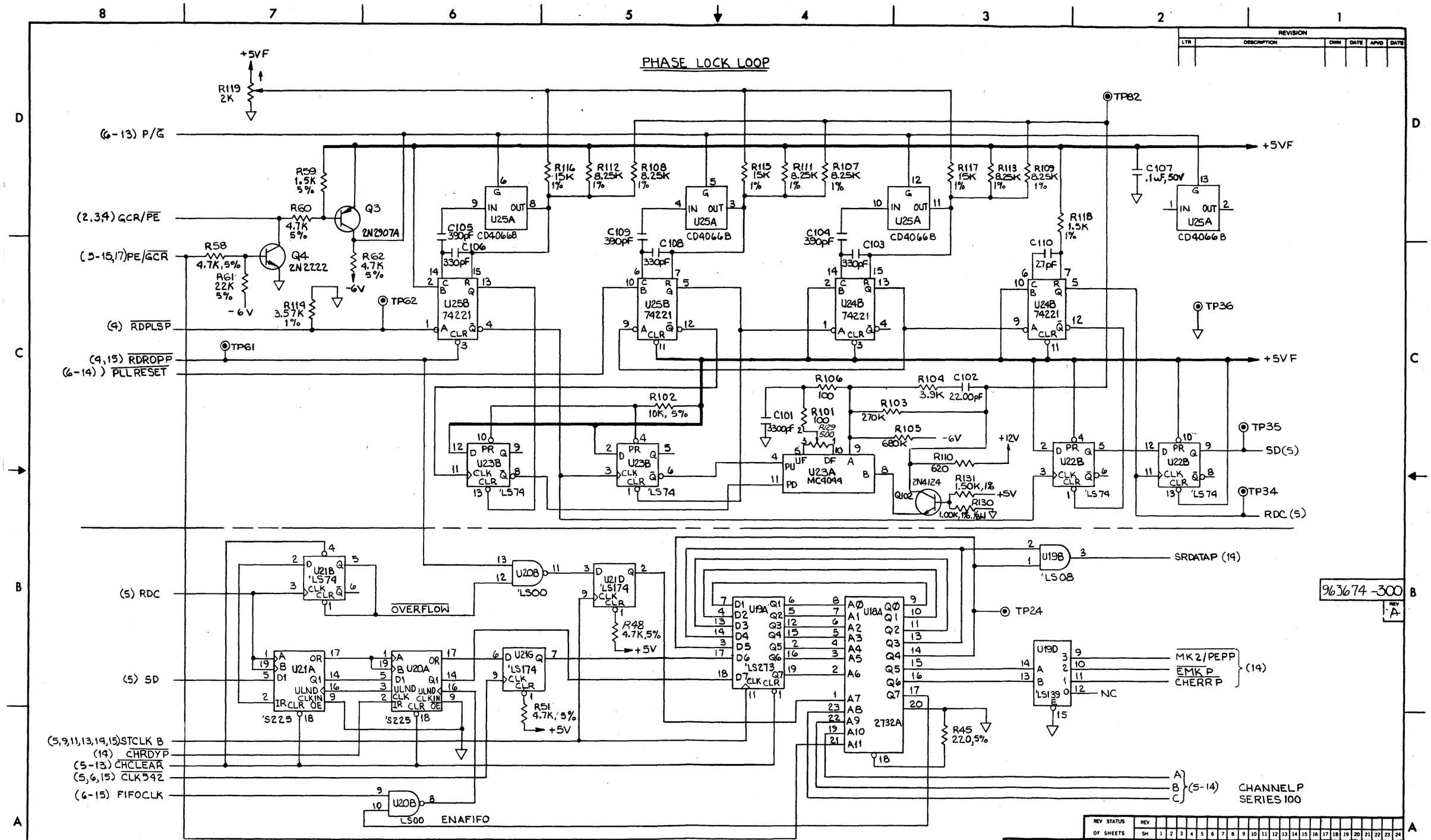
PHASE LOCK LOOP
+5VF
R119 2K
(6-13) P/G
(2,3,4) GCR/PE
(5-15,17) PE/GCR
(4) RDPLSP
(4,15) RDROPP
(6-14) PLLRESET
R59 1.5K 5%
R60 4.7K 5%
Q3 2N2907A
R58 4.7K,5%
Q4 2N2222
R61 22K 5%
R62 4.7K 5%
R114 3.57K 1%
-6V
TP62
TP61
TP82
TP36
TP35
TP34
TP24
R116 15K 1%
R112 8.25K 1%
R108 8.25K 1%
R115 15K 1%
R111 8.25K 1%
R107 8.25K 1%
R117 15K 1%
R113 8.25K 1%
R109 8.25K 1%
R118 1.5K 1%
C107 .1uF,50V
C105 390pF
C106 330pF
C109 390pF
C108 330pF
C104 390pF
C103 330pF
C110 27pF
U25A CD4066B
U25B 74221
U24B 74221
U23B 'LS74
U23A MC4044
U22B 'LS74
R102 10K, 5%
R106 100
R104 3.9K
C102 22.00pF
R103 270K
R105 680K
C101 3300pF
R101 100
R129 500
R110 620
R131 1.50K,1%
R130 1.00K,1%,1/8W
Q102 2N4124
+12V
+5V
SD(5)
RDC(5)
(5) RDC
(5) SD
(5,9,11,13,14,15) STCLK B
(14) CHRDYP
(5-13) CHCLEAR
(5,6,15) CLK542
(6-15) FIFOCLK
U21B 'LS74
U20B 'LS00
U21D 'LS174
OVERFLOW
R48 4.7K,5%
U21A 'S225
U20A 'S225
U21G 'LS174
R51 4.7K,5%
U19A 'LS273
U18A 2732A
U19B 'LS08
SRDATAP (14)
U19D 'LS139
MK2/PEPP
EMKP
CHERRP
(14)
NC
R45 220,5%
A
B
C
(5-14)
CHANNEL P SERIES 100
U20B LS00 ENAFIFO
963674-300
REV A
DE SKEW - CHANNEL STATE MACHINE
REVISION
LTR
DESCRIPTION
DWN
DATE
APVD
DATE
REV STATUS OF SHEETS
REV
SH
ALL INFORMATION CONTAINED IN OR DISCLOSED BY THIS DOCUMENT IS CONSIDERED CONFIDENTIAL AND PROPRIETARY BY CIPHER DATA PRODUCTS, INC. BY ACCEPTING THIS MATERIAL THE RECIPIENT AGREES THAT THIS MATERIAL AND THE INFORMATION CONTAINED THEREIN IS HELD IN CONFIDENCE AND IN TRUST AND WILL NOT BE USED, REPRODUCED IN WHOLE OR IN PART NOR ITS CONTENTS REVEALED TO OTHERS, EXCEPT TO MEET THE PURPOSE FOR WHICH IT WAS DELIVERED. IT IS UNDERSTOOD THAT NO RIGHT IS CONVEYED TO REPRODUCE OR HAVE REPRODUCED ANY ITEM HEREIN DISCLOSED WITHOUT EXPRESS PERMISSION FROM CIPHER DATA PRODUCTS, INC.
UNLESS OTHERWISE SPECIFIED DIMENSIONS ARE IN INCHES
TOLERANCES ARE
DECIMALS
.X±
.XX±
.XXX±
ANGLES±
DO NOT SCALE DRAWING
APPROVAL
DATE
DWN
CHK
DES ENG
SAFETY
DES MGR
MFG ENG
ISSUED
cipher
SAN DIEGO CALIF
TITLE
SCHEM-DATA
CODE IDENT 32274
SIZE D
DWG NO. 963674-300
REV A
SCALE
MOD
SH 5 OF 17

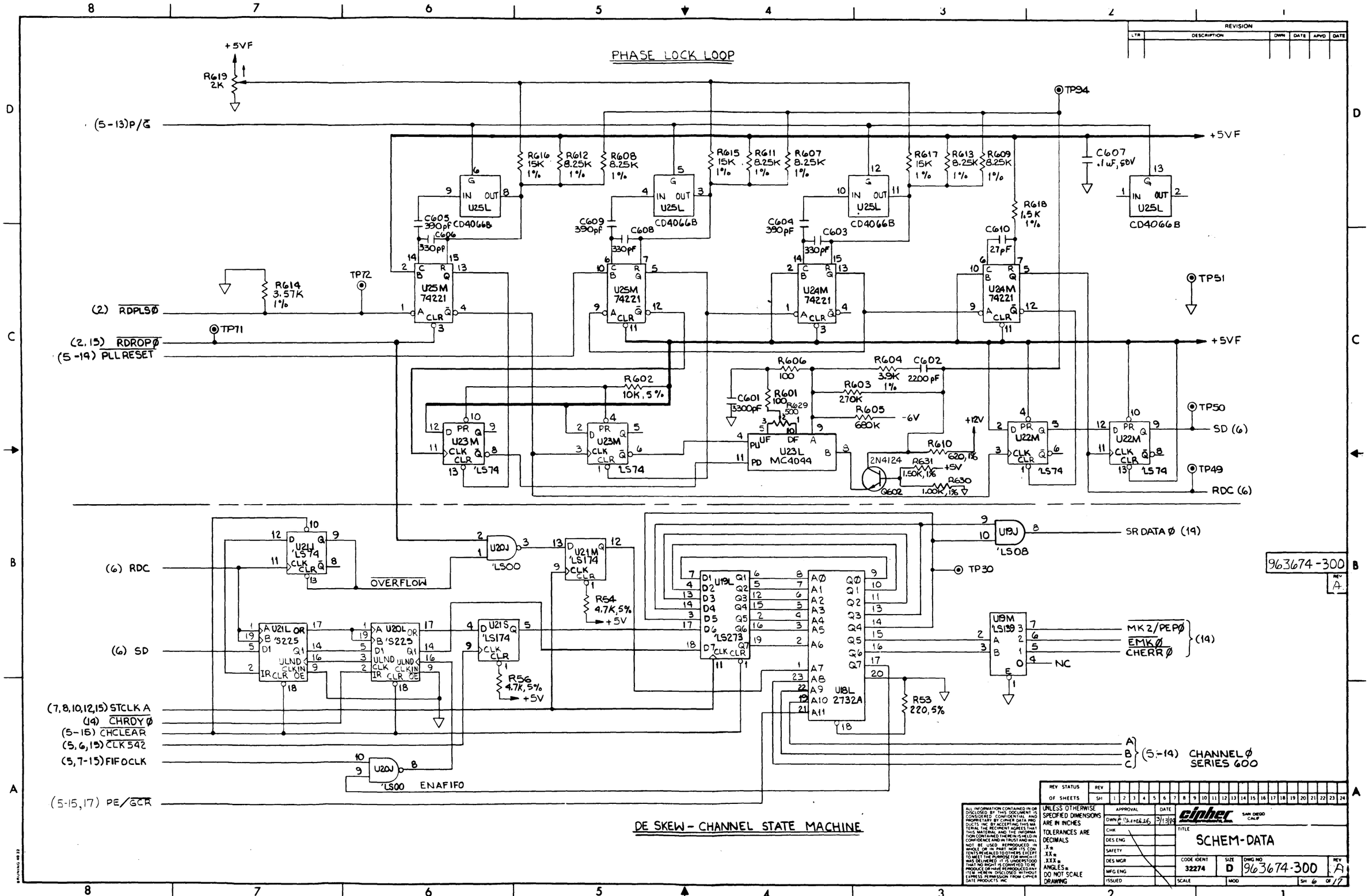
PHASE LOCK LOOP
+5VF
R619 2K
(5-13)P/G
TP94
R616 15K 1%
R612 8.25K 1%
R608 8.25K 1%
R615 15K 1%
R611 8.25K 1%
R607 8.25K 1%
R617 15K 1%
R613 8.25K 1%
R609 8.25K 1%
C607 .1uF, 50V
U25L CD4066B
C605 390pF
C606 330pF
C609 390pF
C608 330pF
C604 390pF
C603 330pF
R618 1.5K 1%
C610 27pF
U25M 74221
U24M 74221
R614 3.57K 1%
TP72
TP71
TP51
(2) RDPLSØ
(2,15) RDROPØ
(5-14) PLLRESET
R602 10K, 5%
R606 100
R604 3.9K 1%
C602 2200pF
R603 270K
R605 680K
-6V
C601 3300pF
R601 100
R629 500
U23M 'LS74
U23L MC4044
+12V
R610 620, 1%
R631 1.50K, 1%
R630 1.00K, 1%
2N4124 Q602
U22M 'LS74
TP50
SD (6)
TP49
RDC (6)
U21J 'LS74
U20J 'LS00
U21M 'LS174
R54 4.7K, 5%
+5V
U19J 'LS08
SR DATA Ø (14)
TP30
(6) RDC
OVERFLOW
U21L 'S225
U20L 'S225
U21S 'LS174
R56 4.7K, 5%
U19L 'LS273
U18L 2732A
U19M 'LS139
MK2/PEPØ
EMKØ
CHERRØ
(14)
NC
(6) SD
R53 220, 5%
(7,8,10,12,15) STCLK A
(14) CHRDYØ
(5-15) CHCLEAR
(5,6,15) CLK542
(5,7-15) FIFOCLK
U20J 'LS00 ENAFIFO
(5-15,17) PE/GCR
A B C (5-14) CHANNEL Ø SERIES 600
963674-300
REV A
DE SKEW - CHANNEL STATE MACHINE
REVISION
LTR DESCRIPTION DWN DATE APVD DATE
REV STATUS OF SHEETS
UNLESS OTHERWISE SPECIFIED DIMENSIONS ARE IN INCHES
TOLERANCES ARE DECIMALS
.X±
.XX±
.XXX±
ANGLES±
DO NOT SCALE DRAWING
APPROVAL DATE
DWN 3/13/84
CHK
DES ENG
SAFETY
DES MGR
MFG ENG
ISSUED
cipher SAN DIEGO CALIF
TITLE SCHEM-DATA
CODE IDENT 32274
SIZE D
DWG NO 963674-300
REV A
SCALE
MOD
SH 6 OF 17

PHASE LOCK LOOP

+5VF
R919 2K
(5-13) P/G
TP103
+5VF
R916 15K 1%
R912 8.25K 1%
R908 8.25K 1%
R915 15K 1%
R911 8.25K 1%
R907 8.25K 1%
R917 15K 1%
R913 8.25K 1%
R909 8.25K 1%
C907 .1uF,50V
R918 1.5K 1%
U25T CD4066B
C905 390pF
C906 330pF
C909 390pF
C908 330pF
C904 390pF
C903 330pF
C910 27pF
R919 3.57K 1%
TP78
TP77
TP60
(2) RDPLS1
(2,15) RDROP1
(5,6-19) PLL RESET
U25U 74221
U24U 74221
R902 10K, 5%
R906 100
R904 3.9K
C902 2200pF
C901 3300pF
R901 100
R903 270K
R905 680K
-6V
+12V
R910 620
R929 500
U23U 'LS74
U23T MC4044
2N4124
R931 1.50K, 1%
+5V
R930 1.00K, 1%
Q902
U22U 'LS74
TP59
SD (7)
TP58
RDC (7)

(7) RDC
OVERFLOW
U21U 'LS74
U20U 'LS00
U21M 'LS174
U19P 'LS08
SR DATA 1 (14)
TP117
(7) SD
U21T 'S225
U20T 'S225
U21S 'LS174
U19T 'LS273
U18T 2732A
U18U 'LS139
MK 2/PEP1
EMK 1
CHERRT
(14)
NC
R57 220, 5%
(6,8,10,12,15) STCLK A
(19) CHRDY1
(5-15) CHCLEAR
(5,6,8-15) FIFOCLK
U20U 'LS00
ENAFIFO
(5-15,17) PE/GCR
A
B
C
(5-14)

CHANNEL 1
SERIES 900

DE SKEW - CHANNEL STATE MACHINE

REVISION					
LTR	DESCRIPTION	DWN	DATE	APVD	DATE

963674-300 REV A

REV STATUS: REV
OF SHEETS: SH 1 2 3 4 5 6 7 8 9 10 11 12 13 14 15 16 17 18 19 20 21 22 23 24

ALL INFORMATION CONTAINED IN OR DISCLOSED BY THIS DOCUMENT IS CONSIDERED CONFIDENTIAL AND PROPRIETARY BY CIPHER DATA PRODUCTS INC BY ACCEPTING THIS MATERIAL THE RECIPIENT AGREES THAT THIS MATERIAL AND THE INFORMATION CONTAINED THEREIN IS HELD IN CONFIDENCE AND IN TRUST AND WILL NOT BE USED, REPRODUCED IN WHOLE OR IN PART NOR ITS CONTENTS REVEALED TO OTHERS EXCEPT TO MEET THE PURPOSE FOR WHICH IT WAS DELIVERED. IT IS UNDERSTOOD THAT NO RIGHT IS CONVEYED TO REPRODUCE OR HAVE REPRODUCED ANY ITEM HEREIN DISCLOSED WITHOUT EXPRESS PERMISSION FROM CIPHER DATA PRODUCTS INC

UNLESS OTHERWISE SPECIFIED DIMENSIONS ARE IN INCHES
TOLERANCES ARE
DECIMALS
.X ±
.XX ±
.XXX ±
ANGLES ±
DO NOT SCALE DRAWING

APPROVAL	DATE
DWN	3/13/86
CHK	
DES ENG	
SAFETY	
DES MGR	
MFG ENG	
ISSUED	

cipher SAN DIEGO CALIF

TITLE: SCHEM-DATA

CODE IDENT	SIZE	DWG NO	REV
32274	D	963674-300	A

SCALE | MOD | SH 7 OF 17

BRUNING 4033

PHASE LOCK LOOP

REVISION					
LTR	DESCRIPTION	DWN	DATE	APVD	DATE

+5VF
R519 2K
(5-13) P/C
TP91
+5VF
R516 15K 1%
R512 8.25K 1%
R508 8.25K 1%
R515 15K 1%
R511 8.25K 1%
R507 8.25K 1%
R517 15K 1%
R513 8.25K 1%
R509 8.25K 1%
C507 .1 uF, 50V
R518 1.5K 1%
U25J CD4066B
C505 390pF
C506 330pF
C509 390pF
C508 330pF
C504 390pF
C503 330pF
C510 27pF
R514 3.57K 1%
TP70
TP48
(2) RDPLS 2
U25K 74221
U24K 74221
TP69
(2,15) RDROP 2
(5-14) PLL RESET
+5VF
R502 10K, 5%
R506 100
R504 3.9K
C502 2200pF
R503 270
C501 3300pF
R501 100
R529 500
R505 680K
-6V
+12V
U23K 'LS74
U23J MC4044
U22K 'LS74
R510 620
Q502 2N4124
R531 1.50K, 1%
R530 1.00K, 1%
+5V
TP47
SD (8)
TP46
RDC (8)

(8) RDC
U21N 'LS74
OVERFLOW
U20J 'LS00
U21D 'LS174
U19H 'LS273
U19J 'LS08
SR DATA 2 (14)
TP29
963674-300 REV A

(8) SD
U21H 'S225
U20H 'S225
U21G 'LS174
U18J 2732A
U19M 'LS139
MK 2/PEP 2
EMK 2
CHERR 2
(14)
NC
R52 220, 5%

(6,7,10,12,15) STCLK A
(19) CHRDY 2
(5-14) CHCLEAR
(A, B, C) (5-14)
CHANNEL 2
SERIES 500

(5-7,9-15) FIFOCLK
U20J 'LS00
ENAFIFO

(5-15,17) PE / GCR

DE SKEW - CHANNEL STATE MACHINE

REV STATUS	REV
OF SHEETS	SH 1 2 3 4 5 6 7 8 9 10 11 12 13 14 15 16 17 18 19 20 21 22 23 24

ALL INFORMATION CONTAINED IN OR DISCLOSED BY THIS DOCUMENT IS CONSIDERED CONFIDENTIAL AND PROPRIETARY BY CIPHER DATA PRODUCTS INC BY ACCEPTING THIS MATERIAL THE RECIPIENT AGREES THAT THIS MATERIAL AND THE INFORMATION CONTAINED THEREIN IS HELD IN CONFIDENCE AND IN TRUST AND WILL NOT BE USED, REPRODUCED IN WHOLE OR IN PART NOR ITS CONTENTS REVEALED TO OTHERS EXCEPT TO MEET THE PURPOSE FOR WHICH IT WAS DELIVERED. IT IS UNDERSTOOD THAT NO RIGHT IS CONVEYED TO REPRODUCE OR HAVE REPRODUCED ANY ITEM HEREIN DISCLOSED WITHOUT EXPRESS PERMISSION FROM CIPHER DATA PRODUCTS INC

UNLESS OTHERWISE SPECIFIED DIMENSIONS ARE IN INCHES
TOLERANCES ARE
DECIMALS
.X ±
.XX ±
.XXX ±
ANGLES ±
DO NOT SCALE DRAWING

APPROVAL	DATE
DWN	
CHK	
DES ENG	
SAFETY	
DES MGR	
MFG ENG	
ISSUED	

cipher SAN DIEGO CALIF

TITLE: SCHEM-DATA

CODE IDENT	SIZE	DWG NO	REV
32274	D	963674-300	A

SCALE | WOD | SH 8 OF 17

BRUNING 40-22

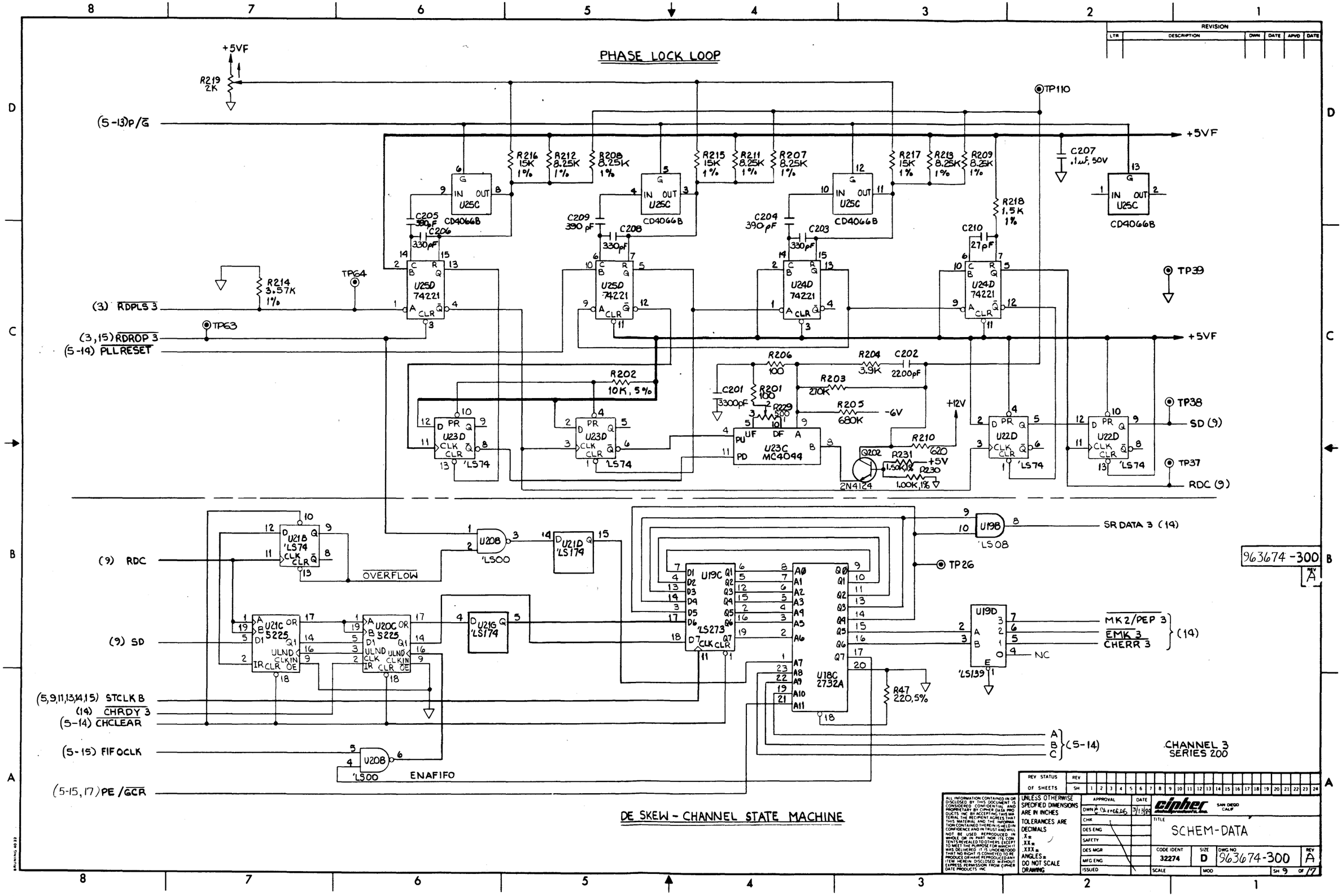
PHASE LOCK LOOP
+5VF
R219 2K
(5-13)P/G
TP110
R216 15K 1%
R212 8.25K 1%
R208 8.25K 1%
R215 15K 1%
R211 8.25K 1%
R207 8.25K 1%
R217 15K 1%
R213 8.25K 1%
R209 8.25K 1%
C207 .1uF, 50V
R218 1.5K 1%
U25C CD4066B
C205 390pF
C206 330pF
C209 390pF
C208 330pF
C204 390pF
C203 330pF
C210 27pF
U25D 74221
U24D 74221
R214 3.57K 1%
TP64
TP63
TP39
(3) RDPLS 3
(3,15) RDROP 3
(5-14) PLLRESET
R202 10K, 5%
R206 100
R204 3.9K
C202 2200pF
R203 270K
C201 3300pF
R201 100
R229 500
R205 680K
-6V
+12V
U23D 'LS74
U23C MC4044
R210 620
Q202 2N4124
R231 1.50K,1%
R230 1.00K,1%
+5V
U22D 'LS74
TP38
SD (9)
TP37
RDC (9)
U21B 'LS74
U20B 'LS00
U21D 'LS174
U19B 'LS08
SR DATA 3 (14)
TP26
(9) RDC
OVERFLOW
U21C S225
U20C S225
U21G 'LS174
U19C 'LS273
U18C 2732A
U19D 'LS139
MK2/PEP 3
EMK 3
CHERR 3
(14)
NC
(9) SD
R47 220,5%
(5,9,11,13,14,15) STCLK B
(14) CHRDY 3
(5-14) CHCLEAR
(5-15) FIFOCLK
U20B 'LS00
ENAFIFO
(5-15,17) PE/GCR
A B C (5-14)
CHANNEL 3 SERIES 200
963674-300
REV A
DE SKEW - CHANNEL STATE MACHINE
REVISION
LTR DESCRIPTION DWN DATE APVD DATE
REV STATUS OF SHEETS
UNLESS OTHERWISE SPECIFIED DIMENSIONS ARE IN INCHES
TOLERANCES ARE DECIMALS
.X±
.XX±
.XXX±
ANGLES±
DO NOT SCALE DRAWING
APPROVAL DATE
DWN 3/13/84
CHK
DES ENG
SAFETY
DES MGR
MFG ENG
ISSUED
cipher SAN DIEGO CALIF
TITLE SCHEM-DATA
CODE IDENT 32274
SIZE D
DWG NO 963674-300
REV A
SCALE
MOD
SH 9 OF 17

PHASE LOCK LOOP

+5VF
R719 2K
(5-13)P/G
TP97
+5VF
R716 15K 1%
R712 8.25K 1%
R708 8.25K 1%
R715 15K 1%
R711 8.25K 1%
R707 8.25K 1%
R717 15K 1%
R713 8.25K 1%
R709 8.25K 1%
C707 .1 µF, 50V
U25N CD4066B
C705 390pF
C706 330pF
-6V
C709 390pF
C708 330pF
C704 390 pF
C703 330pF
C710 27pF
R718 1.5K 1%
R714 3.57K 1%
TP74
TP54
(3) RDPLS4
U25P 74221
U24P 74221
TP73
(3-15) RDROP4
(5-19) PLLRESET
+5VF
R702 10K, 5%
R706 100
R704 3.9K
C702 2200pF
C701 3300pF
R701 100
R703 270K
R729 500
R705 680K
-6V
+12V
TP53
SD (10)
U23P 'LS74
U23N MC4044
R710 620
+5V
Q102 2N4124
R731 1.50K, 1%
R730 1.00K, 1%
U22P 'LS74
TP52
RDC (10)

(10) RDC
U21P 'LS74
OVERFLOW
U20P 'LS00
U21M 'LS174
U19N 'LS273
U19P 'LS08
SR DATA 4 (19)
TP31
963674-300 REV A
(10) SD
U22N 'S225
U21S 'LS174
U18N 2732A
U19S 'LS139
MK 2/PEP 4
EMK 4
CHERR 4
(14)
NC
R55 220, 5%
(6,7,8,12,15) STCLK A
(14) CHRDY 4
(5-19) CHCLEAR
(5-15) FIFOCLK
U20P 'LS00
ENAFIFO
A
B
C
(5-14)
(5-15,17) PE /GCR

CHANNEL 4
SERIES 700

DE SKEW - CHANNEL STATE MACHINE

REVISION

LTR	DESCRIPTION	DWN	DATE	APVD	DATE

REV STATUS	REV
OF SHEETS	SH 1 2 3 4 5 6 7 8 9 10 11 12 13 14 15 16 17 18 19 20 21 22 23 24

ALL INFORMATION CONTAINED IN OR DISCLOSED BY THIS DOCUMENT IS CONSIDERED CONFIDENTIAL AND PROPRIETARY BY CIPHER DATA PRODUCTS INC. BY ACCEPTING THIS MATERIAL THE RECIPIENT AGREES THAT THIS MATERIAL AND THE INFORMATION CONTAINED THEREIN IS HELD IN CONFIDENCE AND IN TRUST AND WILL NOT BE USED, REPRODUCED IN WHOLE OR IN PART NOR ITS CONTENTS REVEALED TO OTHERS EXCEPT TO MEET THE PURPOSE FOR WHICH IT WAS DELIVERED. IT IS UNDERSTOOD THAT NO RIGHT IS CONVEYED TO REPRODUCE OR HAVE REPRODUCED ANY ITEM HEREIN DISCLOSED, WITHOUT EXPRESS PERMISSION FROM CIPHER DATA PRODUCTS INC

UNLESS OTHERWISE SPECIFIED DIMENSIONS ARE IN INCHES
TOLERANCES ARE
DECIMALS
.X ±
.XX ±
.XXX ±
ANGLES ±
DO NOT SCALE DRAWING

APPROVAL	DATE
DWN C. Carmichael	3/13/85
CHK	
DES ENG	
SAFETY	
DES MGR	
MFG ENG	
ISSUED	

cipher SAN DIEGO CALIF

TITLE: SCHEM-DATA

CODE IDENT	SIZE	DWG NO	REV
32274	D	963674-300	A

SCALE | MOD | SH 10 OF 17

8 7 6 5 4 3 2 1

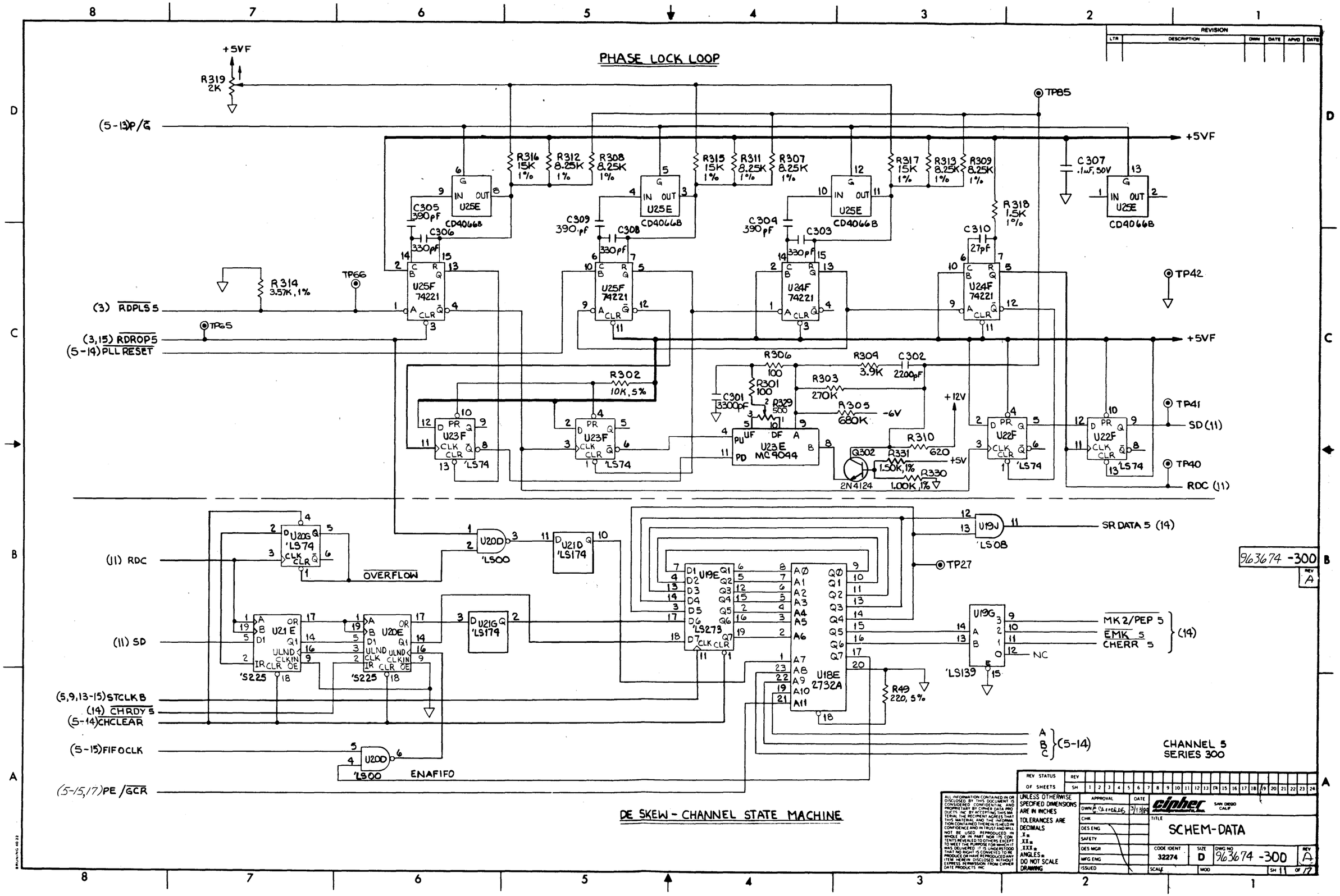
PHASE LOCK LOOP
+5VF
R319 2K
(5-13)P/G
TP85
R316 15K 1%
R312 8.25K 1%
R308 8.25K 1%
R315 15K 1%
R311 8.25K 1%
R307 8.25K 1%
R317 15K 1%
R313 8.25K 1%
R309 8.25K 1%
C307 .1uF, 50V
U25E CD4066B
C305 390pF
C306 330pF
C309 390pF
C308 330pF
C304 390pF
C303 330pF
R318 1.5K 1%
C310 27pF
U25F 74221
U24F 74221
R314 3.57K, 1%
TP66
TP42
(3) RDPLS 5
TP65
(3,15) RDROP5
(5-14) PLL RESET
R302 10K, 5%
R306 100
R301 100
R309 3.9K
C302 2200pF
R303 270K
C301 3300pF
R329 500
R305 680K
-6V
+12V
U23F 'LS74
U23E MC9044
R310 620
Q302 2N4124
R331 1.50K, 1%
R330 1.00K, 1%
+5V
U22F 'LS74
TP41
SD (11)
TP40
RDC (11)
U20G 'LS74
U20D 'LS00
U21D 'LS174
U19J 'LS08
SR DATA 5 (14)
(11) RDC
OVERFLOW
TP27
U19E 'LS273
U21E 'S225
U20E 'S225
U21G 'LS174
U18E 2732A
U19G 'LS139
MK2/PEP 5
EMK 5
CHERR 5
(14)
NC
(11) SD
R49 220, 5%
(5,9,13-15) STCLKB
(14) CHRDY 5
(5-14) CHCLEAR
(5-15) FIFOCLK
U20D 'LS00
ENAFIFO
A
B
C
(5-14)
(5-15,17) PE/GCR
CHANNEL 5
SERIES 300
963674 -300
REV A
DE SKEW - CHANNEL STATE MACHINE
REVISION
LTR
DESCRIPTION
DWN
DATE
APVD
DATE
REV STATUS OF SHEETS
REV
SH
ALL INFORMATION CONTAINED IN OR DISCLOSED BY THIS DOCUMENT IS CONSIDERED CONFIDENTIAL AND PROPRIETARY BY CIPHER DATA PRODUCTS INC. BY ACCEPTING THIS MATERIAL THE RECIPIENT AGREES THAT THIS MATERIAL AND THE INFORMATION CONTAINED THEREIN IS HELD IN CONFIDENCE AND IN TRUST AND WILL NOT BE USED, REPRODUCED IN WHOLE OR IN PART NOR ITS CONTENTS REVEALED TO OTHERS EXCEPT TO MEET THE PURPOSE FOR WHICH IT WAS DELIVERED. IT IS UNDERSTOOD THAT NO RIGHT IS CONVEYED TO REPRODUCE OR HAVE REPRODUCED ANY ITEM HEREIN DISCLOSED WITHOUT EXPRESS PERMISSION FROM CIPHER DATA PRODUCTS INC.
UNLESS OTHERWISE SPECIFIED DIMENSIONS ARE IN INCHES
TOLERANCES ARE
DECIMALS
.X±
.XX±
.XXX±
ANGLES±
DO NOT SCALE DRAWING
APPROVAL
DATE
DWN
CHK
DES ENG
SAFETY
DES MGR
MFG ENG
ISSUED
cipher
SAN DIEGO CALIF
TITLE
SCHEM-DATA
CODE IDENT 32274
SIZE D
DWG NO 963674 -300
REV A
SCALE
MOD
SH 11 OF 17

PHASE LOCK LOOP

+5VF
R819 2K
(5-13) P/C
R816 15K 1%
R812 8.25K 1%
R808 8.25K 1%
R815 15K 1%
R811 8.25K 1%
R807 8.25K 1%
R817 15K 1%
R813 8.25K 1%
R809 8.25K 1%
TP100
C807 .1uF, 50V
R818 1.5K 1%
U25R CD4066B
C805 390pF
C806 330pF
C809 390pF
C808 330pF
C804 390pF
C803 330pF
C810 27pF
R814 3.57K 1%
TP76
TP75
TP57
(4) RDPLS 6
(4,15) RDROP 6
(5-14) PLL RESET
U25S 74221
U24S 74221
R802 10K, 5%
R806 100
R804 3.9K
C802 2200pF
R801 100
C801 3300pF
R803 270K
R805 680K
-6V
+12V
U23S 'LS74
U23R MC4044
R810 620
Q802 2N4124
R831 1.50K, 1%
R830 1.00K, 1%
+5V
U22S 'LS74
TP56
SD (12)
TP55
RDC (12)

(12) RDC
OVERFLOW
U21P 'LS74
U20P 'LS00
U21N 'LS174
U21S 'LS174
U21R 'S225
U20R 'S225
(12) SD
U19R 'LS273
U18R 2732A
U19P 'LS08
SR DATA 6 (14)
TP32
U19S 'LS139
MK2/PEP 6
EMK 6
CHERR 6
(14)
NC
R96 220, 5%
(6,7,8,10,15) STCLK A
(14) CHRDY 6
(5-14) CHCLEAR
15) FIFOCLK
U20P 'LS00
ENAFIFO
(5-15,17) PE/GCR
A
B
C
(5-14)

963674-300 REV A

CHANNEL 6
SERIES 800

DE SKEW - CHANNEL STATE MACHINE

REVISION					
LTR	DESCRIPTION	DWN	DATE	APVD	DATE

REV STATUS	REV
OF SHEETS	SH 1 2 3 4 5 6 7 8 9 10 11 12 13 14 15 16 17 18 19 20 21 22 23 24

ALL INFORMATION CONTAINED IN OR DISCLOSED BY THIS DOCUMENT IS CONSIDERED CONFIDENTIAL AND PROPRIETARY BY CIPHER DATA PRODUCTS, INC. BY ACCEPTING THIS MATERIAL THE RECIPIENT AGREES THAT THIS MATERIAL AND THE INFORMATION CONTAINED THEREIN IS HELD IN CONFIDENCE AND IN TRUST AND WILL NOT BE USED, REPRODUCED IN WHOLE OR IN PART NOR ITS CONTENTS REVEALED TO OTHERS EXCEPT TO MEET THE PURPOSE FOR WHICH IT WAS DELIVERED. IT IS UNDERSTOOD THAT NO RIGHT IS CONVEYED TO REPRODUCE OR HAVE REPRODUCED ANY ITEM HEREIN DISCLOSED WITHOUT EXPRESS PERMISSION FROM CIPHER DATA PRODUCTS, INC.

UNLESS OTHERWISE SPECIFIED DIMENSIONS ARE IN INCHES
TOLERANCES ARE
DECIMALS
.X ±
.XX ±
.XXX ±
ANGLES ±
DO NOT SCALE DRAWING

APPROVAL	DATE
DWN	
CHK	
DES ENG	
SAFETY	
DES MGR	
MFG ENG	
ISSUED	

cipher SAN DIEGO CALIF

TITLE: SCHEM-DATA

CODE IDENT	SIZE	DWG NO	REV
32274	D	963674-300	A

SCALE | MOD | SH 12 OF 17

BRUNING 40-22

REVISION					
LTR	DESCRIPTION	DWN	DATE	APVD	DATE

PHASE LOCK LOOP

+5VF
R419 2K
(5-12) P/$\overline{G}$
TP88
+5VF
R416 15K 1%
R412 8.25K 1%
R408 8.25K 1%
R415 15K 1%
R411 8.25K 1%
R407 8.25K 1%
R417 15K 1%
R413 8.25K 1%
R409 8.25K 1%
C407 .1 uF, 50V
R418 1.5K 1%
C405 390pF
C406 330pF
C409 390pF
C408 330pF
C404 390pF
C403 330pF
C410 27pF
U25G CD4066B
U25H 74221
U24H 74221
R414 3.57K 1%
TP68
TP67
(4) $\overline{RDPLS}$ 7
(4,15) $\overline{RDROP}$ 7
(5-14) PLLRESET
TP45
+5VF
R402 10K, 5%
R406 100
R401 100
R403 270K
R405 680K -6V
R404 3.9K
C402 2200pF
C401 3300pF
R429 500
+12V
R410 620
Q402 2N4124
R431 150K, 1%
R430 1.00K, 1%
+5V
U23H 'LS74
U23G MC4044
U22H 'LS74
TP44
SD (13)
TP43
RDC (13)

(13) RDC
U20S LS74
$\overline{OVERFLOW}$
U20D LS00
U19J LS08
SR DATA 7 (14)
TP28
U19F LS273
U18F 2732A
U19G 'LS139
$\overline{MK2/PEP}$ 7
$\overline{EMK}$ 7
$\overline{CHERR}$ 7
(14)
NC
(14) $\overline{CHRDY}$ 7
(13) SD
U21F OR S225
U20F OR S225
U21G LS174
U21M LS174
R50 220, 5%
(5-14) $\overline{CHCLEAR}$
(5-15) FIFOCLK
U20D LS00
ENAFIFO
A
B
C
(5-14)
(5-15,17) PE/$\overline{GCR}$
(5,9,11,13,15) STCLK B

CHANNEL 7
SERIES 400

DE SKEW - CHANNEL STATE MACHINE

963674-300 REV A

REV STATUS	REV																							
OF SHEETS	SH	1	2	3	4	5	6	7	8	9	10	11	12	13	14	15	16	17	18	19	20	21	22	23	24

ALL INFORMATION CONTAINED IN OR DISCLOSED BY THIS DOCUMENT IS CONSIDERED CONFIDENTIAL AND PROPRIETARY BY CIPHER DATA PRODUCTS INC BY ACCEPTING THIS MATERIAL THE RECIPIENT AGREES THAT THIS MATERIAL AND THE INFORMATION CONTAINED THEREIN IS HELD IN CONFIDENCE AND IN TRUST AND WILL NOT BE USED, REPRODUCED IN WHOLE OR IN PART NOR ITS CONTENTS REVEALED TO OTHERS, EXCEPT TO MEET THE PURPOSE FOR WHICH IT WAS DELIVERED. IT IS UNDERSTOOD THAT NO RIGHT IS CONVEYED TO RE-PRODUCE OR HAVE REPRODUCED ANY ITEM HEREIN DISCLOSED WITHOUT EXPRESS PERMISSION FROM CIPHER DATA PRODUCTS INC

UNLESS OTHERWISE SPECIFIED DIMENSIONS ARE IN INCHES
TOLERANCES ARE
DECIMALS .X ± .XX ± .XXX ±
ANGLES ±
DO NOT SCALE DRAWING

	APPROVAL	DATE
DWN		
CHK		
DES ENG		
SAFETY		
DES MGR		
MFG ENG		
ISSUED		

cipher SAN DIEGO CALIF

TITLE: SCHEM-DATA

CODE IDENT	SIZE	DWG NO	REV
32274	D	963674-300	A

SCALE ~ MOD GCR SH 13 OF 17

REVISION					
LTR	DESCRIPTION	DWN	DATE	APVD	DATE

961460-001 DATA RDY

(6) CHRDY Ø
(7) CHRDY 1
(9) CHRDY 3
(10) CHRDY 4
(11) CHRDY 5
U15J LS174
U12J 24S41 1KX4 PROM
DRDY
(14,15,17) STCLKC
(8) CHRDY 2
(12) CHRDY 6
(13) CHRDY 7
(5) CHRDY P
(5-16) PE/GCR
U12H LS174
CRCCL (17)
R33 220 5%
+5V R11 4.7K,5%
R30 4.7K 5% +5V
ADIØ
(14,16) AS
U10E LS74
(14,16) I/O
ENDATA
(5,15) FIFOCLK
U3G LS08
R37 4.7K +5V
TP6
BLK DLY (15)
U12E LS04

961462-001 MK DET

(6) EMK Ø
(7) EMK 1
(8) EMK 2
(9) EMK 3
(10) EMK 4
(11) EMK 5
(12) EMK 6
(13) EMK 7
(5) EMK P
U15H 24S41 1KX4 PROM
EMK/PEØ
R31 220 5%

961462-001 MK DET

(6) MK2/PEPØ
(7) MK2/PEP 1
(8) MK2/PEP 2
(9) MK2/PEP 3
(10) MK2/PEP 4
(11) MK2/PEP 5
(12) MK2/PEP 6
(13) MK2/PEP 7
(5) MK2/PEP P
U15G 24S41 1KX4 PROM
MK2/PEPØ
R28 220, 5%
(14,15) BLOCK DET
(14,16) RESET
U3E LS32

(6) SRDATAØ
(7) SRDATA 1
(8) SRDATA 2
(9) SRDATA 3
(10) SRDATA 4
(11) SRDATA 5
(12) SRDATA 6
(13) SRDATA 7
U10C LS273
BRDATAØ
BRDATA1
BRDATA2
BRDATA3
BRDATA4
BRDATA5
BRDATA6
BRDATA7
R7 4.7K, 5% +5V
R12 4.7K, 5% +5V
SRDATA P (5)
U10E LS74
BRDATAP (15)
R13 4.7K,5% +5V

(14,16) ADØ
AD1
AD2
AD3
AD4
AD5
AD6
AD7
SYSCLK
INT
INTACK
U12B C10 8036
(14,16) I/O
(14) AS
(14,16) DS
(14,16) R/W
(14) IEI
(14) IEO
U12E LS04
AD1Ø
CS0
CS1
CS2
CS3
CS4
CS5
CS6
CS7

PA0
PA1
PA2
PA3
PA4
PA5
PA6
PA7
PC0
PC1
PC2
PC3
PB0
PB1
PB2
PB3
PB4
PB5
PB6
PB7
PLL RESET (5-13)
FWD/REV
PE/GCR (5-17)
TERMCNT/TEST (15)
PROCINT
POSTAM (14)
BLOCKDET (19,15)
WRITE OP (14,16)
U3G LS08
13 STCLKC
TP4
PROCINT (14)

U11B LS174
CHERRØ (6)
CHERR1 (7)
CHERR2 (8)
NEW VCERR (17)
U15C LS174
CHERR3 (9)
CHERR4 (10)
CERR5 (11)
CERR6 (12)
CERR7 (13)
CHERRP (5)
STCLKC (15)
R44, 4.7K +5V

LS245
U15A
(14,16) ADØ AD1 AD2 AD3 AD4 AD5 AD6 AD7
R3 220 5%
XADØ XAD1 XAD2 XAD3 XAD4 XAD5 XAD6 XAD7

U15E LS02
(14,16) DS
R/W
IEI
INTACK
IEO
(14,16) RESET
SYSCLK
ADIØ
U19B LS08
U15E LS02

LS244
U12A
INT
AS
(14,16) I/O
(14,16) RESET
SYSCLK
ADIØ
R2 220,5%
VI
XAS
XDS
XIO
XINTACK
XRESET
XR/W
XSYCLK
XADIØ

U3A LS244
IEI
(15) I/FCLK MAØ CPUCLK MA1
(14,15) R/WCLK
(15) MA2
INT1 INT2 INT3 INT5 INT4 INTØ
XMA1 XR/WCLK XMA2 XI/FCLK XMAØ XCPUCLK
R1 220,5%

U3B LS244
(15) CLK542 CLK271
R5 220,5%
X READ ADV
5.42mHz
2.71mHz
R/W LAST BYTE

963674-300 REV A

U6H LS273
U6G 2732A 32K 4KX8 EPROM
961463-001 MSTR SM1
961464-001 MSTR SM2
U10G 2732A 32K 4KX8 EPROM
A11 A10 A9 (16)
U6E LS04
U6B LS00
FWD/REV
DRDY
U12G LS148
U1OH LS174
U1G LS86
BØ B1
U3G LS08
U3H LS174
U12E LS04
MK2/PE1
PADCNT (15)
R26 220,5%
R25 220,5%
ENDATA
U3H LS174
PEPAD (15)
POSTAM
PROCINT (14)
CHCLEAR (5-13)
U11F LS125
(15) BUF DWN
U11H LS174
A B C (5-13)
R29, 4.7K, 5%
STCLK B (5,9,11,13,15)
U3C LS08
MASTER STATE MACHINE
(14-16) WRITE OP
U11C LS32
U11E LS14
TP128
AØ A1 A2 A3 A4 A6 (16)
ENMASTER
R/W
TP3

REV STATUS	REV																							
OF SHEETS	SH	1	2	3	4	5	6	7	8	9	10	11	12	13	14	15	16	17	18	19	20	21	22	23	24

ALL INFORMATION CONTAINED IN OR DISCLOSED BY THIS DOCUMENT IS CONSIDERED CONFIDENTIAL AND PROPRIETARY BY CIPHER DATA PRODUCTS, INC. BY ACCEPTING THIS MATERIAL THE RECIPIENT AGREES THAT THIS MATERIAL AND THE INFORMATION CONTAINED THEREIN IS HELD IN CONFIDENCE AND IN TRUST AND WILL NOT BE USED, REPRODUCED IN WHOLE OR IN PART NOR ITS CONTENTS REVEALED TO OTHERS EXCEPT TO MEET THE PURPOSE FOR WHICH IT WAS DELIVERED. IT IS UNDERSTOOD THAT NO RIGHT IS CONVEYED TO REPRODUCE OR HAVE REPRODUCED ANY ITEM HEREON DISCLOSED WITHOUT EXPRESS PERMISSION FROM CIPHER DATA PRODUCTS, INC

UNLESS OTHERWISE SPECIFIED DIMENSIONS ARE IN INCHES	APPROVAL	DATE
TOLERANCES ARE DECIMALS .X± .XX± .XXX± ANGLES±	DWN	
	CHK	
	DES ENG	
DO NOT SCALE DRAWING	SAFETY	
	DES MGR	
	MFG ENG	
	ISSUED	

cipher data products, inc. SAN DIEGO CALIF

TITLE: SCHEM-DATA

CODE IDENT	SIZE	DWG NO.	REV
32274	D	963674-300	A

SCALE ——— MOD GCR SH 14 OF 17

BRUNING 48-29

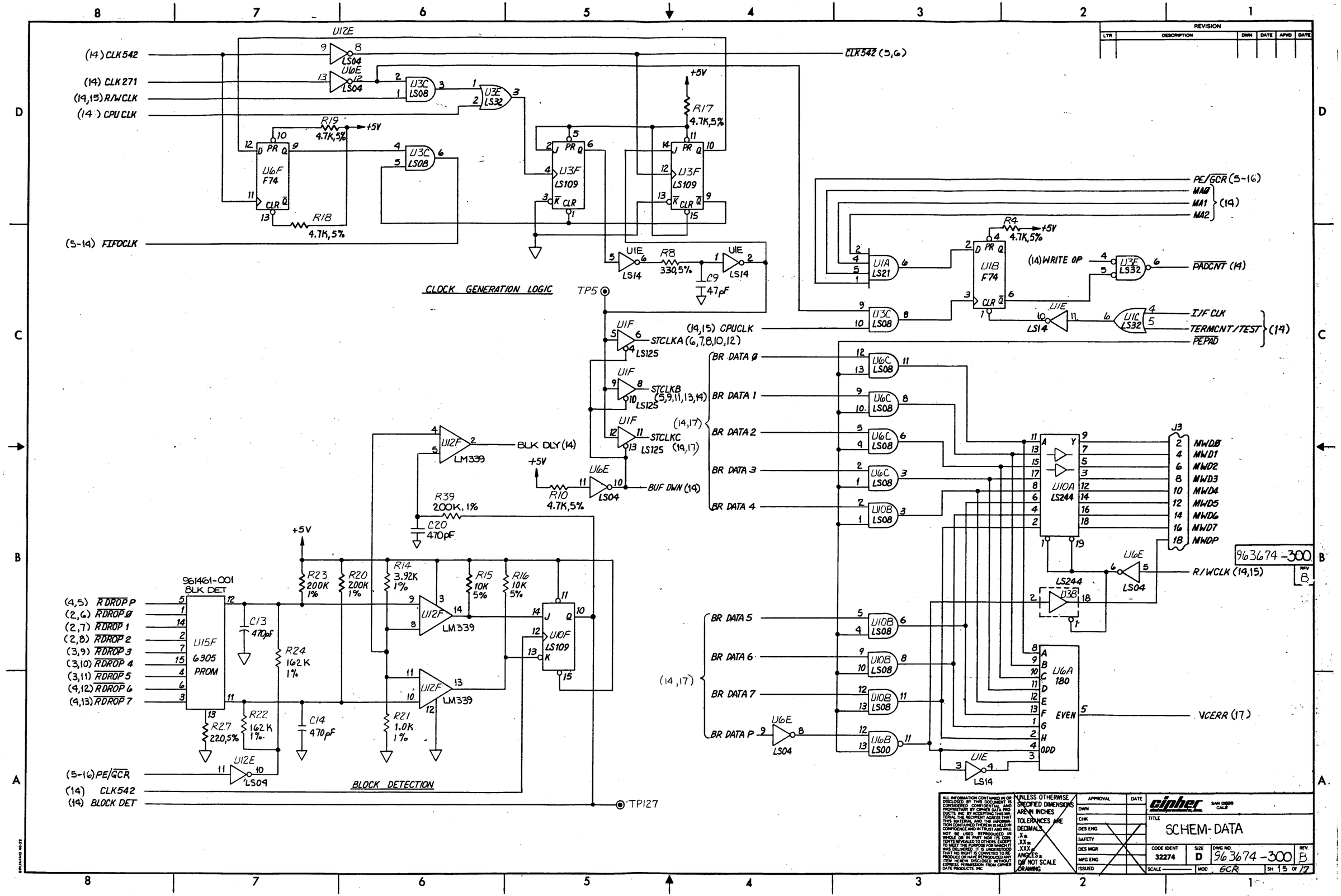

REVISION					
LTR	DESCRIPTION	DWN	DATE	APVD	DATE

ALL INFORMATION CONTAINED IN OR DISCLOSED BY THIS DOCUMENT IS CONSIDERED CONFIDENTIAL AND PROPRIETARY BY CIPHER DATA PRODUCTS, INC. BY ACCEPTING THIS MATERIAL THE RECIPIENT AGREES THAT THIS MATERIAL AND THE INFORMATION CONTAINED THEREIN IS HELD IN CONFIDENCE AND IN TRUST AND WILL NOT BE USED, REPRODUCED IN WHOLE OR IN PART NOR ITS CONTENTS REVEALED TO OTHERS EXCEPT TO MEET THE PURPOSE FOR WHICH IT WAS DELIVERED. IT IS UNDERSTOOD THAT NO RIGHT IS CONVEYED TO REPRODUCE OR HAVE REPRODUCED ANY ITEM HEREIN DISCLOSED WITHOUT EXPRESS PERMISSION FROM CIPHER DATA PRODUCTS, INC.

UNLESS OTHERWISE SPECIFIED DIMENSIONS ARE IN INCHES
TOLERANCES ARE
DECIMALS
.X±
.XX±
.XXX±
ANGLES±
DO NOT SCALE DRAWING

APPROVAL	DATE
DWN	
CHK	
DES ENG	
SAFETY	
DES MGR	
MFG ENG	
ISSUED	

cipher data products, inc. SAN DIEGO CALIF

TITLE: SCHEM-DATA

CODE IDENT	SIZE	DWG NO.	REV.
32274	D	963674-300	B

SCALE — MOD: GCR — SH 15 OF 17

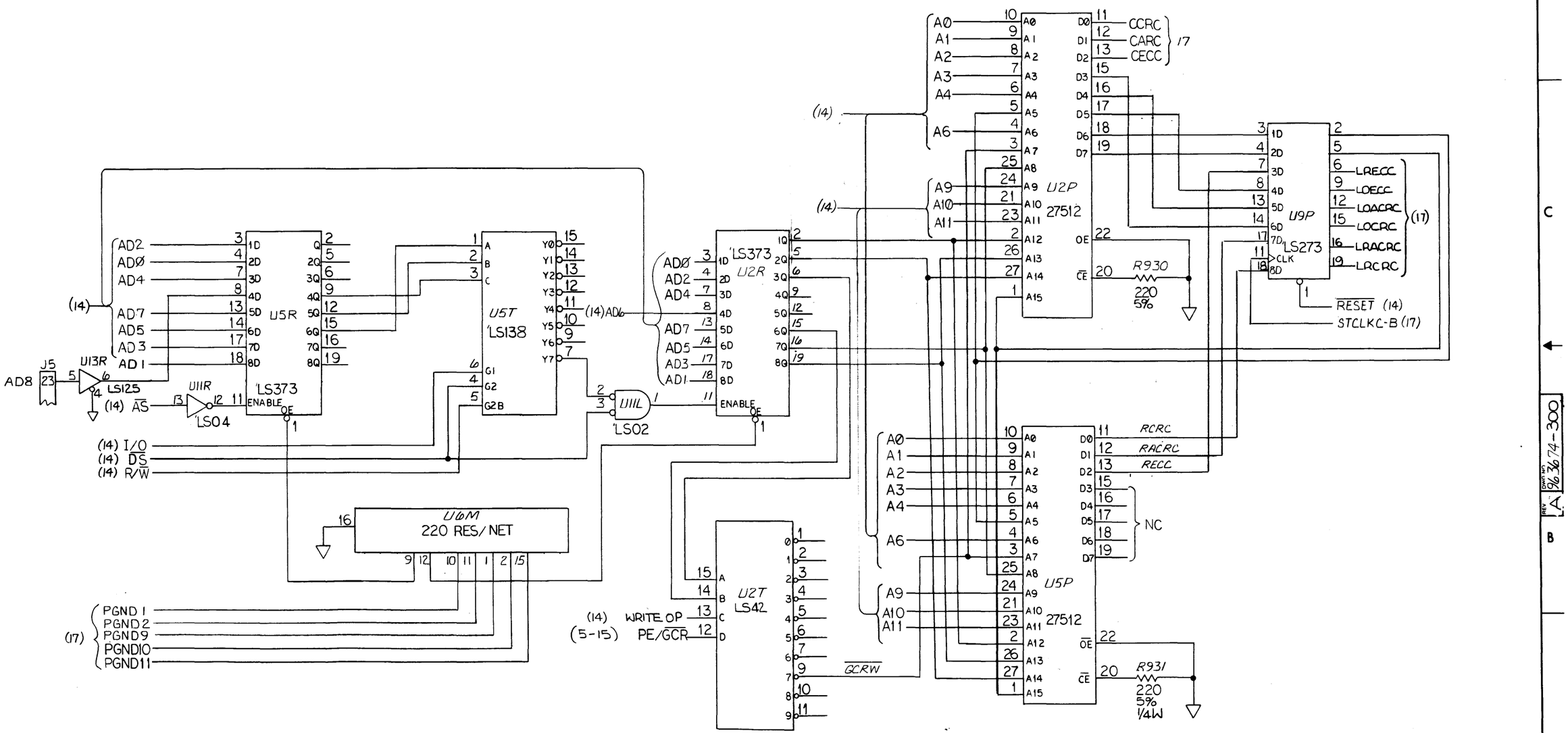

CODE IDENT	SIZE	DWG NO	REV
32274	D	963674-300	A
SCALE —	MOD	SH 16 OF 17	

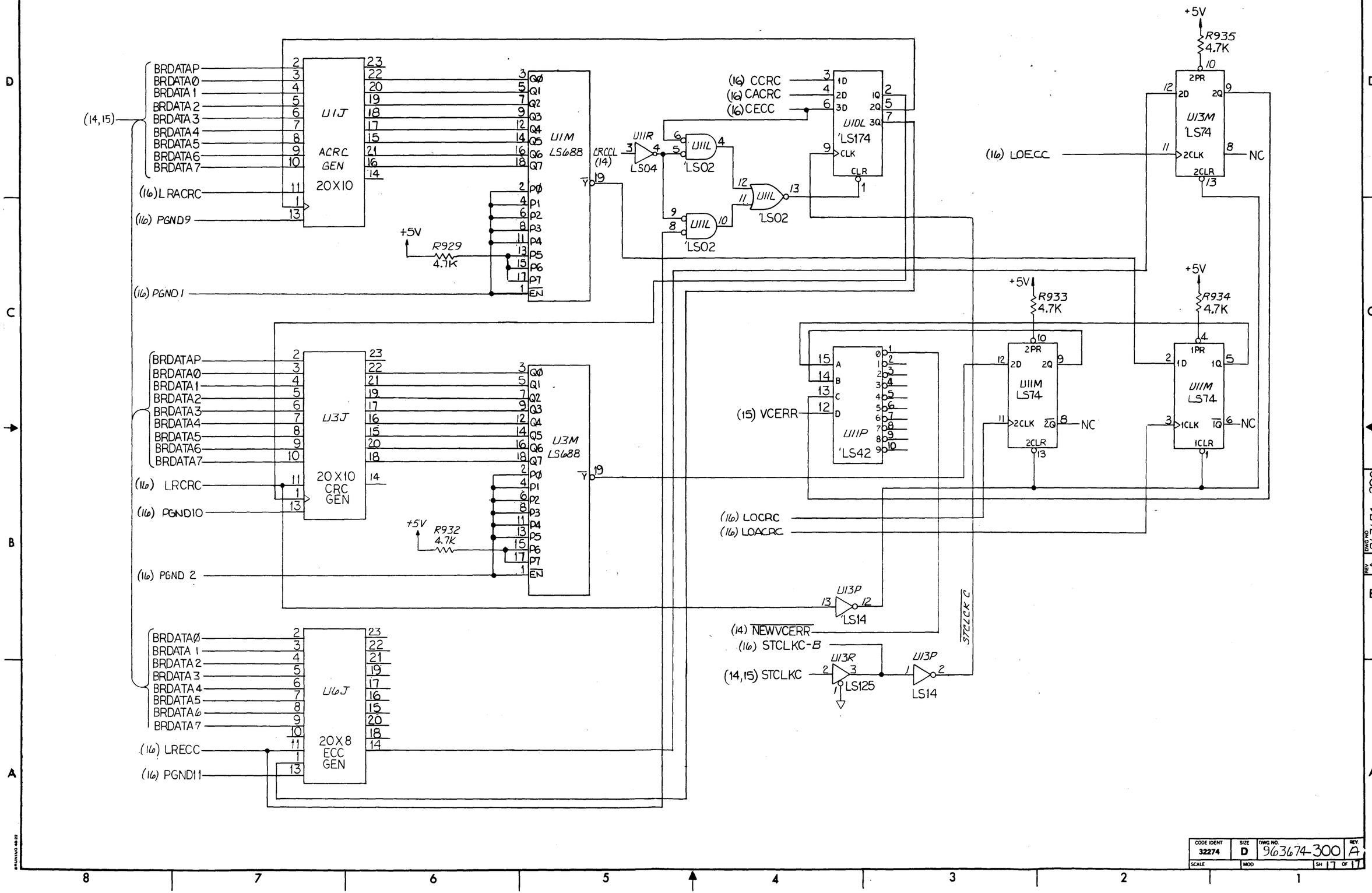

CODE IDENT	SIZE	DWG NO	REV
32274	D	963674-300	A
SCALE	MOD	SH 17 OF 17	

DWG NO 963674-300 REV A

REVISION					
LTR	DESCRIPTION	DWN	DATE	APVD	DATE
A	PROD REL ECO 50-0977	RL	7/14/86	[illegible]	1-22-87
B	INCORP ECO 19979	CW	10/21/87	[illegible]	11-25-87

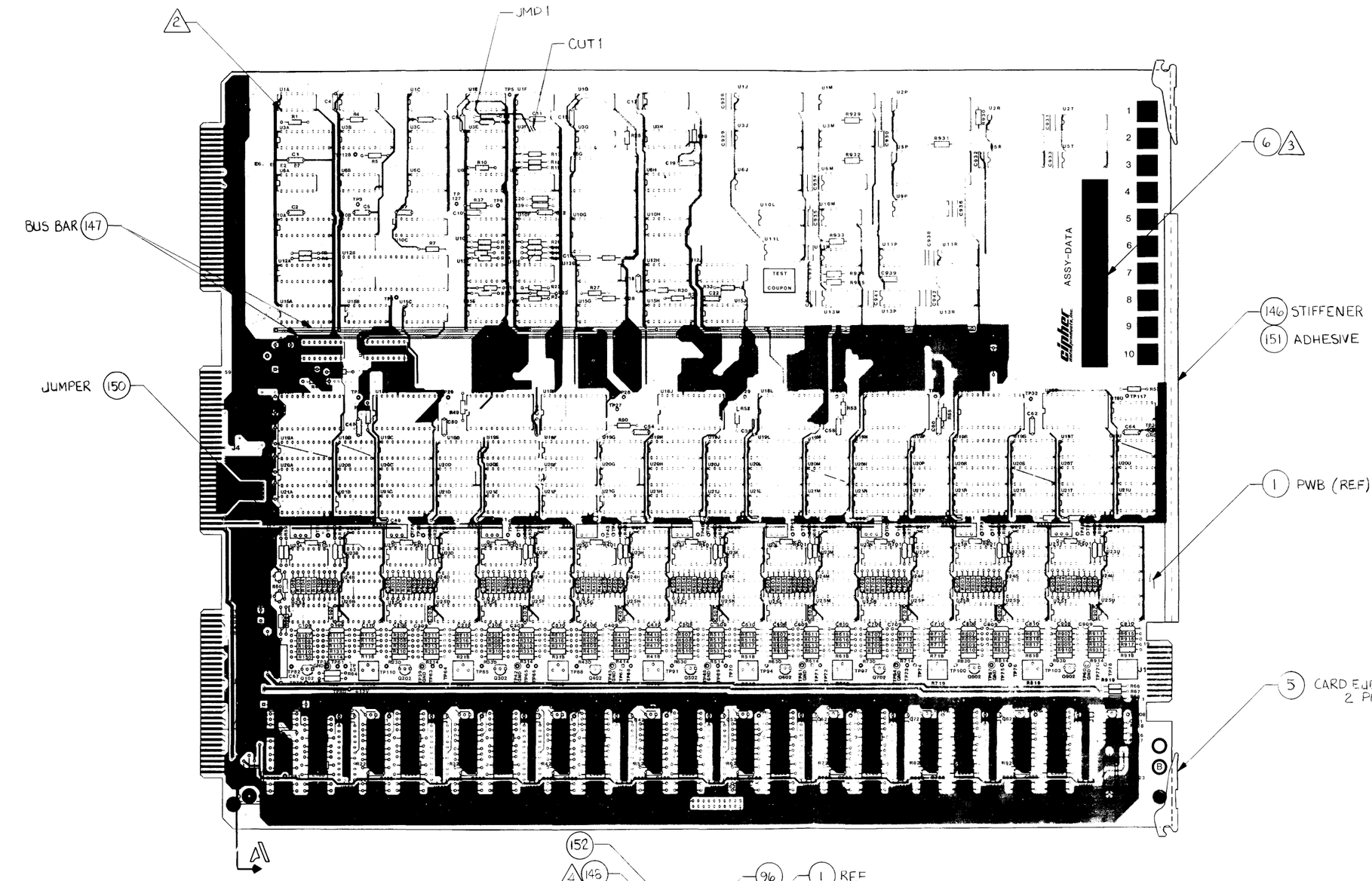

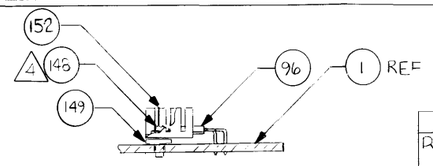

SECTION A-A
SCALE: NONE
ROTATED 90° CCW

9636 74 -000
REV B

ETCH CUT TABLE

REV LEVEL	CUT NO.	FROM	TO	COMP SIDE	SLD SIDE
963674-001 REV B	1	U3F-6	U3F-14	X	

JUMPER TABLE

REV LEVEL	JMP NO	FROM	TO	COMP SIDE	SLD SIDE	WIRE AWG
963674-001 REV B	1	U3F-14	U1E-2	X		30

COMPONENT SIDE

(4) TORQUE SCREW BETWEEN 6 & 8 INCH LBS.

(3) MARK PART NUMBER & REV LETTER THE SAME AS ASSY IN SPACE INDICATED USING A PERMANENT & LEGIBLE MARKING METHOD.

(2) RECTANGULAR PADS INDICATE PIN 1, EMITTER, & POLARITY (+).

1. FOR SCHEMATIC SEE DWG 963674-300.

NOTES: UNLESS OTHERWISE SPECIFIED

ALL INFORMATION CONTAINED IN OR DISCLOSED BY THIS DOCUMENT IS CONSIDERED CONFIDENTIAL AND PROPRIETARY BY CIPHER DATA PRODUCTS, INC. ACCEPTING THIS MATERIAL MEANS THAT THE RECIPIENT AGREES THAT THIS MATERIAL AND THE INFORMATION CONTAINED THEREIN IS HELD IN CONFIDENCE AND IN TRUST AND WILL NOT BE USED, REPRODUCED IN WHOLE OR IN PART NOR ITS CONTENTS REVEALED TO OTHERS EXCEPT TO MEET THE PURPOSE FOR WHICH IT WAS DELIVERED. IT IS UNDERSTOOD THAT NO RIGHT IS CONVEYED TO REPRODUCE OR HAVE REPRODUCED ANY ITEM HEREIN DISCLOSED WITHOUT EXPRESS PERMISSION FROM CIPHER DATA PRODUCTS INC

UNLESS OTHERWISE SPECIFIED DIMENSIONS ARE IN INCHES
TOLERANCES ARE
DECIMALS
.X ±
.XX ±
.XXX ±
ANGLES ±
DO NOT SCALE DRAWING

REV STATUS	REV																							
OF SHEETS	SH	1	2	3	4	5	6	7	8	9	10	11	12	13	14	15	16	17	18	19	20	21	22	23	24

APPROVAL	DATE
DWN R LOVELOY	7/14/86
CHK [illegible]	7/14/86
DES ENG [illegible]	7/14/86
SAFETY [illegible]	7-22-86
DES MGR	
MFG ENG [illegible]	1-28-87
ISSUED [illegible]	1-28-87

CIPHER DATA PRODUCTS, INC. SAN DIEGO CALIF.

TITLE: PICT-PWB ASSY, DATA

CODE IDENT	SIZE	DWG NO	REV
32274	D	963674-000	B

SCALE 1/1 | MOD GCR | SH 1 OF 1

BRUNING 40-22

BILL OF MATERIAL

AS OF ALL DATE

CLASS CODE GROUP: 1 UNCLASSIFIED
CLASS CODE: 3400 G.C.R. UNIQUE BOARD ASSY

963674-001 OPCODE: 3 REV: E PWB ASSY-DATA
MODEL:
ECO NO: 30134
DATE OF LAST ECO: 12/14/87

OP: ORDER POLICY CODE
REQ: N=PART OPTIONAL
Y=PART REQUIRED
PF: N=PART DOES NOT PRINT ON SALES ORDER
Y=PART PRINTS ON SALES ORDER W/O PRICE
P=PART PRINTS ON SALES ORDER WITH PRICE

PART NUMBER	DESCRIPTION	OP	RV	ITEM NO.	QTY PER ASSEMBLY	YIELD FACTR	UM	SC	REQ	PF	DEFAULT QUANTITY	DAYS OFF SET	SEQ	REFERENCE DESIGNATOR	EFFECTIV DATE	OBSOLETE DATE
963674-101	DRILL-PWB DATA	1	A	1	1.000	1.000	EA	B	Y	N	1.000	0	0		00/00/00	99/99/99
963674-000	PICT-PWB DATA	0	D	2	0.000	1.000	EA	F	Y	N	0.000	0	0		5/12/86	99/99/99
963674-300	SCHEM-PWB DATA	0	C	3	0.000	1.000	EA	F	Y	N	0.000	0	0		5/12/86	99/99/99
970083-001	INJECTOR/EJECTOR-1/16"	3	B	5	2.000	1.000	EA	B	N	N	2.000	0	0		00/00/00	99/99/99
731006-800	LABEL-ASSY	3	B	6	1.000	1.000	EA	F	N	N	1.000	0	0		00/00/00	99/99/99
970267-001	PIN-TEST,.040SQ X .360LG	3	A	7	74.000	1.000	EA	F	Y	N	74.000	0	0	TP1-6,24-61,63,65,6769,71,73,75,79-82,8485,87,88,90,91,93,9496,97,99,100,102,103105,108,110,117,127,129	5/12/86	99/99/99
970303-020	CONN-HEADER,20 POSN,STR,	3	C	8	1.000	1.000	EA	B	N	N	1.000	0	0	J2	00/00/00*	7/24/87
970961-020	CONN-LOCK/EJECT,20POS,.100CTRS	3	A	8	1.000	1.000	EA	B	Y	N	1.000	0	0	J2 ECO#19500	7/24/87	99/99/99
201204-272	CAP-CER,27PF,50V,5%,NPO	3	P	13	9.000	1.000	EA	B	Y	N	9.000	0	0	C110,210,310,410,510,610,710,810,910	10/10/85	99/99/99
201204-334	CAP-CER,330OPF,50V,5%,NPO	3	P	14	9.000	1.000	EA	B	Y	N	9.000	0	0	C101,201,301,401,501,601,701,801,901	10/10/85	99/99/99
970784-104	CAP-CER,.1UF,50V,-20+80%,AX,*	3	E	15	78.000	1.000	EA	B	Y	N	78.000	0	0	C1-8,10-12,15-19,22,44-64,107,207,307407,507,607,707,807,907,120,220,320,420,520,620,720,820,920,122,222,322,422,522,622,722,822,928-942	5/30/86	99/99/99

BILL OF MATERIAL

AS OF ALL DATE

CLASS CODE GROUP: 1 UNCLASSIFIED
CLASS CODE: 3400 G.C.R. UNIQUE BOARD ASSY

963674-001 OPCODE: 3 REV: E PWB ASSY-DATA
MODEL:
ECO NO: 30134
DATE OF LAST ECO: 12/14/87

OP: ORDER POLICY CODE
REQ: N=PART OPTIONAL
Y=PART REQUIRED
PF: N=PART DOES NOT PRINT ON SALES ORDER
Y=PART PRINTS ON SALES ORDER W/O PRICE
P=PART PRINTS ON SALES ORDER WITH PRICE

PART NUMBER	DESCRIPTION	OP	RV	ITEM NO.	QTY PER ASSEMBLY	YIELD FACTR	UM	SC	REQ	PF	DEFAULT QUANTITY	DAYS OFF SET	SEQ	REFERENCE DESIGNATOR	EFFECTIV DATE	OBSOLETE DATE
970784-104	CAP-CER,.1UF,50V,-20+80%,AX,*	3	E	15	78.000	1.000	EA	B	Y	N	78.000	0	0	922	5/30/86	99/99/99
201114-105	CAP-CER,10000PF,50V,10%,X7R	3	J	16	18.000	1.000	EA	B	N	N	20.000	0	0	C114,214,314,414,514,614,714,814,914,115,215,315,415,515,615,715,815,915	00/00/00	99/99/99
201171-100	CAP-ELEC,10MF,50V,	3	M	17	3.000	1.000	EA	B	Y	N	3.000	0	0	C43,68,923	3/27/86	99/99/99
201204-472	CAP-CER,47PF,50V,5%,NPO	3	P	18	19.000	1.000	EA	B	N	N	29.000	0	0	C9,118,218,318,418,518,618,718,818,918,119,219,319,419,519,619,719,819,919	00/00/00	99/99/99
201160-680	CAP-TANT,6.8MF,35V,10%	3	F	19	1.000	1.000	EA	B	N	N	1.000	0	0	C67	00/00/00	99/99/99
201204-912	CAP-CER,91.0PF,50V,5%,NPO	3	P	20	18.000	1.000	EA	B	N	N	18.000	0	0	C111,211,311,411,511,611,711,811,911,116,216,316,416,516,616,716,816,916	00/00/00	99/99/99
201204-183	CAP-CER,180PF,50V,5%,NPO	3	P	21	9.000	1.000	EA	B	N	N	9.000	0	0	C121,221,321,421,521,621,721,821,921	00/00/00	99/99/99
201204-273	CAP-CER,270PF,50V,5%,NPO	3	P	22	9.000	1.000	EA	B	N	N	9.000	0	0	C117,217,317,417,517,617,717,817,917	00/00/00	99/99/99
201204-473	CAP-CER,470PF,50V,5%,NPO	3	P	23	3.000	1.000	EA	B	N	N	2.000	0	0	C13,14,20	00/00/00	99/99/99
201204-393	CAP-CER,390PF,50V,5%,NPO	3	P	24	27.000	1.000	EA	B	Y	N	27.000	0	0	C104,204,304,404,504,604,704,804,904,105,205,305,4	00/00/00	99/99/99

BILL OF MATERIAL

AS OF ALL DATE

CLASS CODE GROUP: 1 UNCLASSIFIED
CLASS CODE: 3400 G.C.R. UNIQUE BOARD ASSY

963674-001 OPCODE: 3 REV: E PWB ASSY-DATA
MODEL:
ECO NO: 30134
DATE OF LAST ECO: 12/14/87

OP: ORDER POLICY CODE
REQ: N=PART OPTIONAL
Y=PART REQUIRED
PF: N=PART DOES NOT PRINT ON SALES ORDER
Y=PART PRINTS ON SALES ORDER W/O PRICE
P=PART PRINTS ON SALES ORDER WITH PRICE

PART NUMBER	DESCRIPTION	OP	RV	ITEM NO.	QTY PER ASSEMBLY	YIELD FACTR	UM	SC	REQ	PF	DEFAULT QUANTITY	DAYS OFF SET	SEQ	REFERENCE DESIGNATOR	EFFECTIV DATE	OBSOLETE DATE
201204-393	CAP-CER,390PF,50V,5%,NPO	3	P	24	27.000	1.000	EA	B	Y	N	27.000	0	0	05,505,605,705,805,905,109,209,309,409,509,609,709,809,909	00/00/00	99/99/99
201204-154	CAP-CER,1500PF,50V,5%,NPO	3	P	25	9.000	1.000	EA	B	N	N	9.000	0	0	C112,212,312,412,512,612,712,812,912	00/00/00	99/99/99
201204-204	CAP-CER,2000PF,50V,5%,NPO	3	P	26	9.000	1.000	EA	B	N	N	9.000	0	0	C113,213,313,413,513,613,713,813,913	00/00/00	99/99/99
201204-333	CAP-CER,330PF,50V,5%,NPO	3	P	27	27.000	1.000	EA	B	Y	N	27.000	0	0	C103,203,303,403,503,603,703,803,903,106,206,306,406,506,606,706,806,906,108,208,308,408,508,608,708,808,908	00/00/00	99/99/99
201204-224	CAP-CER,2200PF,50V,5%,NPO	3	P	28	9.000	1.000	EA	B	Y	N	9.000	0	0	C102,202,302,402,502,602,702,802,902	00/00/00	99/99/99
201105-474	CAP-CER,.47MF,50V,10%	3	N	29	2.000	1.000	EA	B	Y	N	2.000	0	0	C69,C70	11/13/85	99/99/99
970155-002	INDUCTOR-1.0UH +-10%,	3	G	34	1.000	1.000	EA	B	N	N	1.000	0	0	L1	00/00/00	99/99/99
970155-133	INDUCTOR-33UH,+-10%	3	H	35	9.000	1.000	EA	B	N	N	9.000	0	0	L103,203,303,403,503,603,703,803,903	00/00/00	99/99/99
970155-200	INDUCTOR-100UH,+-10%	3	H	36	9.000	1.000	EA	B	N	N	9.000	0	0	L102,202,302,402,502,602,702,802,902	00/00/00	99/99/99
970155-901	INDUCTOR-1500UH +-10%,	3	H	37	9.000	1.000	EA	B	N	N	9.000	0	0	L101,201,301,401,501	00/00/00	99/99/99

BILL OF MATERIAL
AS OF ALL DATE

CLASS CODE GROUP: 1 UNCLASSIFIED
CLASS CODE: 3400 G.C.R. UNIQUE BOARD ASSY

963674-001 OPCODE: 3 REV: E PWB ASSY-DATA
MODEL:
ECO NO: 30134
DATE OF LAST ECO: 12/14/87

OP: ORDER POLICY CODE
REQ:N=PART OPTIONAL
Y=PART REQUIRED
PF: N=PART DOES NOT PRINT ON SALES ORDER
Y=PART PRINTS ON SALES ORDER W/O PRICE
P=PART PRINTS ON SALES ORDER WITH PRICE

PART NUMBER	DESCRIPTION	OP	RV	ITEM NO.	QTY PER ASSEMBLY	YIELD FACTR	UM	SC	REQ	PF	DEFAULT QUANTITY	DAYS OFF SET	SEQ	REFERENCE DESIGNATOR	EFFECTIV DATE	OBSOLETE DATE
970155-901	INDUCTOR-1500UH +-10%,	3	H	37	9.000	1.000	EA	B	N	N	9.000	0	0	,601,701,801,901	00/00/00	99/99/99
970854-001	TRANSISTOR-2N4124,NPN,TO-92	3	A	38	9.000	1.000	EA	B	Y	N	9.000	0	0	Q102,202,302,402,502,602,702,802,902	5/12/86	99/99/99
970249-001	TRANSISTOR-PNP,SILICON,	3	C	39	1.000	1.000	EA	B	N	N	1.000	0	0	Q3	00/00/00	99/99/99
204010-533	TRANSISTOR-NPN,SILICON	3	F	40	9.000	1.000	EA	B	Y	N	9.000	0	0	Q101,201,301,401,501,601,701,801,901	11/04/86	99/99/99
204007-500	TRANSISTOR-NPN SILICON	3	J	41	1.000	1.000	EA	B	Y	N	1.000	0	0	Q4	5/12/86	99/99/99
200012-511	RES-511 OHM 1/4W 1% FF	3	R	42	9.000	1.000	EA	B	N	N	9.000	0	0	R120,220,320,420,520,620,720,820,920	00/00/00	99/99/99
200200-501	RES,POT-500 OHM CERMET	3	C	44	9.000	1.000	EA	B	Y	N	9.000	0	0	R129,229,329,429,529,629,729,829,929	00/00/00	99/99/99
200214-202	RES,POT-2K	3	D	47	9.000	1.000	EA	B	Y	N	9.000	0	0	R119,219,319,419,519,619,719,819,919	3/27/86	99/99/99
200075-680	RES-680 KOHM 1/4W 5% CF	3	AA	48	9.000	1.000	EA	F	Y	N	9.000	0	0	R105,205,305,405,505,605,705,805,905	00/00/00	99/99/99
200011-681	RES-68.1 OHM 1/4W 1% FF	3	R	49	2.000	1.000	EA	B	N	N	2.000	0	0	R64,68	00/00/00	99/99/99
200072-680	RES-680 OHM 1/4W 5% CF	3	AA	50	9.000	1.000	EA	F	Y	N	9.000	0	0	R127,227,327,427,527,627,727,827,927	00/00/00	99/99/99
200012-332	RES-332 OHM 1/4W 1% FF	3	P	51	9.000	1.000	EA	B	N	N	9.000	0	0	R121,221,321,421,521,621,721,821,921	00/00/00	99/99/99
200012-182	RES-182 OHM 1/4W 1% FF	3	R	52	9.000	1.000	EA	B	N	N	9.000	0	0	R128,228,328,428,528,628,728,828,928,	00/00/00	99/99/99

BILL OF MATERIAL
AS OF ALL DATE

CLASS CODE GROUP: 1 UNCLASSIFIED
CLASS CODE: 3400 G.C.R. UNIQUE BOARD ASSY

963674-001 OPCODE: 3 REV: E PWB ASSY-DATA
MODEL:
ECO NO: 30134
DATE OF LAST ECO: 12/14/87

OP: ORDER POLICY CODE
REQ: N=PART OPTIONAL
Y=PART REQUIRED
PF: N=PART DOES NOT PRINT ON SALES ORDER
Y=PART PRINTS ON SALES ORDER W/O PRICE
P=PART PRINTS ON SALES ORDER WITH PRICE

PART NUMBER	DESCRIPTION	OP	RV	ITEM NO.	QTY PER ASSEMBLY	YIELD FACTR	UM	SC	REQ	PF	DEFAULT QUANTITY	DAYS OFF SET	SEQ	REFERENCE DESIGNATOR	EFFECTIV DATE	OBSOLETE DATE
200012-200	RES-200 OHM 1/4W 1% FF	3	R	53	2.000	1.000	EA	B	N	N	11.000	0	0	R65,67	00/00/00	99/99/99
200012-499	RES-499 OHM 1/4W 1% FF	3	R	54	1.000	1.000	EA	B	Y	N	1.000	0	0	R63	00/00/00	99/99/99
200012-274	RES-274 OHM 1/4W 1% FF	3	R	55	1.000	1.000	EA	B	Y	N	19.000	0	0	R70	10/10/85	99/99/99
200072-300	RES-300 OHM 1/4W 5% CF	3	AA	56	2.000	1.000	EA	F	Y	N	2.000	0	0	R8,66	5/12/86*	5/19/86
200072-330	RES-330 OHM 1/4W 5% CF	3	AA	56	2.000	1.000	EA	F	Y	N	2.000	0	0	R8,66	5/19/86	99/99/99
200013-121	RES-1.21 KOHM 1/4W 1% FF	3	R	57	1.000	1.000	EA	B	Y	N	1.000	0	0	R69	10/10/85	99/99/99
200014-150	RES-15.0 KOHM 1/4W 1% FF	3	R	59	27.000	1.000	EA	F	Y	N	27.000	0	0	R115,215,315,415,515,615,715,815,915,116,216,316,416,516,616,716,816,916,117,217,317,417,517,617,717,817,917	10/10/85	99/99/99
200013-825	RES-8.25 KOHM 1/4W 1% FF	3	R	60	54.000	1.000	EA	F	Y	N	54.000	0	0	R107,207,307,407,507,607,707,807,907,108,208,308,408,508,608,708,808,908,109,209,309,409,509,609,709,809,909,111,211,311,411,511,611,711,811,911,112,212,312,412,512,612,712,812,912,113,213,313,413,513,613,713,813,913	10/10/85	99/99/99
200013-100	RES-1.00 KOHM 1/4W 1% FF	3	R	61	10.000	1.000	EA	F	Y	N	10.000	0	0	R21,130,230,330,430,	00/00/00	99/99/99

CLASS CODE GROUP: 1 UNCLASSIFIED
CLASS CODE: 3400 G.C.R. UNIQUE BOARD ASSY

963674-001 OPCODE: 3 REV: E PWB ASSY-DATA
MODEL:
ECO NO: 30134
DATE OF LAST ECO: 12/14/87

OP: ORDER POLICY CODE
REQ: N=PART OPTIONAL
Y=PART REQUIRED
PF: N=PART DOES NOT PRINT ON SALES ORDER
Y=PART PRINTS ON SALES ORDER W/O PRICE
P=PART PRINTS ON SALES ORDER WITH PRICE

PART NUMBER	DESCRIPTION	OP	RV	ITEM NO.	QTY PER ASSEMBLY	YIELD FACTR	UM	SC	REQ	PF	DEFAULT QUANTITY	DAYS OFF SET	SEQ	REFERENCE DESIGNATOR	EFFECTIV DATE	OBSOLETE DATE
200013-100	RES-1.00 KOHM 1/4W 1% FF	3	R	61	10.000	1.000	EA	F	Y	N	10.000	0	0	530,630,730,830,930	00/00/00	99/99/99
200013-150	RES-1.50 KOHM 1/4W 1% FF	3	R	62	18.000	1.000	EA	B	N	N	9.000	0	0	R118,218,318,418,518,618,718,818,918,131,231,331,431,531,631,731,831,931	00/00/00	99/99/99
200073-270	RES-2.7 KOHM 1/4W 5% CF	3	AA	64	9.000	1.000	EA	F	Y	N	9.000	0	0	R126,226,326,426,526,626,726,826,926	11/04/86	99/99/99
200013-357	RES-3.57 KOHM 1/4W 1% FF	3	R	65	9.000	1.000	EA	B	N	N	9.000	0	0	R114,214,314,414,514,614,714,814,914	00/00/00	99/99/99
200013-392	RES-3.92 KOHM 1/4W 1% FF	3	R	68	10.000	1.000	EA	F	N	N	10.000	0	0	R14,124,224,324,424,524,624,724,824,924	00/00/00	99/99/99
200013-475	RES-4.75 KOHM 1/4W 1% FF	3	R	69	18.000	1.000	EA	F	N	N	45.000	0	0	R122,222,322,422,522,622,722,822,922,123,223,323,423,523,623,723,823,923	00/00/00	99/99/99
200073-390	RES-3.9 KOHM 1/4W 5% CF	3	AA	70	9.000	1.000	EA	F	Y	N	9.000	0	0	R104,204,304,404,504,604,704,804,904	00/00/00	99/99/99
200015-162	RES-162 KOHM 1/4W 1% FF	3	R	73	2.000	1.000	EA	B	N	N	2.000	0	0	R22,24	00/00/00	99/99/99
200015-200	RES-200 KOHM 1/4W 1% FF	3	R	74	3.000	1.000	EA	B	N	N	2.000	0	0	R20,23,39	00/00/00	99/99/99
971207-001	RES-390HM,5W,5%	1	A	75	1.000	1.000	EA	B	Y	N	1.000	0	0	R71 ECO#30134	3/01/88	99/99/99
200072-100	RES-100 OHM 1/4W 5% CF	3	AA	76	18.000	1.000	EA	F	Y	N	18.000	0	0	R101,201,301,401,501,601,701,8	10/10/85	99/99/99

BILL OF MATERIAL

AS OF ALL DATE

CLASS CODE GROUP: 1 UNCLASSIFIED
CLASS CODE: 3400 G.C.R. UNIQUE BOARD ASSY

963674-001 OPCODE: 3 REV: E PWB ASSY-DATA
MODEL:
ECO NO: 30134
DATE OF LAST ECO: 12/14/87

OP: ORDER POLICY CODE
REQ: N=PART OPTIONAL
Y=PART REQUIRED
PF: N=PART DOES NOT PRINT ON SALES ORDER
Y=PART PRINTS ON SALES ORDER W/O PRICE
P=PART PRINTS ON SALES ORDER WITH PRICE

PART NUMBER	DESCRIPTION	OP	RV	ITEM NO.	QTY PER ASSEMBLY	YIELD FACTR	UM	SC	REQ	PF	DEFAULT QUANTITY	DAYS OFF SET	SEQ	REFERENCE DESIGNATOR	EFFECTIV DATE	OBSOLETE DATE
961462-001	S/W-GCR,ASSY,MARK	1	A	100	2.000	1.000	EA	B	N	N	2.000	0	0	U15G,15H	00/00/00	99/99/99
961460-001	S/W-GCR,ASSY,DATA READY	1	A	101	1.000	1.000	EA	B	N	N	1.000	0	0	U12J	00/00/00	99/99/99
962865-001	MASKED PROM-32K(4KX8)	3	A	102	9.000	1.000	EA	B	Y	N	9.000	0	0	U18A,18C,18E,18F,18J,18L,18N,18R,18T	12/19/85	99/99/99
203012-999	IC-4044 DET PHASE FREQ	3	C	103	9.000	1.000	EA	B	N	N	9.000	0	0	U23A,23C,23E,23G,23J,23L,23N,23R,23T	00/00/00	99/99/99
970367-001	IC-4066 SW BILAT QUAD	3	C	104	9.000	1.000	EA	B	N	N	9.000	0	0	U25A,25C,25E,25G,25J,25L,25N,25R,25T	00/00/00	99/99/99
961461-001	S/W-GCR,ASSY,BLOCK	1	A	105	1.000	1.000	EA	B	N	N	1.000	0	0	U15F	00/00/00	99/99/99
203555-111	IC-8036 CIO 16BIT 6MHZ	3	C	106	1.000	1.000	EA	B	N	N	1.000	0	0	U12B	00/00/00	99/99/99
961055-001	SPECIFICATION/ARTWORK-IC	3	C	107	9.000	1.000	EA	B	N	N	9.000	0	0	U26B,26D,26F,26H,26K,26M,26P,26S,26U	00/00/00	99/99/99
970221-001	IC-74LS00 NAND 2IN POS QUAD	3	E	109	6.000	1.000	EA	B	N	N	6.000	0	0	U20B,20D,20J,20P,20U,6B	00/00/00	99/99/99
203081-001	IC-74LS02 NOR 2IN POS QUAD	3	J	110	2.000	1.000	EA	B	N	N	2.000	0	0	U15E,11L	00/00/00	99/99/99
970011-001	IC-74LS04 INV HEX	3	D	111	3.000	1.000	EA	B	N	N	3.000	0	0	U6E,12E,11R	00/00/00	99/99/99
970010-001	IC-74LS08 AND 2IN QUAD	3	B	112	7.000	1.000	EA	B	N	N	11.000	0	0	U3C,3G,6C,10B,19B,19J,19P	00/00/00	99/99/99
203085-001	IC-74LS14 INV SCHMITT HEX	3	J	113	2.000	1.000	EA	B	N	N	2.000	0	0	U1E,13P	00/00/00	99/99/99
203031-600	IC-74LS21 AND 4IN DUAL	3	E	114	1.000	1.000	EA	B	N	N	1.000	0	0	U1A	00/00/00	99/99/99
203035-032	IC-74LS32 OR 2IN QUAD	3	J	115	2.000	1.000	EA	B	N	N	3.000	0	0	U1C,3E	00/00/00	99/99/99
203039-001	IC-74LS74 FF D DUAL	3	M	116	26.000	1.000	EA	B	N	N	26.000	0	0	U21B,22B,23B,22D,23D,22S,20G,22F,23F,22H,23H,21J,22K,23K,22M,23M,21P,22P,23P,21U,22U,23U,1	00/00/00	99/99/99

BILL OF MATERIAL

AS OF ALL DATE

CLASS CODE GROUP: 1 UNCLASSIFIED
CLASS CODE: 3400 G.C.R. UNIQUE BOARD ASSY

963674-001 OPCODE: 3 REV: E PWB ASSY-DATA
MODEL:
ECO NO: 30134
DATE OF LAST ECO: 12/14/87

OP: ORDER POLICY CODE
REQ: N=PART OPTIONAL
Y=PART REQUIRED
PF: N=PART DOES NOT PRINT ON SALES ORDER
Y=PART PRINTS ON SALES ORDER W/O PRICE
P=PART PRINTS ON SALES ORDER WITH PRICE

PART NUMBER	DESCRIPTION	OP	RV	ITEM NO.	QTY PER ASSEMBLY	YIELD FACTR	UM	SC	REQ	PF	DEFAULT QUANTITY	DAYS OFF SET	SEQ	REFERENCE DESIGNATOR	EFFECTIV DATE	OBSOLETE DATE
203039-001	IC-74LS74 FF D DUAL	3	M	116	26.000	1.000	EA	B	N	N	26.000	0	0	0E,23S,11M 13M	00/00/00	99/99/99
203042-001	IC-74LS86 XOR QUAD	3	K	117	1.000	1.000	EA	B	N	N	4.000	0	0	U1G	00/00/00	99/99/99
203094-500	IC-74LS109 FF JK POS EDGE	3	J	118	2.000	1.000	EA	B	N	N	2.000	0	0	U3F,10F	00/00/00	99/99/99
203036-039	IC-74LS125 BUS BUF QUAD	3	F	119	2.000	1.000	EA	B	N	N	2.000	0	0	U1F,13R	00/00/00	99/99/99
203046-156	IC-74LS139 1-4 DUAL	3	G	120	5.000	1.000	EA	B	N	N	5.000	0	0	U19D,19G,19S,,19M,18U	00/00/00	99/99/99
970364-001	IC-74LS148 8-3 LINE OCT	3	A	121	1.000	1.000	EA	B	N	N	1.000	0	0	U12G	00/00/00	99/99/99
203052-380	IC-74LS174 FF D HEX	3	D	122	12.000	1.000	EA	B	N	N	12.000	0	0	U15B,15C,21D,1H,3H,10H,12H,21G,21M,21S,15J,10L	00/00/00	99/99/99
203062-225	IC-74S225 MEM FIFO 16X5 3S	3	C	123	18.000	1.000	EA	B	N	N	18.000	0	0	U20A,21A,20C,21C,20E,21E,20F,21F,20H,21H,21N,20L,,20N,21L,20R,21R,20T,21T	00/00/00	99/99/99
203052-244	IC-74LS244 BFR OCT 3S	3	L	124	4.000	1.000	EA	B	N	N	6.000	0	0	10A,12A,3A 3B	00/00/00	99/99/99
203102-273	IC-74LS273 LATCH D OCT	3	C	125	12.000	1.000	EA	B	N	N	12.000	0	0	U19A,19C,10C,19E,19F,19L,19R,6H,19H,19N,19T,9P	00/00/00	99/99/99
970325-001	IC-74F74 FF D DUAL	3	D	126	2.000	1.000	EA	B	N	N	3.000	0	0	U1B,6F	00/00/00	99/99/99
203065	IC-74180 GEN CHK PAR 9BIT O/E	3	B	127	1.000	1.000	EA	B	N	N	1.000	0	0	U6A	00/00/00	99/99/99
203102-001	IC-74221 MLTV MNST DUAL	3	D	128	18.000	1.000	EA	B	N	N	18.000	0	0	U24B,,24D,25D,25F,25B,25K,24F,24H,25H,25M,24P,25P,24S,25S,24U,25U,24K,24M	00/00/00	99/99/99
203102-245	IC-74LS245 TRANSCEIVR BUS OCT	3	E	129	1.000	1.000	EA	B	N	N	1.000	0	0	U15A	00/00/00	99/99/99
970824-001	IC-74LS688	3	A	130	2.000	1.000	EA	B	Y	N	2.000	0	0	U1M,U3M	5/19/86	99/99/99

BILL OF MATERIAL

AS OF ALL DATE

CLASS CODE GROUP: 1 UNCLASSIFIED
CLASS CODE: 3400 G.C.R. UNIQUE BOARD ASSY

963674-001 OPCODE: 3 REV: E PWB ASSY-DATA
MODEL:
ECO NO: 30134
DATE OF LAST ECO: 12/14/87

OP: ORDER POLICY CODE
REQ: N=PART OPTIONAL
Y=PART REQUIRED
PF: N=PART DOES NOT PRINT ON SALES ORDER
Y=PART PRINTS ON SALES ORDER W/O PRICE
P=PART PRINTS ON SALES ORDER WITH PRICE

PART NUMBER	DESCRIPTION	OP	RV	ITEM NO.	QTY PER ASSEMBLY	YIELD FACTR	UM	SC	REQ	PF	DEFAULT QUANTITY	DAYS OFF SET	SEQ	REFERENCE DESIGNATOR	EFFECTIV DATE	OBSOLETE DATE
962952-001	S/W-GCR,ASSY,ACRC GENERATOR	1	A	131	2.000	1.000	EA	M	Y	N	2.000	0	0	U1J	7/18/86	99/99/99
962962-001	S/W-GCR, ASSY, ECC GENERATOR	1	A	132	1.000	1.000	EA	M	Y	N	1.000	0	0	U6J	7/18/86	99/99/99
203046-150	IC-74LS42 DCDR BCD-DEC	3	C	133	2.000	1.000	EA	B	Y	N	2.000	0	0	U11P,2T	5/12/86	99/99/99
962967-001	S/W-GCR, ASSY,POLYNOMIAL STATE	1	A	134	2.000	1.000	EA	M	Y	N	2.000	0	0	U2P	7/18/86	99/99/99
203102-373	IC-74LS373 LATCH D OCT	3	G	135	2.000	1.000	EA	B	Y	N	2.000	0	0	U2R,5R	5/12/86	99/99/99
203046-148	IC-74LS138 DCDR 3-8 LINE	3	K	136	1.000	1.000	EA	B	Y	N	1.000	0	0	U5T	5/12/86	99/99/99
961707-001	STIFFENER-EDGE,PCB	1	B	146	1.000	1.000	EA	B	N	N	1.000	0	0		00/00/00	99/99/99
970518-001	BUS BAR-12 PIN,INSULATED	3	A	147	2.000	1.000	EA	B	N	N	2.000	0	0		00/00/00	99/99/99
213271-603	SCREW-PHP,ZINC,6-32X3/16	3	G	148	1.000	1.000	EA	F	Y	N	1.000	0	0		5/12/86	99/99/99
970460-001	NUT-SYNC,6-32,HEATSINK,.220MAX	3	D	149	1.000	1.000	EA	B	Y	N	1.000	0	0		00/00/00	99/99/99
209990-071	ADHESIVE-SUPERBONDER	3	C	151	0.000	1.000	EA	F	Y	N	0.000	0	0		11/22/85	99/99/99
964107-001	HEATSINK	3	A	152	1.000	1.000	EA	B	Y	N	1.000	0	0	XVR1	11/04/86	99/99/99
962957-001	S/W-GCR, ASSY, CRC GENERATOR	1	A	153	1.000	1.000	EA	M	Y	N	1.000	0	0	U3J	7/18/86	99/99/99
962972-001	S/W-GCR, ASSY,POLYNOMIAL STATE	1	A	154	1.000	1.000	EA	M	Y	N	1.000	0	0	U5P	7/18/86	99/99/99
970259-005	TUBING-PVC,105DEG,CLEAR,18	3	A	156	.001	1.000	EA	F	Y	N	.001	0	0	ECO#30134	3/01/88	99/99/99
209998-060	LOCTITE TAK PAK	3	B	157	.001	1.000	EA	F	Y	N	.001	0	0	ECO#30134	3/01/88	99/99/99

Reader's Comment Form

This comment form is for the following document

Document Number _____ Revision _____

Document Title _____

Did you find any errors in this document?

Page No	Description of error

Do you have any recommendations for ways to improve this document?

_____

_____

_____

_____

Thank you for taking the time to fill out this form. We appreciate

ape Please do not staple Tape

Name _____

Company _____

Address _____

_____

_____

Date _____

Phone _____

Fold Here

NO POSTAGE
NECESSARY
IF MAILED
IN THE
UNITED STATES

BUSINESS REPLY MAIL
FIRST CLASS PERMIT NO. 5942 SAN DIEGO, CA

Postage will be paid by addressee

cipher®

P.O. Box 85170
San Diego, CA 92138 U.S.A.

Attn: Technical Publications Department M/S A-8

cipher®

P.O. Box 85170
San Diego, California 92138
Telephone: 1-800-4-CIPHER
TWX: 910-335-1251

799891-001
Thirteenth Edition
February 1988

Copyright © Cipher Data Products, Inc., 1988 All rights reserved.