US Army Corps
of Engineers®

MOBILE DISTRICT
109 SAINT JOSEPH STREET
MOBILE AL 36602

UNACCOMPANIED ENLISTED PERSONNEL HOUSING

SOTO CANO AIR BASE, HONDURAS

MOBILE DISTRICT PROJECT CODE : M017EU44

SOLICITATION NUMBER : W9127819R0028

MARCH 2019

SHEET REF.	TITLE OF DRAWINGS
GENERAL	
G-001	COVER SHEET
G-002	INDEX OF DRAWINGS
G-003	INDEX OF DRAWINGS
CIVIL	
C-001	LOCATION/VICINITY MAP
C-002	ABBREVIATIONS
C-003	LEGEND
C-004	GENERAL NOTES
SURVEY	
V-101	EXISTING CONDITIONS
V-601	EXISTING CONDITIONS SCHEDULES
V-701	SURVEY MONUMENTATION
V-702	SURVEY MONUMENTATION
VU101	EXISTING UTILITIES
CIVIL	
CD101	SITE DEMOLITION PLANS
CD102	SITE DEMOLITION PLANS
CS101	SITE LAYOUT
CS401	SITE LAYOUT, MONUMENT RELOCATION
CG101	GRADING PLANS
CG201	DRAINAGE PROFILE
CG501	DRAINAGE DETAILS
CG502	DRAINAGE DETAILS
CG503	BMP DETAILS
CG601	DRAINAGE SCHEDULE
CG701	BMP PLAN PHASE 1
CG702	BMP PLAN PHASE 2
CP101	PLAN AND PROFILE
CP301	TYPICAL SECTIONS
CP501	DETAILS
CP502	SIDEWALK DETAILS
CP503	BOLLARD DETAILS
CP504	TRAFFIC CONTROL DETAILS
CP505	PAVEMENT MARKING AND SIGN DETAILS
CU100	OVERALL UTILITY PLAN
CU101	OVERALL WATER & WASTEWATER PLAN
CU201	SANITARY SEWER PROFILES
CU501	WATER UTILITY DETAILS
CU502	WATER UTILITY DETAILS
CU503	WATER AND SEWER UTILITY DETAILS
CU504	MANHOLE DETAILS(1 OF 2)
CU505	MANHOLE DETAILS(2 OF 2)

SHEET REF.	TITLE OF DRAWINGS
STRUCTURAL	
S-001	GENERAL STRUCTURAL NOTES
S-101	FOUNDATION PLAN
S-102	FOUNDATION PLAN
S-103	SECOND FLOOR FRAMING PLAN
S-104	SECOND FLOOR FRAMING PLAN
S-105	THIRD FLOOR FRAMING PLAN
S-106	THIRD FLOOR FRAMING PLAN
S-107	ROOF FRAMING PLAN
S-108	ROOF FRAMING PLAN
S-109	FIRE PUMP BUILDING PLANS AND SECTIONS
S-301	FOUNDATION SECTIONS
S-302	FOUNDATION SECTIONS
S-303	FLOOR FRAMING SECTIONS
S-304	FLOOR FRAMING SECTIONS
S-305	ROOF FRAMING SECTIONS AND DETAILS
S-306	ROOF FRAMING SECTIONS AND DETAILS
S-307	ROOF FRAMING SECTIONS AND DETAILS
S-308	ROOF FRAMING SECTIONS AND DETAILS
S-401	ENLARGED PLANS
S-402	ENLARGED PLANS
S-501	TYPICAL CONCRETE DETAILS
S-502	TYPICAL CONCRETE DETAILS
S-503	FLOOR FRAMING DETAILS
S-504	TYPICAL MASONRY DETAILS
S-505	TYPICAL MASONRY DETAILS
S-506	ROOF FRAMING DETAILS
ARCHITECTURAL	
A-001	GENERAL NOTES, ABBREVIATIONS
A-002	FIRST AND SECOND AIR BARRIER PLAN
A-003	THIRD FLOOR AIR BARRIER PLAN AND BUILDING SECTION
A-002	FIRST AND SECOND AIR BARRIER PLAN
A-003	THIRD FLOOR AIR BARRIER PLAN AND BUILDING SECTION
A-101	FIRST FLOOR PLAN COMPOSITE
A-102	ENLARGED FIRST FLOOR PLAN – AREA "A"
A-103	ENLARGED FIRST FLOOR PLAN – AREA "B"
A-104	SECOND FLOOR PLAN COMPOSITE
A-105	ENLARGED SECOND FLOOR PLAN – AREA "A"
A-106	ENLARGED SECOND FLOOR PLAN – AREA "B"
A-107	THIRD FLOOR PLAN COMPOSITE
A-108	ENLARGED THIRD FLOOR PLAN – AREA "A"
A-109	ENLARGED THIRD FLOOR PLAN – AREA "B"
A-111	ROOF PLAN, RISER AND ROOF PLAN
A-112	FIRST AND SECOND FLOOR REFLECTED CEILING PLAN
A-113	THIRD FLOOR REFLECTED CEILING PLAN
A-201	NORTH AND WEST ELEVATIONS

SHEET REF.	TITLE OF DRAWINGS
ARCHITECTURAL CONTINUED	
A-202	SOUTH AND EAST ELEVATIONS
A-203	FIRE PUMP BUILDING WALL SECTIONS AND DETAILS
A-310	WALL SECTIONS
A-311	WALL SECTIONS
A-312	WALL SECTIONS
A-400	ENLARGED CORE PLANS
A-401	STAIR PLAN, SECTIONS, AND DETAILS
A-500	MISCELLANEOUS DETAILS
A-510	ROOF DETAILS
A-601	WALL TYPES
A-603	FIRST FLOOR DOOR SCHEDULE
A-604	SECOND FLOOR DOOR SCHEDULE
A-605	THIRD FLOOR DOOR SCHEDULE
A-607	DOOR DETAILS
A-609	WINDOW DETAILS
A-801	PERSPECTIVE VIEWS
INTERIORS	
I-101	FIRST FLOOR
I-102	SECOND FLOOR
I-103	THIRD FLOOR
I-400	TYPICAL SIGNAGE PLAN
I-501	ENLARGED DORM FURNITURE LAYOUT PLAN
I-601	FIRST FLOOR FINISH SCHEDULE
I-602	SECOND FLOOR FINISH SCHEDULE
I-603	THIRD FLOOR FINISH SCHEDULE
FIRE PROTECTION	
FA001	FIRE ALARM & MASS NOTIFICATION LEGEND
FA101	FIRE ALARM & MASS NOTIFICATION PLAN FIRST FLOOR – AREA "A"
FA102	FIRE ALARM & MASS NOTIFICATION PLAN FIRST FLOOR – AREA "B"
FA103	FIRE ALARM & MASS NOTIFICATION PLAN FIRST FLOOR – AREA "A"
FA104	FIRE ALARM & MASS NOTIFICATION PLAN FIRST FLOOR – AREA "B"
FA105	FIRE ALARM & MASS NOTIFICATION PLAN FIRST FLOOR – AREA "A"
FA106	FIRE ALARM & MASS NOTIFICATION PLAN FIRST FLOOR – AREA "B"
FA501	FIRE ALARM & MASS NOTIFICATION DETAILS
FA601	FIRE ALARM & MASS NOTIFICATION RISER DIAGRAMS & MATRICES
FL100	FIRST FLOOR – LIFE SAFETY PLAN
FL101	SECOND AND THIRD FLOOR – LIFE SAFETY PLAN
FAP701	FIRE PUMP LAYOUT
FX001	FIRE SUPPRESSION
FX101	FIRE SUPPRESSION FIRST AND SECOND FLOOR PLANS
FX102	FIRE SUPPRESSION THIRD FLOOR PLAN

US Army Corps of Engineers®

MARK	DESCRIPTION	DATE

DESIGNED BY:
DRAWN BY:
CHECKED BY:
SUBMITTED BY:
SIZE: ANSI D
FILE NAME:
ISSUE DATE: OCTOBER 2018
SOLICITATION NO.: W912781R0028
CONTRACT NO.: -
PROJECT NUMBER: M077EU44

U.S. ARMY CORPS OF ENGINEERS
MOBILE DISTRICT
109 SAINT JOSEPH STREET
MOBILE, ALABAMA

SOTO CANO AIR BASE, HONDURAS
UNACCOMPANIED ENLISTED PERSONNEL HOUSING

INDEX OF DRAWINGS

SHEET ID
G-002

SHEET REF.	TITLE OF DRAWINGS
PLUMBING	
P–001	PLUMBING NOTES, LEGEND, AND SCHEDULE
P–101	PLUMBING FLOOR PLAN
P–102	PLUMBING FLOOR PLAN
P–401	PLUMBING RISERS
P–402	PLUMBING ENLARGED PLANS
P–501	PLUMBING DETAILS
P–502	PLUMBING DETAILS
P–901	PLUMBING ISOMETRIC
MECHANICAL	
M–001	HVAC LEGEND
M–101	HVAC PLAN
M–102	HVAC PLAN
M–301	HVAC BUILDING SECTION
M–601	HVAC SCHEDULES
M–701	HVAC CONTROLS
M–702	HVAC CONTROLS
M–901	HVAC ISOMETRIC
ELECTRICAL & TELECOMMUNICATIONS SITE DEMOLITION PLAN	
ES001	ELECTRICAL & TELECOMMUNICATIONS SITE LEGEND
ES101	ELECTRICAL & TELECOMMUNICATIONS SITE DEMOLITION PLAN
ES102	ELECTRICAL & TELECOMMUNICATIONS SITE PLAN
ES501	ELECTRICAL DISTRIBUTION DETAILS
ES502	ELECTRICAL DISTRIBUTION DETAILS
ES503	TELECOMMUNICATIONS OSP DETAILS
ES601	ELECTRICAL DISTRIBUTION RISER DIAGRAM
ES602	TELECOMMUNICATIONS OSP RISER DIAGRAM
EG101	LIGHTNING PROTECTION PLAN
EG401	LIGHTNING PROTECTION ELEVATIONS
EG501	LIGHTNING PROTECTION DETAILS
EL001	LIGHTING LEGEND
EL101	LIGHTING PLAN FIRST FLOOR – AREA "A"
EL102	LIGHTING PLAN FIRST FLOOR – AREA "B"
EL103	LIGHTING PLAN SECOND FLOOR – AREA "A"
EL104	LIGHTING PLAN SECOND FLOOR – AREA "B"
EL105	LIGHTING PLAN THIRD FLOOR – AREA "A"
EL106	LIGHTING PLAN THIRD FLOOR – AREA "B"
EL501	LIGHTING FIXTURES SCHEDULES & DETAILS
EL502	LIGHTING FIXTURES SCHEDULES & DETAILS
EL503	LIGHTING CONTROL DIAGRAMS & DETAILS
EP001	POWER LEGEND
EP101	POWER PLAN FIRST FLOOR – AREA "A"
EP102	POWER PLAN FIRST FLOOR – AREA "B"
EP103	POWER PLAN SECOND FLOOR – AREA "A"
EP104	POWER PLAN SECOND FLOOR – AREA "B"

SHEET REF.	TITLE OF DRAWINGS
ELECTRICAL CONTINUED	
EP105	POWER PLAN THIRD FLOOR – AREA "A"
EP106	POWER PLAN THIRD FLOOR – AREA "B"
EP501	POWER DETAILS
EP601	ELECTRICAL RISER DIAGRAM
EP602	PANEL SCHEDULES
EP603	PANEL SCHEDULES
EP604	PANEL SCHEDULES
EP605	PANEL SCHEDULES
TELECOMMUNICATIONS	
ET001	TELECOMMUNICATION SYSTEMS LEGEND
ET101	FIRST FLOOR TELECOMMUNICATION SYSTEMS PLAN – AREA "A"
ET102	FIRST FLOOR TELECOMMUNICATION SYSTEMS PLAN – AREA "B"
ET103	SECOND FLOOR TELECOMMUNICATION SYSTEMS PLAN – AREA "A"
ET104	SECOND FLOOR TELECOMMUNICATION SYSTEMS PLAN – AREA "B"
ET105	THIRD FLOOR TELECOMMUNICATION SYSTEMS PLAN – AREA "A"
ET106	THIRD FLOOR TELECOMMUNICATION SYSTEMS PLAN – AREA "B"
ET501	TELECOMMUNICATION SYSTEMS DETAILS
ET502	TELECOMMUNICATION SYSTEMS DETAILS
ET503	TELECOMMUNICATION SYSTEMS DETAILS
ET601	TELECOMMUNICATION SYSTEMS RISER DIAGRAM
EC501	CATHODIC PROTECTION DETAILS
EC502	CATHODIC PROTECTION DETAILS
EC503	CATHODIC PROTECTION DETAILS

US Army Corps of Engineers®

MARK	DESCRIPTION	DATE

DESIGNED BY:
DRAWN BY:
CHECKED BY:
SUBMITTED BY:
SIZE: ANSI D
FILE NAME:
ISSUE DATE: OCTOBER 2018
SOLICITATION NO.: W912781R0028
CONTRACT NO.: -
PROJECT NUMBER: M077EU44

U.S. ARMY CORPS OF ENGINEERS
MOBILE DISTRICT
109 SAINT JOSEPH STREET
MOBILE, ALABAMA

SOTO CANO AIR BASE, HONDURAS
UNACCOMPANIED ENLISTED PERSONNEL HOUSING

INDEX OF DRAWINGS

SHEET ID

G-003

PLAN NORTH

PROJECT LOCATION

N.T.S.

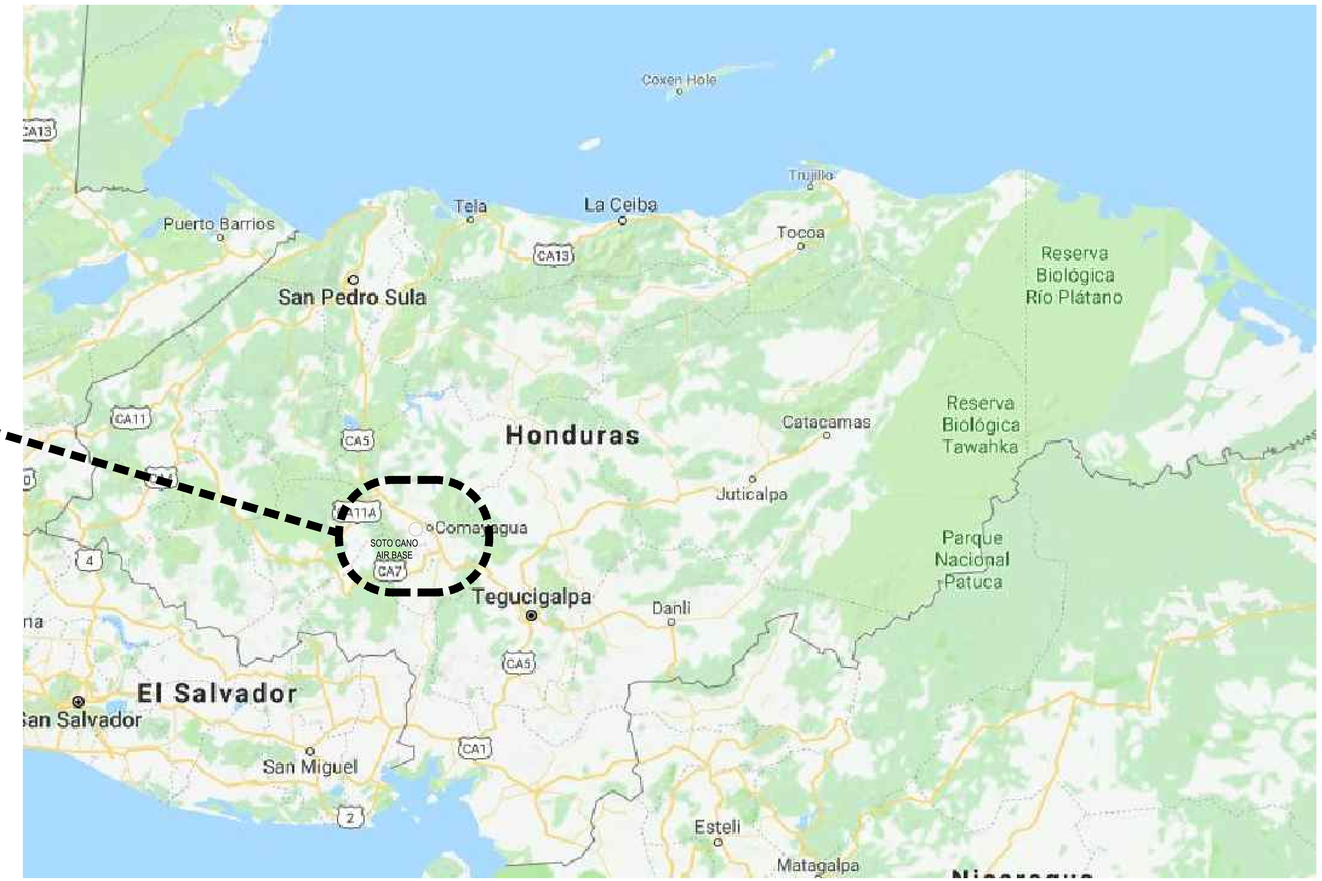

SOTO CANO AIR BASE, HONDURAS

N.T.S.

US Army Corps of Engineers®

MARK	DESCRIPTION	DATE

DESIGNED BY: JBO
DRAWN BY: KES
CHECKED BY: CPE
SUBMITTED BY: RAVO
SIZE: ANSI D
ISSUE DATE: FEBRUARY 2019
SOLICITATION NO.: W912781R0028
CONTRACT NO.: -
PROJECT NUMBER: M017EU44
FILE NAME: M017EU44C-001.dwg

U.S. ARMY CORPS OF ENGINEERS
MOBILE DISTRICT
MOBILE, ALABAMA

SOTO CANO AIR BASE, HONDURAS
UNACCOMPANIED ENLISTED PERSONNEL HOUSING

LOCATION/VICINITY MAP

SHEET ID
C-001

A

@	AT
A/C	AMPS INTERRUPTING CAPACITY (SYM RMS)
AB	ANCHOR BOLT
ABT	ABOUT
AC	ALTERNATING CURRENT
ACSR	ALUMINUM CONDUCTOR STEEL REINFORCED
ACST	ACOUSTIC
AD	ACCESS DOOR OR AREA DRAIN
AFF	ABOVE FINISH FLOOR
AFFF	AQUEOUS FILM-FORMING FOAM
AFG	ABOVE FINISH GRADE
AGG	AGGREGATE
AHU	AIR HANDLING UNIT
AI	AREA INLET
AIC	AMPS INTERRUPTING CAPACITY (SYM RMS)
AL	ALUMINUM
ALT	ALTERNATE
AMP	AMPERE
AP	ACCESS PANEL
APPD	APPROVED
APPROX	APPROXIMATE
ARCH	ARCHITECTURAL
ASPH	ASPHALT
ASWG	AMERICAN WIRE GAUGE
ATC	ACOUSTICAL TILE CEILING
AUTO	AUTOMATIC
AVE	AVENUE
AVG	AVERAGE

B

B & B	BALL AND BURLAP
BM	BEGIN BENCH MARK
BATT	BATTEN INSULATION
BCE	BASE CIVIL ENGINEER
BDY	BOUNDARY
BIT	BITUMINOUS
BL	BUILDING LINE
BLDG	BUILDING
BLDG. DIR	BUILDING DIRECTORY
BLK	BLOCK
BLKG	BLOCKING
BM	BEAM
BOC	BACK OF CURB
BOF	BOTTOM OF FOOTING
BOS	BOTTOM OF STEEL
BOT	BOTTOM
BRCG	BRACING
BRDG	BRIDGING
BRG	BEARING
BRKT	BRACKET
BT	BENT
BTU	BRITISH THERMAL UNIT
BTUH	BTU PER HOUR
BVCE	BEGIN VERTICAL CURVE ELEVATION
BVCS	BEGIN VERTICAL CURVE STATION

C

{ or CL	CENTER LINE
C TO C	CENTER TO CENTER
C&G	CURB & GUTTER
C. or CND	CONDUIT (for raceway)
C.I.	CAST IRON
C.O.E	CORPS OF ENGINEERS
C.O.R	CONTRACTING OFFICER REPRESENTATIVE
CAB	CABINET
CAP	CAPACITY
CB	CATCH BASIN
cc:SPF	CLOSED CELL SPRAY FOAM INSUL.
CE	COVER ELEVATION
CEM	CEMENT
CFM	CUBIC FEET PER MINUTE
CG	CORNER GUARD
CI	CURB INLET
CIR	CIRCULAR
CJ	CONSTRUCTION JOINT
CKD	CHECKED
CKT	CIRCUIT
CL	CENTER LINE
CL	CLEARANCE
CLG	CEILING
CLKG	CAULKING
CLR	CRUSHED LIMEROCK BASE
CLOS	CLOSED
CMP	CORRIGATED METAL PIPE
CMT	CERAMIC MOSAIC TILE
CMU	CONCRETE MASONRY UNITS
CNTR	COUNTER
CO	CLEANOUT
COL	COLUMN
COM	COMMON
COMB	COMBINATION
COMB.	COMBUSTION
COMM	COMMUNICATIONS
COMP	COMPRESSIBLE
CONC	CONCRETE
CONN	CONNECTOR
CONSTR	CONSTRUCTION
CONT.	CONTINUOUS
COR	CONTRACTING OFFICERS REPRESENTATIVE
CORR	CORRIDOR
COV	COVERED
CP	CONCRETE PIPE
CPL	CEMENT PLASTER
CPS or	CYCLES PER SECOND
CRES	CORROSIVE RESISTANT STEEL
CRG	CARRIAGE
CRS	COURSE
CSK	COUNTERSUNK
CSO	COMBINATION SEWER OUTFLOW
CTB	CEMENT TREATED BASE
CTR	CENTER
CTRL	CONTROL
CTU	CERAMIC TILE UNGLAZED
CU	CONDENSING UNIT
CU YD	CUBIC YARDS
CUH	CABINET UNIT HEATER
CV	CEILING VENT
CW	COLD WATER
CWR	CHILLED WATER RETURN
CWRR	CHILLED WATER REVERSE RETURN
CWS	CHILLED WATER SUPPLY
CYL	CYLINDER

D

d	PENNY (as in nail-10d)
D	DATUM OR DRYER
D&M	DRESSED & MATCHED
D or DBL	DOUBLE
D.C.J.	DOWELED CONTROL JOINT
D.I.	DUCTILE IRON
DA	DOUBLE ACTING
DB	DRY BULB
DC	DIRECT CURRENT
DCJT	DUMMY CONTROL JOINT
DCL	DOOR CLOSER
DDESB	DEPT. DEFENSE EXPLOSIVE SAFTETY BOARD
DEG	DEGREE
DEPR	DEPRESSION
DEPT	DEPARTMENT
DF	DRINKING FOUNTAIN
DH	DOUBLE HUNG
DHWR	DOMESTIC HOT WATER RETURN
DHWS	DOMESTIC HOT WATER SUPPLY
DIA or ~	DIAMETER
DIAG	DIAGONAL
DIAPH	DIAPHRAGM
DIM	DIMENSION
DIST	DISTRIBUTION
DN STR	DOWN STREAM
DO	DOOR OPENING
DOIM	DIVISION OF INFORMATION MANAGEMENT
DOM	DOOR OPERATOR MOTOR
DP	DAMPPROOFING
DPST	DOUBLE POLE SNGL THROW
DR	DRAIN
DS	DOWN SPOUT
DTL	DETAIL
DWD	DRINKING WATER DISPENSER
DWG	DRAWING
DWLS	DOWELS

E

E	EAST
EA	EACH
EF	EXHAUST FAN
EOC	EDGE OF CURB
EOP	EDGE OF PAVEMENT
EL/ELV	ELEVATION (GRADE or BLDG)
ELEC	ELECTRICAL OR ELECTRIC
EM	EMERGENCY
ENCL	ENCLOSURE
ENG.	ENGINEERING
ENT	ENTRANCE
EOC	EDGE OF CURB
EOD	EXPLOSIVE ORDINANCE DISPOSAL
EP / EOP	EDGE OF PAVEMENT
EQ	EQUAL
EQUIP	EQUIPMENT
ERP	ENVIRONMENTAL RESOURCE PERMIT
EST	ESTIMATE
EW	EACH WAY
E.W.C.	ELECTRIC WATER COOLER
EXC	EXCAVATE
EXIST	EXISTING
EXP	EXPOSED
EXPN	EXPANSION
EXT	EXTERIOR
EVCE	END VERTICAL CURVE ELEVATION
EVCS	END VERTICAL CURVE STATION

F

F	FAHRENHEIT
F.P.M.	FEET PER MINUTE
F.S.	FAR SIDE OR FULL SIZE
FA	FRESH AIR
FCU	FAN COIL UNIT
FC	FOOT CANDLE
FCG	FACING
FDN	FOUNDATION
FEC	FIRE EXTINGUISHER CABINET
FF	FINISH FLOOR
FG	FINISH GRADE
FH	FIRE HYDRANT
FHC	FIRE HOSE CABINET
FIG	FIGURE
FIN.	FINISH
FIX.	FIXTURE
FL	FLOOR
FLASH.	FLASHING
FLG	FLOORING
FLUOR	FLUORESCENT
FOC	FIBER OPTIC CABLE
FP	FIRE PROTECTION
FPRF	FIRE PROOF
FR	FRAME OR FIRE RATED
FT	FEET OR FINNED TUBE
FTG	FOOTING
FURR'G	FURRING

G

G	GAS
G.C.O.	GROUND CLEANOUT
G.V.	GATE VALVE
GA	GAUGE
GAL	GALLON
GALV	GALVANIZED
GCAB	GRADED CRUSHED AGGREGATE BASE / SURFACE
GEN	GENERAL
GI	GALVANIZED IRON
GL	GLASS
GOVT.	GOVERNMENT
GPM	GALLONS PER MINUTES
GR	GRADE
GRND	GROUND
GRTG	GRATING
GRVL	GRAVEL
GTD	GRADE TO DRAIN
GWB	GYPSUM WALLBOARD
GWT	GLAZED WALL TILE
GYP	GYPSUM

H

H.PT.	HIGH POINT
H.S.	HIGH STRENGTH
HB	HOSE BIBB
HBD	HARDBOARD
HDW	HARDWARE
HDR	HEADER
HTR	HEATER
HEP	HORIZONTAL ELLIPTICAL PIPE
HMA	HOT MIX ASPHALT
HOA	HANDS OFF AUTO
HP	HORSE POWER
HPW	HIGH PRESSURE WASHER
HR	HOUR
HSB	HIGH STRENGTH BOLT
HSGYP	HIGH-STRENGTH GYPSUM PLASTER
HT	HEIGHT
HTG	HEATING
HTR	HEATER
HW	HOT WATER
HWH	HOT WATER HEATER
HWR	HOT WATER RETURN
HWRR	HOT WATER RETURN
HWS	HOT WATER SUPPLY
HYD	HYDRAULIC

I

I OR FE	IRON
I.D.	INSIDE DIAMETER
I.P.	IRON PIPE
IAW	IN ACCORDANCE WITH
IBC	INTERNATIONAL BUILDING CODE
IC	INTERCOM
IE	INVERT ELEVATION
IES	ILLUMINATING ENG. SOCIETY
IESCR	INTERUPTING ELECTRICAL SHORT CIRCUIT RATING
IN	INCH
INSUL.	INSULATION
INT	INTERIOR
INV	INVERT
IRH	INFRA-RED HEATER
IS	INDUSTRIAL SEWER

J

JB	JUNCTION BOX
JC	JANITOR CLOSET
JCT	JUNCTION
JST	JOIST
JT	JOINT

K

K	ALGEBRAIC DIFFERENCE IN GRADE / LENGTH VERTICAL CURVE
KIT	KITCHEN
KL	KEY LOCK
KP	KICK PLATE
KSF	KIPS/SQUARE FOOT
KSI	KIPS/SQUARE INCH
KV	KILOVOLTS
KVA	KILOVOLT AMPERES
KVAR	KILOVOLT AMPERES REACTIVE
KW	KILOWATTS
KWH	KILOWATT HOUR METER

L

L	LUMEN
LAU	LAUNDRY
LAV	LAVATORY
LBR	LUMBER
LBS	POUND
LD	LOAD
LDG	LOADING
LG	LENGTH
LIN	LINEAR
LIS	LAWN IRRIGATION SYSTEM
LLH	LONG - LEG HORIZONTAL
LLV	LONG - LEG VERTICAL
LNDG	LANDING
LNTL	LINTEL
LONG	LONGITUDINAL
LP	LOW POINT
LPS	LIGHT PROOF SHADE
LT	LIGHT
LT. WT.	LIGHT WEIGHT
LVC	LENGTH VERTICAL CURVE

M

M	THOUSAND
M & B	MATCHED & BEADED
MACH	MACHINE
MAS	MASONRY
MAT	MATERIAL
MAX	MAXIMUM
MC	MEDICINE CABINET
MCM	THOUSAND CIRCULAR MILLS
ME	MATCH EXISTING
MECH	MECHANICAL
MES	MITERED END SECTION
MET.	METAL
MFG	MANUFACTURING
MFR	MANUFACTURE
MG	MOTOR GENERATOR
MH	MANHOLE
MHGY	MAHOGANY
MIN	MINIMUM
ML	METAL LATH
MLDG	MOULDING
MO	MASONRY OPENING
MON	MONUMENT
MONO	MONOLITHIC
MOT	MOTOR
MSTC	MASTIC
MT	METAL THRESHOLD
MTD	MOUNTED
MTN	MOUNTAIN
MUTCD	MANUAL OF UNIFORM TRAFFIC CONTROL DEVICES
MW	MONITORING WELL

N

N	NORTH
NEC	NATIONAL ELECTRICAL CODE
NEMA	NATIONAL ELECTRICAL MANUFACTURERS' ASSOCATION
NIC	NOT IN CONTRACT
NOI	NOT IN CONTRACT
NTP	NOTICE OF INTENT NOTICE TO PROCEED

O

OA	OUTSIDE AIR
OB WG	OBSCURE WIRE GLASS
OBGL	OBSCURE GLASS
OBSC	OBSCURE
OC	ON CENTERS
OD	OUTSIDE DIMENSION
OFF.	OFFICE
OH	OVERHEAD
OPNG	OPENING
OPP	OPPOSITE
OPP. HD.	OPPOSITE HAND
OPS	OPERATIONS
OSP	OUTSIDE PLANT CABLE
OVSCP	OVERFLOW SCUPPER
OWS	OIL WATER SEPARATOR

P

P	POLE
P. LAM.	PLASTIC LAMINATE
P/S	PRESTRESSED
PA	PUBLIC ADDRESS
PAN. B	PANIC BOLT
PBS	PUSH BUTTON STATION
PCC	PORTLAND CEMENT CONCRETE
PD	PAVEMENT DRAIN
PERF	PERFORATED
PH or 0	PHASE
PI	POINT OF INTERSECTION
PIV	POST INDICATOR VALVE
PL	PLATE
PLAS	PLASTER
PLATF	PLATFORM
PLBG	PLUMBING
PLG	PILING
PLY WD	PLYWOOD
PNL	PANEL
PNL BD	PANEL BOARD
POL	POLISH
PORC	PORCELAIN
POB	POINT OF BEGINNING
PP	POWER POLE
PR	PAIR
PREFAB	PREFABRICATED
PROJ	PROJECTION
PROP	PROPOSED
PRPT	PARAPET
PRV	PRESSURE REGULATING VALVE
PSF	POUNDS/SQUARE FOOT
PSI	POUNDS/SQUARE INCH
PT	POINT
PTD	PAINTED
PVMT	PAVEMENT

Q

QD	QUANTITY DISTANCE
¼RD	QUARTER ROUND
Q.T.	QUARRY TILE
QT	QUART
QTERS	QUARTERS

R

R	RISER
R.D.	ROOF DRAIN
R.S.	ROOF SCUTTLE
RA	RETURN AIR
RAD or R	RADIUS
RB	RUBBER BASE
RC	RADIATOR CONVECTOR
RC	REMOTE CONTROL
RCB	REINFORCED CONCRETE BOX
RCP	REINFORCED CONCRETE PIPE
RCVR	RECEIVER
RD	ROAD
RD OR ~	ROUND
RECP	RECEPTACLE
RECR	RECREATION
REF or RE:	REFERENCE
REFR	REFRIGERATOR
REG	REGISTER OR REGULAR
REINF	REINFORCEMENT
REM	REMOVABLE
REQ'D	REQUIRED
REQMTS	REQUIREMENTS
REV	REVISIONS
RGE	RANGE
RGH	ROUGH
RM	ROOM
ROW	RIGHT OF WAY
RUB	RUBBER

S

S	SOUTH
S.D.	SUPPLY DIFFUSER
S.ST.	STAINLESS STEEL
S/W	SIDEWALK
SA	SUPPLY AIR
SAF	SUPPLY AIR FAN
SB	SPLASH BLOCK
SCHD	SCHEDULE
SCP	SCUPPER
SCR	SCREW
SCUT	SCUTTLE
SD	STORM DRAIN
SDMH	STORM DRAIN MANHOLE
SEC	SECTION
SECY	SECRETARY
SEQ	SEQUENCE
SFU	STRUCTURAL FACING UNIT
SHT	SHEET
SHTHG	SHEATHING
SIM	SIMILAR
SM	SAND SILTY SAND POORLY GRADED
SPA	SPACING
SPDT	SINGLE POLE DBL THROW
SPEC	SPECIFICATIONS
SPF	SOUNDPROOF
SPH	SPACE HEATER
SPKR	SPEAKER
SPL	SPECIAL
SQ	SQUARE
SQUAD	SQUADRON
SR	SUPPLY REGISTER
SS	SANITARY SEWER
SSMH	SANITARY SEWER MANHOLE
SSMR	STRUCTURAL STANDING SEAM METAL ROOF PANELS
ST	STRAND
STA	STATION
STD	STANDARD
STF	STIFFENER
STGR	STRINGER
STL	STEEL
STN	STONE
STOR	STORAGE
STR	STRUCTURAL
STWY	STAIRWAY
SU	SPARE UNIT
SUB FL	SUB FLOOR
SUSP	SUSPENDED
SW	SWITCH
SWPPP	STORMWATER POLLUTION PREVENTION PLAN
SYMM	SYMMETRICAL

T

T	TREAD
T.O.	TOP OF
TA	TRAINING AREA
TAB	TOP AND BOTTOM
TAN.	TANGENT
TAP	WATTAGE TAP
TBD	TO BE DETERMINED
TBR&R	TO BE REMOVED AND REPLACED
TCP	TRAFFIC CONTROL PLAN
TEL	TELEPHONE
TEMP	TEMPERATURE
TER	TERRAZZO
TERM	TERMINAL
TGL	TOGGLE
TH	THRESHOLD
THERMO	THERMOSTAT
THK	THICK
TOC	TOP OF CONCRETE
TOIL.	TOILET
TOPO	TOPOGRAPHY
TOS	TOP OF STEEL
TP	TEST PIT
TTB	TELE TERMINAL BOARD
TV	TELEVISION
TYP	TYPICAL

U

U.S.	UNITED STATES
UC	UNIT COOLER
UG	UNDERGROUND
UGE	UNDERGROUND ELECTRIC
UH	UNIT HEATER
UIP	USE IN PLACE
UL	UNDERWRITERS' LABORATORIES
UNEX	UNEXCAVATED
UNFIN	UNFINISHED
UNO	UNLESS NOTED OTHERWISE
UPSTR	UPSTREAM
UT	UTILITY
UV	UNIT VENTILATOR

V

V	VOLT
VB	VINYL BASE
VC	VINYL-WALL COVERING
VCP	VITRIFIED CLAY PIPE
VCT	VINYL COMPOSITION TILE
VENT	VENTILATION or VENTILATOR
VERT	VERTICAL
VFDU	VARIABLE FREQUENCY DRIVE UNIT
VOL	VOLUME
VS	VENT STACK
VTR	VENT THRU ROOF

W

W	WEST
W.E.	WATER ELEVATION
W.I.	WROUGHT IRON
W/	WITH
W/O	WITHOUT
WB	WET BULB
WC	WATER CLOSET
WD	WOOD
WF	WIDE FLANGE
WH	WALL HYDRANT
WHM	WATT HOUR METER
WKS	WORK SHOP
WL	WATER LINE
WP	WEATHER PROOF
WPF	WATER PROOF
WPFG	WATER PROOFING
WRB	WARDROBE
WS	WASTE STACK OR WEATHER STRIPPING
WSA	WEAPON STORAGE AREA
WT	WEIGHT
WV	WATER VALVE
WWF	WELDED WIRE FABRIC

X

XFMR	TRANSFORMER

Y

Y.D.	YARD DRAIN
YD	YARD

US Army Corps of Engineers®

MARK	DESCRIPTION	DATE

DESIGNED BY: JBO
DRAWN BY: KES
CHECKED BY: CPE
SUBMITTED BY: BALVO
SIZE: ANSI D
ISSUE DATE: FEBRUARY 2019
SOLICITATION NO.: W912T819R0028
CONTRACT NO.: -
PROJECT NUMBER: M017EU44
FILE NAME: M017EU44C-002.dwg

U.S. ARMY CORPS OF ENGINEERS
MOBILE DISTRICT
MOBILE, ALABAMA

SOTO CANO AIR BASE, HONDURAS
UNACCOMPANIED ENLISTED PERSONNEL HOUSING

ABBREVIATIONS

SHEET ID
C-002

CIVIL LEGEND (PROPOSED)

	HOTMIX ASPHALT (HMA) FLEXIBLE PAVEMENT SECTION	WD	WASTE DRAIN		MANHOLE SELF EXPLANATORY DEPENDING ON TYPE OF UTILITY LINE
	FIRE LANE	X X	SECURITY FENCE		CURB INLET
	CONCRETE SIDEWALK	200mm FW	FIRE PROTECTION WATERLINE		AREA INLET
635.01	SPOT GRADE ELEVATIONS	FM	FORCE MAIN		FLARED END SECTION
	DIRECTION OF DRAINAGE	US	UNDERGROUND STEAM SUPPLY GAS METER		BARREL TYPE FIRE HYDRANT & VALVE ON 6" WATER LINE
	CULVERT	G	GAS		WATER LINE FLUSHING HYDRANT & VALVE ON 3" WATER LINE
SD	STORM DRAIN	GAS MAIN	GAS MAIN		GATE VALUE & VALVE BOX
	HAUL ROAD	152	CONTOUR		REDUCED PRESSURE BACKFLOW PREVENTER
	POV ROUTE		OBJECT MARKER		POST INDICATOR VALVE
	SUBDRAIN OUTLET LINE		SIGN	MT	PROPERTY LINE MONUMENT
100mm WL	DOMESTIC WATERLINE	L	LIFT STATION	N 98.8 E 59.7	NORTHING - EASTING LABEL
100mm SS	SANITARY SEWER		VALVE BOX		TEMPORARY BARRICADES
SF	SILT FENCE BARRIER	MANHOLE BODY	SANITARY SEWER MANHOLE	BFP	BACKFLOW PREVENTER
O/EH	OVERHEAD HIGH VOLTAGE ELECTRIC	MANHOLE LID	NOTE: MANHOLE LID ORITIETATION SHALL BE IN THE DIRECTION AS SHOWN ON CU101		TREE PROTECTION
	PROJECT LIMITS (CLEAR & GRUB WITHIN LIMITS)				

DEMOLITION / REMOVAL LEGEND

	TREE REMOVAL		CONCRETE SIDEWALK (120MM THICK)		WATER AND SEWER LINE
	BUILDING, SLAB SLAB FOUNDATION		ASPHALT PAVEMENT		WATER AND SEWER LINE

SURVEY/EXISTING CONDITIONS LEGEND

O/EH	ELECTRICAL - OVERHEAD (HIGH VOLTAGE)		CHAINLINK FENCE	S OR	SANITARY SEWER MANHOLE OR BOX
O/EM	ELECTRICAL - OVERHEAD (MEDIUM VOLTAGE)	//	WOOD BOARD FENCE	D OR D	STORMWATER MANHOLE OR BOX
O/EL	ELECTRICAL - OVERHEAD (LOW VOLTAGE)	A/C	AC UNIT	WVB	WATER VALVE BOX
UEH	ELECTRICAL - UNDERGROUND (HIGH VOLTAGE)	FAB	FIRE ALARM BOX		WATER VALVE
UEM	ELECTRICAL - UNDERGROUND (MEDIUM VOLTAGE)	CB	COMMUNICATIONS BOX OR CABINET	WM	WATER METER
UEL	ELECTRICAL - UNDERGROUND (LOW VOLTAGE)	OR GI	STORM DRAINAGE GRATE INLET	WP	WATER PUMP
O/C	COMMUNICATIONS - OVERHEAD (GENERIC - UNKNOWN TYPE)	CDM	COMMUNICATIONS DUCT BANK MARKER (CONCRETE)		FIRE HYDRANT
UC	COMMUNICATIONS - UNDERGROUND (GENERIC - UNKNOWN TYPE)	EPB	ELECTRICAL PANEL BOARD OR ELECTRICAL PULL BOX	JB	JERSEY BARRIER
O/T	TELEPHONE - OVERHEAD	OR	SIGN (SINGLE OR DOUBLE POST)	CO	SANITARY SEWER CLEANOUT
UT	TELEPHONE - UNDERGROUND	D-XX	TEMPORARY BENCHMARK	PL	PEDESTAL LIGHT
O/F	FIBER OPTIC - OVERHEAD	BM-XX	BENCHMARK		GUYWIRE
UF	FIBER OPTIC - UNDERGROUND	BLD	BOLLARD		VEGETATION - TREE
CD	CONDUIT - EMPTY (NO LINES IN CONDUIT)	HB	HOSE BIBB		
SS	SANITARY SEWER LINE	BAR-XX-17	SOIL BORING		
SSFM	SANITARY SEWER FORCE MAIN		POWER POLE		
WLxx	WATER LINE		SPOT LIGHT		
	DITCH CENTERLINE	L	LIGHT POLE		
SD	STORMDRAIN PIPE	T	POWER POLE WITH TRANSFORMER		

TABLE 1: DISCIPLINE DESIGNATOR

C-	GENERAL
V-	SURVEY EXISTING CONDITIONS
CD	CIVIL DEMOLITION
CS	CIVIL SITE
CG	CIVIL GRADING
CP	CIVIL SITE PAVING
CU	CIVIL SITE UTILITY

GENERAL NOTES

1. THESE LEGENDS ARE COMPOSED OF STANDARD SYMBOLS AND ARE PERTINENT TO THE CONDITIONS ON THIS SET OF DRAWINGS TO THE EXENT APPLICABLE

2. ADDITIONAL LEGENDS AND/OR ANOTHER LEGEND SHEET MAY APPEAR IN THIS SET OF DRAWINGS TO INDICATE SPECIFIC CONDTIONS IN LIEU OF SYMBOLS SHOWN ON THIS SHEET.

US Army Corps of Engineers®

MARK	DESCRIPTION	DATE

DESIGNED BY: JBQ	ISSUE DATE: FEBRUARY 2019
DRAWN BY: KES	SOLICITATION NO.: W912T819R0028
CHECKED BY: JLL	CONTRACT NO.: -
SUBMITTED BY: JLL	PROJECT NUMBER: M077EU44
SIZE: ANSI D	FILE NAME: M077EU44C-003.dwg

U.S. ARMY CORPS OF ENGINEERS
MOBILE DISTRICT
MOBILE, ALABAMA

SOTO CANO AIR BASE, HONDURAS
UNACCOMPANIED ENLISTED PERSONNEL HOUSING

LEGEND

SHEET ID
C-003

GENERAL NOTES

1. NORMAL WORKING HOURS ARE DEFINED AS 0800 - 1700, MONDAY THRU FRIDAY. WORK SCHEDULED AFTER NORMAL WORKING HOURS SHALL BE SUBMITTED IN WRITING TO THE COR 30 DAYS IN ADVANCE OF THE WORK TO BE PERFORMED SO THAT BASE OPERATIONS CAN COORDINATE. SUBMITTAL DOES NOT GUARANTEE APPROVAL.
2. ALL CONTRACTOR VEHICLES AND PERSONNEL SHALL BE RESPONSIBLE FOR COORDINATING WITH THE BASE SECURITY OFFICE IN OBTAINING PROPER SECURITY CLEARANCE AND BADGING PRIOR TO ENTERING SECURE AREAS.
3. ALL CONTRACTOR VEHICLES AND PERSONNEL MAY BE SEARCHED BY SOTO CANO SECURITY POLICE WHEN ENTERING THE BASE AND MAY EXPERIENCE DELAYS. ALL VEHICLES ENTERING THE BASE MUST HAVE CURRENT/VALID REGISTRATION, CURRENT/VALID INSURANCE, AND CURRENT/VALID DRIVERS LICENSE FOR THE OPERATOR.
4. CONTRACTOR SHALL PROVIDE AND INSTALL A PROFESSIONALLY PAINTED SIGN, MEETING CONTRACTING OFFICER APPROVAL, AT THE CONSTRUCTION ENTRANCE TO DIRECT MATERIAL SUPPLIERS AND EMPLOYEES TO THE CONSTRUCTION SITE.
5. ALL PERSONNEL ENTERING SOTO CANO AIR BASE MUST HAVE A VALID PHOTO ID PER BASE SECURITY REQUIREMENTS.
6. NON-CONSTRUCTION PEDESTRIAN TRAFFIC SHALL NOT BE ALLOWED INSIDE THE CONSTRUCTION LIMITS.
7. ALL CONSTRUCTION EQUIPMENT AND CONTRACTOR CONSTRUCTION VEHICLES SHALL BE MARKED WITH COMPANY PAINTED DESIGNS, INSIGNIAS OR OTHER COMPANY MARKINGS, WHICH ARE CLEARLY VISIBLE.
8. CONTRACTOR CONSTRUCTION EQUIPMENT SHALL HAVE AUTOMATIC SIGNALING DEVICES TO SOUND IN ALARM WHEN MOVING IN REVERSE. VEHICLES ACCESSING THE AIRFIELD MUST BE EQUIPPED WITH A FLASHING/ROTATING AMBER LIGHT, AND BE OPERATING WHEN ON THE AIRFIELD.
9. ONLY RUBBER TIRED VEHICLES SHALL BE ALLOWED ON EXISTING PAVEMENT THAT IS TO REMAIN.
10. CONTRACTOR SHALL COORDINATE ACTIVITIES THROUGHOUT THE PROJECT IN A MANNER THAT ALLOWS EMERGENCY ACCESS TO ALL EXISTING ROADWAYS AT ALL TIME WITHOUT DELAY TO EMERGENCY VEHICLE RESPONSE TIME.
11. CONTRACTOR'S DRIVERS SHALL BE REQUIRED TO HAVE THE NECESSARY AIRFIELD DRIVING COURSE VIA BASE OPERATIONS.
12. LOCATION OF CONTRACTOR'S STAGING AREA SHALL BE WITHIN THE SOTO CANO AB LAY DOWN AREA. CONTRACTOR'S STAGING AREA SHALL BE SUBJECT TO APPROVAL OF CONTRACTING OFFICER'S REPRESENTATIVE. AVAILABILITY OF CONTRACTOR'S STAGING AREA SHALL BE DEPENDENT ON TIMING OF OTHER GOVERNMENT PROJECTS. WHEN NOT ENGAGED IN CONSTRUCTION ACTIVITY, THE CONTRACTOR'S CONSTRUCTION EQUIPMENT AND VEHICLES SHALL BE PARKED IN THE CONTRACTOR'S STAGING AREA.
13. STAGING AREA AND ANY OTHER AREA DISTURBED BY CONTRACTOR DURING CONSTRUCTION SHALL BE RESTORED TO ORIGINAL OR BETTER CONDITION OF EXISTING SITE, SUBJECT TO THE APPROVAL OF THE CONTRACTING OFFICERS REPRESENTATIVE.
14. CONTRACTOR SHALL COORDINATE WITH CONTRACTING OFFICER'S REPRESENTATIVE ANY GOVERNMENT-OWNED EQUIPMENT REQUIRING RELOCATION TO COMPLETE WORK.
15. THE CONTRACTOR SHALL TAKE THE STEPS TO ENSURE THAT PROJECT CONSTRUCTION ACTIVITY DOES NOT INTERFERE WITH REGULAR BASE OPERATIONS. REGULAR BRIEFINGS SHALL BE CONDUCTED BY THE CONTRACTOR WITH THE RESPONSIBLE BASE OFFICIALS FOR THE PURPOSE OF COORDINATING CONSTRUCTION ACTIVITIES AND SCHEDULED BASE OPERATIONS. THE CONTRACTOR SHALL BE RESPONSIBLE FOR COORDINATING THE INTERVAL (WEEKLY, BIWEEKLY, ETC.) FOR THE REQUIRED BRIEFINGS PRIOR TO COMMENCEMENT OF SITE CONSTRUCTION ACTIVITY. THE BASE COMMANDER AND/OR THE CONTRACTING OFFICER'S REPRESENTATIVE SHALL HAVE THE AUTHORITY TO IMMEDIATELY SUSPEND AUTHORIZATION TO WORK IN A PARTICULAR AREA OF THE SITE DURING MILITARY EMERGENCIES OR FOR BASE SECURITY REASONS.
16. CONTRACTOR IS REQUIRED TO SURVEY (USING PROJECT CONTROL AND DATUMS) ALL UTILITY LINES AND APPURTENANCES IMMEDIATELY AFTER INSTALLATION FOR UPDATING RED-LINE AS-BUILT DRAWINGS MAINTAINED ON-SITE BY THE CONTRACTOR.
17. ALL CRANES COMING ON BASE MUST BE FIRST COORDINATED WITH COE/BASE TO GET FULL EXTENSION AND EXPECTED DURATION. THIS MUST BE SUPPLIED TO THE AIRFIELD PRIOR TO CRANE'S ARRIVAL. CONTRACTOR MUST HAVE A TEMPORARY CRANE PERMIT IN HAND PRIOR TO ANY CRANE ACTIVITY.
18. UNLESS OTHERWISE DIRECTED, THE CONTRACTOR SHALL DISPOSE OF ALL WASTE AND UNSUITABLE MATERIAL OFF BASE AT AN APPROVED DISPOSAL AREA.

COORDINATION NOTES

1. CONTRACTOR SHALL APPOINT A CONSTRUCTION SUPERINTENDENT, SUBJECT TO THE APPROVAL OF THE CONTRACTING OFFICER, WHO SHALL BE PRESENT ON THE CONSTRUCTION SITE AT ALL TIMES DURING WORKING HOURS WHILE JOB IS IN PROGRESS. THE SUPERINTENDENT SHALL BE DESIGNATED THE RESPONSIBLE CONTRACTOR'S REPRESENTATIVE WHO SHALL BE AVAILABLE ON A 24-HOUR BASIS. WHEN THE CONTRACTOR'S REPRESENTATIVE IS NOT AVAILABLE ON THE CONSTRUCTION SITE, AN ALTERNATE REPRESENTATIVE SHALL BE PROVIDED.
2. PRIOR TO CONSTRUCTION, THE CONTRACTOR SHALL CORDON OFF THE WORK AREAS AND STREET CROSSINGS BY USING BARRICADES APPROVED BY THE CONTRACTING OFFICER, AS NEEDED.
3. THE CONTRACTOR SHALL BE RESPONSIBLE FOR LAYOUT OF THE PROJECT AND THE EXPENSE THEREOF. IT SHALL BE THE CONTRACTOR'S RESPONSIBILITY TO ENSURE THAT NO IMPROVEMENTS ARE CONSTRUCTED ON OFF-SITE PARCELS.
4. IT WILL BE THE CONTRACTOR'S RESPONSIBILITY TO DETERMINE IF THE REQUIRED CONSTRUCTION CAN BE PERFORMED WITHIN THE AREA PROVIDED AND COMPLY WITH REQUIREMENTS OF THE SAFETY AND HEALTH REGULATIONS (OSHA) FOR CONSTRUCTION PROJECTS OF THIS TYPE. ANY SAFETY MEASURES OR METHOD OF CONSTRUCTION THAT IS NECESSARY IN THE CONSTRUCTION OF THIS PROJECT TO COMPLY WITH THESE REGULATIONS IS THE CONTRACTOR'S RESPONSIBILITY.

SURVEY NOTES:

1. ALL DIMENSIONS ARE IN METERS (m), OTHERWISE AS INDICATED.
2. TOPOGRAPHIC SURVEY WAS PERFORMED BETWEEN OCTOBER 19, 2017 AND NOVEMBER 13, 2017 BY CIVIL ENGINEER DOUGLAS ESCOBAR, PROFESSIONAL LICENSE: 12728 (COLEGIO DE ING. DE GUATEMALA). ADDRESS: 30 CALLE 12-79 ZONA 12, CIUDAD DE GUATEMALA, GUATEMALA.
3. USACE PROVIDED THE COORDINATES AND ELEVATION OF BM-BAR-1, BM-BAR-2, BM-BAR-3 AND TBM2 TO TIE IN THE PROJECT SURVEY. TOTAL STATION WAS SET UP OVER BM94 AND ORIENTATION WAS SET WITH BM95.
4. HORIZONTAL COORDINATES ARE UTM SYSTEM ASSOCIATED TO 16 N ZONE.
5. UTILITY LINES DATA WAS COLLECTED BY SURVEYOR AND COMPLEMENTED WITH UTILITY BASE DRAWINGS (LAST UPDATED VERSION FROM JUNE 05, 2013).

HAUL ROUTE NOTES

1. SITE ACCESS AND HAUL ROUTES SHALL BE COORDINATED AND APPROVED BY THE CONTRACTING OFFICER.

HAUL ROUTE NOTES (CONT'D)

2. THE CONTRACTOR AND COR SHALL DOCUMENT THE EXISTING CONDITION OF THE HAUL ROUTE THROUGH THE BASE, BY VIDEO OR PHOTOGRAPHY, PRIOR TO COMMENCEMENT OF CONSTRUCTION. ANY DAMAGES TO THE
3. HAUL ROUTE ROAD(S) SHALL BE REPAIRED TO THE SATISFACTION OF THE COR AT THE CONTRACTORS EXPENSE.
4. THE CONTRACTOR SHALL MAINTAIN UNOBSTRUCTED ACCESS FROM THE HAUL ROAD TO THE WORK SITE AND FACILITATE GOVERNMENT ACCESS TO THE BASE AT ALL TIMES. THE MAINTENANCE OF HAUL ROADS SHALL BE THE SOLE RESPONSIBILITY OF THE CONTRACTOR AT NO ADDITIONAL COST TO THE GOVERNMENT.
5. CONTRACTOR SHALL MAINTAIN THE ACCESS/HAUL ROUTE TO BE FREE OF DEBRIS CAUSED FROM CONSTRUCTION ACTIVITIES, ON A DAILY BASIS, PRIOR TO RUNWAY OPENING. CONTRACTOR SHALL SWEEP AND CLEAN AFFECTED ROADWAYS. CONTRACTOR TO PROVIDE ALL EQUIPMENT NECESSARY TO PERFORM THE TASK.
6. CONTRACTOR IS TO MAINTAIN PAVEMENT AND MARKINGS FOR AIRFIELD ROADS, OVERRUN, AND TAXIWAY ALONG THE HAUL ROUTE. MAINTENANCE OF PAVEMENT AND MARKINGS WILL BE AT THE EXPENSE OF THE CONTRACTOR.

TRAFFIC CONTROL/PHASING

1. CONTRACTOR SHALL COORDINATE WITH CONTRACTING OFFICER'S REPRESENTATIVE 10 DAYS IN ADVANCE OF ANY LANE OR ROADWAY CLOSURES.
2. SEE SHEET CP504 FOR SINGLE LANE CLOSURE PLAN AND CONSTRUCTION MINOR ENCROACHMENT DETAIL.

BEST MANAGEMENT PRACTICES (BMP) NOTES

1. CONTRACTOR IS FULLY RESPONSIBLE FOR OBTAINING ALL PERMITS REQUIRED FOR SEDIMENT AND EROSION CONTROL FOR DISCHARGES FROM LARGE AND SMALL CONSTRUCTION SITES.
2. THE CONTRACTOR SHALL BE RESPONSIBLE FOR PROPER INSTALLATION/APPLICATION OF ALL BMP'S. THE SEDIMENT AND EROSION CONTROL BEST MANAGEMENT PRACTICES INDICATED HEREIN ARE INTENDED AS A MINIMUM BMP PLAN. THE BMP PLAN SHALL BE AMENDED AS NECESSARY FOR THE SPECIFIC PROJECT REQUIREMENTS AS DIRECTED BY THE CONTRACTING OFFICERS REPRESENTATIVE.
3. EROSION AND SEDIMENT CONTROL SHALL BE THE RESPONSIBILITY OF THE CONTRACTOR. THE CONTRACTOR SHALL DEVELOP HIS OWN BMP PLAN DESIGNED FOR THE SPECIFIC SITE WITH METHOD(S) OF CONSTRUCTION PREFERRED BY THE CONTRACTOR FOR EACH PHASE OF CONSTRUCTION. THE CONTRACTOR'S BMP PLAN SHALL MEET THE PROJECT SPECIFICATIONS, LOCAL REQUIREMENTS, AND THE MINIMUM BMP REQUIREMENTS SHOWN IN THIS PLAN SET. THE CONTRACTOR'S BMP PLAN SHALL BE DESIGNED TO MINIMIZE EROSION OF THE NEWLY GRADED AREAS OF THE SITE, AND SHALL PREVENT SEDIMENTS FROM EXITING THE PROJECT SITE.
4. EROSION CONTROL MEASURES MUST BE IN PLACE PRIOR TO ANY DISTURBANCE. THE CONTRACTOR SHALL IN STALL APPROVED BMP MEASURES PRIOR TO BEGINNING ANY CLEARING, GRADING, EXCAVATION, FILLING OR OTHER LAND DISTURBING ACTIVITIES, EXCEPT THOSE OPERATIONS NEEDED TO INSTALL SUCH MEASURES.
5. THE CONTRACTOR SHALL INSPECT EROSION AND SEDIMENT CONTROL MEASURES DAILY AND MAKE NEEDED REPAIRS OR MAINTENANCE BEFORE WORK STOPS FOR THE DAY.
6. THE CONTRACTOR SHALL MAINTAIN THE APPROVED EROSION AND SEDIMENT CONTROL MEASURES AT ALL TIMES. IF FULL IMPLEMENTATION OF THE APPROVED BMP PLAN DOES NOT PROVIDE FOR EFFECTIVE EROSION CONTROL, ADDITIONAL BMPS SHALL BE IMPLEMENTED TO CONTROL OR TREAT THE SEDIMENT SOURCE. ALL ADDED BMP'S SHALL BE APPROVED BY THE CONTRACTING OFFICER'S REPRESENTATIVE PRIOR TO IMPLEMENTATION, AND INSTALLED PER DETAILS OR MANUFACTURES RECOMMENDATIONS. THE CONTRACTOR IS REQUIRED TO IMPLEMENT ANY BMP'S REQUIRED OR AS DIRECTED BY THE CONTRACTING OFFICER'S REPRESENTATIVE.
7. EROSION CONTROL DEVICES SHALL BE USED FOR THE STAGING AREA AND ANY MATERIAL STOCK PILES WHEN NECESSARY TO CONTROL EROSION AND STORM WATER RUNOFF. THE CONTRACTOR SHALL PROTECT STOCKPILES WITH SILT FENCE, COVER WITH PLASTIC OR OTHER MEANS NECESSARY TO PREVENT STOCKPILE EROSION.
8. STOCKPILED MATERIAL SHALL BE CONSTRAINED IN A MANNER TO PREVENT ITS MOVEMENT BY WIND FORCES.
9. THE CONTRACTOR SHALL INSTALL BMP 3, SEDIMENT TRACKING CONTROL, AT THE LOCATION OF THE PROPOSED NEW ROAD. THE TRACKING CONTROL SHALL EXTEND FROM DE JULIO AVENUE THROUGH TO THE EXISTING DIRT/AGGREAGATE ROAD TO THE NORTH. THE BMP 3 SHALL BE INCORPORATED INTO THE PAVEMENT STRUCTURE FOR THE NEW ROAD. TYPE 3 BMP SHALL BE REQUIRED AT ALL EXIT POINTS FROM CONTRACTOR STAGING AREAS AND OTHER LOCATIONS AS REQUIRED OR DIRECTED BY THE CONTRACTING OFFICER'S REPRESENTATIVE.
10. ALL SEEDING FOR TEMPORARY AND PERMANENT STABILIZATION SHALL BE DONE AS EACH AREA IS MADE READY. ALL AREAS THAT RECEIVE TEMPORARY SEEDING SHALL BE MULCHED WITH HAY STRAW.
12. CONTRACTOR SHALL SPRIG AND FERTILIZE ALL AREAS DISTURBED DURING CONSTRUCTION OUTSIDE THE LIMITS OF PAVED AREAS IN ACCORDANCE WITH THE CONTRACT SPECIFICATIONS AFTER COMPLETION OF ALL PAVING AND TOPSOIL FINISH GRADING WORK FOR EACH PHASE OF THE PROJECT.
13. LIMITS OF CONSTRUCTION IS DEFINED AS THOSE AREAS AFFECTED BY THE CONTRACTOR'S OPERATIONS INVOLVING EXCAVATION, EMBANKMENT AND FINAL GRADING REQUIRED TO COMPLETE THE WORK IN ACCORDANCE WITH THE ELEVATIONS, GRADES AND SECTIONS SHOWN IN THESE DRAWINGS.
14. THE CONTRACTOR SHALL SPRIG ALL DISTURBED AREAS WITHIN THE SITE LIMITS, INCLUDING ALL CUT AND FILL SECTIONS IN ACCORDANCE WITH THE PLANS AND SPECIFICATIONS. SPRIGS SHALL BE AS SPECIFIED. CONTRACTOR SHALL MAINTAIN GRASS UNTIL A PERMANENT VEGETATIVE COVER HAS BEEN ESTABLISHED PRIOR TO FINAL ACCEPTANCE OF THE PROJECT. ESTABLISHMENT OF A PERMANENT VEGETATIVE COVER SHALL INCLUDE: PLACEMENT OF TOPSOIL, APPLICATION OF FERTILIZER, PLANTING OF GRASS SPECIES SELECTED, IRRIGATIONS AS REQUIRED, AND RAKING OR HAND FINISHING.

EXCAVATION AND TRENCHES NOTES

1. OPEN TRENCHES AND EXCAVATIONS WITHIN THE CONSTRUCTION SITE SHALL BE PROMINENTLY MARKED WITH ORANGE FENCING OR OTHER MEANS ACCEPTABLE TO THE COR.
2. ALL TOPSOIL SHALL BE STRIPPED FROM ALL AREAS WITHIN THE LIMITS OF CONSTRUCTION AND STOCKPILED FOR LATER USE IN THE UPPER 100MM OF FINISHED GRADE TO PROVIDE A SUITABLE GRASS BED. THE CONTRACTOR SHALL RECEIVE APPROVAL FROM THE CONTRACTING OFFICERS REPRESENTATIVE FOR TOPSOIL STOCKPILE LOCATIONS.
3. PRIOR TO CONSTRUCTION THE CONTRACTOR SHALL LOCATE ALL UTILITIES. ANY UTILITY ADJUSTMENTS, EXISTING OR PROPOSED, REQUIRED TO COMPLETE CONSTRUCTION UNDER THIS CONTRACT SHALL BE THE RESPONSIBILITY OF THE CONTRACTOR. THIS ITEM INCLUDES, BUT IS NOT LIMITED TO; THE TEMPORARY RELOCATION OF EXISTING OVERHEAD POWER LINES. ALL WORK IN THE VICINITY OF OVERHEAD POWER LINES SHALL CONFORM TO OSHA REQUIREMENTS AND ANY OTHER APPLICABLE (LOCAL) SAFETY REQUIREMENTS. THE CONTRACTOR IS TO REPAIR ALL DAMAGES TO EXISTING UTILITIES THAT ARE TO REMAIN IN SERVICE IMMEDIATELY AT NO ADDITIONAL COSTS OR EXPENSE TO THE GOVERNMENT.
4. ALL WORK IN AND ADJACENT TO STREETS OR ROADS SHALL BE COORDINATED WITH CONTRACTING OFFICER'S REPRESENTATIVE. THE CONTRACTOR SHALL PROVIDE THE CONTRACTING OFFICERS REPRESENTATIVE WITH A ONE-WEEK ADVANCE NOTICE PRIOR TO BEGINNING OF WORK ADJACENT TO BASE ROADWAYS. NO WORK ADJACENT TO OR ON EXISTING ROADS SHALL BE INITIATED WITHOUT PRIOR APPROVAL FROM THE CONTRACTING OFFICER'S REPRESENTATIVE.

SAFETY AND SECURITY REQUIREMENT NOTES

1. CONTRACTOR SHALL MAINTAIN SAFETY PRACTICES THAT CONFORM TO LOCAL REGULATIONS AND USACE SAFETY MANUAL EM385-1-1.
2. OPEN FLAME WELDING OR TORCH CUTTING OPERATIONS IS PERMITTED; CONTRACTOR MUST OBTAIN A HOT WORK PERMIT FROM THE SOTO CANO AIR BASE FIRE DEPARTMENT.
3. THE CONTRACTOR SHALL BE RESPONSIBLE FOR TEMPORARY FENCING OR OTHER SECURITY MEASURES REQUIRED TO PROTECT WORK OR EQUIPMENT DURING CONSTRUCTION.

LANDSCAPING NOTES

1. CONTRACTOR SHALL SEED OR SOD ALL PROPOSED TIE SLOPES, AREAS SHOWN IN PLANS, AND DISTURBED AREAS IN THE PLANS AND PER SPECIFICATIONS.

US Army Corps of Engineers®

MARK	DESCRIPTION	DATE

DESIGNED BY: JBQ	ISSUE DATE: FEBRUARY 2019
DRAWN BY: KBK	SOLICITATION NO.: W912T819R0028
CHECKED BY: CPE	CONTRACT NO.: -
SUBMITTED BY: PWO	PROJECT NUMBER: M077EL44
SIZE: ANSI D	FILE NAME: M077EL44C-004.dwg

U.S. ARMY CORPS OF ENGINEERS
MOBILE DISTRICT
MOBILE, ALABAMA

SOTO CANO AIR BASE, HONDURAS
UNACCOMPANIED ENLISTED PERSONNEL HOUSING

GENERAL NOTES

SHEET ID
C-004

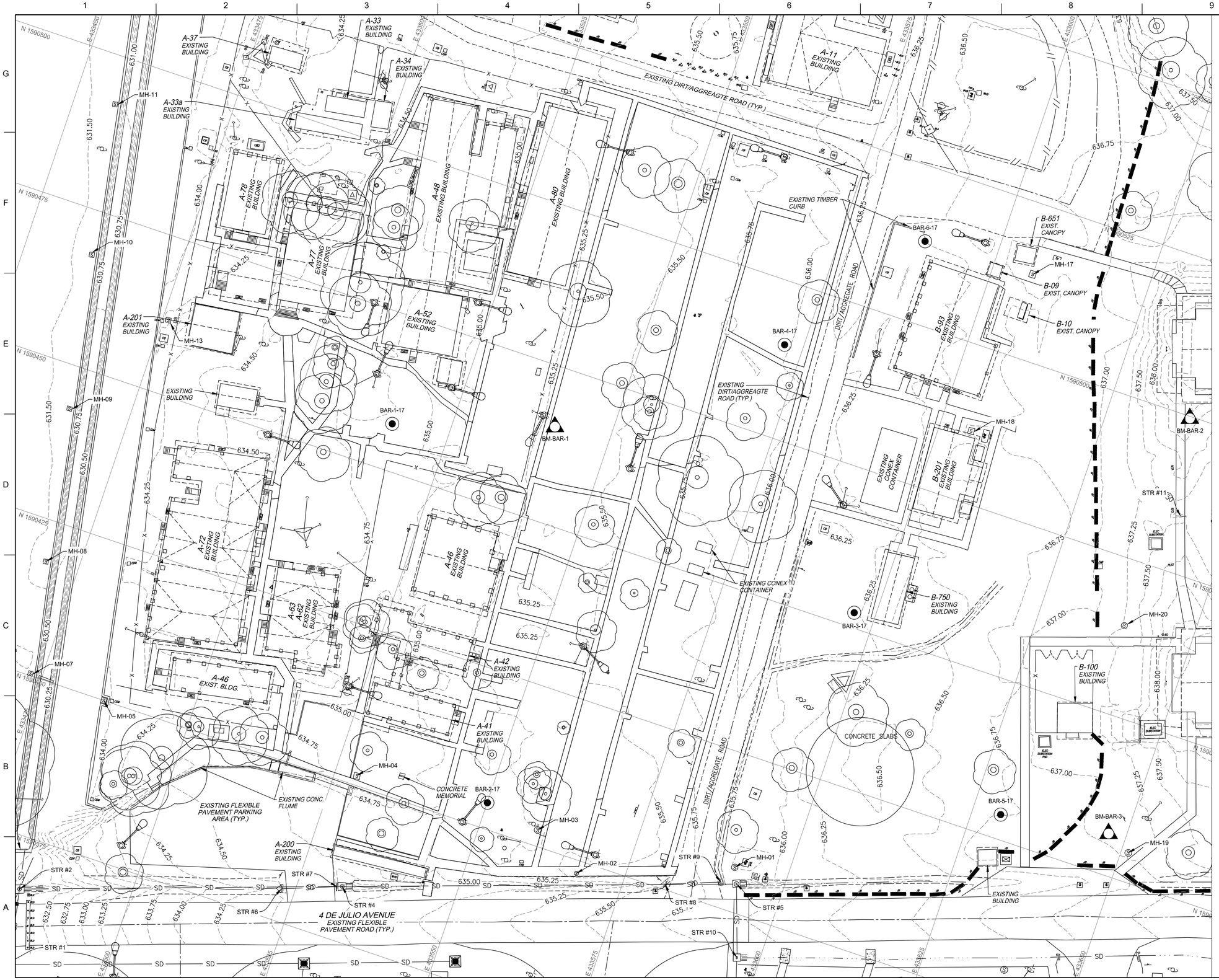

GENERAL NOTE:

1. ALL DIMENSIONS ARE IN METERS (m), OTHERWISE AS INDICATED.
2. TOPOGRAPHIC SURVEY WAS PERFORMED BETWEEN OCTOBER 19, 2017 AND NOVEMBER 13, 2017 BY CIVIL ENGINEER DOUGLAS ESCOBAR, PROFESSIONAL LICENSE: 12728 (COLEGIO DE ING. DE GUATEMALA). ADDRESS: 30 CALLE 12-79 ZONA 12, CIUDAD DE GUATEMALA, GUATEMALA.
3. TBM-1 COORDINATES AND ELEVATION WERE CALCULATED FROM TBM-2 USING THE TOTAL STATION.
4. TBM-2 COORDINATES AND ELEVATION WERE PROVIDED BY USACE IN 2014.
5. TBM-2 ELEVATIONS IS BASED ON EGM96 (GLOBAL) GEOID MODEL.
6. HORIZONTAL COORDINATES ARE UTM SYSTEM ASSOCIATED TO 16 N ZONE.
7. UTILITY LINES DATA WAS COLLECTED BY SURVEYOR AND COMPLEMENTED WITH UTILITY BASE DRAWINGS (LAST UPDATED VERSION FROM JUNE 05, 2013).
8. SEE V-601 FOR BENCHMARK,SOIL BORING DATA AND STORM DRAINAGE TABLE.

PLAN NORTH

0 6000 12000

SCALE: 1 : 300

US Army Corps of Engineers®

MARK	DESCRIPTION	DATE

DESIGNED BY: JBQ	ISSUE DATE: FEBRUARY 2019
DRAWN BY: JBC	SOLICITATION NO.: W912TB19R0028
CHECKED BY: CPE	CONTRACT NO.: -
SUBMITTED BY: PWO	PROJECT NUMBER: M017EU44
SIZE: ANSI D	FILE NAME: M017EU44V-101.dwg

U.S. ARMY CORPS OF ENGINEERS
MOBILE DISTRICT
MOBILE, ALABAMA

SOTO CANO AIR BASE, HONDURAS
UNACCOMPANIED ENLISTED PERSONNEL HOUSING

EXISTING CONDITIONS

SHEET ID

V-101

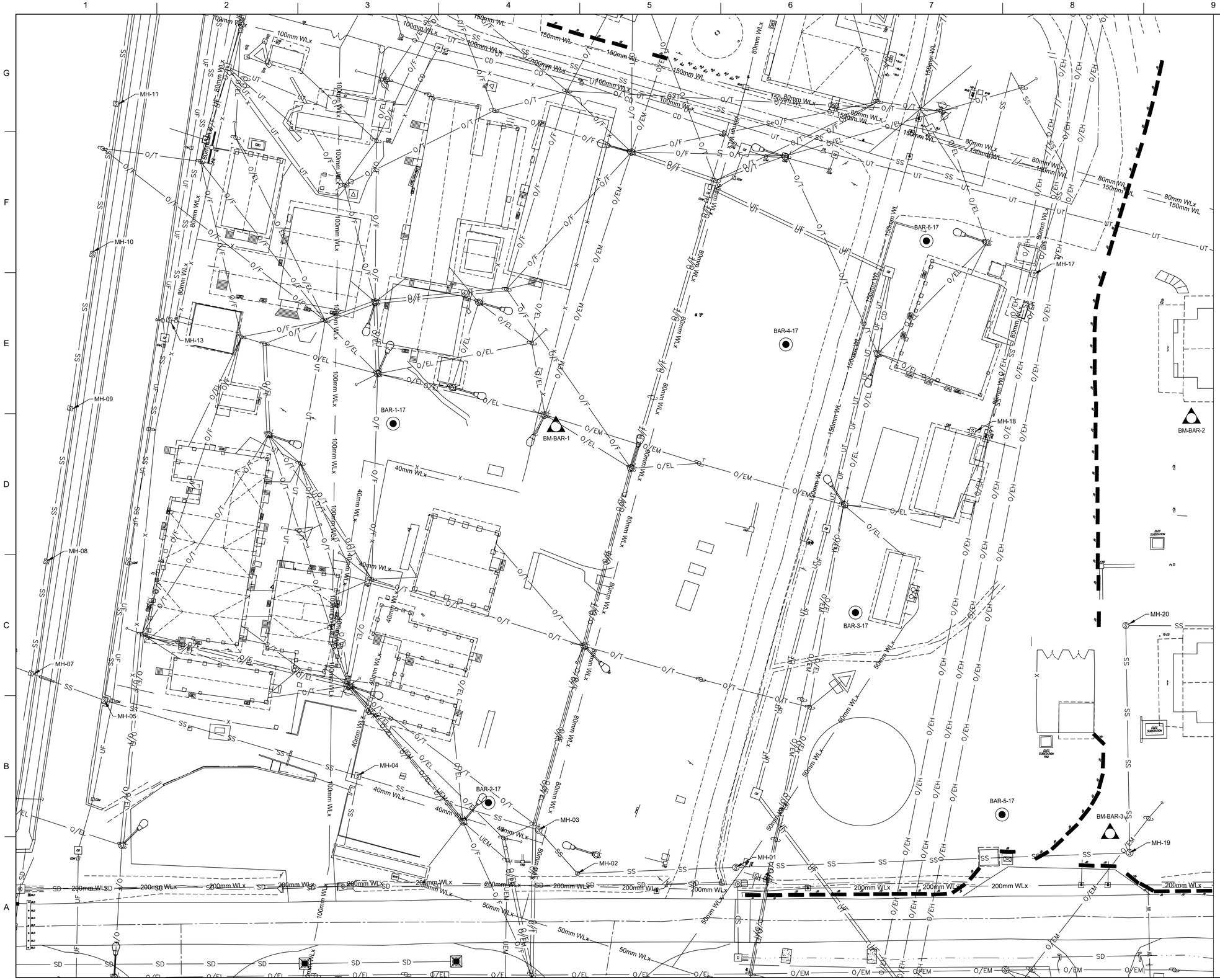

GENERAL NOTE:

1. ALL DIMENSIONS ARE IN METERS (m), OTHERWISE AS INDICATED.
2. TOPOGRAPHIC SURVEY WAS PERFORMED BETWEEN OCTOBER 19, 2017 AND NOVEMBER 13, 2017 BY CIVIL ENGINEER DOUGLAS ESCOBAR, PROFESSIONAL LICENSE: 12728 (COLEGIO DE ING. DE GUATEMALA). ADDRESS: 30 CALLE 12-79 ZONA 12, CIUDAD DE GUATEMALA, GUATEMALA.
3. TBM-1 COORDINATES AND ELEVATION WERE CALCULATED FROM TBM-2 USING THE TOTAL STATION.
4. TBM-2 COORDINATES AND ELEVATION WERE PROVIDED BY USACE IN 2014.
5. TBM-2 ELEVATIONS IS BASED ON EGM96 (GLOBAL) GEOID MODEL.
6. HORIZONTAL COORDINATES ARE UTM SYSTEM ASSOCIATED TO 16 N ZONE.
7. UTILITY LINES DATA WAS COLLECTED BY SURVEYOR AND COMPLEMENTED WITH UTILITY BASE DRAWINGS (LAST UPDATED VERSION FROM JUNE 05, 2013).
8. SEE SHEET V-601 FOR EXISTING UTILITY INFORMATION.

PLAN NORTH

0 6000 12000

SCALE: 1 : 300

US Army Corps of Engineers®

MARK	DESCRIPTION	DATE

DESIGNED BY: JBO	ISSUE DATE: FEBRUARY 2019
DRAWN BY: JBC	SOLICITATION NO.: W912T819R0028
CHECKED BY: CPE	CONTRACT NO.: -
SUBMITTED BY: RAMOS	PROJECT NUMBER: M017EU44
SIZE: ANSI D	FILE NAME: M017EU44V101.dwg

U.S. ARMY CORPS OF ENGINEERS
MOBILE DISTRICT
MOBILE, ALABAMA

SOTO CANO AIR BASE, HONDURAS
UNACCOMPANIED ENLISTED PERSONNEL HOUSING

EXISTING UTILITIES

SHEET ID

V-102

BENCHMARK DATA TABLE

DESIGNATION	NORTHING	EASTING	ELEVATION	DESCRIPTION
TBM 1	1590211.091	433630.231	635.218	EXISTING BENCHMARK
TBM 2	1590175.466	433666.082	636.147	EXISTING BENCHMARK (SEE NOTE 4 & 5)
BM-BAR-1	1590465.465	433540.927	635.445	NEW BENCHMARK
BM-BAR-2	1590499.676	433638.137	638.149	NEW BENCHMARK
BM-BAR-3	1590431.637	433647.157	637.139	NEW BENCHMARK

SOIL BORING DATA TABLE

DESIGNATION	NORTHING	EASTING	ELEVATION	DESCRIPTION
BAR-1-17	1590457.479	433515.760	634.789	DEPTH = 7.03m
BAR-2-17	1590404.166	433550.029	635.132	DEPTH = 6.75m
BAR-3-17	1590452.397	433596.585	636.325	DEPTH = 6.65m
BAR-4-17	1590489.984	433571.999	635.889	DEPTH = 5.95m
BAR-5-17	1590428.953	433629.575	636.682	DEPTH = 2.70m
BAR-6-17	1590513.167	433588.235	636.304	DEPTH = 2.70m

STORM STRUCTURES TABLE (EXISTING)

STRUCTURE		PIPE LENGTH FT.	PIPE DATA			
FROM	TO		STR. TYPE CIRCULAR (DIA. IN.) OR ARCH (RISE x SPAN IN.)	TYPE	INVERT ELEV. UP STREAM	INVERT ELEV. DOWN STREAM
1	2	17.082	600 MM	RCP	630.017	629.995
1	2	17.277	600 MM	RCP	630.020	629.987
3	4	51.598	450 MM	RCP	633.521	631.155
4	5	63.391	450 MM	RCP	634.723	633.521
6	7	9.003	300 MM	RCP	UNK	UNK
8	9	9.072	300 MM	RCP	635.425	635.201
5	10	10.847	450 MM	RCP	UNK	634.743
11		1.587	200 MM	PVC	637.244	367.168

SANITARY SEWER STRUCTURES TABLE (EXISTING)

STRUCTURE		PIPE LENGTH FT.	PIPE DATA			
FROM	TO		NOMINAL PIPE DIAMETER (mm)	TYPE	INVERT ELEV. UP STREAM	INVERT ELEV. DOWN STREAM
MH-01	MH-02	24.83	200	PVC	634.75	634.08
MH-02	MH-03	8.53	200	PVC	634.08	635.556
MH-03	MH-04	29.56	150	PVC	635.556	633.143
MH-04	MH-05	41.95	150	PVC	633.143	632.585
MH-05	MH-06	11.86	150	PVC	631.215	UNK
MH-06	MH-07	17.57	100	PVC	UNK	UNK
MH-07	MH-08	24.36	100	PVC	630.601	UNK
MH-08	MH-09	24.47	100	PVC	630.716	630.798
MH-09	MH-10	23.91	100	PVC	630.818	630.935
MH-10	MH-11	24.27	100	PVC	630.935	631.048
MH-11	MH-12	24.15	100	PVC	631.058	UNK
MH-12	UNK	UNK	100	PVC	631.241	UNK
MH-05	MH-13	61.74	150	PVC	631.625	632.458
MH-13	BLDG	3.39	150	PVC	633.708	UNK
MH-13	MH-14	55.85	150	PVC	632.458	633.152
MH-14	UNK	UNK	100	PVC	633.282	UNK
MH-14	MH-15	23.75	150	PVC	633.252	633.711
MH-15	MH-16	25.03	150	PVC	633.711	634.083
MH-16	UNK	UNK	150	PVC	634.063	UNK
MH-15	MH-17	156.14	150	PVC	633.721	UNK
MH-17	BLDG	UNK	50	PVC	636.176	UNK
MH-17	MH-18	28.81	100	PVC	UNK	636.127
MH-18	UKN-W	UNK	100	PVC	636.127	UNK
MH-18	UKN-S	UNK	100	PVC	636.137	UNK
MH-01	MH-19	62.84	200	PVC	634.770	UNK
MH-19	MH-20	35.82	200		UNK	635.787

US Army Corps of Engineers®

MARK	DESCRIPTION	DATE

ISSUE DATE: FEBRUARY 2019
SOLICITATION NO.: W9127819R0028
CONTRACT NO.: -
PROJECT NUMBER: M017EU44
FILE NAME: M017EU44V-601.dwg

DESIGNED BY: JBO
DRAWN BY: JBC
CHECKED BY: CPE
SUBMITTED BY: PWO
SIZE: ANSI D

U.S. ARMY CORPS OF ENGINEERS
MOBILE DISTRICT
MOBILE, ALABAMA

SOTO CANO AIR BASE, HONDURAS
UNACCOMPANIED ENLISTED PERSONNEL HOUSING

EXISTING CONDITIONS SCHEDULES

SHEET ID
V-601

USACE Survey Monument Archival & Retrieval Tool Datasheet

FIUO: None Type: New

Designation: BM-BAR-1
Project: BARRACKS
Stamping: BM-BAR-1
PID NGS: ☐ PPCP ☐ LPCP
COE:
State:
County:
District: Army
Installations:
Nearest Town:
USGS Quad:
T.R.S.:
Nearest Hwy/Mi:
Date Recovered:
By:
Condition/Stability:
Setting/Monument Type:
Owner:
Boundary Monument: ◉ Yes ☐ No
GPS Suitable: ◉ Yes ☐ No
Obstructions: ☐ N ☐ E ☐ S ☐ W
Magnetic: ☐ Yes ☐ No
Access:

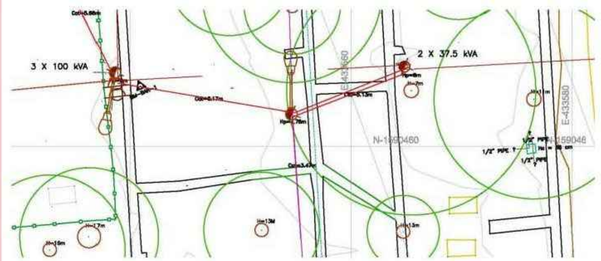

- Horizontal -
Datum: WGS84 ( )
Lat: 14°23'08.29255" N
Lon: 87°36'59.19921" W
Local Accuracy: 2-mm
NSRS Accuracy:
Survey/Computation Method: Static GPS Network
Date Observed: 12/11/17

- Vertical -
Datum: LMSL ( )
Elevation Ht: 635.454
Ellip Ht: 635.454
UOM:
Local Accuracy: 2-mm
NSRS Accuracy:
Geoid Model: EGM199
Survey/Computation Method: Static GPS Network
Date Observed: 12/11/17

- Tidal/Hydraulic Gage Relationships -

Owner:	Gage ID:	- Elevation -	- Datum -	Epoch:

LX_LY_LZ:

Description/Comments:
BENCHMARK BM-BAR-1, BENCHMARK IN AIR BASE, SOTO CANO, HONDURAS.

Zn1: ____ N1: ____ USFT E1: ____ USFT UTM Zn1: ____ N1: ____ USFT E1: ____ USFT
Zn2: ____ N2: ____ USFT E2: ____ USFT UTM Zn2: ____ N2: ____ USFT E2: ____ USFT

- Horizon/Setup View -

- Close-Up View-

Required Fields In Red Reset Form Submit System Fields in Green U-SMART ver 5.6 April 2017

USACE Survey Monument Archival & Retrieval Tool Datasheet

FIUO: None Type: New

Designation: BM-BAR-2
Project: BARRACKS
Stamping: BM-BAR-2
PID NGS: ☐ PPCP ☐ LPCP
COE:
State:
County:
District: Army
Installations:
Nearest Town:
USGS Quad:
T.R.S.:
Nearest Hwy/Mi:
Date Recovered:
By:
Condition/Stability:
Setting/Monument Type:
Owner:
Boundary Monument: ◉ Yes ☐ No
GPS Suitable: ◉ Yes ☐ No
Obstructions: ☐ N ☐ E ☐ S ☐ W
Magnetic: ☐ Yes ☐ No
Access:

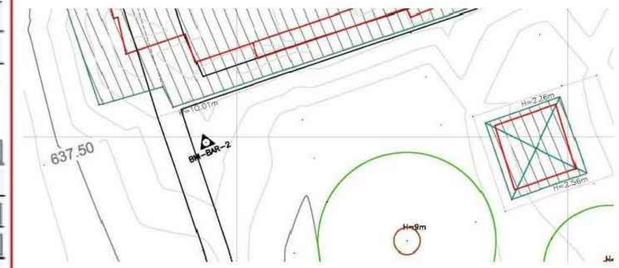

- Horizontal -
Datum: WGS84 ( )
Lat: 14°23'09.40012" N
Lon: 87°36'55.94623" W
Local Accuracy: 2-mm
NSRS Accuracy:
Survey/Computation Method: Static GPS Network
Date Observed: 12/11/17

- Vertical -
Datum: LMSL ( )
Elevation Ht: 638.141
Ellip Ht: 638.141
UOM:
Local Accuracy: 2-mm
NSRS Accuracy:
Geoid Model: EGM199
Survey/Computation Method: Static GPS Network
Date Observed: 12/11/17

- Tidal/Hydraulic Gage Relationships -

Owner:	Gage ID:	- Elevation -	- Datum -	Epoch:

LX_LY_LZ:

Description/Comments:
BENCHMARK BM-BAR-2, BENCHMARK IN AIR BASE, SOTO CANO, HONDURAS.

Zn1: ____ N1: ____ USFT E1: ____ USFT UTM Zn1: ____ N1: ____ USFT E1: ____ USFT
Zn2: ____ N2: ____ USFT E2: ____ USFT UTM Zn2: ____ N2: ____ USFT E2: ____ USFT

- Horizon/Setup View -

- Close-Up View-

Required Fields In Red Reset Form Submit System Fields in Green U-SMART ver 5.6 April 2017

US Army Corps of Engineers®

MARK	DESCRIPTION	DATE

DESIGNED BY: JBO
DRAWN BY: KES
CHECKED BY: CPE
SUBMITTED BY: PWWO
SIZE: ANSI D
ISSUE DATE: FEBRUARY 2019
SOLICITATION NO.: W912T819R0028
CONTRACT NO.: -
PROJECT NUMBER: M017EU44
FILE NAME: M017EU44V-701.dwg

U.S. ARMY CORPS OF ENGINEERS
MOBILE DISTRICT
MOBILE, ALABAMA

SOTO CANO AIR BASE, HONDURAS
UNACCOMPANIED ENLISTED PERSONNEL HOUSING

SURVEY MONUMENTATION

SHEET ID
V-701

USACE Survey Monument Archival & Retrieval Tool Datasheet

FIUO: None Type: New

Designation: BM-BAR-3
Project: BARRACKS
Stamping: BM-BAR-3
PID NGS: ☐ PPCP ☐ LPCP
COE:
State:
County:
District: Army
Installations
Nearest Town:
USGS Quad:
T.R.S.:
Nearest Hwy/Mi:
Date Recovered:
By:
Condition/Stability:
Setting/Monument Type:
Owner:
Boundary Monument: ◉ Yes ☐ No
GPS Suitable: ◉ Yes ☐ No
Obstructions: ☐ N ☐ E ☐ S ☐ W
Magnetic: ☐ Yes ☐ No
Access:

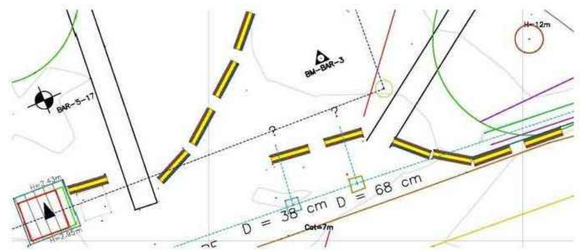

- Horizontal -
Datum: WGS84 ( )
Lat: 14°23'07.19685" N
Lon: 87°36'55.65225" W
Local Accuracy: 2-mm
NSRS Accuracy:
Survey/Computation Method: Static GPS Network
Date Observed: 12/11/17

- Vertical -
Datum: LMSL ( )
Elevation Ht: 637.108
Ellip Ht: 637.108
UOM:
Local Accuracy: 2-mm
NSRS Accuracy:
Geoid Model: EGM199
Survey/Computation Method: Static GPS Network
Date Observed: 12/11/17

- Tidal/Hydraulic Gage Relationships -

Owner:	Gage ID:	- Elevation -	- Datum -	Epoch:

LX_LY_LZ:

Description/Comments:
BENCHMARK BM-BAR-3, BENCHMARK IN AIR BASE, SOTO CANO, HONDURAS.

Zn1: N1: USFT E1: USFT UTM Zn1: N1: USFT E1: USFT
Zn2: N2: USFT E2: USFT UTM Zn2: N2: USFT E2: USFT

- Horizon/Setup View -

Limit

- Close-Up View-

Limit picture size to 1024 by 768

Required Fields In Red Reset Form Submit System Fields in Green U-SMART ver 5.6 April 2017

USACE Survey Monument Archival & Retrieval Tool Datasheet

FIUO: None Type: New

Designation: TBM2
Project: PV FARM AREA
Stamping: TBM2
PID NGS: ☐ PPCP ☐ LPCP
COE:
State:
County:
District: Army
Installations
Nearest Town:
USGS Quad:
T.R.S.:
Nearest Hwy/Mi:
Date Recovered:
By:
Condition/Stability:
Setting/Monument Type:
Owner:
Boundary Monument: ◉ Yes ☐ No
GPS Suitable: ◉ Yes ☐ No
Obstructions: ☐ N ☒ E ☐ S ☐ W
Magnetic: ☐ Yes ☐ No
Access:

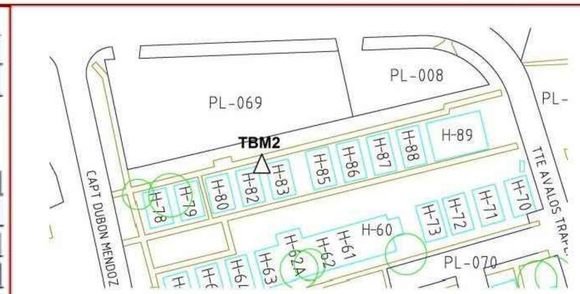

- Horizontal -
Datum: WGS84 ( )
Lat: 14°22'58.86872" N
Lon: 87°36'54.99968" W
Local Accuracy: 2-mm
NSRS Accuracy:
Survey/Computation Method: Static GPS Network
Date Observed: 12/11/17

- Vertical -
Datum: LMSL ( )
Elevation Ht: 636.147
Ellip Ht: 636.147
UOM:
Local Accuracy: 2-mm
NSRS Accuracy:
Geoid Model: EGM199
Survey/Computation Method: Static GPS Network
Date Observed: 12/11/17

- Tidal/Hydraulic Gage Relationships -

Owner:	Gage ID:	- Elevation -	- Datum -	Epoch:

LX_LY_LZ:

Description/Comments:
BENCHMARK TBM2, EXISTING BENCHMARK IN AIR BASE, SOTO CANO, HONDURAS.

Zn1: N1: USFT E1: USFT UTM Zn1: N1: USFT E1: USFT
Zn2: N2: USFT E2: USFT UTM Zn2: N2: USFT E2: USFT

- Horizon/Setup View -

L 768

- Close-Up View-

Limit picture size to 1024 by 768

Required Fields In Red Reset Form Submit System Fields in Green U-SMART ver 5.6 April 2017

US Army Corps of Engineers®

MARK	DESCRIPTION	DATE

DESIGNED BY: JBO
DRAWN BY: KES
CHECKED BY: CPE
SUBMITTED BY: PAUL
SIZE: ANSI D
ISSUE DATE: FEBRUARY 2019
SOLICITATION NO.: W912T819R0028
CONTRACT NO.: -
PROJECT NUMBER: M017EU44
FILE NAME: M017EU44V-702.dwg

U.S. ARMY CORPS OF ENGINEERS
MOBILE DISTRICT
MOBILE, ALABAMA

SOTO CANO AIR BASE, HONDURAS
UNACCOMPANIED ENLISTED PERSONNEL HOUSING

SURVEY MONUMENTATION

SHEET ID
V-702

DEMOLITION & REMOVAL LEGEND

- PROJECT LIMITS (CLEAR & GRUB WITHIN LIMITS)
- BUILDING, SLAB AND FOUNDATION
- DIRT / AGGREGATE ROADWAY
- CONCRETE SIDEWALK REMOVAL (100MM THICK)
- FENCE REMOVAL
- TREE REMOVAL
- TREE PROTECTION

KEYED NOTES:

1. BEACON TOWER TO BE REMOVED BY CONTRACTOR.
2. FENCE TO REMAIN.
3. ANTENNA TO BE REMOVED BY OTHERS.
4. CONTAINER BOXES TO BE REMOVED BY OTHERS.
5. RE LOCATE JERSEY BARRIERS AS NEEDED FOR CONSTRUCTION.
6. TREES TO REMAIN.
7. CONCRETE MEMORIAL TO BE RELOCATED BY CONTRACTOR, SEE SHEET CS401 FOR MORE INFORMATION.
8. CONCRETE JERSEY BARRIERS, TO BE RELOCATED BY OTHERS.
9. REMOVE CONCRETE CURB AND RETAINING WALL.
10. RECYCLING BINS TO BE REMOVED BY OTHERS.
11. SIGNS TO BE REMOVED AND DISPOSED OF BY CONTRACTOR.
12. TO REMAIN.
13. CONCRETE PAD MINIMUM 400MM THICK.

NOTES:

1. ALL FEATURES OUTSIDE PROJECT LIMITS TO REMAIN.
2. SEE SHEET CD102 FOR PIPE DEMOLITION
3. SEE ELECTRICAL SHEETS FOR ELECTRICAL DEMOLITION.

PLAN NORTH

0 6000 12000

SCALE: 1 : 300

US Army Corps of Engineers®

MARK	DESCRIPTION	DATE

DESIGNED BY: JBO	ISSUE DATE: FEBRUARY 2019
DRAWN BY: KES	SOLICITATION NO.: W912TB19R0028
CHECKED BY: JLL	CONTRACT NO.: -
SUBMITTED BY: JLL	PROJECT NUMBER: M017EU44
SIZE: ANSI D	FILE NAME: M017EU44CD101.dwg

U.S. ARMY CORPS OF ENGINEERS
MOBILE DISTRICT
MOBILE, ALABAMA

SOTO CANO AIR BASE, HONDURAS
UNACCOMPANIED ENLISTED PERSONNEL HOUSING

SITE DEMOLITION

SHEET ID

CD101

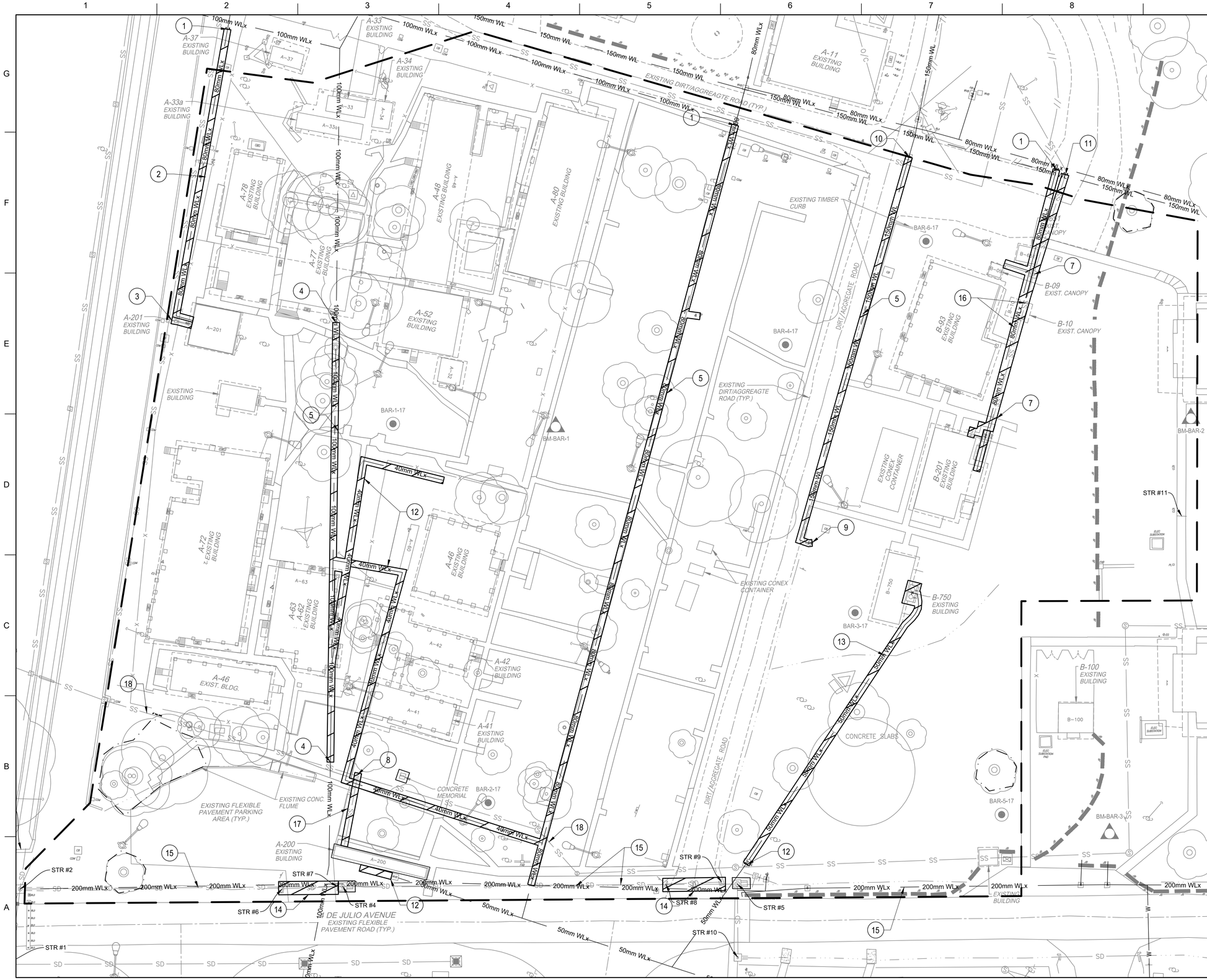

DEMOLITION AND REMOVAL LEGEND

PROJECT LIMITS (CLEAR & GRUB WITHIN LIMITS)

BELOW GRADE UTILITIES

TREE PROTECTION

KEYED NOTES:

1. CUT AND CAP WATER LINE .5 METER FROM WATER MAIN OR BRANCH CONNECTION.
2. REMOVE AND DISPOSE OF WATER SERVICE LATERAL.
3. REMOVE AND DISPOSE OF SANITARY SEWER SERVICE LATERAL UP TO EXISTING MANHOLE. SEAL PENETRATION IN MANHOLE WITH WATER TIGHT SEALANT.
4. SEE CU101 FOR RECONNECTION TO NEW RAW WATER LINE. COORDINATE DISCONNECTION/RECONNECTION WITH COR AND DPW. SERVICE INTERRUPTION SHALL NOT EXCEED 24 HOURS OR AS APPROVED BY THE COR.
5. REMOVE AND DISPOSE OF WATER LINE AS SHOWN .
6. RESERVED
7. REMOVE AND DISPOSE OF EXISTING MANHOLE AND CONNECTED PIPING.
8. REMOVE AND DISPOSE OF EXISTING MANHOLE. REPLACE WITH NEW PRECAST DOG HOUSE MANHOLE. MAINTAIN INLET AND OUTLET PIPE INVERT ELEVATIONS EAST AND WEST OF MANHOLE. SERVICE IN HOT TO BE INTERRUPTED . SEE CU101 FOR ADDITIONAL INFORMATION.
9. REMOVE AND DISPOSE OF EXISTING FIRE HYDRANT AND CONNECTED VALVES.
10. SEE CU101 FOR RECONNECTION OF NEW WATERLINE.
11. CUT AND CAP SANITARY SEWER LINE.
12. DISCONNECT WATERLINE ON DOWNSTREAM SIDE OF VALVE AND INSTALL A BLIND FLANGE OR CUT EXISTING PIPE .5 METER FROM VALVE AND REMOVE WRENCH NUT AND CALVE BOX. BURY GATE VALVE.
13. REMOVE AND DISPOSE OF WATERLINE AS SHOWN.
14. REMOVE EXISTING CROSS DRAIN UNDER ROAD OR PARKING ENTRANCE.
15. RETAIN EXISTING WATER MAIN AND STORM DRAIN.
16. REMOVE AND DISPOSE OF WATER AND SEWER LINE.
17. REMOVE AND DISPOSE OF SANITARY SEWER LINE.
18. RETAIN EXISTING SANITARY SEWER.

NOTES:
1. SEE ES101 FOR ELECTRICAL DEMOLITION.
2. SEE SHEET CD101 FOR STRUCTURE DEMOLITION.
3. SEE ELECTRICAL SHEETS FOR ELECTRICAL DEMOLITION.

PLAN NORTH

0 6000 12000
SCALE: 1 : 300

US Army Corps of Engineers®

MARK	DESCRIPTION	DATE

ISSUE DATE: FEBRUARY 2019
SOLICITATION NO.: W912T819R0028
CONTRACT NO.: -
PROJECT NUMBER: M077EU44
FILE NAME: M077EU44CD102.dwg

DESIGNED BY: JBO
DRAWN BY: KES
CHECKED BY: JLL
SUBMITTED BY: JLL
SIZE: ANSI D

U.S. ARMY CORPS OF ENGINEERS
MOBILE DISTRICT
MOBILE, ALABAMA

SOTO CANO AIR BASE, HONDURAS
UNACCOMPANIED ENLISTED PERSONNEL HOUSING

SITE DEMOLITION

SHEET ID
CD102

GENERAL NOTE:

1. ALL FLOOR PLANS SHOWN ARE BASED ON BUILDING D ORIENTATION.

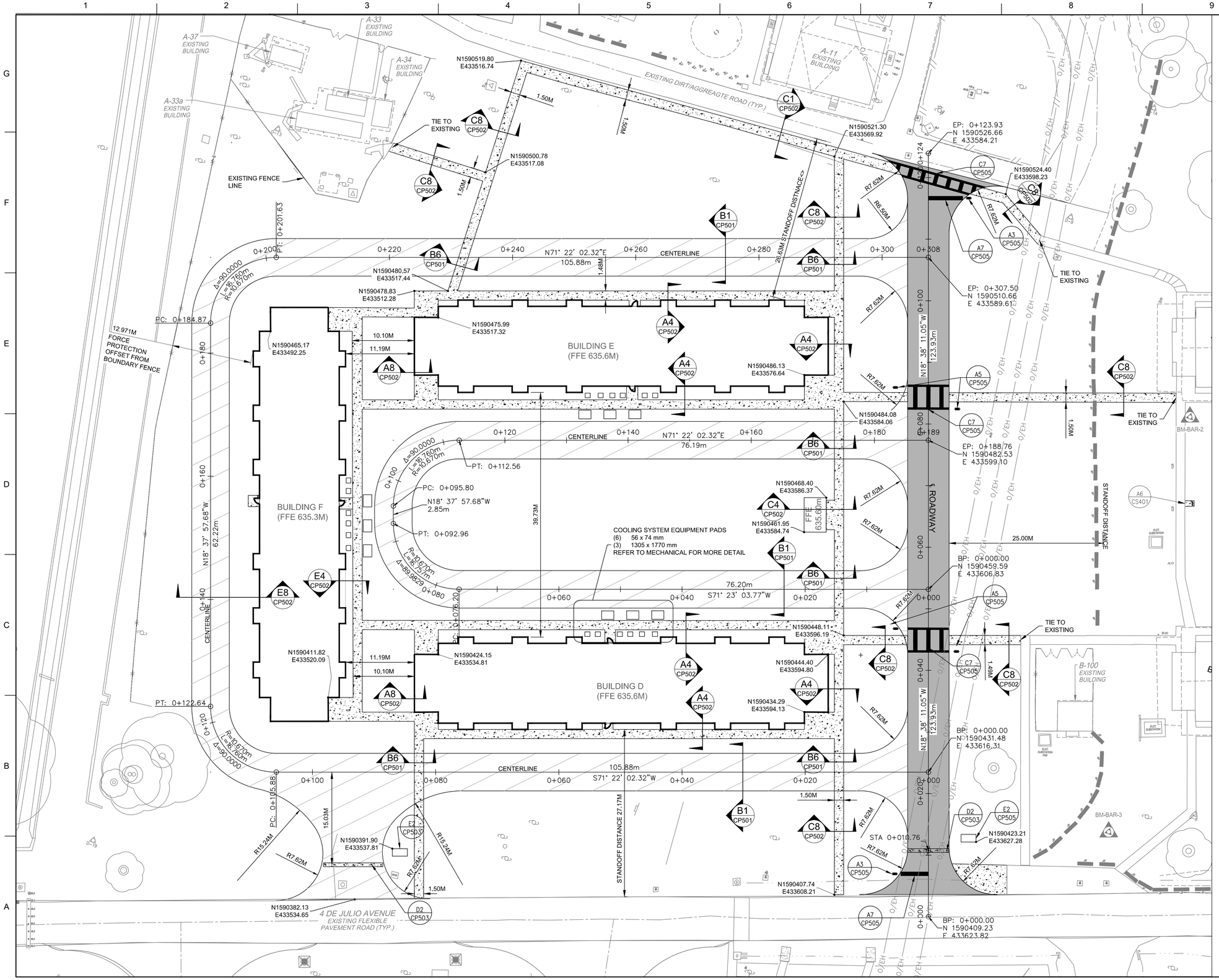

PLAN NORTH

0 6000 12000

SCALE: 1 : 300

US Army Corps of Engineers®

MARK	DESCRIPTION	DATE

DESIGNED BY: JBO	ISSUE DATE: FEBRUARY 2019
DRAWN BY: KES	SOLICITATION NO.: W912T819R0028
CHECKED BY: JLL	CONTRACT NO.: -
SUBMITTED BY: JLL	PROJECT NUMBER: M017EL44
SIZE ANSI D	FILE NAME: M017EL44CS101.dwg

U.S. ARMY CORPS OF ENGINEERS
MOBILE DISTRICT
MOBILE, ALABAMA

SOTO CANO AIR BASE, HONDURAS
UNACCOMPANIED ENLISTED PERSONNEL HOUSING

SITE LAYOUT

SHEET ID

CS101

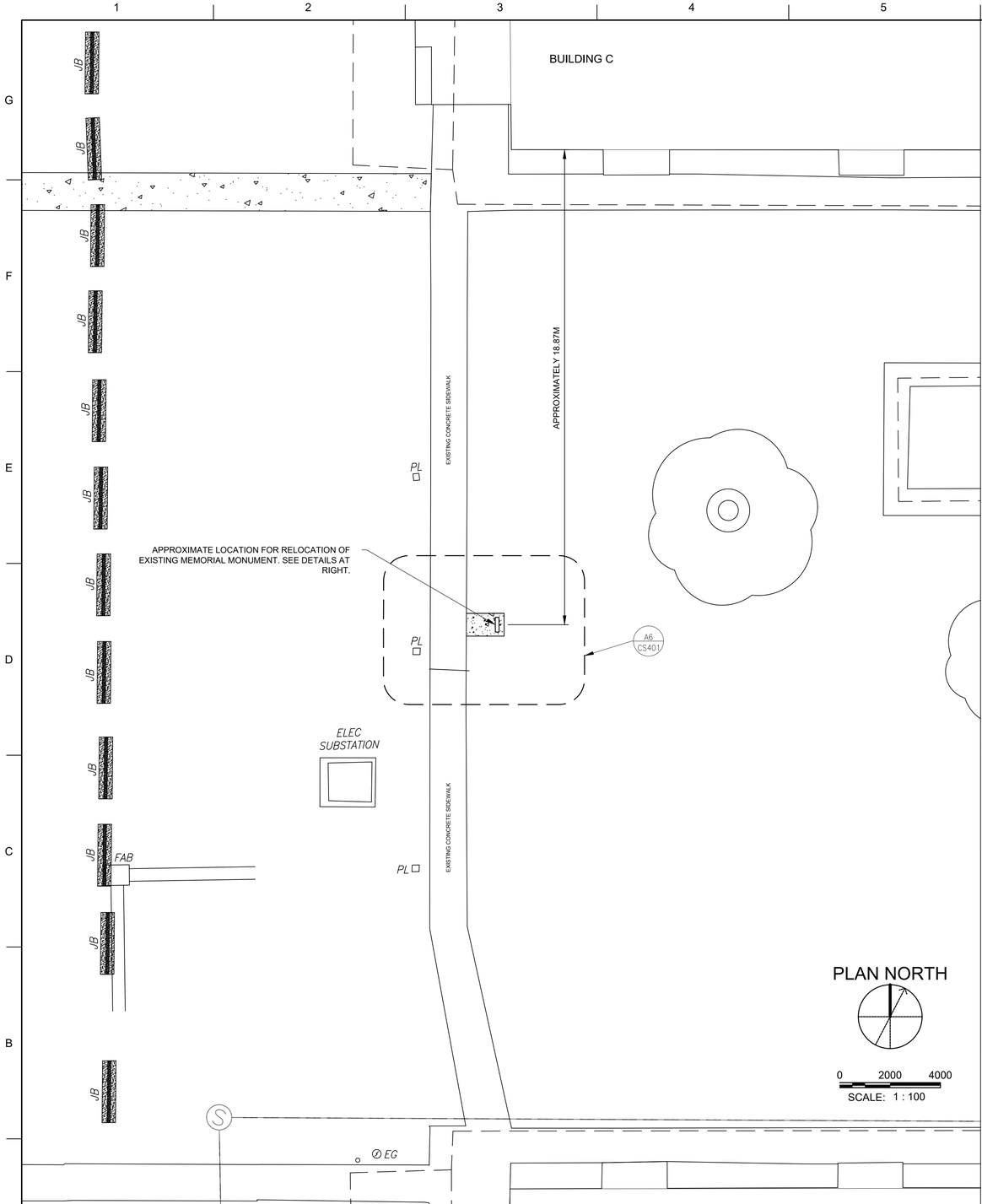

A1 ENLARGED VIEW - MONUMENT RELOCATION
SHOWN

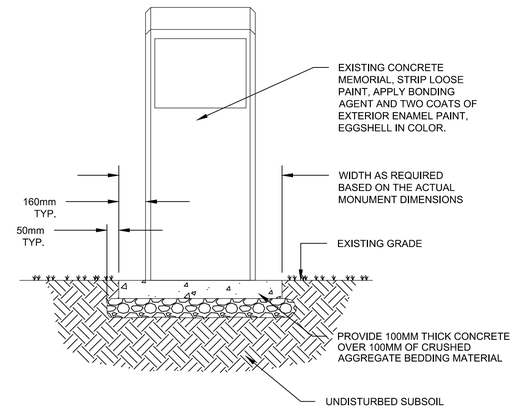

D6 DETAIL - MONUMENT RELOCATION
N. T. S.

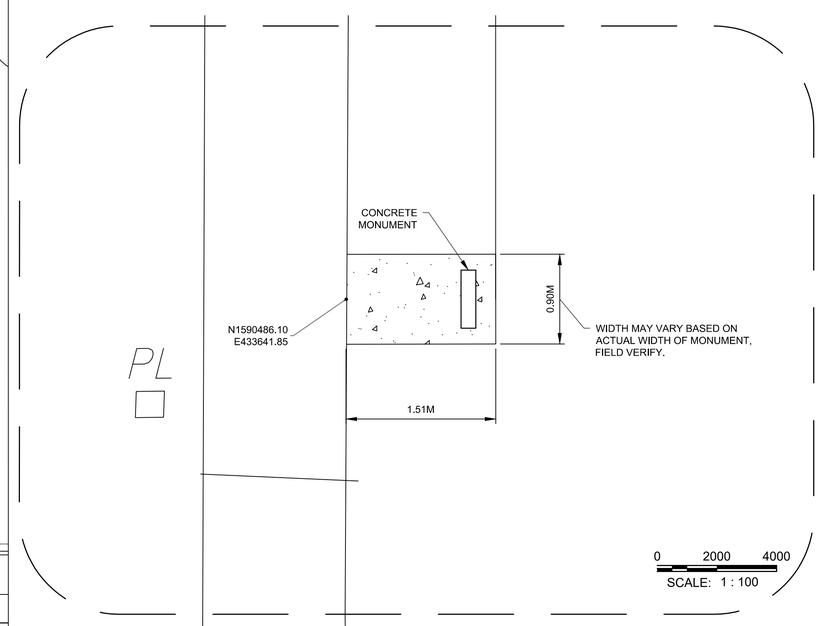

A6 ENLARGED VIEW - MONUMENT RELOCATION
SHOWN

US Army Corps of Engineers®

MARK	DESCRIPTION	DATE

DESIGNED BY: JBO	ISSUE DATE: FEBRUARY 2019
DRAWN BY: KES	SOLICITATION NO.: W912781R0028
CHECKED BY: JLL	CONTRACT NO.: -
SUBMITTED BY: JLL	PROJECT NUMBER: M017EU44
SIZE: ANSI D	FILE NAME: M017EU44CS401.dwg

U.S. ARMY CORPS OF ENGINEERS
MOBILE DISTRICT
MOBILE, ALABAMA

SOTO CANO AIR BASE, HONDURAS
UNACCOMPANIED ENLISTED PERSONNEL HOUSING

SITE LAYOUT
MONUMENT RELOCATION

SHEET ID
CS401

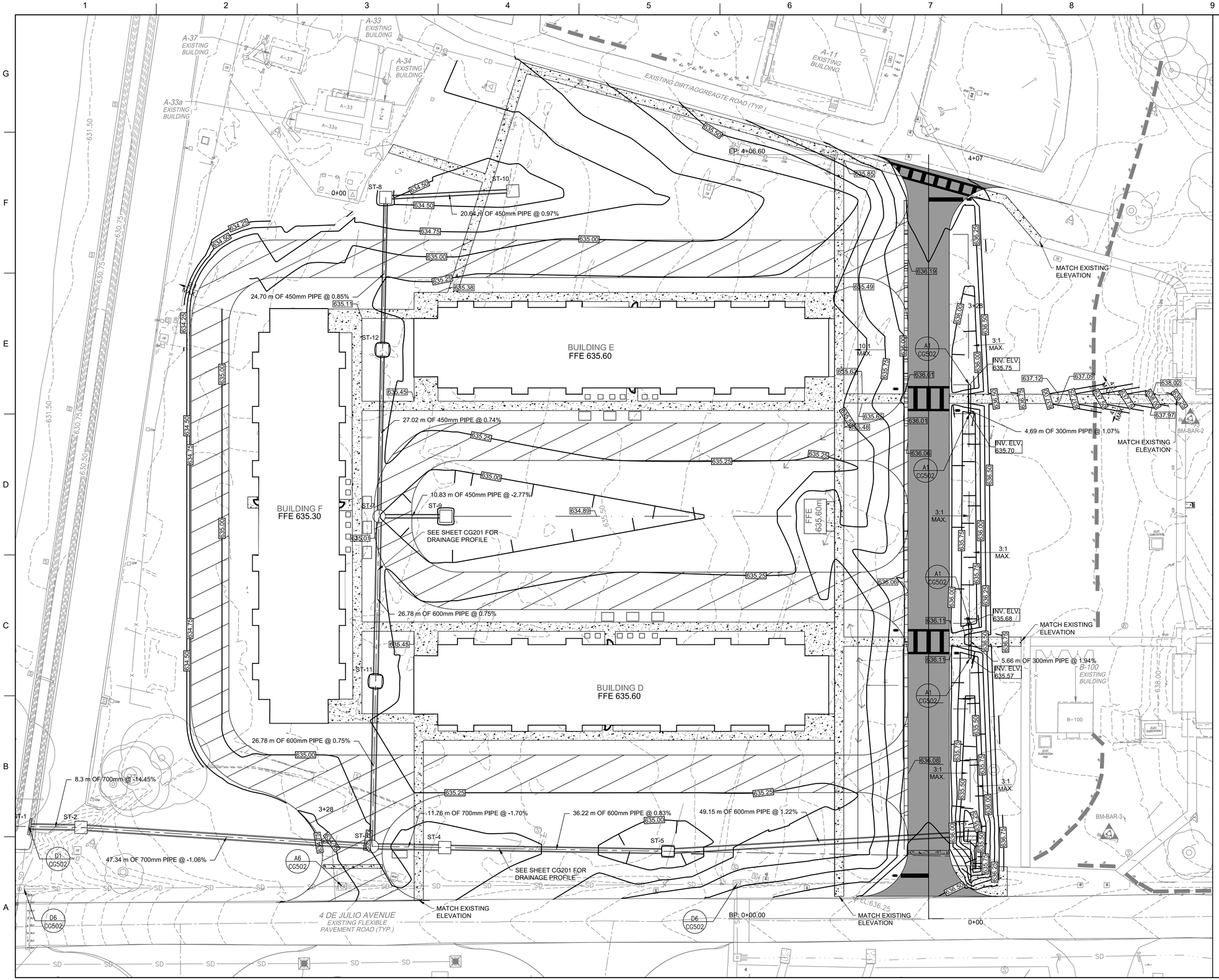

NOTES:

1. SEE CG601 FOR STORM SEWER STRUCTURE AND PIPE SCHEDULE.

LEGEND

GRADE TO DRAIN

PLAN NORTH

0 6000 12000

SCALE: 1 : 300

US Army Corps of Engineers®

MARK	DESCRIPTION	DATE

DESIGNED BY: JBO	ISSUE DATE: FEBRUARY 2019
DRAWN BY: KES	SOLICITATION NO.: W912T819R0028
CHECKED BY: JLL	CONTRACT NO.: -
SUBMITTED BY: JLL	PROJECT NUMBER: M017EU44
SIZE: ANSI D	FILE NAME: M017EU44CG101.dwg

U.S. ARMY CORPS OF ENGINEERS
MOBILE DISTRICT
MOBILE, ALABAMA

SOTO CANO AIR BASE, HONDURAS
UNACCOMPANIED ENLISTED PERSONNEL HOUSING

GRADING PLAN

SHEET ID

CG101

PROFILE VIEW OF ALIGNMENT - (DRAINAGE) - (1)

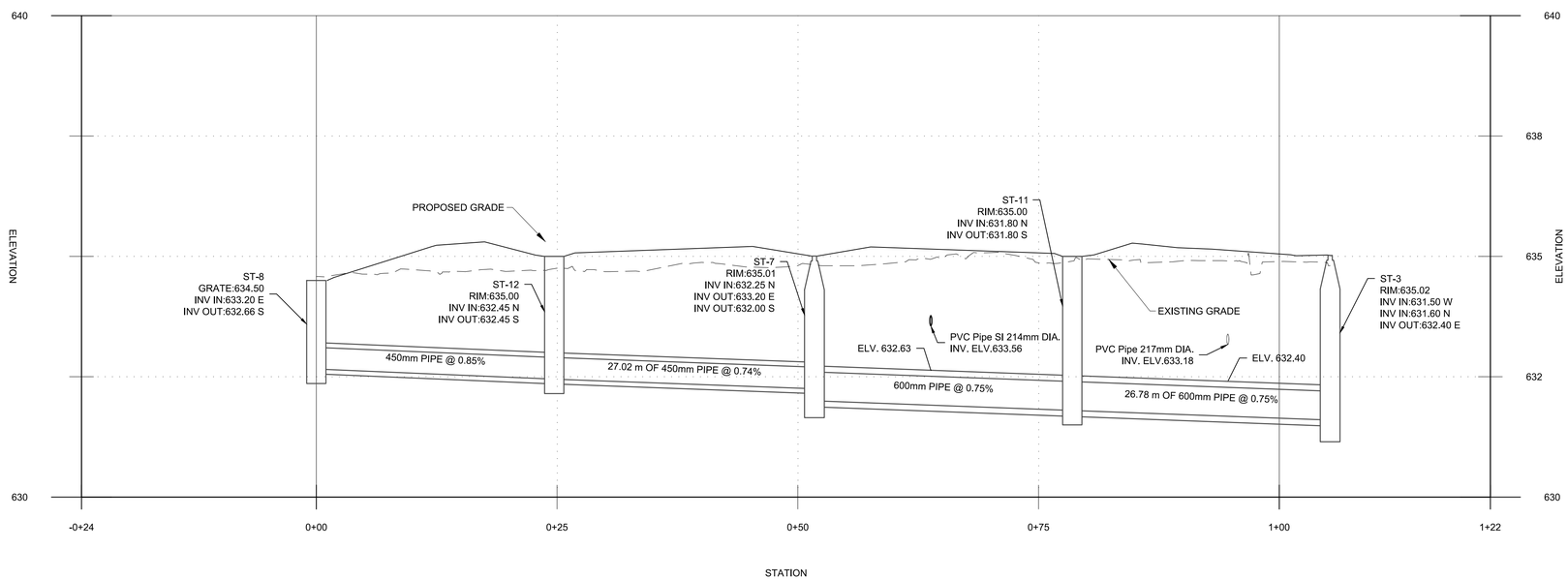

PROFILE VIEW OF ALIGNMENT - (DRAINAGE) - (2)

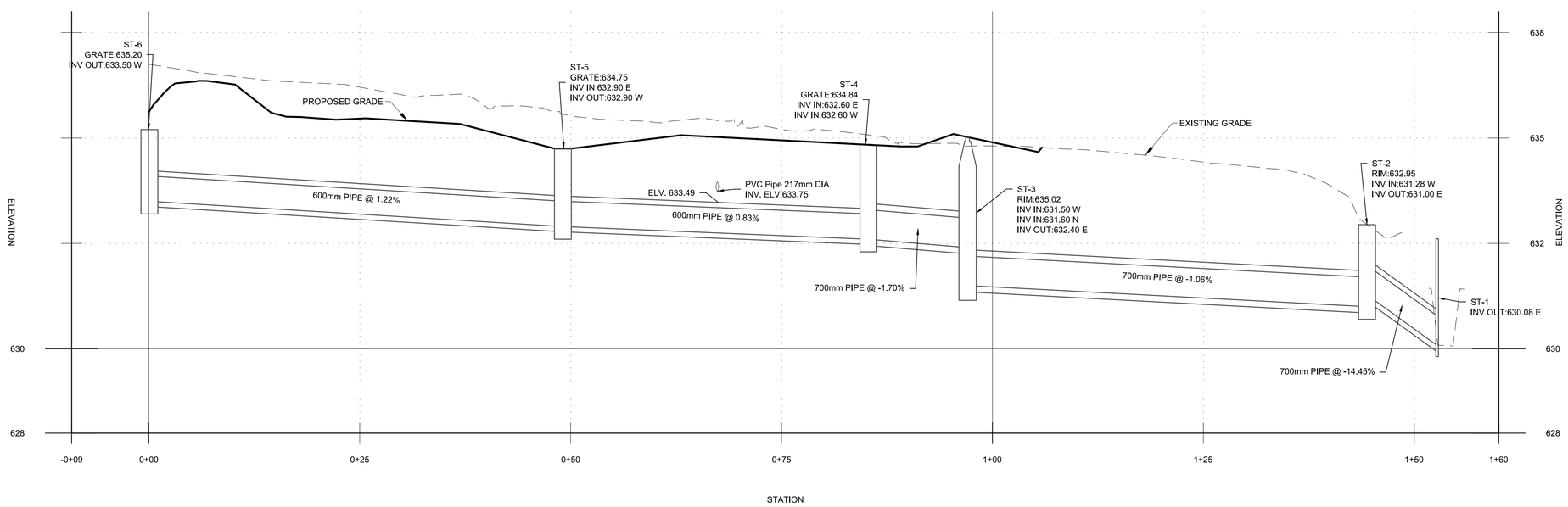

NOTES:
1. SEE CG601 FOR STORM SEWER STRUCTURE AND PIPE SCHEDULE.

PLAN NORTH

0 6000 12000
SCALE: 1 : 300

US Army Corps of Engineers®

MARK	DESCRIPTION	DATE

DESIGNED BY: JBO
DRAWN BY: KES
CHECKED BY: JLL
SUBMITTED BY: JLL
SIZE: ANSI D
ISSUE DATE: FEBRUARY 2019
SOLICITATION NO.: W9127819R0028
CONTRACT NO.: -
PROJECT NUMBER: M017EU44
FILE NAME: M017EU44CG201.dwg

U.S. ARMY CORPS OF ENGINEERS
MOBILE DISTRICT
MOBILE, ALABAMA

SOTO CANO AIR BASE, HONDURAS
UNACCOMPANIED ENLISTED PERSONNEL HOUSING

DRAINAGE PROFILE

SHEET ID
CG201

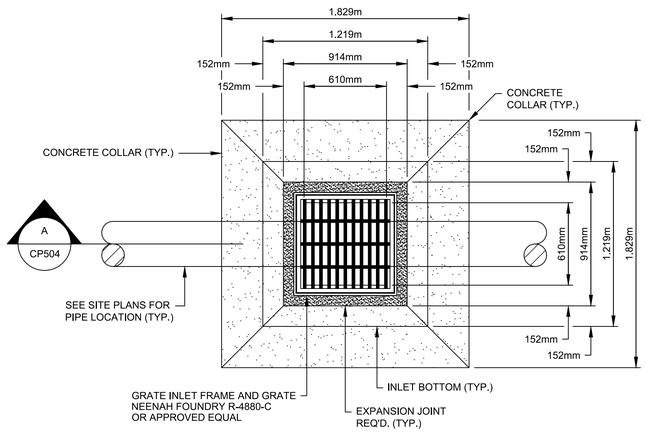

CONCRETE GRATE DETAIL - PLAN VIEW

N.T.S.

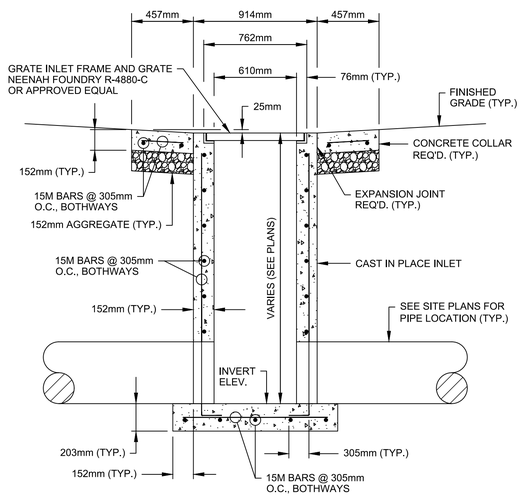

A / CP504 SECTION

N.T.S.

A1 CONCRETE GRATE INLET

N. T. S.

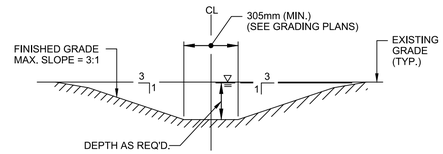

F4 TYPICAL SWALE DETAIL

N. T. S.

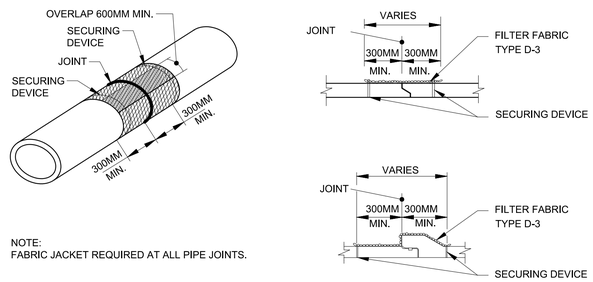

NOTE:
FABRIC JACKET REQUIRED AT ALL PIPE JOINTS.

FOR ALL PIPE TYPES - CONCRETE PIPE SHOWN

D4 FILTER FABRIC PIPE JACKET

N. T. S.

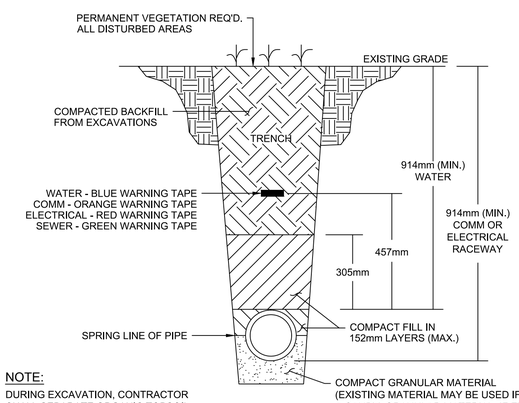

NOTE:
DURING EXCAVATION, CONTRACTOR SHALL SEPARATE ORGANIC TOPSOIL FROM TRENCH EXCAVATION AND REUSE ORGANIC TOPSOIL PRIOR TO PLACING PERMANENT VEGETATION.

A8 TYPICAL PIPE BEDDING, NON-PAVED AREAS

N. T. S.

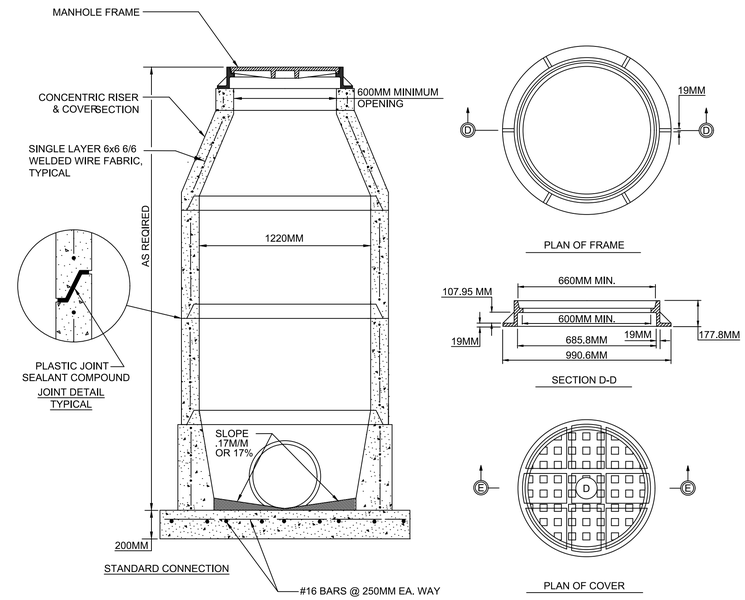

NOTE

CAST IRON COVERS AND FRAMES DESIGN IS BASED ON A WHEEL LOAD OF 16,000 POUNDS PLUS 25 % ALLOWANCE FOR IMPACT AND THE USE OF CLASS 20 CAST IRON (FED.SPEC. RR-F 621C) OTHER. DESIGNS DIFFERING ONLY IN NON-ESSENTIAL DETAILS AND AS APPROVED BY THE CONTRACTING OFFICER MAY BE USED. TOTAL WEIGHT SHALL NOT BE LESS THAN 400 POUNDS.

MANHOLE SECTION

D7 PRECAST STANDARD MANHOLE (ROUND)

N. T. S.

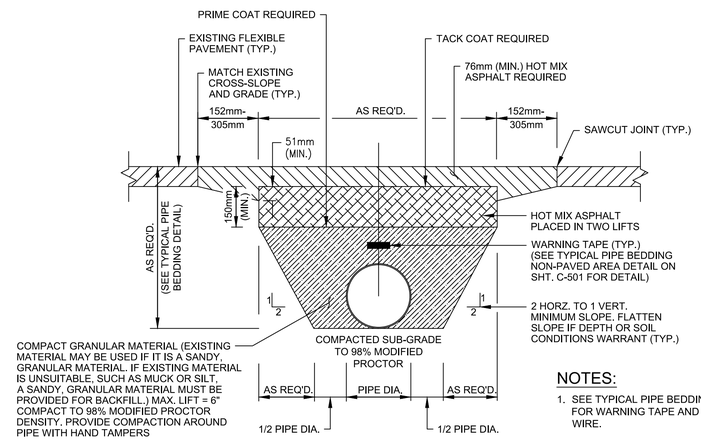

NOTES:

1. SEE TYPICAL PIPE BEDDING DETAIL FOR WARNING TAPE AND TRACER WIRE.
2. ONE LANE OF TRAFFIC TO BE LEFT OPEN AT ALL TIMES. SEE LANE CLOSURE DETAILS THIS SHEET.

A7 OPEN CUT PATCH DETAIL; EXISTING FLEXIBLE PAVEMENT

N. T. S.

US Army Corps of Engineers®

MARK	DESCRIPTION	DATE

DESIGNED BY: JBO	ISSUE DATE: FEBRUARY 2019
DRAWN BY: KES	SOLICITATION NO.: W912TB19R0028
CHECKED BY: JLL	CONTRACT NO.: -
SUBMITTED BY: JLL	PROJECT NUMBER: M017EU44
SIZE: ANSI D	FILE NAME: M017EU44CG501.dwg

U.S. ARMY CORPS OF ENGINEERS
MOBILE DISTRICT
MOBILE, ALABAMA

SOTO CANO AIR BASE, HONDURAS
UNACCOMPANIED ENLISTED PERSONNEL HOUSING

DRAINAGE DETAILS

SHEET ID
CG501

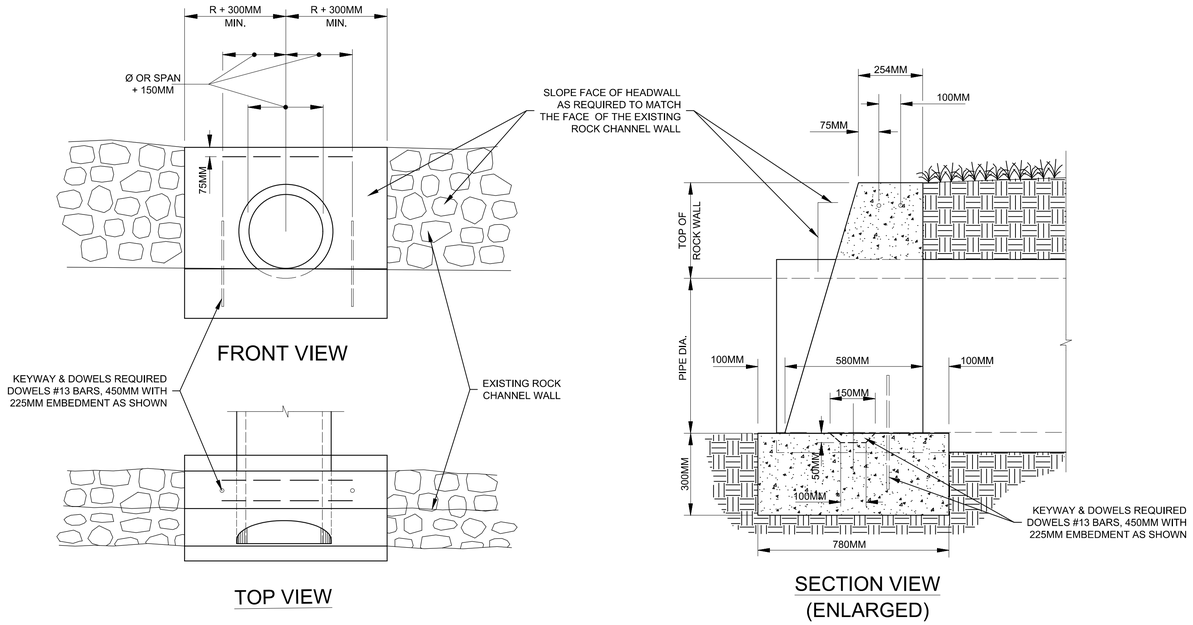

D1 CONCRETE PIPE END TREATMENT
N. T. S.

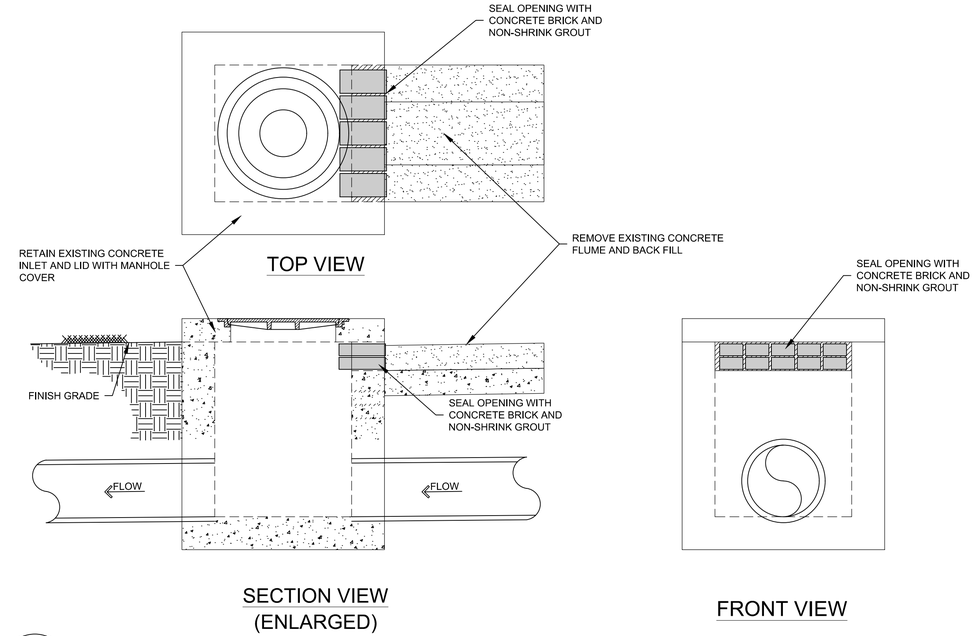

D6 INLET TO MANHOLE CONVERSION
N. T. S.

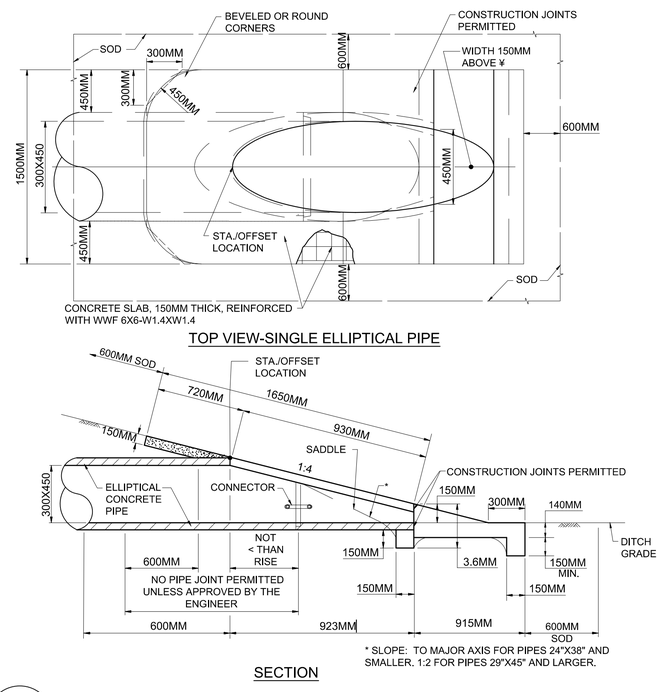

GENERAL NOTES:

1. UNLESS OTHERWISE DESIGNATED IN THE PLANS, CONCRETE PIPE MITERED END SECTIONS MAY BE USED WITH ANY TYPE OF SIDE DRAIN PIPE; WHEN THE MITERED END SECTION PIPE IS DISSIMILAR TO THE SIDE DRAIN PIPE, CONSTRUCT A CONCRETE JACKET TO JOIN THEM.
2. WHEN USED IN CONJUNCTION WITH A CONCRETE MITERED END SECTIONS, CONSTRUCT A CONCRETE JACKET TO JOIN THEM.
3. CLASS NS CONCRETE CAST-IN-PLACE REINFORCED SLABS ARE REQUIRED FOR ALL SIZES OF SIDE DRAIN PIPES.

A1 TAPERED END SECTION FOR ELLIPTICAL SIDEDRAIN
N. T. S.

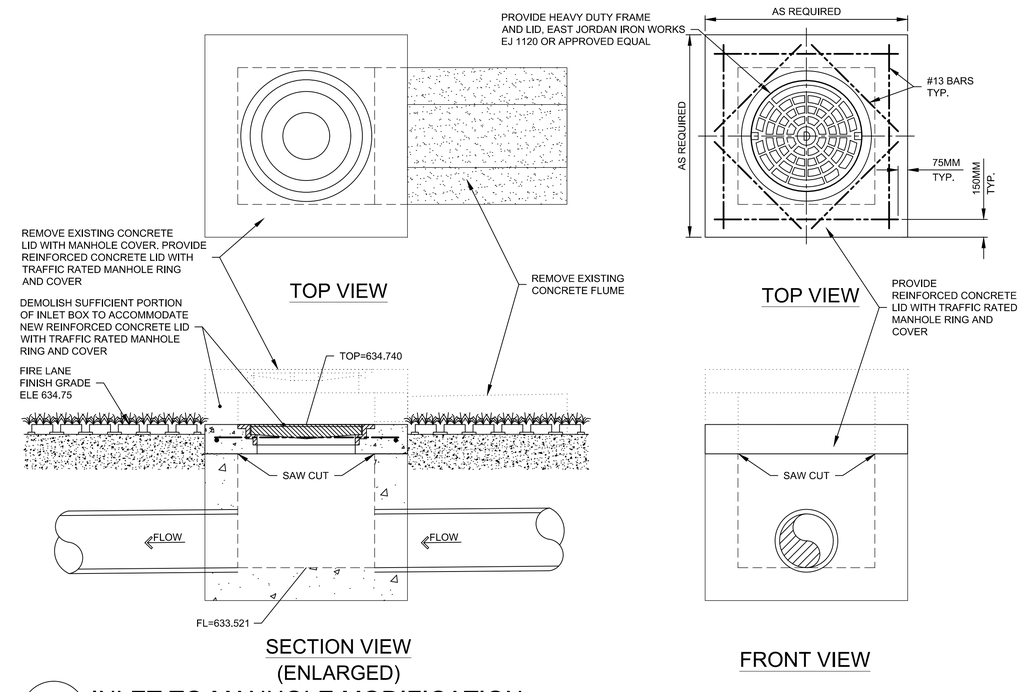

A6 INLET TO MANHOLE MODIFICATION
N. T. S.

US Army Corps of Engineers®

MARK	DESCRIPTION	DATE

DESIGNED BY: JBO
DRAWN BY: KES
CHECKED BY: JLL
SUBMITTED BY: JLL
SIZE: ANSI D
ISSUE DATE: FEBRUARY 2019
SOLICITATION NO.: W912T819R0028
CONTRACT NO.: -
PROJECT NUMBER: M017EU44
FILE NAME: M017EU44CG502.dwg

U.S. ARMY CORPS OF ENGINEERS
MOBILE DISTRICT
MOBILE, ALABAMA

SOTO CANO AIR BASE, HONDURAS
UNACCOMPANIED ENLISTED PERSONNEL HOUSING

DRAINAGE DETAILS

SHEET ID
CG502

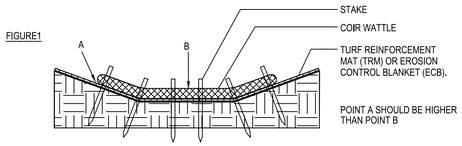

PROPER PLACEMENT OF COIR WATTLE IN DRAINAGE WAY

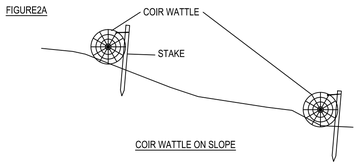

COIR WATTLE ON SLOPE

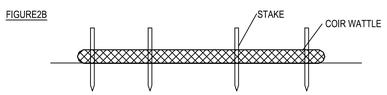

PROPER PLACEMENT OF COIR WATTLE IN SLOPE

NOTES:
1. ON DRAINAGE WAY LINED WITH TURF REINFORCEMENT MAT (TRM) OR EROSION CONTROL BLANKET (ECB), COIR WATTLE SHALL BE INSTALLED AS CHECK DAMS (FIG 1).
2. INSTALLATION TO BE COMPLETED IN ACCORDANCE WITH MANUFACTURER'S SPECIFICATIONS.
3. DO NOT SCALE DRAWING.
4. THIS DRAWING IS INTENDED FOR USE BY ARCHITECTS, ENGINEERS, CONTRACTORS, CONSULTANTS AND DESIGN PROFESSIONALS FOR PLANNING PURPOSES ONLY. THIS DRAWING MAY NOT BE USED FOR CONSTRUCTION.
5. ALL INFORMATION CONTAINED HEREIN WAS CURRENT AT THE TIME OF DEVELOPMENT BUT MUST BE REVIEWED AND APPROVED BY THE PRODUCT MANUFACTURER TO BE CONSIDERED ACCURATE.
6. STAKES SHALL BE SIZED, SPACED AND OF A MATERIAL THAT WILL EFFECTIVELY SECURE THE WATTLE.
7. REFER TO MANUFACTURER SPECIFICATIONS ON OVERLAPPING ENDS (.3M TO 1M MAX).

D1 WATTLE DITCH CHECK (BMP-2)
N. T. S.

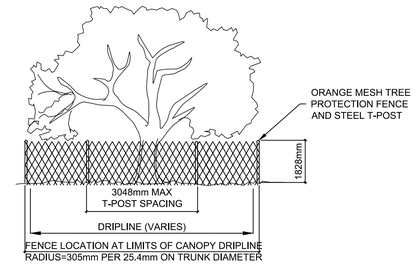

TREE PROTECTION FENCE ELEVATION

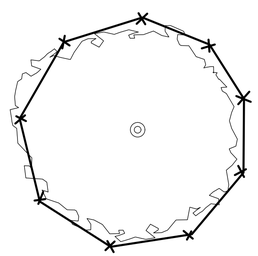

TREE PROTECTION FENCE PLAN

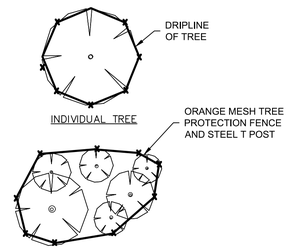

INDIVIDUAL TREE

GROUP OF TREES

D4 TREE PROTECTION (BMP-4)
N. T. S.

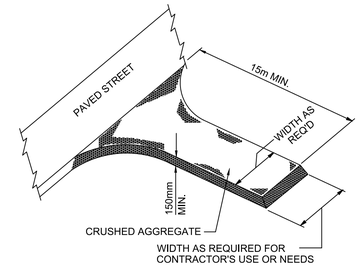

NOTE:
GRAVEL PAD IS REQUIRED TO PROVIDE BUFFER AREA WHERE VEHICLES CAN DROP THEIR MUD AND SEDIMENT TO AVOID TRANSPORTING IT ONTO PAVED STREETS, TO CONTROL EROSION FROM SURFACE RUNOFF, AND TO HELP CONTROL DUST.

CRUSHED AGGREGATE ENTRANCE/EXIT PAD

D7 CONSTRUCTION TRACKING CONTROL (BMP-6)
N. T. S.

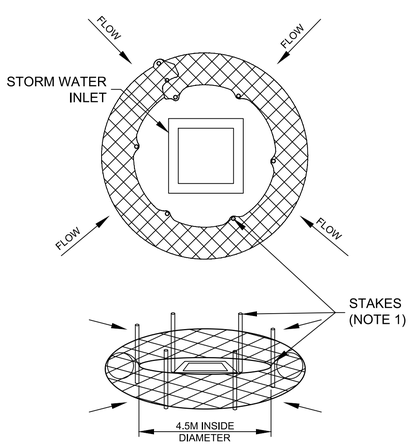

NOTES:
1. STAKES SHALL BE SIZED, SPACED AND OF A MATERIAL THAT WILL EFFECTIVELY SECURE THE WATTLE.
2. REFER TO MANUFACTURER SPECIFICATIONS ON OVERLAPPING ENDS (.3M TO 1M MAX).

A1 WATTLE INLET PROTECTION (BMP-1)
N. T. S.

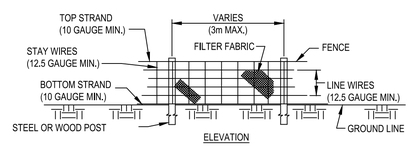

ELEVATION

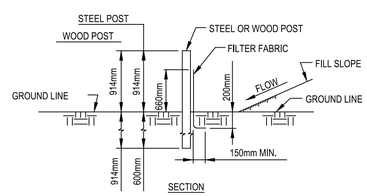

SECTION

NOTES:
1. SILT FENCE MAY BE INSTALLED ALONG TOE OF EMBANKMENTS, ALONG AREAS OF DISTURBED GROUND, AND AROUND STORM DRAIN INLETS AND MANHOLES.
2. WIRE SHALL BE A MIN. WIDTH OF 32 WITH A MIN. OF 6 LINE WIRES WITH 300mm STAY SPACING.
3. FILTER FABRIC MIN. WIDTH IS 1.0m.
4. FILTER FABRIC TO BE SECURELY FASTENED TO THE WIRE.
5. STEEL POSTS TO BE 1.6m IN LENGTH AND SELF-FASTENER ANGLE STEEL TYPE.
6. WOOD POSTS TO BE A MIN. OF 1.8m IN LENGTH AND 75mm OR MORE IN DIAMETER.
7. WIRE FABRIC TO BE FASTENED TO WOOD POST WITH NOT LESS THAN NO. 9 WIRE STAPLES, 37.5mm LONG.
8. ACCUMULATED SEDIMENTS SHALL BE REMOVED PERIODICALLY AS NECESSARY OR DIRECTED.
9. THE FILTER FABRIC SHALL MEET THE FOLLOWING REQUIREMENTS:
A. EOS IS NOT LARGER THAN U.S. STANDARD SIEVE NO.70
A. GRAB STRENGTH 40.8-54.4 kg
B. CONFORM TO ASTM D-1682 OR ASTM D-177

A4 SILT FENCE (BMP-4)
N. T. S.

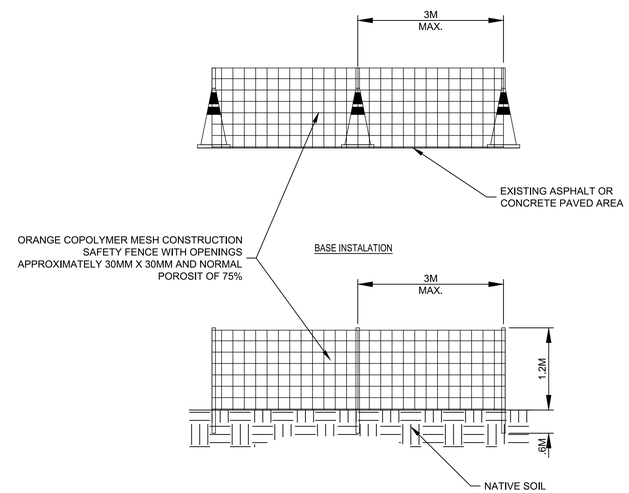

STAKED INSTALLATION

NOTES:
1. CONTRACTOR SHALL INSERT 1.2M LONG WOODEN SUPPORT POST INTO CONE TO SERVE AS A BASE WHEN INSTALLING CONSTRUCTION SAFETY FENCE ON PAVED SURFACES.
2. CONTRACTOR MAY USE OTHER METHOD IN PAVED AREAS IF APPROVED BY THE COR.
3. CONTRACTOR IS RESPONSIBLE FOR SECURING THE CONSTRUCTION FENCING TO THE SUPPORTS TO LIMIT THE POTENTIAL FOR PEDESTRIANS ACCESS TO THE CONSTRUCTION SITE.

A7 CONSTRUCTION SAFETY FENCE (BMP-5)
N. T. S.

US Army Corps of Engineers®

MARK	DESCRIPTION	DATE

DESIGNED BY: JBO	ISSUE DATE: FEBRUARY 2019
DRAWN BY: KBK	SOLICITATION NO.: W912T819R0028
CHECKED BY: CPE	CONTRACT NO.: -
SUBMITTED BY: RMO	PROJECT NUMBER: M017EU44
SIZE: ANSI D	FILE NAME: M017EU44CG503.dwg

U.S. ARMY CORPS OF ENGINEERS
MOBILE DISTRICT
MOBILE, ALABAMA

SOTO CANO AIR BASE, HONDURAS
UNACCOMPANIED ENLISTED PERSONNEL HOUSING

BMP DETAILS

SHEET ID
CG503

STORM STRUCTURES TABLE

STRUCTURE ID #	TOP OF GRATE OR CURB THROAT ELV. (m)	INVERTS (ELEV.) (m)	GRATE/CURB THROAT TO OUTLET INVERT DEPTH (m)	STRUCTURE TYPE	NORTHING	EASTING
ST-1	631.13	OUT 630.08 E	631.779	CONCRETE HEADWALL OUTFALL	N 5217771.58	E 1422181.41
ST-2	632.95	IN 631.28 W OUT 631.00 E	2.145	CONCRETE GRATE INLET	N 5217779.86	E 1422207.37
ST-3	635.02	IN 631.50 W IN 631.60 N OUT 632.40 E	3.721	MANHOLE	N 5217819.85	E 1422357.47
ST-4	634.84	IN 632.60 E IN 632.60 W	2.439	CONCRETE GRATE INLET	N 5217831.56	E 1422394.23
ST-5	635.00	IN 632.90 E OUT 632.90 W	2.300	CONCRETE GRATE INLET	N 5217867.63	E 1422507.45
ST-6	635.22	OUT 633.50 W	1.923	CONCRETE GRATE INLET	N 5217927.90	E 1422657.01
ST-7	635.01	IN 632.25 N OUT 633.20 E OUT 632.00 S	3.206	MANHOLE	N 5217987.49	E 1422304.79
ST-8	634.50	IN 633.20 E OUT 632.66 S	2.040	CONCRETE GRATE INLET	N 5218149.39	E 1422253.94
ST-9	634.75	IN 633.50 W	1.450	CONCRETE GRATE INLET	N 5217998.84	E 1422338.45
ST-10	634.40	OUT 633.40 W	1.000	CONCRETE GRATE INLET	N 5218174.32	E 1422316.91
ST-11	635.00	IN 631.80 N OUT 631.80 S	3.400	CONCRETE GRATE INLET	N 5217903.67	E 1422331.13
ST-12	634.90	IN 632.45 N OUT 632.45 S	2.650	CONCRETE GRATE INLET	N 5218072.06	E 1422278.23

STORM PIPE TABLE

FROM STRUCTURE ID #	TO STRUCTURE ID #	PIPE I.D. (mm)	INVERT IN (ELEV.)	INVERT OUT (ELEV.)	LENGTH (m)	SLOPE (%)
ST-1	ST-2	700	630.08	631.28	8.31	14.45%
ST-2	ST-3	700	631.00	631.50	47.34	1.06%
ST-3	ST-4	700	632.40	632.60	11.76	1.70%
ST-5	ST-4	600	632.90	632.60	36.22	0.83%
ST-6	ST-5	600	633.50	632.90	49.15	1.22%
ST-7	ST-11	600	632.00	631.80	26.78	0.75%
ST-7	ST-9	450	633.20	633.50	10.83	2.77%
ST-8	ST-12	450	632.66	632.45	24.70	0.85%
ST-10	ST-8	450	633.40	633.20	20.64	0.97%
ST-11	ST-3	600	631.80	631.60	26.78	0.75%
ST-12	ST-7	450	632.45	632.25	27.02	0.74%

US Army Corps of Engineers®

MARK	DESCRIPTION	DATE

DESIGNED BY: JBO
DRAWN BY: KES
CHECKED BY: CPE
SUBMITTED BY: PWOO
SIZE: ANSI D
ISSUE DATE: FEBRUARY 2019
SOLICITATION NO.: W9127819R0028
CONTRACT NO.: -
PROJECT NUMBER: M017EU44
FILE NAME: M017EU44CG601.dwg

U.S. ARMY CORPS OF ENGINEERS
MOBILE DISTRICT
MOBILE, ALABAMA

SOTO CANO AIR BASE, HONDURAS
UNACCOMPANIED ENLISTED PERSONNEL HOUSING

DRAINAGE SCHEDULE

SHEET ID
CG601

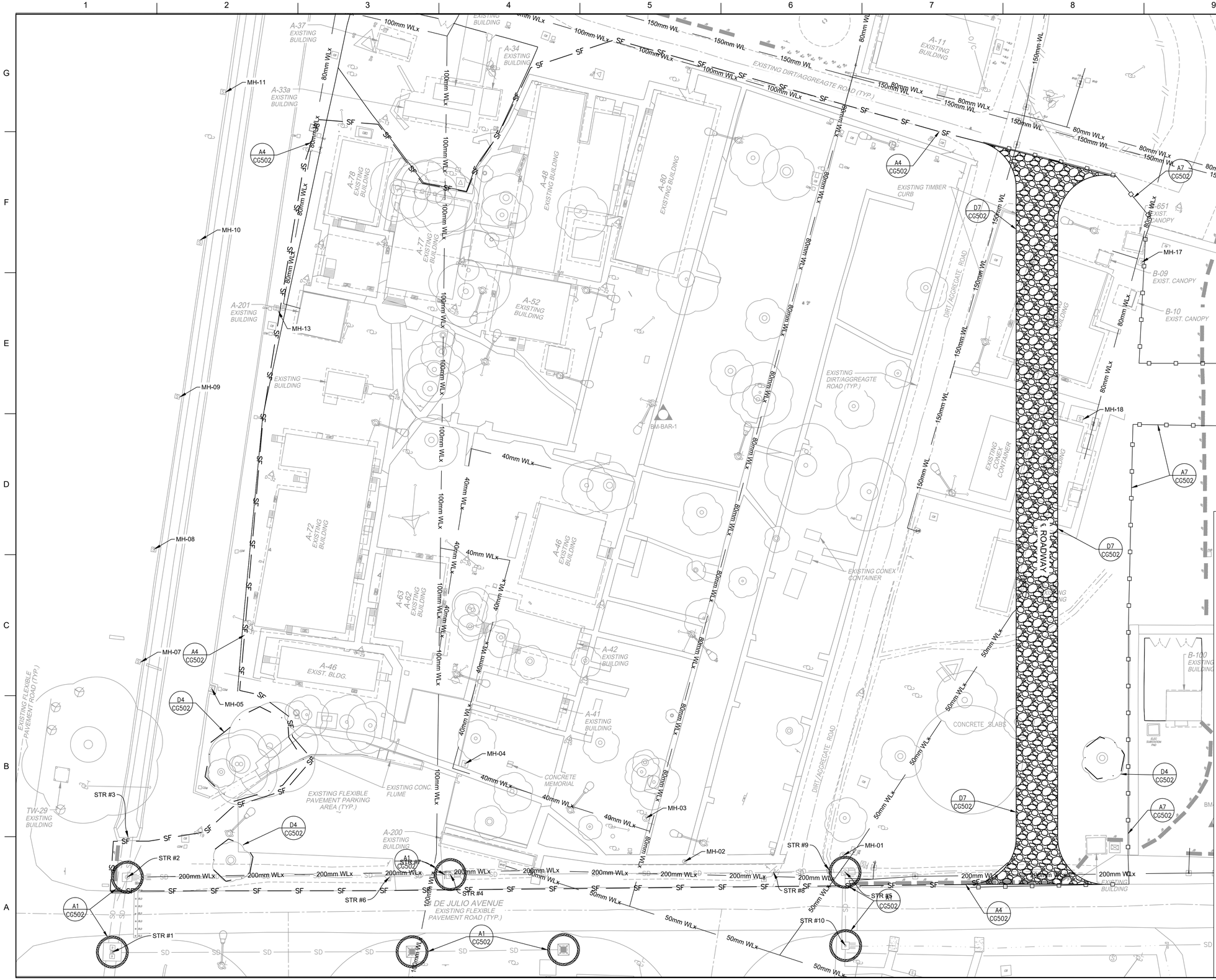

BMP LEGEND

- SF — SILT FENCE
- SAFETY FENCE
- INLET PROTECTION
- TEMPORARY ACCESS ROAD (CONSTRUCTION TRACKING CONTROL)
- TREE PROTECTION

PLAN NORTH

0 6000 12000

SCALE: 1 : 300

US Army Corps of Engineers®

MARK	DESCRIPTION	DATE

DESIGNED BY: JBO	ISSUE DATE: FEBRUARY 2019
DRAWN BY: KES	SOLICITATION NO.: W912T819R0028
CHECKED BY: CPE	CONTRACT NO.: -
SUBMITTED BY: RAMO	PROJECT NUMBER: M017EU44
SIZE: ANSI D	FILE NAME: M017EU44CG701.dwg

U.S. ARMY CORPS OF ENGINEERS
MOBILE DISTRICT
MOBILE, ALABAMA

SOTO CANO AIR BASE, HONDURAS
UNACCOMPANIED ENLISTED PERSONNEL HOUSING

BMP PLAN PHASE I

SHEET ID

CG701

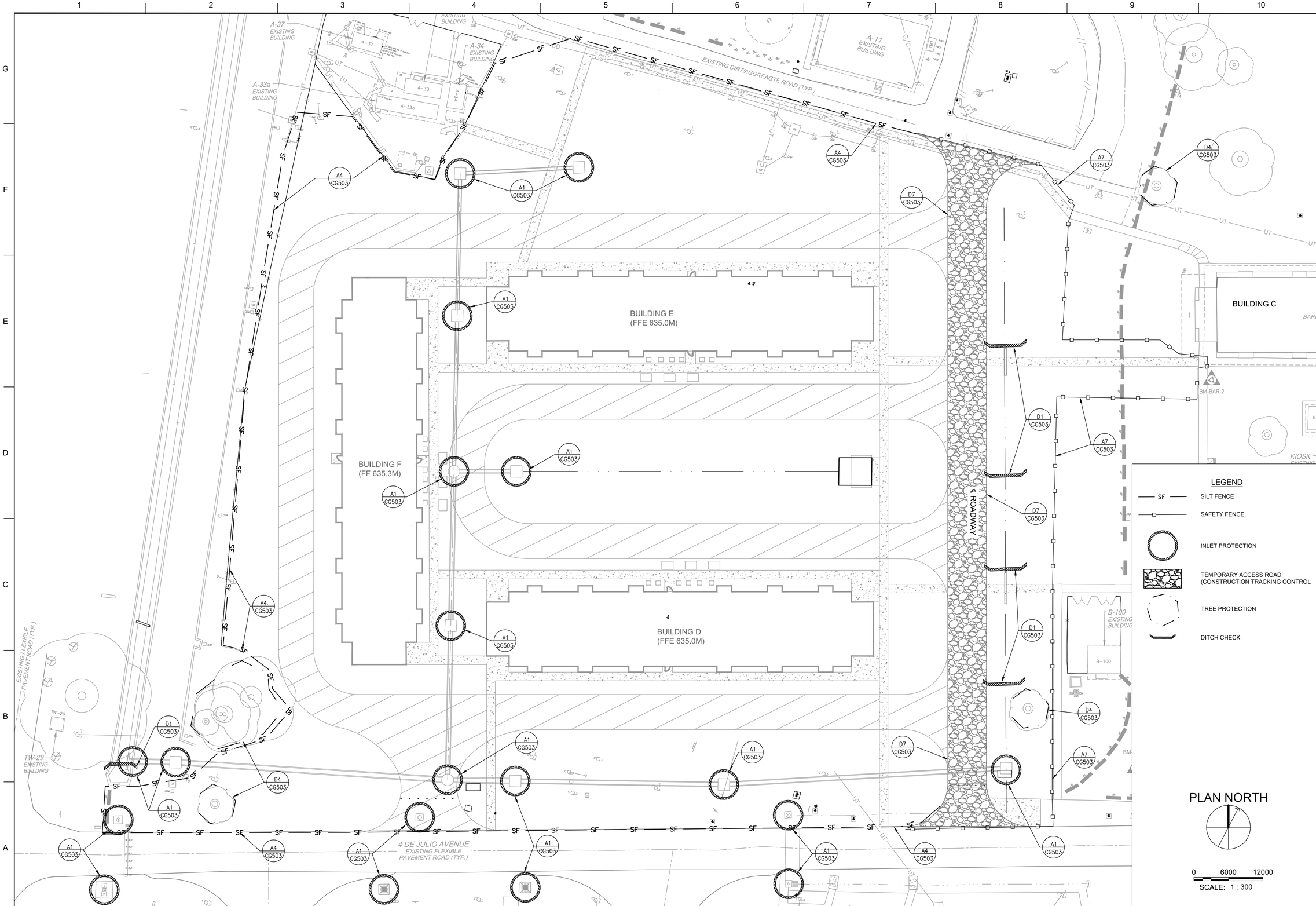

US Army Corps of Engineers®

MARK	DESCRIPTION	DATE

DESIGNED BY: JBO	ISSUE DATE: FEBRUARY 2019
DRAWN BY: KES	SOLICITATION NO.: W912T819R0028
CHECKED BY: CPE	CONTRACT NO.: -
SUBMITTED BY: PM-PLO	PROJECT NUMBER: M017EU44
SIZE: ANSI D	FILE NAME: M017EU44CG702.dwg

U.S. ARMY CORPS OF ENGINEERS
MOBILE DISTRICT
MOBILE, ALABAMA

SOTO CANO AIR BASE, HONDURAS
UNACCOMPANIED ENLISTED PERSONNEL HOUSING

BMP PLAN PHASE II

SHEET ID
CG702

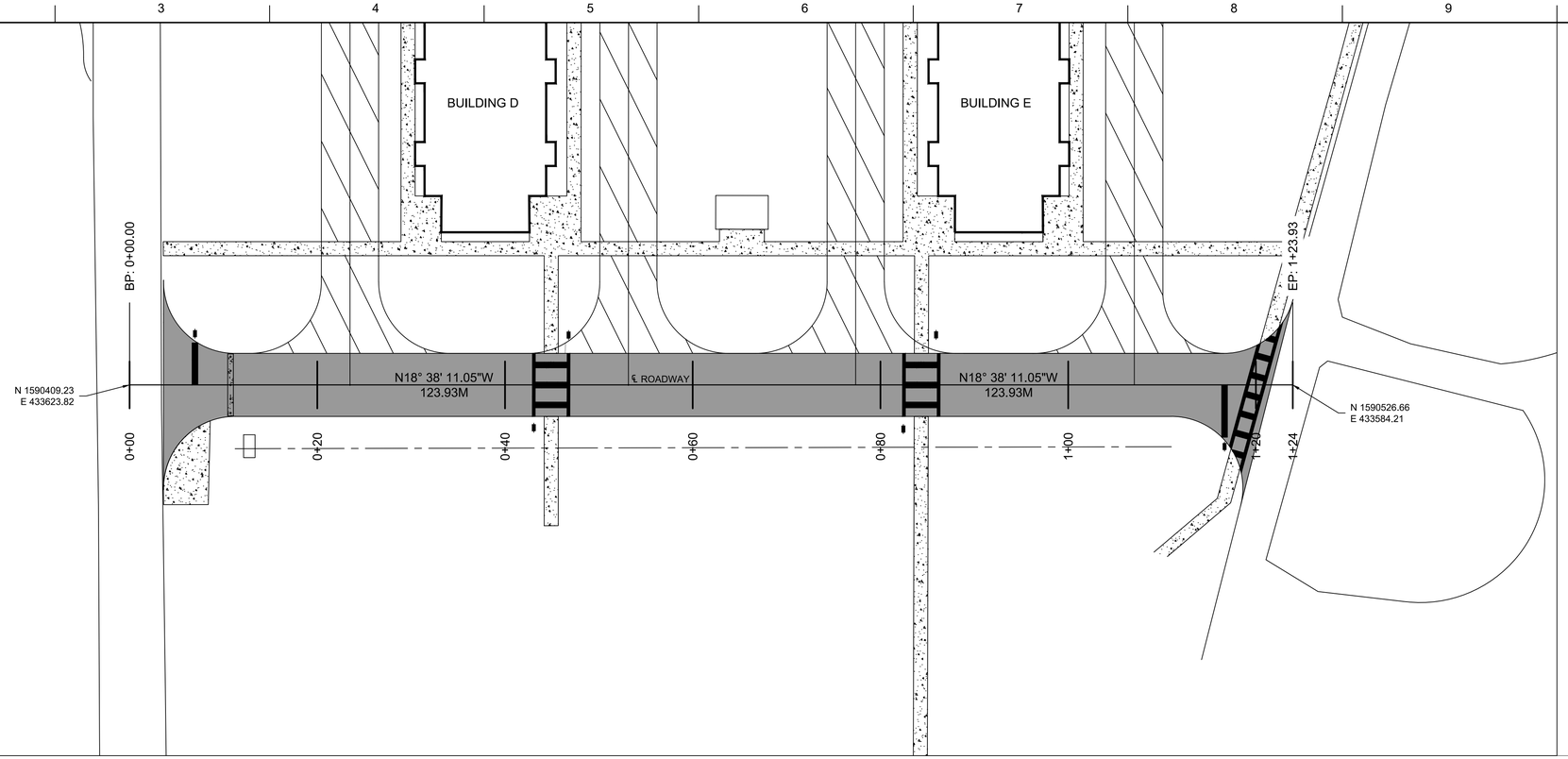

PLAN NORTH

0 6000 12000

SCALE: 1 : 300

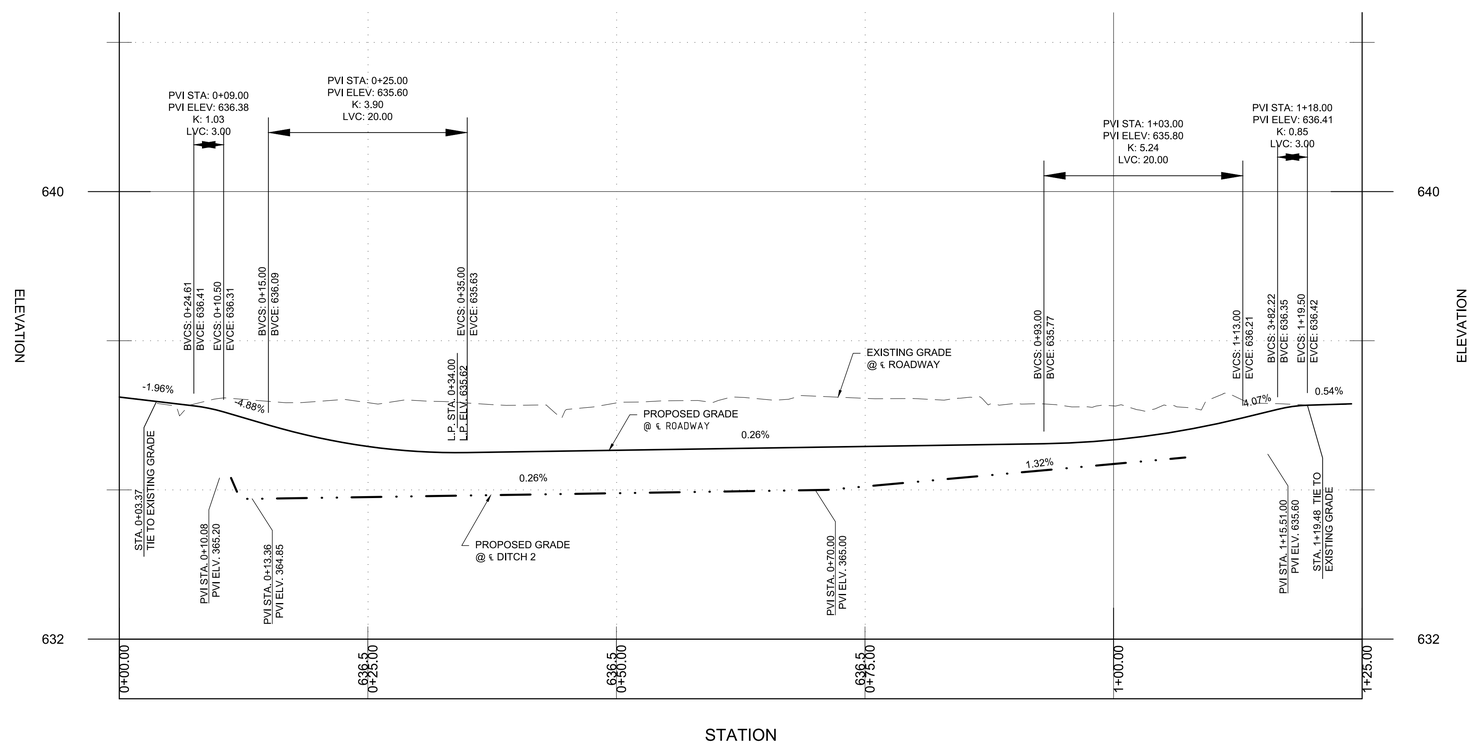

VERTICAL SCALE: 0 100 200

SCALE: 1 : 5

HORIZONTAL SCALE: 0 6000 12000

SCALE: 1 : 300

US Army Corps of Engineers®

MARK	DESCRIPTION	DATE

DESIGNED BY: JBO	ISSUE DATE: FEBRUARY 2019
DRAWN BY: KES	SOLICITATION NO.: W9127819R0028
CHECKED BY: JLL	CONTRACT NO.: -
SUBMITTED BY: JLL	PROJECT NUMBER: M017EU44
SIZE: ANSI D	FILE NAME: M017EU44CP101.dwg

U.S. ARMY CORPS OF ENGINEERS
MOBILE DISTRICT
MOBILE, ALABAMA

SOTO CANO AIR BASE, HONDURAS
UNACCOMPANIED ENLISTED PERSONNEL HOUSING

PLAN AND PROFILE

SHEET ID

CP101

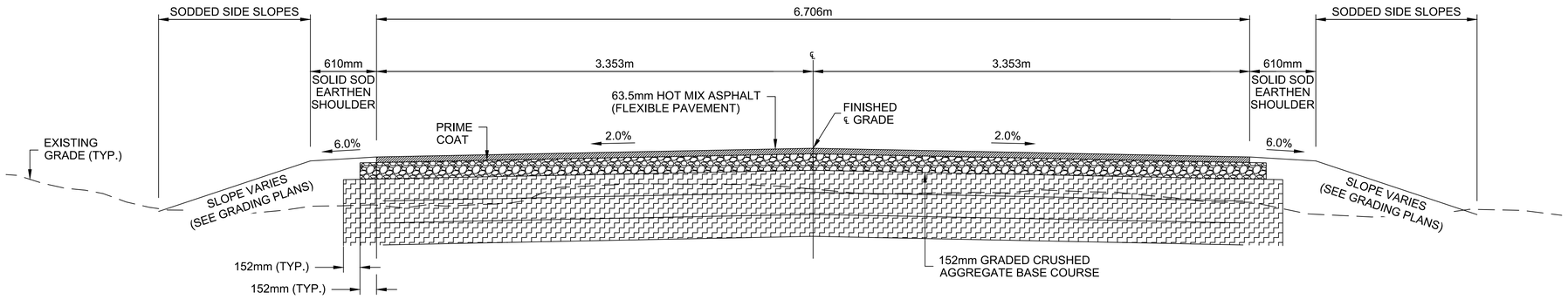

TYPICAL ROADWAY SECTION

STA. 0+01.50 TO STA. 1+21.63

N.T.S.

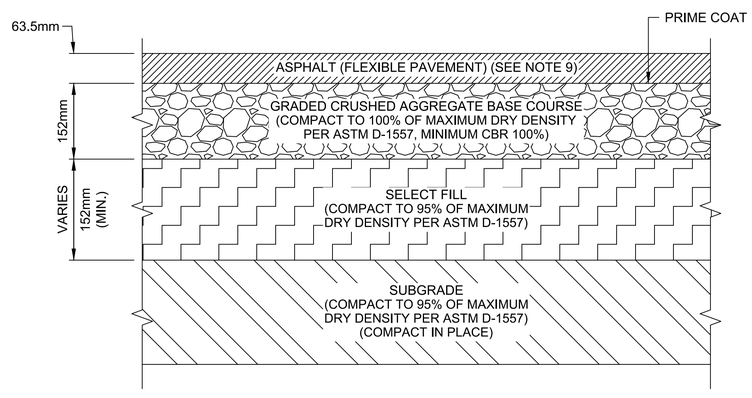

FLEXIBLE PAVEMENT SECTION

N.T.S.

US Army Corps of Engineers®

MARK	DESCRIPTION	DATE

DESIGNED BY: JBO
DRAWN BY: KES
CHECKED BY: JLL
SUBMITTED BY: JLL
SIZE: ANSI D
ISSUE DATE: FEBRUARY 2019
SOLICITATION NO.: W9127819R0028
CONTRACT NO.: -
PROJECT NUMBER: M017EU44
FILE NAME: M017EU44CP301.dwg

U.S. ARMY CORPS OF ENGINEERS
MOBILE DISTRICT
MOBILE, ALABAMA

SOTO CANO AIR BASE, HONDURAS
UNACCOMPANIED ENLISTED PERSONNEL HOUSING

TYPICAL SECTION

SHEET ID
CP301

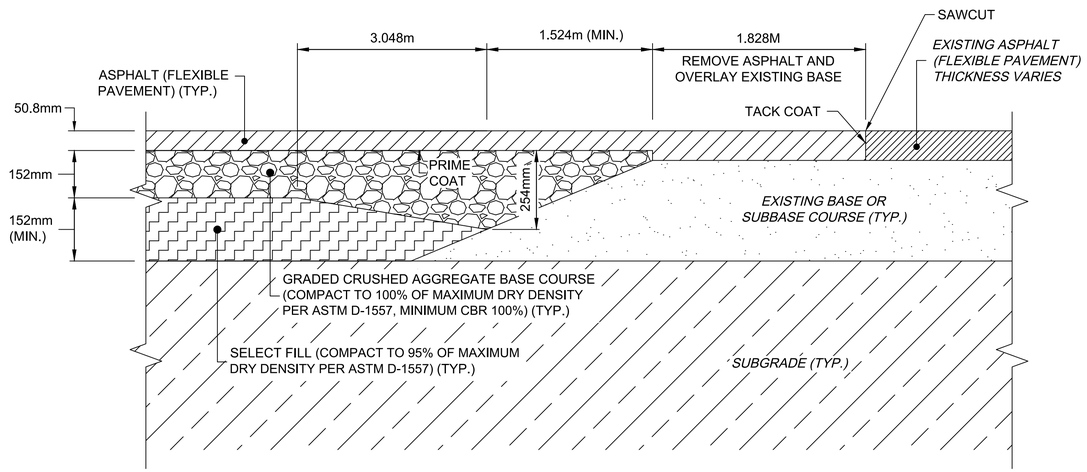

E3 NEW FLEXIBLE PAVEMENT TO EXISTING FLEXIBLE PAVEMENT JUNCTION

N. T. S.

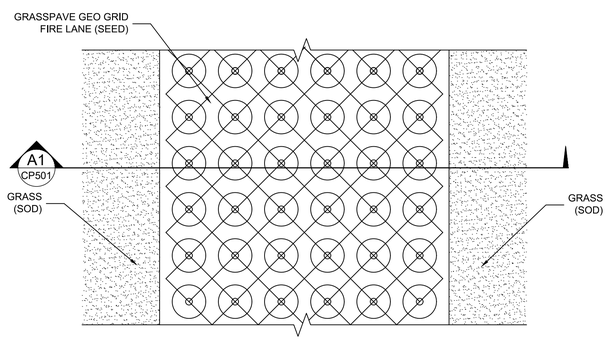

B1 FIRE LANE DETAIL

N. T. S.

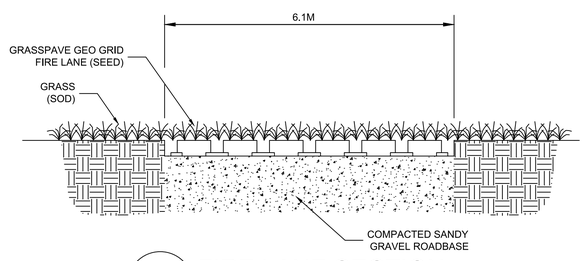

A1 FIRE LANE SECTION

N. T. S.

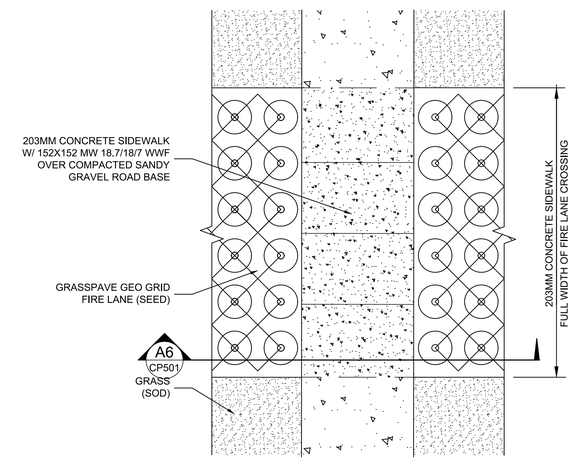

B6 SIDEWALK PLAN AT FIRE LANE

N. T. S.

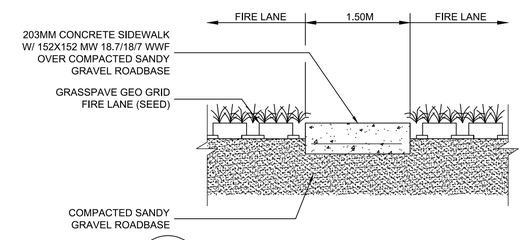

A6 SIDEWALK SECTION AT FIRE LANE

N. T. S.

US Army Corps of Engineers®

MARK	DESCRIPTION	DATE

ISSUE DATE: FEBRUARY 2019
SOLICITATION NO.: W9127819R0028
CONTRACT NO.: -
PROJECT NUMBER: M017EU44
FILE NAME: M017EU44CP501.dwg

DESIGNED BY: JBO
DRAWN BY: KES
CHECKED BY: JLL
SUBMITTED BY: JLL
SIZE: ANSI D

U.S. ARMY CORPS OF ENGINEERS
MOBILE DISTRICT
MOBILE, ALABAMA

SOTO CANO AIR BASE, HONDURAS
UNACCOMPANIED ENLISTED PERSONNEL HOUSING

DETAILS

SHEET ID
CP501

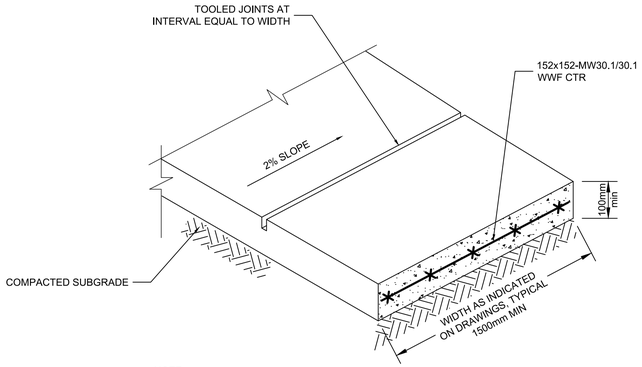

NOTE:

1. 20.7 mpa CONCRETE (CLASS B)
2. PROVIDE FULL DEPTH 9.525mm PREMOLDED EXPANSION JOINT FILLER ALL AROUND AT ALL UTILITY POLES, METER BOXES, ETC.
3. PLACE FULL DEPTH THRU JOINTS W/1 50x150mm PREMOLDED EJF AT POINT OF TANGENCY AND AT MINIMUM 7620mm INTERVALS
4. EDGED WITH 12mm RADIUS AND BROOM FINISH
5. ALL SLOPES SHALL BE NEATLY DRESSED TO TRUE LINE AND GRADE
6. WHERE SIDEWALK CROSSES FIRE LANE, INCREASE THICKNESS TO 150mm

E1 SIDEWALK DETAIL
N. T. S.

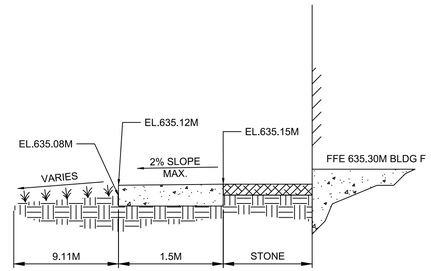

E4 SIDEWALK SECTION BLDG. "F"
N. T. S.

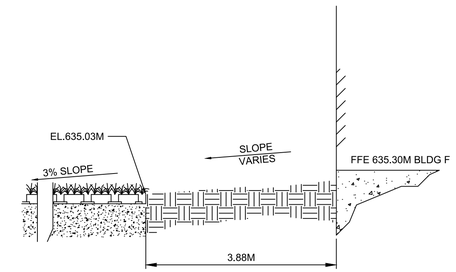

E8 BLDG. "F"
N. T. S.

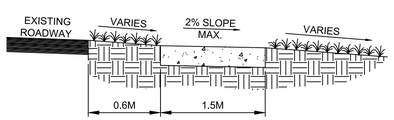

C1 SIDEWALK ALONG ROADWAY
N. T. S.

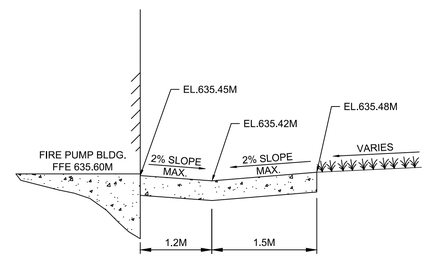

C4 SIDEWALK AT FIRE PUMP HOUSE
N. T. S.

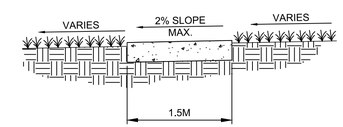

C8 SIDEWALK IN GRASSED AREAS
N. T. S.

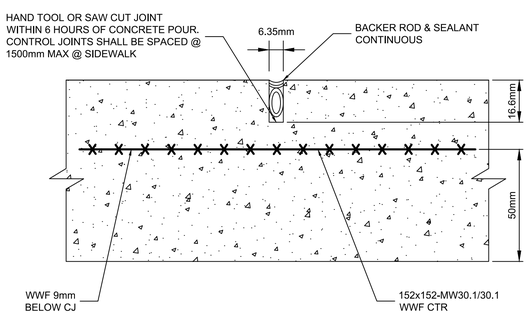

A1 TYPICAL CONTROL JOINT (CJ)
N. T. S.

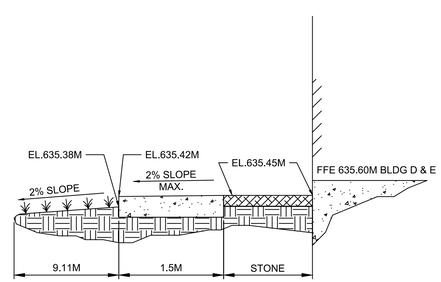

A4 SIDEWALK SECTION AND PLANTER AREA BLDG. "D" AND "E"
N. T. S.

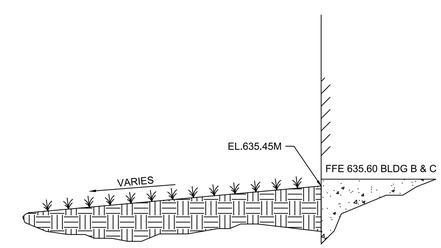

A8 PLANTER AREA BLDG. "D" AND "E"
N. T. S.

US Army Corps of Engineers®

MARK	DESCRIPTION	DATE

ISSUE DATE: FEBRUARY 2019
SOLICITATION NO.: W9127819R0028
CONTRACT NO.: -
PROJECT NUMBER: M017EU44
DESIGNED BY: JBO
DRAWN BY: JBC
CHECKED BY: JLL
SUBMITTED BY: JLL
SIZE: ANSI D
FILE NAME: M017EU44CP502.dwg

U.S. ARMY CORPS OF ENGINEERS
MOBILE DISTRICT
MOBILE, ALABAMA

SOTO CANO AIR BASE, HONDURAS
UNACCOMPANIED ENLISTED PERSONNEL HOUSING

SIDEWALK DETAILS

SHEET ID
CP502

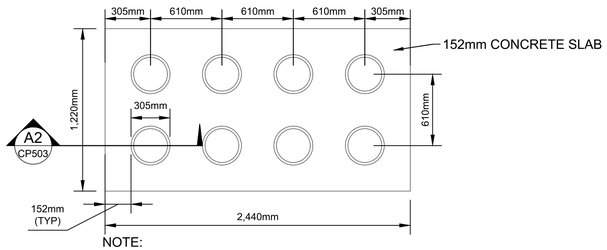

NOTE:

1. WHERE APPLICABLE, THE CONTRACTOR SHALL MONITOR ALL UTILITIES IN THE AREA PRIOR TO PLACING BOLLARD FOUNDATION.

E2 BOLLARD STORAGE AREA
N. T. S.

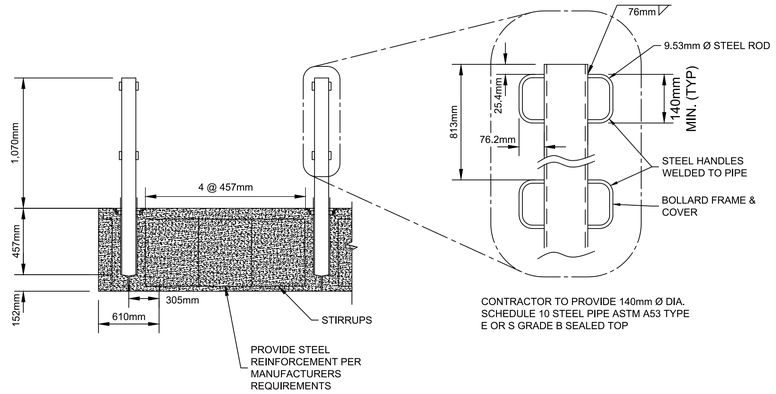

E6 BOLLARD SECTION VIEW
N. T. S.

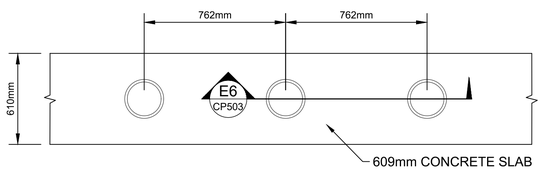

D2 REMOVABLE FORCE PROTECTION BOLLARDS
N. T. S.

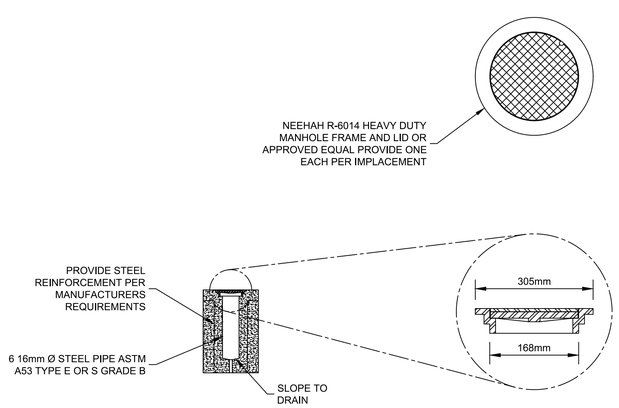

A2 BOLLARD FRAME AND COVER SECTION
N. T. S.

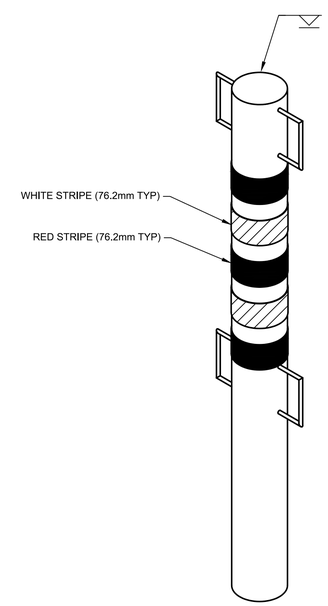

A7 BOLLARD STRIPING
N. T. S.

US Army Corps of Engineers®

MARK	DESCRIPTION	DATE

DESIGNED BY: JBO
DRAWN BY: JBC
CHECKED BY: CPE
SUBMITTED BY: RWO
SIZE: ANSI D
ISSUE DATE: FEBRUARY 2019
SOLICITATION NO.: W9127819R0028
CONTRACT NO.: -
PROJECT NUMBER: M017EU44
FILE NAME: M017EU44CP503.dwg

U.S. ARMY CORPS OF ENGINEERS
MOBILE DISTRICT
MOBILE, ALABAMA

SOTO CANO AIR BASE, HONDURAS
UNACCOMPANIED ENLISTED PERSONNEL HOUSING

BOLLARD DETAILS

SHEET ID
CP503

TCP LEGEND
N.T.S.

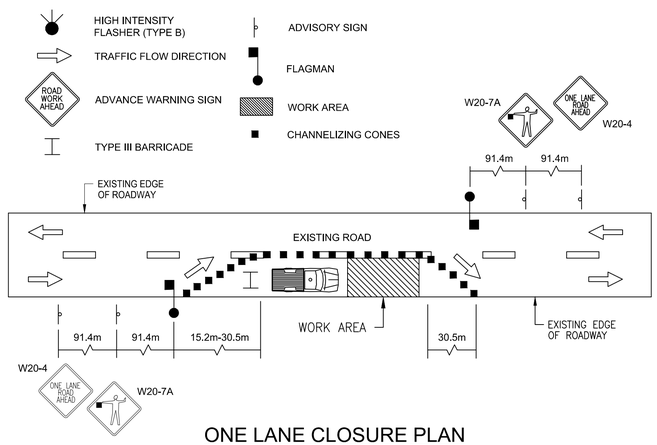

ONE LANE CLOSURE PLAN
N.T.S.

TRAFFIC CONTROL NOTE:

THE CONTRACTOR SHALL BE RESPONSIBLE FOR STRICT COMPLIANCE WITH PART VI OF THE FEDERAL MANUAL ON UNIFORM TRAFFIC CONTROL DEVICES (MUTCD).

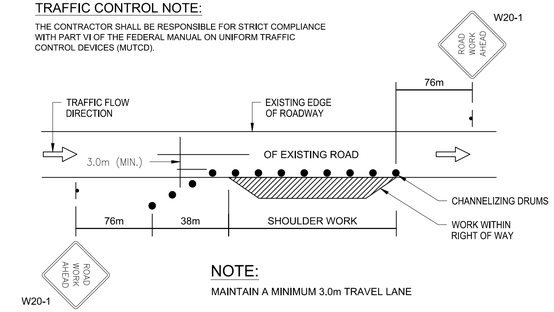

NOTE:
MAINTAIN A MINIMUM 3.0m TRAVEL LANE

CONSTRUCTION WITH MINOR ENCROACHMENT
N.T.S.

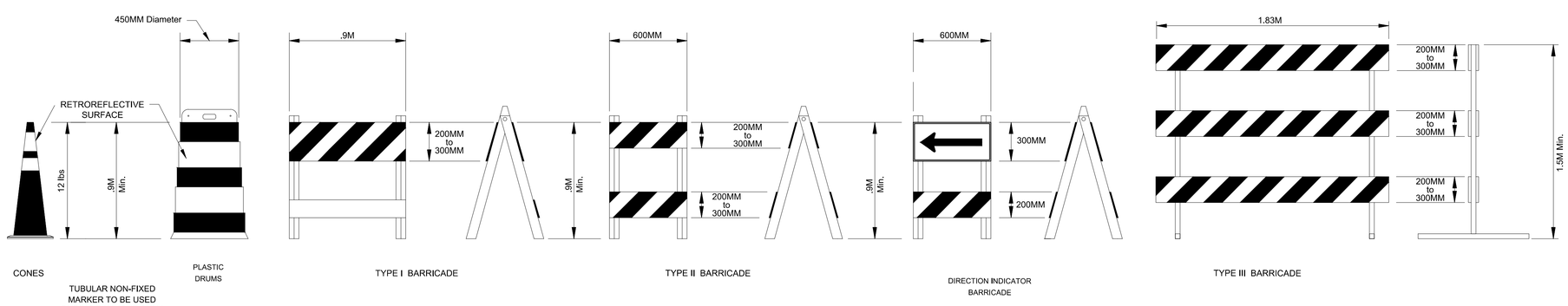

CHANELIZING DEVICES
N.T.S.

TRAFFIC CONTROL NOTES:

1. THE CONTRACTOR SHALL BE RESPONSIBLE FOR ESTABLISHING SAFE WORK ZONES.

CHANNELIZING DEVICE NOTES:

2. THE TYPE III BARRICADE SHALL HAVE A UNIT LENGTH OF 1.83M ONLY. WHEN BARRICADES OF GREATER LENGTHS ARE REQUIRED THOSE LENGTHS SHALL BE IN MULTIPLES OF THE 1.83M UNIT.
3. NO SIGN PANEL SHOULD BE MOUNTED ON ANY CHANNELIZING DEVICE UNLESS THE CHANNELIZING DEVICE/SIGN COMBINATION WAS FOUND TO BE CRASHWORTHY AND THE SIGN PANEL IS MOUNTED IN ACCORDANCE WITH THE VENDOR DRAWING FOR THE CHANNELIZING DEVICE SHOWN.
4. BALLAST SHALL NOT BE PLACED ON TOP RAILS OR ANY STRIPED RAILS OR HIGHER THAN 100MM ABOVE THE DRIVING SURFACE.
5. THE DIRECTION INDICATOR BARRICADE MAY BE USED IN AREAS WHERE SPECIFIC DIRECTIONAL GUIDANCE TO DRIVERS IS NECESSARY. IF USED, DIRECTION INDICATOR BARRICADES SHALL BE USED IN SERIES TO DIRECT THE DRIVER THROUGH THE WORK ZONE TO THE INTENDED DESTINATION.
6. THE SPLICING OF SHEETING IS NOT PERMITTED ON EITHER CHANNELIZING DEVICES OR MOT SIGNS.
7. FOR RAILS LESS THAN .9M LONG, 100MM STRIPES SHALL BE USED.
8. CONES ARE FOR ESTABLISHING A TEMPORARY WORK ZONE AND SHALL:
   A. BE USED ONLY IN ACTIVE WORK ZONES WHERE WORKERS ARE PRESENT.
   B. NOT EXCEED 30M IN LENGTH OF USE AT ANY ONE TIME.
   C. BE REFLECTORIZED WITH RETROREFLECTIVE COLLARS WHEN USED AT NIGHT.
9. FOR BARRIER DELINEATORS, PLACE ON TOP OF UNIT SO THAT RETROREFLECTIVE SHEETING FACES VEHICULAR TRAFFIC. COLOR MUST MATCH ADJACENT LONGITUDINAL PAVEMENT MARKING.

US Army Corps of Engineers®

MARK	DESCRIPTION	DATE

DESIGNED BY: UBO	ISSUE DATE: FEBRUARY 2019
DRAWN BY: KES	SOLICITATION NO.: W912781R0028
CHECKED BY: CPE	CONTRACT NO.: -
SUBMITTED BY: PWO	PROJECT NUMBER: M077EU44
SIZE: ANSI D	FILE NAME: M077EU44CP504.dwg

U.S. ARMY CORPS OF ENGINEERS
MOBILE DISTRICT
MOBILE, ALABAMA

SOTO CANO AIR BASE, HONDURAS
UNACCOMPANIED ENLISTED PERSONNEL HOUSING

TRAFFIC CONTROL DETAILS

SHEET ID
CP504

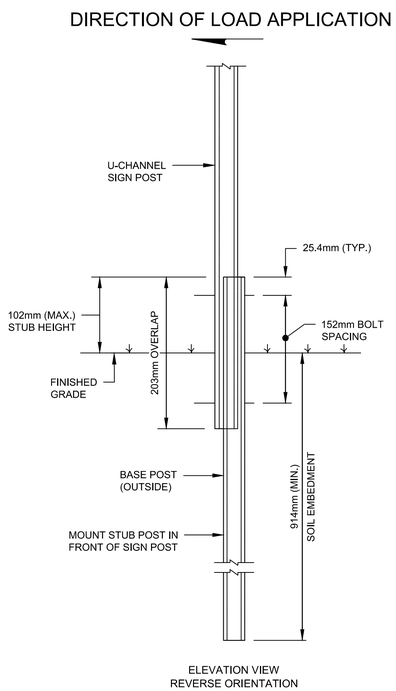

D1 SPLICE DETAIL
N. T. S.

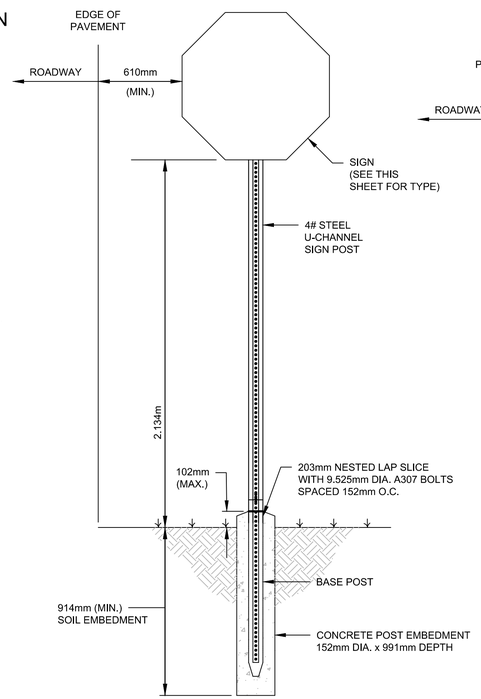

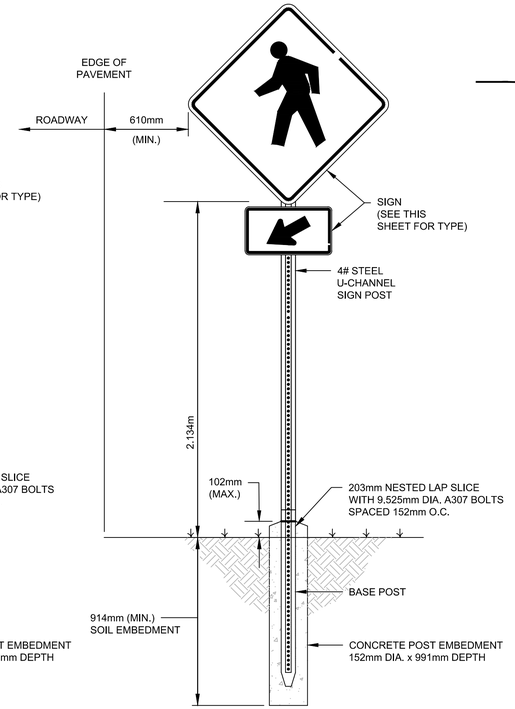

D3 TYPICAL SIGN INSTALLATION DETAIL
N. T. S.

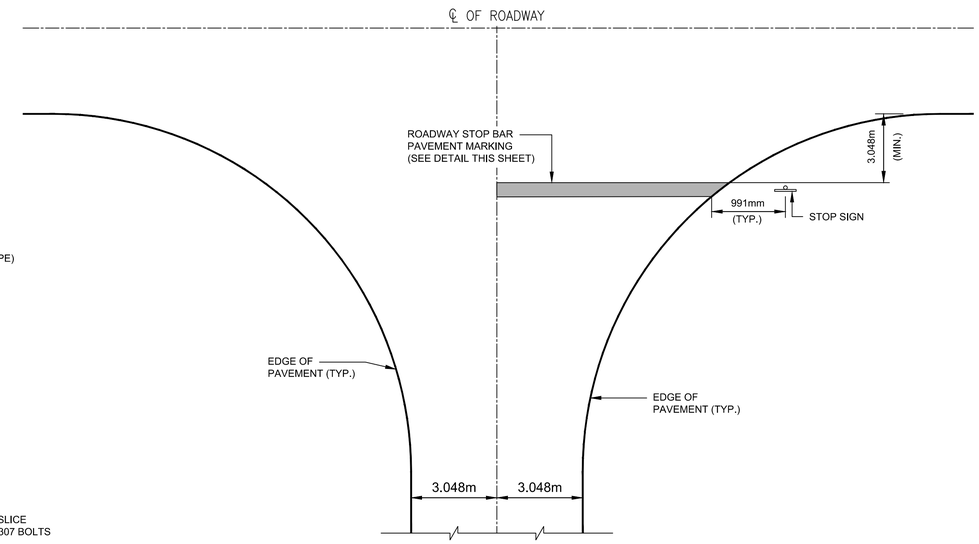

E7 ROADWAY STOP BAR PAVEMENT MARKING PLACEMENT DETAIL
N. T. S.

SIGN INSTALLATION DETAILS
N.T.S.

NOTE:
REFER TO MANUAL ON UNIFORM TRAFFIC CONTROL DEVICES, (MUTCD) U.S. DEPARTMENT OF TRANSPORTATION.

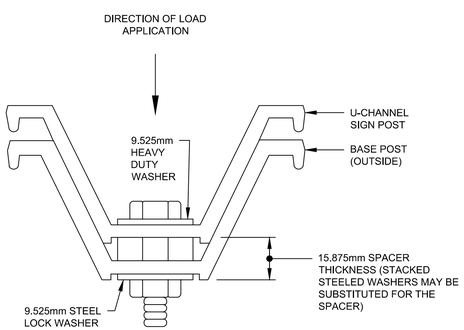

A1 SPLICE SECTION
N. T. S.

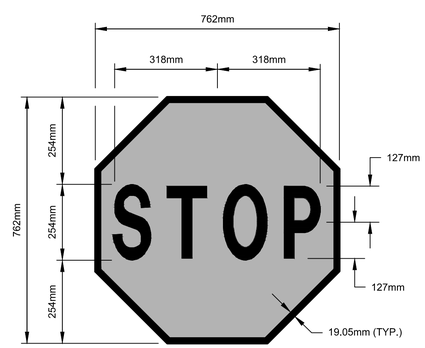

R1-1 COLORS:
LETTERS/BORDER - WHITE (RETROREFLECTIVE)
BACKGROUND - RED (RETROREFLECTIVE)

A3 STOP SIGN DETAIL (R1-1)
N. T. S.

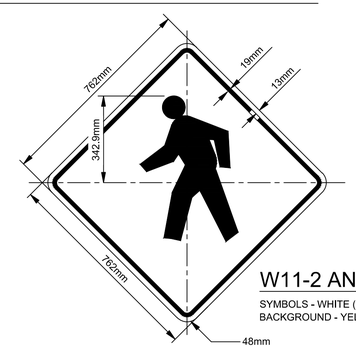

W11-2 AND W16-7 COLORS:
SYMBOLS - WHITE (RETROREFLECTIVE)
BACKGROUND - YELLOW (RETROREFLECTIVE)

C5 LOCATION DESIGNATION (W16-7p)
N. T. S.

DIMENSIONS IN MILLIMETERS						
A	B	C	D	E	F	G
83.36	149.45	175.87	149.45	109.80	76.2	30°

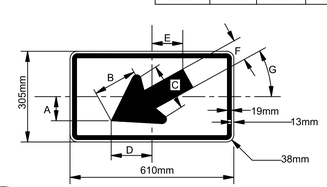

A5 PEDESTRIAN CROSSING (W11-2)
N. T. S.

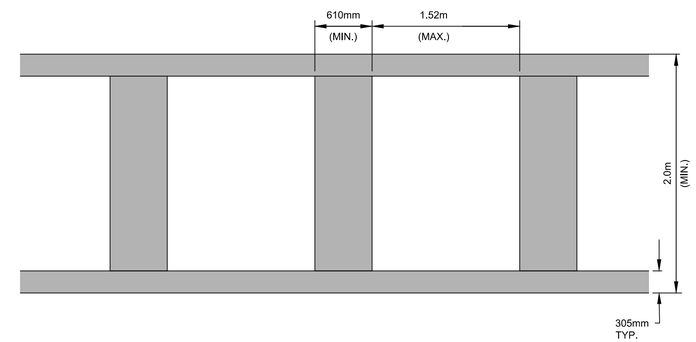

C7 ROADWAY CROSSWALK
N. T. S.

NOTE:
STRIPING SHALL BE WHITE REFLECTIVE PAINT

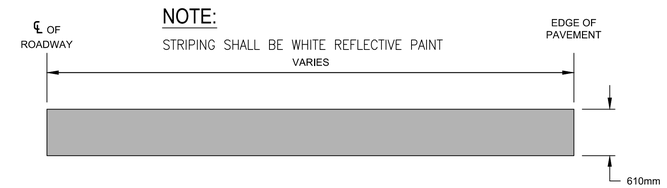

A7 ROADWAY STOP BAR
N. T. S.

US Army Corps of Engineers®

MARK	DESCRIPTION	DATE

DESIGNED BY: JBO	ISSUE DATE: FEBRUARY 2019
DRAWN BY: KBK	SOLICITATION NO.: W912T819R0028
CHECKED BY: CPE	CONTRACT NO.: -
SUBMITTED BY: PWO	PROJECT NUMBER: M077EU44
SIZE: ANSI D	FILE NAME: M077EU44CP505.dwg

U.S. ARMY CORPS OF ENGINEERS
MOBILE DISTRICT
MOBILE, ALABAMA

SOTO CANO AIR BASE, HONDURAS
UNACCOMPANIED ENLISTED PERSONNEL HOUSING

PAVEMENT MARKING AND SIGN DETAILS

SHEET ID
CP505

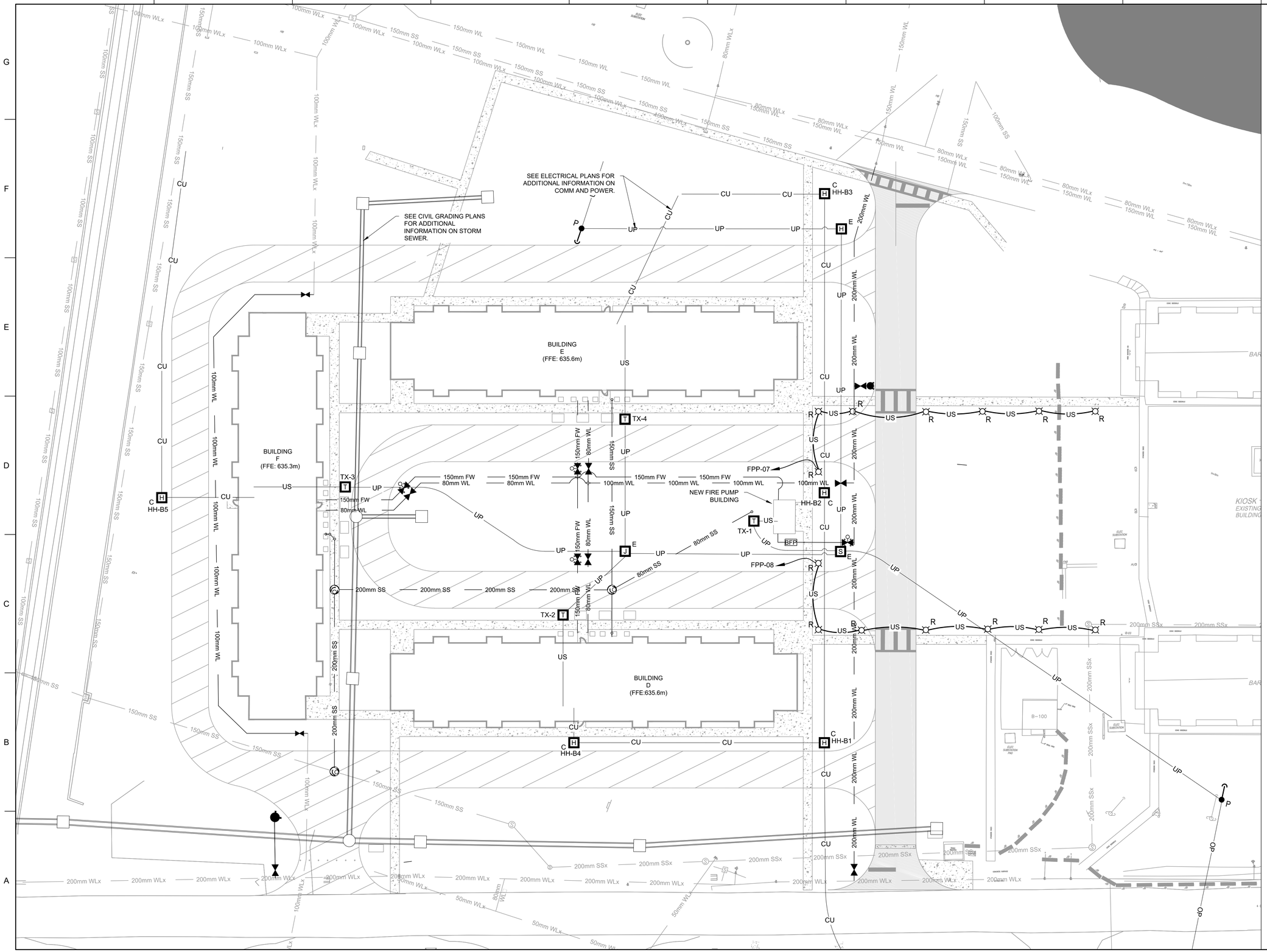

US Army Corps of Engineers®

MARK	DESCRIPTION	DATE

DESIGNED BY: MEC	ISSUE DATE: FEBRUARY 2019
DRAWN BY: KES	SOLICITATION NO.: W912T819R0028
CHECKED BY: PWO	CONTRACT NO.: -
SUBMITTED BY: JWF	PROJECT NUMBER: M017EU44
SIZE: ANSI D	FILE NAME: M017EU45CU100.dwg

U.S. ARMY CORPS OF ENGINEERS
MOBILE DISTRICT
MOBILE, ALABAMA

SOTO CANO AIR BASE, HONDURAS
UNACCOMPANIED ENLISTED PERSONNEL HOUSING

OVERALL UTILITY PLAN

SHEET ID
CU100

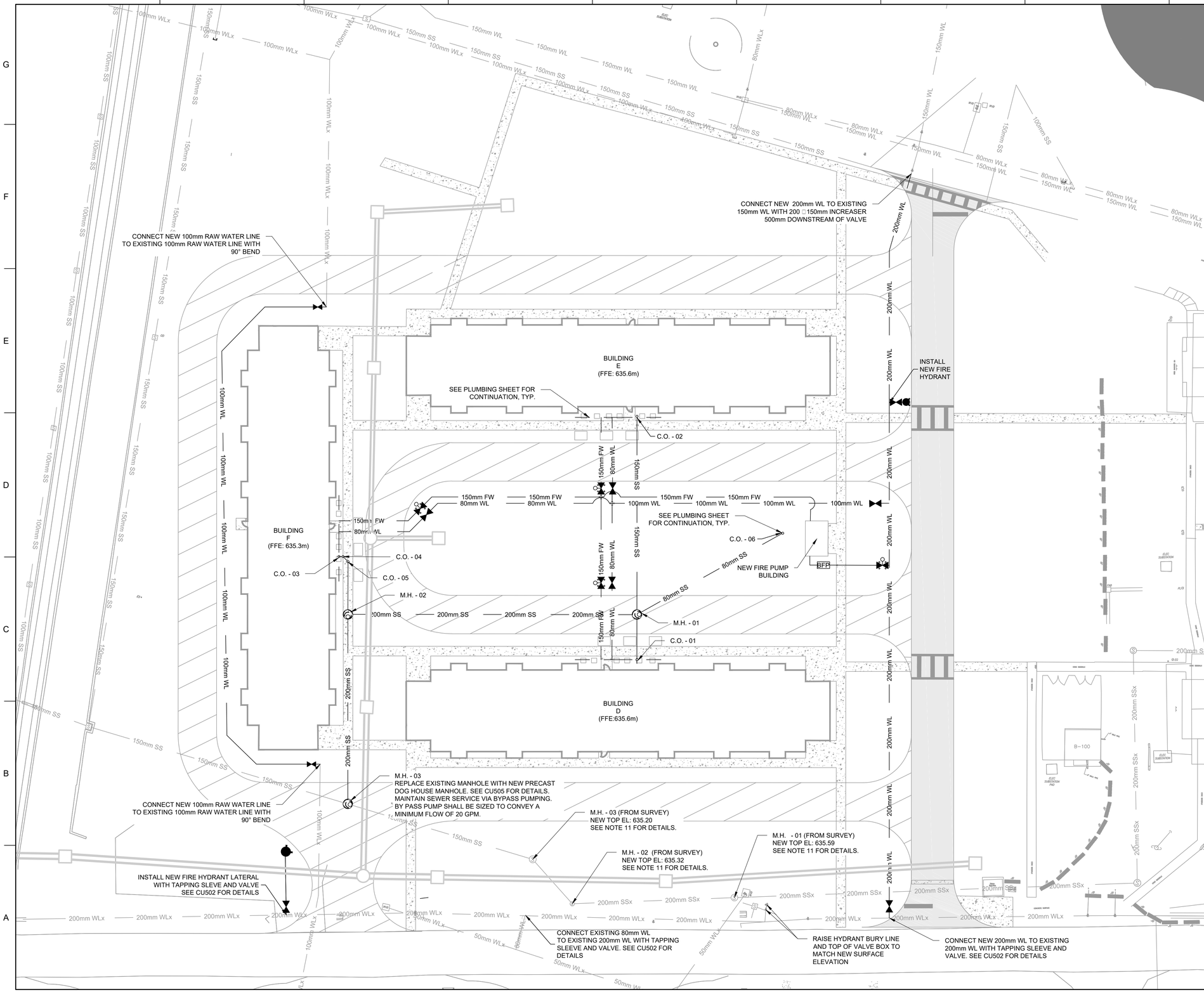

GENERAL NOTES

1. CONTRACTOR SHALL MARK ALL ACTUAL LOCATIONS OF ALL UNDERGROUND CABLE AND UTILITIES (COMM, WATER, ETC.) BEFORE THE START OF CONSTRUCTION. CAUTION SHALL BE TAKEN BY THE CONTRACTOR AROUND ANY UNDERGROUND CABLE OR UTILITY. ANY DAMAGE SHALL BE REPAIRED OR REPLACED TO THE SATISFACTION OF THE C.O.R. AT NO ADDITIONAL COST TO THE GOVERNMENT.

2. CONSTRUCTION DOCUMENTS RELATED TO THE LOCATION OF THESE EXISTING UNDERGROUND WATER, SEWER, ELECTRICAL AND COMMUNICATION UTILITIES MAY NOT BE REPRESENT ACTUAL INSTALLED CONDITIONS. THE CONSTRUCTION CONTRACTOR SHALL COORDINATE THROUGH THE C.O.R. TO VERIFY ALL ACTUAL LOCATIONS OF ALL PLACED UTILITIES BEFORE BEGINNING ANY REMOVAL WORK.

3. ALL WATER AND SEWER CONSTRUCTION WORK ON THIS PROJECT SHALL BE PERFORMED IN ACCORDANCE WITH ALL SPECS □ APPLICABLE INDUSTRY CODES AND STANDARDS. THESE CODES AND STANDARDS INCLUDE BUT ARE NOT LIMITED TO THE FOLLOWING: AMERICAN WATER WORKS ASSOCIATION (AWWA), AMERICAN NATIONAL STANDARD INSTITUTE (ANSI), AMERICAN SOCIETY FOR TESTING AND MATERIALS (ASTM), OCCUPATIONAL SAFETY AND HEALTH ADMINISTRATION (OSHA), AMERICAN ASSOCIATION OF STATE HIGHWAY AND TRANSPORTATION OFFICIALS (AASHTO), NATIONAL FIRE PROTECTION ASSOCIATION (NFPA), UNIFIED FACILITIES CRITERIA (UFC), AND ENVIRONMENTAL PROTECTION AGENCY (EPA).

4. THE EXACT LOCATION OF EXISTING STRUCTURES, UTILITIES AND PIPING SHALL BE VERIFIED IN THE FIELD BY THE CONTRACTOR BEFORE CONSTRUCTION BEGINS. THESE DRAWINGS DO NOT PURPORT TO SHOW IN COMPLETE DETAIL ALL EXISTING STRUCTURES, UTILITIES OR PIPING. THE CONTRACTOR SHALL EXAMINE ALL AVAILABLE RECORDS AND MAKE ALL EXPLORATIONS AND EXCAVATIONS AS REQUIRED TO DETERMINE THE LOCATION OF EXISTING STRUCTURES, UTILITIES, AND PIPES WHENEVER NECESSARY. THE OWNER RESERVES THE RIGHT TO CHANGE LOCATIONS OF THE SEWER LINE OR WATER LINE TO AVOID CONFLICT WITH EXISTING STRUCTURES, UTILITIES OR PIPING, ANY SIGNIFICANT CHANGES SHALL BE APPROVED BY THE C.O.R.

5. THE CONTRACTOR SHALL SCHEDULE HIS WORK SO THAT THE WORK PROCEEDS IN AN EFFICIENT AND ORDERLY MANNER WITHOUT DISRUPTION OF SANITARY SEWER SERVICE OR WATER LINE TO THE GOVERNMENT. THE CONTRACTOR SHALL BE AWARE THAT THE WORK TO BE ACCOMPLISHED IS PART OF AN EXISTING AND OPERATING WATER DISTRIBUTION AND SANITARY SEWER COLLECTION SYSTEM. ALL CONSTRUCTION SHALL BE COORDINATED WITH THE GOVERNMENT IN ORDER TO MINIMIZE OPERATIONAL PROBLEMS. INSTALLATION THAT MAY REQUIRE A WATER OUTAGE SHALL BE SCHEDULED AND APPROVED THROUGH BASE PUBLIC WORKS. A MINIMUM OF 48 HOURS NOTICE SHALL BE GIVEN TO THE UTILITY PROVIDER AND TENANT PRIOR TO THE START OF ANY WORK. WHEN POSSIBLE UTILITY OUTAGES SHALL BE ARRANGED TO OCCUR AFTER NORMAL WORKING HOURS OR ON THE WEEKENDS.

6. THE CONTRACTOR SHALL BE RESPONSIBLE FOR ANY DAMAGE DONE BY HIS EQUIPMENT TO EXISTING UTILITIES. DAMAGE SHALL BE REPAIRED OR REPLACED BACK TO ORIGINAL OR BETTER CONDITION WITHOUT ADDITIONAL COST TO THE GOVERNMENT.

7. THE CONTRACTOR SHALL EXPLORE AHEAD 200 FEET SO ADJUSTMENTS CAN BE MADE IN THE ALIGNMENT OF THE PIPE IN CASE OF CONFLICTS WITH EXISTING STRUCTURES, UTILITIES AND PIPING.

8. 4" Ø AND LARGER WATER LINES SHALL BE PROVIDED WITH THRUST RESTRAINT OR BLOCKS IN ACCORDANCE WITH ALL SPECS AND DETAILS, SEE SHEET CU501.

9. THE CONTRACTOR SHALL ENSURE CONTINUOUS UTILITY SERVICE DURING CONSTRUCTION TO ALL BUILDINGS BEING AFFECTED BY THIS UTILITY WORK

10. MANHOLE LID ORIENTATION IS TO BE AS SHOWN. SEE C-003 FOR ADDITIONAL INFORMATION.

11. THE MANHOLE FRAMES SHALL BE ACCURATELY SET TO LINE AND GRADE BY THE FOLLOWING METHOD:
   1) REMOVE THE FRAME AND LID WHEN LOWERING THE MASONRY TOP OF THE STRUCTURE AND RESETTING WITH EITHER CLAY BRICK AND MORTAR OR BY USING PRECAST GRADE RINGS.
   1)1) PRECAST GRADE RINGS, EITHER 4" (100mm) OR 6" (150mm), MAY BE INSTALLED ABOVE THE MANHOLE CONE. NO MORE THAN TWO GRADE RINGS SHALL BE USED. WHERE MANHOLES ARE TO BE RAISED OR LOWERED 12 INCHES (300mm) OR MORE, THE EXISTING CONE SHALL BE REMOVED AND THE MANHOLE BARREL CUT SUCH THAT THE MANHOLE TOP WILL BE AT THE ELEVATION SHOWN. SAW CUTS MUST BE MADE PERPENDICULAR TO THE BARREL WALLS AND LEVEL ACROSS.
   2) BUTYL MASTIC SEALANT SHALL BE USED WHEN REJOINING THE MANHOLE FRAME TO THE MANHOLE OR BARREL SECTIONS TOGETHER FOR ALL ADJUSTMENTS TO PROVIDE A WATERTIGHT STRUCTURE. SEAL THE INTERIOR AND EXTERIOR OF THE MANHOLE WITH A NON-SHRINK GROUT.

US Army Corps of Engineers®

MARK	DESCRIPTION	DATE

DESIGNED BY: MEC	ISSUE DATE: FEBRUARY 2019
DRAWN BY: KES	SOLICITATION NO.: W9127819R0028
CHECKED BY: PWO	CONTRACT NO.: -
SUBMITTED BY: JWF	PROJECT NUMBER: M017EU44
SIZE: ANSI D	FILE NAME: M017EU45CU101.dwg

U.S. ARMY CORPS OF ENGINEERS
MOBILE DISTRICT
MOBILE, ALABAMA

SOTO CANO AIR BASE, HONDURAS
UNACCOMPANIED ENLISTED PERSONNEL HOUSING

OVERALL WATER □ WASTEWATER PLAN

SHEET ID
CU101

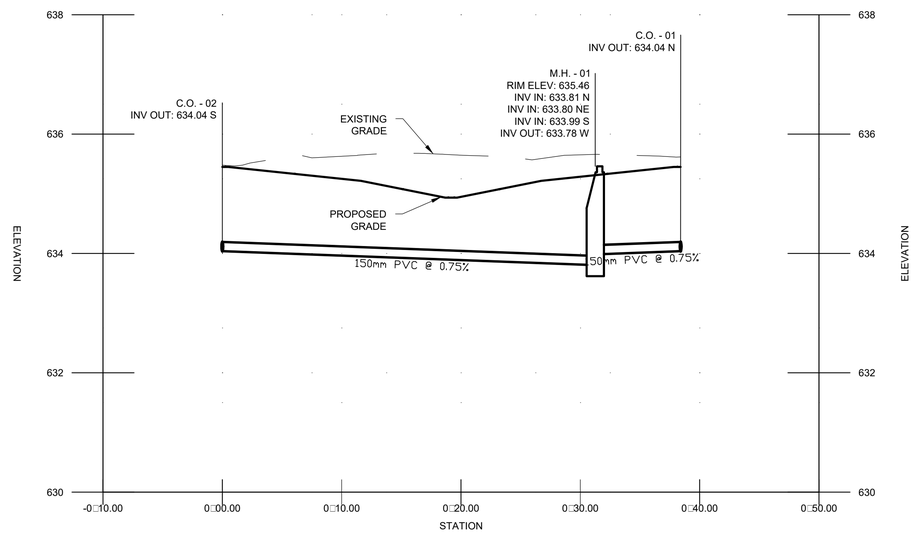

PROFILE VIEW OF PROFILE VIEW OF PROPOSED SANITARY SEWER - (CO-1 CO-2)

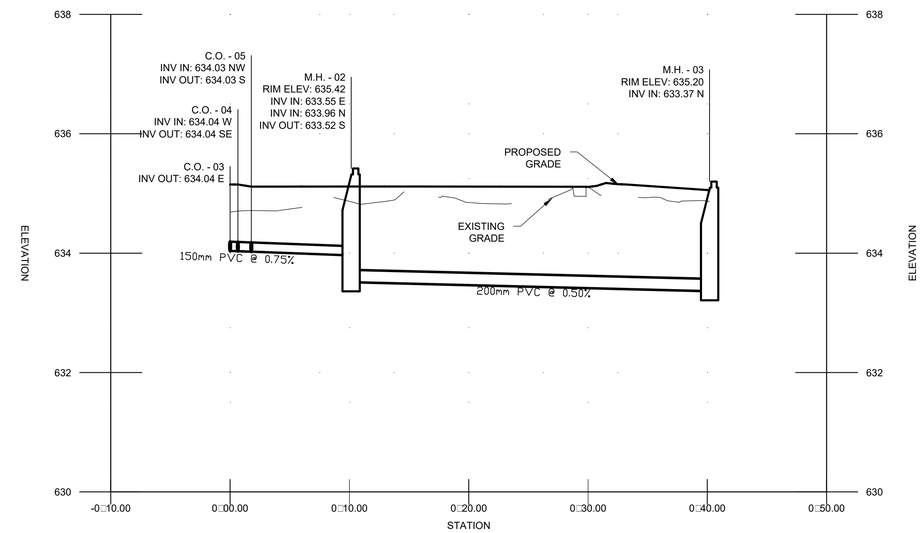

PROFILE VIEW OF PROFILE VIEW OF PROPOSED SANITARY SEWER - (CO-3 MH-3)

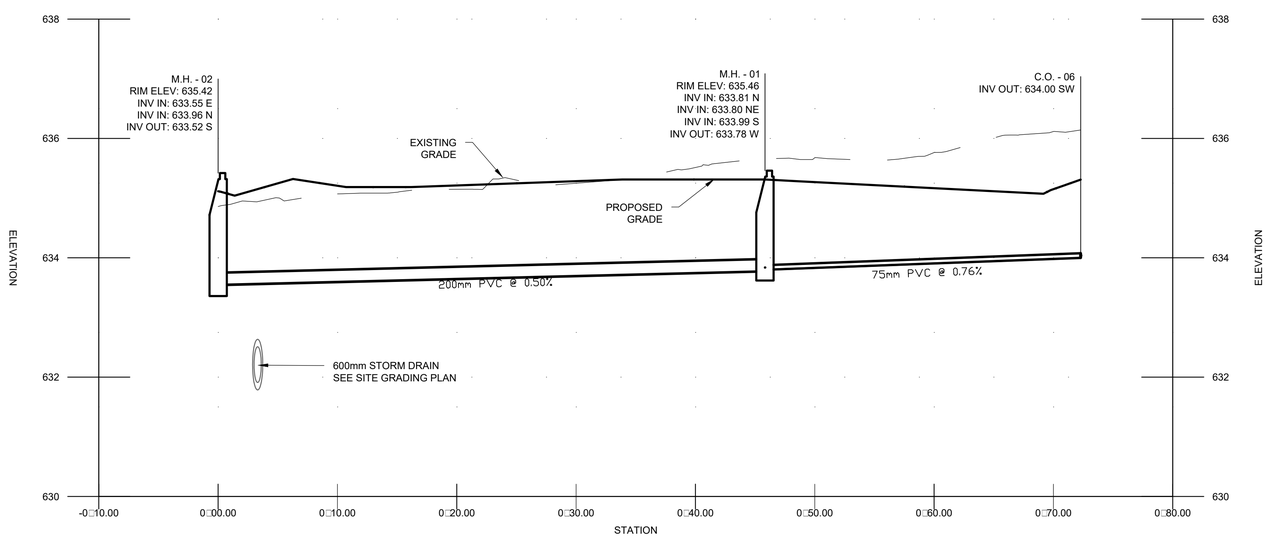

PROFILE VIEW OF PROFILE VIEW OF PROPOSED SANITARY SEWER - (CO-06 MH-02)

SANITARY SEWER STRUCTURES TABLE

STRUCTURE ID	RIM ELEV.
C.O. - 01	635.45
C.O. - 02	635.45
C.O. - 03	635.15
C.O. - 04	635.15
C.O. - 05	635.11
C.O. - 06	635.31
M.H. - 01	635.46
M.H. - 02	635.42
M.H. - 03	635.20

SANITARY SEWER

FROM STRUCTURE ID #	TO STRUCTURE ID #	PIPE I.D. (mm)	INVERT IN (ELEV.)	INVERT OUT (ELEV.)	SLOPE (%)
C.O. - 01	M.H. - 01	150	634.040	633.986	0.75%
C.O. - 02	M.H. - 01	150	634.040	633.806	0.75%
C.O. - 03	C.O. - 04	150	634.040	634.035	0.75%
C.O. - 04	C.O. - 05	150	634.035	634.027	0.75%
C.O. - 05	M.H. - 02	150	634.027	633.964	0.75%
C.O. - 06	M.H. - 01	75	634.000	633.800	0.76%
M.H. - 01	M.H. - 02	200	633.776	633.547	0.50%
M.H. - 02	M.H. - 03	200	633.516	633.366	0.50%

VERTICAL SCALE 0 100 200
SCALE: 1 : 5

HORIZONTAL SCALE 0 10000 20000
SCALE: 1 : 500

US Army Corps of Engineers®

MARK	DESCRIPTION	DATE

DESIGNED BY: MEC
DRAWN BY: MEC
CHECKED BY: PWO
SUBMITTED BY: JWF
SIZE: ANSI D
ISSUE DATE: FEBRUARY 2019
SOLICITATION NO.: W9127819R0028
CONTRACT NO.: -
PROJECT NUMBER: M077EU44
FILE NAME: M077EU45CU201.dwg

U.S. ARMY CORPS OF ENGINEERS
MOBILE DISTRICT
MOBILE, ALABAMA

SOTO CANO AIR BASE, HONDURAS
UNACCOMPANIED ENLISTED PERSONNEL HOUSING

SANITARY SEWER PROFILES

SHEET ID
CU201

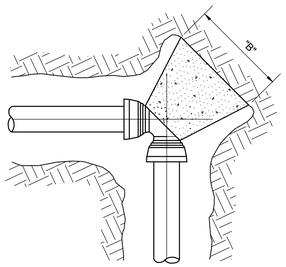

F1 90 DEG. BEND
N. T. S.

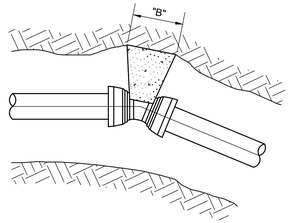

F3 45 DEG., 22.5 DEG., 11.25 DEG. BENDS
N. T. S.

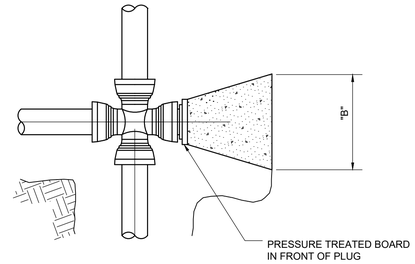

F5 CROSS WITH PLUG
N. T. S.

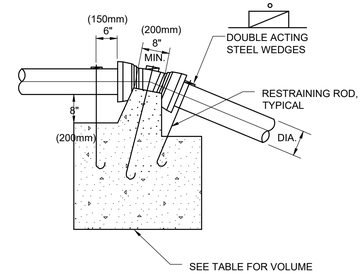

F7 ELEVATION
N. T. S.

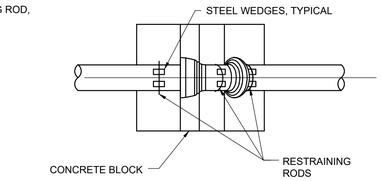

F9 PLAN
N. T. S.

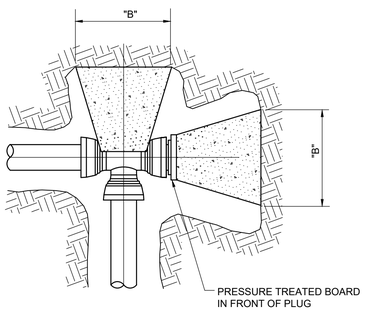

D1 TEE WITH PLUG
N. T. S.

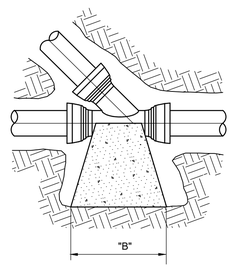

D3 LATERAL
N. T. S.

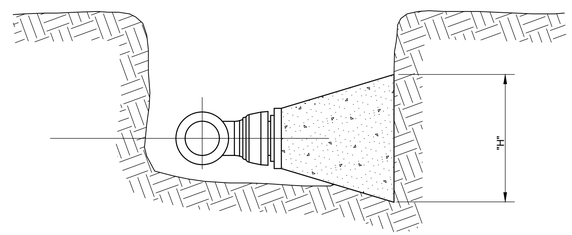

D5 TYPICAL SECTION
N. T. S.

NOTES

1. TABLES ARE BASED ON 2000 LBS/SQ.FT. (.97 □g/□m²) SOIL BEARING PRESSURE. CORRECTION FACTORS FOR OTHER SOILS ARE AS FOLLOWS: SOFT CLAY 4□SAND 2□SAND AND GRAVEL 1.33□SHALE 0.4.

2. PRESSURE USED IS 150 PSI (10.55 □g/□m²) WORKING PRESSURE PLUS 100 PSI (7.03 □g/□m²) ALLOWANCE FOR WATER HAMMER.

3. THRUST PRESSURE WAS COMPUTED USING THE FOLLOWING FORMULA:
P = 125 H A SIN 0/2.

DOWN BEND THRUST BLOCKS

DOWN BEND THRUST BLOCKS				
SOIL BEARING 2000 P.S.F. (96.8 KP□) - TEST PRESSURE 200 P.S.I. (1378.9 KP□)				
PIPE SIZE (DIA.)	90 DEG. BEND	45 DEG. BEND □ WYE	22 1/2 DEG. BEND	11 1/4 DEG. BEND
	CUBIC FEET (CUBIC METERS)	CUBIC FEET (CUBIC METERS)	CUBIC FEET (CUBIC METERS)	CUBIC FEET (CUBIC METERS)
4" (100mm)	14 (0.40)	10 (0.28)	5.5 (0.15)	3 (0.08)
6" (150mm)	56 (1.58)	40 (1.13)	22 (0.62)	11 (0.31)
8" (200mm)	100 (2.83)	71 (2.01)	38 (1.07)	20 (0.56)
10" (250mm)	160 (4.52)	112 (3.17)	60 (1.70)	31 (0.88)
12" (300mm)	226 (6.39)	160 (4.52)	86 (2.43)	44 (1.24)
14" (350mm)	308 (8.71)	218 (6.16)	118 (3.34)	60 (1.70)

REQUIRED THRUST BLOCK BEARING AREA						
SOIL BEARING 2000 P.S.F. (96 KP□) -TEST PRESSURE 200 P.S.I. (1379 KP□)						
PIPE SIZE	90 DEG. BEND	45 DEG. BEND □ WYE	22 1/2 DEG. BEND	11 1/4 DEG. BEND	TEE	PLUG FOR FUTURE CONNECTION
	"H" X "B"	"H" X "B"	"H" X "B"	"H" X "B"	"H" X "B"	"H" X "B"
4" (100mm)	2.9 FT.^{2} (0.27 M^2)	1.7 FT.^{2} (0.15 M^2)	0.8 FT.^{2} (0.08 M^2)	0.6 FT.^{2} (0.05 M^2)	2.1 FT.^{2} (0.11 M^2)	1.8 FT.^{2} (0.17 M^2)
6" (150mm)	6.0 FT.^{2} (0.56 M^2)	3.3 FT.^{2} (0.31 M^2)	1.7 FT.^{2} (0.15 M^2)	0.8 FT.^{2} (0.08 M^2)	4.3 FT.^{2} (0.40 M^2)	3.3 FT.^{2} (0.31 M^2)
8" (200mm)	10.6 FT.^{2} (0.99 M^2)	5.8 FT.^{2} (0.54 M^2)	3.0 FT.^{2} (0.28 M^2)	1.5 FT.^{2} (0.14 M^2)	7.5 FT.^{2} (0.70 M^2)	5.8 FT.^{2} (0.54 M^2)
10" (250mm)	16.7 FT.^{2} (1.55 M^2)	9.0 FT.^{2} (0.84 M^2)	4.6 FT.^{2} (0.43 M^2)	2.3 FT.^{2} (0.22 M^2)	11.8FT.^{2} (1.10 M^2)	8.9 FT.^{2} (0.83 M^2)
12" (300mm)	24.0 FT.^{2} (2.23 M^2)	13.0 FT.^{2} (1.20 M^2)	6.7 FT.^{2} (0.62 M^2)	3.3 FT.^{2} (0.31M^2)	17.0 FT.^{2} (1.58 M^2)	12.0 FT.^{2} (1.12 M^2)
14" (350mm)	32.7 FT.^{2} (3.04 M^2)	17.7 FT.^{2} (1.64 M^2)	9.0 FT.^{2} (0.84 M^2)	4.5 FT.^{2} (0.42 M^2)	23.0 FT.^{2} (2.14 M^2)	15.6 FT.^{2} (1.5 M^2)

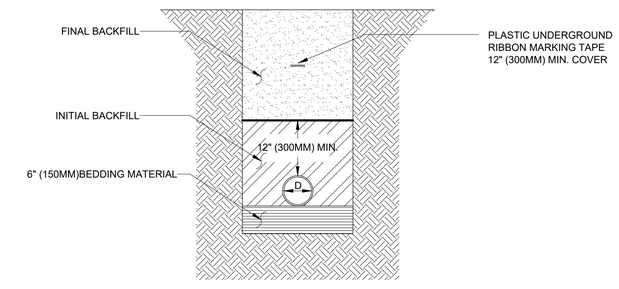

A8 SINGLE PIPE TRENCH BEDDING DETAIL
N. T. S.

NOTES:

1. EXCAVATE FOR PIPE BELLS, BACKFILL AND COMPACT IN ACCORDANCE WITH SPEC SECTION 31 00 00.

2. MINIMUM COVER SHALL BE 36" (900MM) OVER TOP OF PIPE FOR WATER AND 24" (600MM) FOR SEWER.

US Army Corps of Engineers®

MARK	DESCRIPTION	DATE

DESIGNED BY: MEC
DRAWN BY: KES
CHECKED BY: ACR
SUBMITTED BY: CWB
SIZE: ANSI D
ISSUE DATE: FEBRUARY 2019
SOLICITATION NO.: W912T819R0028
CONTRACT NO.: -
PROJECT NUMBER: M017EU44
FILE NAME: M017EU45CU501.dwg

U.S. ARMY CORPS OF ENGINEERS
MOBILE DISTRICT
MOBILE, ALABAMA

SOTO CANO AIR BASE, HONDURAS
UNACCOMPANIED ENLISTED PERSONNEL HOUSING

WATER UTILITY DETAILS

SHEET ID
CU501

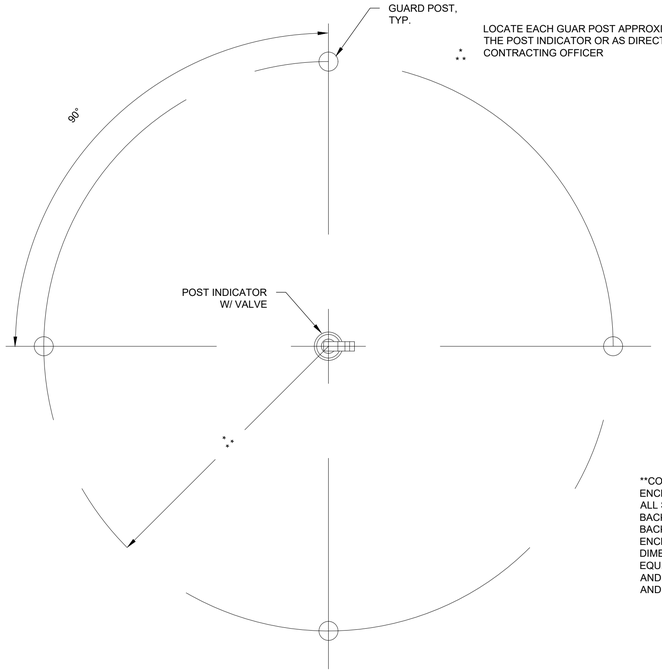

D1 PLAN VIEW - BOLLARDS & POST INDICATOR VALVE

N. T. S.

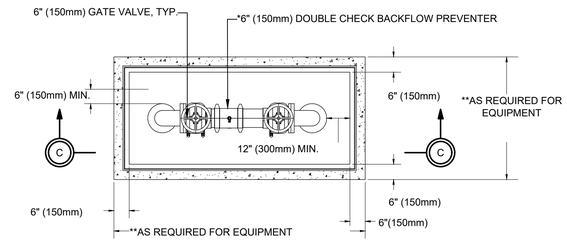

6" (150mm) BACKFLOW PREVENTER
PLAN (COVER REMOVED)

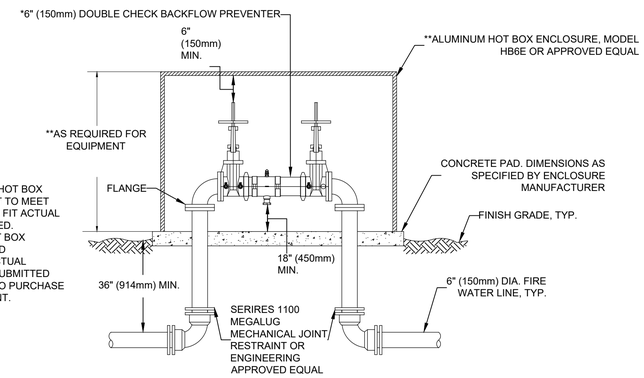

6" (150mm) BACKFLOW PREVENTER
SECTION C-C

**CONTRACTOR SHALL PROVIDE HOT BOX ENCLOSURE OF SIZE SUFFICIENT TO MEET ALL SPACING REQUIREMENTS TO FIT ACTUAL BACKFLOW PREVENTER INSTALLED. BACKFLOW PREVENTER AND HOT BOX ENCLOSURE SPECIFICATIONS AND DIMENSIONAL DRAWINGS FOR ACTUAL EQUIPMENT CHOSEN SHALL BE SUBMITTED AND APPROVED BY COR PRIOR TO PURCHASE AND INSTALLATION OF EQUIPMENT.

D4 TYPICAL BACKFLOW PREVENTER DETAIL

N. T. S.

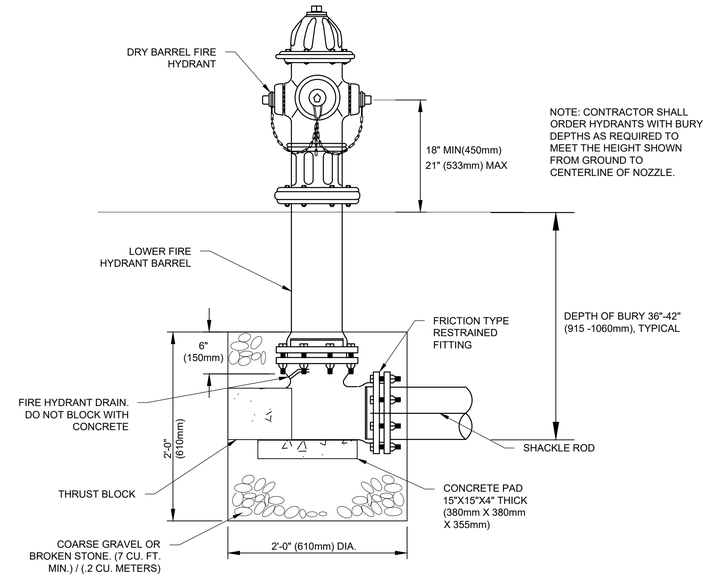

D7 TYPICAL BARREL - TYPE FIRE HYDRANT DETAIL

N. T. S.

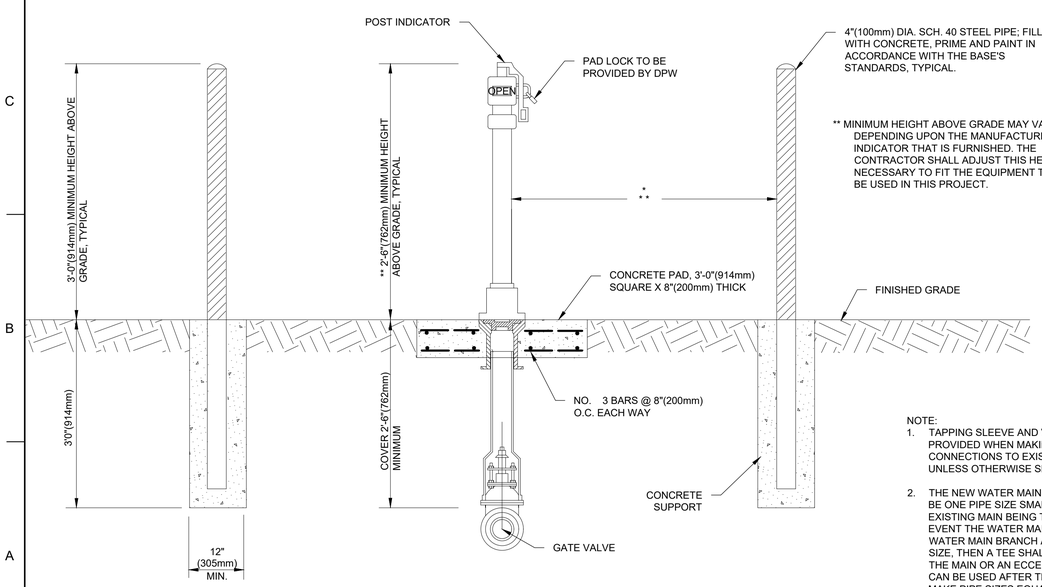

A1 ELEVATION - BOLLARDS & POST INDICATOR VALVE

N. T. S.

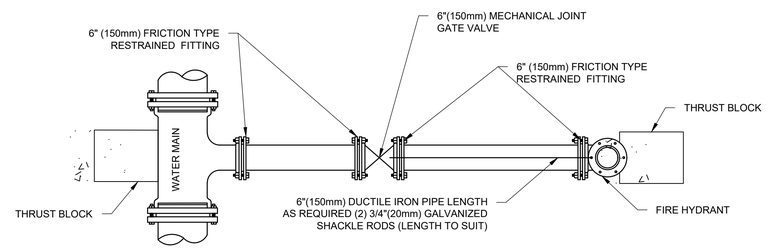

B7 TYPICAL FIRE HYDRANT AND VALVE INSTALLATION

N. T. S.

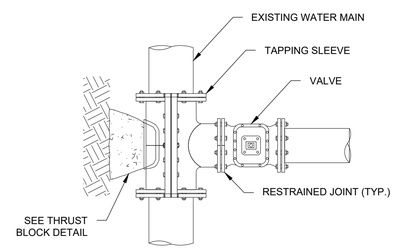

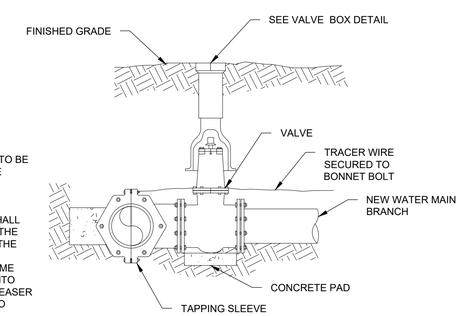

NOTE:
1. TAPPING SLEEVE AND VALVE ARE TO BE PROVIDED WHEN MAKING SERVICE CONNECTIONS TO EXISTING MAIN UNLESS OTHERWISE SPECIFIED.
2. THE NEW WATER MAIN BRANCH SHALL BE ONE PIPE SIZE SMALLER THAN THE EXISTING MAIN BEING TAPPED. IN THE EVENT THE WATER MAIN AND THE WATER MAIN BRANCH ARE THE SAME SIZE, THEN A TEE SHALL BE CUT INTO THE MAIN OR AN ECCENTRIC INCREASER CAN BE USED AFTER THE VALVE TO MAKE PIPE SIZES EQUAL

A5 TAPPING SLEEVE AND VALVE

N. T. S.

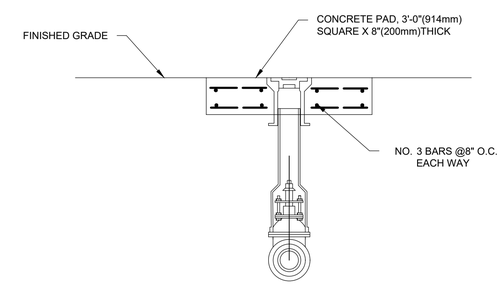

A9 VALVE BOX DETAIL

N. T. S.

US Army Corps of Engineers®

MARK	DESCRIPTION	DATE

DESIGNED BY: MEC
DRAWN BY: KES
CHECKED BY: ACR
SUBMITTED BY: CWB
SIZE: ANSI D
ISSUE DATE: FEBRUARY 2019
SOLICITATION NO.: W912T819R0028
CONTRACT NO.: -
PROJECT NUMBER: M017EU44
FILE NAME: M017EU45CU502.dwg

U.S. ARMY CORPS OF ENGINEERS
MOBILE DISTRICT
MOBILE, ALABAMA

SOTO CANO AIR BASE, HONDURAS
UNACCOMPANIED ENLISTED PERSONNEL HOUSING

WATER UTILITY DETAILS

SHEET ID
CU502

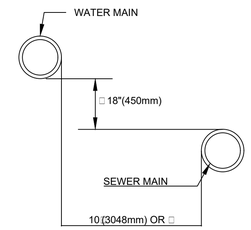

F5 SEWER □WATER SEPERATION DETAILS
N. T. S.

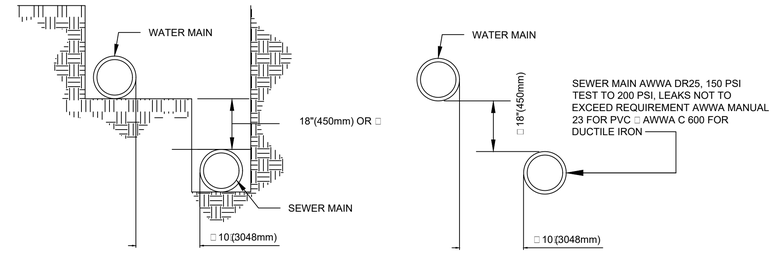

F8 GRAVITY SANITARY SEWER - PARALLEL INSTALLATION
N. T. S.

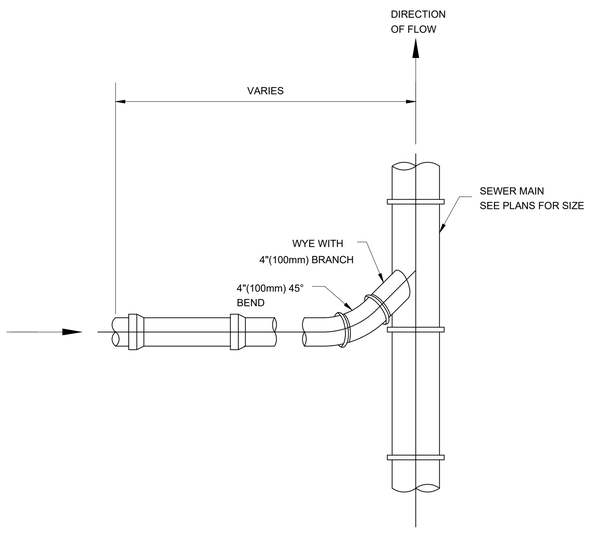

PLAN

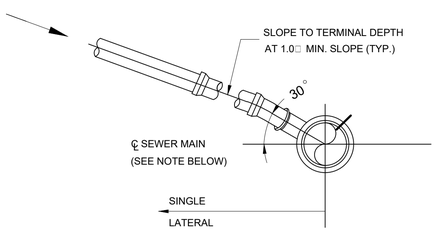

ELEVATION

NOTE:

INVERT OF SERVICE LATERAL SHALL NOT ENTER SEWER MAIN BELOW CENTER LINE.

A1 SERVICE LATERAL DETAIL
N. T. S.

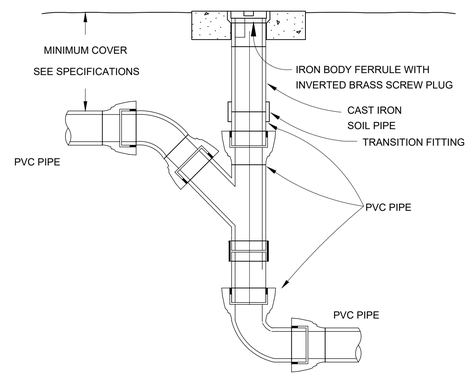

D5 SANITARY SEWER DROP CLANOUT DETAIL
N. T. S.

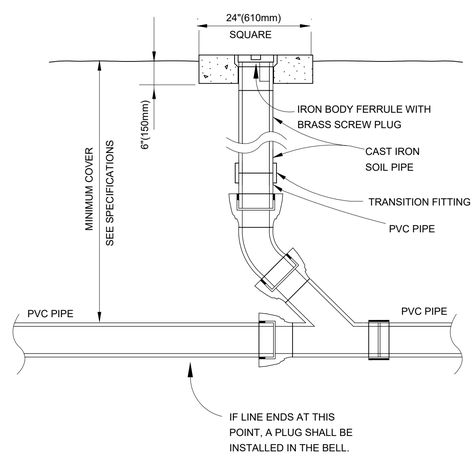

A5 SANITARY SEWER CLANOUT DETAIL
N. T. S.

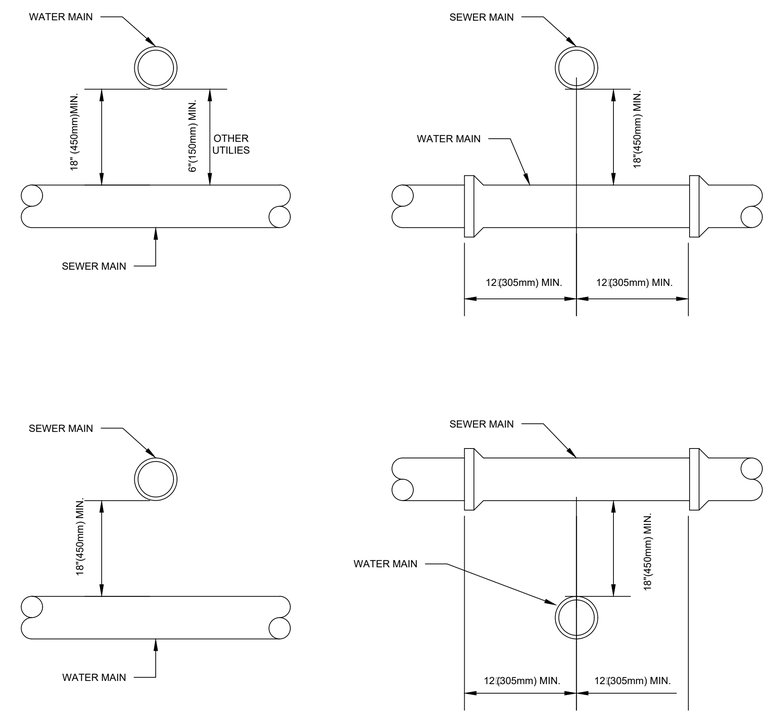

A8 GRAVITY SANITARY SEWER - CROSSING
N. T. S.

US Army Corps of Engineers®

MARK	DESCRIPTION	DATE

DESIGNED BY: MEC
DRAWN BY: KES
CHECKED BY: ACR
SUBMITTED BY: CWB
SIZE: ANSI D
ISSUE DATE: FEBRUARY 2019
SOLICITATION NO.: W912TB19R0028
CONTRACT NO.: -
PROJECT NUMBER: M077EU44
FILE NAME: M077EU44CU503.dwg

U.S. ARMY CORPS OF ENGINEERS
MOBILE DISTRICT
MOBILE, ALABAMA

SOTO CANO AIR BASE, HONDURAS
UNACCOMPANIED ENLISTED PERSONNEL HOUSING

WATER AND SEWER
UTILITY DETAILS

SHEET ID
CU503

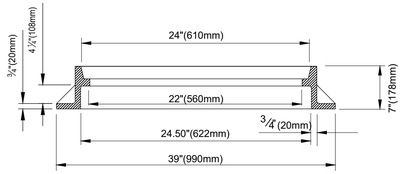

SECTION B-B

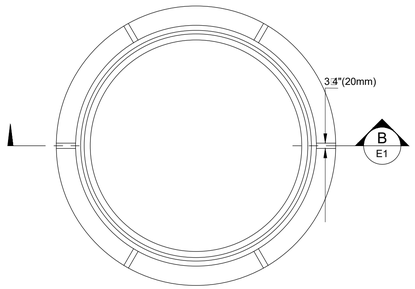

E1 PLAN OF FRAME
N. T. S.

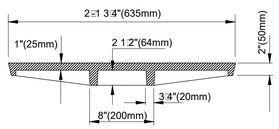

SECTION C-C

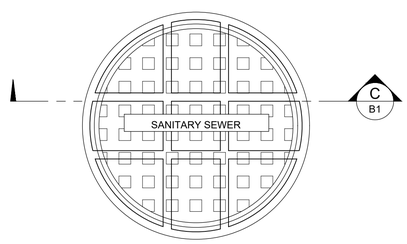

B1 PLAN OF COVER
N. T. S.

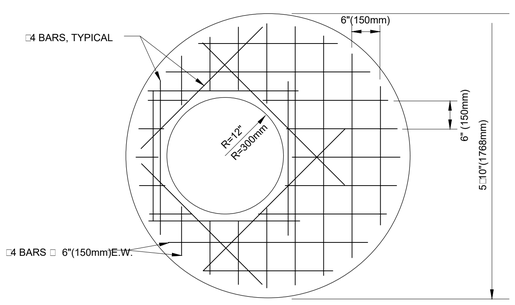

A1 PLAN OF LID
N. T. S.

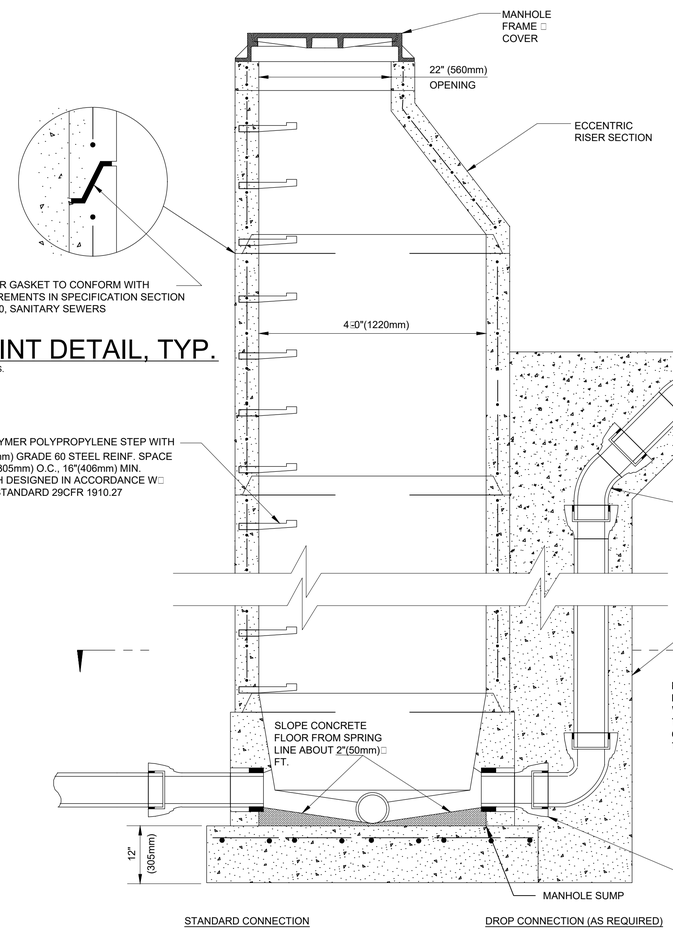

E3 JOINT DETAIL, TYP.
N. T. S.

NOTE:
DROP CONNECTION SHALL BE INSTALLED WHERE THE DISTANCE FROM THE INVERT OF THE INLET PIPE TO THE TOP OF THE FLOOR OF THE MANHOLE (MANHOLE SUMP) OUTSIDE THE CHANNELS EXCEEDS 18" (450mm).

B4 PRECAST MANHOLE DETAIL
N. T. S.

NOTE:

CAST IRON COVERS AND FRAMES DESIGN IS BASED ON A WHEEL LOAD OF 16,000 POUNDS PLUS 25 □ ALLOWANCE FOR IMPACT AND THE USE OF CLASS 20 CAST IRON (FED.SPEC. RR-F 621C) OTHER DESIGNS DIFFERING ONLY IN NON-ESSENTIAL DETAILS AND AS APPROVED BY THE CONTRACTING OFFICER MAY BE USED. TOTAL WEIGHT SHALL NOT BE LESS THAN 400 POUNDS.

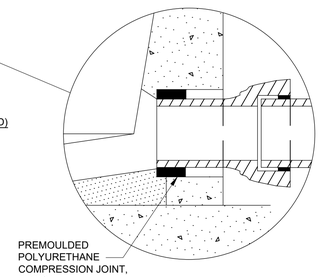

B6 MANHOLE JOINT DETAIL, TYPICAL
N. T. S.

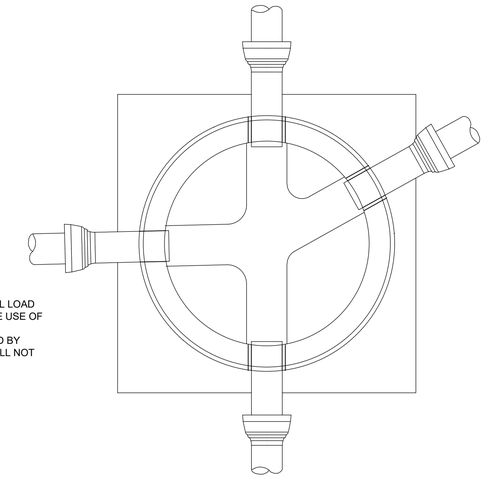

E8 MANHOLE - 01 INVERT LAYOUT, A-A
N. T. S.

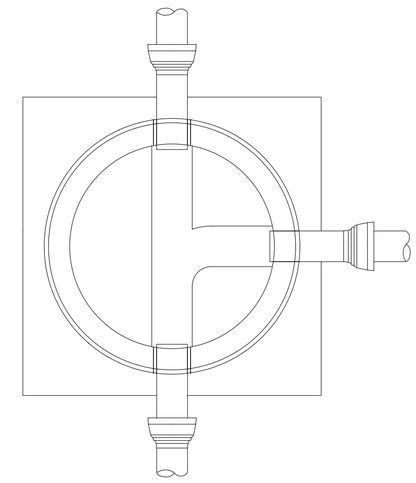

C8 MANHOLE - 02 INVERT LAYOUT, A-A
N. T. S.

US Army Corps of Engineers®

MARK	DESCRIPTION	DATE

DESIGNED BY: MEC
DRAWN BY: MEC
CHECKED BY: JWF
SUBMITTED BY: CWB
SIZE: ANSI D
ISSUE DATE: FEBRUARY 2019
SOLICITATION NO.: W9127819R0028
CONTRACT NO.: -
PROJECT NUMBER: M017EU44
FILE NAME: M017EU44CU504.dwg

U.S. ARMY CORPS OF ENGINEERS
MOBILE DISTRICT
MOBILE, ALABAMA

SOTO CANO AIR BASE, HONDURAS
UNACCOMPANIED ENLISTED PERSONNEL HOUSING

MANHOLE DETAILS
(1 OF 2)

SHEET ID
CU504

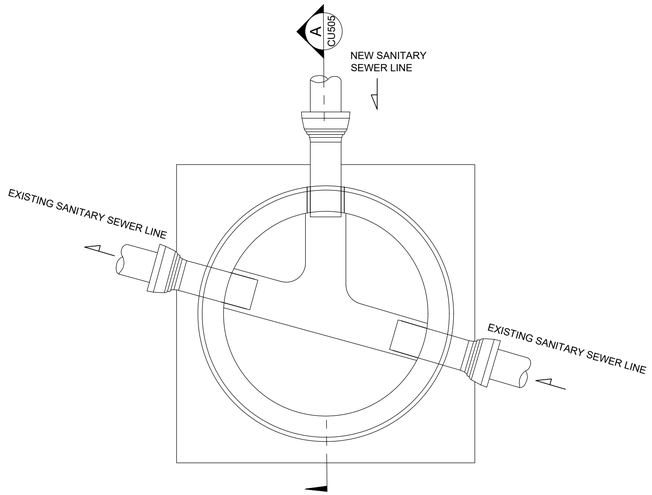

E1 MANHOLE 03 INVERT LAYOUT

N. T. S.

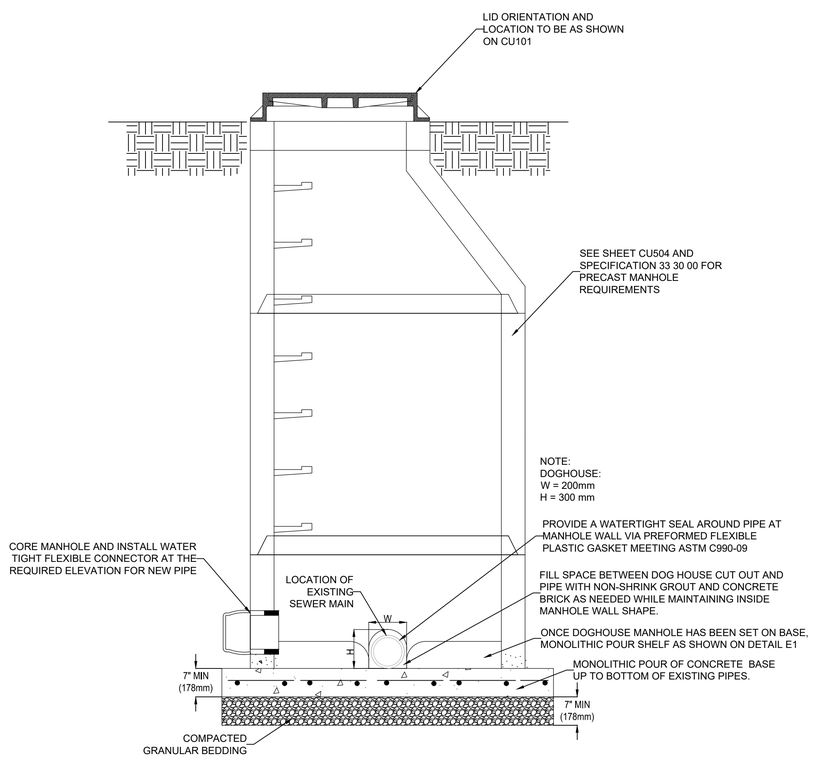

E1 DOGHOUSE MANHOLE DETAIL, A-A

N. T. S.

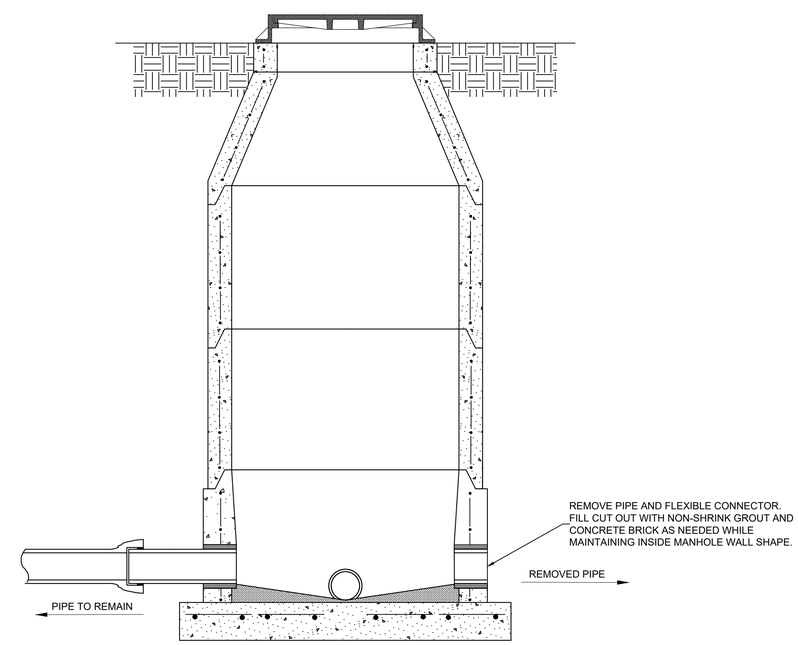

1. CONCRETE SHALL BE USED TO REFORM THE INVERT CHANNEL AS NECESSARY TO MATCH THE FLOW SCHEME OF THE MAINS REMAINING IN SERVICE.

A7 PIPE REMOVAL AT ACTIVE MANHOLE

N. T. S.

US Army Corps of Engineers®

MARK	DESCRIPTION	DATE

U.S. ARMY CORPS OF ENGINEERS
MOBILE DISTRICT
MOBILE, ALABAMA

DESIGNED BY: MEC	ISSUE DATE: FEBRUARY 2019
DRAWN BY: MEC	SOLICITATION NO.: W912T819R0028
CHECKED BY: JWF	CONTRACT NO.: -
SUBMITTED BY: CWB	PROJECT NUMBER: M017EU44
SIZE: ANSI D	FILE NAME: M017EU44CU505.dwg

SOTO CANO AIR BASE, HONDURAS
UNACCOMPANIED ENLISTED PERSONNEL HOUSING

MANHOLE DETAILS
(2 OF2)

SHEET ID

CU505

ABBREVIATIONS:

&	AND
@	AT
AB	ANCHOR BOLT
ABV.	ABOVE
ALT.	ALTERNATE
APPROX.	APPROXIMATE
ARCH.	ARCHITECTURAL
B	BEAM
BLDG.	BUILDING
B/STL	BOTTOM OF STEEL
BOT	BOTTOM
BRKT.	BRACKET
BRNG.	BEARING
C.L.	CENTERLINE
CIP	CAST-IN-PLACE
CJ	CRACK CONTROL JOINT
CL.	CLEAR/CLEARANCE
COE	CORPS OF ENGINEERS
COL.	COLUMN
CONC.	CONCRETE
CMU	CONCRETE MASONRY UNIT
CONN.	CONNECTION
CONT.	CONTINUE/CONTINUOUS
DET.	DETAIL
DIA.	DIAMETER
DIM.	DIMENSION
do	DITTO
DR	DRAIN
DWG.	DRAWING
E.	EAST
E.F.	EACH FACE
E.W.	EACH WAY
EA.	EACH
EL. (HEIGHT)	ELEVATION
ELEV. (VIEW)	ELEVATION
EQ.	EQUAL
EQUIP.	EQUIPMENT
EXIST.	EXISTING
EXP. JT.	EXPANSION JOINT
FS	FOOTING STEP
F.D.	FLOOR DRAIN
F.F.	FAR FACE
FAB.	FABRICATE
FDN.	FOUNDATION
FIG.	FIGURE
FIN. FL.	FINISH FLOOR
FIN. GR.	FINISH GRADE
FL.	FLOOR
FLG	FLANGE
FRMG.	FRAMING
FT.	FOOT
FTG.	FOOTING
GALV.	GALVANIZE
H.R.	HANDRAIL
HEX.	HEXAGON
HGR.	HANGER
HORIZ.	HORIZONTAL
HT.	HEIGHT
I.F.	INSIDE FACE
INCL.	INCLUDE/INCLUSIVE
INV.	INVERT
JST.	JOIST
JT.	JOINT
LLH.	LONG LEG HORIZONTAL
LLV	LONG LEG VERTICAL
LVR.	LOUVER
MCJ	MASONRY CONTROL JOINT
M.O.	MASONRY OPENING
MAT'L.	MATERIAL
MAX.	MAXIMUM
MECH.	MECHANICAL
MFR.	MANUFACTURE
MIN.	MINIMUM
MISC.	MISCELLANEOUS
N.	NORTH
N.F.	NEAR FACE
N.T.S.	NOT TO SCALE
NO.	NUMBER
NSL.	NORMAL SLOT LENGTH
O.C.	ON CENTER
OPNG.	OPENING
OPP.	OPPOSITE
O/F	OUT FACE
O/H	OVERHANG
PED.	PEDESTAL
P.E.J.	PREMOLDED EXPANSION JOINT
PEMB	PRE-ENGINEERED METAL BUILDING
PERP.	PERPENDICULAR
PL.	PLATE
PLATF.	PLATFORM
PLF	POUNDS PER FOOT
PRELIM.	PRELIMINARY
PROJ.	PROJECTION
PT.	POINT
PVC	POLYVINYL CHLORIDE
PVMT.	PAVEMENT
QTY.	QUANTITY
R.	RADIUS
RD	ROAD
REF.	REFERENCE
REINF.	REINFORCE
REQD.	REQUIRED
R.F.	RIGID FRAME
S	SPLICE
SCHED.	SCHEDULE
SECT.	SECTION
SF	SWAY FRAME
SHT.	SHEET
SIM.	SIMILAR
SLV.	SHORT LEG VERTICAL
SPCG.	SPACING
SPEC.	SPECIFICATION
SQ.	SQUARE
SST.	STAINLESS STEEL
SP	SPACE
STA.	STATION
STD.	STANDARD
STIFF.	SIFFERNER
STL.	STEEL
S. FTG.	STEPPED FOOTING
STR.	STRAIGHT
SUPT.	SUPPORT
SYMM.	SYMMETRICAL
T&B	TOP AND BOTTOM
TE	THICKENED EDGE
TOC	TOP OF CONCRETE
TOF	TOP OF FOOTING
T/STL	TOP OF STEEL
T/WALL	TOP OF WALL
TEMP.	TEMPERATURE
TS	THICKENED SLAB
THK.	THICKNESS
U.N.O.	UNLESS NOTED OTHERWISE
VAR.	VARIABLE
VERT.	VERTICAL
W.W.F.	WELDIED WIRE FABRIC
w/	WITH
W/O	WITHOUT
WP	WORKING POINT

GENERAL NOTES:

1. CONTRACTOR SHALL VERIFY ALL DIMENSIONS AND CONDITIONS AFFECTING THE WORK AT JOBSITE. COORDINATE THE LOCATION AND DIMENSIONS OF GROOVES, REGLETS, SLEEVES, OPENINGS, AND EMBEDDED OR ATTACHED ITEMS, REFER TO ARCHITECTURAL, MECHANICAL, ELECTRICAL, AND PIPING DRAWINGS.

2. ALL STRUCTURAL WORK AND MATERIALS SHALL CONFORM TO THE REQUIREMENTS OF THE PROJECT SPECIFICATIONS.

3. PROVIDE TEMPORARY BRACING AND SHORING OF THE STRUCTURE AND COMPONENTS UNTIL ALL COMPONENTS ARE ERECTED AND ALL CONNECTIONS ARE FULLY MADE, AS NECESSARY, TO INSURE STABILITY DURING CONSTRUCTION. BRACE ALL WALLS DURING CONSTRUCTION AGAINST WIND AND/OR CONSTRUCTION LOADS.

4. ELEVATIONS ON THE STRUCTURAL DRAWINGS ARE DENOTED AS [XX.XXXmm] REFERENCED TO THE FINISHED FIRST FLOOR ELEVATION DATUM AS FOLLOWS:

BUILDING D - 635.6 M
BUILDING E - 635.6 M
BUILDING F - 635.3 M
FIRE PUMP BUILDING - 635.1 M

5. REPRODUCTION OF CONTRACT DRAWINGS SHALL NOT BE USED AS SHOP DRAWINGS UNDER ANY CIRCUMSTANCES.

6. REPORT DISCREPANCIES IN DIMENSIONS BETWEEN DIFFERENT DRAWINGS TO THE CONTRACTING OFFICER'S REPRESENTATIVE PRIOR TO BEGINNING WORK IN AREAS THAT WILL BE AFFECTED.

7. ELECTRICAL CONDUIT AND PLUMBING SHALL NOT PENETRATE FOOTINGS AND GRADE BEAMS.

STRUCTURAL DESIGN CRITERIA:

1. BUILDING CODES, STANDARDS, AND SPECIFICATIONS:

UFC 1-200-01	(JUNE 2016) GENERAL BUILDING REQUIREMENTS
UFC 3-301-01	(JUNE 2013) STRUCTURAL ENGINEERING, w/ CHANGE 3
UFC 3-310-04	(JUNE 2013) SEISMIC DESIGN FOR BUILDINGS, w/ CHANGE 1
UFC 4-010-01	(FEBRUARY 2012) DoD MINIMUM ANTITERRORISM STANDARDS FOR BUILDINGS w/ CHANGE 3
ASCE 7-10	MINIMUM DESIGN LOADS FOR BUILDINGS AND OTHER STRUCTURES
ACI 318-14	BUILDING CODE REQUIREMENTS FOR REINFORCED CONCRETE
AISC	MANUAL OF STEEL CONSTRUCTION, 14th EDITION
AISC	SEISMIC DESIGN MANUAL, SECOND EDITION
TMS 402 - 213	BUILDING CODE AND SPECIFICATIONS FOR MASONRY STRUCTURES
IBC-2015	INTERNATIONAL BUILDING CODE

2. STRUCTURAL DESIGN LOADS:

A. DEAD LOADS

ACTUAL WEIGHTS OF MATERIALS USED

B. LIVE LOADS: REDUCIBLE PER BUILDING CODE

ROOF LIVE LOADS..... 0.958 kPa
CORRIDORS..... 3.83 kPa
STAIRS AND EXITWAYS..... 4.788 kPa
DAY ROOM..... 4.788 kPa
MECHANICAL AND STORAGE ROOMS..... 5.96 kPa
PRIVATE ROOMS.....(0.718 kPa ADDED FOR PARTITIONS) 2.63 kPa

C. SNOW LOADS

GROUND SNOW LOAD.....Pg = 0 kg/m2

C. WIND LOADS

BASIC WIND SPEED, V.....193 KM/H
EXPOSURE CATEGORY.....C
INTERNAL PRESSURE COEFFICIENTS:
BUILDING.....Gcpi = +/- 0.18 (ENCLOSED)

D. SEISMIC LOADS

RISK CATEGORY..... II
RISK CATEGORY..... IV (FIRE PUMP BLDG)
IMPORTANCE FACTOR, I.....1.0
IMPORTANCE FACTOR, I.....1.5 (FIRE PUMP BLDG)
SITE (SOIL) CLASS.....D

Ss.....1.05g
S1..... 0.05g
Fa.....1.08
Fv.....1.50
Sds..... 0.756g
Sd1.....0.5g
SEISMIC DESIGN CATEGORY.....D

SEISMIC FORCE RESISTING SYSTEM: SPECIAL REINFORCED MASONRY SHEAR WALLS
SEISMIC RESPONSE MODIFICATION FACTOR.....R = 5
SEISMIC RESPONSE COEFFICIENT.....Cs = 0.151 W

SEISMIC ANALYSIS PROCEDURE: EQUIVALENT LATERAL FORCE

FOUNDATION DESIGN

A. SITE PREPARATION:

1. EXCAVATION AND BACKFILL SHALL BE IN ACCORDANCE WITH THE CONTRACT DRAWINGS AND SPECIFICATIONS.

2. CONTRACTOR SHALL NOTIFY THE CONTRACTING OFFICERS REPRESENTATIVE WHEN LOOSE OF SOFT SOILS ARE EXPOSED WHERE SLABS OR FOOTINGS ARE TO BE PLACED.

3. CAPILLARY WATER BARRIER SHALL BE PROVIDED AND INSTALLED IN ACCORDANCE WITH THE DRAWINGS AND SPECIFICATION SECTION 31 00 00.

4. OVEREXCAVATION AT COLUMN FOOTINGS:
SEE SITE DRAWINGS FOR EXCAVATION/FILL REQUIREMENTS. BACKFILL ALL OVEREXCAVATIONS WITH COMPACTED, SATISFACTORY FILL PER SPECIFICATION SECTION 31 00 00.

5. BACKFILL AROUND FOUNDATION WALLS SHALL BE PLACED ON EACH SIDE OF THE WALL IN EQUAL LIFTS.

B. FOUNDATION DESIGN CRITERIA BASED ON GEOTECHNICAL REPORT PREPARED BY MOBILE DISTRICT CORPS OF ENGINEERS. ALLOWED BEARING CAPACITY = 143 kPa

COLD-FORMED STEEL FRAMING

1. ALL COLD FORMED FRAMING SHALL BE DESIGNED IN ACCORDANCE WITH THE LATEST EDITION OF THE AISI "COLD FORMED STEEL DESIGN MANUAL."

2. ALL COLD-FORMED STEEL FRAMING SHALL BE FORMED FROM STEEL THAT CONFORMS TO THE REQUIREMENTS OF ASTM A-653.

3. ALL COLD-FORMED STEEL FRAMING, CONNECTORS, ETC. SHALL RECEIVE A G-60 GALVANIZED COATING.

4. CONTRACTOR SHALL SUBMIT CALCULATIONS AND SHOP DRAWINGS FOR DETAILING, FABRICATION AND ERECTION OF LIGHT GAUGE STEEL MEMBERS. CALCULATIONS AND DRAWINGS SHALL CLEARLY INDICATE SPACING, TYPE, MATERIAL, MEMBER PROPERTIES, BRACING AND CONNECTIONS FOR LIGHT GAUGE STEEL AND BRACING SYSTEMS.

STRUCTURAL STEEL

1. ALL STRUCTURAL STEEL SHALL BE FABRICATED AND ERECTED IN ACCORDANCE WITH THE LATEST AISC SPECIFICATIONS AND CODE OF STANDARD PRACTICE.

2. STEEL FABRICATION SHALL CONFORM TO FOLLOWING REQUIREMENTS UNLESS NOTED OTHERWISE. NO STRUCTURAL STEEL SHALL BE FABRICATED OR ERECTED UNTIL SHOP DRAWINGS HAVE BEEN APPROVED.

MISCELLANEOUS PLATES AND ANGLES - ASTM A36 (Fy=249 MPa)
RECTANGULAR HSS - ASTM 500, GRADE B (Fy= 318 MPa)
"W" SHAPES - ASTM A992 GRADE 50

3. NO HOLES OTHER THAN THOSE SPECIFICALLY DETAILED SHALL BE ALLOWED THROUGH STRUCTURAL STEEL MEMBERS. CUTTING OF STEEL SHALL NOT BE PERMITTED WITHOUT APPROVAL OF THE CONTRACTING OFFICER'S REPRESENTATIVE.

4. NO STRUCTURAL STEEL SHALL BE FABRICATED OR ERECTED UNTIL SHOP DRAWINGS HAVE BEEN APPROVED.

5. THE CONTRACTOR SHALL VERIFY ALL SHOP DRAWING DIMENSIONS WITH THE STRUCTURAL AND ARCHITECTURAL PLANS AND DETAILS, AND WITH FIELD DIMENSIONS OF COLUMN LAYOUT.

6. BOLTED CONNECTIONS SHALL BE MADE WITH HIGH STRENGTH BOLTS CONFORMING TO ASTM A325, 19 DIAMETER MINIMUM UNLESS NOTED OTHERWISE.

7. ALL WELDS SHALL BE MADE USING E70XX ELECTRODES AND SHALL BE AS REQUIRED BY CONNECTION DESIGN, BUT IN NO CASE LESS THAN 5.

8. STANDARD SHEAR CONNECTIONS NOT SHOWN ON DRAWINGS SHALL BE DESIGNED BY THE FABRICATOR. CONNECTIONS SHALL BE SELECTED TO SUPPORT ONE HALF OF THE TOTAL UNIFORM LOAD CAPACITY SHOWN IN THE LRFD LOAD TABLES OF THE LATEST AISC MANUAL FOR THE GIVEN BEAM, SPAN, AND GRADE OF STEEL SPECIFIED. WHERE POSSIBLE, DOUBLE ANGLE CONNECTIONS SHALL BE USED.

9. ANCHOR BOLTS SHALL CONFORM TO ASTM F1554 GRADE A36.

10. ALL SHOP AND FIELD WELDING SHALL CONFORM TO THE STRUCTURAL WELDING CODE AWS D1.1, LATEST EDITION, PUBLISHED BY THE AMERICAN WELDING SOCIETY (AWS). SHOW ALL SHOP WELDS ON THE FABRICATION DRAWINGS AND ALL FIELD WELDS ON THE ERECTION DRAWING.

CONCRETE

1. STRUCTURAL CONCRETE FOR THE BUILDING STRUCTURE SHALL HAVE A MINIMUM COMPRESSIVE STRENGTH AT 28 DAYS AS FOLLOWS:

FOOTINGS, GRADE BEAMS:.....f'c = 28 MPa
CONCRETE STEM WALLS
AND CAST-IN-PLACE CONCRETE WALLS:.....f'c = 28 MPa
SLABS ON GRADE AND METAL DECK:.....f'c = 28 MPa

2. ALL REINFORCING STEEL SHALL BE DEFORMED BARS CONFORMING TO ASTM A615 GRADE 60 UNLESS NOTED OTHERWISE.

3. LOCATION OF ALL CONCRETE JOINTS, OTHER THAN THOSE SPECIFIED, SHALL BE APPROVED BY THE CONTRACTING OFFICER BEFORE CONCRETE PLACEMENT.

4. MINIMUM PROTECTIVE COVER OF REINFORCEMENT (SEE DETAILS) SHALL BE AS FOLLOWS:

CAST AGAINST AND PERMANENTLY EXPOSED TO EARTH 75
EXPOSED TO EARTH OR WEATHER
#6 OR LARGER.....50
#5 OR SMALLER.....40

5. MINIMUM CONCRETE SPLICES AND HOOKS FOR REINFORCING STEEL SHALL CONFORM TO ACI 318, CURRENT EDITION.

6. CONCRETE WORK SHALL BE COORDINATED WITH DRAINS, UNDERGROUND UTILITIES, MECHANICAL, ELECTRICAL, AND ARCHITECTURAL PLANS. CONCRETE SHALL NOT BE CAST UNTIL THESE ITEMS HAVE BEEN INSTALLED AND ACCEPTED.

7. CONCRETE FINISHES SHALL BE PROVIDED AS DESCRIBED IN THE SPECIFICATIONS.

8. CORNER BARS SHALL BE PROVIDED AT ALL INTERSECTIONS; BAR SIZE AND SPACING TO MATCH LARGER BAR.

9. SLABS ON GRADE SHALL BE REINFORCED AT ALL PENETRATIONS AND RE-ENTRANT CORNERS. PLACE 3, #13 x 915 AROUND FLOOR DRAINS. PLACE 2-#13 x 1220 (MINIMUM) AT RE-ENTRANT CORNERS.

LIGHT GAGE METAL TRUSSES FOR HIGH ROOF

1. FABRICATOR IS RESPONSIBLE FOR THE DESIGN AND DETAILING OF ALL LIGHT GAGE TRUSSES AS SHOWN ON DRAWINGS. ALL COMPONENTS AND CONNECTIONS SHALL BE DESIGNED BY QUALIFIED ENGINEER REGISTERED PROFESSIONAL ENGINEER CURRENTLY LICENSED IN THE UNITED STATES. ALL LIGHT GAUGE FRAMING SHALL BE DESIGNED FOR THE FOLLOWING SUPERIMPOSED LOADS:

TOP CHORD LIVE LOAD.....1.0 kPa
TOP CHORD DEAD LOAD..... 0.25 kPa
BOTTOM CHORD DEAD LOAD..... 0.5 kPa

WIND DESIGN LOADS SHALL BE CALCULATED IN ACCORDANCE WITH ASCE 7-10.

4. ALL TRUSS TOP AND BOTTOM CHORDS SHALL BE MINIMUM 155 in DEPTH.

5. MAXIMUM TRUSS TO TRUSS CENTER SPACING SHALL BE 1220.

6. ALL TRUSS COMPONENTS AND CONNECTIONS SHALL BE DESIGNED BY A QUALIFIED PROFESSIONAL ENGINEER CURRENTLY LICENSED IN THE UNITED STATES. ALL TRUSS TO TRUSS CONNECTIONS AND TRUSS TO SUPPORT CONNECTIONS INDICATED ON THE DRAWINGS ARE TO BE DESIGNED BY THE TRUSS MANUFACTURER'S QUALIFIED DESIGN ENGINEER.

7. THE STEEL TRUSS SUB-CONTRACTOR IS RESPONSIBLE FOR TEMPORARY BRACING OF STEEL ROOF TRUSSES DURING CONSTRUCTION.

8. THE STEEL TRUSS SUB-CONTRACTOR IS RESPONSIBLE FOR OBTAINING QUALIFIED PROFESSIONAL GUIDANCE AS REQUIRED FOR DESIGN AND INSTALLATION OF THE TEMPORARY ROOF TRUSS BRACING SYSTEMS.

9. STEEL TRUSS MANUFACTURER SHALL PROVIDE PERMANENT ROOF TRUSS BRACING SYSTEM DESIGNED BY A QUALIFIED REGISTERED PROFESSIONAL ENGINEER CURRENTLY LICENSED IN THE UNITED STATES. PERMANENT TRUSS BRACING SYSTEM SHALL BE INDICATED ON THE STEEL TRUSS ERECTION DRAWINGS AND SHALL INCLUDE DETAILS, INFORMATION ON MEMBERS, FASTENERS AND CONNECTIONS.

10. CONTRACTOR SHALL SUBMIT CALCULATIONS AND SHOP DRAWINGS FOR DETAILING, FABRICATION AND ERECTION OF LIGHT GAUGE STEEL TRUSSES. CALCULATIONS AND DRAWINGS SHALL CLEARLY INDICATE SPACING, TYPE, MATERIAL, MEMBER PROPERTIES, BRACING AND CONNECTIONS FOR LIGHT GAUGE STEEL TRUSSES AND BRACING SYSTEMS. TRUSS FABRICATION SHALL NOT BEGIN UNTIL THE CONTRACTOR RECEIVES STAMPED REVIEWED CALCULATIONS AND SHOP DRAWINGS FROM THE CONTRACTING OFFICER. ARCHITECTURAL AND STRUCTURAL DRAWINGS SHALL NOT BE COPIED OR REPRODUCED FOR USE AS SHOP DRAWINGS.

METAL DECKING

1. STEEL DECK SHALL BE ERECTED IN ACCORDANCE WITH MANUFACTURER'S AND STEEL DECK INSTITUTE RECOMMENDATIONS AND SPECIFICATIONS.

2. STEEL DECK PROPERTIES AND ATTACHMENTS SHALL BE IN ACCORDANCE WITH THE STEEL DECK INSTITUTE.

3. GALVANIZING SHALL CONFORM TO ASTM A924-94 WITH A MINIMUM COATING CLASS OF G-60.

4. DECK TO BE INSTALLED CONTINUOUS OVER A MINIMUM OF (3) SUPPORTS.

5. LIGHT GAGE METAL FRAMING, SUSPENDED CEILING, LIGHT FIXTURES, DUCTS AND OTHER UTILITIES SHALL NOT BE SUPPORTED BY METAL ROOF DECKING.

6. PROVIDE MINIMUM L102x102x6.4 FRAMING AROUND ALL OPENINGS LARGER THAN 150 FOR ROOF TOP MECHANICAL UNITS.

7. FOR DECK UNITS WITH METAL THICKNESS LESS THAN 0.711 (22 GAGE) WELD DECK THROUGH MANUFACTURER'S STANDARD WELDING WASHERS WITH SPECIFIED WELD PATTERN OR AS SHOWN ON DRAWINGS.

MASONRY CONSTRUCTION NOTES:

1. ALL MASONRY CONSTRUCTION SHALL BE IN ACCORDANCE WITH "BUILDING CODE REQUIREMENTS FOR MASONRY STRUCTURES" ACI 530 AND "SPECIFICATION FOR MASONRY STRUCTURES" ACI 530.1.

2. DESIGN MASONRY ASSEMBLAGE STRENGTH, f'm = 10 MPa. NET AREA COMPRESSIVE STRENGTH OF CONCRETE MASONRY UNITS SHALL BE A MINIMUM OF 13 MPa.

3. CONCRETE MASONRY UNITS SHALL CONFORM TO ASTM C90 AND BE MANUFACTURED WITH NORMAL WEIGHT AGGREGATE.

4.GROUT SHALL CONFORM TO ASTM C476 AND SHALL NOT CONTAIN ADMIXTURES. GROUT SHALL ATTAIN A MINIMUM 28-DAY COMPRESSIVE STRENGTH OF 14 MPa.

5. REINFORCEMENT SHALL BE DEFORMED BARS CONFORMING TO ASTM A615/A615M, GRADE 60 AND SHALL HAVE FABRICATION TOLERANCES IN ACCORDANCE WITH ACI SP-66. SHOP FABRICATE REINFORCING BARS WHICH ARE INDICATED TO BE BENT OR HOOKED.

6. PROVIDE MINIMUM HORIZONTAL REINFORCEMENT WITH JOINT REINFORCEMENT OR BOND BEAM REINFORCEMENT. MINIMUM BOND BEAM REINFORCEMENT IS INDICATED IN TYPICAL DETAILS PROVIDED HEREIN. FOR JOINT REINFORCEMENT, LOCATE REINFORCEMENT 400 ON CENTER VERTICALLY AND ADDITIONALLY AT THE TOP OF ALL FOUNDATIONS AND IN THE TWO JOINTS IMMEDIATELY ABOVE AND BELOW ALL OPENINGS, EXTENDING A MINIMUM OF 600 BEYOND THE JAMB ON EACH SIDE.

7. PLACE PIPES AND CONDUITS PASSING HORIZONTALLY THROUGH MASONRY IN STEEL OR PVC SLEEVES OR CORED HOLES UNLESS OTHERWISE INDICATED ON THE DRAWINGS.

8. ALUMINUM CONDUITS, PIPES, AND ACCESSORIES SHALL NOT BE EMBEDDED IN MASONRY GROUT, OR MORTAR, UNLESS EFFECTIVELY COATED OR COVERED TO PREVENT ALUMINUM-CEMENT CHEMICAL REACTION OR ELECTROLYTIC REACTION BETWEEN ALUMINUM AND STEEL.

9. UNLESS OTHERWISE NOTED OR DETAILED, CENTER WALL REINFORCEMENT IN BLOCK CELLS. USE NONMETALLIC BAR POSITIONERS.

10. PROVIDE DOWEL REINFORCEMENT FROM WALLS INTO FOUNDATION OF SAME SIZE AND SPACING AS VERTICAL WALL REINFORCEMENT. LAP WALL REINFORCEMENT A MINIMUM OF 48 BAR DIAMETERS.

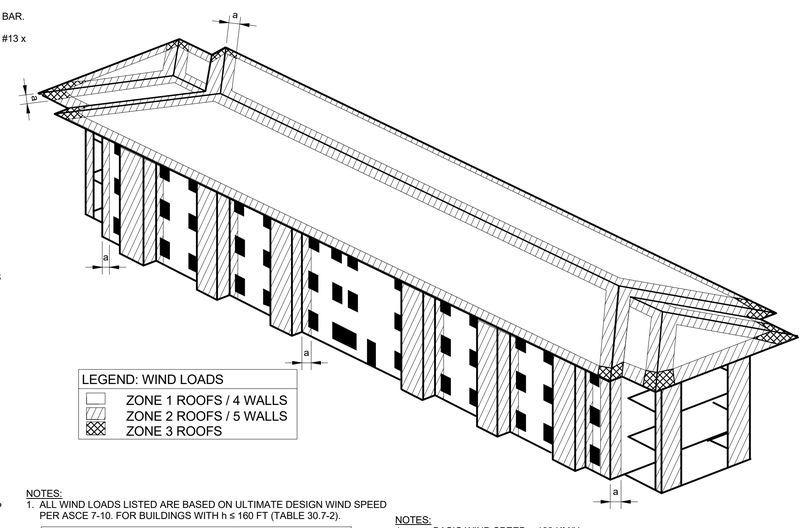

NOTES:
1. ALL WIND LOADS LISTED ARE BASED ON ULTIMATE DESIGN WIND SPEED PER ASCE 7-10. FOR BUILDINGS WITH h ≤ 160 FT (TABLE 30.7-2).

COMPONENTS AND CLADDING SCHEDULE				
LOCATION	0.93 M²	1.86 M²	4.65 M²	9.29 M²
ZONE 1	1.12 kPa -1.77 kPa	1.02 kPa -1.72 kPa	0.89 kPa -1.66 kPa	0.79 kPa -1.61 kPa
ZONE 2	1.12 kPa -3.09 kPa	1.02 kPa -2.84 kPa	0.89 kPa -2.51 kPa	0.79 kPa -2.26 kPa
ZONE 3	1.12 kPa -4.56 kPa	1.02 kPa -4.27 kPa	0.89 kPa -3.87 kPa	0.79 kPa -3.58 kPa
ZONE 4	1.94 kPa -2.10 kPa	1.85 kPa -2.01 kPa	1.73 kPa -1.90 kPa	1.65 kPa -1.81 kPa
ZONE 5	1.94 kPa -2.59 kPa	1.85 kPa -2.42 kPa	1.73 kPa -2.19 kPa	1.65 kPa -2.01 kPa

NOTES:
1. BASIC WIND SPEED = 193 KM/H
2. WIND EXPOSURE = "C"
3. OCCUPANCY CATEGORY II
4. "ENCLOSED STRUCTURE"
5. PLUS AND MINUS SIGNS SIGNIFY PRESSURES ACTING TOWARD AND AWAY FROM THE SURFACES, RESPECTIVELY.
6. THE INDICATED SIMPLIFIED BUILDING DIAGRAMS ARE FOR ILLUSTRATIVE PURPOSES ONLY AND ARE NOT INTENDED TO EXACTLY MATCH ACTUAL BUILDING SHAPE.
7. TOTAL COMPONENTS AND CLADDING PRESSURE IS EQUAL TO THE COMBINATION OF THE EXTERNAL AND INTERNAL PRESSURE (qH(GCp-GCpi)).
8. WIND LOADS ARE CALCULATED AND BUILDINGS ZONES ARE DEFINED IN ACCORDANCE WITH ASCE 7-10.
9. ROOF OVERHANG NOT SHOWN FOR CLARITY BUT VALUES ARE SPECIFIED WITH OH IN WIND LOAD TABLES.
10. a = 1380 MM

WIND LOAD DIAGRAM

NOT TO SCALE

US Army Corps of Engineers ®

MARK	DESCRIPTION	DATE

ISSUE DATE: FEBRUARY 2019
SOLICITATION NO.: W912T819R0028
CONTRACT NO.:
PROJECT NUMBER: M017EU44
DESIGNED BY: -
DRAWN BY: -
CHECKED BY: -
SUBMITTED BY: -
SIZE: ANSI D
FILE NAME: M017EU44

U.S. ARMY CORPS OF ENGINEERS
MOBILE DISTRICT
MOBILE, ALABAMA

SOTO CANO AIR BASE, HONDURAS
UNACCOMPANIED ENLISTED PERSONNEL HOUSING

GENERAL STRUCTURAL NOTES, DESIGN LOADS & ABBREVIATIONS

SHEET ID
S-001

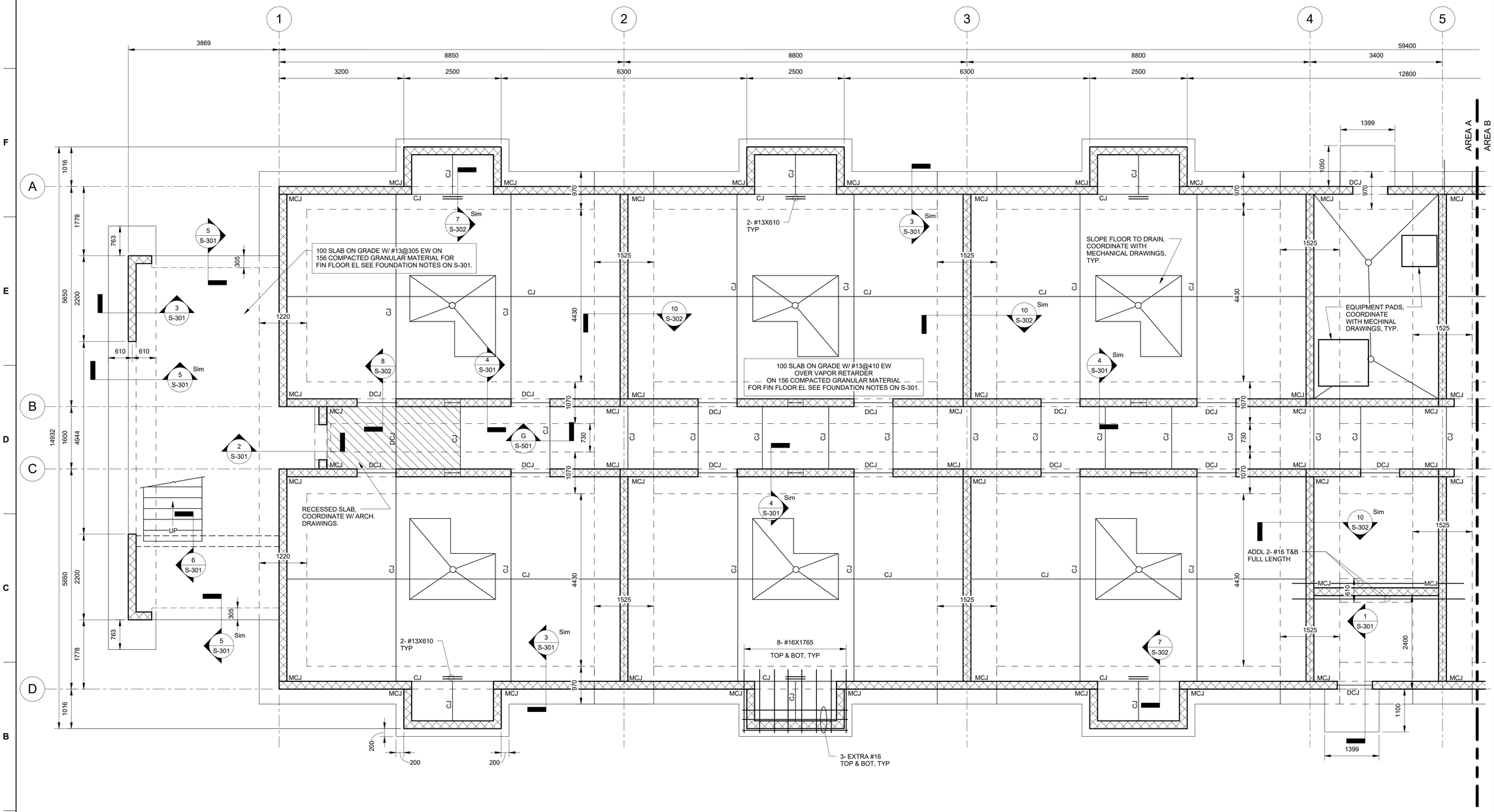

NOTES:
1. SEE SHEET S-001 FOR GENERAL STRUCTURAL NOTES.
2. SEE SHEET S-301 FOR FOUNDATION NOTES.
3. TOF EL. - SEE FOUNDATION NOTES.
4. SEE SHEETS S-501, S-502, S-503, AND S-504 FOR TYPICAL DETAILS.
5. ALL FLOOR PLANS SHOWN ARE BASED ON BUILDING D ORIENTATION.

1 FOUNDATION PLAN - AREA "A"

1 : 50

0 2000 4000

SCALE: 1 : 50

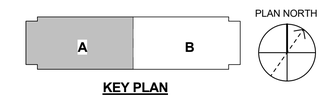

KEY PLAN

US Army Corps of Engineers ®

MARK	DESCRIPTION	DATE

ISSUE DATE: FEBRUARY 2019
SOLICITATION NO.: W9127819R0028
CONTRACT NO.:
PROJECT NUMBER: M07TE144
DESIGNED BY: JLL
DRAWN BY: JGB
CHECKED BY: JCO
SUBMITTED BY:
SIZE: ANSI D
FILE NAME: M07TE144

U.S. ARMY CORPS OF ENGINEERS
MOBILE DISTRICT
MOBILE, ALABAMA

SOTO CANO AIR BASE, HONDURAS
UNACCOMPANIED ENLISTED PERSONNEL HOUSING

FOUNDATION PLAN

SHEET ID

S-101

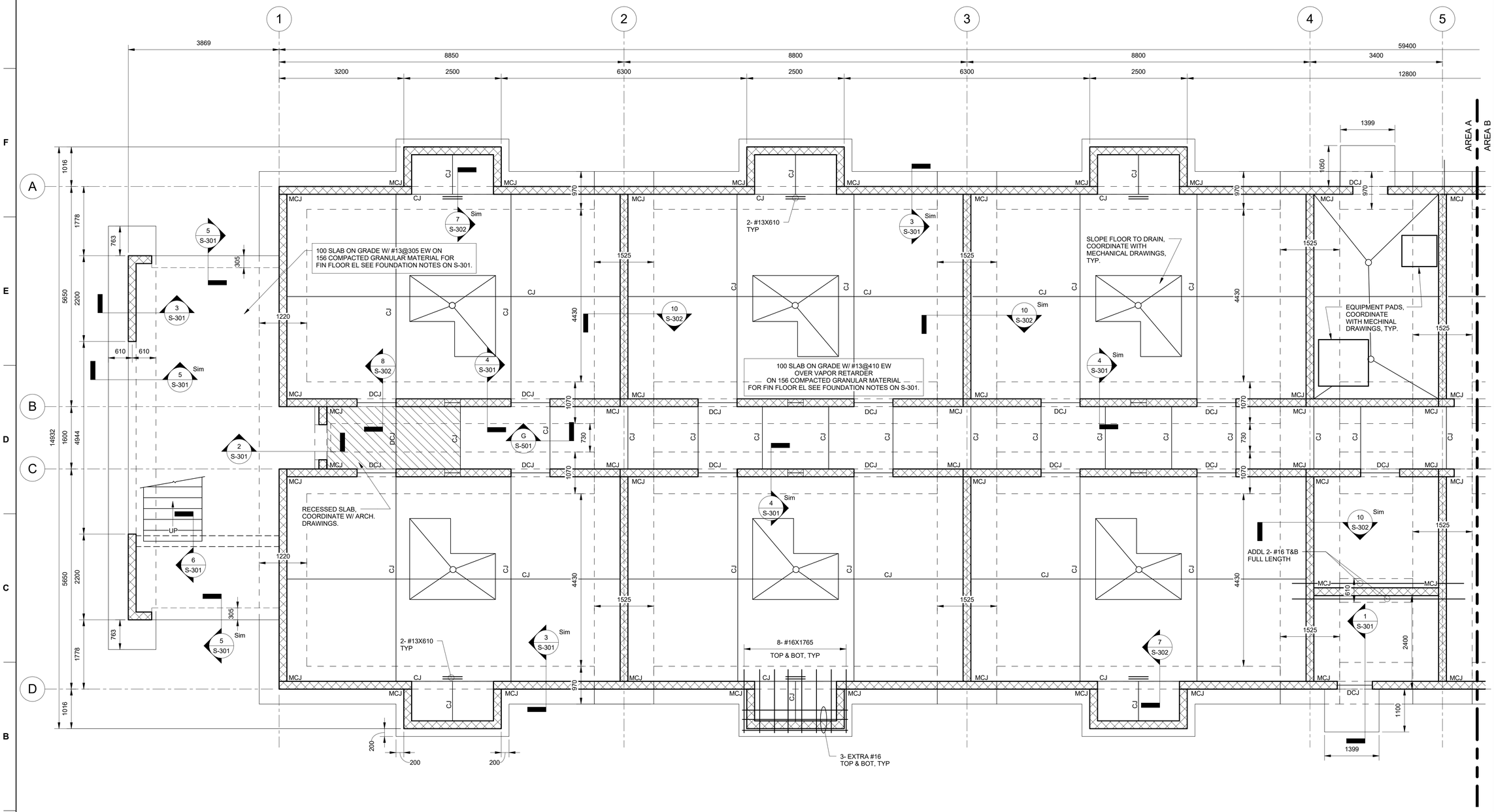

NOTES:
1. SEE SHEET S-001 FOR GENERAL STRUCTURAL NOTES.
2. SEE SHEET S-301 FOR FOUNDATION NOTES.
3. TOF EL. - SEE FOUNDATION NOTES.
4. SEE SHEETS S-501, S-502, S-503, AND S-504 FOR TYPICAL DETAILS.
5. ALL FLOOR PLANS SHOWN ARE BASED ON BUILDING D ORIENTATION.

1 FOUNDATION PLAN - AREA "A"

1 : 50

0 2000 4000

SCALE: 1 : 50

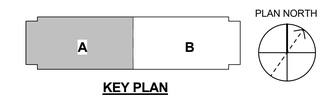

KEY PLAN

US Army Corps of Engineers ®

MARK	DESCRIPTION	DATE

ISSUE DATE: FEBRUARY 2019
SOLICITATION NO.: W9127819R0028
CONTRACT NO.:
PROJECT NUMBER: M07TE144
DESIGNED BY: JLL
DRAWN BY: JGB
CHECKED BY: JCO
SUBMITTED BY:
SIZE: ANSI D
FILE NAME: M07TE144

U.S. ARMY CORPS OF ENGINEERS
MOBILE DISTRICT
MOBILE, ALABAMA

SOTO CANO AIR BASE, HONDURAS
UNACCOMPANIED ENLISTED PERSONNEL HOUSING

FOUNDATION PLAN

SHEET ID

S-101

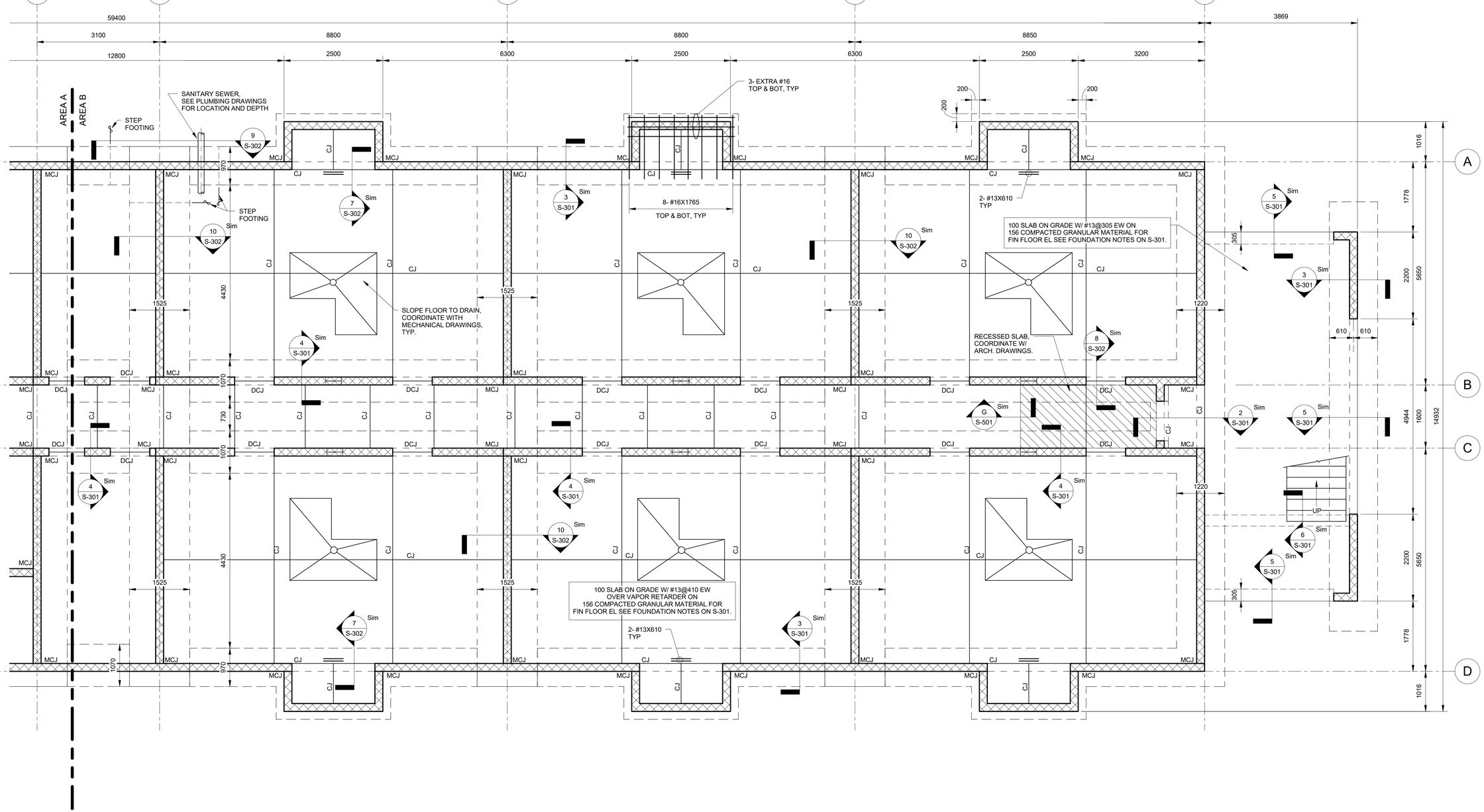

NOTES:
1. SEE SHEET S-001 FOR GENERAL STRUCTURAL NOTES.
2. SEE SHEET S-301 FOR FOUNDATION NOTES.
3. TOF EL. - SEE FOUNDATION NOTES.
4. SEE SHEETS S-501, S-502, S-503, AND S-504 FOR TYPICAL DETAILS.
5. ALL FLOOR PLANS SHOWN ARE BASED ON BUILDING D ORIENTATION.

1 FOUNDATION PLAN - AREA "B"

1 : 50

0 2000 4000

SCALE: 1 : 50

KEY PLAN

US Army Corps of Engineers ®

MARK	DESCRIPTION	DATE

ISSUE DATE: FEBRUARY 2019
SOLICITATION NO.: W912T819R0028
CONTRACT NO.:
PROJECT NUMBER: M07TE144

DESIGNED BY: JLL
DRAWN BY: JGB
CHECKED BY: JCO
SUBMITTED BY:
SIZE: ANSI D
FILE NAME: M07TE144

U.S. ARMY CORPS OF ENGINEERS
MOBILE DISTRICT
MOBILE, ALABAMA

SOTO CANO AIR BASE, HONDURAS
UNACCOMPANIED ENLISTED PERSONNEL HOUSING

FOUNDATION PLAN

SHEET ID
S-102

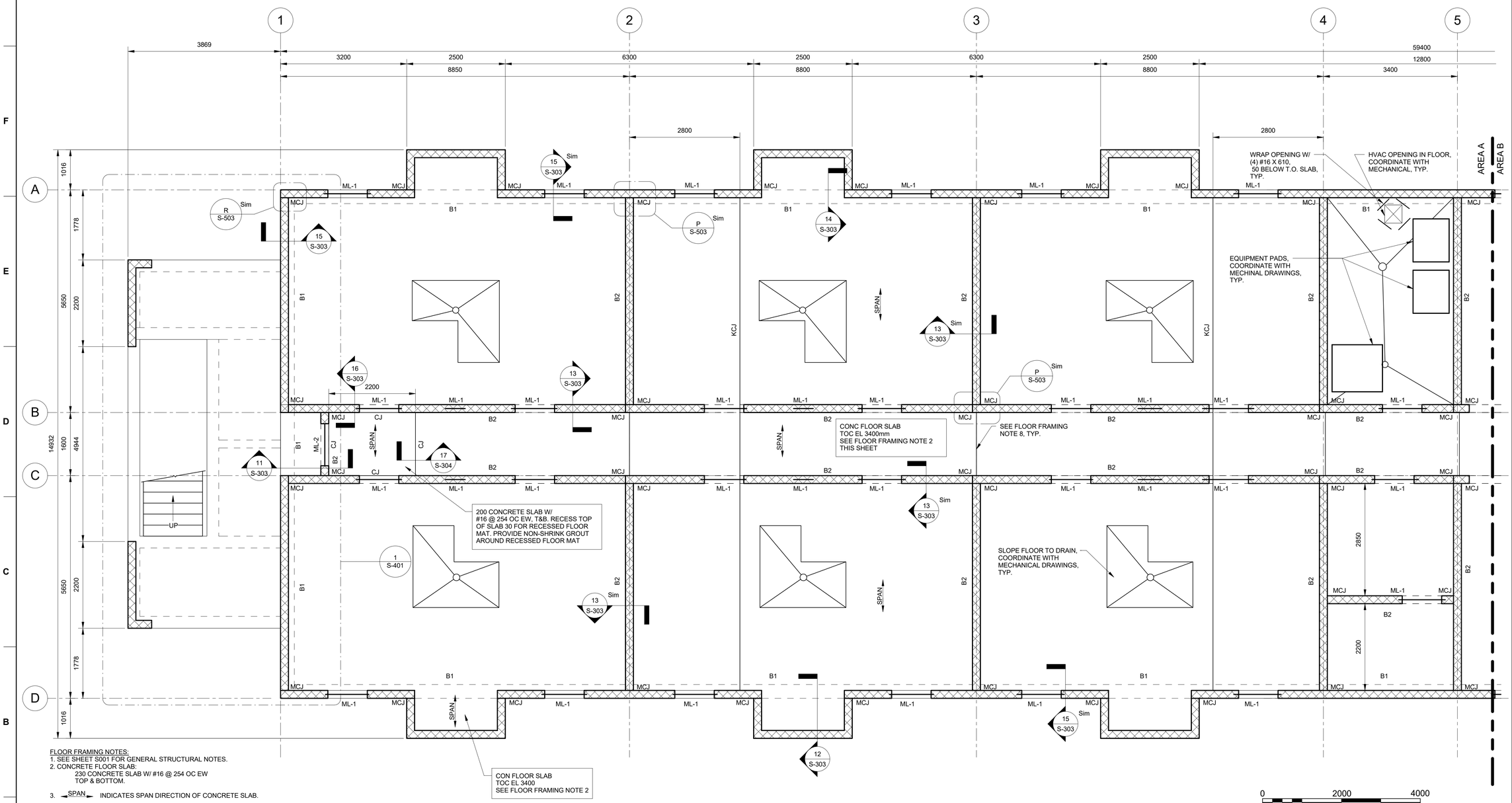

FLOOR FRAMING NOTES:
1. SEE SHEET S001 FOR GENERAL STRUCTURAL NOTES.
2. CONCRETE FLOOR SLAB:
   230 CONCRETE SLAB W/ #16 @ 254 OC EW
   TOP & BOTTOM.
3. SPAN INDICATES SPAN DIRECTION OF CONCRETE SLAB.
4. "BX" INDICATES CONCRETE BEAM TYPE. SEE CONCRETE BEAM SCHEDULE ON SHEET S503 FOR SIZE & REINFORCEMENT.
5. CONTRACTOR SHALL VERIFY WITH MECHANICAL AND ELECTRICAL SIZE AND LOCATIONS OF OPENINGS AND PENETRATIONS IN THE FLOOR.
6. MECHANICAL PIPING AND ELECTRICAL CONDUITS SHALL NOT BE PLACED HORIZONTALLY IN THE ELEVATED FLOOR SLAB.
7. MLX INDICATES MASONRY LINTEL FOR THE OPENINGS BELOW THE CURRENT FLOOR. SEE SHEET S504 FOR SCHEDULE.
8. EXTEND TOP BEAM BARS ACROSS SLAB.
9. ALL FLOOR PLANS SHOWN ARE BASED ON BUILDING D ORIENTATION.

1 SECOND FLOOR FRAMING PLAN - AREA "A"

1 : 50

0 2000 4000

SCALE: 1 : 50

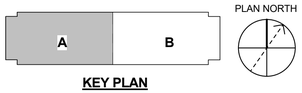

KEY PLAN

US Army Corps of Engineers ®

MARK	DESCRIPTION	DATE

ISSUE DATE: FEBRUARY 2019
SOLICITATION NO.: W912T819R0028
CONTRACT NO.:
PROJECT NUMBER: M0T7EU44
DESIGNED BY: JLL
DRAWN BY: JGB
CHECKED BY: JCO
SUBMITTED BY:
SIZE: ANSI D
FILE NAME: M0T7EU44

U.S. ARMY CORPS OF ENGINEERS
MOBILE DISTRICT
MOBILE, ALABAMA

SOTO CANO AIR BASE, HONDURAS
UNACCOMPANIED ENLISTED PERSONNEL HOUSING

SECOND FLOOR FRAMING PLAN

SHEET ID
S-103

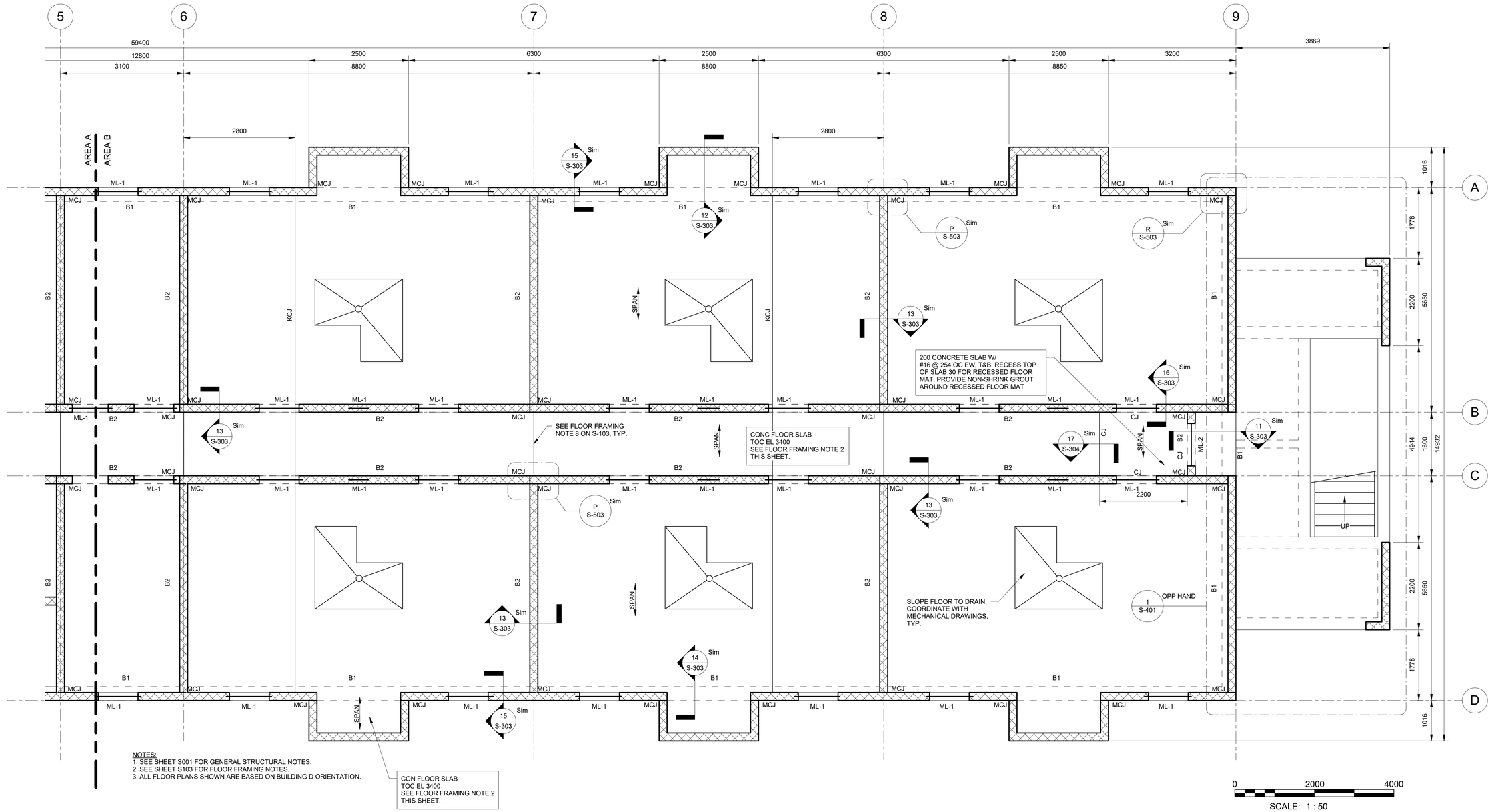

NOTES:
1. SEE SHEET S001 FOR GENERAL STRUCTURAL NOTES.
2. SEE SHEET S103 FOR FLOOR FRAMING NOTES.
3. ALL FLOOR PLANS SHOWN ARE BASED ON BUILDING D ORIENTATION.

0 2000 4000

SCALE: 1 : 50

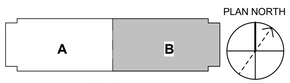

KEY PLAN

1 SECOND FLOOR FRAMING PLAN - AREA "B"

1 : 50

US Army Corps of Engineers ®

MARK	DESCRIPTION	DATE

DESIGNED BY: JLL	ISSUE DATE: FEBRUARY 2019
DRAWN BY: JGB	SOLICITATION NO.: W912T819R0028
CHECKED BY: JCO	CONTRACT NO.:
SUBMITTED BY:	PROJECT NUMBER: M07TE144
SIZE: ANSI D	FILE NAME: M07TE144

U.S. ARMY CORPS OF ENGINEERS
MOBILE DISTRICT
MOBILE, ALABAMA

SOTO CANO AIR BASE, HONDURAS
UNACCOMPANIED ENLISTED PERSONNEL HOUSING

SECOND FLOOR FRAMING PLAN

SHEET ID

S-104

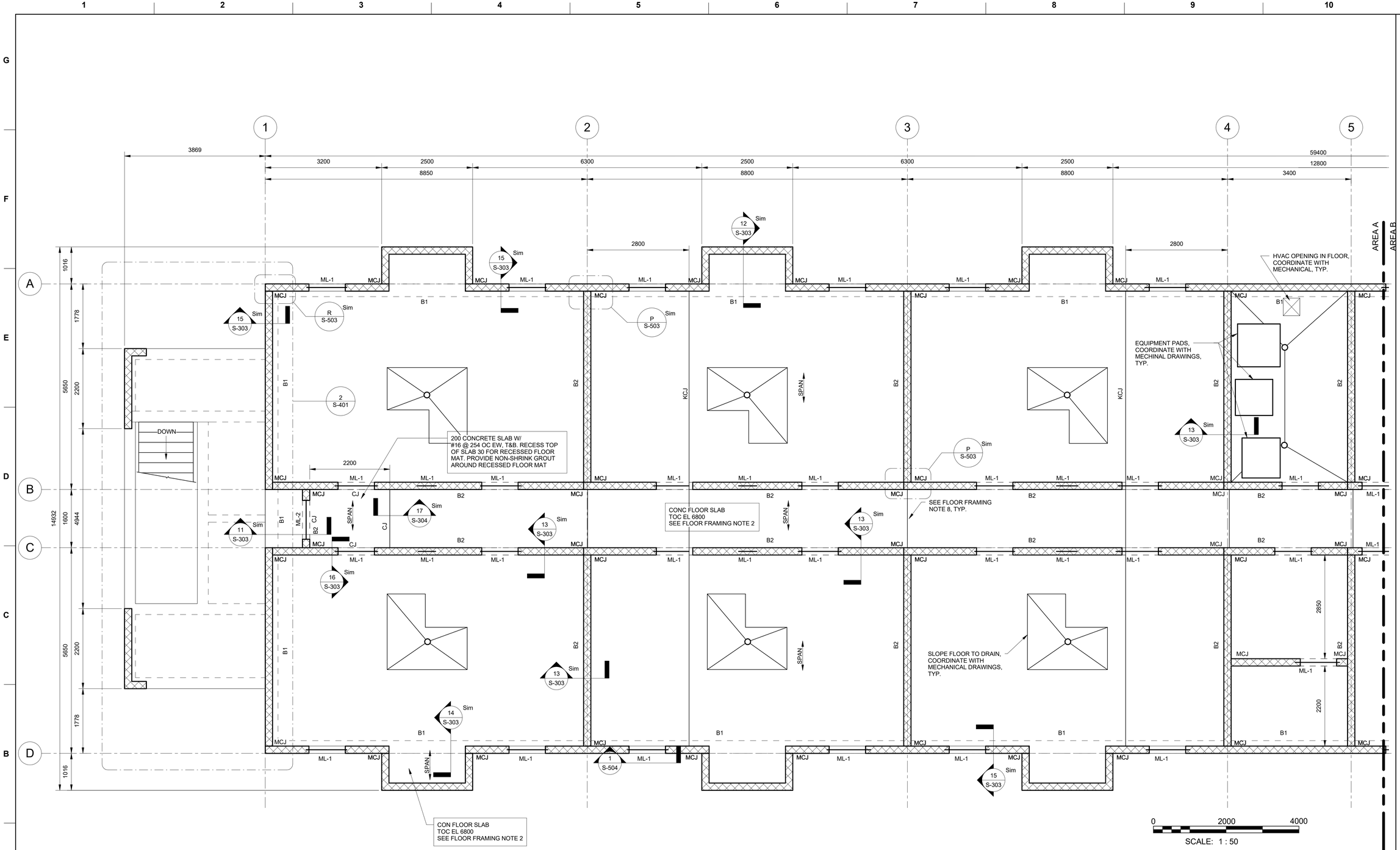

NOTES:
1. SEE SHEET S001 FOR GENERAL STRUCTURAL NOTES.
2. SEE SHEET S103 FOR FLOOR FRAMING NOTES.
3. SECTIONS SHOWN ARE SIMILAR TO SECTIONS CUT AT THE SECOND FLOOR.
4. THIRD FLOOR REFERENCE ELEVATION = 6800
5. ALL FLOOR PLANS SHOWN ARE BASED ON BUILDING D ORIENTATION.

1 THIRD FLOOR FRAMING PLAN - AREA "A"

1 : 50

US Army Corps of Engineers ®

MARK	DESCRIPTION	DATE

DESIGNED BY: JLL
DRAWN BY: JGB
CHECKED BY: JCO
SUBMITTED BY:
SIZE: ANSI D
ISSUE DATE: FEBRUARY 2019
SOLICITATION NO.: W912T819R0028
CONTRACT NO.:
PROJECT NUMBER: M07TEU44
FILE NAME: M07TEU44

U.S. ARMY CORPS OF ENGINEERS
MOBILE DISTRICT
MOBILE, ALABAMA

SOTO CANO AIR BASE, HONDURAS
UNACCOMPANIED ENLISTED PERSONNEL HOUSING

THIRD FLOOR FRAMING PLAN

SHEET ID
S-105

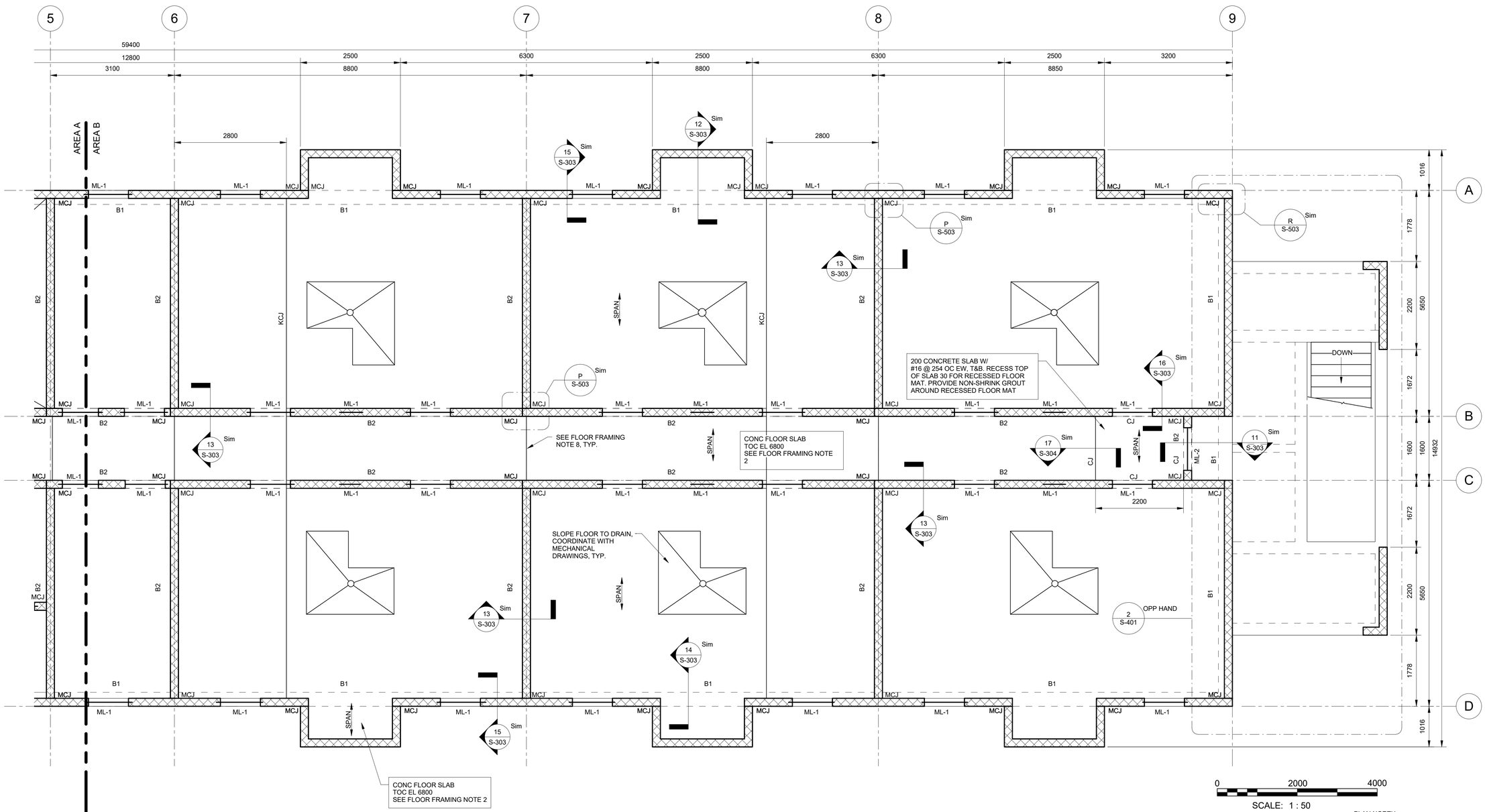

NOTES:
1. SEE SHEET S001 FOR GENERAL STRUCTURAL NOTES.
2. SEE SHEET S103 FOR FLOOR FRAMING NOTES.
3. SECTIONS SHOWN ARE SIMILAR TO SECTIONS CUT AT THE SECOND FLOOR.
4. THIRD FLOOR REFERENCE ELEVATION = 6800
5. ALL FLOOR PLANS SHOWN ARE BASED ON BUILDING D ORIENTATION.

1 THIRD FLOOR FRAMING PLAN - AREA "B"
1 : 50

US Army Corps of Engineers ®

MARK	DESCRIPTION	DATE

ISSUE DATE: FEBRUARY 2019
SOLICITATION NO.: W912781R0028
CONTRACT NO.:
PROJECT NUMBER: M07TE144
DESIGNED BY: JLL
DRAWN BY: JGB
CHECKED BY: JCO
SUBMITTED BY:
SIZE: ANSI D
FILE NAME: M07TE144

U.S. ARMY CORPS OF ENGINEERS
MOBILE DISTRICT
MOBILE, ALABAMA

SOTO CANO AIR BASE, HONDURAS
UNACCOMPANIED ENLISTED PERSONNEL HOUSING

THIRD FLOOR FRAMING PLAN

SHEET ID
S-106

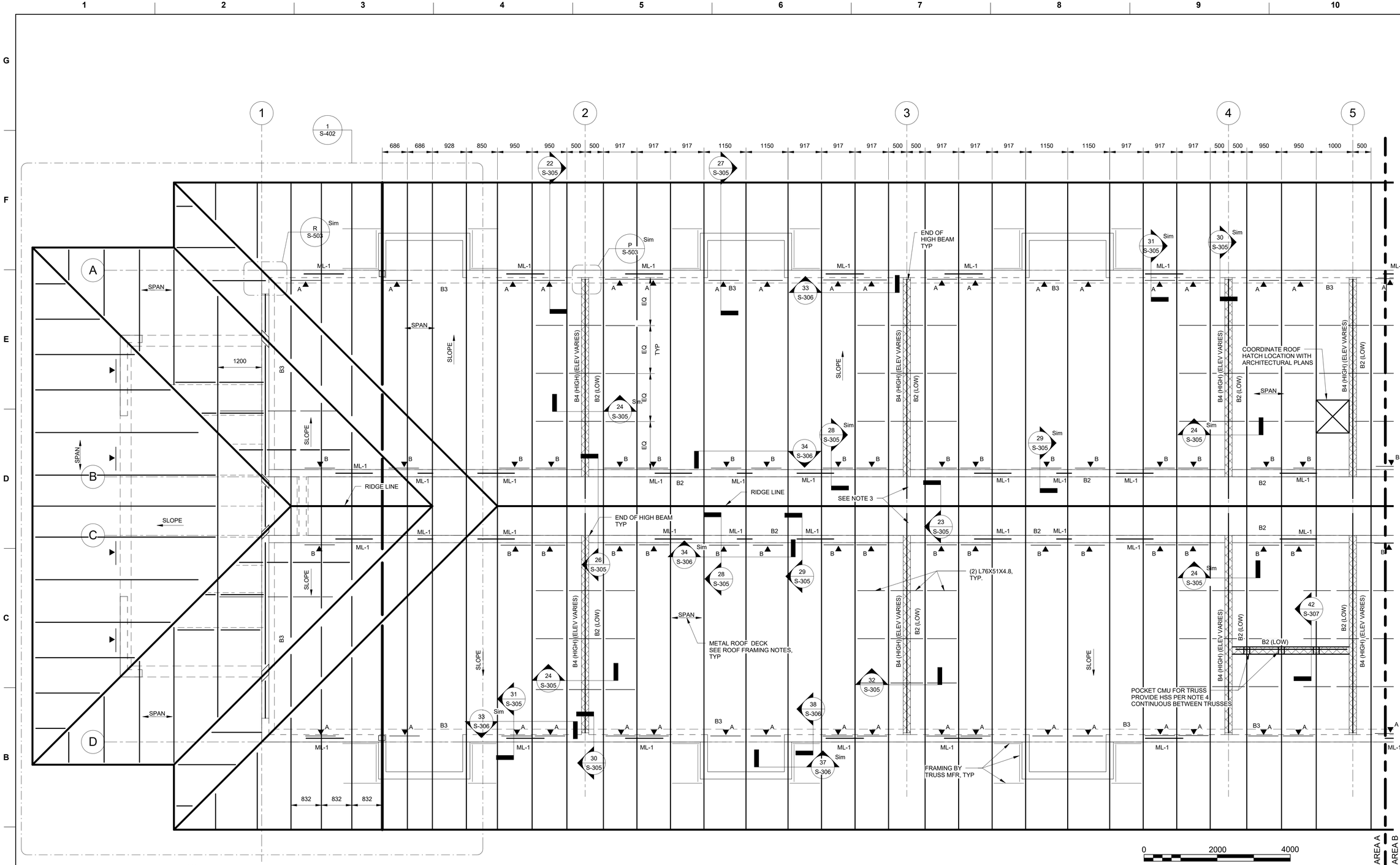

NOTE:
1. SEE SHEET S001 FOR GENERAL STRUCTURAL NOTES.
2. SEE SHEET S305 FOR ROOF FRAMING NOTES.
3. " SEE NOTE X" INDICATES SEE ROOF FRAMING NOTE "X" ON SHEET S-305.
4. ALL FLOOR PLANS SHOWN ARE BASED ON BUILDING D ORIENTATION.
5. SEE S-506 FOR SSMR NET WIND UPLIFT PRESSURES.

1 ROOF FRAMING PLAN - AREA "A"

1 : 50

0 2000 4000

SCALE: 1 : 50

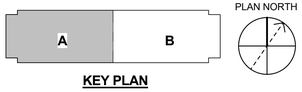

KEY PLAN

US Army Corps of Engineers ®

MARK	DESCRIPTION	DATE

ISSUE DATE: FEBRUARY 2019
SOLICITATION NO.: W912T819R0028
CONTRACT NO.:
PROJECT NUMBER: M07TE144

DESIGNED BY: JLL
DRAWN BY: JGB
CHECKED BY: JCO
SUBMITTED BY:
SIZE: ANSI D
FILE NAME: M07TE144

U.S. ARMY CORPS OF ENGINEERS
MOBILE DISTRICT
MOBILE, ALABAMA

SOTO CANO AIR BASE, HONDURAS
UNACCOMPANIED ENLISTED PERSONNEL HOUSING

ROOF FRAMING PLAN

SHEET ID
S-107

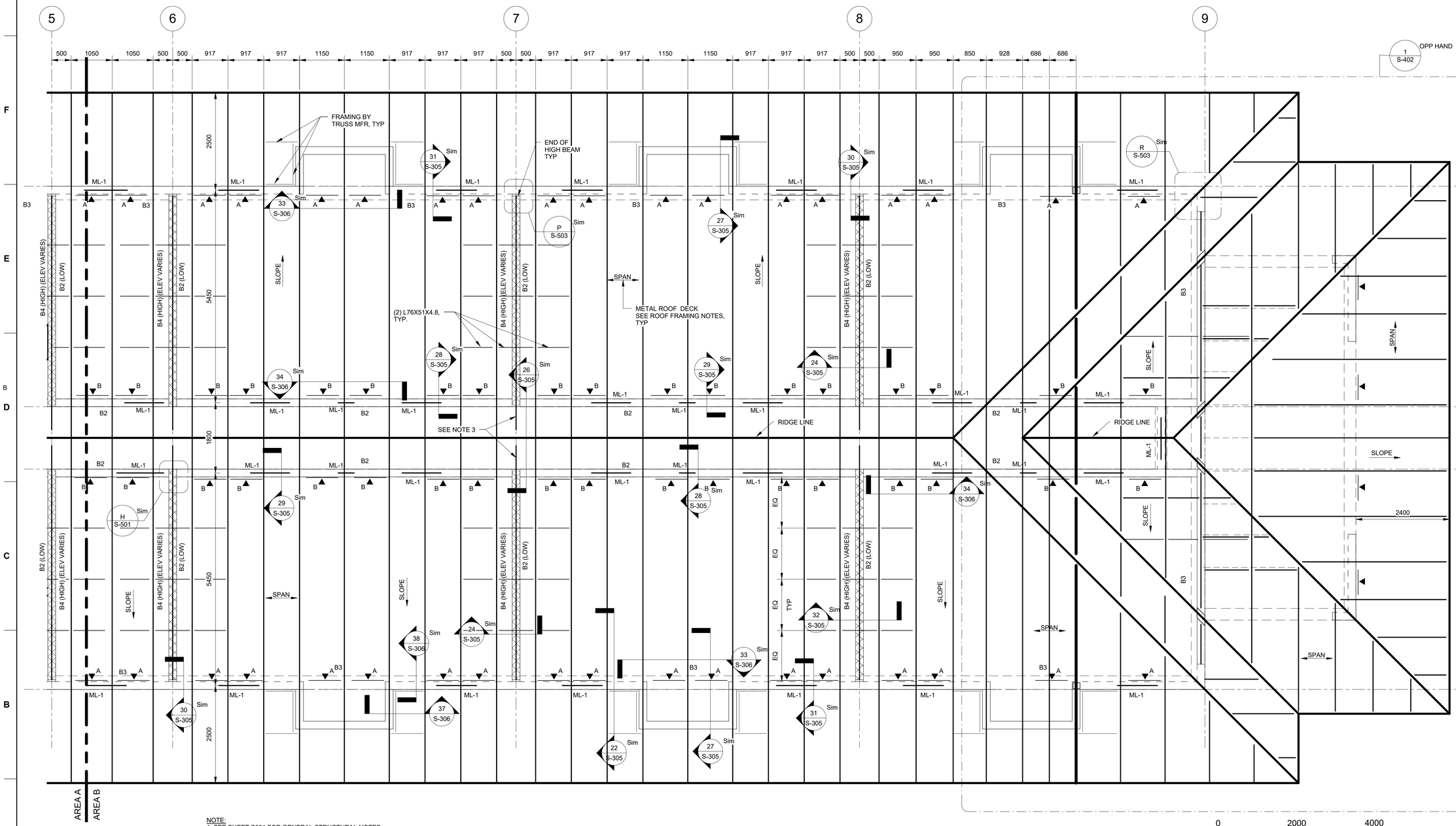

NOTE:
1. SEE SHEET S001 FOR GENERAL STRUCTURAL NOTES.
2. SEE SHEET S522 FOR ROOF FRAMING NOTES.
3. " SEE NOTE X" INDICATES SEE ROOF FRAMING NOTE "X" ON SHEET S522.
4. ALL FLOOR PLANS SHOWN ARE BASED ON BUILDING D ORIENTATION.
5. SEE S-506 FOR SSMR NET WIND UPLIFT PRESSURES.

1 ROOF FRAMING PLAN - AREA "B"

1 : 50

0 2000 4000

SCALE: 1 : 50

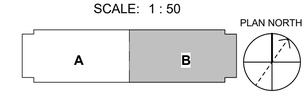

KEY PLAN

US Army Corps of Engineers ®

MARK	DESCRIPTION	DATE

DESIGNED BY: JLL
DRAWN BY: JGB
CHECKED BY: JCO
SUBMITTED BY:
SIZE: ANSI D
ISSUE DATE: FEBRUARY 2019
SOLICITATION NO.: W912T819R0028
CONTRACT NO.:
PROJECT NUMBER: M07TE144
FILE NAME: M07TE144

U.S. ARMY CORPS OF ENGINEERS
MOBILE DISTRICT
MOBILE, ALABAMA

SOTO CANO AIR BASE, HONDURAS
UNACCOMPANIED ENLISTED PERSONNEL HOUSING

ROOF FRAMING PLAN

SHEET ID
S-108

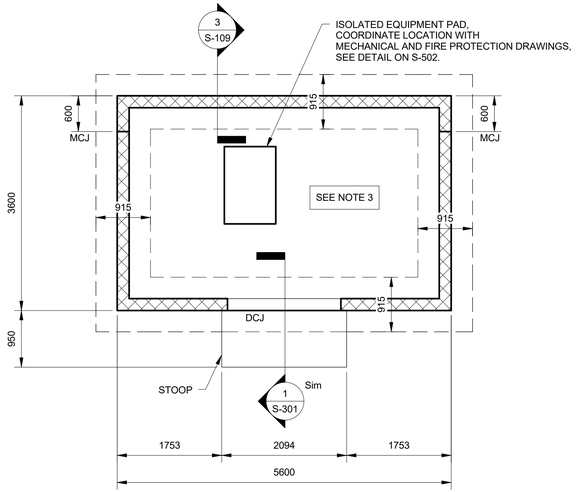

NOTES:
1. SEE SHEET S001 FOR GENERAL STRUCTURAL NOTES.
2. SEE SHEET S-501 FOR FOUNDATION NOTES.
3. 127 SLAB ON GRADE W/ #13 @ 410 O.C. EW OVER VAPOR RETARDER ON 156 COMPACTED GRANULAR MATERIAL FOR FIN FLOOR EL SEE FOUNDATION NOTES ON SHEET S-301.

1 FIRE PUMP BUILDING FOUNDATION PLAN
1 : 50

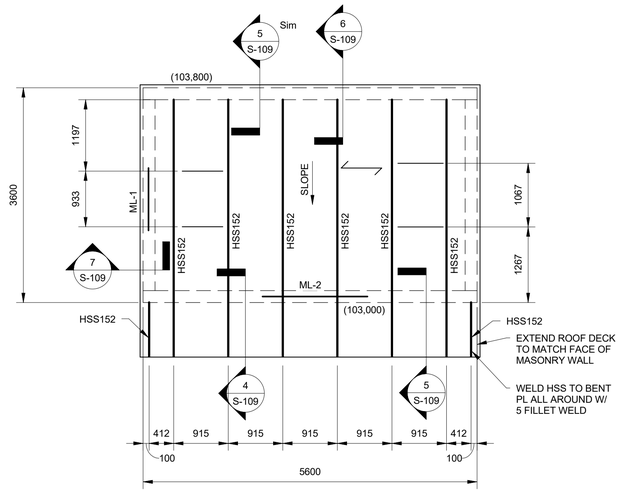

NOTES:
1. SEE SHEET S001 FOR GENERAL STRUCTURAL NOTES.
2. STEEL BEAM BEARING ELEVATION SHOWN THUS (XXX. XXX) ON PLAN.
3. MLX INDICATES MASONRY LINTEL. SEE MASONRY LINTEL SCHEDULE.
4. HSS152 INDICATES HSS152X76X4.8 ELEVATION VARIES.
5. INDICATES 38 X .9093, TYPE B, METAL ROOF DECK SPAN.
6. VERIFY ROOF MECHANICAL PENETRATIONS, SIZES AND LOCATIONS.

2 FIRE PUMP BUILDING ROOF FRAMING PLAN
1 : 50

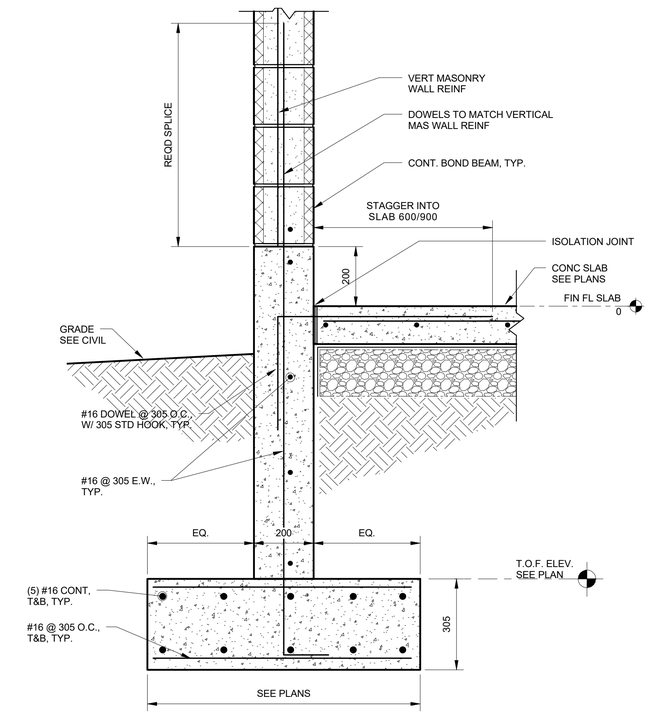

3 FOUNDATION DETAIL
1 : 10

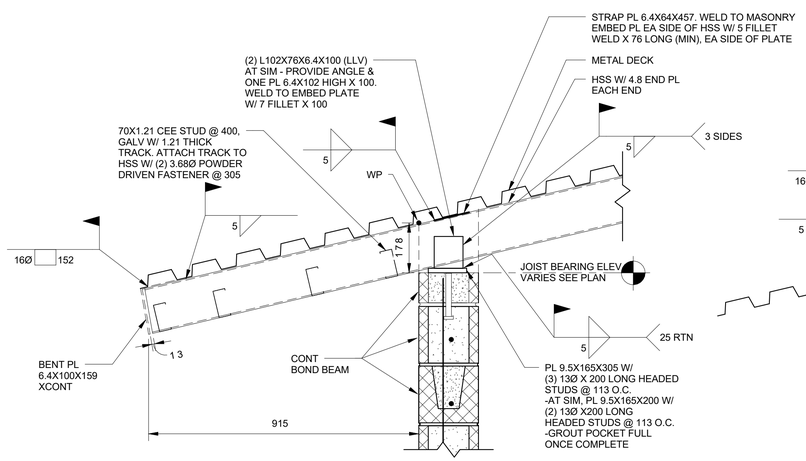

4 ROOF FRAMING SECTION
1 : 10

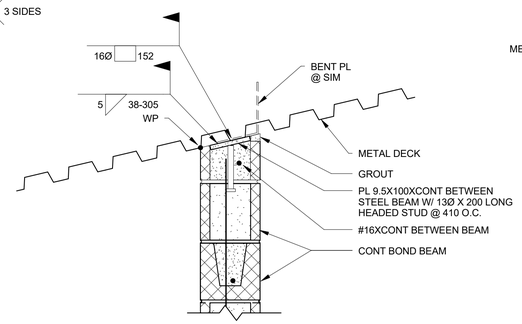

5 ROOF FRAMING SECTION
1 : 10

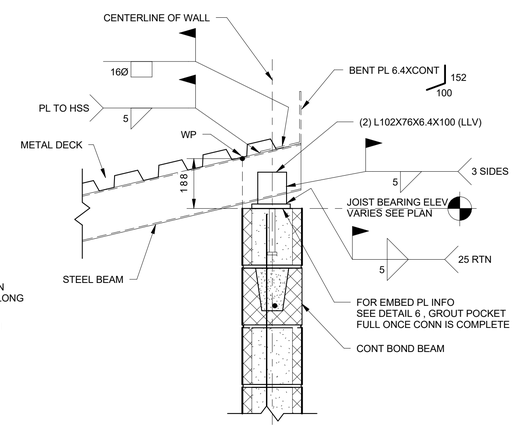

6 ROOF FRAMING DETAIL
1 : 10

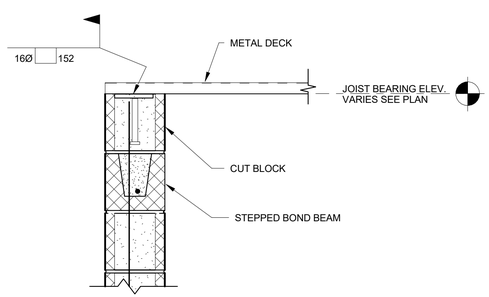

7 ROOF FRAMING DETAIL
1 : 10

US Army Corps of Engineers ®

MARK	DESCRIPTION	DATE

DESIGNED BY: JLL	ISSUE DATE: FEBRUARY 2019
DRAWN BY: JGB	SOLICITATION NO.: W912781R0028
CHECKED BY: JCO	CONTRACT NO.:
SUBMITTED BY:	PROJECT NUMBER: M07TE144
SIZE: ANSI D	FILE NAME: M07TE144

U.S. ARMY CORPS OF ENGINEERS
MOBILE DISTRICT
MOBILE, ALABAMA

SOTO CANO AIR BASE, HONDURAS
UNACCOMPANIED ENLISTED PERSONNEL HOUSING

FIRE PUMP BUILDING PLANS AND SECTIONS

SHEET ID
S-109

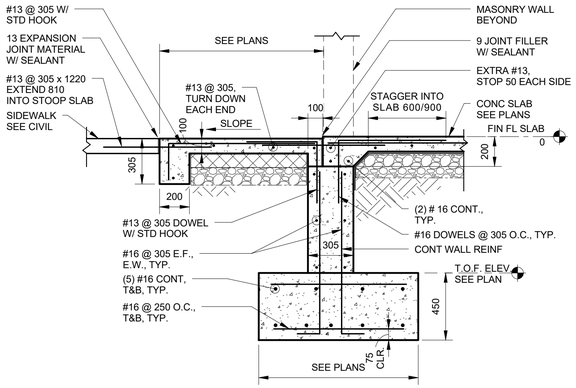

1 STOOP SECTION
1 : 20

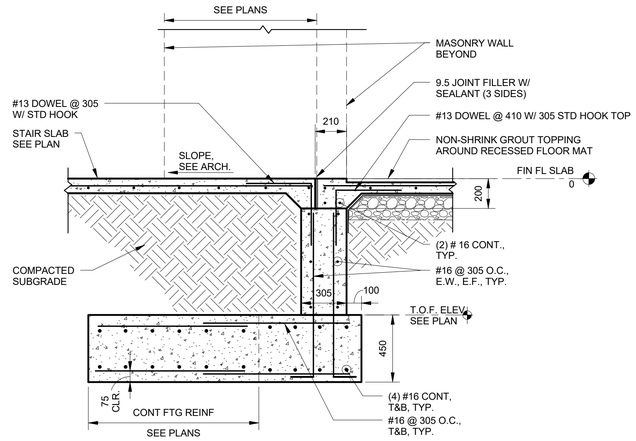

2 SECTION
1 : 20

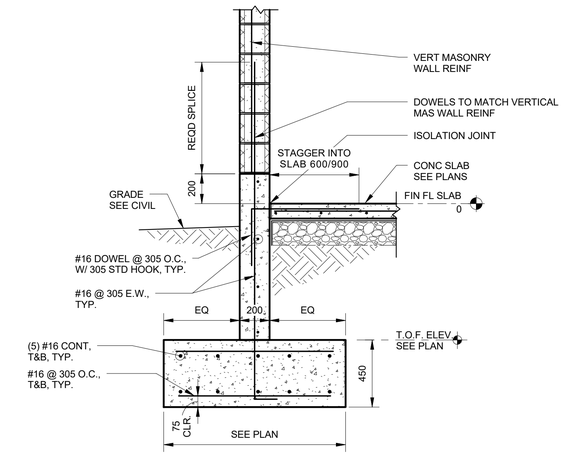

3 TYPICAL EXTERIOR MASONRY WALL FOOTING
1 : 20

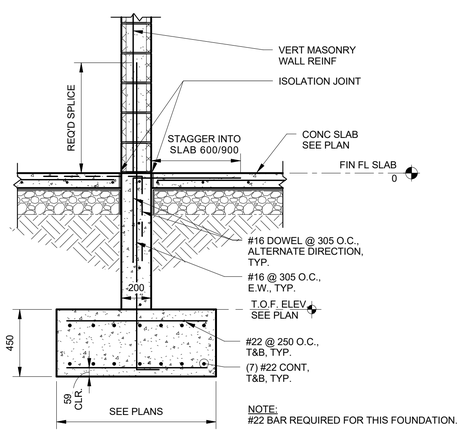

NOTE:
#22 BAR REQUIRED FOR THIS FOUNDATION.

4 TYPICAL INTERIOR MASONRY WALL FOOTING
1 : 20

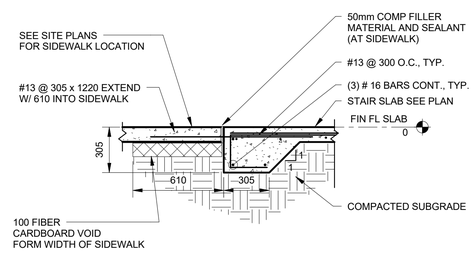

5 FOUNDATION DETAIL
1 : 20

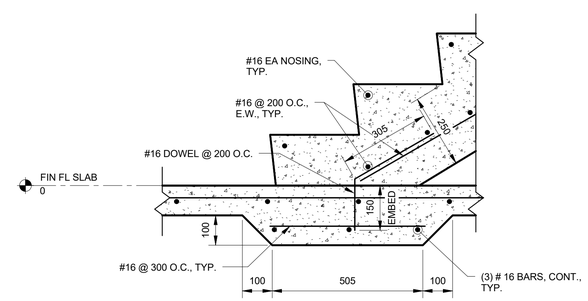

6 STAIR DETAIL
1 : 10

FOUNDATION PLAN NOTES:

1. SEE SHEET S001 FOR STRUCTURAL NOTES.

2. ARCHITECTURAL FINISH FLOOR ELEVATION 000 EQUALS SITE SURVEY ELEVATION:

BUILDING D - 635.6 M
BUILDING E - 635.6 M
BUILDING F - 635.3 M
FIRE PUMP BUILDING - 635.1 M

3. TOP OF FOOTING ELEVATION, UNLESS OTHERWISE NOTED.

BUILDING D - 634.35 M
BUILDING E - 634.35 M
BUILDING F - 634.35 M
FIRE PUMP BUILDING - 634.19 M

4. CONTINUOUS MASONRY WALL FOOTINGS ARE CENTERED AT EACH MASONRY WALL UNLESS NOTED OTHERWISE. SEE PLANS FOR WALL FOOTING WIDTH = XXX.

5. CONCRETE SPREAD FOOTINGS ARE CENTERED AT EACH COLUMN OR WALL UNLESS NOTED OTHERWISE.

6. SEE ARCHITECTURAL DRAWINGS FOR LOCATION OF THICKENED, SLOPED, RAISED OR DEPRESSED SLABS.

7. FLOOR DRAINS - SLOPE SLAB AROUND DRAIN TO DRAIN, TOP OF DRAIN ELEVATION MINUS 13mm OF SURROUNDING FLOOR SLAB ELEVATION.

8. SEE PLUMBING SHEETS FOR CLEANOUT LOCATIONS.

9. CJ - INDICATES SLAB CONTROL JOINT, SEE DETAILS.

10. COORDINATE SIZE AND LOCATION OF EQUIPMENT PADS WITH MECHANICAL AND ELECTRICAL DRAWINGS. SEE STRUCTURAL DRAWINGS FOR TYPICAL EQUIPMENT PAD DETAILS UNLESS NOTED OTHERWISE.

US Army Corps of Engineers ®

MARK	DESCRIPTION	DATE

DESIGNED BY: JLL
DRAWN BY: JGB
CHECKED BY: JCO
SUBMITTED BY:
SIZE: ANSI D
ISSUE DATE: FEBRUARY 2019
SOLICITATION NO.: W912T819R0028
CONTRACT NO.:
PROJECT NUMBER: M07TEU44
FILE NAME: M07TEU44

U.S. ARMY CORPS OF ENGINEERS
MOBILE DISTRICT
MOBILE, ALABAMA

SOTO CANO AIR BASE, HONDURAS
UNACCOMPANIED ENLISTED PERSONNEL HOUSING

FOUNDATION SECTIONS

SHEET ID
S-301

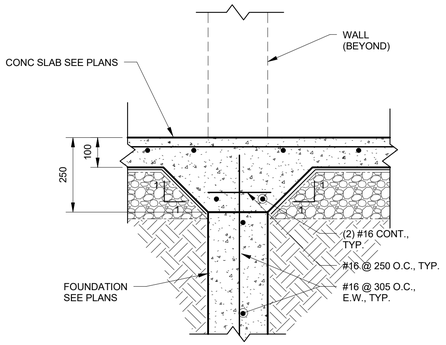

NOTE:
CONSTRUCTION JOINT AT SIM. NO SMOOTH DOWELS. SEE PLANS FOR CJ LOCATION AND CONSTRUCTION JOINT DETAIL S-501.

7 TYPICAL SLAB CONSTRUCTION JOINT @ DOOR

1 : 10

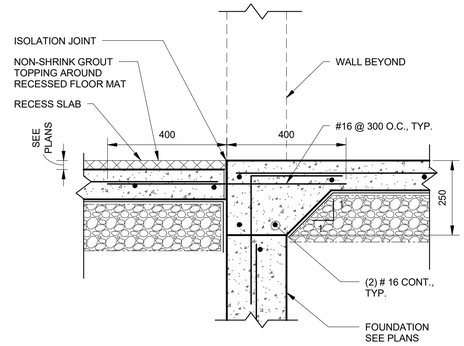

8 FLOOR SLAB RECESS SECTION

1 : 10

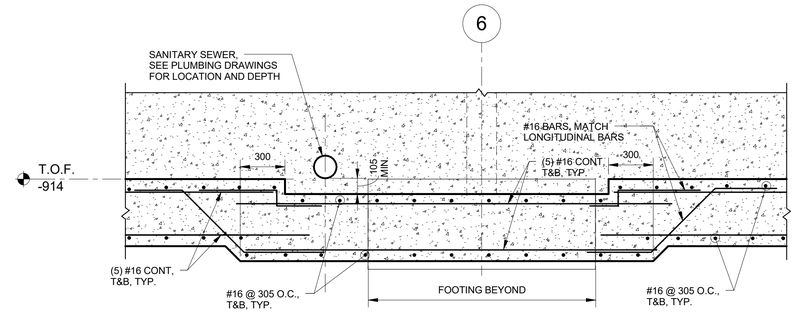

9 TYPICAL STEPPED FOOTING

1 : 20

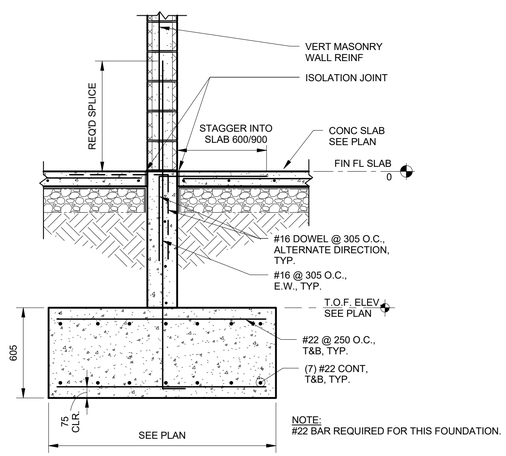

NOTE:
#22 BAR REQUIRED FOR THIS FOUNDATION.

10 TYPICAL MASONRY WALL FOOTING

1 : 20

US Army Corps of Engineers ®

MARK	DESCRIPTION	DATE

ISSUE DATE: FEBRUARY 2019
SOLICITATION NO.: W912781R0028
CONTRACT NO.:
PROJECT NUMBER: M07TEU44

DESIGNED BY: Designer
DRAWN BY: Author
CHECKED BY: Checker
SUBMITTED BY:
SIZE: ANSI D
FILE NAME: M07TEU44

U.S. ARMY CORPS OF ENGINEERS
MOBILE DISTRICT
MOBILE, ALABAMA

SOTO CANO AIR BASE, HONDURAS
UNACCOMPANIED ENLISTED PERSONNEL HOUSING

FOUNDATION SECTIONS

SHEET ID

S-302

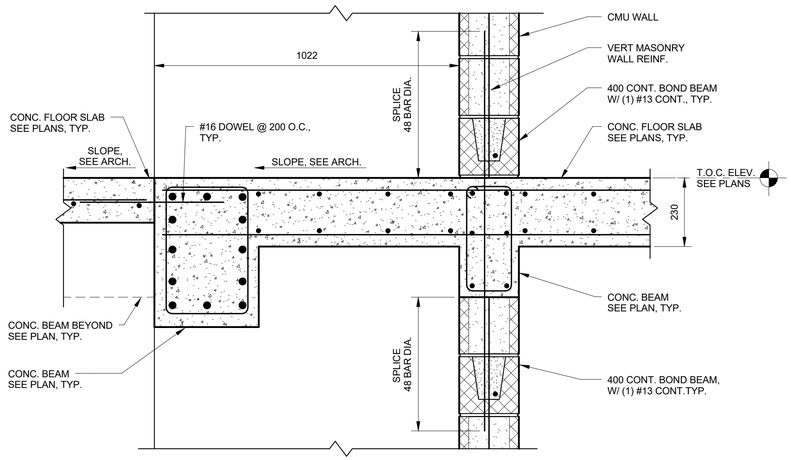

11 CONCRETE FLOOR BEARING DETAIL
1 : 10

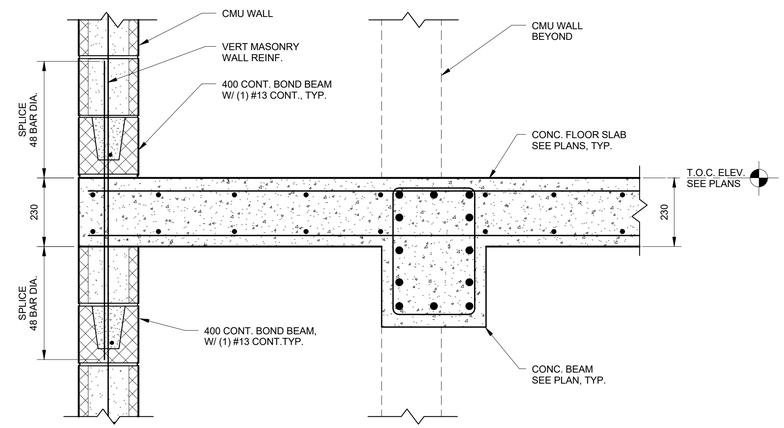

12 CONCRETE FLOOR BEARING DETAIL
1 : 10

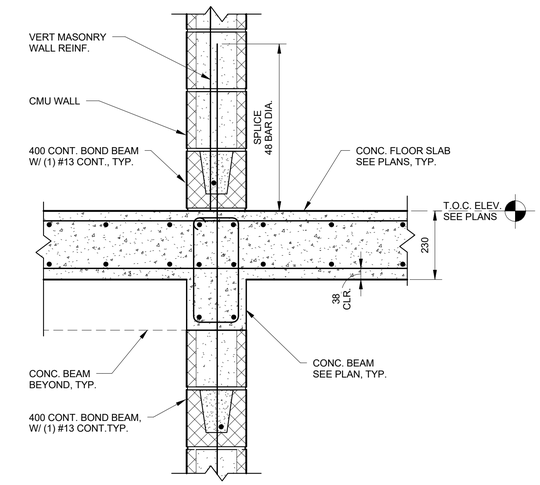

13 CONCRETE FLOOR BEARING DETAIL
1 : 10

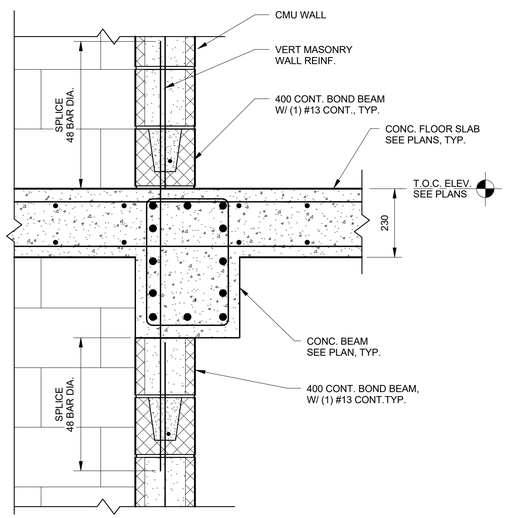

14 MASONRY DETAIL
1 : 10

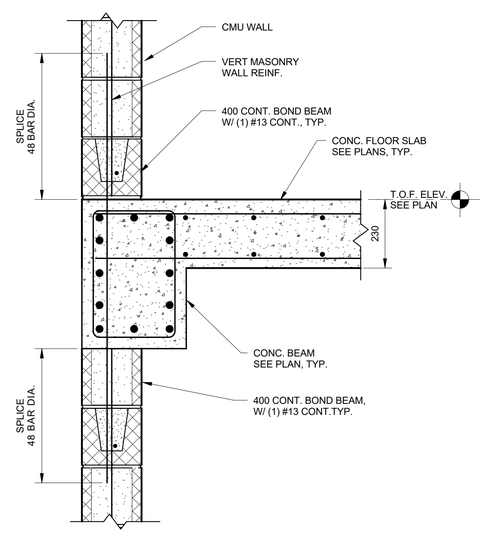

15 CONCRETE FLOOR BEARING DETAIL
1 : 10

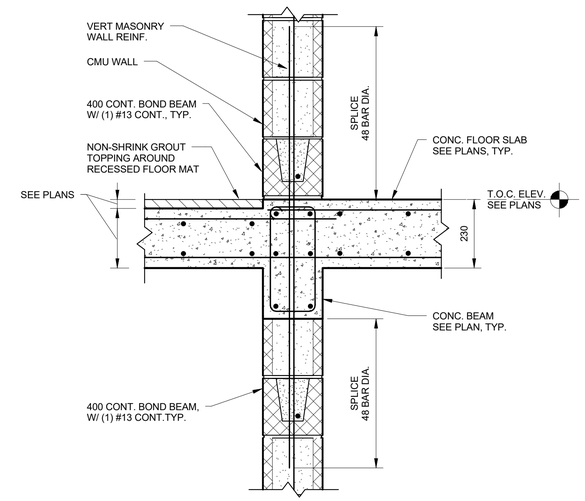

16 RECESSED CONCRETE SLAB DETAIL
1 : 10

NOTES:
1. SECTIONS SHOWN ARE CUT AT THE SECOND FLOOR.
2. THIRD FLOOR REFERENCE ELEVATION = 6800mm

US Army Corps of Engineers ®

MARK	DESCRIPTION	DATE

ISSUE DATE: FEBRUARY 2019
SOLICITATION NO.: W912781R0028
CONTRACT NO.:
PROJECT NUMBER: M07TE144
DESIGNED BY: JLL
DRAWN BY: JGB
CHECKED BY: JCO
SUBMITTED BY:
SIZE: ANSI D
FILE NAME: M07TE144

U.S. ARMY CORPS OF ENGINEERS
MOBILE DISTRICT
MOBILE, ALABAMA

SOTO CANO AIR BASE, HONDURAS
UNACCOMPANIED ENLISTED PERSONNEL HOUSING

FLOOR FRAMING SECTIONS

SHEET ID
S-303

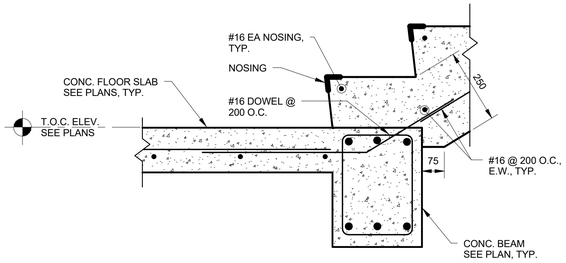

A DETAIL
1 : 10

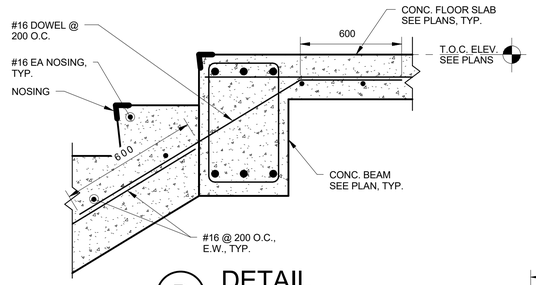

B DETAIL
1 : 10

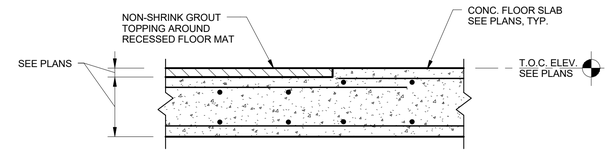

17 RECESSED CONCRETE SLAB DETAIL
1 : 10

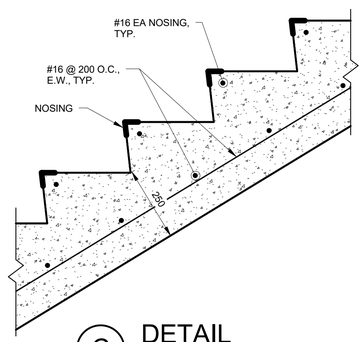

C DETAIL
1 : 10

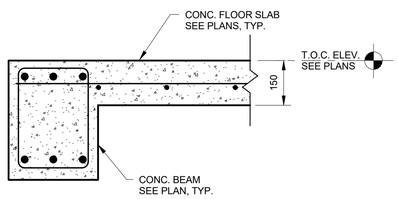

18 CONCRETE FLOOR BEARING DETAIL
1 : 10

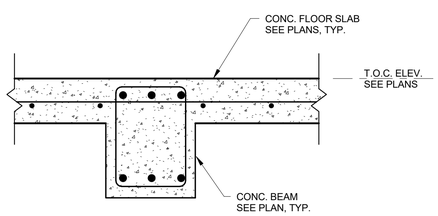

19 CONCRETE FLOOR BEARING DETAIL
1 : 10

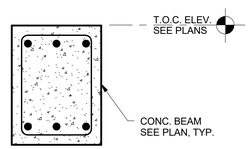

20 SECTION
1 : 10

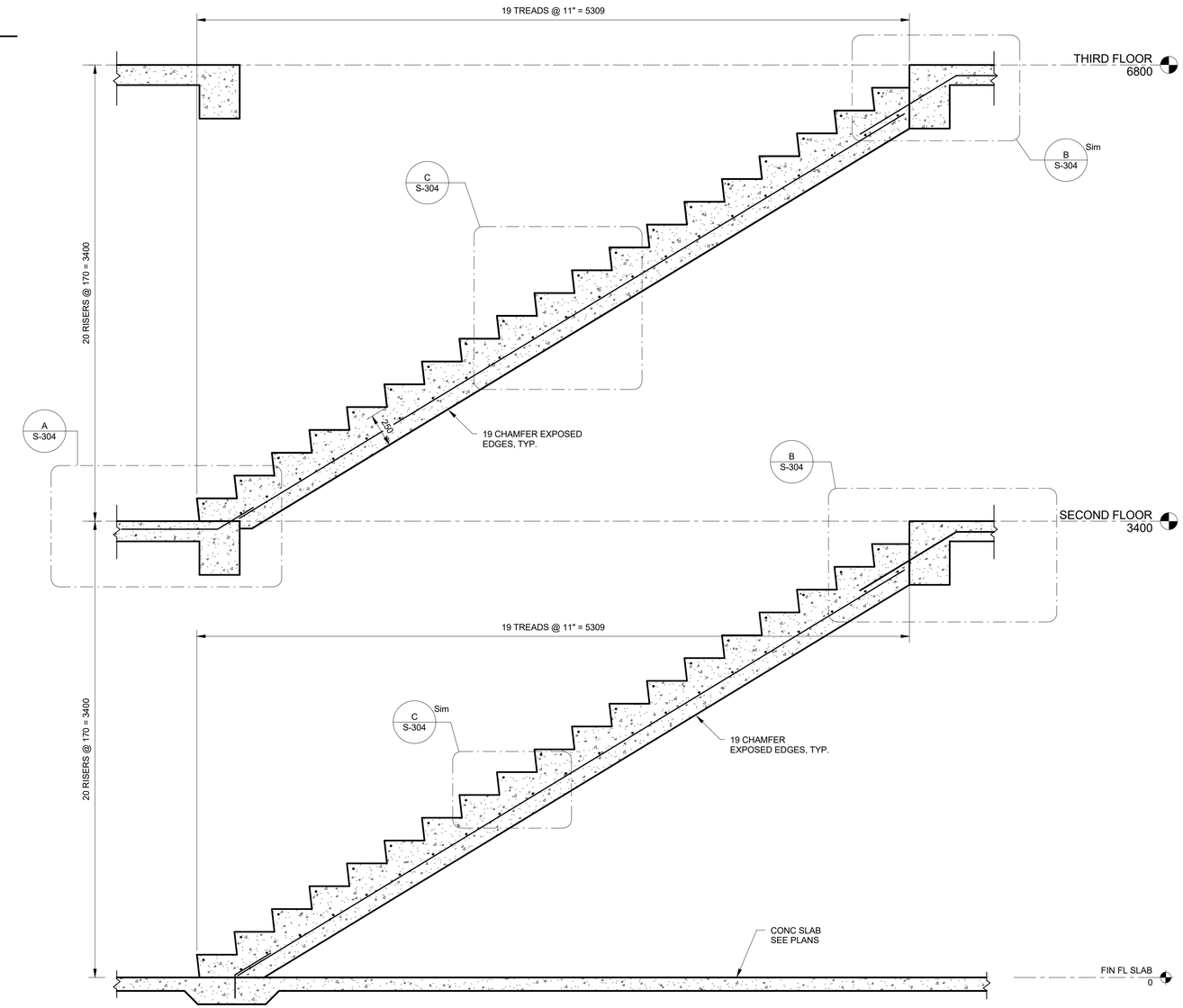

21 TYPICAL STAIR SECTION
1 : 20

NOTES:
1. SECTIONS SHOWN ARE CUT AT THE SECOND FLOOR.
2. THIRD FLOOR REFERENCE ELEVATION = 6800mm

US Army Corps of Engineers ®

MARK	DESCRIPTION	DATE

DESIGNED BY: JLL
DRAWN BY: JGB
CHECKED BY: JCO
SUBMITTED BY:
SIZE: ANSI D
ISSUE DATE: FEBRUARY 2019
SOLICITATION NO.: W912T819R0028
CONTRACT NO.:
PROJECT NUMBER: M07TEU44
FILE NAME: M07TEU44

U.S. ARMY CORPS OF ENGINEERS
MOBILE DISTRICT
MOBILE, ALABAMA

SOTO CANO AIR BASE, HONDURAS
UNACCOMPANIED ENLISTED PERSONNEL HOUSING

FLOOR FRAMING SECTIONS

SHEET ID
S-304

ROOF FRAMING NOTES:

1. SEE SHEET S001 FOR STRUCTURAL NOTES.

2. PRE ENGINEERED COLD FORM TRUSS BEARING ELEVATION EQUALS 10,200 UNLESS SHOWN OTHERWISE THUS: "TBE = XX,XXX" ON PLAN.

3. HSS 100x51x6

4. HSS 127x51x6

5. TRUSS MANUFACTURER TO DESIGN CONNECTION TO TRANSFER AXIAL TOP CHORD LOAD PER DETAIL 1/S-506.

6. TRUSS TO TRUSS MEMBER AND END CONNECTION BY MANUFACTURER. (1.21 MIN THICK). SEE 49/S-308 FOR GRAVITY LOADS, DESIGN END CONNECTION PER NOTE 5 ABOVE.

7. TRUSS MANUFACTURER TO PROVIDE END MEMBER AS REQ'D TO SUPPORT TRUSS ENDS. MAX DEPTH 100. MEMBER CONFIGURATION SHALL ALLOW FOR BENT PLATE ATTACHMENT PER DETAIL 20/S-305.

8. TRUSS CONNECTION TO EMBED PLATE BY TRUSS MANUFACTURER. DESIGN FOR COMBINED LOADS:

UPLIFT = 16.9 KN
HORIZONTAL SHEAR PARALLEL TO TRUSS = 3.85 KN

9. MCJ NOT SHOW, SEE LOWER LEVEL FRAMING PLAN.

10. TO OF STEEL ELEVATION SHOWN THUS: "TOS = XXX,XXX" ON PLAN.

11. ML-X INDICATES MASONRY LINTEL. SEE SHEET S-504 FOR SCHEDULE

12. SEE SHEET S001 FOR PRE-ENGINEERED COLD FORM TRUSS NOTES.

13. NOT USED.

14. VERIFY ROOF MECHANICAL PENETRATIONS SIZES AND LOCATIONS.

15. SPAN — INDICATED 38 x .9093, TYPE B METAL ROOF DECK SPAN.

16. INDICATES BRACE LOCATION. SEE DETAILS 31 & 32 ON S-306.

17. SEE 3/S-506 FOR SSMR NET WIND UPLIFT PRESSURES.

18. 'BX' INDICATES CONCRETE BEAM TYPE. SEE CONCRETE BEAM SCHEDULE ON SHEET S-306 FOR SIZE & REINFORCEMENT.

19. SOLAR PANEL NOT SHOWN. SEE ARCHITECTURAL PLANS FOR LOCATIONS. TRUSS MANUFACTURER SEE TRUSS LOAD DIAGRAM AND DETAILS ON S-506.

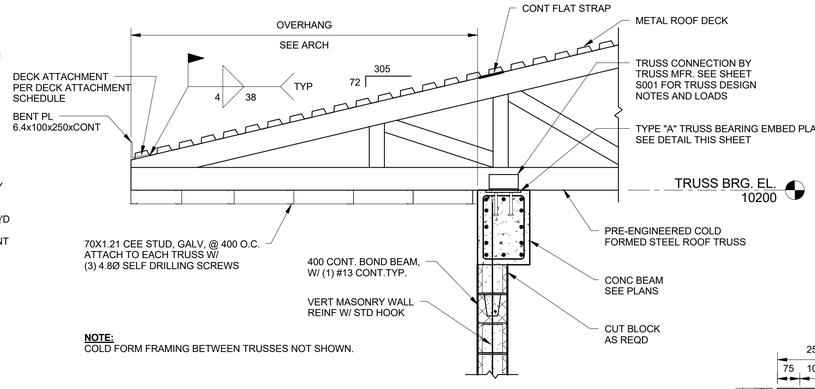

NOTE:
COLD FORM FRAMING BETWEEN TRUSSES NOT SHOWN.

22 TRUSS BEARING DETAIL
1 : 20

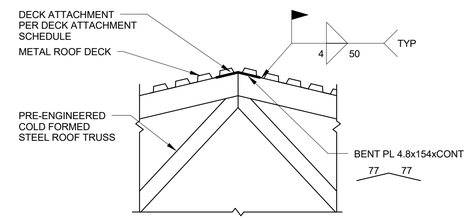

23 ROOF FRAMING DETAIL
1 : 20

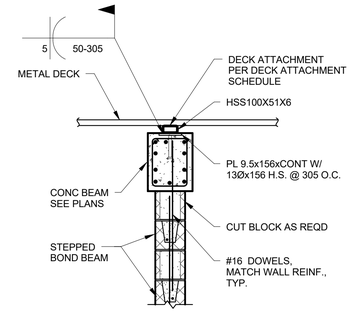

24 TYP METAL DECK BEARING DETAIL
1 : 20

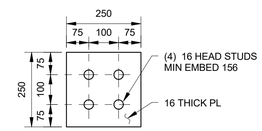

TYPE "A" TRUSS BEARING EMBED PLATE
1 : 10

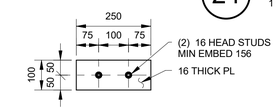

TYPE "B" TRUSS BEARING EMBED PLATE
1 : 10

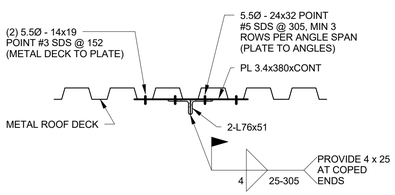

25 FRAMING DETAIL
1 : 10

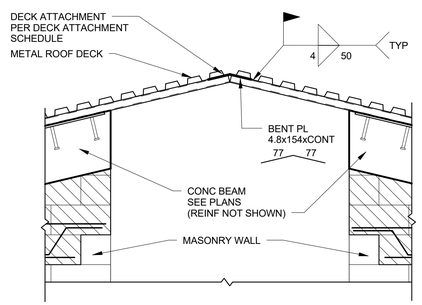

26 ROOF FRAMING DETAIL
1 : 20

NOTE:
1. SEE 20/S-305 FOR ADDL INFORMATION
2. COLD FORM FRAMING BETWEEN TRUSSES NOT SHOWN.

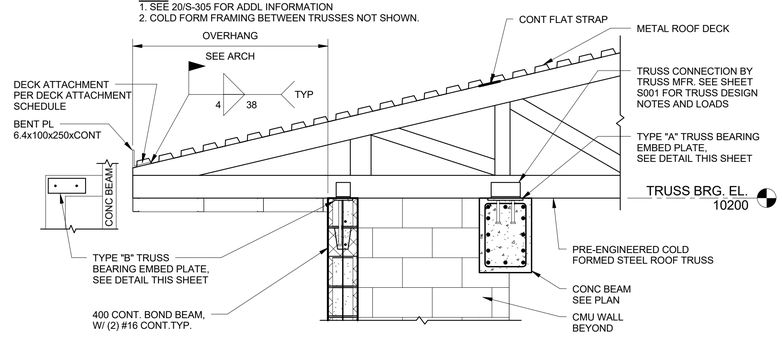

27 TRUSS BEARING DETAIL
1 : 20

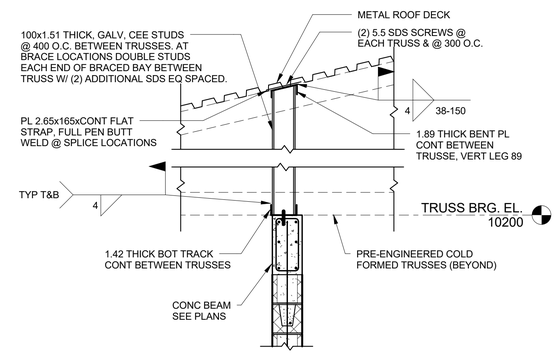

28 TRUSS BEARING DETAIL
1 : 20

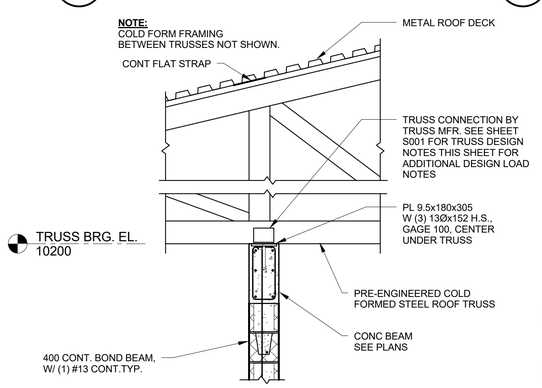

29 ROOF DETAIL
1 : 20

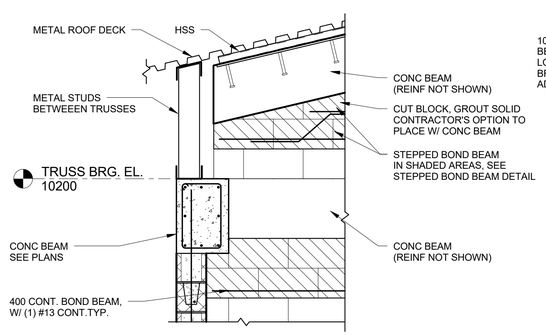

30 ROOF DETAIL
1 : 20

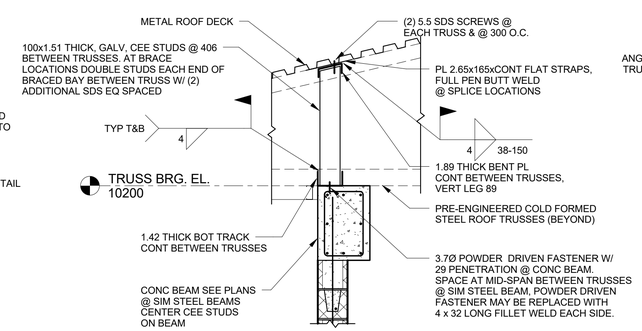

31 ROOF DETAIL
1 : 20

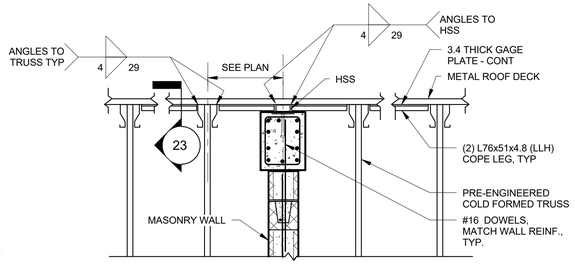

NOTE:
1. AT SIM, CLIP BOTTOM ANGLE LEG AS REQD TO BEAR ON CMU, HSS, AND TO BEAR ON INTERMEDIATE HSS, ANGLE SHOULD BE 1 PIECE - CONTINUOUS. WELD WITH 4 FILLET WELD, ALL AROUND AND AT EACH SIDE FULL LENGTH AT INTERMEDIATE HSS. PROVIDE 29 MIN BRG LENGTH.

32 FRAMING DETAIL
1 : 20

US Army Corps of Engineers ®

MARK	DESCRIPTION	DATE

ISSUE DATE: FEBRUARY 2019
SOLICITATION NO.: W912T819R0028
CONTRACT NO.:
PROJECT NUMBER: M07TE144
DESIGNED BY: JLL
DRAWN BY: JGB
CHECKED BY: JCO
SUBMITTED BY:
FILE NAME: M07TE144
SIZE: ANSI D

U.S. ARMY CORPS OF ENGINEERS
MOBILE DISTRICT
MOBILE, ALABAMA

SOTO CANO AIR BASE, HONDURAS
UNACCOMPANIED ENLISTED PERSONNEL HOUSING

ROOF FRAMING SECTIONS AND DETAILS

SHEET ID
S-305

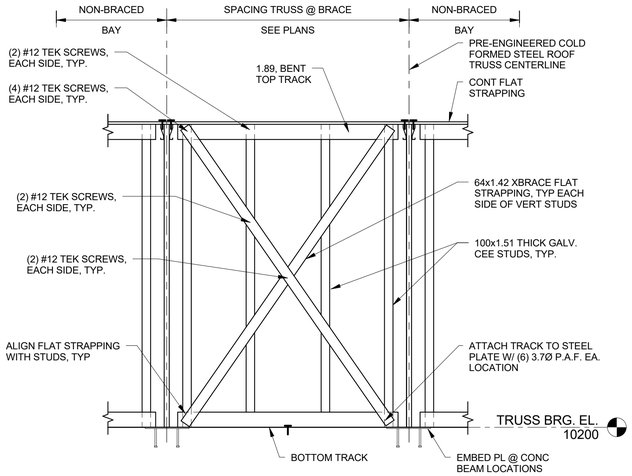

NOTE:
1. BRACING SHOWN IS FOR LATERAL LOAD TRANSFER, PROVIDED BY THE CONTRACTOR. PRE-ENGINEERED COLD FORM TRUSS MANUFACTURER TO DESIGN AND PROVIDE TEMPORARY AND PERMANENT TRUSS BRACING.

33 BRACE DETAIL - TYPE A
NOT TO SCALE

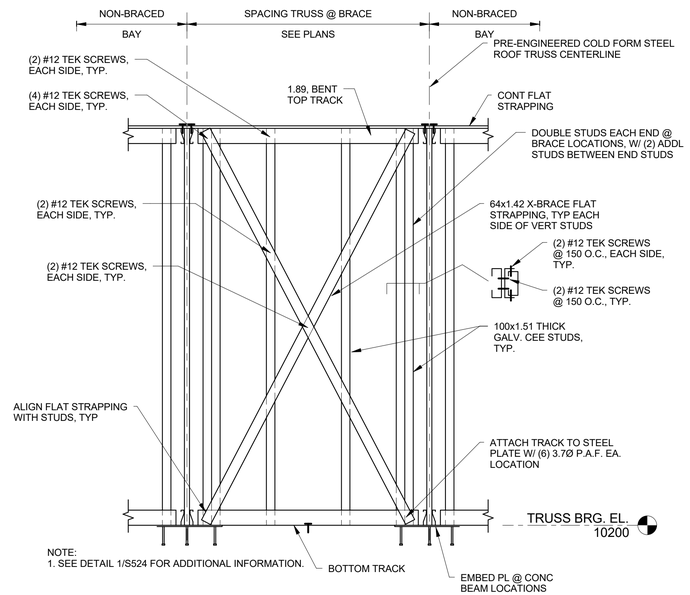

NOTE:
1. SEE DETAIL 1/S524 FOR ADDITIONAL INFORMATION.

34 BRACE DETAIL - TYPE B
NOT TO SCALE

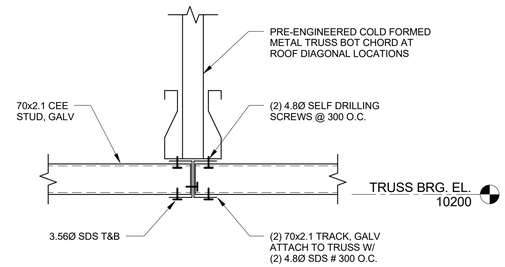

35 TYP SOFFIT METAL STUD CONN @ TRUSS DETAIL
NOT TO SCALE

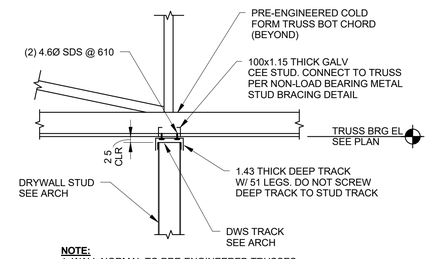

NOTE:
1. WALL NORMAL TO PRE-ENGINEERED TRUSSES.

36 TYP NON-LOAD BEARING METAL STUD BRACING DETAIL
NOT TO SCALE

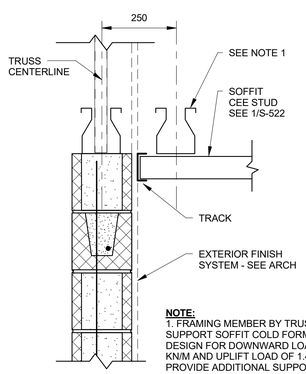

NOTE:
1. FRAMING MEMBER BY TRUSS MFR TO SUPPORT SOFFIT COLD FORMED STUD, DESIGN FOR DOWNWARD LOAD OF 0.24 KN/M AND UPLIFT LOAD OF 1.46 KN/M. PROVIDE ADDITIONAL SUPPORT FRAMING FROM TRUSS TO TRUSS, SEE PLANS.

37 SOFFIT DETAIL
1 : 10

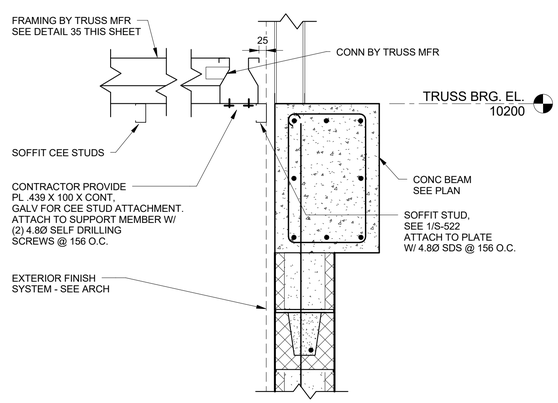

38 SOFFIT DETAIL
1 : 10

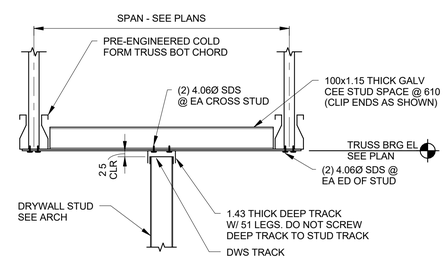

NOTE:
1. WALL PARALLEL TO PRE-ENGINEERED TRUSSES.

39 TYP NON-LOAD BEARING METAL STUD BRACING DETAIL
NOT TO SCALE

US Army Corps of Engineers ®

MARK	DESCRIPTION	DATE

DESIGNED BY: JLL
DRAWN BY: JGB
CHECKED BY: JCO
SUBMITTED BY: G. WRIGHAM
SIZE: ANSI D
ISSUE DATE: FEBRUARY 2019
SOLICITATION NO.: W912781R0028
CONTRACT NO.:
PROJECT NUMBER: M07TE144
FILE NAME: M07TE144

U.S. ARMY CORPS OF ENGINEERS
MOBILE DISTRICT
MOBILE, ALABAMA

SOTO CANO AIR BASE, HONDURAS
UNACCOMPANIED ENLISTED PERSONNEL HOUSING

ROOF FRAMING SECTIONS AND DETAILS

SHEET ID
S-306

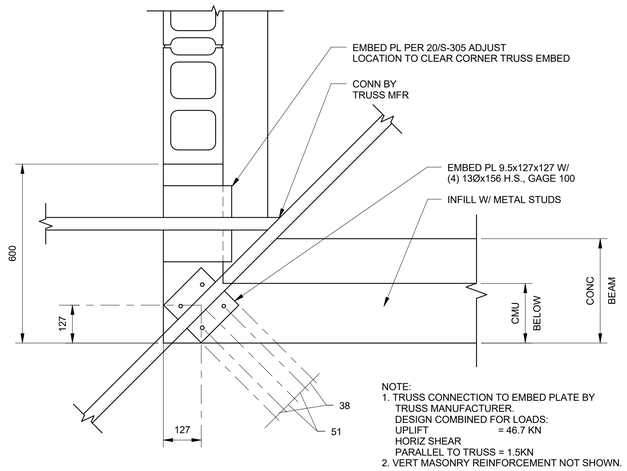

NOTE:
1. TRUSS CONNECTION TO EMBED PLATE BY TRUSS MANUFACTURER.
DESIGN COMBINED FOR LOADS:
UPLIFT = 46.7 KN
HORIZ SHEAR
PARALLEL TO TRUSS = 1.5KN
2. VERT MASONRY REINFORCEMENT NOT SHOWN.

40 FRAMING DETAIL
1 : 10

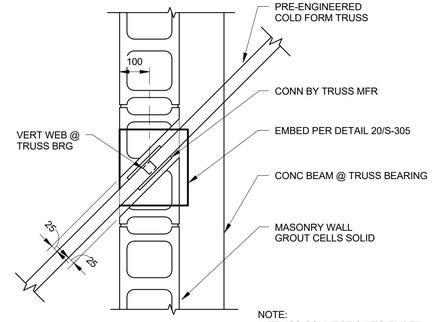

NOTE:
1. TRUSS CONNECTION TO EMBED PLATE BY TRUSS MANUFACTURER.
DESIGN COMBINED FOR LOADS:
UPLIFT = 46.7 KN
HORIZ SHEAR
PARALLEL TO TRUSS = 1.5KN
2. VERT MASONRY REINFORCEMENT NOT SHOWN.

41 TRUSS CONNECTION DETAIL
1 : 10

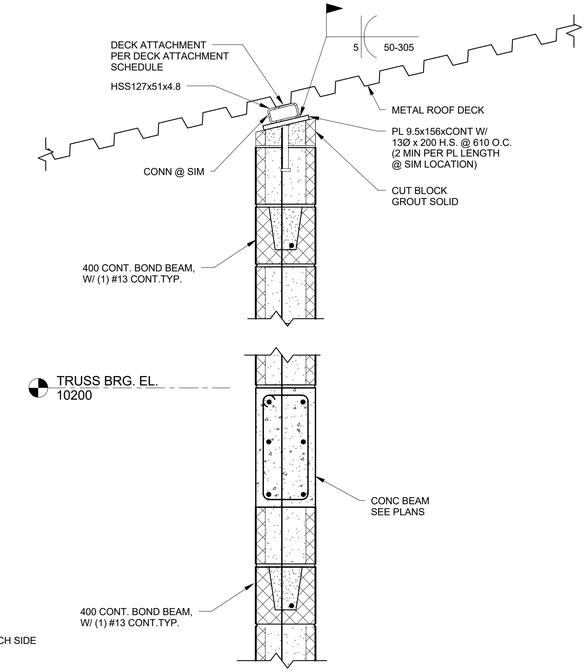

42 METAL DECK BRG DETAIL
1 : 10

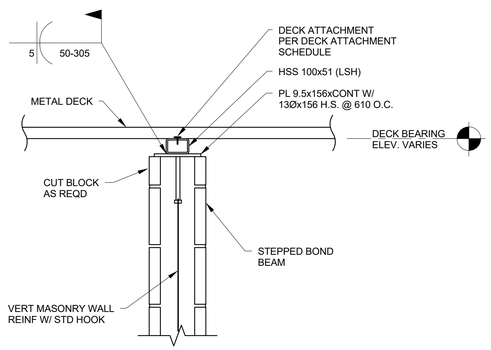

43 METAL DECK BRG DETAIL
1 : 10

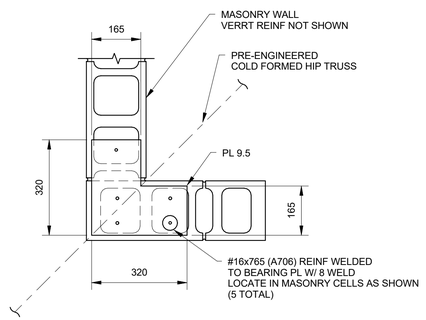

44 FRAMING DETAIL
1 : 10

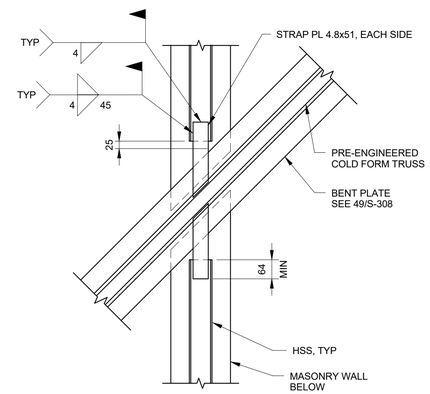

45 FRAMING DETAIL
1 : 10

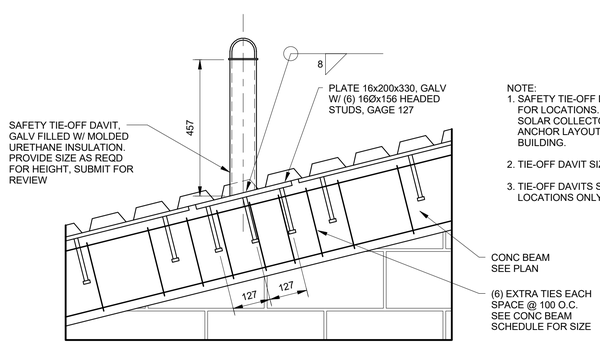

NOTE:
1. SAFETY TIE-OFF DAVIT - SEE ARCH ROOF PLANS FOR LOCATIONS. ACTUAL QUANTITIES VARY W/ SOLAR COLLECTOR LOCATIONS. SUBMIT TIEBACK ANCHOR LAYOUT PLAN FOR REVIEW FOR EACH BUILDING.

2. TIE-OFF DAVIT SIZED FOR 1 PERSON.

3. TIE-OFF DAVITS SHALL BE LOCATED @ CMU WALL LOCATIONS ONLY.

46 TIE-OFF DAVIT AT ROOF
1 : 10

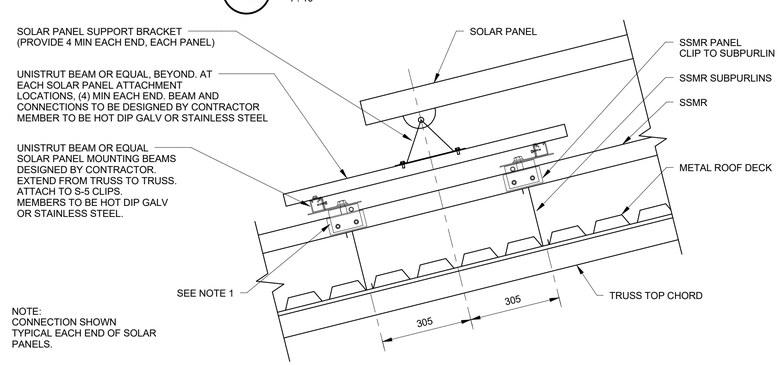

NOTE:
CONNECTION SHOWN
TYPICAL EACH END OF SOLAR
PANELS.

NOTES:
1. "S-5 CLIP" OR APPROVED EQUAL. THE SOLAR PANEL SUPPORT FRAMING SHALL EXTEND PAST THE SOLAR PANELS TO THE NEXT ADJACENT TRUSS, AND SHALL BE ATTACHED, AS A MINIMUM, TO EACH METAL ROOF PANEL VERTICAL RIB BETWEEN THE TRUSSES AND AT THE TRUSS IF A VERTICAL RIB IS LOCATED THERE. THE S-5 CLIP SHALL BE USED TO ATTACH THE SOLAR PANEL SUPPORT FRAMING SYSTEM TO THE VERTICAL RIBS. A SSMR PANEL CLIP SHALL BE LOCATED AT EACH S-5 CLIP.
2. CONTRACTOR SHALL DESIGN SOLAR PANEL SUPPORT FRAMING SYSTEM TO THE SSMR, THE SSMR CLIPS, SUBPURLINS AND ALL CONNECTIONS, INCLUDING CONNECTIONS TO TRUSSES. COORDINATE WITH SOLAR PANEL MANUFACTURER AND SSMR MANUFACTURER.
3. CONTRACTOR SHALL COORDINATE THE SOLARPANEL SUPPORT FRAMING SYSTEM WITH THE SSMR MANUFACTURER. UPLIFT CONNECTION LOADS TRANSFERRED FROM THE S-5 CLIP TO THE SSMR SHALL BE COORDINATED WITH THE SSMR MANUFACTURER TO VERIFY SSMR SYSTEM HAS BEEN TESTED WITH S-5 CLIP AND THE APPLIED LOAD TO THE S-5 CLIP DOES NOT EXCEED THE ALLOWED TESTED VALUE. ALL DESIGN CALCS AND CERTIFICATION LETTERS STATING THE APPLIED LOAD TO THE S-5 CLIP DOES NOT EXCEED THE ALLOWABLE TESTED LOAD SHALL BE SUBMITTED FOR REVIEW.
4. THE CONTRACTOR SHALL COORDINATE WITH THE TRUSS MANUFACTURER FOR ADDITIONAL SOLAR PANEL LOADS APPLIED TO THE TRUSSES, INCLUDING GRAVITY AND UPLIFT.

47 SOLAR PANELSUPPORT DETAIL
1 : 10

US Army Corps of Engineers ®

MARK	DESCRIPTION	DATE

DESIGNED BY: Designer	ISSUE DATE: FEBRUARY 2019
DRAWN BY: Author	SOLICITATION NO.: W912781R0028
CHECKED BY: Checker	CONTRACT NO.:
SUBMITTED BY:	PROJECT NUMBER: M07TE144
SIZE: ANSI D	FILE NAME: M07TE144

U.S. ARMY CORPS OF ENGINEERS
MOBILE DISTRICT
MOBILE, ALABAMA

SOTO CANO AIR BASE, HONDURAS
UNACCOMPANIED ENLISTED PERSONNEL HOUSING

ROOF FRAMING SECTIONS AND DETAILS

SHEET ID
S-307

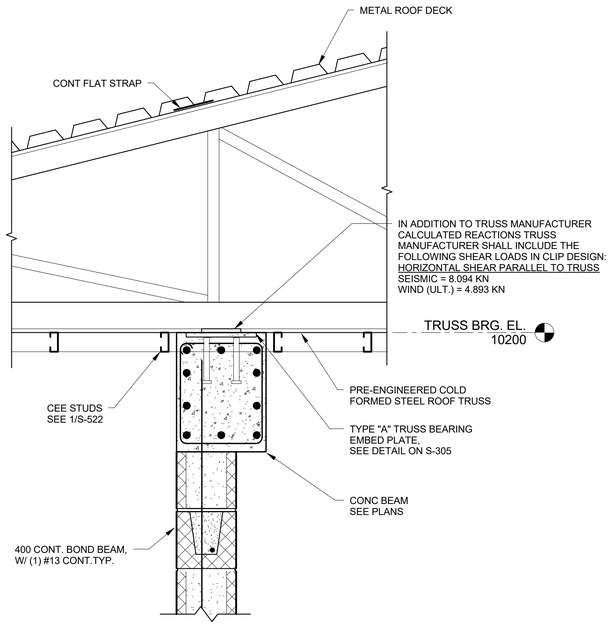

48 TRUSS BEARING DETAIL
1 : 10

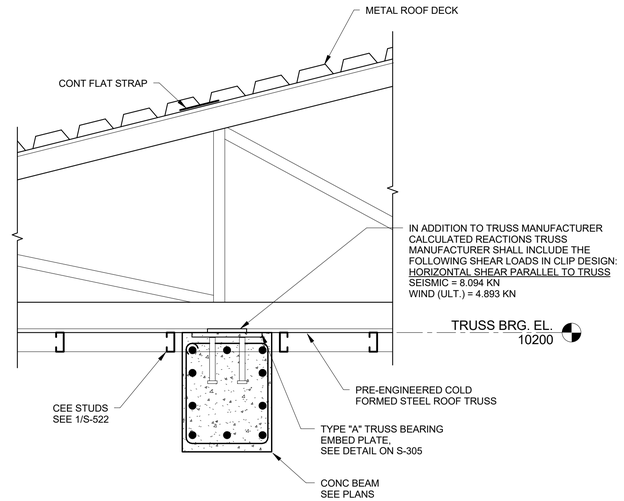

49 TRUSS BEARING DETAIL
1 : 10

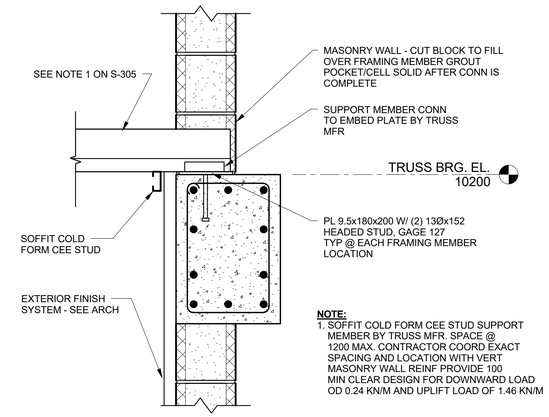

NOTE:
1. SOFFIT COLD FORM CEE STUD SUPPORT MEMBER BY TRUSS MFR. SPACE @ 1200 MAX. CONTRACTOR COORD EXACT SPACING AND LOCATION WITH VERT MASONRY WALL REINF PROVIDE 100 MIN CLEAR DESIGN FOR DOWNWARD LOAD OD 0.24 KN/M AND UPLIFT LOAD OF 1.46 KN/M

50 SOFFIT DETAIL
1 : 10

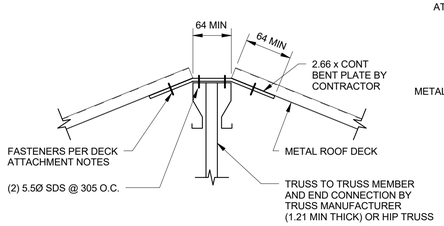

DETAIL A

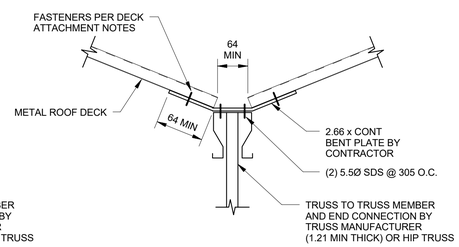

DETAIL B

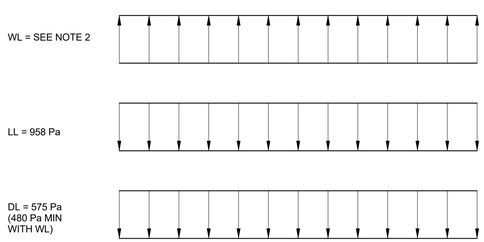

NOTES:
1. LOADS SHOWN ARE FOR TRUSS TO TRUSS MEMBERS. SEE PREMANUFACTURED COLD-FORMED TRUSS LOAD DIAGRAMS FOR HIP TRUSS LOADS.

2. SEE PRE-ENGINEERED COLD FORM TRUSS WIND UPLIFT DIAGRAM ON S-506 FOR TRUSS WIND UPLIFT PRESSURES.

51 ROOF TRUSS TO TRUSS DETAIL
1 : 10

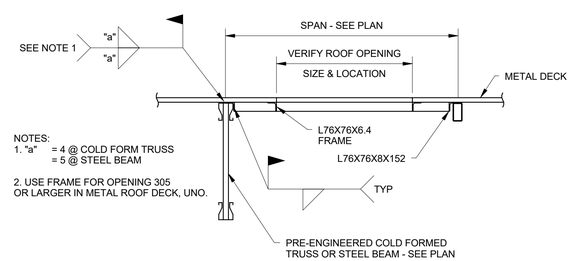

NOTES:
1. "a" = 4 @ COLD FORM TRUSS
= 5 @ STEEL BEAM

2. USE FRAME FOR OPENING 305 OR LARGER IN METAL ROOF DECK, UNO.

52 ROOF FRAMING DETAIL
1 : 10

US Army Corps of Engineers ®

MARK	DESCRIPTION	DATE

DESIGNED BY: Designer
DRAWN BY: Author
CHECKED BY: Checker
SUBMITTED BY:
SIZE: ANSI D
ISSUE DATE: FEBRUARY 2019
SOLICITATION NO.: W912T819R0028
CONTRACT NO.:
PROJECT NUMBER: M07TE144
FILE NAME: M07TE144

U.S. ARMY CORPS OF ENGINEERS
MOBILE DISTRICT
MOBILE, ALABAMA

SOTO CANO AIR BASE, HONDURAS
UNACCOMPANIED ENLISTED PERSONNEL HOUSING

ROOF FRAMING SECTIONS AND DETAILS

SHEET ID
S-308

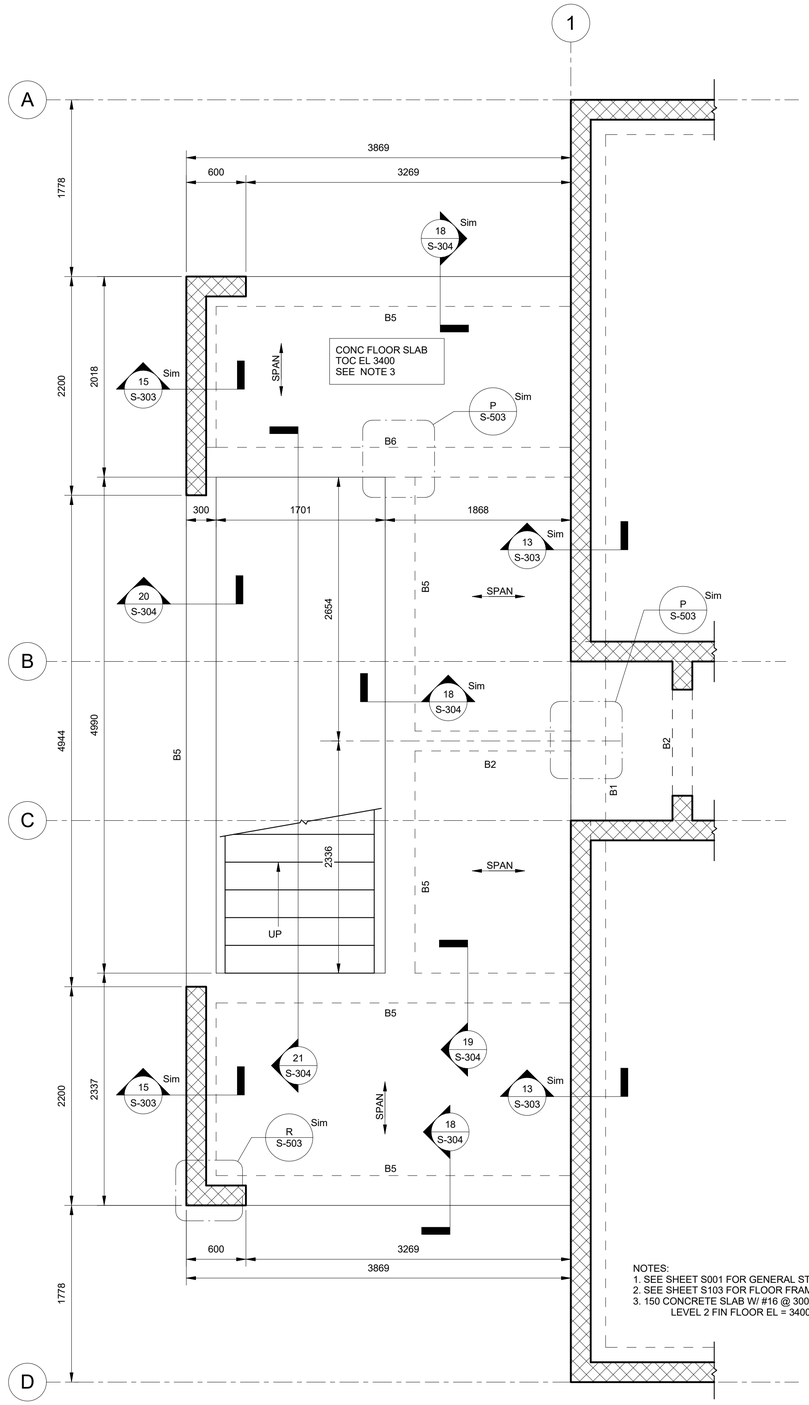

NOTES:
1. SEE SHEET S001 FOR GENERAL STRUCTURAL NOTES.
2. SEE SHEET S103 FOR FLOOR FRAMING NOTES.
3. 150 CONCRETE SLAB W/ #16 @ 300 O.C., EW, T&B.
LEVEL 2 FIN FLOOR EL = 3400

PLAN NORTH

0 1200 2400

SCALE: 1 : 30

1 ENLARGED LEVEL 2 FRAMING PLAN - STAIR TOWER

1 : 30

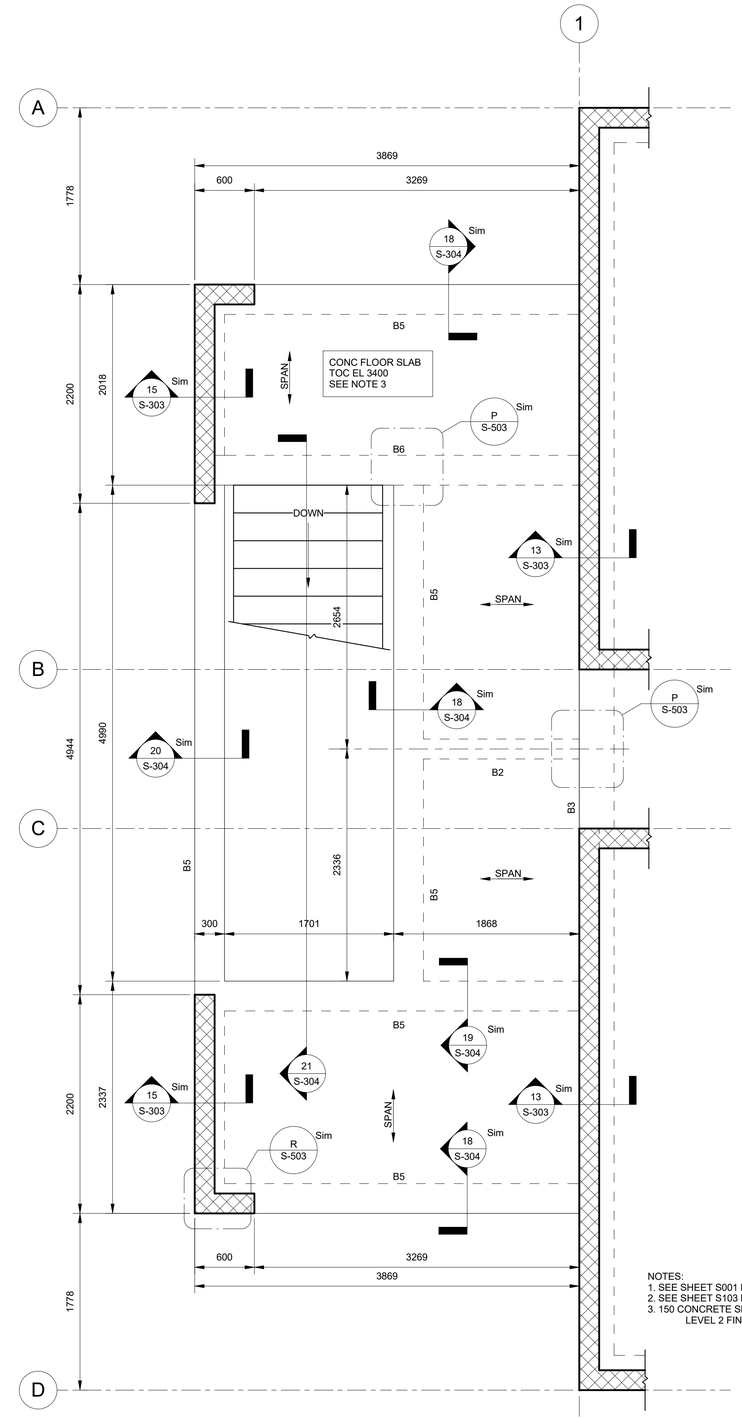

NOTES:
1. SEE SHEET S001 FOR GENERAL STRUCTURAL NOTES.
2. SEE SHEET S103 FOR FLOOR FRAMING NOTES.
3. 150 CONCRETE SLAB W/ #16 @ 254 O.C., EW, T&B.
LEVEL 2 FIN FLOOR EL =6800

PLAN NORTH

0 1200 2400

SCALE: 1 : 30

2 ENLARGED LEVEL 3 FRAMING PLAN - STAIR TOWER

1 : 30

US Army Corps of Engineers ®

MARK	DESCRIPTION	DATE

DESIGNED BY: JLL
DRAWN BY: JGB
CHECKED BY: JCO
SUBMITTED BY:
SIZE: ANSI D
ISSUE DATE: FEBRUARY 2019
SOLICITATION NO.: W912T819R0028
CONTRACT NO.:
PROJECT NUMBER: M07TE144
FILE NAME: M07TE144

U.S. ARMY CORPS OF ENGINEERS
MOBILE DISTRICT
MOBILE, ALABAMA

SOTO CANO AIR BASE, HONDURAS
UNACCOMPANIED ENLISTED PERSONNEL HOUSING

ENLARGED PLANS

SHEET ID
S-401

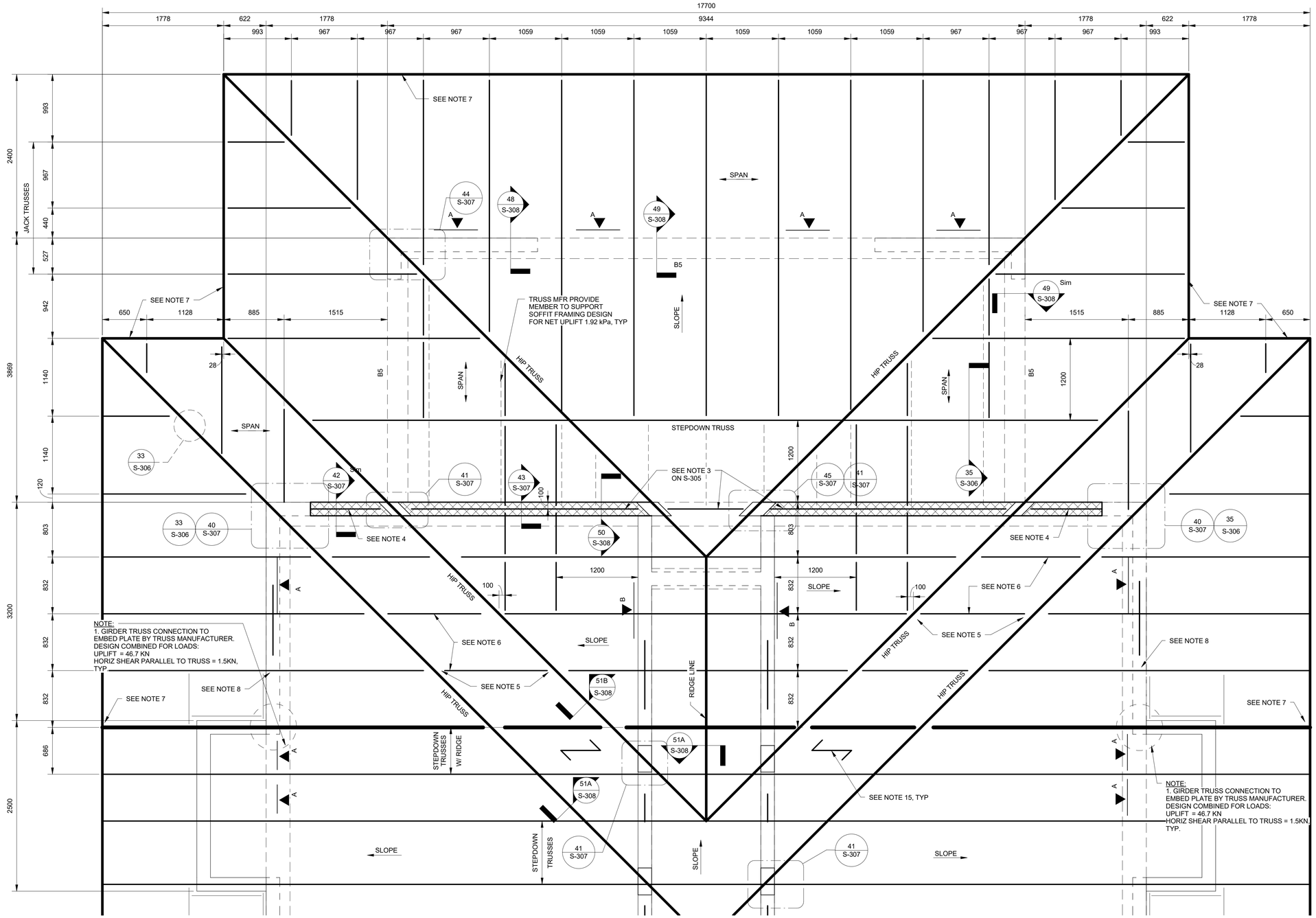

NOTES:
1. SEE SHEET S001 FOR GENERAL STRUCTURAL NOTES.
2. SEE SHEET S-305 FOR ROOF FRAMING NOTES.
3. "SEE NOTE X" INDICATES TO SEE ROOF FRAMING NOTE "X" ON SHEET S-305.

1 ENLARGED PARTIAL ROOF FRAMING PLAN

1 : 30

PLAN NORTH

0 1200 2400

SCALE: 1 : 30

US Army Corps of Engineers ®

MARK	DESCRIPTION	DATE

DESIGNED BY: JLL
DRAWN BY: JGB
CHECKED BY: JCO
SUBMITTED BY:
SIZE: ANSI D
FILE NAME: M07TEU44
ISSUE DATE: FEBRUARY 2019
SOLICITATION NO.: W912T819R0028
CONTRACT NO.:
PROJECT NUMBER: M07TEU44

U.S. ARMY CORPS OF ENGINEERS
MOBILE DISTRICT
MOBILE, ALABAMA

SOTO CANO AIR BASE, HONDURAS
UNACCOMPANIED ENLISTED PERSONNEL HOUSING

ENLARGED PLANS

SHEET ID
S-402

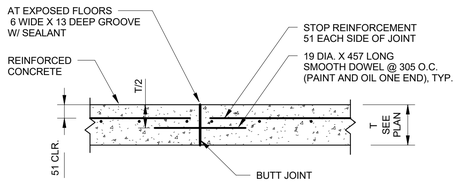

NOTES:
1. AT CONTRACTORS OPTION, CONSTRUCTION JOINTS MAY BE SUBSTITUTED FOR CONTRACTION JOINTS.
2. LOCATE DCJ IN SLAB ON GRADE WHERE SPECIFIED ON PLANS.

CONSTRUCTION JOINT (DCJ)

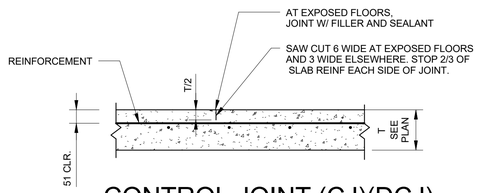

CONTROL JOINT (CJ)(DCJ)

A SLAB ON GRADE JOINT DETAILS (CJ)(DCJ)

NOT TO SCALE

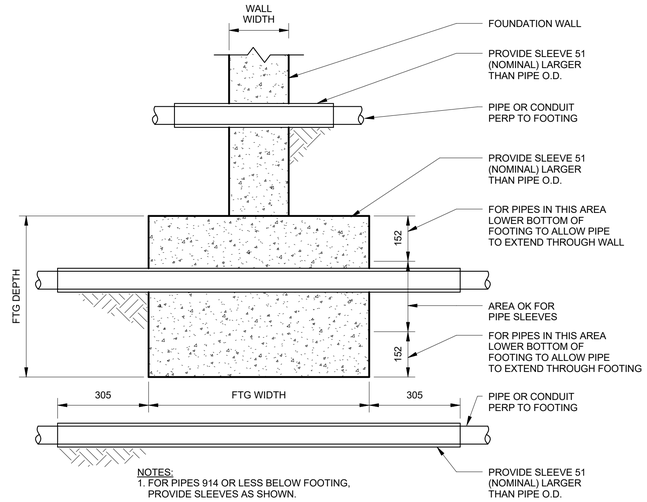

NOTES:
1. FOR PIPES 914 OR LESS BELOW FOOTING, PROVIDE SLEEVES AS SHOWN.
2. FOR PIPES OR CONDUITS MORE THAN 914 BELOW FOOTING, PIPE SLEEVE MAY BE ELIMINATED.
3. COORDINATE WITH MECHANICAL, ELECTRICAL, AND ALL OTHER AFFECTED TRADES.

B TYPICAL INSTALLATION OF PIPES

NOT TO SCALE

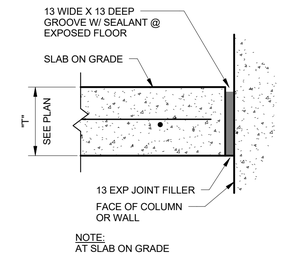

NOTE:
AT SLAB ON GRADE

C TYPICAL ISOLATION JOINT

NOT TO SCALE

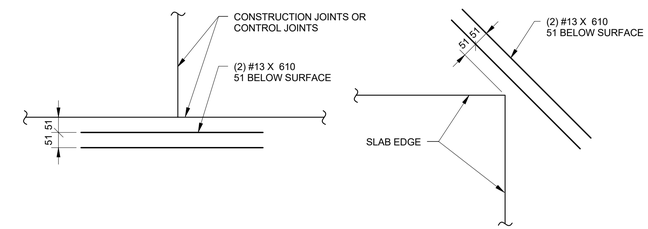

D TYPICAL SLAB-ON-GRADE RE-ENTRANT CORNER

NOT TO SCALE

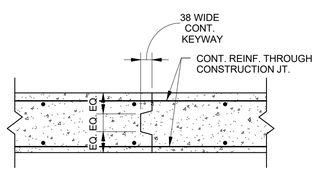

KEYED CONSTRUCTION JOINT

NOTES:
1. FURNISH ROUGHEN CONCRETE JOINT W/ SURFACE ROUGHEN TO 6 AMPLITUDE AT ALL WALL HORIZ AND WALL TO SLAB CONSTRUCTION JOINTS.

2. FURNISH KEYED CONSTRUCTION JOINT AT ALL WALL VERTICAL AND SLAB CONSTRUCTION JOINTS W/ DIMENSIONS SHOWN.

E CONSTRUCTION JOINT DETAIL (KCJ)

NOT TO SCALE

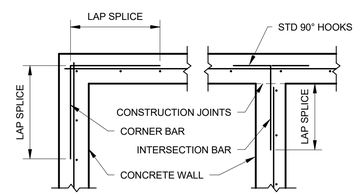

SINGLE LAYER

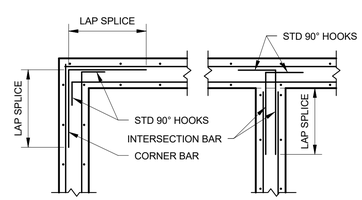

DOUBLE LAYER

NOTES:
CORNER AND INTERSECTION BARS TO BE THE SAME SIZE AND SPACING AS HORIZONTAL BARS.

F TYPICAL CONCRETE WALL CORNER REINFORCING

NOT TO SCALE

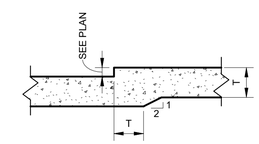

G TYPICAL FLOOR SLAB RECESS

NOT TO SCALE

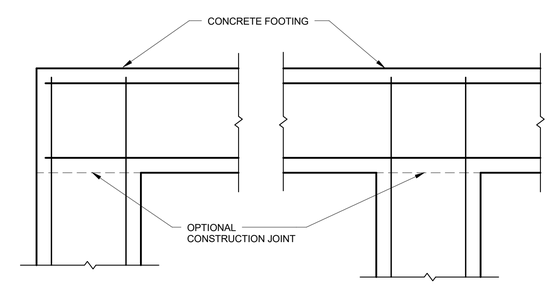

H TYPICAL CONCRETE FOOTING CORNER REINFORCING

NOT TO SCALE

US Army Corps of Engineers ®

MARK	DESCRIPTION	DATE

ISSUE DATE: FEBRUARY 2019
SOLICITATION NO.: W912T819R0028
CONTRACT NO.:
PROJECT NUMBER: MOTTEU44

DESIGNED BY: JLL
DRAWN BY: JGB
CHECKED BY: JCO
SUBMITTED BY:
SIZE: ANSI D
FILE NAME: MOTTEU44

U.S. ARMY CORPS OF ENGINEERS
MOBILE DISTRICT
MOBILE, ALABAMA

SOTO CANO AIR BASE, HONDURAS
UNACCOMPANIED ENLISTED PERSONNEL HOUSING

TYPICAL CONCRETE DETAILS

SHEET ID
S-501

STANDARD 90° HOOKS						STANDARD HOOK		
#10	#13	#16	#19	#22	#25	#29	#32	#36
152	203	254	305	356	406	483	559	610

NOTE:
ALL BARS INDICATED AS BEING HOOKED SHALL HAVE ACI STANDARD 90 DEGREE HOOKS, UNO.

I REINFORCING BAR HOOK SCHEDULE

NOT TO SCALE

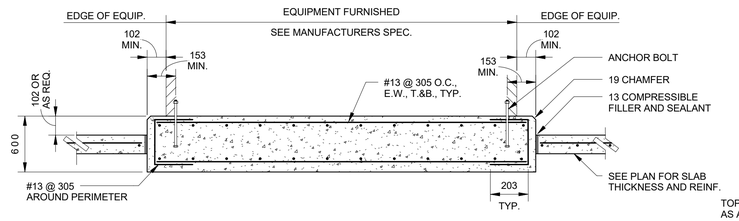

ISOLATED EQUIPMENT PAD DETAIL

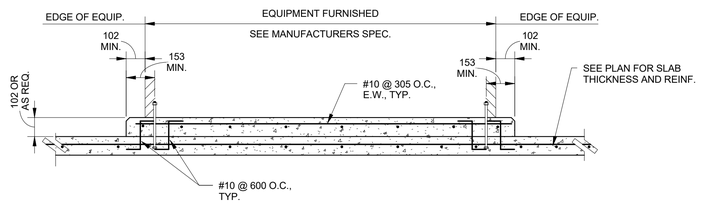

EQUIPMENT PAD DETAIL

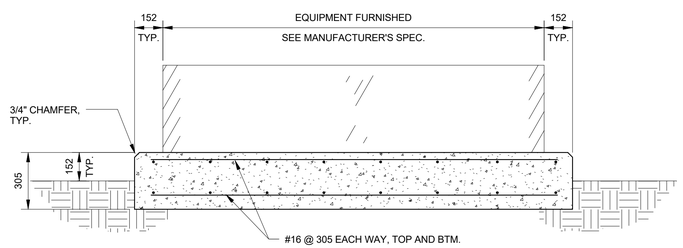

EXTERIOR EQUIPMENT PAD DETAIL

NOTES:
1. VERIFY SIZE AND LOCATION OF EQUIPMENT PAD WITH MECHANICAL OR ELECTRICAL CONCTRACTOR.

2. ANCHOR BOLT SIZE, ;LOCATION, AND EMBEDMENT AS RECOMENDED BY THE EQUIPMENT MANUFACTURER. ANCHOR BOLTS PROVIDED BY THE GENERAL CONTRACTOR. THICKEN SLAB-ON-GRADE WHERE REQ'D TO PROVIDE MIN. 76 CONC. COVER BELOW BOTTOM OF ANCHOR BOLT.

K TYPICAL EQUIPMENT PAD DETAILS

NOT TO SCALE

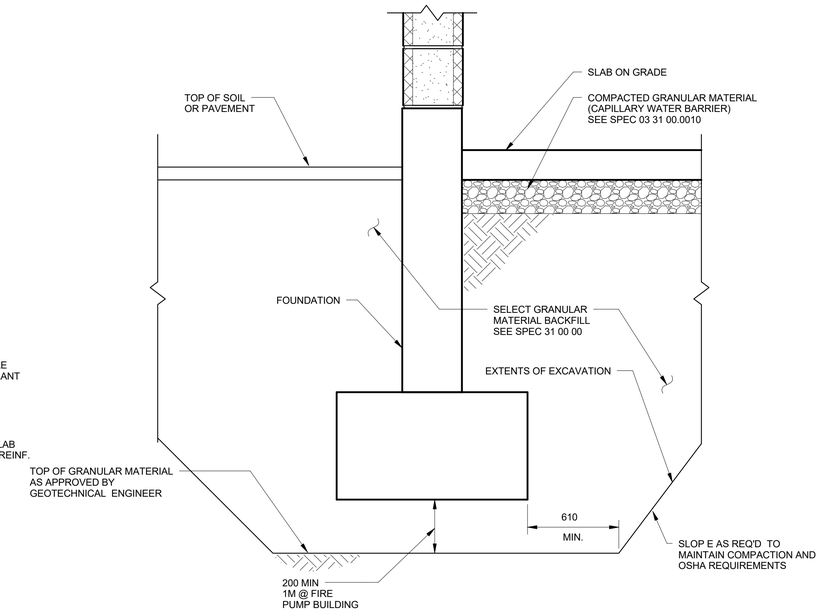

L TYPICAL FOUNDATION & SLAB-ON-GRADE OVEREXCAVATION AND BACKFILL DETAIL

NOT TO SCALE

NOTE:
SIZES NOTED ON DRAWINGS ARE GIVEN IN "METRIC" BAR SIZES. EQUIVALENT "INCH-POUND" BARS HAVING SAME PHYSICAL SIZES AND MINIMUM YIELD STRENGTH MAY BE SUBSTITUTED PER THE TABLE.

METRIC	INCH-POUND
#10	#3
#13	#4
#16	#5
#19	#6
#22	#7
#25	#8
#29	#9
#32	#10
#36	#11
#43	#14
#57	#18
GRADE 420	GRADE 60

J REINFORCING BAR SCHEDULE

NOT TO SCALE

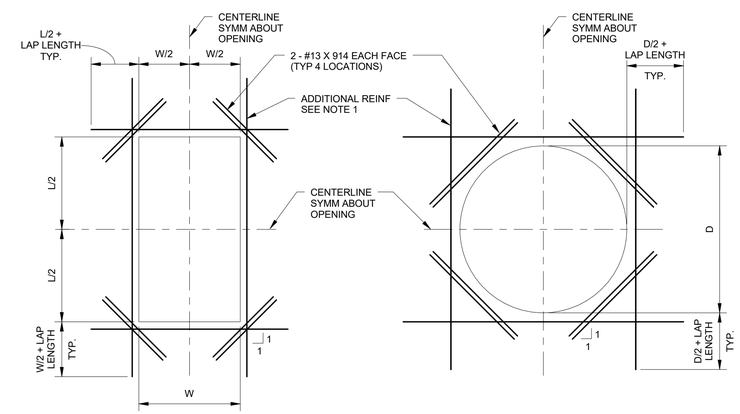

DETAIL SHOWING RECTANGULAR OPENING

DETAIL SHOWING CIRCULAR OPENING

NOTES:
1. ADDITIONAL REINFORCING SHALL BE THE SAME SIZE AS DISCONTINUOUS REINFORCEMENT AT OPENING. QUANTITY OF REINFORCING IN EACH DIRECTION SHALL BE EQUAL TO OR ONE GREATER THAN THE NUMBER OF DISCONTINUOUS BARS. PLACE HALF OF ADDITIONAL REINFORCING BARS EACH SIDE OF OPENING. PLACE ADDITIONAL REINFORCEMENT AT 76 OC (TYPICAL BOTH DIRECTIONS AND ALL LAYERS OF REINFORCEMENT).

2. ADDITIONAL REINFORCING SHALL EXTEND BEYOND EDGE OF OPENING AS SHOWN ABOVE. ADDITIONAL BARS MAY TERMINATE AT THE END OF THE WALL WITH A STANDARD HOOK WHERE THE LENGTH OF THE WALL WILL NOT PERMIT BARS TO EXTEND AS SHOWN ABOVE.

3. TYPICAL WALL OR BASE SLAB REINFORCING NOT SHOWN FOR CLARITY. TERMINATE TYPICAL REINFORCING 51 CLEAR TO OPENING.

4. OPENINGS 305 OR LESS IN BASE SLABS & OPENINGS 457 OR LESS IN WALLS, NO EXTRA REBAR IS REQUIRED UNLESS SHOWN OTHERWISE. TYPICAL REINFORCING SHALL BE SPREAD (NOT CUT) TO ALLOW FOR OPENINGS TO BE MADE.

5. UNLESS SHOWN OTHERWISE ON DRAWINGS, PROVIDE EXTRA REINFORCING AROUND OPENINGS AS SHOWN AND INDICATED ABOVE.

N EXTRA REBAR AROUND CONCRETE OPENINGS

NOT TO SCALE

MINIMUM LAP SPLICE LENGTHS				f'c = 27.53 MPa	
BAR	* MIN BAR SPACING	LAPS FOR BARS SPACED GREATER THAN MIN BAR SPACING		LAPS FOR BARS SPACED CLOSER THAN MIN BAR SPACING	
		VERTICAL	OTHER	VERTICAL	OTHER
#10	76	406	457	406	457
#13	76	483	610	508	660
#16	76	584	762	787	1016
#19	102	711	914	1118	1448
#22	102	1067	1372	1499	1956
#25	102	1397	1803	1981	2591
#29	114	1753	2286	2515	3277
#32	127	2235	2896	3200	4140
#36	143	2743	3556	3912	5080

NOTE:
1. ALL REBAR SPLICE LENGTHS SHALL BE AS SHOWN UNDER HEADING "VERTICAL" EXCEPT IF SPLICED BARS ARE HORIZONTAL BARS WITH 305 OR MORE CONCRETE BELOW. THEN SPLICE LENGTH SHALL BE AS SHOWN UNDER HEADING "OTHER".

2. * AT SPLICES THE BAR SPACING IS THE CENTER TO CENTER DISTANCE BETWEEN ADJACENT REBARS.

3. ALL SPLICES SHALL BE CONTACT SPLICES AND WIRED TOGETHER.

4. NO WELDED OR MECHANICAL SPLICES ARE PERMITTED UNLESS INDICATED OTHERWISE.

5. UNLESS OTHERWISE SHOWN, SPLICES FOR BOTTOM REINF BARS IN BEAMS AND SLABS SHALL BE CENTERED OVER THE SUPPORTS. SPLICES FOR TOP REINF BARS SHALL BE LOCATED ON CENTERLINE OF SPAN.

M CONCRETE REINFORCING LAP SPLICE SCHEDULE

NOT TO SCALE

US Army Corps of Engineers ®

MARK	DESCRIPTION	DATE

ISSUE DATE: FEBRUARY 2019
SOLICITATION NO.: W912T819R0028
CONTRACT NO.:
PROJECT NUMBER: M07TE144
FILE NAME: M07TE144
SIZE: ANSI D

DESIGNED BY: JLL
DRAWN BY: JGB
CHECKED BY: JCO
SUBMITTED BY:

U.S. ARMY CORPS OF ENGINEERS
MOBILE DISTRICT
MOBILE, ALABAMA

SOTO CANO AIR BASE, HONDURAS
UNACCOMPANIED ENLISTED PERSONNEL HOUSING

TYPICAL CONCRETE DETAILS

SHEET ID
S-502

CONCRETE BEAM SCHEDULE											
	SIZE (mm)		BOTTOM BARS		TOP BARS		STIRRUPS		SIDE BARS		REMARKS
MARK	W	D	NO.	SIZE	NO.	SIZE	SIZE	SPACING	NO.	SIZE	
B1	350	500	3	25	3	25	13	125	3	16	
B2	200	400	2	16	2	16	13	250	1	16	
B3	350	500	3	25	3	25	13	125	3	16	
B4	300	380	2	16	2	16	10	250	-	-	
B5	300	400	3	16	3	16	13	200	-	-	
B6	300	474	3	16	3	16	13	200	-	-	

NOTES:
1. TOP AND BOTTOM BARS ARE CONTINUOUS.
2. PROVIDE STANDARD HOOKS AT CORNERS.
3. SEE TYPICAL CONCRETE BEAM REINFORCING DETAIL FOR ADDITIONAL INFORMATION.
4. TOP & BOTTOM BAR CLEARANCE SHALL BE 76 OR AS REQUIRED TO CLEAR TOP & BOTTOM BARS AT INTERSECTING BEAMS.

O CONCRETE BEAM SCHEDULE
1 : 10

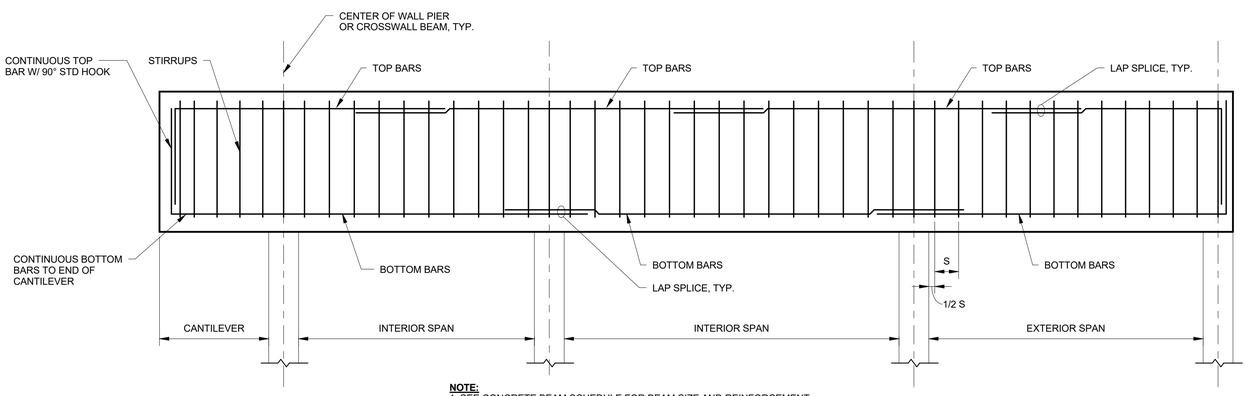

NOTE:
1. SEE CONCRETE BEAM SCHEDULE FOR BEAM SIZE AND REINFORCEMENT.
2. S = STIRRUP SPACING
3. AT INTERSECTING BEAMS, STIRRUPS SHALL START AT FACE OF BEAM.
4. ALL TOP AND BOTTOM BARS SHALL BE PLACED ON ONE LAYER.
5. SIDE BARS NOT SHOWN FOR CLARITY, SEE TYPICAL CONCRETE BEAM DETAIL

Q TYPICAL CONCRETE BEAM REINFORCING
1 : 20

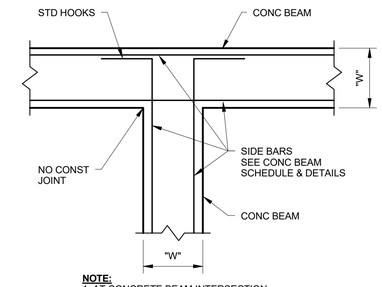

NOTE:
1. AT CONCRETE BEAM INTERSECTION.
2. CONCRETE BEAM TIES NOT SHOWN.

P TYPICAL CONC BEAM SIDE BAR REINF DETAIL
1 : 10

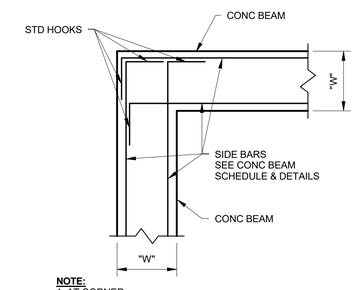

NOTE:
1. AT CORNER.
2. CONCRETE BEAM TIES NOT SHOWN.

R TYPICAL CONC BEAM SIDE BAR REINF DETAIL
1 : 10

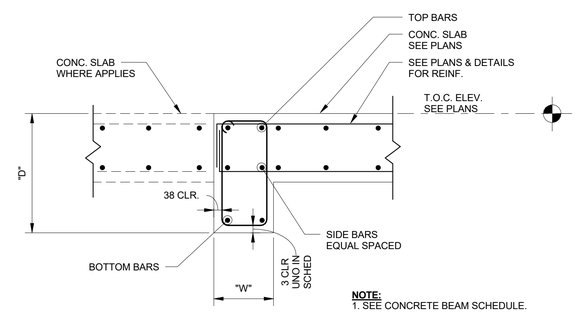

NOTE:
1. SEE CONCRETE BEAM SCHEDULE.

S TYPICAL CONCRETE BEAM DETAIL
1 : 10

US Army Corps of Engineers ®

MARK	DESCRIPTION	DATE

DESIGNED BY: Designer
DRAWN BY: Author
CHECKED BY: Checker
SUBMITTED BY:
SIZE: ANSI D
FILE NAME: M07TE144
ISSUE DATE: FEBRUARY 2019
SOLICITATION NO.: W912781R0028
CONTRACT NO.:
PROJECT NUMBER: M07TE144

U.S. ARMY CORPS OF ENGINEERS
MOBILE DISTRICT
MOBILE, ALABAMA

SOTO CANO AIR BASE, HONDURAS
UNACCOMPANIED ENLISTED PERSONNEL HOUSING

FLOOR FRAMING DETAILS

SHEET ID
S-503

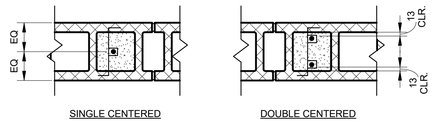

NOTES:
1. MAINTAIN MINIMUM 76 X 76 CONTINUOUS VERTICAL CELL AT EACH REBAR. WALLS AND CROSS-WEBS OF THESE CELLS SHALL BE MORTARED.

2. POUR GROUT TO 13 BELOW TOP OF WALL AND VIBRATE,

3. PROVIDE VERTICAL AND HORIZONTAL REINFORCEMENT PER MASONRY WALL REINF SCHEDULE.

4. NOT USED.

5. SPLICE LENGTHS FOR MASONRY REINFORCEMENT SHALL BE 48 BAR DIAMETERS.

6. PROVIDE VERTICAL REINFORCEMENT SAME SIZE AS TYPICAL WALL REINFORCEMENT CONTINUOUS FROM SUPPORT TO SUPPORT AT ALL CORNERS, AT ALL ENDS OF WALLS, EACH SIDE OF OPENINGS AND CONTROL JOINTS AS INDICATED PER THE MASONRY WALL REINF SCHEDULE.

7. PROVIDE DOWELS INTO THE CONCRETE FOUNDATION FOR EACH VERTICAL MASONRY REINFORCING BAR. DOWEL BAR SIZE SHALL MATCH VERTICAL WALL REINFORCEMENT. EMBED DOWEL ONE CONCRETE LAP LENGTH INTO FOUNDATION CONCRETE UNLESS NOTED OTHERWISE. LAP EACH DOWEL INTO MASONRY AS NOTED ABOVE.

8. PROVIDE WIRE REBAR POSITIONERS TO HOLD BARS IN PLACE.

T REINF MASONRY DETAIL
NOT TO SCALE

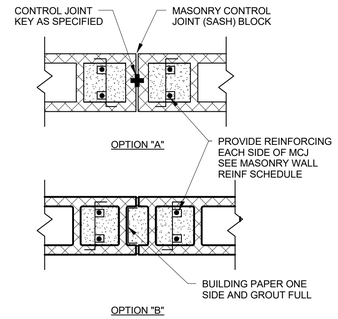

U TYPICAL MASONRY CONTROL JOINT (MCJ)
NOT TO SCALE

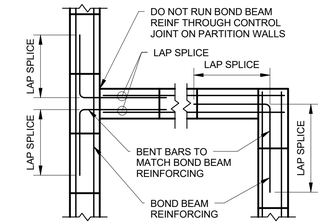

BOND BEAM NOTES:
1. BOND BEAM ELEVATIONS EQUAL BOTTOM OF BOND BEAM.

2. BOND BEAM AT FLOOR, ROOF, AND TOP OF WALL SHALL BE CONTINUOUS THROUGH MASONRY CONTROL JOINTS. INTERMEDIATE BOND BEAMS SHALL BE DISCONTINUOUS AT MASONRY CONTROL JOINTS WHERE BOND BEAMS AT INTERSECTING WALLS MEET AT DIFERENT ELEVATION, EXTEND BOTH BOND BEAMS AROUND INTERSECTING CORNERS TO FIRST REINFORCED CELL BUT NOT LESS THAN 1220 MIN.

V TYP BOND BEAM INTERSECTION
NOT TO SCALE

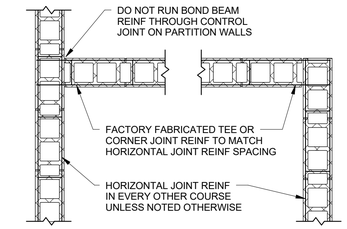

NOTE:
1. VERT WALL REINF NOT SHOWN FOR CLARITY.

W TYP JOINT REINF INTERSECTION
NOT TO SCALE

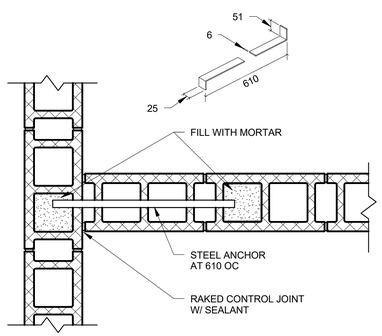

NOTES:
1. USE AT LOAD BEARING WALLS TO LOAD BEARING WALLS.

2. VERT WALL REINF NOT SHOWN FOR CLARITY.

X TYP MASONRY INTERSECTION
NOT TO SCALE

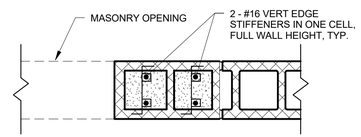

NOTES:
1. SEE TYPICAL MASONRY PIER REINF DETAIL FOR ADDITIONAL WALL REINF, WHERE APPLIES.

Z TYP EDGE STIFFENERS AT MASONRY OPENING
NOT TO SCALE

MASONRY LINTEL SCHEDULE			
MARK	WIDTH (W)	HEIGHT (H)	REINFORCING
ML-1	200	200	2 - #16
ML-2	200	406	2 - #16
ML-3	200	610	2 - #16

AA TYPICAL MASONRY LINTEL SCHEDULE
NOT TO SCALE

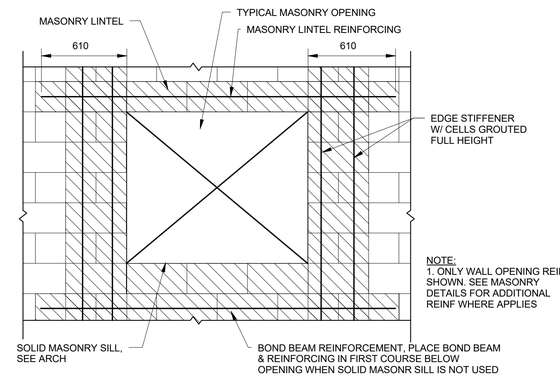

NOTE:
1. ONLY WALL OPENING REINF SHOWN. SEE MASONRY DETAILS FOR ADDITIONAL REINF WHERE APPLIES

7 TYP MASONRY WALL OPENING
NOT TO SCALE

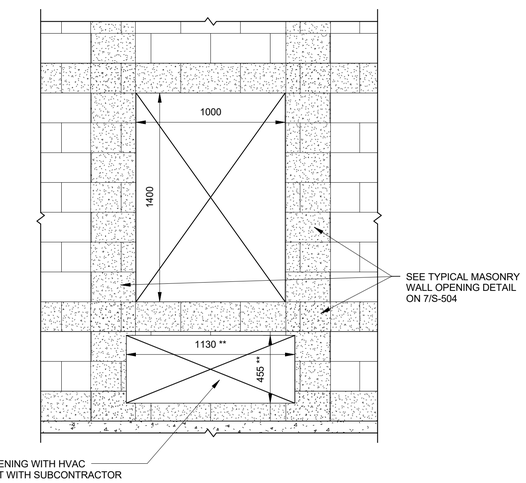

1 TYP WINDOW/PTAC LAYOUT
1 : 20

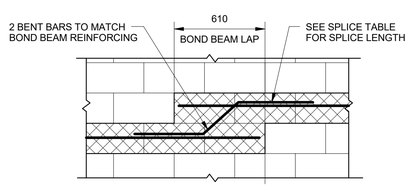

BB TYPICAL STEPPED BOND BEAM
NOT TO SCALE

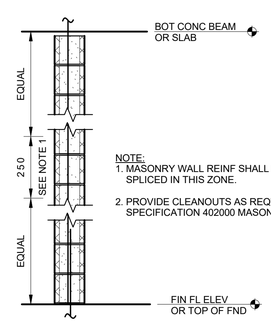

NOTE:
1. MASONRY WALL REINF SHALL NOT BE LAPPED/ SPLICED IN THIS ZONE.

2. PROVIDE CLEANOUTS AS REQ'D PER SPECIFICATION 402000 MASONRY.

CC MASONRY VERT WALL SPLICE ZONES
NOT TO SCALE

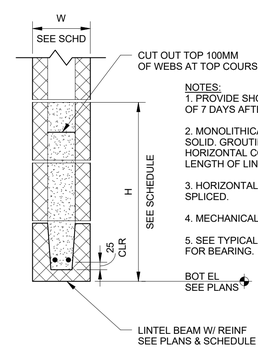

NOTES:
1. PROVIDE SHORING UNDER LINTEL FOR MINIMUM OF 7 DAYS AFTER GROUTING.

2. MONOLITHICALLY GROUT LINTEL AND ALL CELLS SOLID. GROUTING SHALL HAVE NO VERTICAL OR HORIZONTAL COLD JOINTS, FULL HEIGHT AND LENGTH OF LINTEL.

3. HORIZONTAL REINFORCMENT SHALL NOT BE SPLICED.

4. MECHANICALLY VIBRATE GROUT.

5. SEE TYPICAL MASONRY LINTEL BEARING DETAIL FOR BEARING.

DD TYPICAL MASONRY LINTEL DETAIL (ML-X)
NOT TO SCALE

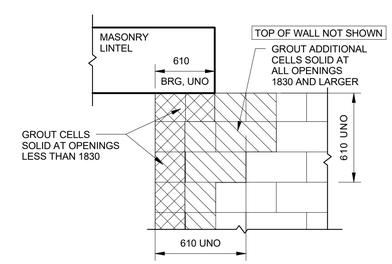

EE TYPICAL MASONRY LINTEL BRG DETAIL
NOT TO SCALE

US Army Corps of Engineers ®

MARK	DESCRIPTION	DATE

ISSUE DATE: FEBRUARY 2019
SOLICITATION NO.: W912T819R0028
CONTRACT NO.:
PROJECT NUMBER: M07TEU44
DESIGNED BY: JLL
DRAWN BY: JGB
CHECKED BY: JCO
SUBMITTED BY:
FILE NAME: M07TEU44
SIZE: ANSI D

U.S. ARMY CORPS OF ENGINEERS
MOBILE DISTRICT
MOBILE, ALABAMA

SOTO CANO AIR BASE, HONDURAS
UNACCOMPANIED ENLISTED PERSONNEL HOUSING

TYPICAL MASONRY DETAILS

SHEET ID
S-504

MASONRY WALL REINFORCING SCHEDULE			
MARK	REINFORCING LOCATION	200 mm CMU	
VERTICAL	WALLS	A, E	GROUT SOLID TO 3RD LEVEL #16 @ 406
		B	#16 @ 200
		C	GROUT SOLID TO 3RD LEVEL #16 @ 610
		D	GROUT SOLID UP TO 2ND LEVEL #16 @ 610
		F	#16 @ 406
		G	GROUT SOLID FULL HEIGHT
			SEE DETAIL LL / S505
		FIRE PUMP BUILDING	GROUT SOLID UP TO 2ND LEVEL #16 @ 406
	WALL OPENINGS AND JAMBS	SEE TYPICAL MASONRY OPENING DETAIL AND PIER DETAIL 2 / S503	
	WALL CORNERS AND INTERSECTIONS	1 - #16 SINGLE CENTERED MIN, UNO PER MASONRY DETAILS	
	WALL ENDS @ MCJ	2 - #16 DOUBLED CENTERED MIN, UNO PER MASONRY DETAILS	
	PIERS	SEE TYPICAL MASONRY PIER REINF DETAIL	
HORIZONTAL	WALL	ALL WALLS	BOND BEAMS W/ 2- #13 BARS @ 1200 OC VERTICALLY. EXTEND FROM WALL BASE TO ROOF LEVEL. SEE MASONRY DETAILS
	BOND BEAM AT TOP OF WALL AND FLOOR LEVELS	SEE TYP BOND BEAM INTERSECTION DETAIL	
	BOND BEAMS BELOW OPENINGS	SEE TYP MASONRY WALL OPENING DETAIL	
	INTERMEDIATE BOND BEAMS	2200mm ABOVE FIN FL ELEV AT 1ST, 2ND, AND 3RD LEVELS. TYP ALL BUILDINGS	
	AT 410 VERTICAL SPACING	9 GAGE WIRE JOINT REINFORCING	
	PIERS	SEE TYPICAL MASONRY PIER REINF DETAIL	
	LINTELS	SEE MASONRY LINTEL SCHEDULE	

FF MASONRY WALL REINFORCING SCHEDULE
NOT TO SCALE

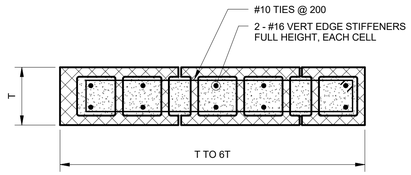

NOTE:
1. GROUT ALL CELLS SOLID.

GG TYPICAL MASONRY PIER REINF DETAIL
1 : 10

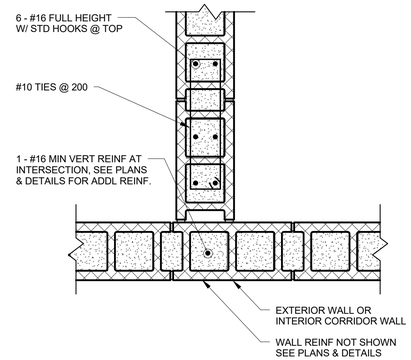

HH MASONRY DETAIL
1 : 10

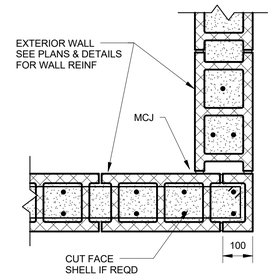

II MASONRY DETAIL
1 : 10

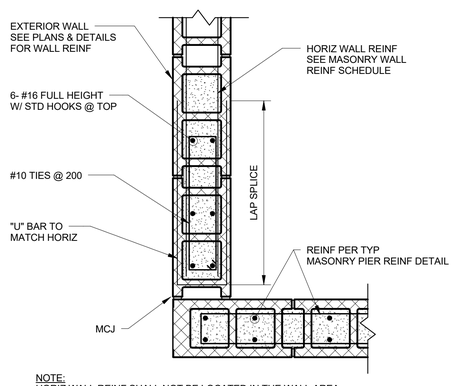

NOTE:
HORIZ WALL REINF SHALL NOT BE LOCATED IN THE WALL AREA WHERE LAPS OR SPLICES ARE NOT PERMITED PER THR MASONRY VERT WALL SPLICE ZONES DETAIL. COORDINATE LOCATION OF HORIZONTAL REINF TO AVOID THIS AREA AND MAINTAIN SPACING FOR MASONRY WALL REINF SCHEDULE.

JJ MASONRY DETAIL
1 : 10

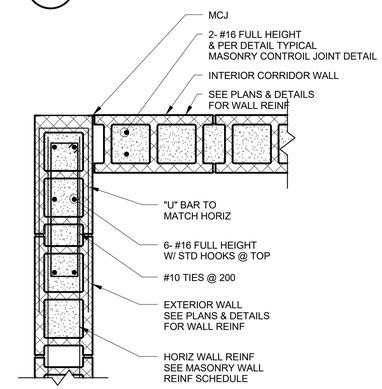

NOTE:
HORIZ WALL REINF SHALL NOT BE LOCATED IN THE WALL AREA WHERE LAPS OR SPLICES ARE NOT PERMITED PER THR MASONRY VERT WALL SPLICE ZONES DETAIL. COORDINATE LOCATION OF HORIZONTAL REINF TO AVOID THIS AREA AND MAINTAIN SPACING FOR MASONRY WALL REINF SCHEDULE.

KK MASONRY DETAIL
1 : 10

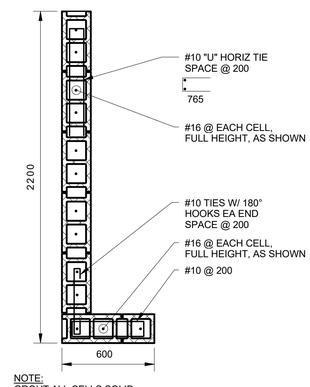

NOTE:
GROUT ALL CELLS SOLID
(GROUT NOT SHOWN FOR CLARITY)

LL MASONRY DETAIL
1 : 20

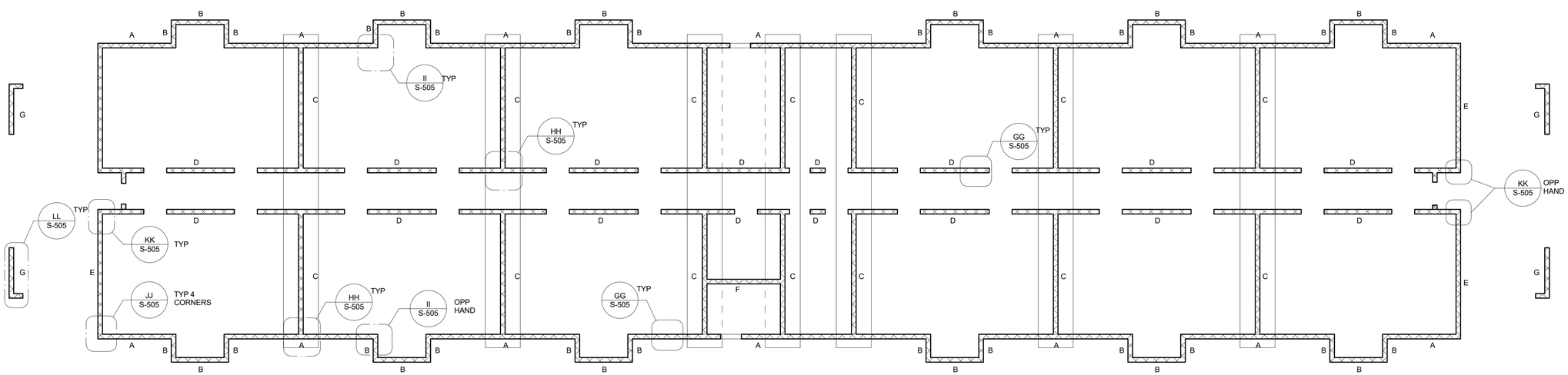

MM MASONRY WALL REINF PLAN
NOT TO SCALE

US Army Corps of Engineers ®

MARK	DESCRIPTION	DATE

DESIGNED BY: JLL
DRAWN BY: JGB
CHECKED BY: JCO
SUBMITTED BY:
SIZE: ANSI D
ISSUE DATE: FEBRUARY 2019
SOLICITATION NO.: W912781R0028
CONTRACT NO.:
PROJECT NUMBER: M07TEU44
FILE NAME: M07TEU44

U.S. ARMY CORPS OF ENGINEERS
MOBILE DISTRICT
MOBILE, ALABAMA

SOTO CANO AIR BASE, HONDURAS
UNACCOMPANIED ENLISTED PERSONNEL HOUSING

TYPICAL MASONRY DETAILS

SHEET ID
S-505

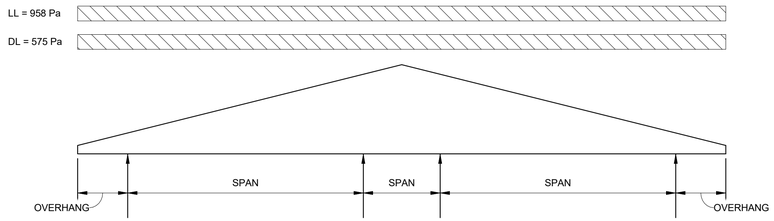

NOTES:
1. DESIGN BOTTOM CHORD:
   DL = 622 Pa
   DL (SOFFIT) = 479 Pa
   LL = 958 Pa
2. MINIMUM LIVE LOAD DEFLECTION = L/360, TOTAL DEFLECTION = L/240.
3. AT JACK & HIP TRUSSES, USE LOADS SHOWN.
4. JACK GIRDER OR JACK TRUSS POINT LOADS NOT SHOWN.
5. IN ADDITION TO THE DEAD AND LIVE LOADS SHOWN, THE BOTTOM CHORD SHALL BE DESIGNED FOR AN ADDITIONAL SINGLE CONCENTRATED LOAD OF 1.33 KN AT EACH PANEL POINT (APPLY ONE CONCENTRATED LOAD AT A TIME)
6. TOP CHORD SHALL BE DESIGNED FOR ADDITIONAL 3.78 KN AXIAL LOAD, (TENSION & COMPRESSION).

TRUSS PROFILE #1

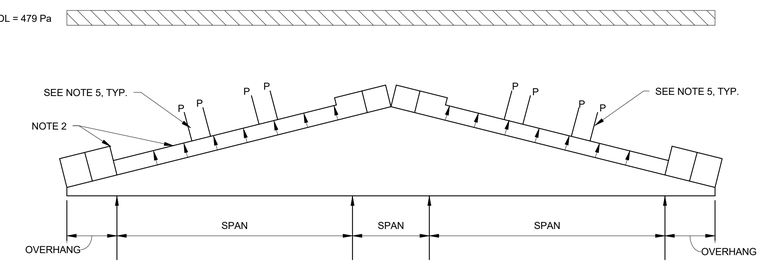

NOTES:
1. MINIMUM LIVE LOAD DEFLECTION = L/360, TOTAL DEFLECTION = L/240.
2. SEE PRE-ENGINEERED COLD FORM TRUSS WIND UPLIFT DIAGRAM FOR TRUSS WIND UPLIFT PRESSURES.
3. AT JACK & HIP TRUSSES, USE LOADS SHOWN.
4. JACK GIRDER OR JACK TRUSS POINT LOADS NOT SHOWN.
5. WIND UPLIFT LOADS AND GRAVITY, DEAD LOADS FROM SOLAR PANEL ATTACHMENT SEE DETAIL 47/S-307. COORDINATE EXACT SOLAR PANEL LOCATIONS AND LOAD SPACINGS WITH CONTRACTOR. DESIGN FOR MINIMUM LOADS AS FOLLOWS:
   Pmin UPLIFT = 3.15 KN/M
   Pmin GRAVITY (DL) = 0.70 KN/M
   479 Pa DOES NOT INCLUDE PANEL WEIGHTS.

TRUSS PROFILE #2

GENERAL NOTES:
1. TRUSS LOADING DIAGRAM TYPICAL EXCEPT AT DETAIL 2/S-523.

1 PREMANUFACTURED COLD-FORM TRUSS LOAD DIAGRAMS

NOT TO SCALE

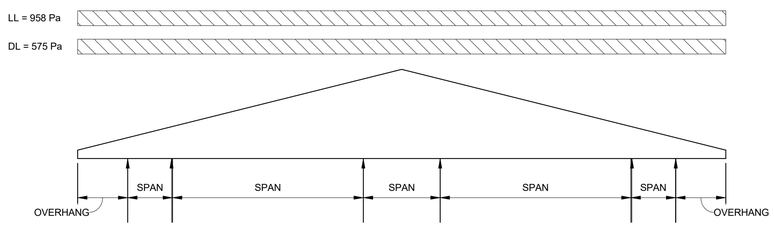

NOTES:
1. DESIGN BOTTOM CHORD:
   DL = 622 Pa
   DL (SOFFIT) = 479 Pa
   LL = 958 Pa
2. MINIMUM LIVE LOAD DEFLECTION = L/360, TOTAL DEFLECTION = L/240.
3. AT JACK & HIP TRUSSES, USE LOADS SHOWN.
4. JACK GIRDER OR JACK TRUSS POINT LOADS NOT SHOWN.
5. IN ADDITION TO THE DEAD AND LIVE LOADS SHOWN, THE BOTTOM CHORD SHALL BE DESIGNED FOR AN ADDITIONAL SINGLE CONCENTRATED LOAD OF 1.33 KN AT EACH PANEL POINT (APPLY ONE CONCENTRATED LOAD AT A TIME)
6. TOP CHORD SHALL BE DESIGNED FOR ADDITIONAL 3.78 KN AXIAL LOAD, (TENSION & COMPRESSION).

TRUSS PROFILE #3

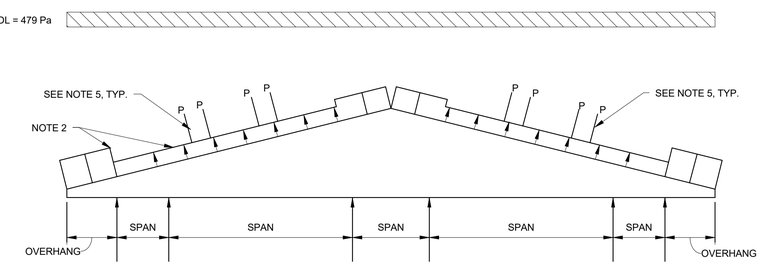

NOTES:
1. MINIMUM LIVE LOAD DEFLECTION = L/360, TOTAL DEFLECTION = L/240.
2. SEE PRE-ENGINEERED COLD FORM TRUSS WIND UPLIFT DIAGRAM FOR TRUSS WIND UPLIFT PRESSURES.
3. AT JACK & HIP TRUSSES, USE LOADS SHOWN.
4. JACK GIRDER OR JACK TRUSS POINT LOADS NOT SHOWN.
5. SOLAR PANEL LOADS NOT SHOWN. SEE DETAIL 1/S-506.

TRUSS PROFILE #4

2 PREMANUFACTURED COLD-FORM TRUSS LOAD DIAGRAMS

NOT TO SCALE

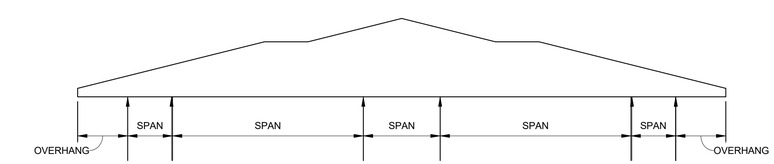

NOTES:
1. STEP-DOWN TRUSS W/ RIDGE.
2. SEE TRUSS LOAD DIAGRAM 1/S-506 FOR LOADS AND ADDITIONAL INFORMATION.

TRUSS PROFILE #5

4 PREMANUFACTURED COLD-FORM TRUSS LOAD DIAGRAMS

NOT TO SCALE

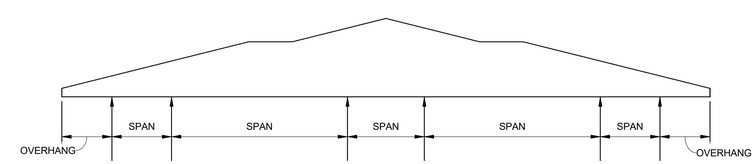

NOTES:
1. STEP-DOWN TRUSS W/ RIDGE.
2. SEE TRUSS LOAD DIAGRAM 1/S-506 FOR LOADS AND ADDITIONAL INFORMATION.

TRUSS PROFILE #6

5 PREMANUFACTURED COLD-FORM TRUSS LOAD DIAGRAMS

NOT TO SCALE

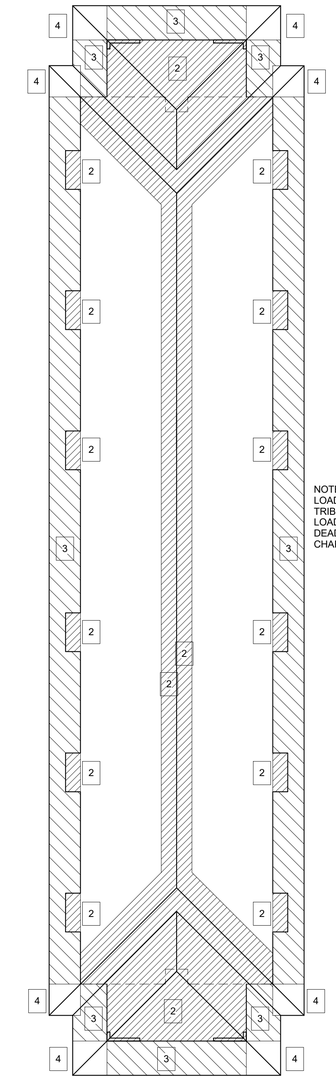

NET UPLIFT

1	-1.9 kPa
2	-2.75 kPa
3	-3.31 kPa
4	-4.40 kPa

NOTE:
LOADS ARE PROVIDED USING A TRIBUTARY AREA OF 4.65 m^2 FOR LOADS USING DIFFERENT m^2 ADD .24 kPa DEAD LOAD TO THE NUMBER FROM THE CHART TO OBTAIN THE NET UPLIFT.

1	2.1 KPa
2	2.92 KPa
3	5.21 KPa
4	6.03 KPa

NOTES:
1. LOADS SHOWN ARE NORMAL TO ROOF.
2. SOLAR PANELS NOT SHOWN, SEE ARCHITECTURAL DRAWINGS FOR LOCATIONS.
3. THIS DIAGRAM IS ONLY TO BE USED FOR TRUSS DESIGN.

PP PRE-ENGINEERED COLD FORM TRUSS WIND UPLIFT DIAGRAM

1 : 1

US Army Corps of Engineers ®

MARK	DESCRIPTION	DATE

DESIGNED BY: Designer	ISSUE DATE: FEBRUARY 2019
DRAWN BY: Author	SOLICITATION NO.: W912T819R0028
CHECKED BY: Checker	CONTRACT NO.:
SUBMITTED BY:	PROJECT NUMBER: M07TE144
SIZE: ANSI D	FILE NAME: M07TE144

U.S. ARMY CORPS OF ENGINEERS
MOBILE DISTRICT
MOBILE, ALABAMA

SOTO CANO AIR BASE, HONDURAS
UNACCOMPANIED ENLISTED PERSONNEL HOUSING

ROOF FRAMING DETAILS

SHEET ID

S-506

DRAWING ABBREVIATIONS

A ----------
A LABEL CLASS A DOOR
A/C AIR CONDITION
A/C UNIT AIR CONDITIONING UNIT
A/E ARCHITECT/ENGINEER
AB ANCHOR BOLT
ACC ACCESSIBLE
ACS AUTOMATIC CONTROL SYSTEM
ACS DR ACCESS DOOR
ACS PNL ACCESS PANEL
ACT ACOUSTICAL CEILING TILE
ADA AMERICANS WITH DISABILITIES ACT
ADMIN ADMINISTRATION
AFC ABOVE FINISHED COUNTER
AFF ABOVE FINISHED FLOOR
AFG ABOVE FINISHED GRADE
AFS ABOVE FINISHED SLAB
AGGR AGGREGATE
AHU AIR HANDLING UNIT
AIB AIR INFILTRATION BARRIER
ALT ALTERNATE
ALUM ALUMINUM
ANOD ANODIZE
APC ACOUSTICAL PANEL CEILING
APPROX APPROXIMATE
AR AS REQUIRED
ARCH ARCHITECT
ASC ABOVE SUSPENDED CEILING
ASSY ASSEMBLY
ATC ACOUSTICAL TILE CEILING
AVG AVERAGE
AW ARCHITECTURAL WOODWORK
AWT ACOUSTICAL WALL TREATMENT

B ----------
B LABEL CLASS B DOOR
BALC BALCONY
BB BASEBOARD
BC BOOKCASE
BD BOARD
BDRY BOUNDARY
BFF BELOW FINISH FLOOR
BHMA BUILDER'S HARDWARE MANUFACTURER'S ASSOCIATION
BLDG BUILDING
BLKG BLOCKING
BLT IN BUILT-IN
BN BULLNOSE
BOS BOTTOM OF STEEL
BOT BOTTOM
BP BUILDING PAPER
BRKT BRACKET
BSMT BASEMENT
BTWN BETWEEN
BUR BUILT-UP ROOFING

C ----------
C CONC CAST CONCRETE
C LABEL CLASS C DOOR
CAB CABINET
CATW CATWALK
CAV CAVITY
CBB CEMENTITIOUS (BACKER) BOARD
CD CONSTRUCTION DOCUMENTS
CDW CHILLED DRINKING WATER
CEM PLAS CEMENT PLASTER
CER CERAMIC
CF CONTRACTOR FURNISHED
CF/CI CONTRACTOR FURNISHED/CONTRACTOR INSTALLED
CFE CONTRACTOR FURNISHED EQUIPMENT
CFLG COUNTERFLASHING
CFM CUBIC FEET PER MINUTE
CFMF COLD-FORMED METAL FRAMING
CFS CUBIC FEET PER SECOND
CG CORNER GUARD
CI CAST IRON
CIP CAST-IN-PLACE
CJ CONTROL JOINT
CL CENTER LINE
CLG CEILING
CLG DIFF CEILING DIFFUSER
CLG HT CEILING HEIGHT
CLL COLUMN LINE
CLO CLOSET
CLR COLOR
CLRM CLASSROOM
CMU CONCRETE MASONRY UNIT
CNDS CONDENSATE
CDR CARD READER
CO CLEANOUT
COL COLUMN
COM COMMUNICATION
CONC CONCRETE
CONC FLR CONCRETE FLOOR
CONF CONFERENCE
CONT CONTINUE
COORD COORDINATE
CORR CORRIDOR
CP CONCRETE PIPE
CPT CARPET
CR CONTROL ROOM
CS CAST STONE
CSWK CASEWORK
CT CERAMIC TILE
CTB CERAMIC TILE BASE
CTF CERAMIC TILE FLOOR
CTR CENTER
CU FT CUBIC FEET
CW CASEMENT WINDOW

D ----------
D DEPTH
D LABEL CLASS D DOOR
DBL DOUBLE
DEMO DEMOLITION
DEPT DEPARTMENT
DET DETAIL
DIA DIAMETER
DIR DIRECTION
DIST DISTANCE
DOC DOCUMENT
DR DOOR
DS DOWNSPOUT

E ----------
E LABEL CLASS E DOOR
EA EACH
EF EACH FACE
EIFS EXTERIOR INSULATION AND FINISH SYSTEM
EJ EXPANSION JOINT
ES EACH SIDE
EL ELEVATION
ELEV ELEVATOR
ENTR ENTRANCE
EPS EXPANDED POLYSTYRENE BOARD (INSULATION)
ETS EXPOSED TO STRUCTURE
EQ EQUAL
EWC ELECTRIC WATER COOLER
EXP EXPOSED
EXT EXTERIOR
EXT EXTINGUISHER
EXT GR EXTERIOR GRADE

F ----------
FA FIRE ALARM
FAAP FIRE ALARM ANNUNCIATOR PANEL
FAS BD FASCIA BOARD
FC BRK FACE BRICK
FCO FLOOR CLEANOUT
FD FLOOR DRAIN
FDTN FOUNDATION
FE FIRE EXTINGUISHER
FEC FIRE EXTINGUISHER CABINET
FED FEDERAL
FF FINISH FACE
FF EL FINISH FLOOR ELEVATION
FF INSUL FOIL BACKED INSULATION
FGL FIBERGLASS
FH FIRE HOSE
FHP FULL HEIGHT PARTITION
FIN FINISH
FIN BS FINISH BOTH SIDES
FIN FLR FINISH FLOOR
FIN GR FINISH GRADE
FIXT FIXTURE
FLDG FOLDING
FLEX FLEXIBLE
FLG FLOORING
FLMT FLUSH MOUNT
FLR FLOOR
FM FACTORY MUTUAL
FOC FACE OF CONCRETE
FOM FACE OF MASONRY
FR FIRE RESISTANT
FRG FIBER REINFORCED GYPSUM
FRMG FRAMING
FRP FIBERGLASS REINFORCED PLASTIC
FRTW FIRE RETARDANT TREATED WOOD
FS FEDERAL SPECIFICATION
FSTNR FASTENER
FT FEET
FTG FOOTING
FWC FABRIC WALLCOVERING

G ----------
GALV GALVANIZED
GB GRAB BAR
GFCI GOVERNMENT FURNISHED CONTRACTOR INSTALLED
GFGI GOVERNMENT INSTALLED FURNISHED INSTALLED BY GOVERNMENT
GFRG GLASS-FIBER-REINFORCED GYPSUM
GPC GROUND AND POLISHED CONCRETE FINISH
GLZ GLAZING
GSF GROSS SQUARE FEET
GSM GROSS SQUARE METERS
GYP BD GYPSUM BOARD
GYP PLAS GYPSUM PLASTER

H ----------
HB HOSE BIBB
HDPE HIGH DENSITY POLYETHYLENE
HDW HARDWARE
HDWD HARDWOOD
HEPA HIGH EFFICIENCY PARTICULATE AIR (FILTER)
HM HOLLOW METAL
HMD HOLLOW METAL DOOR
HORIZ HORIZONTAL
HT HEIGHT
HYDR HYDRAULIC

I ----------
IBC INTERNATIONAL BUILDING CODE
INSUL INSULATION
INT INTERIOR
ILO IN LIEU OF

J ----------
JAN JANITOR

K ----------
KPD KEYPAD
KIT KITCHEN
KPL KICKPLATE

L ----------
LAM LAMINATE
LAV LAVATORY
LBR LUMBER
LBS POUND
LDG LANDING
LF LINEAR FEET (FOOT)
LIB LIBRARY
LIN LINEAR
LKR LOCKER
LOC LOCATION
LT LIGHT
LVDR LOUVER DOOR
LVR LOUVER

M ----------
MM MILIMETERS
MATL MATERIAL
MAX MAXIMUM
MC MOISTURE CONTENT
MD METAL DECK
MECH MECHANICAL
MECH RM MECHANICAL ROOM
MEMB MEMBRANE
MF MILL FINISH
MFR MANUFACTURER
MID MIDDLE
MIL STD MILITARY STANDARD
MIN MINIMUM, MINUTE
MIRR MIRROR
MISC MISCELLANEOUS
MLDG MOLDING (MOULDING)
MO MASONRY OPENING
MOD MODIFY
MB MOISTURE BARRIER
MTG MOUNTING
MTL METAL
MVBL MOVABLE
MWP MEMBRANE WATERPROOFING

N ----------
N NORTH
NA NOT APPLICABLE
NFPA NATIONAL FIRE PROTECTION ASSOCIATION
NIC NOT IN CONTRACT
NO NUMBER
NOM NOMINAL
NP NO PAINT
NRC NOISE REDUCTION COEFFICIENT
NTS NOT TO SCALE

O ----------
OA OVERALL
OC ON CENTER
OD OUTSIDE DIAMETER
OFD OVERFLOW DRAIN
OFF OFFICE
OGL OBSCURE GLASS
OPH OPPOSITE HAND
OPNG OPENING
OPP OPPOSITE
OPQ OPAQUE
OWSJ OPEN WEB STEEL JOIST
OPR OPERABLE
ORD OVERFLOW ROOF DRAIN
ORIG ORIGINAL

P ----------
PA PUBLIC ADDRESS
PAR PARAPET
PAT PATTERN
PB PULL BOX
PBD PARTICLEBOARD
PCC PRECAST CONCRETE
PCF POUNDS PER CUBIC FOOT
PCT PERCENT
PERF PERFORATED
PERIM PERIMETER
PH PHASE
PIL PILASTER
PL PROPERTY LINE
PL GL PLATE GLASS
PLAM PLASTIC LAMINATE
PLAS PLASTER
PLBG PLUMBING
PLG PILING
PLYWD PLYWOOD
PNL PANEL
PP PL PUSH/PULL PLATE
PR PAIR
PRCST PRECAST
PRKG PARKING
PS CONC PRESTRESSED CONCRETE

PSF POUNDS PER SQUARE FOOT
PSI POUNDS PER SQUARE INCH
PT PRESSURE TREATED
PTD PAPER TOWEL DISPENSER
PTDR PAPER TOWEL DISPENSER AND RECEPTACLE
PTN PARTITION
PWR POWER

Q ----------
QT QUARRY TILE
QTY QUANTITY

R ----------
RB RESILIENT BASE
RBM REINFORCED BRICK MASONRY

RBR RUBBER
RC REINFORCED CONCRETE
RCP REFLECTED CEILING PLAN
RD ROOF DRAIN
RDG INS RIGID INSULATION, SOLID

REC RECESSED
REC ROOM RECREATION ROOM
REF REFERENCE
REM REMOVABLE
REP REPAIR
REPL REPLACE
REQ REQUIRE
REQD REQUIRED
RESIL RESILIENT
REST RESTROOM
RF RESILIENT FLOORING
RFG ROOFING
RH ROOF HATCH
RHR RIGHT HAND REVERSE
RL ROOF LEADER
RLG RAILING
RM ROOM
RO ROUGH OPENING
RSD ROLLING STEEL DOOR
RV ROOF VENT
RVL REVEAL

S ----------
SB SPLASH BLOCK
SCHED SCHEDULE
SD SMOKE DETECTOR
SF SQUARE FOOT (FEET)
SFTWD SOFTWOOD
SGL SINGLE
SHT MTL FLASH (FLASHING) SHEET METAL
SHTHG SHEATHING
SHV SHELVING
SIM SIMILAR
SJ SCORED JOINT
SKLT SKYLIGHT
SLNT SEALANT
SMK SMOKE
SMLS SEAMLESS
SP EL SPOT ELEVATION
SPEC SPECIFICATION
SQ SQUARE
SQ IN SQUARE INCH
SQ YD SQUARE YARD
SST STAINLESS STEEL
ST STAIRS
STD STANDARD
STL JST STEEL JOIST
STL RF DK STEEL ROOF DECK
STOR STORAGE
STR STRINGERS
STRB/HRN STROBE/HORN
SUB FL SUBFLOOR
SV SHEET VINYL
SW SIDEWALK

T ----------
T TREAD
T/S TUB/SHOWER
TC TERRA COTTA
TD TRENCH DRAIN
TEL TELEPHONE
TEMP TEMPORARY
TER TERRAZZO
TFF TOP OF FINISH FLOOR
THK THICKNESS
TK BD TACKBOARD
TMPD GL TEMPERED GLASS
TN TRUE NORTH
TOF TOP OF FOOTING
TOM TOP OF MASONRY
TOP TOP OF PARAPET
TOPO TOPOGRAPHY
TOS TOP OF SLAB
TRANS TRANSOM
TRTD TREATED
TV TELEVISION

NUMBERING SYSTEM:

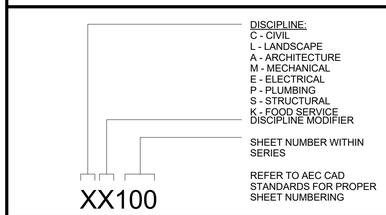

ANNOTATION CALLOUTS/DRAWING SYMBOLS

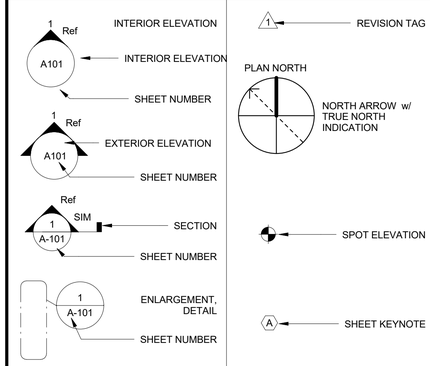

MATERIALS

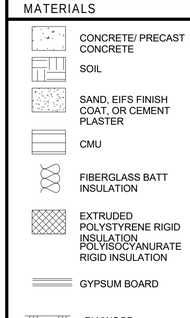

SYMBOLS

SYMBOLS LEGEND

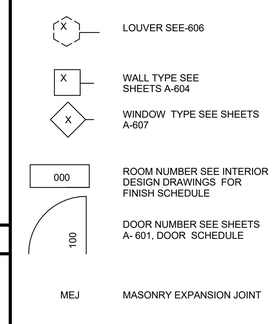

REFLECTED CEILING SYMBOLS LEGEND

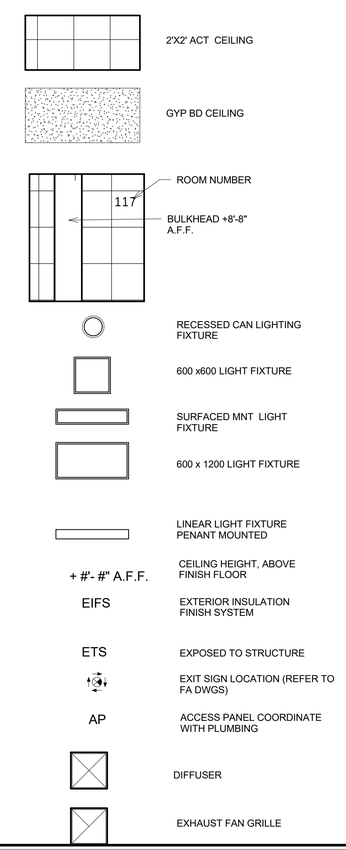

GENERAL NOTES

1. PLAN DRAWINGS ARE APPLICABLE TO BUILDING D, E, & F.
2. ALL FLOOR PLANS SHOWN ARE BASED ON BUILDING D ORIENTATION.

US Army Corps of Engineers®

MARK	DESCRIPTION	DATE

ISSUE DATE: FEBRUARY 2019
SOLICITATION NO.: W912781R0028
CONTRACT NO.:
PROJECT NUMBER: M017ECA4
FILE NAME: M017EU44

DESIGNED BY: T.D.W.
DRAWN BY: T.D.W.
CHECKED BY: J.M.C.
SUBMITTED BY: C.A.
SIZE: ANSI D

U.S. ARMY CORPS OF ENGINEERS
MOBILE DISTRICT
MOBILE, ALABAMA

SOTO CANO AIR BASE, HONDURAS
UNACCOMPANIED ENLISTED PERSONNEL HOUSING

GENERAL NOTES, ABBREVIATIONS

SHEET ID
A-001

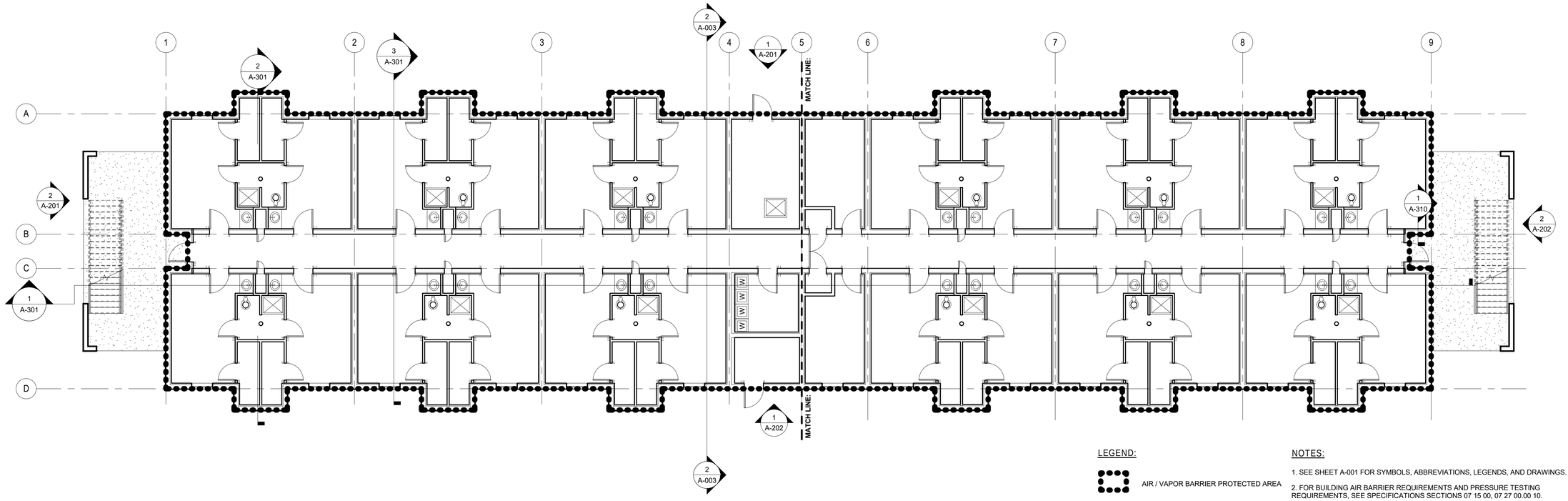

1 FIRST FLOOR PLAN - AIR BARRIER
1 : 100

LEGEND:

AIR / VAPOR BARRIER PROTECTED AREA

AIR / VAPOR BARRIER LOCATION

NOTES:

1. SEE SHEET A-001 FOR SYMBOLS, ABBREVIATIONS, LEGENDS, AND DRAWINGS.

2. FOR BUILDING AIR BARRIER REQUIREMENTS AND PRESSURE TESTING REQUIREMENTS, SEE SPECIFICATIONS SECTIONS 07 15 00, 07 27 00.00 10.

3. SEAL ALL PENETRATIONS OF THE AIR BARRIER AND VERIFY INTEGRITY PRIOR TO COVERING WITH OTHER MATERIALS.

4. SECTIONS ON SHEET A003 ARE SCHEMATIC. SEE DETAILED BUILDING SECTIONS AND SPECIFICATIONS FOR SPECIFIC'S ON AIR BARRIER LOCATION AND INSTALLATION.

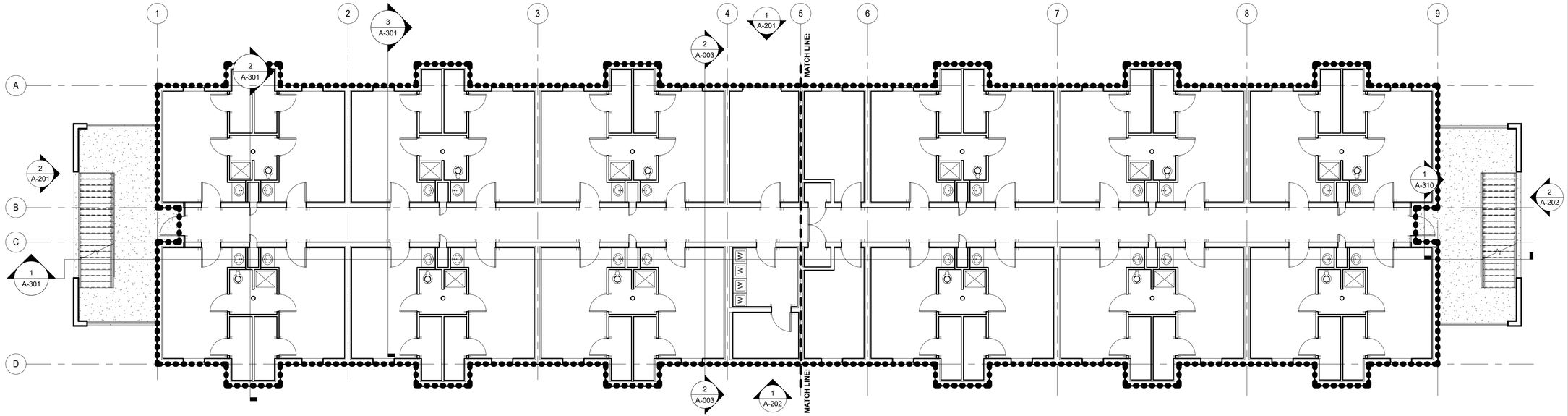

2 SECOND FLOOR PLAN - AIR BARRIER
1 : 100

US Army Corps of Engineers®

MARK	DESCRIPTION	DATE

DESIGNED BY: Designer
DRAWN BY: Author
CHECKED BY: Checker
SUBMITTED BY:
SIZE: ANSI D
ISSUE DATE: FEBRUARY 2019
SOLICITATION NO.: W912781R0028
CONTRACT NO.:
PROJECT NUMBER: M077EC44
FILE NAME: M077EC144

U.S. ARMY CORPS OF ENGINEERS
MOBILE DISTRICT
MOBILE, ALABAMA

SOTO CANO AIR BASE, HONDURAS
UNACCOMPANIED ENLISTED PERSONNEL HOUSING

FIRST AND SECOND AIR BARRIER PLAN

SHEET ID
A-002

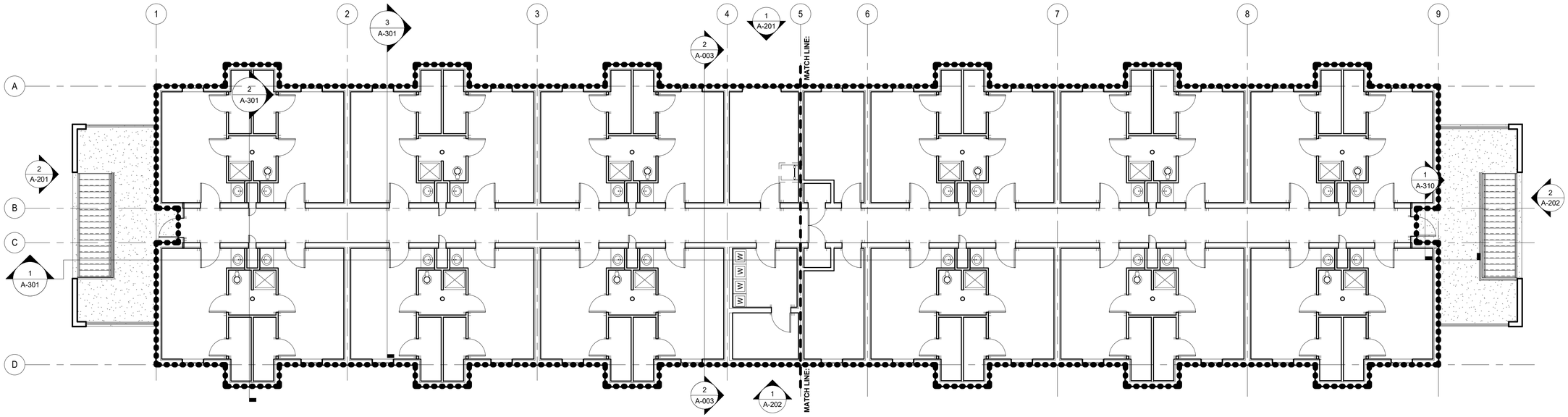

1 THIRD FLOOR PLAN - AIR BARRIER

1 : 100

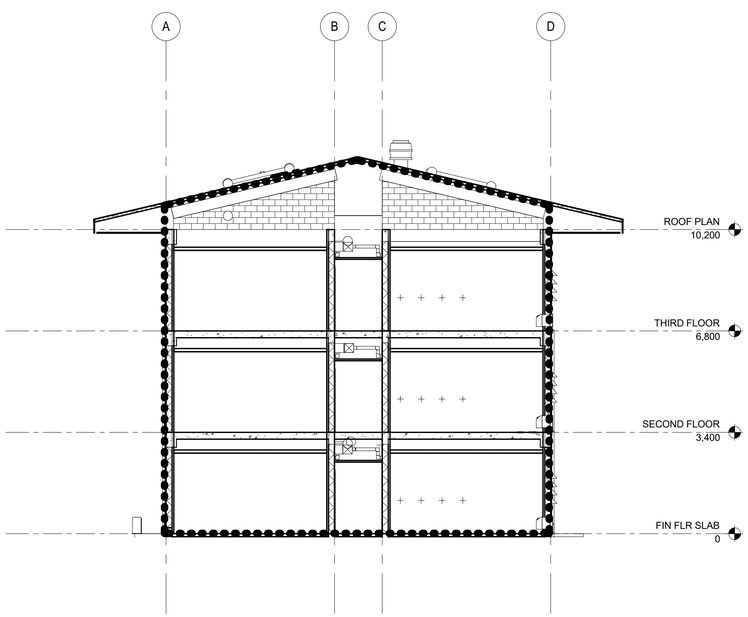

2 AIR BARRIER SECTION

1 : 100

LEGEND:

AIR / VAPOR BARRIER PROTECTED AREA

AIR / VAPOR BARRIER LOCATION

NOTES:

1. SEE SHEET A-001 FOR SYMBOLS, ABBREVIATIONS, LEGENDS, AND DRAWINGS.

2. FOR BUILDING AIR BARRIER REQUIREMENTS AND PRESSURE TESTING REQUIREMENTS, SEE SPECIFICATIONS SECTIONS 07 15 00, 07 27 00.00 10.

3. SEAL ALL PENETRATIONS OF THE AIR BARRIER AND VERIFY INTEGRITY PRIOR TO COVERING WITH OTHER MATERIALS.

4. SECTIONS ON SHEET A003 ARE SCHEMATIC, SEE DETAILED BUILDING SECTIONS AND SPECIFICATIONS FOR SPECIFIC'S ON AIR BARRIER LOCATION AND INSTALLATION.

US Army Corps of Engineers®

MARK	DESCRIPTION	DATE

DESIGNED BY: Designer
DRAWN BY: Author
CHECKED BY: Checker
SUBMITTED BY:
SIZE: ANSI D
ISSUE DATE: FEBRUARY 2019
SOLICITATION NO.: W912781R0028
CONTRACT NO.:
PROJECT NUMBER: M077EC44
FILE NAME: M077E144

U.S. ARMY CORPS OF ENGINEERS
MOBILE DISTRICT
MOBILE, ALABAMA

SOTO CANO AIR BASE, HONDURAS
UNACCOMPANIED ENLISTED PERSONNEL HOUSING

THIRD FLOOR AIR BARRIER PLAN AND BUILDING SECTION

SHEET ID

A-003

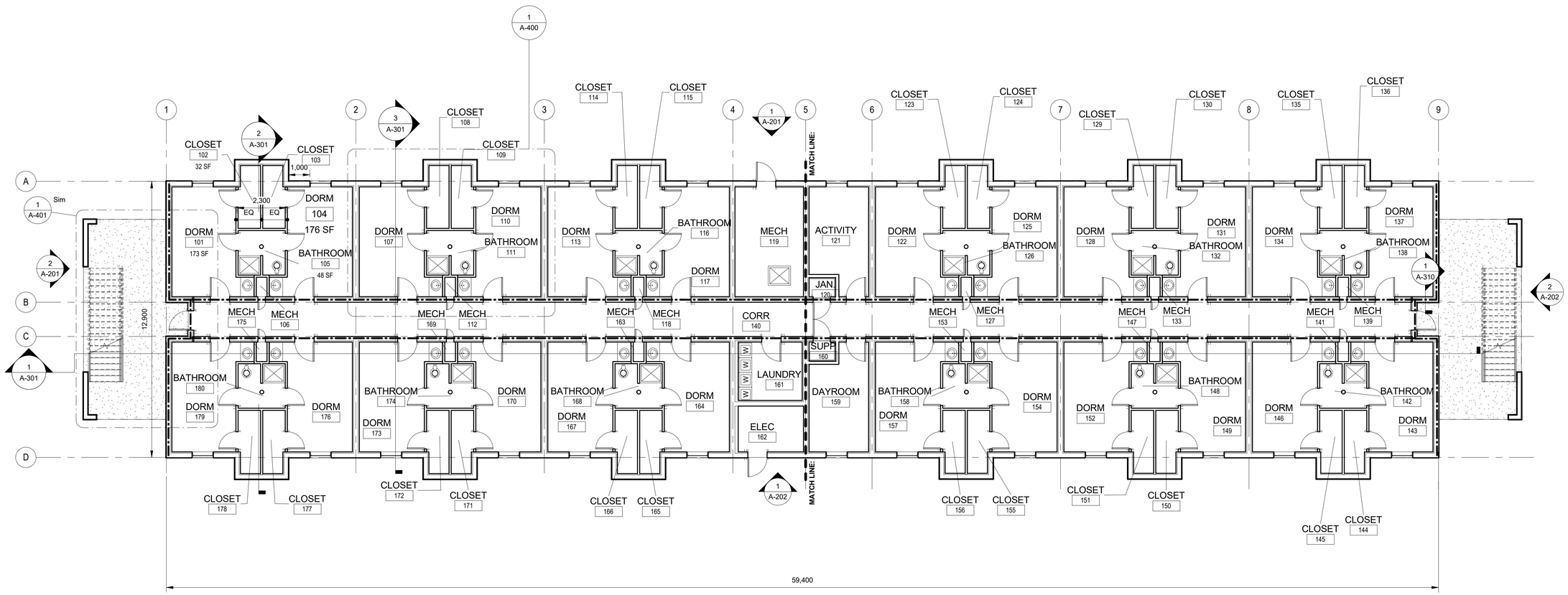

1 FIRST FLOOR PLAN - COMPOSITE

1 : 100

GENERAL NOTES:

1. PROVIDE BLOCKING IN GALVANIZED METAL STUD WALLS WITH GALVANIZED METAL STUD BLOCKING TO SUPPORT WALL MOUNTED EQUIPMENT.
2. VERIFY STRUCTURAL FOR COLUMN SPACING.
3. SEAL ALL WALL PENETRATIONS. PENETRATIONS SEAL SHALL MATCH FIRE RATING OF WALL.
4. COORDINATE WITH STRUCTURAL, PLUMBING, MECHANICAL, ELECTRICAL, FOR ASSOCIATED WORK UNLESS NOTED OTHERWISE.
5. SEE SHEET A-603, 604, and 605 FOR DOOR & WINDOW SCHEDULES AND EXIT SIGNS .
6. SEE SHEETS A-602 & A-603 FOR DOOR AND WINDOW DETAILS.
7. ALL DOOR OPENINGS SHALL BE 4" OFF ADJACENT STUD WALLS ON THE HINGE SIDE OF DOOR UNLESS NOTED OTHERWISE.
8. AVERAGE EXTERIOR WALL "R" VALUE = R19.
9. DIMENSIONS ARE OUTSIDE FACE OF MASONRY. DOES NOT INCLUDE STUCCO FINISH ON OUTSIDE FACE OF MASONRY.
10. SEE STRUCTURAL DRAWINGS FOR MASONRY CONTROL JOINTS (MCJ)
11. DOOR AND WINDOW DIMENSIONS SHOWN ARE ROUGH OPENING MASONRY DIMENSIONS.
12. ALL WALLS SHALL HAVE A STC 50 RATING.
13. FURNISHING (DESKS, CHAIRS, STORAGE CABINETS, ETC) NOT IN CONTRACT. FURNITURE SHALL BE GOVERNMENT FURNISHED AND CONTRACTOR INSTALLED (GFCI).
14. PORCELAIN TILE SHALL BE 200MM X 200MM. SEE COLOR SCHEDULE 09 06 90.
15. RESTROOMS SHALL HAVE CEMENTIOUS BACKER BOARD BEHIND WALL TILE FINISHES.
16. SEE SHEET A601 FOR WALL TYPES.
17. PLAN NORTH IS FOR REFERENCE ONLY AND IS BASED ON BUILDING D. SEE CIVIL FOR BUILDING ORIENTATION.

LEGEND

- PROPOSED CONCRETE SIDEWALK
- 16 GWB. BOTH SIDES ON 92 METAL STUD @ 600 O.C.
- WINDOW OR LOUVER
- DOOR
- PLUMBING FIXTURES
- WATER HEATER
- PLUMBING VENT
- MISCELLANEOUS FURNITURE ITEMS (NIC)
- ROOF SLOPE INDICATOR
- 1 HOUR FIRE RATED WALL
- SH — WOODEN SHELVES (30.48cm WIDE)
- ROD — CLOSET ROD TYPE 304 STAINLESS STEEL □1-1/4" WITH STAINLESS STEEL MOUNTING HARD WARE. LENGTH 72"

0 4000 8000

SCALE: 1 : 100

PLAN NORTH

US Army Corps of Engineers®

MARK	DESCRIPTION	DATE

DESIGNED BY: T.D.W.	ISSUE DATE: FEBRUARY 2019
DRAWN BY: T.D.W.	SOLICITATION NO.: W9127819R0028
CHECKED BY: J.M.C.	CONTRACT NO.:
SUBMITTED BY: C.A.C.	PROJECT NUMBER: M077EC44
SIZE: ANSI D	FILE NAME: M077E0144

U.S. ARMY CORPS OF ENGINEERS
MOBILE DISTRICT
MOBILE, ALABAMA

SOTO CANO AIR BASE, HONDURAS
UNACCOMPANIED ENLISTED PERSONNEL HOUSING

FIRST FLOOR PLAN COMPOSITE

SHEET ID

A-101

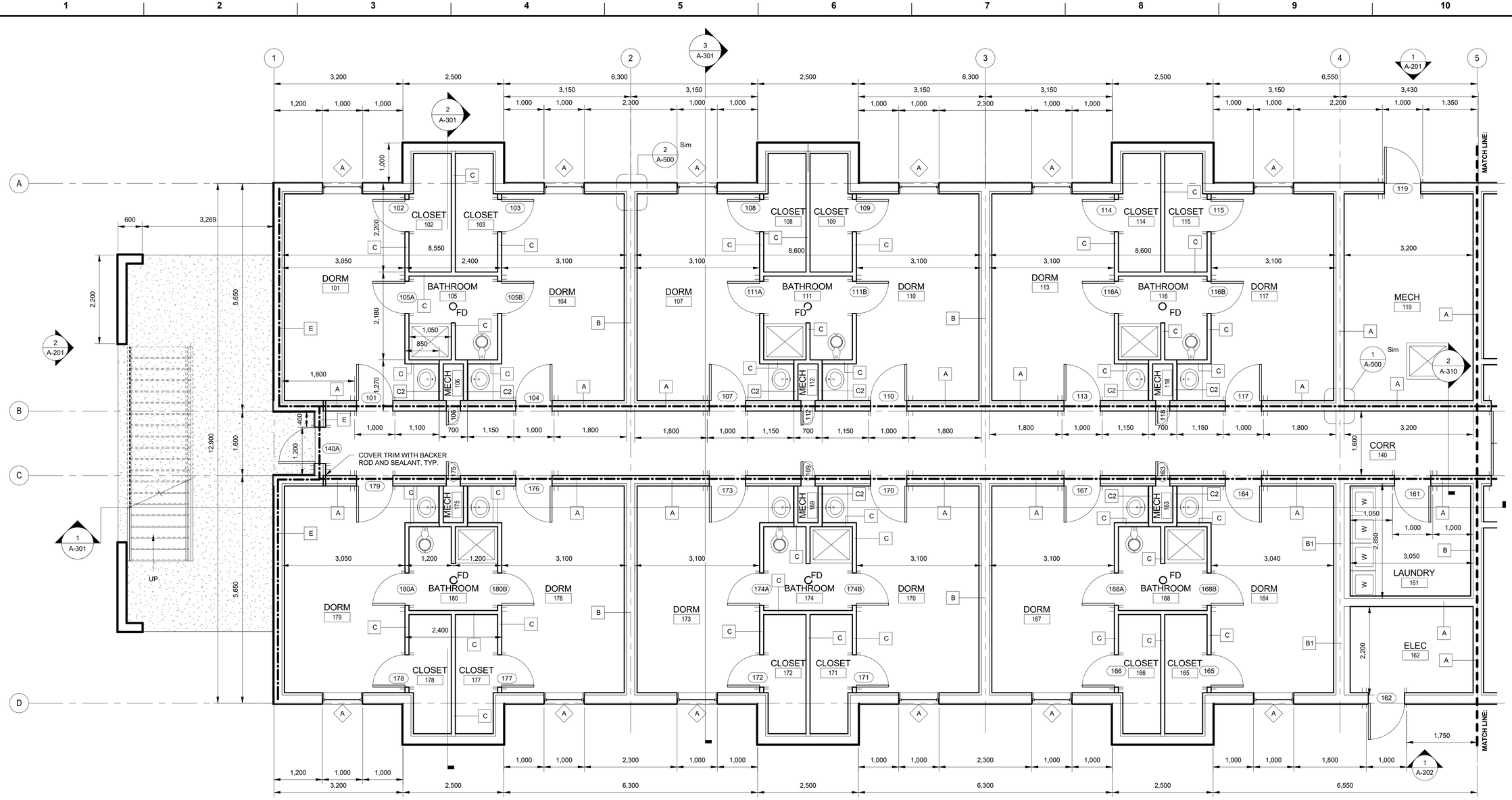

GENERAL NOTES:

1. PROVIDE BLOCKING IN GALVANIZED METAL STUD WALLS WITH GALVANIZED METAL STUD BLOCKING TO SUPPORT WALL MOUNTED EQUIPMENT.
2. VERIFY STRUCTURAL FOR COLUMN SPACING.
3. SEAL ALL WALL PENETRATIONS. PENETRATIONS SEAL SHALL MATCH FIRE RATING OF WALL.
4. COORDINATE WITH STRUCTURAL, PLUMBING, MECHANICAL, ELECTRICAL, FOR ASSOCIATED WORK UNLESS NOTED OTHERWISE.
5. SEE SHEET A-603, 604, and 605 FOR DOOR & WINDOW SCHEDULES AND EXIT SIGNS .
6. SEE SHEETS A-602 & A-603 FOR DOOR AND WINDOW DETAILS.
7. ALL DOOR OPENINGS SHALL BE 4" OFF ADJACENT STUD WALLS ON THE HINGE SIDE OF DOOR UNLESS NOTED OTHERWISE.
8. AVERAGE EXTERIOR WALL "R" VALUE = R19.
9. DIMENSIONS ARE OUTSIDE FACE OF MASONRY. DOES NOT INCLUDE STUCCO FINISH ON OUTSIDE FACE OF MASONRY.
10. SEE STRUCTURAL DRAWINGS FOR MASONRY CONTROL JOINTS (MCJ)
11. DOOR AND WINDOW DIMENSIONS SHOWN ARE ROUGH OPENING MASONRY DIMENSIONS.
12. ALL WALLS SHALL HAVE A STC 50 RATING.
13. FURNISHING (DESKS, CHAIRS, STORAGE CABINETS, ETC) NOT IN CONTRACT. FURNITURE SHALL BE GOVERNMENT FURNISHED AND CONTRACTOR INSTALLED (GFCI).
14. PORCELAIN TILE SHALL BE 200MM X 200MM. SEE COLOR SCHEDULE 09 06 90.
15. RESTROOMS SHALL HAVE CEMENTIOUS BACKER BOARD BEHIND WALL TILE FINISHES.
16. SEE SHEET A601 FOR WALL TYPES.
17. PLAN NORTH IS FOR REFERENCE ONLY AND IS BASED ON BUILDING D. SEE CIVIL FOR BUILDING ORIENTATION.

1 FIRST FLOOR PLAN - AREA "A"

1 : 50

LEGEND

- PROPOSED CONCRETE SIDEWALK
- 16 GWB. BOTH SIDES ON 92 METAL STUD @ 600 O.C.
- <A> WINDOW OR LOUVER
- 1 DOOR
- PLUMBING FIXTURES
- WATER HEATER
- PLUMBING VENT
- MISCELLANEOUS FURNITURE ITEMS (NIC)
- X X ROOF SLOPE INDICATOR
- 1 HOUR FIRE RATED WALL
- SH WOODEN SHELVES (30.48cm WIDE)
- ROD CLOSET ROD TYPE 304 STAINLESS STEEL □1-1/4" WITH STAINLESS STEEL MOUNTING HARD WARE. LENGTH 72"

KEY PLAN

0 50 100

SCALE: 1:50

PLAN NORTH

US Army Corps of Engineers®

MARK	DESCRIPTION	DATE

DESIGNED BY: T.D.W.	ISSUE DATE: FEBRUARY 2019
DRAWN BY: T.D.W.	SOLICITATION NO.: W912781R0028
CHECKED BY: J.M.C.	CONTRACT NO.:
SUBMITTED BY: C.A.C.	PROJECT NUMBER: M077EC44
SIZE: ANSI D	FILE NAME: M077E144

U.S. ARMY CORPS OF ENGINEERS
MOBILE DISTRICT
MOBILE, ALABAMA

SOTO CANO AIR BASE, HONDURAS
UNACCOMPANIED ENLISTED PERSONNEL HOUSING

ENLARGED FIRST FLOOR PLAN - AREA "A"

SHEET ID

A-102

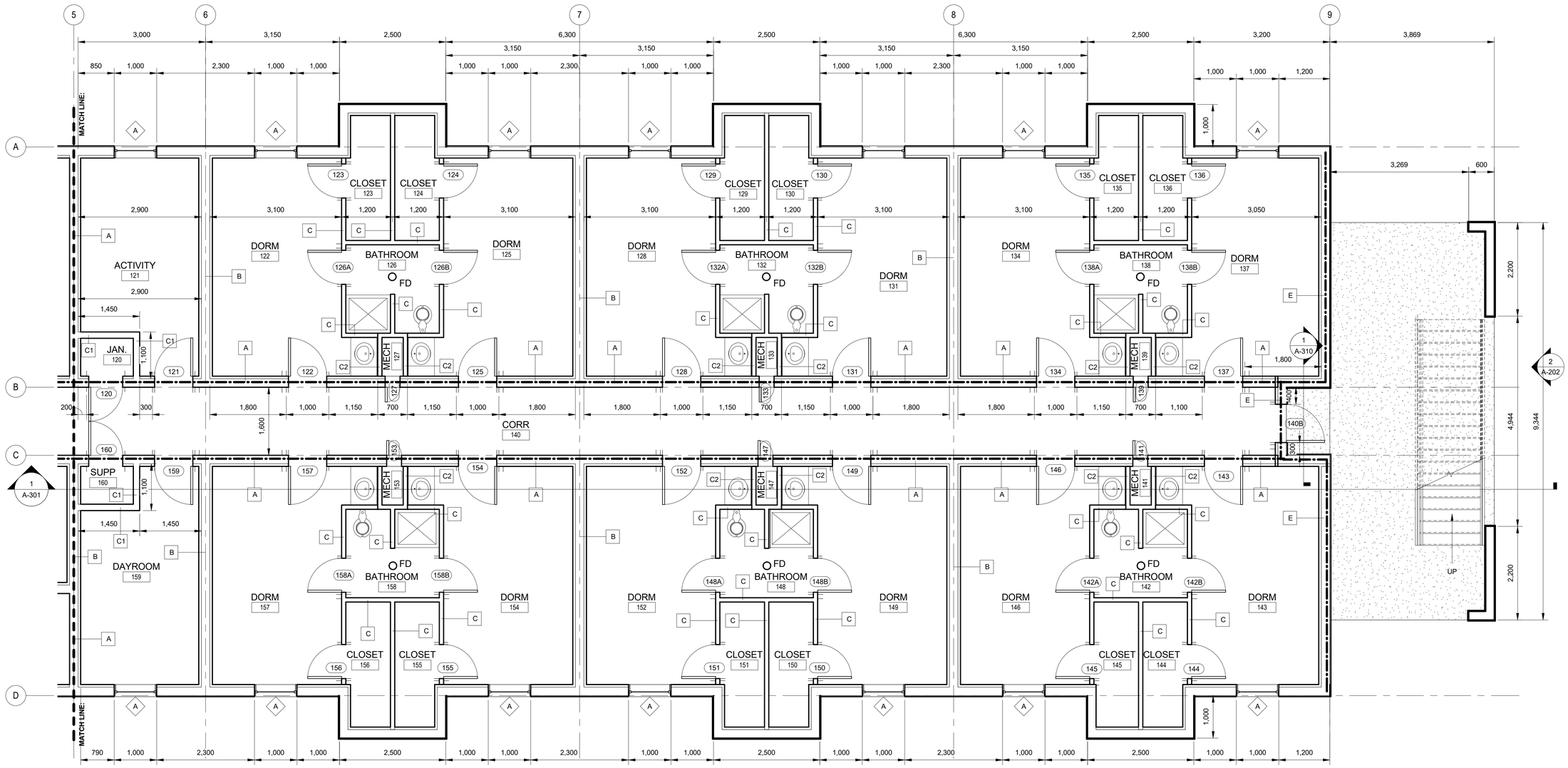

GENERAL NOTES:

1. PROVIDE BLOCKING IN GALVANIZED METAL STUD WALLS WITH GALVANIZED METAL STUD BLOCKING TO SUPPORT WALL MOUNTED EQUIPMENT.
2. VERIFY STRUCTURAL FOR COLUMN SPACING.
3. SEAL ALL WALL PENETRATIONS. PENETRATIONS SEAL SHALL MATCH FIRE RATING OF WALL.
4. COORDINATE WITH STRUCTURAL, PLUMBING, MECHANICAL, ELECTRICAL, FOR ASSOCIATED WORK UNLESS NOTED OTHERWISE.
5. SEE SHEET A-603, 604, and 605 FOR DOOR & WINDOW SCHEDULES AND EXIT SIGNS .
6. SEE SHEETS A-602 & A-603 FOR DOOR AND WINDOW DETAILS.
7. ALL DOOR OPENINGS SHALL BE 4" OFF ADJACENT STUD WALLS ON THE HINGE SIDE OF DOOR UNLESS NOTED OTHERWISE.
8. AVERAGE EXTERIOR WALL "R" VALUE = R19.
9. DIMENSIONS ARE OUTSIDE FACE OF MASONRY. DOES NOT INCLUDE STUCCO FINISH ON OUTSIDE FACE OF MASONRY.
10. SEE STRUCTURAL DRAWINGS FOR MASONRY CONTROL JOINTS (MCJ)
11. DOOR AND WINDOW DIMENSIONS SHOWN ARE ROUGH OPENING MASONRY DIMENSIONS.
12. ALL WALLS SHALL HAVE A STC 50 RATING.
13. FURNISHING (DESKS, CHAIRS, STORAGE CABINETS, ETC) NOT IN CONTRACT. FURNITURE SHALL BE GOVERNMENT FURNISHED AND CONTRACTOR INSTALLED (GFCI).
14. PORCELAIN TILE SHALL BE 200MM X 200MM. SEE COLOR SCHEDULE 09 06 90.
15. RESTROOMS SHALL HAVE CEMENTIOUS BACKER BOARD BEHIND WALL TILE FINISHES.
16. SEE SHEET A601 FOR WALL TYPES.
17. PLAN NORTH IS FOR REFERENCE ONLY AND IS BASED ON BUILDING D. SEE CIVIL FOR BUILDING ORIENTATION.

1 FIRST FLOOR PLAN - AREA "B"

1 : 50

LEGEND

- PROPOSED CONCRETE SIDEWALK
- 16 GWB. BOTH SIDES ON 92 METAL STUD @ 600 O.C.
- WINDOW OR LOUVER
- DOOR
- PLUMBING FIXTURES
- WATER HEATER
- PLUMBING VENT
- MISCELLANEOUS FURNITURE ITEMS (NIC)
- ROOF SLOPE INDICATOR
- 1 HOUR FIRE RATED WALL
- SH — WOODEN SHELVES (30.48cm WIDE)
- ROD — CLOSET ROD TYPE 304 STAINLESS STEEL □1-1/4" WITH STAINLESS STEEL MOUNTING HARD WARE. LENGTH 72"

KEY PLAN

0 50 100

SCALE: 1:50

PLAN NORTH

US Army Corps of Engineers®

MARK	DESCRIPTION	DATE

ISSUE DATE: FEBRUARY 2019
SOLICITATION NO.: W912781R0028
CONTRACT NO.:
PROJECT NUMBER: M077EC44

DESIGNED BY: T.D.W.
DRAWN BY: T.D.W.
CHECKED BY: J.M.C.
SUBMITTED BY: C.A.
SIZE: ANSI D
FILE NAME: M077EC44

U.S. ARMY CORPS OF ENGINEERS
MOBILE DISTRICT
MOBILE, ALABAMA

SOTO CANO AIR BASE, HONDURAS
UNACCOMPANIED ENLISTED PERSONNEL HOUSING

ENLARGED FIRST FLOOR PLAN - AREA "B"

SHEET ID
A-103

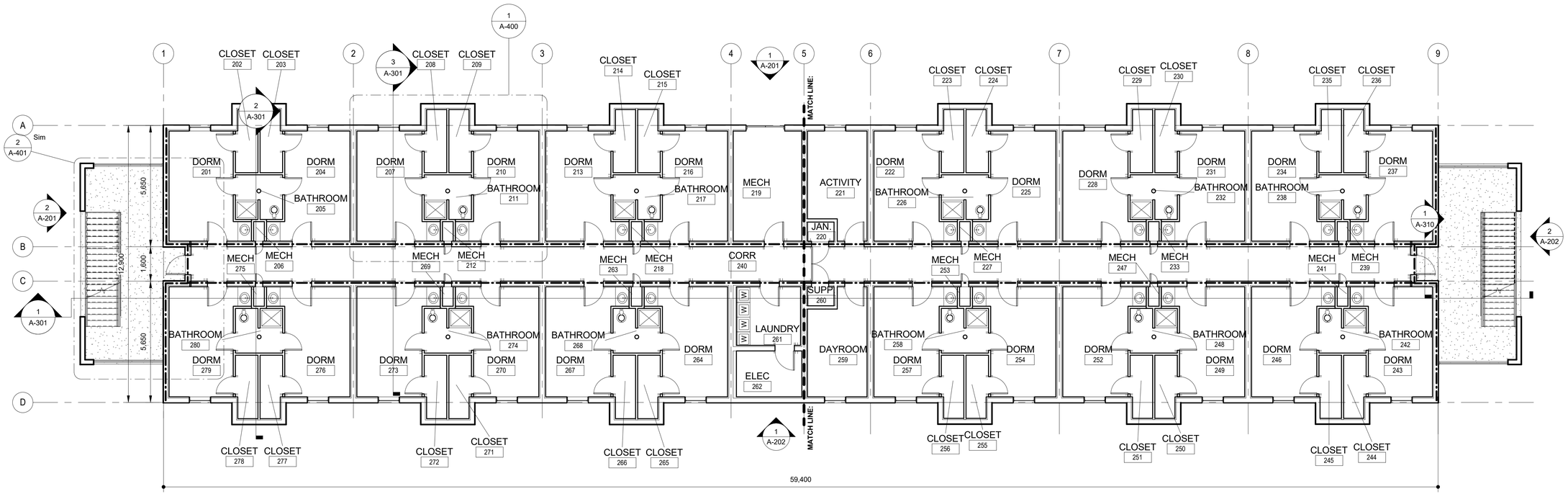

1 SECOND FLOOR PLAN - COMPOSITE

1 : 100

GENERAL NOTES:

1. PROVIDE BLOCKING IN GALVANIZED METAL STUD WALLS WITH GALVANIZED METAL STUD BLOCKING TO SUPPORT WALL MOUNTED EQUIPMENT.
2. VERIFY STRUCTURAL FOR COLUMN SPACING.
3. SEAL ALL WALL PENETRATIONS. PENETRATIONS SEAL SHALL MATCH FIRE RATING OF WALL.
4. COORDINATE WITH STRUCTURAL, PLUMBING, MECHANICAL, ELECTRICAL, FOR ASSOCIATED WORK UNLESS NOTED OTHERWISE.
5. SEE SHEET A-603, 604, and 605 FOR DOOR & WINDOW SCHEDULES AND EXIT SIGNS .
6. SEE SHEETS A-602 & A-603 FOR DOOR AND WINDOW DETAILS.
7. ALL DOOR OPENINGS SHALL BE 4" OFF ADJACENT STUD WALLS ON THE HINGE SIDE OF DOOR UNLESS NOTED OTHERWISE.
8. AVERAGE EXTERIOR WALL "R" VALUE = R19.
9. DIMENSIONS ARE OUTSIDE FACE OF MASONRY. DOES NOT INCLUDE STUCCO FINISH ON OUTSIDE FACE OF MASONRY.
10. SEE STRUCTURAL DRAWINGS FOR MASONRY CONTROL JOINTS (MCJ)
11. DOOR AND WINDOW DIMENSIONS SHOWN ARE ROUGH OPENING MASONRY DIMENSIONS.
12. ALL WALLS SHALL HAVE A STC 50 RATING.
13. FURNISHING (DESKS, CHAIRS, STORAGE CABINETS, ETC) NOT IN CONTRACT. FURNITURE SHALL BE GOVERNMENT FURNISHED AND CONTRACTOR INSTALLED (GFCI).
14. PORCELAIN TILE SHALL BE 200MM X 200MM. SEE COLOR SCHEDULE 09 06 90.
15. RESTROOMS SHALL HAVE CEMENTIOUS BACKER BOARD BEHIND WALL TILE FINISHES.
16. SEE SHEET A601 FOR WALL TYPES.
17. PLAN NORTH IS FOR REFERENCE ONLY AND IS BASED ON BUILDING D. SEE CIVIL FOR BUILDING ORIENTATION.

LEGEND

- PROPOSED CONCRETE SIDEWALK
- 16 GWB. BOTH SIDES ON 92 METAL STUD @ 600 O.C.
- WINDOW OR LOUVER
- DOOR
- PLUMBING FIXTURES
- WATER HEATER
- PLUMBING VENT
- MISCELLANEOUS FURNITURE ITEMS (NIC)
- ROOF SLOPE INDICATOR
- 1 HOUR FIRE RATED WALL
- SH — WOODEN SHELVES (30.48cm WIDE)
- ROD — CLOSET ROD TYPE 304 STAINLESS STEEL □1-1/4" WITH STAINLESS STEEL MOUNTING HARD WARE. LENGTH 72"

0 100 200

SCALE: 1:100

PLAN NORTH

US Army Corps of Engineers®

MARK	DESCRIPTION	DATE

DESIGNED BY: T.D.W.	ISSUE DATE: FEBRUARY 2019
DRAWN BY: T.D.W.	SOLICITATION NO.: W912T819R0028
CHECKED BY: J.M.C.	CONTRACT NO.:
SUBMITTED BY: C.C.	PROJECT NUMBER: M077EC44
SIZE: ANSI D	FILE NAME: M077E0144

U.S. ARMY CORPS OF ENGINEERS
MOBILE DISTRICT
MOBILE, ALABAMA

SOTO CANO AIR BASE, HONDURAS
UNACCOMPANIED ENLISTED PERSONNEL HOUSING

SECOND FLOOR PLAN COMPOSITE

SHEET ID

A-104

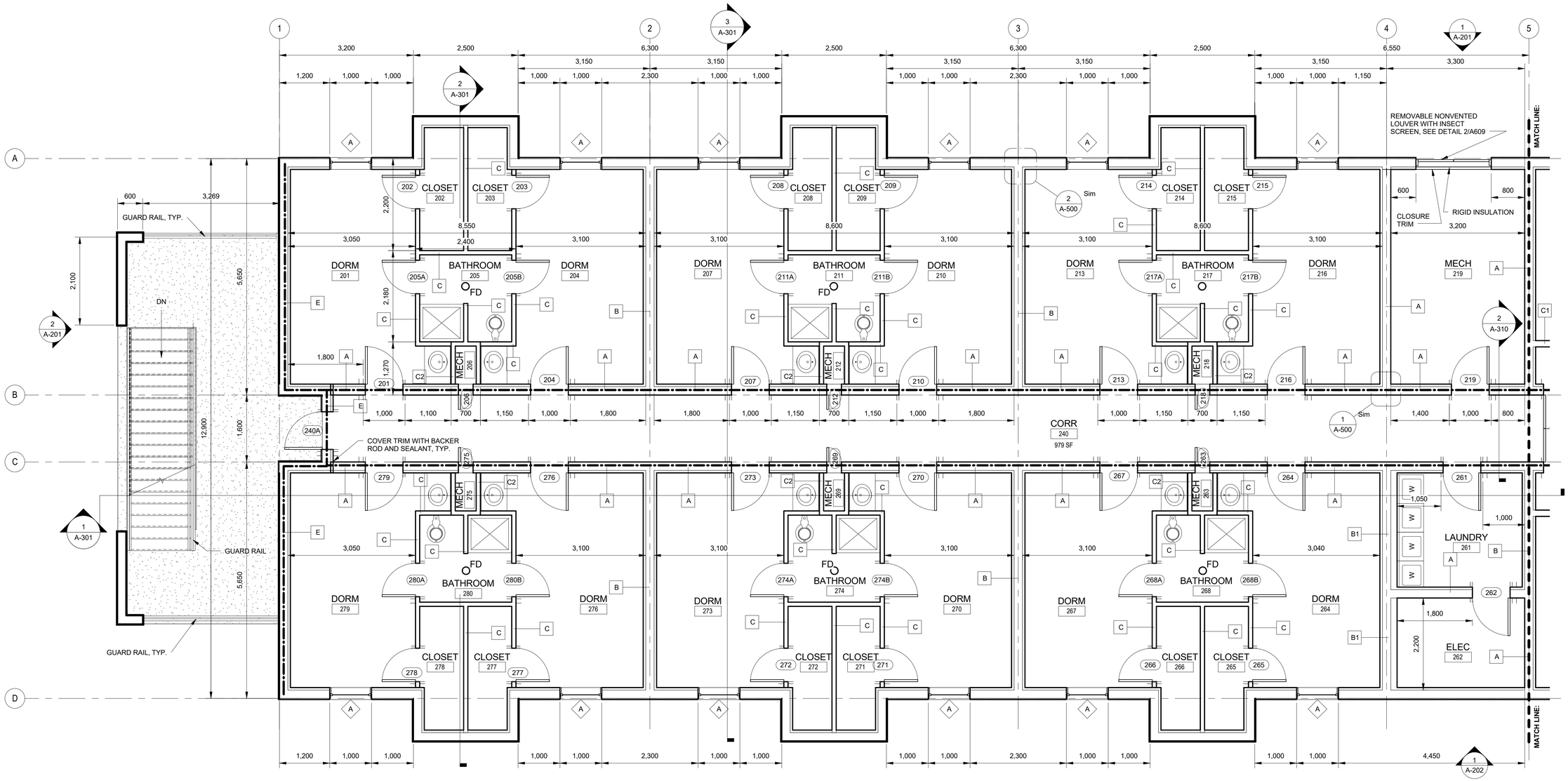

1 SECOND FLOOR PLAN - AREA "A"

1 : 50

GENERAL NOTES:

1. PROVIDE BLOCKING IN GALVANIZED METAL STUD WALLS WITH GALVANIZED METAL STUD BLOCKING TO SUPPORT WALL MOUNTED EQUIPMENT.
2. VERIFY STRUCTURAL FOR COLUMN SPACING.
3. SEAL ALL WALL PENETRATIONS. PENETRATIONS SEAL SHALL MATCH FIRE RATING OF WALL.
4. COORDINATE WITH STRUCTURAL, PLUMBING, MECHANICAL, ELECTRICAL, FOR ASSOCIATED WORK UNLESS NOTED OTHERWISE.
5. SEE SHEET A-603, 604, and 605 FOR DOOR & WINDOW SCHEDULES AND EXIT SIGNS .
6. SEE SHEETS A-602 & A-603 FOR DOOR AND WINDOW DETAILS.
7. ALL DOOR OPENINGS SHALL BE 4" OFF ADJACENT STUD WALLS ON THE HINGE SIDE OF DOOR UNLESS NOTED OTHERWISE.
8. AVERAGE EXTERIOR WALL "R" VALUE = R19.
9. DIMENSIONS ARE OUTSIDE FACE OF MASONRY. DOES NOT INCLUDE STUCCO FINISH ON OUTSIDE FACE OF MASONRY.
10. SEE STRUCTURAL DRAWINGS FOR MASONRY CONTROL JOINTS (MCJ)
11. DOOR AND WINDOW DIMENSIONS SHOWN ARE ROUGH OPENING MASONRY DIMENSIONS.
12. ALL WALLS SHALL HAVE A STC 50 RATING.
13. FURNISHING (DESKS, CHAIRS, STORAGE CABINETS, ETC) NOT IN CONTRACT. FURNITURE SHALL BE GOVERNMENT FURNISHED AND CONTRACTOR INSTALLED (GFCI).
14. PORCELAIN TILE SHALL BE 200MM X 200MM. SEE COLOR SCHEDULE 09 06 90.
15. RESTROOMS SHALL HAVE CEMENTIOUS BACKER BOARD BEHIND WALL TILE FINISHES.
16. SEE SHEET A601 FOR WALL TYPES.
17. PLAN NORTH IS FOR REFERENCE ONLY AND IS BASED ON BUILDING D. SEE CIVIL FOR BUILDING ORIENTATION.

LEGEND

- PROPOSED CONCRETE SIDEWALK
- 16 GWB. BOTH SIDES ON 92 METAL STUD @ 600 O.C.
- WINDOW OR LOUVER
- DOOR
- PLUMBING FIXTURES
- WATER HEATER
- PLUMBING VENT
- MISCELLANEOUS FURNITURE ITEMS (NIC)
- ROOF SLOPE INDICATOR
- 1 HOUR FIRE RATED WALL
- SH — WOODEN SHELVES (30.48cm WIDE)
- ROD — CLOSET ROD TYPE 304 STAINLESS STEEL □1-1/4" WITH STAINLESS STEEL MOUNTING HARD WARE. LENGTH 72"

KEY PLAN

SCALE: 1:50

PLAN NORTH

US Army Corps of Engineers®

MARK	DESCRIPTION	DATE

DESIGNED BY: T.D.W.
DRAWN BY: T.D.W.
CHECKED BY: J.M.C.
SUBMITTED BY: C.A.
SIZE: ANSI D
ISSUE DATE: FEBRUARY 2019
SOLICITATION NO.: W9127819R0028
CONTRACT NO.:
PROJECT NUMBER: M07TEC44
FILE NAME: M07TEC44

U.S. ARMY CORPS OF ENGINEERS
MOBILE DISTRICT
MOBILE, ALABAMA

SOTO CANO AIR BASE, HONDURAS
UNACCOMPANIED ENLISTED PERSONNEL HOUSING

ENLARGED SECOND FLOOR PLAN - AREA "A"

SHEET ID
A-105

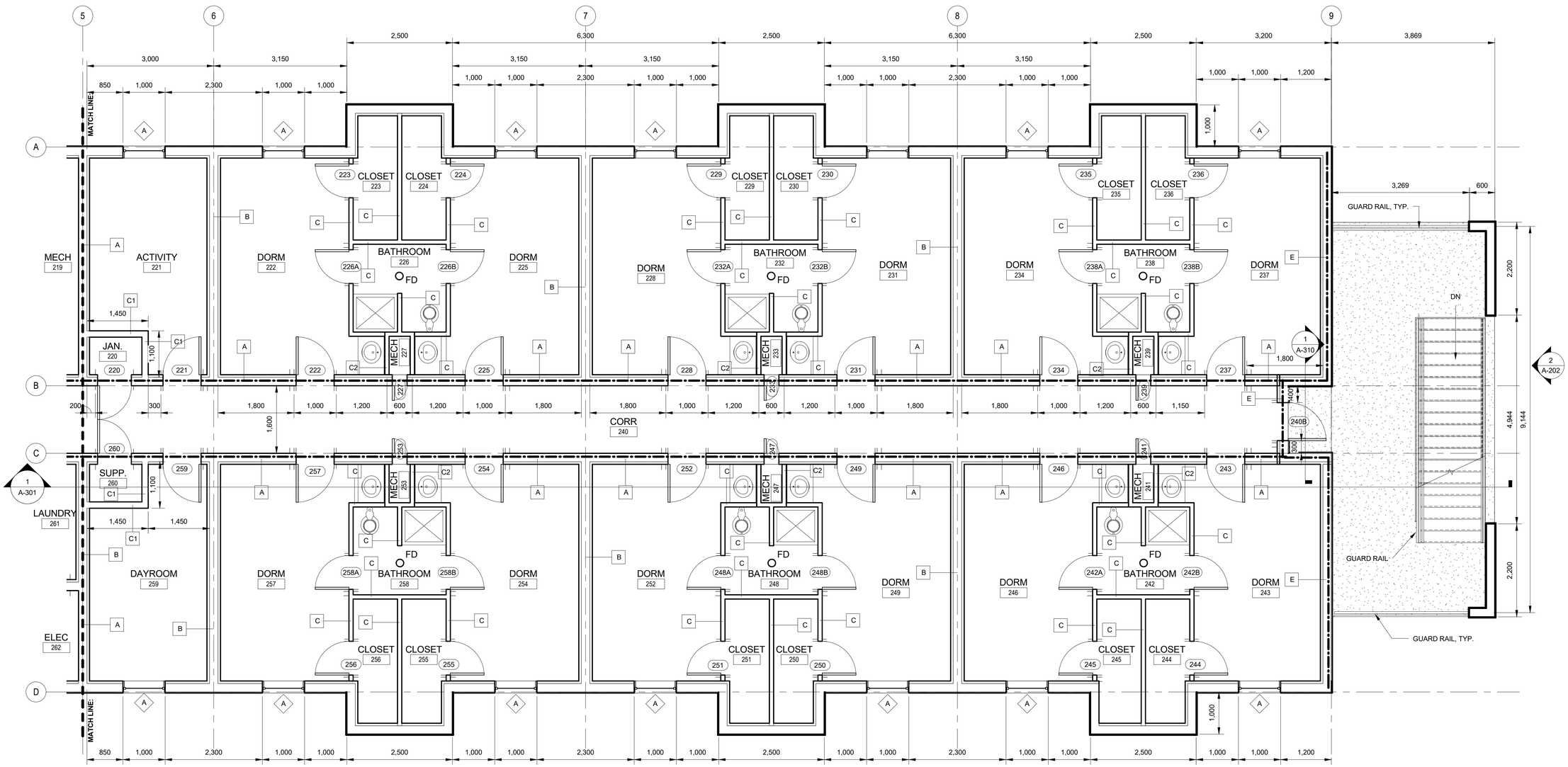

GENERAL NOTES:

1. PROVIDE BLOCKING IN GALVANIZED METAL STUD WALLS WITH GALVANIZED METAL STUD BLOCKING TO SUPPORT WALL MOUNTED EQUIPMENT.
2. VERIFY STRUCTURAL FOR COLUMN SPACING.
3. SEAL ALL WALL PENETRATIONS. PENETRATIONS SEAL SHALL MATCH FIRE RATING OF WALL.
4. COORDINATE WITH STRUCTURAL, PLUMBING, MECHANICAL, ELECTRICAL, FOR ASSOCIATED WORK UNLESS NOTED OTHERWISE.
5. SEE SHEET A-603, 604, and 605 FOR DOOR & WINDOW SCHEDULES AND EXIT SIGNS .
6. SEE SHEETS A-602 & A-603 FOR DOOR AND WINDOW DETAILS.
7. ALL DOOR OPENINGS SHALL BE 4" OFF ADJACENT STUD WALLS ON THE HINGE SIDE OF DOOR UNLESS NOTED OTHERWISE.
8. AVERAGE EXTERIOR WALL "R" VALUE = R19.
9. DIMENSIONS ARE OUTSIDE FACE OF MASONRY. DOES NOT INCLUDE STUCCO FINISH ON OUTSIDE FACE OF MASONRY.
10. SEE STRUCTURAL DRAWINGS FOR MASONRY CONTROL JOINTS (MCJ)
11. DOOR AND WINDOW DIMENSIONS SHOWN ARE ROUGH OPENING MASONRY DIMENSIONS.
12. ALL WALLS SHALL HAVE A STC 50 RATING.
13. FURNISHING (DESKS, CHAIRS, STORAGE CABINETS, ETC) NOT IN CONTRACT. FURNITURE SHALL BE GOVERNMENT FURNISHED AND CONTRACTOR INSTALLED (GFCI).
14. PORCELAIN TILE SHALL BE 200MM X 200MM. SEE COLOR SCHEDULE 09 06 90.
15. RESTROOMS SHALL HAVE CEMENTIOUS BACKER BOARD BEHIND WALL TILE FINISHES.
16. SEE SHEET A601 FOR WALL TYPES.
17. PLAN NORTH IS FOR REFERENCE ONLY AND IS BASED ON BUILDING D. SEE CIVIL FOR BUILDING ORIENTATION.

1 SECOND FLOOR PLAN - AREA "B"

1 : 50

LEGEND

- PROPOSED CONCRETE SIDEWALK
- 16 GWB. BOTH SIDES ON 92 METAL STUD @ 600 O.C.
- <A> WINDOW OR LOUVER
- 1 DOOR
- PLUMBING FIXTURES
- WATER HEATER
- PLUMBING VENT
- MISCELLANEOUS FURNITURE ITEMS (NIC)
- X X ROOF SLOPE INDICATOR
- 1 HOUR FIRE RATED WALL
- SH WOODEN SHELVES (30.48cm WIDE)
- ROD CLOSET ROD TYPE 304 STAINLESS STEEL □1-1/4" WITH STAINLESS STEEL MOUNTING HARD WARE. LENGTH 72"

KEY PLAN

0 50 100

SCALE: 1:50

PLAN NORTH

US Army Corps of Engineers®

MARK	DESCRIPTION	DATE

DESIGNED BY: T.D.W.
DRAWN BY: T.D.W.
CHECKED BY: J.M.C.
SUBMITTED BY: C.
SIZE: ANSI D
ISSUE DATE: FEBRUARY 2019
SOLICITATION NO.: W912781R0028
CONTRACT NO.:
PROJECT NUMBER: M07TE0144
FILE NAME: M07TE0144

U.S. ARMY CORPS OF ENGINEERS
MOBILE DISTRICT
MOBILE, ALABAMA

SOTO CANO AIR BASE, HONDURAS
UNACCOMPANIED ENLISTED PERSONNEL HOUSING

ENLARGED SECOND FLOOR PLAN - AREA "B"

SHEET ID

A-106

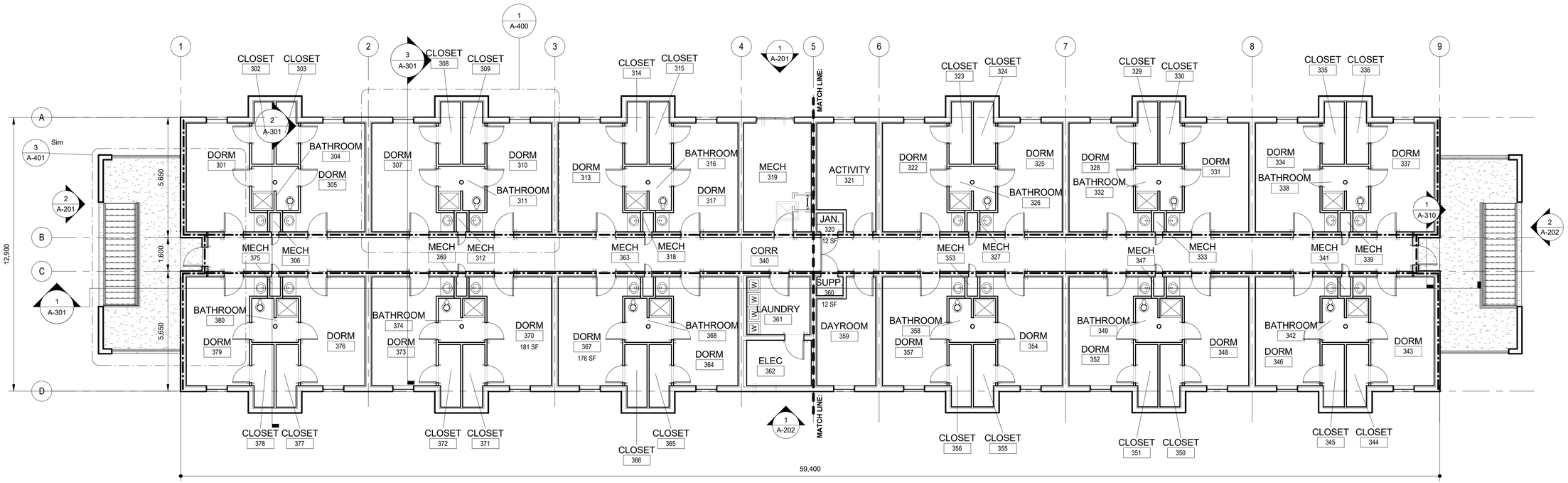

1 THIRD FLOOR PLAN - COMPOSITE

1 : 100

GENERAL NOTES:

1. PROVIDE BLOCKING IN GALVANIZED METAL STUD WALLS WITH GALVANIZED METAL STUD BLOCKING TO SUPPORT WALL MOUNTED EQUIPMENT.
2. VERIFY STRUCTURAL FOR COLUMN SPACING.
3. SEAL ALL WALL PENETRATIONS. PENETRATIONS SEAL SHALL MATCH FIRE RATING OF WALL.
4. COORDINATE WITH STRUCTURAL, PLUMBING, MECHANICAL, ELECTRICAL, FOR ASSOCIATED WORK UNLESS NOTED OTHERWISE.
5. SEE SHEET A-603, 604, and 605 FOR DOOR & WINDOW SCHEDULES AND EXIT SIGNS .
6. SEE SHEETS A-602 & A-603 FOR DOOR AND WINDOW DETAILS.
7. ALL DOOR OPENINGS SHALL BE 4" OFF ADJACENT STUD WALLS ON THE HINGE SIDE OF DOOR UNLESS NOTED OTHERWISE.
8. AVERAGE EXTERIOR WALL "R" VALUE = R19.
9. DIMENSIONS ARE OUTSIDE FACE OF MASONRY. DOES NOT INCLUDE STUCCO FINISH ON OUTSIDE FACE OF MASONRY.
10. SEE STRUCTURAL DRAWINGS FOR MASONRY CONTROL JOINTS (MCJ)
11. DOOR AND WINDOW DIMENSIONS SHOWN ARE ROUGH OPENING MASONRY DIMENSIONS.
12. ALL WALLS SHALL HAVE A STC 50 RATING.
13. FURNISHING (DESKS, CHAIRS, STORAGE CABINETS, ETC) NOT IN CONTRACT. FURNITURE SHALL BE GOVERNMENT FURNISHED AND CONTRACTOR INSTALLED (GFCI).
14. PORCELAIN TILE SHALL BE 200MM X 200MM. SEE COLOR SCHEDULE 09 06 90.
15. RESTROOMS SHALL HAVE CEMENTIOUS BACKER BOARD BEHIND WALL TILE FINISHES.
16. SEE SHEET A601 FOR WALL TYPES.
17. PLAN NORTH IS FOR REFERENCE ONLY AND IS BASED ON BUILDING D. SEE CIVIL FOR BUILDING ORIENTATION.

LEGEND

- PROPOSED CONCRETE SIDEWALK
- 16 GWB. BOTH SIDES ON 92 METAL STUD @ 600 O.C.
- WINDOW OR LOUVER
- DOOR
- PLUMBING FIXTURES
- WATER HEATER
- PLUMBING VENT
- MISCELLANEOUS FURNITURE ITEMS (NIC)
- ROOF SLOPE INDICATOR
- 1 HOUR FIRE RATED WALL
- SH — WOODEN SHELVES (30.48cm WIDE)
- ROD — CLOSET ROD TYPE 304 STAINLESS STEEL □1-1/4" WITH STAINLESS STEEL MOUNTING HARD WARE. LENGTH 72"

0 100 200

SCALE: 1:100

PLAN NORTH

US Army Corps of Engineers®

MARK	DESCRIPTION	DATE

ISSUE DATE: FEBRUARY 2019
SOLICITATION NO.: W912781R0028
CONTRACT NO.:
PROJECT NUMBER: M077EC44
FILE NAME: M077EC44

DESIGNED BY: T.D.W.
DRAWN BY: T.D.W.
CHECKED BY: J.M.C.
SUBMITTED BY: C.C.
SIZE: ANSI D

U.S. ARMY CORP'S OF ENGINEERS
MOBILE DISTRICT
MOBILE, ALABAMA

SOTO CANO AIR BASE, HONDURAS
UNACCOMPANIED ENLISTED PERSONNEL HOUSING

THIRD FLOOR PLAN
COMPOSITE

SHEET ID
A-107

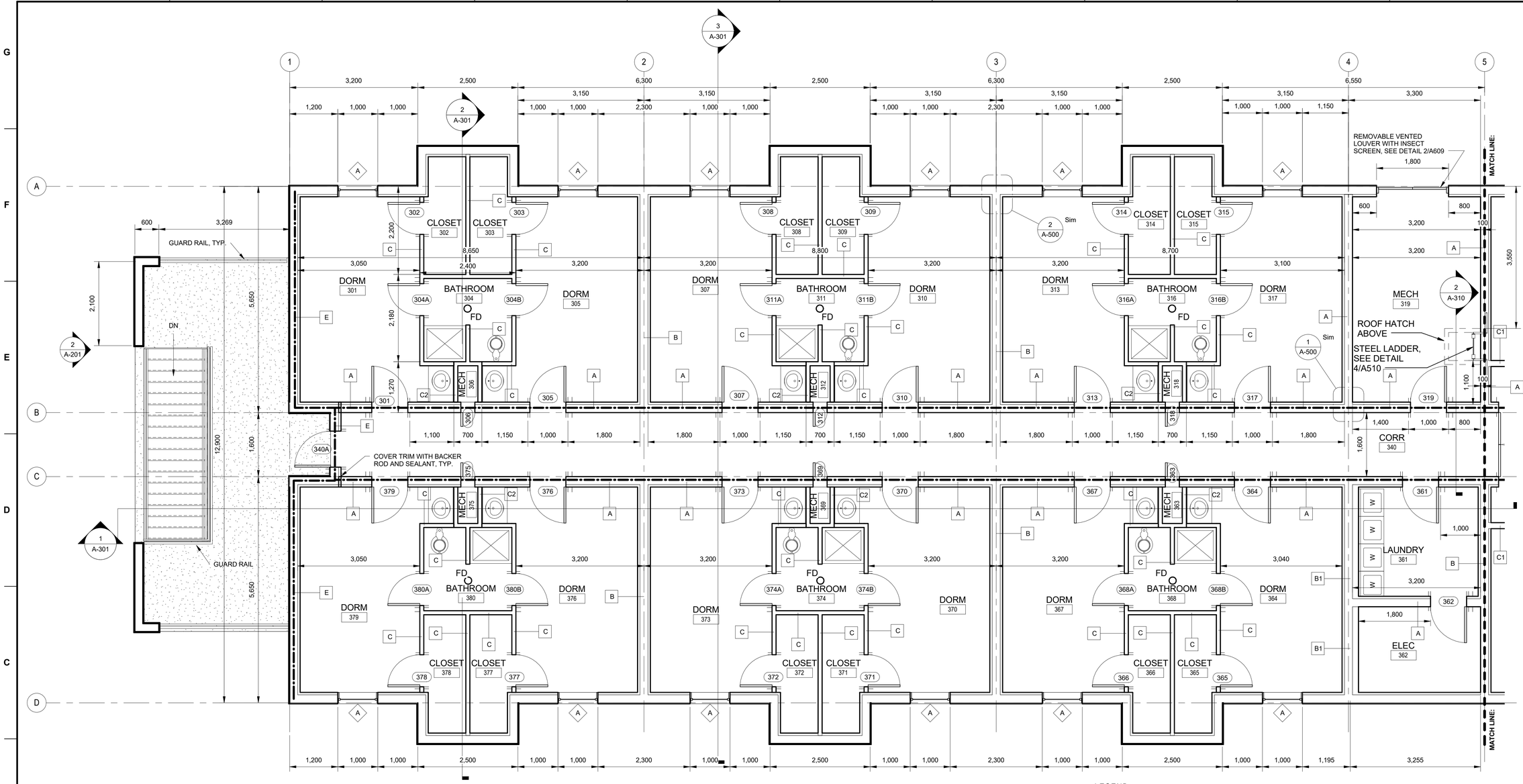

1 THIRD FLOOR PLAN - AREA "A"

1 : 50

GENERAL NOTES:

1. PROVIDE BLOCKING IN GALVANIZED METAL STUD WALLS WITH GALVANIZED METAL STUD BLOCKING TO SUPPORT WALL MOUNTED EQUIPMENT.
2. VERIFY STRUCTURAL FOR COLUMN SPACING.
3. SEAL ALL WALL PENETRATIONS. PENETRATIONS SEAL SHALL MATCH FIRE RATING OF WALL.
4. COORDINATE WITH STRUCTURAL, PLUMBING, MECHANICAL, ELECTRICAL, FOR ASSOCIATED WORK UNLESS NOTED OTHERWISE.
5. SEE SHEET A-603, 604, and 605 FOR DOOR & WINDOW SCHEDULES AND EXIT SIGNS .
6. SEE SHEETS A-602 & A-603 FOR DOOR AND WINDOW DETAILS.
7. ALL DOOR OPENINGS SHALL BE 4" OFF ADJACENT STUD WALLS ON THE HINGE SIDE OF DOOR UNLESS NOTED OTHERWISE.
8. AVERAGE EXTERIOR WALL "R" VALUE = R19.
9. DIMENSIONS ARE OUTSIDE FACE OF MASONRY. DOES NOT INCLUDE STUCCO FINISH ON OUTSIDE FACE OF MASONRY.
10. SEE STRUCTURAL DRAWINGS FOR MASONRY CONTROL JOINTS (MCJ)
11. DOOR AND WINDOW DIMENSIONS SHOWN ARE ROUGH OPENING MASONRY DIMENSIONS.
12. ALL WALLS SHALL HAVE A STC 50 RATING.
13. FURNISHING (DESKS, CHAIRS, STORAGE CABINETS, ETC) NOT IN CONTRACT. FURNITURE SHALL BE GOVERNMENT FURNISHED AND CONTRACTOR INSTALLED (GFCI).
14. PORCELAIN TILE SHALL BE 200MM X 200MM. SEE COLOR SCHEDULE 09 06 90.
15. RESTROOMS SHALL HAVE CEMENTIOUS BACKER BOARD BEHIND WALL TILE FINISHES.
16. SEE SHEET A601 FOR WALL TYPES.
17. PLAN NORTH IS FOR REFERENCE ONLY AND IS BASED ON BUILDING D. SEE CIVIL FOR BUILDING ORIENTATION.

LEGEND

- PROPOSED CONCRETE SIDEWALK
- 16 GWB. BOTH SIDES ON 92 METAL STUD @ 600 O.C.
- A — WINDOW OR LOUVER
- 1 — DOOR
- PLUMBING FIXTURES
- WATER HEATER
- PLUMBING VENT
- MISCELLANEOUS FURNITURE ITEMS (NIC)
- X — ROOF SLOPE INDICATOR
- 1 HOUR FIRE RATED WALL
- SH — WOODEN SHELVES (30.48cm WIDE)
- ROD — CLOSET ROD TYPE 304 STAINLESS STEEL □1-1/4" WITH STAINLESS STEEL MOUNTING HARD WARE. LENGTH 72"

KEY PLAN

PLAN NORTH

0 50 100

SCALE: 1:50

US Army Corps of Engineers®

MARK	DESCRIPTION	DATE

DESIGNED BY: T.D.W.	ISSUE DATE: FEBRUARY 2019
DRAWN BY: T.D.W.	SOLICITATION NO.: W912781R0028
CHECKED BY: J.M.C.	CONTRACT NO.:
SUBMITTED BY: C.A.C.	PROJECT NUMBER: M07TE0A4
SIZE: ANSI D	FILE NAME: M07TE0A4

U.S. ARMY CORPS OF ENGINEERS
MOBILE DISTRICT
MOBILE, ALABAMA

SOTO CANO AIR BASE, HONDURAS
UNACCOMPANIED ENLISTED PERSONNEL HOUSING

ENLARGED THIRD FLOOR PLAN - AREA "A"

SHEET ID

A-108

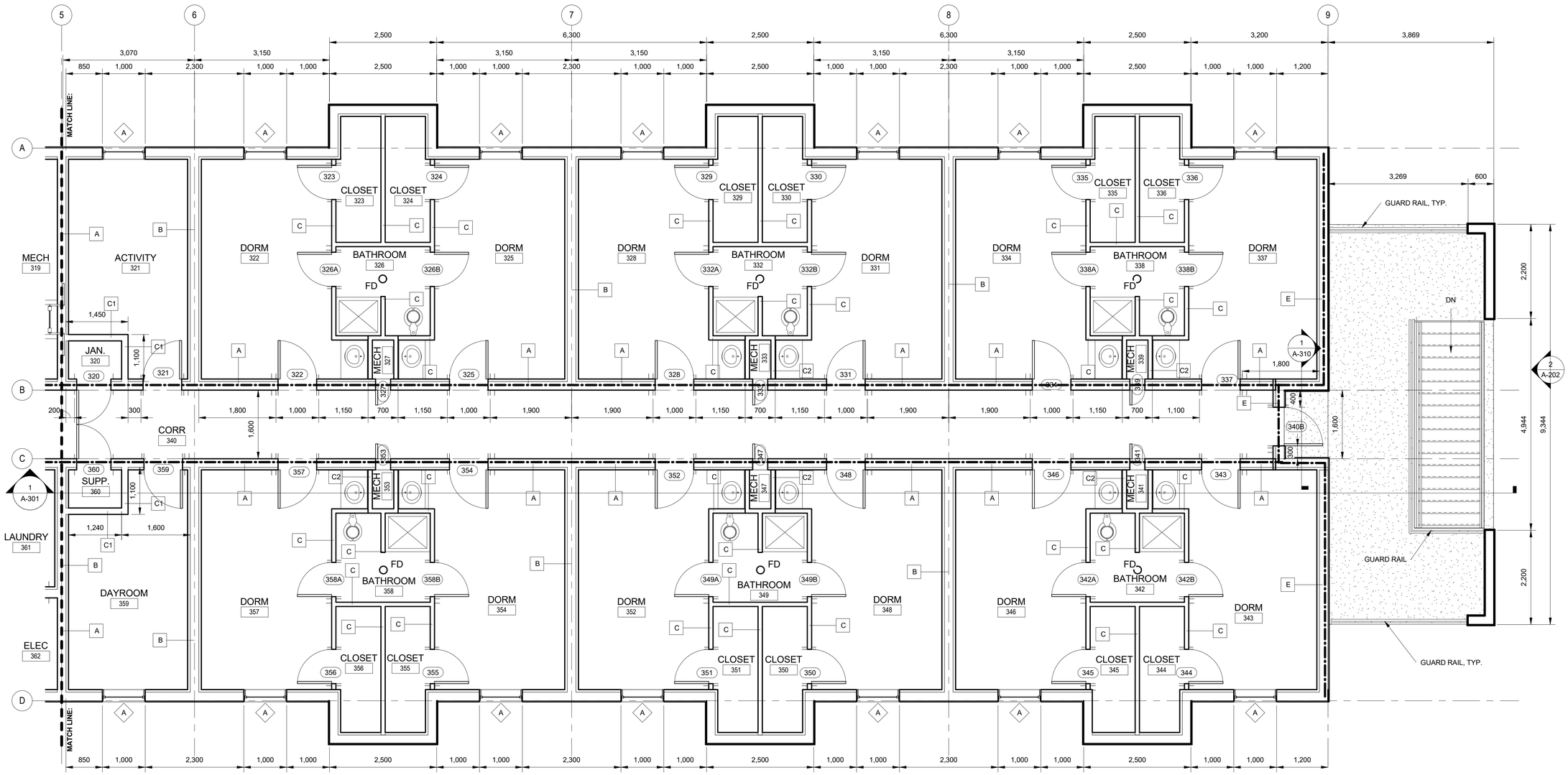

1 THIRD FLOOR PLAN - AREA "B"

1 : 50

GENERAL NOTES:

1. PROVIDE BLOCKING IN GALVANIZED METAL STUD WALLS WITH GALVANIZED METAL STUD BLOCKING TO SUPPORT WALL MOUNTED EQUIPMENT.
2. VERIFY STRUCTURAL FOR COLUMN SPACING.
3. SEAL ALL WALL PENETRATIONS. PENETRATIONS SEAL SHALL MATCH FIRE RATING OF WALL.
4. COORDINATE WITH STRUCTURAL, PLUMBING, MECHANICAL, ELECTRICAL, FOR ASSOCIATED WORK UNLESS NOTED OTHERWISE.
5. SEE SHEET A-603, 604, and 605 FOR DOOR & WINDOW SCHEDULES AND EXIT SIGNS .
6. SEE SHEETS A-602 & A-603 FOR DOOR AND WINDOW DETAILS.
7. ALL DOOR OPENINGS SHALL BE 4" OFF ADJACENT STUD WALLS ON THE HINGE SIDE OF DOOR UNLESS NOTED OTHERWISE.
8. AVERAGE EXTERIOR WALL "R" VALUE = R19.
9. DIMENSIONS ARE OUTSIDE FACE OF MASONRY. DOES NOT INCLUDE STUCCO FINISH ON OUTSIDE FACE OF MASONRY.
10. SEE STRUCTURAL DRAWINGS FOR MASONRY CONTROL JOINTS (MCJ)
11. DOOR AND WINDOW DIMENSIONS SHOWN ARE ROUGH OPENING MASONRY DIMENSIONS.
12. ALL WALLS SHALL HAVE A STC 50 RATING.
13. FURNISHING (DESKS, CHAIRS, STORAGE CABINETS, ETC) NOT IN CONTRACT. FURNITURE SHALL BE GOVERNMENT FURNISHED AND CONTRACTOR INSTALLED (GFCI).
14. PORCELAIN TILE SHALL BE 200MM X 200MM. SEE COLOR SCHEDULE 09 06 90.
15. RESTROOMS SHALL HAVE CEMENTIOUS BACKER BOARD BEHIND WALL TILE FINISHES.
16. SEE SHEET A601 FOR WALL TYPES.
17. PLAN NORTH IS FOR REFERENCE ONLY AND IS BASED ON BUILDING D. SEE CIVIL FOR BUILDING ORIENTATION.

LEGEND

- PROPOSED CONCRETE SIDEWALK
- 16 GWB. BOTH SIDES ON 92 METAL STUD @ 600 O.C.
- <A> WINDOW OR LOUVER
- 1 DOOR
- PLUMBING FIXTURES
- WATER HEATER
- PLUMBING VENT
- MISCELLANEOUS FURNITURE ITEMS (NIC)
- X X ROOF SLOPE INDICATOR
- 1 HOUR FIRE RATED WALL
- SH WOODEN SHELVES (30.48cm WIDE)
- ROD CLOSET ROD TYPE 304 STAINLESS STEEL ◯ 1-1/4" WITH STAINLESS STEEL MOUNTING HARD WARE. LENGTH 72"

KEY PLAN

PLAN NORTH

0 50 100

SCALE: 1:50

US Army Corps of Engineers®

MARK	DESCRIPTION	DATE

DESIGNED BY: T.D.W.
DRAWN BY: T.D.W.
CHECKED BY: J.M.C.
SUBMITTED BY: C.
SIZE: ANSI D
ISSUE DATE: FEBRUARY 2019
SOLICITATION NO.: W912781R0028
CONTRACT NO.:
PROJECT NUMBER: M07TEC44
FILE NAME: M07TE0144

U.S. ARMY CORPS OF ENGINEERS
MOBILE DISTRICT
MOBILE, ALABAMA

SOTO CANO AIR BASE, HONDURAS
UNACCOMPANIED ENLISTED PERSONNEL HOUSING

ENLARGED THIRD FLOOR PLAN - AREA "B"

SHEET ID

A-109

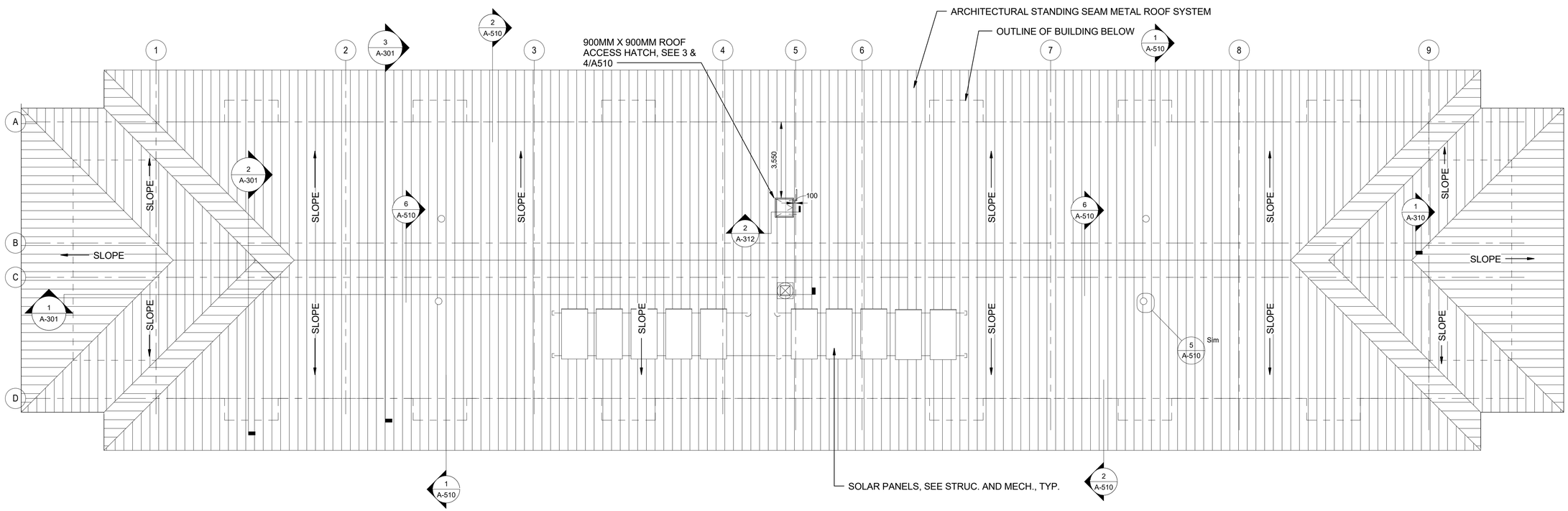

1 ROOF PLAN
1 : 100

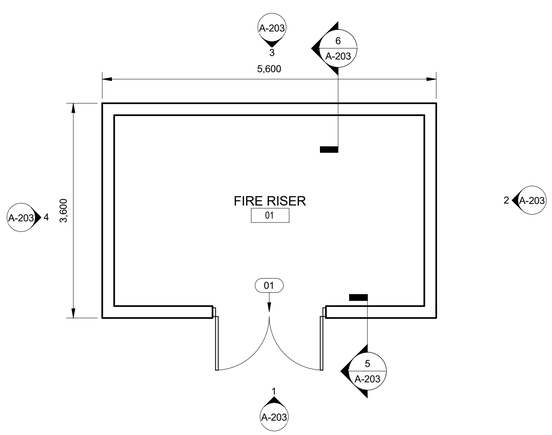

2 FIRE PUMP BUILDING PLAN
1 : 50

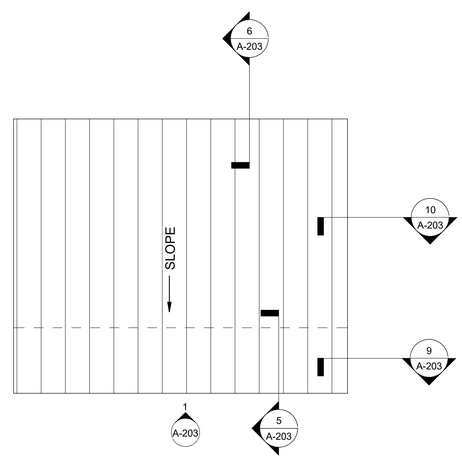

3 FIRE PUMP BUILDING ROOF PLAN
1 : 50

GENERAL NOTES:

1. ALL DIMENSIONS ARE FROM EDGE OF ROOF TO EDGE OF ROOF, OR WHERE APPLICABLE, COLUMN GRIDLINE.
2. ALL ROOF SLOPES ARE 2.01/12, UNLESS NOTED OTHERWISE.
3. SEE STRUCTURAL FOR COLUMN GRID SPACING.
4. SEAL ALL ROOF PENETRATIONS.
5. DIMENSIONS FOR LOCATIONS OF ROOF LIGHTS SHALL BE FROM CENTERLINE OF COLUMN TO CENTERLINE OF UNIT, OR, FROM CENTERLINE TO CENTERLINE OF EACH UNIT, VERT. & HORIZ. AS SHOWN IN PLAN, UNLESS NOTED OTHERWISE.
6. AVERAGE ROOF "R" VALUE = R30.
7. PROVIDE MANUFACTURERS STANDARD PREFINISHED TRIM, RIDGE CAPS AND PREFINISHED FLASHING. COLOR SHALL MATCH ROOF.

LEGEND

- PROPOSED CONCRETE SIDEWALK
- 16 GWB. BOTH SIDES ON 92 METAL STUD @ 600 O.C.
- WINDOW OR LOUVER
- DOOR
- PLUMBING FIXTURES
- WATER HEATER
- PLUMBING VENT
- MISCELLANEOUS FURNITURE ITEMS (NIC)
- ROOF SLOPE INDICATOR
- 1 HOUR FIRE RATED WALL
- SH — WOODEN SHELVES (30.48cm WIDE)
- ROD — CLOSET ROD TYPE 304 STAINLESS STEEL □1-1/4" WITH STAINLESS STEEL MOUNTING HARD WARE. LENGTH 72"

0 100 200
SCALE: 1:100

PLAN NORTH

US Army Corps of Engineers®

MARK	DESCRIPTION	DATE

ISSUE DATE: FEBRUARY 2019
SOLICITATION NO.: W9127819R0028
CONTRACT NO.:
PROJECT NUMBER: M07TE044
FILE NAME: M07TE0144

DESIGNED BY: T.D.W.
DRAWN BY: T.D.W.
CHECKED BY: J.M.C.
SUBMITTED BY: C.C.
SIZE: ANSI D

U.S. ARMY CORPS OF ENGINEERS
MOBILE DISTRICT
MOBILE, ALABAMA

SOTO CANO AIR BASE, HONDURAS
UNACCOMPANIED ENLISTED PERSONNEL HOUSING

ROOF PLAN, RISER AND ROOF PLAN

SHEET ID
A-111

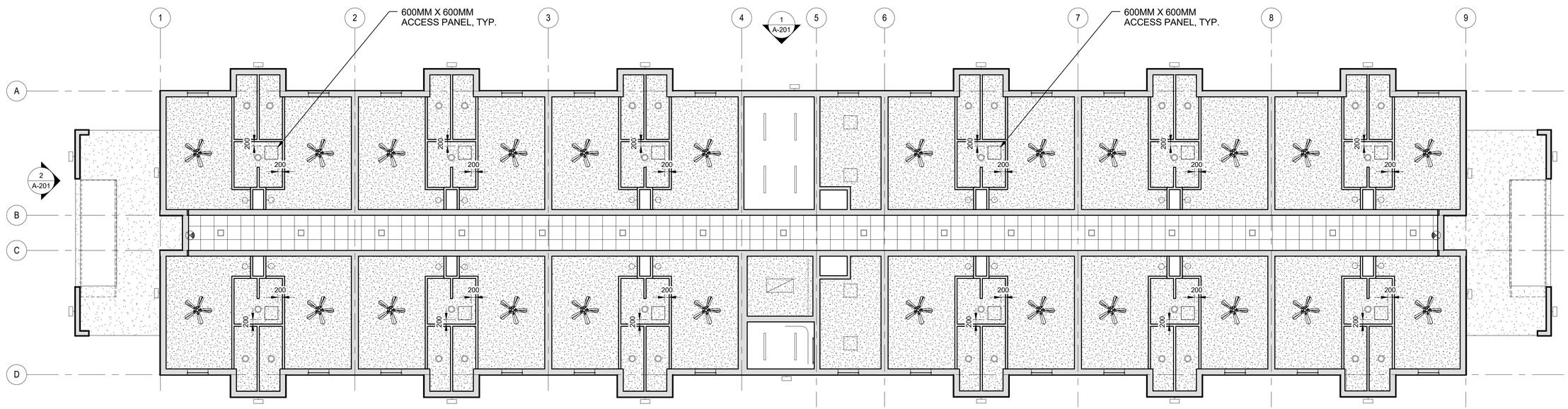

1 FIRST FLOOR REFLECTED CEILING PLAN
1 : 96

GENERAL NOTES:

1. PROVIDE BLOCKING IN CEILING AS REQUIRED TO SUPPORT CEILING MOUNTED EQUIPMENT.
2 SEE STRUCTURAL FOR COLUMN GRID SPACING.
3. SEAL ALL PENETRATIONS PER SPECIFICATIONS.
4. ALL CEILING HEIGHTS ARE 2700MM A.F.F. IN ROOMS, COORIDOR CEILINGS 2700MM A.F.F UNLESS NOTED OTHERWISE.
5. ROOM NAMES OMITTED FOR CLARITY.
6. CONTRACTOR SHALL COORDINATE LIGHT FIXTURES WITH DIFFUSER LOCATIONS.
7. CEILING SHALL HAVE STC 50 RATING. ACCUSTICAL CEILING TILES SHALL BE INSTALLLED

REFLECTED CEILING PLAN:

- 2'-0" x 2'-0" ACT
- GWB CEILING
- EXPOSED STRUCTURE (PAINTED)
- 1' x 4' DOWNLIGHT
- 2' x 4' DOWNLIGHT
- 1' X 8' PENDANT
- 1' X 1' DOWNLIGHT
- EXTERIOR LIGHT FIXTURE
- RECESSED CAN FIXTURE
- SMOKE DETECTOR (SEE FA DWGS)
- EXIT SIGN LOCATION (SEE FA DWGS)
- DIFFUSER
- RETURN
- 1'-0" A.F.F. — CEILING HEIGHT, ABOVE FIN. FLR.

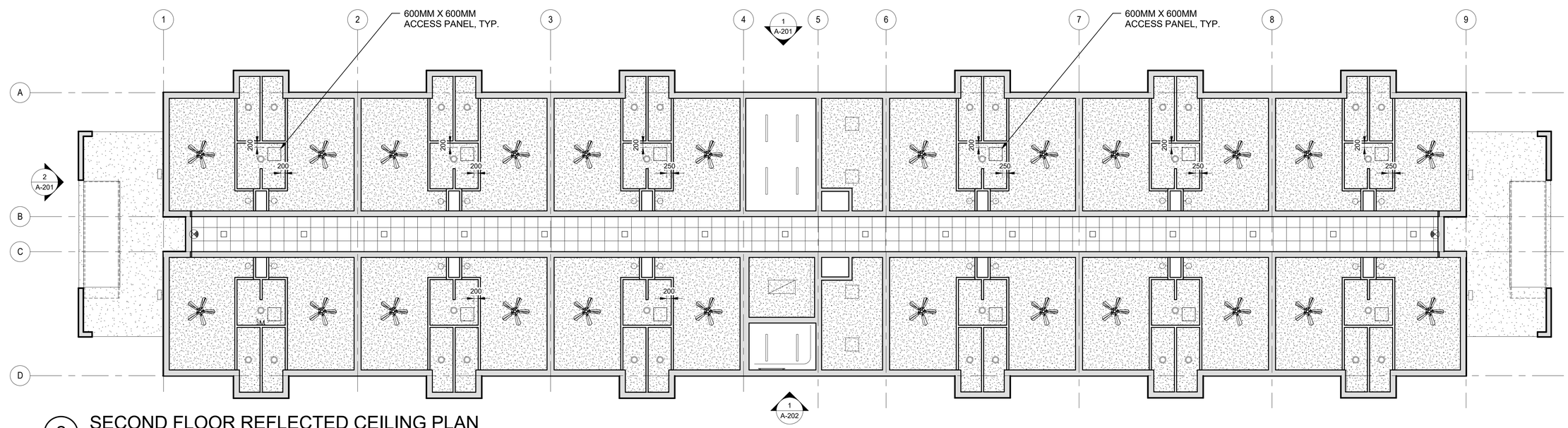

2 SECOND FLOOR REFLECTED CEILING PLAN
1 : 96

US Army Corps of Engineers®

MARK	DESCRIPTION	DATE

DESIGNED BY: T.D.W.	ISSUE DATE: FEBRUARY 2019
DRAWN BY: T.D.W.	SOLICITATION NO.: W912781R0028
CHECKED BY: J.M.C.	CONTRACT NO.:
SUBMITTED BY: C.C.A.	PROJECT NUMBER: M077EC44
SIZE: ANSI D	FILE NAME: M077E0144

U.S. ARMY CORPS OF ENGINEERS
MOBILE DISTRICT
MOBILE, ALABAMA

SOTO CANO AIR BASE, HONDURAS
UNACCOMPANIED ENLISTED PERSONNEL HOUSING

FIRST AND SECOND FLOOR REFLECTED CEILING PLAN

SHEET ID
A-112

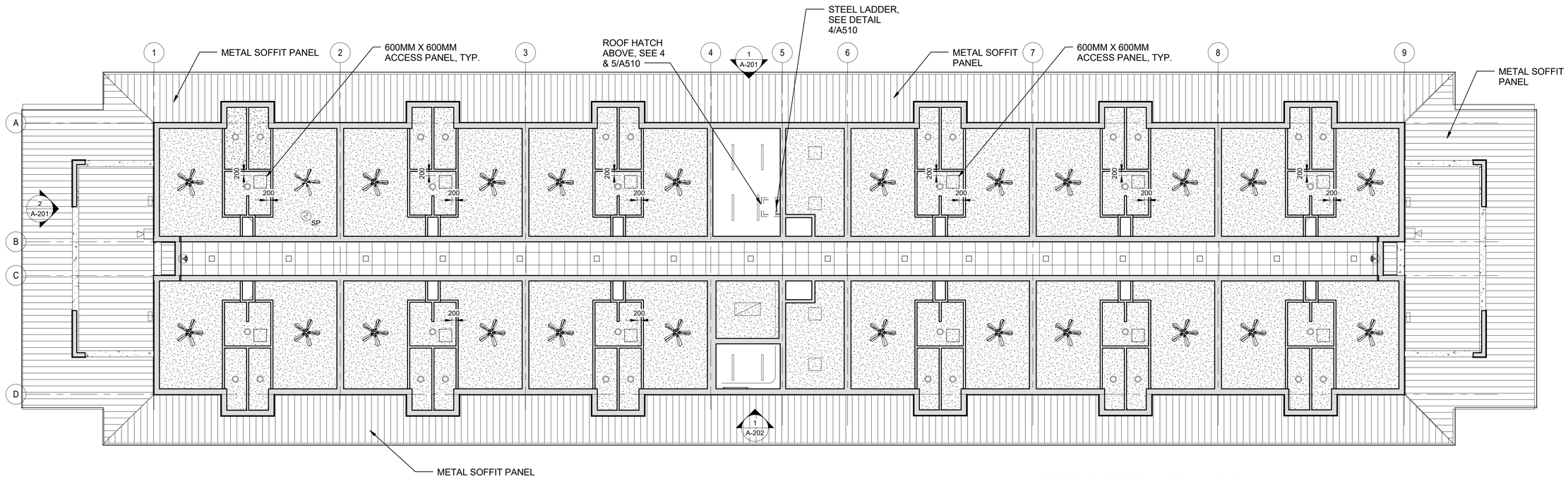

1 THIRD FLOOR REFLECTED CEILING PLAN
1 : 100

GENERAL NOTES:

1. PROVIDE BLOCKING IN CEILING AS REQUIRED TO SUPPORT CEILING MOUNTED EQUIPMENT.
2. SEE STRUCTURAL FOR COLUMN GRID SPACING.
3. SEAL ALL PENETRATIONS PER SPECIFICATIONS.
4. ALL CEILING HEIGHTS ARE 2700MM A.F.F. IN ROOMS, COORIDOR CEILINGS 2700MM A.F.F UNLESS NOTED OTHERWISE.
5. ROOM NAMES OMITTED FOR CLARITY.
6. CONTRACTOR SHALL COORDINATE LIGHT FIXTURES WITH DIFFUSER LOCATIONS.
7. CEILING SHALL HAVE STC 50 RATING. ACCUSTICAL CEILING TILES SHALL BE INSTALLLED

REFLECTED CEILING PLAN:

- 2'-0" x 2'-0" ACT
- GWB CEILING
- EXPOSED STRUCTURE (PAINTED)
- 1' x 4' DOWNLIGHT
- 2' x 4' DOWNLIGHT
- 1' X 8' PENDANT
- 1' X 1' DOWNLIGHT
- EXTERIOR LIGHT FIXTURE
- RECESSED CAN FIXTURE
- SMOKE DETECTOR (SEE FA DWGS)
- EXIT SIGN LOCATION (SEE FA DWGS)
- DIFFUSER
- RETURN
- 1'-0" A.F.F. — CEILING HEIGHT, ABOVE FIN. FLR.

US Army Corps of Engineers®

MARK	DESCRIPTION	DATE

DESIGNED BY: T.D.W.	ISSUE DATE: FEBRUARY 2019
DRAWN BY: T.D.W.	SOLICITATION NO.: W9127819R0028
CHECKED BY: J.M.C.	CONTRACT NO.:
SUBMITTED BY: C.A.C.	PROJECT NUMBER: M07TEC44
SIZE: ANSI D	FILE NAME: M07TE144

U.S. ARMY CORPS OF ENGINEERS
MOBILE DISTRICT
MOBILE, ALABAMA

SOTO CANO AIR BASE, HONDURAS
UNACCOMPANIED ENLISTED PERSONNEL HOUSING

THIRD FLOOR REFLECTED CEILING PLAN

SHEET ID
A-113

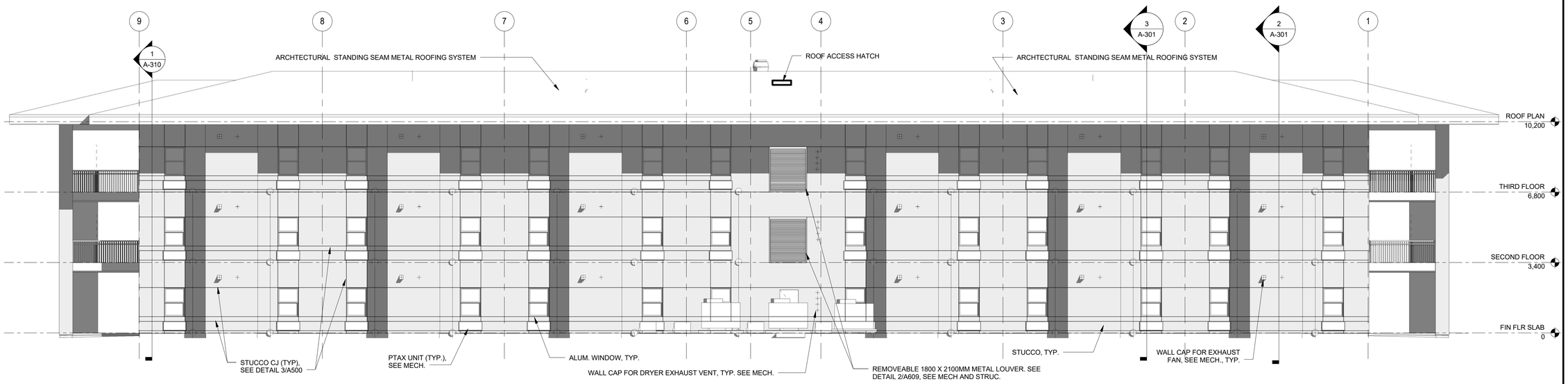

1 North Elevation
1 : 100

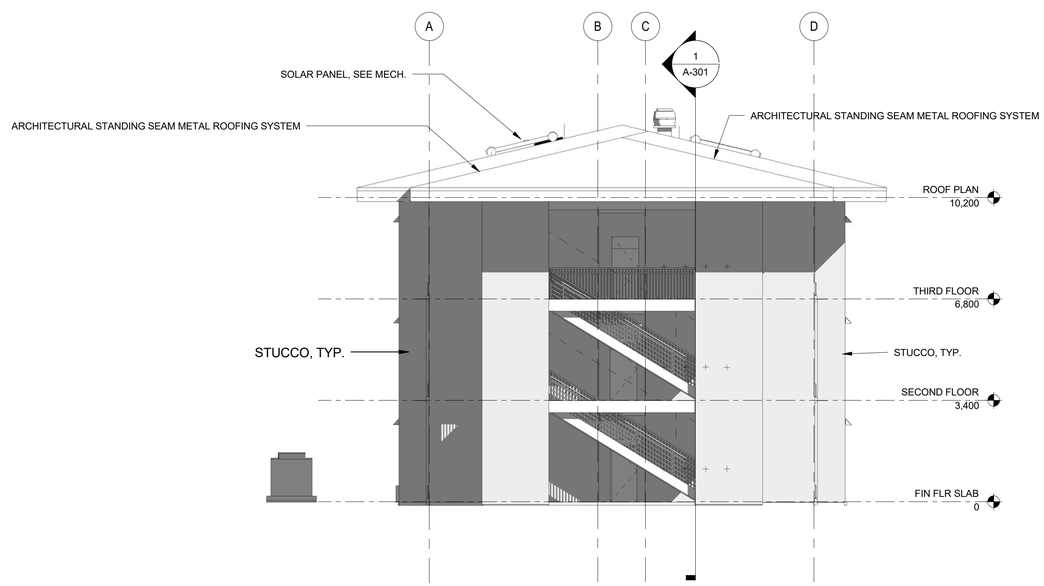

2 West Elevation
1 : 100

US Army Corps of Engineers®

MARK	DESCRIPTION	DATE

DESIGNED BY: T.D.W.
DRAWN BY: T.D.W.
CHECKED BY: J.M.C.
SUBMITTED BY: C.F.
SIZE: ANSI D
ISSUE DATE: FEBRUARY 2019
SOLICITATION NO.: W9127819R0028
CONTRACT NO.:
PROJECT NUMBER: M07TE0144
FILE NAME: M07TE0144

U.S. ARMY CORPS OF ENGINEERS
MOBILE DISTRICT
MOBILE, ALABAMA

SOTO CANO AIR BASE, HONDURAS
UNACCOMPANIED ENLISTED PERSONNEL HOUSING

NORTH AND WEST ELEVATIONS

SHEET ID
A-201

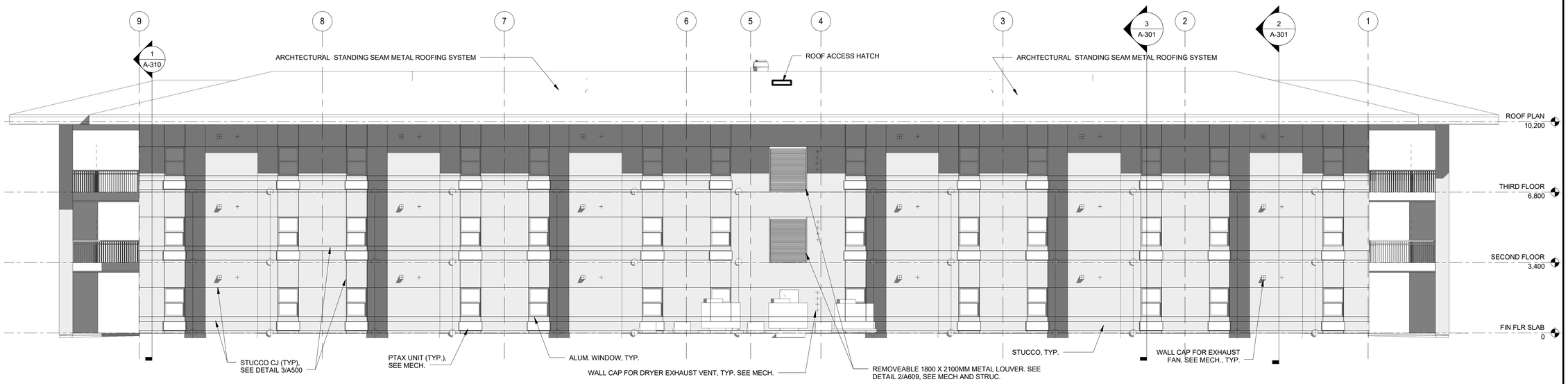

1 North Elevation
1 : 100

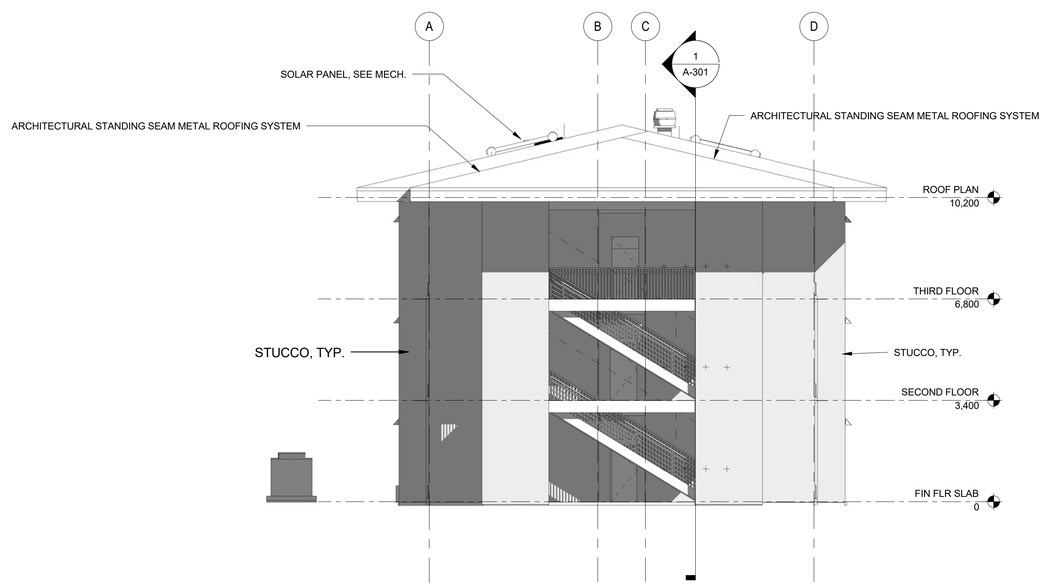

2 West Elevation
1 : 100

US Army Corps of Engineers®

MARK	DESCRIPTION	DATE

DESIGNED BY: T.D.W.
DRAWN BY: T.D.W.
CHECKED BY: J.M.C.
SUBMITTED BY: C.F.
SIZE: ANSI D
ISSUE DATE: FEBRUARY 2019
SOLICITATION NO.: W9127819R0028
CONTRACT NO.:
PROJECT NUMBER: M07TE0144
FILE NAME: M07TE0144

U.S. ARMY CORPS OF ENGINEERS
MOBILE DISTRICT
MOBILE, ALABAMA

SOTO CANO AIR BASE, HONDURAS
UNACCOMPANIED ENLISTED PERSONNEL HOUSING

NORTH AND WEST ELEVATIONS

SHEET ID
A-201

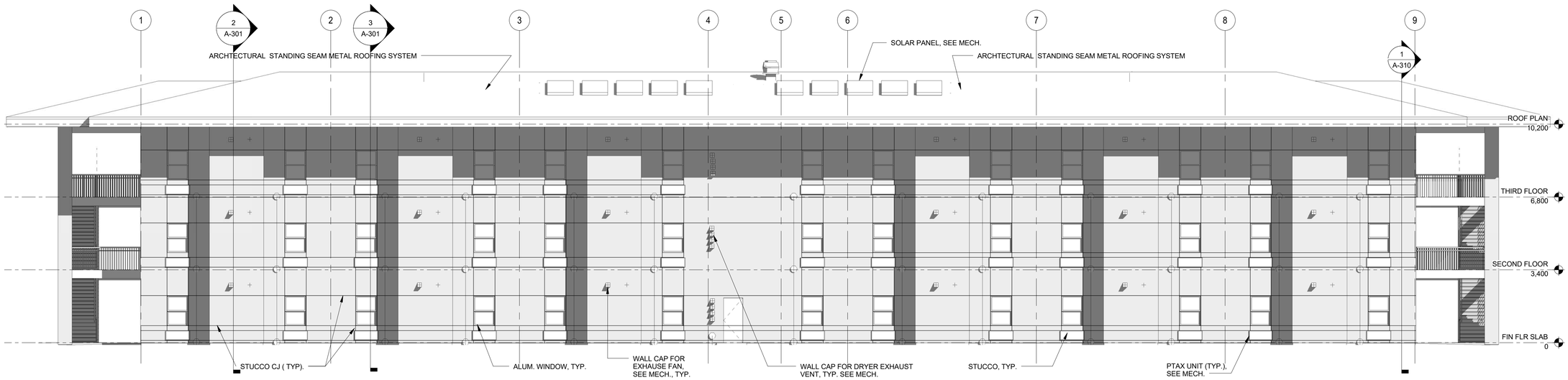

1 South Elevation
1 : 100

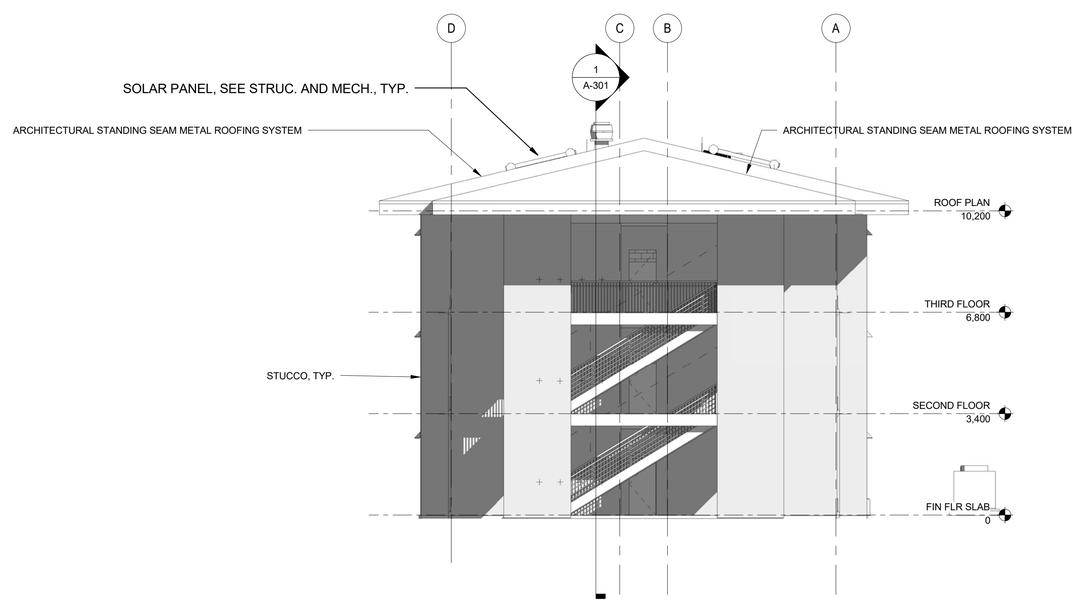

2 East Elevation
1 : 100

US Army Corps of Engineers®

MARK	DESCRIPTION	DATE

ISSUE DATE: FEBRUARY 2019
SOLICITATION NO.: W912781R0028
CONTRACT NO.:
PROJECT NUMBER: M077EC44

DESIGNED BY: T.D.W.
DRAWN BY: T.D.W.
CHECKED BY: J.M.C.
SUBMITTED BY:
SIZE: ANSI D
FILE NAME: M077EU44

U.S. ARMY CORPS OF ENGINEERS
MOBILE DISTRICT
MOBILE, ALABAMA

SOTO CANO AIR BASE, HONDURAS
UNACCOMPANIED ENLISTED PERSONNEL HOUSING

SOUTH AND EAST ELEVATIONS

SHEET ID
A-202

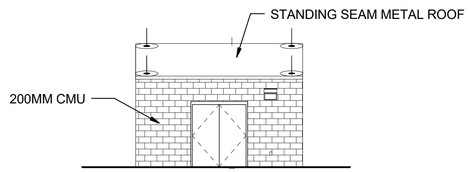

1 Elevation 1 - a
1 : 100

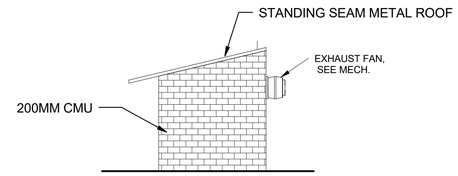

2 Elevation 2 - a
1 : 100

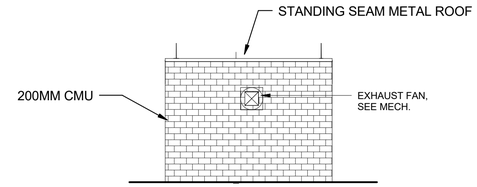

3 Elevation 3 - a
1 : 100

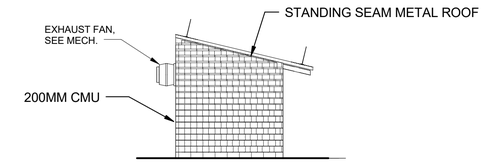

4 Elevation 4 - a
1 : 100

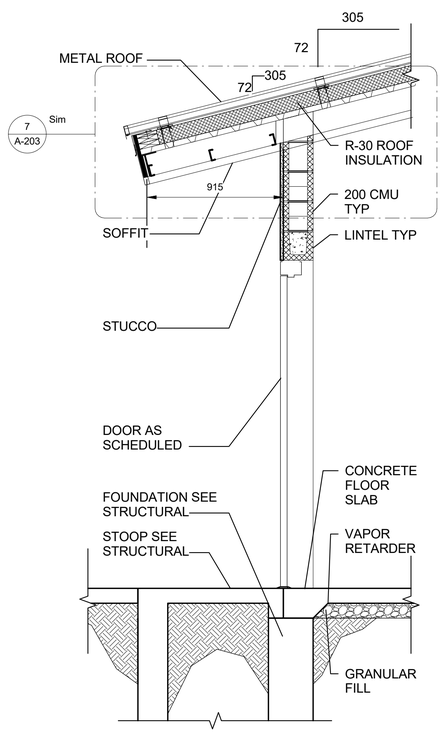

5 WALL SECTION
1 : 20

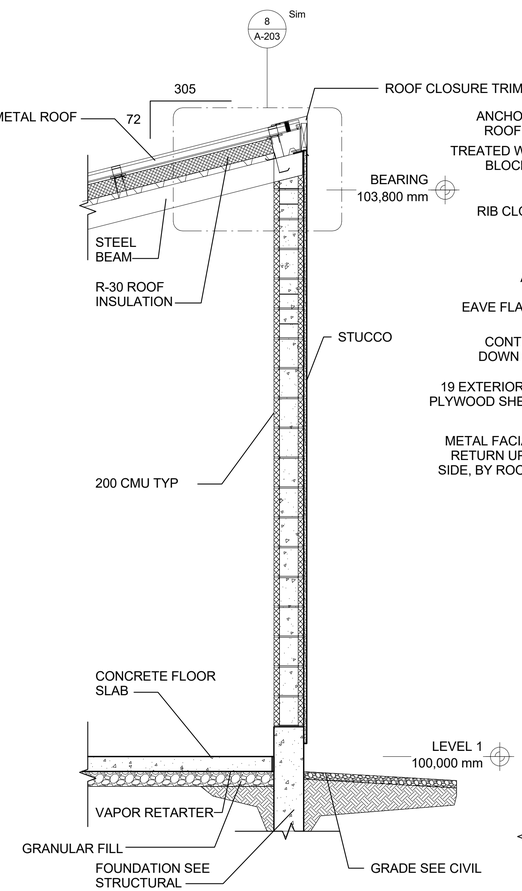

6 WALL SECTION
1 : 20

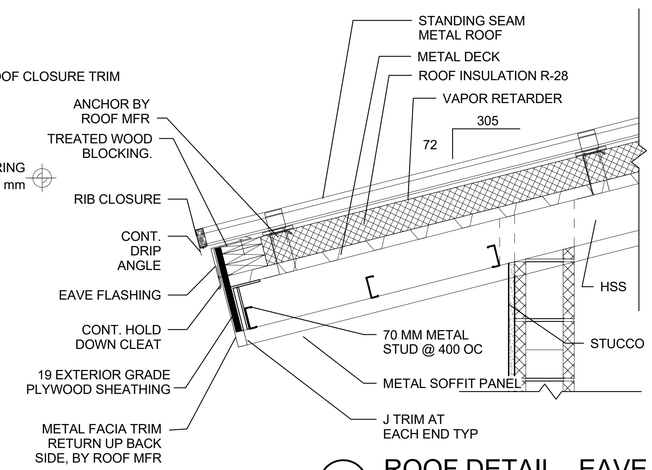

7 ROOF DETAIL - EAVE
1 : 10

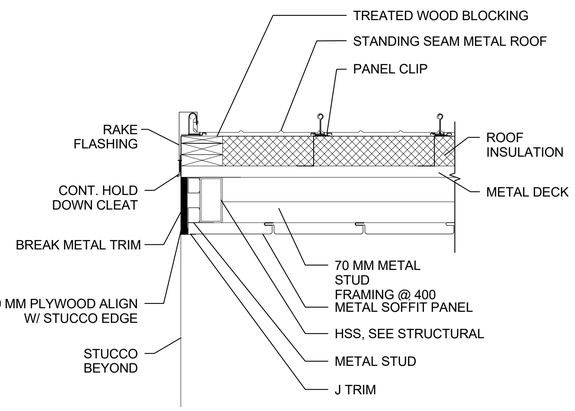

9 ROOF RAKE DETAIL-SOFFIT
1 : 10

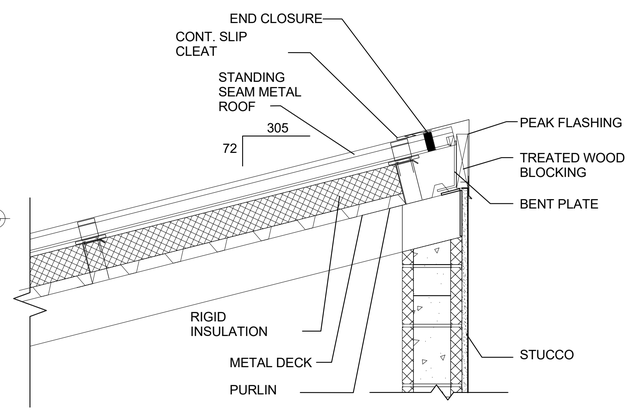

8 ROOF DETAIL - PEAK
1 : 10

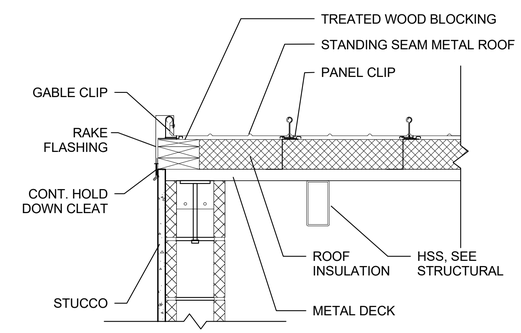

10 ROOF RAKE DETAIL
1 : 10

US Army Corps of Engineers®

MARK	DESCRIPTION	DATE

DESIGNED BY: T.D.W.	ISSUE DATE: FEBRUARY 2019
DRAWN BY: T.D.W.	SOLICITATION NO.: W912781R0028
CHECKED BY: J.M.C.	CONTRACT NO.:
SUBMITTED BY: C.A.	PROJECT NUMBER: M077EC44
SIZE: ANSI D	FILE NAME: M077E0144

U.S. ARMY CORPS OF ENGINEERS
MOBILE DISTRICT
MOBILE, ALABAMA

SOTO CANO AIR BASE, HONDURAS
UNACCOMPANIED ENLISTED PERSONNEL HOUSING

FIRE PUMPBUILDING
WALL SECTIONS AND DETAILS

SHEET ID
A-203

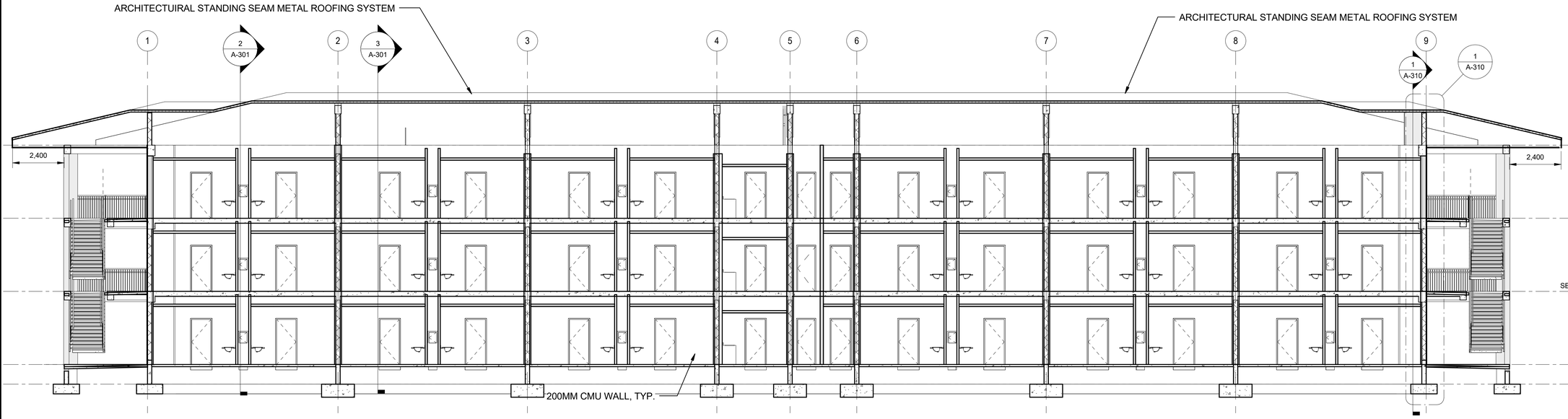

1 BUILDING SECTION
1 : 100

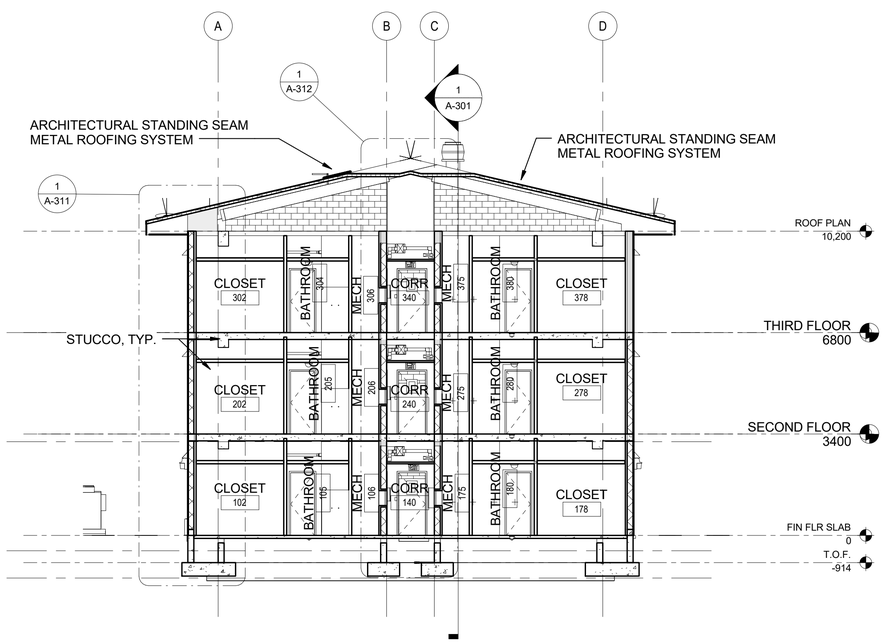

2 BUILDING SECTION
1 : 100

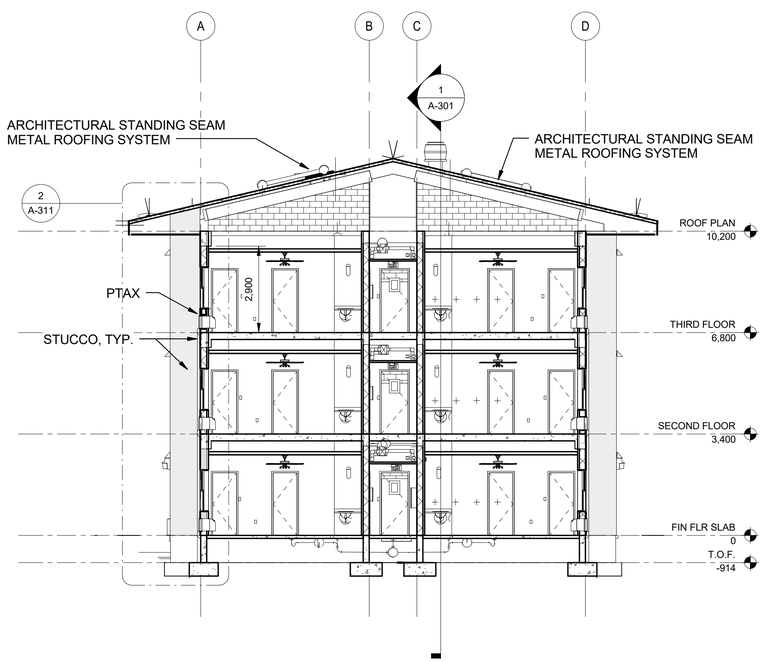

3 BUILDING SECTION
1 : 100

US Army Corps of Engineers®

MARK	DESCRIPTION	DATE

DESIGNED BY: T.D.W.
DRAWN BY: T.D.W.
CHECKED BY: J.M.C.
SUBMITTED BY: C.C.
SIZE: ANSI D
ISSUE DATE: FEBRUARY 2019
SOLICITATION NO.: W9127819R0028
CONTRACT NO.:
PROJECT NUMBER: M077EC44
FILE NAME: M077EC44

U.S. ARMY CORPS OF ENGINEERS
MOBILE DISTRICT
MOBILE, ALABAMA

SOTO CANO AIR BASE, HONDURAS
UNACCOMPANIED ENLISTED PERSONNEL HOUSING

BUILDING CROSS SECTION

SHEET ID
A-301

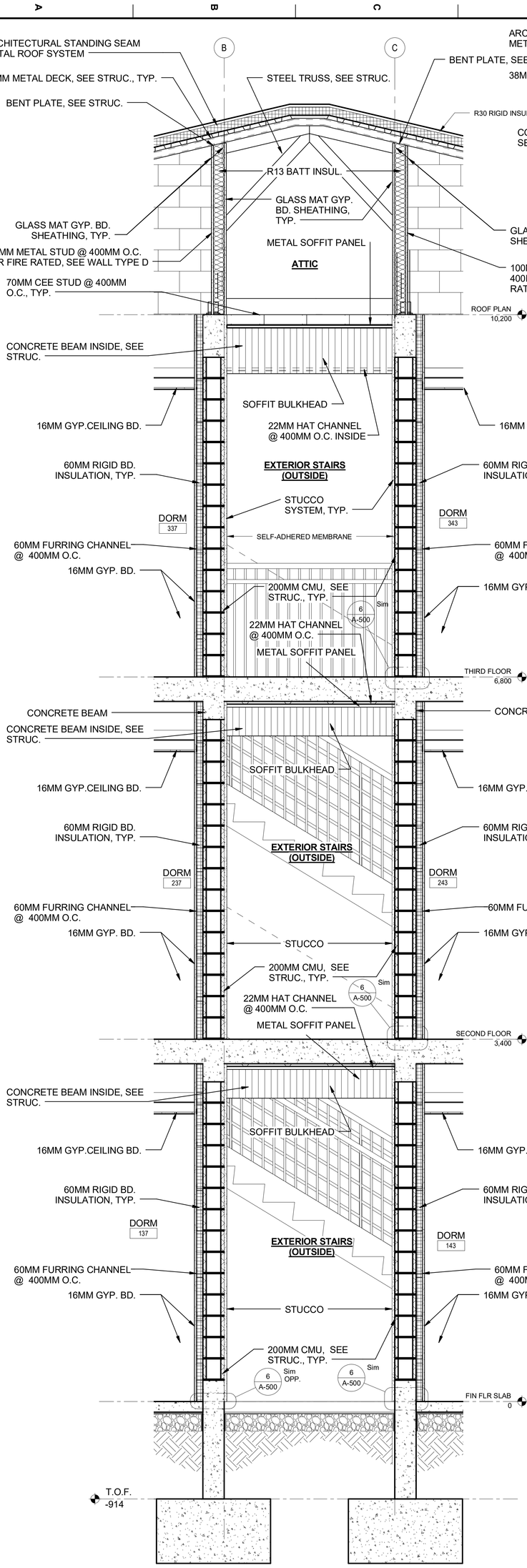

1 WALL SECTION
1 : 20

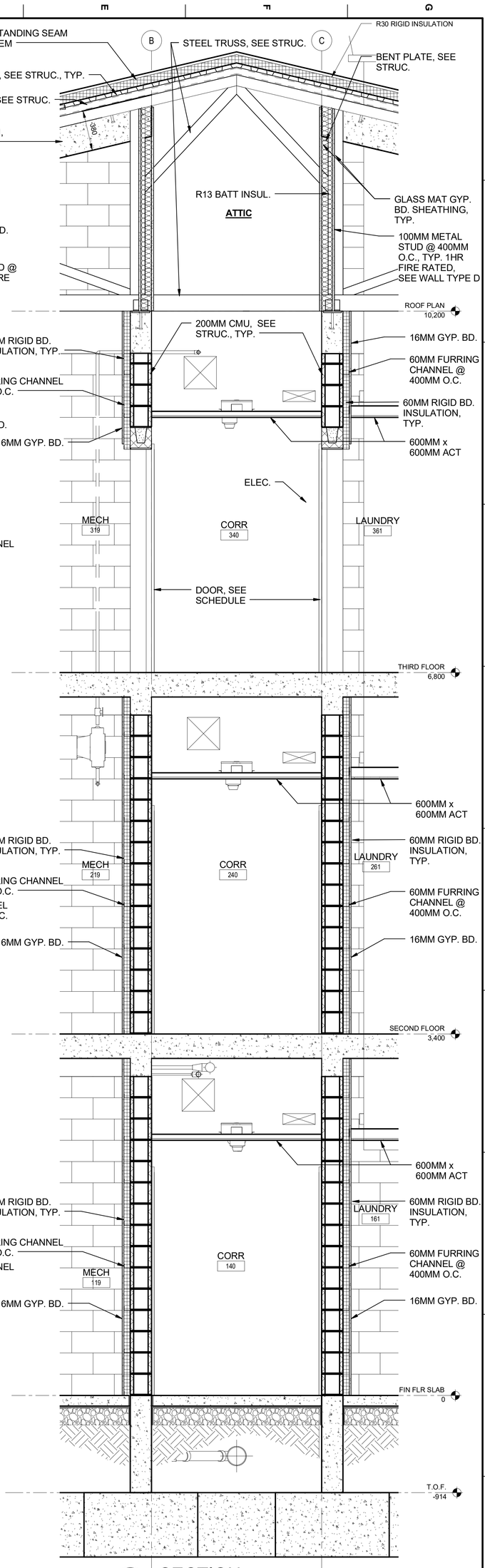

2 SECTION
1 : 20

SHEET ID A-310	SOTO CANO AIR BASE, HONDURAS UNACCOMPANIED ENLISTED PERSONNEL HOUSING WALL SECTIONS	U.S. ARMY CORPS OF ENGINEERS MOBILE DISTRICT MOBILE, ALABAMA	DESIGNED BY: T.D.W. / ISSUE DATE: FEBRUAURY 2019 DRAWN BY: T.D.W. / SOLICITATION NO.: W9127819R0028 CHECKED BY: J.M.C. / CONTRACT NO.: SUBMITTED BY: C.A. / PROJECT NUMBER: M017EC44 SIZE: ANSI D / FILE NAME: M017EU44

MARK	DESCRIPTION	DATE

US Army Corps of Engineers

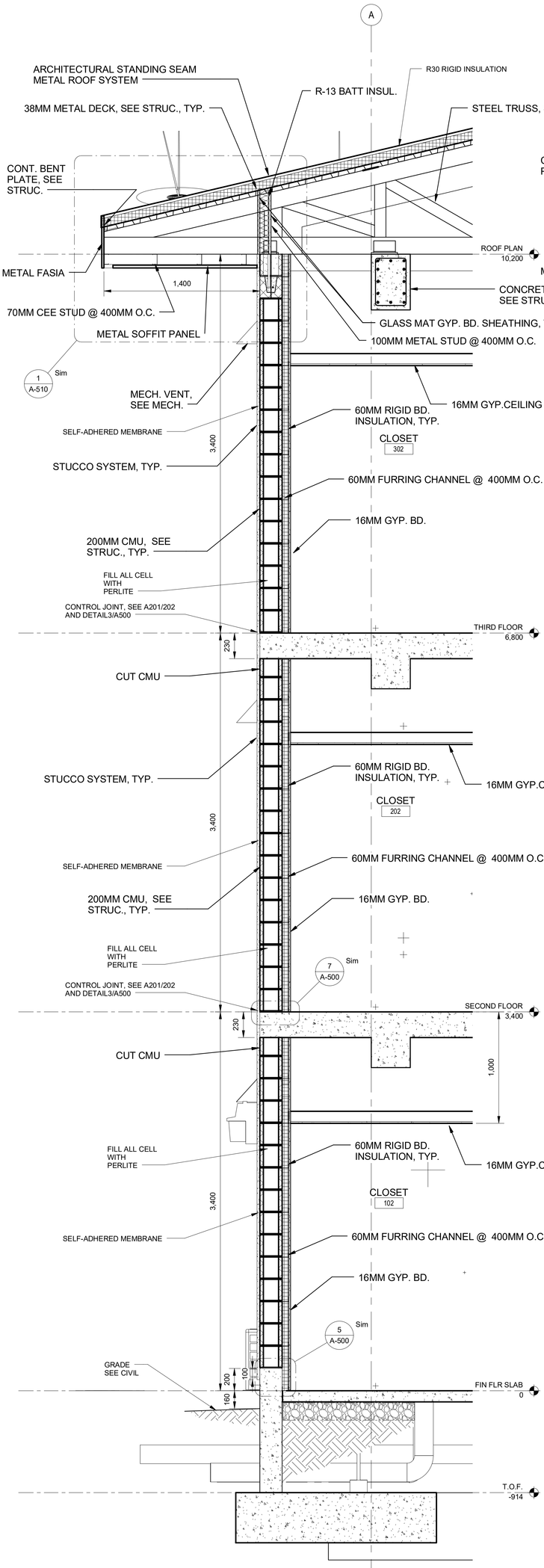

1 WALL SECTION
1 : 20

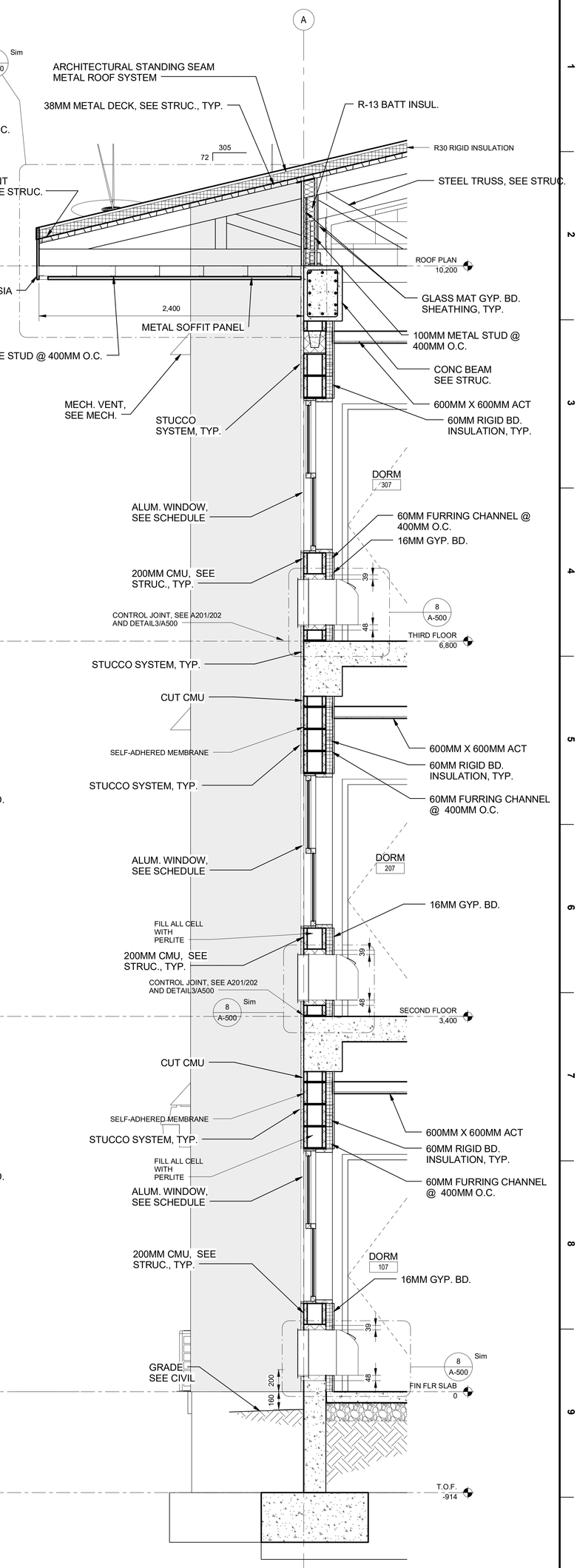

2 WALL SECTION
1 : 20

SHEET ID A-311	SOTO CANO AIR BASE, HONDURAS UNACCOMPANIED ENLISTED PERSONNEL HOUSING WALL SECTIONS	U.S. ARMY CORPS OF ENGINEERS MOBILE DISTRICT MOBILE, ALABAMA	DESIGNED BY: T.D.W. DRAWN BY: T.D.W. CHECKED BY: J.M.C. SUBMITTED BY: C.A. SIZE: ANSI D FILE NAME: M017EU44	ISSUE DATE: FEBRUAURY 2019 SOLICITATION NO.: W9127819R0028 CONTRACT NO.: PROJECT NUMBER: M017EC44	MARK / DESCRIPTION / DATE

US Army Corps of Engineers

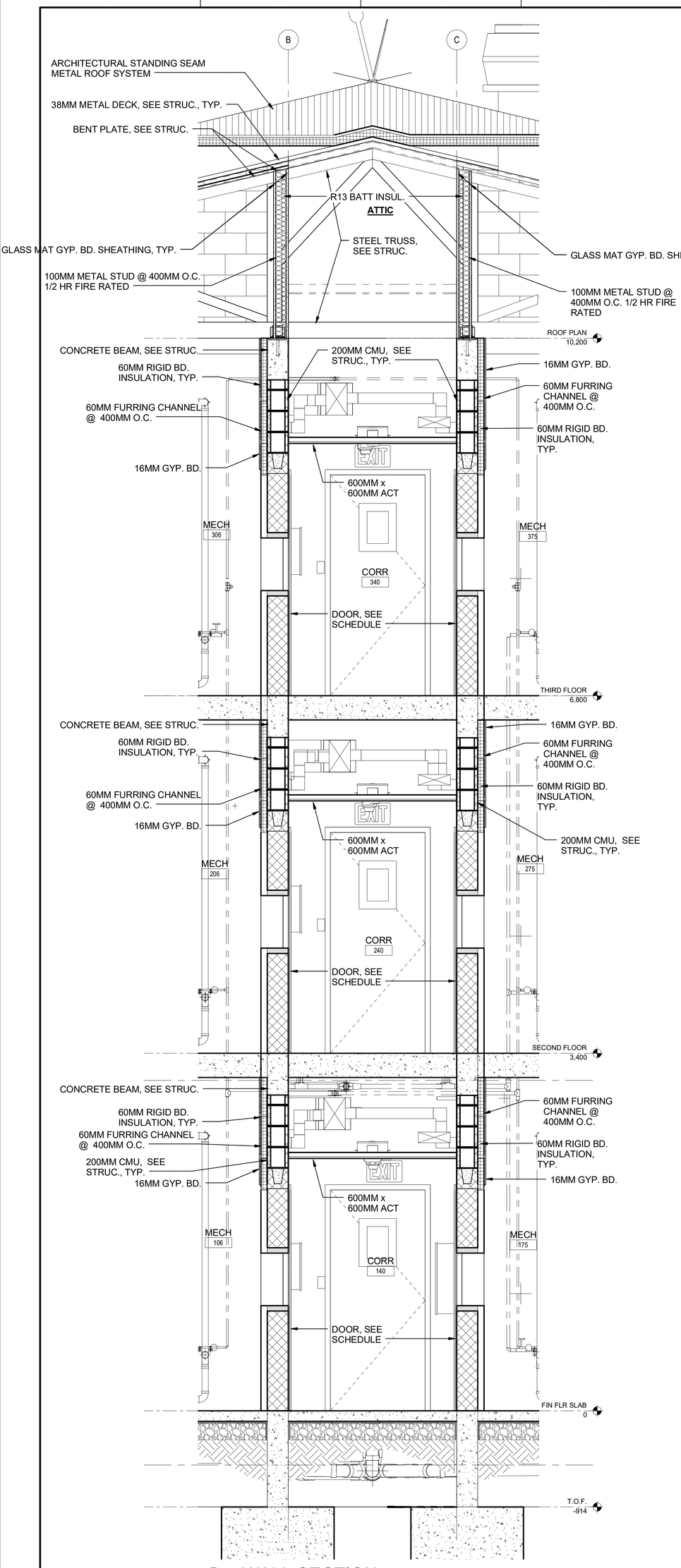

1 WALL SECTION
1 : 20

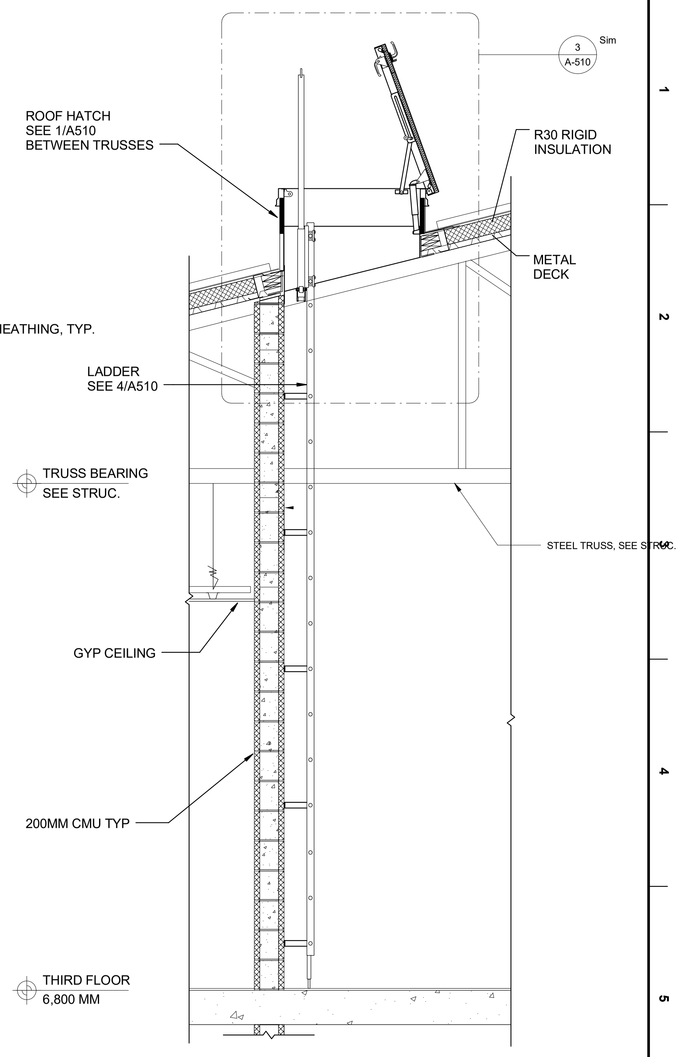

2 ROOF ACCESS HATCH SECTION
1 : 20

A-312 SHEET ID	SOTO CANO AIR BASE, HONDURAS UNACCOMPANIED ENLISTED PERSONNEL HOUSING WALL SECTIONS	U.S. ARMY CORPS OF ENGINEERS MOBILE DISTRICT MOBILE, ALABAMA	DESIGNED BY: T.D.W. / ISSUE DATE: FEBRUAURY 2019 DRAWN BY: T.D.W. / SOLICITATION NO.: W9127819R0028 CHECKED BY: J.M.C. / CONTRACT NO.: SUBMITTED BY: C.A. / PROJECT NUMBER: M017EC44 SIZE: ANSI D / FILE NAME: M017EU44

MARK	DESCRIPTION	DATE

US Army Corps of Engineers

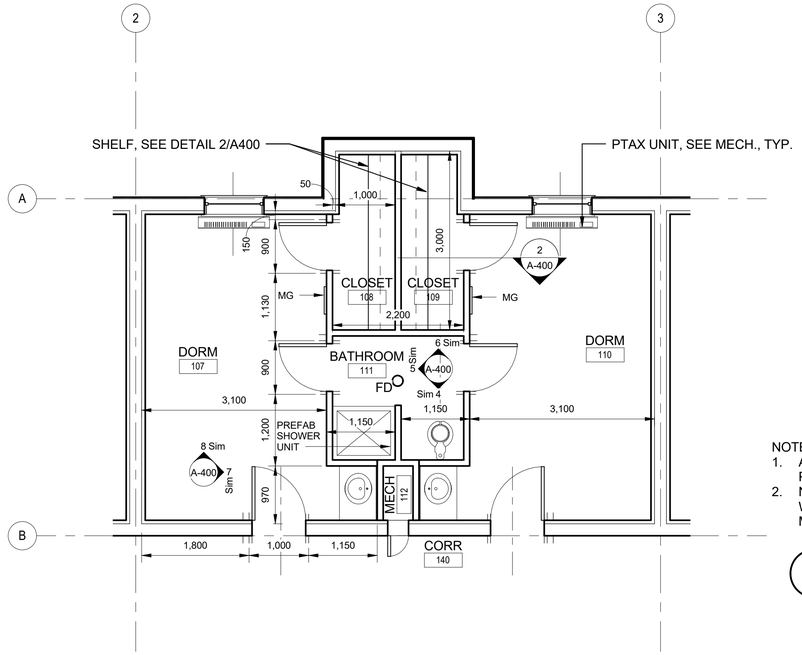

1 ENLARGED TYPICAL UNIT PLAN
1 : 50

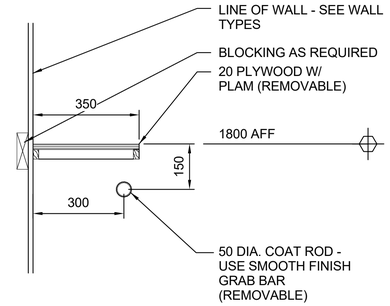

NOTE:
1. ALL MILLWORK TO BE CONSTRUCTED FROM PLYWOOD WITH PLAM FACES.
2. NO PRODUCT SUBSTITUTION OF PLYWOOD WILL BE ALLOWED, IE PARTICLE BOARD OR MEDIUM DENSITY FIBER BOARD.

2 CLOSET SHELF DETAIL
1 : 10

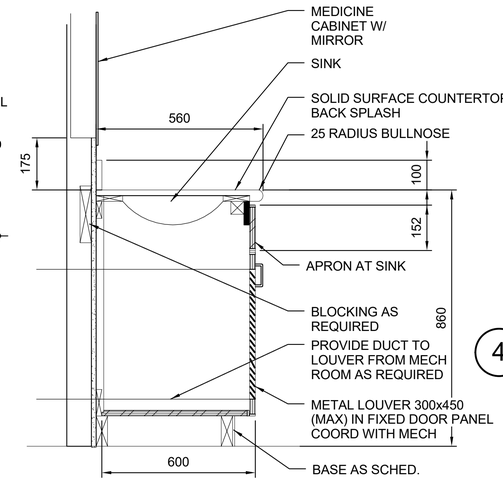

3 LAVITORY DETAIL
1 : 10

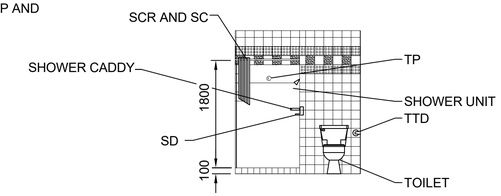

4 INTERIOR ELEVATION - BATHROOM A
1 : 50

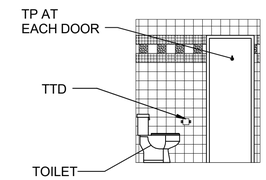

5 INTERIOR ELEVATION - BATHROOM B
1 : 50

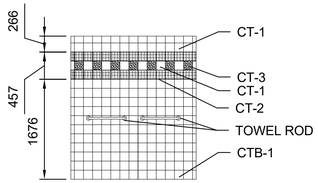

6 INTERIOR ELEVATION - BATHROOM C
1 : 50

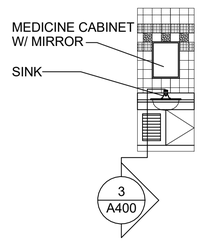

7 INTERIOR ELEVATION - LAVORTORY A
1 : 50

8 INTERIOR ELEVATION - LAVORTORY B
1 : 50

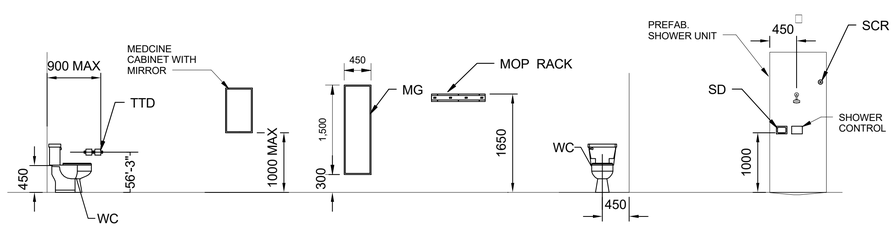

MOUNTING HEIGHTS
1 : 50

TOILET ACCESSORY LEGEND:

TP	TOWEL PIN
TTD	TOILET TISSUE DISPENSER
SCR	SHOWER CURTAIN ROD
SD	SOAP DISH
MG	MIRROR SIZE INDICATED ON DRAWINGS.
SC	SHOWER CURTAIN

NOTE:
PREFABRICATED SHOWER UNIT, SEE SPEC 22 00 00

US Army Corps of Engineers®

MARK	DESCRIPTION	DATE

DESIGNED BY: T.D.W.
DRAWN BY: T.D.W.
CHECKED BY: J.M.C.
SUBMITTED BY: C.C.A.
SIZE: ANSI D
ISSUE DATE: FEBRUARY 2019
SOLICITATION NO.: W912781R0028
CONTRACT NO.:
PROJECT NUMBER: M077EC44
FILE NAME: M077E144

U.S. ARMY CORPS OF ENGINEERS
MOBILE DISTRICT
MOBILE, ALABAMA

SOTO CANO AIR BASE, HONDURAS
UNACCOMPANIED ENLISTED PERSONNEL HOUSING

ENLARGED CORE PLANS

SHEET ID
A-400

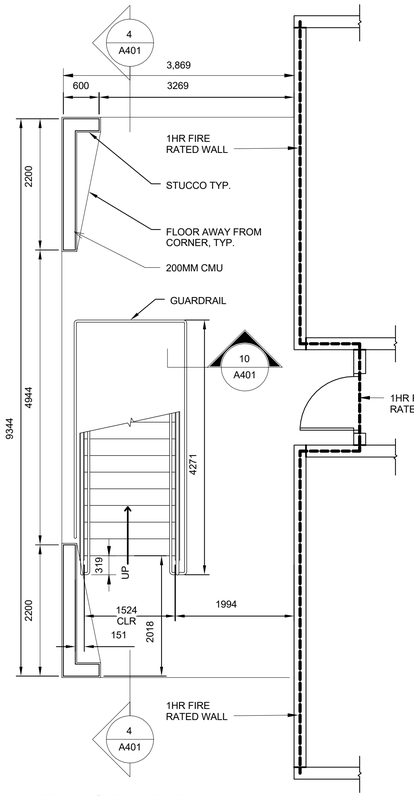

1 STAIR PLAN - 1
1 : 50

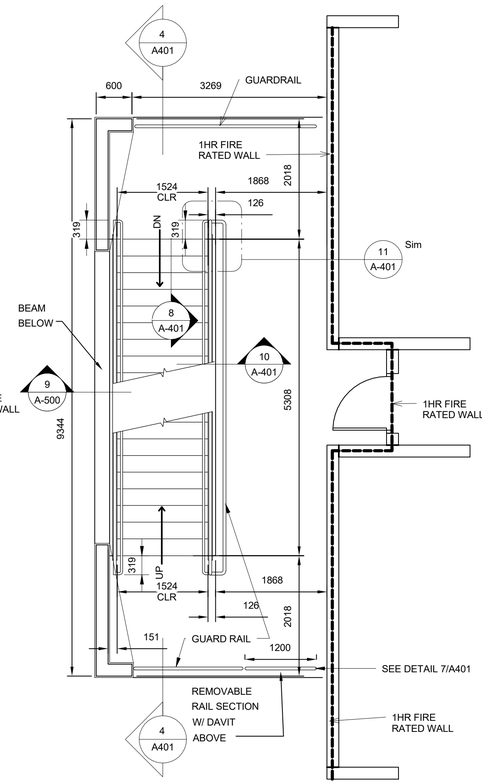

2 STAIR PLAN - 2
1 : 50

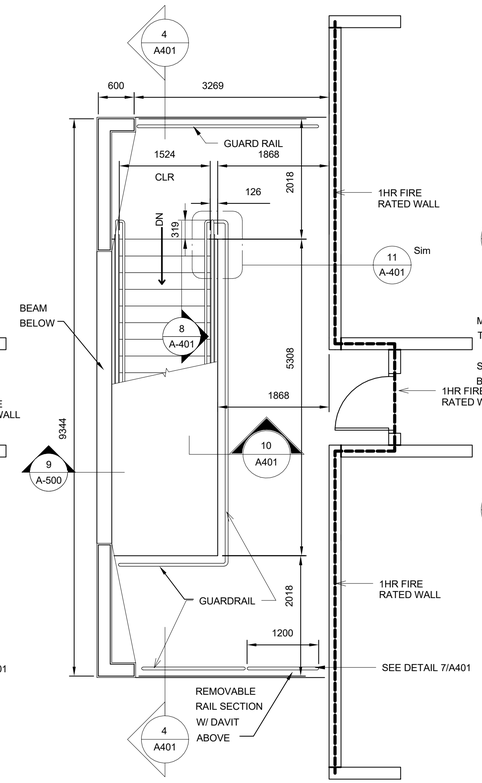

3 STAIR PLAN - 3
1 : 50

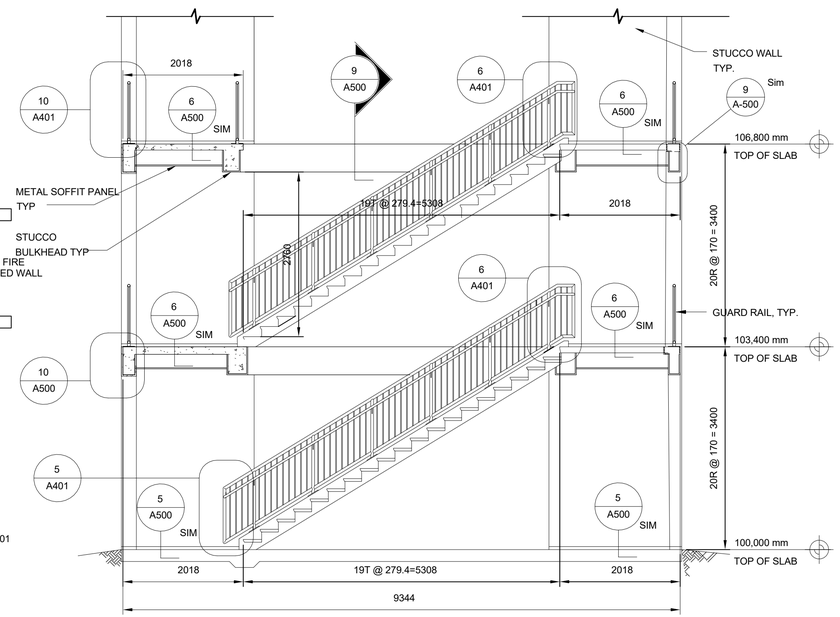

4 STAIR PLAN - SECTION
1 : 50

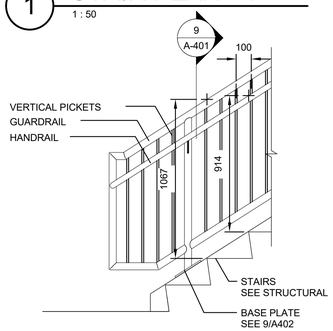

5 STAIR DETAIL - RAIL @ BOTTOM
1 : 20

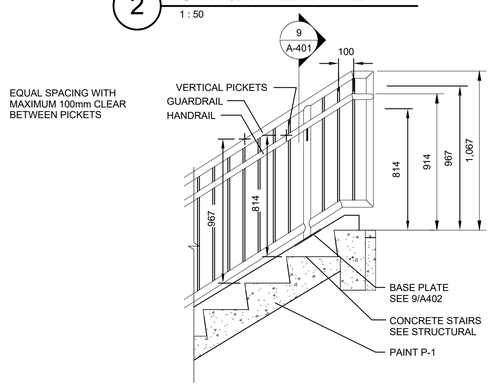

6 STAIR DETAIL- RAIL @ TOP
1 : 20

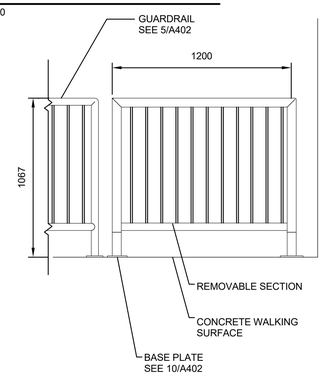

7 STAIR DETAIL- REMOVEABLE RAIL
1 : 20

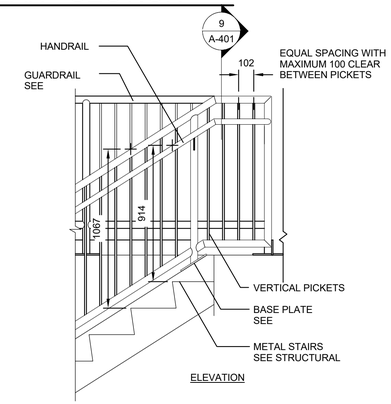

8 STAIR DETAILS - RAIL RETURN SECTION
1 : 20

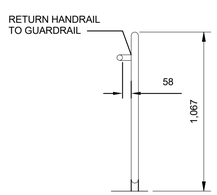

9 STAIR DETAIL- HANDRAIL
1 : 20

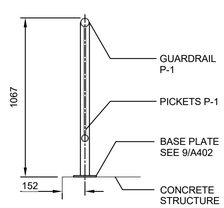

10 STAIR DETAIL - GAURDRAIL
1 : 20

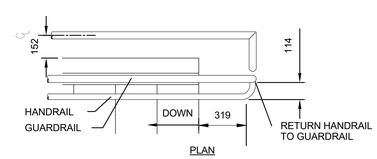

11 STAIR DETAILS - RAIL RETURN @ TOP
1 : 20

US Army Corps of Engineers®

MARK	DESCRIPTION	DATE

DESIGNED BY: T.D.W.	ISSUE DATE: FEBRUARY 2019
DRAWN BY: T.D.W.	SOLICITATION NO.: W912T819R0028
CHECKED BY: J.M.C.	CONTRACT NO.:
SUBMITTED BY: C.	PROJECT NUMBER: M07TE044
SIZE: ANSI D	FILE NAME: M07TE0144

U.S. ARMY CORPS OF ENGINEERS
MOBILE DISTRICT
MOBILE, ALABAMA

SOTO CANO AIR BASE, HONDURAS
UNACCOMPANIED ENLISTED PERSONNEL HOUSING

STAIR PLAN, SECTIONS, AND DETAILS

SHEET ID
A-401

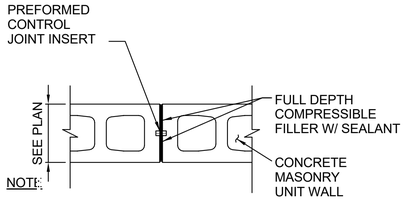

NOTE:

1. SEE STRUCTURAL FOR VERTICAL WALL REINFORCEMENT.

1 MASONRY CONTROL JOINT DETAIL
1 : 10

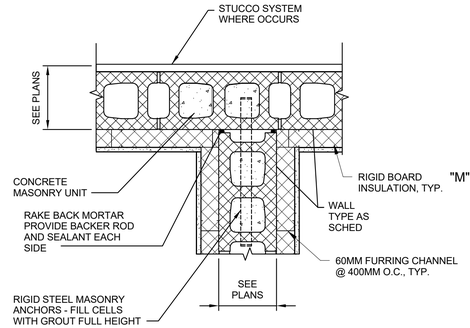

NOTE

1. SEE STRUCTURAL FOR VERTICAL WALL REINFORCING.

2 LOAD BEARING CONTROL JOINT
1 : 10

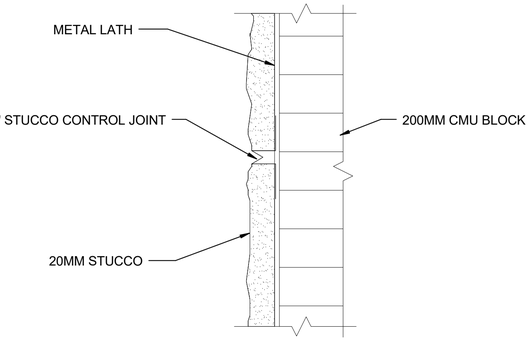

3 CONTROL JOINT DETAIL - STUCCO
1 : 25

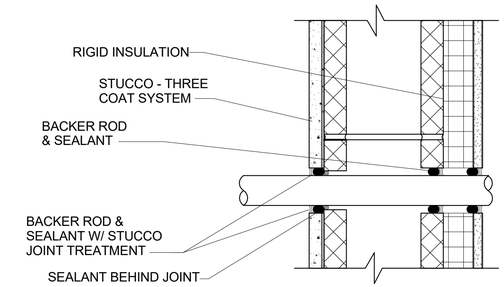

4 PENETRATION DETAIL
1 : 5

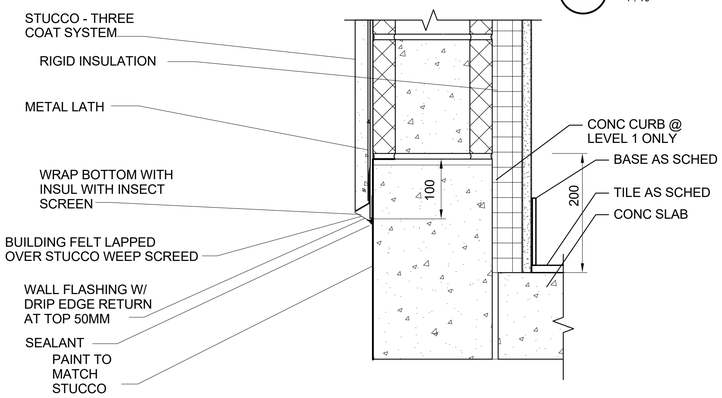

5 WALL DETAIL - @ FOUNDATION
1 : 5

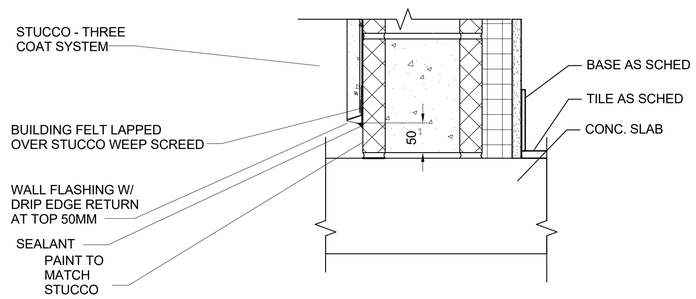

6 WALL DETAIL - @ SLAB
1 : 5

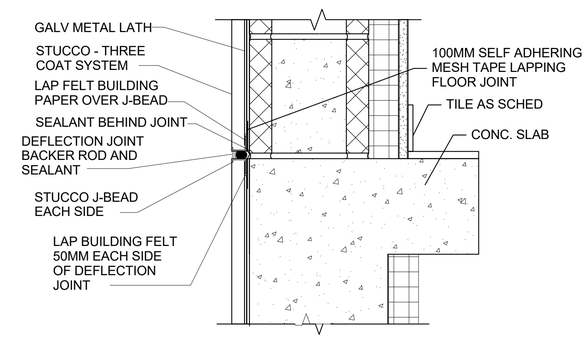

7 WALL DETAIL - @ EXP. JOINT
1 : 5

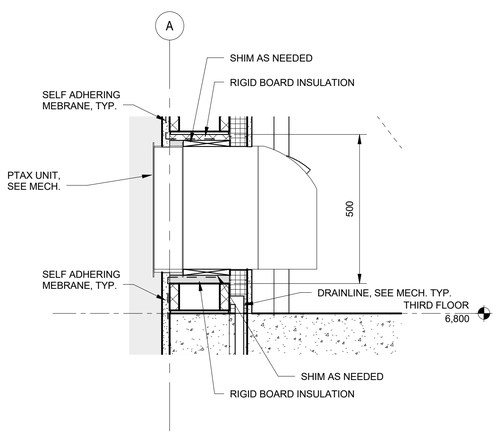

8 WALL DETAIL - PTAC UNIT
1 : 10

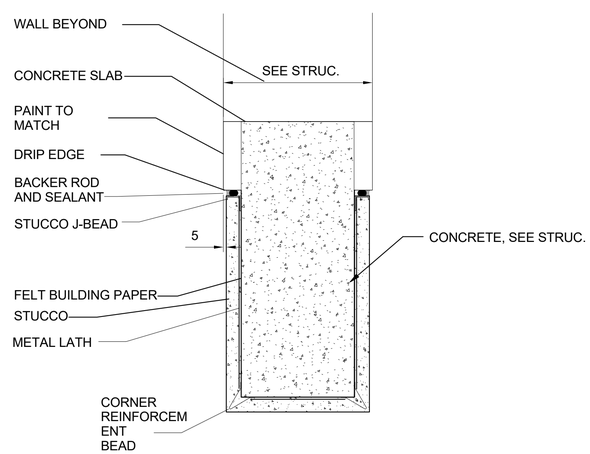

9 BULKHEAD DETAIL
1 : 5

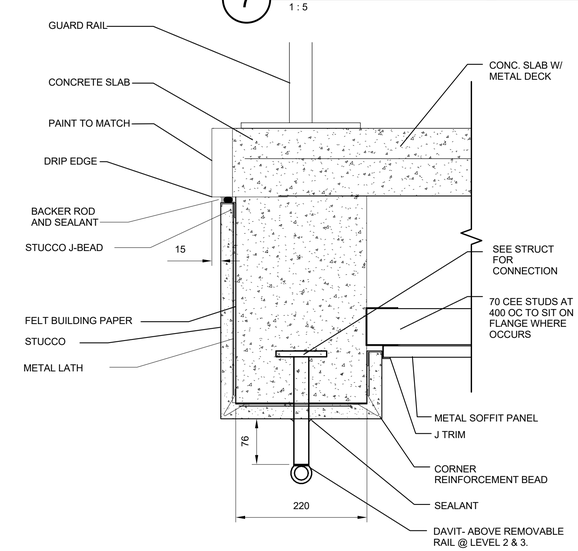

10 BULKHEAD DETAIL - STAIR
1 : 5

US Army Corps of Engineers®

MARK	DESCRIPTION	DATE

DESIGNED BY: T.D.W.	ISSUE DATE: FEBRUARY 2019
DRAWN BY: T.D.W.	SOLICITATION NO.: W912781R0028
CHECKED BY: J.M.C.	CONTRACT NO.:
SUBMITTED BY: C.C.A.	PROJECT NUMBER: M077EC44
SIZE: ANSI D	FILE NAME: M077E0144

U.S. ARMY CORPS OF ENGINEERS
MOBILE DISTRICT
MOBILE, ALABAMA

SOTO CANO AIR BASE, HONDURAS
UNACCOMPANIED ENLISTED PERSONNEL HOUSING

MISCELLANEOUS DETAILS

SHEET ID

A-500

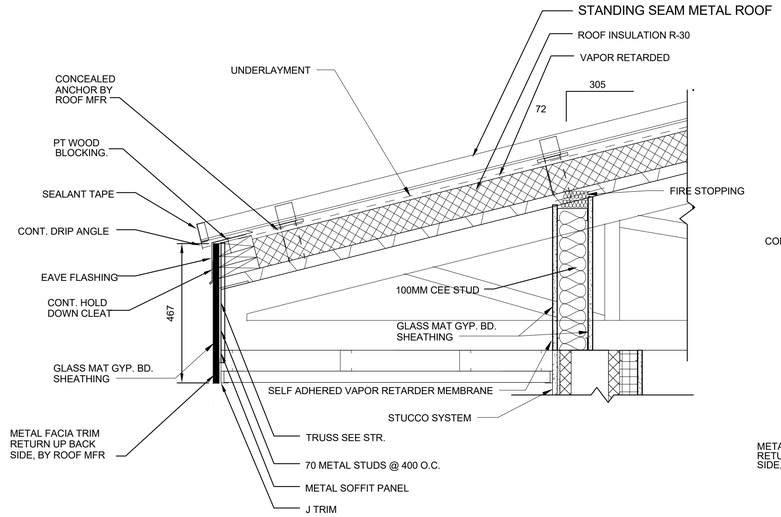

1 ROOF EAVE DETAIL
1 : 10

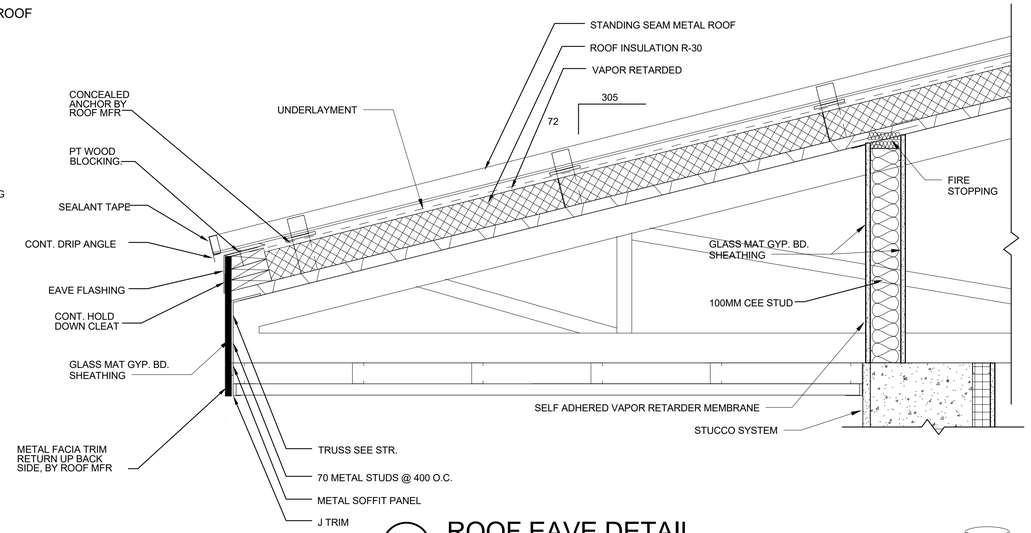

2 ROOF EAVE DETAIL
1 : 10

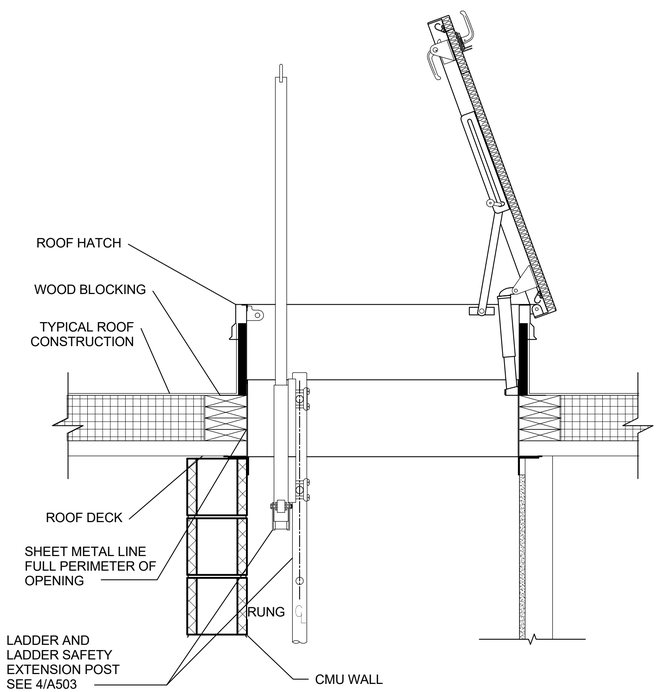

3 ROOF ACCESS HATCH DETAIL
1 : 10

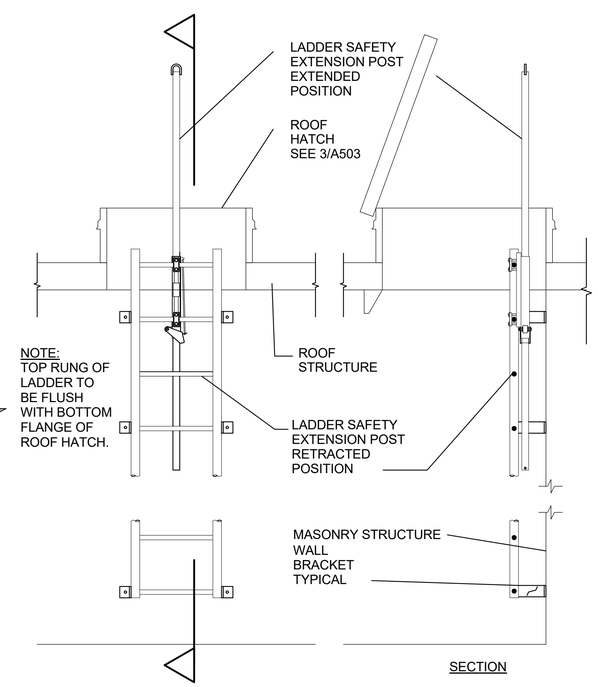

4 ROOF ACCESS HATCH DETAIL- LADDER
1 : 10

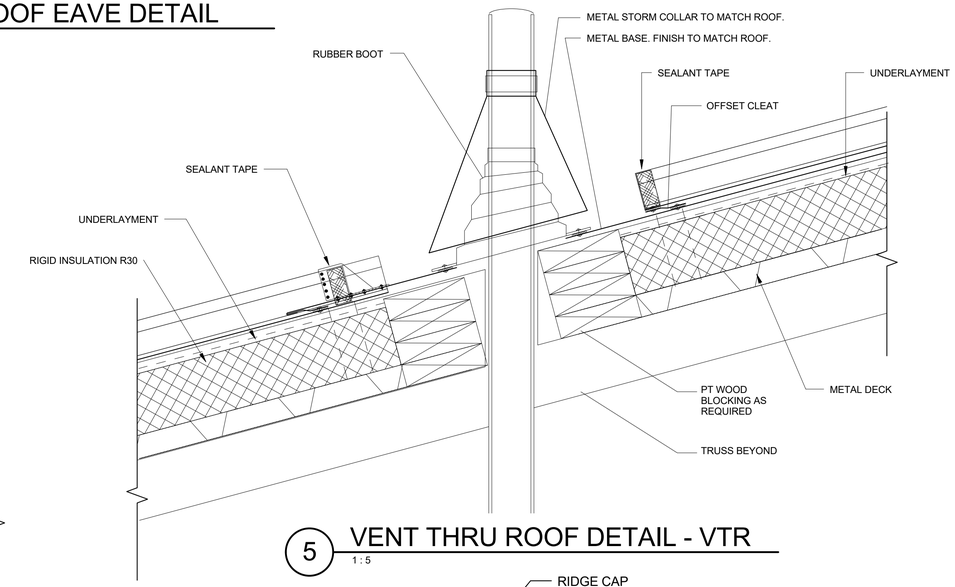

5 VENT THRU ROOF DETAIL - VTR
1 : 5

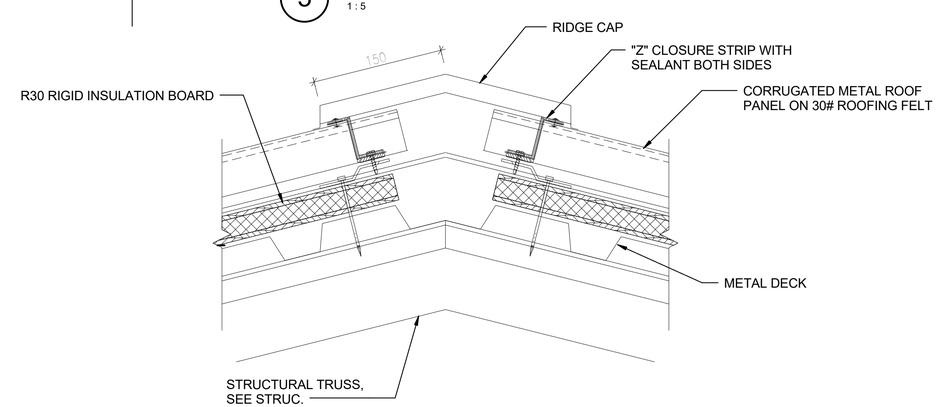

6 ROOF DETAIL - RIDGE CAP
1 : 10

US Army Corps of Engineers®

MARK	DESCRIPTION	DATE

ISSUE DATE: FEBRUARY 2019
SOLICITATION NO.: W912781R0028
CONTRACT NO.:
PROJECT NUMBER: M017EC44
DESIGNED BY: T.D.W.
DRAWN BY: T.D.W.
CHECKED BY: J.M.C.
SUBMITTED BY: C.A.
SIZE: ANSI D
FILE NAME: M017EU44

U.S. ARMY CORP'S OF ENGINEERS
MOBILE DISTRICT
MOBILE, ALABAMA

SOTO CANO AIR BASE, HONDURAS
UNACCOMPANIED ENLISTED PERSONNEL HOUSING

ROOF DETAILS

SHEET ID
A-510

GENERAL NOTES

1. SEE ROOM FINISH SCHEDULE FOR SPECIAL FINISHES ON CONCRETE MASONRY UNITS.
2. SEE PLANS FOR FIRE RATED WALL LOCATIONS AND HOURLY RATED REQUIREMENTS.
3. SEE STRUCTURAL FOR ALL VERTICAL WALL REINFORCING AND ALL BOND BEAM REINFORCING IN MASONRY WALLS AND FOR ALL REINFORCING IN CIP CONCRETE WALLS.
4. PROVIDE ACOUSTICAL SEALANT AT WALL TYPES INDICATED TO RECEIVE SOUND INSULATION.
5. PROVIDE FIRE STOPPING AND FIRE RATED SEALANT AS REQUIRED FOR ASSEMBLY INDICATED AT FIRE RATED WALLS.
6. SEE PLANS FOR WALL THICKNESS NOT SHOWN ON THIS DRAWING.
7. PROVIDE CEMENT BACKER BOARD WHERE CERAMIC TILE IS INDICATED IN LIEU OF GYPSUM BOARD WHERE WALL IS SCHEDULED TO RECEIVE CERAMIC TILE FINISH, UNLESS NOTED OTHERWISE FOR SPECIFIC WALL TYPE.
8. PROVIDE IMPACT RESISTANT PANELS IN LIEU OF GYPSUM BOARD WHERE SCHEDULED.

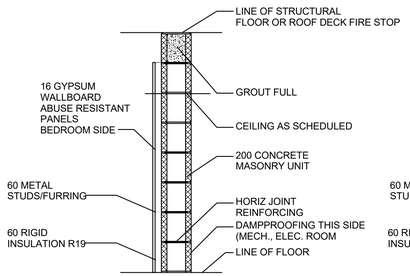

FIRE RATING: 1 HR FR

WALL TYPE A
SCALE: NTS

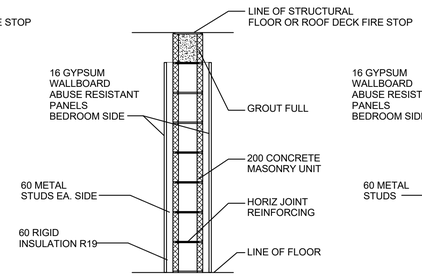

FIRE RATING: 1 HR FR

WALL TYPE B
SCALE: NTS

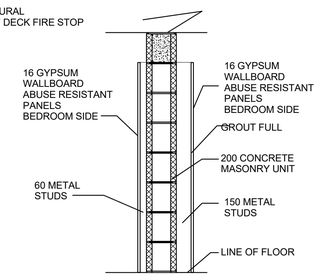

FIRE RATING: 1 HR FR

WALL TYPE B1
SCALE: NTS

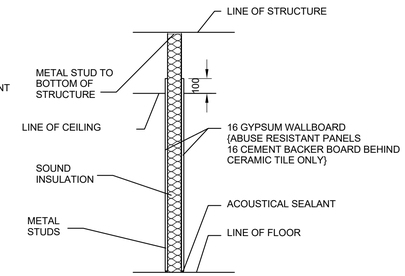

FIRE RATING: NOT RATED

WALL TYPE C
SCALE: NTS

C1 150 METAL STUD

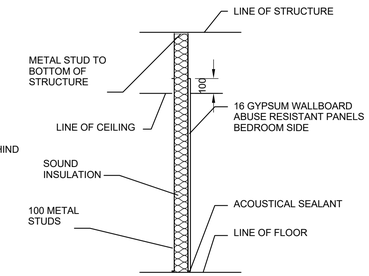

CHASE WALL

WALL TYPE C2
SCALE: NTS

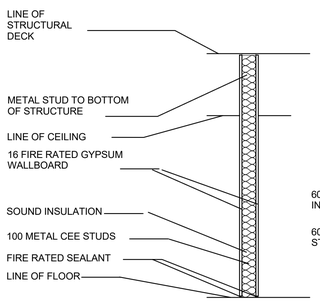

FIRE RATING: 1 HR FR

WALL TYPE D
SCALE: NTS

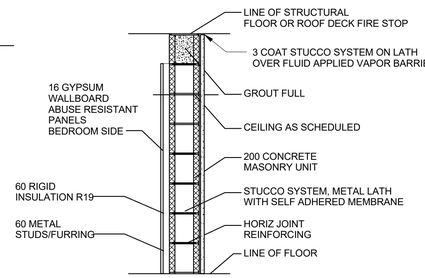

FIRE RATING: 1 HR FR

WALL TYPE E
SCALE: NTS

NOTE
1. PROVIDE 19 EXTERIOR GRADE SHEATHING AT EXTERIOR WALLS.
2. PROVIDE CONTINIOUS FIRE RATING BETWEEN TRUSSES AS REQUIRED.

US Army Corps of Engineers®

MARK	DESCRIPTION	DATE

ISSUE DATE: FEBRUARY 2019
SOLICITATION NO.: W9127819R0028
CONTRACT NO.:
PROJECT NUMBER: M077EC44
DESIGNED BY: T.D.W.
DRAWN BY: T.D.W.
CHECKED BY: J.M.C.
SUBMITTED BY: C.A.
SIZE: ANSI D
FILE NAME: M077EU44

U.S. ARMY CORPS OF ENGINEERS
MOBILE DISTRICT
MOBILE, ALABAMA

SOTO CANO AIR BASE, HONDURAS
UNACCOMPANIED ENLISTED PERSONNEL HOUSING

WALL TYPES

SHEET ID
A-601

USACE_DOOR SCHEDULE FIRST FLOOR

DOOR NO.	TYPE	DOOR SIZE WIDTH	DOOR SIZE HEIGHT	DOOR SIZE THICKNESS	DOOR MATERIAL	DOOR FINISH	FIRE RATING	HARDWARE	FRAME TYPE	FRAME MATERIAL	FRAME FINISH	FRAME DETAILS HEAD	FRAME DETAILS JAMB	FRAME DETAILS SILL	COMMENTS:
101	F	900	2,100	50	WD	PAINTED	1/2HR	HW-6	1	HM	PAINTED	3/A607	4/A607	9/A607	
102	F	800	2,100	50	WD	PAINTED	-	HW-8	2	HM	PAINTED	5/A607	6/A607	9/A607	
103	F	800	2,100	50	WD	PAINTED	-	HW-8	2	HM	PAINTED	5/A607	6/A607	9/A607	
104	F	900	2,100	50	WD	PAINTED	1/2HR	HW-6	1	HM	PAINTED	3/A607	4/A607	9/A607	
105A	F	800	2,100	50	WD	PAINTED	-	HW-7	2	HM	PAINTED	5/A607	6/A607	9/A607	
105B	F	800	2,100	50	WD	PAINTED	-	HW-7	2	HM	PAINTED	5/A607	6/A607	9/A607	
106	A	350	500	50	STEEL	PAINTED	1/2HR	-		STEEL	PAINTED		-	-	CAM LOCK BY MANUF.
107	F	900	2,100	50	WD	PAINTED	1/2HR	HW-6	1	HM	PAINTED	3/A607	4/A607	9/A607	
108	F	800	2,100	50	WD	PAINTED	-	HW-8	2	HM	PAINTED	5/A607	6/A607	9/A607	
109	F	800	2,100	50	WD	PAINTED	-	HW-8	2	HM	PAINTED	5/A607	6/A607	9/A607	
110	F	900	2,100	50	WD	PAINTED	1/2HR	HW-6	1	HM	PAINTED	3/A607	4/A607	9/A607	
111A	F	800	2,100	50	WD	PAINTED	-	HW-7	2	HM	PAINTED	5/A607	6/A607	9/A607	
111B	F	800	2,100	50	WD	PAINTED	-	HW-7	2	HM	PAINTED	5/A607	6/A607	9/A607	
112	A	350	500	50	STEEL	PAINTED	1/2HR	-	-	STEEL	PAINTED	-	-	-	CAM LOCK BY MANUF.
113	F	900	2,100	50	WD	PAINTED	1/2HR	HW-6	1	HM	PAINTED	3/A607	4/A607	9/A607	
114	F	800	2,100	50	WD	PAINTED	-	HW-8	2	HM	PAINTED	5/A607	6/A607	9/A607	
115	F	800	2,100	50	WD	PAINTED	-	HW-8	2	HM	PAINTED	5/A607	6/A607	9/A607	
116A	F	800	2,100	50	WD	PAINTED	-	HW-7	2	HM	PAINTED	5/A607	6/A607	9/A607	
116B	F	800	2,100	50	WD	PAINTED	-	HW-7	2	HM	PAINTED	5/A607	6/A607	9/A607	
117	F	900	2,100	50	WD	PAINTED	1/2HR	HW-6	1	HM	PAINTED	3/A607	4/A607	9/A607	
118	A	350	500	50	STEEL	PAINTED	1/2HR	-	-	STEEL	PAINTED	-	-	-	CAM LOCK BY MANUF.
119	F	900	2,100	50	HM	PAINTED	1/2HR	HW-1	1	HM	PAINTED	1/A607	2/A607	8/A607	
120	F	800	2,100	50	WD	PAINTED	1/2HR	HW-4	1	HM	PAINTED	3/A607	4/A607	9/A607	
121	F	900	2,100	50	WD	PAINTED	1/2HR	HW-5	1	HM	PAINTED	3/A607	4/A607	9/A607	
122	F	900	2,100	50	WD	PAINTED	1/2HR	HW-6	1	HM	PAINTED	3/A607	4/A607	9/A607	
123	F	800	2,100	50	WD	PAINTED	-	HW-8	2	HM	PAINTED	5/A607	6/A607	9/A607	
124	F	800	2,100	50	WD	PAINTED	-	HW-8	2	HM	PAINTED	5/A607	6/A607	9/A607	
125	F	900	2,100	50	WD	PAINTED	1/2HR	HW-6	1	HM	PAINTED	3/A607	4/A607	9/A607	
126A	F	800	2,100	50	WD	PAINTED	-	HW-7	2	HM	PAINTED	5/A607	6/A607	9/A607	
126B	F	800	2,100	50	WD	PAINTED	-	HW-7	2	HM	PAINTED	5/A607	6/A607	9/A607	
127	A	350	500	50	STEEL	PAINTED	1/2HR		-	STEEL	PAINTED	-	-	-	CAM LOCK BY MANUF.
128	F	900	2,100	50	WD	PAINTED	1/2HR	HW-6	1	HM	PAINTED	3/A607	4/A607	9/A607	
129	F	800	2,100	50	WD	PAINTED	-	HW-8	2	HM	PAINTED	5/A607	6/A607	9/A607	
130	F	800	2,100	50	WD	PAINTED	-	HW-8	2	HM	PAINTED	5/A607	6/A607	9/A607	
131	F	900	2,100	50	WD	PAINTED	1/2HR	HW-6	1	HM	PAINTED	3/A607	4/A607	9/A607	
132A	F	800	2,100	50	WD	PAINTED	-	HW-7	2	HM	PAINTED	5/A607	6/A607	9/A607	
132B	F	800	2,100	50	WD	PAINTED	-	HW-7	2	HM	PAINTED	5/A607	6/A607	9/A607	
133	A	350	500	50	STEEL	PAINTED	1/2HR		-	STEEL	PAINTED	-	-	-	CAM LOCK BY MANUF.
134	F	900	2,100	50	WD	PAINTED	1/2HR	HW-6	1	HM	PAINTED	3/A607	4/A607	9/A607	
135	F	800	2,100	50	WD	PAINTED	-	HW-8	2	HM	PAINTED	5/A607	6/A607	9/A607	
136	F	800	2,100	50	WD	PAINTED	-	HW-8	2	HM	PAINTED	5/A607	6/A607	9/A607	
137	F	900	2,100	50	WD	PAINTED	1/2HR	HW-6	1	HM	PAINTED	3/A607	4/A607	9/A607	
138A	F	800	2,100	50	WD	PAINTED	-	HW-7	2	HM	PAINTED	5/A607	6/A607	9/A607	
138B	F	800	2,100	50	WD	PAINTED	-	HW-7	2	HM	PAINTED	5/A607	6/A607	9/A607	
139	A	350	500	50	STEEL	PAINTED	1/2HR		-	STEEL	PAINTED	-	-	-	CAM LOCK BY MANUF.
140A	N	900	2,100	50	HM	PAINTED	1/2 HR	HW-2	1	HM	PAINTED	1/A607	2/A607	7/A607	
140B	N	900	2,100	50	HM	PAINTED	1/2 HR	HW-2	1	HM	PAINTED	1/A607	2/A607	7/A607	
141	A	350	500	50	STEEL	PAINTED	1/2HR	-	-	STEEL	PAINTED	-	-	-	CAM LOCK BY MANUF.
142A	F	800	2,100	50	WD	PAINTED	-	HW-7	2	HM	PAINTED	5/A607	6/A607	9/A607	
142B	F	800	2,100	50	WD	PAINTED	-	HW-7	2	HM	PAINTED	5/A607	6/A607	9/A607	
143	F	900	2,100	50	WD	PAINTED	1/2HR	HW-6	1	HM	PAINTED	3/A607	4/A607	9/A607	
144	F	800	2,100	50	WD	PAINTED	-	HW-8	2	HM	PAINTED	5/A607	6/A607	9/A607	
145	F	800	2,100	50	WD	PAINTED	-	HW-8	2	HM	PAINTED	5/A607	6/A607	9/A607	
146	F	900	2,100	50	WD	PAINTED	1/2HR	HW-6	1	HM	PAINTED	3/A607	4/A607	9/A607	
147	A	350	500	50	STEEL	PAINTED	1/2HR	-	-	STEEL	PAINTED	-	-	-	CAM LOCK BY MANUF.
148A	F	800	2,100	50	WD	PAINTED	-	HW-7	2	HM	PAINTED	5/A607	6/A607	9/A607	
148B	F	800	2,100	50	WD	PAINTED	-	HW-7	2	HM	PAINTED	5/A607	6/A607	9/A607	
149	F	900	2,100	50	WD	PAINTED	1/2HR	HW-6	1	HM	PAINTED	3/A607	4/A607	9/A607	
150	F	800	2,100	50	WD	PAINTED	-	HW-8	2	HM	PAINTED	5/A607	6/A607	9/A607	
151	F	800	2,100	50	WD	PAINTED	-	HW-8	2	HM	PAINTED	5/A607	6/A607	9/A607	
152	F	900	2,100	50	WD	PAINTED	1/2HR	HW-6	1	HM	PAINTED				
153	A	350	500	50	STEEL	PAINTED	1/2HR		-	STEEL	PAINTED	-	-	-	CAM LOCK BY MANUF.
154	F	900	2,100	50	WD	PAINTED	1/2HR	HW-6	1	HM	PAINTED	3/A607	4/A607	9/A607	
155	F	800	2,100	50	WD	PAINTED	-	HW-8	2	HM	PAINTED	5/A607	6/A607	9/A607	
156	F	800	2,100	50	WD	PAINTED	-	HW-8	2	HM	PAINTED	5/A607	6/A607	9/A607	
157	F	900	2,100	50	WD	PAINTED	1/2HR	HW-6	1	HM	PAINTED	3/A607	4/A607	9/A607	
158A	F	800	2,100	50	WD	PAINTED	-	HW-7	2	HM	PAINTED	5/A607	6/A607	9/A607	
158B	F	800	2,100	50	WD	PAINTED	-	HW-7	2	HM	PAINTED	5/A607	6/A607	9/A607	
159	F	900	2,100	50	WD	PAINTED	1/2HR	HW-5	1	HM	PAINTED	3/A607	4/A607	9/A607	
160	F	800	2,100	50	WD	PAINTED	1/2HR	HW-3	1	HM	PAINTED	3/A607	4/A607	9/A607	
161	F	900	2,100	50	WD	PAINTED	1/2HR	HW-5	1	HM	PAINTED	3/A607	4/A607	9/A607	
162	F	900	2,100	50	HM	PAINTED	1/2HR	HW-1	1	HM	PAINTED	1/A607	2/A607	9/A607	
163	A	350	500	50	STEEL	PAINTED	1/2HR	-	-	STEEL	PAINTED	-	-	-	CAM LOCK BY MANUF.
164	F	900	2,100	50	WD	PAINTED	1/2HR	HW-6	1	HM	PAINTED	3/A607	4/A607	9/A607	
165	F	800	2,100	50	WD	PAINTED	-	HW-8	2	HM	PAINTED	5/A607	6/A607	9/A607	
166	F	800	2,100	50	WD	PAINTED	-	HW-8	2	HM	PAINTED	5/A607	6/A607	9/A607	
167	F	900	2,100	50	WD	PAINTED	1/2HR	HW-6	1	HM	PAINTED	3/A607	4/A607	9/A607	
168A	F	800	2,100	50	WD	PAINTED	-	HW-7	2	HM	PAINTED	5/A607	6/A607	9/A607	
168B	F	800	2,100	50	WD	PAINTED	-	HW-7	2	HM	PAINTED	5/A607	6/A607	9/A607	
169	A	350	500	50	STEEL	PAINTED	1/2HR	-	-	STEEL	PAINTED	-	-	-	CAM LOCK BY MANUF.
170	F	900	2,100	50	WD	PAINTED	1/2HR	HW-6	1	HM	PAINTED	3/A607	4/A607	9/A607	
171	F	800	2,100	50	WD	PAINTED	-	HW-8	2	HM	PAINTED	5/A607	6/A607	9/A607	
172	F	800	2,100	50	WD	PAINTED	-	HW-8	2	HM	PAINTED	5/A607	6/A607	9/A607	
173	F	900	2,100	50	WD	PAINTED	1/2HR	HW-6	1	HM	PAINTED	3/A607	4/A607	9/A607	
174A	F	800	2,100	50	WD	PAINTED	-	HW-7	2	HM	PAINTED	5/A607	6/A607	9/A607	
174B	F	800	2,100	50	WD	PAINTED	-	HW-7	2	HM	PAINTED	5/A607	6/A607	9/A607	
175	A	350	500	50	STEEL	PAINTED	1/2HR	-	-	STEEL	PAINTED	-	-	-	CAM LOCK BY MANUF.
176	F	900	2,100	50	WD	PAINTED	1/2HR	HW-6	1	HM	PAINTED	3/A607	4/A607	9/A607	
177	F	800	2,100	50	WD	PAINTED	-	HW-8	2	HM	PAINTED	5/A607	6/A607	9/A607	
178	F	800	2,100	50	WD	PAINTED	-	HW-8	2	HM	PAINTED	5/A607	6/A607	9/A607	
179	F	900	2,100	50	WD	PAINTED	1/2HR	HW-6	1	HM	PAINTED	3/A607	4/A607	9/A607	
180A	F	800	2,100	50	WD	PAINTED	-	HW-7	2	HM	PAINTED	5/A607	6/A607	9/A607	
180B	F	800	2,100	50	WD	PAINTED	-	HW-7	2	HM	PAINTED	5/A607	6/A607	9/A607	

USACE_DOOR SCHEDULE RISER ROOM

DOOR NO.	TYPE	DOOR SIZE WIDTH	DOOR SIZE HEIGHT	DOOR SIZE THICKNESS	DOOR MATERIAL	DOOR FINISH	FIRE RATING	HARDWARE	FRAME TYPE	FRAME MATERIAL	FRAME FINISH	FRAME DETAILS HEAD	FRAME DETAILS JAMB	FRAME DETAILS SILL	COMMENTS:
01	25	1,800	2,100	44	HM	PAINTED			1	HM	PAINTED				FULLY LOUVERED

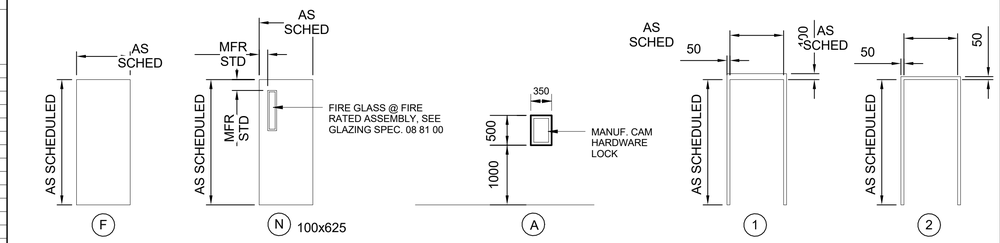

DOOR TYPES

DOOR FRAMES

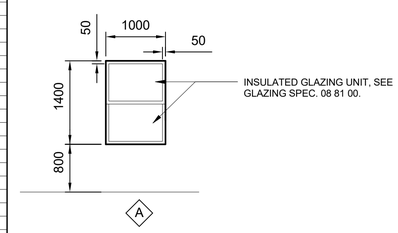

WINDOW TYPES

US Army Corps of Engineers®

MARK	DESCRIPTION	DATE

DESIGNED BY: T.D.W.
DRAWN BY: T.D.W.
CHECKED BY: J.M.C.
SUBMITTED BY: C.A.
SIZE: ANSI D
ISSUE DATE: FEBRUARY 2019
SOLICITATION NO.: W912781R0028
CONTRACT NO.:
PROJECT NUMBER: M077EC44
FILE NAME: M077E0144

U.S. ARMY CORPS OF ENGINEERS
MOBILE DISTRICT
MOBILE, ALABAMA

SOTO CANO AIR BASE, HONDURAS
UNACCOMPANIED ENLISTED PERSONNEL HOUSING

FIRST FLOOR DOOR SCHEDULE

SHEET ID
A-603

USACE_DOOR SCHEDULE SECOND FLOOR

DOOR NO.	TYPE	DOOR SIZE WIDTH	DOOR SIZE HEIGHT	DOOR SIZE THICKNESS	DOOR MATERIAL	Finish	FIRE RATING	HARDWARE	FRAME TYPE	FRAME MATERIAL	FRAME DETAILS HEAD	FRAME DETAILS JAMB	FRAME DETAILS SILL	COMMENTS:
201	F	900	2,100	50	WD	PAINTED	1/2HR	HW-6	1	HM	3/A607	4/A607	9/A607	
202	F	800	2,100	50	WD	PAINTED	-	HW-8	2	HM	5/A607	6/A607	9/A607	
203	F	800	2,100	50	WD	PAINTED	-	HW-8	2	HM	5/A607	6/A607	9/A607	
204	F	900	2,100	50	WD	PAINTED	1/2HR	HW-6	1	HM	3/A607	4/A607	9/A607	
205A	F	800	2,100	50	WD	PAINTED	-	HW-7	2	HM	5/A607	6/A607	9/A607	
205B	F	800	2,100	50	WD	PAINTED	-	HW-7	2	HM	5/A607	6/A607	9/A607	
206	A	350	500	50	STEEL	PAINTED	1/2HR	-	-	STEEL	-	-	-	CAM LOCK BY MANUF.
207	F	900	2,100	50	WD	PAINTED	1/2HR	HW-6	1	HM	3/A607	4/A607	9/A607	
208	F	800	2,100	50	WD	PAINTED	-	HW-8	2	HM	5/A607	6/A607	9/A607	
209	F	800	2,100	50	WD	PAINTED	-	HW-8	2	HM	5/A607	6/A607	9/A607	
210	F	900	2,100	50	WD	PAINTED	1/2HR	HW-6	1	HM	3/A607	4/A607	9/A607	
211A	F	800	2,100	50	WD	PAINTED	-	HW-7	2	HM	5/A607	6/A607	9/A607	
211B	F	800	2,100	50	WD	PAINTED	-	HW-7	2	HM	5/A607	6/A607	9/A607	
212	A	350	500	50	STEEL	PAINTED	1/2HR	-	-	STEEL	-	-	-	CAM LOCK BY MANUF.
213	F	900	2,100	50	WD	PAINTED	1/2HR	HW-6	1	HM	3/A607	4/A607	9/A607	
214	F	800	2,100	50	WD	PAINTED	-	HW-8	2	HM	5/A607	6/A607	9/A607	
215	F	800	2,100	50	WD	PAINTED	-	HW-8	2	HM	5/A607	6/A607	9/A607	
216	F	900	2,100	50	WD	PAINTED	1/2HR	HW-6	1	HM	3/A607	4/A607	9/A607	
217A	F	800	2,100	50	WD	PAINTED	-	HW-7	2	HM	5/A607	6/A607	9/A607	
217B	F	800	2,100	50	WD	PAINTED	-	HW-7	2	HM	5/A607	6/A607	9/A607	
218	A	350	500	50	STEEL	PAINTED	1/2HR	-	-	STEEL	-	-	-	CAM LOCK BY MANUF.
219	F	900	2,100	50	HM	PAINTED	1/2HR	HW-3	1	HM	3/A607	4/A607	9/A607	
220	F	800	2,100	50	WD	PAINTED	1/2HR	HW-4	1	HM	3/A607	4/A607	9/A607	
221	F	900	2,100	50	WD	PAINTED	1/2HR	HW-5	1	HM	3/A607	4/A607	9/A607	
222	F	900	2,100	50	WD	PAINTED	1/2HR	HW-6	1	HM	3/A607	4/A607	9/A607	
223	F	800	2,100	50	WD	PAINTED	-	HW-8	2	HM	5/A607	6/A607	9/A607	
224	F	800	2,100	50	WD	PAINTED	-	HW-8	2	HM	5/A607	6/A607	9/A607	
225	F	900	2,100	50	WD	PAINTED	1/2HR	HW-6	1	HM	3/A607	4/A607	9/A607	
226A	F	800	2,100	50	WD	PAINTED	-	HW-7	2	HM	5/A607	6/A607	9/A607	
226B	F	800	2,100	50	WD	PAINTED	-	HW-7	2	HM	5/A607	6/A607	9/A607	
227	A	350	500	50	STEEL	PAINTED	1/2HR	-	-	STEEL	-	-	-	CAM LOCK BY MANUF.
228	F	900	2,100	50	WD	PAINTED	1/2HR	HW-6	1	HM	3/A607	4/A607	9/A607	
229	F	800	2,100	50	WD	PAINTED	-	HW-8	2	HM	5/A607	6/A607	9/A607	
230	F	800	2,100	50	WD	PAINTED	-	HW-8	2	HM	5/A607	6/A607	9/A607	
231	F	900	2,100	50	WD	PAINTED	1/2HR	HW-6	1	HM	3/A607	4/A607	9/A607	
232A	F	800	2,100	50	WD	PAINTED	-	HW-7	2	HM	5/A607	6/A607	9/A607	
232B	F	800	2,100	50	WD	PAINTED	-	HW-7	2	HM	5/A607	6/A607	9/A607	
233	A	350	500	50	STEEL	PAINTED	1/2HR	-	-	STEEL	-	-	-	CAM LOCK BY MANUF.
234	F	900	2,100	50	WD	PAINTED	1/2HR	HW-6	1	HM	3/A607	4/A607	9/A607	
235	F	800	2,100	50	WD	PAINTED	-	HW-8	2	HM	5/A607	6/A607	9/A607	
236	F	800	2,100	50	WD	PAINTED	-	HW-8	2	HM	5/A607	6/A607	9/A607	
237	F	900	2,100	50	WD	PAINTED	1/2HR	HW-6	1	HM	1/A607	4/A607	9/A607	
238A	F	800	2,100	50	WD	PAINTED	-	HW-7	2	HM	5/A607	6/A607	9/A607	
238B	F	800	2,100	50	WD	PAINTED	-	HW-7	2	HM	5/A607	6/A607	9/A607	
239	A	350	500	50	STEEL	PAINTED	1/2HR	-	-	STEEL	-	-	-	CAM LOCK BY MANUF.
240A	N	900	2,100	50	HM	PAINTED	1/2 HR	HW-4	1	HM	1/A607	2/A607	7/A607	
240B	N	900	2,100	50	HM	PAINTED	1/2 HR	HW-4	1	HM	1/A607	2/A607	7/A607	
241	A	350	500	50	STEEL	PAINTED	1/2HR	-	-	STEEL	-	-	-	CAM LOCK BY MANUF.
242A	F	800	2,100	50	WD	PAINTED	-	HW-7	2	HM	5/A607	6/A607	9/A607	
242B	F	800	2,100	50	WD	PAINTED	-	HW-7	2	HM	5/A607	6/A607	9/A607	
243	F	900	2,100	50	WD	PAINTED	1/2HR	HW-6	1	HM	3/A607	4/A607	9/A607	
244	F	800	2,100	50	WD	PAINTED	-	HW-8	2	HM	5/A607	6/A607	9/A607	
245	F	800	2,100	50	WD	PAINTED	-	HW-8	2	HM	5/A607	6/A607	9/A607	
246	F	900	2,100	50	WD	PAINTED	1/2HR	HW-6	1	HM	3/A607	4/A607	9/A607	
247	A	350	500	50	STEEL	PAINTED	1/2HR	-	-	STEEL	-	-	-	CAM LOCK BY MANUF.
248A	F	800	2,100	50	WD	PAINTED	-	HW-7	2	HM	5/A607	6/A607	9/A607	
248B	F	800	2,100	50	WD	PAINTED	-	HW-7	2	HM	5/A607	6/A607	9/A607	
249	F	900	2,100	50	WD	PAINTED	1/2HR	HW-6	1	HM	3/A607	4/A607	9/A607	
250	F	800	2,100	50	WD	PAINTED	-	HW-8	2	HM	5/A607	6/A607	9/A607	
251	F	800	2,100	50	WD	PAINTED	-	HW-8	2	HM	5/A607	6/A607	9/A607	
252	F	900	2,100	50	WD	PAINTED	1/2HR	HW-6	1	HM	3/A607	4/A607	9/A607	
253	A	350	500	50	STEEL	PAINTED	1/2HR	-	-	STEEL	-	-	-	CAM LOCK BY MANUF.
254	F	900	2,100	50	WD	PAINTED	1/2HR	HW-6	1	HM	3/A607	4/A607	9/A607	
255	F	800	2,100	50	WD	PAINTED	-	HW-8	2	HM	5/A607	6/A607	9/A607	
256	F	800	2,100	50	WD	PAINTED	-	HW-8	2	HM	5/A607	6/A607	9/A607	
257	F	900	2,100	50	WD	PAINTED	1/2HR	HW-6	1	HM	3/A607	4/A607	9/A607	
258A	F	800	2,100	50	WD	PAINTED	-	HW-7	2	HM	5/A607	6/A607	9/A607	
258B	F	800	2,100	50	WD	PAINTED	-	HW-7	2	HM	5/A607	6/A607	9/A607	
259	F	900	2,100	50	WD	PAINTED	1/2HR	HW-5	1	HM	3/A607	4/A607	9/A607	
260	F	800	2,100	50	WD	PAINTED	1/2HR	HW-3	1	HM	3/A607	4/A607	9/A607	
261	F	900	2,100	50	WD	PAINTED	1/2HR	HW-5	1	HM	3/A607	4/A607	9/A607	
262	B	900	2,100	50	HM	PAINTED	-	HW-9	1	HM	3/A607	4/A607	9/A607	
263	A	350	500	50	STEEL	PAINTED	1/2HR	-	-	STEEL	-	-	-	CAM LOCK BY MANUF.
264	F	900	2,100	50	WD	PAINTED	1/2HR	HW-6	1	HM	3/A607	4/A607	9/A607	
265	F	800	2,100	50	WD	PAINTED	-	HW-7	2	HM	5/A607	6/A607	9/A607	
266	F	800	2,100	50	WD	PAINTED	-	HW-7	2	HM	5/A607	6/A607	9/A607	
267	F	900	2,100	50	WD	PAINTED	1/2HR	HW-6	1	HM	3/A607	4/A607	9/A607	
268A	F	800	2,100	50	WD	PAINTED	-	HW-7	2	HM	5/A607	6/A607	9/A607	
268B	F	800	2,100	50	WD	PAINTED	-	HW-7	2	HM	5/A607	6/A607	9/A607	
269	A	350	500	50	STEEL	PAINTED	1/2HR	-	-	STEEL	-	-	-	CAM LOCK BY MANUF.
270	F	900	2,100	50	WD	PAINTED	1/2HR	HW-6		HM	3/A607	4/A607	9/A607	
271	F	800	2,100	50	WD	PAINTED	-	HW-8	2	HM	5/A607	6/A607	9/A607	
272	F	800	2,100	50	WD	PAINTED	-	HW-8	2	HM	5/A607	6/A607	9/A607	
273	F	900	2,100	50	WD	PAINTED	1/2HR	HW-6		HM	3/A607	4/A607	9/A607	
274A	F	800	2,100	50	WD	PAINTED	-	HW-7	2	HM	5/A607	6/A607	9/A607	
274B	F	800	2,100	50	WD	PAINTED	-	HW-7	2	HM	5/A607	6/A607	9/A607	
275	A	350	500	50	STEEL	PAINTED	1/2HR	-	-	STEEL	-	-	-	CAM LOCK BY MANUF.
276	F	900	2,100	50	WD	PAINTED	1/2HR	HW-6	1	HM	3/A607	4/A607	9/A607	
277	F	800	2,100	50	WD	PAINTED	-	HW-8	2	HM	5/A607	6/A607	9/A607	
278	F	800	2,100	50	WD	PAINTED	-	HW-8	2	HM	5/A607	6/A607	9/A607	
279	F	900	2,100	50	WD	PAINTED	1/2HR	HW-6	1	HM	3/A607	4/A607	9/A607	
280A	F	800	2,100	50	WD	PAINTED	-	HW-7	2	HM	5/A607	6/A607	9/A607	
280B	F	800	2,100	50	WD	PAINTED	-	HW-7	2	HM	5/A607	6/A607	9/A607	

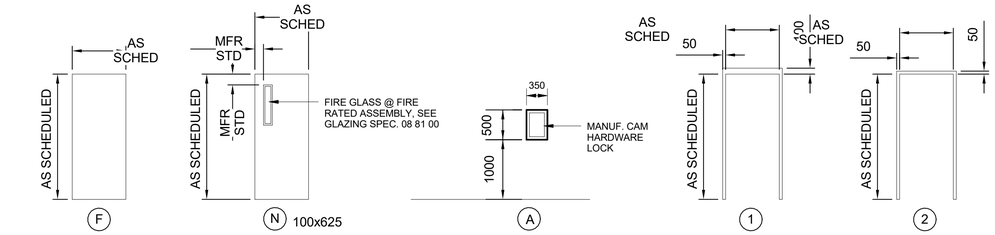

DOOR TYPES

DOOR FRAMES

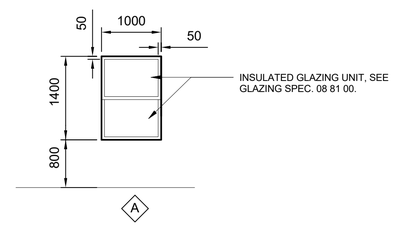

WINDOW TYPES

US Army Corps of Engineers®

MARK	DESCRIPTION	DATE

DESIGNED BY: T.D.W.
DRAWN BY: T.D.W.
CHECKED BY: J.M.C.
SUBMITTED BY: C.A.
SIZE: ANSI D
ISSUE DATE: FEBRUARY 2019
SOLICITATION NO.: W9127819R0028
CONTRACT NO.:
PROJECT NUMBER: M077EC44
FILE NAME: M077E0144

U.S. ARMY CORPS OF ENGINEERS
MOBILE DISTRICT
MOBILE, ALABAMA

SOTO CANO AIR BASE, HONDURAS
UNACCOMPANIED ENLISTED PERSONNEL HOUSING

SECOND FLOOR DOOR SCHEDULE

SHEET ID

A-604

USACE_DOOR SCHEDULE THIRD FLOOR

		DOOR							FRAME					
		SIZE									DETAILS			
DOOR NO.	TYPE	WIDTH	HEIGHT	THICKNESS	MATERIAL	Finish	FIRE RATING	HARDWARE	TYPE	MATERIAL	HEAD	JAMB	SILL	COMMENTS:
301	F	900	2,100	50	WD	PAINTED	1/2HR	HW-6	1	HM	3/A607	4/A607	9/A607	
302	F	800	2,100	50	WD	PAINTED	-	HW-8	2	HM	5/A607	6/A607	9/A607	
303	F	800	2,100	50	WD	PAINTED	-	HW-8	2	HM	5/A607	6/A607	9/A607	
304A	F	800	2,100	50	WD	PAINTED	-	HW-7	2	HM	5/A607	6/A607	9/A607	
304B	F	800	2,100	50	WD	PAINTED	-	HW-7	2	HM	5/A607	6/A607	9/A607	
305	F	900	2,100	50	WD	PAINTED	1/2HR	HW-6	1	HM	3/A607	4/A607	9/A607	
306	A	350	500	50	STEEL	PAINTED	1/2HR	-	-	STEEL	-	-	-	CAM LOCK BY MANUF.
307	F	900	2,100	50	WD	PAINTED	1/2HR	HW-6	1	HM	3/A607	4/A607	9/A607	
308	F	800	2,100	50	WD	PAINTED	-	HW-8	2	HM	5/A607	6/A607	9/A607	
309	F	800	2,100	50	WD	PAINTED	-	HW-8	2	HM	5/A607	6/A607	9/A607	
310	F	900	2,100	50	WD	PAINTED	1/2HR	HW-6	1	HM	3/A607	4/A607	9/A607	
311A	F	800	2,100	50	WD	PAINTED	-	HW-7	2	HM	5/A607	6/A607	9/A607	
311B	F	800	2,100	50	WD	PAINTED	-	HW-7	2	HM	5/A607	6/A607	9/A607	
312	A	350	500	50	STEEL	PAINTED	1/2HR	-	-	STEEL	-	-	-	CAM LOCK BY MANUF.
313	F	900	2,100	50	WD	PAINTED	1/2HR	HW-6	1	HM	3/A607	4/A607	9/A607	
314	F	800	2,100	50	WD	PAINTED	-	HW-8	2	HM	5/A607	6/A607	9/A607	
315	F	800	2,100	50	WD	PAINTED	-	HW-8	2	HM	5/A607	6/A607	9/A607	
316A	F	800	2,100	50	WD	PAINTED	-	HW-7	2	HM	5/A607	6/A607	9/A607	
316B	F	800	2,100	50	WD	PAINTED	-	HW-7	2	HM	5/A607	6/A607	9/A607	
317	F	900	2,100	50	WD	PAINTED	1/2HR	HW-6	1	HM	3/A607	4/A607	9/A607	
318	A	350	500	50	STEEL	PAINTED	1/2HR	-	-	STEEL	-	-	-	CAM LOCK BY MANUF.
319	F	900	2,100	50	HM	PAINTED	1/2HR	HW-3	1	HM	3/A607	4/A607	9/A607	
320	F	800	2,100	50	WD	PAINTED	1/2HR	HW-4	1	HM	3/A607	4/A607	9/A607	
321	F	900	2,100	50	WD	PAINTED	1/2HR	HW-5	1	HM	3/A607	4/A607	9/A607	
322	F	900	2,100	50	WD	PAINTED	1/2HR	HW-6	1	HM	3/A607	4/A607	9/A607	
323	F	800	2,100	50	WD	PAINTED	-	HW-8	2	HM	5/A607	6/A607	9/A607	
324	F	800	2,100	50	WD	PAINTED	-	HW-8	2	HM	5/A607	6/A607	9/A607	
325	F	900	2,100	50	WD	PAINTED	1/2HR	HW-6	1	HM	3/A607	4/A607	9/A607	
326A	F	800	2,100	50	WD	PAINTED	-	HW-7	2	HM	5/A607	6/A607	9/A607	
326B	F	800	2,100	50	WD	PAINTED	-	HW-7	2	HM	5/A607	6/A607	9/A607	
327	A	350	500	50	STEEL	PAINTED	1/2HR	-	-	STEEL	-	-	-	CAM LOCK BY MANUF.
328	F	900	2,100	50	WD	PAINTED	1/2HR	HW-6	1	HM	3/A607	4/A607	9/A607	
329	F	800	2,100	50	WD	PAINTED	-	HW-8	2	HM	5/A607	6/A607	9/A607	
330	F	800	2,100	50	WD	PAINTED	-	HW-8	2	HM	5/A607	6/A607	9/A607	
331	F	900	2,100	50	WD	PAINTED	1/2HR	HW-6	1	HM	3/A607	4/A607	9/A607	
332A	F	800	2,100	50	WD	PAINTED	-	HW-7	2	HM	5/A607	6/A607	9/A607	
332B	F	800	2,100	50	WD	PAINTED	-	HW-7	2	HM	5/A607	6/A607	9/A607	
333	A	350	500	50	STEEL	PAINTED	1/2HR	-	-	STEEL	-	-	-	CAM LOCK BY MANUF.
334	F	900	2,100	50	WD	PAINTED	1/2HR	HW-6	1	HM	3/A607	4/A607	9/A607	
335	F	800	2,100	50	WD	PAINTED	-	HW-8	2	HM	5/A607	6/A607	9/A607	
336	F	800	2,100	50	WD	PAINTED	-	HW-8	2	HM	5/A607	6/A607	9/A607	
337	F	900	2,100	50	WD	PAINTED	1/2HR	HW-6	1	HM	3/A607	4/A607	9/A607	
338A	F	800	2,100	50	WD	PAINTED	-	HW-7	2	HM	5/A607	6/A607	9/A607	
338B	F	800	2,100	50	WD	PAINTED	-	HW-7	2	HM	5/A607	6/A607	9/A607	
339	A	350	500	50	STEEL	PAINTED	1/2HR	-	-	STEEL	-	-	-	CAM LOCK BY MANUF.
340A	N	900	2,100	50	HM	PAINTED	1/2 HR	HW-2	1	HM	1/A607	2/A607	7/A607	
340B	N	900	2,100	50	HM	PAINTED	1/2 HR	HW-2	1	HM	1/A607	2/A607	7/A607	
341	A	350	500	50	STEEL	PAINTED	1/2HR	-	-	STEEL	-	-	-	CAM LOCK BY MANUF.
342A	F	800	2,100	50	WD	PAINTED	-	HW-7	2	HM	5/A607	6/A607	9/A607	
342B	F	800	2,100	50	WD	PAINTED	-	HW-7	2	HM	5/A607	6/A607	9/A607	
343	F	900	2,100	50	WD	PAINTED	1/2HR	HW-6	1	HM	3/A607	4/A607	9/A607	
344	F	800	2,100	50	WD	PAINTED	-	HW-8	2	HM	5/A607	6/A607	9/A607	
345	F	800	2,100	50	WD	PAINTED	-	HW-8	2	HM	5/A607	6/A607	9/A607	
346	F	900	2,100	50	WD	PAINTED	1/2HR	HW-6	1	HM	3/A607	4/A607	9/A607	
347	A	350	500	50	STEEL	PAINTED	1/2HR	-	-	STEEL	-	-	-	CAM LOCK BY MANUF.
348	F	900	2,100	50	WD	PAINTED	1/2HR	HW-6	1	HM	3/A607	4/A607	9/A607	
349A	F	800	2,100	50	WD	PAINTED	-	HW-7	2	HM	5/A607	6/A607	9/A607	
349B	F	800	2,100	50	WD	PAINTED	-	HW-7	2	HM	5/A607	6/A607	9/A607	
350	F	800	2,100	50	WD	PAINTED	-	HW-8	2	HM	5/A607	6/A607	9/A607	
351	F	800	2,100	50	WD	PAINTED	-	HW-8	2	HM	5/A607	6/A607	9/A607	
352	F	900	2,100	50	WD	PAINTED	1/2HR	HW-6	1	HM	3/A607	4/A607	9/A607	
353	A	350	500	50	STEEL	PAINTED	1/2HR	-	-	STEEL	-	-	-	CAM LOCK BY MANUF.
354	F	900	2,100	50	WD	PAINTED	1/2HR	HW-6	1	HM	3/A607	4/A607	9/A607	
355	F	800	2,100	50	WD	PAINTED	-	HW-8	2	HM	5/A607	6/A607	9/A607	
356	F	800	2,100	50	WD	PAINTED	-	HW-8	2	HM	5/A607	6/A607	9/A607	
357	F	900	2,100	50	WD	PAINTED	1/2HR	HW-6	1	HM	3/A607	4/A607	9/A607	
358A	F	800	2,100	50	WD	PAINTED	-	HW-7	2	HM	5/A607	6/A607	9/A607	
358B	F	800	2,100	50	WD	PAINTED	-	HW-7	2	HM	5/A607	6/A607	9/A607	
359	F	900	2,100	50	WD	PAINTED	1/2HR	HW-5	1	HM	3/A607	4/A607	9/A607	
360	F	800	2,100	50	WD	PAINTED	1/2HR	HW-3	1	HM	3/A607	4/A607	9/A607	
361	F	900	2,100	50	WD	PAINTED	1/2HR	HW-5	1	HM	3/A607	4/A607	9/A607	
362	B	900	2,100	50	HM	PAINTED	-	HW-9	1	HM	3/A607	4/A607	9/A607	
363	A	350	500	50	STEEL	PAINTED	1/2HR	-	-	STEEL	-	-	-	CAM LOCK BY MANUF.
364	F	900	2,100	50	WD	PAINTED	1/2HR	HW-6	1	HM	3/A607	4/A607		
365	F	800	2,100	50	WD	PAINTED	-	HW-8	2	HM	5/A607	6/A607	9/A607	
366	F	800	2,100	50	WD	PAINTED	-	HW-8	2	HM	5/A607	6/A607	9/A607	
367	F	900	2,100	50	WD	PAINTED	1/2HR	HW-6	1	HM	3/A607	4/A607	9/A607	
368A	F	800	2,100	50	WD	PAINTED	-	HW-7	2	HM	5/A607	6/A607	9/A607	
368B	F	800	2,100	50	WD	PAINTED	-	HW-7	2	HM	5/A607	6/A607	9/A607	
369	A	350	500	50	STEEL	PAINTED	1/2HR	-	-	STEEL	-	-	-	CAM LOCK BY MANUF.
370	F	900	2,100	50	WD	PAINTED	1/2HR	HW-6	1	HM	3/A607	4/A607	9/A607	
371	F	800	2,100	50	WD	PAINTED	-	HW-8	2	HM	5/A607	6/A607	9/A607	
372	F	800	2,100	50	WD	PAINTED	-	HW-8	2	HM	5/A607	6/A607	9/A607	
373	F	900	2,100	50	WD	PAINTED	1/2HR	HW-6	1	HM	3/A607	4/A607	9/A607	
374A	F	800	2,100	50	WD	PAINTED	-	HW-7	2	HM	5/A607	6/A607	9/A607	
374B	F	800	2,100	50	WD	PAINTED	-	HW-7	2	HM	5/A607	6/A607	9/A607	
375	A	350	500	50	STEEL	PAINTED	1/2HR	-	-	STEEL	-	-	-	CAM LOCK BY MANUF.
376	F	900	2,100	50	WD	PAINTED	1/2HR	HW-6	1	HM	3/A607	4/A607	9/A607	
377	F	800	2,100	50	WD	PAINTED	-	HW-8	2	HM	5/A607	6/A607	9/A607	
378	F	800	2,100	50	WD	PAINTED	-	HW-8	2	HM	5/A607	6/A607	9/A607	
379	F	900	2,100	50	WD	PAINTED	1/2HR	HW-6	1	HM	3/A607	4/A607	9/A607	
380A	F	800	2,100	50	WD	PAINTED	-	HW-7	2	HM	5/A607	6/A607	9/A607	
380B	F	800	2,100	50	WD	PAINTED	-	HW-7	2	HM	5/A607	6/A607	9/A607	

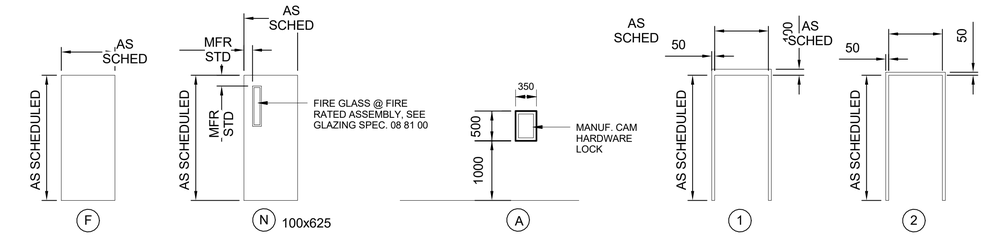

DOOR TYPES

DOOR FRAMES

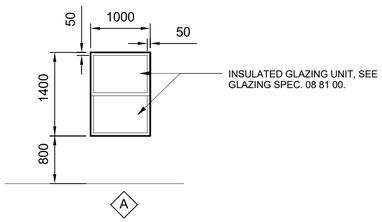

WINDOW TYPES

US Army Corps of Engineers®

MARK	DESCRIPTION	DATE

DESIGNED BY: T.D.W.
DRAWN BY: T.D.W.
CHECKED BY: J.M.C.
SUBMITTED BY: C.A.
SIZE: ANSI D
ISSUE DATE: FEBRUARY 2019
SOLICITATION NO.: W9127818R0028
CONTRACT NO.:
PROJECT NUMBER: M017EC44
FILE NAME: M017E0144

U.S. ARMY CORPS OF ENGINEERS
MOBILE DISTRICT
MOBILE, ALABAMA

SOTO CANO AIR BASE, HONDURAS
UNACCOMPANIED ENLISTED PERSONNEL HOUSING

THIRD FLOOR DOOR SCHEDULE

SHEET ID

A-605

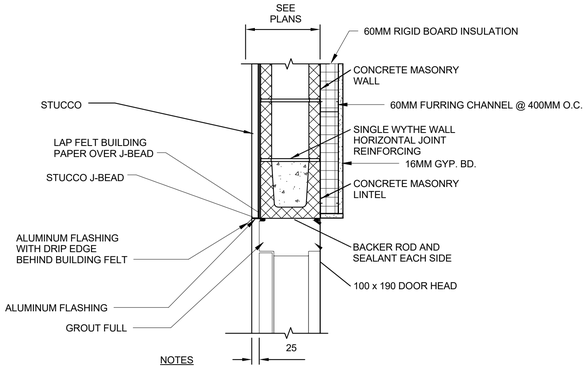

NOTES

1. SEE STRUCTURAL FOR LINTEL REINFORCING.
2. INSULATION NOT SHOWN.

1 EXT. HD. DR.
1 : 10

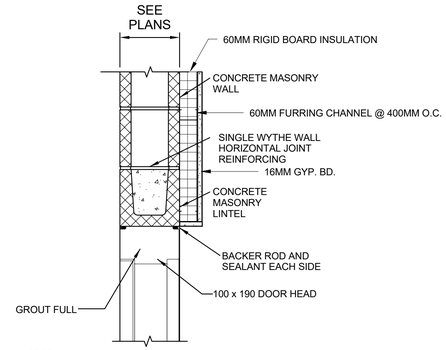

NOTES

1. SEE STRUCTURAL FOR LINTEL REINFORCING.
2. INSULATION NOT SHOWN.

3 INT. CMU DOOR DETAIL
1 : 10

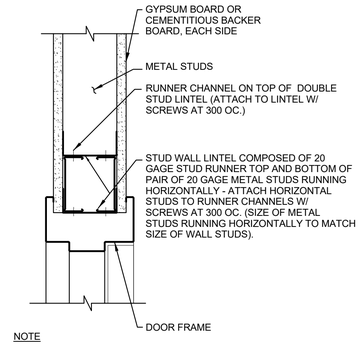

NOTE

1. INSULATION NOT SHOWN. SEE WALL TYPES.

5 GYP. BD. HEAD DETAIL
1 : 10

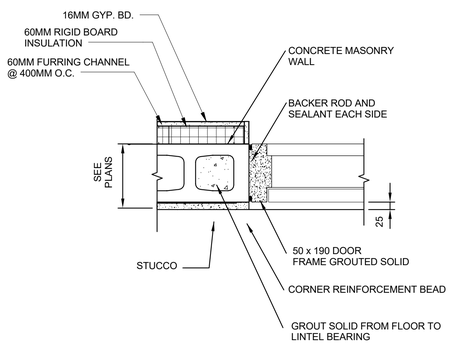

2 EXT JAMB DR
1 : 10

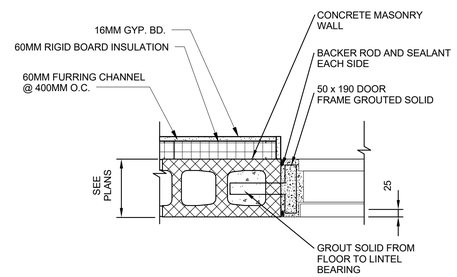

NOTES

1. SEE STRUCTURAL FOR VERTICAL REINFORCING.
2. INSULATION NOT SHOWN.

4 INT. CMU DOOR JAMB DETAIL
1 : 10

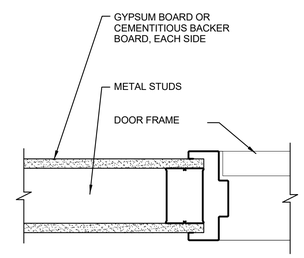

NOTE

1. INSULATION NOT SHOWN. SEE WALL TYPES.

6 GYP. BD. JAMB DETAIL
1 : 10

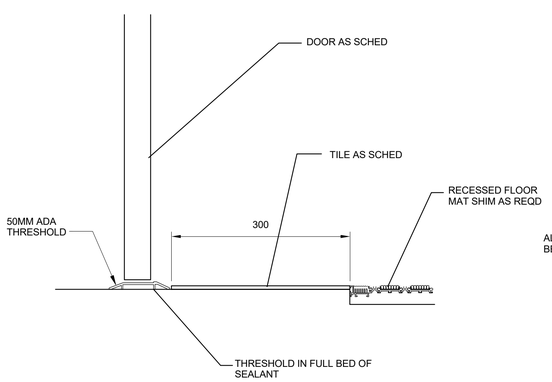

7 DOOR THRESHOLD - TYP.
1 : 5

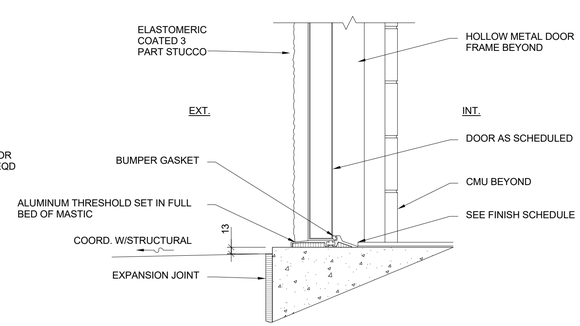

EXTERIOR DOOR SILL - TYPICAL

8 EXT. DOOR DETAIL - THRESHOLD
1 : 150

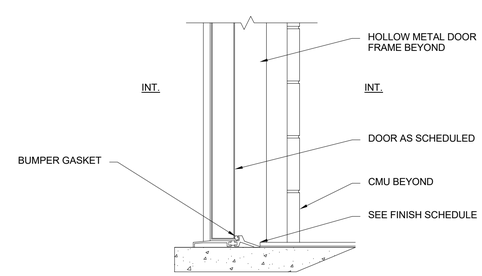

INTERIOR DOOR SILL - TYPICAL

9 INT. DOOR DETAIL - THRESHOLD
1 : 150

US Army Corps of Engineers®

MARK	DESCRIPTION	DATE

DESIGNED BY: T.D.W.
DRAWN BY: T.D.W.
CHECKED BY: J.M.C.
SUBMITTED BY: C.A.
SIZE: ANSI D
ISSUE DATE: FEBRUARY 2019
SOLICITATION NO.: W912781R0028
CONTRACT NO.:
PROJECT NUMBER: M07TEC44
FILE NAME: M07TE0144

U.S. ARMY CORPS OF ENGINEERS
MOBILE DISTRICT
MOBILE, ALABAMA

SOTO CANO AIR BASE, HONDURAS
UNACCOMPANIED ENLISTED PERSONNEL HOUSING

DOOR DETAILS

SHEET ID
A-607

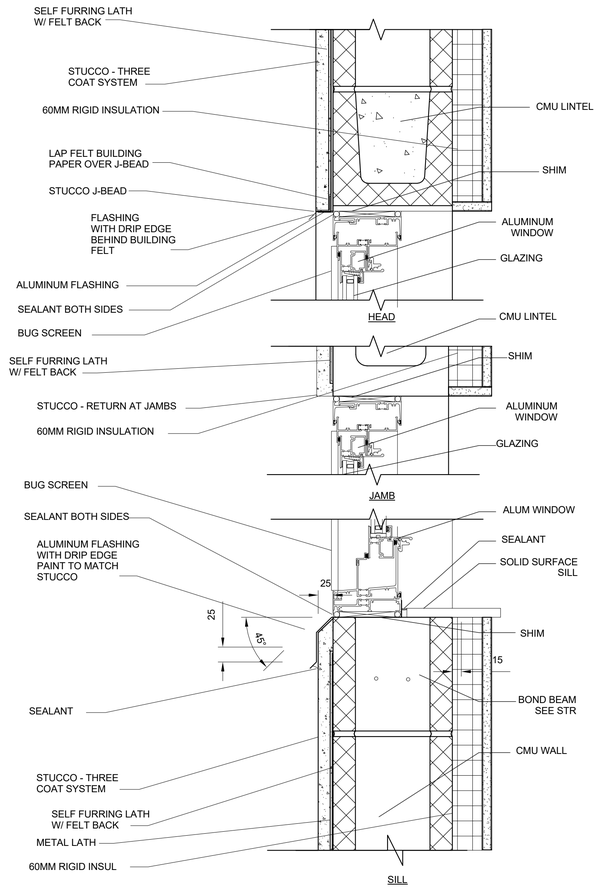

1 WINDOW DETAIL
1 : 5

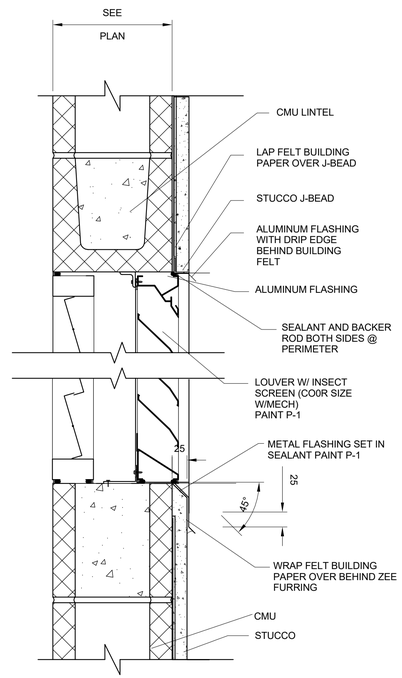

2 LOUVER DETAIL
1 : 5

US Army Corps of Engineers®

MARK	DESCRIPTION	DATE

DESIGNED BY: XXX YYY	ISSUE DATE: FEBRUARY 2019
DRAWN BY: Author	SOLICITATION NO.: W912781R0028
CHECKED BY: XXX YYY	CONTRACT NO.:
SUBMITTED BY:	PROJECT NUMBER: M077EC44
SIZE: ANSI D	FILE NAME: M077EC44

U.S. ARMY CORPS OF ENGINEERS
MOBILE DISTRICT
MOBILE, ALABAMA

SOTO CANO AIR BASE, HONDURAS
UNACCOMPANIED ENLISTED PERSONNEL HOUSING

WINDOW DETAILS

SHEET ID

A-609

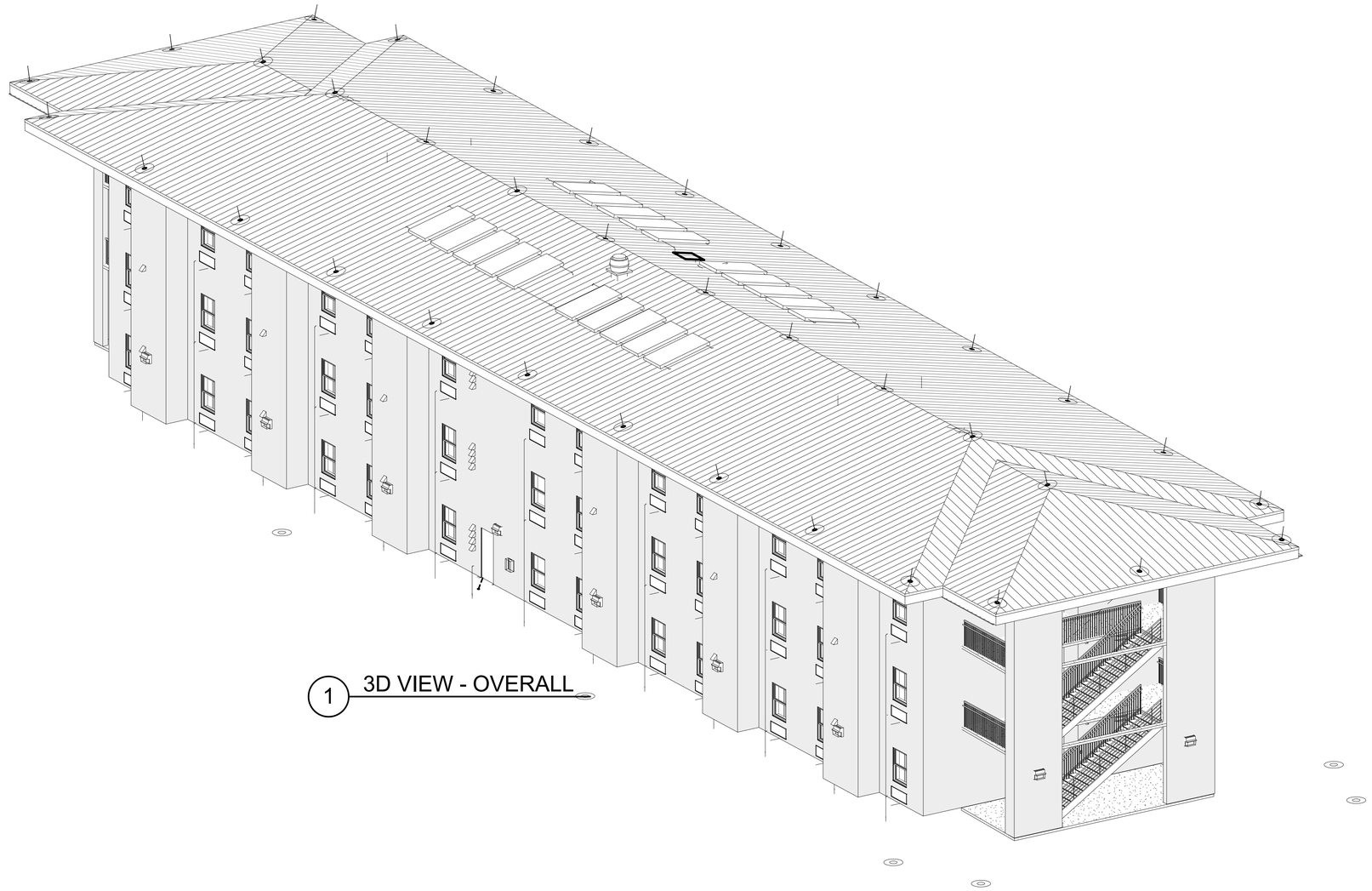

1 3D VIEW - OVERALL

2 3D View 1

3 3D View 2

US Army Corps of Engineers®

MARK	DESCRIPTION	DATE

U.S. ARMY CORPS OF ENGINEERS
MOBILE DISTRICT
MOBILE, ALABAMA

DESIGNED BY: XXX YYY
DRAWN BY: Author
CHECKED BY: XXX YYY
SUBMITTED BY: XXX YYY
SIZE: ANSI D
ISSUE DATE: FEBRUAUARY 2019
SOLICITATION NO.: W9127819R0028
CONTRACT NO.:
PROJECT NUMBER: M077EC44
FILE NAME: M077E0144

SOTO CANO AIR BASE, HONDURAS
UNACCOMPANIED ENLISTED PERSONNEL HOUSING

PERSPECTIVE VIEWS

SHEET ID

A-801

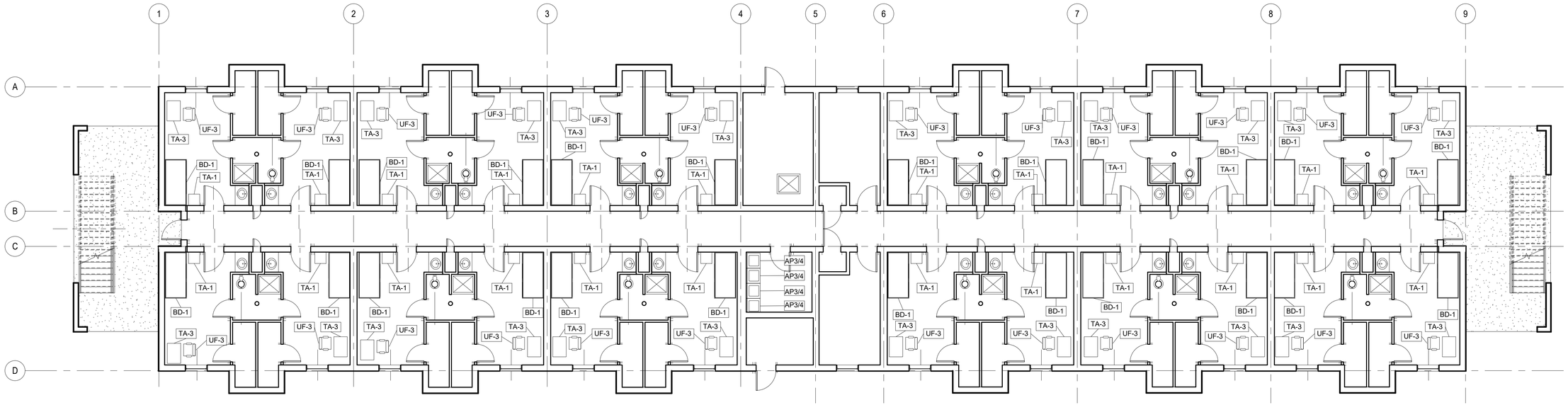

OVERALL FIRST FLOOR FURNITURE PLAN

1 : 96

GENERAL NOTES:

1. ARTWORK PLACEMENT SHOULD BE CENTERED ON WALL. MOUNT 1168MM ABOVE THE FINISHED FLOOR TO THE BOTTOM OF FRAME. DIMENSIONS SHOULD BE CONFIRMED WITH THE GOVERNMENT IF SPECIFIED PRODUCTS ARE SUBSTITUTED.
2. SEE SHEET A400 FOR ENLARGED CORE PLAN, INTERIOR ELEVATIONS, AND MOUNTING HEIGHTS.
3. SEE SHEET I-001,002, AND 003 FOR ROOM FINISH SCHEDULES.

LEGEND

MISCELLANEOUS FURNITURE ITEMS (NIC)

SH WOODEN SHELVES (30.48cm WIDE)

ROD CLOSET ROD TYPE 304 STAINLESS STEEL □1-1/4" WITH STAINLESS STEEL MOUNTING HARD WARE. LENGTH 72"

FF & E LEGEND:	
ACCESSIORES	
AC1	WASTE BASKET
AC2	TRASH CAN
AC3	SHOWER CURTAIN
AC4	RECYCLE CONTAINER
APPLIANCES	
AP3/4	STACKABLE WASHER AND DRYER
FURNITURE	
TA1	END TABLE
TA3	DESK
BD1	BED WITH MATTRESS

GRAPHIC SCALE:

1 0 1 1.9 2.9 3.8 4.8

SCALE 1:96 m

PLAN NORTH

US Army Corps of Engineers ®

MARK	DESCRIPTION	DATE

ISSUE DATE: FEBRUARY 2019
SOLICITATION NO.: W912T819R0028
CONTRACT NO.:
PROJECT NUMBER: M07TE144

DESIGNED BY: T.D.W.
DRAWN BY: T.D.W.
CHECKED BY: J.M.C.
SUBMITTED BY: C.A.
SIZE: ANSI D
FILE NAME: M07TE144

U.S. ARMY CORPS OF ENGINEERS
MOBILE DISTRICT
109 SAINT JOSEPH STREET
MOBILE AL 36602

SOTO CANO AIR BASE, HONDURAS
UNACCOMPANIED ENLISTED PERSONNEL HOUSING

FIRST FLOOR
OVERALL FURNITURE PLAN

SHEET ID

I-101

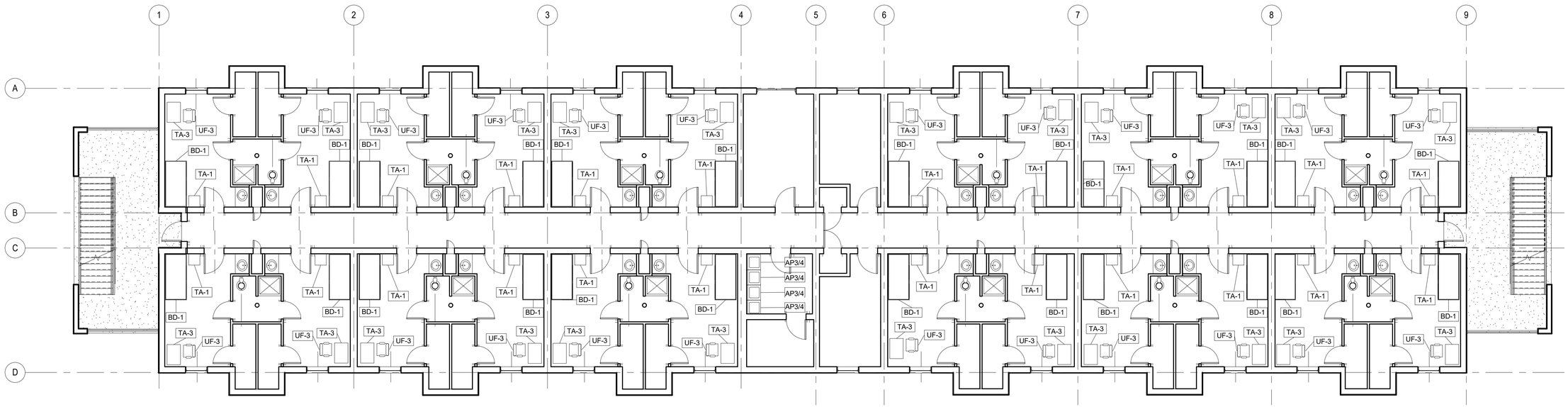

SECOND FLOOR PLAN

1 : 96

GENERAL NOTES:

1. ARTWORK PLACEMENT SHOULD BE CENTERED ON WALL. MOUNT 1168MM ABOVE THE FINISHED FLOOR TO THE BOTTOM OF FRAME. DIMENSIONS SHOULD BE CONFIRMED WITH THE GOVERNMENT IF SPECIFIED PRODUCTS ARE SUBSTITUTED.
2. SEE SHEET A400 FOR ENLARGED CORE PLAN, INTERIOR ELEVATIONS, AND MOUNTING HEIGHTS.
3. SEE SHEET I-001,002, AND 003 FOR ROOM FINISH SCHEDULES.

LEGEND

MISCELLANEOUS FURNITURE ITEMS (NIC)

SH — WOODEN SHELVES (30.48cm WIDE)

ROD — CLOSET ROD TYPE 304 STAINLESS STEEL □1-1/4" WITH STAINLESS STEEL MOUNTING HARD WARE. LENGTH 72"

FF & E LEGEND:	
ACCESSIORES	
AC1	WASTE BASKET
AC2	TRASH CAN
AC3	SHOWER CURTAIN
AC4	RECYCLE CONTAINER
APPLIANCES	
AP3/4	STACKABLE WASHER AND DRYER
FURNITURE	
TA1	END TABLE
TA3	DESK
BD1	BED WITH MATTRESS

GRAPHIC SCALE:

1 0 1 1.9 2.9 3.8 4.8

SCALE 1:96 m

PLAN NORTH

US Army Corps of Engineers ®

MARK	DESCRIPTION	DATE

ISSUE DATE: FEBRUARY 2019
SOLICITATION NO.: W912T819R0028
CONTRACT NO.:
PROJECT NUMBER: M07TEU44
FILE NAME: M07TEU44

DESIGNED BY: T.D.W.
DRAWN BY: T.D.W.
CHECKED BY: J.M.C.
SUBMITTED BY: C.A.
SIZE: ANSI D

U.S. ARMY CORPS OF ENGINEERS
MOBILE DISTRICT
109 SAINT JOSEPH STREET
MOBILE AL 36602

SOTO CANO AIR BASE, HONDURAS
UNACCOMPANIED ENLISTED PERSONNEL HOUSING

SECOND FLOOR
OVERALL FURNITURE PLAN

SHEET ID

I-102

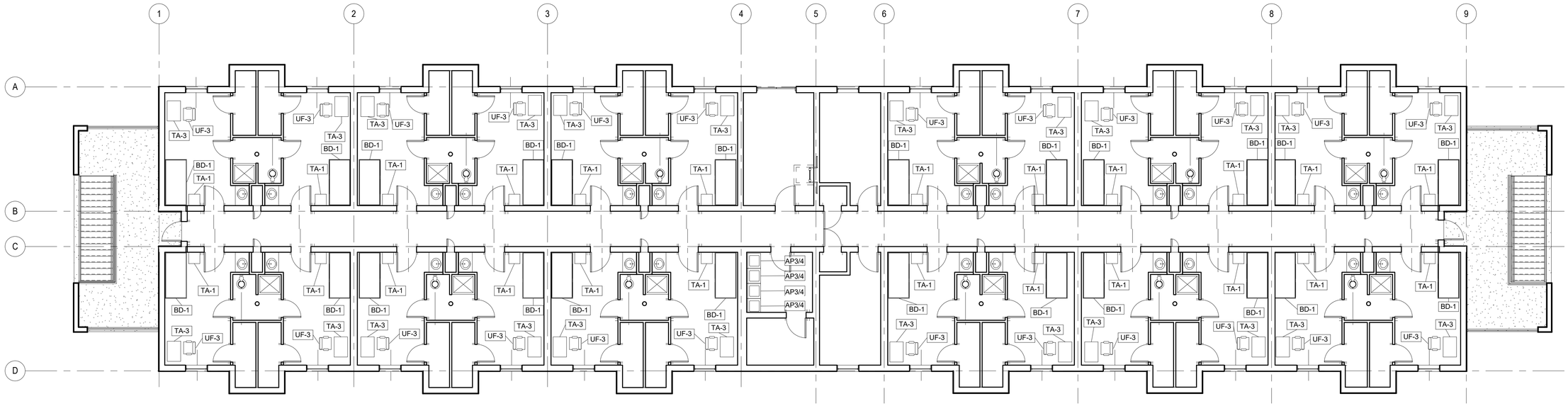

THIRD FLOOR PLAN

1 : 96

GENERAL NOTES:

1. ARTWORK PLACEMENT SHOULD BE CENTERED ON WALL. MOUNT 1168MM ABOVE THE FINISHED FLOOR TO THE BOTTOM OF FRAME. DIMENSIONS SHOULD BE CONFIRMED WITH THE GOVERNMENT IF SPECIFIED PRODUCTS ARE SUBSTITUTED.
2. SEE SHEET A400 FOR ENLARGED CORE PLAN, INTERIOR ELEVATIONS, AND MOUNTING HEIGHTS.
3. SEE SHEET I-001,002, AND 003 FOR ROOM FINISH SCHEDULES.

LEGEND

MISCELLANEOUS FURNITURE ITEMS (NIC)

SH WOODEN SHELVES (30.48cm WIDE)

ROD CLOSET ROD TYPE 304 STAINLESS STEEL □1-1/4" WITH STAINLESS STEEL MOUNTING HARD WARE. LENGTH 72"

FF & E LEGEND:	
ACCESSIORES	
AC1	WASTE BASKET
AC2	TRASH CAN
AC3	SHOWER CURTAIN
AC4	RECYCLE CONTAINER
APPLIANCES	
AP3/4	STACKABLE WASHER AND DRYER
FURNITURE	
TA1	END TABLE
TA3	DESK
BD1	BED WITH MATTRESS

GRAPHIC SCALE:

1 0 1 1.9 2.9 3.8 4.8

SCALE 1:96 m

PLAN NORTH

US Army Corps of Engineers ®

MARK	DESCRIPTION	DATE

DESIGNED BY: T.D.W.
DRAWN BY: T.D.W.
CHECKED BY: J.M.C.
SUBMITTED BY: C.A.
SIZE: ANSI D
FILE NAME: M07TE144
ISSUE DATE: FEBRUARY 2019
SOLICITATION NO.: W912T819R0028
CONTRACT NO.:
PROJECT NUMBER: M07TE144

U.S. ARMY CORPS OF ENGINEERS
MOBILE DISTRICT
109 SAINT JOSEPH STREET
MOBILE AL 36602

SOTO CANO AIR BASE, HONDURAS
UNACCOMPANIED ENLISTED PERSONNEL HOUSING

THIRD FLOOR
OVERALL FURNITURE PLAN

SHEET ID

I-103

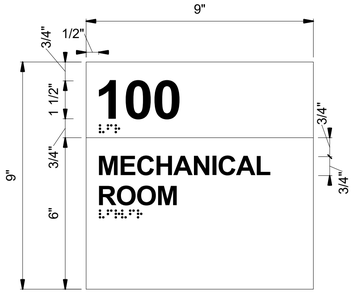

SIGN TYPE - A

SIGN TYPE - E

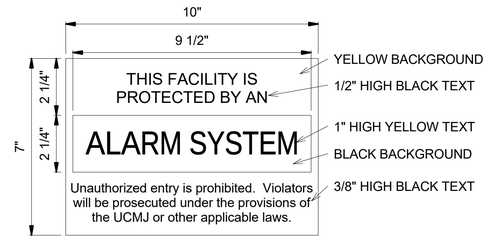

SIGN TYPE - H

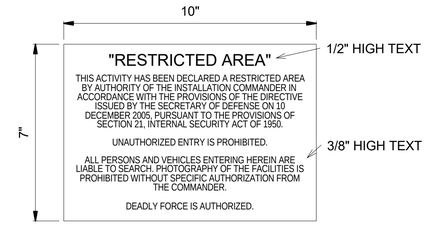

SIGN TYPE - G

NOTE: BACKGROUND SHALL MATCH GENERAL WALL PAINT IN COLOR, TITLE SHALL BE MANUFACTURER'S STANDARD RED, ALL OTHER TEXT SHALL BE BLACK.

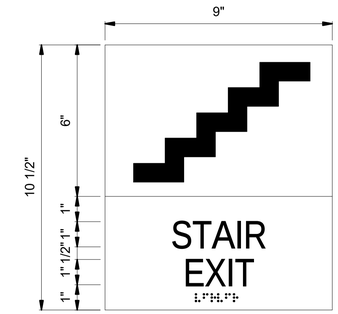

SIGN TYPE - J

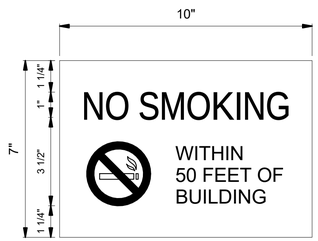

SIGN TYPE - M

NOTE: SIGN SHALL BE POSTED PER AR 600-63.

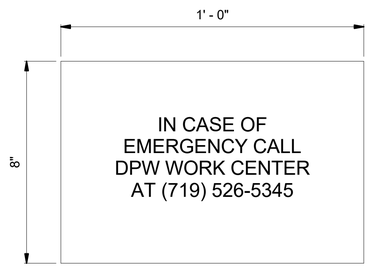

SIGN TYPE - N

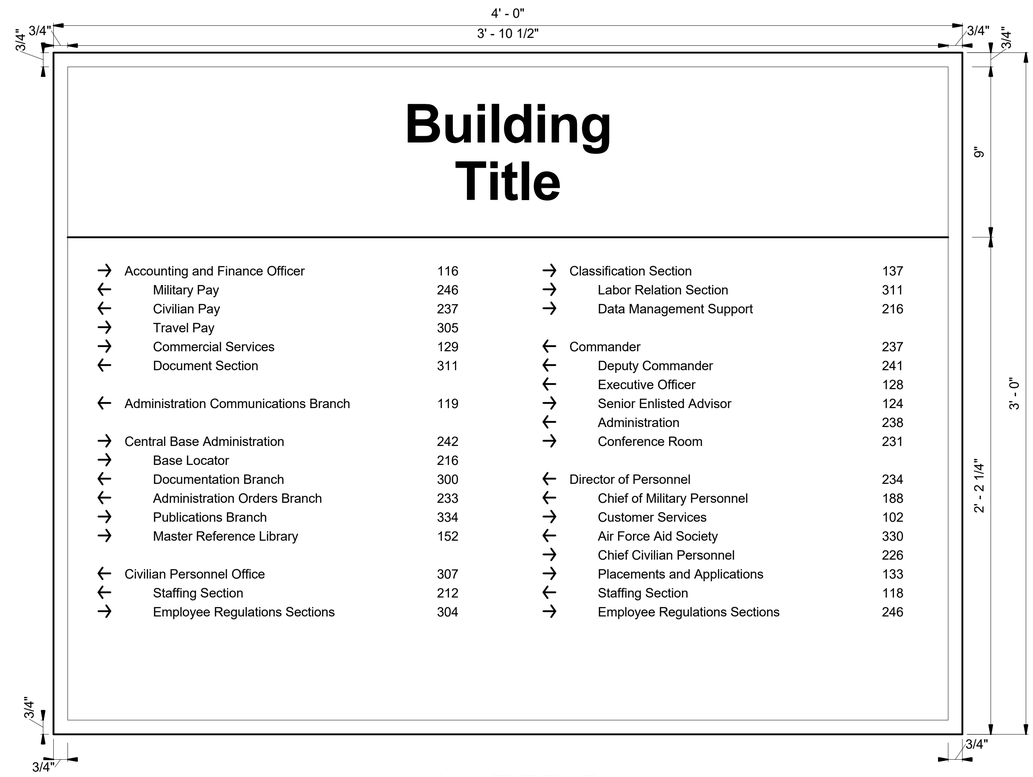

SIGN TYPE - F

GENERAL NOTES:

1. OVERALL SIGN SIZE VARIES DEPENDENT ON NUMBER OF LINES OF TEXT.
2 SEE SPEC SECTIONS 10-14-00.20 FOR SIGNAGE SCHEDULE.

US Army Corps of Engineers ®

MARK	DESCRIPTION	DATE

DESIGNED BY: T.D.W.	ISSUE DATE: FEBRUARY 2019
DRAWN BY: T.D.W.	SOLICITATION NO.: W912T819R0028
CHECKED BY: J.M.C.	CONTRACT NO.:
SUBMITTED BY: C.A.	PROJECT NUMBER: M077E144
SIZE: ANSI D	FILE NAME: M077E144

U.S. ARMY CORPS OF ENGINEERS
MOBILE DISTRICT
109 SAINT JOSEPH STREET
MOBILE AL 36602

SOTO CANO AIR BASE, HONDURAS
UNACCOMPANIED ENLISTED PERSONNEL HOUSING

TYPICAL SIGNAGE

SHEET ID

I-400

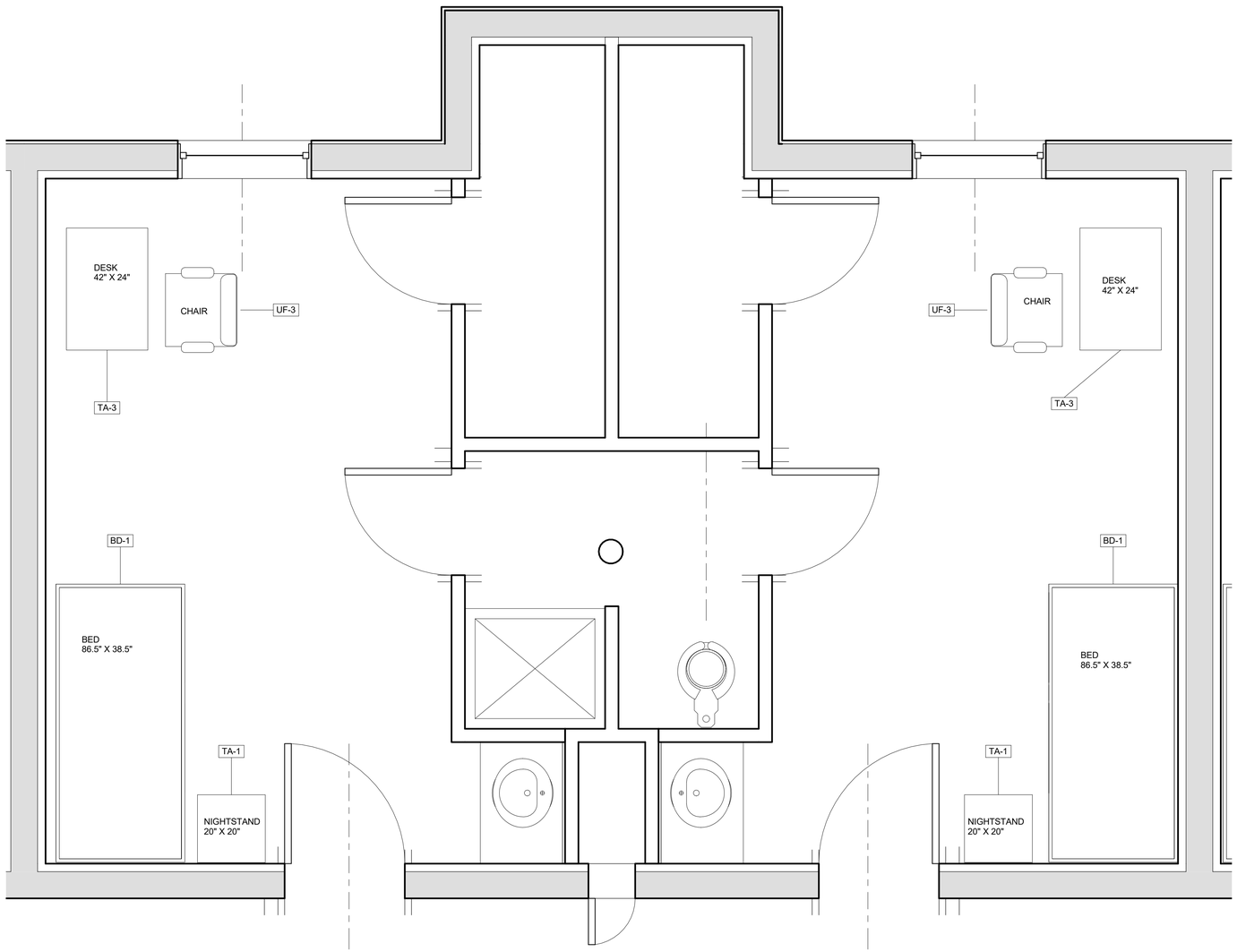

1 ENLARGED FURNITURE PLAN

1 : 20

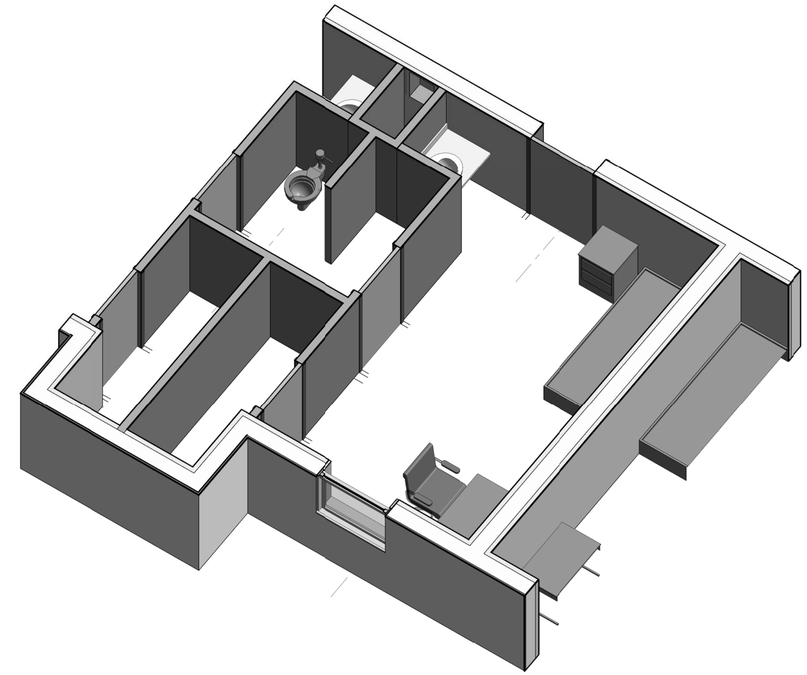

2 3D VIEW 1

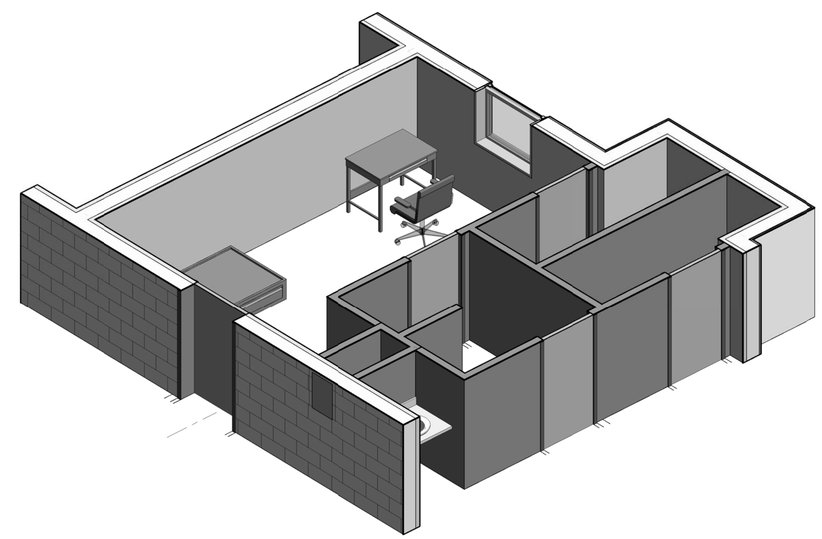

3 3D VIEW 2

LEGEND

MISCELLANEOUS FURNITURE ITEMS (NIC)

SH WOODEN SHELVES (30.48cm WIDE)

ROD CLOSET ROD TYPE 304 STAINLESS STEEL □1-1/4" WITH STAINLESS STEEL MOUNTING HARD WARE. LENGTH 72"

GENERAL NOTES:

1. ARTWORK PLACEMENT SHOULD BE CENTERED ON WALL. MOUNT 1168MM ABOVE THE FINISHED FLOOR TO THE BOTTOM OF FRAME. DIMENSIONS SHOULD BE CONFIRMED WITH THE GOVERNMENT IF SPECIFIED PRODUCTS ARE SUBSTITUTED.
2. SEE SHEET A400 FOR ENLARGED CORE PLAN, INTERIOR ELEVATIONS, AND MOUNTING HEIGHTS.
3. SEE SHEET I-001,002, AND 003 FOR ROOM FINISH SCHEDULES.

FF & E LEGEND:	
ACCESSIORES	
AC1	WASTE BASKET
AC2	TRASH CAN
AC3	SHOWER CURTAIN
AC4	RECYCLE CONTAINER
APPLIANCES	
AP3/4	STACKABLE WASHER AND DRYER
FURNITURE	
TA1	END TABLE
TA3	DESK
BD1	BED WITH MATTRESS

GRAPHIC SCALE:

200 0 200 400 600 800 1000 mm

SCALE 1:20

PLAN NORTH

US Army Corps of Engineers ®

MARK	DESCRIPTION	DATE

DESIGNED BY: T.D.W.
DRAWN BY: T.D.W.
CHECKED BY: J.M.C.
SUBMITTED BY: C.A.
SIZE: ANSI D
ISSUE DATE: FEBRUARY 2019
SOLICITATION NO.: W912T819R0028
CONTRACT NO.:
PROJECT NUMBER: M07TEU44
FILE NAME: M07TEU44

U.S. ARMY CORPS OF ENGINEERS
MOBILE DISTRICT
109 SAINT JOSEPH STREET
MOBILE AL 36602

SOTO CANO AIR BASE, HONDURAS
UNACCOMPANIED ENLISTED PERSONNEL HOUSING

ENLARGED DORM FURNITURE LAYOUT PLAN

SHEET ID

I-501

FIRST FLOOR FINISH SCHEDULE

ROOM NO	ROOM NAME	WALLS NORTH MATERIAL	WALLS NORTH FINISH	WALLS EAST MATERIAL	WALLS EAST FINISH	WALLS SOUTH MATERIAL	WALLS SOUTH FINISH	WALLS WEST MATERIAL	WALLS WEST FINISH	BASE MATERIAL NORTH	BASE MATERIAL EAST	BASE MATERIAL SOUTH	BASE MATERIAL WEST	FLOOR MAT.	FLOOR FIN.	CEILING MAT.	CEILING FIN.	NOTES & REMARKS (SEE NOTES)
01	FIRE RISER	CMU		CMU		CMU		CMU						CONCRETE				
101	DORM	GWB	P-5	GWB	P-5	GWB	P-5	GWB	P-5	PTB-1	PTB-1	PTB-1	PTB-1	CONCRETE	PT-1	GWB	P-4	1,2,3,9
102	CLOSET	GWB	P-5	GWB	P-5	GWB	P-5	GWB	P-5	PTB-1	PTB-1	PTB-1	PTB-1	CONCRETE	PT-1	GWB	P-4	1,8
103	CLOSET	GWB	P-5	GWB	P-5	GWB	P-5	GWB	P-5	PTB-1	PTB-1	PTB-1	PTB-1	CONCRETE	PT-1	GWB	P-4	1,8
104	DORM	GWB	P-5	GWB	P-5	GWB	P-5	GWB	P-5	PTB-1	PTB-1	PTB-1	PTB-1	CONCRETE	PT-1	GWB	P-4	1,2,3,9
105	BATHROOM	CT	CT-1,2,3	CT	CT-1,2,3	CT	CT-1,2,3	CT	CT-1,2,3	PTB-1	PTB-1	PTB-1	PTB-1	CONCRETE	PT-1	GWB	P-4	1,6,8,9
106	MECH	GWB	P-2	GWB	P-2	GWB	P-2	GWB	P-2	RB-1	RB-1	RB-1	RB-1	CONCRETE	C	EXPOSED	PS-1	
107	DORM	GWB	P-5	GWB	P-5	GWB	P-5	GWB	P-5	PTB-1	PTB-1	PTB-1	PTB-1	CONCRETE	PT-1	GWB	P-4	1,2,3,9
108	CLOSET	GWB	P-5	GWB	P-5	GWB	P-5	GWB	P-5	PTB-1	PTB-1	PTB-1	PTB-1	CONCRETE	PT-1	GWB	P-4	1,8
109	CLOSET	GWB	P-5	GWB	P-5	GWB	P-5	GWB	P-5	PTB-1	PTB-1	PTB-1	PTB-1	CONCRETE	PT-1	GWB	P-4	1,8
110	DORM	GWB	P-5	GWB	P-5	GWB	P-5	GWB	P-5	PTB-1	PTB-1	PTB-1	PTB-1	CONCRETE	PT-1	GWB	P-4	1,2,3,9
111	BATHROOM	CT	CT-1,2,3	CT	CT-1,2,3	CT	CT-1,2,3	CT	CT-1,2,3	PTB-1	PTB-1	PTB-1	PTB-1	CONCRETE	PT-1	GWB	P-4	1,6,8,9
112	MECH	GWB	P-2	GWB	P-2	GWB	P-2	GWB	P-2	RB-1	RB-1	RB-1	RB-1	CONCRETE	C	EXPOSED	PS-1	
113	DORM	GWB	P-5	GWB	P-5	GWB	P-5	GWB	P-5	PTB-1	PTB-1	PTB-1	PTB-1	CONCRETE	PT-1	GWB	P-4	1,2,3,9
114	CLOSET	GWB	P-5	GWB	P-5	GWB	P-5	GWB	P-5	PTB-1	PTB-1	PTB-1	PTB-1	CONCRETE	PT-1	GWB	P-4	1,8
115	CLOSET	GWB	P-5	GWB	P-5	GWB	P-5	GWB	P-5	PTB-1	PTB-1	PTB-1	PTB-1	CONCRETE	PT-1	GWB	P-4	1,8
116	BATHROOM	CT	CT-1,2,3	CT	CT-1,2,3	CT	CT-1,2,3	CT	CT-1,2,3	PTB-1	PTB-1	PTB-1	PTB-1	CONCRETE	PT-1	GWB	P-4	1,6,8,9
117	DORM	GWB	P-5	GWB	P-5	GWB	P-5	GWB	P-5	PTB-1	PTB-1	PTB-1	PTB-1	CONCRETE	PT-1	GWB	P-4	1,2,3,9
118	MECH	GWB	P-2	GWB	P-2	GWB	P-2	GWB	P-2	RB-1	RB-1	RB-1	RB-1	CONCRETE	C	EXPOSED	PS-1	
119	MECH	GWB	P-2	GWB	P-2	GWB	P-2	GWB	P-2	RB-1	RB-1	RB-1	RB-1	CONCRETE	C	EXPOSED	PS-1	
120	JAN.	GWB	P-5	GWB	P-5	GWB	P-5	GWB	P-5	PTB-1	PTB-1	PTB-1	PTB-1	CONCRETE	PT-1	GWB	P-4	
121	ACTIVITY	GWB	P-5	GWB	P-5	GWB	P-5	GWB	P-5	PTB-1	PTB-1	PTB-1	PTB-1	CONCRETE	PT-1	GWB	P-4	
122	DORM	GWB	P-5	GWB	P-5	GWB	P-5	GWB	P-5	PTB-1	PTB-1	PTB-1	PTB-1	CONCRETE	PT-1	GWB	P-4	1,2,3,9
123	CLOSET	GWB	P-5	GWB	P-5	GWB	P-5	GWB	P-5	PTB-1	PTB-1	PTB-1	PTB-1	CONCRETE	PT-1	GWB	P-4	1,8
124	CLOSET	GWB	P-5	GWB	P-5	GWB	P-5	GWB	P-5	PTB-1	PTB-1	PTB-1	PTB-1	CONCRETE	PT-1	GWB	P-4	1,8
125	DORM	GWB	P-5	GWB	P-5	GWB	P-5	GWB	P-5	PTB-1	PTB-1	PTB-1	PTB-1	CONCRETE	PT-1	GWB	P-4	1,2,3,9
126	BATHROOM	CT	CT-1,2,3	CT	CT-1,2,3	CT	CT-1,2,3	CT	CT-1,2,3	PTB-1	PTB-1	PTB-1	PTB-1	CONCRETE	PT-1	GWB	P-4	1,6,8,9
127	MECH	GWB	P-2	GWB	P-2	GWB	P-2	GWB	P-2	RB-1	RB-1	RB-1	RB-1	CONCRETE	C	EXPOSED	PS-1	
128	DORM	GWB	P-5	GWB	P-5	GWB	P-5	GWB	P-5	PTB-1	PTB-1	PTB-1	PTB-1	CONCRETE	PT-1	GWB	P-4	1,2,3,9
129	CLOSET	GWB	P-5	GWB	P-5	GWB	P-5	GWB	P-5	PTB-1	PTB-1	PTB-1	PTB-1	CONCRETE	PT-1	GWB	P-4	1,8
130	CLOSET	GWB	P-5	GWB	P-5	GWB	P-5	GWB	P-5	PTB-1	PTB-1	PTB-1	PTB-1	CONCRETE	PT-1	GWB	P-4	1,8
131	DORM	GWB	P-5	GWB	P-5	GWB	P-5	GWB	P-5	PTB-1	PTB-1	PTB-1	PTB-1	CONCRETE	PT-1	GWB	P-4	1,2,3,9
132	BATHROOM	CT	CT-1,2,3	CT	CT-1,2,3	CT	CT-1,2,3	CT	CT-1,2,3	PTB-1	PTB-1	PTB-1	PTB-1	CONCRETE	PT-1	GWB	P-4	1,6,8,9
133	MECH	GWB	P-2	GWB	P-2	GWB	P-2	GWB	P-2	RB-1	RB-1	RB-1	RB-1	CONCRETE	C	EXPOSED	PS-1	
134	DORM	GWB	P-5	GWB	P-5	GWB	P-5	GWB	P-5	PTB-1	PTB-1	PTB-1	PTB-1	CONCRETE	PT-1	GWB	P-4	1,2,3,9
135	CLOSET	GWB	P-5	GWB	P-5	GWB	P-5	GWB	P-5	PTB-1	PTB-1	PTB-1	PTB-1	CONCRETE	PT-1	GWB	P-4	1,8
136	CLOSET	GWB	P-5	GWB	P-5	GWB	P-5	GWB	P-5	PTB-1	PTB-1	PTB-1	PTB-1	CONCRETE	PT-1	GWB	P-4	1,8
137	DORM	GWB	P-5	GWB	P-5	GWB	P-5	GWB	P-5	PTB-1	PTB-1	PTB-1	PTB-1	CONCRETE	PT-1	GWB	P-4	1,2,3,9
138	BATHROOM	CT	CT-1,2,3	CT	CT-1,2,3	CT	CT-1,2,3	CT	CT-1,2,3	PTB-1	PTB-1	PTB-1	PTB-1	CONCRETE	PT-1	GWB	P-4	1,6,8,9
139	MECH	GWB	P-2	GWB	P-2	GWB	P-2	GWB	P-2	RB-1	RB-1	RB-1	RB-1	CONCRETE	C	EXPOSED	PS-1	
140	CORR	CMU	P-2	CMU	P-2	CMU	P-2	CMU	P-2	PTB-1	PTB-1	PTB-1	PTB-1	CONCRETE	PT-1	ACT	ACT-1	1,4,5,9
141	MECH	GWB	P-2	GWB	P-2	GWB	P-2	GWB	P-2	PTB-1	PTB-1	PTB-1	PTB-1	CONCRETE	C	EXPOSED	PS-1	
142	BATHROOM	CT	CT-1,2,3	CT	CT-1,2,3	CT	CT-1,2,3	CT	CT-1,2,3	PTB-1	PTB-1	PTB-1	PTB-1	CONCRETE	PT-1	GWB	P-4	1,6,8,9
143	DORM	GWB	P-5	GWB	P-5	GWB	P-5	GWB	P-5	PTB-1	PTB-1	PTB-1	PTB-1	CONCRETE	PT-1	GWB	P-4	1,2,3,9
144	CLOSET	GWB	P-5	GWB	P-5	GWB	P-5	GWB	P-5	PTB-1	PTB-1	PTB-1	PTB-1	CONCRETE	PT-1	GWB	P-4	1,8
145	CLOSET	GWB	P-5	GWB	P-5	GWB	P-5	GWB	P-5	PTB-1	PTB-1	PTB-1	PTB-1	CONCRETE	PT-1	GWB	P-4	1,8
146	DORM	GWB	P-5	GWB	P-5	GWB	P-5	GWB	P-5	PTB-1	PTB-1	PTB-1	PTB-1	CONCRETE	PT-1	GWB	P-4	1,2,3,9
147	MECH	GWB	P-2	GWB	P-2	GWB	P-2	GWB	P-2	RB-1	RB-1	RB-1	RB-1	CONCRETE	C	EXPOSED	PS-1	
148	BATHROOM	CT	CT-1,2,3	CT	CT-1,2,3	CT	CT-1,2,3	CT	CT-1,2,3	PTB-1	PTB-1	PTB-1	PTB-1	CONCRETE	PT-1	GWB	P-4	1,6,8,9
149	DORM	GWB	P-5	GWB	P-5	GWB	P-5	GWB	P-5	PTB-1	PTB-1	PTB-1	PTB-1	CONCRETE	PT-1	GWB	P-4	1,2,3,9
150	CLOSET	GWB	P-5	GWB	P-5	GWB	P-5	GWB	P-5	PTB-1	PTB-1	PTB-1	PTB-1	CONCRETE	PT-1	GWB	P-4	1,8
151	CLOSET	GWB	P-5	GWB	P-5	GWB	P-5	GWB	P-5	PTB-1	PTB-1	PTB-1	PTB-1	CONCRETE	PT-1	GWB	P-4	1,8
152	DORM	GWB	P-5	GWB	P-5	GWB	P-5	GWB	P-5	PTB-1	PTB-1	PTB-1	PTB-1	CONCRETE	PT-1	GWB	P-4	1,2,3,9
153	MECH	GWB	P-2	GWB	P-2	GWB	P-2	GWB	P-2	RB-1	RB-1	RB-1	RB-1	CONCRETE	C	EXPOSED	PS-1	
154	DORM	GWB	P-5	GWB	P-5	GWB	P-5	GWB	P-5	PTB-1	PTB-1	PTB-1	PTB-1	CONCRETE	PT-1	GWB	P-4	1,2,3,9
155	CLOSET	GWB	P-5	GWB	P-5	GWB	P-5	GWB	P-5	PTB-1	PTB-1	PTB-1	PTB-1	CONCRETE	PT-1	GWB	P-4	1,8
156	CLOSET	GWB	P-5	GWB	P-5	GWB	P-5	GWB	P-5	PTB-1	PTB-1	PTB-1	PTB-1	CONCRETE	PT-1	GWB	P-4	1,8
157	DORM	GWB	P-5	GWB	P-5	GWB	P-5	GWB	P-5	PTB-1	PTB-1	PTB-1	PTB-1	CONCRETE	PT-1	GWB	P-4	1,2,3,9
158	BATHROOM	CT	CT-1,2,3	CT	CT-1,2,3	CT	CT-1,2,3	CT	CT-1,2,3	PTB-1	PTB-1	PTB-1	PTB-1	CONCRETE	PT-1	GWB	P-4	1,6,8,9
159	DAYROOM	GWB	P-5	GWB	P-5	GWB	P-5	GWB	P-5	PTB-1	PTB-1	PTB-1	PTB-1	CONCRETE	PT-1	GWB	P-4	1,2,3,9
160	SUPP	GWB	P-5	GWB	P-5	GWB	P-5	GWB	P-5	PTB-1	PTB-1	PTB-1	PTB-1	CONCRETE	PT-1	GWB	P-4	
161	LAUNDRY	GWB	P-2	GWB	P-2	GWB	P-2	GWB	P-2	PTB-2	PTB-2	PTB-2	PTB-2	CONCRETE	C	GWB	P-4	1,8
162	ELEC	GWB	P-2	GWB	P-2	GWB	P-2	GWB	P-2	RB-1	RB-1	RB-1	RB-1	CONCRETE	C	EXPOSED	PS-1	
163	MECH	GWB	P-2	GWB	P-2	GWB	P-2	GWB	P-2	RB-1	RB-1	RB-1	RB-1	CONCRETE	C	EXPOSED	PS-1	
164	DORM	GWB	P-5	GWB	P-5	GWB	P-5	GWB	P-5	PTB-1	PTB-1	PTB-1	PTB-1	CONCRETE	PT-1	GWB	P-4	1,2,3,9
165	CLOSET	GWB	P-5	GWB	P-5	GWB	P-5	GWB	P-5	PTB-1	PTB-1	PTB-1	PTB-1	CONCRETE	PT-1	GWB	P-4	1,8
166	CLOSET	GWB	P-5	GWB	P-5	GWB	P-5	GWB	P-5	PTB-1	PTB-1	PTB-1	PTB-1	CONCRETE	PT-1	GWB	P-4	1,8
167	DORM	GWB	P-5	GWB	P-5	GWB	P-5	GWB	P-5	PTB-1	PTB-1	PTB-1	PTB-1	CONCRETE	PT-1	GWB	P-4	1,2,3,9
168	BATHROOM	CT	CT-1,2,3	CT	CT-1,2,3	CT	CT-1,2,3	CT	CT-1,2,3	PTB-1	PTB-1	PTB-1	PTB-1	CONCRETE	PT-1	GWB	P-4	1,6,8,9
169	MECH	GWB	P-2	GWB	P-2	GWB	P-2	GWB	P-2	RB-1	RB-1	RB-1	RB-1	CONCRETE	C	EXPOSED	PS-1	
170	DORM	GWB	P-5	GWB	P-5	GWB	P-5	GWB	P-5	PTB-1	PTB-1	PTB-1	PTB-1	CONCRETE	PT-1	GWB	P-4	1,2,3,9
171	CLOSET	GWB	P-5	GWB	P-5	GWB	P-5	GWB	P-5	PTB-1	PTB-1	PTB-1	PTB-1	CONCRETE	PT-1	GWB	P-4	1,8
172	CLOSET	GWB	P-5	GWB	P-5	GWB	P-5	GWB	P-5	PTB-1	PTB-1	PTB-1	PTB-1	CONCRETE	PT-1	GWB	P-4	1,8
173	DORM	GWB	P-5	GWB	P-5	GWB	P-5	GWB	P-5	PTB-1	PTB-1	PTB-1	PTB-1	CONCRETE	PT-1	GWB	P-4	1,2,3,9
174	BATHROOM	CT	CT-1,2,3	CT	CT-1,2,3	CT	CT-1,2,3	CT	CT-1,2,3	PTB-1	PTB-1	PTB-1	PTB-1	CONCRETE	PT-1	GWB	P-4	1,6,8,9
175	MECH	GWB	P-2	GWB	P-2	GWB	P-2	GWB	P-2	RB-1	RB-1	RB-1	RB-1	CONCRETE	C	EXPOSED	PS-1	
176	DORM	GWB	P-5	GWB	P-5	GWB	P-5	GWB	P-5	PTB-1	PTB-1	PTB-1	PTB-1	CONCRETE	PT-1	GWB	P-4	1,6,8,9
177	CLOSET	GWB	P-5	GWB	P-5	GWB	P-5	GWB	P-5	PTB-1	PTB-1	PTB-1	PTB-1	CONCRETE	PT-1	GWB	P-4	1,8
178	CLOSET	GWB	P-5	GWB	P-5	GWB	P-5	GWB	P-5	PTB-1	PTB-1	PTB-1	PTB-1	CONCRETE	PT-1	GWB	P-4	1,8
179	DORM	GWB	P-5	GWB	P-5	GWB	P-5	GWB	P-5	PTB-1	PTB-1	PTB-1	PTB-1	CONCRETE	PT-1	GWB	P-4	1,2,3,9
180	BATHROOM	CT	CT-1,2,3	CT	CT-1,2,3	CT	CT-1,2,3	CT	CT-1,2,3	PTB-1	PTB-1	PTB-1	PTB-1	CONCRETE	PT-1	GWB	P-4	1,6,8,9

MATERIAL AND FINISH LEGEND:

FLOOR		BASE	
PT	PORCELAIN TILE	RB	RESILIENT BASE
C	SEALED CONCRETE	CTB	CERAMIC TILE BASE
CT	CERAMIC TILE	PTB	PORCELAIN TILE BASE
EFS	ENTRANCE FLOORING SYSTEM	GR	GROUT
GR	GROUT		
WALLS		**CEILINGS**	
P	PAINTED GYPSUM BOARD	ACT	ACCOUSTICAL CEILING TILE
CMU	CONCRETE MASONRY UNITS - PAINTED	P	PAINTED GYPSUM BOARD
CT	CERAMIC TILE - FULL HEIGHT	PS	PAINTED STRUCTURE
GWB	GYPSUM WALL BOARD	GWB	GYPSUM WALL BOARD
GR	GROUT		
		OTHER	
		MB	METAL BLIND
		SSM	SOLID SURFACE MATERIAL
		IS	INTERIOR SIGNAGE
		PLAM	PLASTIC LAMINATE

REMARKS:
1. ALL INTERIOR DOORS AND TRIM SHOULD BE PAINTED P-3
2. ALL WINDOW SILLS SHOULD BE SSM-1.
3. ALL WINDOWS SHOULD HAVE ONE METAL BLIND (MB-1) MOUNTED INSIDE THE FRAMED OPENING.
4. ENTRANCE FLOORING SYSTEM (EFS-1) SHOULD BE AT EACH EXTERIOR ENTRANCE INTO THE CORRIDOR.
5. INTERIOR SIGNAGE SHOULD BE IS-1.
6. PREFABICATED SHOWER SHOULD MATCH TILED PT-2.
7. CABINET FINISH SHOULD BE PLAM-1 WITH SSM-1 COUNTERTOP AND BACKSPLASH.
8. CERAMIC WALL TILE (CT-1,2, AND 3) GROUT SHOULD BE GR-2.
9. ALL PORCELAIN FLOOR AND WALL BASE GROUT SHOULD BE GR-1.
10. REFER TO UFGS SECTION 09 06 90 COLOR SCHEDULE FOR FINISH COLOR SPECIFICATIONS.
11. ALL EXTERIOR DOORS AND TRIMS SHOULD BE PAINTED P-1.
12. PROVIDE SIGNAGE AT BUILDING ENTRY DOORS (6 LOCATIONS) STATING:
"THIS IS A SMOKE FREE BUILDING. NO SMOKING WITHIN 25 FEET OF ANY ENTRY"

US Army Corps of Engineers®

MARK	DESCRIPTION	DATE

DESIGNED BY: T.D.W.
DRAWN BY: T.D.W.
CHECKED BY: J.M.C.
SUBMITTED BY: C.C.
SIZE: ANSI D
FILE NAME: M07TE0144
ISSUE DATE: FEBRUARY 2019
SOLICITATION NO.: W9127819R0028
CONTRACT NO.:
PROJECT NUMBER: M07TE0144

U.S. ARMY CORPS OF ENGINEERS
MOBILE DISTRICT
MOBILE, ALABAMA

SOTO CANO AIR BASE, HONDURAS
UNACCOMPANIED ENLISTED PERSONNEL HOUSING

FIRST FLOOR FINISH SCHEDULE

SHEET ID
I-601

SECOND FLOOR FINISH SCHEDULE

ROOM NO	ROOM NAME	WALLS NORTH MATERIAL	WALLS NORTH FINISH	WALLS EAST MATERIAL	WALLS EAST FINISH	WALLS SOUTH MATERIAL	WALLS SOUTH FINISH	WALLS WEST MATERIAL	WALLS WEST FINISH	BASE MATERIAL NORTH	BASE MATERIAL EAST	BASE MATERIAL SOUTH	BASE MATERIAL WEST	FLOOR MAT.	FLOOR FIN.	CEILING MAT.	CEILING FIN.	NOTES & REMARKS (SEE NOTES)
201	DORM	GWB	P-5	GWB	P-5	GWB	P-5	GWB	P-5	PTB-1	PTB-1	PTB-1	PTB-1	CONCRETE	PT-1	GWB	P-4	1,2,3,9
202	CLOSET	GWB	P-5	GWB	P-5	GWB	P-5	GWB	P-5	PTB-1	PTB-1	PTB-1	PTB-1	CONCRETE	PT-1	GWB	P-4	1,8
203	CLOSET	GWB	P-5	GWB	P-5	GWB	P-5	GWB	P-5	PTB-1	PTB-1	PTB-1	PTB-1	CONCRETE	PT-1	GWB	P-4	1,8
204	DORM	GWB	P-5	GWB	P-5	GWB	P-5	GWB	P-5	PTB-1	PTB-1	PTB-1	PTB-1	CONCRETE	PT-1	GWB	P-4	1,2,3,9
205	BATHROOM	CT	CT-1,2,3	CT	CT-1,2,3	CT	CT-1,2,3	CT	CT-1,2,3	PTB-1	PTB-1	PTB-1	PTB-1	CONCRETE	PT-1	GWB	P-4	1,6,8,9
206	MECH	GWB	P-2	GWB	P-2	GWB	P-2	GWB	P-2	RB-1	RB-1	RB-1	RB-1	CONCRETE	C	EXPOSED	PS-1	
207	DORM	GWB	P-5	GWB	P-5	GWB	P-5	GWB	P-5	PTB-1	PTB-1	PTB-1	PTB-1	CONCRETE	PT-1	GWB	P-4	1,2,3,9
208	CLOSET	GWB	P-5	GWB	P-5	GWB	P-5	GWB	P-5	PTB-1	PTB-1	PTB-1	PTB-1	CONCRETE	PT-1	GWB	P-4	1,8
209	CLOSET	GWB	P-5	GWB	P-5	GWB	P-5	GWB	P-5	PTB-1	PTB-1	PTB-1	PTB-1	CONCRETE	PT-1	GWB	P-4	1,8
210	DORM	GWB	P-5	GWB	P-5	GWB	P-5	GWB	P-5	PTB-1	PTB-1	PTB-1	PTB-1	CONCRETE	PT-1	GWB	P-4	1,2,3,9
211	BATHROOM	CT	CT-1,2,3	CT	CT-1,2,3	CT	CT-1,2,3	CT	CT-1,2,3	PTB-1	PTB-1	PTB-1	PTB-1	CONCRETE	PT-1	GWB	P-4	1,6,8,9
212	MECH	GWB	P-2	GWB	P-2	GWB	P-2	GWB	P-2	RB-1	RB-1	RB-1	RB-1	CONCRETE	C	EXPOSED	PS-1	
213	DORM	GWB	P-5	GWB	P-5	GWB	P-5	GWB	P-5	PTB-1	PTB-1	PTB-1	PTB-1	CONCRETE	PT-1	GWB	P-4	1,2,3,9
214	CLOSET	GWB	P-5	GWB	P-5	GWB	P-5	GWB	P-5	PTB-1	PTB-1	PTB-1	PTB-1	CONCRETE	PT-1	GWB	P-4	1,8
215	CLOSET	GWB	P-5	GWB	P-5	GWB	P-5	GWB	P-5	PTB-1	PTB-1	PTB-1	PTB-1	CONCRETE	PT-1	GWB	P-4	1,8
216	DORM	GWB	P-5	GWB	P-5	GWB	P-5	GWB	P-5	PTB-1	PTB-1	PTB-1	PTB-1	CONCRETE	PT-1	GWB	P-4	1,2,3,9
217	BATHROOM	CT	CT-1,2,3	CT	CT-1,2,3	CT	CT-1,2,3	CT	CT-1,2,3	PTB-1	PTB-1	PTB-1	PTB-1	CONCRETE	PT-1	GWB	P-4	1,6,8,9
218	MECH	GWB	P-2	GWB	P-2	GWB	P-2	GWB	P-2	RB-1	RB-1	RB-1	RB-1	CONCRETE	C	EXPOSED	PS-1	
219	MECH	GWB	P-2	GWB	P-2	GWB	P-2	GWB	P-2	RB-1	RB-1	RB-1	RB-1	CONCRETE	C	EXPOSED	PS-1	
220	JAN.																	
221	ACTIVITY	GWB	P-5	GWB	P-5	GWB	P-5	GWB	P-5	PTB-1	PTB-1	PTB-1	PTB-1	CONCRETE	PT-1	GWB	P-4	1,2,3,9
222	DORM	GWB	P-5	GWB	P-5	GWB	P-5	GWB	P-5	PTB-1	PTB-1	PTB-1	PTB-1	CONCRETE	PT-1	GWB	P-4	1,2,3,9
223	CLOSET	GWB	P-5	GWB	P-5	GWB	P-5	GWB	P-5	PTB-1	PTB-1	PTB-1	PTB-1	CONCRETE	PT-1	GWB	P-4	1,8
224	CLOSET	GWB	P-5	GWB	P-5	GWB	P-5	GWB	P-5	PTB-1	PTB-1	PTB-1	PTB-1	CONCRETE	PT-1	GWB	P-4	1,8
225	DORM	GWB	P-5	GWB	P-5	GWB	P-5	GWB	P-5	PTB-1	PTB-1	PTB-1	PTB-1	CONCRETE	PT-1	GWB	P-4	1,2,3,9
226	BATHROOM	CT	CT-1,2,3	CT	CT-1,2,3	CT	CT-1,2,3	CT	CT-1,2,3	PTB-1	PTB-1	PTB-1	PTB-1	CONCRETE	PT-1	GWB	P-4	1,6,8,9
227	MECH	GWB	P-2	GWB	P-2	GWB	P-2	GWB	P-2	RB-1	RB-1	RB-1	RB-1	CONCRETE	C	EXPOSED	PS-1	
228	DORM	GWB	P-5	GWB	P-5	GWB	P-5	GWB	P-5	PTB-1	PTB-1	PTB-1	PTB-1	CONCRETE	PT-1	GWB	P-4	1,2,3,9
229	CLOSET	GWB	P-5	GWB	P-5	GWB	P-5	GWB	P-5	PTB-1	PTB-1	PTB-1	PTB-1	CONCRETE	PT-1	GWB	P-4	1,8
230	CLOSET	GWB	P-5	GWB	P-5	GWB	P-5	GWB	P-5	PTB-1	PTB-1	PTB-1	PTB-1	CONCRETE	PT-1	GWB	P-4	1,8
231	DORM	GWB	P-5	GWB	P-5	GWB	P-5	GWB	P-5	PTB-1	PTB-1	PTB-1	PTB-1	CONCRETE	PT-1	GWB	P-4	1,2,3,9
232	BATHROOM	CT	CT-1,2,3	CT	CT-1,2,3	CT	CT-1,2,3	CT	CT-1,2,3	PTB-1	PTB-1	PTB-1	PTB-1	CONCRETE	PT-1	GWB	P-4	1,6,8,9
233	MECH	GWB	P-2	GWB	P-2	GWB	P-2	GWB	P-2	RB-1	RB-1	RB-1	RB-1	CONCRETE	C	EXPOSED	PS-1	
234	DORM	GWB	P-5	GWB	P-5	GWB	P-5	GWB	P-5	PTB-1	PTB-1	PTB-1	PTB-1	CONCRETE	PT-1	GWB	P-4	1,2,3,9
235	CLOSET	GWB	P-5	GWB	P-5	GWB	P-5	GWB	P-5	PTB-1	PTB-1	PTB-1	PTB-1	CONCRETE	PT-1	GWB	P-4	1,8
236	CLOSET	GWB	P-5	GWB	P-5	GWB	P-5	GWB	P-5	PTB-1	PTB-1	PTB-1	PTB-1	CONCRETE	PT-1	GWB	P-4	1,8
237	DORM	GWB	P-5	GWB	P-5	GWB	P-5	GWB	P-5	PTB-1	PTB-1	PTB-1	PTB-1	CONCRETE	PT-1	GWB	P-4	1,2,3,9
238	BATHROOM	CT	CT-1,2,3	CT	CT-1,2,3	CT	CT-1,2,3	CT	CT-1,2,3	PTB-1	PTB-1	PTB-1	PTB-1	CONCRETE	PT-1	GWB	P-4	1,6,8,9
239	MECH	GWB	P-2	GWB	P-2	GWB	P-2	GWB	P-2	RB-1	RB-1	RB-1	RB-1	CONCRETE	C	EXPOSED	PS-1	
240	CORR	CMU	P-2	CMU	P-2	CMU	P-2	CMU	P-2	PTB-1	PTB-1	PTB-1	PTB-1	CONCRETE	PT-1	ACT	ACT-1	1,4,5,9
241	MECH	GWB	P-2	GWB	P-2	GWB	P-2	GWB	P-2	RB-1	RB-1	RB-1	RB-1	CONCRETE	C	EXPOSED	PS-1	
242	BATHROOM	CT	CT-1,2,3	CT	CT-1,2,3	CT	CT-1,2,3	CT	CT-1,2,3	PTB-1	PTB-1	PTB-1	PTB-1	CONCRETE	PT-1	GWB	P-4	1,6,8,9
243	DORM	GWB	P-5	GWB	P-5	GWB	P-5	GWB	P-5	PTB-1	PTB-1	PTB-1	PTB-1	CONCRETE	PT-1	GWB	P-4	1,2,3,9
244	CLOSET	GWB	P-5	GWB	P-5	GWB	P-5	GWB	P-5	PTB-1	PTB-1	PTB-1	PTB-1	CONCRETE	PT-1	GWB	P-4	1,8
245	CLOSET	GWB	P-5	GWB	P-5	GWB	P-5	GWB	P-5	PTB-1	PTB-1	PTB-1	PTB-1	CONCRETE	PT-1	GWB	P-4	1,8
246	DORM	GWB	P-5	GWB	P-5	GWB	P-5	GWB	P-5	PTB-1	PTB-1	PTB-1	PTB-1	CONCRETE	PT-1	GWB	P-4	1,2,3,9
247	MECH	GWB	P-2	GWB	P-2	GWB	P-2	GWB	P-2	RB-1	RB-1	RB-1	RB-1	CONCRETE	C	EXPOSED	PS-1	
248	BATHROOM	CT	CT-1,2,3	CT	CT-1,2,3	CT	CT-1,2,3	CT	CT-1,2,3	PTB-1	PTB-1	PTB-1	PTB-1	CONCRETE	PT-1	GWB	P-4	1,6,8,9
249	DORM	GWB	P-5	GWB	P-5	GWB	P-5	GWB	P-5	PTB-1	PTB-1	PTB-1	PTB-1	CONCRETE	PT-1	GWB	P-4	1,2,3,9
250	CLOSET	GWB	P-5	GWB	P-5	GWB	P-5	GWB	P-5	PTB-1	PTB-1	PTB-1	PTB-1	CONCRETE	PT-1	GWB	P-4	1,8
251	CLOSET	GWB	P-5	GWB	P-5	GWB	P-5	GWB	P-5	PTB-1	PTB-1	PTB-1	PTB-1	CONCRETE	PT-1	GWB	P-4	1,8
252	DORM	GWB	P-5	GWB	P-5	GWB	P-5	GWB	P-5	PTB-1	PTB-1	PTB-1	PTB-1	CONCRETE	PT-1	GWB	P-4	1,2,3,9
253	MECH	GWB	P-2	GWB	P-2	GWB	P-2	GWB	P-2	RB-1	RB-1	RB-1	RB-1	CONCRETE	C	EXPOSED	PS-1	
254	DORM	GWB	P-5	GWB	P-5	GWB	P-5	GWB	P-5	PTB-1	PTB-1	PTB-1	PTB-1	CONCRETE	PT-1	GWB	P-4	1,2,3,9
255	CLOSET	GWB	P-5	GWB	P-5	GWB	P-5	GWB	P-5	PTB-1	PTB-1	PTB-1	PTB-1	CONCRETE	PT-1	GWB	P-4	1,8
256	CLOSET	GWB	P-5	GWB	P-5	GWB	P-5	GWB	P-5	PTB-1	PTB-1	PTB-1	PTB-1	CONCRETE	PT-1	GWB	P-4	1,8
257	DORM	GWB	P-5	GWB	P-5	GWB	P-5	GWB	P-5	PTB-1	PTB-1	PTB-1	PTB-1	CONCRETE	PT-1	GWB	P-4	1,2,3,9
258	BATHROOM	CT	CT-1,2,3	CT	CT-1,2,3	CT	CT-1,2,3	CT	CT-1,2,3	PTB-1	PTB-1	PTB-1	PTB-1	CONCRETE	PT-1	GWB	P-4	1,6,8,9
259	DAYROOM	GWB	P-5	GWB	P-5	GWB	P-5	GWB	P-5	PTB-1	PTB-1	PTB-1	PTB-1	CONCRETE	PT-1	GWB	P-4	1,2,3,9
260	SUPP.																	
261	LAUNDRY																	
262	ELEC	GWB	P-2	GWB	P-2	GWB	P-2	GWB	P-2	RB-1	RB-1	RB-1	RB-1	CONCRETE	C	EXPOSED	PS-1	1,8
263	MECH	GWB	P-2	GWB	P-2	GWB	P-2	GWB	P-2	RB-1	RB-1	RB-1	RB-1	CONCRETE	C	EXPOSED	PS-1	
264	DORM	GWB	P-5	GWB	P-5	GWB	P-5	GWB	P-5	PTB-1	PTB-1	PTB-1	PTB-1	CONCRETE	PT-1	GWB	P-4	1,2,3,9
265	CLOSET	GWB	P-5	GWB	P-5	GWB	P-5	GWB	P-5	PTB-1	PTB-1	PTB-1	PTB-1	CONCRETE	PT-1	GWB	P-4	1,8
266	CLOSET	GWB	P-5	GWB	P-5	GWB	P-5	GWB	P-5	PTB-1	PTB-1	PTB-1	PTB-1	CONCRETE	PT-1	GWB	P-4	1,8
267	DORM	GWB	P-5	GWB	P-5	GWB	P-5	GWB	P-5	PTB-1	PTB-1	PTB-1	PTB-1	CONCRETE	PT-1	GWB	P-4	1,2,3,9
268	BATHROOM	CT	CT-1,2,3	CT	CT-1,2,3	CT	CT-1,2,3	CT	CT-1,2,3	PTB-1	PTB-1	PTB-1	PTB-1	CONCRETE	PT-1	GWB	P-4	1,6,8,9
269	MECH	GWB	P-2	GWB	P-2	GWB	P-2	GWB	P-2	RB-1	RB-1	RB-1	RB-1	CONCRETE	C	EXPOSED	PS-1	
270	DORM	GWB	P-5	GWB	P-5	GWB	P-5	GWB	P-5	PTB-1	PTB-1	PTB-1	PTB-1	CONCRETE	PT-1	GWB	P-4	1,2,3,9
271	CLOSET	GWB	P-5	GWB	P-5	GWB	P-5	GWB	P-5	PTB-1	PTB-1	PTB-1	PTB-1	CONCRETE	PT-1	GWB	P-4	1,8
272	CLOSET	GWB	P-5	GWB	P-5	GWB	P-5	GWB	P-5	PTB-1	PTB-1	PTB-1	PTB-1	CONCRETE	PT-1	GWB	P-4	1,8
273	DORM	GWB	P-5	GWB	P-5	GWB	P-5	GWB	P-5	PTB-1	PTB-1	PTB-1	PTB-1	CONCRETE	PT-1	GWB	P-4	1,2,3,9
274	BATHROOM	CT	CT-1,2,3	CT	CT-1,2,3	CT	CT-1,2,3	CT	CT-1,2,3	PTB-1	PTB-1	PTB-1	PTB-1	CONCRETE	PT-1	GWB	P-4	1,6,8,9
275	MECH	GWB	P-2	GWB	P-2	GWB	P-2	GWB	P-2	RB-1	RB-1	RB-1	RB-1	CONCRETE	C	EXPOSED	PS-1	
276	DORM	GWB	P-5	GWB	P-5	GWB	P-5	GWB	P-5	PTB-1	PTB-1	PTB-1	PTB-1	CONCRETE	PT-1	GWB	P-4	1,2,3,9
277	CLOSET	GWB	P-5	GWB	P-5	GWB	P-5	GWB	P-5	PTB-1	PTB-1	PTB-1	PTB-1	CONCRETE	PT-1	GWB	P-4	1,8
278	CLOSET	GWB	P-5	GWB	P-5	GWB	P-5	GWB	P-5	PTB-1	PTB-1	PTB-1	PTB-1	CONCRETE	PT-1	GWB	P-4	1,8
279	DORM	GWB	P-5	GWB	P-5	GWB	P-5	GWB	P-5	PTB-1	PTB-1	PTB-1	PTB-1	CONCRETE	PT-1	GWB	P-4	1,2,3,9
280	BATHROOM	CT	CT-1,2,3	CT	CT-1,2,3	CT	CT-1,2,3	CT	CT-1,2,3	PTB-1	PTB-1	PTB-1	PTB-1	CONCRETE	PT-1	GWB	P-4	1,6,8,9

MATERIAL AND FINISH LEGEND:

FLOOR		BASE	
PT	PORCELAIN TILE	RB	RESILIENT BASE
C	SEALED CONCRETE	CTB	CERAMIC TILE BASE
CT	CERAMIC TILE	PTB	PORCELAIN TILE BASE
EFS	ENTRANCE FLOORING SYSTEM	GR	GROUT
GR	GROUT		
WALLS		**CEILINGS**	
P	PAINTED GYPSUM BOARD	ACT	ACCOUSTICAL CEILING TILE
CMU	CONCRETE MASONRY UNITS - PAINTED	P	PAINTED GYPSUM BOARD
CT	CERAMIC TILE - FULL HEIGHT	PS	PAINTED STRUCTURE
GWB	GYPSUM WALL BOARD	GWB	GYPSUM WALL BOARD
GR	GROUT		
		OTHER	
		MB	METAL BLIND
		SSM	SOLID SURFACE MATERIAL
		IS	INTERIOR SIGNAGE
		PLAM	PLASTIC LAMINATE

REMARKS:
1. ALL INTERIOR DOORS AND TRIM SHOULD BE PAINTED P-3
2. ALL WINDOW SILLS SHOULD BE SSM-1.
3. ALL WINDOWS SHOULD HAVE ONE METAL BLIND (MB-1) MOUNTED INSIDE THE FRAMED OPENING.
4. ENTRANCE FLOORING SYSTEM (EFS-1) SHOULD BE AT EACH EXTERIOR ENTRANCE INTO THE CORRIDOR.
5. INTERIOR SIGNAGE SHOULD BE IS-1.
6. PREFABICATED SHOWER SHOULD MATCH TILED PT-2.
7. CABINET FINISH SHOULD BE PLAM-1 WITH SSM-1 COUNTERTOP AND BACKSPLASH.
8. CERAMIC WALL TILE (CT-1,2, AND 3) GROUT SHOULD BE GR-2.
9. ALL PORCELAIN FLOOR AND WALL BASE GROUT SHOULD BE GR-1.
10. REFER TO UFGS SECTION 09 06 90 COLOR SCHEDULE FOR FINISH COLOR SPECIFICATIONS.
11. ALL EXTERIOR DOORS AND TRIMS SHOULD BE PAINTED P-1.
12. PROVIDE SIGNAGE AT BUILDING ENTRY DOORS (6 LOCATIONS) STATING:
"THIS IS A SMOKE FREE BUILDING. NO SMOKING WITHIN 25 FEET OF ANY ENTRY"

US Army Corps of Engineers®

MARK	DESCRIPTION	DATE

ISSUE DATE: FEBRUARY 2019
SOLICITATION NO.: W912781R0028
CONTRACT NO.:
PROJECT NUMBER: M077EC44
FILE NAME: M077E0144
DESIGNED BY: T.D.W.
DRAWN BY: T.D.W.
CHECKED BY: J.M.C.
SUBMITTED BY: C.A.
SIZE: ANSI D

U.S. ARMY CORPS OF ENGINEERS
MOBILE DISTRICT
MOBILE, ALABAMA

SOTO CANO AIR BASE, HONDURAS
UNACCOMPANIED ENLISTED PERSONNEL HOUSING

SECOND FLOOR FINISH SCHEDULE

SHEET ID
I-602

THIRD FLOOR FINISH SCHEDULE

ROOM NO	ROOM NAME	WALLS NORTH MATERIAL	WALLS NORTH FINISH	WALLS EAST MATERIAL	WALLS EAST FINISH	WALLS SOUTH MATERIAL	WALLS SOUTH FINISH	WALLS WEST MATERIAL	WALLS WEST FINISH	BASE MATERIAL NORTH	BASE MATERIAL EAST	BASE MATERIAL SOUTH	BASE MATERIAL WEST	FLOOR MAT.	FLOOR FIN.	CEILING MAT.	CEILING FIN.	NOTES & REMARKS (SEE NOTES)
301	DORM	GWB	P-5	GWB	P-5	GWB	P-5	GWB	P-5	PTB-1	PTB-1	PTB-1	PTB-1	CONCRETE	PT-1	GWB	P-4	1,2,3,9
302	CLOSET	GWB	P-5	GWB	P-5	GWB	P-5	GWB	P-5	PTB-1	PTB-1	PTB-1	PTB-1	CONCRETE	PT-1	GWB	P-4	1,8
303	CLOSET	GWB	P-5	GWB	P-5	GWB	P-5	GWB	P-5	PTB-1	PTB-1	PTB-1	PTB-1	CONCRETE	PT-1	GWB	P-4	1,8
304	BATHROOM	CT	CT-1,2,3	CT	CT-1,2,3	CT	CT-1,2,3	CT	CT-1,2,3	PTB-1	PTB-1	PTB-1	PTB-1	CONCRETE	PT-1	GWB	P-4	1,6,8,9
305	DORM	GWB	P-5	GWB	P-5	GWB	P-5	GWB	P-5	PTB-1	PTB-1	PTB-1	PTB-1	CONCRETE	PT-1	GWB	P-4	1,2,3,9
306	MECH	GWB	P-2	GWB	P-2	GWB	P-2	GWB	P-2	RB-1	RB-1	RB-1	RB-1	CONCRETE	C	EXPOSED	PS-1	
307	DORM	GWB	P-5	GWB	P-5	GWB	P-5	GWB	P-5	PTB-1	PTB-1	PTB-1	PTB-1	CONCRETE	PT-1	GWB	P-4	1,2,3,9
308	CLOSET	GWB	P-5	GWB	P-5	GWB	P-5	GWB	P-5	PTB-1	PTB-1	PTB-1	PTB-1	CONCRETE	PT-1	GWB	P-4	1,8
309	CLOSET	GWB	P-5	GWB	P-5	GWB	P-5	GWB	P-5	PTB-1	PTB-1	PTB-1	PTB-1	CONCRETE	PT-1	GWB	P-4	1,8
310	DORM	GWB	P-5	GWB	P-5	GWB	P-5	GWB	P-5	PTB-1	PTB-1	PTB-1	PTB-1	CONCRETE	PT-1	GWB	P-4	1,2,3,9
311	BATHROOM	CT	CT-1,2,3	CT	CT-1,2,3	CT	CT-1,2,3	CT	CT-1,2,3	PTB-1	PTB-1	PTB-1	PTB-1	CONCRETE	PT-1	GWB	P-4	1,6,8,9
312	MECH	GWB	P-2	GWB	P-2	GWB	P-2	GWB	P-2	RB-1	RB-1	RB-1	RB-1	CONCRETE	C	EXPOSED	PS-1	
313	DORM	GWB	P-5	GWB	P-5	GWB	P-5	GWB	P-5	PTB-1	PTB-1	PTB-1	PTB-1	CONCRETE	PT-1	GWB	P-4	1,2,3,9
314	CLOSET	GWB	P-5	GWB	P-5	GWB	P-5	GWB	P-5	PTB-1	PTB-1	PTB-1	PTB-1	CONCRETE	PT-1	GWB	P-4	1,8
315	CLOSET	GWB	P-5	GWB	P-5	GWB	P-5	GWB	P-5	PTB-1	PTB-1	PTB-1	PTB-1	CONCRETE	PT-1	GWB	P-4	1,8
316	BATHROOM	CT	CT-1,2,3	CT	CT-1,2,3	CT	CT-1,2,3	CT	CT-1,2,3	PTB-1	PTB-1	PTB-1	PTB-1	CONCRETE	PT-1	GWB	P-4	1,6,8,9
317	DORM	GWB	P-5	GWB	P-5	GWB	P-5	GWB	P-5	PTB-1	PTB-1	PTB-1	PTB-1	CONCRETE	PT-1	GWB	P-4	1,2,3,9
318	MECH	GWB	P-2	GWB	P-2	GWB	P-2	GWB	P-2	RB-1	RB-1	RB-1	RB-1	CONCRETE	C	EXPOSED	PS-1	
319	MECH	GWB	P-2	GWB	P-2	GWB	P-2	GWB	P-2	RB-1	RB-1	RB-1	RB-1	CONCRETE	C	EXPOSED	PS-1	
320	JAN.																	
321	ACTIVITY	GWB	P-5	GWB	P-5	GWB	P-5	GWB	P-5	PTB-1	PTB-1	PTB-1	PTB-1	CONCRETE	PT-1	GWB	P-4	1,2,3,9
322	DORM	GWB	P-5	GWB	P-5	GWB	P-5	GWB	P-5	PTB-1	PTB-1	PTB-1	PTB-1	CONCRETE	PT-1	GWB	P-4	1,2,3,9
323	CLOSET	GWB	P-5	GWB	P-5	GWB	P-5	GWB	P-5	PTB-1	PTB-1	PTB-1	PTB-1	CONCRETE	PT-1	GWB	P-4	1,8
324	CLOSET	GWB	P-5	GWB	P-5	GWB	P-5	GWB	P-5	PTB-1	PTB-1	PTB-1	PTB-1	CONCRETE	PT-1	GWB	P-4	1,8
325	DORM	GWB	P-5	GWB	P-5	GWB	P-5	GWB	P-5	PTB-1	PTB-1	PTB-1	PTB-1	CONCRETE	PT-1	GWB	P-4	1,2,3,9
326	BATHROOM	CT	CT-1,2,3	CT	CT-1,2,3	CT	CT-1,2,3	CT	CT-1,2,3	PTB-1	PTB-1	PTB-1	PTB-1	CONCRETE	PT-1	GWB	P-4	1,6,8,9
327	MECH	GWB	P-2	GWB	P-2	GWB	P-2	GWB	P-2	RB-1	RB-1	RB-1	RB-1	CONCRETE	C	EXPOSED	PS-1	
328	DORM	GWB	P-5	GWB	P-5	GWB	P-5	GWB	P-5	PTB-1	PTB-1	PTB-1	PTB-1	CONCRETE	PT-1	GWB	P-4	1,2,3,9
329	CLOSET	GWB	P-5	GWB	P-5	GWB	P-5	GWB	P-5	PTB-1	PTB-1	PTB-1	PTB-1	CONCRETE	PT-1	GWB	P-4	1,8
330	CLOSET	GWB	P-5	GWB	P-5	GWB	P-5	GWB	P-5	PTB-1	PTB-1	PTB-1	PTB-1	CONCRETE	PT-1	GWB	P-4	1,8
331	DORM	GWB	P-5	GWB	P-5	GWB	P-5	GWB	P-5	PTB-1	PTB-1	PTB-1	PTB-1	CONCRETE	PT-1	GWB	P-4	1,2,3,9
332	BATHROOM	CT	CT-1,2,3	CT	CT-1,2,3	CT	CT-1,2,3	CT	CT-1,2,3	PTB-1	PTB-1	PTB-1	PTB-1	CONCRETE	PT-1	GWB	P-4	1,6,8,9
333	MECH	GWB	P-2	GWB	P-2	GWB	P-2	GWB	P-2	RB-1	RB-1	RB-1	RB-1	CONCRETE	C	EXPOSED	PS-1	
334	DORM	GWB	P-5	GWB	P-5	GWB	P-5	GWB	P-5	PTB-1	PTB-1	PTB-1	PTB-1	CONCRETE	PT-1	GWB	P-4	1,2,3,9
335	CLOSET	GWB	P-5	GWB	P-5	GWB	P-5	GWB	P-5	PTB-1	PTB-1	PTB-1	PTB-1	CONCRETE	PT-1	GWB	P-4	1,8
336	CLOSET	GWB	P-5	GWB	P-5	GWB	P-5	GWB	P-5	PTB-1	PTB-1	PTB-1	PTB-1	CONCRETE	PT-1	GWB	P-4	1,8
337	DORM	GWB	P-5	GWB	P-5	GWB	P-5	GWB	P-5	PTB-1	PTB-1	PTB-1	PTB-1	CONCRETE	PT-1	GWB	P-4	1,2,3,9
338	BATHROOM	CT	CT-1,2,3	CT	CT-1,2,3	CT	CT-1,2,3	CT	CT-1,2,3	PTB-1	PTB-1	PTB-1	PTB-1	CONCRETE	PT-1	GWB	P-4	1,6,8,9
339	MECH	GWB	P-2	GWB	P-2	GWB	P-2	GWB	P-2	RB-1	RB-1	RB-1	RB-1	CONCRETE	C	EXPOSED	PS-1	
340	CORR	CMU	P-2	CMU	P-2	CMU	P-2	CMU	P-2	PTB-1	PTB-1	PTB-1	PTB-1	CONCRETE	PT-1	ACT	ACT-1	1,4,5,9
341	MECH	GWB	P-2	GWB	P-2	GWB	P-2	GWB	P-2	RB-1	RB-1	RB-1	RB-1	CONCRETE	C	EXPOSED	PS-1	
342	BATHROOM	CT	CT-1,2,3	CT	CT-1,2,3	CT	CT-1,2,3	CT	CT-1,2,3	PTB-1	PTB-1	PTB-1	PTB-1	CONCRETE	PT-1	GWB	P-4	1,6,8,9
343	DORM	GWB	P-5	GWB	P-5	GWB	P-5	GWB	P-5	PTB-1	PTB-1	PTB-1	PTB-1	CONCRETE	PT-1	GWB	P-4	1,2,3,9
344	CLOSET	GWB	P-5	GWB	P-5	GWB	P-5	GWB	P-5	PTB-1	PTB-1	PTB-1	PTB-1	CONCRETE	PT-1	GWB	P-4	1,8
345	CLOSET	GWB	P-5	GWB	P-5	GWB	P-5	GWB	P-5	PTB-1	PTB-1	PTB-1	PTB-1	CONCRETE	PT-1	GWB	P-4	1,8
346	DORM	GWB	P-5	GWB	P-5	GWB	P-5	GWB	P-5	PTB-1	PTB-1	PTB-1	PTB-1	CONCRETE	PT-1	GWB	P-4	1,2,3,9
347	MECH	GWB	P-2	GWB	P-2	GWB	P-2	GWB	P-2	RB-1	RB-1	RB-1	RB-1	CONCRETE	C	EXPOSED	PS-1	
348	DORM	GWB	P-5	GWB	P-5	GWB	P-5	GWB	P-5	PTB-1	PTB-1	PTB-1	PTB-1	CONCRETE	PT-1	GWB	P-4	1,2,3,9
349	BATHROOM	CT	CT-1,2,3	CT	CT-1,2,3	CT	CT-1,2,3	CT	CT-1,2,3	PTB-1	PTB-1	PTB-1	PTB-1	CONCRETE	PT-1	GWB	P-4	1,6,8,9
350	CLOSET	GWB	P-5	GWB	P-5	GWB	P-5	GWB	P-5	PTB-1	PTB-1	PTB-1	PTB-1	CONCRETE	PT-1	GWB	P-4	1,8
351	CLOSET	GWB	P-5	GWB	P-5	GWB	P-5	GWB	P-5	PTB-1	PTB-1	PTB-1	PTB-1	CONCRETE	PT-1	GWB	P-4	1,8
352	DORM	GWB	P-5	GWB	P-5	GWB	P-5	GWB	P-5	PTB-1	PTB-1	PTB-1	PTB-1	CONCRETE	PT-1	GWB	P-4	1,2,3,9
353	MECH	GWB	P-2	GWB	P-2	GWB	P-2	GWB	P-2	RB-1	RB-1	RB-1	RB-1	CONCRETE	C	EXPOSED	PS-1	
354	DORM	GWB	P-5	GWB	P-5	GWB	P-5	GWB	P-5	PTB-1	PTB-1	PTB-1	PTB-1	CONCRETE	PT-1	GWB	P-4	1,2,3,9
355	CLOSET	GWB	P-5	GWB	P-5	GWB	P-5	GWB	P-5	PTB-1	PTB-1	PTB-1	PTB-1	CONCRETE	PT-1	GWB	P-4	1,8
356	CLOSET	GWB	P-5	GWB	P-5	GWB	P-5	GWB	P-5	PTB-1	PTB-1	PTB-1	PTB-1	CONCRETE	PT-1	GWB	P-4	1,8
357	DORM	GWB	P-5	GWB	P-5	GWB	P-5	GWB	P-5	PTB-1	PTB-1	PTB-1	PTB-1	CONCRETE	PT-1	GWB	P-4	1,2,3,9
358	BATHROOM	CT	CT-1,2,3	CT	CT-1,2,3	CT	CT-1,2,3	CT	CT-1,2,3	PTB-1	PTB-1	PTB-1	PTB-1	CONCRETE	PT-1	GWB	P-4	1,6,8,9
359	DAYROOM	GWB	P-5	GWB	P-5	GWB	P-5	GWB	P-5	PTB-1	PTB-1	PTB-1	PTB-1	CONCRETE	PT-1	GWB	P-4	1,2,3,9
360	SUPP.																	
361	LAUNDRY																	
362	ELEC	GWB	P-2	GWB	P-2	GWB	P-2	GWB	P-2	RB-1	RB-1	RB-1	RB-1	CONCRETE	C	EXPOSED	PS-1	1,8
363	MECH	GWB	P-2	GWB	P-2	GWB	P-2	GWB	P-2	RB-1	RB-1	RB-1	RB-1	CONCRETE	C	EXPOSED	PS-1	
364	DORM	GWB	P-5	GWB	P-5	GWB	P-5	GWB	P-5	PTB-1	PTB-1	PTB-1	PTB-1	CONCRETE	PT-1	GWB	P-4	1,2,3,9
365	CLOSET	GWB	P-5	GWB	P-5	GWB	P-5	GWB	P-5	PTB-1	PTB-1	PTB-1	PTB-1	CONCRETE	PT-1	GWB	P-4	1,8
366	CLOSET	GWB	P-5	GWB	P-5	GWB	P-5	GWB	P-5	PTB-1	PTB-1	PTB-1	PTB-1	CONCRETE	PT-1	GWB	P-4	1,8
367	DORM	GWB	P-5	GWB	P-5	GWB	P-5	GWB	P-5	PTB-1	PTB-1	PTB-1	PTB-1	CONCRETE	PT-1	GWB	P-4	1,2,3,9
368	BATHROOM	CT	CT-1,2,3	CT	CT-1,2,3	CT	CT-1,2,3	CT	CT-1,2,3	PTB-1	PTB-1	PTB-1	PTB-1	CONCRETE	PT-1	GWB	P-4	1,6,8,9
369	MECH	GWB	P-2	GWB	P-2	GWB	P-2	GWB	P-2	RB-1	RB-1	RB-1	RB-1	CONCRETE	C	EXPOSED	PS-1	
370	DORM	GWB	P-5	GWB	P-5	GWB	P-5	GWB	P-5	PTB-1	PTB-1	PTB-1	PTB-1	CONCRETE	PT-1	GWB	P-4	1,2,3,9
371	CLOSET	GWB	P-5	GWB	P-5	GWB	P-5	GWB	P-5	PTB-1	PTB-1	PTB-1	PTB-1	CONCRETE	PT-1	GWB	P-4	1,8
372	CLOSET	GWB	P-5	GWB	P-5	GWB	P-5	GWB	P-5	PTB-1	PTB-1	PTB-1	PTB-1	CONCRETE	PT-1	GWB	P-4	1,8
373	DORM	GWB	P-5	GWB	P-5	GWB	P-5	GWB	P-5	PTB-1	PTB-1	PTB-1	PTB-1	CONCRETE	PT-1	GWB	P-4	1,2,3,9
374	BATHROOM	CT	CT-1,2,3	CT	CT-1,2,3	CT	CT-1,2,3	CT	CT-1,2,3	PTB-1	PTB-1	PTB-1	PTB-1	CONCRETE	PT-1	GWB	P-4	1,6,8,9
375	MECH	GWB	P-2	GWB	P-2	GWB	P-2	GWB	P-2	RB-1	RB-1	RB-1	RB-1	CONCRETE	C	EXPOSED	PS-1	
376	DORM	GWB	P-5	GWB	P-5	GWB	P-5	GWB	P-5	PTB-1	PTB-1	PTB-1	PTB-1	CONCRETE	PT-1	GWB	P-4	1,2,3,9
377	CLOSET	GWB	P-5	GWB	P-5	GWB	P-5	GWB	P-5	PTB-1	PTB-1	PTB-1	PTB-1	CONCRETE	PT-1	GWB	P-4	1,8
378	CLOSET	GWB	P-5	GWB	P-5	GWB	P-5	GWB	P-5	PTB-1	PTB-1	PTB-1	PTB-1	CONCRETE	PT-1	GWB	P-4	1,8
379	DORM	GWB	P-5	GWB	P-5	GWB	P-5	GWB	P-5	PTB-1	PTB-1	PTB-1	PTB-1	CONCRETE	PT-1	GWB	P-4	1,2,3,9
380	BATHROOM	CT	CT-1,2,3	CT	CT-1,2,3	CT	CT-1,2,3	CT	CT-1,2,3	PTB-1	PTB-1	PTB-1	PTB-1	CONCRETE	PT-1	GWB	P-4	1,6,8,9

MATERIAL AND FINISH LEGEND:

FLOOR		BASE	
PT	PORCELAIN TILE	RB	RESILIENT BASE
C	SEALED CONCRETE	CTB	CERAMIC TILE BASE
CT	CERAMIC TILE	PTB	PORCELAIN TILE BASE
EFS	ENTRANCE FLOORING SYSTEM	GR	GROUT
GR	GROUT		
WALLS		**CEILINGS**	
P	PAINTED GYPSUM BOARD	ACT	ACCOUSTICAL CEILING TILE
CMU	CONCRETE MASONRY UNITS - PAINTED	P	PAINTED GYPSUM BOARD
CT	CERAMIC TILE - FULL HEIGHT	PS	PAINTED STRUCTURE
GWB	GYPSUM WALL BOARD	GWB	GYPSUM WALL BOARD
GR	GROUT		
		OTHER	
		MB	METAL BLIND
		SSM	SOLID SURFACE MATERIAL
		IS	INTERIOR SIGNAGE
		PLAM	PLASTIC LAMINATE

REMARKS:
1. ALL INTERIOR DOORS AND TRIM SHOULD BE PAINTED P-3
2. ALL WINDOW SILLS SHOULD BE SSM-1.
3. ALL WINDOWS SHOULD HAVE ONE METAL BLIND (MB-1) MOUNTED INSIDE THE FRAMED OPENING.
4. ENTRANCE FLOORING SYSTEM (EFS-1) SHOULD BE AT EACH EXTERIOR ENTRANCE INTO THE CORRIDOR.
5. INTERIOR SIGNAGE SHOULD BE IS-1.
6. PREFABICATED SHOWER SHOULD MATCH TILED PT-2.
7. CABINET FINISH SHOULD BE PLAM-1 WITH SSM-1 COUNTERTOP AND BACKSPLASH.
8. CERAMIC WALL TILE (CT-1,2, AND 3) GROUT SHOULD BE GR-2.
9. ALL PORCELAIN FLOOR AND WALL BASE GROUT SHOULD BE GR-1.
10. REFER TO UFGS SECTION 09 06 90 COLOR SCHEDULE FOR FINISH COLOR SPECIFICATIONS.
11. ALL EXTERIOR DOORS AND TRIMS SHOULD BE PAINTED P-1.
12. PROVIDE SIGNAGE AT BUILDING ENTRY DOORS (6 LOCATIONS) STATING:
"THIS IS A SMOKE FREE BUILDING. NO SMOKING WITHIN 25 FEET OF ANY ENTRY"

US Army Corps of Engineers®

MARK	DESCRIPTION	DATE

ISSUE DATE: FEBRUARY 2019
SOLICITATION NO.: W912781R0028
CONTRACT NO.:
PROJECT NUMBER: M077EC44
FILE NAME: M077E0144

DESIGNED BY: T.D.W.
DRAWN BY: T.D.W.
CHECKED BY: J.M.C.
SUBMITTED BY: C.A.
SIZE: ANSI D

U.S. ARMY CORPS OF ENGINEERS
MOBILE DISTRICT
MOBILE, ALABAMA

SOTO CANO AIR BASE, HONDURAS
UNACCOMPANIED ENLISTED PERSONNEL HOUSING

THIRD FLOOR FINISH SCHEDULE

SHEET ID
I-603

FIRE DETECTION/MASS NOTIFICATION

	FIRE ALARM/MASS NOTIFICATION SPEAKER/STROBE, WALL MOUNTED 2.5M AFF. "A" = AMBER, "C"=CLEAR
	FIRE ALARM/MASS NOTIFICATION SPEAKER/STROBE, CEILING OR PENDANT MOUNTED. "A" = AMBER, "C"=CLEAR
	FIRE ALARM/MASS NOTIFICATION STROBE, CEILING MOUNTED. "A" = AMBER, "C"=CLEAR
	FIRE ALARM/MASS NOTIFICATION STROBE, WALL MOUNTED 2200mm AFF. "A" = AMBER, "C"=CLEAR
B	FOAM SUPPRESSION SYSTEM BLUE ROTATING BEACON, MINIMUM 400 CANDELA WALL MOUNTED 6M AFF.
R	NON-FLASHING RED INDICATING LIGHT FOR FLAME DETECTOR DISCONNECT SWITCH, MINIMUM 400 CANDELA. WALL MOUNTED ABOVE SWITCH.
S F	FIRE ALARM/MASS NOTIFICATION SPEAKER, CEILING MOUNTED.
	FIRE ALARM/MASS NOTIFICATION SPEAKER, WALL MOUNTED 2.5M AFF UNLESS NOTED OTHERWISE.
P	MANUAL PULL STATION - 1200mm AFF
F	FOAM SUPPRESSION SYSTEM START STATIONS - 1200mm AFF SEE SHEET FA503 DETAIL A.
A	FOAM SUPPRESSION SYSTEM ABORT STATIONS - 1200mm AFF SEE SHEET FA503 DETAIL A.
A	SMOKE DETECTOR, CEILING OR PENDANT MOUNTED. ("###" DENOTES HEIGHT IF PENDANT MOUNTED, "P" DENOTES PHOTOELECTRIC, "SP" DENOTES SINGLE STATION PHOTOELECTRIC, "I" DENOTES IONIZATION)
S D	DUCT SMOKE DETECTOR
F	FIXED TEMPERATURE HEAT DETECTOR, CEILING OR PENDANT MOUNTED. ("###" DENOTES HEIGHT IF PENDANT MOUNTED, 135 DEGREE UNLESS NOTED OTHERWISE)
R/F	RATE OF RISE/FIXED TEMPERATURE HEAT DETECTOR, CEILING OR PENDANT MOUNTED. ("###" DENOTES HEIGHT IF PENDANT MOUNTED, 165 DEGREE UNLESS NOTED OTHERWISE)
IR	OPTICAL FLAME DETECTOR. MOUNT IN ACCORDANCE WITH MANUFACTURER'S RECOMMENDATION.
FMCP	FIRE ALARM/MASS NOTIFICATION CONTROL PANEL
RSCU	FIRE SUPPRESSION CONTROL PANEL
ANN	FIRE ALARM ANNUNCIATOR PANEL
FAT	FIRE ALARM TRANSCEIVER
TEXT	LED TEXT DISPLAY. WALL MOUNTED ABOVE DOOR FRAME.
LOC	MASS NOTIFICATION LOCAL OPERATING CONSOLE. MOUNTED 1200mm AFF.
	HVAC EMERGENCY SHUTDOWN. MOUNTED 1200mm AFF.
	TAMPER SWITCH
	FLOW SWITCH
PS	PRESSURE SWITCH
TM	TEMPERATURE MONITOR. COORDINATE LOCATION AND MOUNTING HEIGHT WITH FIRE PROTECTION PLANS.
DS	SUPERVISED SOLENOID DISCONNECT SWITCH FOR FOAM RISERS. COORDINATE LOCATION WITH FIRE PROTECTION PLANS.
CM	CONTROL MODULE FOR SHUNT TRIP BREAKER.
R	FIRE ALARM DOOR RELEASE RELAY
K	KNOX BOX. MOUNTED 1200mm AFF.
	FIRE ALARM ANTENNA

NOTE: NOT ALL SYMBOLS USED ON PLANS

ABBREVIATIONS

A	AMPERE
AC	ABOVE COUNTER, 42"AFF UNLESS OTHERWISE INDICATED
ADA	AMERICANS WITH DISABILITIES ACT
AFF	ABOVE FINISHED FLOOR
AL	ALUMINUM
1/C	ONE CONDUCTOR
C	CONDUIT
CB	CIRCUIT BREAKER
CKT	CIRCUIT
CU	COPPER
EF	EXHAUST FAN
EMT	ELECTRICAL METALLIC TUBING
EWC	ELECTRIC WATER COOLER
FACP	FIRE ALARM CONTROL PANEL
FAT	FIRE ALARM TRANSCEIVER
FM	FREQUENCY MODULATION
FMCP	FIRE ALARM/MASS NOTIFICATION CONTROL PANEL
FOC	FIBER OPTIC CABLE
GFI	GROUND FAULT CIRCUIT INTERRUPTER
GFP	GROUND FAULT PROTECTION
HACR	HEATING AIR CONDITIONING REFRIGATION
HP	HORSEPOWER
HPS	HIGH PRESSURE SODIUM
HT	HEIGHT
HZ	HERTZ
IDS	INTRUSION DETECTION SYSTEM
J	JUNCTION BOX
KWH	KILOWATT HOUR
LED	LIGHT EMITTING DIODE
MCB	MOLDED CASE CIRCUIT BREAKER
MH	METAL HALIDE
MLO	MAIN LUGS ONLY
MM	MULTIMODE
MTD	MOUNTED
NEC	NATIONAL ELECTRICAL CODE
NF	NON FUSED
NO.	NUMBER
OS	OCCUPANCY SENSOR
PH	PHASE
PIR	PASSIVE INFRARED
RGS	RIGID GALVANIZED STEEL
SM	SINGLE MODE
SPD	SURGE PROTECTION DEVICE
TTB	TELEPHONE TERMINAL BOARD
TV	TELEVISION
TVSS	TRANSIENT VOLTAGE SURGE SUPRESSOR
TX	TRANSFORMER
UNO	UNLESS NOTED OTHERWISE
V	VOLT
VA	VOLTAMPERE
VVD	VARIABLE VOLUME DAMPER
W	WATTS
WP	WATER PROOF
XFMR	TRANSFORMER

GENERAL NOTES

1. PLAN DRAWINGS ARE APPLICABLE TO BUILDINGS D, E, & F.
2. ALL FLOOR PLANS SHOWN ARE BASED ON BUILDING D ORIENTATION.
3. PLAN DRAWINGS INDICATE MINIMUM REQUIREMENTS PER NFPA 101 AND IBC. THE CONTRACTOR SHALL PROVIDE FULL DESIGN, CONSTRUCTION (SHOP) DRAWINGS, AND CALCULATIONS IN ACCORDANCE WITH SPECIFICATION 28 31 76.
4. CONSTRUCTION (SHOP) DRAWINGS AND CALCULATIONS MUST BE PREPARED BY AN INDIVIDUAL THAT HAS OBTAINED NATIONAL INSTITUTE FOR CERTIFICATION IN ENGINEERING TECHNOLOGIES, FIRE ALARM SYSTEMS, LEVEL IV CERTIFICATION, AT A MINIMUM. IN ADDITION, THE INDIVIDUAL SHALL POSSESS A MINIMUM OF 4 YEARS CURRENT WORK EXPERIENCE SPECIFIC TO INDIVIDUAL BUILDING MASS NOTIFICATION SYSTEMS COMMUNICATIONS-ELECTRONICS. THE QFPE MUST REVIEW THE SHOP DRAWINGS, CALCULATIONS AND MATERIAL SUBMITTALS. THE SHOP DRAWINGS MUST BEAR THE REVIEW STAMP OF THE QFPE PRIOR TO SUBMITTING THE FIRE ALARM SYSTEM SHOP DRAWINGS.
5. SMOKE DETECTORS IN DORM ROOMS SHALL BE SINGLE STATION TYPE PROVIDING LOCAL AUDIBLE ALARM AND SUPERVISORY SIGNAL TO FMCP.
6. COORDINATE FINAL LOCATION OF KNOX BOX AND ANNUNCIATOR PANEL FOR EACH BUILDING WITH LOCAL AHJ.

US Army Corps of Engineers®

MARK	DESCRIPTION	DATE

DESIGNED BY: R.M.FORTNER
DRAWN BY: EN-DE
CHECKED BY: D.D.COLLIER
SUBMITTED BY: W.W.KNAPP
SIZE: ANSI D
ISSUE DATE: FEBRUARY 2019
SOLICITATION NO.: W912781R0028
CONTRACT NO.:
PROJECT NUMBER: M077E144
FILE NAME: M077E144

U.S. ARMY CORPS OF ENGINEERS
MOBILE DISTRICT
MOBILE, ALABAMA

SOTO CANO AIR BASE, HONDURAS
UNACCOMPANIED ENLISTED PERSONNEL HOUSING

FIRE ALARM & MASS NOTIFICATION LEGEND

SHEET ID
FA001

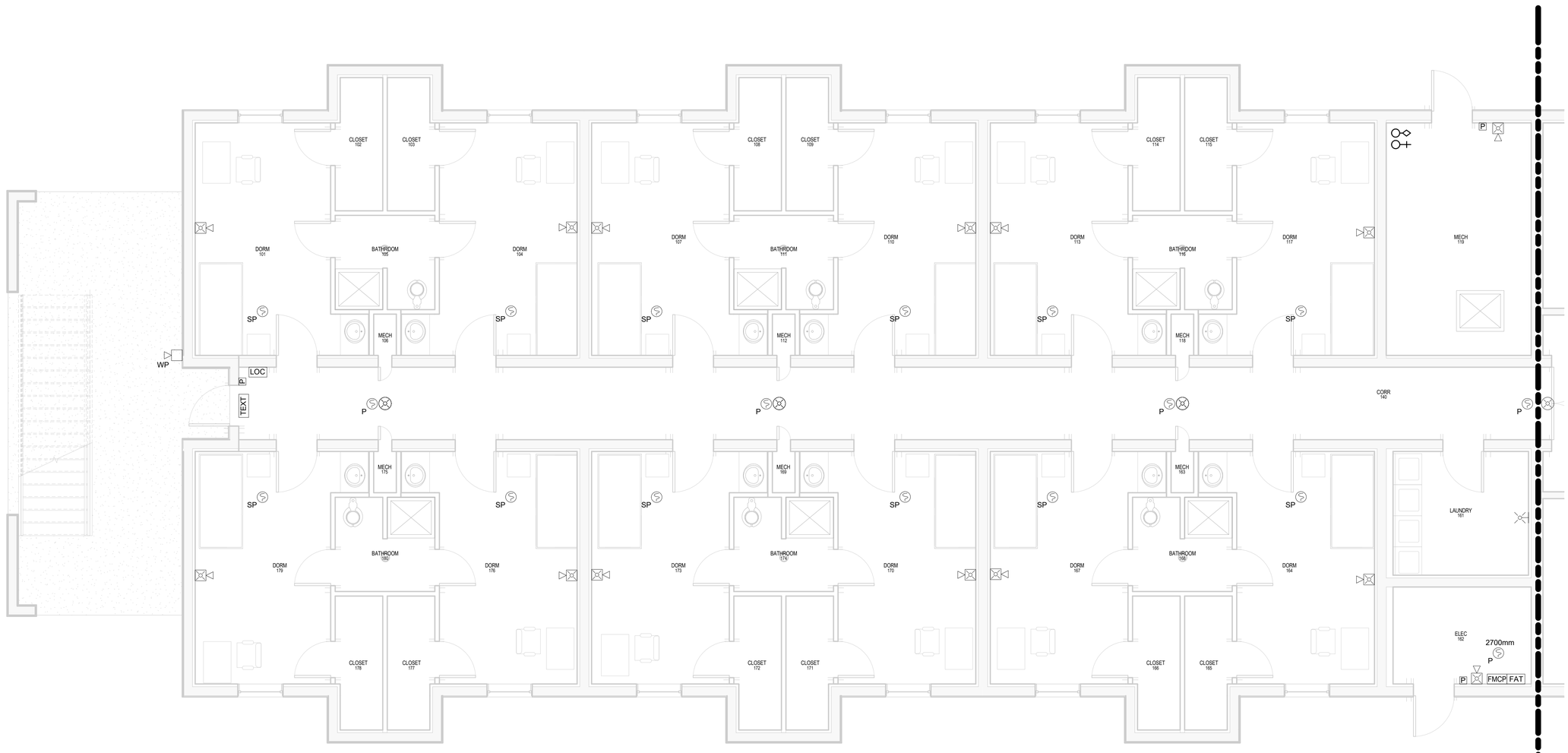

1 FIRST FLOOR FIRE ALARM & MASS NOTIFICATION PLAN - AREA "A"

1 : 50

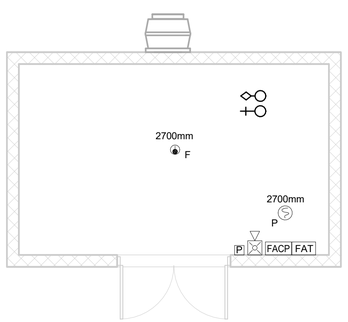

2 FIRE ALARM & MASS NOTIFICATION PLAN - FIRE PUMP BUILDING

KEY PLAN

0 2000 4000

SCALE: 1 : 50

US Army Corps of Engineers®

MARK	DESCRIPTION	DATE

DESIGNED BY: R.M.FORTNER	ISSUE DATE: FEBRUARY 2019
DRAWN BY: EN-DE	SOLICITATION NO.: W912ZB19R0028
CHECKED BY: D.D.COLLIER	CONTRACT NO.:
SUBMITTED BY: W.A.KNAPP	PROJECT NUMBER: M077E1J44
SIZE: ANSI D	FILE NAME: M077E1J44

U.S. ARMY CORPS OF ENGINEERS
MOBILE DISTRICT
MOBILE, ALABAMA

SOTO CANO AIR BASE, HONDURAS
UNACCOMPANIED ENLISTED PERSONNEL HOUSING

FIRST FLOOR FIRE ALARM & MASS NOTIFICATION PLAN - AREA "A" & FIRE PUMP BUILDING

SHEET ID

FA101

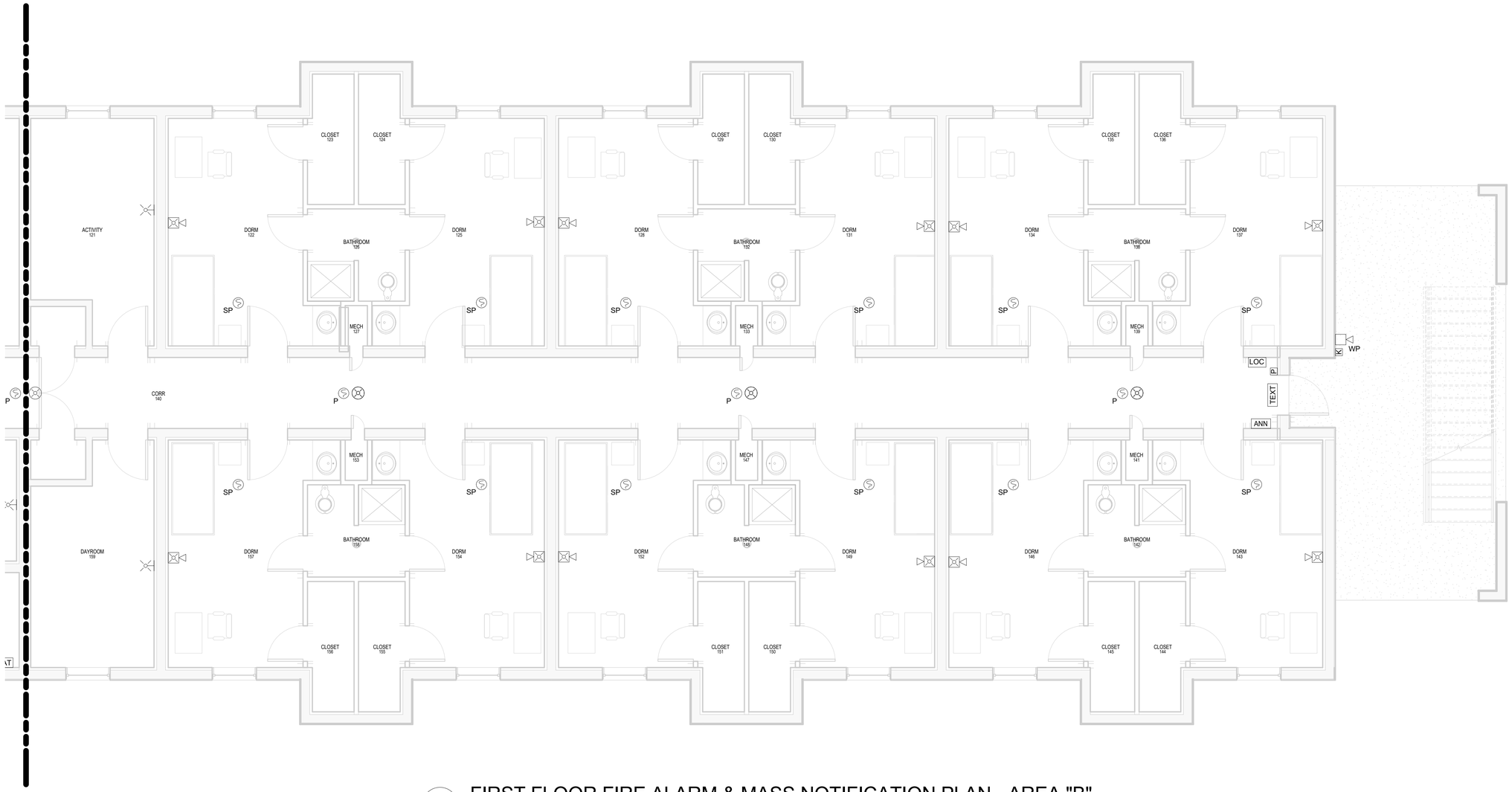

1 FIRST FLOOR FIRE ALARM & MASS NOTIFICATION PLAN - AREA "B"

1 : 50

KEY PLAN

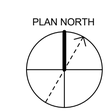

0 2000 4000

SCALE: 1 : 50

US Army Corps of Engineers®

MARK	DESCRIPTION	DATE

DESIGNED BY: R.M.FORTNER	ISSUE DATE: FEBRUARY 2019
DRAWN BY: EN-DE	SOLICITATION NO.: W912ZB19R0028
CHECKED BY: D.D.COLLIER	CONTRACT NO.:
SUBMITTED BY: W.J.KNAPP	PROJECT NUMBER: M077E1J44
SIZE: ANSI D	FILE NAME: M077E1J44

U.S. ARMY CORPS OF ENGINEERS
MOBILE DISTRICT
MOBILE, ALABAMA

SOTO CANO AIR BASE, HONDURAS
UNACCOMPANIED ENLISTED PERSONNEL HOUSING

FIRST FLOOR FIRE ALARM & MASS NOTIFICATION PLAN - AREA "B"

SHEET ID

FA102

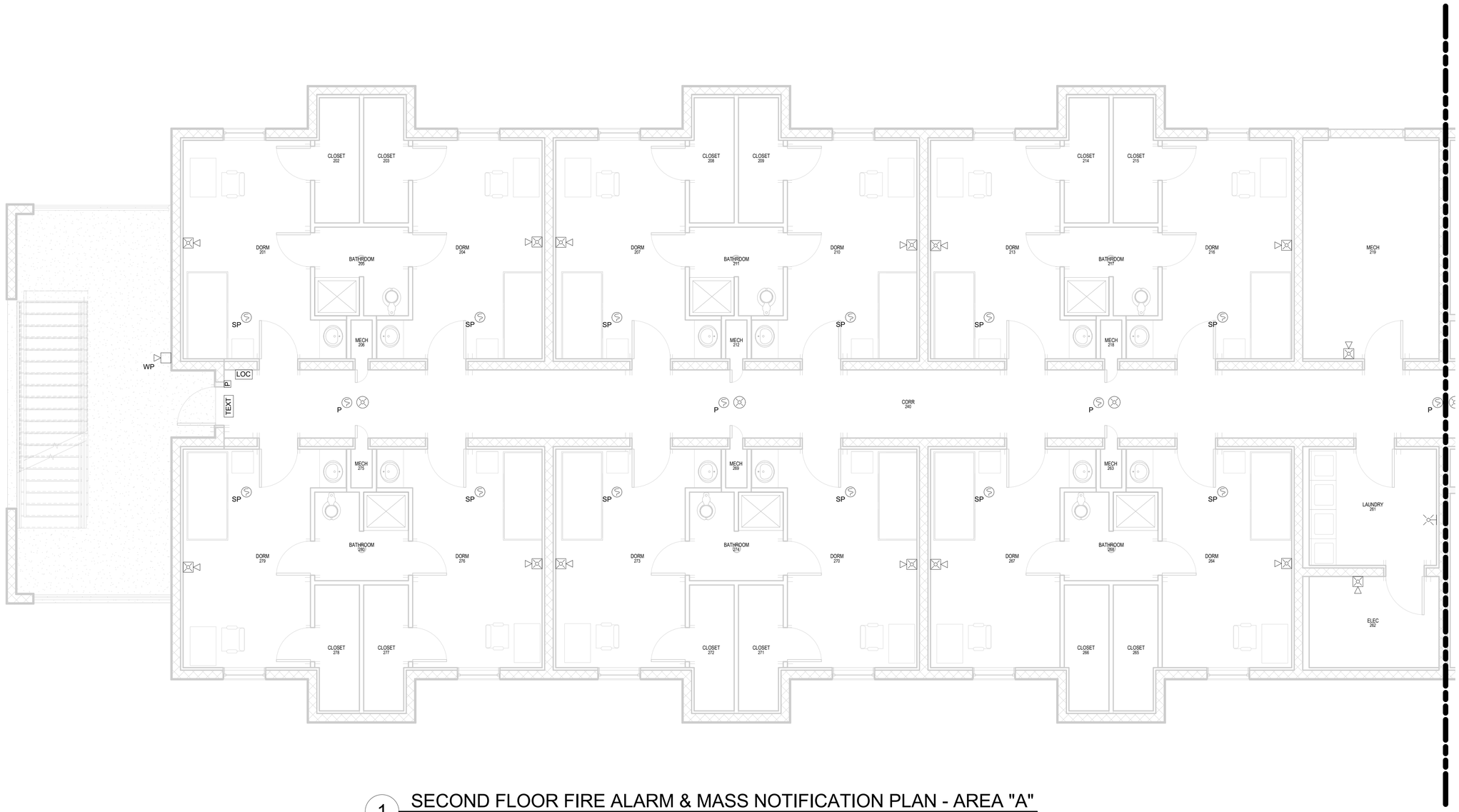

1 SECOND FLOOR FIRE ALARM & MASS NOTIFICATION PLAN - AREA "A"

1 : 50

KEY PLAN

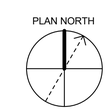

SCALE: 1 : 50

US Army Corps of Engineers®

MARK	DESCRIPTION	DATE

ISSUE DATE: FEBRUARY 2019
SOLICITATION NO.: W912ZB19R0028
CONTRACT NO.:
PROJECT NUMBER: M017E144

DESIGNED BY: R.M.FORTNER
DRAWN BY: EN-DE
CHECKED BY: D.D.COLLIER
SUBMITTED BY: M.J.KNAPP
SIZE: ANSI D
FILE NAME: M017E144

U.S. ARMY CORPS OF ENGINEERS
MOBILE DISTRICT
MOBILE, ALABAMA

SOTO CANO AIR BASE, HONDURAS
UNACCOMPANIED ENLISTED PERSONNEL HOUSING

SECOND FLOOR FIRE ALARM & MASS NOTIFICATION PLAN - AREA "A"

SHEET ID

FA103

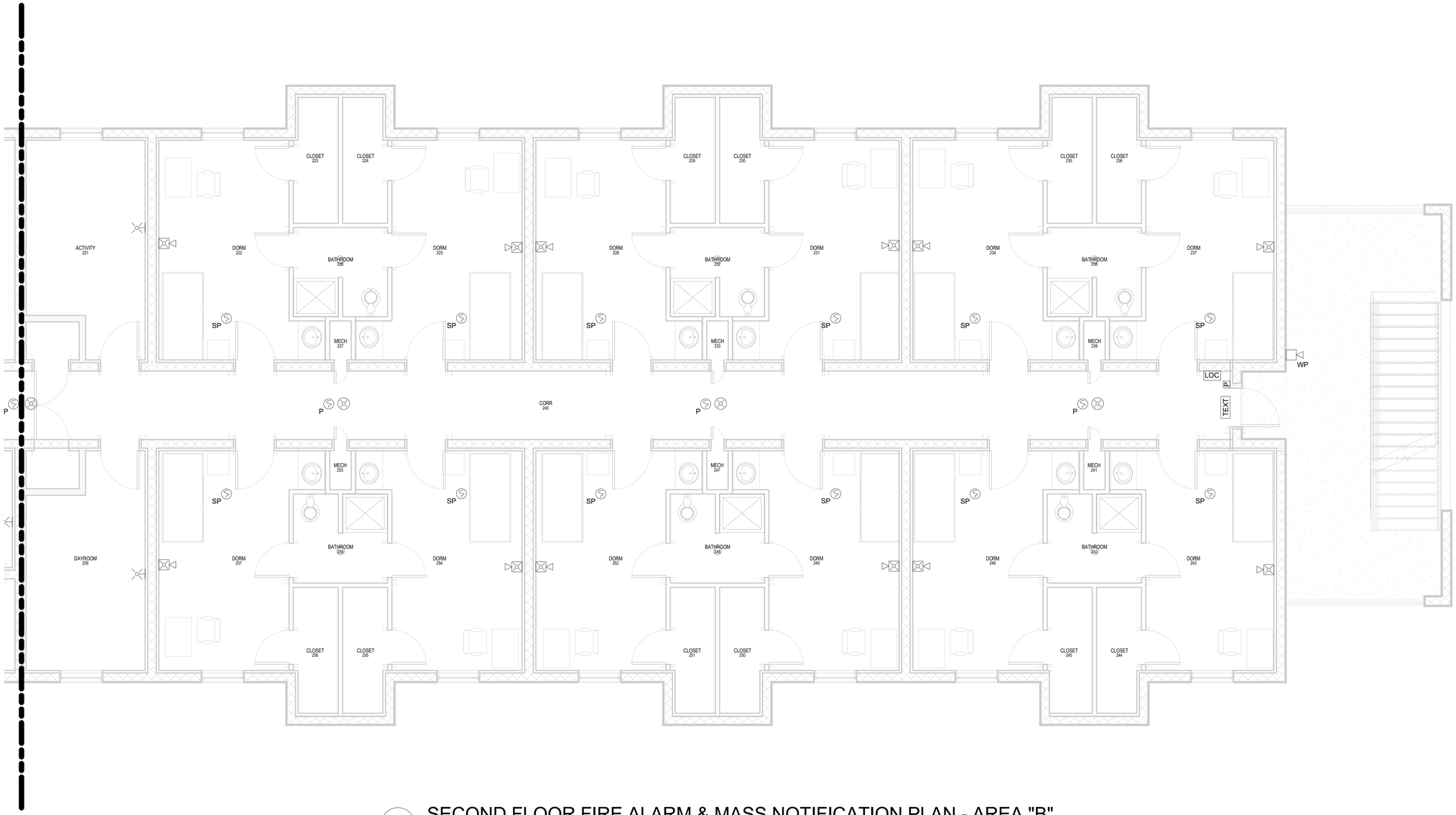

1 SECOND FLOOR FIRE ALARM & MASS NOTIFICATION PLAN - AREA "B"

1 : 50

KEY PLAN

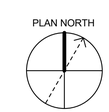

0 2000 4000

SCALE: 1 : 50

US Army Corps of Engineers®

MARK	DESCRIPTION	DATE

ISSUE DATE: FEBRUARY 2019
SOLICITATION NO.: W912ZB19R0028
CONTRACT NO.:
PROJECT NUMBER: M017E144
SIZE: ANSI D
FILE NAME: M017E144

DESIGNED BY: R.M.FORTNER
DRAWN BY: EN-DE
CHECKED BY: D.D.COLLIER
SUBMITTED BY: W.A.KNAPP

U.S. ARMY CORPS OF ENGINEERS
MOBILE DISTRICT
MOBILE, ALABAMA

SOTO CANO AIR BASE, HONDURAS
UNACCOMPANIED ENLISTED PERSONNEL HOUSING

SECOND FLOOR FIRE ALARM & MASS NOTIFICATION PLAN - AREA "B"

SHEET ID

FA104

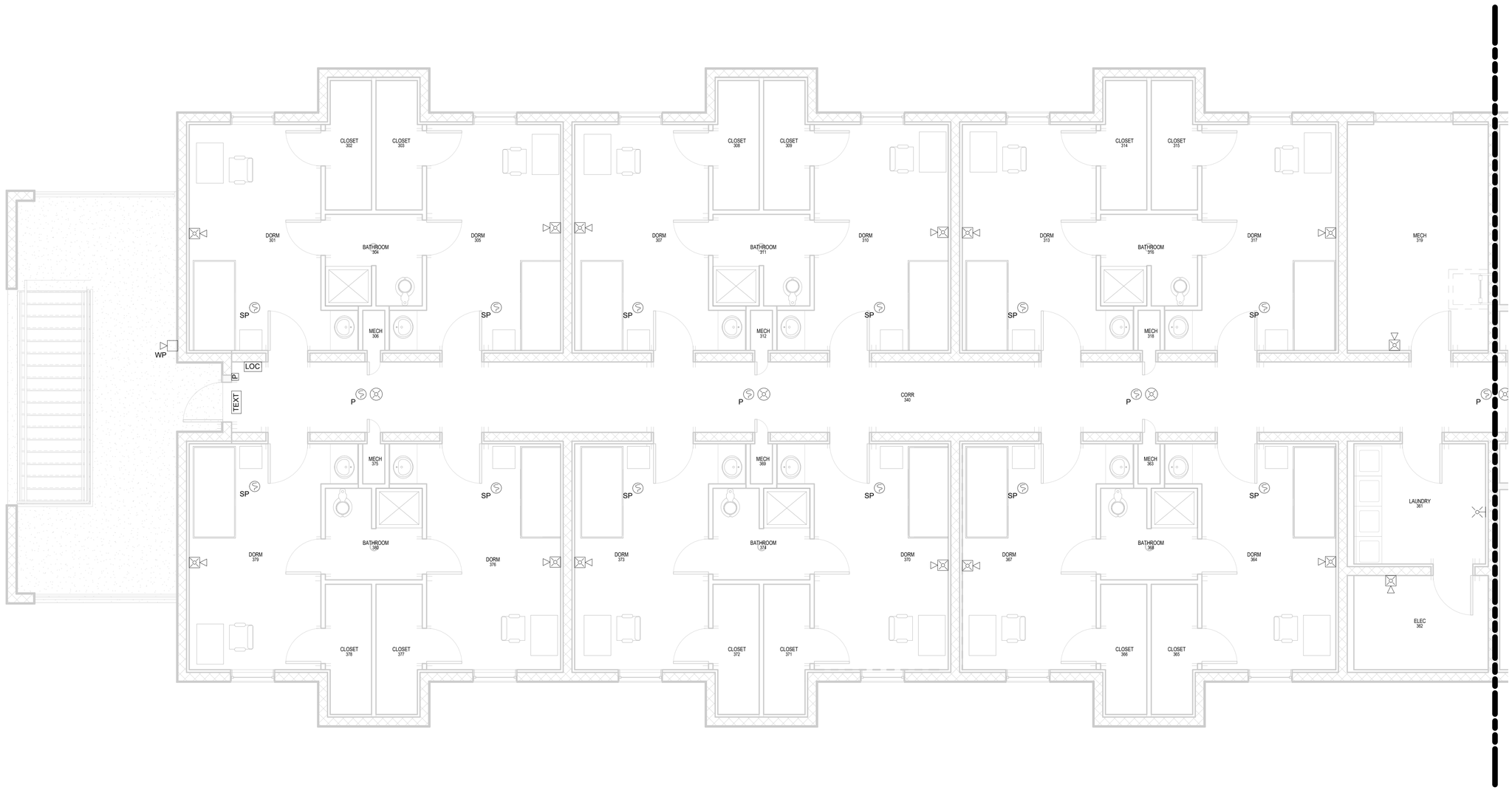

1 THIRD FLOOR FIRE ALARM & MASS NOTIFICATION PLAN - AREA "A"

1 : 50

KEY PLAN

0 2000 4000

SCALE: 1 : 50

US Army Corps of Engineers®

MARK	DESCRIPTION	DATE

DESIGNED BY: R.M.FORTNER	ISSUE DATE: FEBRUARY 2019
DRAWN BY: EN-DE	SOLICITATION NO.: W912ZB19R0028
CHECKED BY: D.D.COLLIER	CONTRACT NO.:
SUBMITTED BY: W.J.KNAPP	PROJECT NUMBER: M077E1J44
SIZE: ANSI D	FILE NAME: M077E1J44

U.S. ARMY CORPS OF ENGINEERS
MOBILE DISTRICT
MOBILE, ALABAMA

SOTO CANO AIR BASE, HONDURAS
UNACCOMPANIED ENLISTED PERSONNEL HOUSING

THIRD FLOOR FIRE ALARM & MASS NOTIFICATION PLAN - AREA "A"

SHEET ID

FA105

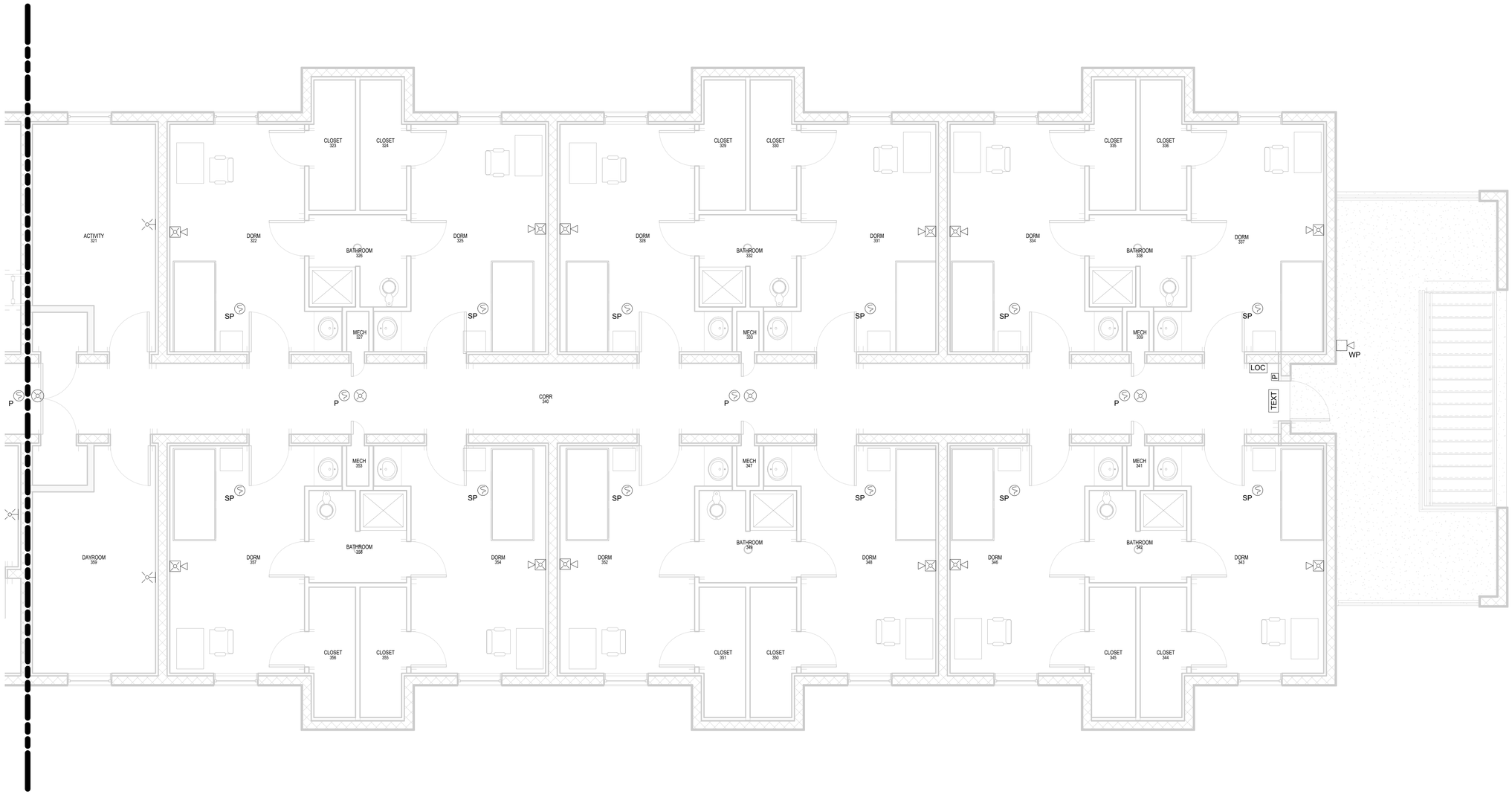

1 THIRD FLOOR FIRE ALARM & MASS NOTIFICATION PLAN - AREA "B"

1 : 50

KEY PLAN

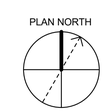

0 2000 4000

SCALE: 1 : 50

US Army Corps of Engineers®

MARK	DESCRIPTION	DATE

ISSUE DATE: FEBRUARY 2019
SOLICITATION NO.: W912ZB19R0028
CONTRACT NO.:
PROJECT NUMBER: M077E144
SIZE: ANSI D
FILE NAME: M077E144

DESIGNED BY: R.M.FORTNER
DRAWN BY: EN-DE
CHECKED BY: D.D.COLLIER
SUBMITTED BY: W.A.KNAPP

U.S. ARMY CORPS OF ENGINEERS
MOBILE DISTRICT
MOBILE, ALABAMA

SOTO CANO AIR BASE, HONDURAS
UNACCOMPANIED ENLISTED PERSONNEL HOUSING

THIRD FLOOR FIRE ALARM & MASS NOTIFICATION PLAN - AREA "B"

SHEET ID

FA106

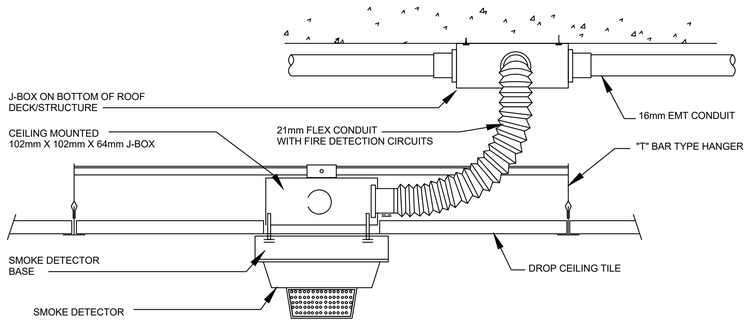

1 DETECTOR MOUNTING DETAIL - DROP CEILING

N.T.S.

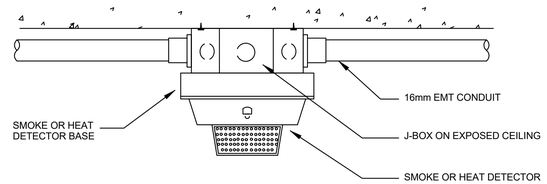

2 DETECTOR MOUNTING DETAIL - EXPOSED STRUCTURE

N.T.S.

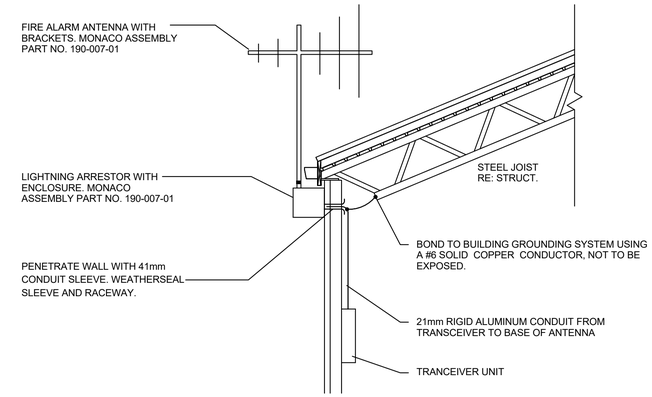

ANTENNA NOTES:

1. MODIFY ANTENNA MOUNTING AS REQUIRED TO ACCOMODATE EXACT LOCATION. COORDINATED WITH CONTRACTING OFFICERS REPRESENTATIVE.

2. COAXIAL CABLE SHALL BE ENCLOSED IN ALUMINUMN CONDUIT FROM THE TRANSCEIVER TO THE ANTENNA. MEASURES SHALL BE TAKEN TO AVOID SHARP BENDS OR "KINKING" OF COAXIAL CABLES.

3. PAINT ANTENNA MOUNTS AND CONDUIT TO EXTERIOR WALL COLOR.

3 FIRE ALARM ANTENNA MOUNTING DETAIL

N.T.S.

US Army Corps of Engineers®

MARK	DESCRIPTION	DATE

DESIGNED BY: R.M.FORTNER
DRAWN BY: EN-DE
CHECKED BY: D.D.COLLIER
SUBMITTED BY: W.W.KNAPP
SIZE: ANSI D
ISSUE DATE: FEBRUARY 2019
SOLICITATION NO.: W912781R0028
CONTRACT NO.:
PROJECT NUMBER: M077E144
FILE NAME: M077E144

U.S. ARMY CORPS OF ENGINEERS
MOBILE DISTRICT
MOBILE, ALABAMA

SOTO CANO AIR BASE, HONDURAS
UNACCOMPANIED ENLISTED PERSONNEL HOUSING

FIRE ALARM & MASS NOTIFICATION DETAILS

SHEET ID

FA501

GENERAL NOTES:

1. RISER DIAGRAM (1) AND MATRIX (3) ARE APPLICABLE TO BUILDINGS D, E, & F.
2. SEE PLAN DRAWINGS FOR DEVICE QUANTITIES AND TYPES.
3. ZONE SYSTEM BY DEVICE TYPE AND FLOOR. (NOT REFLECTED ON THIS RISER)
4. THE ACU SHALL BE CAPABLE OF PLAYING UP TO 9 PRE-RECORDED MESSAGES OF A MINIMUM DURATION OF 1 MINUTE, ALONG WITH THE ABILITY TO BROADCAST SIX DISTINCT ALERTING TONES. THE AUTHORITY HAVING JURISDICTION SHALL DETERMINE THE TYPE AND NUMBER OF PRE-RECORDED MESSAGES TO BE CONNECTED TO THE FIRE ALARM TRANSCEIVER. TRANSCEIVERS SHALL BE CAPABLE OF HAVING MESSAGES PROGRAMMED BY INTERCONNECTING CABLE FROM THE MONACO D-21-M CLIENT TERMINAL OR BY A LAPTOP.
5. THE FIRE ALARM TRANSCEIVERS SHALL BE 100% COMPATIBLE WITH THE INSTALLATION MONACO D-21 CENTRAL RECEIVER STATION. STANDARD MONACO TRANSCEIVER IS TYPE BT-X. THE FIRE ALARM TRANSCEIVER SHALL HAVE THE APPROPRIATE NUMBER OF CONTROL RELAYS IN ORDER TO INTERFACE WITH THE FIRE ALARM CONTROL PANEL AND OTHER REQUIRED EQUIPMENT.
6. COAXIAL CABLE SHALL BE ENCLOSED IN METAL CONDUIT FROM THE TRANSCEIVER TO THE ANTENNA. MEASURES SHALL BE TAKEN TO AVOID SHARP BENDS OR "KINKING" OF COAXIAL CABLES.

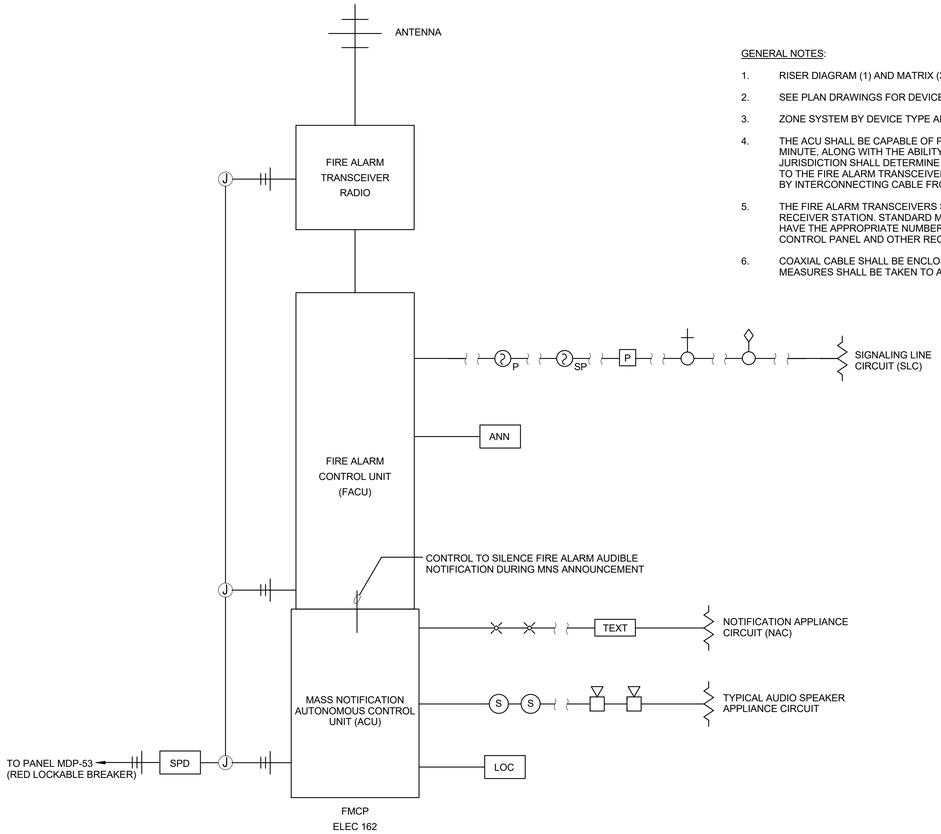

1 FIRE ALARM & MASS NOTIFICATION RISER DIAGRAM

N.T.S.

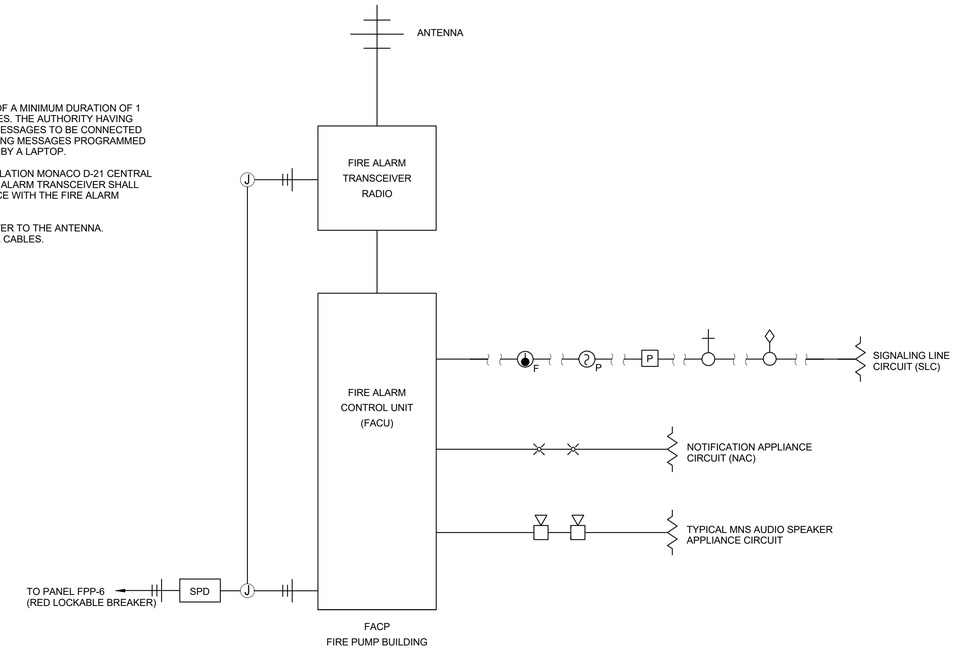

2 FIRE ALARM RISER DIAGRAM - FIRE PUMP BUILDING

N.T.S.

SYSTEM OUTPUTS

SYSTEM INPUTS		ANNUNCIATION AT LOCAL PANELS			NOTIFICATION					AUXILIARY FUNCTIONS	
		A: AUDIO-VISUAL FIRE ALARM INDICATION BY TYPE DEVICE AND AREA	B: AUDIO-VISUAL TROUBLE INDICATION BY DEVICE	C: AUDIO-VISUAL SUPERVISORY INDICATION BY DEVICE	D: GENERAL FIRE ALARM SIGNAL TO RECEIVING STATION	E: COMMON TROUBLE SIGNAL TO RECEIVING STATION	F: COMMON SUPERVISORY SIGNAL TO RECEIVING STATION	G: INITIATE FIRE ALARM NOTIFICATION DEVICES	H: INITIATE CO VOICE MESSAGE AND ALARM SIGNAL TO RECEIVING STATION	I: SHUTDOWN SUPPLY AND RECIRCULATING FANS	J: CHARGE PRE-ACTION SPRINKLER SYSTEM
FIRE ALARMS											
1	MANUAL FIRE ALARM STATIONS	X			X			X			
2	SMOKE DETECTORS	X			X			X			
3	HEAT DETECTORS	X			X						
4	WATER FLOW SWITCHES - WET-PIPE SPRINKLER SYSTEM	X			X			X			
TROUBLE CONDITIONS											
5	COMMON TROUBLE		X			X					
6	LOW BATERY VOLTAGE		X			X					
7	CIRCUIT FAULT		X			X					
8	AC POWER FAILURE		X			X					
SUPERVISORY SIGNALS											
9	COMMON SUPERVISORY			X			X				
10	SUPERVISED COMPONENT FAILURE			X			X				
11	MNS OVERRIDE OF FIRE ALARM NOTIFICATION DEVICES			X			X				
12	SINGLE STATION SMOKE DETECTORS		X			X					

3 FIRE ALARM & MASS NOTIFICATION FUNCTIONAL MATRIX

N.T.S.

SYSTEM OUTPUTS

SYSTEM INPUTS		ANNUNCIATION AT LOCAL PANELS			NOTIFICATION					AUXILIARY FUNCTIONS	
		A: AUDIO-VISUAL FIRE ALARM INDICATION BY TYPE DEVICE AND AREA	B: AUDIO-VISUAL TROUBLE INDICATION BY DEVICE	C: AUDIO-VISUAL SUPERVISORY INDICATION BY DEVICE	D: GENERAL FIRE ALARM SIGNAL TO RECEIVING STATION	E: COMMON TROUBLE SIGNAL TO RECEIVING STATION	F: COMMON SUPERVISORY SIGNAL TO RECEIVING STATION	G: INITIATE FIRE ALARM NOTIFICATION DEVICES	H: INITIATE CO VOICE MESSAGE AND ALARM SIGNAL TO RECEIVING STATION	I: SHUTDOWN SUPPLY AND RECIRCULATING FANS	J: CHARGE PRE-ACTION SPRINKLER SYSTEM
FIRE ALARMS											
1	MANUAL FIRE ALARM STATIONS	X			X			X			
2	SMOKE DETECTORS	X			X			X			
3	HEAT DETECTORS	X			X			X			
4	FIRE PUMP RUN	X			X						
TROUBLE CONDITIONS											
5	COMMON TROUBLE		X			X					
6	LOW BATERY VOLTAGE		X			X					
7	CIRCUIT FAULT		X			X					
8	AC POWER FAILURE		X			X					
9	FIRE PUMP TROUBLE SIGNALS		X			X					
SUPERVISORY SIGNALS											
10	COMMON SUPERVISORY			X			X				
11	SUPERVISED COMPONENT FAILURE			X			X				
12	FIRE PUMP SUPERVISORY SIGNALS			X			X				

4 FIRE ALARM FUNCTIONAL MATRIX - FIRE PUMP BUILDING

N.T.S.

US Army Corps of Engineers®

MARK	DESCRIPTION	DATE

DESIGNED BY: R.M.FORTNER
DRAWN BY: EN-DE
CHECKED BY: D.D.COLLIER
SUBMITTED BY: W.W.KNAPP
SIZE: ANSI D
ISSUE DATE: FEBRUARY 2019
SOLICITATION NO.: W912T819R0028
CONTRACT NO.:
PROJECT NUMBER: M077E144
FILE NAME: M077E144

U.S. ARMY CORPS OF ENGINEERS
MOBILE DISTRICT
MOBILE, ALABAMA

SOTO CANO AIR BASE, HONDURAS
UNACCOMPANIED ENLISTED PERSONNEL HOUSING

FIRE ALARM & MASS NOTIFICATION RISER DIAGRAMS & MATRICES

SHEET ID
FA601

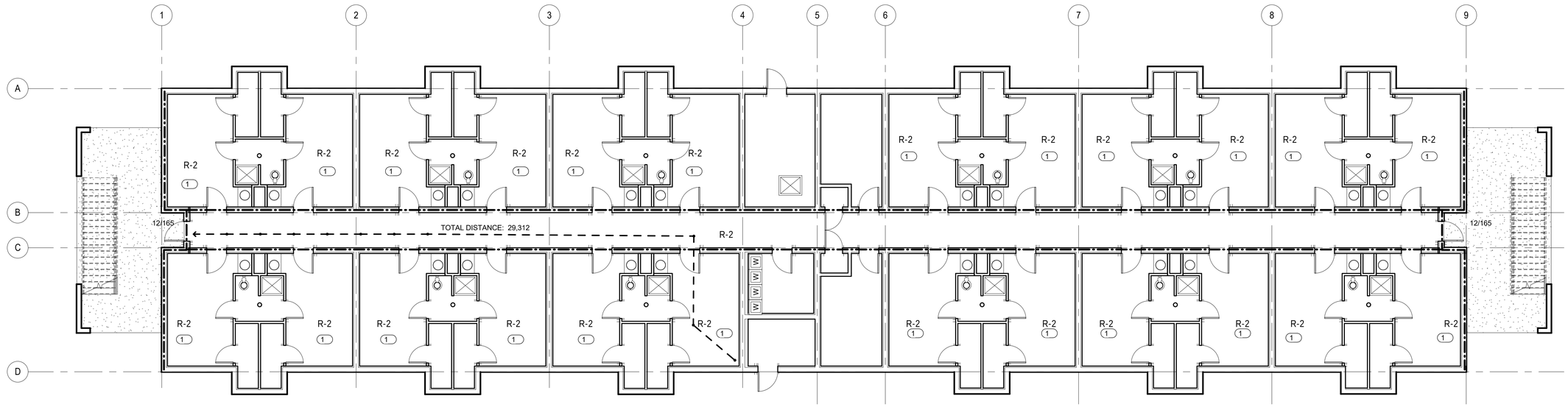

1 FL-100 FIRST FLOOR LIFE SAFETY PLAN
1 : 100

CODE ANALYSIS

1. NFPA 101 LIFE SAFETY

A. NEW HOTEL AND DORMITORIES OCCUPANCY - CHAPTER 28:
AUTOMATIC SPRINKLER SYSTEM THROUGHOUT THE BUILDING,
FIRE EXTINGUISHERS WILL NOT BE PROVIDED.

B. MEANS OF EGRESS - 28.2.5:
COMMON PATH SHALL NOT EXCEED 50FT
DEAD-END CORRIDORS SHALL NOT EXCEED 50FT
MAXIMUM TRAVEL NOT TO EXCEED 200FT.

2. IBC:

A. TYPE OF CONSTRUCTION - TYPE IIB (NON-COMBUSTIBLE CONSTRUCTION).

B. OCCUPANCY CLASSIFICATION - GROUP R-2

C .FIRE SEPARATION - 1/2 HOUR FIRE SEPARATION REQUIRED.

LIFE SAFETY LEGEND

30 TD — 15 CP — PATH OF EXIT TRAVEL WITH DISTANCES TO THE NEAREST EXIT (DTE). DISTANCES INCLUDE TOTAL TRAVEL DISTANCE (TD), DEAD END (DE) AND COMMON PATH (CP) OF EXIT TRAVEL.(DISTANCES IN FEET)

■ - INDICATES START OF CP

● - INDICATES END OF CP

< - INDICATES POINT OF EXIT

10 / 215 — ACTUAL QUANTITY / EXIT CAPACITY

(123) — CALCULATED OCCUPANCY LOAD

ONE HR FIRE BARRIER
1/2 HR IN INTERIOR BARRACKS CORRIDOR

R-2 — IBC GROUP R-2 OCCUPANCY CLASSIFICATION

HD — NFPA NEW HOTEL AND DORMITORIES OCCUPANCY CLASSIFICATION

⊗ — EXIT SIGN

MEANS OF EGRESS

1. 50 FEET MAXIMUM DEAD-END CORRIDOR IN FULLY SPRINKLED BUILDING. NEW HOTEL AND DORMITORIES (NFPA 101 28.2.5.6)

2. 50 FEET MAXIMUM COMMON PATH OF EXIT TRAVEL IN FULLY SPRINKLED BUILDING. NEW HOTEL AND DORMITORIES (NFPA 101 28.2.5.4)

3. 200 FEET MAXIMUM TRAVEL DISTANCE TO EXIT IN BUILDING WITH AUTOMATIC SPRINKLER SYSTEM. NEW HOTEL AND DORMITORIES (NFPA 101 28.2.6.3.1)

DESIGN CRITERIA

1. NFPA LIFE SAFETY CODE 101, 2015; EGRESS REQUIREMENTS.

2. INTERNATIONAL BUILDING CODE 2015; OCCUPANCY CLASSIFICATION, CONSTRUCTION TYPE, AND CONSTRUCTION REQUIREMENTS.
3. UFC 3 600 01 FIRE PROTECTION ENGINEERING FOR FACILITIES 2016

US Army Corps of Engineers®

MARK	DESCRIPTION	DATE

ISSUE DATE: FEBRUARY 2019
SOLICITATION NO.: W912781R0028
CONTRACT NO.:
PROJECT NUMBER: M017EC44

DESIGNED BY: T.D.W.
DRAWN BY: T.D.W.
CHECKED BY: J.M.C.
SUBMITTED BY: C.A.
SIZE: ANSI D
FILE NAME: M017EU44

U.S. ARMY CORPS OF ENGINEERS
MOBILE DISTRICT
MOBILE, ALABAMA

SOTO CANO AIR BASE, HONDURAS
UNACCOMPANIED ENLISTED PERSONNEL HOUSING

FIRST FLOOR - LIFE SAFETY PLAN

SHEET ID
FL-100

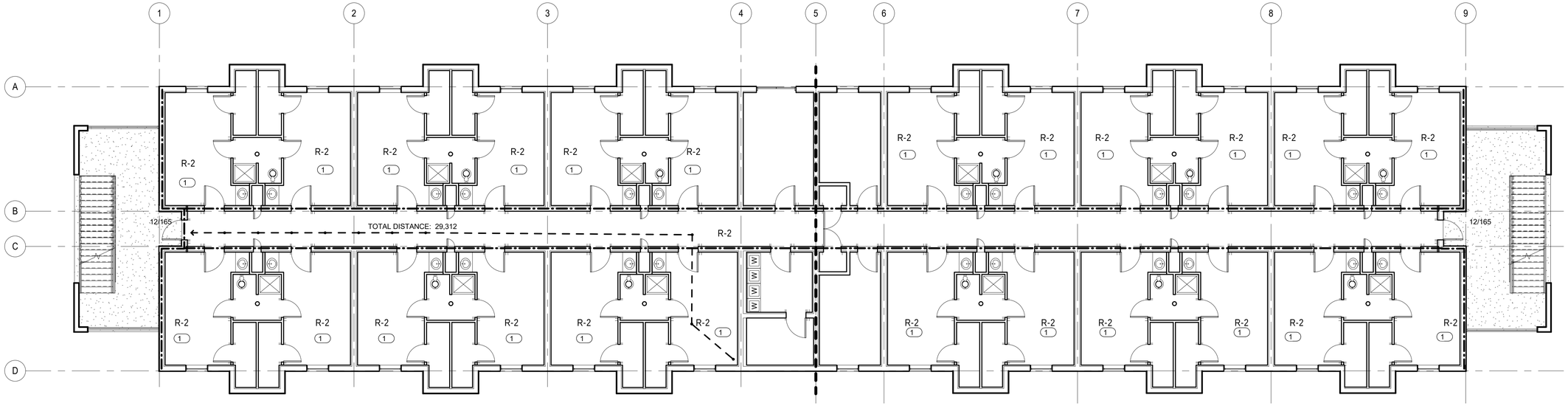

1 FL-101 SECOND FLOOR LIFE SAFETY PLAN
1 : 100

CODE ANALYSIS

1. NFPA 101 LIFE SAFETY

A. NEW HOTEL AND DORMITORIES OCCUPANCY - CHAPTER 28:
AUTOMATIC SPRINKLER SYSTEM THROUGHOUT THE BUILDING, FIRE EXTINGUISHERS WILL NOT BE PROVIDED.

B. MEANS OF EGRESS - 28.2.5:
COMMON PATH SHALL NOT EXCEED 50FT
DEAD-END CORRIDORS SHALL NOT EXCEED 50FT
MAXIMUM TRAVEL NOT TO EXCEED 200FT.

2. IBC:

A. TYPE OF CONSTRUCTION - TYPE IIB (NON-COMBUSTIBLE CONSTRUCTION).

B. OCCUPANCY CLASSIFICATION - GROUP R-2

C .FIRE SEPARATION - 1/2 HOUR FIRE SEPARATION REQUIRED.

LIFE SAFETY LEGEND

30 TD ● 15 CP ■ — PATH OF EXIT TRAVEL WITH DISTANCES TO THE NEAREST EXIT (DTE). DISTANCES INCLUDE TOTAL TRAVEL DISTANCE (TD), DEAD END (DE) AND COMMON PATH (CP) OF EXIT TRAVEL.(DISTANCES IN FEET)

■ - INDICATES START OF CP

● - INDICATES END OF CP

< - INDICATES POINT OF EXIT

10 / 215 — ACTUAL QUANTITY / EXIT CAPACITY

123 — CALCULATED OCCUPANCY LOAD

ONE HR FIRE BARRIER
1/2 HR IN INTERIOR BARRACKS CORRIDOR

R-2 — IBC GROUP R-2 OCCUPANCY CLASSIFICATION

HD — NFPA NEW HOTEL AND DORMITORIES OCCUPANCY CLASSIFICATION

EXIT SIGN

MEANS OF EGRESS

1. 50 FEET MAXIMUM DEAD-END CORRIDOR IN FULLY SPRINKLED BUILDING. NEW HOTEL AND DORMITORIES (NFPA 101 28.2.5.6)

2. 50 FEET MAXIMUM COMMON PATH OF EXIT TRAVEL IN FULLY SPRINKLED BUILDING. NEW HOTEL AND DORMITORIES (NFPA 101 28.2.5.4)

3. 200 FEET MAXIMUM TRAVEL DISTANCE TO EXIT IN BUILDING WITH AUTOMATIC SPRINKLER SYSTEM. NEW HOTEL AND DORMITORIES (NFPA 101 28.2.6.3.1)

DESIGN CRITERIA

1. NFPA LIFE SAFETY CODE 101, 2015; EGRESS REQUIREMENTS.

2. INTERNATIONAL BUILDING CODE 2015; OCCUPANCY CLASSIFICATION, CONSTRUCTION TYPE, AND CONSTRUCTION REQUIREMENTS.
3. UFC 3 600 01 FIRE PROTECTION ENGINEERING FOR FACILITIES 2016

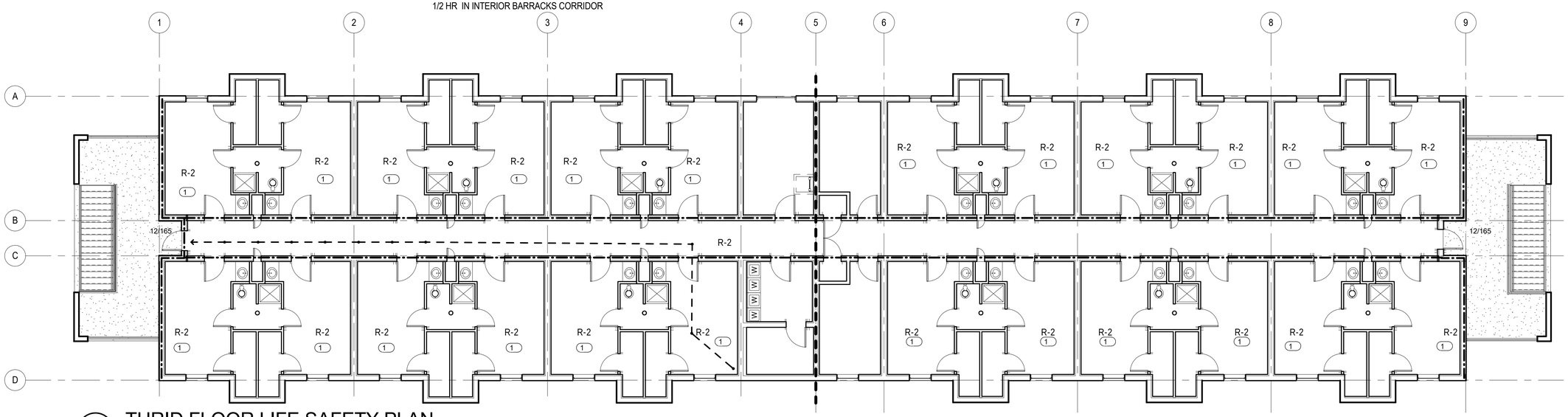

2 FL-101 THRID FLOOR LIFE SAFETY PLAN
1 : 100

US Army Corps of Engineers®

MARK	DESCRIPTION	DATE

DESIGNED BY: XXX YYY
DRAWN BY: Author
CHECKED BY: XXX YYY
SUBMITTED BY:
SIZE: ANSI D
ISSUE DATE: FEBRUARY 2019
SOLICITATION NO.: W9127818R0028
CONTRACT NO.:
PROJECT NUMBER: M07TEC44
FILE NAME: M07TEC44

U.S. ARMY CORPS OF ENGINEERS
MOBILE DISTRICT
MOBILE, ALABAMA

SOTO CANO AIR BASE, HONDURAS
UNACCOMPANIED ENLISTED PERSONNEL HOUSING

SECOND AND THIRD FLOOR - LIFE SAFETY PLAN

SHEET ID
FL-101

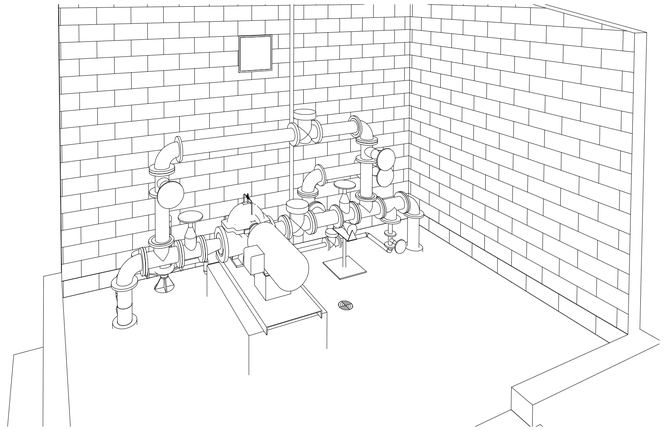

3 PERSPECTIVE VIEW

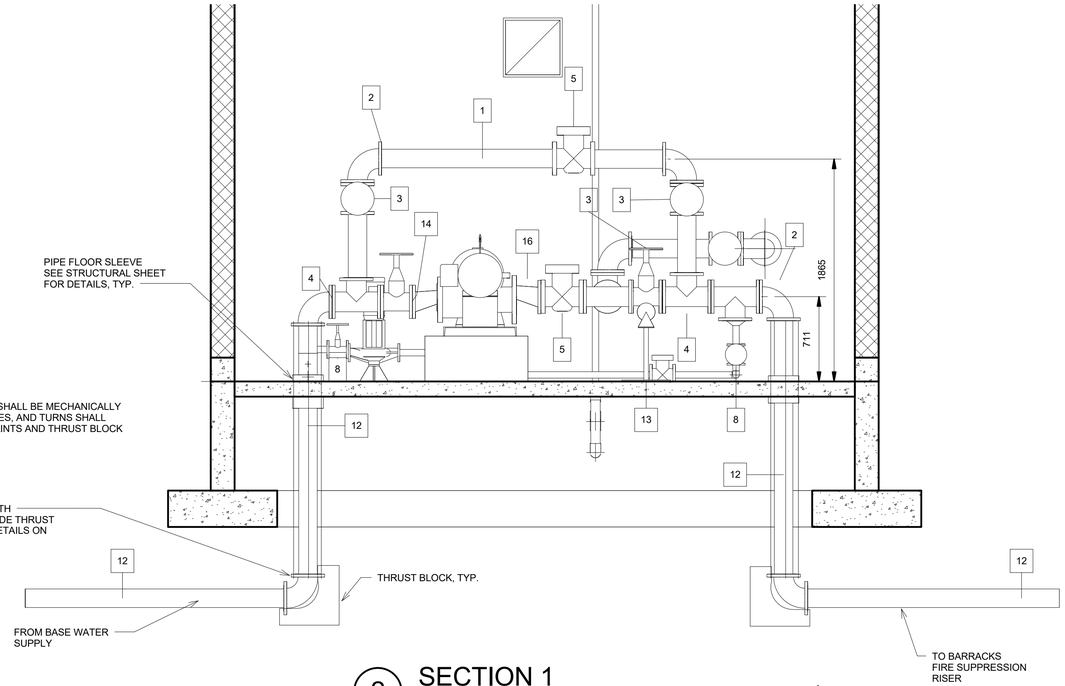

NOTE:

ALL EXTERIOR FIRE MAIN JOINTS SHALL BE MECHANICALLY RESTRAINED AND ALL BENDS, TEES, AND TURNS SHALL HAVE BOTH MECHANICAL RESTRAINTS AND THRUST BLOCK RESTRAINTS.

2 SECTION 1
1 : 25

FIRE PUMP EQUIPMENT SCHEDULE

TAG NUMBER	DESCRIPTION
1	150mm STEEL PIPE - FLANGED
2	150mm FLANGED ELBOW
3	150mm GATE VALVE
4	150mm FLANGED TEE
5	150mm CHECK VALVE
6	50mm PIPE
7	50mm CHECK VALVE
8	50mm GATE VALVE
9	50mm ELBOW
10	50mm HOSE CONNECTION
11	150mm PIPE SLEEVE
12	150mm DUCTILE IRON
13	Pipe Support
14	150mm x 100mm ECCENTRIC REDUCER
15	TEST HEADER (50mm HOSE VALVES)
16	80mm X 150mm ECCENTRIC REDUCER
17	CENTRIFUGAL HORIZONTAL SPLIT CASE FIRE PUMP 15 H.P. - 250 GPM @ 42 PSI
18	JOCKEY PUMP - 1/2 H.P.

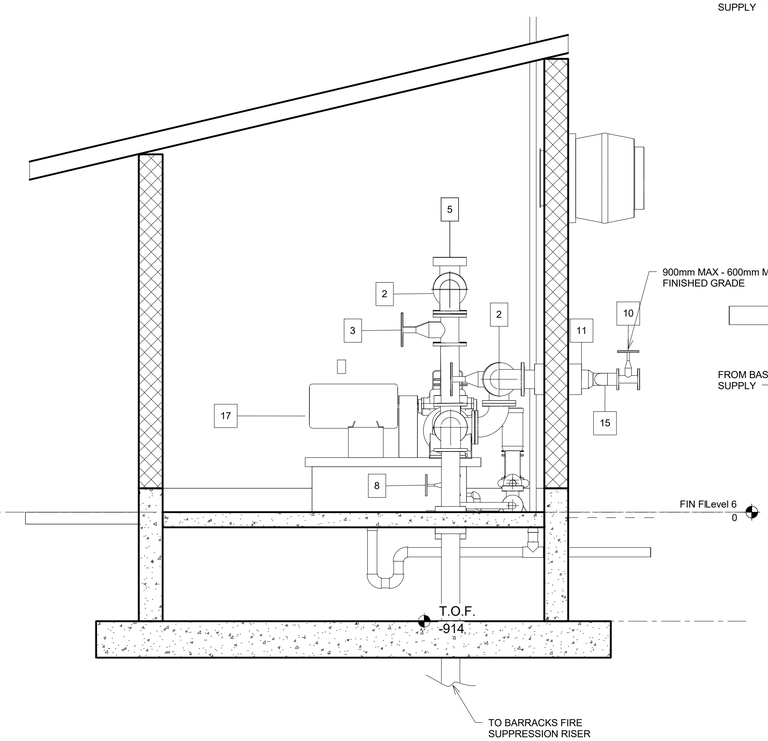

4 SECTION 2
1 : 25

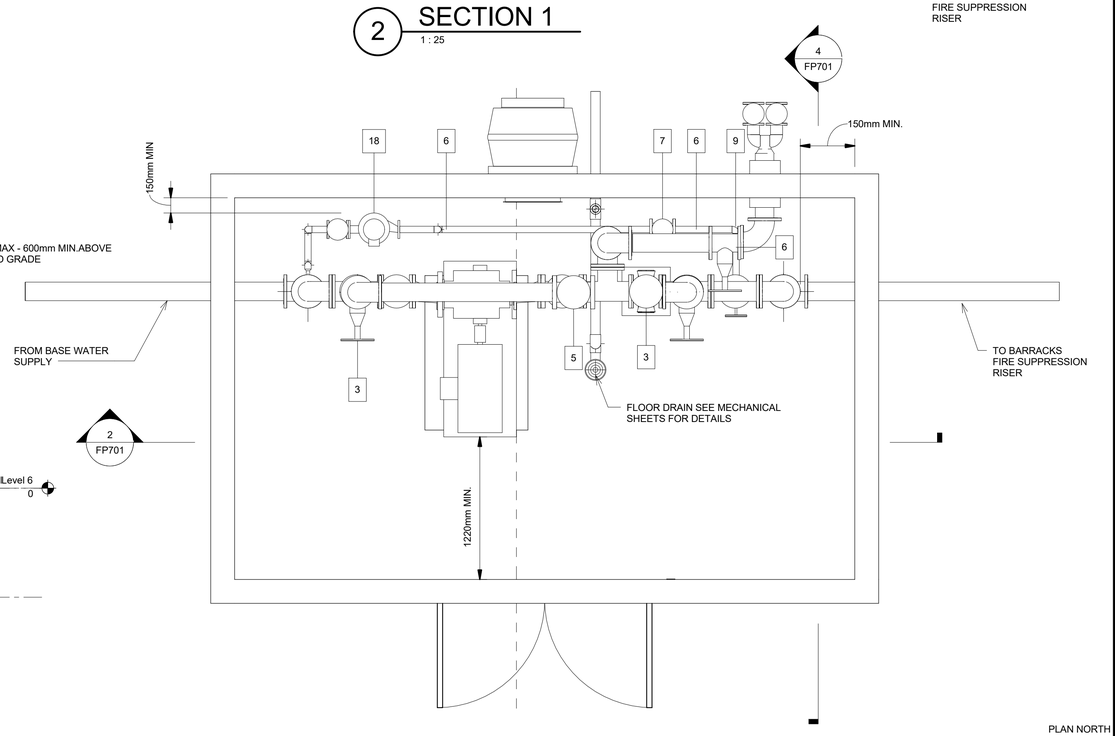

1 FLOOR PLAN
1 : 25

0 1000 2000
SCALE: 1 : 25

PLAN NORTH

NOTES:

1. CONTRACTOR SHALL ADJUST DIMENSIONS AS NECESSARY TO SUIT EQUIPMENT FURNISHED SUCH THAT OPERATIONAL AND MAINTENANCE CLEARANCES SHALL BE PROVIDED. DIMENSIONAL CLEARANCES MUST BE APPROVED BY THE CONTRACTING OFFICER PRIOR TO BEGINNING PUMP ROOM CONSTRUCTION.

2. ALL WATER PIPING PASSING THROUGH THE CONCRETE SLAB SHALL BE SLEEVED AND SEALED. THE THRU-WALL SLEEVE FOR THE HOSE VALVE HEADER SHALL BE INSTALLED IN A SIMILAR MANNER. PROVIDE A MINIMUM CLEARANCE OF ONE INCH BETWEEN OUTSIDE OF THE WATER PIPE OR THE TIE ROD AND THE INSIDE OF THE CASING PIPE. THE ANNULAR SPACE BETWEEN THE WATER PIPE AND THE SLEEVE SHALL BE FILLED WITH WATERPROOF MASTIC.

3. CONTROL PANEL ALARMS, TROUBLE SWITCHES, AND VALVE TAMPER SWITCHES TO THE FIRE ALARM SYSTEM. VALVES SHALL BE SUPERVISED.

4. THE HEIGHT OF THE HOSE VALVE MANIFOLD ABOVE FINISHED GRADE SHALL BE AS SPECIFIED IN SPECIFICATION SECTION 21 30 00 - "FIRE PUMPS"

5. CONTRACTOR SHALL PROVIDE PIPE SUPPORTS AS SHOWN.

6. FIRE PUMP CIRCULATION RELIEF VALVE SHALL BE PIPED TO FLOOR PIT TO DRAIN.

7. NO BUTTERFLY VALVES SHALL BE PERMITTED IN FIRE PUMP ROOM.

8. SEE ELECTRICAL DRAWINGS FOR LOCATIONS OF ELECTRICAL AND PUMP CONTROLLER PANELS.

US Army Corps of Engineers®

MARK	DESCRIPTION	DATE

ISSUE DATE: MMMMMMMMM YYYY
SOLICITATION NO.: W91328-XX-X-XXXX
CONTRACT NO.: W91328-XX-X-XXXX
PROJECT NUMBER: PROJECT #
FILE NAME:

DESIGNED BY: MEC
DRAWN BY: KES
CHECKED BY: PWO
SUBMITTED BY: PWO
SIZE: ANSI D

U.S. ARMY CORPS OF ENGINEERS
MOBILE DISTRICT
MOBILE, ALABAMA

SOTO CANO AIR BASE, HONDURAS
UNACCOMPANIED ENLISTED PERSONNEL HOUSING

FIRE PUMP LAYOUT

SHEET ID
FP701

FIRE SUPPRESSION NOTES

1. THE ENTIRE BUILDINGS SHALL BE FULLY PROTECTED BY AUTOMATIC FIRE SUPPRESSION SYSTEMS INSTALLED IN ACCORDANCE WITH NFPA 13R, NFPA 13, UFC-3-600-01, AND BASE SPECIFIC CRITERIA. THE SYSTEM TYPES SHALL BE WET, DRY, AGENT AS INDICATED, UNLESS REQUIRED OTHERWISE BY CODE OR BASE CRITERIA.

2. THE FIRE SUPPRESSION SYSTEMS SHALL BE DESIGNED, INSTALLED AND TESTED IN ACCORDANCE WITH THE FOLLOWING CRITERIA:

A. UFC-3-600-01 FIRE PROTECTION ENGINEERING FOR FACILITIES.
B. NFPA-13R STANDARD FOR THE INSTALLATION OF SPRINKLER SYSTEMS.

3. THE SPRINKLER SYSTEMS SHALL BE HYDRAULICALLY CALCULATED IN ACCORDANCE WITH NFPA-13. DESIGN DENSITIES AND HOSE STREAM ALLOWANCE SHALL BE AS IDENTIFIED IN THE TABLE ON THIS SHEET:

4. MAXIMUM AREA OF COVERAGE PER SPRINKLER SHALL BE IN ACCORDANCE WITH UFC-3-600-01 FOR THE APPLICABLE HAZARD AND TYPE OF SPRINKLER, OR IN ACCORDANCE WITH MANUFACTURER'S LISTINGS.

5. QUICK RESPONSE SPRINKLERS SHALL BE USED THROUGHOUT, EXCEPT IN ROOMS OR AREAS FOR WHICH QUICK RESPONSE SPRINKLERS ARE NOT LISTED, OR WHERE THEIR USE HAS BEEN SPECIFICALLY PROHIBITED BY THE UFC

6. ALL FIRE PROTECTION SYSTEM CONTROL VALVES SHALL BE PROVIDED WITH SUPERVISORY SWITCHES BY THE SPRINKLER CONTRACTOR. ALL ELECTRICAL DEVICES FOR THE FIRE PROTECTION SYSTEM SHALL BE COMPATABLE WITH THE FIRE ALARM SYSTEM.

7. PIPING SHALL BE INSTALLED SO THAT ALL PORTIONS OF THE SYSTEM CAN BE DRAINED BACK THROUGH VALVES IN ACCORDANCE WITH THE REFERENCED NFPA STANDARDS.

8. ALL FIRE WALL PENETRATIONS SHALL BE MADE WITH UL APPROVED FIRESTOPPING SYSTEMS LISTED TO MAINTAIN THE FIRE RATING OF THE WALLS IN WHICH THEY ARE INSTALLED.

9. INSPECTOR'S TEST VALVE TO BE PIPED FROM END OF LAST BRANCH LINE WITH NO EXPOSED PIPE IN FINISHED SPACES.

10. FULLY COORDINATE INSTALLATION OF PIPE WITH ALL OTHER TRADES, WITH PARTICULAR EMPHASIS ON COORDINATION WITH HVAC DUCTWORK. SPRINKLER PIPE SHALL NOT BE SUSPENDED FROM DUCT HANGERS UNLESS THESE SUPPORTS ARE SPECIFICALLY DESIGNED TO ACCOMMODATE SPRINKLER PIPE. HANGERS SHALL BE IN ACCORDANCE WITH NFPA 13. NO OTHER SYSTEM SHALL BE SUPPORTED FROM SPRINLER PIPING.

11. FIRE DEPARTMENT CONNECTION FOR THE SPRINKLER SYSTEM SHALL BE PROVIDED WITH NAME PLATES PERMANENTLY ATTACHED TO IDENTIFY THE SYSTEM TYPE AND BUILDING SERVED, IN ACCORDANCE WITH APPLICABLE REQUIREMENTS OF NFPA 13.

12. ALL SPRINKLER PIPING SHALL BE SCHEDULE 40 BLACK STEEL.

13. FIRE FLOW TEST DATA:

STATIC PRESSURE:	303 kPa (44 PSI)
RESIDUAL PRESSURE:	207 kPa (30 PSI)
FLOW:	102 lps (1619 GPM)
DATE:	14 MAR 2018

PERFORM A CONFIRMING FLOW TEST IN ACCORDANCE WITH NFPA 291 AND USE DATA OBATINED FOR FINAL DESIGN.

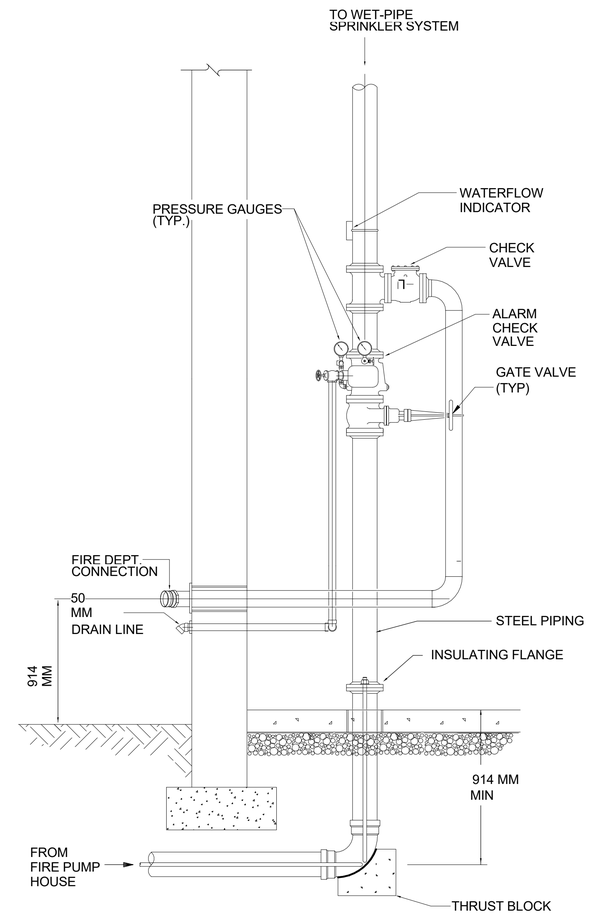

1 **WET PIPE RISER**
N.T.S.

FIRE SUPPRESSION HAZARD SCHEDULE

AREA	HAZARD RATING	AREA OF OPERATION	DENSITY	TYPE OF SYSTEM	HOSE STREAM ALLOWANCE	SYMBOL
MECH RM, JANITORS CLOSET	ORDINARY HAZARD	232.3 SQ M	8.0 LPM/SQ M	WET PIPE	15.8 LPS	OH
DORMS	RESIDENTIAL	4 SPRINKLES	2.0 LPM/SQ M	WET PIPE	15.8 LPS	RH
ALL OTHER AREAS	LIGHT HAZARD	139.4 SQ M	4.0 LPM/SQ M	WET PIPE	15.8 LPS	LH

US Army Corps of Engineers ®

MARK	DESCRIPTION	DATE

DESIGNED BY: R. PERSON
DRAWN BY: EN-DE
CHECKED BY: B. DURHAM
SUBMITTED BY: W. KNAPP
SIZE: ANSI D
ISSUE DATE: FEBRUARY 2019
SOLICITATION NO.: W912781R0028
CONTRACT NO.:
PROJECT NUMBER: M017EU44
FILE NAME: M017EU44

U.S. ARMY CORPS OF ENGINEERS
MOBILE DISTRICT
MOBILE, AL

SOTO CANO AIR BASE, HONDURAS
UNACCOMPANIED ENLISTED PERSONNEL HOUSING

FIRE SUPPRESSION

SHEET ID
FX001

GENERAL SHEET NOTES:

1. SEE SHEET FX001 FOR GENERAL NOTES, LEGENDS, AND ABBREVIATIONS.
2. PLAN NORTH IS FOR REFERENCE ONLY AND IS BASED ON BUILDING D. SEE CIVIL FOR BUILDING ORIENTATION.

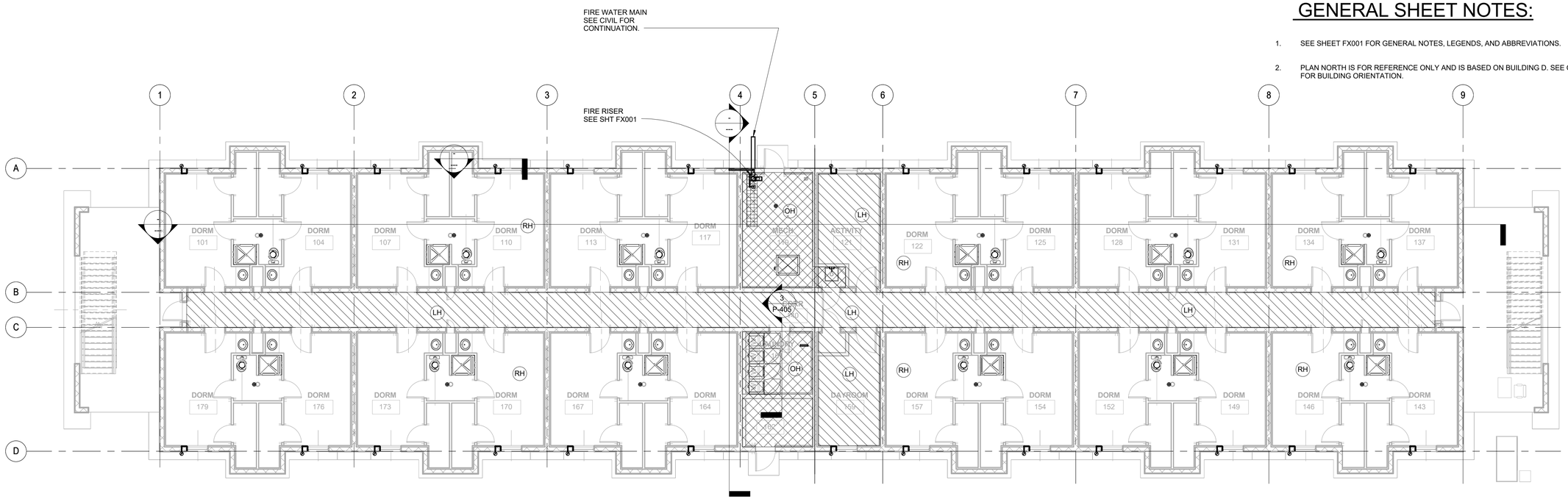

1 FIRE SUPPRESSION PLAN - 1ST FLR
1 : 100

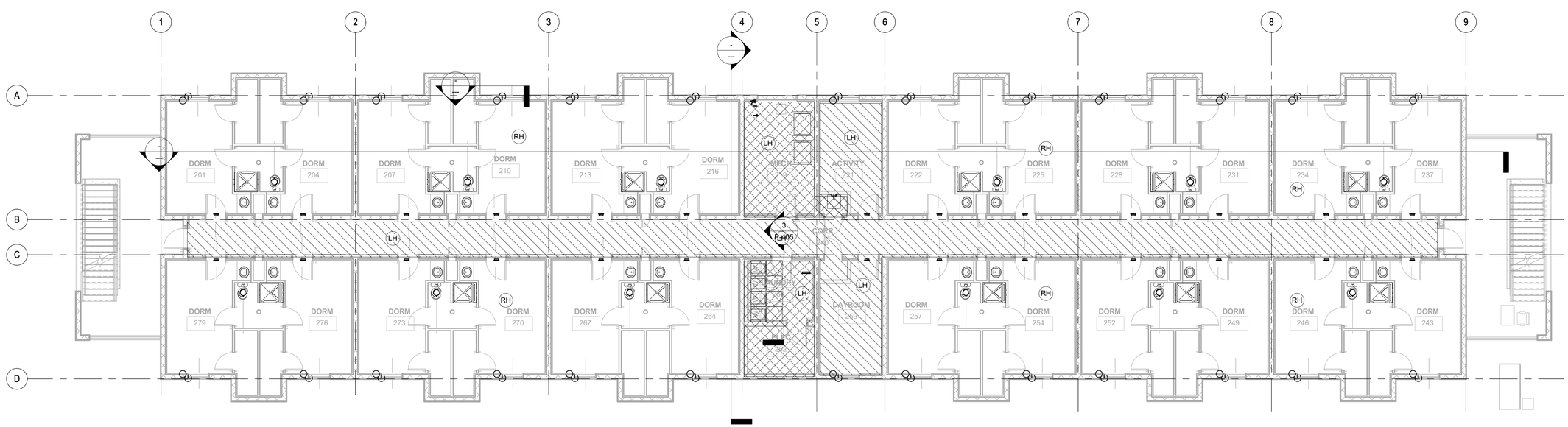

2 FIRE SUPPRESSION PLAN - 2ND FLR
1 : 100

0 8000 16000
SCALE: 1 : 200

US Army Corps of Engineers ®

MARK	DESCRIPTION	DATE

ISSUE DATE: FEBRUARY 2019
SOLICITATION NO.: W9127819R0028
CONTRACT NO.:
PROJECT NUMBER: M077E044

DESIGNED BY: R. PERSON
DRAWN BY: EN-DE
CHECKED BY: Checker
SUBMITTED BY:
SIZE: ANSI D
FILE NAME: M077E044

U.S. ARMY CORPS OF ENGINEERS
MOBILE DISTRICT
MOBILE, AL

SOTO CANO AIR BASE, HONDURAS
UNACCOMPANIED ENLISTED PERSONNEL HOUSING

FIRE SUPPRESSION 1ST & 2ND FLOOR PLAN

SHEET ID
FX101

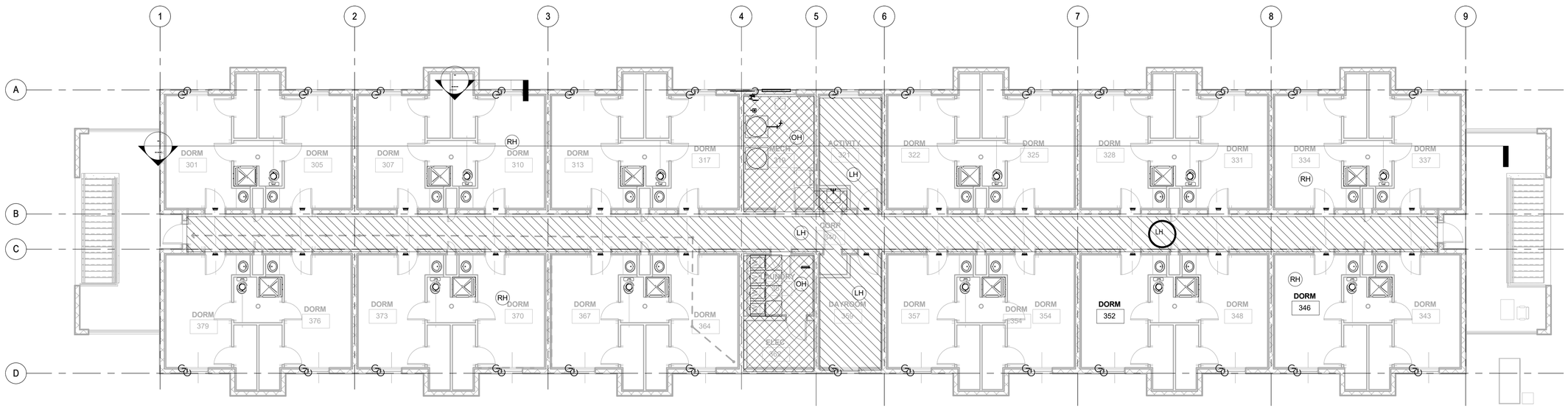

1 FX102 FIRE SUPPRESSION PLAN - 3RD FLR

1 : 100

0 4000 8000

SCALE: 1 : 100

US Army Corps of Engineers ®

MARK	DESCRIPTION	DATE

DESIGNED BY: R. PERSON
DRAWN BY: EN-DE
CHECKED BY: B. DURHAM
SUBMITTED BY: W. KNAPP
SIZE: ANSI D
ISSUE DATE: FEBRUARY 2019
SOLICITATION NO.: W912781R0028
CONTRACT NO.:
PROJECT NUMBER: M077EU44
FILE NAME: M077EU44

U.S. ARMY CORPS OF ENGINEERS
MOBILE DISTRICT
MOBILE, AL

SOTO CANO AIR BASE, HONDURAS
UNACCOMPANIED ENLISTED PERSONNEL HOUSING

FIRE SUPPRESSION 3RD FLOOR PLAN

SHEET ID

FX102

PLUMBING GENERAL NOTES

1. ALL WORK SHALL CONFORM WITH UFC 3-420-01 AND ALL OTHER APPLICABLE CODES AND STANDARDS.
2. ALL HANDICAP FIXTURES SHALL BE MOUNTED IN ACCORDANCE WITH THE AMERICANS WITH DISABILITIES ACT (ADA) AND ALL OTHER PERTINENT ACCESSIBILITY CODE FOR BUILDING CONSTRUCTION.
3. PRIOR TO START OF CONSTRUCTION, CONTRACTOR SHALL VERIFY EXACT LOCATIONS OF UTILITIES IN FIELD.
4. PRIOR TO START OF CONSTRUCTION, CONTRACTOR SHALL VERIFY ALL EXISTING BUILDING CONDITIONS.
5. COORDINATE WORK WITH ALL OTHER TRADES TO AVOID INTERFERENCES.
6. INSTALL ALL WATER, WASTE AND VENT PIPING IN ACCORDANCE WITH ALL APPLICABLE CODES.
7. SOIL, WASTE AND VENT PIPING SHALL BE SCHEDULE 40 PVC IN ACCORDANCE WITH ASTM D 2665. PVC PIPE FITTINGS SHALL BE IN ACCORDANCE WITH ASTM D 3311. JOINTS SHALL BE SOLVENT CEMENTED IN ACCORDANCE WITH ASTM D 2855 USING SOLVENT CEMENT IN COMPLIANCE WITH ASTM D 2564.
8. REFER TO ARCHITECTURAL DRAWINGS FOR EXACT LOCATIONS AND MOUNTING HEIGHTS OF ALL PLUMBING FIXTURES.
9. ALL PIPING SHALL BE CONCEALED WITHIN THE CEILING SPACE, WALLS AND CHASES AS SHOWN ON PLANS.
10. ALL EXPOSED PIPING AT PLUMBING FIXTURES SHALL BE CHROME PLATED BRASS WITH ESCUTCHEON PLATES AT THE WALL, FLOOR OR CEILING PENETRATIONS.
11. ALL ABOVE SLAB COLD WATER AND HOT WATER PIPING SHALL BE TYPE "L" COPPER TUBING IN ACCORDANCE WITH ASTM B 88. PIPE FIITINGS SHALL BE COPPER OR COPPER ALLOY IN ACCORDANCE WITH ASME 16.22.. JOINTS SHALL BE SOLDER ACCORDANCE WITH ASTM B 828 USING "LEAD FREE" SOLDER IN COMPLIANCE WITH ASTM B 32.
12. ALL BELOW SLAB COLD WATER AND HOT WATER PIPING SHALL BE TYPE "K" COPPER.
13. ALL COPPER WATER LINE PENETRATIONS THROUGH WALLS SHALL BE SLEEVED.
14. INSULATE ALL HOT WATER PIPING, TEMPERED WATER PIPING AND HOT WATER RECIRCULATING PIPING WITH 1 1/2" FIBERGLASS INSULATION PER SPECIFICATIONS.
15. INSULATE ALL EXPOSED PIPES AND SURFACES UNDER ACCESSIBLE LAVATORIES AND COUNTER SINKS PER ADA 4.19.4 AND ANSI-A117.1. PROVIDE ONE PIECE PROTECTOR WITH FULL ROTATION OPTION CONSISTING OF INTERNAL GROOVE LOCKING RING FOR NON SEPERATION AND EXTERNAL LOCKING RING WITH STAINLESS STEEL SECURITY SCREW TO INSURE EXTRA LONG TERM TAMPER RESISTANCE ANTIMICROBIAL U.V. INHIBITED UNIVERSAL FIT, 3-M DUAL LOCK (TM) FASTENERS SECURED WITH SELF LOCKING APPROVED NYLON STRAPS. FURNISH ONE PIECE VALVE/ANGLE STEP PROTECTOR. ONE PIECE OFFSET PROTECTOR AND ONE PIECE P-TRAP PROTECTOR. PRO-XTREME BY PLUMBEREX.
16. ALL PIPING SHALL BE FIRMLY ANCHORED AND SUPPORTED TO PREVENT SWAY AND VIBRATION THE ENTIRE LENGTH.
17. CONTRACTOR SHALL FURNISH AND INSTALL WATER SHOCK ARRESTERS EQUAL TO ZURN SHOKTROL AS SHOWN ON PLANS AND AS PER MANUFACTURER'S RECOMMENDATIONS. AIR CHAMERS SHALL NOT BE SUBSTITUTED FOR FACTORY FABRICATED WATER SHOCK ARRESTORS.
18. ALL FLOOR DRAINS SHALL HAVE TRAP PRIMER CONNECTIONS AND SHALL BE SUPPLIED FROM AUTOMATIC TRAP PRIMERS CONNECT TO THE NEAREST SINK. RUN 1/4" SOFT COPPER TUBING FROM TRAP PRIMERS TO FLOOR DRAIN TRAP PRIMER CONNECTION. TRAP PRIMERS SHALL BE EQUAL TO ZURN "SANI-GUARD" MODEL Z-1022.
19. FURNISH SUPPLIES WITH STOP VALVES FOR ALL PLUMBING FIXTURES.
20. ALL SHUT-OFF VALVES SHALL BE BALL VALVES.
21. ALL WATER PIPING SHALL BE SLOPED TO DRAIN.
22. ALL SOIL, WASTE, AND VENT PIPING SHALL BE SLOPED 21 MM PER M (2%) FOR PIPES 2 1/2" AND SMALLER AND 1 MM PER M (1%) FOR PIPES 75 MM AND LARGER.
23. PROVIDE DIELECTRIC UNIONS AT ALL CONNECTIONS OF DISSIMILAR METALS.
24. SEAL ALL PENETRATIONS OF FIRE RATED PARTITIONS WITH FIRE RATED STOPPING MATERIAL.
25. FURNISH RELAYS NECESSARY FOR THE DDC CONTROL SYSTEM TO CONTROL THE WATER HEATER AND THE HOT WATER RECALCULATION PUMP.
26. SET WATER HEATER THERMOSTAT TO PREVENT PROMOTION OF LEGIONELLA. FURNISH TEMPERING MIXING VALVE TO PROVIDE 43.3°C WATER AT THE PLUMBING FIXTURES.
28. PIPE ALL P&T VALVES FROM WATER HEATERS TO OUTSIDE OF BUILDING USING FULL SIZE COPPER PIPING.
29. PROVIDE 305 x305 ACCESS DOORS ON ALL NON-ACCESSIBLE CEILINGS AND WALLS FOR VALVES
30. ALL FLOOR CLEAN OUT PLUGS SHALL BE PVC.

***31. THE ENTIRE SOLAR WATER HEATING SYSTEM IS BID OPTION #1. THIS INCLUDES, BUT NOT LIMIT TO, SOLAR COLLECTORS, SOLAR PUMPS SP-1 &SP-2, SOLAR STORAGE TANK, AND DRAIN BACK TANK.

PLUMBING LEGEND

SS	SANITARY SEWER		SOIL , WASTE
	COLD WATER		VENT
	HOT WATER (44°C)	T	TRAP PRIMER
	HOT WATER RETURN		GATE VALVE
HW 60°C	HOT WATER (60°C)		GLOBE VALVE
	BALANCE VALVE	UNO	UNLESS NOTED OTHERWISE
	CHECK VALVE		UNION
	SILL COCK (SC) HOSE BIBB (HB)		CLEANOUT (C.O.)
	INCREASER	AC	ABOVE CEILING
	FLOOR DRAIN (FD)	NTS	NOT TO SCALE
	HUB DRAIN		CHECK VALVE SCREWED & FLANGED
V.T.R.	VENT THRU ROOF		GATE VALVE
H.B.	HOSE BIBB		PIPE TEST PLUG
DN	DOWN		FLEX. PIPE CONN.
FD	FLOOR DRAIN		CONCENTRIC REDUCER
WHA " "	WATER HAMMER ARRESTOR "SIZE"	HP	HOT WATER REC. PUMP
F.C.O.	FLOOR CLEANOUT	RD	ROOF DRAIN
D.F.	DRINKING FOUNTAIN	B.F.	BELOW FLOOR
E.C.O.	EXTERIOR CLEANOUT	TP	TRAP PRIMER
WH	WALL HYDRANT	EWH	ELECTRIC WATER HEATER
	CALIBRATED BALANCING VALVE		MANUAL AIR VENT
FM	FIRE MAIN		PUMP
FF	FINISHED FLOOR	BOP	BOTTON OF PIPE
AFF	ABOVIE FINISHED FLOOR	TOP	TOP OF PIPE
IWFT	INDIRECT FUNNEL AND WASTE TRAP	℄	CENTER LINE
W.C.O.	WALL CLEANOUT	-	-

PLUMBING FIXTURE SCHEDULE

NO.	FIXTURES	VENT MM	WASTE MM	SUPPLY SIZE (mm) HOT	SUPPLY SIZE (mm) COLD	DESCRIPTION
P1	WATER CLOSET	50	100	--	15	VITREOUS CHINA FLOOR MOUNTED, SIPHON JET, TANK TYPE, BOTTOM OUTLET, WHITE VITREOUS CHINA, ELONGATED BOWL. (4.8 L PER FLUSH) ELONGATED SEAT, CLOSED FRONT W/ COVER, STAINLESS STEEL POSTS. ANGLE STOPS. CLOSET RISER.
P2	COUNTERTOP LAVATORY	32	50	15	15	500mmX450mm, VITREOUS CHINA COUNTERTOP, 100mm CENTERS, SELF RIMMING, FRONT OVERFLOW. A.D.A. COMPLIANT FAUCET, SINGLE CONTROL, POP UP DRAIN AND LIFT ROD IN BRUSHED SATIN FINISH, AND 1.9L/min (0.5 GPM) RESTRICTOR. 40mm, 17GA. P-TRAP. SUPPLIES W/ ANGLE STOPS.
P3	LAUNDRY SINK	40	50	15	15	500mmX600mm FLOOR MOUNTED UTILITY SINK WITH LEGS. DECK MOUNTED CHROME PLATED SINGLE LEVER MIXING FAUCET W/ SWING SPOUT. 40mm, 17GA. P-TRAP. ANGLE STOPS. SUPPLIES.
P5	SHOWER (H.C. ACCESSIBLE)	40	75	15	15	PRESSURE BALANCED SINGLE LEVER MIXING VALVE WITH STOPS, 5.6 L/min HAND HELD SHOWER WITH 600mm SLIDE GLIDE AND 1725mm BRAIDED HOSE. ALL IN BRUSHED SATIN FINISH.
P6	WALL HYDRANT	-	-	-	15	PERMANENT STAINLESS STEEL SEAT, ADJUSTABLE TEFLON IMPREGNATED PACKING NUT, STANDARD O SEAT WASHER, SINGLE KEY OPERATION, VACUUM BREAKER CAP & BODY.
P7	LAUNDRY BOX	40	50	15	15	20 GAUGE HOT DIPPED GALVANIZED STEEL LAUNDRY BOX WITH VALVES, DRAIN, AND ARRESTORS. FIRE RATED CONSTRUCTION.
P8	SERVICE SINK	50	75	15	15	SEE SPECIFICATIONS.
FD-1	FLOOR DRAIN	--	75	--	--	FLOOR DRAIN W/ SQUARE TOP AND TRAP PRIMER CONNECTION.

HC - HANDICAPPED

GENERAL NOTES

1 - SEE ARCHITECTURAL PLANS FOR LOCATION OF ALL PLUMBING FIXTURES COORDINATE PLUMBING PIPING WITH HVAC DUCTS AND ELECTRICAL CONDUIT.

2 - ALL WATER PIPING SHALL BE RUN ABOVE CEILING UNLESS OTHERWISE NOTED.

3 - ALL VENTS THRU ROOF (VTR) SHALL BE OFFSET A MINIMUM OF 4.6m FROM ALL OUTSIDE INTAKES.

4 - PROVIDE INSULATING COVER FOR ALL EXPOSED DRAIN AND WATER PIPING FOR H.C. ACCESSIBLE LAVATORIES.

US Army Corps of Engineers ®

MARK	DESCRIPTION	DATE

ISSUE DATE: FEBRUARY 2019
SOLICITATION NO.: W9127819R0028
CONTRACT NO.:
PROJECT NUMBER: M077EU44
FILE NAME: M077EU44

DESIGNED BY: R. PERSON
DRAWN BY: EN-DE
CHECKED BY: B. DURHAM
SUBMITTED BY: W. KNAPP
SIZE: ANSI D

U.S. ARMY CORPS OF ENGINEERS
MOBILE DISTRICT
MOBILE, AL

SOTO CANO AIR BASE, HONDURAS
UNACCOMPANIED ENLISTED PERSONNEL HOUSING

PLUMBING NOTES, LEGEND, AND SCHEDULE

SHEET ID
P001

GENERAL SHEET NOTES:

1. SEE SHEET P-001 FOR GENERAL NOTES, LEGENDS, AND ABBREVIATIONS.
2. PLAN NORTH IS FOR REFERENCE ONLY AND IS BASED ON BUILDING D. SEE CIVIL FOR BUILDING ORIENTATION.

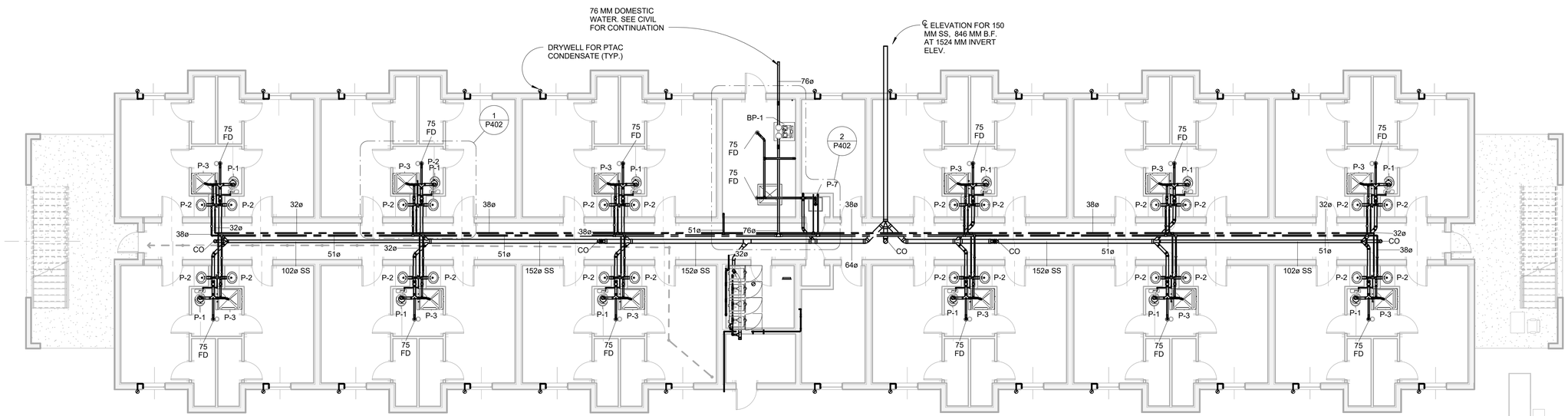

1 PLUMBING PLAN 1ST FLOOR
1 : 100

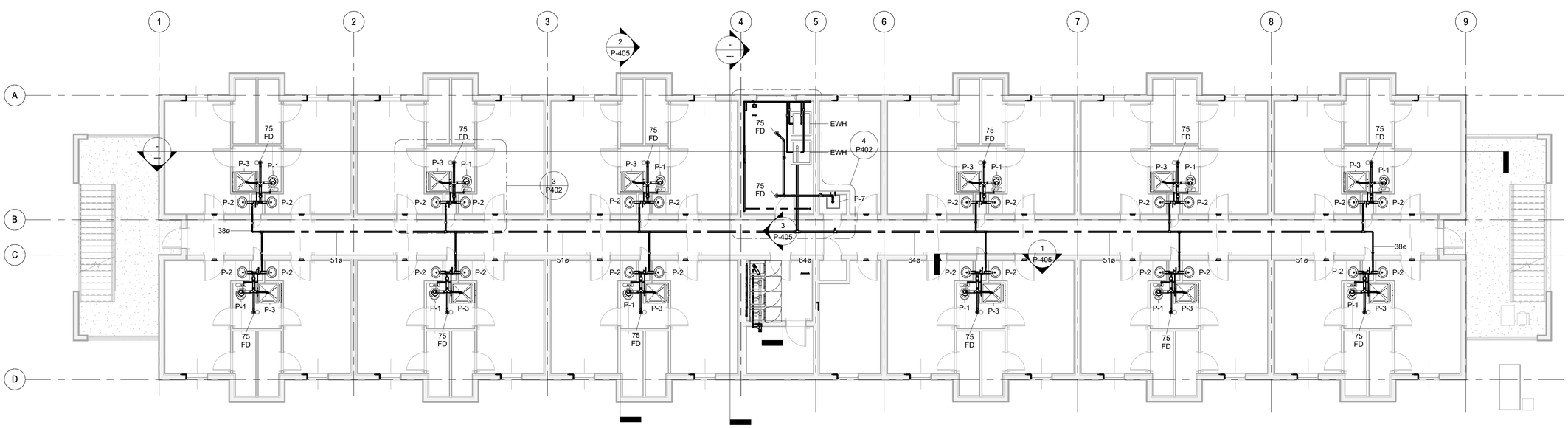

2 PLUMBING PLAN 2ND FLOOR
1 : 100

NOTE: ALL UNITS ARE IN MILLIMETERS UNLESS INDICATED OTHERWISE.

0 4000 8000
SCALE: 1 : 100

PLAN NORTH

US Army Corps of Engineers ®

MARK	DESCRIPTION	DATE

DESIGNED BY: R. PERSON	ISSUE DATE: FEBRUARY 2019
DRAWN BY: EN-DE	SOLICITATION NO.: W912781R0028
CHECKED BY: B. DURHAM	CONTRACT NO.:
SUBMITTED BY: W. KNAPP	PROJECT NUMBER: M077EU44
SIZE: ANSI D	FILE NAME: M077EU44

U.S. ARMY CORPS OF ENGINEERS
MOBILE DISTRICT
MOBILE, AL

SOTO CANO AIR BASE, HONDURAS
UNACCOMPANIED ENLISTED PERSONNEL HOUSING

PLUMBING FLOOR PLAN

SHEET ID
P101

GENERAL SHEET NOTES:

1. SEE SHEET P-001 FOR GENERAL NOTES, LEGENDS, AND ABBREVIATIONS.

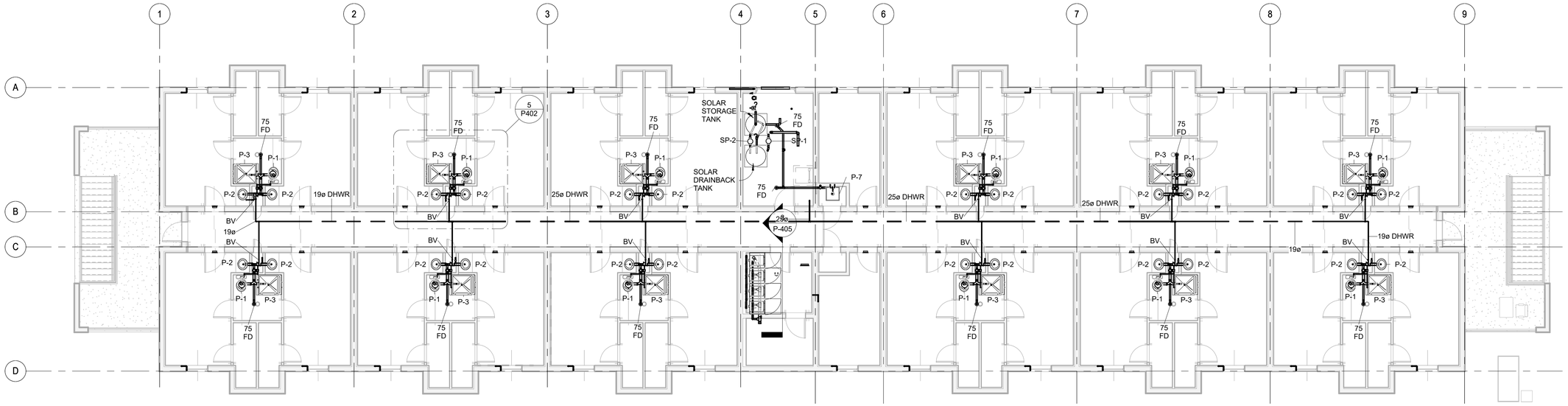

1 PLUMBING PLAN 3RD FLOOR

1 : 100

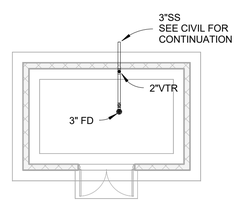

2 PLUMBING PLAN PUMP HOUSE

N.T.S.

0 4000 8000

SCALE: 1 : 100

PLAN NORTH

NOTE: ALL UNITS ARE IN MILLIMETERS UNLESS INDICATED OTHERWISE.

US Army Corps of Engineers ®

MARK	DESCRIPTION	DATE

DESIGNED BY: R. PERSON
DRAWN BY: EN-DE
CHECKED BY: B. DURHAM
SUBMITTED BY: W. KNAPP
SIZE: ANSI D
ISSUE DATE: FEBRUARY 2019
SOLICITATION NO.: W9127819R0028
CONTRACT NO.:
PROJECT NUMBER: M077EU44
FILE NAME: M077EU44

U.S. ARMY CORPS OF ENGINEERS
MOBILE DISTRICT
MOBILE, AL

SOTO CANO AIR BASE, HONDURAS
UNACCOMPANIED ENLISTED PERSONNEL HOUSING

PLUMBING FLOOR PLAN

SHEET ID

P102

GENERAL SHEET NOTES:

1. SEE SHEET P-001 FOR GENERAL NOTES, LEGENDS, AND ABBREVIATIONS.

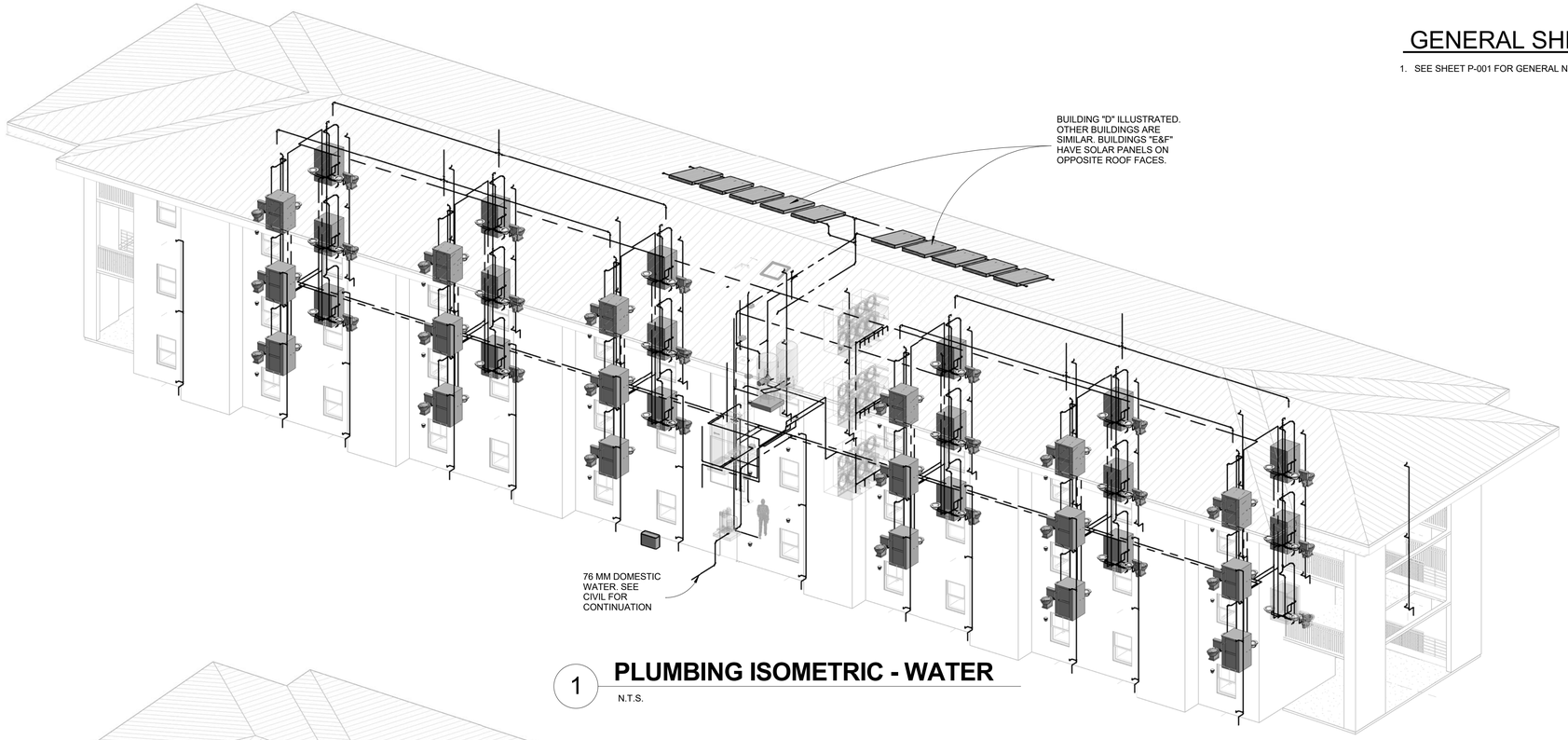

1 **PLUMBING ISOMETRIC - WATER**

N.T.S.

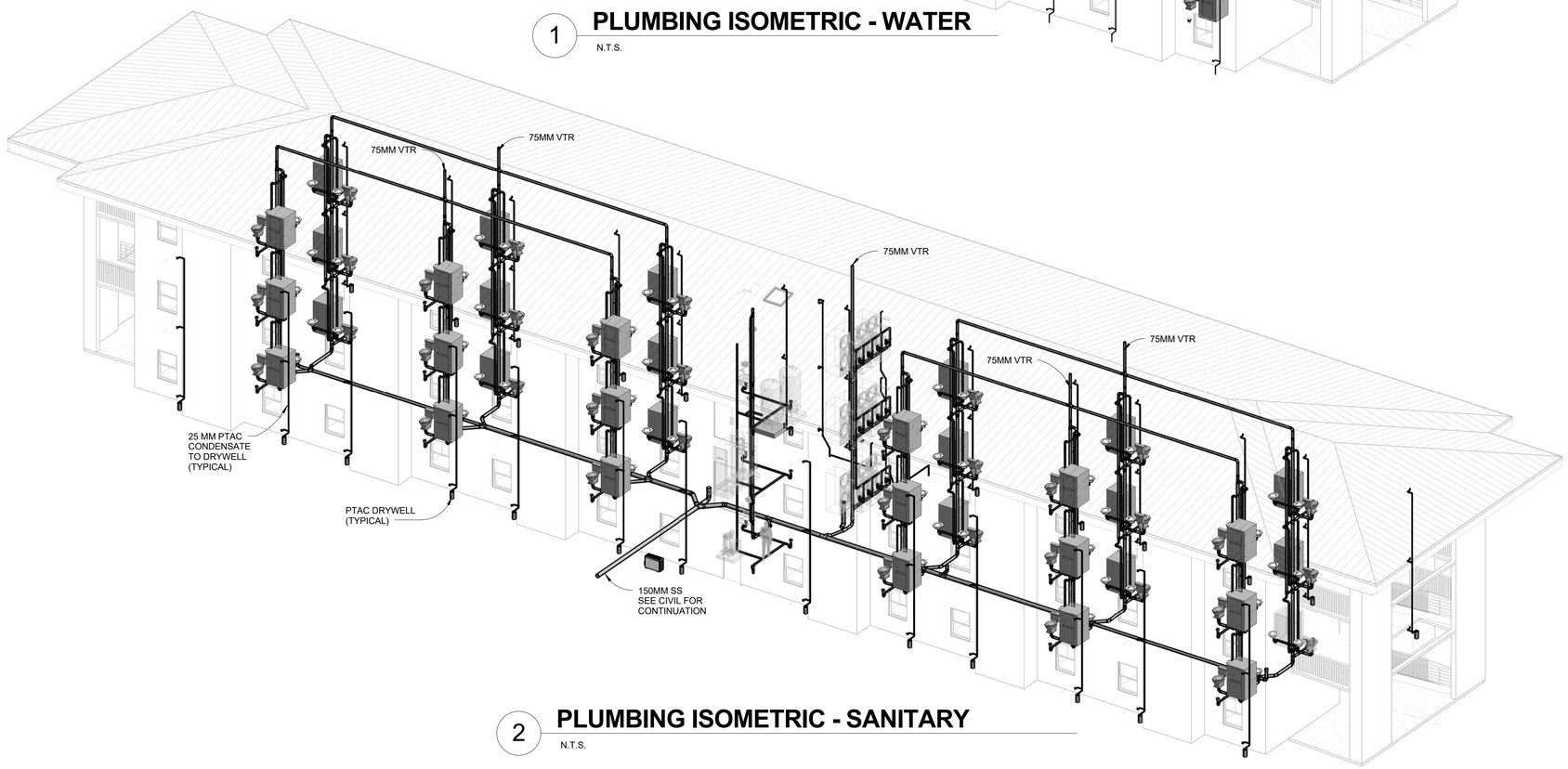

2 **PLUMBING ISOMETRIC - SANITARY**

N.T.S.

US Army Corps of Engineers ®

MARK	DESCRIPTION	DATE

DESIGNED BY: R. PIERSON	ISSUE DATE: FEBRUARY 2019
DRAWN BY: EN-DE	SOLICITATION NO.: W912781R0028
CHECKED BY: B. DURHAM	CONTRACT NO.:
SUBMITTED BY: W. KNAPP	PROJECT NUMBER: M077EU44
SIZE: ANSI D	FILE NAME:

U.S. ARMY CORPS OF ENGINEERS
MOBILE DISTRICT
MOBILE, AL

SOTO CANO AIR BASE, HONDURAS
UNACCOMPANIED ENLISTED PERSONNEL HOUSING

PLUMBING RISERS

SHEET ID

P401

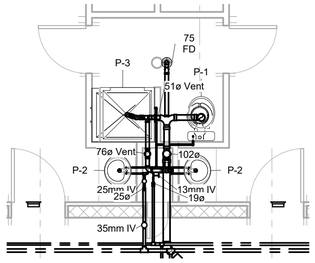

1 / P402 PLUMBING ENLARGED PLAN 1ST FLOOR - UNIT RESTROOM

1 : 50

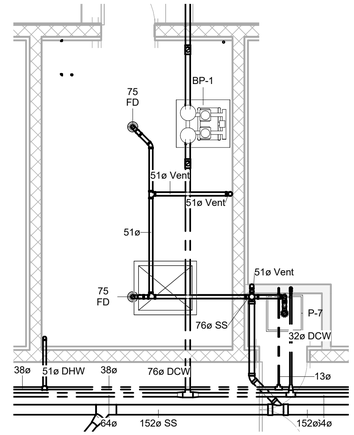

2 / P402 PLUMBING ENLARGED PLAN 1ST FLOOR - MECH RM & JAN CLOSET

1 : 50

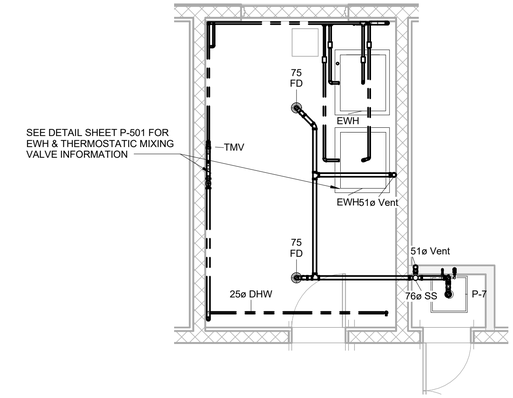

4 / P402 PLUMBING ENLARGED PLAN 2ND FLOOR - MECH RM & JAN CLOSET

1 : 50

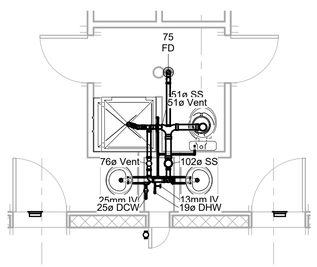

3 / P402 PLUMBING ENLARGED PLAN 2ND FLOOR - UNIT RESTROOM

1 : 50

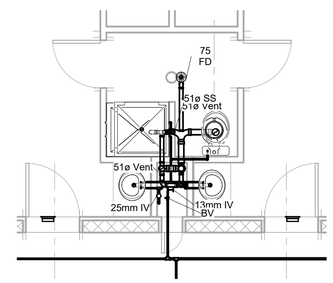

5 / P402 PLUMBING ENLARGED PLAN 3RD FLOOR - UNIT RESTROOM

1 : 50

0 2000 4000

SCALE: 1 : 50

US Army Corps of Engineers ®

MARK	DESCRIPTION	DATE

DESIGNED BY: R. PERSON
DRAWN BY: EN-DE
CHECKED BY: B. DURHAM
SUBMITTED BY: W. KNAPP
SIZE: ANSI D
ISSUE DATE: FEBRUARY 2019
SOLICITATION NO.: W912781R0028
CONTRACT NO.:
PROJECT NUMBER: M077EU44
FILE NAME:

U.S. ARMY CORPS OF ENGINEERS
MOBILE DISTRICT
MOBILE, AL

SOTO CANO AIR BASE, HONDURAS
UNACCOMPANIED ENLISTED PERSONNEL HOUSING

PLUMBING ENLARGED PLANS

SHEET ID

P402

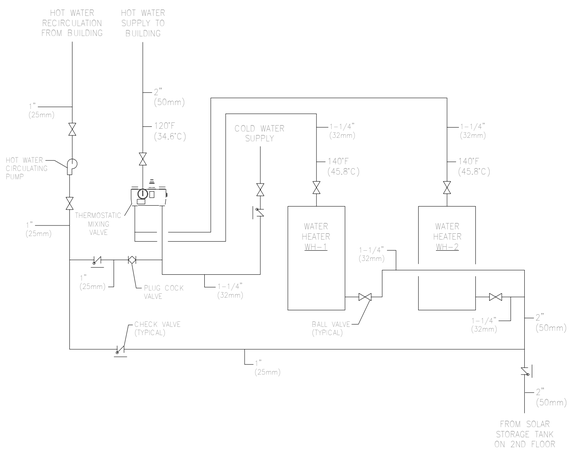

1 **HOT WATER SYSTEM PIPING SCHEMATIC**

N.T.S.

ELECTRIC WATER HEATER SCHEDULE

MARK	**EWH
LOCATION	3RD FLOOR MECH ROOM
STORAGE CAPACITY - L EACH	946.4
INPUT - W	2 @ 12kW EACH
L/H RECOVERY @ 44.5°C RISE EACH	378

REMARKS:
1. **2 WATER HEATERS REQUIRED.
2. WATER TEMPERATURE 60°C.

CIRCULATING PUMP SCHEDULE

MARK	FLOW L/s	HEAD IN kPa	W	VOLTAGE
CP-1	3.5	44.9	373	120V

REMARKS:

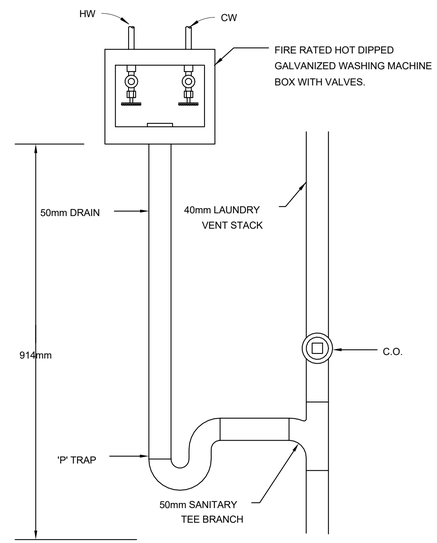

2 **WASHING MACHINE BOX**

N.T.S.

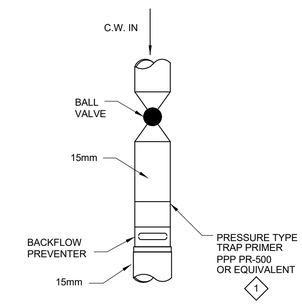

3 **TRAP PRIMER**

N.T.S.

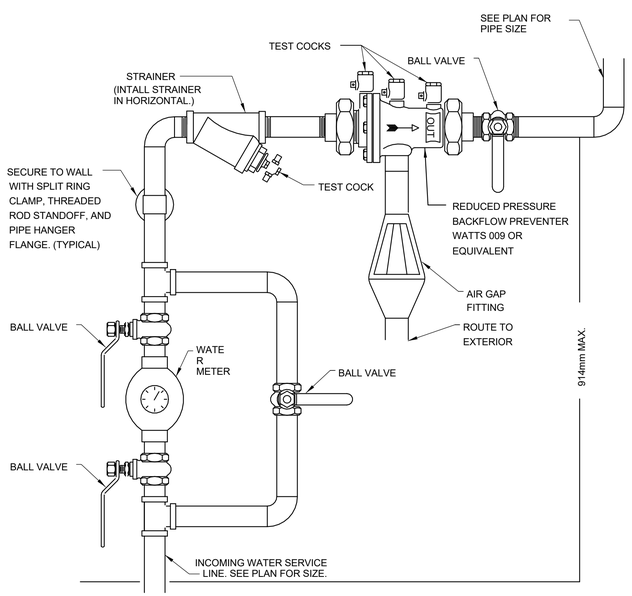

4 **WATER SERVICE ENTRANCE INSTALLATION DETAIL**

N.T.S.

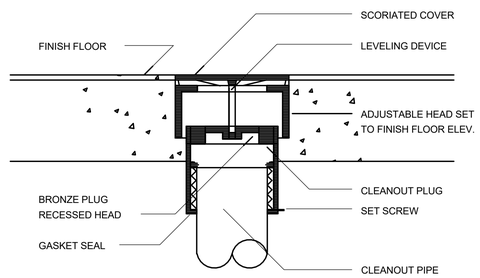

5 **FINISHED FLOOR CLEANOUT**

N.T.S.

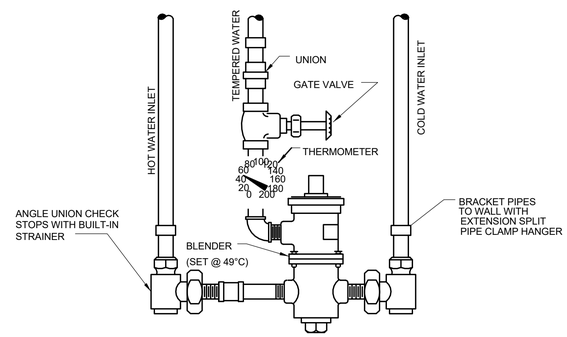

6 **THERMOSTATIC MIXING VALVE DETAIL**

N.T.S.

DOMESTIC BOOSTER PACKAGE SCHEDULE

CAPACITY - L/s		7.38
OPERATING PRESSURE - kPa		248.2
MIN SUCTION PRESSURE - kPa		137.9
MOTOR - kW (EACH MOTOR)		3.73
ELECTRICAL DATA	VOLTS	208
	PHASE	3
	HERTZ	60

- SELECT DUPLEX ASSEMBLY AT 100%/100% CAPACITY.
- PROVIDE WITH VFD FOR EACH MOTOR.

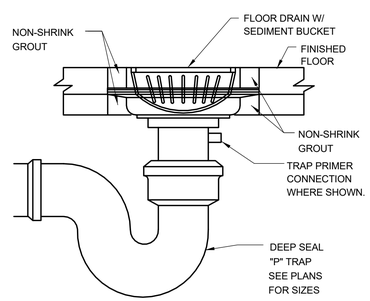

7 **FLOOR DRAIN (FLOOR SINK SIMILAR)**

N.T.S.

SLOPE 610mm X 610mm FLOOR AREA TO FLOOR DRAIN AT 6mm PER 300MM.
REFER TO STRUCTURAL.

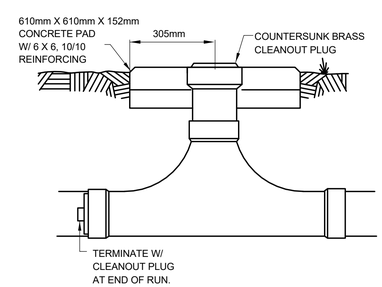

8 **TWO-WAY EXTERIOR CLEANOUT**

N.T.S.

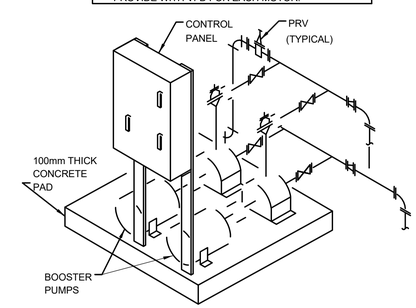

9 **DOMESTIC BOOSTER PUMP**

N.T.S.

1. REFER TO FLOOR PLAN FOR UNIT CONFIGURATION
2. PROVIDE RUBBER-IN-SHEAR VIBRATION ISOLATORS FOR PUMPS.
3. PROVIDE 305mm MINIMUM FLEXIBLE SPOOL PIECE ON PIPING CONNECTIONS TO AND FROM BOOSTER PUMP.

US Army Corps of Engineers ®

MARK	DESCRIPTION	DATE

ISSUE DATE: FEBRUARY 2019
SOLICITATION NO.: W912781R0028
CONTRACT NO.:
PROJECT NUMBER: M077EU44
FILE NAME:

DESIGNED BY: R. PERSON
DRAWN BY: EN-DE
CHECKED BY: B. DURHAM
SUBMITTED BY: W. KNAPP
SIZE: ANSI D

U.S. ARMY CORPS OF ENGINEERS
MOBILE DISTRICT
MOBILE, AL

SOTO CANO AIR BASE, HONDURAS
UNACCOMPANIED ENLISTED PERSONNEL HOUSING

PLUMBING DETAILS

SHEET ID
P501

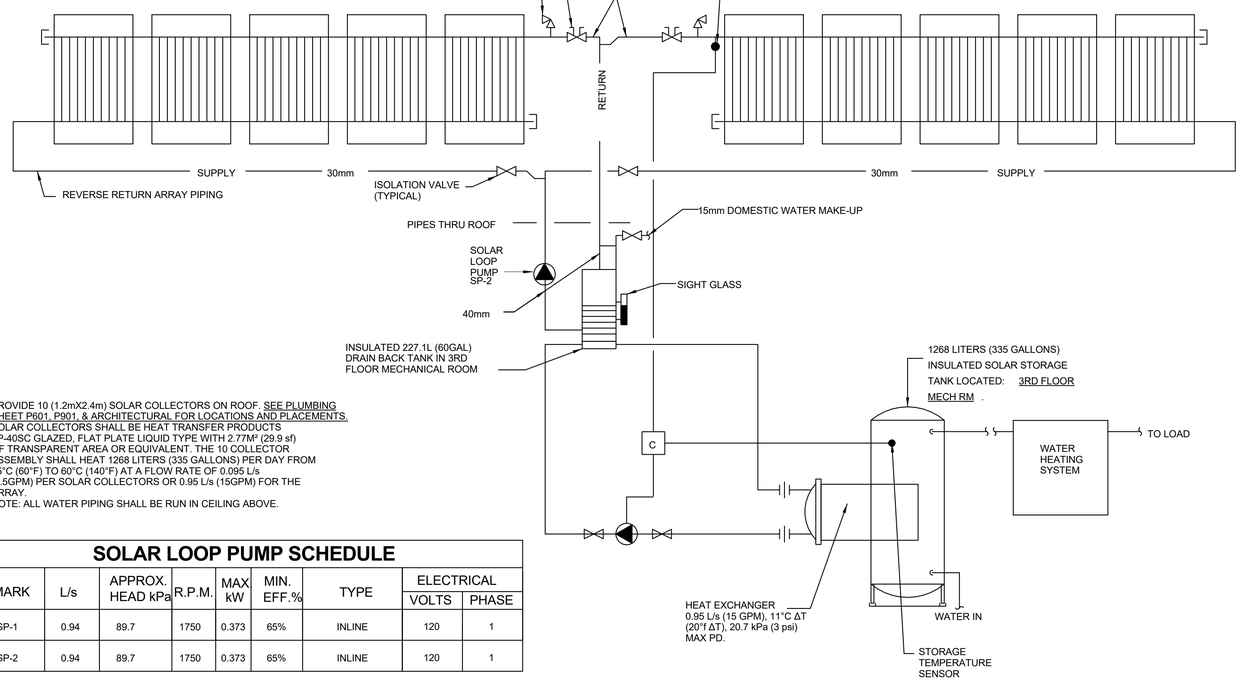

PROVIDE 10 (1.2mX2.4m) SOLAR COLLECTORS ON ROOF. SEE PLUMBING SHEET P601, P901, & ARCHITECTURAL FOR LOCATIONS AND PLACEMENTS.
SOLAR COLLECTORS SHALL BE HEAT TRANSFER PRODUCTS FP-40SC GLAZED, FLAT PLATE LIQUID TYPE WITH 2.77M² (29.9 sf) OF TRANSPARENT AREA OR EQUIVALENT. THE 10 COLLECTOR ASSEMBLY SHALL HEAT 1268 LITERS (335 GALLONS) PER DAY FROM 15°C (60°F) TO 60°C (140°F) AT A FLOW RATE OF 0.095 L/s (1.5GPM) PER SOLAR COLLECTORS OR 0.95 L/s (15GPM) FOR THE ARRAY.
NOTE: ALL WATER PIPING SHALL BE RUN IN CEILING ABOVE.

SOLAR LOOP PUMP SCHEDULE

MARK	L/s	APPROX. HEAD kPa	R.P.M.	MAX kW	MIN. EFF.%	TYPE	ELECTRICAL	
							VOLTS	PHASE
SP-1	0.94	89.7	1750	0.373	65%	INLINE	120	1
SP-2	0.94	89.7	1750	0.373	65%	INLINE	120	1

5 SOLAR COLLECTOR FLOW DIAGRAM

N.T.S.

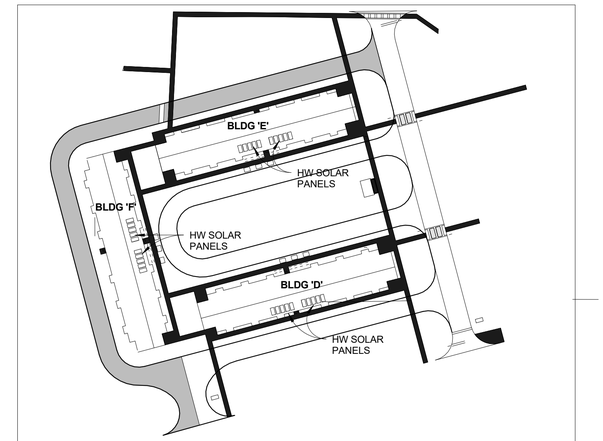

4 SOLAR PANEL SITE PLAN

N.T.S.

NOTE: SOLAR WATER HEATING SYSTEM IS BID OPTION #1

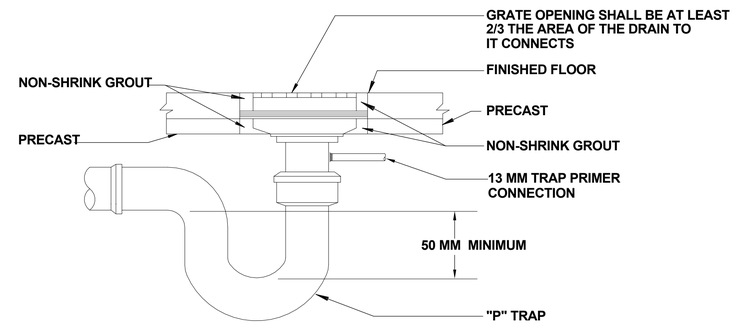

2 FLOOR DRAIN DETAIL

N.T.S.

PIPE LABEL SIZES

A - PIPE COVERING OUTSIDE DIAMETER	B - LETTER HEIGHT	C - BAND LENGTH
LESS THAN 32	13	203
32 TO 64	19	203
76 TO 203	32	305
203 TO 254	64	610
OVER 254	76	813

NOTE: ENTIRE SOLAR WATER HEATING SYSTEM IS BID OPTION #1

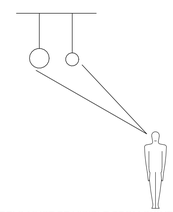

1. PIPE LABELS MUST BE VISIBLE FROM SIGHT LEVEL.
2. PLACED CLOSE TO VALVES OR FLANGES, ADJACENT TO TO CHANGES IN DIRECTION, BRANCHES AND WHERE PIPES PASS THROUGH WALLS OR FLOORS.
3. ON STRAIGHT RUNS, NO MORE THAN 6M INTERVALS BETWEEN LABELS.

PIPE LABELING SCHEDULE

PIPE MEDIUM / LEGEND	BAND COLOR / LETTER COLOR
DOMESTIC HOT WATER SUPPLY	YELLOW / BLACK
DOMESTIC COLD WATER	GREEN / WHITE
STORM DRIAN	GREEN / WHITE

NOTES:
1. PIPING EXPOSED TO THE WEATHER SHALL HAVE MECHANICALLY FASTENED LABELS. FASTENERS SHALL BE FURNISHED BE THE LABEL MANUFACTURER.
2. ALL PIPING WITH SUPPLY AND RETURN LINES SHALL HAVE DIRECTIONAL ARROW TAPE OF THE SAME COLOR AS THE LABEL.
3. ALL LABELS (INCLUDING ANY SPECIALTY PIPING NOT LISTED) SHALL MEET ASME (ANSI) STANDARD A13.1-1981.

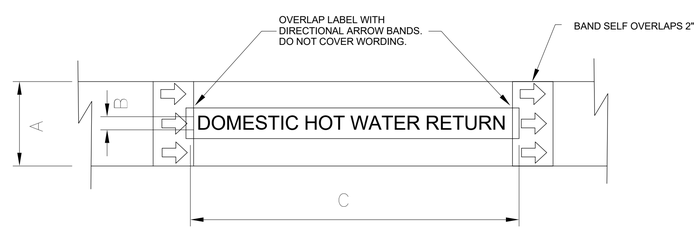

3 PIPE LABELING DETAILS

N.T.S.

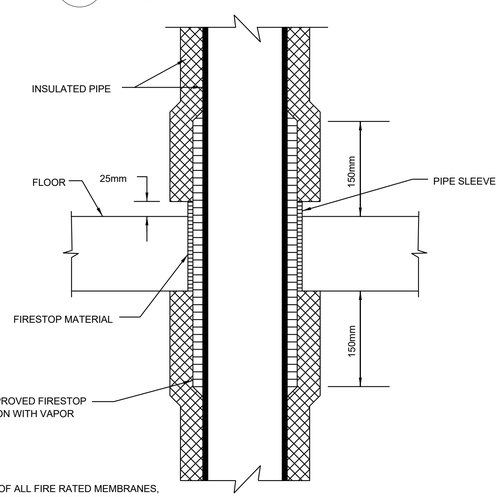

NOTE:
1. APPLICABLE TO PENETRATIONS OF ALL FIRE RATED MEMBRANES, IN ACCORDANCE WITH NFPA 101. REFER TO SPECIFICATIONS SECTION, FIRE STOPPING.

1 PIPE PENETRATION THRU FLOOR

N.T.S.

US Army Corps of Engineers ®

MARK	DESCRIPTION	DATE

DESIGNED BY: R. PERSON
DRAWN BY: EN-DE
CHECKED BY: B. DURHAM
SUBMITTED BY: W. KNAPP
SIZE: ANSI D
ISSUE DATE: FEBRUARY 2019
SOLICITATION NO.: W912781R0028
CONTRACT NO.:
PROJECT NUMBER: M077E144
FILE NAME:

U.S. ARMY CORPS OF ENGINEERS
MOBILE DISTRICT
MOBILE, AL

SOTO CANO AIR BASE, HONDURAS
UNACCOMPANIED ENLISTED PERSONNEL HOUSING

PLUMBING DETAILS

SHEET ID
P502

GENERAL SHEET NOTES:

1. SEE SHEET M-001 FOR GENERAL NOTES, LEGENDS, AND ABBREVIATIONS.
2. PLAN NORTH IS FOR REFERENCE ONLY AND IS BASED ON BUILDING D. SEE CIVIL FOR BUILDING ORIENTATION.

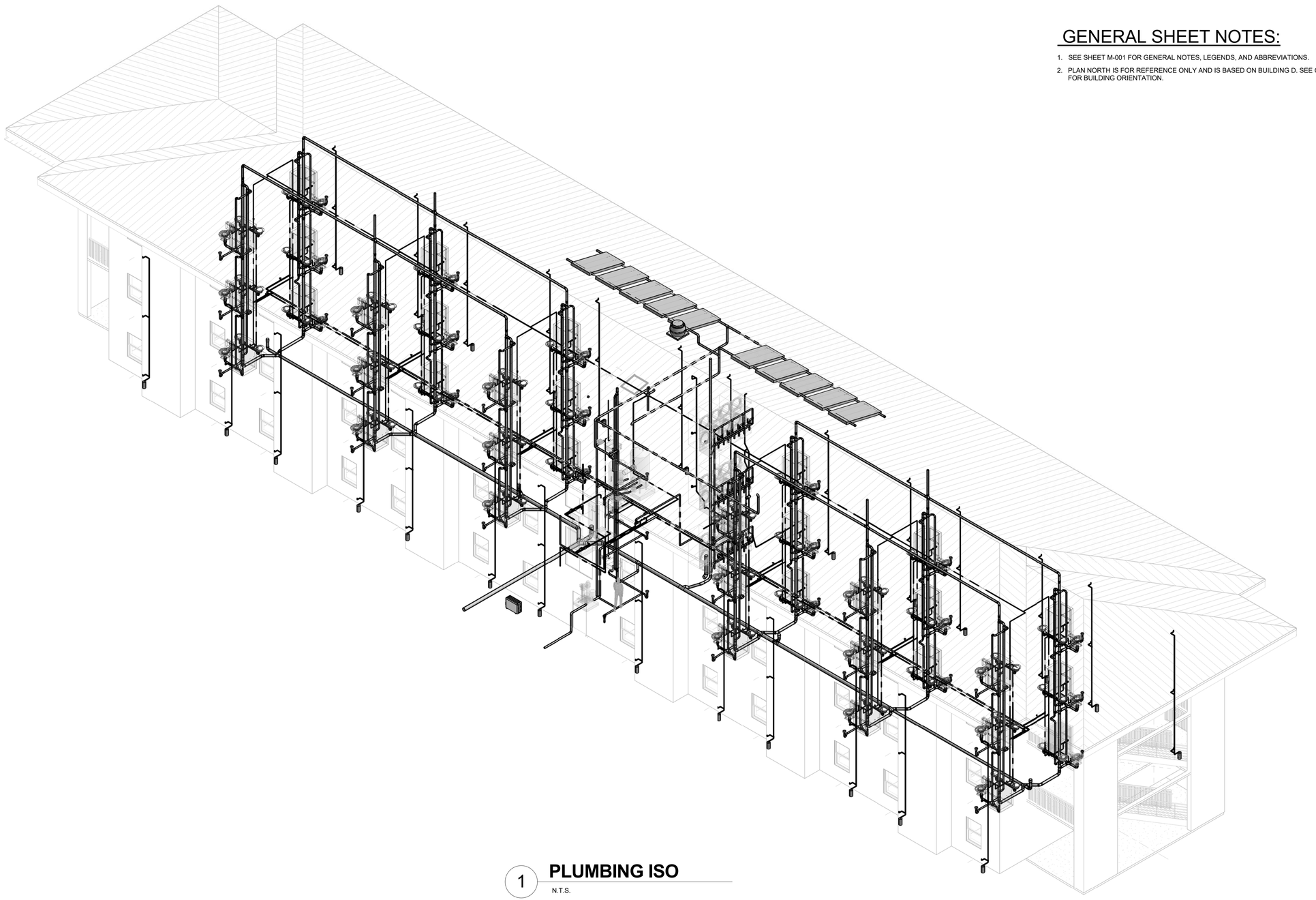

1 **PLUMBING ISO**

N.T.S.

US Army Corps of Engineers ®

MARK	DESCRIPTION	DATE

U.S. ARMY CORPS OF ENGINEERS
MOBILE DISTRICT
MOBILE, AL

DESIGNED BY: R. PERSON
DRAWN BY: EN-DE
CHECKED BY: B. DURHAM
SUBMITTED BY: W. KNAPP
SIZE: ANSI D
ISSUE DATE: FEBRUARY 2019
SOLICITATION NO.: W912781R0028
CONTRACT NO.:
PROJECT NUMBER: M017EU44
FILE NAME:

SOTO CANO AIR BASE, HONDURAS
UNACCOMPANIED ENLISTED PERSONNEL HOUSING

PLUMBING ISO

SHEET ID

P901

GENERAL NOTES:

1. MECHANICAL LAYOUTS ARE SCHEMATIC. PROVIDE ANY ADDITIONAL DROPS, RISERS OR OFFSETS REQUIRED FOR A COMPLETE INSTALLATION. COORDINATE EXACT ROUTING OR OFFSETS REQUIRED FOR A COMPLETE INSTALLATION. COORDINATE EXACT ROUTING MOUNTED WORK WITH LIGHTS, CEILING GRID, AND OTHER OBSTRUCTIONS. PROVIDE ACCESS DOORS FOR EACH DAMPER OR FAN LOCATED ABOVE GYPBOARD CEILINGS.

2. UNLESS OTHERWISE INDICATED, ALL DUCTWORK SHALL BE RUN ABOVE CEILING AND SHALL BE RUN EXPOSED AS HIGH AS POSSIBLE IN AREAS WITHOUT CEILINGS.

3. DUCT DIMENSIONS ARE INSIDE CLEAR DIMENSIONS.

4. UNLESS OTHERWISE INDICATED, ALL DUCTWORK SHALL BE CONSTRUCTED FOR 500 Pa (2" W.G.) SEAL CLASS 'A' SMACNA STATIC PRESSURE CLASS.

5. UNLESS OTHERWISE INDICATED, ALL DIFFUSERS SHALL BE 4-WAY TYPE.

6. ALL SUPPLY DIFFUSERS AND, RETURN & EXHAUST REGISTERS SHALL BE PROVIDED WITH OPPOSED BLADE VOLUME DAMPERS, UNLESS INDICATED OTHERWISE

7. ROUND RUNOUTS SHOWN SHALL BE GALVANIZED STEEL INSULATED WITH 50mm (2") FIBERGLASS INSULATION WITH VAPOR BARRIER COVER UNLESS INDICATED OTHERWISE. RUNOUTS SHALL BE THE SAME SIZE AS DIFFUSER NECK TO WHICH IT IS CONNECTED.

8. ALL OUTSIDE AIR INTAKES SHALL BE PROVIDED WITH A MANUAL VOLUME DAMPER.

9. TRAP AND SLOPE CONDENSATE DRAIN FROM COOLING COILS TO FLOOR DRAIN OR DRY WELL.

10. PROVIDE FLEXIBLE CONNECTORS AT DUCT CONNECTIONS TO FAN UNITS, UNLESS INDICATED OTHERWISE.

11. ALL LOUVERS AND ALL EXHAUST FANS SHALL HAVE A FACTORY PAINTED FINISH WITH COLOR TO MATCH THE ADJACENT SURFACE INTO WHICH IT IS INSTALLED. SEE ARCHITECTURAL SHEETS FOR COLOR SCHEDULE. ALL LOUVERS, ROOF INTAKES, AND ROOF EXHAUST VENTS SHALL HAVE BACKDRAFT DAMPERS AND BIRDSCREENS.

12. EXTEND NECKS OF EXHAUST FANS FULLSIZE OF FAN INLET TO ACCOMODATE CONNECTION OF EXHAUST REGISTERS OR LOUVERS. TRANSITION AS REQUIRED. PROVIDE, UNLESS INDICATED OTHERWISE.

13. NOISE CRITERIA (NC) RATING FOR ALL REGISTERS, GRILLE, AND DIFFUSERS SHALL BE 30, EXCEPT FOR OFFICES SHALL BE 25.

ABBREVIATIONS

AD	ACCESS DOOR
AFF	ABOVE FINISHED FLOOR
AL	ACOUSTICAL LINING
AMD	AUTOMATIC MOTORIZED DAMPER
BE	BOTTOM ELEVATION
BG	BOTTOM GRILLE
BR	BOTTOM REGISTER
BRD	BAROMETRIC RELIEF DAMPER
CD	CEILING DIFFUSER
CG	CEILING GRILLE
CR	CEILING REGISTER
℄	CENTERLINE
CE	CENTERLINE ELEVATION
CO	CLEANOUT
CC	COOLING COIL
D	DRAIN
DSP	DUCT STATIC PRESSURE SENSOR
EA	EXHAUST AIR
EUH	ELECTRIC UNIT HEATER
ER	EXHAUST REGISTER
FC	FLEXIBLE CONNECTION
FD	FIRE DAMPER
HC	HEATING COIL
HES	HVAC EMERGENCY SHUTDOWN SWITCH
LPS	LITERS PER SECOND
NTS	NOT TO SCALE
OA	OUTSIDE AIR
OAI	OUTSIDE AIR INTAKE
RA	RETURN AIR
RAG	RETURN AIR GRILLE
RAO	RETURN AIR OPENING
RAR	RETURN AIR REGISTER
RL	REFRIGERANT LIQUID
RS	REFRIGERANT SUCTION
SA	SUPPLY AIR
TR	TOP REGISTER
TD	TRANSFER DUCT
VAV	VARIABLE AIR VOLUME
VD	VOLUME DAMPER
WMS	WIRE MESH SCREEN
SAR	SUPPLY AIR REGISTER
PCD	PERFORATED CEILING DIFFUSER
PCR	PERFORATED CEILING REGISTER
GFGI	GOVERNMENT FURNISHED GOVERNMENT INSTALLED

HVAC, DUCTWORK, AND ACCESSORIES

FLEXIBLE DUCT CONNECTION

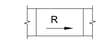

INCLINED RISE (R) OR DROP (D)

MANUAL VOLUME DAMPER (VD)

AUTOMATIC MOTORIZED DAMPER (AMD)

SQUARE ELBOW WITH TURNING VANES

LOUVERED DOOR

UNDERCUT DOOR

THERMOSTAT

HUMIDISTAT

ON- OFF SWITCH

VALVED PRESSURE GAGE CONNECTION

FLEXIBLE DUCT TO DIFFUSER
W/ VOLUME DAMPER

EXTEND NECK OF REGISTER
AS INDICATED WITH ACOUSTICAL
LINING

US Army Corps of Engineers ®

MARK	DESCRIPTION	DATE

DESIGNED BY: R. PERSON	ISSUE DATE: FEBRUARY 2019
DRAWN BY: R. PERSON	SOLICITATION NO.: W9127818R0028
CHECKED BY: B. DURHAM	CONTRACT NO.:
SUBMITTED BY: W. KNAPP	PROJECT NUMBER: M077EU44
SIZE: ANSI D	FILE NAME: M077EU44

U.S. ARMY CORPS OF ENGINEERS
MOBILE DISTRICT
MOBILE, AL

SOTO CANO AIR BASE, HONDURAS
UNACCOMPANIED ENLISTED PERSONNEL HOUSING

HVAC LEGEND

SHEET ID

M001

GENERAL SHEET NOTES:

1. SEE SHEET M-001 FOR GENERAL NOTES, LEGENDS, AND ABBREVIATIONS.
2. PLAN NORTH IS FOR REFERENCE ONLY AND IS BASED ON BUILDING D. SEE CIVIL FOR BUILDING ORIENTATION.

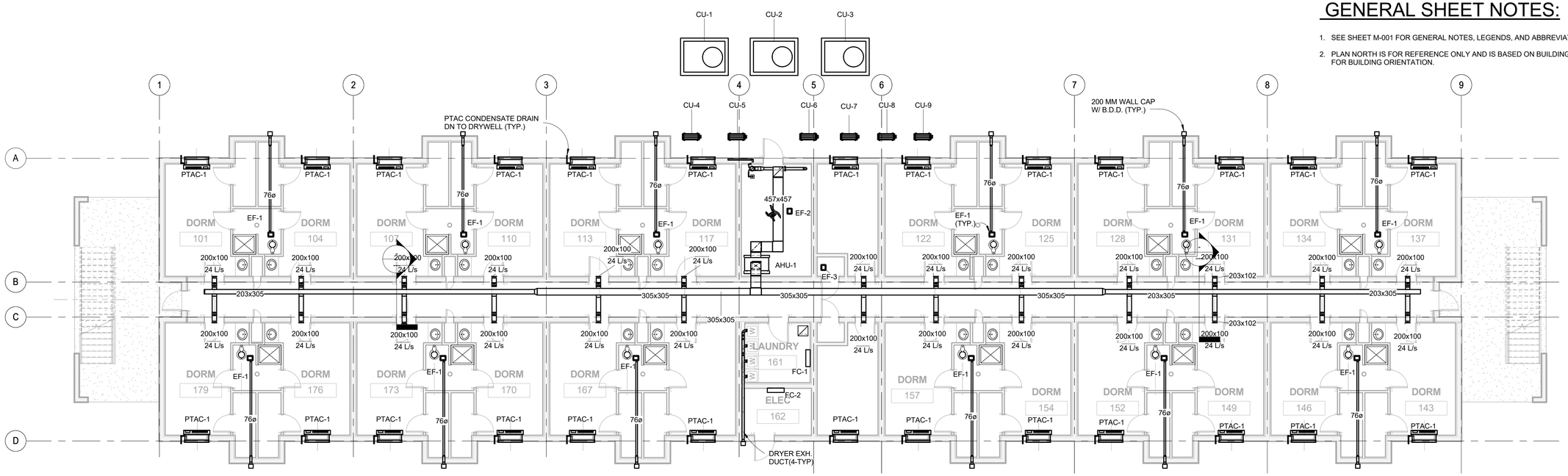

1 HVAC PLAN 1ST FLOOR

1 : 100

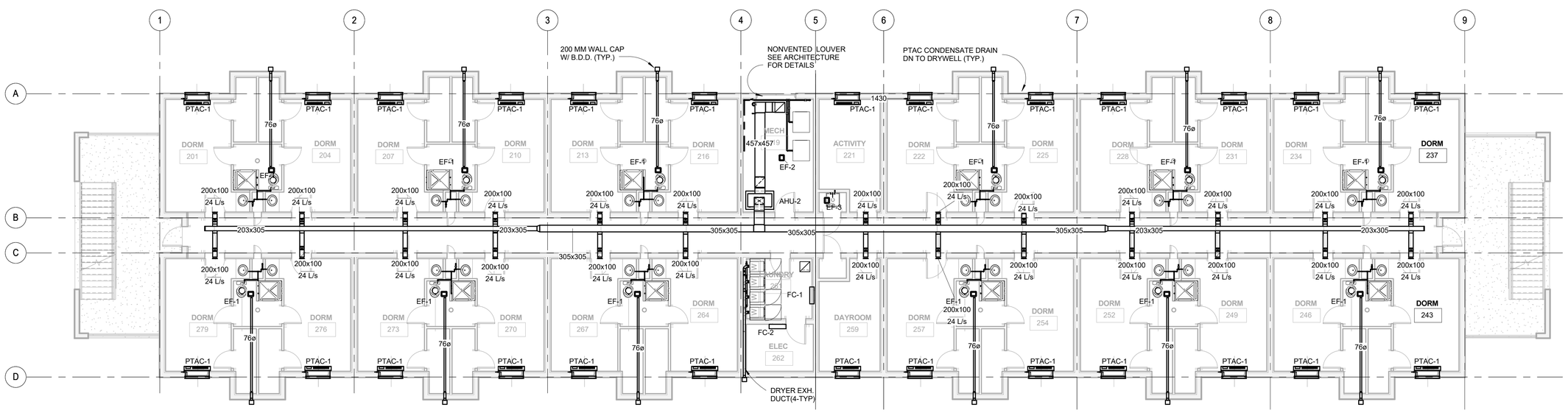

2 HVAC PLAN 2ND FLOOR

1 : 100

NOTE: ALL UNITS ARE IN MILLIMETERS UNLESS INDICATED OTHERWISE.

0 4000 8000

SCALE: 1 : 100

PLAN NORTH

US Army Corps of Engineers ®

MARK	DESCRIPTION	DATE

ISSUE DATE: FEBRUARY 2019
SOLICITATION NO.: W9127819R0028
CONTRACT NO.:
PROJECT NUMBER: M017E144
FILE NAME: M017E144

DESIGNED BY: R. PERSON
DRAWN BY: R. PERSON
CHECKED BY: B. DURHAM
SUBMITTED BY: W. KNAPP
SIZE: ANSI D

U.S. ARMY CORPS OF ENGINEERS
MOBILE DISTRICT
MOBILE, AL

SOTO CANO AIR BASE, HONDURAS
UNACCOMPANIED ENLISTED PERSONNEL HOUSING

HVAC FLOOR PLAN

SHEET ID

M101

GENERAL SHEET NOTES:

1. SEE SHEET M-001 FOR GENERAL NOTES, LEGENDS, AND ABBREVIATIONS.
2. PLAN NORTH IS FOR REFERENCE ONLY AND IS BASED ON BUILDING D. SEE CIVIL FOR BUILDING ORIENTATION.

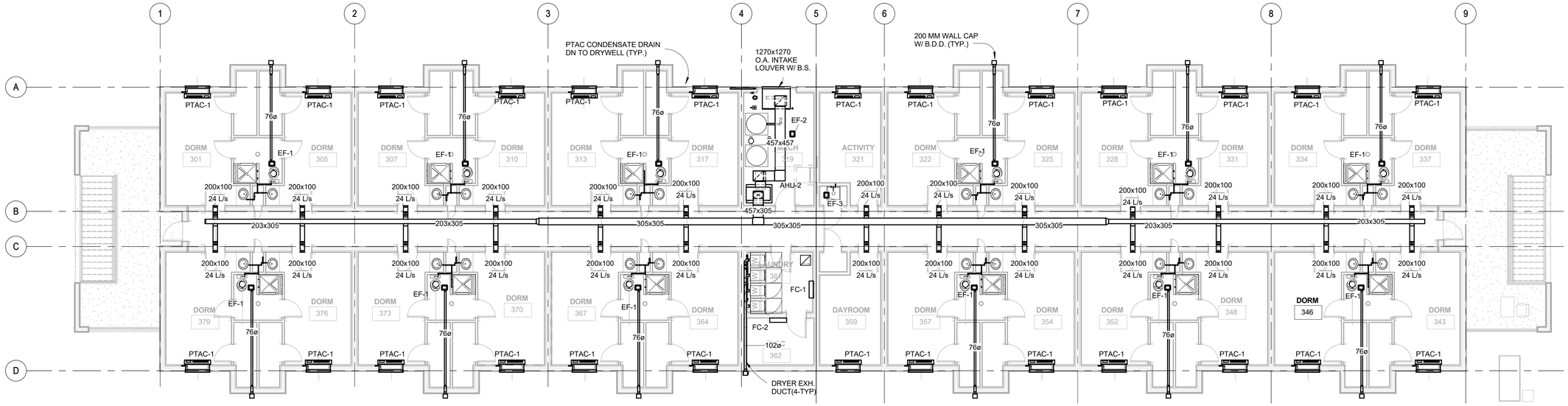

1 HVAC PLAN 3RD FLOOR

1 : 100

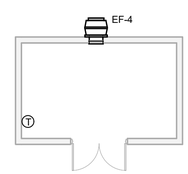

2 HVAC PLAN PUMP BLDG

1 : 100

0 4000 8000

SCALE: 1 : 100

PLAN NORTH

US Army Corps of Engineers ®

MARK	DESCRIPTION	DATE

DESIGNED BY: R. PERSON
DRAWN BY: EN-DE
CHECKED BY: B. DURHAM
SUBMITTED BY: W. KNAPP
SIZE: ANSI D
ISSUE DATE: FEBRUARY 2019
SOLICITATION NO.: W912781R0028
CONTRACT NO.:
PROJECT NUMBER: M077EU44
FILE NAME: M077EU44

U.S. ARMY CORPS OF ENGINEERS
MOBILE DISTRICT
MOBILE, AL

SOTO CANO AIR BASE, HONDURAS
UNACCOMPANIED ENLISTED PERSONNEL HOUSING

HVAC FLOOR PLAN

SHEET ID

M102

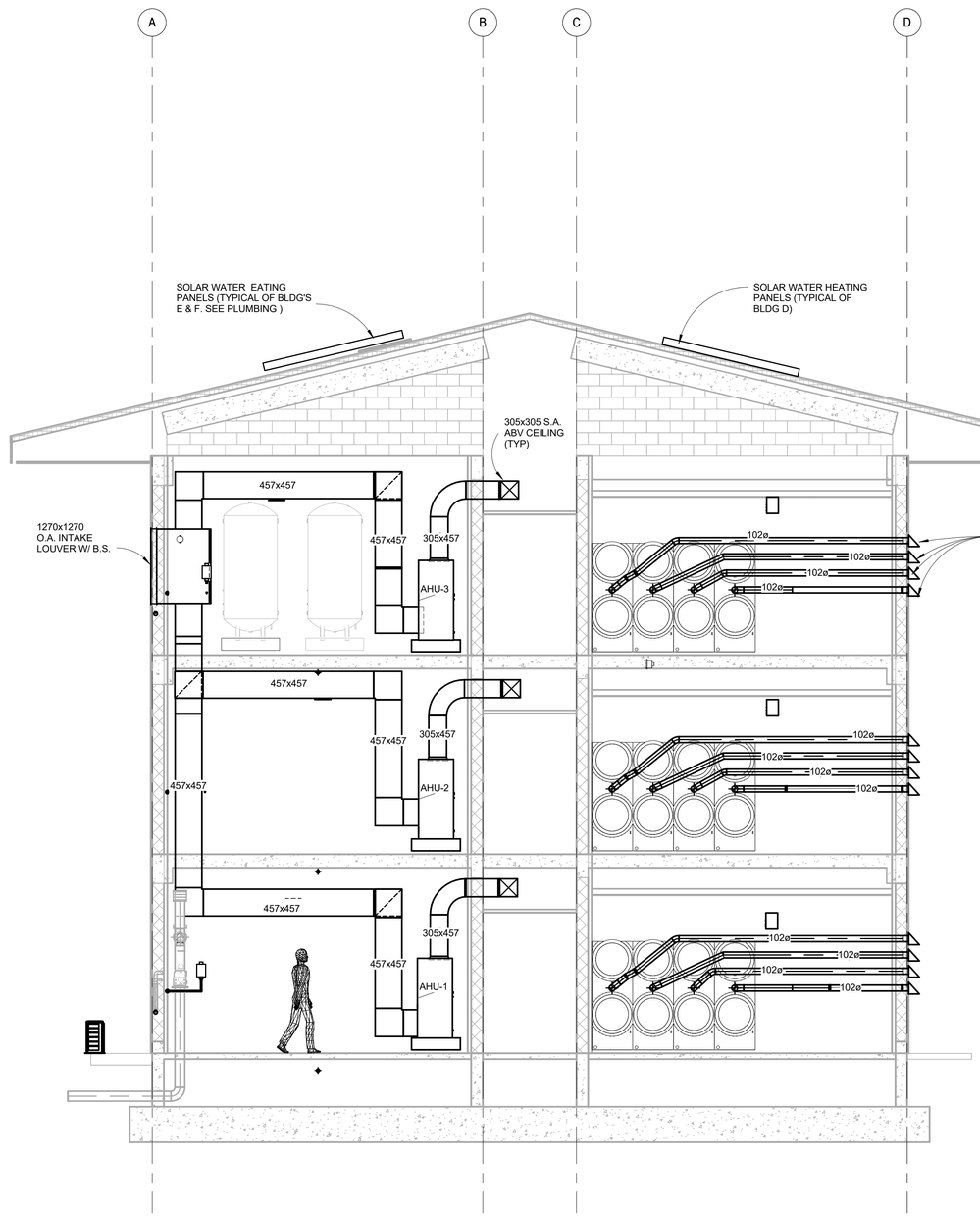

1 MECHANICAL BLDG CROSS SECTION

1 : 50

GENERAL SHEET NOTES:

1. SEE SHEET M-001 FOR GENERAL NOTES, LEGENDS, AND ABBREVIATIONS.
2. PLAN NORTH IS FOR REFERENCE ONLY AND IS BASED ON BUILDING D. SEE CIVIL FOR BUILDING ORIENTATION.

US Army Corps of Engineers ®

MARK	DESCRIPTION	DATE

DESIGNED BY: R. PERSON
DRAWN BY: EN-DE
CHECKED BY: B. DURHAM
SUBMITTED BY: W. KNAPP
SIZE: ANSI D
ISSUE DATE: FEBRUARY 2019
SOLICITATION NO.: W912781R0028
CONTRACT NO.:
PROJECT NUMBER: M077EU44
FILE NAME:

U.S. ARMY CORPS OF ENGINEERS
MOBILE DISTRICT
MOBILE, AL

SOTO CANO AIR BASE, HONDURAS
UNACCOMPANIED ENLISTED PERSONNEL HOUSING

HVAC BUILDING SECTION

SHEET ID

M301

AIR HANDLING UNIT SCHEDULE

MARK		AHU-1	AHU-2	AHU-3
TYPE		DRAW THRU	DRAW THRU	DRAW THRU
LOCATION		MECH RM	MECH RM	MECH RM
MINIMUM OUTSIDE AIR-LPS		614	614	614
FAN DATA	SUPPLY AIR-LPS	614	614	614
	FAN TYPE	F.C.	F.C.	F.C.
	EXT. S.P.- PA.	375	375	375
	MAXIMUM FAN R.P.M.	2140	2140	2140
	MAX. OUTLET VEL.-M.P.M.	550	550	550
COIL DATA COOLING	CAPACITY (KW	35	35	35
	ENT. DB/ENT. WB - C	27.4/20.3	27.4/20.3	27.4/20.3
	LVG. DB/LVG. WB - C	10.8/10.2	10.8/10.2	10.8/10.2
	MAX. FACE VEL.-M.P.M.	152.8	152.8	152.8
	MIN. SAT. SUC. TEMP.-C	5.55	5.55	5.55
	MAX. AIR P.D.- PA.	100	100	100
	MAXIMUM FINS/CM	4	4	4
	NO. OF ROWS	8	8	8
HEATING DATA	KW	7.5	.7.5	7.5
	STEPS	2	2	2
ELECTRICAL DATA	MOTOR KW	.75	.75	.75
	VOLTS	208	208	208
	PHASE	3	3	3
	HERTZ	60	60	60
FILTER DATA	TYPE	MERV 13	MERV 13	MERV 13
	MAX. FACE VEL.-F.P.M.	300	300	300
	INITIAL P.D.- PA	31	31	31
	FINAL P.D.- PA	156	156	156

REMARKS:

1. PROVIDE WITH VARIABLE FREQUENCY DRIVE AND PREMIUM EFFICIENCY MOTOR RATED FOR INVERTER DUTY.

2. FAN SHALL BE SELECTED BASED ON DIRTY FILTER CONDITIONS.

3. PROVIDE WITH STAINLESS STEEL COIL HEADERS.

4. PROVIDE STAINLESS STEEL DRAIN PAN.

5. AIR HANDLING UNITS CASING SHALL BE DOUBLE WALLED.

6. AIR HANDLING UNITS SHALL BE PROVIDED WITH DUAL FULL-FACED REFRIGERANT CIRCUITS.

F.C. = FORWARD CURVED

UNITARY CONDENSING UNIT SCHEDULE

MARK		CU-1	CU-2	CU-3	CU-4	CU-5	CU-6	CU-7	CU-8	CU-9
TYPE		AIR COOLED	AIR COOLED	AIR COOLED	AIR COOLED	AIR COOLED	AIR COOLED	AIR COOLED	AIR COOLED	AIR COOLED
CAPACITY KW (MBH)		35(120)	35(120)	35(120)	2.6 (9)	2.6 (9)	2.6 (9)	2.6 (9)	2.6 (9)	2.6 (9)
DESIGN AMBIENT EMP.- °C (°F)		95	95	95	35 (95)	35 (95)	35 (95)	35 (95)	35 (95)	35 (95)
LOW AMBIENT TEMP.- °C (°F)		35	35	35	1.7 (35)	1.7 (35)	1.7 (35)	1.7 (35)	1.7 (35)	1.7 (35)
NO. OF COMPRESSORS		2	2	2	1	1	1	1	1	1
STEPS OF REDUCTION/COMPRESSOR		16	16	16	1	1	1	1	1	1
ASSOCIATED FAN COIL		AHU-1	AHU-2	AHU-3	FC-1	FC-2	FC-1	FC-2	FC-1	FC-2
ELECTRICAL DATA	MAX. UNIT KW.	14	14	14	1	1	1	1	1	1
	VOLTS	208	208	208	115	115	115	115	115	115
	PHASE	3	3	3	1	1	1	1	1	1
	HERTZ	60	60	60	60	60	60	60	60	60

REMARKS:

1. UNIT CU-1, 2, & 3 SHALL BE PROVIDED WITH LEAD DIGITAL SCROLL COMPRESSOR.

2. ALL CONDENSING UNITS SHALL BE PROVIDED WITH SATURATED SUNCTION TEMPERATURE OF 5.55 DEG C.

3. UNIT CU-1, 2, & 3 SHALL BE PROVIDED WITH DUAL REFRIGERANT CIRCUITS

PACKAGED TERMINAL AIR CONDITIONER SCHEDULE

MARK		PTAC-1
TYPE		THRU WALL
INDOOR FAN - LPS		165
OUTSIDE AIR - LPS		0
COOLING DATA	TOTAL CAPACITY (KW)	2.64
	ENT. DB/ENT. WB - C	24/17
	AMBIENT TEMP. - C	35
	MIN. UNIT EER	13
HEATING DATA	HEATER SIZE - KW	0
	NO. OF STEPS	N.A.
ELECTRICAL DATA	KW INPUT	.5
	VOLTS	208
	PHASE	1
	HERTZ	60

NOTES: UNIT HAS TWO-SPEED FAN.
REFRIGERANT SHALL BE R-410a.

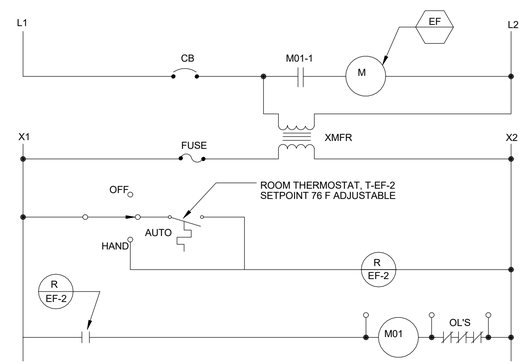

EF-2 FAN STARTER

(TYPICAL OF EF-3, & EF-4)

UNITARY FAN COIL UNIT SCHEDULE

MARK		FC-1	FC-2
TYPE		WALL MTD	WALL MTD
L/S (CFM) (HIGH SPEED)		113 (240)	113 (240)
INPUT WATTS @ ARI COND.		40	40
COOLING DATA	TOTAL CAP. KW (MBH)	2.6 (9)	2.6 (9)
	SENS. CAP. KW (MBH)	2.5 (8.5)	2.5 (8.5)
	DESIGN AMB. TEMP.-°C (°F)	35 (95)	35 (95)
ELECTRICAL DATA	VOLTS	115	115
	PHASE	1	1
	HERTZ	60	60

REMARKS:

EF-2 SEQUENCE OF OPERATION

(TYPICAL OF EF-3, & EF-4)

1. WHEN THE FAN HAND-OFF-AUTO SWITCH IS PLACED IN THE HAND POSITION THE FAN WILL RUN, CONTACT R-EF-2 WILL ENERGIZE THE FAN MOTOR STARTER.

2. WHEN THE FAN HAND-OFF-AUTO SWITCH IS PLACED IN THE AUTO POSITION AND WITH A RISE IN ROOM TEMPERATURE ABOVE THE THERMOSTAT T-EF-2 SET POINT, CONTACT R-EF-2 WILL ENERGIZE THE FAN MOTOR STARTER.

EXHAUST FAN SCHEDULE

MARK		EF-1	EF-2	EF-3	EF-4
TYPE		CENTRIFUGAL	CENTRIFUGAL	CENTRIFUGAL	CENTRIFUGAL
LOCATION		CEILING	CEILING	CEILING	CEILING
LPS		35.4	188	35.4	188
EXTERNAL S.P.- PA.		.375	.375	.375	.375
MAXIMUM R.P.M.		1550	1550	1550	1550
MAXIMUM SONES		8	8	8	8
DRIVE TYPE		DIRECT	DIRECT	DIRECT	DIRECT
ELECTRICAL DATA	MOTOR - WATTS	95.8	235	95.8	132
	VOLTS	120	120	120	120
	PHASE	1	1	1	1
	HERTZ	60	60	60	60

REMARKS:

EF-1 SHALL BE CONTROLLED BY ITS OWN ROOM ON-OFF SWITCH.

US Army Corps of Engineers ®

MARK	DESCRIPTION	DATE

DESIGNED BY: R. PERSON
DRAWN BY: EN-DE
CHECKED BY: B. DURHAM
SUBMITTED BY: W. KNAPP
SIZE: ANSI D
ISSUE DATE: FEBRUARY 2019
SOLICITATION NO.: W912781R0028
CONTRACT NO.:
PROJECT NUMBER: M077EU44
FILE NAME: M077EU44

U.S. ARMY CORPS OF ENGINEERS
MOBILE DISTRICT
MOBILE, AL

SOTO CANO AIR BASE, HONDURAS
UNACCOMPANIED ENLISTED PERSONNEL HOUSING

HVAC SCHEDULES

SHEET ID
M601

CONTROL LEGEND

- CLK XX-XX — TIME CLOCK
- DPS XX-XX — DIFFERENTIAL-PRESSURE SWITCH
- DPT XX-XX — DIFFERENTIAL-PRESSURE TRANSMITTER
- EC XX-XX — ECONOMIZER CONTROLLER
- EP XX-XX — ELECTRIC SOLENOID ACTUATED PNEUMATIC VALVE
- FC XX-XX — FLOW CONTROLLER
- FT XX-XX — FLOW TRANSMITTER
- IP XX-XX — CURRENT-TO-PNEUMATIC TRANSDUCER
- LD XX-XX — LOOP DRIVER
- MPS XX-XX — MINIMUM-POSITION SWITCH
- PC XX-XX — PRESSURE CONTROLLER
- PI XX-XX — PRESSURE GAUGE
- PT XX-XX — PRESSURE TRANSMITTER
- RHC XX-XX — RELATIVE-HUMIDITY CONTROLLER
- RHSH XX-XX — HI-LIMIT HUMIDISTAT, NON-MODULATING
- RHT XX-XX — RELATIVE-HUMIDITY TRANSMITTER, DUCT-MOUNTED
- RHT XX-XX — RELATIVE-HUMIDITY TRANSMITTER, SPACE-MOUNTED
- RHY XX-XX — SIGNAL SELECTOR, HUMIDITY CONTROL LOOP
- SMK XX-XX — SMOKE DETECTOR, DUCT-MOUNTED
- T XX-XX — MODULATING SPACE THERMOSTAT
- T XX-XX — MODULATING DUCT THERMOSTAT, NON-AVERAGING
- T XX-XX — MODULATING THERMOSTAT, AVERAGING
- TC XX-XX — TEMPERATURE CONTROLLER
- TI XX-XX — THERMOMETER, AVERAGING
- TI XX-XX — THERMOMETER, NON-AVERAGING
- TS XX-XX — NON-MODULATING SPACE THERMOSTAT, (MAKES/BREAKS CONTACTS ON TEMPERATURE RISE)
- TSH XX-XX — NON-MODULATING SPACE THERMOSTAT, (MAKES CONTACT ON TEMPERATURE RISE)
- TSL XX-XX — NIGHT THERMOSTAT, NON-MODULATING SPACE THERMOSTAT, (BREAKS CONTACT ON TEMPERATURE RISE)
- TSL XX-XX — THERMOSTAT, LOW TEMPERATURE PROTECTION
- TSP XX-XX — MANUAL TEMPERATURE SETPOINT DEVICE
- TT XX-XX — SPACE-TEMPERATURE TRANSMITTER
- TT XX-XX — TEMPERATURE TRANSMITTER, AVERAGING
- TT XX-XX — TEMPERATURE TRANSMITTER
- TuP XX-XX — MICROPROCESSOR-BASED SPACE THERMOSTAT
- TY XX-XX — SIGNAL SELECTOR, TEMPERATURE CONTROL LOOP
- R XX-XX — RELAY COIL
- XXX XX-XX — RELAY COIL OR DEVICE OPERATING CIRCUIT
  - XX.XX — CONTACT LOCATION
- XXXX XX-XX — PANEL-DEVICE CONTACT
- XXX XX-XX — FIELD-DEVICE CONTACT
- R XX-XX — RELAY CONTACT
  - LADDER DIAGRAM LINE # OF COIL — X
- HS XX-XX — MAINTAINED CONTACT INTERLOCKED SWITCH
- HS XX-XX — MOMENTARY SWITCH
- HAND / OFF / AUTO — MAGNETIC STARTER LOCAL CONTROL SWITCH
- H — HUMIDITY-SWITCH CONTACT (MAKES ON HUMIDITY INCREASE)
- H — HUMIDITY-SWITCH CONTACT (BREAKS ON HUMIDITY INCREASE)
- PRESSURE-SWITCH CONTACT (MAKES ON PRESSURE INCREASE)
- PRESSURE-SWITCH CONTACT (BREAKS ON PRESSURE INCREASE)
- TEMPERATURE-SWITCH, CONTACT (MAKES ON TEMPERATURE RISE) (BREAKS ON TEMPERATURE FALL)
- TEMPERATURE-SWITCH, CONTACT (BREAKS ON TEMPERATURE RISE) (MAKES ON TEMPERATURE FALL)
- CB — MAGNETIC-STARTER CIRCUIT BREAKER
- FUSE — MAGNETIC STARTER CONTROL CONTROL CIRCUIT FUSE
- M — MOTOR
- M01 — MAGNETIC-STARTER HOLDING COIL
- L1 L2 / X1 X2 — MAGNETIC STARTER CONTROL CIRCUIT TRANSFORMER
- OL'S — MAGNETIC-STARTER OVERLOADS
- M01-1 — MAGNETIC-STARTER POWER CONTACT
- VLV XX-XX — MOTORIZED BUTTERFLY CONTROL VALVE
- VLV XX-XX — VALVE, 3-WAY MIXING (C, NC, NO)
- VLV XX-XX — VALVE, 3-WAY DIVERTING (C, NC, NO)
- VLV XX-XX — VALVE, NORMALLY CLOSED (NC)
- VLV XX-XX — VALVE, NORMALLY OPEN (NO)
- AD XX-XX — DAMPER, OPPOSED-BLADE WITHOUT SEALS
- AD XX-XX — DAMPER, OPPOSED-BLADE WITH SEALS
- AD XX-XX — DAMPER, PARALLEL-BLADE WITHOUT SEALS
- AD XX-XX — DAMPER, PARALLEL-BLADE WITH SEALS
- DA XX-XX, AAD — ACTUATOR, DAMPER, ELECTRIC OR ELECTRONIC
- DA XX-XX — ACTUATOR, DAMPER, PNEUMATIC
- DA XX-XX, PP — ACTUATOR, DAMPER, PNEUMATIC WITH POSITIVE POSITIONER
- DA XX-XX, PP, M — ACTUATOR, VALVE, ELECTRIC OR ELECTRONIC
- DA XX-XX, PP — ACTUATOR, VALVE, PNEUMATIC WITH POSITIVE POSITIONER
- AAD — AUXILIARY ACTUATOR DRIVE
- PP — POSITIVE POSITIONER
- THERMOWELL
- M — MAIN AIR
- VFD — VARIABLE FREQUENCY DRIVE
- VS XX-XX — VIBRATION SWITCH
- LS XX-XX — LEVEL SWITCH
- TAG — HVAC EQUIPMENT IDENTIFIER
- TAG — BOILER
- TAG, C C — COIL, COOLING
- TAG, D X — COIL, COOLING, DIRECT-EXPANSION
- TAG, H C — COIL, HEATING
- TAG, EL C — COIL, ELECTRIC HEATING
- TAG, P C — COIL, OUTSIDE-AIR PREHEAT
- TAG, P C — COIL, OUTSIDE-AIR PREHEAT FACE & BYPASS DAMPER
- EF — EXHAUST FAN
- FLTR — FILTER
- RF — RETURN FAN
- SF — SUPPLY FAN
- AFMA XX-XX, FT XX-XX — AIR-FLOW MEASURING STATION AND TRANSMITTER
- PNEUMATIC LINE
- ELECTRIC LINES (LADDER DIAGRAMS AND SCHEMATICS)
- ELECTRONIC SIGNALS (SCHEMATICS)
- DA XX-XX, PP — ACTUATOR, VALVE, PNEUMATIC WITH POSITIVE POSITIONER
- UPPER FIELD OF UNIQUE IDENTIFIER FOR DEVICE — XXXX XX-XX — LOWER FIELD OF UNIQUE IDENTIFIER FOR DEVICE
  - PANEL MOUNTED HVAC CONTROL DEVICE
- UPPER FIELD OF UNIQUE IDENTIFIER FOR DEVICE — XXXX XX-XX — LOWER FIELD OF UNIQUE IDENTIFIER FOR DEVICE
  - FIELD MOUNTED HVAC CONTROL DEVICE
- 2-DIGIT IDENTIFIER FOR SPECIFIC DEVICE — XX-XX — 2-DIGIT SYSTEM IDENTIFIER
- LOWER FIELD OF UNIQUE IDENTIFIER FOR DEVICE
- MAXIMUM OF 4 ALPHABETICAL CHARACTERS FOR DEVICE TYPE — XXXX
- UPPER FIELD OF UNIQUE IDENTIFIER FOR DEVICE
- CHILLER CONTROL PANEL, TAG — CHILLER
- TAG — COOLING TOWER
- TAG — PUMP

US Army Corps of Engineers ®

MARK	DESCRIPTION	DATE

ISSUE DATE: FEBRUARY 2019
SOLICITATION NO.: W912781R0028
CONTRACT NO.:
PROJECT NUMBER: M077EU44
FILE NAME:

DESIGNED BY: R. PERSON
DRAWN BY: EN-DE
CHECKED BY: B. DURHAM
SUBMITTED BY: W. KNAPP
SIZE: ANSI D

U.S. ARMY CORPS OF ENGINEERS
MOBILE DISTRICT
MOBILE, AL

SOTO CANO AIR BASE, HONDURAS
UNACCOMPANIED ENLISTED PERSONNEL HOUSING

HVAC CONTROLS

SHEET ID
M701

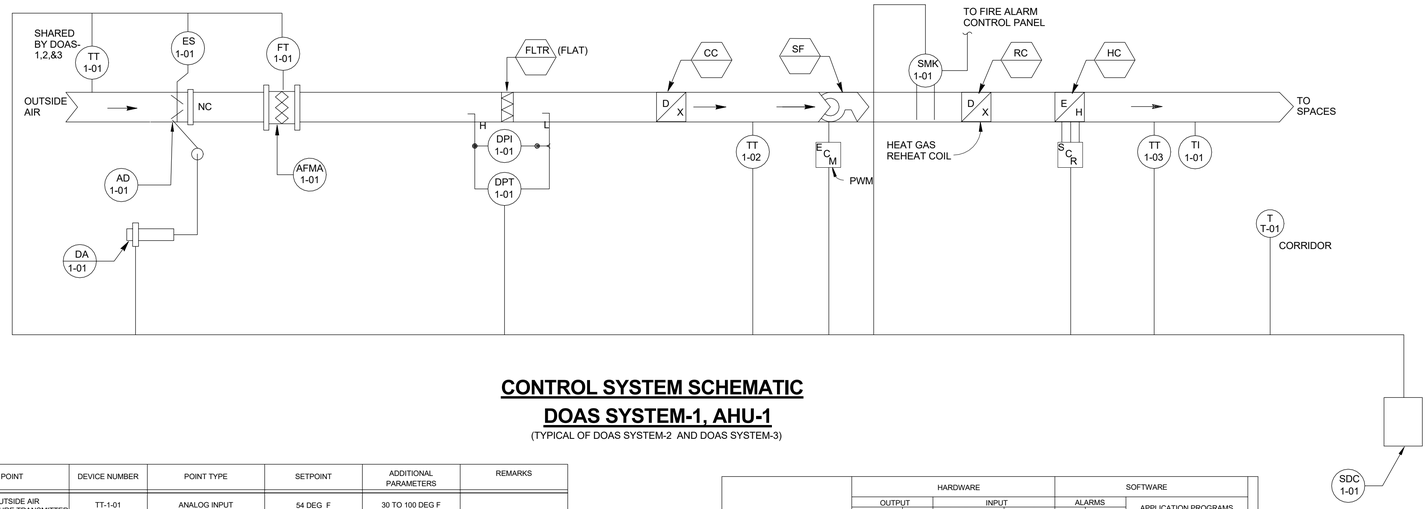

CONTROL SYSTEM SCHEMATIC
DOAS SYSTEM-1, AHU-1

(TYPICAL OF DOAS SYSTEM-2 AND DOAS SYSTEM-3)

POINT	DEVICE NUMBER	POINT TYPE	SETPOINT	ADDITIONAL PARAMETERS	REMARKS
OUTSIDE AIR TEMPERATURE TRANSMITTER	TT-1-01	ANALOG INPUT	54 DEG F	30 TO 100 DEG F	
COOLING COIL LVG AIR TEMPERATURE TRANSMITTER	TT-1-02	ANALOG INPUT	——		
SUPPLY AIR THERMOMETER	TI-1-01	ANALOG OUTPUT	——	40 TO 140 DEG F	
OUTSIDE AIR DAMPER ACTUATOR	DA-1-01	DIGITAL OUTPUT	——	-	
OUTSIDE AIR DAMPER	AD-1-01	——	——	——	INTEGRAL COMPONENT OF OA FLOW STATION/DAMPER
OUTSIDE AIR DAMPER END SWITCH	ES-1-01	DIGITAL INPUT	——	——	
AFMS	FT-1-01	ANALOG INPUT	——	4 - 20 mA	
AHU-1 SF-1 START/STOP	——	DIGITAL OUTPUT	——	——	
ECM - PWM	——	ANALOG OUTPUT	——	4 - 20 mA	
SUPPLY DUCT SMOKE DETECTOR	SMK-1-01	DIGITAL INPUT	——	——	PROVIDE OUTPUT TO FIRE ALARM PANEL. COORDINATE WITH SUBMITTED PANELS.
FIRE PANEL INTERLOCK	——	DIGITAL INPUT	——	——	
SPACE TEMP SENSOR	T-T-01	ANALOG INPUT	——	——	

	HARDWARE																											SOFTWARE													
	OUTPUT								INPUT																			ALARMS				APPLICATION PROGRAMS									
	DIGITAL				ANALG				DIGITAL								ANALG											DIGITAL		ANALG											
SYSTEM(S) DOAS SYSTEM-1 / OCCUPANCY TIME / POINT DESCRIPTION	CONTROL RELAY	SOLENOID	HAND/OFF/AUTO	OFF/AUTO	CONTROL POINT ADJUSTMENT				PRESSURE SWITCH	DIFFERENTIAL PRESSURE SW.	FLOW SWITCH	ANALOG CONTACT	PULSE	UNIT STATUS	CURRENT SENSOR RELAY	TEMPERATURE	% RELATIVE HUMIDITY	PSIG, PSIA, PAID	POSITION	FLOW	CONTACT CLOSURE	DRIVE ALARM STATUS	HIGH LIMIT	LOW LIMIT	RUN TIME	SCHEDULED START/STOP	OPTIMUM START/STOP	DAY/NIGHT SETBACK	VENTILATION DELAY									FAILURE MODE : :
SUPPLY FAN (ECM)	●		●		●															●	●				●		●		●												O
SUPPLY AIR																●								●	●																
ROOM AIR TEMP																●																									
FIRE ALARM SYS INTERLOCK												●										●																			F
SA SMOKE DETECTOR												●										●																			F
AFMS																				●																					
OUTSIDE AIR : OUTSIDE AIR DAMPER					●							●				●						●							●												F
CONDENSING UNIT	●														●										●		●														

DOAS SYSTEM-1 I/O POINTS

DOAS SYSTEM-1 EQUIPMENT

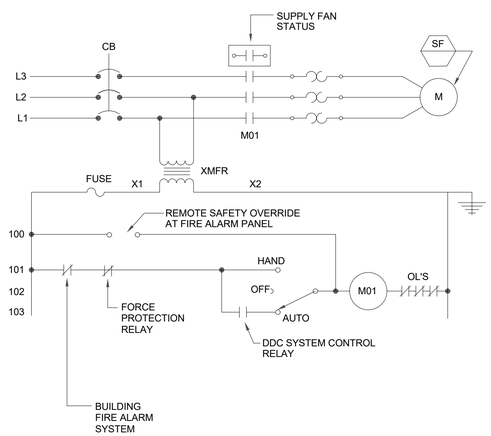

SUPPLY FAN STARTER
DOAS SYSTEM-1, AHU-1
(TYPICAL OF DOAS SYSTEM-2 AND DOAS SYSTEM-3)

FORCE PROTECTION RELAY

SHUT-DOWN SWITCH FOR ENTIRE HVAC SYSTEM TO BE LOCATED IN CLOSE PROXIMITY TO FIRE ALARM CONTROL PANEL OR AS SPECIFIED BY THE AUTHORIZED REPRESENTATIVE OF THE CONTRACTING OFFICER. RELAY SHALL SHUT-DOWN DOAS AHU-1, 2, &3, AND ALL OTHER AIR MOVING EQUIPMENT SIMULTANEOUSLY.

DOAS SYSTEM -1(AHU-1 & CU-1) SEQUENCE OF CONTROL

(TYPICAL OF DOAS SYSTEM-2, (AHU-2 & CU-2) AND DOAS SYSTEM-3, (AHU-3 & CU-3))

MODES OF OPERATION

START/STOP CYCLE: SYSTEM SHALL START AND STOP THE DDC SYSTEM WHEN THE UNITS H.O.A. SWITCH IS IN THE AUTO POSITION. SAFETY DEVICES SHALL NOT BE BY-PASSED AND BE FULLY FUNCTIONAL WHEN THE H.O.A. SWITCH IS IN EITHER "HAND" OR "AUTO" POSITION.

COOLING COIL

THE COOLING MODE WILL BE ENABLED WHENEVER THE OUTDOOR TEMPERATURE IS ABOVE THE DISCHARGE AIR COOLING SET POINT. DURING THE COOLING MODE, THE DDC CONTROLLER WILL STAGE OR MODULATE COOLING TO MAINTAIN THE DISCHARGE COOLING SETPOINT.

HEATING COIL

THE HEATING MODE WILL BE ENABLED YEAR-ROUND. DURING THE HEATING MODE, THE DDC CONTROLLER WILL STAGE OR MODULATE HEATING TO MAINTAIN THE REHEATING SETPOINT.

SUPPLY FAN

ALL MODES - WHEN THE SUPPLY FAN IS RUNNING, THE DDC SYSTEM SHALL MODULATE THE SUPPLY FAN VARIABLE FREQUENCY DRIVE UNIT (VFDU) FROM THE SIGNAL OF THE AFMS TRANSMITTERS MAINTAINING OA AIRFLOW CFM.

MODULATING + STAGED CONTROL

THIS SECTION DEFINES OPERATION WHEN A MODULATING SOURCE OF RE-HEATING OR COOLING IS USED ALONG WITH STAGED SOURCES. THE MOST COMMON MODULATING SOURCES WILL BE DIGITAL SCROOL COMPRESSOR AND ELECTRIC STRIP HEATING.

- STAGING UP

  THE MODULATING SOURCE WILL BE ENABLED BY Y1 AND WILL RAMP FROM 0-100%. WHEN THE MODULATING SOURCE REACHES 100% THE STAGE UP TIMER ACTIVATES. ONCE THE STAGE UP TIMER EXPIRES AND THE DEMAND FOR STAGE-1 IS STILL AT 100%, Y2 IS ACTIVATED AND Y1 WILL MODULATE DOWN AS NEEDED.

- STAGING DOWN

  WHEN THE MODULATING SOURCE OR Y1 MODULATES TO 0%, THE STAGE DOWN TIMER ACTIVATES, ONCE THE STAGE DOWN TIMER EXPIRES AND THE DEMAND FOR Y1 IS STILL AT 0%, Y2 IS DEACTIVATED AND STAGE-1 WILL MODULATE UP AS NEEDED. AS THE DEMAND DECREASES, Y1 WILL MODULATED DOWN AS NEEDED.

DIGITAL SCROLL COMPRESSORS

EACH DIGITAL SCROLL COMPRESSOR (DCS) WILL REQUIRE AND ENABLE RELAY AND A 1.5 TO 5 VDC ANALOG SIGNAL TO CONTROL THE CAPACITY. THE COPELAND CONTROL BAORD FOR THE DSC ACTIVATES THE COMPRESSOR AT 1.5 VDC SIGNAL. WHEN THE SIGNAL FALLS BELOW 1.5 VDC THE COMPRESSOR DEACTIVATES WITH A SMALL BUILT-IN HYSTERESIS. WHEN SETTING UP THE SIGNAL, 0%=1.5 VDC AND 100%=5 VDC.

WHEN TWO DIGITAL SCROLL COMPRESSOR ARE USED, BOTH COMPRESSORS WILL BE ACTIVATED AND THE SIGNAL CONTROLLED IN PARALLEL, ACTIVATED BY Y1 AND Y2 AS DEFINED AS ONE CIRCUIT (STAGE-1) OF COOLING OR DEHUMIDIFICATION.

WHEN FOUR DIGITAL SCROLL COMPRESSORS ARE USED, TWO DCS'S WILL BE ACTIVATED AND THE SIGNAL CONTROLLED IN PARALLEL, ACTIVATED BY Y1 AND Y2 AS DEFINED AS ONE CIRCUIT (STAGE-1) OF COOLING OR DEHUMIDIFICATION. TWO MOVE DSC'S WILL BE ACTIVATED AND THE SIGNAL CONTROLLED IN PARALLEL, ACTIVATED BY Y3 AND Y4 AND DEFINED AS ONE CIRCUIT (STAGE-2) OF COOLING OR DEHUMIDIFICATION.

FC-1 AND FC-2 SEQUENCE OF OPERATION

1. MICROPROCESSOR-BASED THERMOSTAT SHALL HAVE ONE STAGE OF COOLING WITH FAN ON-AUTO SWITCH AND HEAT-OFF-COOL SWITCH.

2. COOLING: WHEN THE SYSTEM SWITCHES ARE INDEXED TO "COOL" AND "AUTO", THE THERMOSTAT CYCLES ON THE FAN AND ENERGIZES THE COMPRESSOR IN THE CONDENSING UNIT TO MAINTAIN THE PROGRAMMED SPACE TEMPERATURE SETPOINT.

3. ON-OFF: WHEN THE FAN ON-AUTO SWITCH IS INDEXED TO "ON" THE FAN SHALL RUN CONTINUOUSLY. WHEN THE HEAT-OFF-COOL SWITCH IS INDEXED TO "OFF" THE FAN IS SHUT DOWN AND NEITHER HEATING NOR COOLING CAN BE ENERGIZED.

US Army Corps of Engineers ®

MARK	DESCRIPTION	DATE

ISSUE DATE: FEBRUARY 2019
SOLICITATION NO.: W912781R0028
CONTRACT NO.:
PROJECT NUMBER: M077EU44
SIZE: ANSI D
FILE NAME:

DESIGNED BY: R. PERSON
DRAWN BY: EN-DE
CHECKED BY: B. DURHAM
SUBMITTED BY: W. KNAPP

U.S. ARMY CORPS OF ENGINEERS
MOBILE DISTRICT
MOBILE, AL

SOTO CANO AIR BASE, HONDURAS
UNACCOMPANIED ENLISTED PERSONNEL HOUSING

HVAC CONTROLS

SHEET ID
M702

GENERAL SHEET NOTES:

1. SEE SHEET M-001 FOR GENERAL NOTES, LEGENDS, AND ABBREVIATIONS.
2. PLAN NORTH IS FOR REFERENCE ONLY AND IS BASED ON BUILDING D. SEE CIVIL FOR BUILDING ORIENTATION.

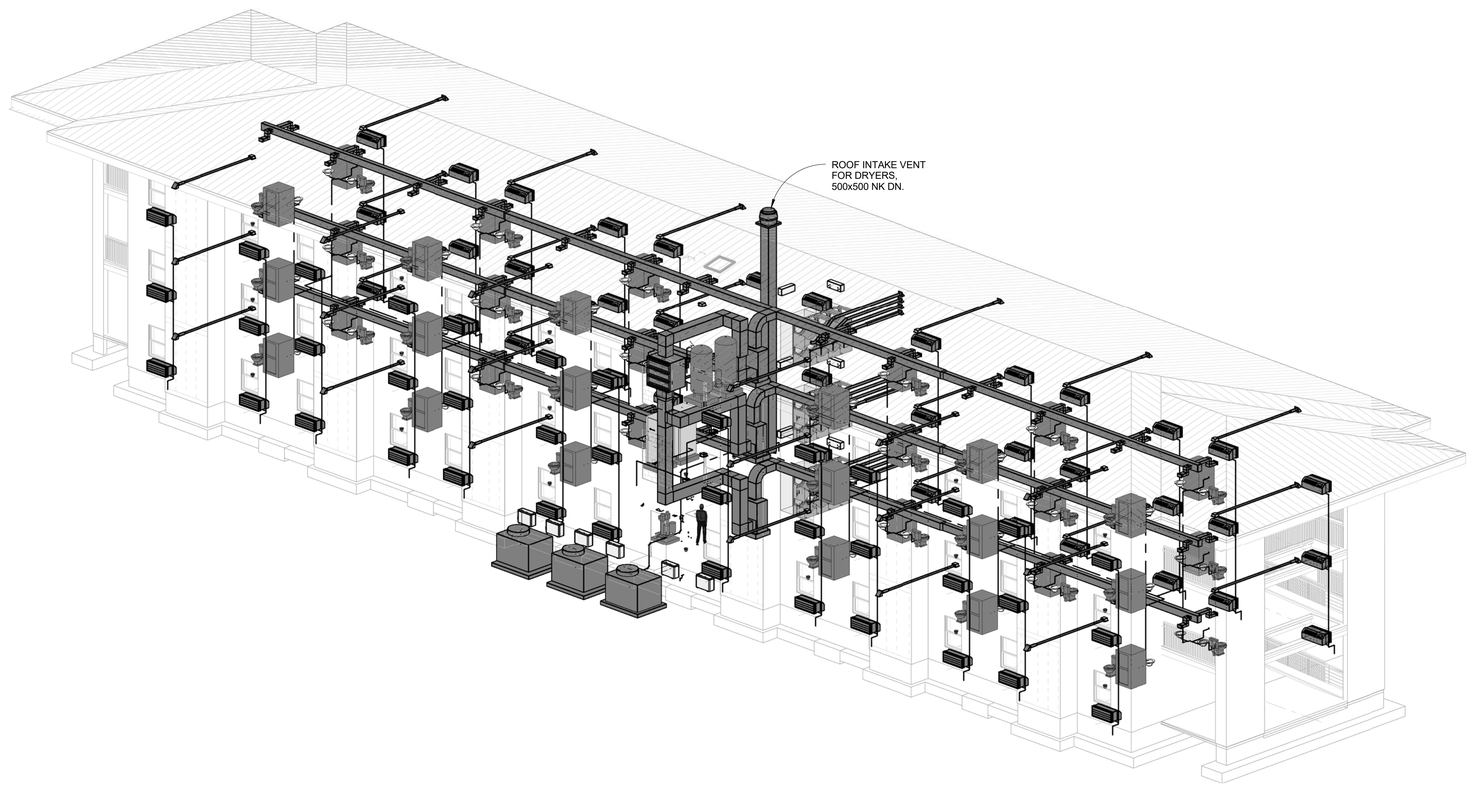

1 **HVAC ISOMETRIC**

N.T.S.

US Army Corps of Engineers ®

MARK	DESCRIPTION	DATE

U.S. ARMY CORPS OF ENGINEERS
MOBILE DISTRICT
MOBILE, AL

DESIGNED BY: R. PERSON	ISSUE DATE: FEBRUARY 2019
DRAWN BY: EN-DE	SOLICITATION NO.: W912781R0028
CHECKED BY: B. DURHAM	CONTRACT NO.:
SUBMITTED BY: W. KNAPP	PROJECT NUMBER: M017EU44
SIZE: ANSI D	FILE NAME: M017EU44

SOTO CANO AIR BASE, HONDURAS
UNACCOMPANIED ENLISTED PERSONNEL HOUSING

HVAC ISOMETRIC

SHEET ID

M901

ELECTRICAL SITE PLAN LEGEND

NEW

OP	NEW OVERHEAD PRIMARY ELECTRICAL
UP	NEW UNDERGROUND PRIMARY ELECTRICAL
US	NEW UNDERGROUND SECONDARY ELECTRICAL
CU	NEW UNDERGROUND TELECOMMUNICATIONS
H E	NEW ELECTRICAL HANDHOLE (TYPE 2 2/ES501)
S E	NEW ELECTRICAL PAD MOUNTED SWITCH (4/ES502)
J E	NEW ELECTRICAL PRIMARY JUNCTION CABINET (1/ES501)
H C	NEW TELECOMMUNICATIONS HANDHOLE (1/ES503)
P	NEW RISER POLE (3/ES501)
	NEW GUY WIRE
	NEW BOLLARD LIGHT FIXTURE (TYPE "R" PER FIXTURE SCHEDULE)

DEMO

O/C — CB — UC	EXISTING ELEC/COMM EQUIPMENT AND LINE TO BE REMOVED

EXISTING

O/EH	ELECTRICAL - OVERHEAD (HIGH VOLTAGE)
O/EM	ELECTRICAL - OVERHEAD (MEDIUM VOLTAGE)
O/EL	ELECTRICAL - OVERHEAD (LOW VOLTAGE)
UEH	ELECTRICAL - UNDERGROUND (HIGH VOLTAGE)
UEM	ELECTRICAL - UNDERGROUND (MEDIUM VOLTAGE)
UEL	ELECTRICAL - UNDERGROUND (LOW VOLTAGE)
O/C	TELECOMMUNICATIONS - OVERHEAD (GENERIC - UNKNOWN TYPE)
UC	TELECOMMUNICATIONS - UNDERGROUND (GENERIC - UNKNOWN TYPE)
O/T	TELEPHONE - OVERHEAD
UT	TELEPHONE - UNDERGROUND
O/F	FIBER OPTIC - OVERHEAD
UF	FIBER OPTIC - UNDERGROUND
CD	CONDUIT - EMPTY (NO LINES IN CONDUIT)
PL	PEDESTAL LIGHT
	GUYWIRE
A/C	AC UNIT
FAB	FIRE ALARM BOX
CB	TELECOMMUNICATIONS BOX
CDM	TELECOMMUNICATIONS DUCT BANK MARKER (CONCRETE)
EPB	ELECTRICAL PANEL BOARD OR ELECTRICAL PULL BOX
BLD	BOLLARD
HB	HOSE BIBB
	POWER POLE
	SPOT LIGHT
	LIGHT POLE
T	POWER POLE WITH TRANSFORMER

GENERAL NOTES:

1. NEW ELECTRICAL AND TELECOMMUNCIATIONS DISTRIBUTION SYSTEMS ARE REQUIRED TO MAINTAIN SERVICE FOR FACILITIES ON BOTH SIDES OF THE PROJECT SITE. NEW PRIMARY AND OSP DISTRIBUTION PATHWAYS AND CABLES SHALL BE INSTALLED, TESTED, AND ACCEPTED PRIOR TO THE REMOVAL OF THE EXSITING SYSTEMS. FACILITIES NOT BEING REMOVED AS PART OF THIS PROJECT SHALL REMAIN FULLY OPERATIONAL. COORDINATE ANY TEMPORARY OUTAGES FOR CHANGE OVERS WITH COR AND SOTO CANO BCE.
2. NEW PRIMARY AND TELECOMMUNICATIONS CONDUITS SHALL BE ENCASED IN CONCRETE.
3. NEW SECONDARY CONDUITS SHALL BE DIRECT BURIED, EXCEPT WHEN PASSING UNDER PAVEMENTS.
4. PROVIDE CONCRETE ENCASEMENT ON DUCT BANKS RUNNING UNDER PAVEMENTS; ROADWAYS, FIRE LANES, ETC. CONCRETE SHALL EXTEND FIVE FEET PAST END OF PAVEMENT.
5. EXISTING MANHOLES, HAND HOLES AND CONDUIT LOCATIONS ARE APPROXIMATE. CONTRACTOR SHALL FIELD VERIFY FOR PATHWAY CONNECTION POINTS.
6. NEW MANHOLES, HAND HOLES, AND CONDUIT RUNS ARE SHOWN DIAGRAMMATICALLY, BENDS SHALL BE KEPT TO A MINIMUM AND WHERE NECESSARY SHALL BE ACCOMPLISHED WITH WIDE SWEEP ELBOWS. CONDUITS ARE TO BE INSTALLED SLOPING DOWN TO A HAND HOLE. THE LOW POINT OF THE DUCT BANK MAY NOT OCCUR BETWEEN HAND HOLES.
7. COORDINATE NEW UNDERGROUND ELECTRICAL AND TELECOMMUNICATIONS INTERSECTIONS WITH OTHER UTILITIES, NEW AND EXISTING, AND ADJUST DEPTHS ACCORDINGLY. SEE OVERALL UTILITY PLAN CU100 FOR ADDITIONAL UTILITIES NOT SHOWN.
8. REMOVED EQUIPMENT AND MATERIALS SHALL BECOME THE PROPERTY OF THE CONTRACTOR UNLESS NOTED OTHERWISE.
9. SEE ES500'S FOR ELECTRICAL DISTRIBUTION AND TELECOMMUNICATION OSP DETAILS.
10. SEE ES600'S FOR ELECTRICAL DISTRIBUTION AND TELECOMMUNICATIONS OSP RISER DIAGRAMS FOR QUANTITIES AND SIZES.

US Army Corps of Engineers®

MARK	DESCRIPTION	DATE

DESIGNED BY: R.M.FORTNER
DRAWN BY: ENDE
CHECKED BY: W.J.KNAPP
SUBMITTED BY: D.D.COLLER
SIZE: ANSI D
FILE NAME: M017EU44-ES001.dwg
ISSUE DATE: FEBRUARY 2019
SOLICITATION NO.: W912781R0028
CONTRACT NO.: -
PROJECT NUMBER: M017EU44

U.S. ARMY CORPS OF ENGINEERS
MOBILE DISTRICT
MOBILE, ALABAMA

SOTO CANO AIR BASE, HONDURAS
UNACCOMPANIED ENLISTED PERSONNEL HOUSING

ELECTRICAL & TELECOMMUNICATION SITE LEGEND

SHEET ID
ES001

GENERAL NOTES:

1. NEW ELECTRICAL AND TELECOMMUNCIATIONS DISTRIBUTION PATHWAYS ARE REQUIRED TO MAINTAIN CONNECTION FOR FACILITIES ON BOTH SIDES OF THE PROJECT SITE. ELECTRICAL AND TELECOMMUNICATIONS IN THE HATCHED AREA SHALL BE REMOVED ONLY AFTER THE NEW PRIMARY AND OSP DISTRIBUTION PATHWAYS SHOWN ON ES102 HAVE BE INSTALLED, TESTED, AND ACCEPTED. FACILITIES NOT BEING REMOVED AS PART OF THIS PROJECT SHALL REMAIN FULLY OPERATIONAL. COORDINATE ANY TEMPORARY OUTAGES FOR CHANGE OVERS WITH COR AND SOTO CANO BCE. SEE RISERS ON ES600'S FOR ADDITIONAL INFORMATION.

KEYED NOTES:

1. POLE TO REMAIN. ADD NEW GUY WIRES AS NEEDED.
2. NEW PRIMARY CONNECTION POINT, POLE A40. SEE ES102 AND ES601.
3. NEW TELECOMMUNICATION DISTRIBUTION UNDERGROUND PATHWAY CONNECTION POINT. SEE ES102 AND ES602.
4. EXISTING CU SPLICE CASE IN HANDHOLE.
5. EXISTING FOC SPLICE CASE IN HANDHOLE TO BE REMOVED.
6. EXISTING POLE B27 SHALL BE TURNED OVER TO BASE CIVIL ENGINEERING (BCE).

PLAN NORTH

0 6000 12000

SCALE: 1 : 300

US Army Corps of Engineers®

MARK	DESCRIPTION	DATE

DESIGNED BY: R.M.FORTNER	ISSUE DATE: FEBRUARY 2019
DRAWN BY: ENDE	SOLICITATION NO.: W912T819R0028
CHECKED BY: W.J.KNAPP	CONTRACT NO.: -
SUBMITTED BY: D. COLLER	PROJECT NUMBER: M017EU44
SIZE: ANSI D	FILE NAME: M017EU44-ES101.dwg

U.S. ARMY CORPS OF ENGINEERS
MOBILE DISTRICT
MOBILE, ALABAMA

SOTO CANO AIR BASE, HONDURAS
UNACCOMPANIED ENLISTED PERSONNEL HOUSING

ELECTRICAL & TELECOMMUNICATION SITE DEMOLITION PLAN

SHEET ID

ES101

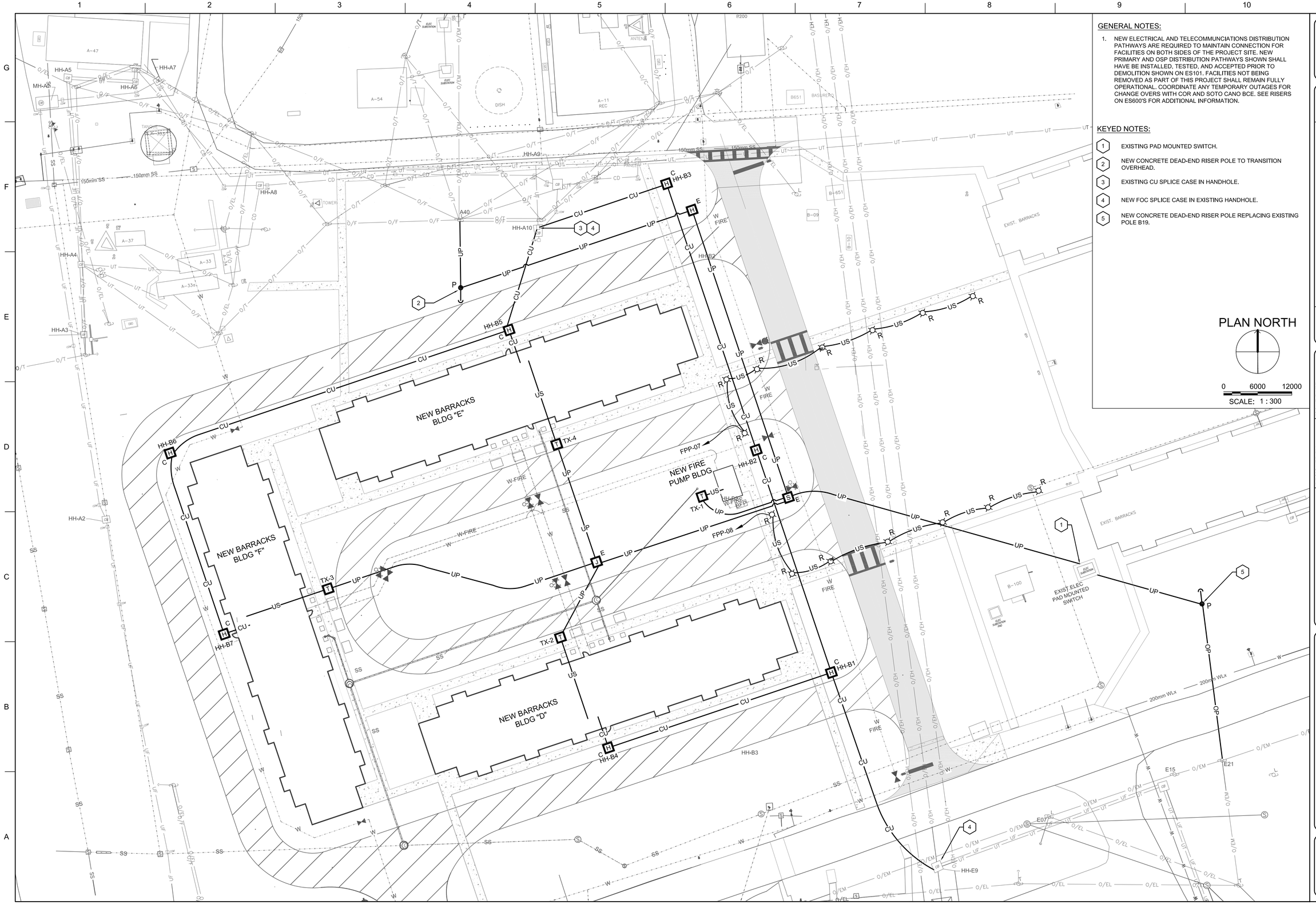

GENERAL NOTES:

1. NEW ELECTRICAL AND TELECOMMUNCIATIONS DISTRIBUTION PATHWAYS ARE REQUIRED TO MAINTAIN CONNECTION FOR FACILITIES ON BOTH SIDES OF THE PROJECT SITE. NEW PRIMARY AND OSP DISTRIBUTION PATHWAYS SHOWN SHALL HAVE BE INSTALLED, TESTED, AND ACCEPTED PRIOR TO DEMOLITION SHOWN ON ES101. FACILITIES NOT BEING REMOVED AS PART OF THIS PROJECT SHALL REMAIN FULLY OPERATIONAL. COORDINATE ANY TEMPORARY OUTAGES FOR CHANGE OVERS WITH COR AND SOTO CANO BCE. SEE RISERS ON ES600'S FOR ADDITIONAL INFORMATION.

KEYED NOTES:

1. EXISTING PAD MOUNTED SWITCH.
2. NEW CONCRETE DEAD-END RISER POLE TO TRANSITION OVERHEAD.
3. EXISTING CU SPLICE CASE IN HANDHOLE.
4. NEW FOC SPLICE CASE IN EXISTING HANDHOLE.
5. NEW CONCRETE DEAD-END RISER POLE REPLACING EXISTING POLE B19.

US Army Corps of Engineers®

MARK	DESCRIPTION	DATE

DESIGNED BY: R.M.FORTNER	ISSUE DATE: FEBRUARY 2019
DRAWN BY: ENDE	SOLICITATION NO.: W912T819R0028
CHECKED BY: W.J.KNAPP	CONTRACT NO.: -
SUBMITTED BY: D.COLLER	PROJECT NUMBER: M017EU44
SIZE: ANSI D	FILE NAME: M017EU44-ES102.dwg

U.S. ARMY CORPS OF ENGINEERS
MOBILE DISTRICT
MOBILE, ALABAMA

SOTO CANO AIR BASE, HONDURAS
UNACCOMPANIED ENLISTED PERSONNEL HOUSING

ELECTRICAL & TELECOMMUNICATION SITE PLAN

SHEET ID

ES102

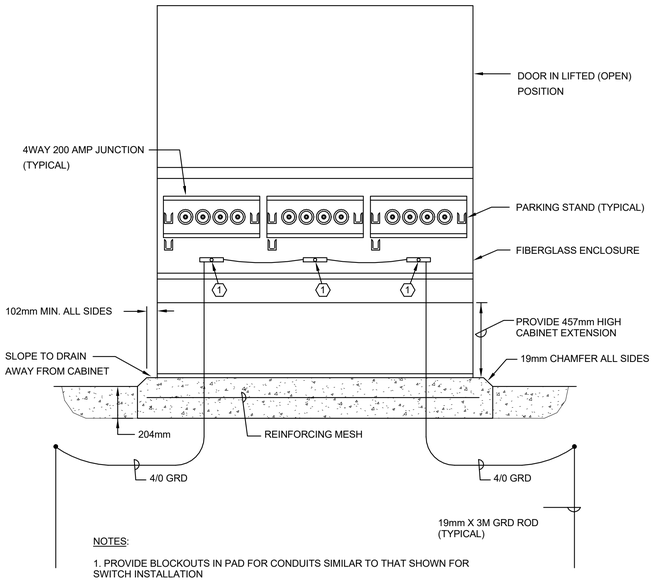

NOTES:

1. PROVIDE BLOCKOUTS IN PAD FOR CONDUITS SIMILAR TO THAT SHOWN FOR SWITCH INSTALLATION

KEY NOTES:

1 PROVIDE GROUND BUS ASSEMBLY AT EACH GROUND NUT. CONNECT ALL NEUTRALS TO INDIVIDUAL LUGS ON GRD BUS. INTERCONNECT GRD BUSSES WITH #4/0 MIN. GROUND CONDUCTOR

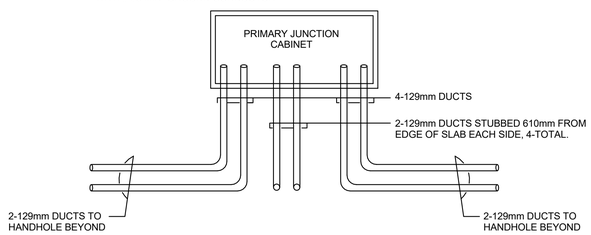

1 PRIMARY JUNCTION CABINET DETAIL

N.T.S.

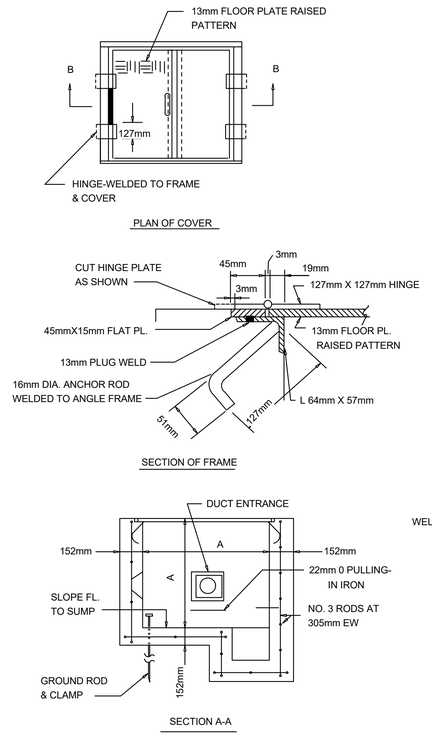

HANDHOLE	A
TYPE 1	915mm
TYPE 2	1220mm

NOTE:

SEE SPEC 33 71 02 FOR CABLE RACK, DUCT ENTRANCE, AND PULLING-IN IRON REQUIREMENTS.

2 ELECTRICAL HANDHOLE DETAIL

N.T.S.

OVERHEAD PHASE CONDUCTORS

* 3 #1/0 ACSR (34.500/19,630V, 3PH, 60HZ)
* SEE SHEET NOTE #1
* SEE SITE PLAN ES102

1. 12.2 M CONCRETE POLE
2. 1.8 M STEEL DEAD-END CROSSARM
3. TONDUE AND CLEVIS SUSPENSION INSULATOR - 38KV
4. DEAD-END ASSEMBLY - 38KV
5. BARE COPPER JUMPERS - #6 CU
6. FUSED CUTOUT - 38KV
7. SURGE ARRESTORS - 27KV POLYMER
8. COMBINATION CUTOUT/ARRESTOR MTG BRACKET
9. CABLE TERMINATORS - 35KV
10. TERMINATOR MTG BRACKET
11. INSULATED, SHIELDED CONDUCTORS - 35KV
12. CABLE SEALING FITTING
13. CONDUIT POLE RISER - GRS (BOND TO POLE GRD)
14. GROUNDING PROVISIONS - SEE SPEC
15. GUY ASSEMBLY - SEE SPEC
16. HOT LINE CLAMP
17. 600 VOLT CLEVIS AND SPOOL
18. INSTALL CURRENT LIMITING FUSES IN SERIES WITH CUTOUTS

NOTE:

1. ALL METAL HARWARE AND METAL CONDUIT RISER ARE TO BE BONDED TO THE POLE GROUND.

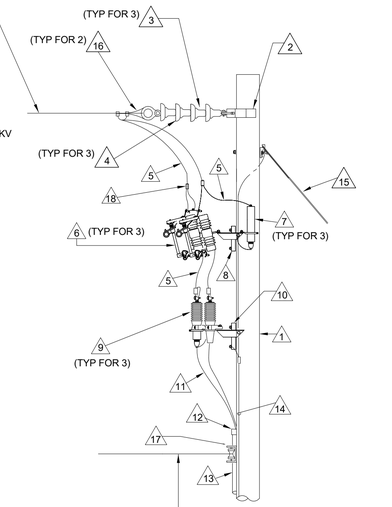

OVERHEAD NEUTRAL CONDUCTOR

* 1 #1/0 ACSR
* SEE SHEET NOTE #1
* SEE SITE PLAN ES102

3 DEAD-END POLE WITH CUTOUT

N.T.S.

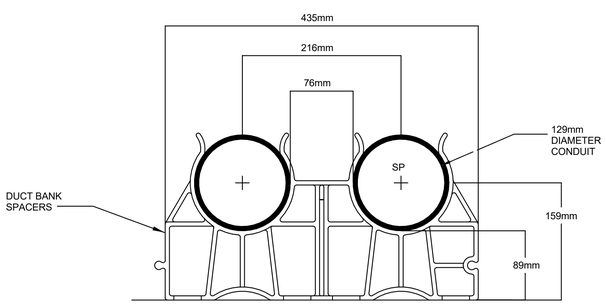

NOTE:

1. ALL DIMENSIONS ARE NOMINAL.
2. INSTALL SPACERS EVERY 127mm OF DUCT LENGTH.

4 PRIMARY DUCTBANK SECTION DETAIL

N.T.S.

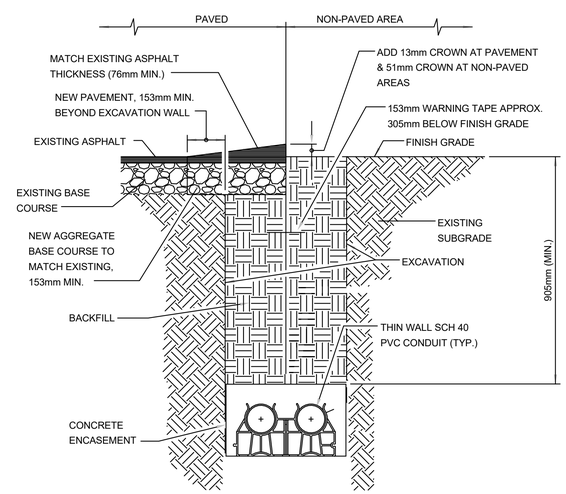

5 TYPICAL CONCRETE ENCASED DUCTBANK DETAIL

N.T.S.

US Army Corps of Engineers®

MARK	DESCRIPTION	DATE

DESIGNED BY: R.M.FORTNER
DRAWN BY: EN-DE
CHECKED BY: D.D.COLLIER
SUBMITTED BY: W.A.NAMUR
SIZE: ANSI D
ISSUE DATE: FEBRUARY 2019
SOLICITATION NO.: W912781R0028
CONTRACT NO.:
PROJECT NUMBER: M017E144
FILE NAME: M017E144

U.S. ARMY CORPS OF ENGINEERS
MOBILE DISTRICT
MOBILE, ALABAMA

SOTO CANO AIR BASE, HONDURAS
UNACCOMPANIED ENLISTED PERSONNEL HOUSING

ELECTRICAL DISTRIBUTION DETAILS

SHEET ID

ES501

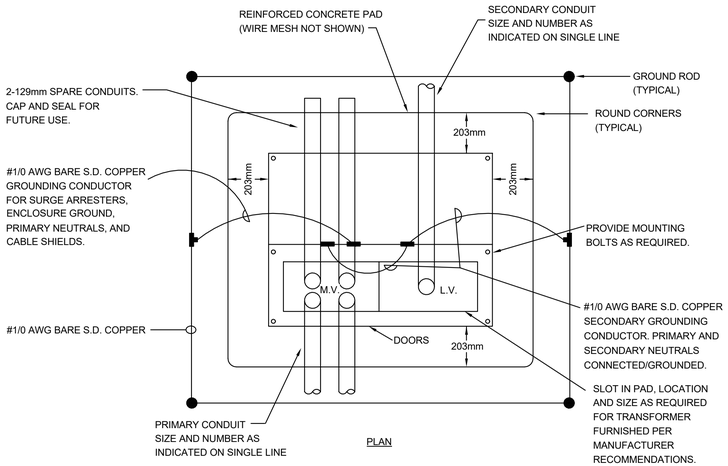

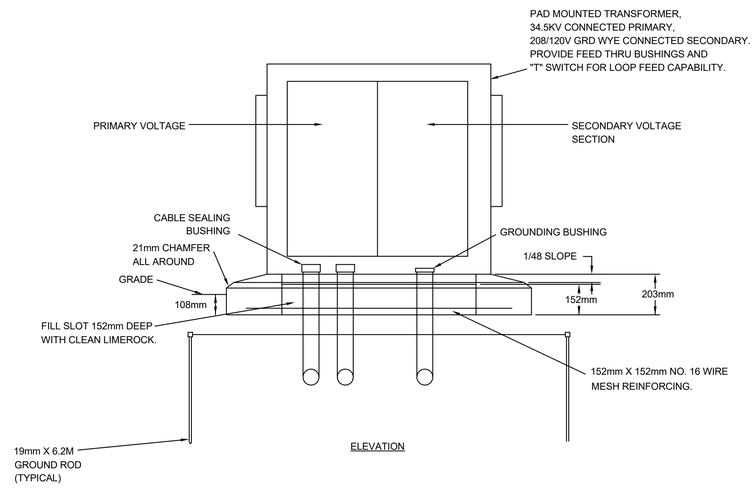

1 PAD MOUNTED TRANSFORMER INSTALLATION DETAIL

N.T.S.

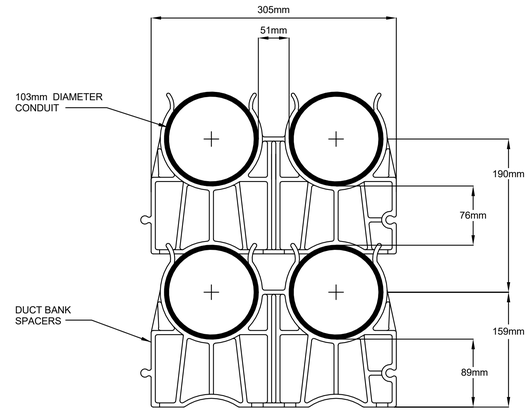

NOTES:
1. ALL DIMENSIONS ARE NOMINAL.
2. INSTALL SPACERS EVERY 127mm OF DUCT LENGTH.

2 SECONDARY DUCTBANK SECTION DETAIL

N.T.S.

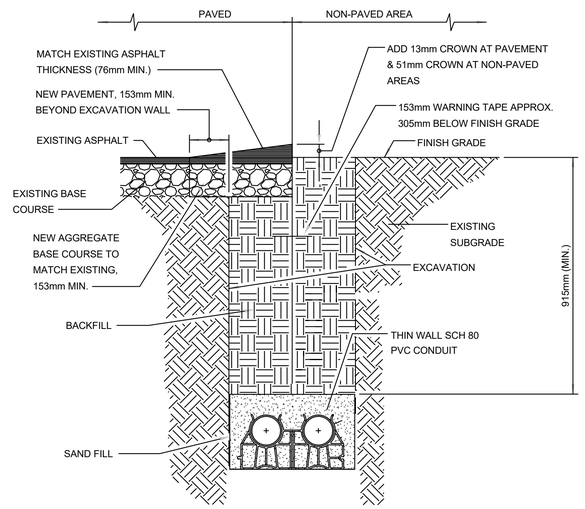

3 TYPICAL DIRECT BURIED DUCTBANK DETAIL

N.T.S.

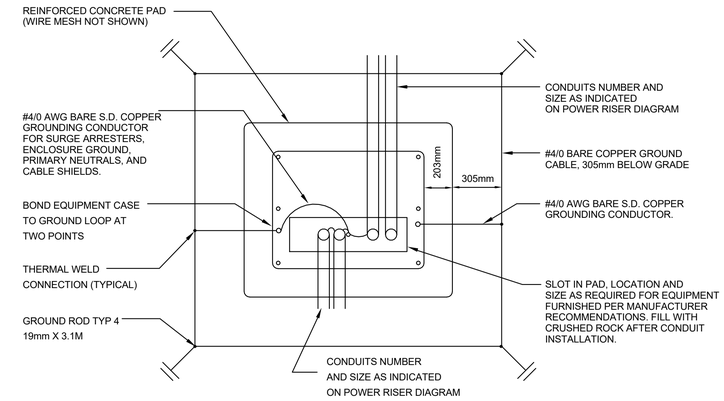

NOTES: ALL GROUND CONNECTIONS SHALL BE BRAZED OR EXOTHERMIC WELDED. GROUND RESISTANCE SHALL BE 25 OHMS OR LESS.

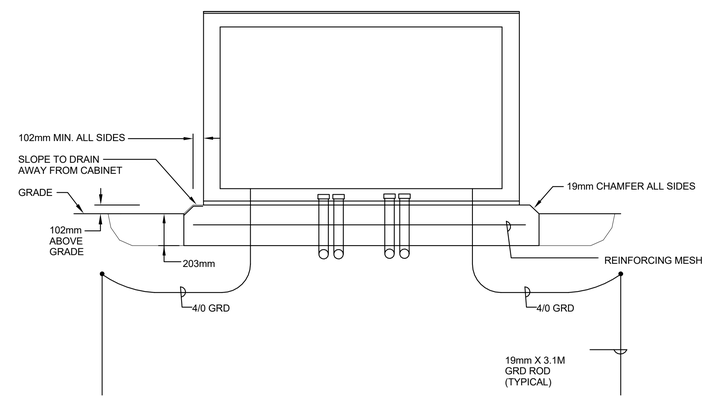

4 PAD MOUNTED SWITCH INSTALLATION DETAIL

N.T.S.

US Army Corps of Engineers®

MARK	DESCRIPTION	DATE

ISSUE DATE: FEBRUARY 2019
SOLICITATION NO.: W9127819R0028
CONTRACT NO.:
PROJECT NUMBER: M017EU44

DESIGNED BY: R.M.FORTNER
DRAWN BY: EN-DE
CHECKED BY: D.D.COLLIER
SUBMITTED BY: M.J.KNAPP
SIZE: ANSI D
FILE NAME: M017EU44

U.S. ARMY CORPS OF ENGINEERS
MOBILE DISTRICT
MOBILE, ALABAMA

SOTO CANO AIR BASE, HONDURAS
UNACCOMPANIED ENLISTED PERSONNEL HOUSING

ELECTRICAL DISTRIBUTION DETAILS

SHEET ID
ES502

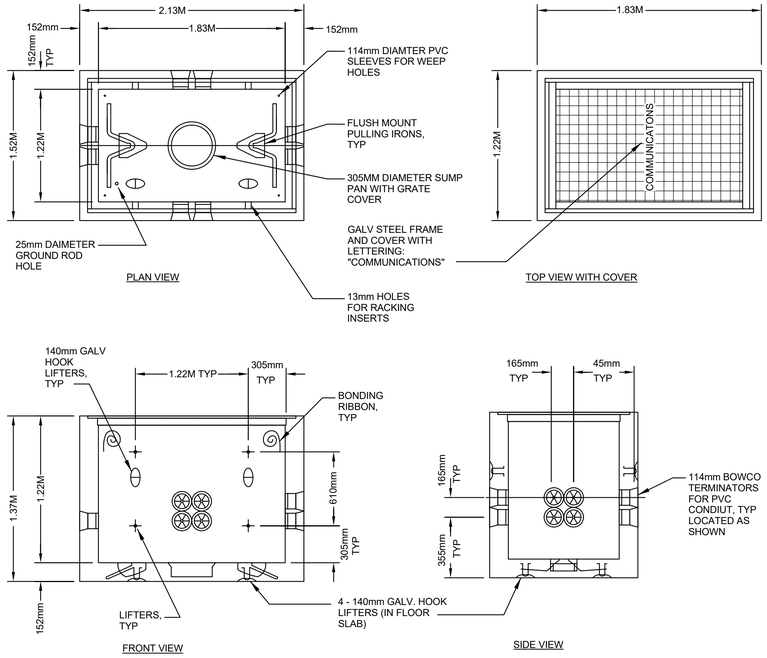

NOTES:

1. CONCRETE: 28 DAY COMPRESSIVE STRENGTH fc=5,000 PSI.
2. GRADE 60 STEEL REINFORCING.
3. PRECAST STRUCTURE ARE PRODUCED TO MEET OR EXCEED ASTM SPECIFICATIONS.
4. SUPPORTS H20 LOADING AS INDICATED BY AASHTO.
5. CONTRACTOR TO VERIFY SIZE AND LOCATION OF ALL OPENINGS.
6. SEE SPEC 33 71 02 FOR PULLING IRONS AND CABLE RACK REQUIREMENTS.

1 TELECOMMUNICATIONS HANDHOLE DETAIL

N.T.S.

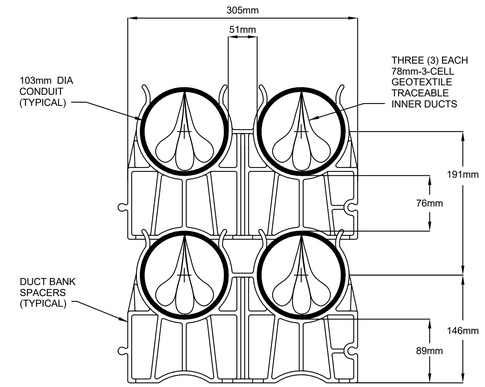

NOTES:

1. ALL DIMENSIONS ARE NOMINAL.
2. INSTALL SPACERS EVERY 1.5M OF DUCT LENGTH.

2 4-WAY DUCTBANK SECTION DETAIL

N.T.S.

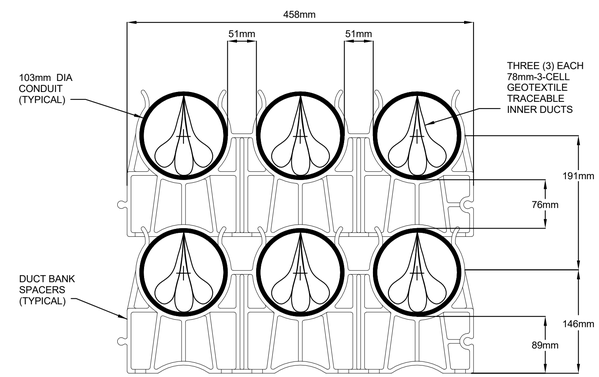

NOTES:

1. ALL DIMENSIONS ARE NOMINAL.
2. INSTALL SPACERS EVERY 1.5M OF DUCT LENGTH.

4 6-WAY DUCTBANK SECTION DETAIL

N.T.S.

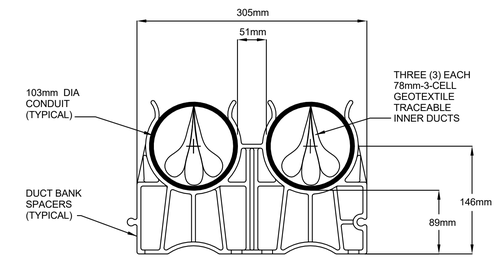

NOTES:

1. ALL DIMENSIONS ARE NOMINAL.
2. INSTALL SPACERS EVERY 1.5M FEET OF DUCT LENGTH.

3 2-WAY DUCTBANK SECTION DETAIL

N.T.S.

FIBER OPTIC ID	FO 07-07
# FIBER STRANDS	12 FO SM
CABLE COUNT	1-12 STRANDS

NOTES:

1. UNDER "# FIBER STRANDS", APPEND WITH "SM" FOR SINGLE-MODE FIBER OPTIC CABLE AND "MM" FOR MULTI-MODE FIBER OPTIC CABLE.

2. BUILDING ENTRANCE PROTECTOR TERMINALS AND FIBER OPTIC DISTRIBUTION PANELS SHALL BE LABELED USING YELLOW 26mm x 26mm SIZED LABEL.

5 FIBER OPTIC CABLE LABELING DETAIL

N.T.S.

BUILDING #	B####
SIZE-TYPE	P3-24PF
CABLE ID #	CA-07-05
CABLE COUNT	PAIR-601-800+100XD

NOTES:

1. SIZE-TYPE IN THIS EXAMPLE IS 300-PAIR (P3), 24 AWG (24PF). OMIT BUILDING # OUTSIDE OF MAIN TELECOM ROOM.

3. BUILDING ENTRANCE PROTECTOR TERMINALS AND FIBER OPTIC DISTRIBUTION PANELS SHALL BE LABELED USING YELLOW 26mm x 26mm SIZED LABEL.

6 COPPER CABLE LABELING DETAIL

N.T.S.

US Army Corps of Engineers®

MARK	DESCRIPTION	DATE

DESIGNED BY: R.M.FORTNER	ISSUE DATE: FEBRUARY 2019
DRAWN BY: EN-DE	SOLICITATION NO.: W912781R0028
CHECKED BY: D.D.COLLIER	CONTRACT NO.:
SUBMITTED BY: M.W.KNAPP	PROJECT NUMBER: M077E144
SIZE: ANSI D	FILE NAME: M077E144

U.S. ARMY CORPS OF ENGINEERS
MOBILE DISTRICT
MOBILE, ALABAMA

SOTO CANO AIR BASE, HONDURAS
UNACCOMPANIED ENLISTED PERSONNEL HOUSING

TELECOMMUNICATION OSP DETAILS

SHEET ID

ES503

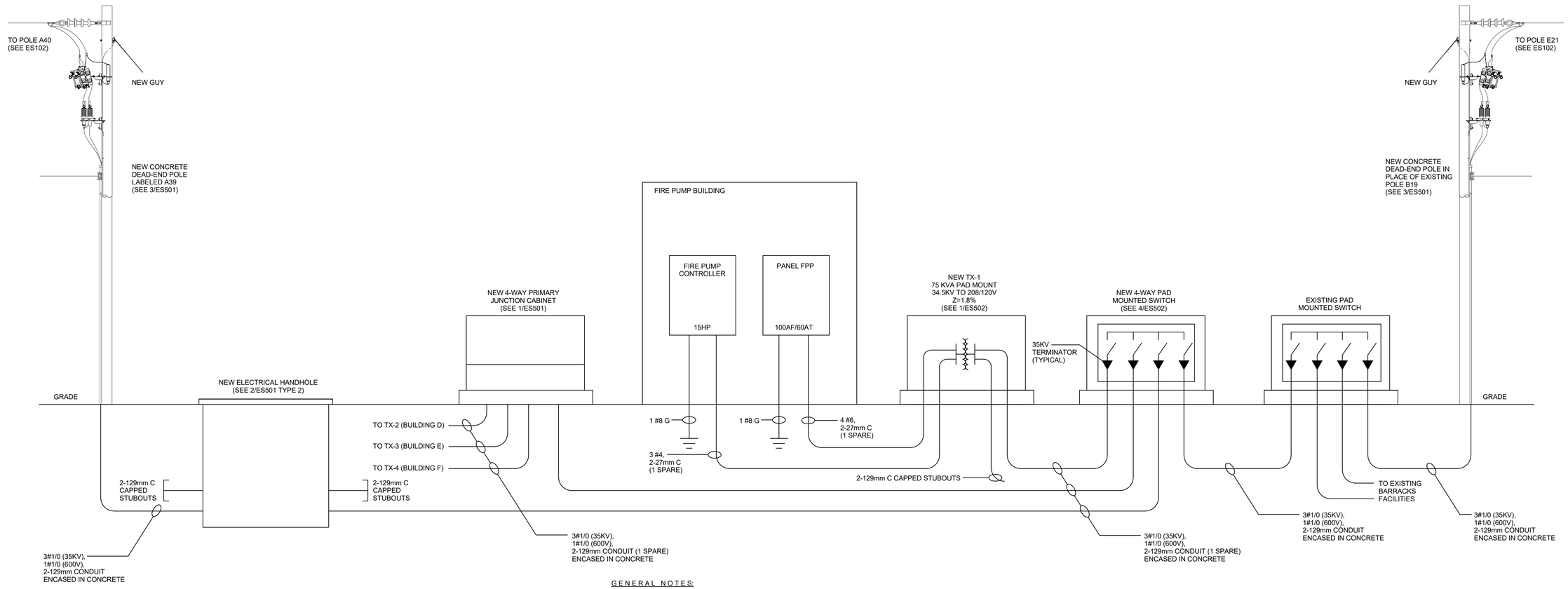

GENERAL NOTES:

1. SEE ES101 FOR ACTUAL EQUIPMENT LOCATIONS.
2. COORDINATE FINAL EQUIPMENT NAME CONVENTION WITH SOTO CANO BCE.
3. SEE EP601 FOR CONTINUATION TO SERVICE FOR BUILDINGS D, E, AND F.

1 ELECTRICAL DISTRIBUTION RISER DIAGRAM

N.T.S.

US Army Corps of Engineers®

MARK	DESCRIPTION	DATE

DESIGNED BY: R.M.FORTNER	ISSUE DATE: FEBRUARY 2019
DRAWN BY: EN-DE	SOLICITATION NO.: W912T819R0028
CHECKED BY: D.D.COLLIER	CONTRACT NO.:
SUBMITTED BY: W.W.KNAPP	PROJECT NUMBER: M077E144
SIZE: ANSI D	FILE NAME: M077E144

U.S. ARMY CORPS OF ENGINEERS
MOBILE DISTRICT
MOBILE, ALABAMA

SOTO CANO AIR BASE, HONDURAS
UNACCOMPANIED ENLISTED PERSONNEL HOUSING

ELECTRICAL DISTRIBUTION RISER DIAGRAM

SHEET ID

ES601

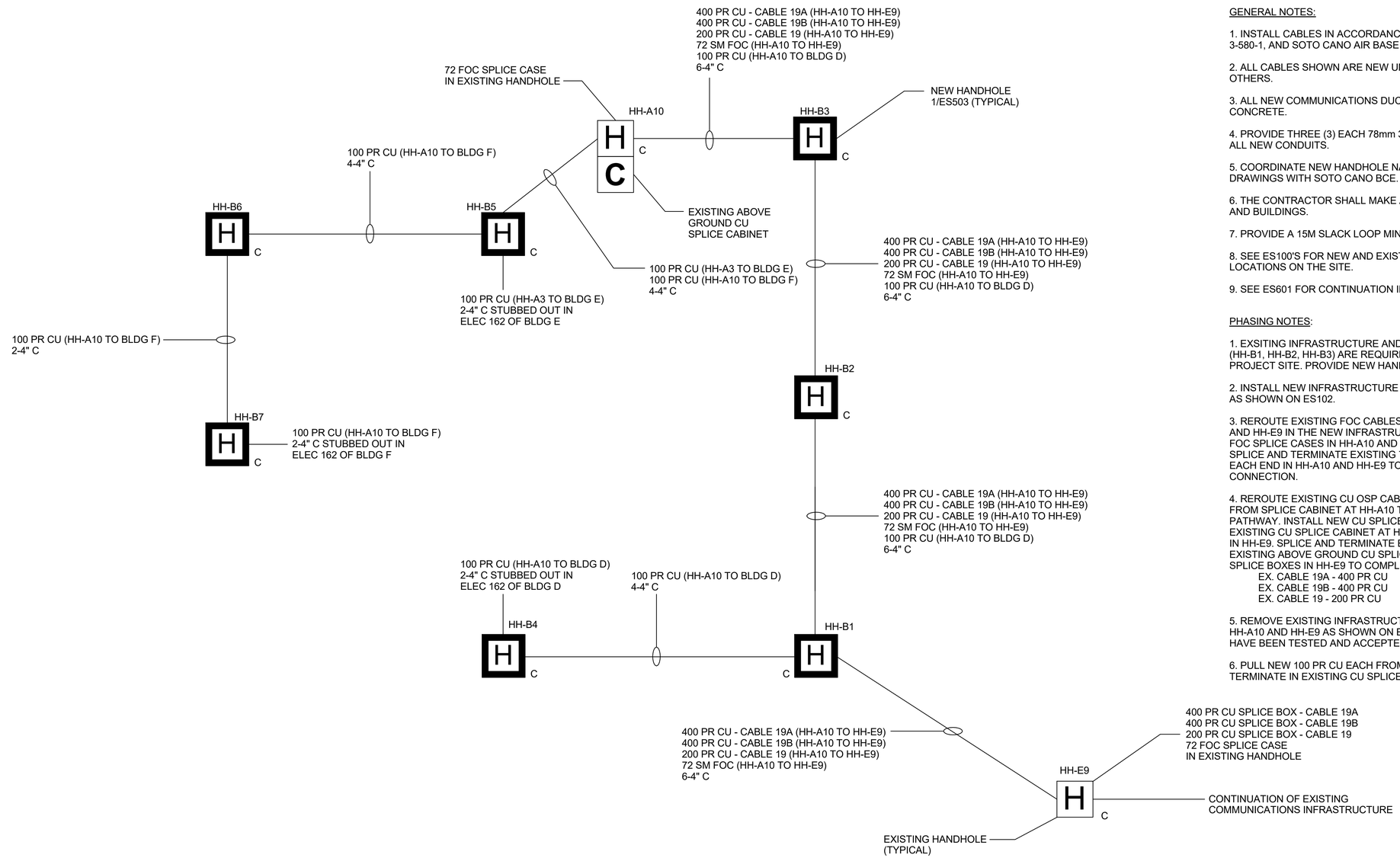

1 TELECOMMUNICATION OUTSIDE PLANT RISER DIAGRAM

N.T.S.

GENERAL NOTES:

1. INSTALL CABLES IN ACCORDANCE WITH SPECIFICATION 33 82 00, UFC 3-580-1, AND SOTO CANO AIR BASE COMMUNICATIONS REQUIREMETNS.

2. ALL CABLES SHOWN ARE NEW UNLESS NOTED AS EXISTING OR BY OTHERS.

3. ALL NEW COMMUNICATIONS DUCT BANKS SHALL BE ENCASED IN CONCRETE.

4. PROVIDE THREE (3) EACH 78mm 3-CELL GEOTEXTILE INNER DUCTS IN ALL NEW CONDUITS.

5. COORDINATE NEW HANDHOLE NAMING CONVENTION FOR AS-BUILT DRAWINGS WITH SOTO CANO BCE.

6. THE CONTRACTOR SHALL MAKE ALL TERMINATIONS; IN HAND HOLES AND BUILDINGS.

7. PROVIDE A 15M SLACK LOOP MINIMUM IN EACH HAND HOLE.

8. SEE ES100'S FOR NEW AND EXISTING MANHOLE/HANDHOLE LOCATIONS ON THE SITE.

9. SEE ES601 FOR CONTINUATION INTO THE BUILDINGS; D, E, & F.

PHASING NOTES:

1. EXSITING INFRASTRUCTURE AND CABLES BETWEEN HH-A10 AND HH-E9 (HH-B1, HH-B2, HH-B3) ARE REQUIRED TO BE RELOCATED AROUND THE NEW PROJECT SITE. PROVIDE NEW HANDHOLES WITH SAME NAMES AS SHOWN.

2. INSTALL NEW INFRASTRUCTURE PATHWAY BETWEEN HH-A10 AND HH-E9 AS SHOWN ON ES102.

3. REROUTE EXISTING FOC CABLES. PULL NEW 72 SM FOC BETWEEN HH-A10 AND HH-E9 IN THE NEW INFRASTRUCTURE PATHWAY. INSTALL NEW 72 SM FOC SPLICE CASES IN HH-A10 AND HH-E9 AND TERMINATE NEW 72 SM FOC. SPLICE AND TERMINATE EXISTING 72 SM FOC INTO NEW SPLICE CASES AT EACH END IN HH-A10 AND HH-E9 TO COMPLETE NEWLY ROUTED CONNECTION.

4. REROUTE EXISTING CU OSP CABLES (BELOW). PULL NEW CU QUANTITIES FROM SPLICE CABINET AT HH-A10 TO HH-E9 IN IN NEW INFRASTRUCTURE PATHWAY. INSTALL NEW CU SPLICE BOXES IN HH-E9. TERMINATE NEW CU IN EXISTING CU SPLICE CABINET AT HH-A10 AND NEW COPPER SPLICE BOXES IN HH-E9. SPLICE AND TERMINATE EXISTING CU CABLES AT EACH END INTO EXISTING ABOVE GROUND CU SPLICE CABINET AT HH-A10 AND NEW COPPER SPLICE BOXES IN HH-E9 TO COMPLETE NEWLY ROUTED CONNECTION.
   - EX. CABLE 19A - 400 PR CU
   - EX. CABLE 19B - 400 PR CU
   - EX. CABLE 19 - 200 PR CU

5. REMOVE EXISTING INFRASTRUCTURE PATHWAY AND CABLES BETWEEN HH-A10 AND HH-E9 AS SHOWN ON ES102 ONLY AFTER THE NEW CABLES HAVE BEEN TESTED AND ACCEPTED.

6. PULL NEW 100 PR CU EACH FROM BUILDINGS D, E, AND F TO HH-A10 AND TERMINATE IN EXISTING CU SPLICE CABINET.

US Army Corps of Engineers®

MARK	DESCRIPTION	DATE

DESIGNED BY: R.M.FORTNER
DRAWN BY: EN-DE
CHECKED BY: D.D.COLLIER
SUBMITTED BY: W.J.KNAPP
SIZE: ANSI D
ISSUE DATE: FEBRUARY 2019
SOLICITATION NO.: W912781R0028
CONTRACT NO.:
PROJECT NUMBER: M077E144
FILE NAME: M077E144

U.S. ARMY CORPS OF ENGINEERS
MOBILE DISTRICT
MOBILE, ALABAMA

SOTO CANO AIR BASE, HONDURAS
UNACCOMPANIED ENLISTED PERSONNEL HOUSING

TELECOMMUNICATION OSP RISER DIAGRAM

SHEET ID

ES602

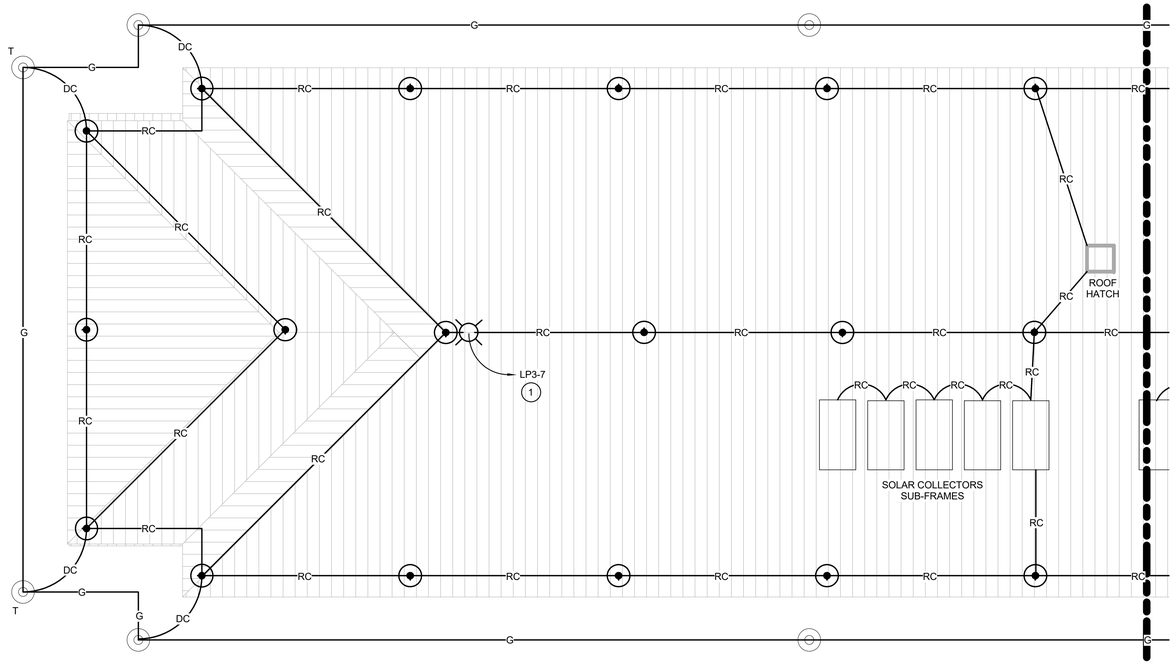

1 LIGHTNING PROTECTION PLAN - AREA "A"

1 : 100

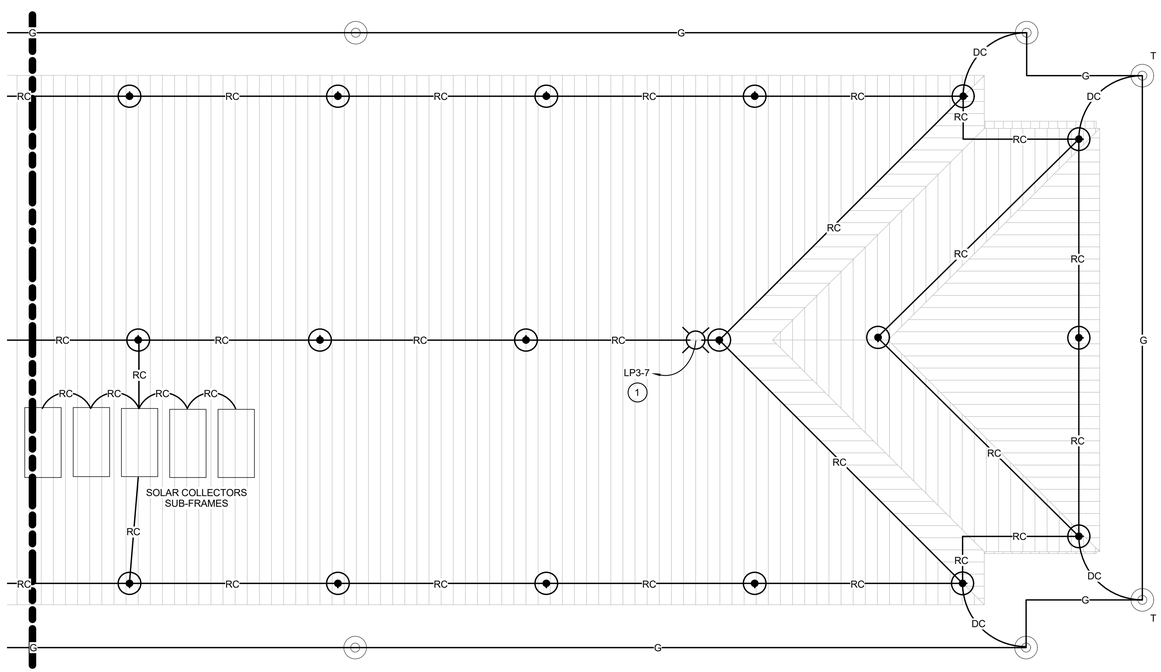

2 LIGHTNING PROTECTION PLAN - AREA "B"

1 : 100

LIGHTNING PROTECTION LEGEND

●	AIR TERMINAL
○ T	GROUNDING ROD ("T" DENOTES TEST WELL)
—— G ——	GRID COUNTERPOISE CONDUCTOR
—— RC ——	LIGHTNING PROTECTION ROOF CONDUCTOR
—— DC ——	LIGHTNING PROTECTION DOWN CONDUCTOR

GENERAL NOTES:

1. PLAN DRAWINGS ARE APPLICABLE TO BUILDINGS D, E, & F.
2. ALL FLOOR PLANS SHOWN ARE BASED ON BUILDING D ORIENTATION.
3. THE LIGHTNING PROTECTION SHALL UTILIZE ROOF CONDUCTORS AND DOWN CONDUCTORS TO CONNECT TO THE COUNTERPOISE SYSTEM. PROVIDE ADDITIONAL ROOF CONDUCTORS TO BOND ALL ROOF MOUNTED EQUIPMENT; SOLAR COLLECTORS SUB-FRAME, ROOF HATCH, ETC.
4. AIR TERMINALS SHALL BE 610mm X 10mm AND SPACED EVERY 7.5M MAX.
5. GROUND RODS SHALL BE 3M X 19mm AND SPACED EVERY 30M MAX.
6. COUNTERPOISE SHALL BE 3/0 AWG BARE COPPER BURIED 610mm BELOW GRADE MINIMUM, BETWEEN 1M AND 2.5M AWAY FROM THE BUILDING, AND HAVE NO BENDS LESS THAN 90 DEGREES.
7. ALL PERIMETER COLUMNS SHALL BE BONDED TO THE COUNTERPOISE SYSTEM.
8. SEE EG500'S FOR RISERS, DETAILS, AND ADDITIONAL CONDUCTOR SIZES.
9. SEE EP601 FOR GROUNDING SYSTEM TIE IN POINT TO SERVICE ENTRANCE ELECTRICAL EQUIPMENT.

KEYED NOTES:

1. TWIN FIXTURE HEAD OBSTRUCTION LIGHT. CONNECT VIA OBSTRUCTION LIGHT TEST PANEL SHOWN ON EL101. SEE FIXTURE DETAIL TYPE "OB" ON EL502 AND OBSTRUCTION LIGHTING CONTROL DIAGRAM 4/EL503.

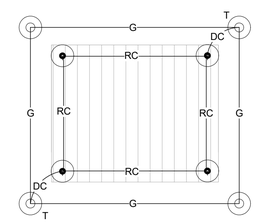

3 LIGHTNING PROTECTION PLAN - FIRE PUMP BUILDING

1 : 100

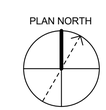

0 4000 8000

SCALE: 1 : 100

US Army Corps of Engineers®

MARK	DESCRIPTION	DATE

DESIGNED BY: R.M.FORTNER	ISSUE DATE: FEBRUARY 2019
DRAWN BY: EN-DE	SOLICITATION NO.: W912781R0028
CHECKED BY: D.D.COLLIER	CONTRACT NO.:
SUBMITTED BY: W.W.KNAPP	PROJECT NUMBER: M077E144
SIZE: ANSI D	FILE NAME: M077E144

U.S. ARMY CORPS OF ENGINEERS
MOBILE DISTRICT
MOBILE, ALABAMA

SOTO CANO AIR BASE, HONDURAS
UNACCOMPANIED ENLISTED PERSONNEL HOUSING

LIGHTNING PROTECTION PLAN

SHEET ID

EG101

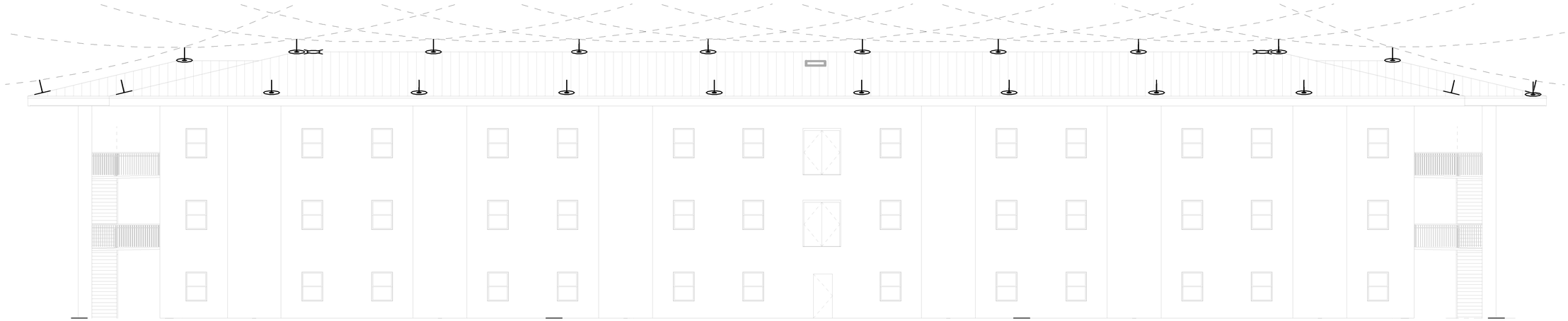

1 LIGHTNING PROTECTION ELEV - NORTH
1 : 100

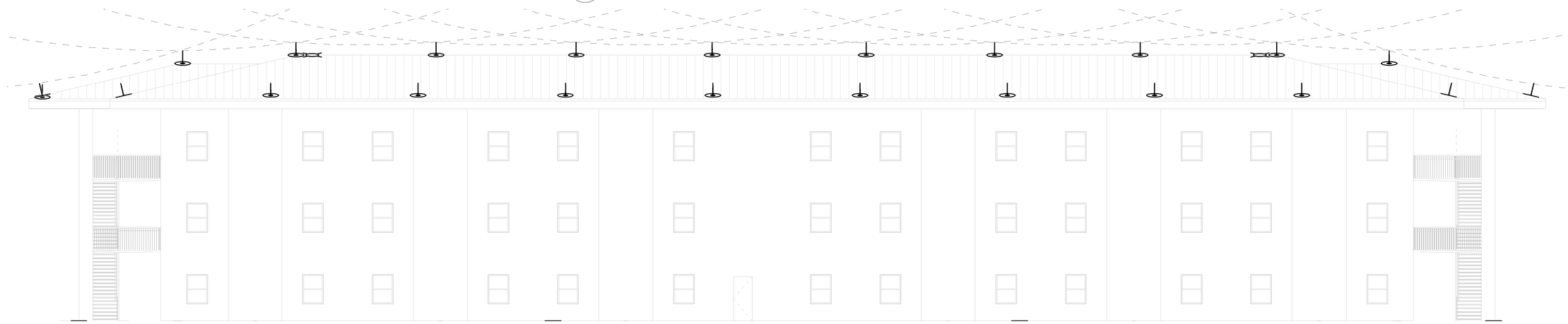

2 LIGHTNING PROTECTION ELEV - SOUTH
1 : 100

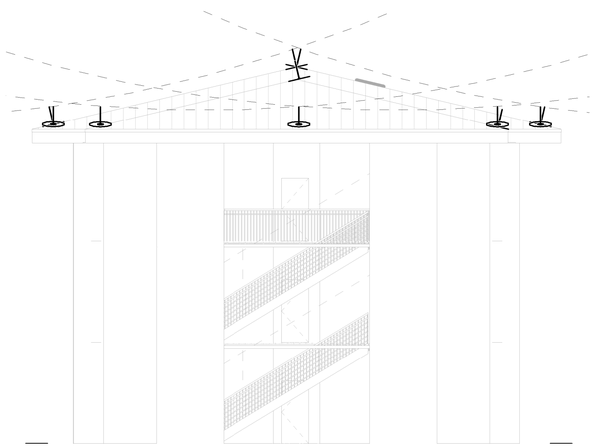

3 LIGHTNING PROTECTION ELEV - EAST
1 : 100

GENERAL NOTES:

1. THESE DRAWINGS INDICATE AREAS PROTECTED BY THE LIGHTNING PROTECTION SYSTEM USING THE ROLLING SPHERE METHOD (45.7M RADIUS). DASHED LINES INDICATE THE LIMITS OF THE ROLLING SPHERE PATH.

2. PROVIDE LIGHTNING PROTECTION IN ACCORDANCE WITH NFPA 780, UL 96, AND UFC 3-575-01. SYSTEM IS A PERFORMANCE BASED DESIGN PER SPECIFICATION SECTION 26 41 00. THE CONTRACT DOCUMENTS ARE MEANT TO CONVEY AREAS OF COVERAGE AND ARE NOT INTENDED TO SERVE AS THE CONTRACTOR'S LPS DESIGN AND AS SUCH SHALL NOT BE DUPLICATED AS 'SHOP DRAWINGS'.

3. SEE EG503 FOR LIGHTNING PROTECTION DETAILS.

0 4000 8000
SCALE: 1 : 100

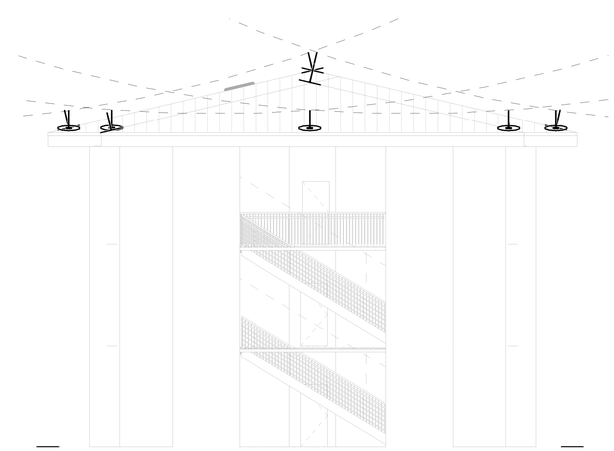

4 LIGHTNING PROTECTION ELEV - WEST
1 : 100

US Army Corps of Engineers®

MARK	DESCRIPTION	DATE

DESIGNED BY: R.M.FORTNER	ISSUE DATE: FEBRUARY 2019
DRAWN BY: EN-DE	SOLICITATION NO.: W9127819R0028
CHECKED BY: D.D.COLLIER	CONTRACT NO.:
SUBMITTED BY: W.W.KNAPP	PROJECT NUMBER: M077E144
SIZE: ANSI D	FILE NAME: M077E144

U.S. ARMY CORPS OF ENGINEERS
MOBILE DISTRICT
MOBILE, ALABAMA

SOTO CANO AIR BASE, HONDURAS
UNACCOMPANIED ENLISTED PERSONNEL HOUSING

LIGHTNING PROTECTION ELEVATIONS

SHEET ID
EG401

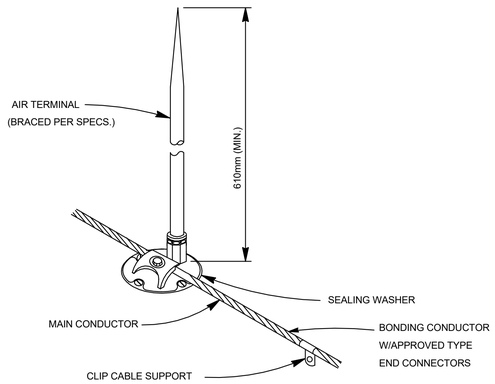

1 AIR TERMINAL WITH ROOF CONDUCTORS

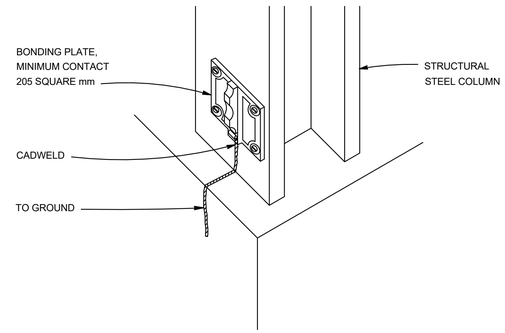

2 BONDING PLATE DETAIL

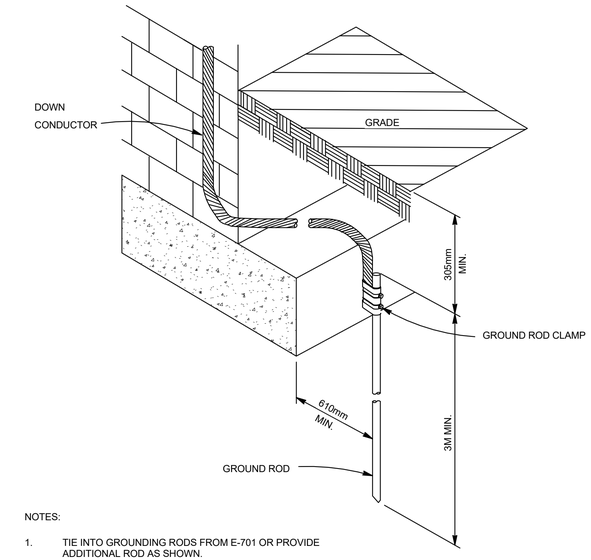

NOTES:

1. TIE INTO GROUNDING RODS FROM E-701 OR PROVIDE ADDITIONAL ROD AS SHOWN.

3 DOWN CONDUCTOR GROUND DETAIL

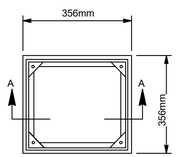

TOP VIEW - (COVER REMOVED)

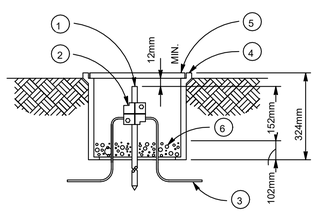

SECTION A-A

MATERIAL LIST

1	GROUND ROD	4	POLYMER CONCRETE FIBERGLASS REINFORCED BOX
2	GROUND CLAMP	5	COVER FOR ABOVE BOX
3	GROUNDING CONDUCTOR #1/0 COPPER	6	GRAVEL OR CRUSHED STONE

4 GROUND ROD TESTING WELL DETAIL

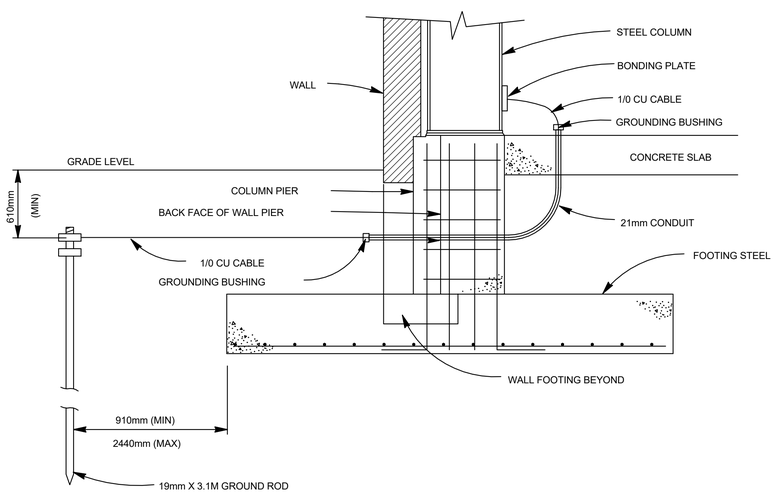

5 COLUMN GROUNDING DETAIL

US Army Corps of Engineers®

MARK	DESCRIPTION	DATE

DESIGNED BY: R.M.FORTNER	ISSUE DATE: FEBRUARY 2019
DRAWN BY: EN-DE	SOLICITATION NO.: W912781R0028
CHECKED BY: D.D.COLLIER	CONTRACT NO.:
SUBMITTED BY: W.W.KNAPP	PROJECT NUMBER: M077E144
SIZE: ANSI D	FILE NAME: M077E144

U.S. ARMY CORPS OF ENGINEERS
MOBILE DISTRICT
MOBILE, ALABAMA

SOTO CANO AIR BASE, HONDURAS
UNACCOMPANIED ENLISTED PERSONNEL HOUSING

LIGHTNING PROTECTION DETAILS

SHEET ID

EG501

LIGHTING LEGEND

AE	600mm X 1200mm RECESSED OR SURFACE MOUNTED FIXTURE. LETTER INDICATES TYPE PER THE FIXTURE SCHEDULE, "E" INDICATES BATTERY BACK-UP.
AE	600mm X 600mm RECESSED OR SURFACE CEILING MOUNTED FIXTURE. LETTER INDICATES TYPE PER THE FIXTURE SCHEDULE, "E" INDICATES BATTERY BACK-UP.
AE	COMBINATION CEILING FAN WITH LIGHT FIXTURE.
AE	1200mm OR 2400mm PENDANT MOUNTED FIXTURE. LETTER INDICATES TYPE PER THE FIXTURE SCHEDULE, "E" INDICATES BATTERY BACK-UP.
AE	1200mm PENDANT MOUNTED INDUSTRIAL FIXTURE. LETTER INDICATES TYPE PER THE FIXTURE SCHEDULE, "E" INDICATES BATTERY BACK-UP.
AE	600mm OR 1200mm WALL MOUNTED FIXTURE. LETTER INDICATES TYPE PER THE FIXTURE SCHEDULE. "E" INDICATES BATTERY BACK-UP.
AE	600mm UNDER CABINET MOUNTED FIXTURE. LETTER INDICATES TYPE PER THE FIXTURE SCHEDULE.
AE	150mm X 150mm RECESSED DOWNLIGHT FIXTURE, LETTER INDICATES TYPE PER FIXTURE SCHEDULE, "E" INDICATES BATTERY BACK-UP.
AE	ROUND SURFACE MOUNTED FIXTURE, LETTER INDICATES TYPE PER FIXTURE SCHEDULE.
AE	WALL MOUNTED FIXTURE, LETTER INDICATES TYPE PER FIXTURE SCHEDULE, "E" INDICATES BATTERY BACK-UP.
A	ROOF MOUNTED OBSTRUCTION FIXTURE. LETTER INDICATES TYPE PER THE FIXTURE SCHEDULE.)
AE	WALL MOUNTED HID FIXTURE. LETTER INDICATES TYPE PER FIXTURE SCHEDULE, "E" INDICATES BATTERY BACK-UP.
X	CEILING MOUNTED EXIT SIGN WITH DIRECTIONAL ARROWS AS INDICATED.
X	WALL MOUNTED EXIT SIGN WITH DIRECTIONAL ARROWS AS INDICATED.
$a	20 AMP, 277 VOLT TOGGLE SWITCH MOUNTED 1200mm AFF. a - CONTROLS LIGHTS WITH "a" DESIGNATION.
$D	SLIDING LIGHTING CONTROLS (FULL RANGE 0-100) MOUNTED 1200mm AFF.
$2	PUSH BUTTON LIGHTING CONTROLS (ON/OFF) MOUNTED 1200mm AFF.
$3	PUSH BUTTON LIGHTING CONTROLS (ON/DIM/OFF) MOUNTED 1200mm AFF.
$OS	PUSH BUTTON LIGHTING CONTROLS (ON/OFF) WITH INTEGRAL PIR OCCUPANCY SENSOR MOUNTED 1200mm AFF.
OS	CEILING OR PENDANT MOUNTED DUAL TECH OCCUPANCY SENSOR
VS	CEILING OR PENDANT MOUNTED DUAL TECH VACANCY SENSOR
LC	LIGHTING CONTACTOR

WIRING

A-21	1 #12 PHASE CONDUCTOR, 1#12 GROUNDED CONDUCTOR AND 1 #12 GREEN EQUIPMENT GROUND IN CONCEALED 16mm CONDUIT, UNLESS NOTED OTHERWISE. ARROW INDICATES HOMERUN TO PANEL "A", CIRCUIT 21.
	FLEXIBLE CONDUIT CONNECTION

ABBREVIATIONS

A	AMPERE
AC	ABOVE COUNTER
ADA	AMERICANS WITH DISABILITIES ACT
AFF	ABOVE FINISHED FLOOR
AL	ALUMINUM
1/C	ONE CONDUCTOR
C	CONDUIT
CB	CIRCUIT BREAKER
CKT	CIRCUIT
CU	COPPER
EF	EXHAUST FAN
EMT	ELECTRICAL METALLIC TUBING
EWC	ELECTRIC WATER COOLER
FACP	FIRE ALARM CONTROL PANEL
FAT	FIRE ALARM TRANSCEIVER
FM	FREQUENCY MODULATION
FMCP	FIRE ALARM/MASS NOTIFICATION CONTROL PANEL
FOC	FIBER OPTIC CABLE
GFI	GROUND FAULT CIRCUIT INTERRUPTER
GFP	GROUND FAULT PROTECTION
HACR	HEATING AIR CONDITIONING REFRIGATION
HP	HORSEPOWER
HPS	HIGH PRESSURE SODIUM
HT	HEIGHT
HZ	HERTZ
IDS	INTRUSION DETECTION SYSTEM
J	JUNCTION BOX
KWH	KILOWATT HOUR
LED	LIGHT EMITTING DIODE
MCB	MOLDED CASE CIRCUIT BREAKER
MH	METAL HALIDE
MLO	MAIN LUGS ONLY
MM	MULTIMODE
MTD	MOUNTED
NEC	NATIONAL ELECTRICAL CODE
NF	NON FUSED
NO.	NUMBER
OS	OCCUPANCY SENSOR
PH	PHASE
PIR	PASSIVE INFRARED
RGS	RIGID GALVANIZED STEEL
SM	SINGLE MODE
SPD	SURGE PROTECTION DEVICE
TTB	TELEPHONE TERMINAL BOARD
TV	TELEVISION
TVSS	TRANSIENT VOLTAGE SURGE SUPRESSOR
TX	TRANSFORMER
UNO	UNLESS NOTED OTHERWISE
V	VOLT
VA	VOLTAMPERE
VVD	VARIABLE VOLUME DAMPER
W	WATTS
WP	WATER PROOF
XFMR	TRANSFORMER

GENERAL NOTES

1. PLAN DRAWINGS ARE APPLICABLE TO BUILDINGS D, E, & F.
2. ALL FLOOR PLANS SHOWN ARE BASED ON BUILDING D ORIENTATION.

US Army Corps of Engineers®

MARK	DESCRIPTION	DATE

DESIGNED BY: R.M.FORTNER
DRAWN BY: EN-DE
CHECKED BY: D.D.COLLIER
SUBMITTED BY: W.W.KNAPP
SIZE: ANSI D
ISSUE DATE: FEBRUARY 2019
SOLICITATION NO.: W912781R0028
CONTRACT NO.:
PROJECT NUMBER: M077E144
FILE NAME: M077E144

U.S. ARMY CORPS OF ENGINEERS
MOBILE DISTRICT
MOBILE, ALABAMA

SOTO CANO AIR BASE, HONDURAS
UNACCOMPANIED ENLISTED PERSONNEL HOUSING

LIGHTING LEGEND

SHEET ID
EL001

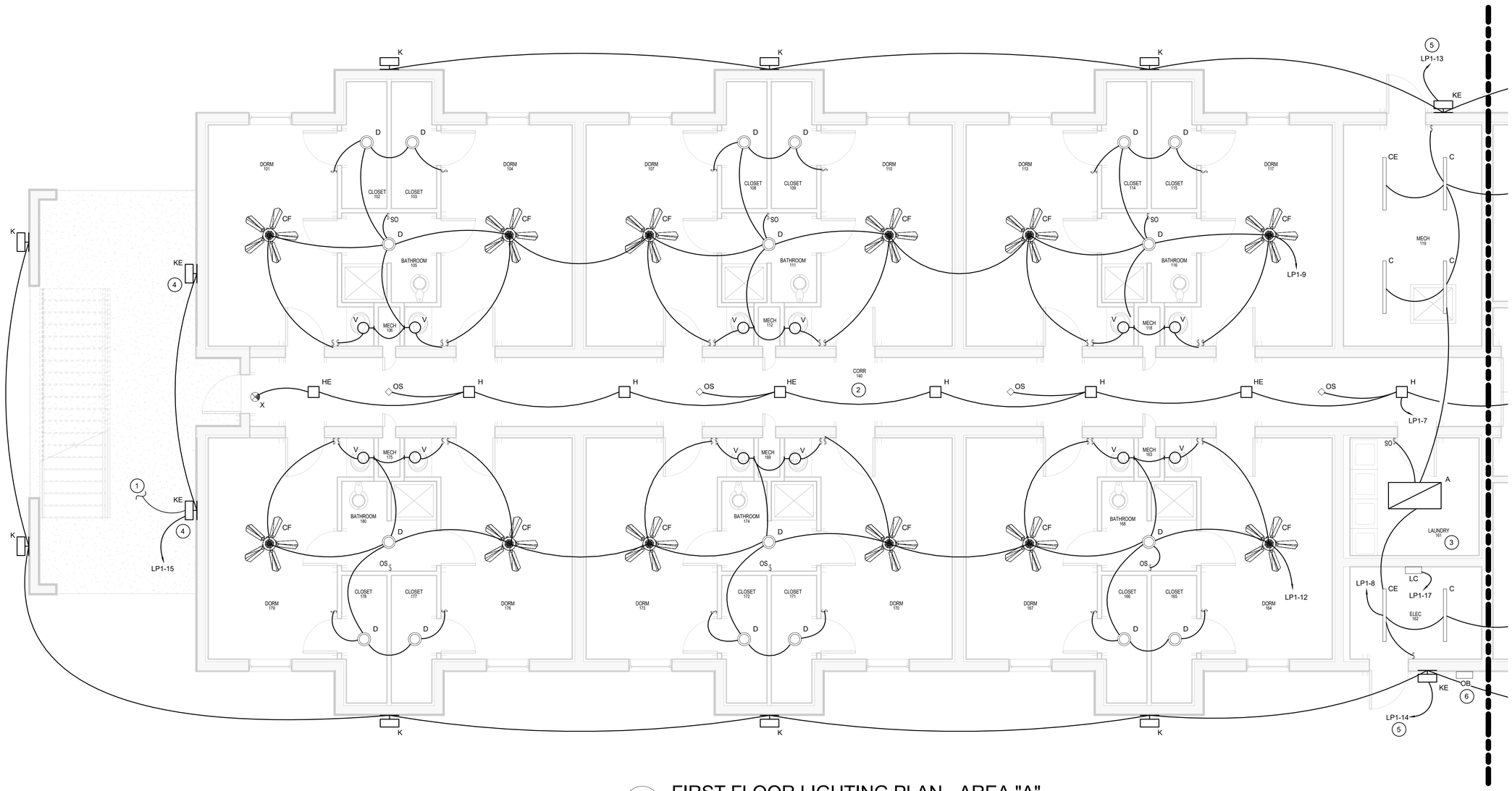

1 FIRST FLOOR LIGHTING PLAN - AREA "A"

1 : 50

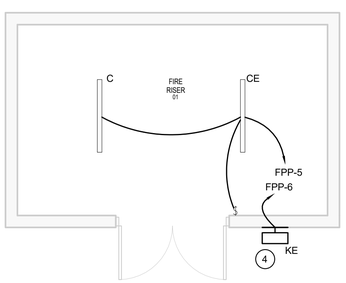

2 LIGHTING PLAN - FIRE PUMP BUILDING

1 : 50

KEYED NOTES:

1. CONNECT TO EXTERIOR FIXTURES ON THE SECOND FLOOR. SEE SHEET EL103.
2. SEE DETAIL 2/EL503 FOR CONTROLS TYPE.
3. SEE DETAIL 3/EL503 FOR CONTROLS TYPE.
4. PROVIDE INTEGRAL PHOTO-CONDUCTIVE CONTROLLER.
5. CONTROLLED VIA LIGHTING CONTACTOR "LC" IN ELEC 162. SEE DETAIL 7/EL503.
6. OBSTRUCTION LIGHT TEST PANEL FOR TWIN FIXTURE HEAD OBSTRUCTION LIGHTS SHOWN ON EG101. SEE OBSTRUCTION LIGHTING CONTROL DIAGRAM 4/EL503.

KEY PLAN

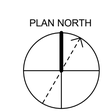

0 2000 4000

SCALE: 1 : 50

US Army Corps of Engineers®

MARK	DESCRIPTION	DATE

DESIGNED BY: R.M.FORTNER
DRAWN BY: EN-DE
CHECKED BY: D.D.COLLIER
SUBMITTED BY: W.JUKNAPP
SIZE: ANSI D
ISSUE DATE: FEBRUARY 2019
SOLICITATION NO.: W912ZB19R0028
CONTRACT NO.:
PROJECT NUMBER: M017E1J44
FILE NAME: M017E1J44

U.S. ARMY CORP'S OF ENGINEERS
MOBILE DISTRICT
MOBILE, ALABAMA

SOTO CANO AIR BASE, HONDURAS
UNACCOMPANIED ENLISTED PERSONNEL HOUSING

FIRST FLOOR LIGHTING PLAN - AREA "A" & FIRE PUMP BUILDING

SHEET ID

EL101

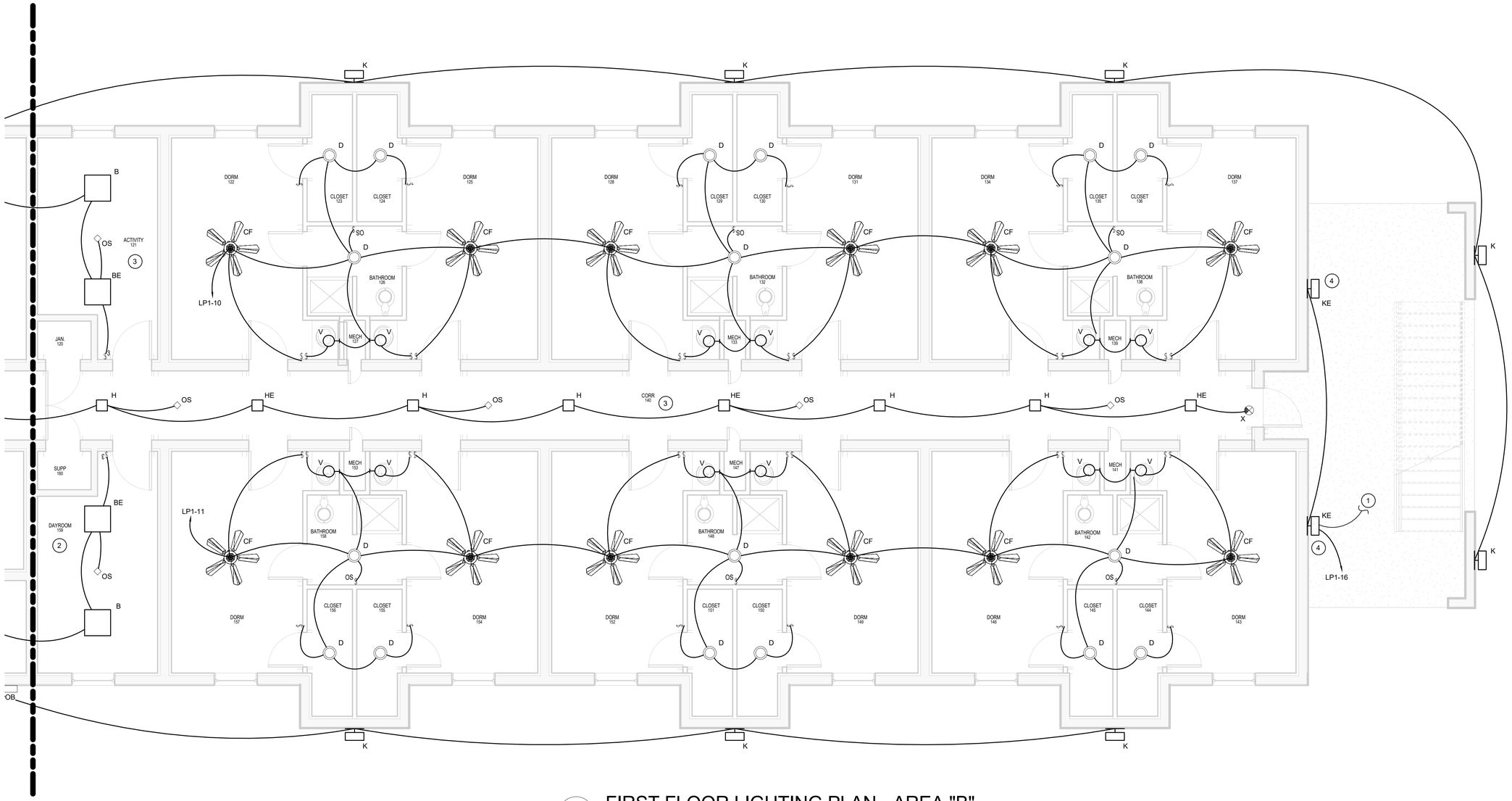

1 FIRST FLOOR LIGHTING PLAN - AREA "B"

1 : 50

KEYED NOTES:

1. CONNECT TO EXTERIOR FIXTURES ON THE SECOND FLOOR. SEE SHEET EL104.
2. SEE DETAIL 1/EL503 FOR CONTROLS TYPE.
3. SEE DETAIL 2/EL503 FOR CONTROLS TYPE.
4. PROVIDE INTEGRAL PHOTO-CONDUCTIVE CONTROLLER.

KEY PLAN

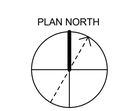

0 2000 4000

SCALE: 1 : 50

US Army Corps of Engineers®

MARK	DESCRIPTION	DATE

ISSUE DATE: FEBRUARY 2019
SOLICITATION NO.: W912ZB19R0028
CONTRACT NO.:
PROJECT NUMBER: M017E144
SIZE: ANSI D
FILE NAME: M017E144

DESIGNED BY: R.M.FORTNER
DRAWN BY: EN-DE
CHECKED BY: D.D.COLLIER
SUBMITTED BY: W.J.KNAPP

U.S. ARMY CORPS OF ENGINEERS
MOBILE DISTRICT
MOBILE, ALABAMA

SOTO CANO AIR BASE, HONDURAS
UNACCOMPANIED ENLISTED PERSONNEL HOUSING

FIRST FLOOR LIGHTING PLAN - AREA "B"

SHEET ID

EL102

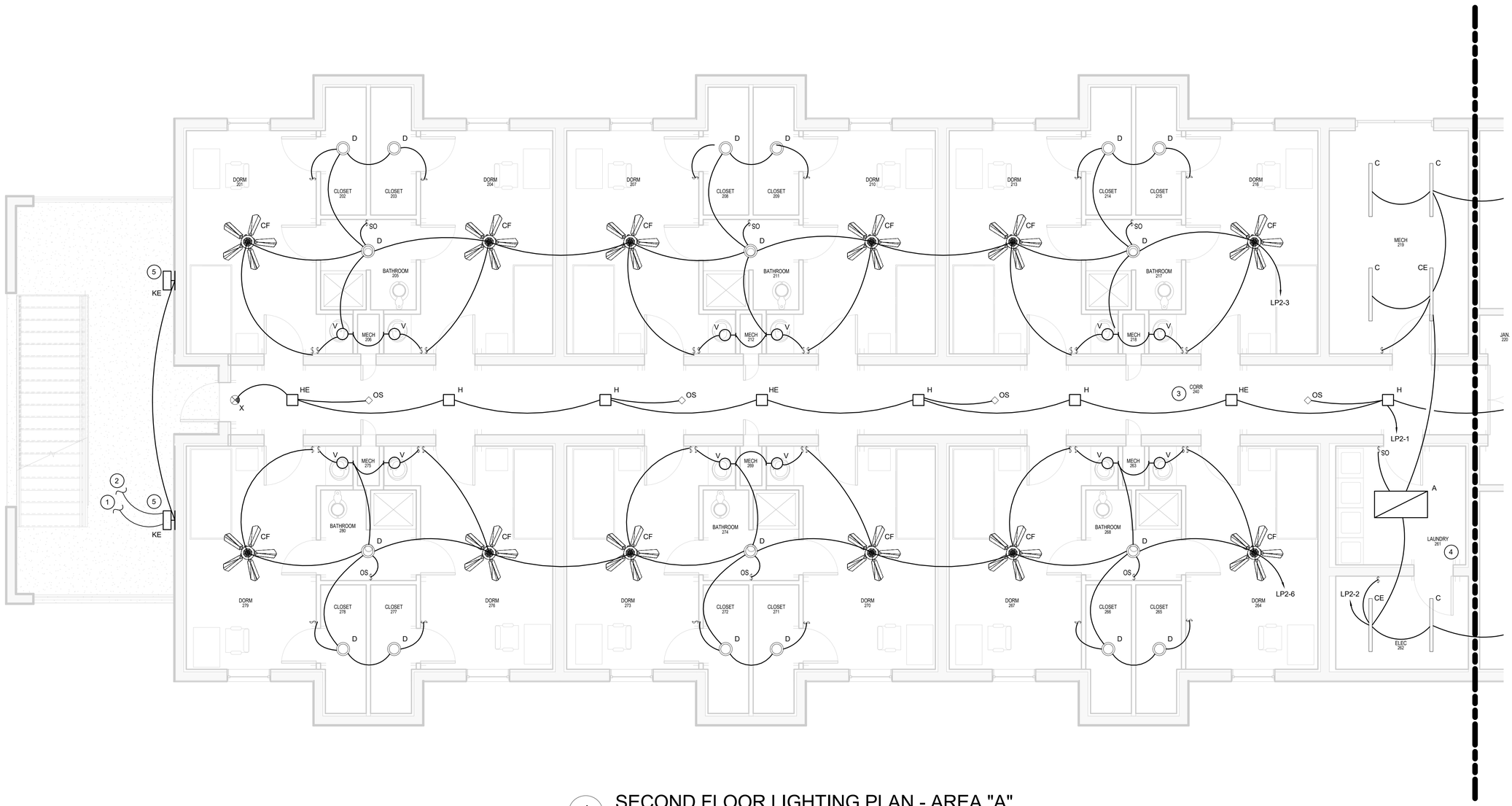

1 SECOND FLOOR LIGHTING PLAN - AREA "A"

1 : 50

KEYED NOTES:

1. CONNECT TO EXTERIOR FIXTURES ON THE FIRST FLOOR. SEE SHEET EL101.
2. CONNECT TO EXTERIOR FIXTURES ON THE THIRD FLOOR. SEE SHEET EL105.
3. SEE 2/EL503 FOR CONTROLS TYPE.
4. SEE 3/EL503 FOR CONTROLS TYPE.
5. PROVIDE INTEGRAL PHOTO-CONDUCTIVE CONTROLLER.

KEY PLAN

0 2000 4000

SCALE: 1 : 50

US Army Corps of Engineers®

MARK	DESCRIPTION	DATE

DESIGNED BY: R.M.FORTNER
DRAWN BY: EN-DE
CHECKED BY: D.D.COLLIER
SUBMITTED BY: W.JUKNAPP
SIZE: ANSI D
ISSUE DATE: FEBRUARY 2019
SOLICITATION NO.: W912ZB19R0028
CONTRACT NO.:
PROJECT NUMBER: M077E1444
FILE NAME: M077E1444

U.S. ARMY CORPS OF ENGINEERS
MOBILE DISTRICT
MOBILE, ALABAMA

SOTO CANO AIR BASE, HONDURAS
UNACCOMPANIED ENLISTED PERSONNEL HOUSING

SECOND FLOOR LIGHTING PLAN - AREA "A"

SHEET ID

EL103

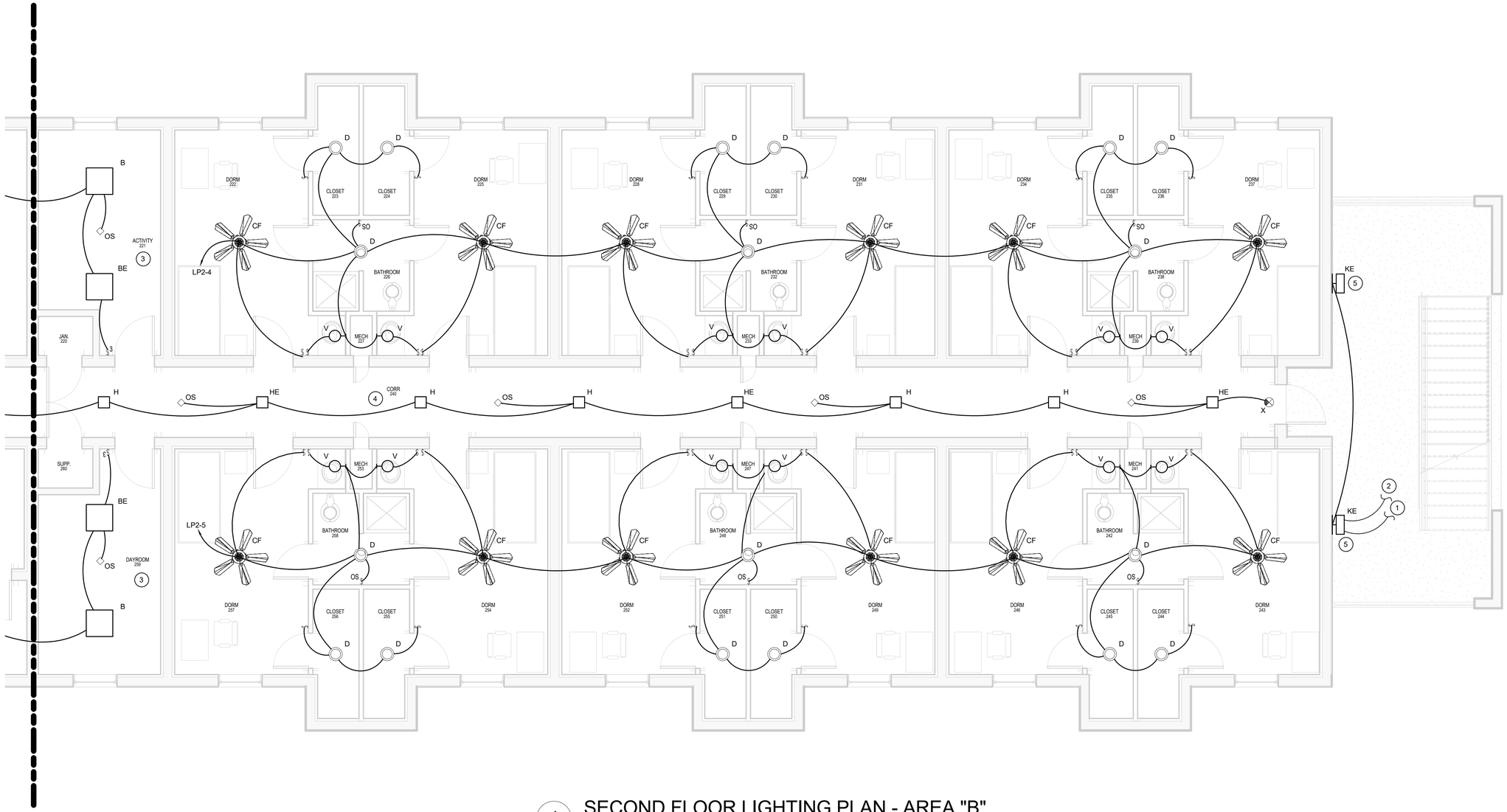

1 SECOND FLOOR LIGHTING PLAN - AREA "B"

1 : 50

KEYED NOTES:

1. CONNECT TO EXTERIOR FIXTURES ON THE FIRST FLOOR. SEE SHEET EL102.
2. CONNECT TO EXTERIOR FIXTURES ON THE THIRD FLOOR. SEE SHEET EL106.
3. SEE 1/EL503 FOR CONTROLS TYPE.
4. SEE 2/EL503 FOR CONTROLS TYPE.
5. PROVIDE INTEGRAL PHOTO-CONDUCTIVE CONTROLLER.

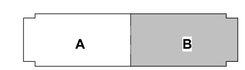

KEY PLAN

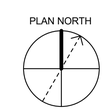

0 2000 4000

SCALE: 1 : 50

US Army Corps of Engineers®

MARK	DESCRIPTION	DATE

DESIGNED BY: R.M.FORTNER	ISSUE DATE: FEBRUARY 2019
DRAWN BY: EN-DE	SOLICITATION NO.: W912ZB19R0028
CHECKED BY: D.D.COLLIER	CONTRACT NO.:
SUBMITTED BY: W.JUNKAPP	PROJECT NUMBER: M077E1J44
SIZE: ANSI D	FILE NAME: M077E1J44

U.S. ARMY CORPS OF ENGINEERS
MOBILE DISTRICT
MOBILE, ALABAMA

SOTO CANO AIR BASE, HONDURAS
UNACCOMPANIED ENLISTED PERSONNEL HOUSING

SECOND FLOOR LIGHTING PLAN - AREA "B"

SHEET ID

EL104

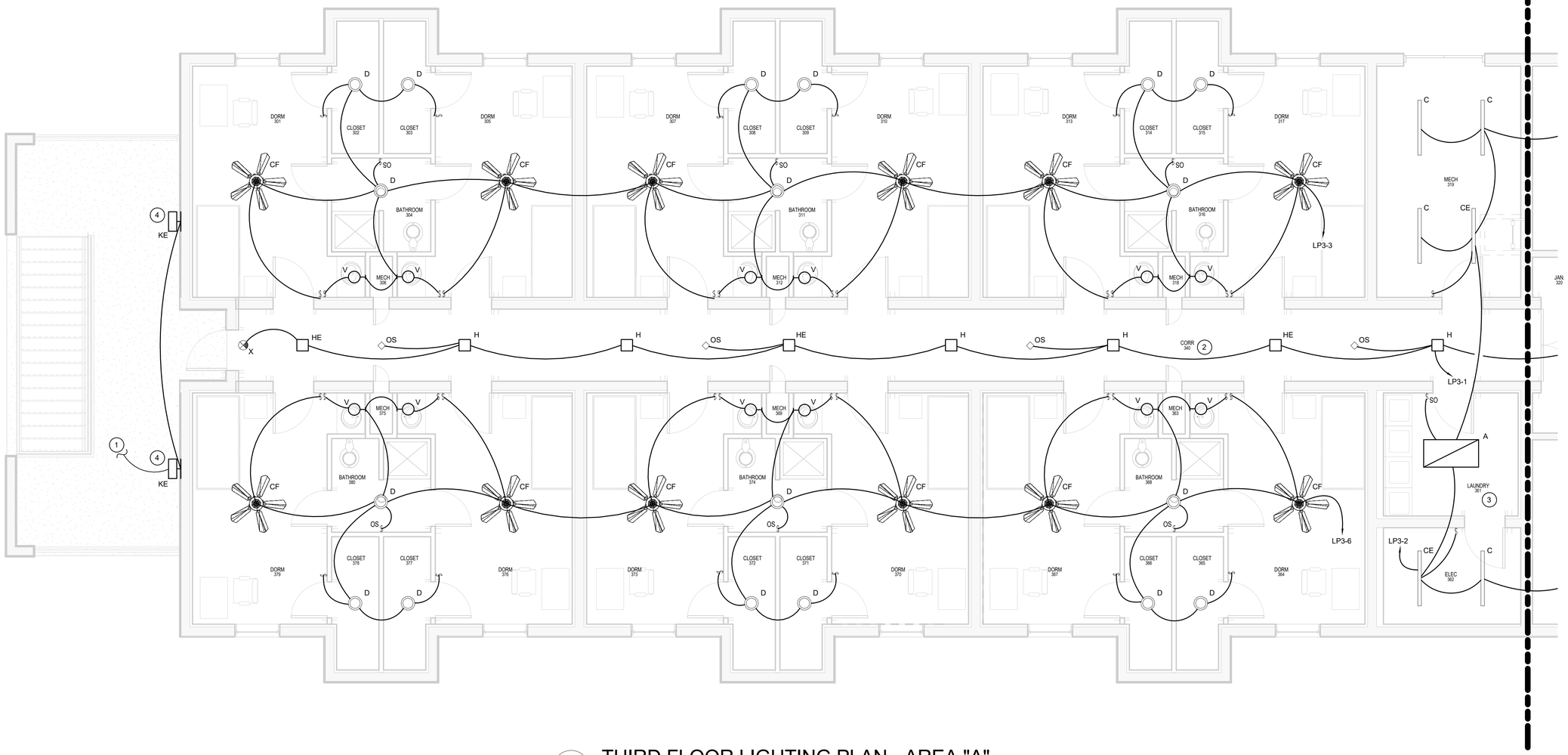

1 THIRD FLOOR LIGHTING PLAN - AREA "A"

1 : 50

KEYED NOTES:

1. CONNECT TO EXTERIOR FIXTURES ON THE SECOND FLOOR. SEE SHEET EL103.
2. SEE 2/EL503 FOR CONTROLS TYPE.
3. SEE 3/EL503 FOR CONTROLS TYPE.
4. PROVIDE INTEGRAL PHOTO-CONDUCTIVE CONTROLLER.

KEY PLAN

0 2000 4000

SCALE: 1 : 50

US Army Corps of Engineers®

MARK	DESCRIPTION	DATE

DESIGNED BY: R.M.FORTNER
DRAWN BY: EN-DE
CHECKED BY: D.D.COLLIER
SUBMITTED BY: W.J.KNAPP
SIZE: ANSI D
ISSUE DATE: FEBRUARY 2019
SOLICITATION NO.: W912ZB19R0028
CONTRACT NO.:
PROJECT NUMBER: M077E1444
FILE NAME: M077E1444

U.S. ARMY CORPS OF ENGINEERS
MOBILE DISTRICT
MOBILE, ALABAMA

SOTO CANO AIR BASE, HONDURAS
UNACCOMPANIED ENLISTED PERSONNEL HOUSING

THIRD FLOOR LIGHTING PLAN - AREA "A"

SHEET ID

EL105

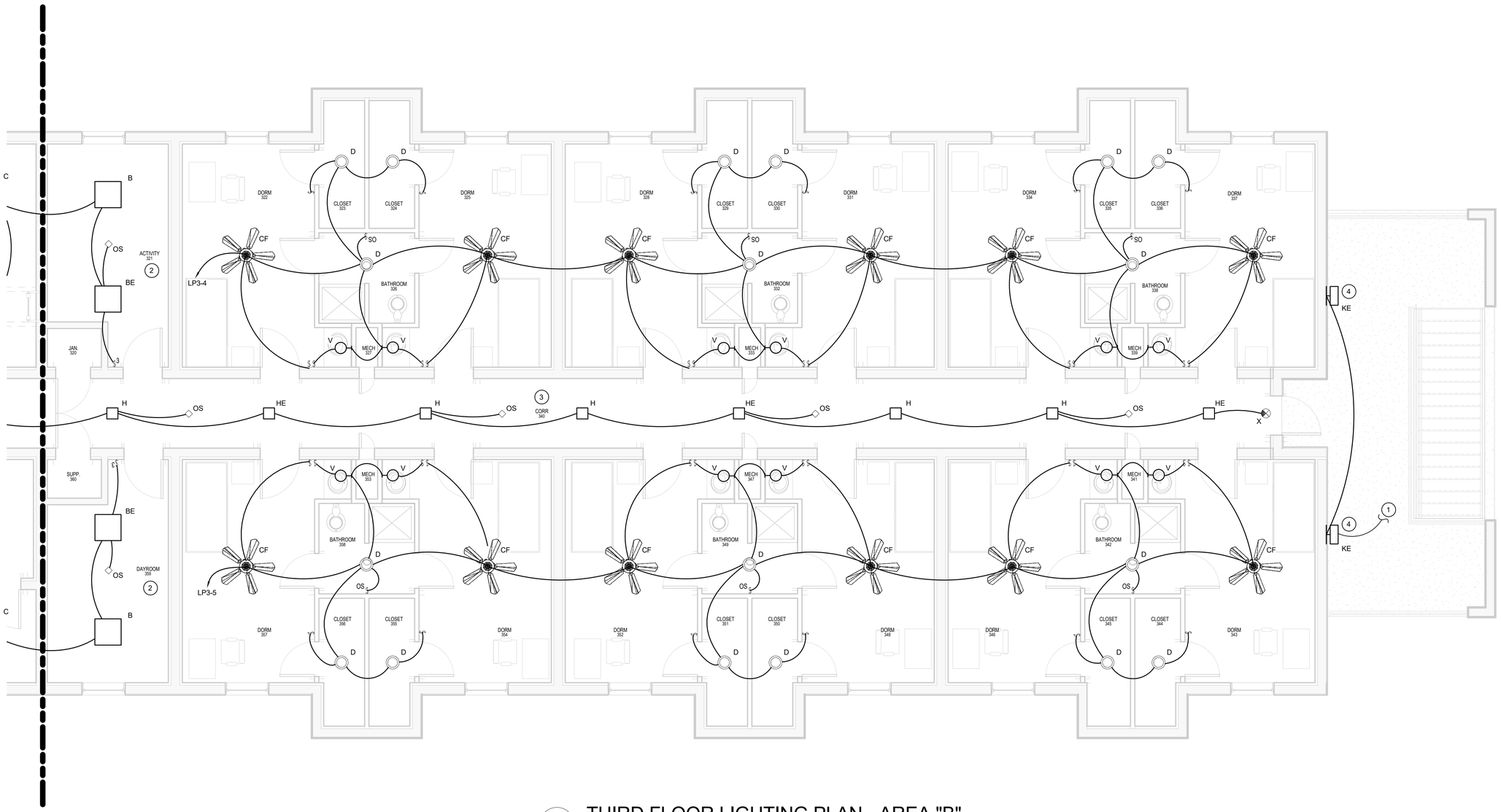

1 THIRD FLOOR LIGHTING PLAN - AREA "B"

1 : 50

KEYED NOTES:

1. CONNECT TO EXTERIOR FIXTURES ON THE SECOND FLOOR. SEE SHEET EL104.
2. SEE 1/EL503 FOR CONTROLS TYPE.
3. SEE 2/EL503 FOR CONTROLS TYPE.
4. PROVIDE INTEGRAL PHOTO-CONDUCTIVE CONTROLLER.

KEY PLAN

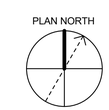

0 2000 4000

SCALE: 1 : 50

US Army Corps of Engineers®

MARK	DESCRIPTION	DATE

ISSUE DATE: FEBRUARY 2019
SOLICITATION NO.: W912ZB19R0028
CONTRACT NO.:
PROJECT NUMBER: M017E144

DESIGNED BY: R.M.FORTNER
DRAWN BY: EN-DE
CHECKED BY: D.D.COLLIER
SUBMITTED BY: M.J.KNAPP
SIZE: ANSI D
FILE NAME: M017E144

U.S. ARMY CORPS OF ENGINEERS
MOBILE DISTRICT
MOBILE, ALABAMA

SOTO CANO AIR BASE, HONDURAS
UNACCOMPANIED ENLISTED PERSONNEL HOUSING

THIRD FLOOR LIGHTING PLAN - AREA "B"

SHEET ID

EL106

LIGHTING FIXTURES SCHEDULE

Type Mark	Lamp	Initial Color Temperature	Wattage	Count	Mounting
A	LED	3500 K	51 W	3	Recessed Ceiling
B	LED	3500 K	37 W	6	Recessed Ceiling
BE	LED	3500 K	37 W	6	Recessed Ceiling
C	LED	3500 K	33 W	13	Pendant 2700mm AFF
CE	LED	3500 K	33 W	7	Pendant 2700mm AFF
CF	LED	3500 K	18 W	72	Surface Ceiling
D	LED A-19	3500 K	13 W	108	Recessed Ceiling
H	LED	3500 K	23 W	30	Recessed Ceiling
HE	LED	3500 K	23 W	18	Recessed Ceiling
K	LED	3500 K	48 W	16	Wall 2400mm AFF
KE	LED	3500 K	48 W	15	Wall 2400mm AFF
R	LED	2800 K	41 W	14	Finished Grade
V	LED	3500 K	18 W	72	Wall 2100mm AFF
X	LED		5 W	6	Surface Ceiling

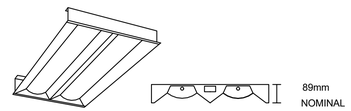

LUMINAIRE REQUIREMENTS:

1. HOUSING - DIE-FORMED, COLD-ROLLED STEEL, OR SIMILAR; ENCLOSED LED CHAMBER WITH REMOVABLE LENS; HIGHLY REFLECTIVE WHITE FINISH ON PRETREATED METAL.

2. FINISH - HIGHLY REFLECTANCE (MINIMUM 85%), BAKED WHITE ENAMEL FINISH.

3. REFLECTORS - HIGH REFLECTANCE WHITE PAINT.

4. LIGHT BASKET - TEXTURED OPAL SURFACE DESIGNED FOR LIGHTING LENSES..

5. LAMPS - LED, TYPICALLY WITH WATTAGES AS INDICATED. SEE LIGHTING FIXTURE SCHEDULE; CONSISTENT FIXTURE TO FIXTURE COLOR TEMPERATURE; EASILY REPLACEABLE ARRAY BOARDS.

6. LED DRIVER - NEMA 410 COMPLIANT. ACCOMMODATES 120-277 V INPUT VOLTS. DIMMING STANDARD TO 10% WITH 0-10V DC CONTROL PROTOCOL. EASY ACCESS TO DRIVER FOR MAINTENANCE.

7. CERTIFICATION - UL LISTED AND LABELED.

8. INSTALLATION - LIGHTWEIGHT AND EASY TO INSTALL IN ANY STANDARD T-BAR OR SCREW SLOT GRID. DRYWALL FRAME AVAILABLE.

9. LIFE - RATED FOR 50,000 HRS.

10. OPTIONS - EMERGENCY DRIVER

DIRECT/INDIRECT LED - 600mm X 1200mm — TYPE A, AE

REVISED: 2016 | LIGHTING PLATE:

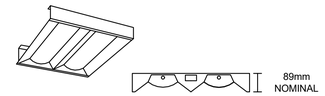

LUMINAIRE REQUIREMENTS:

1. HOUSING - DIE-FORMED, COLD-ROLLED STEEL, OR SIMILAR; ENCLOSED LED CHAMBER WITH REMOVABLE LENS; HIGHLY REFLECTIVE WHITE FINISH ON PRETREATED METAL.

2. FINISH - HIGHLY REFLECTANCE (MINIMUM 85%), BAKED WHITE ENAMEL FINISH.

3. REFLECTORS - HIGH REFLECTANCE WHITE PAINT.

4. LIGHT BASKET - TEXTURED OPAL SURFACE DESIGNED FOR LIGHTING LENSES..

5. LAMPS - LED, TYPICALLY WITH WATTAGES AS INDICATED. SEE LIGHTING FIXTURE SCHEDULE; CONSISTENT FIXTURE TO FIXTURE COLOR TEMPERATURE; EASILY REPLACEABLE ARRAY BOARDS.

6. LED DRIVER - NEMA 410 COMPLIANT. ACCOMMODATES 120-277 V INPUT VOLTS. DIMMING STANDARD TO 10% WITH 0-10V DC CONTROL PROTOCOL. EASY ACCESS TO DRIVER FOR MAINTENANCE.

7. CERTIFICATION - UL LISTED AND LABELED.

8. INSTALLATION - LIGHTWEIGHT AND EASY TO INSTALL IN ANY STANDARD T-BAR OR SCREW SLOT GRID. DRYWALL FRAME AVAILABLE.

9. LIFE - RATED FOR 50,000 HRS.

10. OPTIONS - EMERGENCY DRIVER

DIRECT/INDIRECT LED - 600mm X 600mm — TYPE B, BE

REVISED: 2016 | LIGHTING PLATE:

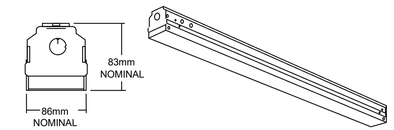

LUMINAIRE REQUIREMENTS:

1. HOUSING - DIE-FORMED, COLD-ROLLED STEEL, OR SIMILAR; SNAP 'N' LOCK END PLATES; TOOL-LESS CHANNEL COVER; HIGHLY REFLECTIVE WHITE FINISH ON PRETREATED METAL.

2. FINISH - HIGH GLOSS, BAKED WHITE ENAMEL FINISH.

3. OPTICS - REPLACEABLE MEDIUM DIFFUSE LENS.

4. LAMPS - LED, TYPICALLY WITH WATTAGES AS INDICATED. SEE LIGHTING FIXTURE SCHEDULE; CONSISTENT FIXTURE TO FIXTURE COLOR TEMPERATURE; COOL-RUNNING OPERATION.

5. LED DRIVER - NEMA 410 COMPLIANT. ACCOMMODATES 120-277 V INPUT VOLTS. DIMMING STANDARD TO 10% WITH 0-10V DC CONTROL PROTOCOL. EASY ACCESS TO DRIVER FOR MAINTENANCE.

6. CERTIFICATION - UL LISTED AND LABELED.

7. INSTALLATION - SURFACE, PENDANT, OR STEM MOUNTED.

8. LIFE - RATED FOR 50,000 HRS.

9. OPTIONS - EMERGENCY DRIVER

INDUSTRIAL LED - 1200mm — TYPE C, CE

REVISED: 2016 | LIGHTING PLATE:

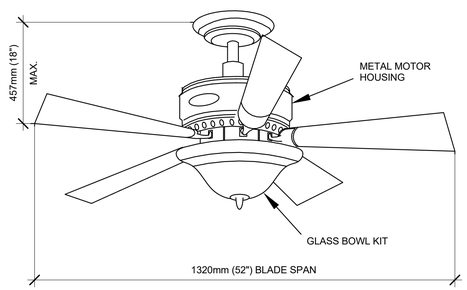

LUMINAIRE REQUIREMENTS:

1. HOUSING - DIE-CAST ALUMINUM WITH PREMIUM BRONZE FINISH.

2. MOTOR - 120V AC, 60HZ, 15A CIRCUIT (MIN). 3 SPEED (MIN), HIGH 146 RPM (MAX).

3. BLADES - FIVE (5) REVERSIBLE BLADES WITH 13 DEGREE BLADE PITCH, WALNUT/CHERRY.

4. MOUNTING - UNIVERSAL DOWNROD MOUNTING KIT FOR CEILING. 51mm (2") AND 76mm (3") DOWNRODS INCLUDED FOR PROPER MOUNTING HEIGHT.

5. ILLUMINATION - TRANSITIONAL GLASS BOWL LIGHT KIT WITH TWO (2) 9 WATT LED BULBS, 3000K, 700 LUMENS EACH.

6. CONTROLS - STANDARD WALL SWITCH AND PULL CHAINS FOR LIGHT ON/OFF AND SPEED ADJUSTMENTS.

CEILING FAN LIGHT FIXTURE — TYPE CF

REVISED: 2017 | LIGHTING PLATE:

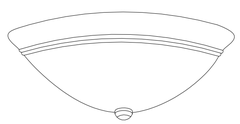

LUMINAIRE REQUIREMENTS:

1. HOUSING - DIE-FORMED 20 GUAGE COLD-ROLLED STEEL BACK PAN WITH REFLECTIVE FINISH.

2. NOMINAL DIMENSIONS - L: 15" (381mm), W: 15" (381mm), H: 5-1/2" (140mm), 14" (556mm) DIA BOWL.

3. FINISH - POLISHED BRUSHED NICKEL.

4. OPTICS - WHITE FROSTED GLASS.

5. LAMPS - LED (A-19), 1-LAMP TYPICALLY WITH WATTAGES AS INDICATED. SEE LIGHTING FIXTURE SCHEDULE; CONSISTENT FIXTURE TO FIXTURE COLOR TEMPERATURE.

6. CERTIFICATION - UL LISTED AND LABELED.

7. INSTALLATION - SURFACE MOUNTED.

ROUND SURFACE LED — TYPE D

REVISED: 2018 | LIGHTING PLATE:

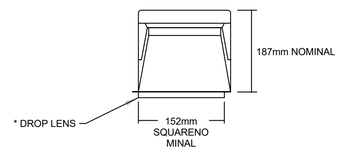

LUMINAIRE REQUIREMENTS:

1. HOUSING - HEAVY GAUGE COLD ROLLED STEEL. DESIGNED TO CONDUCT HEAT AWAY FROM THE LED KEEPING JUNCTION TEMPERATURES BELOW SPECIFIED MAXIMUMS.

2. REFLECTOR - ONE-PIECE, CLEAR, IRIDESCENCE-SUPPRESSED.

3. DRIVER - INTEGRAL, THERMALLY PROTECTED ELECTRONIC LED DRIVER, UNIVERSAL VOLTAGE

4. LAMPS - LED

5. LENS/TRIM - COMPATIBLE WITH LED HOUSING AND SUITABLE FOR DAMP/WET LOCATIONS.

6. CERTIFICATION - UL LISTED AND LABELED FOR DAMP LOCATIONS.

RECESSED DOWNLIGHT LED - 150mm X150mm — TYPE H,HE

REVISED: 2016 | LIGHTING PLATE:

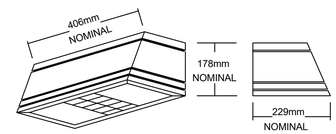

LUMINAIRE REQUIREMENTS:

1. HOUSING/BACKPLATE: ONE-PIECE, DIE-CAST ALUMINUM HOUSING INTEGRATES SECONDARY HEAT SINKS TO OPTIMIZE THERMAL TRANSFER FROM THE INTERNAL LIGHT ENGINE HEAT SINKS AND PROMOTE LONG LIFE.

2. FINISH: ZINC-INFUSED POWDER COAT FINISH THAT PROVIDES SUPERIOR RESISTANCE TO CORROSION AND WEATHERING. MINIMUM THREE MILS THICKNESS FOR A FINISH THAT CAN WITHSTAND EXTREME CLIMATE CHANGES WITHOUT CRACKING OR PEELING.

3. OPTICS: PRECISION MOLDED ACRYLIC LENSES ENGINEERED FOR SUPERIOR DISTRIBUTION, UNIFORMITY AND SPACING. LIGHT ENGINES ARE 4000K.

4. ELECTRICAL: HEIGHT ENGINE CONSISTS OF 10 HIGH EFFICIENCY LEDS MOUNTED TO A METAL CORE CIRCUIT BOARD AND INTEGRAL ALUMINUM HEAT SINKS TO MAXIMIZE HEAT DISSIPATION AND PROMOTE LONG LIFE (100,000 HRS) AT 25°C. ELECTRONIC DRIVER HAS A POWER FACTOR GREATER THAN OR EQUAL TO 90%. NEMA 410 COMPLIANT LED DRIVER.

5. INSTALLATION: A UNIVERSAL MOUNTING PLATE WITH INTEGRAL MOUNTING SUPPORT ARMS WHICH ALLOWS THE FIXTURE TO HINGE DOWN FOR EASY ACCESS WHILE MAKING WIRING CONNECTIONS.

6. LIGHT ENGINES: 2 (TWO) LIGHT ENGINES (20 LEDS). FIXTURE WATTS: 48 WATTS.

7. CERTIFICATION: CSA CERTIFIED TO US AND CANADIAN STANDARDS. LIGHT ENGINES ARE IP66 RATED; LUMINAIRE IS IP65 RATED AND SUITABLE FOR WET LOCATIONS WHEN MOUNTED WITH THE LENS DOWN.

8. OPTIONS: INTEGRAL PHOTO-CONDUCTIVE CONTROLLER.

WALL-MOUNTED HALF-SHIELDED CUTOFF LED — TYPE K,KE

REVISED: 2015 | LIGHTING PLATE: -

US Army Corps of Engineers®

MARK	DESCRIPTION	DATE

DESIGNED BY: R.M.FORTNER
DRAWN BY: EN-DE
CHECKED BY: D.D.COLLIER
SUBMITTED BY: W.J.KNAPP
SIZE: ANSI D
ISSUE DATE: FEBRUARY 2019
SOLICITATION NO.: W912781R0028
CONTRACT NO.:
PROJECT NUMBER: M07TE144
FILE NAME: M07TE144

U.S. ARMY CORPS OF ENGINEERS
MOBILE DISTRICT
MOBILE, ALABAMA

SOTO CANO AIR BASE, HONDURAS
UNACCOMPANIED ENLISTED PERSONNEL HOUSING

LIGHTING FIXTURE SCHEDULE & DETAILS

SHEET ID
EL501

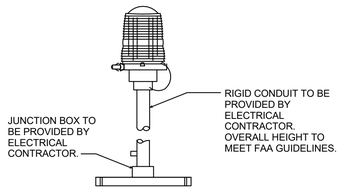

LUMINAIRE REQUIREMENTS:

1. HOUSING - DIE-CAST ALUMINUM WITH POLYESTER POWDER COAT FINISH.

2. MOUNTING - 20mm OR 25mm, SIDE OR BOTTOM CONDUIT MOUNTING AS INDICATED.

3. GLOBE - TEMPERED RED FRESNEL GLASS GLOBE WITH LATCHING RING AND MECHANISM TO HOLD GLOBE FIRMLY ONTO BASE. PROVIDE CABLE TYPE TETHER WIRE. OTHER GLOBE COLORS AVAILABLE AS INDICATED.

4. LAMP - FAA NUMBER 32B, 116 WATT INCANDESCENT LAMP, TYPICALLY. PROVIDE WITH WATTAGES AS INDICATED. SEE LIGHTING FIXTURE SCHEDULE.

5. FIXTURE BASE - PROVIDE MATCHING BASE FOR FIXTURE MOUNTING AS INDICATED.

6. CERTIFICATION - ETL VERIFIED PER FAA AC 150/5345-43.

7. OTHER - PROVIDE SINGLE OR TWIN FIXTURE HEADS AS INDICATED; (SINGLE HEAD FIXTURE DEPICTED).

OBSTRUCTION LIGHT — TYPE OB

REVISED:	AUGUST 2004	LIGHTING PLATE:	NL-70

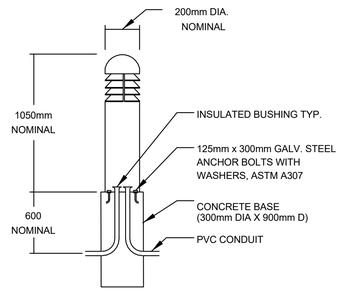

LUMINAIRE REQUIREMENTS:

1. HOUSING - DIE CAST ALUMINUM DOME TOP SECURES TO ONE-PIECE LOUVERED CASTING WITH CONCEALED TAMPER RESISTANT SCREWS. EXTRUDED ALUMINUM BASE HOUSING. BOTTOM SECTION HAS WELDED CAST RING FOR ATTACHMENT TO BASE ASSEMBLY.

2. FINISH - LUMINAIRE HAS FADE AND ABRASION RESISTANT, ELECTROSTATICALLY APPLIED, TEXTURED POWDERCOAT FINISH.

3. OPTICS - LED BOLLARDS FEATURE ADVANCED STACKED LOUVER LED TECHNOLOGY. EACH INDIVIDUAL LOUVER IS REPLACEABLE. 360° LIGHT OUTPUT.

4. LAMP - LED APPROXIMATELY 41 WATTS, 718 LUMENS, APPROXIMATELY 4000K.

5. CONTROLS - INTEGRAL PHOTO-CONDUCTIVE CONTROLLER.

6. CERTIFICATION - UL LISTED AND CERTIFIED FOR WET LOCATIONS.

7. MOUNTING - EXTERIOR ASSEMBLY HAS CAST ALUMINUM PLATFORM MOUNTING BRACKET. ASSEMBLY IS SECURED AND LEVELED TO CONCRETE MOUNTING FOUNDATION WITH ANCHOR BOLTS.

LED BOLLARD — TYPE R

REVISED:	AUGUST 2004	LIGHTING PLATE:	XL-7

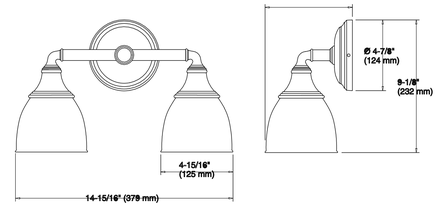

LUMINAIRE REQUIREMENTS:

1. HOUSING - PREMIUM METAL CONSTRUCTION WITH CORROSION AND TARNISH RESISTANT FINISH.

2. FINISH - POLISHED BRUSHED NICKEL.

3. OPTICS - WHITE FROSTED GLASS.

4. LAMPS - LED (A-19), 2-LAMP TYPICALLY WITH WATTAGES AS INDICATED. SEE LIGHTING FIXTURE SCHEDULE; CONSISTENT FIXTURE TO FIXTURE COLOR TEMPERATURE.

5. CERTIFICATION - UL LISTED AND LABELED.

6. INSTALLATION - WALL MOUNTED WITH SCONCES POSITIONED UP OR DOWN.

VANITY LED — TYPE V, VE

REVISED:	LIGHTING PLATE:

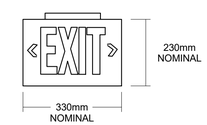

LUMINAIRE REQUIREMENTS:

1. HOUSING - DIE-CAST ALUMINUM OR HIGH-IMPACT, UV-STABILIZED, INJECTION-MOLDED THERMOPLASTIC. SINGLE OR DOUBLE-FACED AS INDICATED.

2. FINISH (ON CAST ALUMINUM HOUSING ONLY) - TEXTURED POWDER COAT FINISH OPTIONS INCLUDE WHITE, WHITE WITH BRUSHED ALUMINUM FACE, BLACK, OR BLACK WITH BRUSHED ALUMINUM FACE.

3. LETTERS/CHEVRONS - MINIMUM 152mm HIGH WITH 21mm STROKE. RED LETTERS AS INDICATED. PROVIDE CHEVRONS AS INDICATED EITHER LEFT, RIGHT OR BOTH DIRECTIONS AS INDICATED. CHEVRONS PUNCHED OUT THROUGH HOUSING AS REQUIRED.

4. EMERGENCY PACK - SOLID-STATE, CONSTANT-CURRENT TYPE BATTERY CHARGER WITH MAINTENANCE-FREE, NICKEL-CADMIUM BATTERY, AC-ON INDICATOR LAMP AND TEST SWITCH.

5. MOUNTING - UNIVERSAL MOUNTING KIT FOR CEILING, WALL OR END-OF-FIXTURE MOUNTING.

6. ILLUMINATION - PROVIDED BY RED HIGH-OUTPUT LEDS INSIDE OF FIXTURE HOUSING. PROVIDE POLYSTYRENE DIFFUSER IN COLOR INDICATED WITH FREQUENCY-MATCHED SILKSCREEN COATING FOR MAXIMUM LED LIGHT OUTPUT.

7. CERTIFICATION - UL LISTED AND CERTIFIED FOR DAMP LOCATIONS.

LED EXIT SIGN — TYPE X

REVISED:	2015	LIGHTING PLATE:	NL-63

US Army Corps of Engineers®

MARK	DESCRIPTION	DATE

DESIGNED BY: R.M.FORTNER	ISSUE DATE: FEBRUARY 2019
DRAWN BY: EN-DE	SOLICITATION NO.: W9127819R0028
CHECKED BY: D.D.COLLIER	CONTRACT NO.:
SUBMITTED BY: W.W.KNAPP	PROJECT NUMBER: M077E144
SIZE: ANSI D	FILE NAME: M077E144

U.S. ARMY CORPS OF ENGINEERS
MOBILE DISTRICT
MOBILE, ALABAMA

SOTO CANO AIR BASE, HONDURAS
UNACCOMPANIED ENLISTED PERSONNEL HOUSING

LIGHTING FIXTURE DETAILS

SHEET ID

EL502

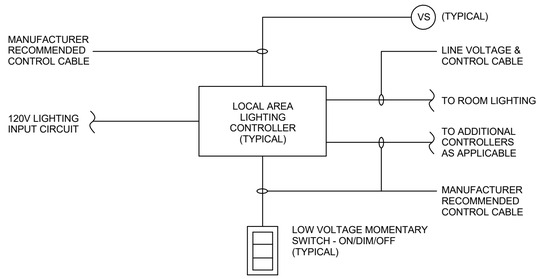

NOTES:
1. PROVIDE QUANTITY OF LOCAL AREA CONTROLLERS AND SENSORS IN ACCORDANCE WITH MANUFACTURER'S RECOMMENDATIONS TO SUPPORT THE LIGHTING LAYOUTS SHOWN ON SHEETS EL101 THRU EL106.

1 MANUAL ON/MANUAL 50%/MANUAL OFF/VACANCY OFF

N.T.S.

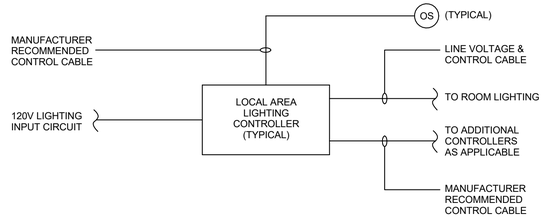

NOTES:
1. PROVIDE QUANTITY OF LOCAL AREA CONTROLLERS AND SENSORS IN ACCORDANCE WITH MANUFACTURER'S RECOMMENDATIONS TO SUPPORT THE LIGHTING LAYOUTS SHOWN ON SHEETS EL101 THRU EL106.

2 OCCUPANCY FULL/VACANCY 50%

N.T.S.

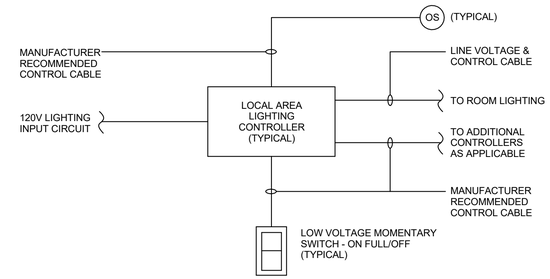

NOTES:
1. PROVIDE QUANTITY OF LOCAL AREA CONTROLLERS AND SENSORS IN ACCORDANCE WITH MANUFACTURER'S RECOMMENDATIONS TO SUPPORT THE LIGHTING LAYOUTS SHOWN ON SHEETS EL101 THRU EL106.

3 OCCUPANCY 50%/MANUAL FULL/MANUAL OFF/VACANCY OFF

N.T.S.

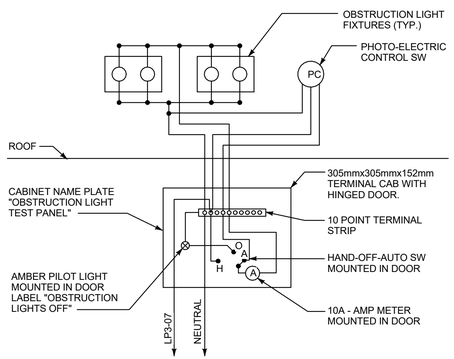

NOTE:
1. HOA ENCLOSURE SHALL BE LOCKABLE AND NEMA 12 RATED. PHOTOCELL LOCATED ON THE ROOF. SEE EG101 FOR CIRCUIT LOCATIONS.

4 OBSTRUCTION LIGHTING CONTROL DIAGRAM

N.T.S.

FEATURES

PATTERN: 360 DEGREES
COVERAGE: 45-180 SM

TIME DELAY: ADJUSTABLE 15 SECONDS TO 15 MINUTES

OPTIONS

NOM. DIMENSIONS 114mm DIA. X 32mm D

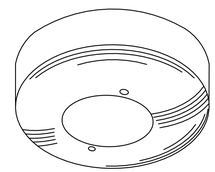

GENERAL DESCRIPTION

HOUSING: IMPACT RESISTANT INJECTION MOLDED ABS

MOUNTING: CEILING BETWEEN 2.5-3.5M

ELECTRICAL: 24 VOLT DC (FROM POWER PACK), 120 OR 277 VOLT AC

DUAL TECHNOLOGY: PASSIVE INFARED AND ULTRASONIC

FINISH: WHITE

5 CEILING MOUNTED OCCUPANY SENSOR

N.T.S.

FEATURES

PATTERN: 180 DEGREES
COVERAGE: 15 - 35 SM

TIME DELAY: ADJUSTABLE 15 SECONDS TO 15 MINUTES

OPTIONS

NOM. DIMENSIONS 70mm X 45mm X 47mm

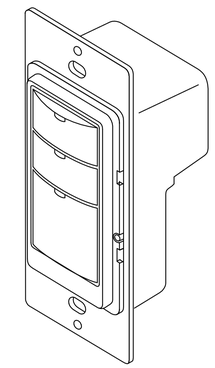

GENERAL DESCRIPTION

CONTROLS: MANUAL ON/OFF AND AUTO ON/OFF SETTINGS

HOUSING: IMPACT RESISTANT INJECTION MOLDED ABS

MOUNTING: WALL BETWEEN 1060mm - 1220mm AFF

ELECTRICAL: 24 VOLT DC (FROM POWER PACK), 120 OR 277 VOLT AC

DUAL TECHNOLOGY: PASSIVE INFARED AND ULTRASONIC

FINISH: WHITE

6 WALL MOUNTED OCCUPANCY SENSOR

N.T.S.

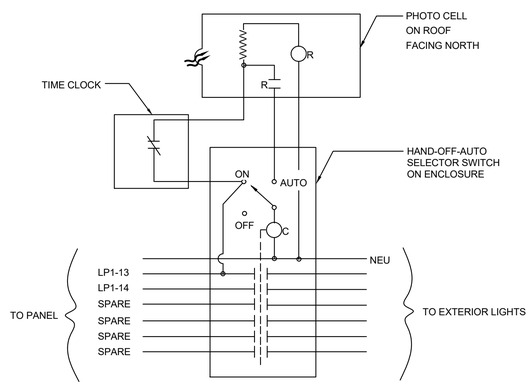

VOLTAGE: 120V
AMPERAGE: 30
OF POLES: 6
COIL VOLTAGE: 120V

7 EXTERIOR LIGHTING CONTROLS

N.T.S.

US Army Corps of Engineers®

MARK	DESCRIPTION	DATE

DESIGNED BY: R.M.FORTNER	ISSUE DATE: FEBRUARY 2019
DRAWN BY: EN-DE	SOLICITATION NO.: W912781R0028
CHECKED BY: D.D.COLLIER	CONTRACT NO.:
SUBMITTED BY:	PROJECT NUMBER: M077EL144
SIZE: ANSI D	FILE NAME: M077EL144

U.S. ARMY CORPS OF ENGINEERS
MOBILE DISTRICT
MOBILE, ALABAMA

SOTO CANO AIR BASE, HONDURAS
UNACCOMPANIED ENLISTED PERSONNEL HOUSING

LIGHTING CONTROL DIAGRAMS & DETAILS

SHEET ID

EL503

POWER

NEMA 5-20 QUAD RECEPTACLE MOUNTED 450mm AFF (##" DENOTES ALTERNATE MOUNTING HEIGHT, AC DENOTES ABOVE COUNTER, TV DENOTES ADJACENT TO CATV OUTLET, AV DENOTES ADJACENT TO AUDIO VIDEO OUTLET, G DENOTES GFI, WP DENOTES WEATHERPROOF)

NEMA 5-20 DUPLEX RECEPTACLE MOUNTED 450mm AFF ("###" DENOTES ALTERNATE MOUNTING HEIGHT, AC DENOTES ABOVE COUNTER, TV DENOTES ADJACENT TO CATV OUTLET, AV DENOTES ADJACENT TO AUDIO VIDEO OUTLET, G DENOTES GFI, WP DENOTES WEATHERPROOF)

A — 250 VOLT, 60 Hz, 1ø, 15 AMP RECEPTACLE (NEMA 6-15) MOUNTED 450mm AFF

D — 125/250 VOLT, 60 Hz, 3ø, 30 AMP RECEPTACLE (NEMA L14-30R) MOUNTED 1200mm AFF

J — JUNCTION BOX ("W" DENOTES WALL MOUNTED 1200mm AFF UNLESS NOTED OTHERWISE, ##" DENOTES ALTERNATE MOUNTING HEIGHT, "C" INDICATES CEILING MOUNTED)

S_M — MOTOR RATED, 20 AMP, 125 VOLT TOGGLE SWITCH

FUSED DISCONNECT SWITCH. SIZE FUSES FOR EQUIPEMENT BASED ON MANUFACTURERS RECOMENDATIONS.

15/1/1 — UNFUSED DISCONNECT SWITCH. (AMPERAGE/#POLES/NEMA)

VARIABLE FREQUENCY DRIVE.

PNL — SURFACE MOUNTED PANELBOARD.

ABBREVIATIONS

A	AMPERE
AC	ABOVE COUNTER
ADA	AMERICANS WITH DISABILITIES ACT
AFF	ABOVE FINISHED FLOOR
AL	ALUMINUM
1/C	ONE CONDUCTOR
C	CONDUIT
CB	CIRCUIT BREAKER
CKT	CIRCUIT
CU	COPPER
EF	EXHAUST FAN
EMT	ELECTRICAL METALLIC TUBING
EWC	ELECTRIC WATER COOLER
FACP	FIRE ALARM CONTROL PANEL
FAT	FIRE ALARM TRANSCEIVER
FM	FREQUENCY MODULATION
FMCP	FIRE ALARM/MASS NOTIFICATION CONTROL PANEL
FOC	FIBER OPTIC CABLE
GFI	GROUND FAULT CIRCUIT INTERRUPTER
GFP	GROUND FAULT PROTECTION
HACR	HEATING AIR CONDITIONING REFRIGATION
HP	HORSEPOWER
HPS	HIGH PRESSURE SODIUM
HT	HEIGHT
HZ	HERTZ
IDS	INTRUSION DETECTION SYSTEM
J	JUNCTION BOX
KWH	KILOWATT HOUR
LED	LIGHT EMITTING DIODE
MCB	MOLDED CASE CIRCUIT BREAKER
MH	METAL HALIDE
MLO	MAIN LUGS ONLY
MM	MULTIMODE
MTD	MOUNTED
NEC	NATIONAL ELECTRICAL CODE
NF	NON FUSED
NO.	NUMBER
OS	OCCUPANCY SENSOR
PH	PHASE
PIR	PASSIVE INFRARED
RGS	RIGID GALVANIZED STEEL
SM	SINGLE MODE
SPD	SURGE PROTECTION DEVICE
TTB	TELEPHONE TERMINAL BOARD
TV	TELEVISION
TVSS	TRANSIENT VOLTAGE SURGE SUPRESSOR
TX	TRANSFORMER
UNO	UNLESS NOTED OTHERWISE
V	VOLT
VA	VOLTAMPERE
VVD	VARIABLE VOLUME DAMPER
W	WATTS
WP	WATER PROOF
XFMR	TRANSFORMER

GENERAL NOTES

1. PLAN DRAWINGS ARE APPLICABLE TO BUILDINGS D, E, & F.
2. ALL FLOOR PLANS SHOWN ARE BASED ON BUILDING D ORIENTATION.
3. SEE MECHANICAL PLANS FOR EXHAUST FAN (EF-#) CONTROLS.
4. GENERAL RECEPTACLES CIRCUITS IN THE DORM ROOMS SHALL BE ON ARC FAULT TYPE CIRCUIT BREAKERS. SEE PANEL SCHEDULES.

WIRING

A-21 — 1 #12 PHASE CONDUCTOR, 1#12 GROUNDED CONDUCTOR AND 1 #12 GREEN EQUIPMENT GROUND IN CONCEALED 16mm CONDUIT, UNLESS NOTED OTHERWISE. ARROW INDICATES HOMERUN TO PANEL "A", CIRCUIT 21.

FLEXIBLE CONDUIT CONNECTION

NOTE: NOT ALL SYMBOLS USED ON PLANS

MISCELLANEOUS

COMMUNICATIONS RACK

TE — TELECOMMUNICATIONS ENCLOSURE

TBB — 2440mm X1220mm TELECOMMUNICATIONS BACKBOARD

US Army Corps of Engineers®

MARK	DESCRIPTION	DATE

DESIGNED BY: R.M.FORTNER
DRAWN BY: EN-DE
CHECKED BY: D.D.COLLIER
SUBMITTED BY: W.W.KNAPP
SIZE: ANSI D
ISSUE DATE: FEBRUARY 2019
SOLICITATION NO.: W912781R0028
CONTRACT NO.:
PROJECT NUMBER: M077E144
FILE NAME: M077E144

U.S. ARMY CORPS OF ENGINEERS
MOBILE DISTRICT
MOBILE, ALABAMA

SOTO CANO AIR BASE, HONDURAS
UNACCOMPANIED ENLISTED PERSONNEL HOUSING

POWER LEGEND

SHEET ID
EP001

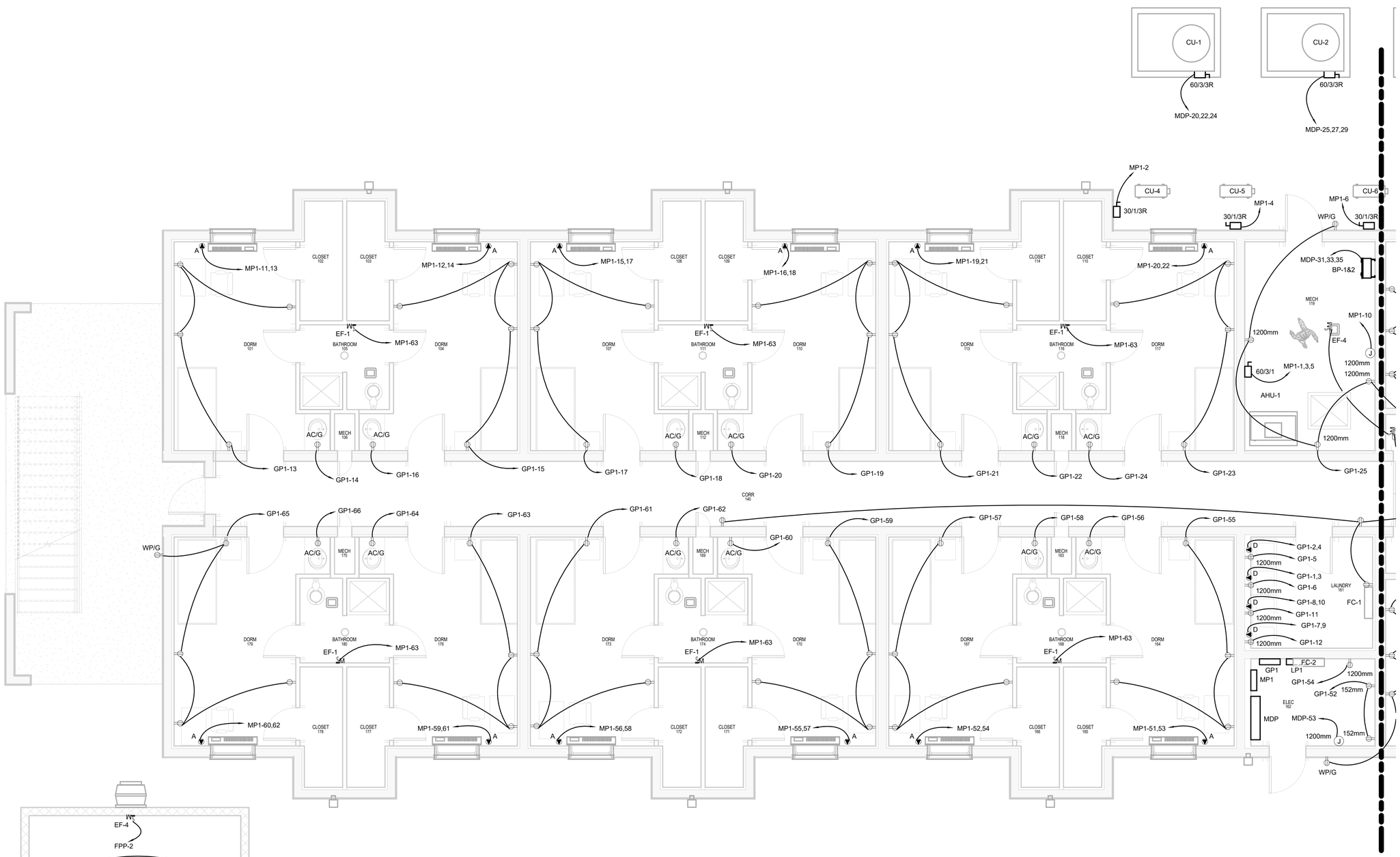

1 FIRST FLOOR POWER PLAN - AREA "A"

1 : 50

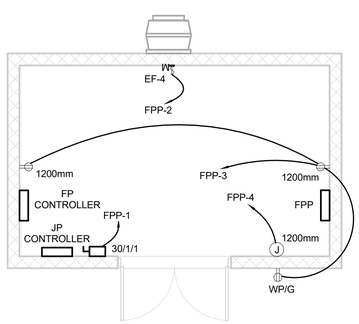

2 POWER PLAN - FIRE PUMP BUILDING

KEY PLAN

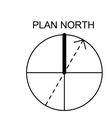

0 2000 4000

SCALE: 1 : 50

US Army Corps of Engineers®

MARK	DESCRIPTION	DATE

ISSUE DATE: FEBRUARY 2019
SOLICITATION NO.: W912T819R0028
CONTRACT NO.:
PROJECT NUMBER: M017E1J44

DESIGNED BY: R.M.FORTNER
DRAWN BY: EN-DE
CHECKED BY: D.D.COLLIER
SUBMITTED BY: W.JANKAPE
SIZE: ANSI D
FILE NAME: M017E1J44

U.S. ARMY CORPS OF ENGINEERS
MOBILE DISTRICT
MOBILE, ALABAMA

SOTO CANO AIR BASE, HONDURAS
UNACCOMPANIED ENLISTED PERSONNEL HOUSING

FIRST FLOOR POWER PLAN - AREA "A" & FIRE PUMP BUILDING

SHEET ID

EP101

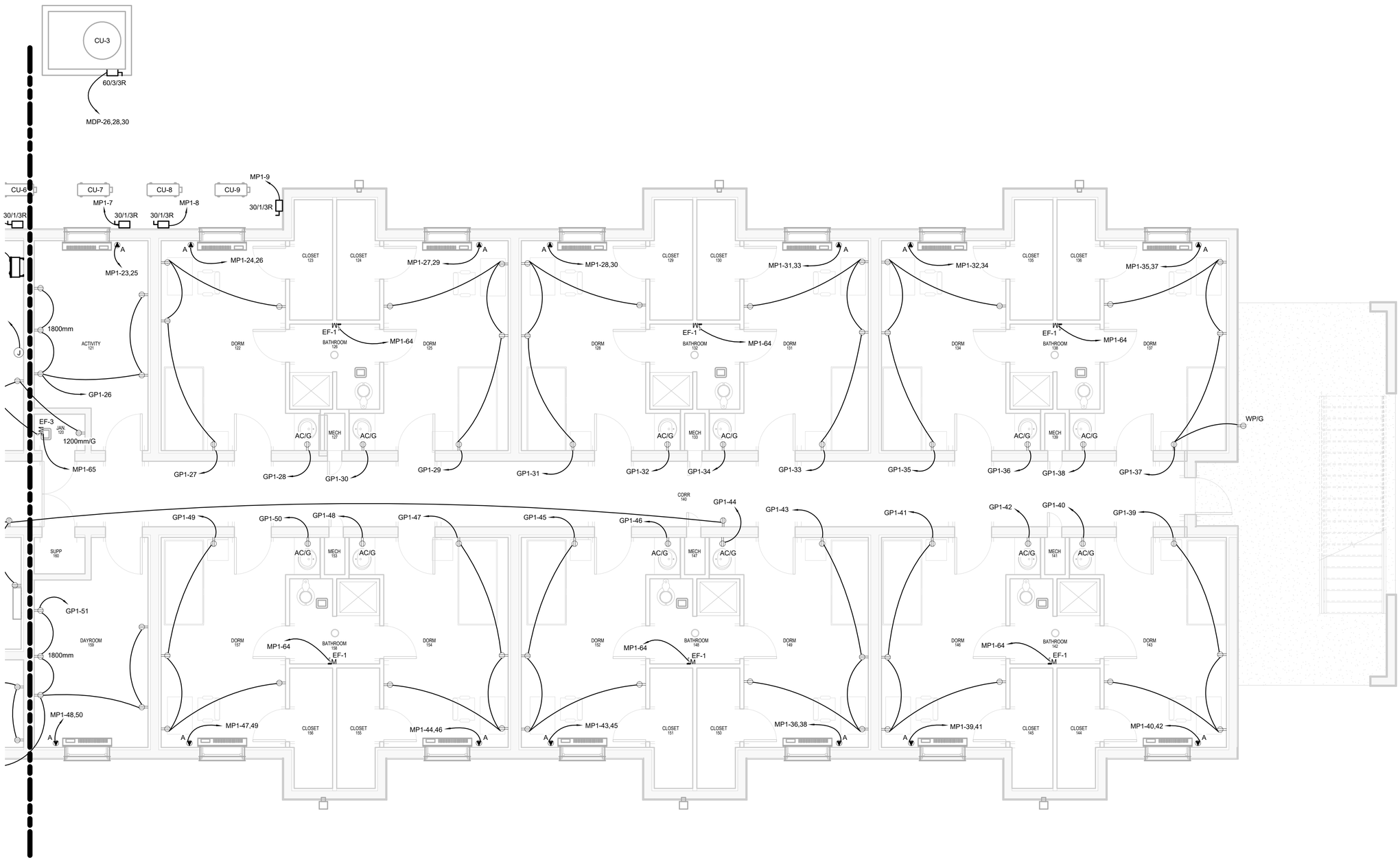

1 FIRST FLOOR POWER PLAN - AREA "B"

1 : 50

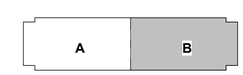

KEY PLAN

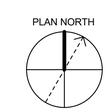

SCALE: 1 : 50

US Army Corps of Engineers®

MARK	DESCRIPTION	DATE

ISSUE DATE: FEBRUARY 2019
SOLICITATION NO.: W912T819R0028
CONTRACT NO.:
PROJECT NUMBER: M017E144
FILE NAME: M017E144

DESIGNED BY: R.M.FORTNER
DRAWN BY: EN-DE
CHECKED BY: D.D.COLLIER
SUBMITTED BY: W.J.KNAPP
SIZE: ANSI D

U.S. ARMY CORPS OF ENGINEERS
MOBILE DISTRICT
MOBILE, ALABAMA

SOTO CANO AIR BASE, HONDURAS
UNACCOMPANIED ENLISTED PERSONNEL HOUSING

FIRST FLOOR POWER PLAN - AREA "B"

SHEET ID

EP102

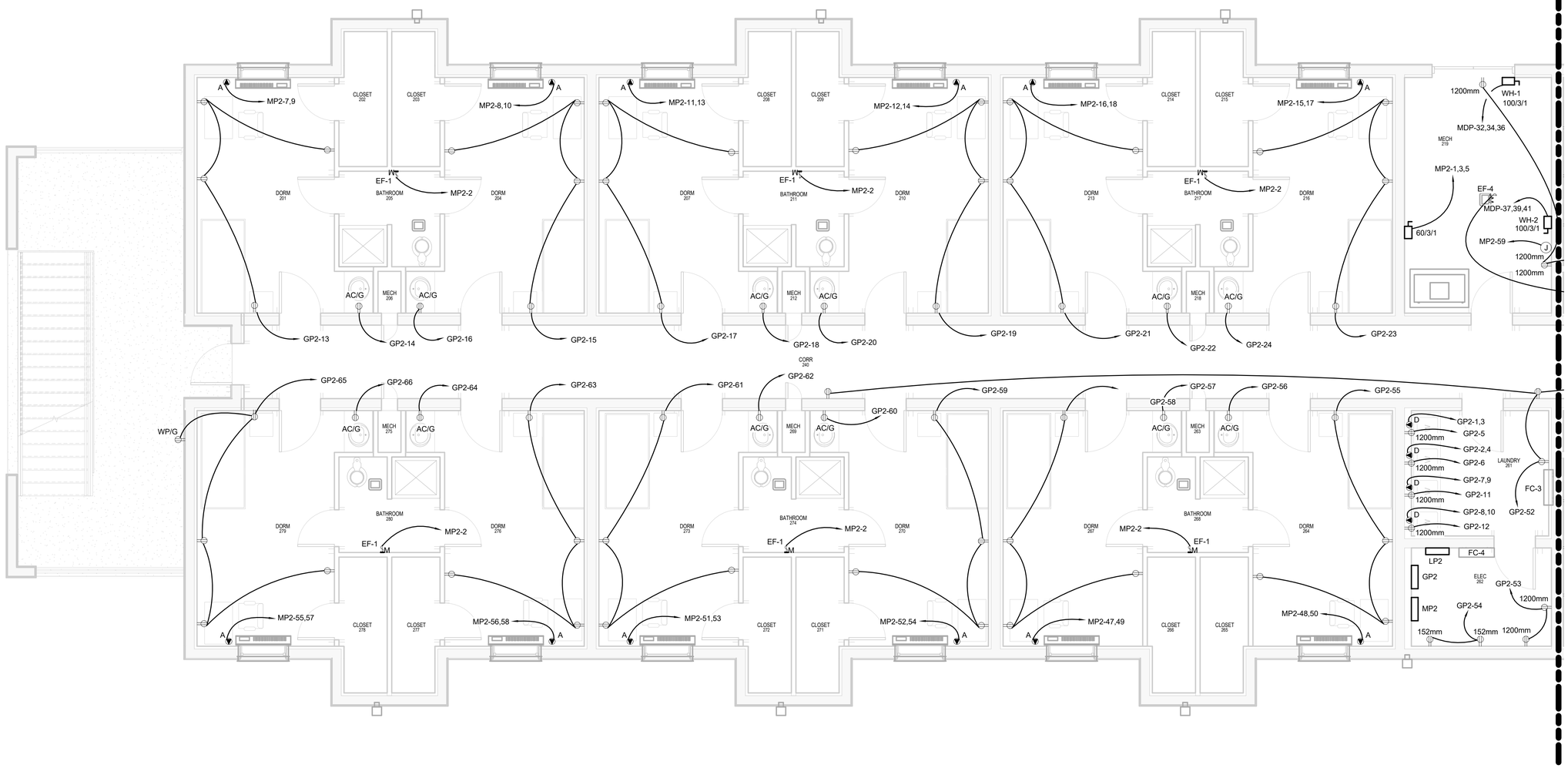

1 SECOND FLOOR POWER PLAN - AREA "A"

1 : 50

KEY PLAN

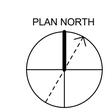

0 2000 4000

SCALE: 1 : 50

US Army Corps of Engineers®

MARK	DESCRIPTION	DATE

ISSUE DATE: FEBRUARY 2019
SOLICITATION NO.: W912ZB19R0028
CONTRACT NO.:
PROJECT NUMBER: M017E1J44
SIZE: ANSI D
FILE NAME: M017E1J44

DESIGNED BY: R.M.FORTNER
DRAWN BY: EN-DE
CHECKED BY: D.D.COLLIER
SUBMITTED BY: W.JUNKAPP

U.S. ARMY CORPS OF ENGINEERS
MOBILE DISTRICT
MOBILE, ALABAMA

SOTO CANO AIR BASE, HONDURAS
UNACCOMPANIED ENLISTED PERSONNEL HOUSING

SECOND FLOOR POWER PLAN - AREA "A"

SHEET ID

EP103

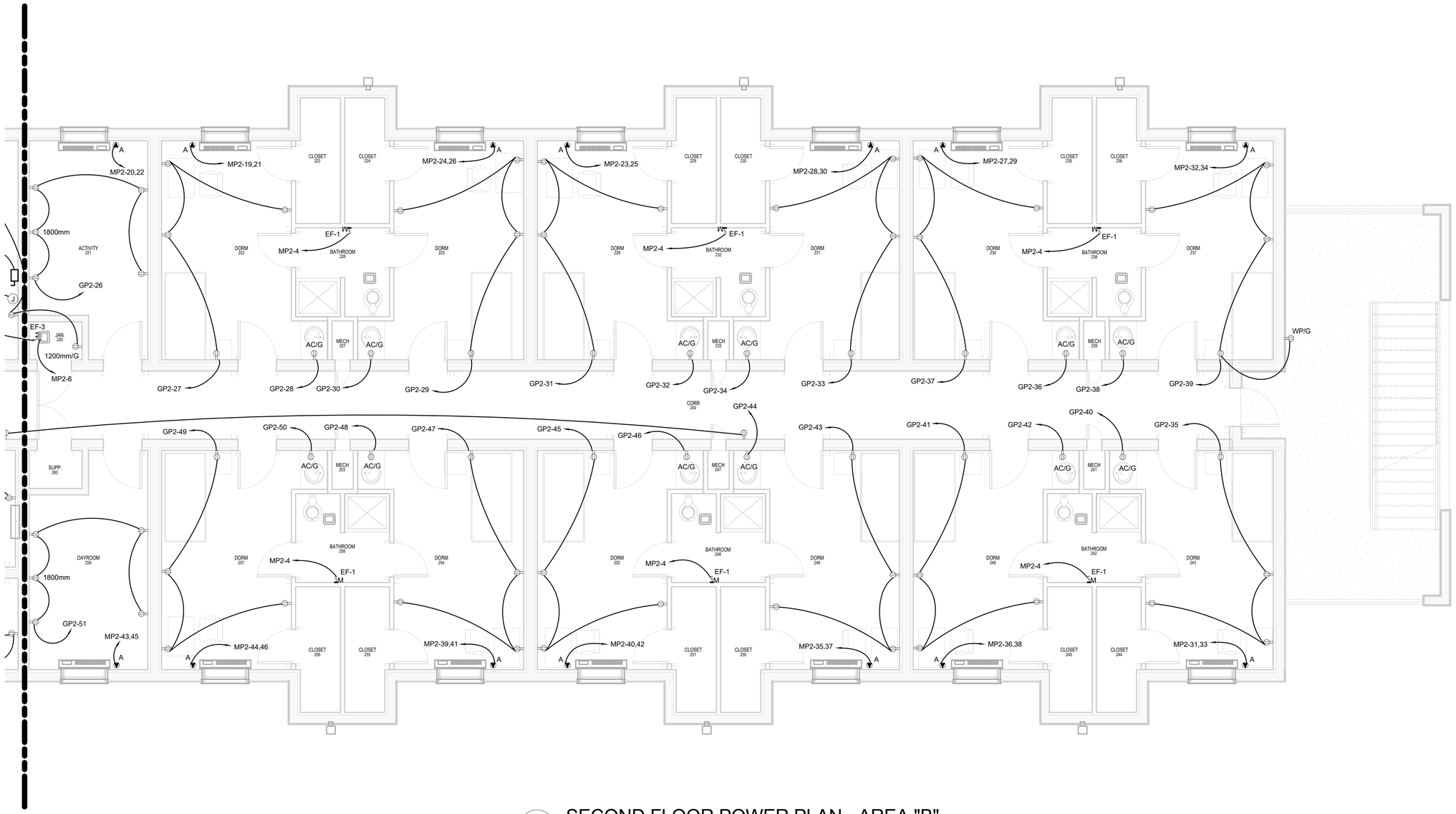

1 SECOND FLOOR POWER PLAN - AREA "B"

1 : 50

KEY PLAN

0 2000 4000

SCALE: 1 : 50

US Army Corps of Engineers®

MARK	DESCRIPTION	DATE

ISSUE DATE: FEBRUARY 2019
SOLICITATION NO.: W912ZB19R0028
CONTRACT NO.:
PROJECT NUMBER: M017E1J44
SIZE: ANSI D
FILE NAME: M017E1J44

DESIGNED BY: R.M.FORTNER
DRAWN BY: EN-DE
CHECKED BY: D.D.COLLIER
SUBMITTED BY: W.J.KNAPP

U.S. ARMY CORPS OF ENGINEERS
MOBILE DISTRICT
MOBILE, ALABAMA

SOTO CANO AIR BASE, HONDURAS
UNACCOMPANIED ENLISTED PERSONNEL HOUSING

SECOND FLOOR POWER PLAN - AREA "B"

SHEET ID

EP104

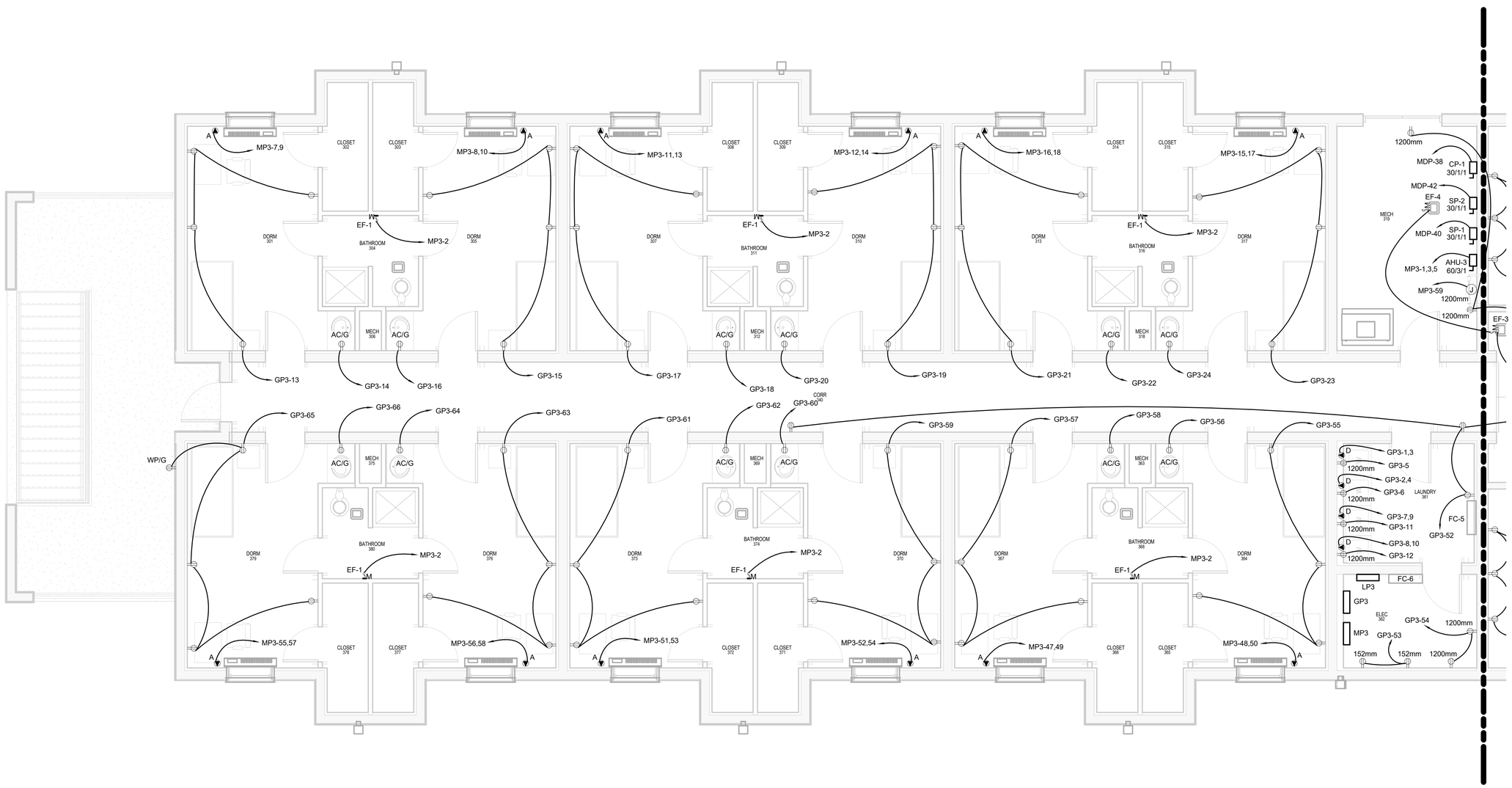

1 THIRD FLOOR POWER PLAN - AREA "A"

1 : 50

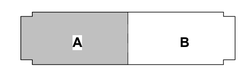

KEY PLAN

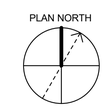

0 2000 4000

SCALE: 1 : 50

US Army Corps of Engineers®

MARK	DESCRIPTION	DATE

ISSUE DATE: FEBRUARY 2019
SOLICITATION NO.: W912ZB19R0028
CONTRACT NO.:
PROJECT NUMBER: M077E1J44
SIZE: ANSI D
FILE NAME: M077E1J44

DESIGNED BY: R.M.FORTNER
DRAWN BY: EN-DE
CHECKED BY: D.D.COLLIER
SUBMITTED BY: W.A.KNAPP

U.S. ARMY CORPS OF ENGINEERS
MOBILE DISTRICT
MOBILE, ALABAMA

SOTO CANO AIR BASE, HONDURAS
UNACCOMPANIED ENLISTED PERSONNEL HOUSING

THIRD FLOOR POWER PLAN - AREA "A"

SHEET ID

EP105

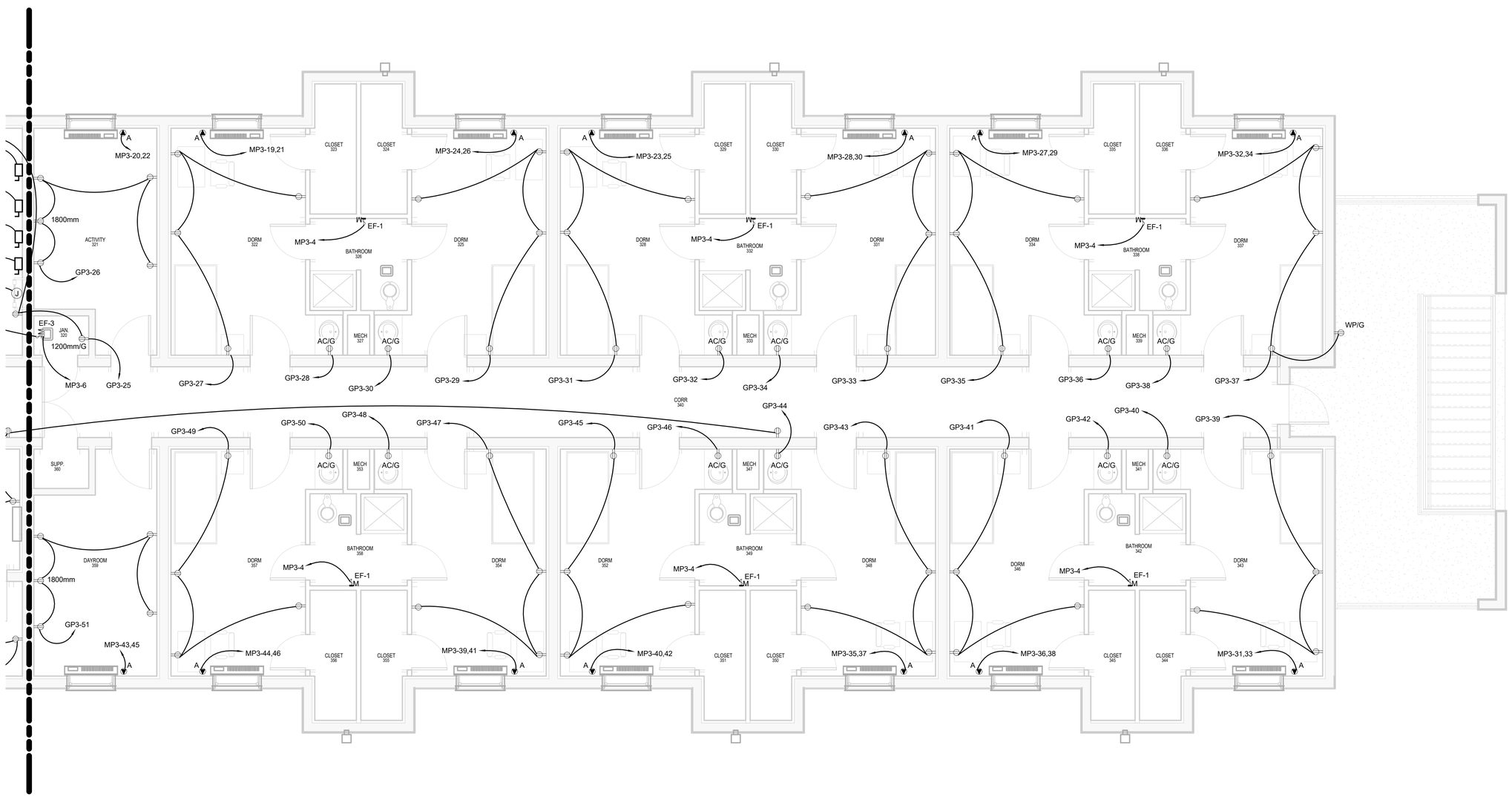

1 THIRD FLOOR POWER PLAN - AREA "B"

1 : 50

KEY PLAN

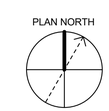

0 2000 4000

SCALE: 1 : 50

US Army Corps of Engineers®

MARK	DESCRIPTION	DATE

DESIGNED BY: R.M.FORTNER
DRAWN BY: EN-DE
CHECKED BY: D.D.COLLIER
SUBMITTED BY: W.A.KNAPP
SIZE: ANSI D
ISSUE DATE: FEBRUARY 2019
SOLICITATION NO.: W912ZB19R0028
CONTRACT NO.:
PROJECT NUMBER: M017E1J44
FILE NAME: M017E1J44

U.S. ARMY CORPS OF ENGINEERS
MOBILE DISTRICT
MOBILE, ALABAMA

SOTO CANO AIR BASE, HONDURAS
UNACCOMPANIED ENLISTED PERSONNEL HOUSING

THIRD FLOOR POWER PLAN - AREA "B"

SHEET ID

EP106

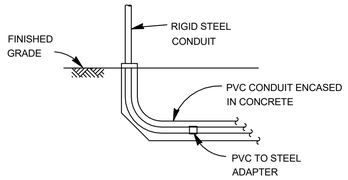

NOTE:

THIS DETAIL IS TYPICAL FOR ALL CONDUIT TERMINATIONS AT THE PAD MOUNTED TRANSFORMER AND AT THE PANEL LOCATION.

1 PVC TO STEEL CONDUIT CONVERSION DETAIL

N.T.S.

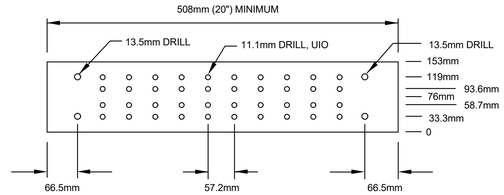

TYPICAL DRILLED HOLE DIMENSIONS FOR GROUND BAR

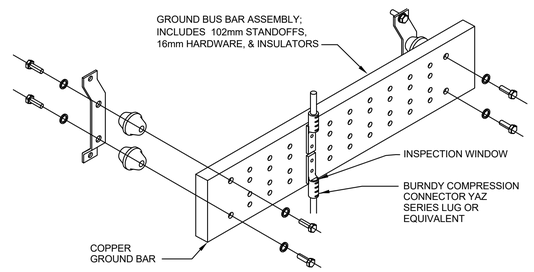

NOTES:

1. GROUND BUS BAR MUST BE UL LISTED.

2 MAIN SERVICE ENTRANCE GROUNDING BAR

N.T.S.

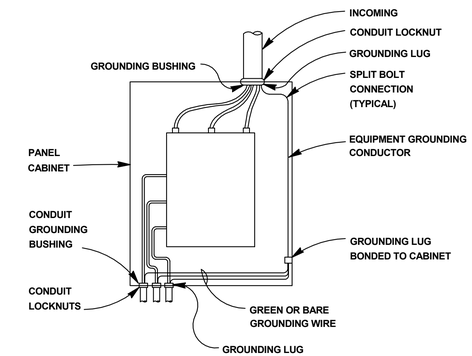

NOTES:

1. ALL WIRES TO BE NEATLY LACED.
2. AT THE POINT OF ATTACHMENT OF THE GROUNDING LUG TO THE CABINET, THE SURFACES SHALL BE SCRAPED FREE OF PAINT AND THOROUGHLY CLEANED TO INSURE PROPER BONDING.
3. NEUTRAL CONDUCTOR NOT SHOWN FOR CLARITY.

3 TYPICAL PANEL GROUNDING DETAIL

N.T.S.

WARNING

Arc Flash and Shock Hazard
Appropriate PPE Required

*****	Flash Hazard Boundary
*****	cal/cm2 Flash Hazard at 63 Inches
*****	PPE Level ERROR: No Valid Trip Device Found Upstream or in Bus Dialog.
230	kV Shock Hazard when cover is removed
13' - 0"	Limited Approach
5' - 3"	Restricted Approach - Class 00 Voltage Gloves
4' - 9"	Prohibited Approach - Class 00 Voltage Gloves

Equipment Name: AUX 230KV BUS

4 ARC FLASH LABEL

N.T.S.

US Army Corps of Engineers®

MARK	DESCRIPTION	DATE

DESIGNED BY: R.M.FORTNER
DRAWN BY: EN-DE
CHECKED BY: D.D.COLLIER
SUBMITTED BY: W.W.KNAPP
SIZE: ANSI D
ISSUE DATE: FEBRUARY 2019
SOLICITATION NO.: W912781R0028
CONTRACT NO.:
PROJECT NUMBER: M07TE0144
FILE NAME: M07TE0144

U.S. ARMY CORPS OF ENGINEERS
MOBILE DISTRICT
MOBILE, ALABAMA

SOTO CANO AIR BASE, HONDURAS
UNACCOMPANIED ENLISTED PERSONNEL HOUSING

POWER DETAILS

SHEET ID
EP501

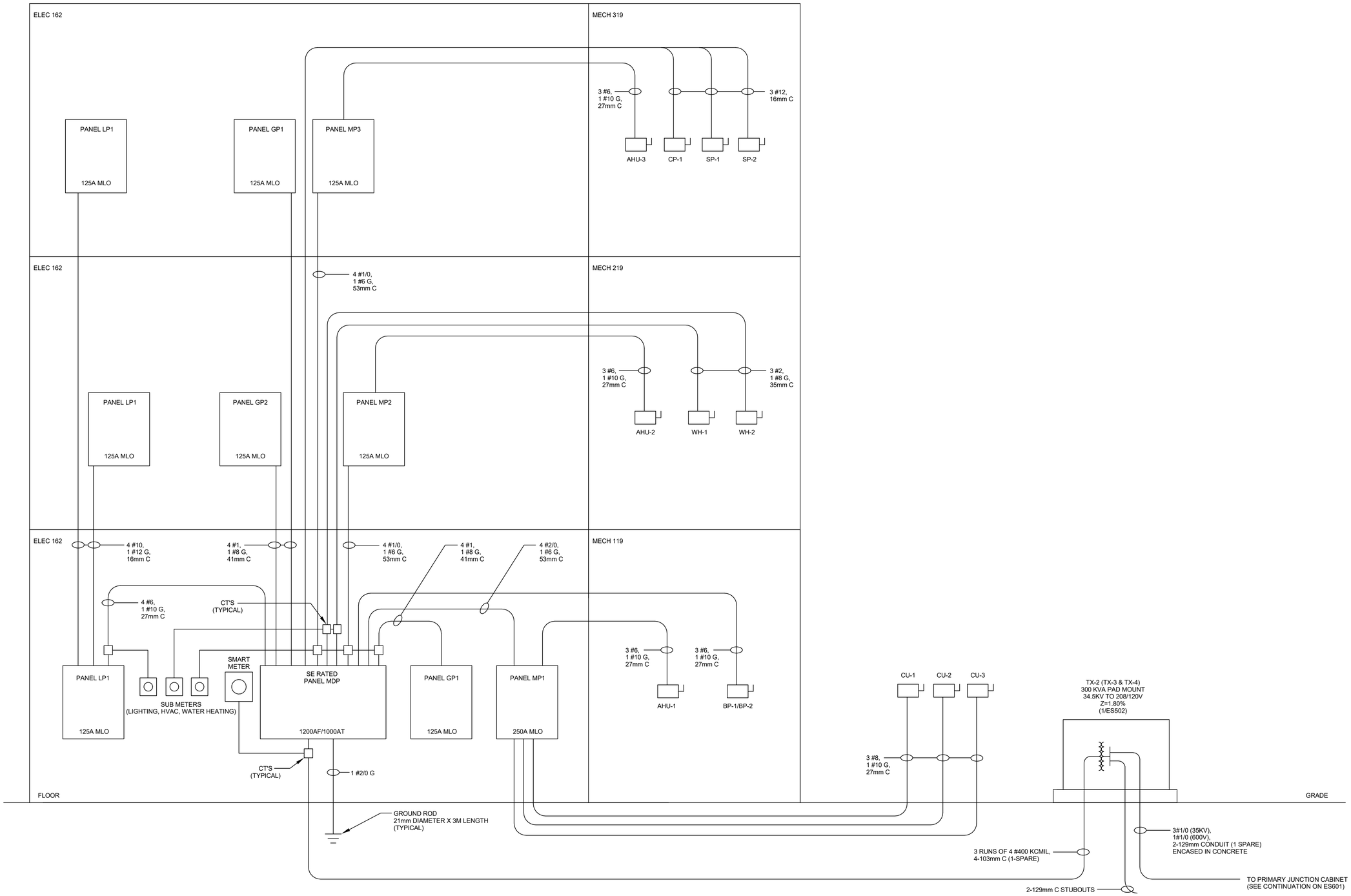

1 ELECTRICAL RISER DIAGRAM

N.T.S.

US Army Corps of Engineers®

MARK	DESCRIPTION	DATE

DESIGNED BY: R.M.FORTNER
DRAWN BY: EN-DE
CHECKED BY: D.D.COLLIER
SUBMITTED BY: W.W.KNAPP
SIZE: ANSI D
ISSUE DATE: FEBRUARY 2019
SOLICITATION NO.: W912781R0028
CONTRACT NO.:
PROJECT NUMBER: M077E144
FILE NAME: M077E144

U.S. ARMY CORPS OF ENGINEERS
MOBILE DISTRICT
MOBILE, ALABAMA

SOTO CANO AIR BASE, HONDURAS
UNACCOMPANIED ENLISTED PERSONNEL HOUSING

ELECTRICAL RISER DIAGRAM

SHEET ID

EP601

Branch Panel: MDP

Location: ELEC 162 | **Volts:** 120/208 Wye | **A.I.C. Rating:** 65,000
Supply From: | **Phases:** 3 | **Mains Type:** MCB
Mounting: Surface | **Wires:** 4 | **Mains Rating:** 1200 A
Enclosure: Type 1 | **MCB Rating:** 1000 A

Notes: SERVICE ENTRANCE RATED WITH INTEGRAL TVSS

CKT	Load Name	Trip	Poles	A		B		C		Poles	Trip	Load Name	CKT
MDP-1	Panel MP1, ELEC 162,	175 A	3	17325 VA	13245 VA					3	125 A	Panel MP2, ELEC 262,	MDP-2
MDP-3	--	--	--			16383 VA	13245 VA			--	--	--	MDP-4
MDP-5	--	--	--					14405 VA	12263 VA	--	--	--	MDP-6
MDP-7	Panel MP3, ELEC 362,	125 A	3	13245 VA	3402 VA					3	50 A	Panel LP1, ELEC 162,	MDP-8
MDP-9	--	--	--			13245 VA	3926 VA			--	--	--	MDP-10
MDP-11	--	--	--					12263 VA	3895 VA	--	--	--	MDP-12
MDP-13	Panel GP1, ELEC 162,	100 A	3	12780 VA	12240 VA					3	100 A	Panel GP2, ELEC 262,	MDP-14
MDP-15	--	--	--			12880 VA	12600 VA			--	--	--	MDP-16
MDP-17	--	--	--					13900 VA	10280 VA	--	--	--	MDP-18
MDP-19	Panel GP3, ELEC 362,	100 A	3	12420 VA	4565 VA					3	35 A	CU-1, EXTERIOR,	MDP-20
MDP-21	--	--	--			12420 VA	4565 VA			--	--	--	MDP-22
MDP-23	--	--	--					10280 VA	4565 VA	--	--	--	MDP-24
MDP-25	CU-2, EXTERIOR,	35 A	3	4565 VA	4565 VA					3	35 A	CU-3, EXTERIOR,	MDP-26
MDP-27	--	--	--			4565 VA	4565 VA			--	--	--	MDP-28
MDP-29	--	--	--					4565 VA	4565 VA	--	--	--	MDP-30
MDP-31	BP-1 & 2, MECH 119,	50 A	3	3870 VA	8000 VA					3	90 A	WH-1, MECH 219,	MDP-32
MDP-33	--	--	--			3870 VA	8000 VA			--	--	--	MDP-34
MDP-35	--	--	--					3870 VA	8000 VA	--	--	--	MDP-36
MDP-37	WH-2, MECH 219,	90 A	3	8000 VA	1200 VA					1	20 A	CP-1, MECH 319,	MDP-38
MDP-39	--	--	--			8000 VA	1200 VA			1	20 A	SP-2, MECH 319,	MDP-40
MDP-41	--	--	--					8000 VA	1200 VA	1	20 A	SP-1, MECH 319,	MDP-42
MDP-43					0 VA					1	20 A	--	MDP-44
MDP-45							0 VA			1	20 A	--	MDP-46
MDP-47									0 VA	1	20 A	--	MDP-48
MDP-49	--	20 A	1	0 VA	0 VA					1	20 A	--	MDP-50
MDP-51	--	20 A	1			0 VA	0 VA			1	20 A	--	MDP-52
MDP-53	* Fire Alarm Control Unit ELEC 162,	20 A	1					500 VA	0 VA	1	20 A	--	MDP-54
		Total Load:		119422 VA		119464 VA		112551 VA					
		Total Amps:		1004 A		1004 A		938 A					

Load Classification	Connected Load		Estimated Demand	Panel Totals	
HVAC	176814 VA		176814 VA		
Lighting	9644 VA		12055 VA	**Total Conn. Load:**	351262 VA
Motor	3600 VA		2880 VA	**Total Est. Demand:**	303004 VA
Other	1404 VA		1755 VA	**Total Conn. Current:**	975 A
Power	2000 VA		1600 VA	**Total Est. Demand Current:**	841 A
Water Heating	48000 VA		48000 VA		
Receptacles	88200 VA		49100 VA		
Clothes Dryer	21600 VA		10800 VA		

Notes: * RED LOCKABLE BREAKER

Branch Panel: FPP

Location: FIRE RISER 01 | **Volts:** 120/208 Wye | **A.I.C. Rating:** 18,000
Supply From: | **Phases:** 3 | **Mains Type:** MCB
Mounting: Surface | **Wires:** 4 | **Mains Rating:** 100 A
Enclosure: Type 1 | **MCB Rating:** 50 A

Notes:

CKT	Load Name	Trip	Poles	A		B		C		Poles	Trip	Load Name	CKT
FPP-1	Jockey Pump Controller,	20 A	1	1176 VA	100 VA					1	20 A	EF-4,	FPP-2
FPP-3	Receptacles,	20 A	1			540 VA	500 VA			1	20 A	* FACP,	FPP-4
FPP-5	Lighting,	20 A	1					66 VA	48 VA	1	20 A	Lighting - Exterior,	FPP-6
FPP-7	Lighting - Exterior Bollards,	20 A	1	287 VA	287 VA					1	20 A	Lighting - Exterior Bollards,	FPP-8
FPP-9	--	20 A	1			0 VA	0 VA			1	20 A	--	FPP-10
FPP-11	--	20 A	1					0 VA	0 VA	1	20 A	--	FPP-12
FPP-13	--	20 A	1	0 VA	0 VA					1	20 A	--	FPP-14
FPP-15													FPP-16
FPP-17													FPP-18
		Total Load:		1850 VA		1040 VA		114 VA					
		Total Amps:		17 A		10 A		1 A					

Load Classification	Connected Load		Estimated Demand	Panel Totals	
HVAC	100 VA		100 VA		
Lighting	114 VA		143 VA	**Total Conn. Load:**	3004 VA
Motor	1176 VA		941 VA	**Total Est. Demand:**	2697 VA
Power	500 VA		400 VA	**Total Conn. Current:**	8 A
Lighting - Exterior	574 VA		574 VA	**Total Est. Demand Current:**	7 A
Receptacles	540 VA		540 VA		

Notes: * RED LOCKABLE BREAKER

Branch Panel: LP1

Location: ELEC 162 | **Volts:** 120/208 Wye | **A.I.C. Rating:** 10,000
Supply From: MDP | **Phases:** 3 | **Mains Type:** MLO
Mounting: Surface | **Wires:** 4 | **Mains Rating:** 125 A
Enclosure: Type 1

Notes:

CKT	Load Name	Trip	Poles	A		B		C		Poles	Trip	Load Name	CKT
LP1-1	Panel LP2, ELEC 262,	20 A	3	779 VA	1011 VA					3	20 A	Panel LP3, ELEC 362,	LP1-2
LP1-3	--	--	--			1132 VA	1132 VA			--	--	--	LP1-4
LP1-5	--	--	--					1132 VA	1132 VA	--	--	--	LP1-6
LP1-7	Lighting, CORR 140,	20 A	1	382 VA	397 VA					1	20 A	Lighting, 162, 161, 119, 159, 121,	LP1-8
LP1-9	Lighting, DORM 101,104,107,110,113,117,	20 A	1			546 VA	566 VA			1	20 A	Lighting, DORM 122,125,128,131,134,137,	LP1-10
LP1-11	Lighting, DORM 143,146,149,152,154,157,	20 A	1					566 VA	566 VA	1	20 A	Lighting, DORM 164,167,170,173,176,179,	LP1-12
LP1-13	Lighting, EXTERIOR,	20 A	1	432 VA	432 VA					1	20 A	Lighting, EXTERIOR,	LP1-14
LP1-15	Lighting, STAIRWELL,	20 A	1			288 VA	288 VA			1	20 A	Lighting, STAIRWELL,	LP1-16
LP1-17	Lighting Contactor, ELEC 162,	20 A	1					500 VA	0 VA	1	20 A	--	LP1-18
LP1-19	--	20 A	1	0 VA	0 VA					1	20 A	--	LP1-20
LP1-21	--	20 A	1			0 VA	0 VA			1	20 A	--	LP1-22
LP1-23	--	20 A	1					0 VA	0 VA	1	20 A	--	LP1-24
		Total Load:		3434 VA		3951 VA		3895 VA					
		Total Amps:		29 A		34 A		33 A					

Load Classification	Connected Load		Estimated Demand	Panel Totals	
Lighting	9144 VA		11430 VA		
Motor	500 VA		400 VA	**Total Conn. Load:**	11048 VA
Other	1404 VA		1755 VA	**Total Est. Demand:**	13585 VA
				Total Conn. Current:	31 A
				Total Est. Demand Current:	38 A

Notes:

Branch Panel: LP2

Location: ELEC 262 | **Volts:** 120/208 Wye | **A.I.C. Rating:** 10,000
Supply From: LP1 | **Phases:** 3 | **Mains Type:** MLO
Mounting: Surface | **Wires:** 4 | **Mains Rating:** 125 A
Enclosure: Type 1

Notes:

CKT	Load Name	Trip	Poles	A		B		C		Poles	Trip	Load Name	CKT
LP2-1	Lighting, CORR 240,	20 A	1	382 VA	397 VA					1	20 A	Lighting, 262, 261, 219, 259, 221,	LP2-2
LP2-3	Lighting, DORM 201,204,207,210,213,216,	20 A	1			566 VA	566 VA			1	20 A	Lighting, DORM 222,225,228,231,234,237,	LP2-4
LP2-5	Lighting, DORM 243,246,249,252,254,257,	20 A	1					566 VA	566 VA	1	20 A	Lighting, DORM 264,267,270,273,276,279,	LP2-6
LP2-7	--	20 A	1	0 VA	0 VA					1	20 A	--	LP2-8
LP2-9	--	20 A	1			0 VA	0 VA			1	20 A	--	LP2-10
LP2-11	--	20 A	1					0 VA	0 VA	1	20 A	--	LP2-12
LP2-13													LP2-14
LP2-15													LP2-16
LP2-17													LP2-18
		Total Load:		779 VA		1132 VA		1132 VA					
		Total Amps:		6 A		10 A		10 A					

Load Classification	Connected Load		Estimated Demand	Panel Totals	
Lighting	2575 VA		3218 VA		
Other	468 VA		585 VA	**Total Conn. Load:**	3043 VA
				Total Est. Demand:	3803 VA
				Total Conn. Current:	8 A
				Total Est. Demand Current:	11 A

Notes:

Branch Panel: LP3

Location: ELEC 362 | **Volts:** 120/208 Wye | **A.I.C. Rating:** 10,000
Supply From: LP1 | **Phases:** 3 | **Mains Type:** MLO
Mounting: Surface | **Wires:** 4 | **Mains Rating:** 125 A
Enclosure: Type 1

Notes:

CKT	Load Name	Trip	Poles	A		B		C		Poles	Trip	Load Name	CKT
LP3-1	Lighting, CORR 340,	20 A	1	382 VA	397 VA					1	20 A	Lighting, 362, 361, 319, 359, 321,	LP3-2
LP3-3	Lighting, DORM 301,305,307,310,313,317,	20 A	1			566 VA	566 VA			1	20 A	Lighting, DORM 322,325,328,331,334,337,	LP3-4
LP3-5	Lighting, DORM 343,346,348,352,354,357,	20 A	1					566 VA	566 VA	1	20 A	Lighting, DORM 364,367,370,373,376,379,	LP3-6
LP3-7	Lighting, ROOF OBSTRUCTION LIGHTS,	20 A	1	232 VA	0 VA					1	20 A	--	LP3-8
LP3-9	--	20 A	1			0 VA	0 VA			1	20 A	--	LP3-10
LP3-11	--	20 A	1					0 VA	0 VA	1	20 A	--	LP3-12
LP3-13													LP3-14
LP3-15													LP3-16
LP3-17													LP3-18
		Total Load:		1011 VA		1132 VA		1132 VA					
		Total Amps:		8 A		10 A		10 A					

Load Classification	Connected Load		Estimated Demand	Panel Totals	
Lighting	2575 VA		3218 VA		
Other	468 VA		585 VA	**Total Conn. Load:**	3043 VA
				Total Est. Demand:	3803 VA
				Total Conn. Current:	8 A
				Total Est. Demand Current:	11 A

Notes:

US Army Corps of Engineers®

MARK	DESCRIPTION	DATE

ISSUE DATE: FEBRUARY 2019
SOLICITATION NO.: W912781R0028
CONTRACT NO.:
PROJECT NUMBER: M07TE144
FILE NAME: M07TE144
DESIGNED BY: R.M.FORTNER
DRAWN BY: EN-DE
CHECKED BY: D.D.COLLIER
SUBMITTED BY: W.W.KNAPP
SIZE: ANSI D

U.S. ARMY CORPS OF ENGINEERS
MOBILE DISTRICT
MOBILE, ALABAMA

SOTO CANO AIR BASE, HONDURAS
UNACCOMPANIED ENLISTED PERSONNEL HOUSING

PANEL SCHEDULES

SHEET ID
EP602

Branch Panel: MP1

Location: ELEC 162
Supply From: MDP
Mounting: Surface
Enclosure: Type 1

Volts: 120/208 Wye
Phases: 3
Wires: 4

A.I.C. Rating: 18,000
Mains Type: MLO
Mains Rating: 250 A

Notes:

CKT	Load Name	Trip	Poles	A		B		C		Poles	Trip	Load Name	CKT
MP1-1	AHU-1, MECH 119,	50 A	3	2907 VA	1560 VA					1	20 A	CU-4, Exterior,	MP1-2
MP1-3	--	--	--			2907 VA	1560 VA			1	20 A	CU-5, Exterior,	MP1-4
MP1-5	--	--	--					2907 VA	1560 VA	1	20 A	CU-6, Exterior,	MP1-6
MP1-7	CU-7, Exterior,	20 A	1	1560 VA	1560 VA					1	20 A	CU-8, Exterior,	MP1-8
MP1-9	CU-9, Exterior,	20 A	1			1560 VA	500 VA			1	20 A	HVAC Controls, MECH 119,	MP1-10
MP1-11	PTAC, DORM 79,	15 A	2					541 VA	541 VA	2	15 A	PTAC, DORM 80,	MP1-12
MP1-13	--	--	--	541 VA	541 VA					--	--	--	MP1-14
MP1-15	PTAC, DORM 85,	15 A	2			541 VA	541 VA			2	15 A	PTAC, DORM 86,	MP1-16
MP1-17	--	--	--					541 VA	541 VA	--	--	--	MP1-18
MP1-19	PTAC, DORM 91,	20 A	2	541 VA	541 VA					2	15 A	PTAC, DORM 92,	MP1-20
MP1-21	--	--	--			541 VA	541 VA			--	--	--	MP1-22
MP1-23	PTAC, ACTIVITY 121,	15 A	2					541 VA	541 VA	2	15 A	PTAC, DORM 122,	MP1-24
MP1-25	--	--	--	541 VA	541 VA					--	--	--	MP1-26
MP1-27	PTAC, DORM 125,	15 A	2			541 VA	541 VA			2	15 A	PTAC, DORM 128,	MP1-28
MP1-29	--	--	--					541 VA	541 VA	--	--	--	MP1-30
MP1-31	PTAC, DORM 131,	15 A	2	541 VA	541 VA					2	15 A	PTAC, DORM 134,	MP1-32
MP1-33	--	--	--			541 VA	541 VA			--	--	--	MP1-34
MP1-35	PTAC, DORM 137,	15 A	2					541 VA	541 VA	2	15 A	PTAC, DORM 149,	MP1-36
MP1-37	--	--	--	541 VA	541 VA					--	--	--	MP1-38
MP1-39	PTAC, DORM 146,	15 A	2			541 VA	541 VA			2	15 A	PTAC, DORM 143,	MP1-40
MP1-41	--	--	--					541 VA	541 VA	--	--	--	MP1-42
MP1-43	PTAC, DORM 152,	15 A	2	541 VA	541 VA					2	15 A	PTAC, DORM 154,	MP1-44
MP1-45	--	--	--			541 VA	541 VA			--	--	--	MP1-46
MP1-47	PTAC, DORM 157,	15 A	2					541 VA	541 VA	2	15 A	PTAC, DAYROOM 159,	MP1-48
MP1-49	--	--	--	541 VA	541 VA					--	--	--	MP1-50
MP1-51	PTAC, DORM 164,	15 A	2			541 VA	541 VA			2	15 A	PTAC, DORM 167,	MP1-52
MP1-53	--	--	--					541 VA	541 VA	--	--	--	MP1-54
MP1-55	PTAC, DORM 170,	15 A	2	541 VA	541 VA					2	15 A	PTAC, DORM 173,	MP1-56
MP1-57	--	--	--			541 VA	541 VA			--	--	--	MP1-58
MP1-59	PTAC, DORM 176,	15 A	2					541 VA	541 VA	2	15 A	PTAC, DORM 179,	MP1-60
MP1-61	--	--	--	541 VA	541 VA					--	--	--	MP1-62
MP1-63	EF-1, BATHROOM 105, 180, 111, 174, 116, 188,	20 A	1			600 VA	600 VA			1	20 A	EF-1, BATHROOM 126, 158, 132, 148, 138, 142,	MP1-64
MP1-65	EF-2/EF-3, MECH 119/JAN 120,	20 A	1					200 VA	0 VA	1	20 A	--	MP1-66
			Total Load:	17325 VA		16383 VA		14405 VA					
			Total Amps:	147 A		139 A		120 A					

Load Classification	Connected Load		Estimated Demand	Panel Totals	
HVAC	47613 VA		47613 VA		
Power	500 VA		400 VA	**Total Conn. Load:**	48113 VA
				Total Est. Demand:	48013 VA
				Total Conn. Current:	134 A
				Total Est. Demand Current:	133 A

Notes:

Branch Panel: MP2

Location: ELEC 262
Supply From: MDP
Mounting: Surface
Enclosure: Type 1

Volts: 120/208 Wye
Phases: 3
Wires: 4

A.I.C. Rating: 18,000
Mains Type: MCB
Mains Rating: 125 A

Notes:

CKT	Load Name	Trip	Poles	A		B		C		Poles	Trip	Load Name	CKT
MP2-1	AHU-2, MECH 219,	35 A	3	2907 VA	600 VA					1	20 A	EF-1, BATHROOM 205, 280, 211, 274, 217, 268,	MP2-2
MP2-3	--	--	--			2907 VA	600 VA			1	20 A	EF-1, BATHROOM, 258, 232, 248, 238, 242,	MP2-4
MP2-5	--	--	--					2907 VA	200 VA	1	20 A	EF-2/EF-3, MECH 219/JAN 220,	MP2-6
MP2-7	PTAC, DORM 201,	15 A	2	541 VA	541 VA					2	15 A	PTAC, DORM 204,	MP2-8
MP2-9	--	--	--			541 VA	541 VA			--	--	--	MP2-10
MP2-11	PTAC, DORM 207,	15 A	2					541 VA	541 VA	2	15 A	PTAC, DORM 210,	MP2-12
MP2-13	--	--	--	541 VA	541 VA					--	--	--	MP2-14
MP2-15	PTAC, DORM 216,	15 A	2			541 VA	541 VA			2	15 A	PTAC, DORM 213,	MP2-16
MP2-17	--	--	--					541 VA	541 VA	--	--	--	MP2-18
MP2-19	PTAC, DORM 222,	15 A	2	541 VA	541 VA					2	15 A	PTAC, ACTIVITY 221,	MP2-20
MP2-21	--	--	--			541 VA	541 VA			--	--	--	MP2-22
MP2-23	PTAC, DORM 228,	15 A	2					541 VA	541 VA	2	15 A	PTAC, DORM 225,	MP2-24
MP2-25	--	--	--	541 VA	541 VA					--	--	--	MP2-26
MP2-27	PTAC, DORM 234,	15 A	2			541 VA	541 VA			2	15 A	PTAC, DORM 231,	MP2-28
MP2-29	--	--	--					541 VA	541 VA	--	--	--	MP2-30
MP2-31	PTAC, DORM 243,	15 A	2	541 VA	541 VA					2	15 A	PTAC, DORM 237,	MP2-32
MP2-33	--	--	--			541 VA	541 VA			--	--	--	MP2-34
MP2-35	PTAC, DORM 249,	15 A	2					541 VA	541 VA	2	15 A	PTAC, DORM 246,	MP2-36
MP2-37	--	--	--	541 VA	541 VA					--	--	--	MP2-38
MP2-39	PTAC, DORM 254,	15 A	2			541 VA	541 VA			2	15 A	PTAC, DORM 252,	MP2-40
MP2-41	--	--	--					541 VA	541 VA	--	--	--	MP2-42
MP2-43	PTAC, DAYROOM 259,	15 A	2	541 VA	541 VA					2	15 A	PTAC, DORM 257,	MP2-44
MP2-45	--	--	--			541 VA	541 VA			--	--	--	MP2-46
MP2-47	PTAC, DORM 267,	15 A	2					541 VA	541 VA	2	15 A	PTAC, DORM 264,	MP2-48
MP2-49	--	--	--	541 VA	541 VA					--	--	--	MP2-50
MP2-51	PTAC, DORM 273,	15 A	2			541 VA	541 VA			2	15 A	PTAC, DORM 270,	MP2-52
MP2-53	--	--	--					541 VA	541 VA	--	--	--	MP2-54
MP2-55	PTAC, DORM 279,	15 A	2	541 VA	541 VA					2	15 A	PTAC, DORM 276,	MP2-56
MP2-57	--	--	--			541 VA	541 VA			--	--	--	MP2-58
MP2-59	HVAC Controls, MECH 219,	20 A	1					500 VA	0 VA	1	20 A	--	MP2-60
MP2-61	--	20 A	1	0 VA	0 VA					1	20 A	--	MP2-62
MP2-63	--	20 A	1			0 VA	0 VA			1	20 A	--	MP2-64
MP2-65	--	20 A	1					0 VA	0 VA	1	20 A	--	MP2-66
			Total Load:	13245 VA		13245 VA		12263 VA					
			Total Amps:	112 A		112 A		102 A					

Load Classification	Connected Load		Estimated Demand	Panel Totals	
HVAC	38253 VA		38253 VA		
Power	500 VA		400 VA	**Total Conn. Load:**	38753 VA
				Total Est. Demand:	38653 VA
				Total Conn. Current:	108 A
				Total Est. Demand Current:	107 A

Notes:

Branch Panel: MP3

Location: ELEC 362
Supply From: MDP
Mounting: Surface
Enclosure: Type 1

Volts: 120/208 Wye
Phases: 3
Wires: 4

A.I.C. Rating: 10,000
Mains Type: MCB
Mains Rating: 125 A

Notes:

CKT	Load Name	Trip	Poles	A		B		C		Poles	Trip	Load Name	CKT
MP3-1	AHU-3, MECH 319,	20 A	3	2907 VA	600 VA					1	20 A	EF-1, BATHROOM 304, 380, 311, 374, 316, 368,	MP3-2
MP3-3	--	--	--			2907 VA	600 VA			1	20 A	EF-1, BATHROOM, 358, 332, 349, 338, 342,	MP3-4
MP3-5	--	--	--					2907 VA	200 VA	1	20 A	EF-2/EF-3, MECH 319/JAN 320,	MP3-6
MP3-7	PTAC, DORM 301,	20 A	2	541 VA	541 VA					2	20 A	PTAC, DORM 305,	MP3-8
MP3-9	--	--	--			541 VA	541 VA			--	--	--	MP3-10
MP3-11	PTAC, DORM 307,	20 A	2					541 VA	541 VA	2	20 A	PTAC, DORM 310,	MP3-12
MP3-13	--	--	--	541 VA	541 VA					--	--	--	MP3-14
MP3-15	PTAC, DORM 317,	20 A	2			541 VA	541 VA			2	20 A	PTAC, DORM 313,	MP3-16
MP3-17	--	--	--					541 VA	541 VA	--	--	--	MP3-18
MP3-19	PTAC, DORM 322,	20 A	2	541 VA	541 VA					2	20 A	PTAC, ACTIVITY 321,	MP3-20
MP3-21	--	--	--			541 VA	541 VA			--	--	--	MP3-22
MP3-23	PTAC, DORM 328,	20 A	2					541 VA	541 VA	2	20 A	PTAC, DORM 325,	MP3-24
MP3-25	--	--	--	541 VA	541 VA					--	--	--	MP3-26
MP3-27	PTAC, DORM 334,	20 A	2			541 VA	541 VA			2	20 A	PTAC, DORM 331,	MP3-28
MP3-29	--	--	--					541 VA	541 VA	--	--	--	MP3-30
MP3-31	PTAC, DORM 343,	20 A	2	541 VA	541 VA					2	20 A	PTAC, DORM 337,	MP3-32
MP3-33	--	--	--			541 VA	541 VA			--	--	--	MP3-34
MP3-35	PTAC, DORM 348,	20 A	2					541 VA	541 VA	2	20 A	PTAC, DORM 346,	MP3-36
MP3-37	--	--	--	541 VA	541 VA					--	--	--	MP3-38
MP3-39	PTAC, DORM 354,	20 A	2			541 VA	541 VA			2	20 A	PTAC, DORM 352,	MP3-40
MP3-41	--	--	--					541 VA	541 VA	--	--	--	MP3-42
MP3-43	PTAC, DAYROOM 359,	20 A	2	541 VA	541 VA					2	20 A	PTAC, DORM 357,	MP3-44
MP3-45	--	--	--			541 VA	541 VA			--	--	--	MP3-46
MP3-47	PTAC, DORM-2 367,	20 A	2					541 VA	541 VA	2	20 A	PTAC, DORM 364,	MP3-48
MP3-49	--	--	--	541 VA	541 VA					--	--	--	MP3-50
MP3-51	PTAC, DORM-1 45-1,	20 A	2			541 VA	541 VA			2	20 A	PTAC, DORM 370,	MP3-52
MP3-53	--	--	--					541 VA	541 VA	--	--	--	MP3-54
MP3-55	PTAC, DORM 379,	20 A	2	541 VA	541 VA					2	20 A	PTAC, DORM 376,	MP3-56
MP3-57	--	--	--			541 VA	541 VA			--	--	--	MP3-58
MP3-59	HVAC Controls, MECH 319,	20 A	1					500 VA	0 VA	1	20 A	--	MP3-60
MP3-61	--	20 A	1	0 VA	0 VA					1	20 A	--	MP3-62
MP3-63	--	20 A	1			0 VA	0 VA			1	20 A	--	MP3-64
MP3-65	--	20 A	1					0 VA	0 VA	1	20 A	--	MP3-66
			Total Load:	13245 VA		13245 VA		12263 VA					
			Total Amps:	112 A		112 A		102 A					

Load Classification	Connected Load		Estimated Demand	Panel Totals	
HVAC	38253 VA		38253 VA		
Power	500 VA		400 VA	**Total Conn. Load:**	38753 VA
				Total Est. Demand:	38653 VA
				Total Conn. Current:	108 A
				Total Est. Demand Current:	107 A

Notes:

US Army Corps of Engineers®

MARK	DESCRIPTION	DATE

DESIGNED BY: R.M.FORTNER
DRAWN BY: EN-DE
CHECKED BY: D.D.COLLIER
SUBMITTED BY: W.W.KNAPP
SIZE: ANSI D
ISSUE DATE: FEBRUARY 2019
SOLICITATION NO.: W912781R0028
CONTRACT NO.:
PROJECT NUMBER: M077E144
FILE NAME: M077E144

U.S. ARMY CORPS OF ENGINEERS
MOBILE DISTRICT
MOBILE, ALABAMA

SOTO CANO AIR BASE, HONDURAS
UNACCOMPANIED ENLISTED PERSONNEL HOUSING

PANEL SCHEDULES

SHEET ID
EP603

Branch Panel: GP1

Location: ELEC 162
Supply From: MDP
Mounting: Surface
Enclosure: Type 1

Volts: 120/208 Wye
Phases: 3
Wires: 4

A.I.C. Rating: 18,000
Mains Type: MLO
Mains Rating: 125 A

Notes:

CKT	Load Name	Trip	Poles	A		B		C		Poles	Trip	Load Name	CKT
GP1-1	Clothes Dryer LAUNDRY 161,	20 A	2	900 VA	900 VA					2	20 A	Clothes Dryer LAUNDRY 161,	GP1-2
GP1-3	--	--	--			900 VA	900 VA			--	--	--	GP1-4
GP1-5	Washer LAUNDRY 161,	20 A	1					1200 VA	1200 VA	1	20 A	Washer LAUNDRY 161,	GP1-6
GP1-7	Clothes Dryer LAUNDRY 161,	20 A	2	900 VA	900 VA					2	20 A	Clothes Dryer LAUNDRY 161,	GP1-8
GP1-9	--	--	--			900 VA	900 VA			--	--	--	GP1-10
GP1-11	Washer LAUNDRY 161,	20 A	1					1200 VA	1200 VA	1	20 A	Washer LAUNDRY 161,	GP1-12
GP1-13	* Receptacles DORM 101,	20 A	1	720 VA	180 VA					1	20 A	Receptacles DORM 101,	GP1-14
GP1-15	* Receptacles DORM 104,	20 A	1			720 VA	180 VA			1	20 A	Receptacles DORM 104,	GP1-16
GP1-17	* Receptacles DORM 107,	20 A	1					720 VA	180 VA	1	20 A	Receptacles DORM 107,	GP1-18
GP1-19	* Receptacles DORM 110,	20 A	1	720 VA	180 VA					1	20 A	Receptacles DORM 110,	GP1-20
GP1-21	* Receptacles DORM 113,	20 A	1			720 VA	180 VA			1	20 A	Receptacles DORM 113,	GP1-22
GP1-23	* Receptacles DORM 117,	20 A	1					720 VA	180 VA	1	20 A	Receptacles DORM 117,	GP1-24
GP1-25	Receptacles Room 119, 120,	20 A	1	900 VA	900 VA					1	20 A	* Receptacles ACTIVITY 121,	GP1-26
GP1-27	* Receptacles DORM 122,	20 A	1			720 VA	180 VA			1	20 A	Receptacles DORM 122,	GP1-28
GP1-29	* Receptacles DORM 125,	20 A	1					720 VA	180 VA	1	20 A	Receptacles DORM 125,	GP1-30
GP1-31	* Receptacles DORM 128,	20 A	1	720 VA	180 VA					1	20 A	Receptacles DORM 128,	GP1-32
GP1-33	* Receptacles DORM 131,	20 A	1			720 VA	180 VA			1	20 A	Receptacles DORM 131,	GP1-34
GP1-35	* Receptacles DORM 134,	20 A	1					720 VA	180 VA	1	20 A	Receptacles DORM 134,	GP1-36
GP1-37	* Receptacles DORM 137,	20 A	1	900 VA	180 VA					1	20 A	Receptacles DORM 137,	GP1-38
GP1-39	* Receptacles DORM 143,	20 A	1			720 VA	180 VA			1	20 A	Receptacles DORM 143,	GP1-40
GP1-41	* Receptacles DORM 146,	20 A	1					720 VA	180 VA	1	20 A	Receptacles DORM 146,	GP1-42
GP1-43	* Receptacles DORM 149,	20 A	1	720 VA	180 VA					1	20 A	Receptacles DORM 149,	GP1-44
GP1-45	* Receptacles DORM 152,	20 A	1			720 VA	180 VA			1	20 A	Receptacles DORM 152,	GP1-46
GP1-47	* Receptacles DORM 154,	20 A	1					720 VA	180 VA	1	20 A	Receptacles DORM 154,	GP1-48
GP1-49	* Receptacles DORM 157,	20 A	1	720 VA	180 VA					1	20 A	Receptacles DORM 157,	GP1-50
GP1-51	* Receptacles DAYROOM 159,	20 A	1			1080 VA	1000 VA			1	20 A	Telecomm Backboard ELEC 162,	GP1-52
GP1-53	Receptacles Room 161, 140,	20 A	1					720 VA	1000 VA	1	20 A	Telecomm Cabinet ELEC 162,	GP1-54
GP1-55	* Receptacles DORM 164,	20 A	1	720 VA	180 VA					1	20 A	Receptacles DORM 164,	GP1-56
GP1-57	* Receptacles DORM 167,	20 A	1			720 VA	180 VA			1	20 A	Receptacles DORM 167,	GP1-58
GP1-59	* Receptacles DORM 170,	20 A	1					720 VA	180 VA	1	20 A	Receptacles DORM 170,	GP1-60
GP1-61	* Receptacles DORM 173,	20 A	1	720 VA	180 VA					1	20 A	Receptacles DORM 173,	GP1-62
GP1-63	* Receptacles DORM 176,	20 A	1			720 VA	180 VA			1	20 A	Receptacles DORM 176,	GP1-64
GP1-65	* Receptacles DORM 179,	20 A	1					900 VA	180 VA	1	20 A	Receptacles DORM 179,	GP1-66
GP1-67	--	20 A	1	0 VA	0 VA					1	20 A	--	GP1-68
GP1-69	--	20 A	1			0 VA	0 VA			1	20 A	--	GP1-70
GP1-71	--	20 A	1					0 VA	0 VA	1	20 A	--	GP1-72
			Total Load:	12780 VA		12880 VA		13900 VA					
			Total Amps:	107 A		107 A		116 A					

Load Classification	Connected Load		Estimated Demand	Panel Totals	
Receptacles	32360 VA		21180 VA		
Clothes Dryer	7200 VA		3600 VA	**Total Conn. Load:**	39560 VA
				Total Est. Demand:	24780 VA
				Total Conn. Current:	110 A
				Total Est. Demand Current:	69 A

Notes: * DENOTES ARC FAULT BREAKER

Branch Panel: GP2

Location: ELEC 262
Supply From: MDP
Mounting: Surface
Enclosure: Type 1

Volts: 120/208 Wye
Phases: 3
Wires: 4

A.I.C. Rating: 18,000
Mains Type: MLO
Mains Rating: 125 A

Notes:

CKT	Load Name	Trip	Poles	A		B		C		Poles	Trip	Load Name	CKT
GP2-1	Clothes Dryer LAUNDRY 261,	20 A	2	900 VA	900 VA					2	20 A	Clothes Dryer LAUNDRY 261,	GP2-2
GP2-3	--	--	--			900 VA	900 VA			--	--	--	GP2-4
GP2-5	Washer LAUNDRY 261,	20 A	1					180 VA	180 VA	1	20 A	Washer LAUNDRY 261,	GP2-6
GP2-7	Clothes Dryer LAUNDRY 261,	20 A	2	900 VA	900 VA					2	20 A	Clothes Dryer LAUNDRY 261,	GP2-8
GP2-9	--	--	--			900 VA	900 VA			--	--	--	GP2-10
GP2-11	Washer LAUNDRY 261,	20 A	1					180 VA	180 VA	1	20 A	Washer LAUNDRY 261,	GP2-12
GP2-13	* Receptacles DORM 201,	20 A	1	720 VA	180 VA					1	20 A	Receptacles DORM 201,	GP2-14
GP2-15	* Receptacles DORM 204,	20 A	1			720 VA	180 VA			1	20 A	Receptacles DORM 204,	GP2-16
GP2-17	* Receptacles DORM 207,	20 A	1					720 VA	180 VA	1	20 A	Receptacles DORM 207,	GP2-18
GP2-19	* Receptacles DORM 210,	20 A	1	720 VA	180 VA					1	20 A	Receptacles DORM 210,	GP2-20
GP2-21	* Receptacles DORM 213,	20 A	1			720 VA	180 VA			1	20 A	Receptacles DORM 213,	GP2-22
GP2-23	* Receptacles DORM 216,	20 A	1					720 VA	180 VA	1	20 A	Receptacles DORM 216,	GP2-24
GP2-25	Receptacles Room 219, 220,	20 A	1	540 VA	900 VA					1	20 A	* Receptacles ACTIVITY 221,	GP2-26
GP2-27	* Receptacles DORM 222,	20 A	1			720 VA	180 VA			1	20 A	Receptacles DORM 222,	GP2-28
GP2-29	* Receptacles DORM 225,	20 A	1					720 VA	180 VA	1	20 A	Receptacles DORM 225,	GP2-30
GP2-31	* Receptacles DORM 228,	20 A	1	720 VA	180 VA					1	20 A	Receptacles DORM 228,	GP2-32
GP2-33	* Receptacles DORM 231,	20 A	1			720 VA	180 VA			1	20 A	Receptacles DORM 231,	GP2-34
GP2-35	* Receptacles DORM 243,	20 A	1					720 VA	180 VA	1	20 A	Receptacles DORM 234,	GP2-36
GP2-37	* Receptacles DORM 234,	20 A	1	720 VA	180 VA					1	20 A	Receptacles DORM 237,	GP2-38
GP2-39	* Receptacles DORM 237,	20 A	1			900 VA	180 VA			1	20 A	Receptacles DORM 243,	GP2-40
GP2-41	* Receptacles DORM 246,	20 A	1					720 VA	180 VA	1	20 A	Receptacles DORM 246,	GP2-42
GP2-43	* Receptacles DORM 249,	20 A	1	720 VA	180 VA					1	20 A	Receptacles DORM 249,	GP2-44
GP2-45	* Receptacles DORM 252,	20 A	1			720 VA	180 VA			1	20 A	Receptacles DORM 252,	GP2-46
GP2-47	* Receptacles DORM 254,	20 A	1					720 VA	180 VA	1	20 A	Receptacles DORM 254,	GP2-48
GP2-49	* Receptacles DORM 257,	20 A	1	720 VA	180 VA					1	20 A	Receptacles DORM 257,	GP2-50
GP2-51	* Receptacles DAYROOM 259,	20 A	1			900 VA	720 VA			1	20 A	Receptacles Room 261, 240,	GP2-52
GP2-53	Telecomm Cabinet ELEC 262,	20 A	1					1180 VA	1000 VA	1	20 A	Telecomm Backboard ELEC 262,	GP2-54
GP2-55	* Receptacles DORM 264,	20 A	1	720 VA	180 VA					1	20 A	Receptacles DORM 264,	GP2-56
GP2-57	* Receptacles DORM 267,	20 A	1			720 VA	180 VA			1	20 A	Receptacles DORM 267,	GP2-58
GP2-59	* Receptacles DORM 270,	20 A	1					720 VA	180 VA	1	20 A	Receptacles DORM 270,	GP2-60
GP2-61	* Receptacles DORM 273,	20 A	1	720 VA	180 VA					1	20 A	Receptacles DORM 273,	GP2-62
GP2-63	* Receptacles DORM 276,	20 A	1			720 VA	180 VA			1	20 A	Receptacles DORM 276,	GP2-64
GP2-65	* Receptacles Room 279,	20 A	1					900 VA	180 VA	1	20 A	Receptacles DORM 279,	GP2-66
GP2-67	--	20 A	1	0 VA	0 VA					1	20 A	--	GP2-68
GP2-69	--	20 A	1			0 VA	0 VA			1	20 A	--	GP2-70
GP2-71	--	20 A	1					0 VA	0 VA	1	20 A	--	GP2-72
			Total Load:	12240 VA		12600 VA		10280 VA					
			Total Amps:	105 A		108 A		86 A					

Load Classification	Connected Load		Estimated Demand	Panel Totals	
Receptacles	27920 VA		18960 VA		
Clothes Dryer	7200 VA		3600 VA	**Total Conn. Load:**	35120 VA
				Total Est. Demand:	22560 VA
				Total Conn. Current:	97 A
				Total Est. Demand Current:	63 A

Notes: * DENOTES ARC FAULT BREAKER

US Army Corps of Engineers®

MARK	DESCRIPTION	DATE

ISSUE DATE: FEBRUARY 2019
SOLICITATION NO.: W912781R0028
CONTRACT NO.:
PROJECT NUMBER: M017E144
FILE NAME: M017E144

DESIGNED BY: R.M.FORTNER
DRAWN BY: EN-DE
CHECKED BY: D.D.COLLIER
SUBMITTED BY: W.W.KAMP
SIZE: ANSI D

U.S. ARMY CORPS OF ENGINEERS
MOBILE DISTRICT
MOBILE, ALABAMA

SOTO CANO AIR BASE, HONDURAS
UNACCOMPANIED ENLISTED PERSONNEL HOUSING

PANEL SCHEDULES

SHEET ID
EP604

Branch Panel: GP3

Location: ELEC 362
Supply From: MDP
Mounting: Surface
Enclosure: Type 1

Volts: 120/208 Wye
Phases: 3
Wires: 4

A.I.C. Rating: 18,000
Mains Type: MLO
Mains Rating: 125 A

Notes:

CKT	Load Name	Trip	Poles	A		B		C		Poles	Trip	Load Name	CKT
GP3-1	Clothes Dryer LAUNDRY 361,	20 A	2	900 VA	900 VA					2	20 A	Clothes Dryer LAUNDRY 361,	GP3-2
GP3-3	--	--	--			900 VA	900 VA			--	--	--	GP3-4
GP3-5	Washer LAUNDRY 361,	20 A	1					180 VA	180 VA	1	20 A	Washer LAUNDRY 361,	GP3-6
GP3-7	Clothes Dryer LAUNDRY 361,	20 A	2	900 VA	900 VA					2	20 A	Clothes Dryer LAUNDRY 361,	GP3-8
GP3-9	--	--	--			900 VA	900 VA			--	--	--	GP3-10
GP3-11	Washer LAUNDRY 361,	20 A	1					180 VA	180 VA	1	20 A	Washer LAUNDRY 361,	GP3-12
GP3-13	* Receptacles DORM 301,	20 A	1	720 VA	180 VA					1	20 A	Receptacles DORM 301,	GP3-14
GP3-15	* Receptacles DORM 305,	20 A	1			720 VA	180 VA			1	20 A	Receptacles DORM 305,	GP3-16
GP3-17	* Receptacles DORM 307,	20 A	1					720 VA	180 VA	1	20 A	Receptacles DORM 307,	GP3-18
GP3-19	* Receptacles DORM 310,	20 A	1	720 VA	180 VA					1	20 A	Receptacles DORM 310,	GP3-20
GP3-21	* Receptacles DORM 313,	20 A	1			720 VA	180 VA			1	20 A	Receptacles DORM 313,	GP3-22
GP3-23	* Receptacles DORM 317,	20 A	1					720 VA	180 VA	1	20 A	Receptacles DORM 317,	GP3-24
GP3-25	Receptacles Room 319, 320,	20 A	1	540 VA	900 VA					1	20 A	* Receptacles ACTIVITY 321,	GP3-26
GP3-27	* Receptacles DORM 322,	20 A	1			720 VA	180 VA			1	20 A	Receptacles DORM 322,	GP3-28
GP3-29	* Receptacles DORM 325,	20 A	1					720 VA	180 VA	1	20 A	Receptacles DORM 325,	GP3-30
GP3-31	* Receptacles DORM 328,	20 A	1	720 VA	180 VA					1	20 A	Receptacles DORM 328,	GP3-32
GP3-33	* Receptacles DORM 331,	20 A	1			720 VA	180 VA			1	20 A	Receptacles DORM 331,	GP3-34
GP3-35	* Receptacles DORM 334,	20 A	1					720 VA	180 VA	1	20 A	Receptacles DORM 334,	GP3-36
GP3-37	* Receptacles DORM 337,	20 A	1	900 VA	180 VA					1	20 A	Receptacles DORM 337,	GP3-38
GP3-39	* Receptacles DORM 343,	20 A	1			720 VA	180 VA			1	20 A	Receptacles DORM 343,	GP3-40
GP3-41	* Receptacles DORM 346,	20 A	1					720 VA	180 VA	1	20 A	Receptacles DORM 346,	GP3-42
GP3-43	* Receptacles DORM 348,	20 A	1	720 VA	180 VA					1	20 A	Receptacles DORM 348,	GP3-44
GP3-45	* Receptacles DORM 352,	20 A	1			720 VA	180 VA			1	20 A	Receptacles DORM 352,	GP3-46
GP3-47	* Receptacles DORM 354,	20 A	1					720 VA	180 VA	1	20 A	Receptacles DORM 354,	GP3-48
GP3-49	* Receptacles DORM 357,	20 A	1	720 VA	180 VA					1	20 A	Receptacles DORM 357,	GP3-50
GP3-51	* Receptacles DAYROOM 359,	20 A	1			900 VA	720 VA			1	20 A	Receptacles Room 361, 340,	GP3-52
GP3-53	Telecomm Backboard ELEC 362,	20 A	1					1000 VA	1180 VA	1	20 A	Telecomm Cabinet ELEC 362,	GP3-54
GP3-55	* Receptacles DORM 364,	20 A	1	720 VA	180 VA					1	20 A	Receptacles DORM 364,	GP3-56
GP3-57	* Receptacles DORM 367,	20 A	1			720 VA	180 VA			1	20 A	Receptacles DORM 367,	GP3-58
GP3-59	* Receptacles DORM 370,	20 A	1					720 VA	180 VA	1	20 A	Receptacles DORM 370,	GP3-60
GP3-61	* Receptacles DORM 373,	20 A	1	720 VA	180 VA					1	20 A	Receptacles DORM 373,	GP3-62
GP3-63	* Receptacles DORM 376,	20 A	1			720 VA	180 VA			1	20 A	Receptacles DORM 376,	GP3-64
GP3-65	* Receptacles DORM 379,	20 A	1					900 VA	180 VA	1	20 A	Receptacles DORM 379,	GP3-66
GP3-67	--	20 A	1	0 VA	0 VA					1	20 A	--	GP3-68
GP3-69	--	20 A	1			0 VA	0 VA			1	20 A	--	GP3-70
GP3-71	--	20 A	1					0 VA	0 VA	1	20 A	--	GP3-72
			Total Load:	12420 VA		12420 VA		10280 VA					
			Total Amps:	106 A		106 A		86 A					

Load Classification	Connected Load		Estimated Demand	Panel Totals	
Receptacles	27920 VA		18960 VA		
Clothes Dryer	7200 VA		3600 VA	**Total Conn. Load:**	35120 VA
				Total Est. Demand:	22560 VA
				Total Conn. Current:	97 A
				Total Est. Demand Current:	63 A

Notes: * DENOTES ARC FAULT BREAKER

US Army Corps of Engineers®

MARK	DESCRIPTION	DATE

ISSUE DATE: FEBRUARY 2019
SOLICITATION NO.: W912781R0028
CONTRACT NO.:
PROJECT NUMBER: M077E144
FILE NAME: M077E144
DESIGNED BY: R.M.FORTNER
DRAWN BY: EN-DE
CHECKED BY: D.D.COLLIER
SUBMITTED BY: W.W.KNAPP
SIZE: ANSI D

U.S. ARMY CORPS OF ENGINEERS
MOBILE DISTRICT
MOBILE, ALABAMA

SOTO CANO AIR BASE, HONDURAS
UNACCOMPANIED ENLISTED PERSONNEL HOUSING

PANEL SCHEDULES

SHEET ID
EP605

TELECOMMUNICATIONS

▼	MODULAR DATA JACK, 450mm AFF UNLESS OTHERWISE INDICATED. ("2" DENOTES TWO MODULAR DATA JACKS IN DUAL OUTLET)
▼W	MODULAR DATA JACK, 1200mm AFF.
▼	2 MODULAR DATA JACKS IN A DUAL OUTLET, MOUNTED IN FLOOR BOX ALONG WITH A POWER RECEPTACLE.
	BASKET TYPE CABLE TRAY, 300mm WIDE X 100mm DEEP, BOTTOM MOUNTED 2600mm AFF.
	LADDER TYPE CABLE TRAY, 300mm WIDE, BOTTOM MOUNTED 2600mm AFF.
	2 CONDUIT WALL PENETRATIONS,103mm EMT, BOTTOM MOUNTED 2600mm AFF.

SYSTEMS

TV	CATV OUTLET, MOUNTED 450mm AFF UNLESS OTHERWISE INDICATED.

MISCELLANEOUS

	COMMUNICATIONS RACK
TE	TELECOMMUNICATIONS ENCLOSURE
TBB	2440mm X1220mm TELECOMMUNICATIONS BACKBOARD

NOTE: NOT ALL SYMBOLS USED ON PLANS

ABBREVIATIONS

A	AMPERE
AC	ABOVE COUNTER, 42"AFF UNLESS OTHERWISE INDICATED
ADA	AMERICANS WITH DISABILITIES ACT
AFF	ABOVE FINISHED FLOOR
AL	ALUMINUM
1/C	ONE CONDUCTOR
C	CONDUIT
CB	CIRCUIT BREAKER
CKT	CIRCUIT
CU	COPPER
EF	EXHAUST FAN
EMT	ELECTRICAL METALLIC TUBING
EWC	ELECTRIC WATER COOLER
FACP	FIRE ALARM CONTROL PANEL
FAT	FIRE ALARM TRANSCEIVER
FM	FREQUENCY MODULATION
FMCP	FIRE ALARM/MASS NOTIFICATION CONTROL PANEL
FOC	FIBER OPTIC CABLE
GFI	GROUND FAULT CIRCUIT INTERRUPTER
GFP	GROUND FAULT PROTECTION
HACR	HEATING AIR CONDITIONING REFRIGATION
HP	HORSEPOWER
HPS	HIGH PRESSURE SODIUM
HT	HEIGHT
HZ	HERTZ
IDS	INTRUSION DETECTION SYSTEM
J	JUNCTION BOX
KWH	KILOWATT HOUR
LED	LIGHT EMITTING DIODE
MCB	MOLDED CASE CIRCUIT BREAKER
MH	METAL HALIDE
MLO	MAIN LUGS ONLY
MM	MULTIMODE
MTD	MOUNTED
NEC	NATIONAL ELECTRICAL CODE
NF	NON FUSED
NO.	NUMBER
OS	OCCUPANCY SENSOR
PH	PHASE
PIR	PASSIVE INFRARED
RGS	RIGID GALVANIZED STEEL
SM	SINGLE MODE
SPD	SURGE PROTECTION DEVICE
TTB	TELEPHONE TERMINAL BOARD
TV	TELEVISION
TVSS	TRANSIENT VOLTAGE SURGE SUPRESSOR
TX	TRANSFORMER
UNO	UNLESS NOTED OTHERWISE
V	VOLT
VA	VOLTAMPERE
VVD	VARIABLE VOLUME DAMPER
W	WATTS
WP	WATER PROOF
XFMR	TRANSFORMER

GENERAL NOTES

1. PLAN DRAWINGS ARE APPLICABLE TO BUILDINGS D, E, & F.
2. ALL FLOOR PLANS SHOWN ARE BASED ON BUILDING D ORIENTATION.

US Army Corps of Engineers®

MARK	DESCRIPTION	DATE

DESIGNED BY: R.M.FORTNER
DRAWN BY: EN-DE
CHECKED BY: D.D.COLLIER
SUBMITTED BY: W.W.KNAPP
SIZE: ANSI D
ISSUE DATE: FEBRUARY 2019
SOLICITATION NO.: W912781R0028
CONTRACT NO.:
PROJECT NUMBER: M07TE144
FILE NAME: M07TE144

U.S. ARMY CORPS OF ENGINEERS
MOBILE DISTRICT
MOBILE, ALABAMA

SOTO CANO AIR BASE, HONDURAS
UNACCOMPANIED ENLISTED PERSONNEL HOUSING

TELECOMMUNICATION SYSTEMS LEGEND

SHEET ID
ET001

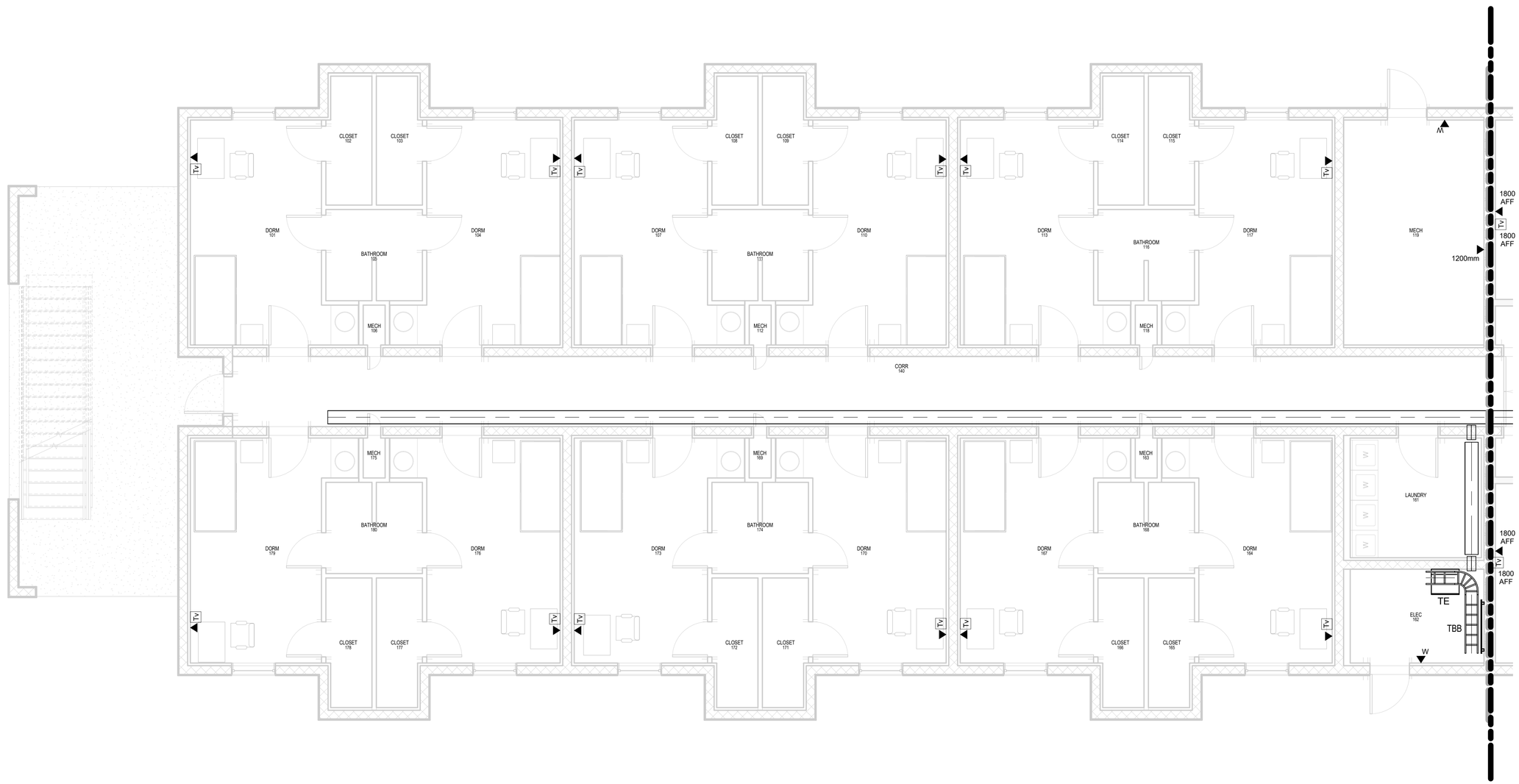

1 FIRST FLOOR TELECOMMUNICATIONS PLAN - AREA "A"

1 : 50

KEY PLAN

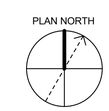

0 2000 4000

SCALE: 1 : 50

US Army Corps of Engineers®

MARK	DESCRIPTION	DATE

ISSUE DATE: FEBRUARY 2019
SOLICITATION NO.: W912ZB19R0028
CONTRACT NO.:
PROJECT NUMBER: M017EL44

DESIGNED BY: R.M.FORTNER
DRAWN BY: EN-DE
CHECKED BY: D.D.COLLIER
SUBMITTED BY: W.J.KNAPP
SIZE: ANSI D
FILE NAME: M017EL44

U.S. ARMY CORPS OF ENGINEERS
MOBILE DISTRICT
MOBILE, ALABAMA

SOTO CANO AIR BASE, HONDURAS
UNACCOMPANIED ENLISTED PERSONNEL HOUSING

FIRST FLOOR TELECOMMUNICATION SYSTEMS PLAN - AREA "A"

SHEET ID

ET101

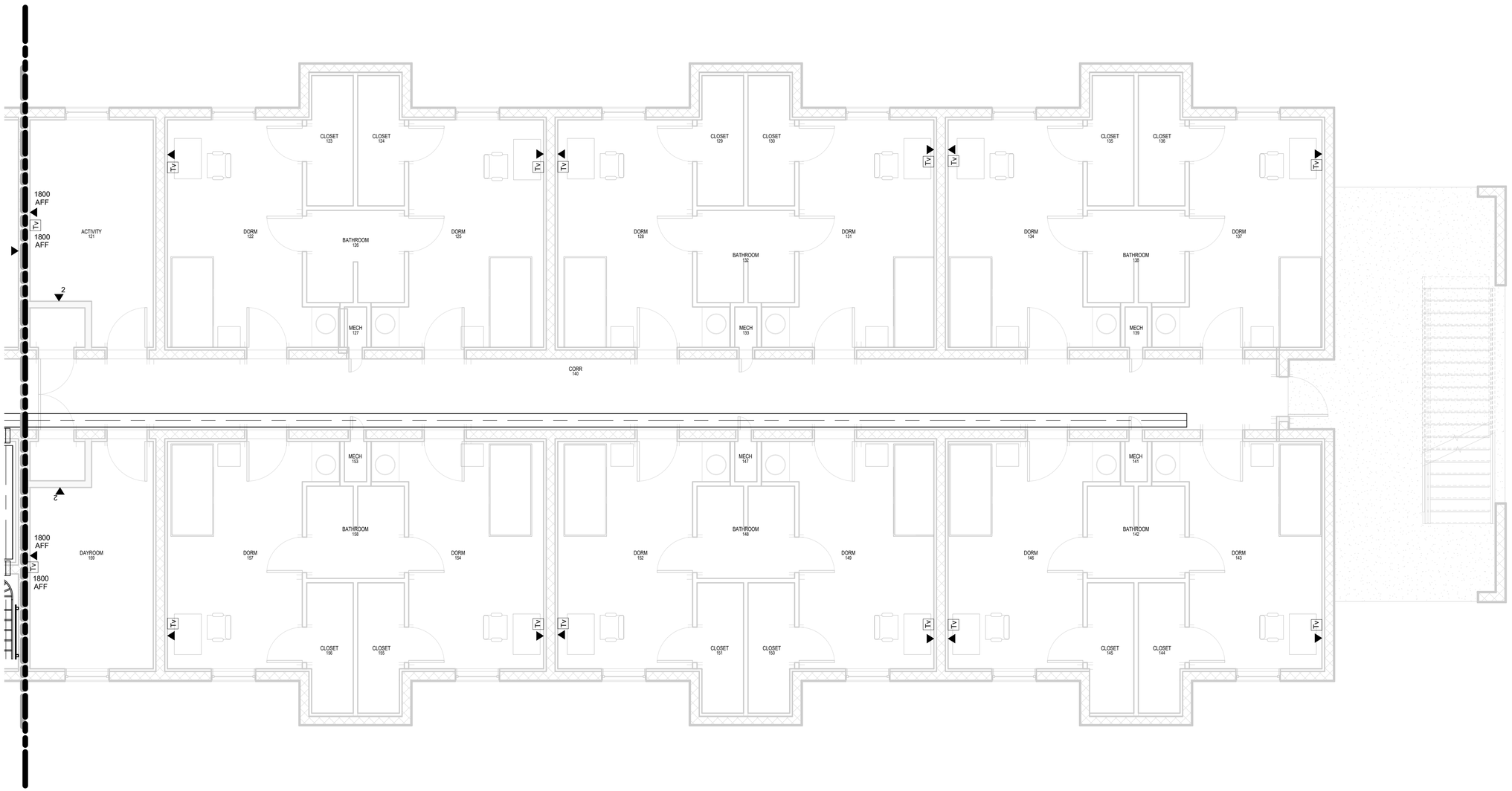

1 FIRST FLOOR TELECOMMUNICATIONS PLAN - AREA "B"

1 : 50

KEY PLAN

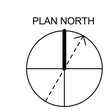

SCALE: 1 : 50

US Army Corps of Engineers®

MARK	DESCRIPTION	DATE

DESIGNED BY: R.M.FORTNER
DRAWN BY: EN-DE
CHECKED BY: D.D.COLLIER
SUBMITTED BY: W.JUNKAPP
SIZE: ANSI D
ISSUE DATE: FEBRUARY 2019
SOLICITATION NO.: W912ZB19R0028
CONTRACT NO.:
PROJECT NUMBER: M017E1J44
FILE NAME: M017E1J44

U.S. ARMY CORPS OF ENGINEERS
MOBILE DISTRICT
MOBILE, ALABAMA

SOTO CANO AIR BASE, HONDURAS
UNACCOMPANIED ENLISTED PERSONNEL HOUSING

FIRST FLOOR TELECOMMUNICATION SYSTEMS PLAN - AREA "B"

SHEET ID

ET102

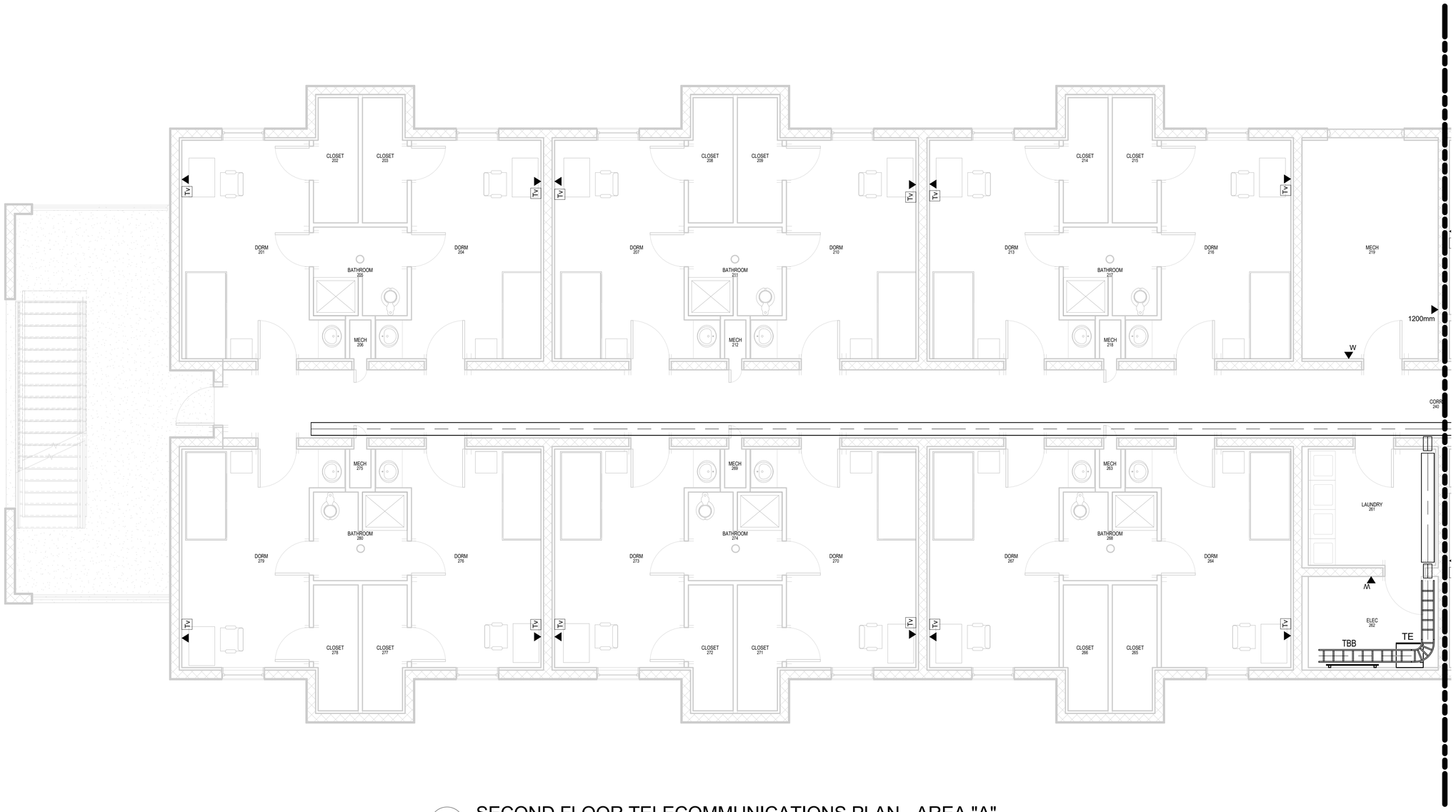

1 SECOND FLOOR TELECOMMUNICATIONS PLAN - AREA "A"

1 : 50

KEY PLAN

0 2000 4000

SCALE: 1 : 50

US Army Corps of Engineers®

MARK	DESCRIPTION	DATE

ISSUE DATE: FEBRUARY 2019
SOLICITATION NO.: W912ZB19R0028
CONTRACT NO.:
PROJECT NUMBER: M017ELM4

DESIGNED BY: R.M.FORTNER
DRAWN BY: EN-DE
CHECKED BY: D.D.COLLIER
SUBMITTED BY: M.J.KNAPP
SIZE: ANSI D
FILE NAME: M017ELM4

U.S. ARMY CORPS OF ENGINEERS
MOBILE DISTRICT
MOBILE, ALABAMA

SOTO CANO AIR BASE, HONDURAS
UNACCOMPANIED ENLISTED PERSONNEL HOUSING

SECOND FLOOR TELECOMMUNICATION SYSTEMS PLAN - AREA "A"

SHEET ID

ET103

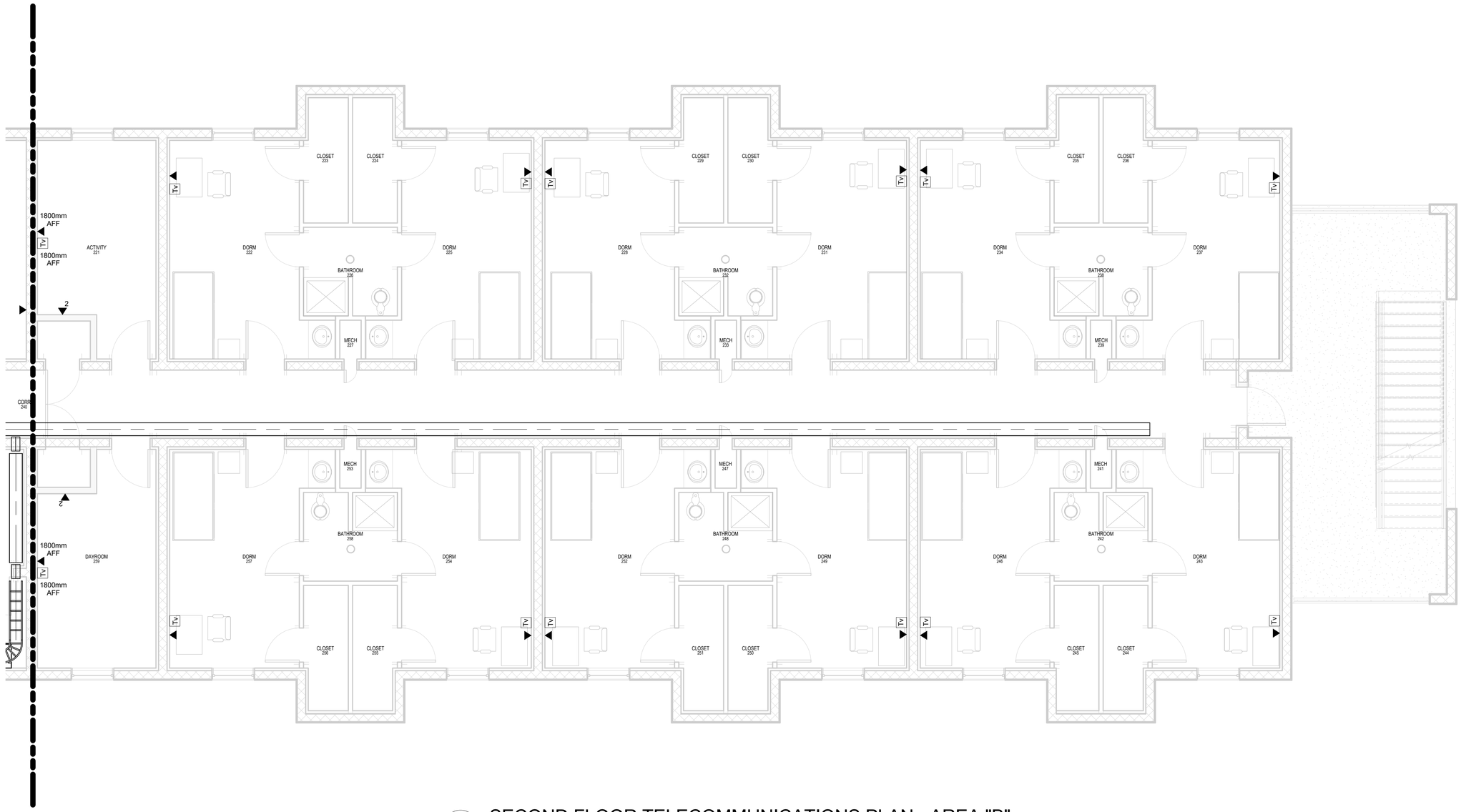

1 SECOND FLOOR TELECOMMUNICATIONS PLAN - AREA "B"

1 : 50

KEY PLAN

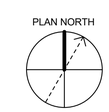

0 2000 4000

SCALE: 1 : 50

US Army Corps of Engineers®

MARK	DESCRIPTION	DATE

ISSUE DATE: FEBRUARY 2019
SOLICITATION NO.: W912ZB19R0028
CONTRACT NO.:
PROJECT NUMBER: M077E1J44
FILE NAME: M077E1J44

DESIGNED BY: R.M.FORTNER
DRAWN BY: EN-DE
CHECKED BY: D.D.COLLIER
SUBMITTED BY: W.J.KNAPP
SIZE: ANSI D

U.S. ARMY CORPS OF ENGINEERS
MOBILE DISTRICT
MOBILE, ALABAMA

SOTO CANO AIR BASE, HONDURAS
UNACCOMPANIED ENLISTED PERSONNEL HOUSING

SECOND FLOOR TELECOMMUNICATION SYSTEMS PLAN - AREA "B"

SHEET ID

ET104

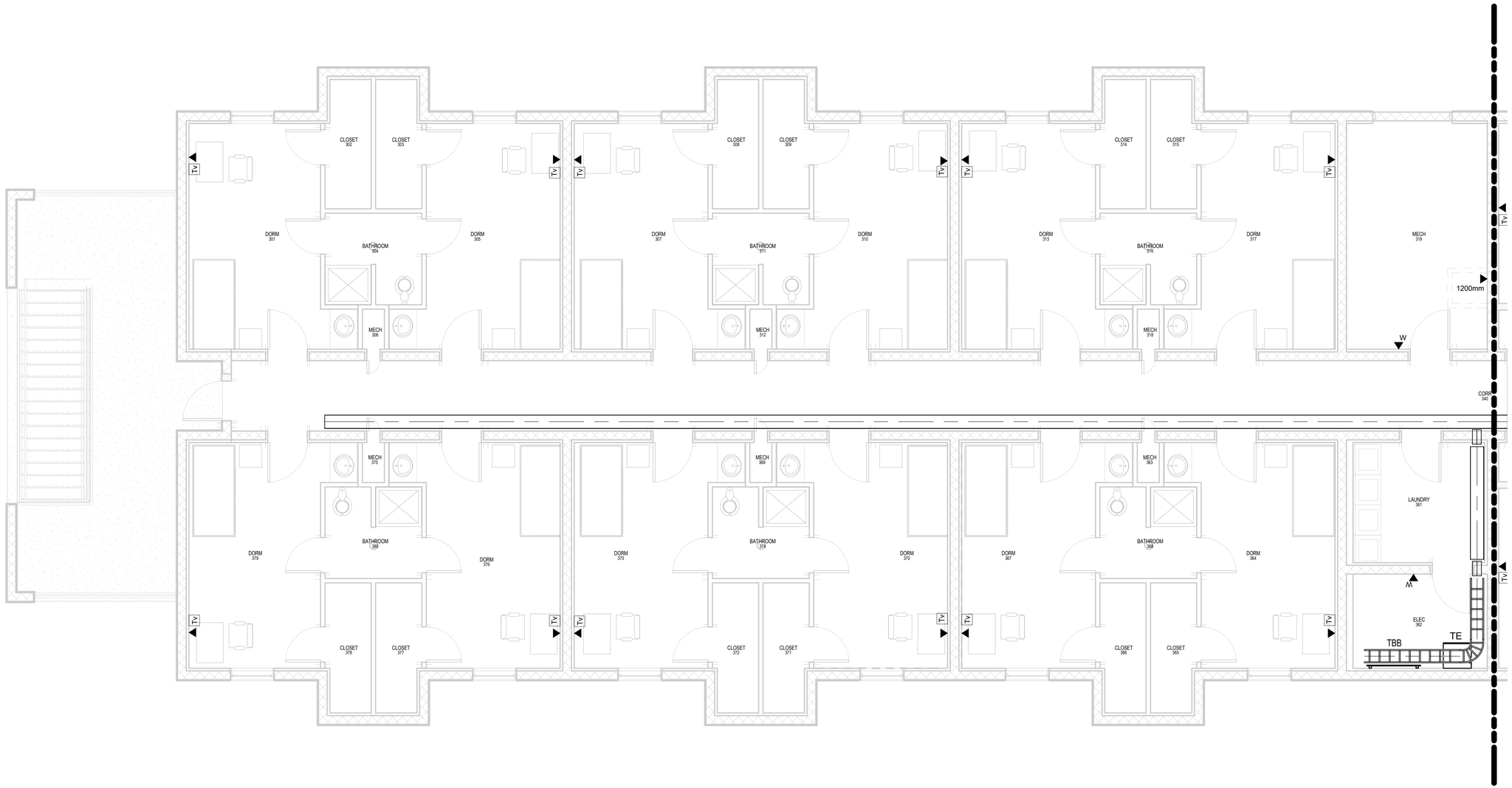

1 THIRD FLOOR TELECOMMUNICATIONS PLAN - AREA "A"

1 : 50

KEY PLAN

0 2000 4000

SCALE: 1 : 50

US Army Corps of Engineers®

MARK	DESCRIPTION	DATE

DESIGNED BY: R.M.FORTNER
DRAWN BY: EN-DE
CHECKED BY: D.D.COLLIER
SUBMITTED BY: W.JUNAPP
SIZE: ANSI D
ISSUE DATE: FEBRUARY 2019
SOLICITATION NO.: W912ZB19R0028
CONTRACT NO.:
PROJECT NUMBER: M077E1J44
FILE NAME: M077E1J44

U.S. ARMY CORPS OF ENGINEERS
MOBILE DISTRICT
MOBILE, ALABAMA

SOTO CANO AIR BASE, HONDURAS
UNACCOMPANIED ENLISTED PERSONNEL HOUSING

THIRD FLOOR TELECOMMUNICATION SYSTEMS PLAN - AREA "A"

SHEET ID

ET105

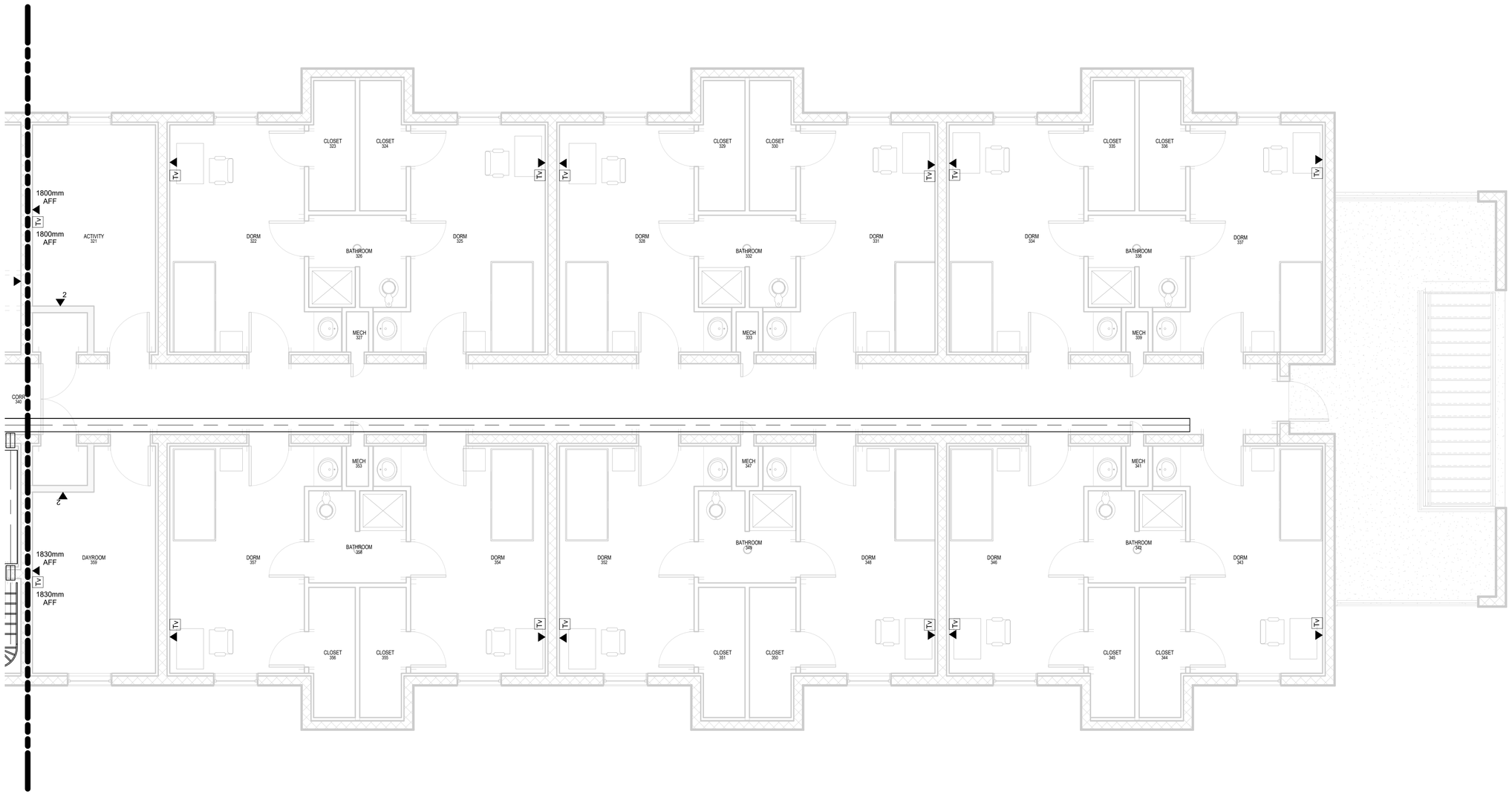

1 THIRD FLOOR TELECOMMUNICATIONS PLAN - AREA "B"

1 : 50

KEY PLAN

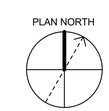

0 2000 4000

SCALE: 1 : 50

US Army Corps of Engineers®

MARK	DESCRIPTION	DATE

ISSUE DATE: FEBRUARY 2019
SOLICITATION NO.: W912ZB19R0028
CONTRACT NO.:
PROJECT NUMBER: M017E1J44
SIZE: ANSI D
FILE NAME: M017E1J44

DESIGNED BY: R.M.FORTNER
DRAWN BY: EN-DE
CHECKED BY: D.D.COLLIER
SUBMITTED BY: W.JUNKAPP

U.S. ARMY CORPS OF ENGINEERS
MOBILE DISTRICT
MOBILE, ALABAMA

SOTO CANO AIR BASE, HONDURAS
UNACCOMPANIED ENLISTED PERSONNEL HOUSING

THIRD FLOOR TELECOMMUNICATION SYSTEMS PLAN - AREA "B"

SHEET ID

ET106

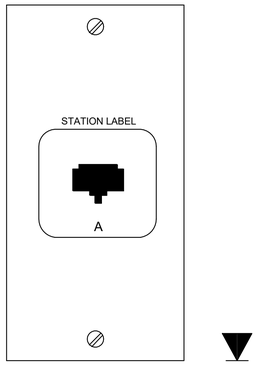

1 1-PORT OUTLET DETAIL
N.T.S.

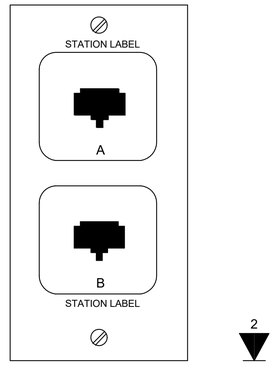

2 2-PORT OUTLET DETAIL
N.T.S.

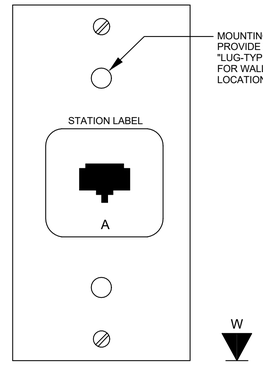

3 WALL OUTLET DETAIL
N.T.S.

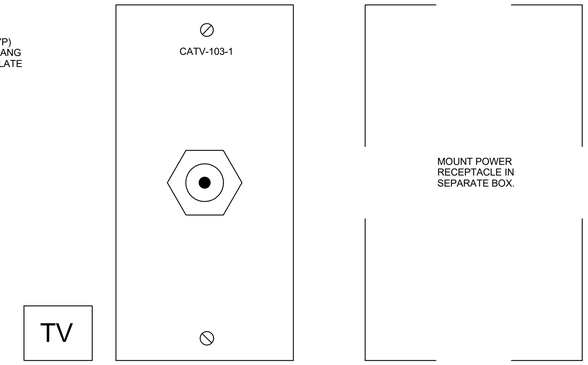

4 CATV OUTLET DETAIL
N.T.S.

COMMUNICATIONS COLOR CODE DESIGNATION SCHEDULE			
TYPE	LETTER	JACK	CABLE
DATA (NIPRNET)	N/A	BLUE	BLUE
VOICE	W	GREY	GRET

ALL COMM OUTLETS SHALL BE 8-PIN RJ-45 U.O.N.

5 OUTLET COLOR DESIGNATION SCHEDULE
N.T.S.

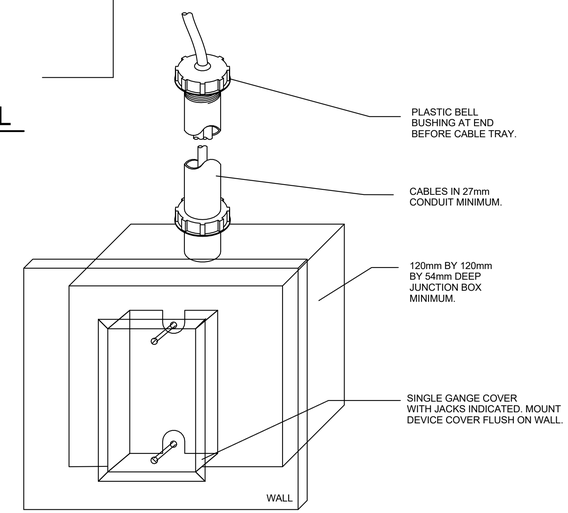

8 TYPICAL OUTLET MOUNTING DETAIL
N.T.S.

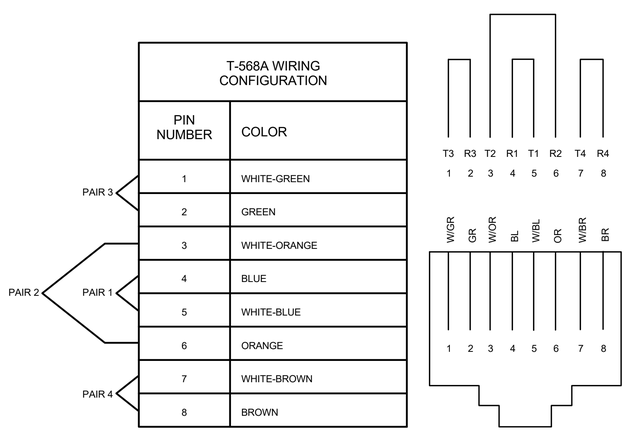

6 T-568A WIRING CONFIGURATION DETAIL
N.T.S.

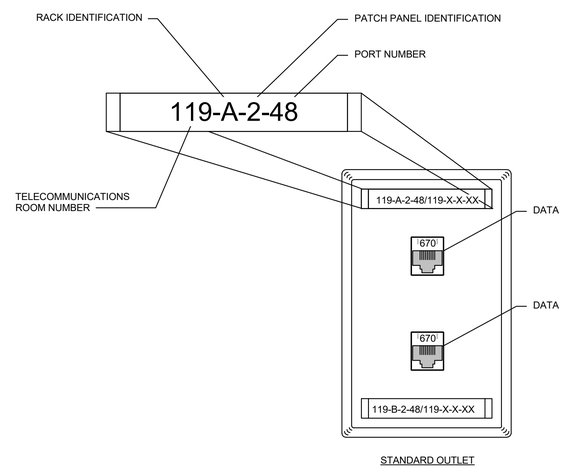

NOTES: OUTLET/PATCH PANEL LABELS

THE TELECOMMUNICATIONS SYSTEM LABELING MUST BE DONE IAW THE FOLLOWING GUIDELINES. ALL OUTLETS AND PATCH PANEL POSITIONS MUST BE LABELED AS TO THEIR FUNCTION (I.E., VOICE, NIPRNET, OR COMMERCIAL) AND WITH A UNIQUE IDENTIFIER CODE.

(1) VOICE AND DATA PORT: ON THE USER END, THE DATA PORT WILL BE LABELED IDENTIFYING THE TELECOM ROOM THE DROP IS BEING FED FROM, FOLLOWED BY THE RACK IDENTIFICATION IN THAT TELECOM ROOM. THE CABLE BEING TERMINTAED ON A PATCH PANEL WILL BE IDENTIFIED WITH A NUMERICAL SEQUENCE OF THE AMOUNT OF PATCH PANELS, FOLLOWED BY THE PORT NUMBER ON THAT PATCH PANEL.

(2) EACH ROOM SHALL BE LABELED IN SEQUENCE BEGINING WITH FIRST OUTLET FROM LEFT OF THE ROOM AND CLOCKWISE AROUND THE ROOM.

(3) PATCH PANELS SHALL BE IN ORDER OF ROOM NUMBER BEGINNING WITH LOWEST ROOM NUMBER.

THE REMOVAL OF THE DASHES BETWEEN THE FIRST THREE (3) DESIGNATORS ARE ALLOWED FOR MORE SPACE ON FACEPLATE AND PATCH PANEL "DESIGNATOR STRIPS". FOR EXAMPLE, "140A2-48" IN PLACE OF "140-A-2-48".

7 OUTLET LABELING DETAIL
N.T.S.

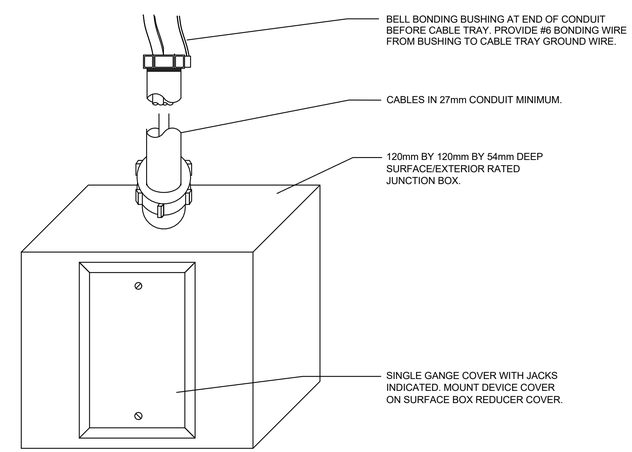

9 TYPICAL OUTLET SURFACE MOUNTING DETAIL
N.T.S.

US Army Corps of Engineers®

MARK	DESCRIPTION	DATE

DESIGNED BY: R.M.FORTNER
DRAWN BY: EN-DE
CHECKED BY: D.D.COLLIER
SUBMITTED BY: W.W.KNAPP
SIZE: ANSI D
ISSUE DATE: FEBRUARY 2019
SOLICITATION NO.: W912781R0028
CONTRACT NO.:
PROJECT NUMBER: M077E144
FILE NAME: M077E144

U.S. ARMY CORPS OF ENGINEERS
MOBILE DISTRICT
MOBILE, ALABAMA

SOTO CANO AIR BASE, HONDURAS
UNACCOMPANIED ENLISTED PERSONNEL HOUSING

TELECOMMUNICATION SYSTEMS DETAILS

SHEET ID
ET501

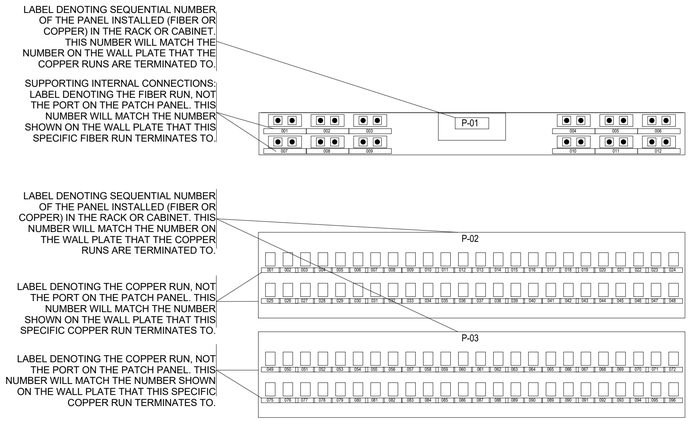

1 PATCH PANEL LABELING DETAIL

N.T.S.

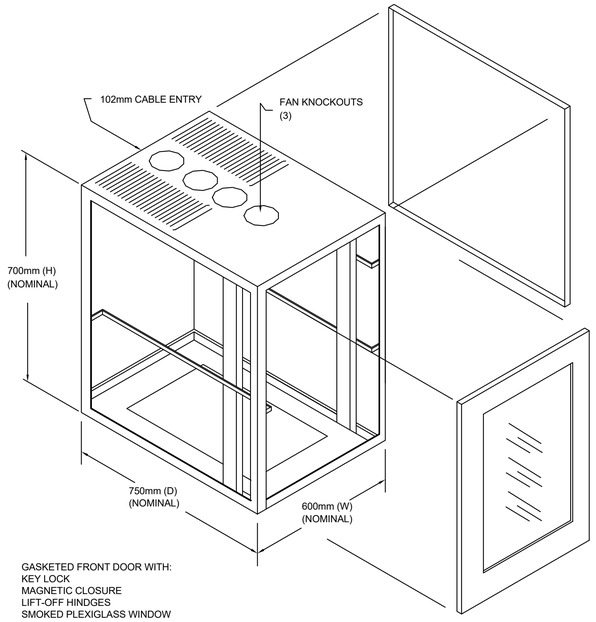

2 TELECOMMUNICATIONS ENCLOSURE

N.T.S.

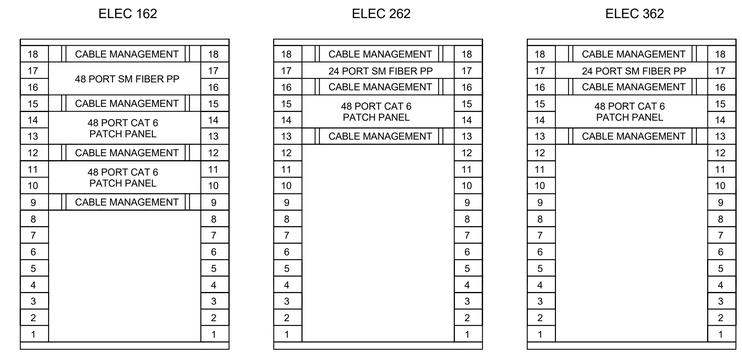

3 TELECOMMUNICATION ENCLOSURE ELEVATIONS

N.T.S.

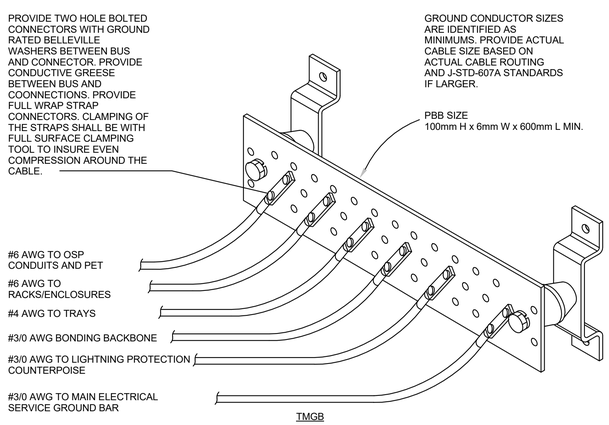

NOTES :

1. GROUND BUS BAR MUST BE UL LISTED.

4 PRIMARY GROUNDING BUS BAR

N.T.S.

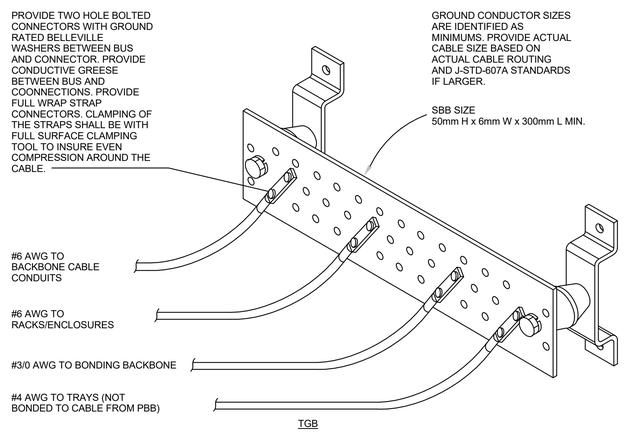

NOTES :

1. GROUND BUS BAR MUST BE UL LISTED.

5 SECONDARY GROUNDING BUS BAR

N.T.S.

US Army Corps of Engineers®

MARK	DESCRIPTION	DATE

DESIGNED BY: R.M.FORTNER	ISSUE DATE: FEBRUARY 2019
DRAWN BY: EN-DE	SOLICITATION NO.: W912781R0028
CHECKED BY: D.D.COLLIER	CONTRACT NO.:
SUBMITTED BY: W.W.KNAPP	PROJECT NUMBER: M077E144
SIZE: ANSI D	FILE NAME: M077E144

U.S. ARMY CORPS OF ENGINEERS
MOBILE DISTRICT
MOBILE, ALABAMA

SOTO CANO AIR BASE, HONDURAS
UNACCOMPANIED ENLISTED PERSONNEL HOUSING

TELECOMMUNICATION SYSTEMS DETAILS

SHEET ID

ET502

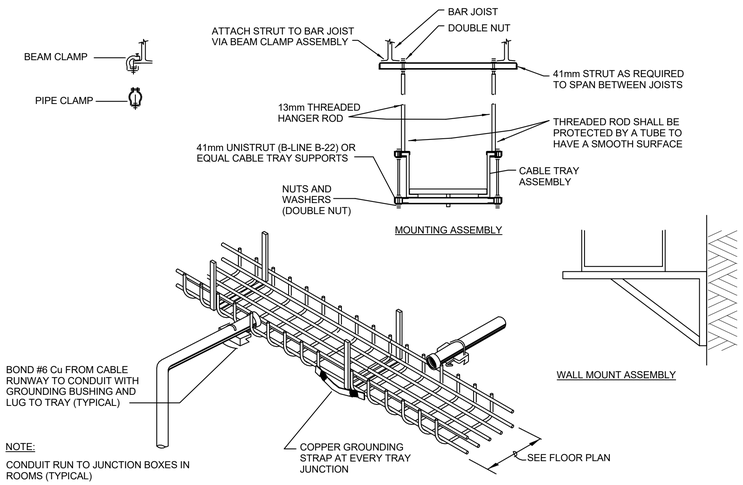

NOTE:

CONDUIT RUN TO JUNCTION BOXES IN ROOMS (TYPICAL)

CABLE TRAY NOTES:

1. CABLE RUNWAY SHALL BE SUPPORTED PER THE REQUIREMENTS OF NEMA VE-1, CONTRACT DOCUMENTS AND THE MANUFACTURER REQUIREMENTS. ALL NUTS, BOLTS, WASHERS, ETC. NECESSARY TO ASSEMBLE AND INSTALL THE RUNWAY ARE THE RESPONSIBILITY OF THE CONTRACTOR.

2. RUNWAY SHALL BE GROUNDED AT EACH DATA CLOSET TO NEAREST GROUND BAR. IF A GIVEN RUNWAY IS NOT RATED PER THE NEC TO BE AN EQUIPMENT GROUNDING CONDUCTOR, THEN A 4 AWG BARE GROUND CONDUCTOR SHALL BE RUN IN THE RUNWAY AND BE BONDED TO EACH SECTION. IF THE RUNWAY IS RATED PER THE NFPA70 TO BE AN EQUIPMENT GROUNDING CONDUCTOR, BUT CONTINUITY IS LOST AT A SECTION CONNECTION, THEN PROVIDE FLEXIBLE GROUND STRAPS ACROSS SECTION JOINT.

3. AT SUPPORT POINTS, THREADED ROD MUST BE HUNG FROM CONCRETE INSERTS, CLAMPS OR DEVICES THAT ARE SECURELY FASTENED IN THE INTERMEDIATE GRID, WALL OR BEAM SUFFICIENTLY TO CARRY THE LOAD OF THE RUNWAY AND ITS CONTENTS WITH A SAFETY FACTOR OF 1.5. CONTRACTOR IS TO USE EXTRA HANGARS WHENEVER IN DOUBT OR FOR ANY UNUSUAL SITUATION WHEN HANGAR ROD IS MOUNTED AT OTHER THAN A SPLICE POINT ALONG A RUNWAY.

4. INSTALL CABLES UNIFORMLY ACROSS THE BOTTOM OF THE RUNWAY.

5. PROVIDE 305mm MINIMUM CLEARANCE FROM TOP OF CABLE TRAY TO STRUCTURE ABOVE AND 152mm MINIMUM CLEARANCE FROM TOP OF CABLE TRAY TO HVAC DUCTWORK.

1 TYPICAL CABLE RUNWAY TO CONDUIT TRANSITION DETAIL

N.T.S.

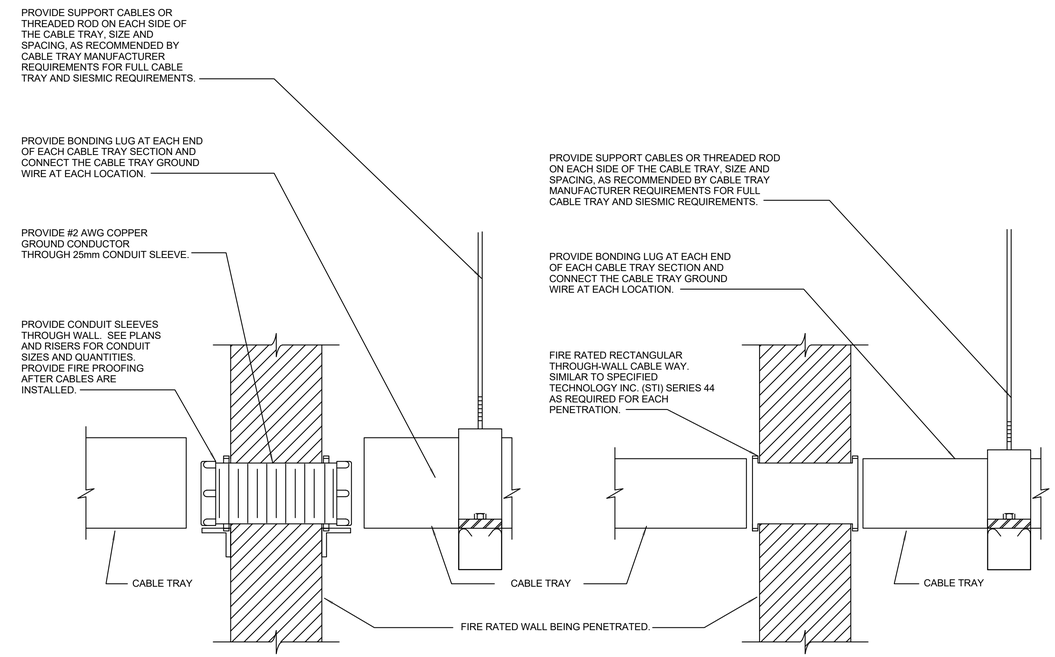

3 TYPICAL CABLE TRAY WALL PENETRATION DETAIL

N.T.S.

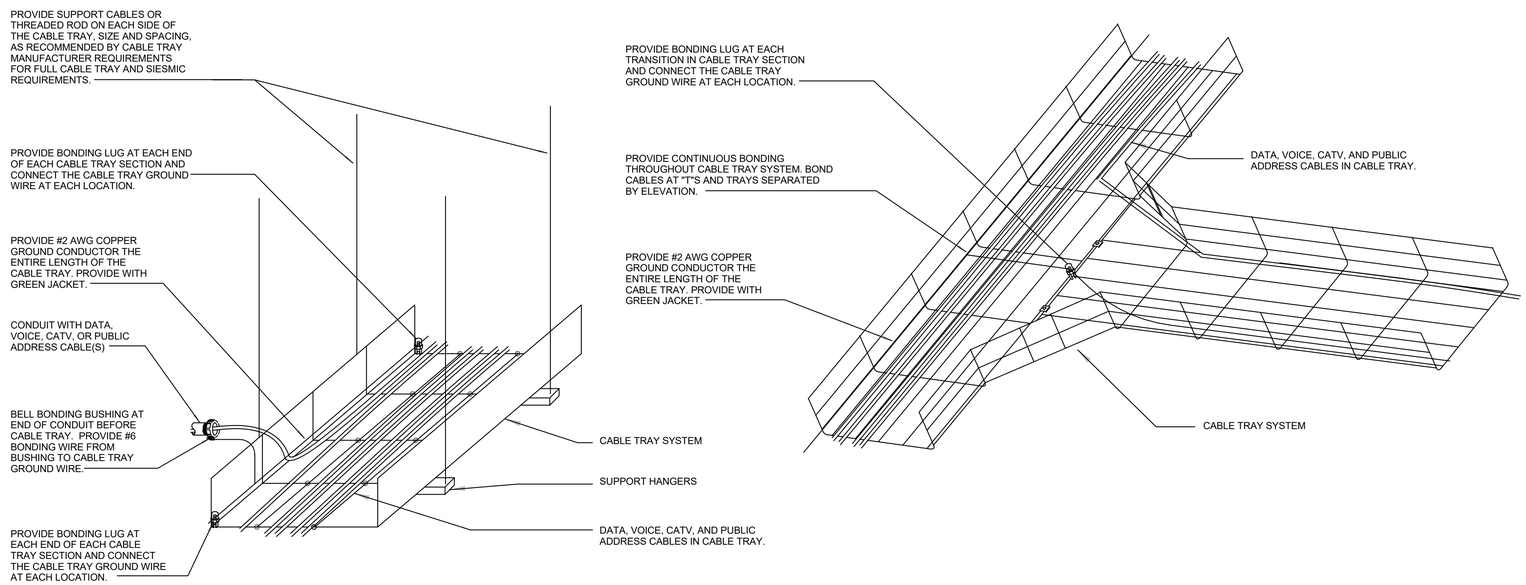

2 TYPICAL CABLE TRAY MOUNTING AND BONDING DETAIL

N.T.S.

US Army Corps of Engineers®

MARK	DESCRIPTION	DATE

DESIGNED BY: R.M.FORTNER
DRAWN BY: EN-DE
CHECKED BY: D.D.COLLIER
SUBMITTED BY: W.W.KNAPP
SIZE: ANSI D
ISSUE DATE: FEBRUARY 2019
SOLICITATION NO.: W9127819R0028
CONTRACT NO.:
PROJECT NUMBER: M077E144
FILE NAME: M077E144

U.S. ARMY CORPS OF ENGINEERS
MOBILE DISTRICT
MOBILE, ALABAMA

SOTO CANO AIR BASE, HONDURAS
UNACCOMPANIED ENLISTED PERSONNEL HOUSING

TELECOMMUNICATION SYSTEMS DETAILS

SHEET ID

ET503

NOTES:

1. ALL DEVICES, CABLING, AND CONDUIT ARE NEW UNLESS LABELED EXISTING OR BY OTHERS.

2. COORDINATE ALL OUTAGES AND OUTSIDE PLANT WORK WITH COR AND SOTO CANO BCE.

CABLE SCHEDULE:

1. 25 PR OSP CU
2. 50 PR BACKBONE CU
3. 25 PR CU
4. CAT6 TO OUTLET (TYPICAL ALL OUTLETS, SEE PLANS FOR NUMBER OF CABLES PER OUTLET)
5. RG-11 COAXIAL CABLE (3M SLACK LOOP AT CATV AMPLIFIER/SPLITTER LOCATION)
6. RG-6 COAXIAL CABLE (3M SLACK LOOP AT CATV AMPLIFIER/SPLITTER LOCATION)

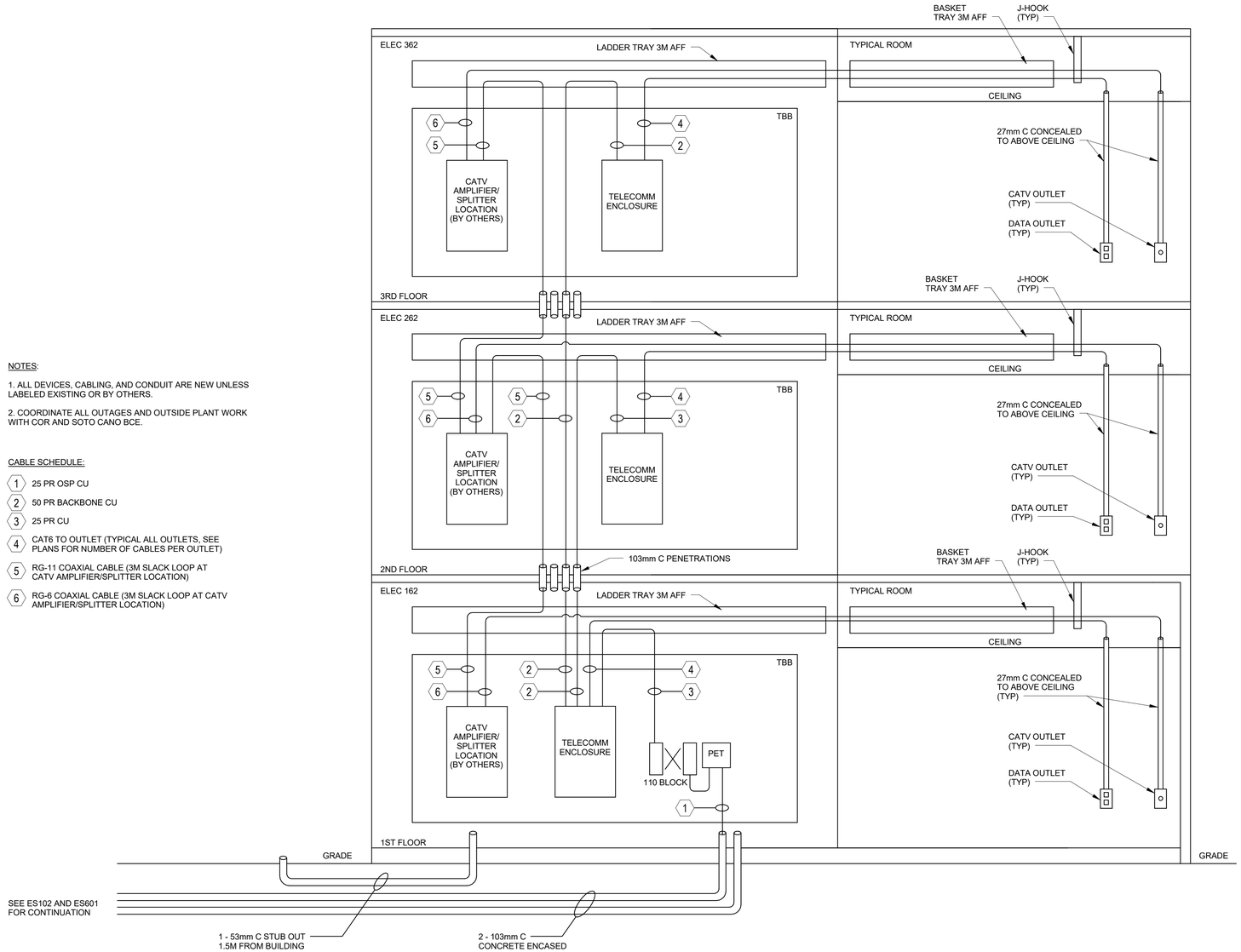

1 TELECOMMUNICATION SYSTEMS RISER DIAGRAM

N.T.S.

US Army Corps of Engineers®

MARK	DESCRIPTION	DATE

DESIGNED BY: R.M.FORTNER
DRAWN BY: EN-DE
CHECKED BY: D.D.COLLIER
SUBMITTED BY: W.W.KNAPP
SIZE: ANSI D
ISSUE DATE: FEBRUARY 2019
SOLICITATION NO.: W912781R0028
CONTRACT NO.:
PROJECT NUMBER: M077E144
FILE NAME: M077E144

U.S. ARMY CORPS OF ENGINEERS
MOBILE DISTRICT
MOBILE, ALABAMA

SOTO CANO AIR BASE, HONDURAS
UNACCOMPANIED ENLISTED PERSONNEL HOUSING

TELECOMMUNICATION SYSTEMS RISER DIAGRAM

SHEET ID

ET601

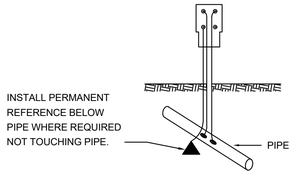

POTENTIAL TEST STATION
(TYPE 1)

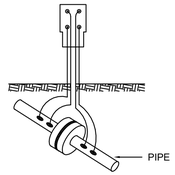

INSULATING JOINT TEST STATION
(TYPE 2)

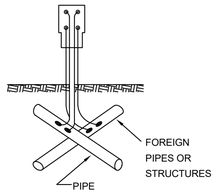

LINE CROSSING TEST STATION
INTERFERENCE
(TYPE 3)

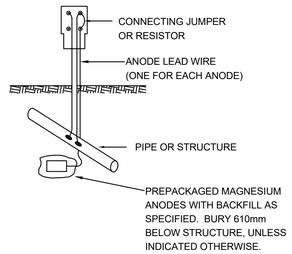

GALVANIC ANODE TEST STATION
(TYPE 4)

NOTE:
ALL LEADS MUST BE NO. 10 AWG TYPE TW, RHW, OR HMWPE INSULATED.

1 TEST STATION DETAILS
N.T.S.

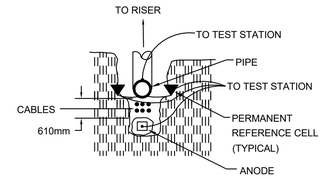

ANODE TO PIPE LOCATION

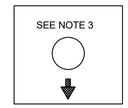

PLAN VIEW

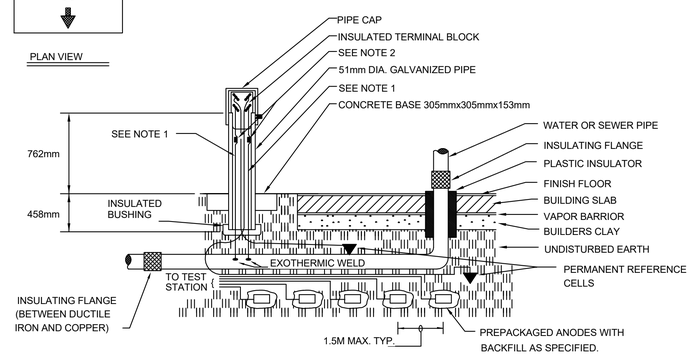

NOTES:

1. PROVIDE TWO POTENTIAL TEST LEADS UNLESS OTHERWISE INDICATED ON THE CONTRACT DRAWINGS OR IN THE SPECIFICATIONS. THE POTENTIAL TEST LEADS SHALL BE COLOR CODED IN ACCORDANCE WITH COLOR CODE SCHEDULE. ANODE LEADS SHALL BE COLOR CODED BLACK AND SHALL BE STRAPPED TO PIPE AT TEST STATION TERMINAL BLOCK. REFERENCE CELL SHALL BE COLOR CODED RED.

2. LEAVE SUFFICIENT SLACK IN LEADS TO ALLOW REMOVAL OF THE TERMINAL BLOCK. REFER TO NOTE 3, DETAIL 3, SH. REF. EC802.

3. INSCRIBE AN ARROW IN CONCRETE BASE POINTING IN THE DIRECTION OF BURIED STRUCTURE.

4. OTHER COMMERCIALLY AVAILABLE TEST STATIONS WILL BE ACCEPTABLE IF APPROVED BY THE CONTRACTING OFFICER. IN EACH TEST STATION, PROVIDE ONE TERMINAL FOR EACH ANODE LEAD CABLE, ONE TERMINAL FOR EACH REFERENCE CELL, AND ONE TERMINAL FOR EACH POTENTIAL TEST LEAD. BONDING STRAPS SHALL BE PROVIDED TO BOND ALL ANODES TO PIPE.

2 METAL PIPE CATHODIC PROTECTION UNDER CONCRETE SLAB
N.T.S.

CATHODIC PROTECTION NOTES :

1. FOR DETAILS ON THE INSTALLATION, ROUTING, AND EXTENT OF ALL NEW BURIED METALLIC WATER AND FIRE PROTECTION LINES THAT ARE REQUIRED TO BE PROTECTED IN ACCORDANCE WITH THE "EC800" SERIES DRAWINGS AND THE CATHODIC PROTECTION SPECIFICATIONS, SEE THE UTILITY (CU SERIES DRAWINGS), MECHANICAL DRAWINGS, AND THE APPLICABLE SPECIFICATION SECTIONS. IN THIS PROJECT, ALL NEW BURIED METALLIC WATER, GAS, AND FIRE PROTECTION LINES, AND METALLIC COMPONENTS OF THESE LINES, INCLUDING FIRE HYDRANTS, POST INDICATOR VALVES, POINTS OF CONNECTIONS, ETC., WHERE PLASTIC OR OTHER NON-METALLIC PIPING IS UTILIZED SHALL BE CATHODICALLY PROTECTED IN ACCORDANCE WITH THE APPLICABLE DETAILS SHOWN ON THESE SERIES DRAWINGS AND AS REQUIRED IN THE SPECIFICATIONS.

2. THE CATHODIC PROTECTION SPECIFICATIONS AND THE "EC800" SERIES DRAWINGS INDICATE THE MINIMUM NUMBER OF MAGNESIUM ANODES AND TEST STATIONS REQUIRED FOR THE METALLIC PIPING AND FOR EACH METALLIC FITTING, VALVE, PIPE SECTION, ETC. INSTALLED IN A NON-METALLIC PIPELINE. GALVANIC ANODE TEST STATIONS SHALL BE CONNECTED AS SHOWN IN DETAIL 1, TYPE 4, THIS SHEET (TYPICAL).

3. ALL BURIED METALLIC PIPING AND COMPONENTS OF THE FACILITIES LISTED IN NOTE 1 ABOVE AND IN THE CATHODIC PROTECTION SPECIFICATIONS SHALL BE CATHODICALLY PROTECTED. SEE THE UTILITY (CU SERIES DRAWINGS) AND MECHANICAL DRAWINGS FOR LOCATIONS AND DETAILS OF THESE FACILITIES.

4. CONSTRUCT TEST STATIONS IN ACCORDANCE WITH DETAIL 3, SH. REF. EC802. MAKE LEAD CONNECTIONS IN ACCORDANCE WITH DETAIL 1, THIS SHEET. SEE DETAIL 3, THIS SHEET FOR ANODE CONNECTIONS TO METALLIC COMPONENTS OF NON-METALLIC PIPE LINES.

5. BOND ALL MECHANICAL JOINTS IN ACCORDANCE WITH DETAIL 4, THIS SHEET, FOR METALLIC PIPING.

6. POST INDICATOR VALVES (PIV'S), FIRE HYDRANTS, AND SIMILAR COMPONENTS SHALL BE CATHODICALLY PROTECTED IN ACCORDANCE WITH DETAIL 1, SH. REF. EC802.

7. SEE DETAIL 2, SH. REF. EC802, FOR CATHODIC PROTECTION DETAIL PERTAINING TO CONNECTION OF NEW PIPE TO EXISTING PIPE. INSULATING TYPE VALVE SHALL BE PROVIDED (SEE INSULATING FLANGE DETAIL 3, SH. REF. EC803), WHEN NECESSARY, IN ORDER TO ISOLATE EXISTING NON-CATHODICALLY PROTECTED METALLIC PIPING FROM NEW CATHODICALLY PROTECTED METALLIC PIPING. ELECTRICAL ISOLATION OF NEW PIPE FROM THE EXISTING PIPE AT THE POINT OF CONNECTION IS A MANDATORY REQUIREMENT OF THIS CONTRACT WHEREVER CATHODIC PROTECTION IS ALSO REQUIRED ON THE NEW PIPE.

8. ALL ADJACENT PIPING SHALL BE BONDED IN ACCORDANCE WITH BONDING DETAIL 4, SH. REF. EC803.

9. SEE SHEET REFERENCE EC803, DETAILS 1, 2, AND 3 FOR DETAILS OF INSULATING FLANGES AND UNIONS AND SURGE PROTECTION OF INSULATORS.

10. PRESSURIZED METALLIC PIPING (INCLUDING DUCTILE IRON) UNDER FLOOR SLABS SHALL BE CATHODICALLY PROTECTED IN ACCORDANCE WITH DETAIL "2", THIS SHEET, AND IN ACCORDANCE WITH THE SPECIFICATIONS. FOR THIS PROJECT, THIS REQUIREMENT PERTAINS TO THE NEW FIRE RISER PIPING, AS WELL AS ANY OTHER PRESSURIZED METALLIC PIPING UNDER FLOOR SLAB INCLUDED IN THIS PROJECT (SUCH AS ALL BURIED PIPING EXTENDING TO AND FROM THE NEW FIRE PUMP AND ALL BURIED DOMESTIC WATER LINES). POLYETHYLENE ENCASEMENT OR UNBONDED COATINGS SHALL NOT BE USED ON ANY PIPING REQUIRING CATHODIC PROTECTION BY THESE CONTRACT DOCUMENTS.

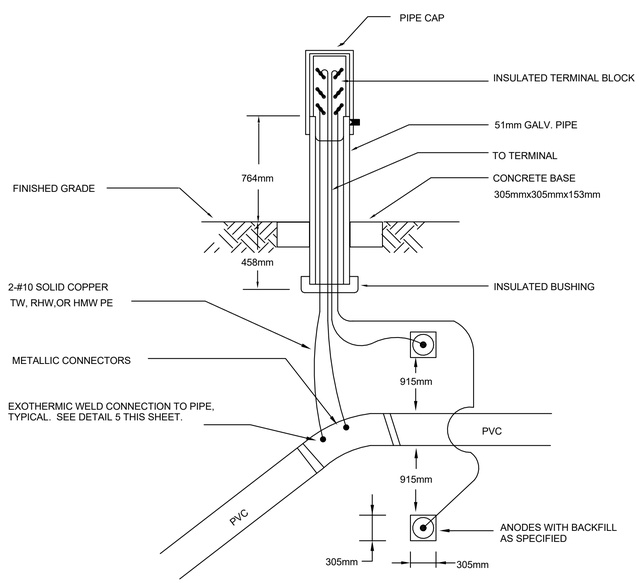

3 CATHODIC PROTECTION FOR PVC PIPE WITH METALLIC CONNECTORS AND FITTINGS
N.T.S.

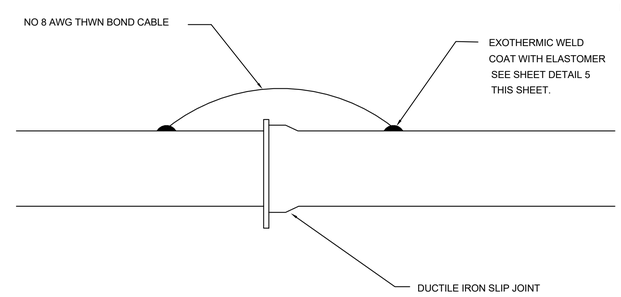

4 PIPE BONDING DETAIL
N.T.S.

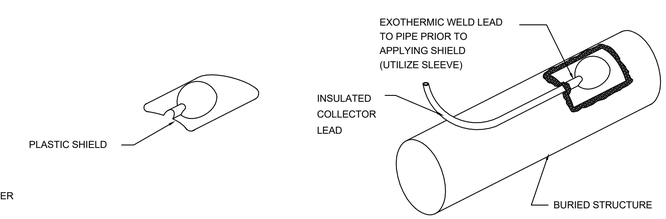

NOTES:

1. SHIELD SHALL BE COMPLETELY FILLED WITH MASTIC SEALANT AND PRESSED IN CONTACT WITH THE PIPE OVER THE CONNECTION, UNTIL MASTIC IS SQUEEZED OUT AT EDGES OF THE SHIELD.

2. THIS IS AN EXOTHERMIC CONNECTION TO PIPE COVERED WITH PLASTIC SHIELD FILLED WITH ELASTOMER.

3. ALL METALLIC AREA (EX. COPPER OR DUCTAL IRON) MUST BE COMPLETELY SEALED FROM SOIL OR WATER.

4. FOR NO. 8 AND SMALLER CONDUCTOR, EXOTHERMIC WELD MUST BE ACCOMPLISHED USING AN APPROPRIATELY SIZED SLEEVE.

5 EXOTHERMIC CONNECTION
N.T.S.

US Army Corps of Engineers®

MARK	DESCRIPTION	DATE

DESIGNED BY: R.M.FORTNER
DRAWN BY: EN-DE
CHECKED BY: D.D.COLLIER
SUBMITTED BY: W.W.KNAPP
SIZE: ANSI D
ISSUE DATE: FEBRUARY 2019
SOLICITATION NO.: W912781R0028
CONTRACT NO.:
PROJECT NUMBER: M077E144
FILE NAME: M077E144

U.S. ARMY CORPS OF ENGINEERS
MOBILE DISTRICT
MOBILE, ALABAMA

SOTO CANO AIR BASE, HONDURAS
UNACCOMPANIED ENLISTED PERSONNEL HOUSING

CATHODIC PROTECTION DETAILS

SHEET ID
EC501

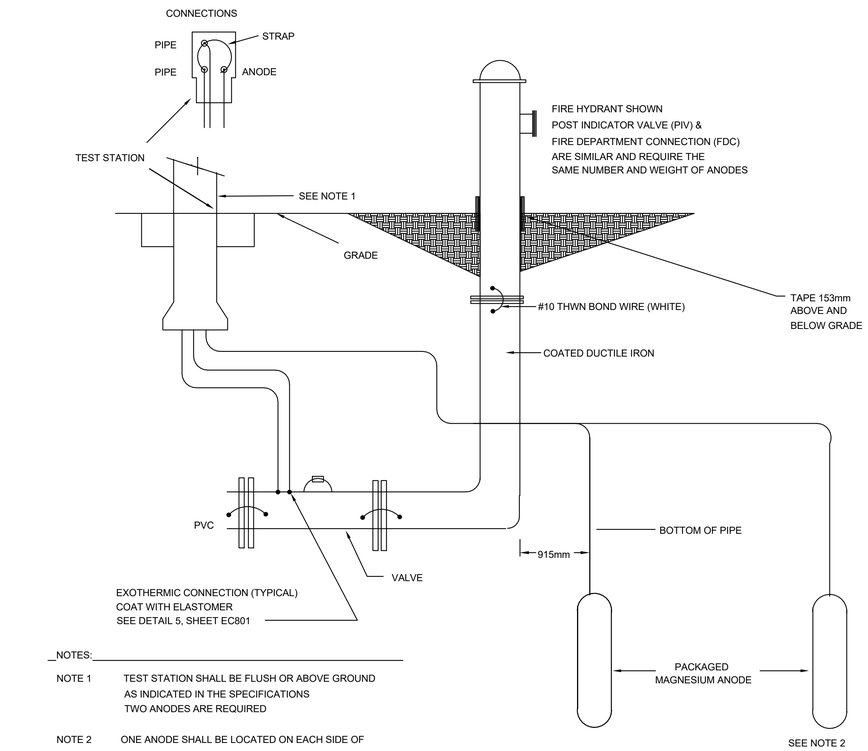

NOTES:

NOTE 1 TEST STATION SHALL BE FLUSH OR ABOVE GROUND AS INDICATED IN THE SPECIFICATIONS TWO ANODES ARE REQUIRED

NOTE 2 ONE ANODE SHALL BE LOCATED ON EACH SIDE OF THE PIPE.

1 FIRE SUPPRESSION FIRE HYDRANT, PIV, FDC

N.T.S.

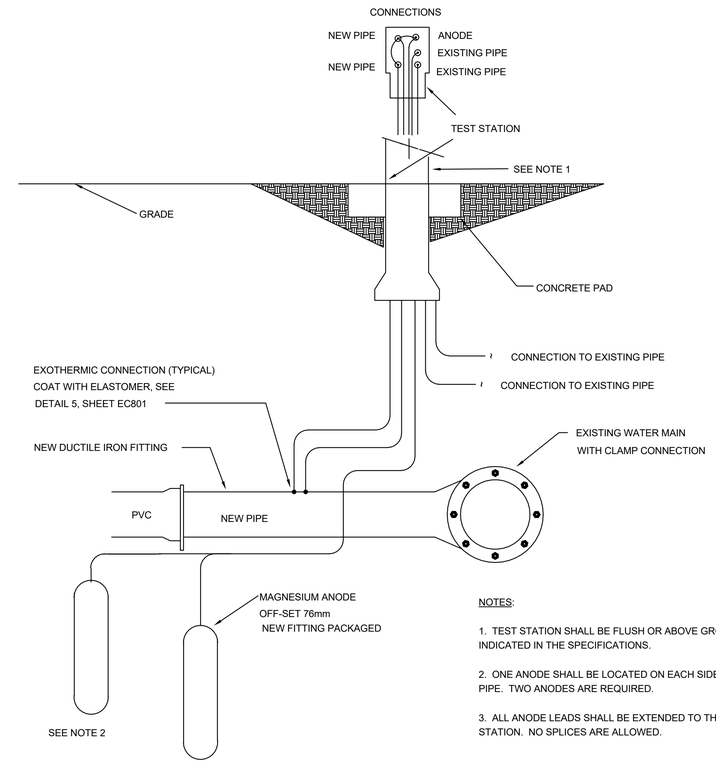

NOTES:

1. TEST STATION SHALL BE FLUSH OR ABOVE GROUND AS INDICATED IN THE SPECIFICATIONS.

2. ONE ANODE SHALL BE LOCATED ON EACH SIDE OF THE PIPE. TWO ANODES ARE REQUIRED.

3. ALL ANODE LEADS SHALL BE EXTENDED TO THE TEST STATION. NO SPLICES ARE ALLOWED.

2 BURIED CONNECTION TO EXISTING WATER MAIN

N.T.S.

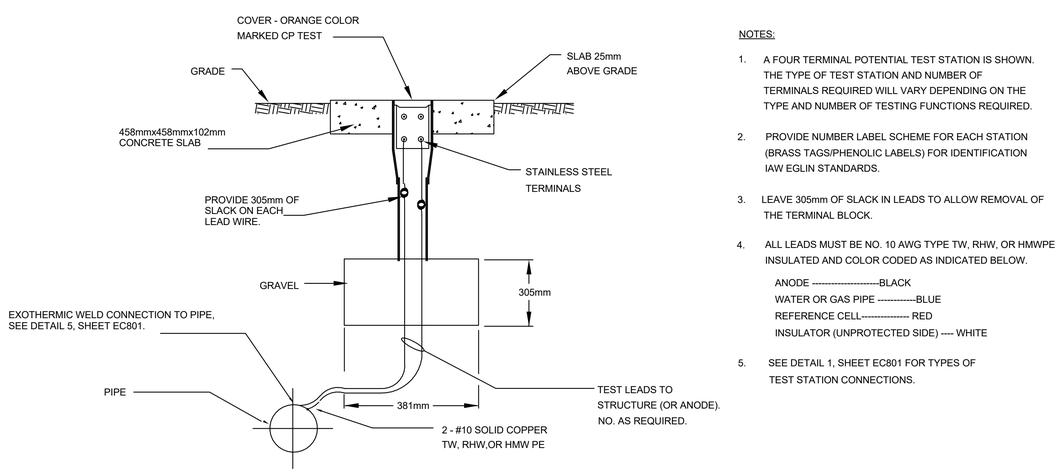

NOTES:

1. A FOUR TERMINAL POTENTIAL TEST STATION IS SHOWN. THE TYPE OF TEST STATION AND NUMBER OF TERMINALS REQUIRED WILL VARY DEPENDING ON THE TYPE AND NUMBER OF TESTING FUNCTIONS REQUIRED.

2. PROVIDE NUMBER LABEL SCHEME FOR EACH STATION (BRASS TAGS/PHENOLIC LABELS) FOR IDENTIFICATION IAW EGLIN STANDARDS.

3. LEAVE 305mm OF SLACK IN LEADS TO ALLOW REMOVAL OF THE TERMINAL BLOCK.

4. ALL LEADS MUST BE NO. 10 AWG TYPE TW, RHW, OR HMWPE INSULATED AND COLOR CODED AS INDICATED BELOW.

   ANODE ----------BLACK
   WATER OR GAS PIPE ----------BLUE
   REFERENCE CELL---------- RED
   INSULATOR (UNPROTECTED SIDE) ---- WHITE

5. SEE DETAIL 1, SHEET EC801 FOR TYPES OF TEST STATION CONNECTIONS.

3 FLUSH MOUNTED TEST STATION

N.T.S.

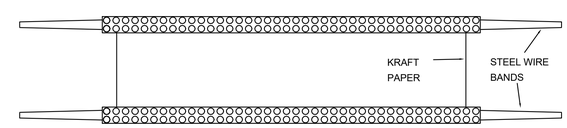

DETAIL OF PAPER JOINT COVER

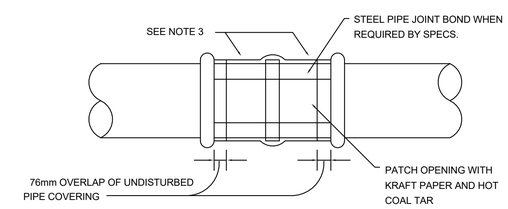

PLAN VIEW OF PAPER JOINT COVER IN PLACE

NOTES:

1. WIDTH AS REQUIRED TO PROVIDE OVERLAP OF 76mm EACH SIDE AS INDICATED.
2. FILL JOINT COVER WITH HOT COAL TAR ENAMEL FROM ONE SIDE ONLY UNTIL THE AIR IS EXHAUSTED AND COVER IS FILLED.
3. OUTER WRAP SHALL BE STRIPPED BACK SET LESS THAN 76mm EACH SIDE OF JOINT TO ALLOW MAXIMUM BOND OF THE NEW TAR TO EXISTING TAR COATING.

4 PIPE COVER FOR BOND OR INSULATOR

N.T.S.

US Army Corps of Engineers®

MARK	DESCRIPTION	DATE

ISSUE DATE: FEBRUARY 2019
SOLICITATION NO.: W9127819R0028
CONTRACT NO.:
PROJECT NUMBER: M077EU44

DESIGNED BY: R.M.FORTNER
DRAWN BY: EN.DE
CHECKED BY: D.D.COLLIER
SUBMITTED BY: W.J.NAVARP
SIZE: ANSI D
FILE NAME: M077EU44

U.S. ARMY CORPS OF ENGINEERS
MOBILE DISTRICT
MOBILE, ALABAMA

SOTO CANO AIR BASE, HONDURAS
UNACCOMPANIED ENLISTED PERSONNEL HOUSING

CATHODIC PROTECTION DETAILS

SHEET ID
EC502

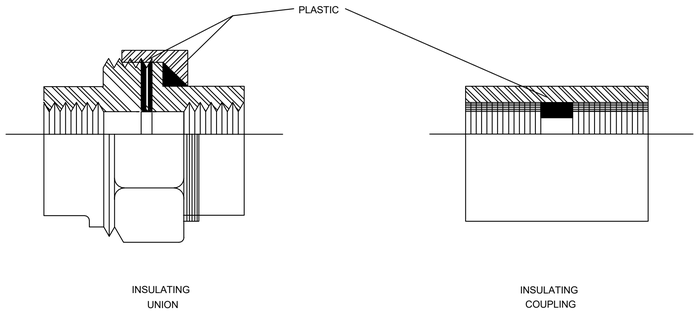

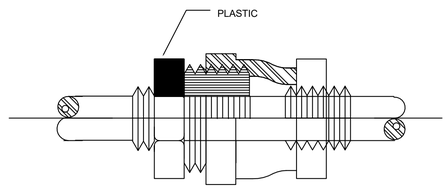

INSULATING BUSHING

1 INSULATED COUPLINGS

N.T.S.

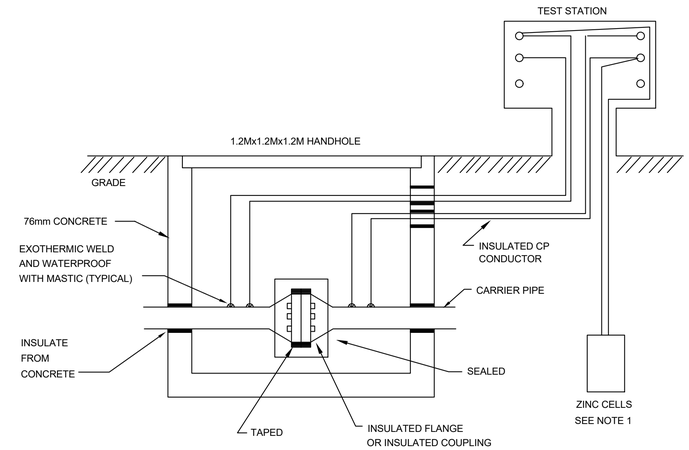

NOTE 1
SURGE AND LIGHTINING ARRESTOR MAY BE USED IN LIEU OF ZINC CELLS. REFER TO SPECIFICATIONS.

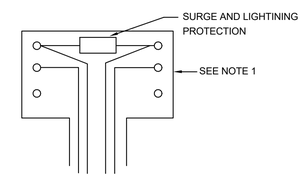

2 SURGE PROTECTION UNDERGROUND INSULATOR IN HANDHOLE

N.T.S.

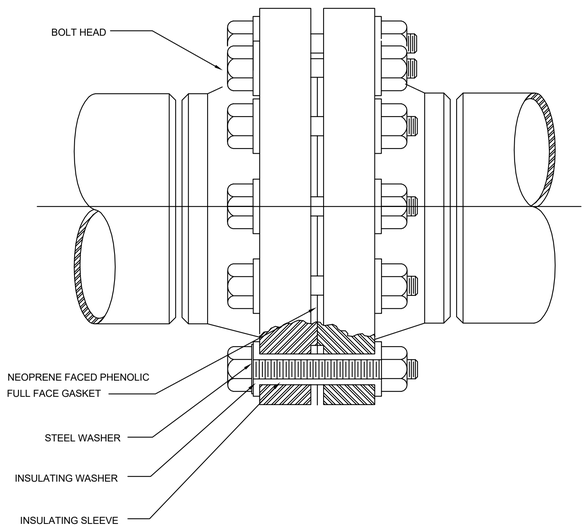

3 INSULATING FLANGE ASSEMBLY

N.T.S.

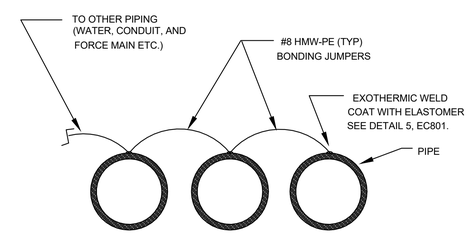

WHEN NECESSARY TO MITIGATE INTERFERENCE CURRENT, CATHODICALLY UNPROTECTED METALLIC PIPING SHALL BE BONDED TO CATHODICALLY PROTECTED PIPELINE THAT IT IS IN CLOSE PROXIMITY TO. WHEN NECESSARY AND APPROVED, OTHER INTERFERENCE MITIGATION METHODS, AS DESCRIBED IN THE SPECIFICATIONS, MAY BE UTILIZED.

4 PIPE BONDING JUMPERS

N.T.S.

US Army Corps of Engineers®

MARK	DESCRIPTION	DATE

DESIGNED BY: R.M.FORTNER
DRAWN BY: EN-DE
CHECKED BY: D.D.COLLIER
SUBMITTED BY: W.W.KNAPP
SIZE: ANSI D
ISSUE DATE: FEBRUARY 2019
SOLICITATION NO.: W912781R0028
CONTRACT NO.:
PROJECT NUMBER: M077EU44
FILE NAME: M077EU44

U.S. ARMY CORPS OF ENGINEERS
MOBILE DISTRICT
MOBILE, ALABAMA

SOTO CANO AIR BASE, HONDURAS
UNACCOMPANIED ENLISTED PERSONNEL HOUSING

CATHODIC PROTECTION DETAILS

SHEET ID
EC503