marcus b.

NorthStar

North Star DIMENSION™ Technical Manual

DIMENSION® is a registered trademark of North Star Computers, Inc.
North Star DIMENSION™ is a trademark of North Star Computers, Inc.
IBM® is a registered trademark of International Business Machines Corporation
MS™-DOS is a trademark of Microsoft, Inc.
80186® and 8088-2® are registered trademarks of Intel Corporation

Copyright© 1984 by North Star Computers, Inc
All Rights Reserved

To reorder this manual, order part number 03740.

Overview to the Technical Manual

This manual describes the electronic and mechanical components of the North Star DIMENSION computer.

Chapter 1 discusses the steps to install system hardware. This includes installation procedures for the central module and workstations as well as procedures and requirements for attaching shared and local printers, modems and local mouse devices.

Chapter 2 contains detailed specifications of computer subassemblies including the compatibility requirements for non-North Star circuit boards attached to the bus PCB.

Chapter 3 contains a general discussion of system theory of operation.

Chapter 4 describes system diagnostics. This includes descriptions of automatic self-tests, Service Diskette #1 and Service Diskette #2.

Chapter 5 contains basic system troubleshooting information and adjustment procedures for the central module power supply.

Chapter 6 contains central module subassembly removal procedures.

Appendix A contains assembly drawings and parts lists for system subassemblies.

Appendix B contains schematic drawings for all system circuit boards.

Appendix C contains the device name, manufacturer and publication number of major LSI chips used in the central module.

Disclaimer

North Star Computers, Incorporated, reserves the right, without notice, to make changes in the product and product specifications described in this manual in order to improve performance or design.

INTRODUCTION		i
CHAPTER 1	**HARDWARE INSTALLATION**	1-1
	SYSTEM HARDWARE INSTALLATION	1-2
	Physical Location of the System Modules	1-2
	Central Module	1-6
	Workstation	1-17
	PERIPHERAL EQUIPMENT INSTALLATION	1-23
	Shared Printers	1-23
	Local Printers	1-27
	Local Modems	1-31
	Local Mouse Devices	1-34
CHAPTER 2	**SPECIFICATIONS**	2-1
	SYSTEM	2-2
	POWER	2-7
	KEYBOARD	2-9
	VIDEO DISPLAY	2-15
	POWER SUPPLY	2-27
	BUS PCB	2-31
	BUS COMPARISION	2-33
CHAPTER 3	**THEORY OF OPERATION**	3-1
	CENTRAL BOARD AND WORKSTATION BOARDS	3-2
	CENTRAL MODULE POWER SUPPLY	3-16
CHAPTER 4	**DIAGNOSTICS**	4-1
	SUPPLEMENTAL TOOLS	4-2
	SELF-TESTS	4-3
	SERVICE DISKETTES	4-5
	SERVICE DISKETTE #1	4-6
	SERVICE DISKETTE #2	4-9
	Fixed Disk Format and Label Writer Options	4-11
	Loading Service Diskette #2	4-14
	Diskette Drive Test	4-16
	Fixed Disk Format and Label Writer	4-17
	Fixed Disk Drive #1 Test	4-18
	Fixed Disk Drive #2 Test	4-19
	Park Fixed Disk Drive Heads	4-20
	Using the Fixed Disk Extension Cables	4-21
	Error Screens and Codes	4-23
	ERROR SCREENS AND CODES	4-24
	Error Screens	4-24
	Error Codes	4-28
	ERROR CODE MATRIX	4-31

CHAPTER 5	**TROUBLESHOOTING**	5-1
	SYSTEM TROUBLESHOOTING	5-2
	VERIFYING POWER SUPPLY VOLTAGES	5-5
CHAPTER 6	**SUBASSEMBLY REMOVAL**	6-1
	NOMENCLATURE OF THE CENTRAL MODULE	6-2
	WORKSTATION PCB	6-3
	WORKSTATION 128K/384K MEMORY PCB	6-4
	POWER SUPPLY	6-5
	CENTRAL RAM EXPANSION PCB	6-10
	BUS PCB	6-11
	CENTRAL PCB	6-13
	DISKETTE DRIVE	6-15
	FIXED DISK DRIVES	6-17
	INSTALLING A NEW CENTRAL PCB	6-19
APPENDIX A	**MAJOR SUBASSEMBLY PARTS LISTS**	A-1
	WORKSTATION PCB SUBASSEMBLY	A-3
	WORKSTATION 128K MEMORY PCB SUBASSEMBLY	A-9
	WORKSTATION 384K MEMORY PCB SUBASSEMBLY	A-11
	CENTRAL PCB SUBASSEMBLY	A-13
	CENTRAL RAM EXPANSION PCB SUBASSEMBLY	A-21
	BUS PCB SUBASSEMBLY	A-23
	STATION INTERCONNECT PCB SUBASSEMBLY	A-25
	CENTRAL MODULE MISCELLANEOUS PARTS	A-27
APPENDIX B	**SCHEMATIC DRAWINGS**	B-1
	WORKSTATION PCB	B-3
	WORKSTATION 128K MEMORY PCB	B-19
	WORKSTATION 384K MEMORY PCB	B-25
	CENTRAL PCB	B-31
	CENTRAL RAM EXPANSION PCB	B-51
	BUS PCB	B-53
	STATION INTERCONNECT PCB	B-55
	UVELCO POWER SUPPLY PCB	B-57
	CHERRY KEYBOARD PCB	B-61
	KEYTRONICS KEYBOARD PCB	B-63
	SAMPO VIDEO MONITOR PCB	B-65
	SAMSUNG VIDEO MONITOR PCB	B-67
APPENDIX C	**LSI SPECIFICATIONS**	C-1

HARDWARE INSTALLATION

Overview

This chapter explains how to install DIMENSION computer system hardware including the central module, its workstations and peripheral devices such as printers.

DIMENSION computer systems may vary significantly in complexity. A simple system might contain two workstations and a shared printer; a complex system might contain as many as twelve workstations with shared and local printers and modems, and local mouse devices. Simple and complex systems use the installation procedures found on the following pages.

Because of the number of power cords and cables used to connect the components of the system, you should position the equipment before attaching cords and cables. Begin the installation by sketching your office area and determining where you plan to locate the central module, workstations and peripheral equipment. Then unpack and move the components to the locations suggested by your sketch. After you've finished positioning the equipment, begin using the installation procedures to connect the components.

You'll need a small slotted screwdriver and a medium Phillips screwdriver to complete the installation procedures.

General Requirements

Before you begin positioning the components of your computer system, consider the following requirements:

- The central module and the video displays receive their power from standard 115VAC (U.S.) or 230VAC (international) three-conductor, grounded power outlets.

  The central module and any peripheral devices attached to the central module must share power outlets that are part of a commonly fused and grounded electric circuit.

- The length of the central module and video display power cables is fixed, so placement of these components is determined by power cable length and power outlet location. You may be able to install three-conductor, grounded extension cords if they are rated for at least 10 amps (115VAC) or 5 amps (230VAC).

- A standard workstation cable is 25 feet long; 100-foot extensions are also available. Three 100-foot extensions may be used in conjunction with a standard 25-foot cable to create a maximum central module-to-workstation cable length of 325 feet.

  When you are determining workstation cable lengths, take into account that cable placement should not stress cable connectors.

General Requirements (cont.)

o Consider local fire, electrical and building codes as you are setting up your computer system. For example:

- Don't allow cables to cross aisles--they may pose a safety hazard and might be accidentally disconnected.
- Don't cover power cables with carpeting--this may create a fire hazard.
- Don't use extension cords unless you are familiar with local electrical codes governing their use in office environments.

Make sure you follow local codes. Speak with someone knowledgeable (a building electrician or contractor) before you begin connecting the equipment.

Cabling Diagram

The diagram on this page illustrates typical connections within a simple DIMENSION computer system. Note the lengths of the cables and cords and how the various components fit together.

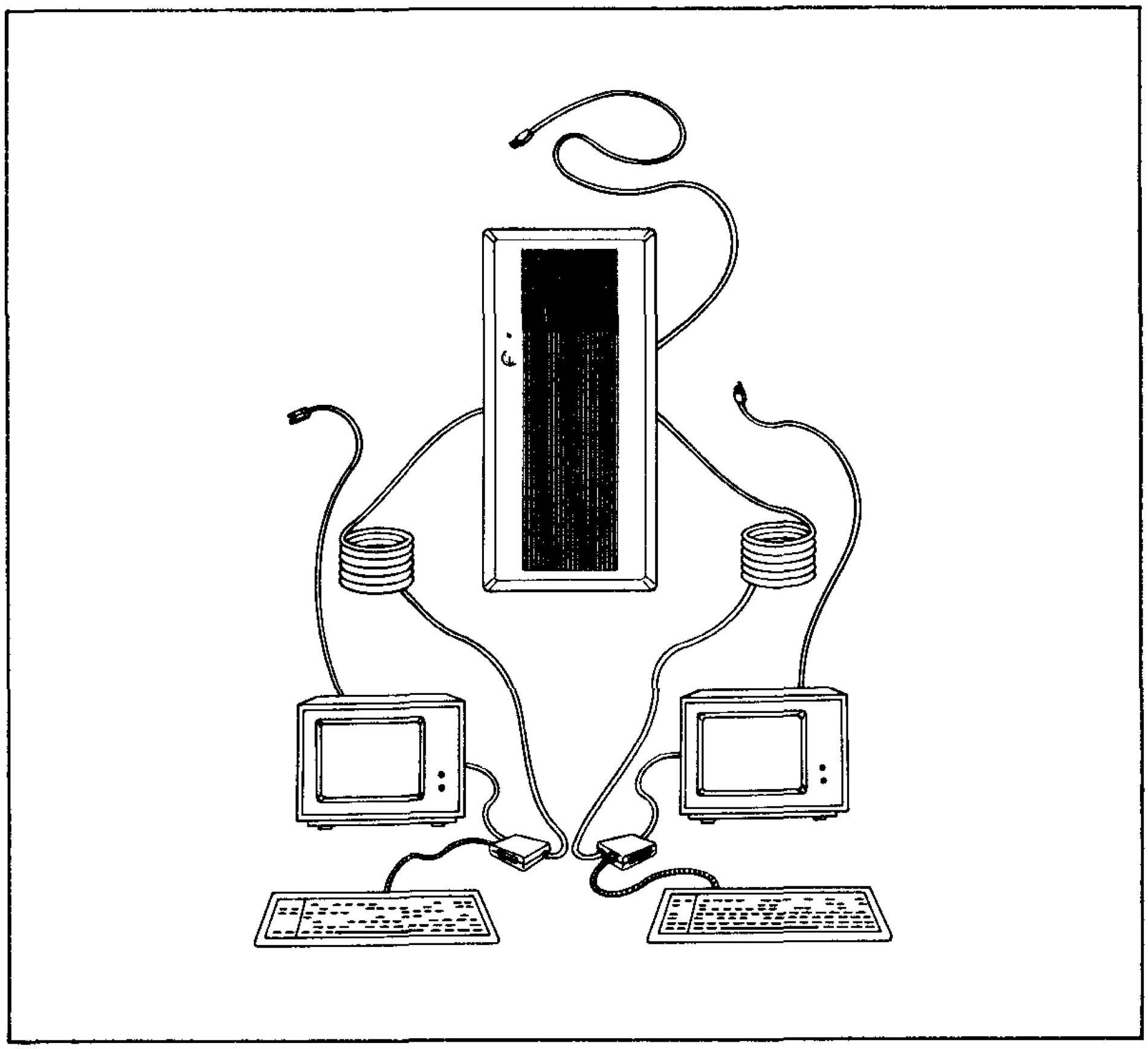

Cable and Cord Lengths

The following list of cord and cable lengths details physical constraints you should consider when locating the system components.

- o Central module power cord = 8 feet
- o Video display power cords = 6 feet
- o Keyboard cable (extended) = 6 feet
- o Workstation cable = 25 feet
- o Workstation extension cable = 100 feet

Procedure Summary

After you have positioned the system components, the next step in the hardware installation procedure is to install and configure the central module. The procedures on the following pages describe how to:

- o Place the central module on its side and remove the cover.
- o Install the workstation circuit boards.
- o Set the thumbwheel switches of the workstation circuit boards.
- o Connect the workstation cables to the workstation circuit boards.
- o Install the workstation expansion RAM circuit boards. (Optional)
- o Install the central module expansion RAM circuit boards. (Optional)
- o Replace the cover.
- o Check the selectable power line receptacle for correct orientation of the voltage selection cam and proper fuse.
- o Install rubber feet to protect the base of the central module.
- o Return the central module to an upright position.
- o Install the power cord.

Procedure: Central Module Installation and Configuration

1. Place the central module on its side, unfasten the three screws which hold the cover in place and remove the cover.

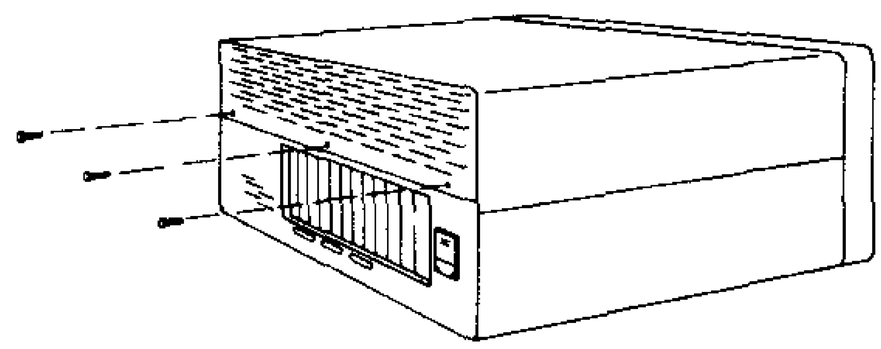

2. If you have to install one or more expansion RAM circuit boards on the central board, proceed to step #3. If you have to install one or more expansion RAM circuit boards on work-station circuit boards, proceed to step #7. If you do not have to install expansion RAM circuit boards, proceed to step #10.

3. If you haven't already done so, unpack and examine the expansion RAM circuit board and the two plastic standoffs used with the central board. Compare these parts with the pictures in steps #4 and #5. Notice how the two circuit boards are connected.

   An expansion RAM circuit board is fastened to the central board in three places:

   - o by an edge connector which electrically mates the two circuit boards, and
   - o by the two plastic standoffs which physically fasten the expansion RAM circuit board to the central board.

---->

Technical Manual

Procedure: Central Module Installation and Configuration

4. Mount the two plastic standoffs by pressing them in the appropriate holes in the central board.

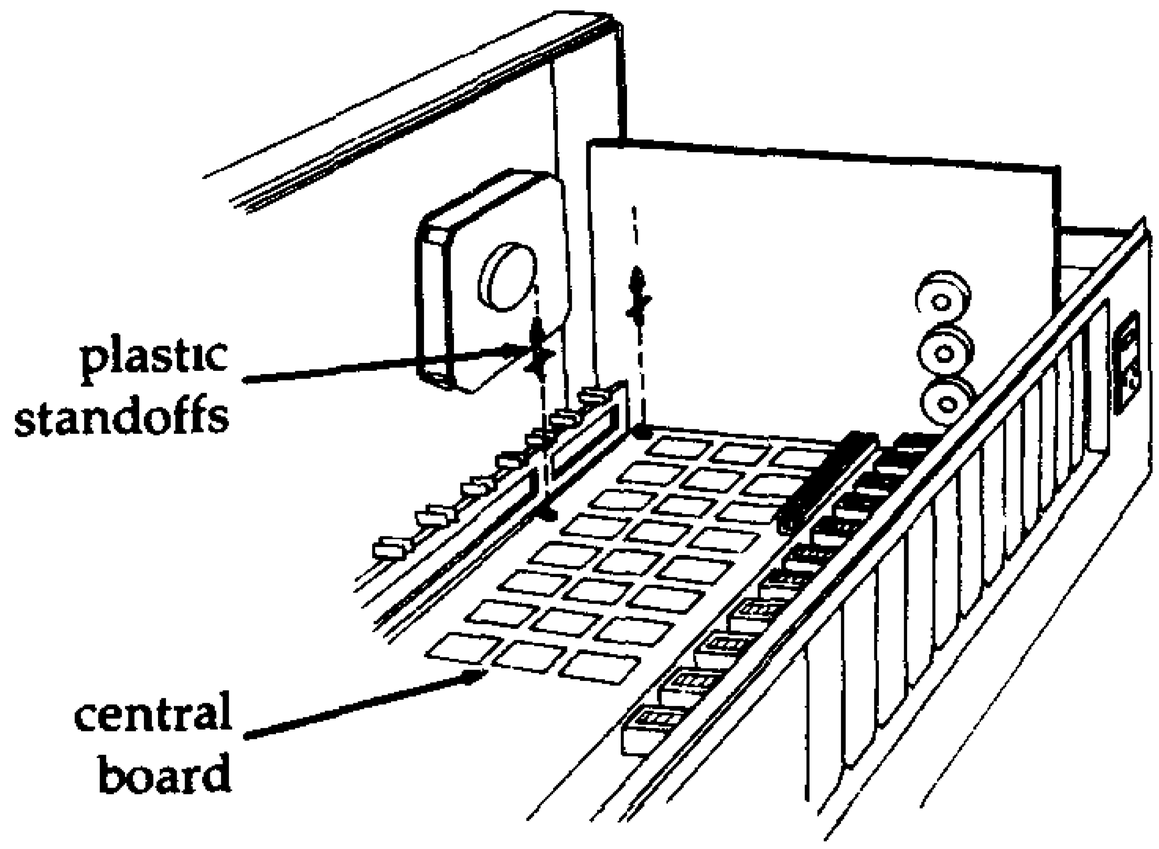

5. Position the expansion RAM circuit board over the two plastic standoffs and the central board connector. Press the expansion RAM circuit board in place.

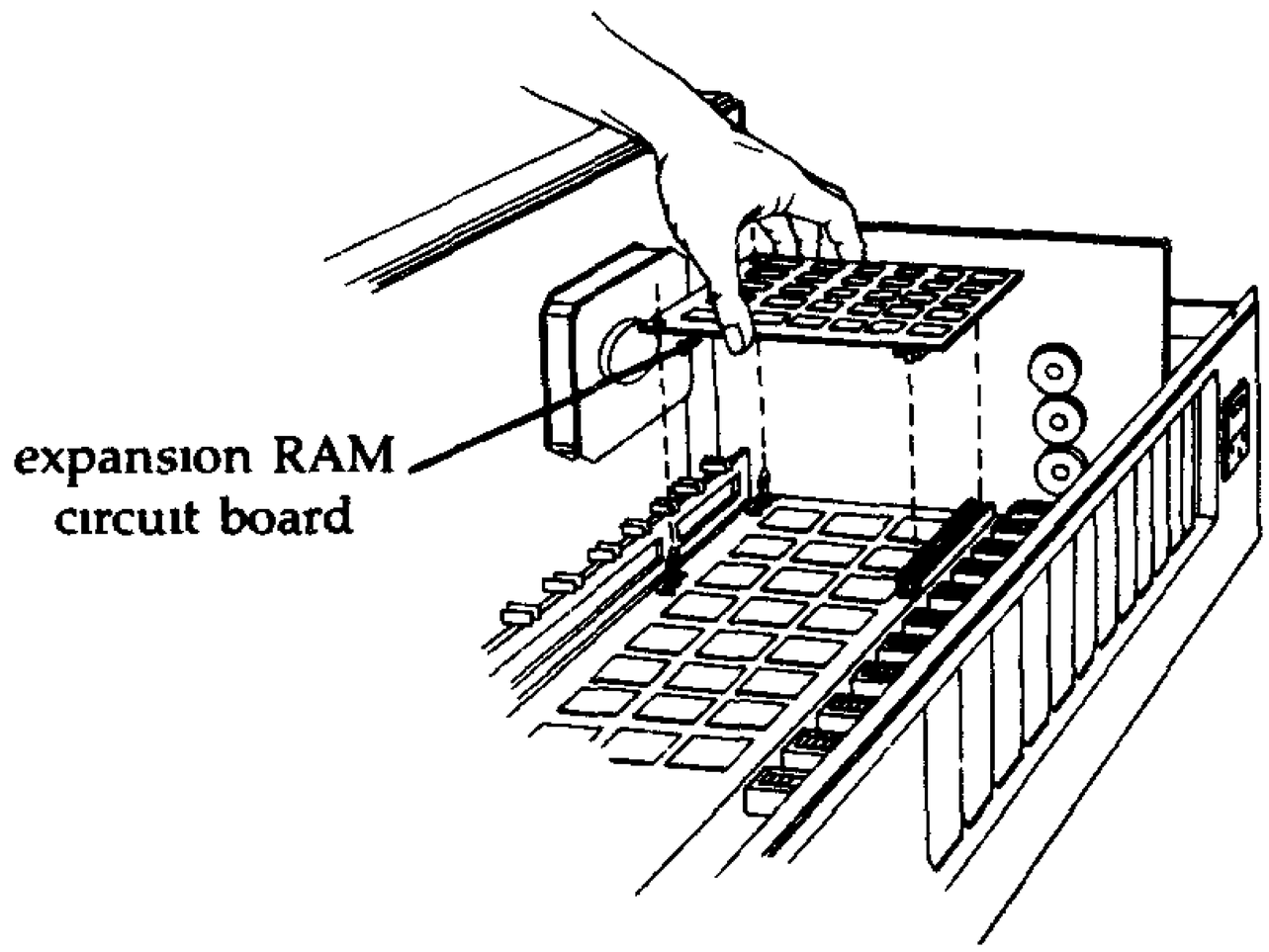

6. If you have to install workstation expansion RAM circuit boards, proceed to step #7; otherwise, proceed to step #10.

---->

Procedure: Central Module Installation and Configuration

7. If you haven't already done so, unpack and examine the workstation expansion RAM circuit boards, the two plastic standoffs used with each, and all workstation circuit boards.

   An expansion RAM circuit board is fastened to the workstation board in three places:

   - By an edge connector which electrically mates the two circuit boards, and
   - By the two plastic standoffs which physically fasten the expansion RAM circuit board to the workstation board.

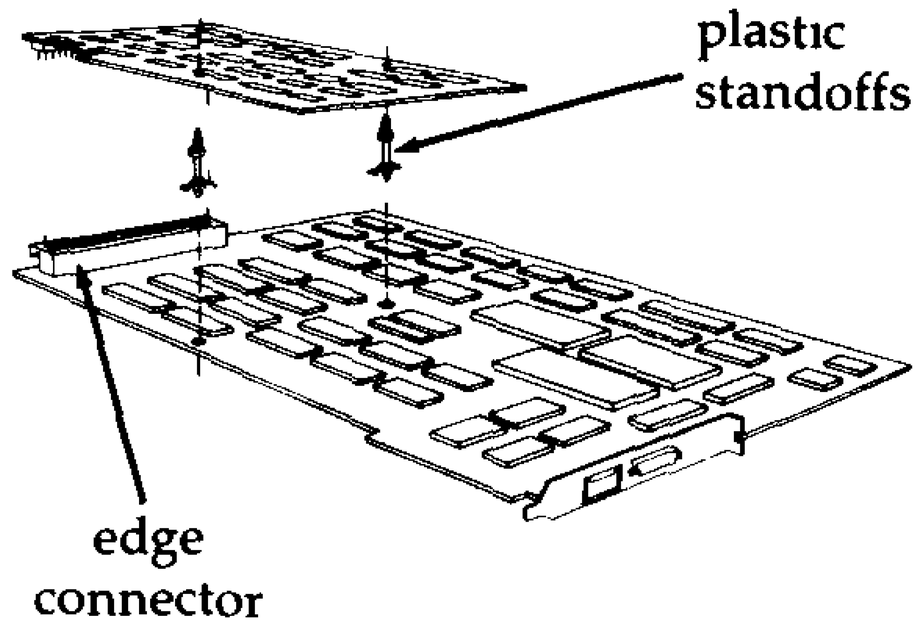

8. Mount the two plastic standoffs by pressing them in the appropriate holes in the workstation board.

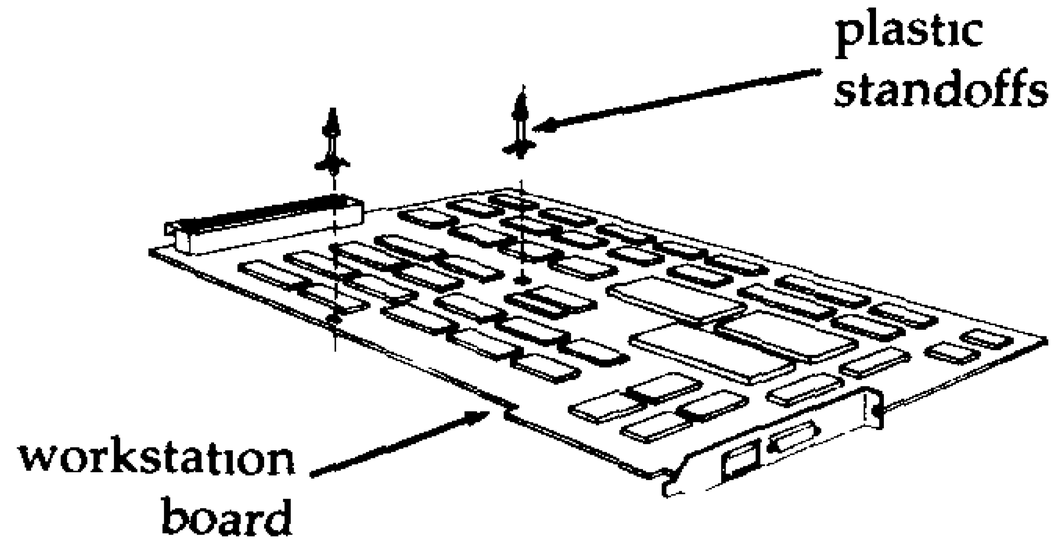

---->>

Procedure: Central Module Installation and Configuration

9. Position the expansion RAM circuit board over the two plastic standoffs and workstation board connector. Press the expansion RAM circuit board in place. Repeat steps #7 through #9 for each expansion RAM circuit board.

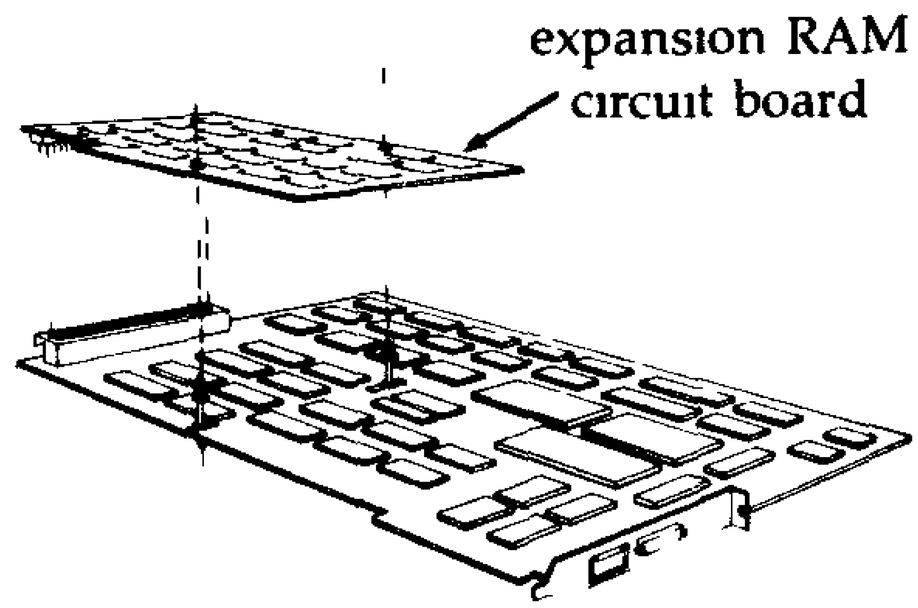

10. There are thirteen numbered, sheet-metal plates attached to the rear panel of the central module. The upper edges of the plates are fastened with a screw.

    Count the number of workstations you plan to install, and, beginning with plate #1, consecutively remove as many of the plates as you have workstation circuit boards to install.

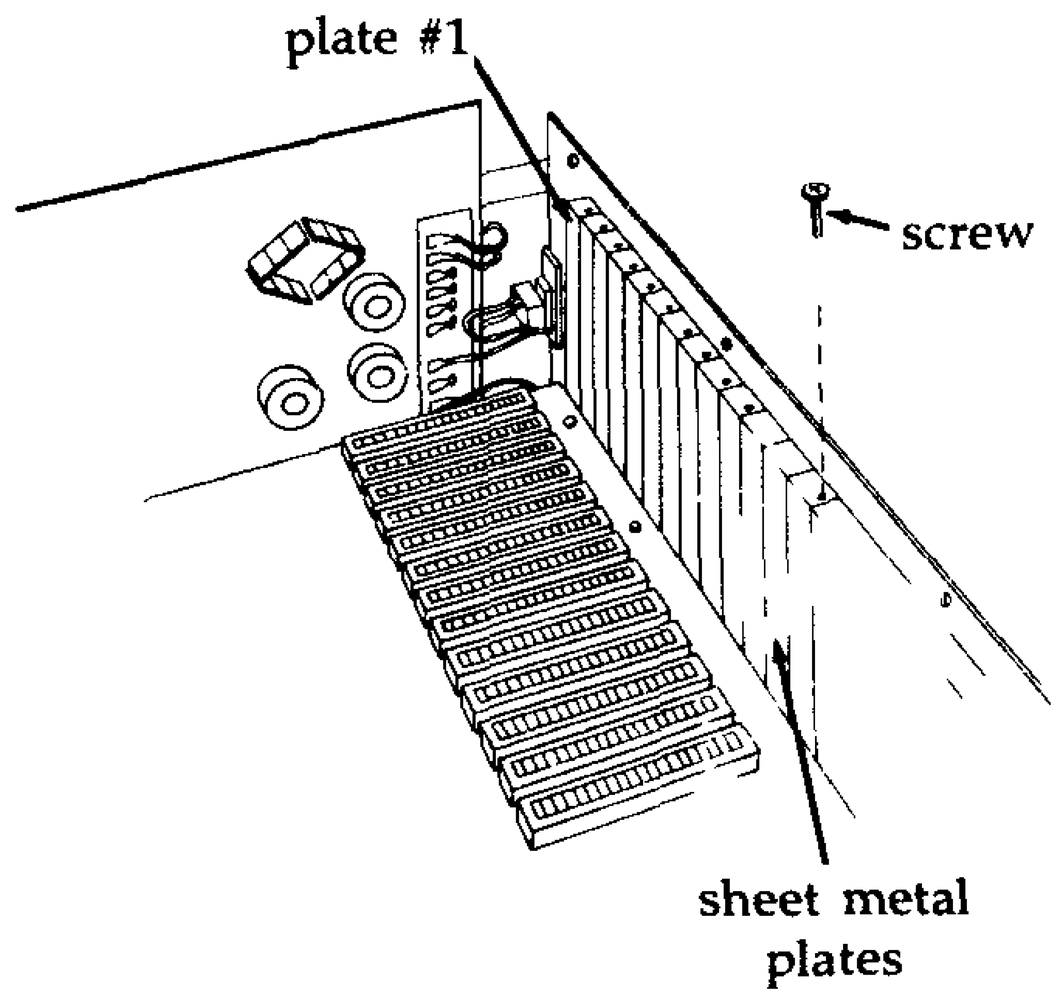

--->

Procedure: Central Module Installation and Configuration

11. Beginning at position #1, install the workstation circuit boards in consecutive slots. Seat the circuit board edge connectors and mounted sheet-metal plates in the slots of the bus circuit board and central module rear panel.

    Note: Be careful not to bend the sheet-metal plates when inserting them in the central module rear panel slots.

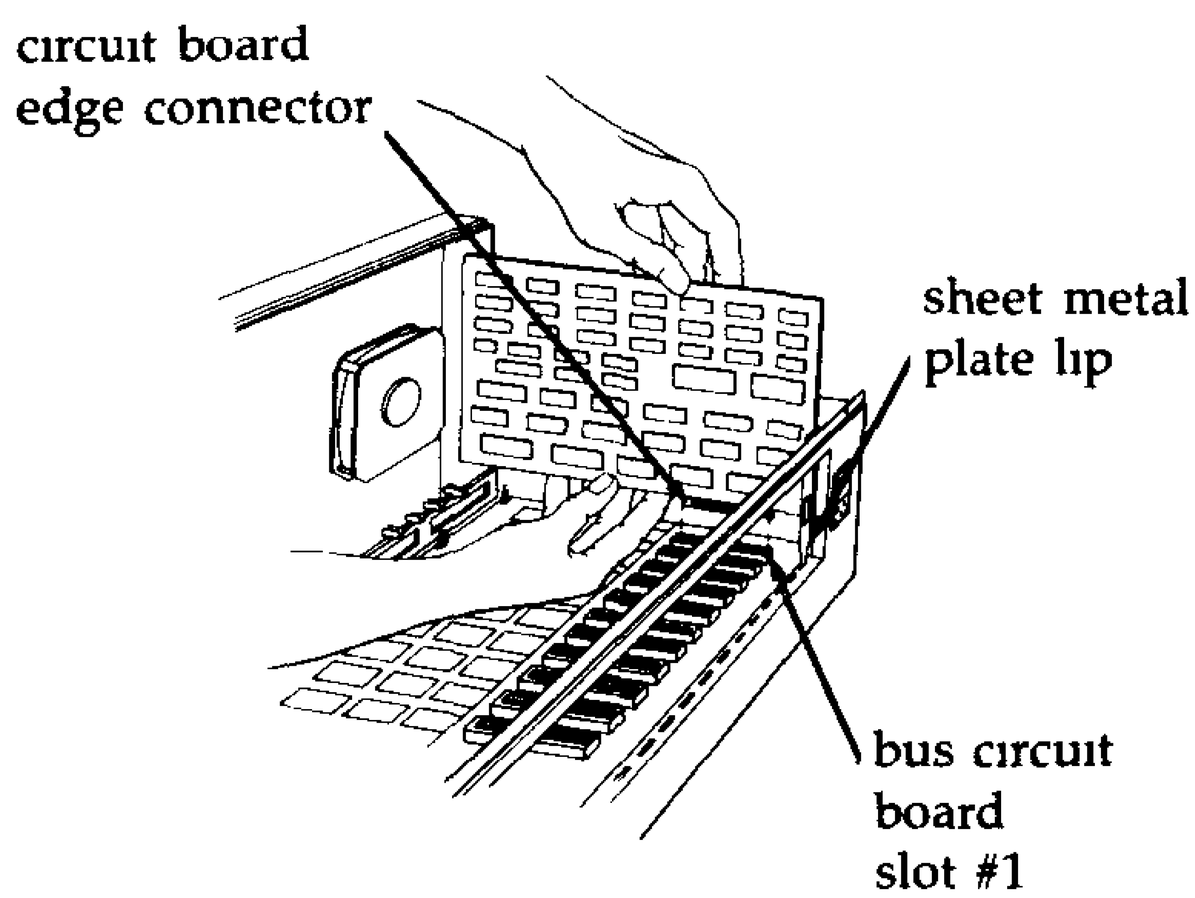

12. Fasten the workstation circuit boards in place using the screws you removed in step #10.

13. Notice that there is a thumbwheel switch on the rear edge of each workstation circuit board.

    Rotate each thumbwheel switch to a consecutive number, beginning with #1 in circuit board position #1.

    Note: No two switches may be set to the same number.

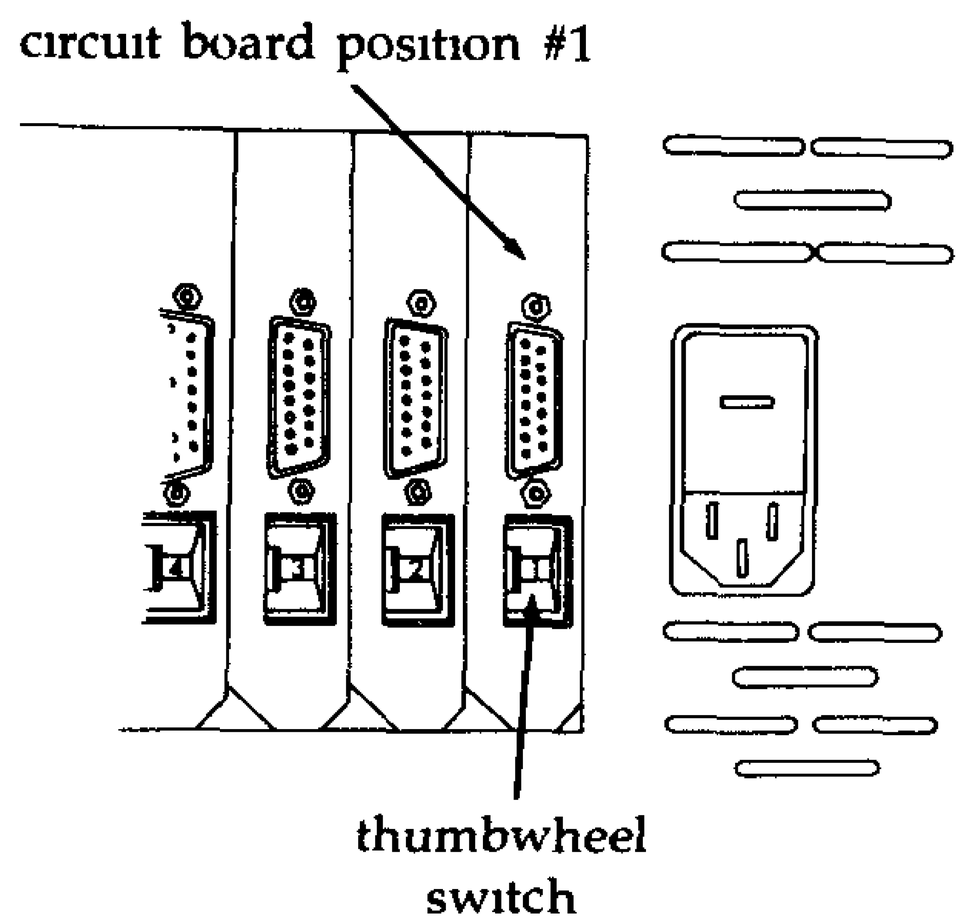

---->>

Procedure: Central Module Installation and Configuration

14. Notice that each workstation circuit board has a connector which projects through the rear panel of the central module.

    Uncoil the workstation cables and attach one cable to each of the connectors. Fasten the cables securely, using the screws attached to the cable plugs.

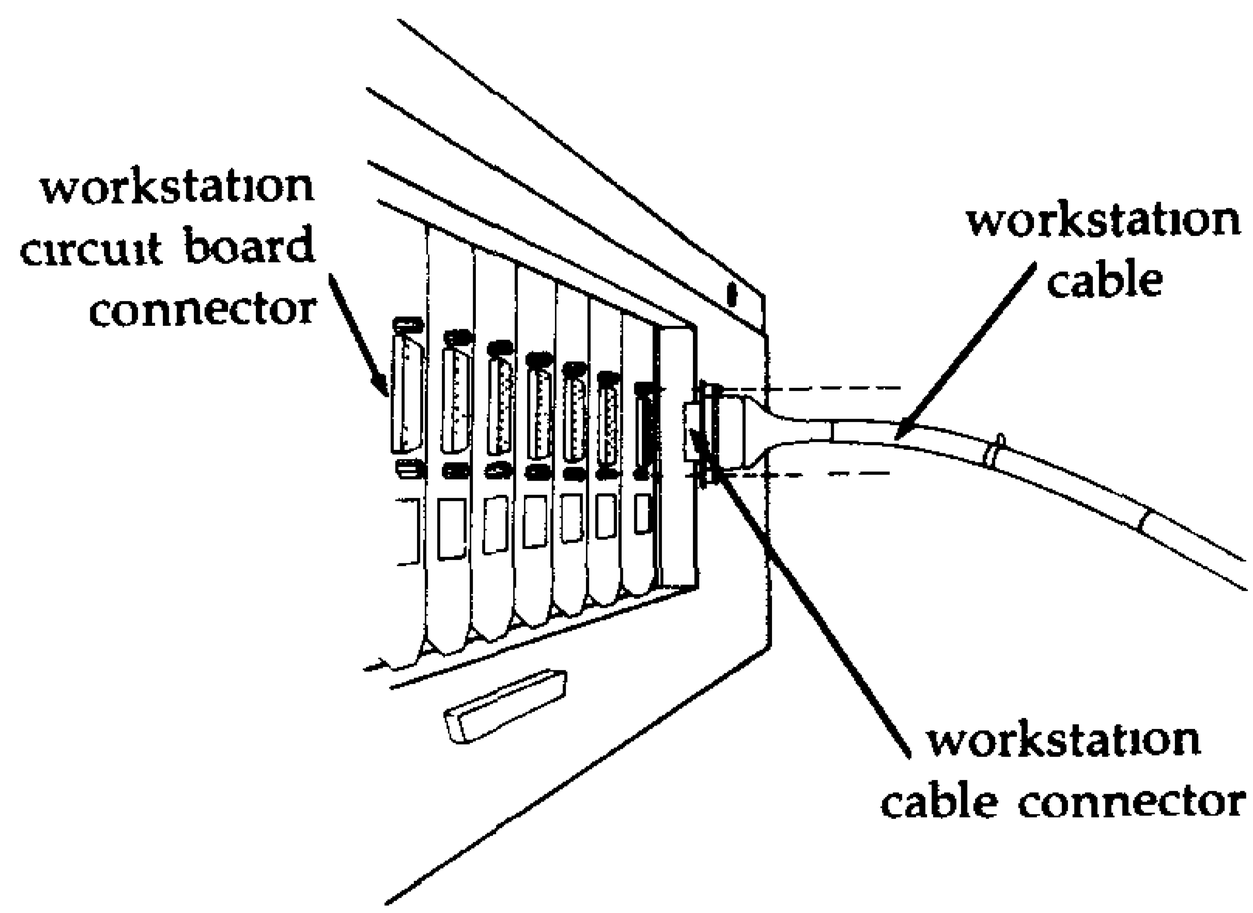

15. Replace the top cover of the central module, and fasten it with the three screws which you removed in step #1.

16. Notice the selectable power line receptacle located on the rear panel of the central module. It consists of a voltage selection cam, a fuse and fuse holder and a receptacle for the main power cord. (See the illustrations in steps #18 and #19.)

    If the power outlets in your office supply the voltage shown in the window of the power receptacle, proceed to step #21.

    If the power outlets in your office do not supply the voltage shown, proceed to step #17.

---->

1-12 Technical Manual

Procedure: Central Module Installation and Configuration

17. Use a small slotted screwdriver to gently pry open the door of the selectable power line receptacle.

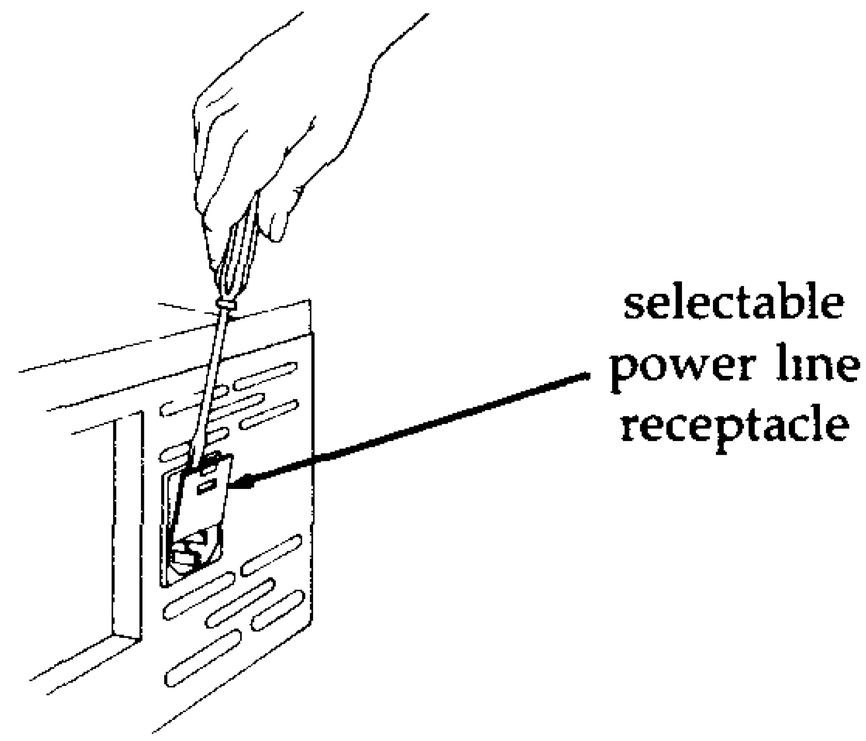

18. Remove the 115VAC (grey) or 230VAC (black) fuse assembly from the fuse receptacle. Replace this with the alternate assembly contained in your central module installation kit.

When you install the new fuse assembly, orient the arrow on the fuse assembly in the same direction as the arrows on the door of the power receptacle.

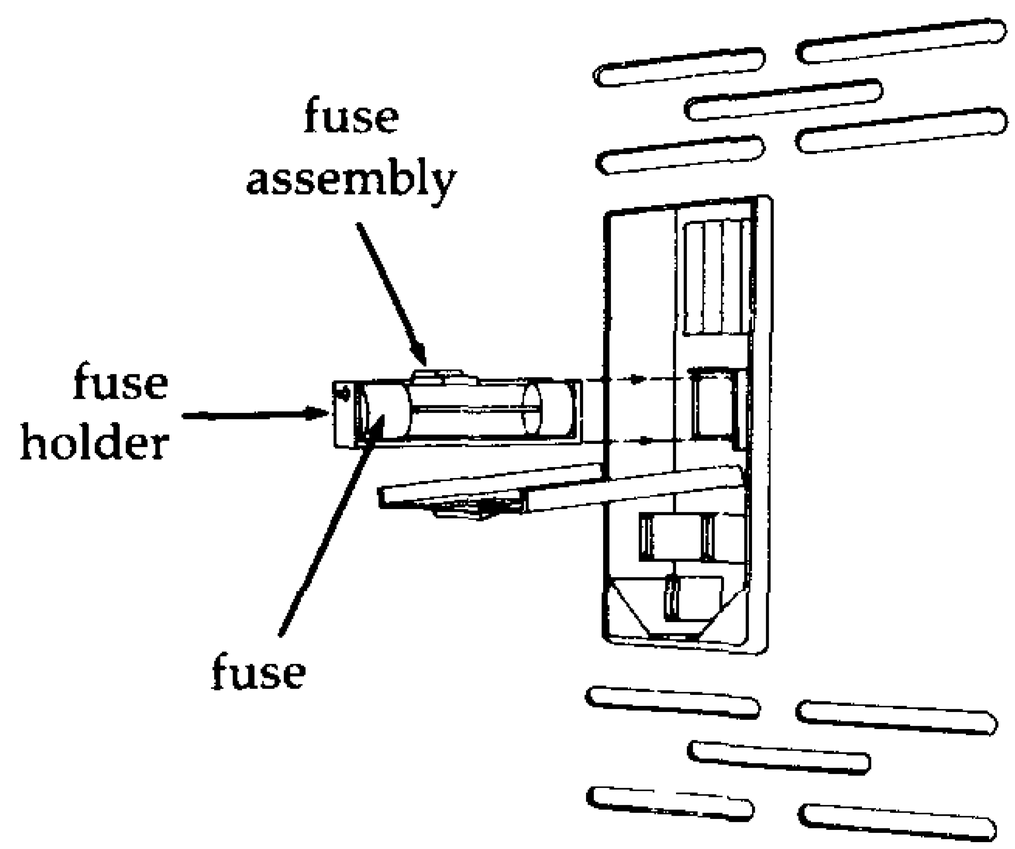

--->

Procedure: Central Module Installation and Configuration

19. Remove the voltage selection cam from the selectable power line receptacle.

    Rotate the cam appropriately and replace it so the correct voltage sign (either 115VAC or 230VAC) appears when the door of the power receptacle is closed.

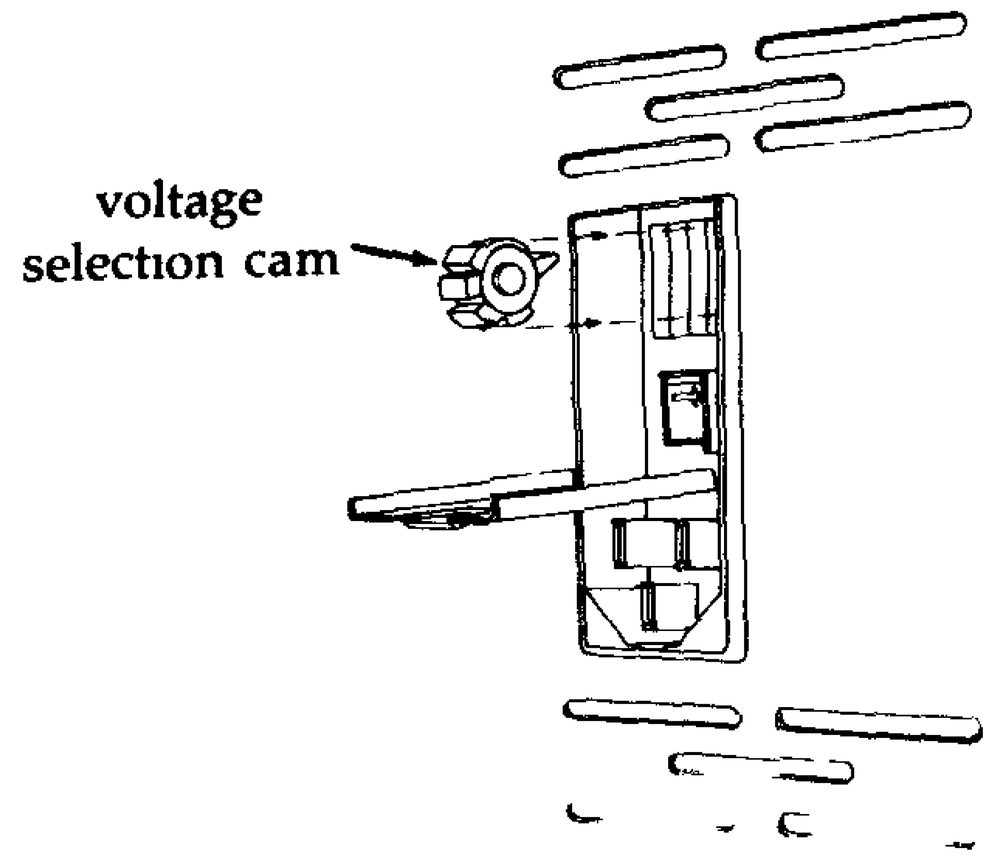

20. Close the door of the selectable power line receptacle.

---->

Procedure: Central Module Installation and Configuration

21. Four self-adhering rubber feet, used to protect the bottom surface of the central module, are contained in your installation kit.

    Before mounting the feet, you must decide on an orientation for the module, because once attached, the feet are difficult to remove. Although vertical orientation is usually preferred (because less floor space is required), the module must be serviced while in a horizontal position.

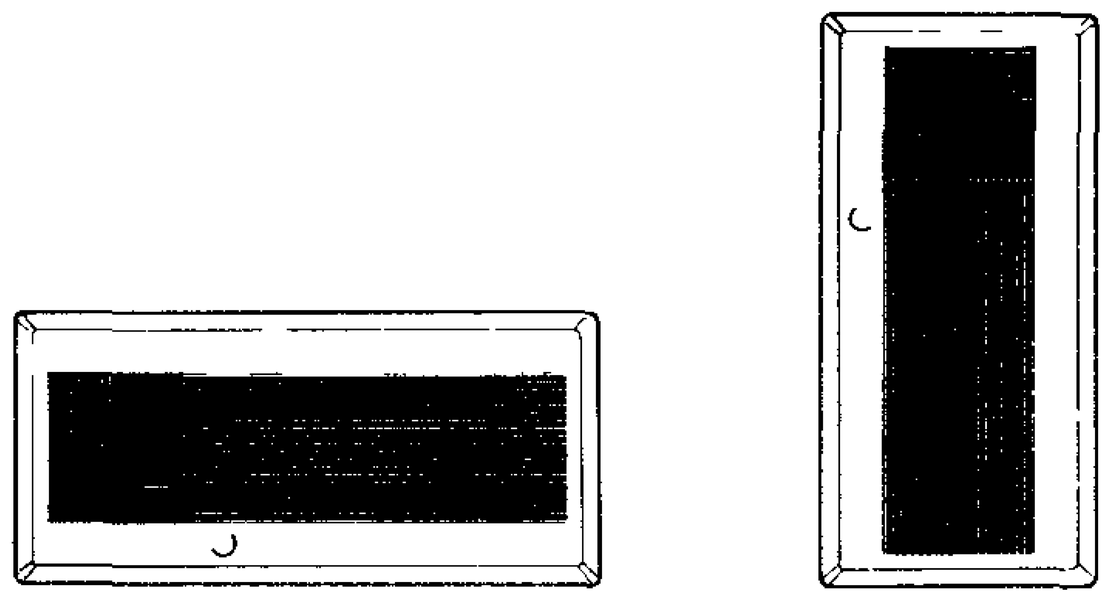

    After you have made your decision, place the central module on one of its sides. Remove the protective paper from the adhesive surface of each rubber foot. Mount the feet at the corners of the module base. For optimal stability, mount the feet as close to the corners of the base as possible.

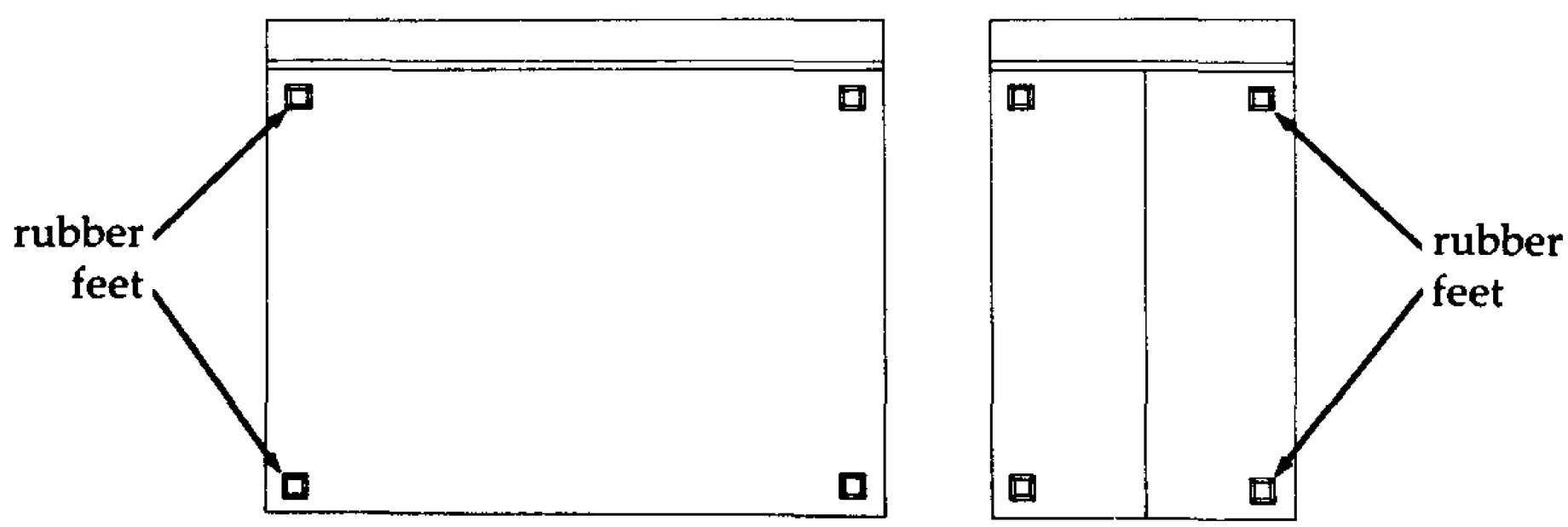

---->>

Procedure: Central Module Installation and Configuration

22. Return the central module to the chosen orientation. Do not slide the module on its rubber feet until the adhesive has cured for at least three hours. Maximum adhesion takes 24 hours.

23. Plug one end of the central module main power cord in the selectable power line receptacle, and plug the other end in a wall outlet.

    This completes the installation and configuration of the DIMENSION central module.

Procedure Summary

After you have installed and configured the central module, the next step in the hardware installation procedure is to install and configure the workstations. The procedures on the following pages describe how to:

- o Plug the keyboard cable into the connector box.
- o Plug the video cable into the video display.
- o Mount the connector box.
- o Mount the workstation label.
- o Plug in the video display power cord.
- o Adjust the tilt-and-swivel mechanism.

Procedure: Workstation Installation and Configuration

1. Route the uncoiled workstation cables to the workstations.

2. Notice that each keyboard cable ends in a six-pin plug. This plug mates with a six-pin receptacle in a workstation connector box.

   Attach all the keyboard cables to their respective connector boxes.

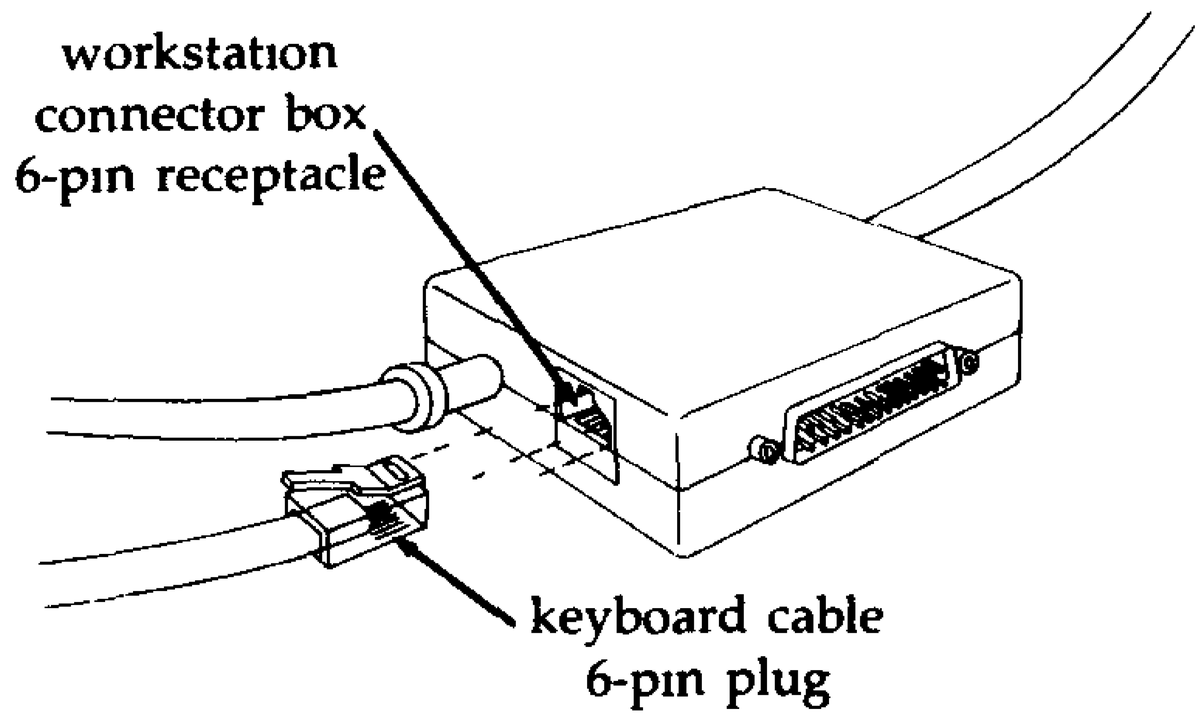

3. A video display cable, which extends from each connector box, ends in a plug. This plug mates with a receptacle on the back panel of a video display.

   Attach all the video display cables to their respective video displays.

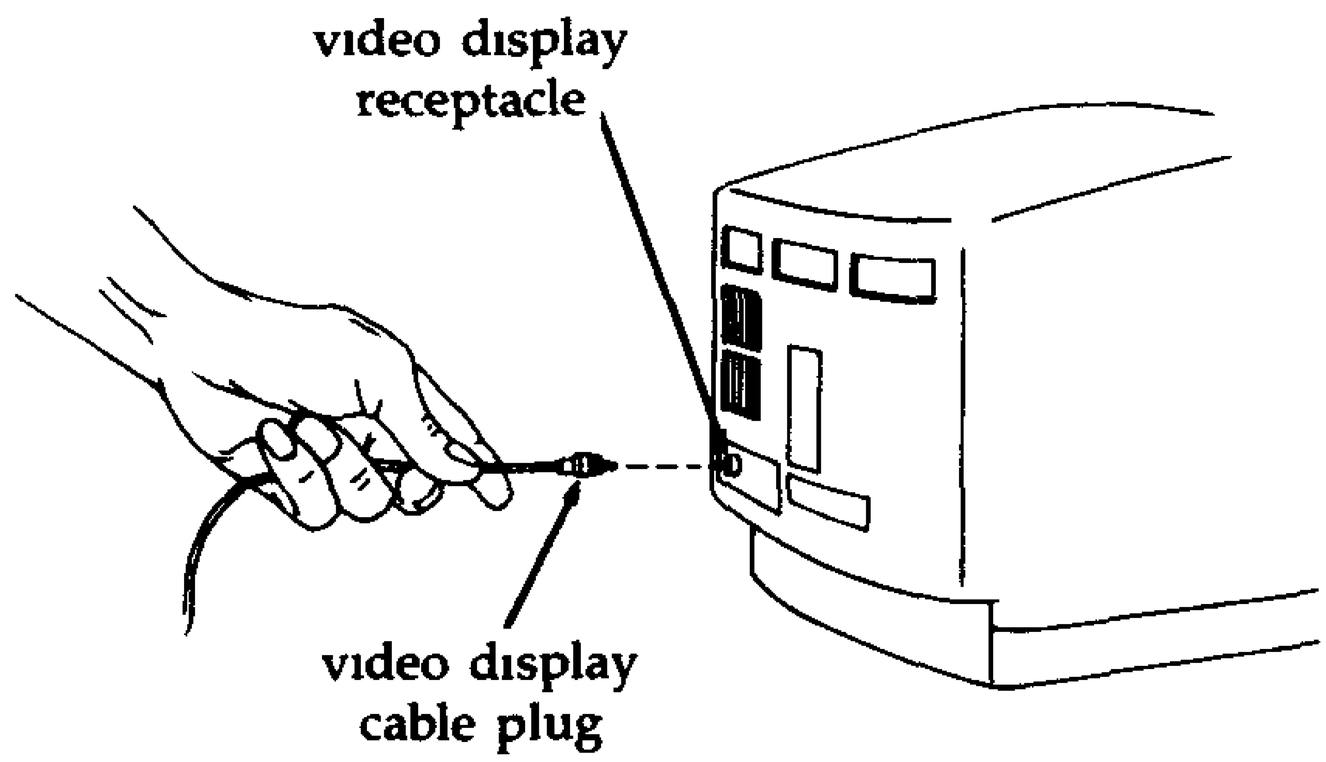

---->>

Procedure: Workstation Installation and Configuration

4. Notice the 3/4" circle of Dual Lock™ included with each workstation installation kit. It is used to fasten the connector box to a location close to the workstation video display.

CAUTION
Once you have used the Dual Lock™ to attach the connector box to a suitable surface, you cannot easily reposition the connector box.

5. Remove the protective paper from one side of the Dual Lock™ circle, and attach the circle to the back of the connector box.

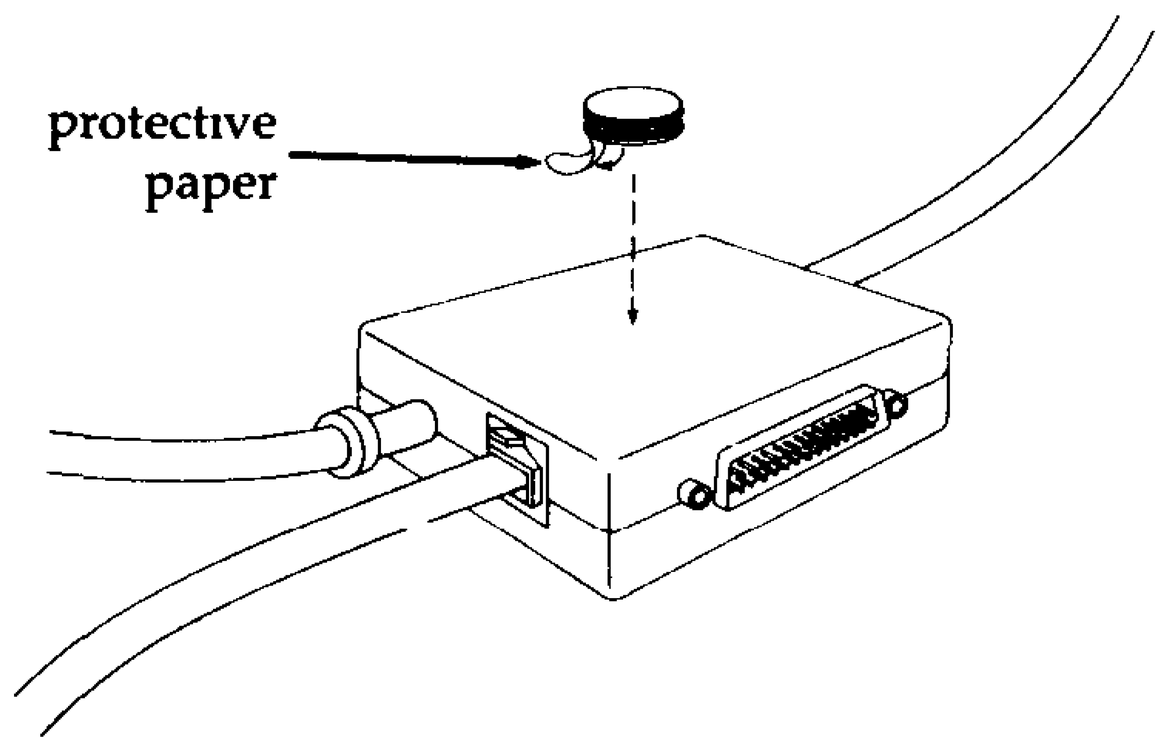

6. Remove the protective paper from the other side of the circle, and press the connector box against a surface near the video display.

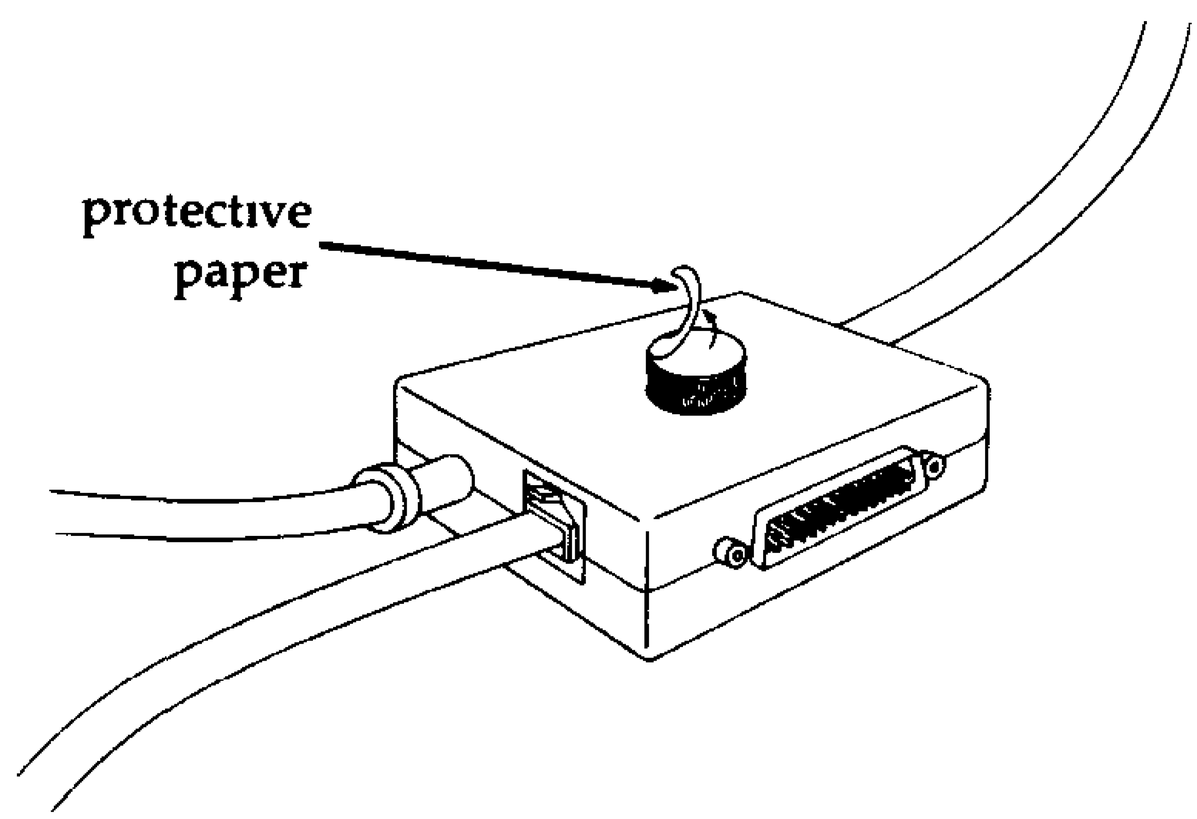

Procedure: Workstation Installation and Configuration

7. You received twelve pre-numbered workstation labels as part of your central module installation kit. Starting at the back of the central module, trace the cable which connects workstation circuit board #1 (found in position #1) to a workstation. Attach workstation label #1 to the front of this workstation's video display. Repeat these steps until you have assigned and attached a pre-numbered label to the front of each video display.

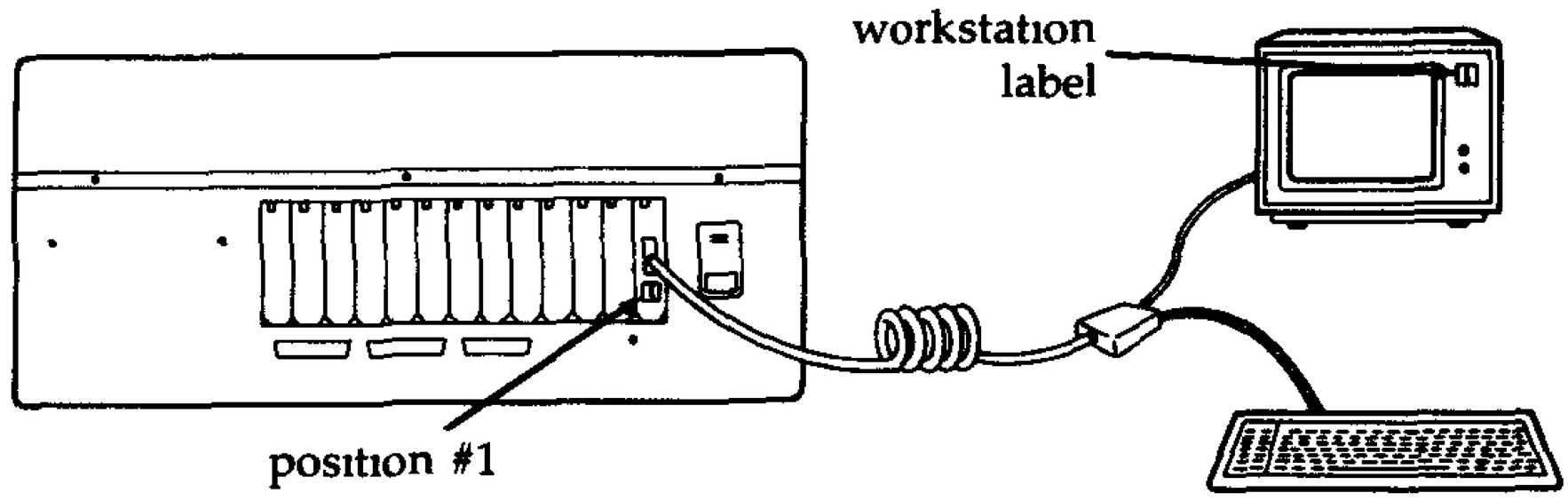

8. Plug the power cord of each video display into a wall outlet.

Tilt and Swivel

The optional North Star DIMENSION Tilt and Swivel mechanism is designed to allow adjustment of the workstation video display viewing angle.

Procedure: Tilt and Swivel Installation

1. Loosen the wingnut of the tilt and swivel mechanism so the two sections may be moved freely.

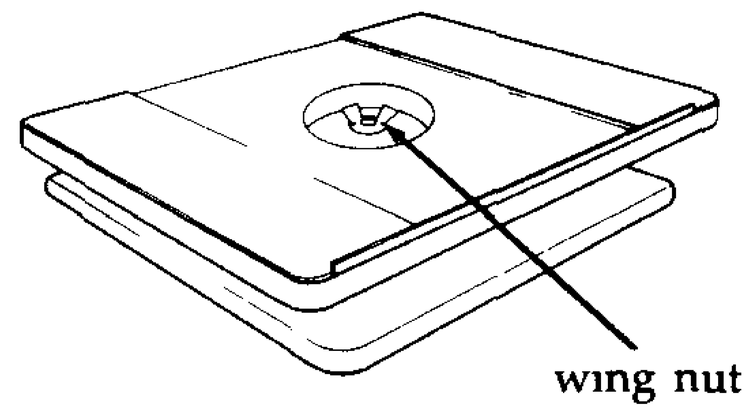

2. Rotate the tilt and swivel mechanism so the edge of the swivel plate which has an upper lip is facing toward you.

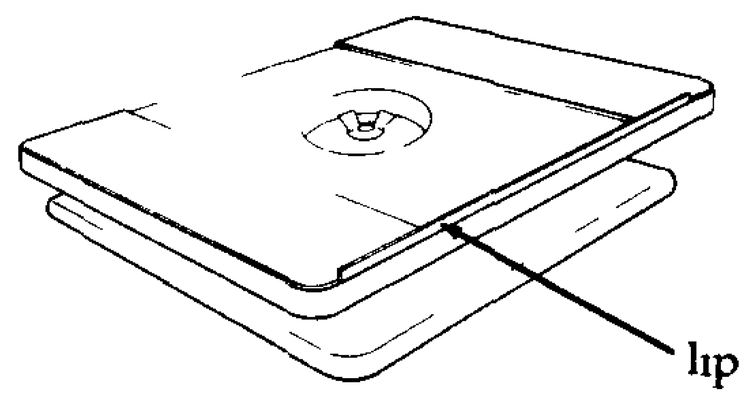

3. Place the workstation video display on the swivel plate so the feet of the display stradle the lip of the swivel plate.

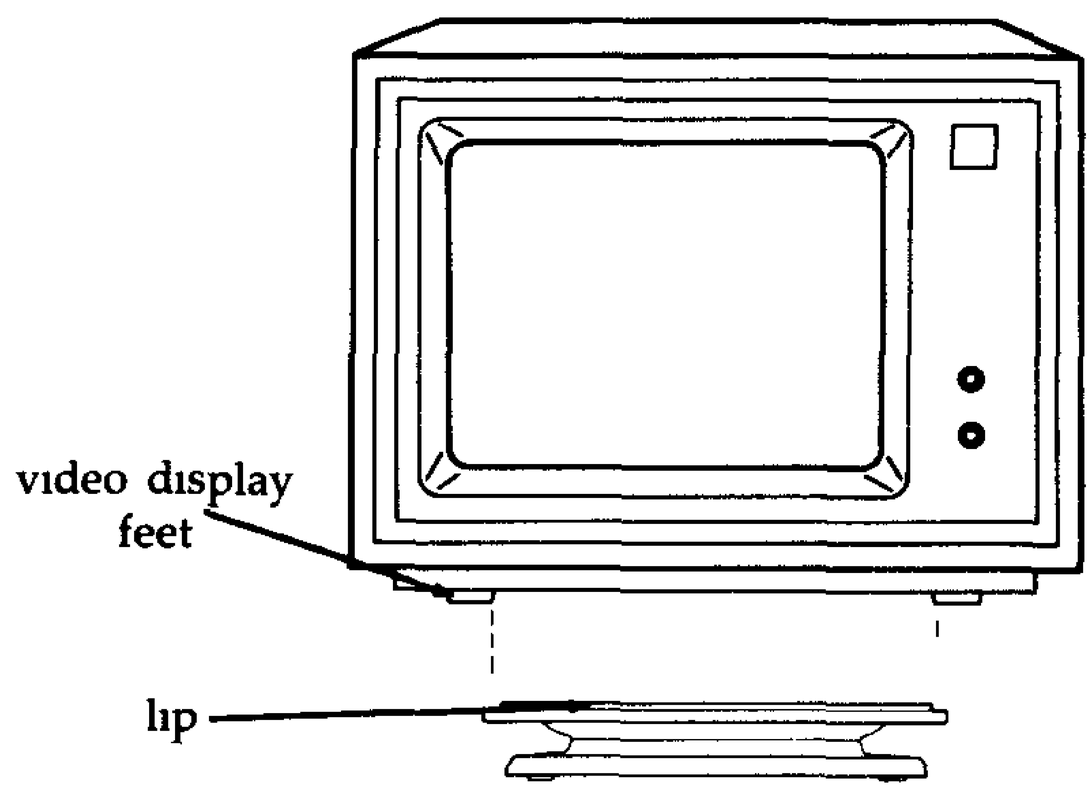

Procedure: Tilt and Swivel Installation

4. Press down on the base plate of the tilt and swivel mechanism while grasping the swivel plate. Rotate the swivel plate to a comfortable viewing angle.

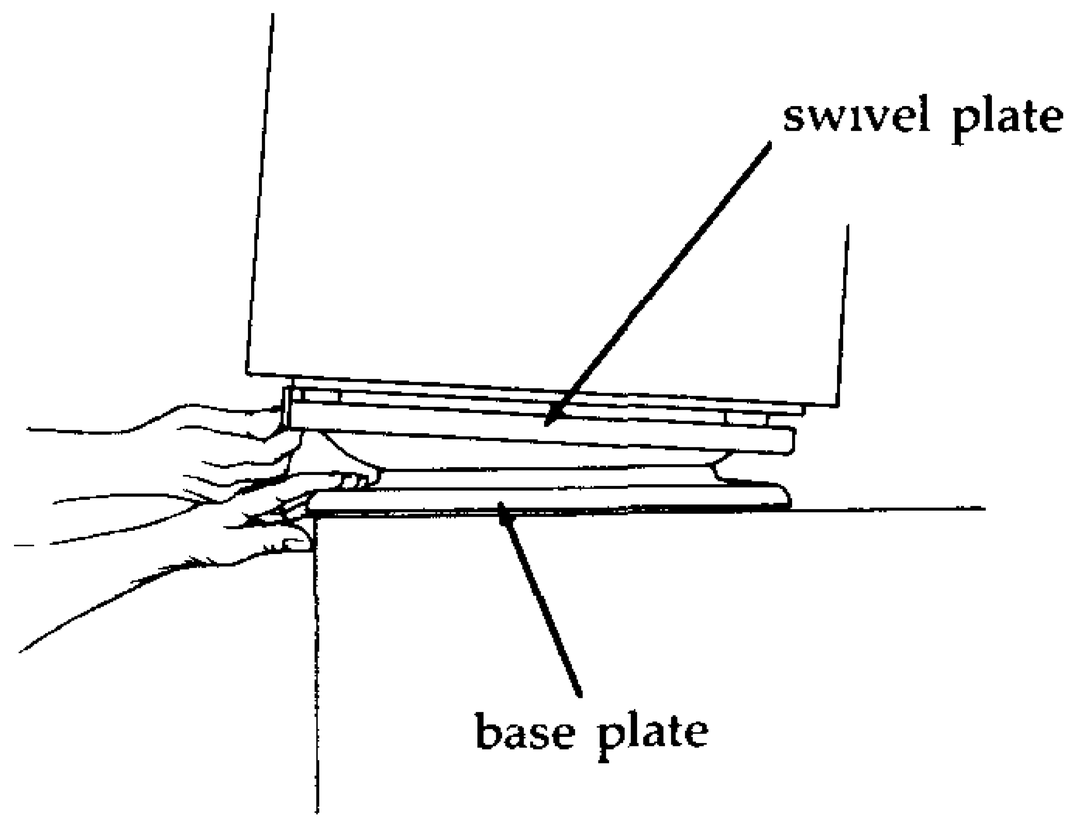

This completes the hardware installation procedures for the DIMENSION workstation.

Central Module Printer Installations

This section of the chapter explains how to install printers at the DIMENSION central module. Up to three printers may be installed at one time, because the central module can accept one parallel and two serial printers simultaneously.

Serial vs. Parallel Interfacing

Before attaching a printer to the central module, you must determine if it uses a serial or parallel interface.

Serial and parallel interfacing are methods of data transmission used by the printer. Serial printers transmit data bits sequentially, while parallel printers transmit data bits simultaneously. If you are in doubt about the interface used by your printer, refer to your printer manual.

Printer Cables

If your printer uses a serial interface, use a DIMENSION serial printer cable to attach the printer to the central module.

If your printer uses a parallel interface, use a DIMENSION parallel printer cable to attach the printer to the central module.

Installation Requirements

There is only one specific requirement that must be met when attaching printers to the central module:

THE CENTRAL MODULE AND ITS PRINTERS MUST SHARE POWER OUTLETS THAT ARE PART OF A COMMONLY FUSED AND GROUNDED ELECTRICAL CIRCUIT.

This precaution eliminates ground loops which could cause erratic behavior of the printers, or the central module, or both.

Procedure Summary

The following procedures describe how to:

- o Connect an interface cable between a shared serial or parallel printer and the central module.
- o Plug in the printer power cord.

Parallel Printer Installation

The back panel of the central module has one connector which you may use for attaching a parallel printer. This connector is labeled "Parallel 1."

Procedure: Shared Parallel Printer Installation

1. Connect one end of a parallel printer cable to the parallel port connector ("Parallel 1") on the rear panel of the central module. Firmly fasten the cable using the screws attached to the cable connector.

2. Connect the other end of the parallel printer cable to the port connector of the parallel printer. Firmly fasten the cable using the screws attached to the cable connector.

3. Connect the printer main power cable to a 115VAC (or 230VAC) wall outlet which is commonly fused and grounded to the central module.

   This completes the installation procedure for a shared parallel printer.

Serial Printer Installation

The back panel of the central module has two connectors which you may use for attaching serial printers. These connectors are labeled "Serial 1" and "Serial 2."

Procedure: **Shared Serial Printer Installation**

1. Connect one end of a serial printer cable to either of the serial port connectors ("Serial 1" or "Serial 2") on the rear panel of the central module. Firmly fasten the cable using the screws attached to the cable connector.

2. Connect the other end of the serial printer cable to the serial port connector of the serial printer. Firmly fasten the cable using the screws attached to the cable connector.

3. Connect the printer main power cable to a 115VAC (or 230VAC) wall outlet which is commonly fused and grounded to the central module.

This completes the installation procedure for a shared serial printer.

Workstation Printer Installations

This section of the chapter explains how to install a printer at a DIMENSION workstation. Only one printer may be installed at each workstation, and the printer must use a serial interface compatible with the Electronic Industries Association RS-232C standard. This standard attempts to ensure interfacing compatibility between data terminal (DTE) and data communications (DCE) equipment.

EIA RS-232C Compatibility

The portion of the standard which concerns the DIMENSION workstation states that signal grounds and shield (safety) grounds (of the printer, in this instance) must be wired in a manner which permits their isolation from each other. If you are in doubt about your printer's ability to meet this standard, refer to your printer manual.

Many commonly available printers meet the EIA RS-232C specification.

Some printers that have their signal and shield (safety) grounds wired together may be modified to meet the isolation requirements. The printer maintenance manuals may contain procedures that explain how to isolate the grounds.

If you have a printer in which the signal ground and shield (safety) ground are inseparably wired together, or if you have a printer which uses a parallel interface, this printer may not be connected to a DIMENSION workstation. Instead, consider using it as a shared printer at the central module.

Serial vs. Parallel Printers

Before attaching a printer to a workstation, you must ensure that it uses a serial interface.

As discussed earlier in this chapter, serial and parallel interfacing refers to the method of data transmission used by the printer. Serial printers transmit data bits sequentially, while parallel printers transmit data bits simultaneously. If you are in doubt about the interface used by your printer, refer to your printer owner's manual.

Workstation Serial Port

Your printer owner's manual may provide you with the information to make your printer's serial port compatible with a number of different computers. If this is the case, the following chart may help you. It shows the signals used by your DIMENSION workstation when communicating with a serial printer.

Pin Number	Signal Name
1	Shield (safety) ground
2	Transmit Data - from computer to printer
3	Receive Data - from printer to computer
4	RTS (request to send) - always asserted output from computer
6	DSR (data set ready) - input to computer
7	Signal ground
20	DTR (data terminal ready) - always asserted output from computer

Printer Cables

Most serial printers which meet the EIA RS-232C standard may be attached to the DIMENSION workstation by using a "null modem" cable. The cable must have connectors of the proper gender which match the ports of the workstation connector box and your printer.

The wiring for a null modem cable is shown in the following chart:

DIMENSION Connector Pin Number	Printer Connector Pin Number
1	1
2	3
3	2
4	8
5	8
6	20
7	7
8	4 & 5
20	6

Procedure: Local Serial Printer Installation

1. Connect one end of a serial printer cable to the serial port of the workstation connector box. Firmly fasten the cable using the screws attached to the cable connector.

2. Connect the other end of the cable to the serial port connector of your printer. Firmly fasten the cable using the screws attached to the cable connector.

3. Connect the printer main power cable to a 115VAC (or 230VAC) wall outlet.

   This completes the installation procedure for a local serial printer.

Local Modem Installation

This section of the chapter explains how to install a modem at a DIMENSION workstation. Only one modem may be installed at each workstation, and the modem must use a serial interface compatible with the Electronic Industries Association RS-232C standard.

Most commonly available modems meet this industry specification; however, if you are in doubt, you should read your modem owner's manual.

Serial vs. Parallel Modems

Before attaching a modem to a workstation, you must ensure that it uses a serial interface.

As discussed earlier in this chapter, serial and parallel interfacing refers to the method of data transmission used by the modem. Serial modems transmit data bits sequentially, while parallel modems transmit data bits simultaneously. If you are in doubt about the interface used by your modem, refer to your modem owner's manual.

Workstation Serial Port

Your modem owner's manual may provide you with the information to make your modem's serial port compatible with a number of different computers. If this is the case, the following chart may help you. It shows the signals used by your DIMENSION workstation when communicating with a serial modem.

Workstation Serial Port (cont.)

Pin Number	Signal Name
1	Shield (safety) ground
2	Transmit Data - from computer to modem
3	Receive Data - from modem to computer
4	RTS (request to send) - always asserted output from computer
6	DSR (data set ready) - input to computer
7	Signal ground
20	DTR (data terminal ready) - always asserted output from computer

Modem Cables

Most serial modems which meet the EIA RS-232C standard may be attached to the DIMENSION workstation by using a "null modem" cable. The cable must have connectors of the proper gender which match the ports of the workstation connector box and your modem.

The wiring for a null modem cable is shown in the following chart:

DIMENSION Connector Pin Number	Printer Connector Pin Number
1	1
2	3
3	2
4	8
5	8
6	20
7	7
8	4 & 5
20	6

Procedure: Local Modem Installation

1. Connect one end of a serial cable to the serial port of the workstation connector box. Firmly fasten the cable using the screws attached to the cable connector.

2. Connect the other end of the cable to the serial port of the modem. Firmly fasten the cable using the screws attached to the cable connector.

3. Connect the modem main power cable to a 115VAC (or 230VAC) wall outlet.

   This completes the installation procedure for a local modem.

Local Mouse Installation

Only a mouse which uses a serial interface may be attached to a workstation. Additionally, the mouse must conform to EIA RS-232C specifications. A typical mouse meets this industry specification; however, if you are in doubt, you should read your owner's manual.

Procedure: **Local Mouse Installation**

1. Connect one end of a serial cable to the serial port of the workstation connector box. Firmly fasten the cable using the screws attached to the cable connector.

2. Due to differences in mouse interface connections, you should refer to your mouse owner's manual to complete the installation procedure.

   This completes the hardware installation procedures for peripheral equipment.

SPECIFICATIONS

Introduction

This chapter contains general specifications for the DIMENSION system. It also contains detailed specifications for the keyboard, video display and power supply subassemblies. A compatibility specification for non-North Star circuit boards which may be attached to the bus circuit board is also included.

The specification of each subsystem includes an overview; an environmental specification; a power requirement; cosmetic requirements; and, pertinent electrical, physical, and mechanical parameters. Lists of various agencies and subassembly standards are also included.

Introduction

This section of the chapter lists general specifications for the DIMENSION computer. Included are size, power and environmental specifications for the central module and workstation as well as specifications for the diskette drive, fixed disk drive and central module I/O ports.

Detailed specification for the video display, keyboard, central module power supply and bus circuit board may be found in other sections of the chapter.

	Central Module	Keyboard	Video Display
Physical Size	23.75"(h) 11.375"(w) 19.5"(d)	1.375"(h) 17.75"(w) 7.625"(d)	11.75"(h) 14.25"(w) 12.75"(d)
Net Weight	60-84 lbs.	3.3 lbs.	19 lbs.
U.S. Power Requirements	95-135VAC	provided by central module	100-132VAC
U.S. Power Consumption	10 amps (RMS) @ 115VAC	N/A	0.3 amps @ 115VAC
International Power Requirements	190-264VAC	provided by central module	195-264VAC
International Power Consumption	5 amps (RMS) @ 230VAC	N/A	0.18 amps @ 230VAC
Temperature and Humidity	o Operating:	10° C to 40° C (50° F to 104° F) 30% to 80% (non-condensing) relative humidity	
	o Non-operating and shipping:	-20° C to 60° C (-4° F to 140° F) 30% to 90% (non-condensing) relative humidity	

Diskette Drive

- o Number of drives: 1
- o Diskettes: 48 tracks/inch, soft-sectored, double-density
- o Storage: 40 cylinders, 2 heads, 8 or 9 sectors/track
- o Transfer rate: 250 Kbits/sec.
- o Latency (average): 100 msec.
- o Access Time (track-to-track): 6 msec.
- o Track Density: 48 tracks/inch
- o Tracks per side: 40
- o Soft read error rate: 1 per 10^9 bits read
- o Hard read error rate: 1 per 10^{12} bits read
- o Seek error rate: 1 per 10^6 seeks

Fixed Disk Drive

	15Mbyte	30Mbyte
o Capacity:		
Formatted		
per track	8,704 bytes	8,704 bytes
per sector	512 bytes	512 bytes
sectors per track	17	17
o Transfer rate:	5 Mbits/sec	5 Mbits/sec
o Access time:		
Track-to-track (with settling time)	18 msec.	8 msec.
Average (with settling time)	120 msec.	55 msec.
Maximum (with settling time)	310 msec.	130 msec.
Settling time	15 msec.	included in access time
o Average latency:	8.33 msec.	8.33 msec.
o Rotational Speed:	3600 rpm	3600 rpm
o Number of tracks:	1836	3672

o Soft read error rate: 1 per 10^{10} bits read

o Hard read error rate: 1 per 10^{12} bits read

o Seek error rate: 1 per 10^{6} seeks (15Mbyte)
1 per 5 x 10^{6} seeks (30Mbyte)

o Guaranteed good cylinder:	cylinder 0	cylinder 0
o Maximum bad spots:	24	48

Central Module I/O Ports

- o I/O Bus: slots for up to thirteen plug-in circuit boards
- o Two serial I/O: RS-232C serial ports

  SDLC external clock
  Asynchronous: 38.4 Kilobaud (maximum)
  Synchronous: 880 Kilobaud (maximum)

- o One parallel I/O: Centronics compatible; maximum speed limited by the processor.

Current Requirements

The following table lists DIMENSION subassemblies and indicates the current (in amperes) required by each.

Subassembly	±5VDC	±12VDC	-12VDC
Central Board	4.50	0.10	0.10
Expansion RAM	0.43	0.00	0.00
Workstation PCB	2.50	0.03	0.03
Workstation Ex RAM	0.65	0.00	0.00
Fixed Disk Drive	1.00	2.00	0.00
Diskette Drive	0.80	1.00	0.00
Tape Back-up Drive	1.00	1.20	0.00
Keyboard	0.00	0.35	0.03
Tape Back-up PCB	NA	NA	NA

Maximum System Power

The following table lists the current and power dissipation of a DIMENSION system comprising a central module with two fixed disk drives, tape back-up drive, central board expansion RAM and twelve workstations.

Subassembly	±5VDC	±12VDC	-12VDC
Central Board	4.50	0.10	0.10
Expansion RAM	0.43	0.00	0.00
Workstation PCB	30.00	0.36	0.36
Workstation Ex RAM	7.80	0.00	0.00
Fixed Disk Drive	2.00	4.00	0.00
Diskette Drive	0.80	1.00	0.00
Tape Back-up Drive	1.00	1.20	0.00
Keyboard	0.00	4.20	0.36
Total Current: (amperes)	46.53	10.86	0.82
Total Power: (watts)	232.65	130.32	9.84

Total System Power Dissipation: 372.81 watts

Minimum System Power

The following table lists the current and power dissipation of a DIMENSION system comprising a central module with one fixed disk drive and one workstation.

Subassembly	+5VDC	+12VDC	-12VDC
Central Board	4.50	0.10	0.10
Workstation PCB	2.50	0.03	0.03
Fixed Disk Drive	1.00	2.00	0.00
Diskette Drive	0.80	1.00	0.00
Keyboard	0.00	0.35	0.03
Total Current: (amperes)	8.80	3.48	0.16
Total Power: (watts)	44.00	41.76	1.92

Total System Power Dissipation: 87.68 watts

Note: The total system power dissipation figures shown here are average figures and do not take into account power-up surges and power losses from switches, power supply inefficiency, etc.

Overview

This specification describes an 84-key, enhanced IBM compatible, capacitive, solid-state keyboard. General characteristics include:

- o A low profile design meeting 1985 DIN standards.
- o A sculptured keyboard with tilt mechanism, off-white housing and light and grey keys with dark legends.
- o A coiled cord with phone-type connector for the RS-422 and power connections.
- o An IBM Selectric-type "QWERTY" keyboard layout with numeric control keys and programmable function keys.

The design satisfies the needs of users requiring a reliable keyboard for word processing, data processing and graphics programs. It meets the necessary agency requirements as a component in a computing device for U.S. and international market-places.

Operating Conditions

The keyboard meets following environmental requirements:

- o Operating: +10° C to +40° C ambient (50° F to 104° F) 30% to 80% (non-condensing)
- o Non-operating and shipping: -20° C to 60° C (-4° F to 140° F) 30% to 90% (non-condensing) relative humidity

Approvals

Keyboard is listed as a recognized component that satifies UL478 and UL114 standards, and conforms to CSA standards C.222 No. 154, VDE 0804 and 0806 safety standards. Interference levels are within VDE 0871 and FCC Part 15 subpart J class A to meet system interference requirements.

Ergonomic Factors

Ergonomic requirements are met per German Professional Trade Association ZH 1/618 and DIN 66234, Part 6, including key height and reflectivity.

The keyboard is equipped with feet that prevent slippage on and damage to table surfaces.

The keyboard contains a tilt mechanism which allows a minimum of two keyboard positions. The mechanism, when fully extended, adds 8° of tilt.

Power Requirements

Power requirements: 7.5 volts to 13 volts at 300 milliamps or less typically, 400 milliamps maximum.

Keyboard Cosmetics

The keyboard has a medium texture finish per NSCI Paint Texture Specification (P/N 03397). The color is off-white (P/N 03395).

Electrical Interface

The electrical interface is a balanced differential, two wire drive, per the EIA RS422 specification. The drive load capacitance is 0.02 microFarads maximum.

- o Terminal A is negative with respect to Terminal B for a binary 1 state;
- o Terminal A is positive with respect to Terminal B for a binary 0 state.

Key Rollover and Up/Down Status

The keyboard design provides N-key rollover scanning as well as key-up/key-down status.

Key-down codes repeat automatically at a 12 Hz rate after 500 millisecond delay.

The cable interface supplies key-up and key-down codes. (See the table on page 2-8.) Sixteen or more key-down and key-up codes are buffered during high-speed keying for subsequent transmission. A code of 255 (0FF hex) is sent when the keyboard buffer is full.

The keyboard includes a hysteresis feature for discriminating between up-to-down and down-to-up key transitions and to avoid false hits, missed hits, double hits, feathering and teasing.

Data Transfer Rate

Serial data is transferred at 300 baud using asynchronous protocol:

- o start bit, binary 0 state
- o 8 data bits
- o no parity
- o 2 stop bits, binary 1 state

Keyboard Logic During Power-On

A power-on condition causes 126 (07E hex) to be sent.

Each LED is cleared at power-on. When a key is depressed, the LED turns on. It reverses its state each time the key is subsequently depressed after it is released. An exception to this is the "Num Lock" key. It does not change state if the "Ctrl" key is also depressed.

Key Description

The keys have the following properties:

- o Low profile, highly reliable design which achieve a 20 million mean-cycles-before-failure life rating or better.
- o The actuating force for the keys is typically 2.0 oz. ±0.5 oz., 2.5 oz. max. Total key travel is 3.8 mm. ± 0.2 mm., and the make point is 1.9 mm ± 0.8 mm.
- o The actuating force for the space-bar is 2.8 oz. ±0.5 oz. Total space bar travel is 3.8 mm. ±0.2 mm., and the make-point is 1.9 mm. ±0.8 mm.
- o The "Caps Lock" and "Num Lock" keys have LED indicators in the keytops.
- o The keys have sculptured keytops with single axis dishes. The keytops have a fine texture on the top surface with matte finish on the sides.
- o The keytops are two color molded, and the legends are dark (Borg Warner #4500 Cyclolak or equivalent) on light key bodies (Eastman Kodak R5T143 Tenite or equivalent), or sand brown on gray (control) keys bodies (Eastman Kodak R5T923 Tenite or equivalent).

Interface Cable Description

The keyboard cable has the following properties:

- o Measures six feet, coiled, extended length.
- o Has five conductors plus drain wire.
- o Terminates in six-pin modular phone connector, AMP P/N 641337-1 or equivalent.
- o Disconnects internally at keyboard with a six-pin connector, Berg 65039-033 or equivalent.
- o Drain wire is 4" longer than the five conductors, is insulated, and is terminated with an AMP .250 14-16 AWG FISO, or equivalent on the internal end.
- o Has strain relief to prevent the internal connector from being the sole retention mechanism for the cable to the keyboard.
- o Color is the same as the keyboard housing.
- o Keyboard circuitry cannot be damaged by disconnecting or reconnecting the modular phone connector with the workstation and central module turned-on.
- o Keyboard pin connectors use the following wiring chart:

Modular Phone Pin #	Signal Name	Internal Pin #
1	Gnd (separate connector)	5
2	Gnd (separate connector)	4
3	Data Out, (B),1 = more positive	1
4	+12 volt nominal supply	6
5	Data Inv (A),1 = more negative	2
6	Shield drain (.250 FISO to chassis internally)	
N/A	polarization key	3

Key Number	Code (decimal)	Key Description	Key Number	Code (decimal)	Key Description
1	59	F1	43	31	S
2	60	F2	44	32	D
3	1	ESC	45	33	F
4	2	1 !	46	34	G
5	3	2 @	47	35	H
6	4	3 #	48	36	J
7	5	4 $	49	37	K
8	6	5 %	50	38	L
9	7	6 ^	51	39	; :
10	8	7 &	52	40	' "
11	9	8 *	53	28	Return
12	10	9 (	54	75	4 (num pad)
13	11	0)	55	76	5 (num pad)
14	12	- _	56	77	6 (num pad)
15	13	= +	57	78	+ (add)
16	14	Back Space	58	65	F7
17	69	Num Lock	59	66	F8
18	70	Scroll Lock	60	43	\ |
19	61	F3	61	42	(left shift)
20	62	F4	62	44	Z
21	15	Tab	63	45	X
22	16	Q	64	46	C
23	17	W	65	47	V
24	18	E	66	48	B
25	19	R	67	49	N
26	20	T	68	50	M
27	21	Y	69	51	, <
28	22	U	70	52	. >
29	23	I	71	53	/ ?
30	24	O	72	54	(right shift)
31	25	P	73	55	PrtSc
32	26	[{	74	79	1 (num pad)
33	27	] }	75	80	2 (num pad)
34	41	` ~	76	81	3 (num pad)
35	71	7 (num pad)	77	67	F9
36	72	8 (num pad)	78	68	F10
37	73	9 (num pad)	79	56	Alt
38	74	- (subtract)	80	57	(space bar)
39	63	F5	81	58	Caps Lock
40	64	F6	82	82	0 (num pad)
41	29	Ctrl	83	83	Del .
42	30	A	84	84	Enter

Note: Key-down codes are shown; for key-up codes, add 128 (decimal).

Overview

This specification describes a 12-inch monochrome data display monitor. The monitor has electrical inputs as described in EIA standard RS-170 for composite video, and meets the applicable U/L, CSA, VDE and FCC requirements for safety and EMI.

This monitor displays both character and graphical information for a commercial grade computer system. It is used in both interlaced and non-interlaced modes. Characters are formed in 8 x 16 and 8 x 8 matrices and in dot addressable graphics mode using matrices of 640 x 200 and 640 x 400 dots.

Power Input

Power Source

- o U.S. Model: 100 - 132VAC @ 60 HZ
- o International Model: 195 - 264VAC @ 50 HZ

Power Cord

- o Color is complementary to cabinet and in accordance with required ergonomic standards.
- o Length: 5 - 8 feet
- o Wire color coding is acceptable to appropriate regulatory agencies.

Power Plug

- o The 115VAC model has a standard US three-prong plug.
- o The 230VAC model has no plug. The cord is in compliance with agency requirements and has stripped and tinned leads.

Grounding

- o Chassis and logic grounds are separate.

Video Input

Connector

o RCA phono jack

Signal

o Minimum sync. + video = 1.8 Vpp with minimum sync. of 0.4 volts

o Maximum sync. + video = 2.2 Vpp with maximum sync. of 0.8 volts

o Conforms to RS-170 for composite video and RS-375-A for interlaced video.

Impedance

o 67.5 - 82.5 ohms

Video Frequency Response

o 0 - 18 MHZ (± 3dB)

Total Scan Lines

o 262, non-interlaced

o 525, interlaced

Visible Scan Lines

o 200, non-interlaced

o 400, interlaced

Total Horizontal Dots

o 912

Visible Horizontal Dots

o 640

Non-Interlaced Character Formation

o 80 columns by 25 rows in an 8 wide x 8 high matrix.

Video Input (cont.)

Interlaced Character Formation

- o 80 columns by 25 rows in an 8 wide x 16 high matrix.

Timing

- o Nominal Dot Clock:

  frequency = 14.31818 Mhz
  period = 69.843 nsec

- o Horizontal:

  frequency = 15.750 Khz
  period = 63.695 usec

- o Visible Horizontal Display = 44.698 usec

- o Time from start of visible horizontal display to start of horizontal sync pulse = 50.285 usec

- o Duration of horizontal sync pulse = 3.0 - 4.0 usec

- o Vertical:

  frequency = 59.923 Hz
  period = 16.688 msec

- o Visible Vertical Display = 12.739 msec

- o Time from start of visible display to start of vertical sync pulse:

  non-interlaced & even interlaced = 14.268 msec
  odd field interlaced = 14.300 msec

- o Duration of vertical sync pulse = 95 - 285 usec

Display Image Unless otherwise noted, the reference condition for the display image are as follows:

- o Input signal at 1.0 Vpp.
- o With video at "black" level and brightness adjusted to maximum, adjust the contrast to produce a background raster of 0.5 footlamberts.
- o With video at "white" level and contrast adjusted as above, adjust brightness to 15.0 footlamberts.

Aspect Ratio (width/height)

- o 4/3 ± 3.0 %

Image Size

- o Width: 7.9 - 8.1 inches
- o Height: 5.9 - 6.1 inches

Horizontal Linearity

- o Less than 10%
- o Horizontal linearity is measured by 10 character lengths. Any one character row should equal not less than 9 or more than 11 character lengths on the opposite end of the character row. Also, any set of 10 horizontal characters does not deviate from nominal size by ± 10%.

Vertical Linearity

- o Less than 7%
- o Vertical linearity is measured by 15 character heights. Any one character column should equal not less than 14 or more than 16 character heights on the opposite end of the character column. Also, any set of 10 vertical characters does not deviate from nominal size by ± 7%.

Display Image (cont.)

Geometric Distortion

- o Less than 2%
- o Geometric distortion is measured by a horizontal or vertical line extending from one extreme of the image to the other. It does deviate from a straight line by more than 0.1 inch.

Contrast and Brightness Adjustment

- o The contrast and brightness are front panel adjustable to produce a background luminance of 3.0 footlamberts with full foreground luminance of at least 30.0 footlamberts.

Resolution

- o Center: greater than 900 lines
- o Corners: greater than 700 lines

Focus

- o All dots of a lower case "m" in all character positions are distinguishable.

Tilt

- o Less than 0.1 inch with face of screen towards magnetic west. Tilt is measured by measuring the distance from the horizontal center line of the display image to the bottom bezel edge on the extreme left and right sides of the display image. The difference between these two distances is defined as the tilt.

Display Image (cont.)

Dynamic Tilt

- o Less than 0.1 inch in 360 degrees of rotation. Dynamic tilt is measured by measuring the distance from the horizontal center line of the display image to the bottom bezel edge on the extreme left and right sides of the display image. The difference between these two distances is defined as the tilt.

Centering

- o Horizontal: within 0.1 inch
- o Vertical: within 0.2 inch

Interlace Factor

- o Between 2:1 and 2.25:1
- o Interlace factor is calculated by (a+b)/a, where:

  a = the smaller of the distances between an even and odd scan line pair.
  b = the larger of the distances between an even and odd scan line pair.

Display Tube

Size

o 12 inch diagonal

Radius

o 25 inch

Phosphor

o P39, green

Body

o dark glass

Anti-glare

o direct chemical etch

Implosion Protection

o tension band

Phosphor & Glass Defects

o central two inch zone = 0

o outer picture area = 2

o outside picture area = 3

o A phosphor or glass defect is any defect of a size greater than 0.013 inch square (the size of an interlaced pixel) with a luminance 50% less than non-defect areas.

Phosphor Burn Sensitivity

o Able to have a steady pattern on the screen for 96 hours at 30.0 footlamberts brightness without damage to phosphor.

Controls	**User Front**
	o Power on/off
	o Brightness
	o Contrast
	User Back
	o Horizontal Hold
	o Vertical Hold
	Service
	o Horizontal Size
	o Vertical Size
	o Vertical Linearity
	o Focus
Dielectric Strength	**Minimum Dielectric Strength**
	o 1.30 KVAC for 1 sec.

Environmental Conditions

Temperature

o Operating: +10° C to + 40° C

o Storage: -20° C to + 60° C

Relative Humidity

o Operating: 30% to 80%, non-condensing

o Storage: 30% to 90%, non-condensing

Vibration

o Operating: 0.5g continuous

o Storage (packaged): 2.0g continuous

Shock

o Operating: 1.0g @ 10ms

o Storage (packaged): 30.0g @ 10ms

Cosmetic

o Color & Finish - The housing is NSCI color (P/N 03395) off-white. The bezel is NSCI color (P/N 03396) gray. The texture for both is NSCI paint texture (P/N 03397) medium.

Domestic (US 115VAC)

U/L Standard

- o UL114 - Office Appliances and Business Equipment
- o UL478 - Electronic Data Processing Units and Systems

CSA Standard

- o C22.2 No. 154 - Data Processing Equipment
- o C22.2 No. 143 - Office Machines

FCC

- o Part 15 subpart J class A

Export (230VAC)

VDE

- o 0804, 0806 (safety)
- o 0871 (EMI)

Ergonomic

VDMA

- o ZH 1/618 issued by the German Mechanical Engineering and Plant-Making Industries (VDMA)

Supplier Quality Assurance Program

The supplier documents his Quality Assurance program and procedures to North Star Computers, Inc.

North Star Acceptance Testing

The acceptability of production shipments from the supplier are determined by examination of supplier test data, from testing of limited parameters or from testing all the requirements of this specification.

Sampling Procedure

- o When sampling procedures are used for determining the acceptability of units received from the supplier, samples are randomly selected and inspected in accordance with Mil-Std-105D, inspection level II, to the following A.Q.L. requirements:
  - o major defect: 1.0 %
  - o minor defect: 2.0 %

Source Inspection

- o North Star Computers, Inc. may elect to witness inspection on the premises of the supplier to assure requirements of this specification or to inspect on receipt of the products at a North Star facility.

Product Changes

- o No change affecting the interchangeability, reliability or cosmetic appearance of units supplied as production shipments is allowed without prior written permission of North Star Computers, Inc.

Reliability Requirements

- o MTBF in excess of 10,000 hours.

Overview

This specification describes a switching power supply which produces three DC voltages required by the DIMENSION computer central module.

Operating Conditions

Input Voltage

o 95-132VAC/190-264VAC

Input Voltage Transients

o 2.5-3KV, 1.0-1.5 MHZ ocillating spike decay to 5% peak value in less than 6 us (per ANSI C37.90a-1974/IEEE standard 472-1974).

Frequency

o 47-63 HZ

Output Voltage

o + 5.1VDC @ $\geq$ 8.5 Amps and $\leq$ 48.0 Amps
o +12.0VDC @ $\geq$ 2.2 Amps and $\leq$ 11.0 Amps*
o -12.0VDC @ $\geq$ 0.0 Amps and $\leq$ 1.0 Amps

* 15A decaying to 11A at .34A/sec. for disc driver start up.

Regulation	Regulation with remote sense including long term. Regulation is maintained under all operating conditions. + 5.0VDC output: ±3% +12.0VDC output: ±4% -12.0VDC output: ±5%
Efficiency	70% minimum at full load
Periodic and Random Deviation	+ 5.0VDC output: 2% p-p max @ 30MHz BW +12.0VDC output: 1% p-p max @ 30MHz BW -12.0VDC output: 2% p-p max @ 100MHZ BW
Overshoot	3% maximum instantaneous peak at power-on
Transient Response	At 75% of maximum load with a step load change of ± 25%, all outputs are within ± 5% of their nominal value 500 msec. after the step load.
Hold Up	5 msec minimum
Over-Voltage Protection	125% threshold (5-volt and 12-volt outputs only). No setting of voltage adjustment pot causes an over-voltage condition.
Over-Current Limit	+5VDC output: 55 amps +12VDC output: 17 amps

Damage Protection	No condition of output load (no load to short circuit) causes damage to the power supply (fuse blowing excepted). Application of either 115VAC to a 230VAC input or application of 230VAC to a 115VAC input does not damage the power supply (fuse blowing excepted). There is a thermally activated shut-off for the power supply. Any condition of ambient temperature does not damage the power supply.
Power Fail	There is an active TTL-low indication when input power fails. Output regulation may fail after 1.5 msec.
Power Reset	Active TTL low indication whenever +5VDC or +12VDC outputs are not in regulation due to power interruption. Power reset to be active for a minimum of 50 msec.
Approvals	This design meets VDE, FCC Class A, CSA and UL requirements.
Noise	The supply emits no audible noise.
MTBF	The MTBF is 40,000 power-on hours.
Size	The power supply dimensions are 10" x 15" x 2 3/4".

Introduction

The bus circuit board provides an interface between a central board and attached workstation circuit boards, tape back-up circuit board, and North Star supported IBM PC/XT compatible circuit boards.

DC Power Considerations

Power to the bus circuit board is distributed to the circuit boards attached to it; this power is provided by the central module power supply and the central board. Three voltages (+5VDC, +12VDC and -12VDC) come from the central module power supply; sufficient power is produced to support the concurrent installation of twelve workstation circuit boards, twelve workstation expansion RAM circuit boards, and one tape back-up circuit board. The central board contains a -5VDC regulator which supplies this voltage to the bus.

North Star supported IBM PC/XT compatible circuit boards, if they are attached to the bus, must have their power requirements calculated to insure that their needs combined with the requirements of other bus-mounted circuit boards do not exceed the capacity of the DIMENSION power supply.

Power supply voltages and their respective current ratings may be found in the "Power" specification in this chapter.

Bus PCB Signal Considerations

It should be noted that only North Star supported IBM PC/XT compatible circuit boards should be attached to the bus PCB. Most "off-the-shelf" circuit boards cannot be mounted because their features are inaccessible via a workstation circuit board.

Most DIMENSION bus signals have the same names and they function in the same manner as their IBM PC bus counterparts. Yet, their functions are often implemented differently, they may have different timings, and they almost certainly require different programming. For example, the North Star DMA controller is 2 channel rather than 3 channel.

Bus PCB Signal Consider-ations

Specific pin-to-pin differences may be found in the following chart.

Pin	Signal Name	Function
A1	I/O CH CK	IBM uses this signal as a parity error indicator; North Star uses it as a workstation PCB interrupt.
B8	HOLD REQST	IBM uses this signal to put their processor on hold; North Star does not use it.
B19	+DACK0	IBM uses this signal for refresh; North Star reserves it for use as a DMA control line. Other DACK'S are timed differently but perform in the same manner.
B20	CLOCK	IBM uses a 4.77MHz clock; North Star uses 3.0MHz.

All North Star interrupt lines (IQR2 through IQR7) are capable of producing interrupts, but we do not use an 8259 interrupt controller; this implementation makes different programming necessary.

The chart on the following page compares all signals on the North Star DIMENSION and IBM PC buses.

IBM PC Bus				North Star DIMENSION Bus			
Pin	Signal	Pin	Signal	Pin	Signal	Pin	Signal
A1	-I/O CH CK	B1	GROUND	A1	-I/O CHCK	B1	GROUND
A2	+D7	B2	RESET DRV	A2	+D7	B2	RESETDRV
A3	+D6	B3	+5VDC	A3	+D6	B3	+5VDC
A4	+D5	B4	+IRQ2	A4	+D5	B4	+IRQ2
A5	+D4	B5	-5VDC	A5	+D4	B5	-5VDC
A6	+D3	B6	+DRQ2	A6	+D3	B6	+DRQ2
A7	+D2	B7	-12VDC	A7	+D2	B7	-12VDC
A8	+D1	B8	HOLD REQST	A8	+D1	B8	RESERVED
A9	+D0	B9	+12VDC	A9	+D0	B9	+12VDC
A10	+I/O CH RDY	B10	GROUND	A10	+I/O CHRDY	B10	GROUND
A11	+AEN	B11	-MEMW	A11	+AEN	B11	-MEMW
A12	+A19	B12	-MEMR	A12	+A19	B12	-MEMR
A13	+A18	B13	-IOW	A13	+A18	B13	-IOW
A14	+A17	B14	-IOR	A14	+A17	B14	-IOR
A15	+A16	B15	-DACK3	A15	+A16	B15	-DACK3
A16	+A15	B16	+DRQ3	A16	+A15	B16	+DRQ3
A17	+A14	B17	-DACK1	A17	+A14	B17	-DACK1
A18	+A13	B18	+DRQ1	A18	+A13	B18	+DRQ1
A19	+A12	B19	-DACK0	A19	+A12	B19	-DACK0
A20	+A11	B20	CLOCK	A20	+A11	B20	CLOCK
A21	+A10	B21	+IRQ7	A21	+A10	B21	+IRQ7
A22	+A9	B22	+IRQ6	A22	+A9	B22	+IRQ6
A23	+A8	B23	+IRQ5	A23	+A8	B23	+IRQ5
A24	+A7	B24	+IRQ4	A24	+A7	B24	+IRQ4
A25	+A6	B25	+IRQ3	A25	+A6	B25	+IRQ3
A26	+A5	B26	-DACK2	A26	+A5	B26	-DACK2
A27	+A4	B27	+T/C	A27	+A4	B27	+T/C
A28	+A3	B28	+ALE	A28	+A3	B28	+ALE
A29	+A2	B29	+5VDC	A29	+A2	B29	+5VDC
A30	+A1	B30	+OSC	A30	+A1	B30	+OSC
A31	+A0	B31	+GROUND	A31	+A0	B31	+GROUND

THEORY OF OPERATION

Introduction

This section of the manual contains general theories of operation for the DIMENSION central board and workstation boards. It also contains a detailed theory of operation and circuit description of the central module power supply.

Refer to the appropriate block diagrams, parts lists, assembly drawings, schematic diagrams, and integrated circuit specification sheets located elsewhere in this manual for further information.

IBM PC/XT Multi-User Compatibility

A DIMENSION computer may include up to 12 IBM PC/XT compatible workstations linked into a network. In addition to the capabilities of a stand-alone IBM PC or XT, this system offers users important added benefits:

- o Electronic mail
- o Shared programs
- o Shared peripherals

Multi-Processor Architecture

Most early multi-user microcomputer systems were based on a single processor and a time-sharing operating system. While this structure provides an economical way to achieve multi-user capability, it makes performance unpredictable at best, or sluggish at worst. A multi-processor architecture alleviates this problem. By providing each user with a processing unit, degradation of response time is minimized as the network expands.

Each DIMENSION workstation uses dedicated resources: CPU, memory and I/O. A workstation includes a 7 MHz 8088-2 processor, up to half megabyte of user RAM, plus a keyboard and video display that are IBM compatible. An RS-232C compatible serial port permits each user to attach a local peripheral such as a printer, plotter, modem or mouse.

The Workstation

Each workstation 8088-2 processor runs an independent copy of MS-DOS 2.11, with a BIOS that emulates the IBM PC/XT ROM BIOS. A DIMENSION computer can run most off-the-shelf IBM-compatible applications. Since application programs are run by the workstation processors, at any given time, each user may work with a different program. Each workstation establishes and maintains its own file system. These files are stored on a shared fixed disk, rather than on a private fixed disk as in the IBM XT, a difference that is completely transparent to both programs and users.

The Central Module

An Intel 80186 processor on the central board coordinates access to system resources such as the disk and diskette drives and shared printers. The central board includes up to a half megabyte of main memory; I/O interfaces to controllers for one or two fixed disks and an IBM compatible diskette drive; one parallel and two serial ports; and a battery-powered clock/calendar. The central board also controls a bus circuit board that implements an IBM-type system bus. The workstation boards plug into this 13-slot bus circuit board. Spare slots in the bus may be allotted to a tape backup controller or to IBM compatible boards such as an Ethernet controller or a 3270 communications controller.

All of these I/O devices represent system resources that are managed by the central board. The central board 80186 processor runs a real time multi-tasking "kernel" that coordinates requests for shared resources and schedules the work of the 80186. This kernel contains the "extensions" that enable single-user MS-DOS 2.11 to function in a network environment. These extensions support user sign-on and sign-off, shared access to programs, electronic mail, and system utilities.

Processor Task Allocation

Integrating multiple processors into a co-processing arrangement of this kind yields special efficiencies. The work of running programs and managing files is performed by workstation processors operating concurrently. The work of handling system I/O is assigned to a dedicated central board processor. This design limits the scope of the work that is delegated to the central board processor and prevents it from becoming a bottleneck. Because the central board processor relieves the workstation processors of such time-consuming tasks as writing data to the fixed disk, throughput of the workstation processors increases.

Communication Between Processors

Communication between the workstation processors and the central board processor occurs via I/O ports and shared memory data transfers. This approach incorporates aspects of the two divergent types of networks: loosely coupled and closely coupled systems.

Loosely Coupled Networks

A loosely coupled network, such as Ethernet, links multiple processors by means of a cable. The processors communicate through I/O ports. The principal disadvantage associated with this architecture is the inherently time consuming nature of serial data transmission. Since multiple processors must contend for the communication medium, collisions and retries cause delays. The risk of errors in transmission requires elaborate protocols for detecting errors. The resulting software overhead can reduce the effective bandwidth to 10% of the median bandwidth.

Closely Coupled Networks

In a closely coupled network, multiple processors communicate through shared memory. Reading and writing to memory is one of the operations a processor performs most rapidly. Memory-to-memory transfers entail a very low risk of error. The result is that software overhead is minimal and throughput is high. The major disadvantage of a closely coupled system is the processor address space it requires.

The DIMENSION provides to each of 12 workstations a megabyte of memory address space. This would normally require a central board processor with 13 megabytes of address space. The processor for the central board is the 80186, a highly integrated chip with two built-in DMA channels. The 80186 has an address space of one megabyte, however, which precludes a conventional, closely coupled arrangement.

DIMENSION Coupling

The DIMENSION's solution allows the workstation processors to operate independently, except when the need to access system resources brings them temporarily into a closely coupled relationship with the central board processor.

A workstation initiates a request for system resources through a central board I/O port. When the central board processor is ready to respond to the request, it uses the I/O port to establish a closely coupled relationship with the workstation processor. Data is transmitted through an area of memory that both processors are able to access. When the data transfer is complete, the central board again uses the I/O port to restore the workstation processor to independence.

Implementing Shared Memory

In the DIMENSION computer, shared memory means the memory in a workstation is accessed by both the workstation and central board processors. Each workstation has 32K of system overhead memory, 32K of bit-mapped video memory and up to 512K bytes of user RAM. The one megabyte of memory space which is addressable by the 8088-2 is divided into four quadrants. The 80186 may map any quadrant of any user's RAM into the top of the central board's address space, and read and write to this memory directly. This ability to share memory is used two ways.

First, the central board processor learns the details of a service request by mapping the top quadrant of a user's RAM into its address space. This quadrant contains the overhead area of 32K that the 8088-2 uses to define the nature of its requests for system resources. The 80186 writes to this area to return the status of these requests.

Second, when the 80186 needs to read data from or supply data to a workstation processor, it does so by mapping in the appropriate quadrant of user RAM, copying the data between this and the central board's cache RAM, and mapping the quadrant back out again. This arrangement expedites the transfer of data by allowing the central board processor to obtain data directly from, or place it directly into, the desired location in user RAM.

Memory Segregation

The DIMENSION segregates areas of memory to protect their contents. Whenever memory is shared, there is an inherent risk that one processor will inadvertently affect another processor's program or data. The DIMENSION minimizes that risk by eliminating common memory which may be accessed by all processors. Instead, all memory is either semi-private user RAM, or wholly private central board memory.

The central board has up to a half megabyte of memory accessible only by its 80186 processor. This is primarily used as cache RAM to provide high speed interaction between the workstation processors and the fixed disk(s). No workstation processor may gain access to central board memory, so the programs and data stored there are protected from interference.

User RAM is accessible to just two processors: the 8088-2 workstation processor, and the 80186 central board processor. No workstation processor may gain access to another user's RAM, and the central board processor can usually interact with only one quadrant of one user's RAM at a time. This combination of private and semi-private banks of memory maximizes the integrity of data in the system.

Regulating Memory Access

Although workstation memory is accessible to two processors, it is not dual ported. In a dual ported arrangement, the memory itself arbitrates access by the processors. In the DIMENSION, access to shared memory is controlled by the central board.

Before the central board is able to access an area of workstation memory, it must suspend the operation of the workstation processor and take control of the workstation bus. In this way, the central board processor gains direct access to the workstation memory and does not relinquish its control until completion of the transaction.

In short, the central board functions as master of not only the bus circuit board, but also the bus on each individual workstation board. This ability to appropriate control of the workstation bus increases the central board's efficiency. The 80186 does not need to compete with the 8088-2 for access to workstation memory, and it does not have to wait for arbitration on each cycle. Contention is never an issue because the 80186 enjoys absolute priority over the workstation processors.

Optimizing the Fixed Disk

Increasing system throughput also requires optimizing the performance of the fixed disk(s). Two measures contribute to this end.

First, by using most of the central board's half megabyte of RAM as cache for selected data from the fixed disk, the network reduces the need for actual physical access to the fixed disk. Data may be retrieved from cache memory in one percent of the time it takes to access the fixed disk. The large cache memory expedites system response and minimizes contention for access to the fixed disk.

Second, dedicating one of the two DMA channels on the 80186 to the fixed disk(s) expedites the transfer of data between the disk buffer and the central board's cache RAM.

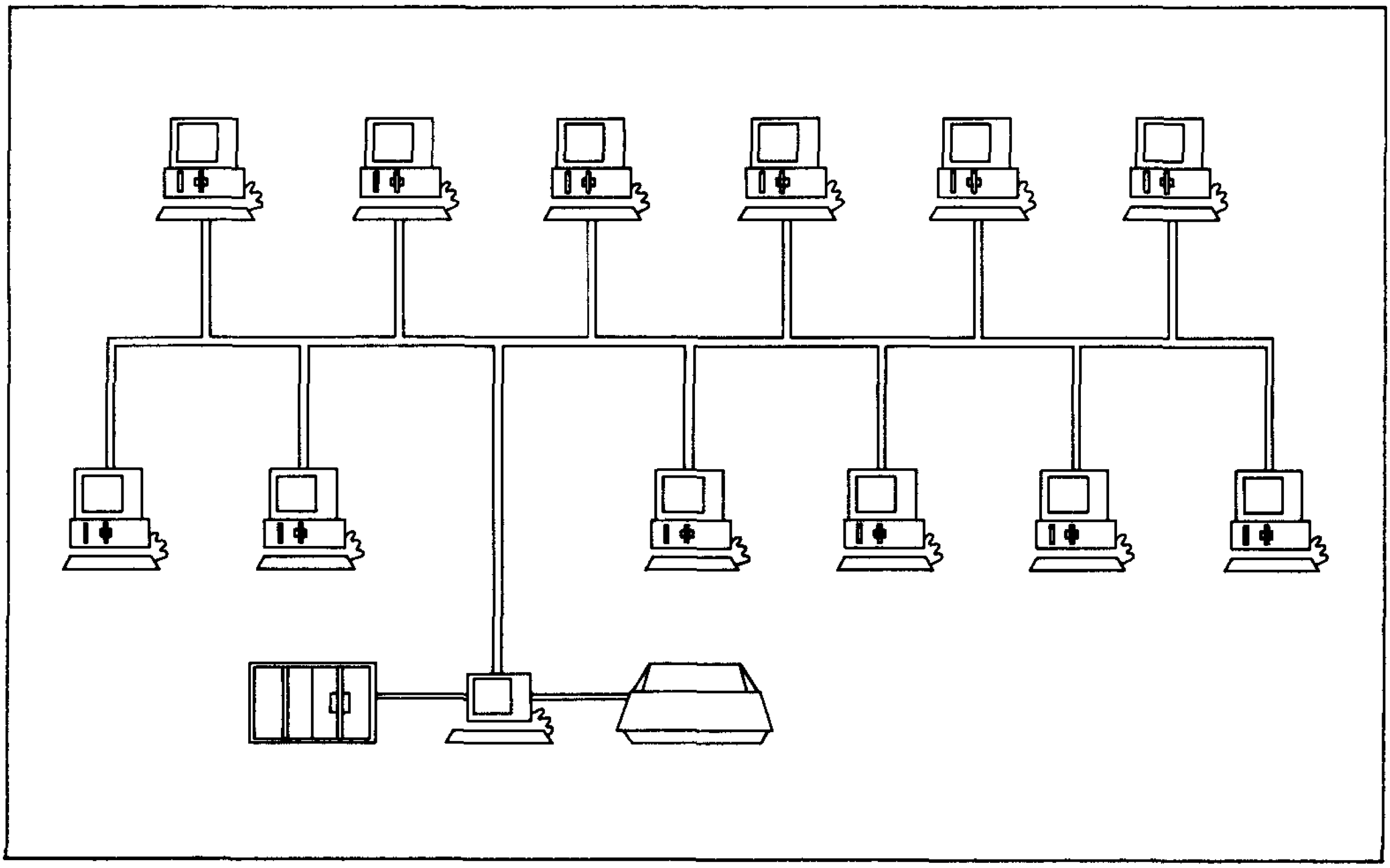

A loosely coupled network that links IBM PC's and XT's by means of a cable has certain advantages. This type of serial network can include a large number of workstations spread over a great distance. However, in a serial network, the data paths are long and the environment is hostile.

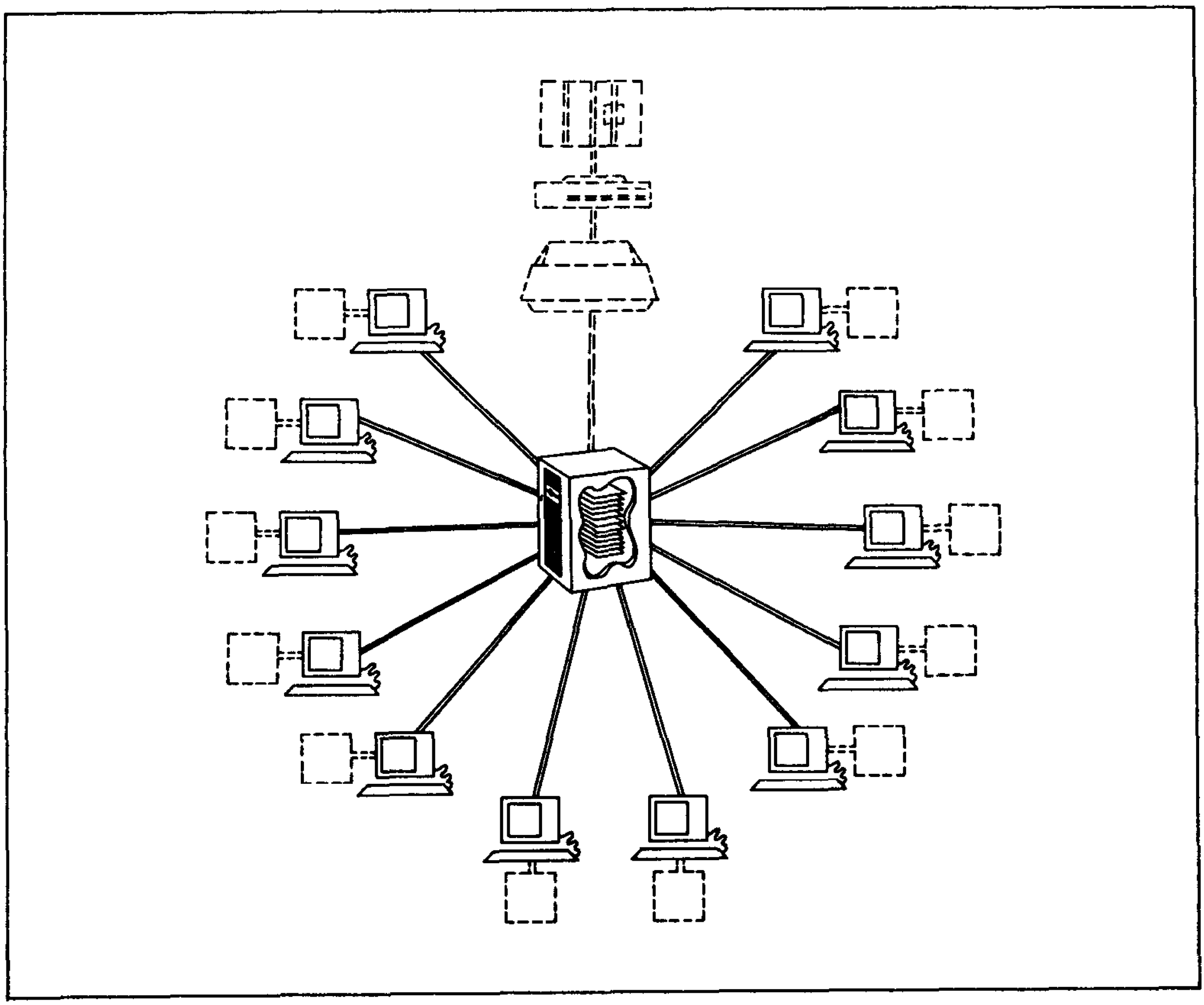

The closely coupled DIMENSION network supports up to 12 workstations, each at a maximum distance of 325 feet from the central board. The data paths are short and the environment is controlled.

Data Flow

The central board's 80186 processor coordinates data flow throughout the system. It controls some subsystems, e.g., the diskette and fixed disk controllers which are part of the central board. Other devices, such as the workstation boards, are plugged into a bus circuit board that is connected to the central board. This 13-slot bus is always controlled by the central board. The bus can also accommodate IBM-compatible boards such as a 3270 cluster controller or a tape backup controller.

The workstation board's 8088-2 processor controls local resources such as user memory and I/O. The 80186 temporarily appropriates control of the workstation bus to permit memory sharing between the workstation and central board processors. This permits high speed communication between the processors, substantially increasing response time in the network.

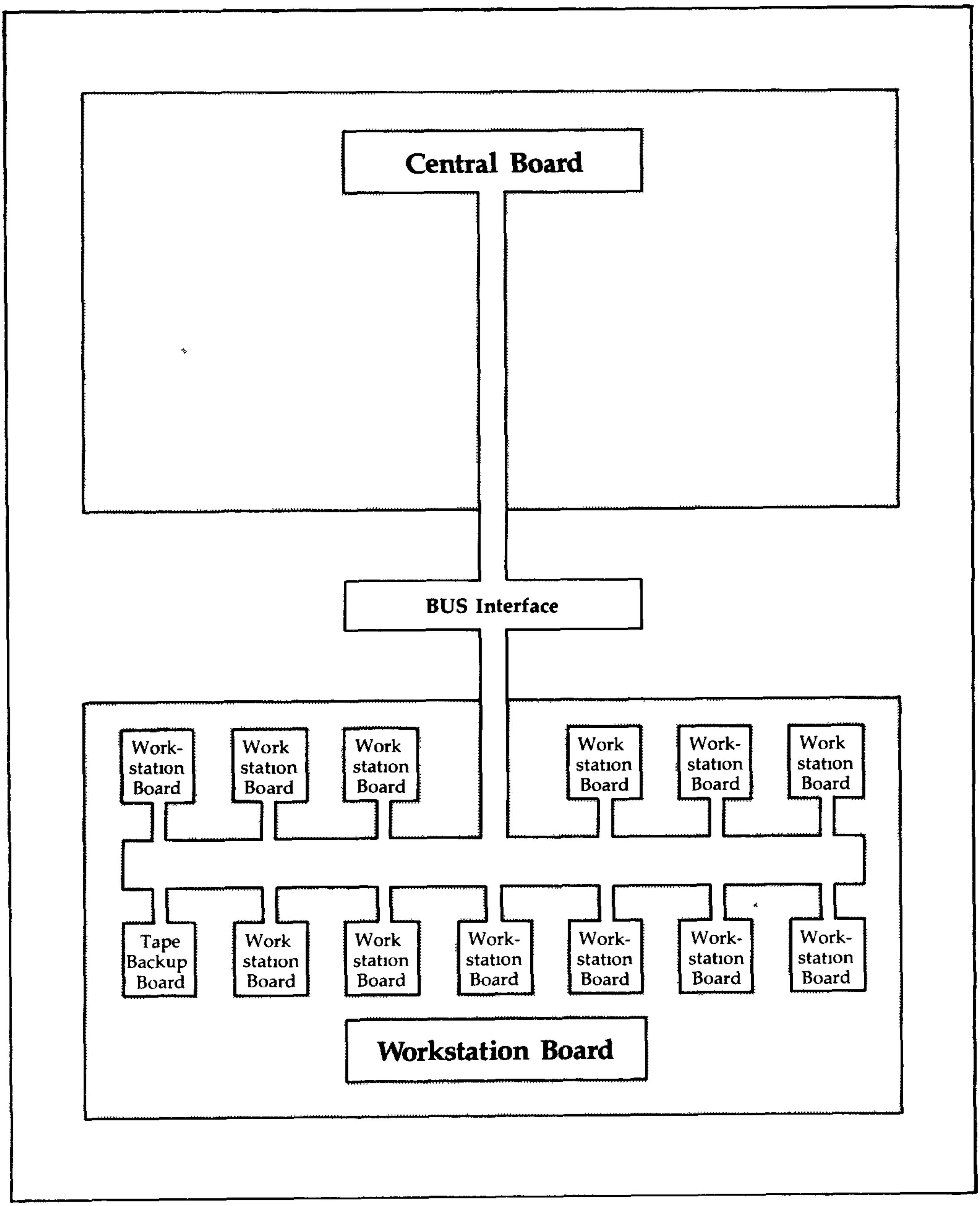
Central Board
BUS Interface
Work-station Board
Work station Board
Work station Board
Work station Board
Work-station Board
Work station Board
Tape Backup Board
Work station Board
Work station Board
Work-station Board
Work-station Board
Work-station Board
Work-station Board
Workstation Board

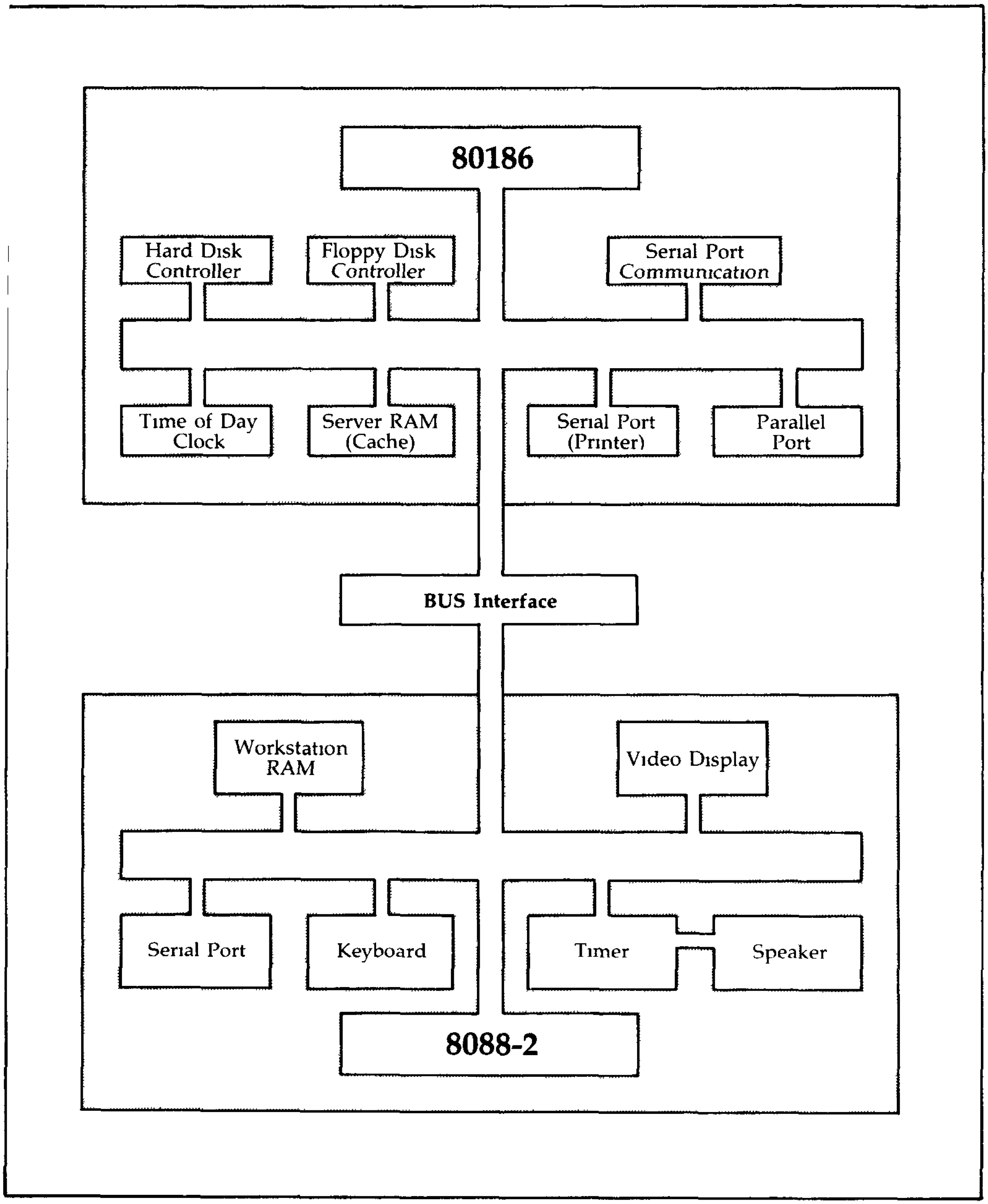
80186
Hard Disk Controller
Floppy Disk Controller
Serial Port Communication
Time of Day Clock
Server RAM (Cache)
Serial Port (Printer)
Parallel Port
BUS Interface
Workstation RAM
Video Display
Serial Port
Keyboard
Timer
Speaker
8088-2

Memory Allocation

The DIMENSION computer supplies each workstation with extensive memory capability. Each workstation has a minimum of 128K of user RAM, which can be expanded to a half megabyte. Additional memory modules piggyback on the workstation circuit board rather than requiring a slot on the IBM bus.

An extra 64K of memory is provided for bit-mapped video memory and system overhead memory. The latter is used primarily for workstation board/central board communications and emulation of the IBM PC/XT ROM BIOS.

Any quadrant of any user's RAM may be mapped into the top quarter of the central board's memory address space to permit high speed data transfers between the workstation and central board processors.

The central board's main memory may also be expanded to a maximum of 512K with a module that piggybacks onto the central board. Most of the main central board memory serves as cache to expedite information retrieval. Parity checking is provided for all user RAM, central board cache memory and system overhead memory.

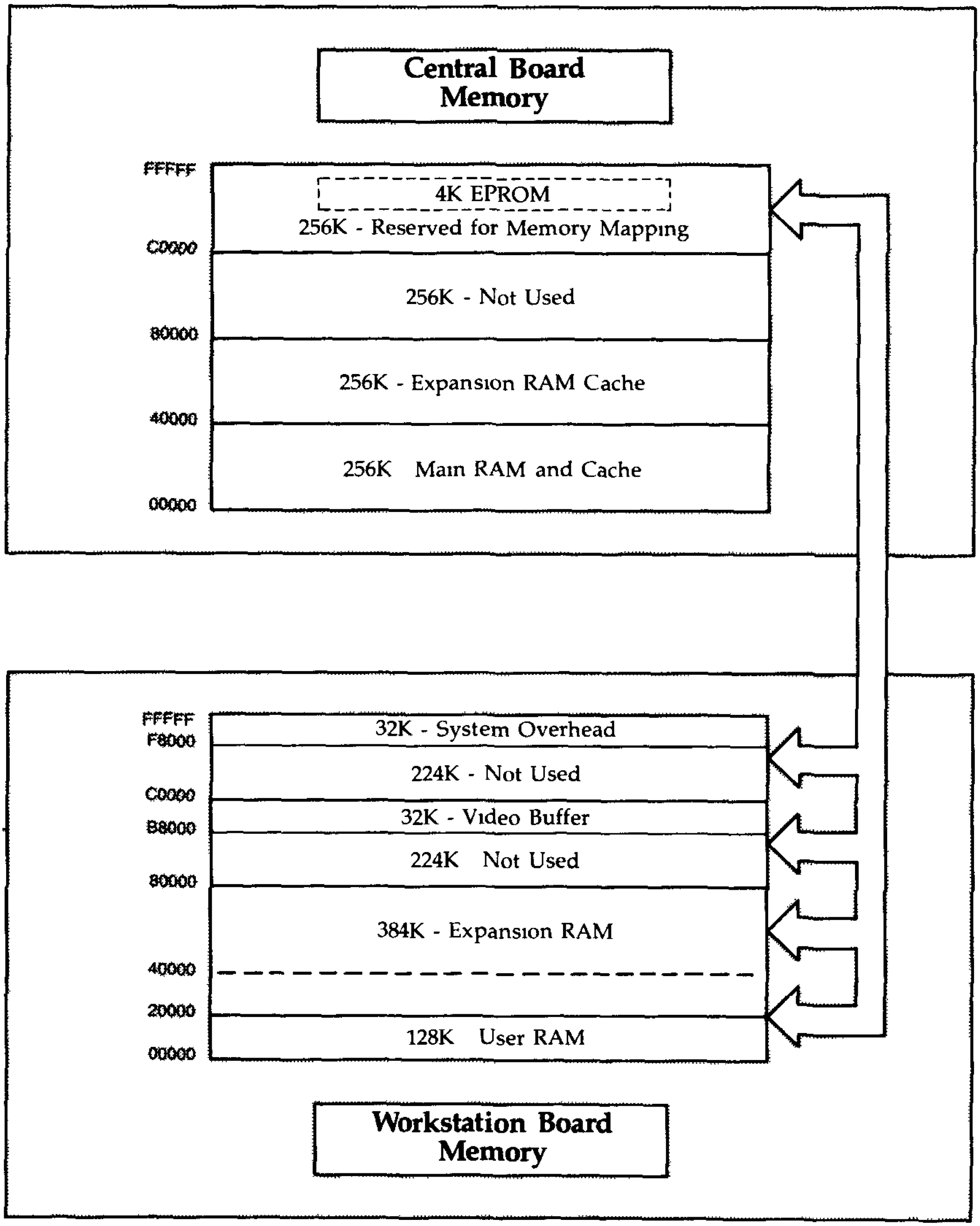
Central Board
Memory
FFFFF
4K EPROM
256K - Reserved for Memory Mapping
C0000
256K - Not Used
80000
256K - Expansion RAM Cache
40000
256K Main RAM and Cache
00000
FFFFF
F8000
32K - System Overhead
224K - Not Used
C0000
32K - Video Buffer
B8000
224K Not Used
80000
384K - Expansion RAM
40000
20000
128K User RAM
00000
Workstation Board
Memory

Introduction

The central module power supply is a pulse-width modulated (PWM), primary switching power supply operable from either 115VAC or 230VAC sources.

The power supply has three individually regulated outputs. The +5VDC output is regulated by means of a main feedback loop, and the two 12VDC outputs are regulated by means of post-regulators.

The switch function is provided by a single-ended, forward converter topology. An AC input voltage is rectified and filtered and passed to a switch transistor. The transistor chops the DC voltage and passes it to the primary of a high-frequency transformer. An LC filter on the transformer secondary produces a DC output voltage that is proportional to the amplitude and pulse-width of the applied waveform.

The output voltage is sensed and fed back to a control circuit on the transformer primary. Here, the switch pulse-width is adjusted to maintain a constant output voltage.

Schematic Reference

Refer to the blocked schematic diagrams in Appendix B while reading the following circuit descriptions.

Block 1 RFI Filter

The RFI filter attenuates internally generated radio interference so the power supply meets FCC and VDE regulations.

Block 2 Voltage Selection Protection

The voltage selection protection circuit is used when 115VAC power is selected. The circuit causes the AC line fuse to blow if 230VAC is applied to the power supply.

A reactive voltage divider (R154, R155 and C93) senses the AC input voltage. When the input voltage exceeds approximately 150VAC, D52 fires TY2. The AC input is shorted through R200, and the line fuse blows. R200 reduces the short circuit current.

Block 3 Rectifiers and Input Capacitors

The input rectifier and capacitors are D20 and C6, C7, C79 and C80 respectively.

When 230VAC is selected as the AC input to the power supply, this circuit acts as a full-wave rectifier with storage capacitors.

When 115VAC is selected as the AC input, this circuit acts as a voltage doubler.

The DC voltage drop across the input capacitors remains the same regardless of changes in AC input voltage.

Block 4 Drive Power

The drive power circuit delivers the drive voltages needed by the switch transistor and control circuits.

During start-up, T5 conducts and delivers positive drive voltage. When the switch transistor begins switching, the positive and negative drive voltages are generated from the auxiliary windings of the switch transformer.

Block 5
The Switch

The switch transistor, T4, chops the DC output from the input capacitors through the switch transformer TR1.

The switch transistor drive circuit receives pulse-width modulated drive pulses from the control circuit in Block 7.

T4, during its on-time, is forward biased by means of the simultaneously conducting transistors T1 and T2. During its off-time, T4 is negative biased by T3.

The maximum on-time is limited by the control circuit to 45% of the total switch period.

During the off-time of T4, TR1 is demagnetized by means of a demagnetizing winding and D1.

D10 is a Baker clamp diode which allows T4 to work in quasi-saturated mode.

Block 6
Secondary
Power

The chopped DC-voltage is coupled through transformer TR1. Diodes D30 and D36 and the FET's in the +12VDC post-regulator (Block 8) conduct simultaneously with T4. During this time, the primary side of TR1 delivers energy to a load through the LC output filters while magnetic energy is stored in the output inductors (L3 and L8).

During T4's off-time, output continues due to the energy previously stored in the inductors and by means of the free-wheel diodes D31, D37 and D62 in the +12VDC post-regulator.

The +5VDC output is regulated by feedback to the control circuit (Block 7). The control circuit adjusts the on-time (pulse-width) of T4 in order to maintain a constant output voltage.

A three-pin linear regulator, IC2, post-regulates the -12VDC output.

An FET regulator, which is described in Block 8, post-regulates the +12VDC output.

Block 7 Control

The +5VDC output is sensed and fed to IC11, a programmable zener diode. The error signal output of IC11, which acts as an error amplifier, is transmitted at points E and F to the primary side of TR1 through opto-coupler IC6. This signal is fed to the control circuit (IC1), which controls the switch transistor pulse-width to maintain a constant voltage output.

IC1 is an integrated pulse-width modulation circuit that produces a pulse-width proportional to the error signals from IC6.

The following functions are obtained from IC1:

- o Oscillator circuit - This circuit, together with R22 and C14, determines the switch frequency.

- o Slow-start circuit - This circuit, together with R18, R21, R33 and C13, slowly increases the drive pulse on-time until the voltage control loop takes over. R18, R21 and R33 also determine the pulse-width. This is factory-set to 45% by R33, and it must not be changed.

- o Total output power limit circuit - R85 and R16 sense the switch current passing through T4 and feed it to IC1 by means of the voltage divider, R28 and R25. This current is proportional to the total output power.

  The power limit circuit has two trip-points that can be adjusted by R28. The first trip-point reduces the pulse-width on the signal to the T4 drive stage during light overloads. The second trip-point shuts down the power supply by reducing the pulse-width to zero during heavy overload conditions. A slow-start sequence is then initiated.

- o Low supply protection circuit - IC1 has an internal low supply protection that inhibits the drive pulses to T4 until adequate current is assured.

Block 7 Control (cont.)

The +5VDC output has a separate current limit sensed in TR2. A voltage proportional to this current is dropped at R109. This voltage is referenced to a logic common on the primary side of TR1 by a clamp circuit comprised of D38, C68 and R108.

IC7 compares the +5VDC current to a reference that can be adjusted by R106. Current limiting, which is analogous to the current limit handling of IC1, is performed in two steps:

1. A moderate overload trips the lower comparator, IC7 (pin 2), and reduces the drive pulse-width to T4.

2. A heavy overload trips the upper comparator, IC7 (pin 1), and a number of drive pulses are inhibited from reaching T4. A soft-start sequence is then initiated.

Block 8 +12VDC Post-Regulator

Two FET's, T14 and T15, decrease the pulse-width of the chopped signal fed to the post-regulator. The FET's conduct during only part of the pulse-time of T4, permitting separate regulation of the +12VDC output.

The +12VDC output is sensed and fed to IC14 (pin 6) where it is compared to a reference voltage from IC16. The error signal from IC14 (pin 7) is fed to IC13 (pin 6) where it is compared to a signal proportional to the output current sensed by TR3. When the proportional signal reaches an error signal level, IC13 (pin 1) trips and the drive circuit (IC15, T8 and T9) shuts off the FET's.

When IC13 (pin 8) senses completion of T4's switch cycle, it transmits a pulse (from pin 14) that trips the drive circuit. This forward biases the FET's and prepares them for the next switch cycle.

When IC13 (pin 13) is low, the post-regulator is inhibited until there is sufficient drive voltage after start-up. When the drive voltage is high, IC13 (pin 13) trips and causes C100 to charge through D59. This process is called a slow-start.

Block 8
+12 VDC Post-Regulator
(cont.)

D59, T12, D60 and R189 work as a current limiter by clamping the error signal level. This action forces IC13 (pin 1) to trip at an output current level preset by R189. During a heavy overload condition, IC13 (pin 2) trips and starts the transistor combination, T12 and T13. This discharges C100 and prevents the FET's from conducting for a number of switch cycles. A slow-start is then initiated.

D64, C95, C96, R169 and R170 comprise a snubber network. This network takes care of the inductive transformer current during the turn-on time of T14 and T15.

Block 9
Over-voltage Protection

IC8 senses the +5VDC and +12VDC outputs and compares them to a reference voltage from Z3. When either voltage reaches an over-voltage trip point, IC8 (pin 1) goes high and triggers IC4. This fires thyristor TY1 and causes a heavy over-current condition on the +5VDC output. The power supply shuts down and initiates a slow-start sequence.

Block 10
Power Reset

IC10 and its associated components form the power reset circuit. IC10 senses and compares the three output voltages with a reference voltage from Z3. When any one of the output voltages reaches the power reset voltage trip point, a minimum 50 mS power reset signal is transmitted by IC14 (pin 14).

Block 11
Power Fail

IC11 and its associated components form the power fail circuit. The negative peak voltage at the secondary of TR1 is proportional to the DC voltage level on the input capacitors, C6, C7, C79 and C80. If there is an AC power failure, the voltage drop across the input capacitors decreases to a level preset by R45. This trips IC5 (pin 3) and makes it go negative. C53 discharges through IC5 (pin 13), IC5 (pin 2) trips, and IC5 (pin 1) transmits the power fail signal.

IC6 and feedback resistor, R53, give the circuit hysteresis performance.

DIAGNOSTICS

Introduction

This chapter describes DIMENSION diagnostic and service utility programs.

Some diagnostic programs are automatic; they are designed to operate each time the system is turned on. Other diagnostic programs and service utility programs are stored on two service diskettes which are accessible only by service technicians. The two service diskettes, together with this manual, comprise a service pack.

Self-tests

The main diagnostic program for the DIMENSION is comprised of a group of central PCB self-tests. These self-tests are automatically invoked whenever the computer is turned on.

Service Diskettes

Two service diskettes are available to technicians to test the DIMENSION. These diskettes contain utility programs for formatting and labeling the fixed disks as well as service programs for extended testing of circuit boards and disk or diskette drives. Revised programs with extended capabilities will be released later.

Supplemental Tools

Two of the procedures described in this chapter are fixed disk drive tests. Although the fixed disk drives may be tested while they are mounted in the central module, there may also be occasions when a test of an unmounted drive is desirable. To facilitate this process, three extension cables are available:

- o DC power extension cable; North Star part number 03898
- o Signal extension cable; North Star part number 03899
- o Control extension cable; North Star part number 03900

A procedure for attaching the cables is located in this chapter.

Definition

Self-tests are integrity tests of the central PCB critical hardware. The boot program automatically performs the central PCB self-tests, and attempts to read in valid boot code from the diskette or fixed disk drives each time the system is turned on.

The tests run very quickly and their operation is transparent to a system user. The self-tests do not impede a user's access to the computer, but they do provide assurance that the system is functioning correctly.

Self-tests and Service Diskettes

Self-tests are designed to permit service diskettes to be loaded from the diskette drive prior to reading the boot code. This enables extended hardware tests to be run.

Self-test Error Reporting

If the self-tests detect a problem, specific errors are not shown. Testing halts, the main power LED (on the front panel of the central module) turns off, and the computer simply fails to load the operating system. A successful test results in a normal boot of the DIMENSION Operating System (DOS).

Test Features

The central board self-test checks the following:

- o Prom checksum
- o Dynamic RAM (non-destructive)
- o Processor internal register mapping
- o Read/write from a fixed disk

If any of these tests fail, the main power LED turns off. If the tests pass, workstation PCB self-tests begin.

Diskette Drive Boot Sequence

The following sequence of events occurs when booting from the diskette drive:

- o If a diskette is inserted in the diskette drive after power-on, read the boot tracks from the diskette. If there is not a valid boot file or if an error occurs during reading, halt the boot process.
- o If the diskette contains a valid boot file and if no errors occur during reading, execute the boot code.

Fixed Disk Drive Boot Sequence

The following sequence of events occurs when booting from the fixed disk drive:

- o Read the boot tracks from the disk.
- o If there is not a valid boot file or if an error occurs during reading, halt the boot process and indicate a failure of the fixed disk boot.
- o If there is a valid boot file and if no errors occur during reading, execute the boot code.

Categories

Service diskette diagnostics are divided into two categories--those diagnostics which test system electronics and those diagnostics which test and format system mass storage.

Service Diskette #1 checks the system electronics; these include tests of a system's configuration and evaluation of the central and workstation PCB's.

Service Diskette #2 checks system mass storage; these include evaluation of the fixed disk and diskette drives. Service Diskette #2 also contains programs which format and write the label for the fixed disk.

Each diskette contains programs which are user selectable from menus. Descriptions of the program options are found later in this chapter.

Copying Service Diskettes

Make duplicates of the service diskettes with the DISKCOPY utility of the DIMENSION operating system. If you attempt to copy the diskettes using any other method, you may destroy the contents of the diskettes.

Loading Service Diskettes

Service Diskette #1 contains its own operating system tracks. You may load it directly from the diskette drive without first having to load the DIMENSION operating system from the fixed disk.

Service Diskette #2 does not contain operating system tracks. You must load the DIMENSION Operating System (DOS) from System Diskette #1 before loading this service diskette. After you have signed on at a workstation, place Service Diskette #2 in the diskette drive, and type **DISKTOOL** to call up the main menu. See the procedure on loading Service Diskette #2 later in this chapter.

Uses

Service Diskette #1 contains a menu driven set of programs which may be used for evaluating the DIMENSION central board and workstation boards. These programs offer more extensive testing of the electronics than the self-tests performed during power-on of the computer.

The diskette contains its own operating system and may be booted from the diskette drive when you are ready to test the circuit boards.

Main Menu

After you boot Service Diskette #1, the following menu appears:

```
North Star DIMENSION
Service Diskette #1
Revision 1.0.0

1 - Verify System Configuration
2 - Test Central PCB
3 - Test Central PCB and Workstation PCB's

A - Stop on Error -
B - Infinite Loop -

Press any key to stop a test.
```

Verify System Configuration

Option #1 of the diskette verifies the configuration of system hardware. It checks for the presence of central RAM expansion PCB's, workstation PCB's, and workstation 128K or 384K memory PCB's. The system configuration option does not test the circuit boards.

Test Central PCB

Option #2 of the diskette contains a diagnostic program that checks the status of the following circuits on the central PCB:

- o RAM
- o 80186 instruction set
- o Parity
- o RAM addressing
- o CPU gate array chip
- o 80186 DMA logic
- o 80186 interrupt logic
- o 80186 timer logic
- o Central module parallel port
- o Real time clock

Test Central and Workstation PCB's

Option #3 of the diskette contains a program that evaluates the central board (using the test parameters described in option #2) and workstation circuit board memories. The following RAM is checked at each workstation:

- o Display RAM
- o Boot RAM
- o Main RAM

Other Options There are two other options which are selectable from the main menu of Service Diskette #1.

- o Stop on Error - an option which may be turned on or off by typing **A**

  When the option is enabled, tests #2 and #3 stop if an error is detected. When the option is disabled, tests #2 and #3:

  - Cycle once and stop if Infinite Loop is turned off.
  - Repeatedly cycle until a key is pressed to stop the test if Infinite Loop is turned on.

- o Infinite Loop - an option which may be turned on or off by pressing **B**

  This feature permits the user to select either single or multiple cycles of tests #2 or #3. If this option is turned on, a test:

  - Cycles until an error is detected, if Stop on Error is turned on.
  - Cycles until a key is pressed to stop the test if Stop on Error is turned off.

Uses

Service Diskette #2 contains a menu-driven set of programs which may be used for testing the diskette drive as well as testing, formatting and labeling the fixed disk drive(s).

Main Menu

Service Diskette #2 does not contain operating system tracks. You must load the DIMENSION Operating System (DOS) from System Diskette #1 before loading this service diskette. After you have signed on at a workstation, place Service Diskette #2 in the diskette drive, and type **DISKTOOL** to call up the main menu. See the procedure on loading Service Diskette #2 later in this chapter.

```
North Star DIMENSION
Service Diskette #2
Version 1.0.0

Main Menu

a) Diskette Drive Test
b) Fixed Disk Drive #1 Test
c) Fixed Disk Drive #2 Test
d) Fixed Disk Format and Label Writer
e) Park Fixed Disk Drive Heads
```

The diskette drive test option and fixed disk drive test options perform read/write tests on the media. Service Diskette #2 also contains programs that format the fixed disk and read and write its label.

Error Screens and Error Codes

The final section of this chapter contains samples of error screens and error codes that may appear during use of the tests on this diskette. A matrix containing error codes and related system hardware may assist you in locating the source of a problem.

Cautionary Notes

- Options A, B, C and D on Service Diskette #2 are destructive to stored data. Backup fixed disks before beginning these tests.
- Option A, the diskette drive test, is only as reliable as the blank diskette you use to conduct the test. If the test indicates a problem, use another blank diskette. Don't replace a diskette drive before confirming errors with a different blank diskette.
- Before using options B, C and D on Service Diskette #2, remove the central module cover and copy the information contained on the fixed disk drive label. Make note of the five-character drive code and all entries in the Bad Track Table (cylinder and head locations of each bad track).
- Format and label fixed disks (option D) before using the Fixed Disk Drive Tests (options B and C). These tests automatically record bad tracks on the Bad Track Table; therefore, the table must be generated before the test begins.

Diskette Drive Test

You may test the diskette drive by selecting option A. This test verifies the integrity of the diskette drive by randomly writing and reading data patterns to a blank diskette. Format a blank diskette and have it ready for use before selecting the option. Although completion of this option takes approximately five hours, you have the option of stopping the test at any time. Pressing **[Ctrl]** and **C** stops the test and recalls the DIMENSION Operating System (DOS) command prompt.

Fixed Disk Drive Test

You may test a fixed disk drive by selecting option B or C. These tests verify the integrity of the fixed disk drives by randomly writing and reading data patterns to the disks. At the completion of each test, bad tracks, if found, are automatically recorded on the Bad Track Table. Completion of this option takes approximately five hours.

Fixed Disk Format and Label Writer

You may format or create a label for a fixed disk by selecting option D. This option is comprised of three menus. The first two menus are used for selecting the fixed disk drive number and drive type; the third is used for activity selection. Completion of this option takes approximately 70 seconds.

Park Fixed Disk Drive Heads

You may safely position the heads of the fixed disk drive by selecting option E. This option rotates the head mechanism so the heads are positioned over an area of the disk that does not contain data. Use this option before transporting or shipping a fixed disk drive.

Drive Number Selection Menu

Use this menu to select the number of the fixed disk drive you wish to format. Drive #1 is the bottom drive, nearest the base panel of the central module. Type **[Retrn]** to select Drive #1 automatically.

Drive Type Selection Menu

Use this menu to select the type of fixed disk drive you wish to format. You must remove the top cover of the central module and look at the fixed disk paper label to obtain this information. When you are prepared to answer the screen prompt, type the number adjacent to the drive type rather than the five-character disk drive code. Type **[Retrn]** to select a Miniscribe 15 Mbyte drive automatically.

After you have made your selection, the program responds twice. First it converts the single digit you typed into a five-character disk drive code. This step is included to ensure you have made a correct choice. Second, it presents the Activity Menu and waits for you to make a selection.

Activity Menu

Use the Activity Menu to select various fixed disk options. The following options are available from the menu:

- Option A - Add a bad track. Use this option to add bad tracks (from the fixed disk paper label) to the Bad Track Table after formatting, labeling or testing the fixed disk.

  Note: You must make entries to the Bad Track Table using the cylinder and head number of the bad track.

- Option D - Display the Bad Track Table. Use this option to list the bad tracks entered on the Bad Track Table.

  Note: You are able to display the Bad Track Table only before formatting and labeling the fixed disk.

Activity Menu (cont.)

- Option R - Remove a bad track. Use this option to correct incorrect entries in the Bad Track Table.

  Note: You must use bad track reference numbers--not head and cylinder locations--when removing entries from the Bad Track Table.

- Option F - Format the disk and write a label with changes. Use this option to format and write a new label to the fixed disk. Use of this option saves manual entries made to the Bad Track Table before formatting. This test returns you to the main menu after the disk has been formatted and labeled.

- Option X - Exit to the Main Menu (without saving changes). Use this option to leave the Activity Menu and recall the operating system command prompt.

Introduction

The following procedure explains how to load Service Diskette #2 and how to properly use its features. It is very important to follow the steps in the order in which they are presented; misuse of the diskette may result in a loss of data, an inaccurately tested diskette or disk drive, or an improperly formatted and labeled fixed disk.

CAUTION

As stated earlier, before using options B, C or D on Service Diskette #2, you must remove the central module cover and copy the information contained on the fixed disk label. Make note of the five-character drive code and all entries in the Bad Track Table (cylinder and head locations of each bad track).

Procedure: Loading Service Disk #2

1. Turn on the DIMENSION central module. Wait for the diskette drive LED to turn on. Insert DIMENSION Operating System (DOS) System Diskette #1 (of 3) in the diskette drive to load the DIMENSION operating system.

2. When the DIMENSION sign-on display appears, type **Manager** for the "Name" entry, and type **Password** for the "Password" entry.

3. Remove DIMENSION Operating System (DOS) System Diskette #1, and insert Service Diskette #2 in the diskette drive.

---->

4-14 Technical Manual

Procedure: Loading Service Disk #2

4. At any workstation, type **DISKTOOL**

```
North Star DIMENSION
Service Diskette #2
Version 1.0.0

Main Menu

a) Diskette Drive Test
b) Fixed Disk Drive #1 Test
c) Fixed Disk Drive #2 Test
d) Fixed Disk Format and Label
   Writer
e) Park Fixed Disk Drive Heads
```

5. If you wish to test a diskette drive, refer to the procedure called Diskette Drive Test.

   If you wish to test a fixed disk drive, refer to the procedure called Fixed Disk Drive Test.

   If you wish to format and label a fixed disk, refer to the procedure called Fixed Disk Format and Label Writer.

   If you wish to transport or ship the fixed disk drive, refer to the procedure called Park Fixed Disk Drive Heads.

Introduction Use this procedure to test a DIMENSION diskette drive. Have a formatted, blank diskette ready before selecting this test option.

Note: The formatted, blank diskette must be formatted for 9 sectors per track on both sides. This is the default mode of the DIMENSION format utility.

CAUTION
As stated earlier, the diskette drive test is only as reliable as the blank diskette you use to conduct the test. If the test indicates a problem, use a different diskette. Don't replace a diskette drive before confirming errors with a different blank diskette.

Procedure: Using the Diskette Test Option

1. After loading Service Diskette #2, type **A** to select the Diskette Drive Test.

2. Follow the instructions on the screen to complete the test.

   Note: The Diskette Drive Test normally takes approximately five hours to run to completion. You have the following options when the test is running:

   - You may pause the test by typing **[Cntrl]** and **[Num Lock]** or **[Cntrl]** and **S.** Press any key to continue.
   - You may pause the test to look at the current test parameters, the soft error summary, and the hard error summary by pressing the space bar. Press any key to continue.
   - Press **[Ctrl]** and **C** to stop the test and recall the DIMENSION Operating System (DOS) command prompt. No error summaries are displayed when the test is stopped.

Introduction Use this procedure to format and label a DIMENSION fixed disk drive. This option must be used before testing a fixed disk drive and before manually adding bad tracks (from the fixed disk paper label) to the Bad Track Table.

CAUTIONS

Use of Service Diskette #2 may be destructive to stored data. Back up fixed disks before beginning tests.

Before using Service Diskette #2, remove the central module cover and copy the information contained on the fixed disk paper label. Make note of the five-character drive code and all entries in the bad track table (cylinder and head locations of each bad track).

Procedure: Fixed Disk Format and Label Writer Option

1. After loading Service Diskette #2, type **D** to select the Fixed Disk Format and Label Writer option.

2. Follow the instructions on the screen to complete the procedure. Refer to the last section of this chapter for information regarding error screens and error codes.

Introduction Use this procedure to test fixed disk drive #1 (the bottom drive) in the DIMENSION central module.

CAUTION

As stated earlier, use of Service Diskette #2 may be destructive to stored data. Back up fixed disks before beginning tests.

Format and label the fixed disk before using the Fixed Disk Tests. These tests automatically record bad tracks on the Bad Track Table; therefore, the table must exist before the test begins.

Procedure: **Fixed Disk Drive #1 Test Option**

1. Before loading Service Diskette #2, remove the top cover of the central module and copy the information contained on the fixed disk label.

2. If the central module contains two fixed disk drives, disconnect the DC power plug attached to drive #2.

3. Load Service Diskette #2 and type **D** to select the Fixed Disk Format and Label Writer option.

4. After formatting and writing a new label to the disk drive, type **B** to select the Fixed Disk Drive #1 Test.

5. Follow the instructions on the screen to complete the test. Refer to the last section of this chapter for information regarding error screens and error codes.

Introduction Use this procedure to test fixed disk drive #2 (the top drive) in the DIMENSION central module.

CAUTION
As stated earlier, use of Service Diskette #2 may be destructive to stored data. Back up fixed disks before beginning tests. Format and label the fixed disk before using the Fixed Disk Tests. These tests automatically record bad tracks on the Bad Track Table; therefore, the table must be generated before the test begins.

Procedure: **Fixed Disk Drive #2 Test Option**

1. Before loading Service Diskette #2, remove the top cover of the central module and copy the information contained on the fixed disk label.

2. Disconnect the DC power plug attached to drive #1.

3. Load Service Diskette #2 and type **D** to select the Fixed Disk Format and Label Writer option.

4. After formatting and writing a new label to the disk drive, type **C** to select the Fixed Disk Drive #2 Test.

5. Follow the instructions on the screen to complete the test. Refer to the last section of this chapter for information regarding error screens and error codes.

Introduction Use this procedure to park a fixed disk drive head assembly before transporting or shipping a fixed disk drive.

Procedure: **Park Fixed Disk Drive Heads Option**

1. After loading Service Diskette #2, type **E** to select the Park Fixed Disk Drive Heads option.

2. Follow the instructions on the screen to complete the procedure.

Introduction The following procedure may facilitate testing, formatting and labeling a fixed disk drive that is not mounted in a DIMENSION central module.

The procedure requires the use of three fixed disk extension cables (specified in the beginning of this chapter).

Procedure: Fixed Disk Extension Cable Installation

1. Detach the 20-pin (signal cable) connector from location J12 on the central board.

2. Detach the 34-pin (control cable) connector from location J13 on the central board.

3. Detach the 4-wire (DC power) connector from the back of the mounted fixed disk drive.

4. Attach the 20-wire (signal) extension cable to location J12 on the central board. The red stripe on the ribbon cable must be facing the power supply side of the central module.

5. Attach the 34-wire (control) extension cable to location J13 on the central board. The red stripe on the ribbon cable must be facing the power supply side of the central module.

6. Attach the 4-wire (DC power) extension cable to the fixed disk DC power cable.

7. Attach the unconnected ends of the three extension cables to the remote fixed disk drive circuit board.

   Note: Orient the fixed disk drive with the rear edge of the drive facing the front of the central module and the circuit board facing down. Attach the ribbon cables with their red stripes facing the disk drive side of the central module.

---->

Procedure: Fixed Disk Extension Cable Installation

8. Proceed to format, label and test the remote fixed disk drive.

Introduction

This section of the chapter illustrates error screens and error codes that may appear if a failure is detected by either the self-tests or the DIMENSION service diskettes.

Error Screens

The error screens illustrated in this section are those screens that might appear during tests of the diskette and fixed disk drives. Although most of the screens indicate that an error has occurred, some screens may appear (the diskette drive Current Test Parameters, for example) only when you request information or at the conclusion of a test.

Error Codes

Most of the error codes shown are applicable only to the diskette and fixed disk tests--this is the reason for placing this information in this particular location. But you should bear in mind that the error codes are valid for all DIMENSION hardware, all diagnostic programs and the DIMENSION Operating System (DOS).

Use of the Error Code Matrix

The error codes are shown in a matrix with the names of major DIMENSION hardware subsystems. Descriptions of these subsystems (for diagnostic purposes) are found later in this chapter.

If an error occurs during system operation, self-testing, or service diskette testing, look up the code in the matrix. To the right of the error code, you will find one or more subsystems numbered #1 through #11. #1 indicates the most likely subsystem to have caused the failure; #11 the least likely.

Note: We recommend that if more than one subsystem is shown, replace more accessible parts before replacing those that are difficult to get to.

Example: It is faster to replace a workstation board before replacing a central board (if both are listed as possible causes of the failure) even if the matrix indicates that the central board is the more likely culprit.

Types of Error Screens

There are four types of error screens that may appear during diskette and fixed disk drive tests. They are:

- o Reading errors
- o Writing errors
- o Soft errors
- o Hard errors

Reading Errors

The following display is an example of an error message that appears if an error occurs during a read cycle of either a diskette of fixed disk test.

```
READING

Error code: xxxx
Error description:
     Iteration: xxxx
     Logical record number: xxxx
     Number of bad bytes: xxxx
     Expected data: xxxx
     Actual data: xxxx
     Sector location: xxxx
```

Writing Errors

The following display is an example of an error message that appears if an error occurs during a write cycle of either a diskette of fixed disk test.

```
WRITING

Error code: xxxx
Error description:
     Iteration: xxxx
     Logical record number: xxxx

Checking for bad tracks.
     Number of errors: xxxx
```

Soft Errors

The following display is an example of a soft error summary that appears when diskette or fixed disk drive test is paused (by pressing the space bar) or completed.

```
Soft Error Summary Table

Characters that appear in parenthesis are not
valid.

ITER    LRN    ERROR    COUNT    EXP    ACT    LOC

xxxx    xxxx   xxxx     xxxx     xxxx   xxxx   xxxx
xxxx    xxxx   xxxx     xxxx     xxxx   xxxx   xxxx
xxxx    xxxx   xxxx     xxxx     xxxx   xxxx   xxxx
```

Hard Errors

The following display is an example of a hard error (Bad Track) summary that appears when a fixed disk test is paused (by pressing the space bar) or completed.

```
Bad Track Summary Table

Ignore this summary during diskette drive
testing.

ITER    LRN     Error

xxxx    xxxx    xxxx
xxxx    xxxx    xxxx
xxxx    xxxx    xxxx
```

Interrupt and End-of-Test Screens

There are three types of interrupt and end-of-test screens that may appear during diskette and fixed disk tests. They are:

- o the parameter screen (with soft and hard error summaries)
- o the normal end-of-test screen
- o the forced end-of-test screen

Parameter Screen

The following display is an example of a parameter screen that appears when you begin or pause (by pressing the space bar) a diskette or fixed disk drive test.

```
Current Test Parameters

Testing LRN: x to xxx
Drive: x
Reads: xxxx
Write retry: xx
Seeks: (Sequential)(Random)
Data: (Fixed)(Random)
Compare: (On)(Off)
Iteration: 1/1
Error count: xxxx
```

If a test is paused and soft or hard errors have been recorded, summary tables showing these errors also appear.

Normal End-of-Test Screen

The following displays are examples of normal end-of-test screens that appear after a diskette or fixed disk drive test has run to completion.

```
The drive has passed.

E   to list errors
P   to display test parameters
X   to exit
```

or

```
*********************************
**TEST DISKETTE MAY BE WORN OUT**
*********************************

*********************************
**********REJECT DRIVE**********
*******TOO MANY SOFT ERRORS******
*********************************

E   to list errors
P   to display test parameters
X   to exit
```

Forced End-of-Test Screen

The following display is an example of a forced end-of-test screen that appears when a diskette or fixed disk drive test is halted before completion (by typing **[Cntrl]** and **C**).

```
Terminate batch job (Y or N)?
```

If you type **N**, the Service Diskette #2 main menu reappears on your screen. If you type **Y**, the DIMENSION Operating System (DOS) command prompt reappears on your screen.

Note: Before typing **[Cntrl]** and **C** to stop a test, press the space bar to see a summary of the errors that have occurred during the test.

Error Code Matrix

The error code matrix indicates possible causes for the appearance of an error code. There will usually be at least two items that you should investigate. The items will normally be DIMENSION hardware subsystems, but problems may also be caused by printer errors or misuse of system commands by one or more operators. Read the following list for a complete description of each error causing subsystem before you begin to troubleshoot an error code.

- Central Board - the problem may be located in the central board hardware. This may include a failure of circuit board components or failure of interfaces between the central board and other central module subassemblies.

- Workstation Board - the problem may be located in the workstation board hardware. This may include a failure of circuit board components, incorrect thumbwheel switch settings, or failure of interfaces (including the workstation cable and its connector box) between the workstation board and other subassemblies.

- Bus Board - the problem may be located in the bus PCB hardware. This may include a failure of circuit board components or failure of interfaces between the bus PCB and other circuit boards.

- Diskette Drive - the problem may be located in the diskette drive hardware. This may include failures of the diskette drive read/write head, the controller board, etc.

- Diskette Media - the problem may be located on the diskette. This may include flaws on or loss of data from the diskette or use of an improper diskette.

- Fixed Drive - the problem may be located in the fixed disk drive hardware. This may include failures of the fixed disk drive read/write heads, the controller board, etc.

Error Code Matrix (cont.)

- Fixed Media - the problem may be located on the fixed disk platter. This may include flaws on or loss of data from the platter.

- Power Supply - the problem may be located in the central module power supply assembly. This may include failure of circuit board components or failure of DC power interfaces between the power supply and subassemblies such as the bus board or fixed disk, diskette and tape backup drives.

- System Software - the problem may be due to a failure of the system software on the fixed disk. Data may be erased or contaminated. Reloading the software to the fixed disk from the diskette masters will usually resolve this type of problem.

- Printer - the problem may be located in the a shared or local printer. This may include failure of printer hardware, lack of power to the printer, or incorrect interface between the printer and the subassembly to which it is attached.

- User Operation - the problem may be due to user error. This may include errors that result from misuse of a system command or application program.

Error Code	Central Board	Wrkstn Board	Bus Board	Diskette Drive	Diskette Media	Fixed Drive	Fixed Media	Power Supply	System Software	Printer	User Operation
00	1								2		
01									1		
02									1		
03	See pages 4-35 through 4-39 (disk driver error codes) when this error code appears.										
04	4	3								1	2
05		2							3		1
06									2		1
07									2		1
08									2		1
09									2		1
0A									2		1
0B									2		1
0C									1		2
0D									2		1
0E									1		

Error Code	Central Board	Wrkstn Board	Bus Board	Diskette Drive	Diskette Media	Fixed Drive	Fixed Media	Power Supply	System Software	Printer	User Operation
0F									1		
10			4			3			2		1
11									2		1
12									2		1
13									2		1
14									1		
15									1		2
16									1		
17				4	3	2	1				
18				2	4	1	3	5	6		
19				2	4	1	3	5	6		

Error Code	Central Board	Wrkstn Board	Bus Board	Diskette Drive	Diskette Media	Fixed Drive	Fixed Media	Power Supply	System Software	Printer	User Operation
01 41 81 C1				3	2				4		1
03 43 83 C3				5	3	4	2		6		1
05 45 85 C5	3			4	1	5	2				
08 48 88 C8					1						2
09 49 89 C9	3			4	1	5	2				
0D 4D 8D CD				4	2	3	1		5		
12 52 92 D2	3			2	1						
13 53 93 D3	3			2	1						
14 54 94 D4	3			2	1						
15 55 95 D5	3			1		2					
16 56 96 D6	2			1							
17 57 97 D7	2			1							
19 59 99 D9					1				2		
1A 5A 9A DA									1		
1B 5B 9B DB									1		

Error Code	Central Board	Wrkstn Board	Bus Board	Diskette Drive	Diskette Media	Fixed Drive	Fixed Media	Power Supply	System Software	Printer	User Operation
1C 5C 9C DC	2			1							
1D 5D 9D DD	2			1							
1E 5E 9E DE	2					1					
1F 5F 9F DF	2					1					
20 60 A0 E0	2								1		
21 61 A1 E1	2			1							
22 62 A2 E2	2			1							
23 63 A3 E3	2			1							
24 64 A4 E4	2			1							
25 65 A5 E5	2					1					
26 66 A6 E6	2					1					
27 67 A7 E7	2					1					
28 68 A8 E8	2					1					
29 69 A9 E9	3			2		1					
2A 6A AA EA	2					1					

Error Code	Central Board	Wrkstn Board	Bus Board	Diskette Drive	Diskette Media	Fixed Drive	Fixed Media	Power Supply	System Software	Printer	User Operation
2B 6B AB EB	2					1					
31 71 B1 F1	4		3	2		1					

TROUBLESHOOTING

Introduction

This chapter contains preliminary troubleshooting information for the DIMENSION. By using this information, a service technican may locate a defective subassembly, remove and replace the defective part (using Chapter 6), and verify that the system is operating correctly (using Chapter 4).

Preliminary Observations and Actions

The primary tool you must use during system troubleshooting is observation. You must look at the central module and workstations when power is first turned-on and make sure the following occur:

1. **The main power LED on the central module turns on and stays on.**

   If the main power LED turns off, it may be an indication of a failure of the central PCB. If the LED turns off:

   - o Verify power supply voltages. See the section on checking and adjusting the power supply.
   - o Use Service Diskette #1 to check the central PCB.
   - o Replace the central PCB.

2. **The operating system boots from the diskette drive or fixed disk drive.**

   If you are booting from the diskette drive and you observe that both the main power LED and diskette drive LED turn off after an attempted boot, it may be an indication that you are attempting to boot from the wrong type of diskette. It may also be an indication that there has been a failure of the diskette drive.

   If you are booting from a fixed disk and observe that the central module main power LED turns off after an attempted boot, it may be an indication of a failure of the fixed disk drive or damage to the data written on the fixed disk. In this case:

   - o Use another boot diskette.
   - o Verify DC power to the disk drive.
   - o Use Service Diskette #2 to check the diskette and fixed disk drives.

Preliminary Observations and Actions (cont.)

- o Use Service Diskette #2 to check the fixed disk label.
- o Replace the disk drive.

3. The operating system loads and the sign-on screen appears at each of the workstations.

If one or more workstations display a failure icon, it may be an indication of workstation PCB failure.

If one or more workstations display blank screens, it may indicate:

- o Workstation PCB failure
- o Workstation cable failure
- o Video display failure
- o No power to the video display

If all workstations display a failure icon, it may be an indication of +12VDC power supply or central board failure. If the display icon appears at all workstations:

- o Use Service Diskette #1 to check the central board and workstation PCB's.
- o Check the thumbwheel switch settings. Make certain that workstation numbers are not duplicated.
- o Replace workstation PCB's for all workstations displaying failure icons.
- o Verify power supply voltages. See the section on checking and adjusting the power supply.

Preliminary Observations and Actions (cont.)

4. Users sign-on at all workstations.

If one or more users are not able to sign-on, it may indicate defective workstation cables or keyboards. You should:

- o Exchange the suspect keyboards or workstation cables with keyboards and cables which you know are working.

Power Supply Voltages

The DIMENSION central module power supply produces the following DC voltages:

- o +5.0VDC @ ≥ 8.5 amps and ≤ 48.0 amps
- o +12.0VDC @ ≥ 2.2 amps and ≤ 11.0 amps
- o -12.0VDC @ ≥ 0.0 amps and ≤ 1.0 amps

If you need to check these three voltages, use access points and a reference ground found on the bus PCB.

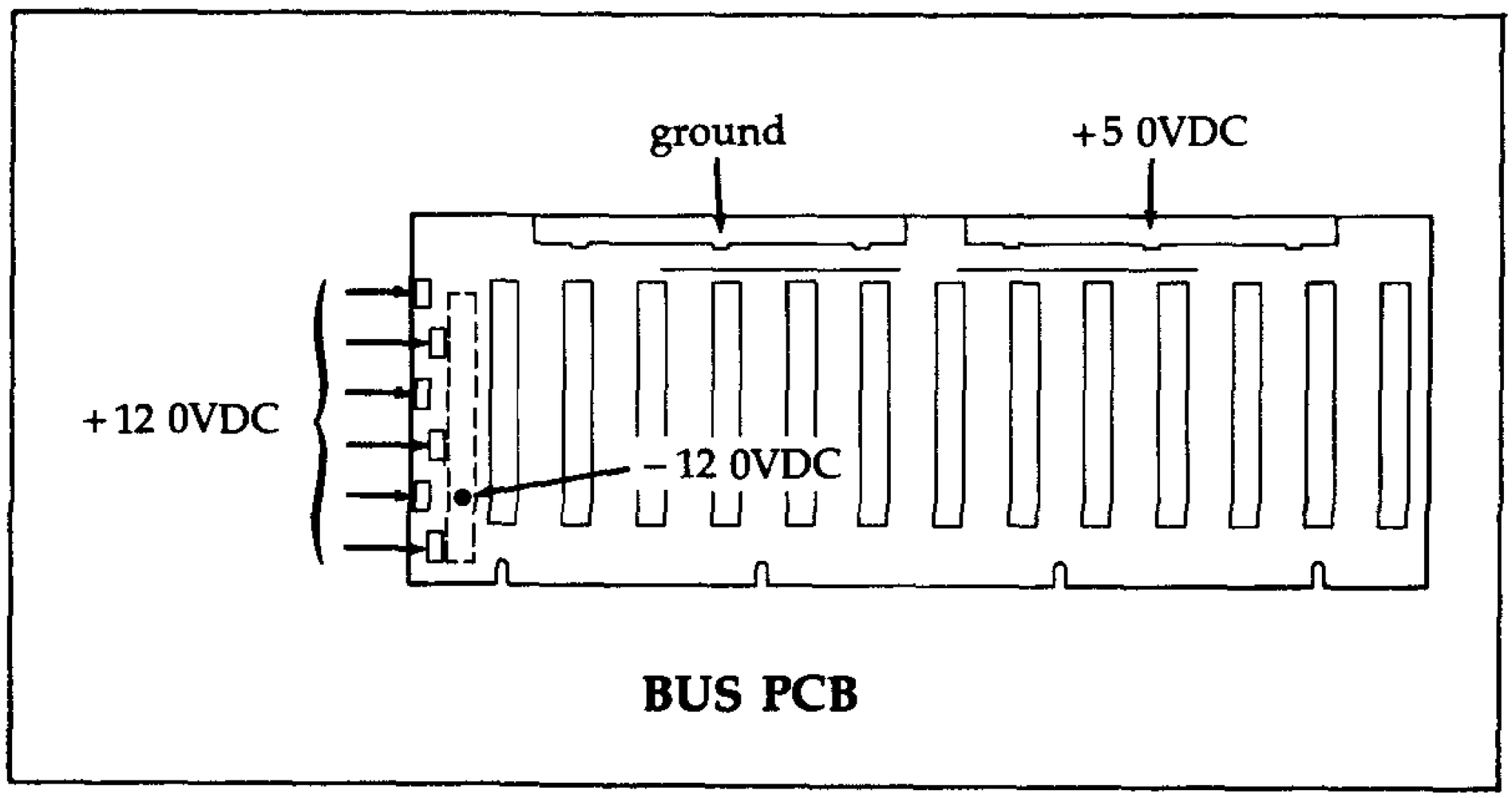

Checking and Adjusting the +5VDC Supply

If you need to check or adjust the +5VDC supply, you should use the +5VDC bus on the bus PCB as your reference.

Use resistor R146 on the power supply circuit board to adjust the +5VDC supply voltage. (It is the only voltage which may be adjusted.) Set the resistor for a bus PCB reading of +5.10VDC when making the adjustment.

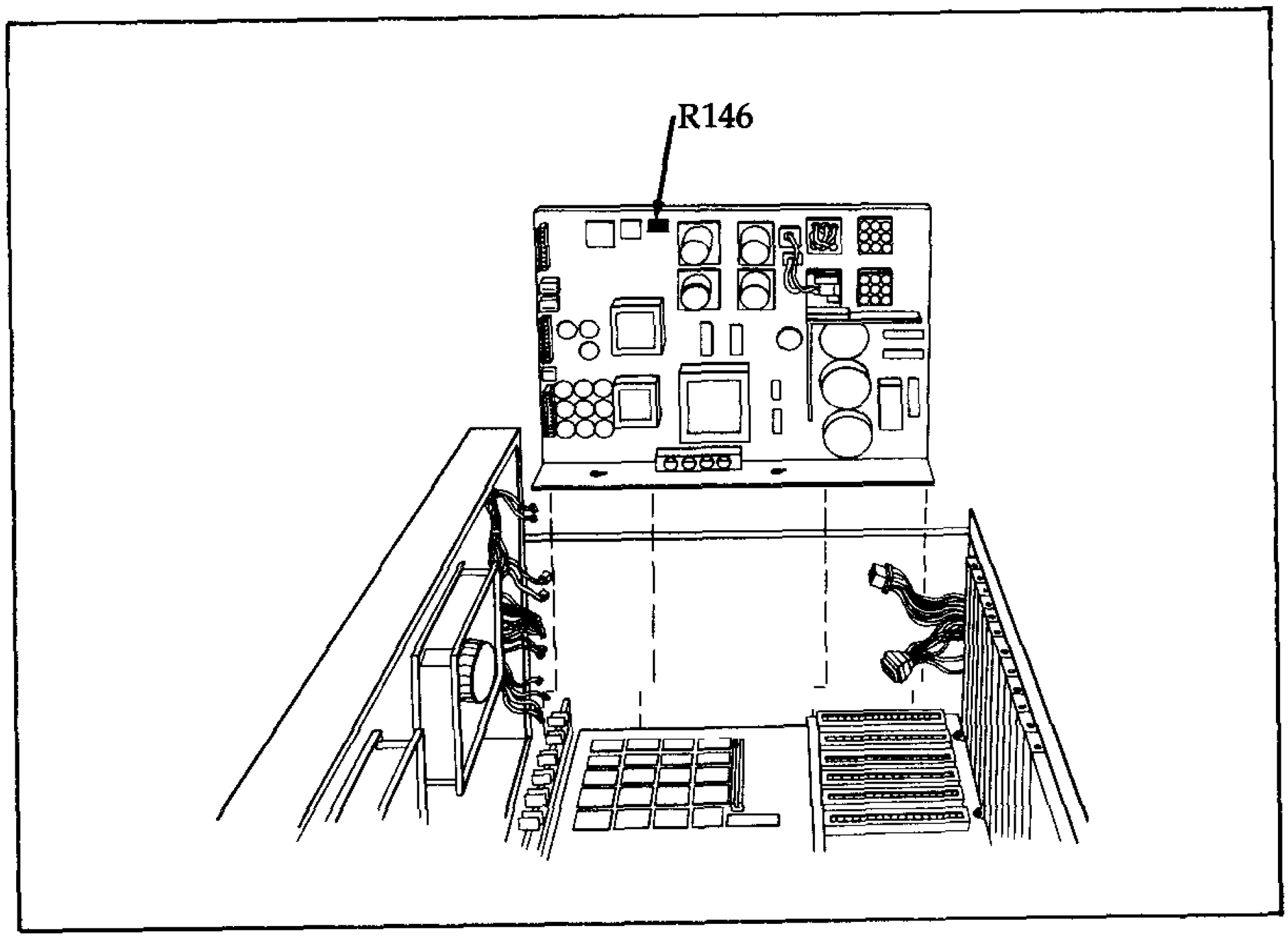

Checking the +12VDC Supply

If you need to check the +12VDC supply, you should use one of the connectors, E10 through E14, on the edge of the bus PCB as your reference.

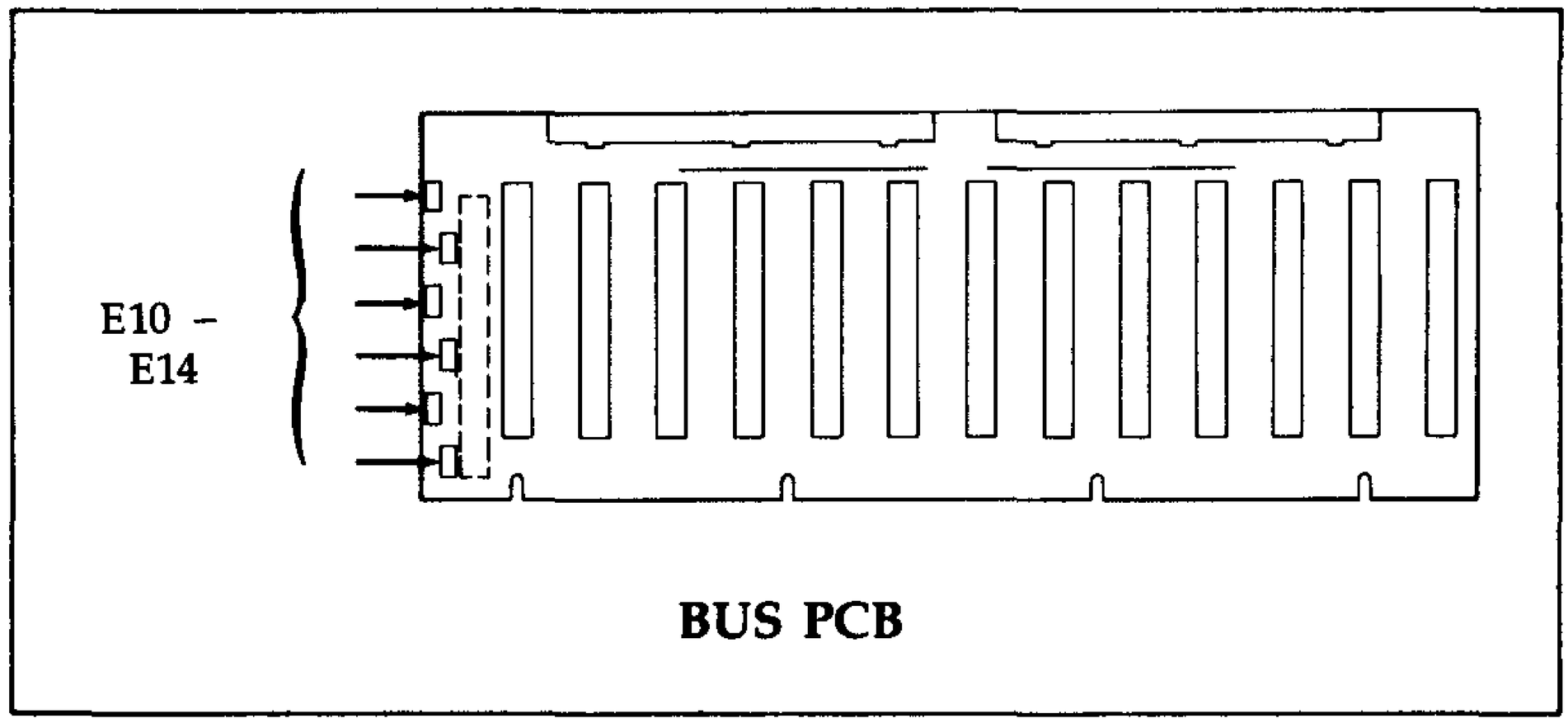

Checking the -12VDC Supply

If you need to check the -12VDC supply, you should use pin A-7 on connector P6 of the bus PCB as your reference.

CAUTION

Do not check the -12VDC supply on the pins inside a workstation board edge connector socket. It is too easy to short these pins; a short may damage the power supply or other parts within the central module.

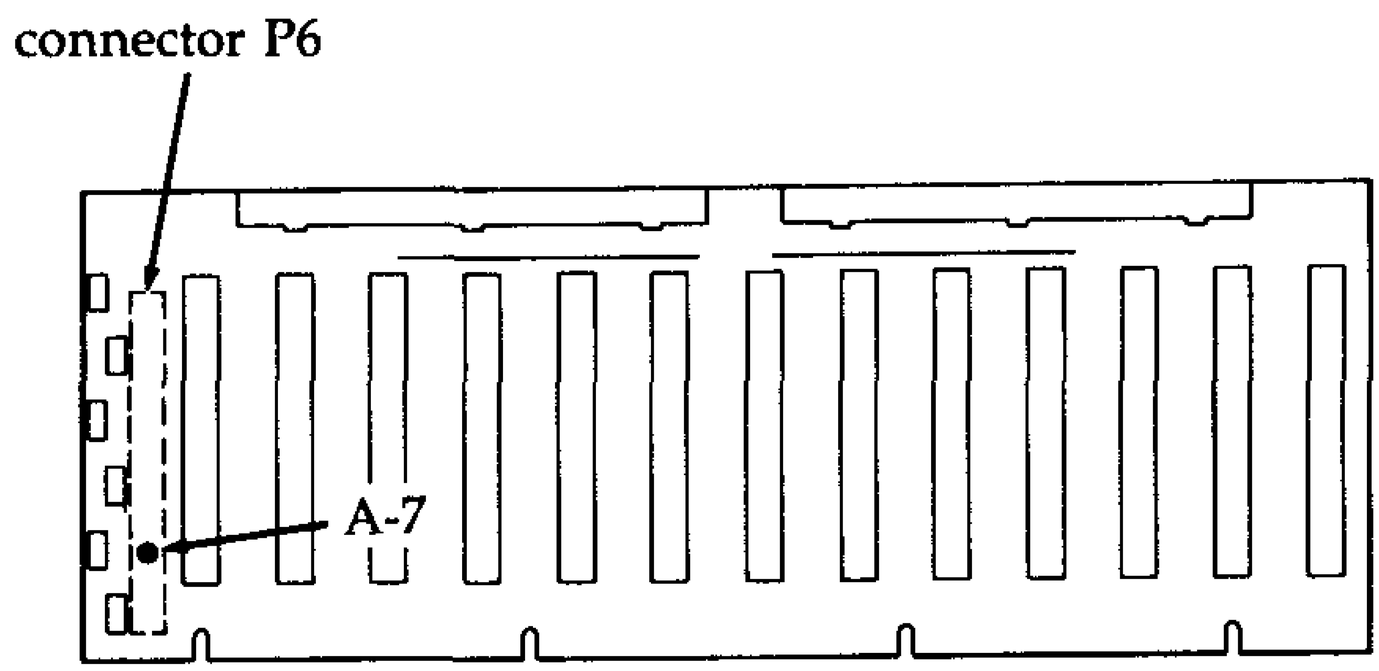

BUS PCB

SUBASSEMBLY REMOVAL

Introduction

This chapter contains procedures for removing major subassemblies from the DIMENSION central module. The removal procedures include the:

- o Power supply
- o Workstation PCB
- o Workstation 128K/384K memory PCB
- o Central RAM expansion PCB
- o Bus PCB
- o Central PCB
- o Floppy disk drive
- o Fixed disk drive
- o Tape back-up drive

Central Module Orientation

The subassembly removal procedures use descriptions such as "right side," "left side," "right panel," "rear panel," etc. These terms denote the subassembly's location within a central module and are based on a consistent orientation of the central module.

The following diagram indicates the standard orientation used for describing the six sides of the central module in the removal procedures.

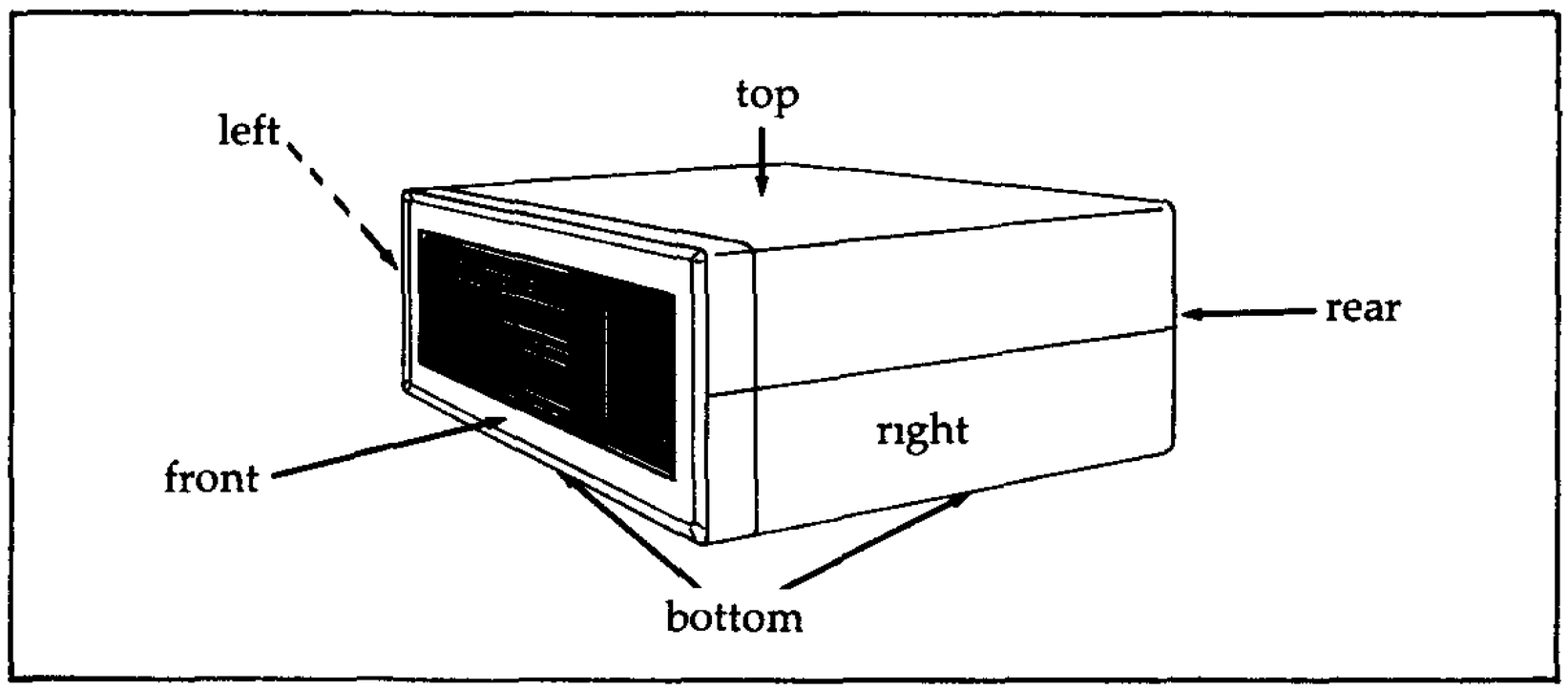

Tools

The only non-standard tool required for removal of subassemblies is a 5/32" hex ball-driver. This tool is used for loosening two hex screws which fasten the power supply subassembly to the base panel of the central module.

Component Names and Locations

Use this exploded view diagram in conjunction with the subassembly removal sections in this chapter and the parts lists in Appendix A, to locate parts described in the following procedures.

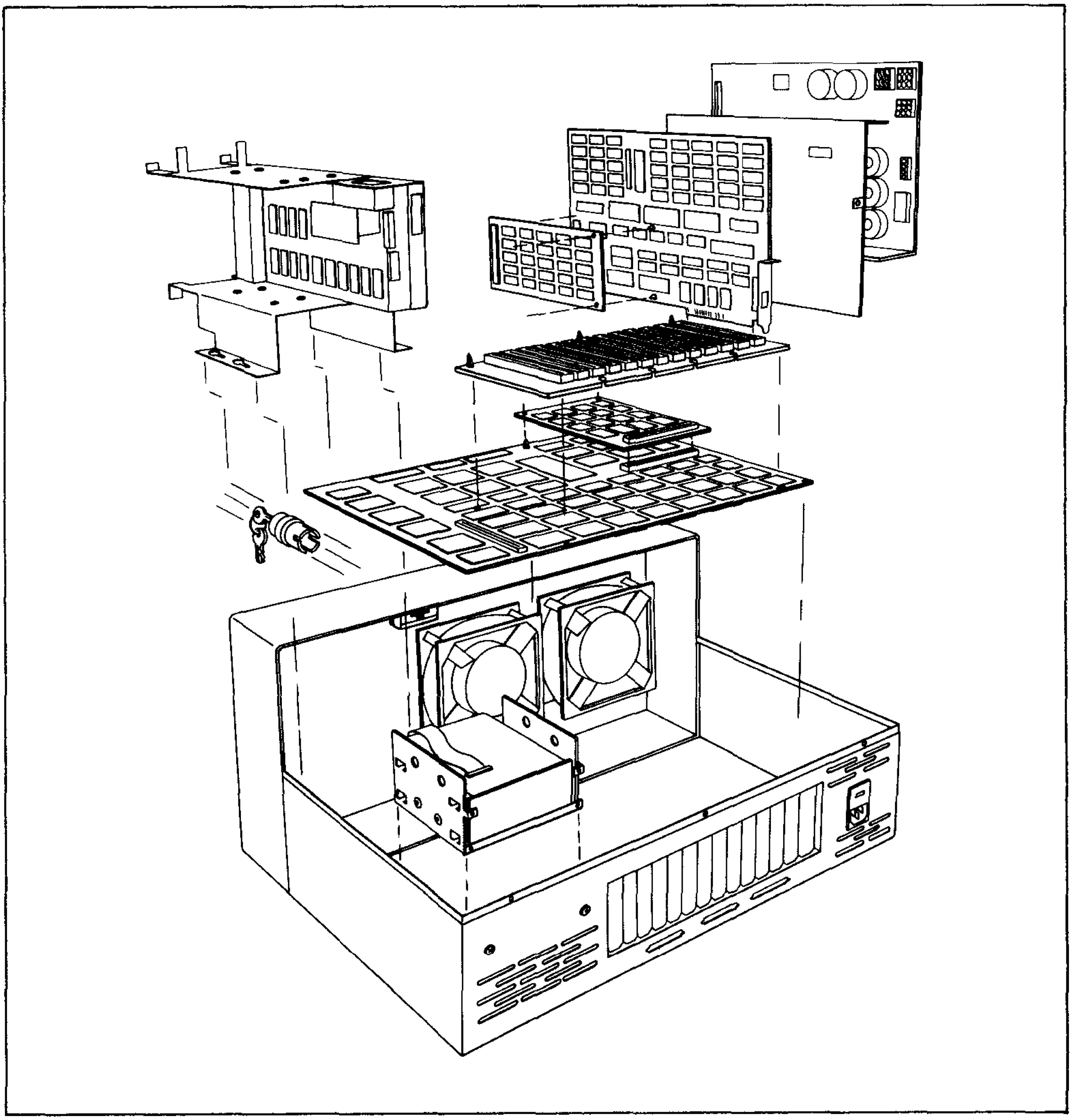

Introduction Use this procedure to remove a workstation PCB subassembly from the central module.

Procedure: **Workstation PCB Removal**

1. Remove the Phillips screw which fastens the rear edge of the workstation PCB to the central module.

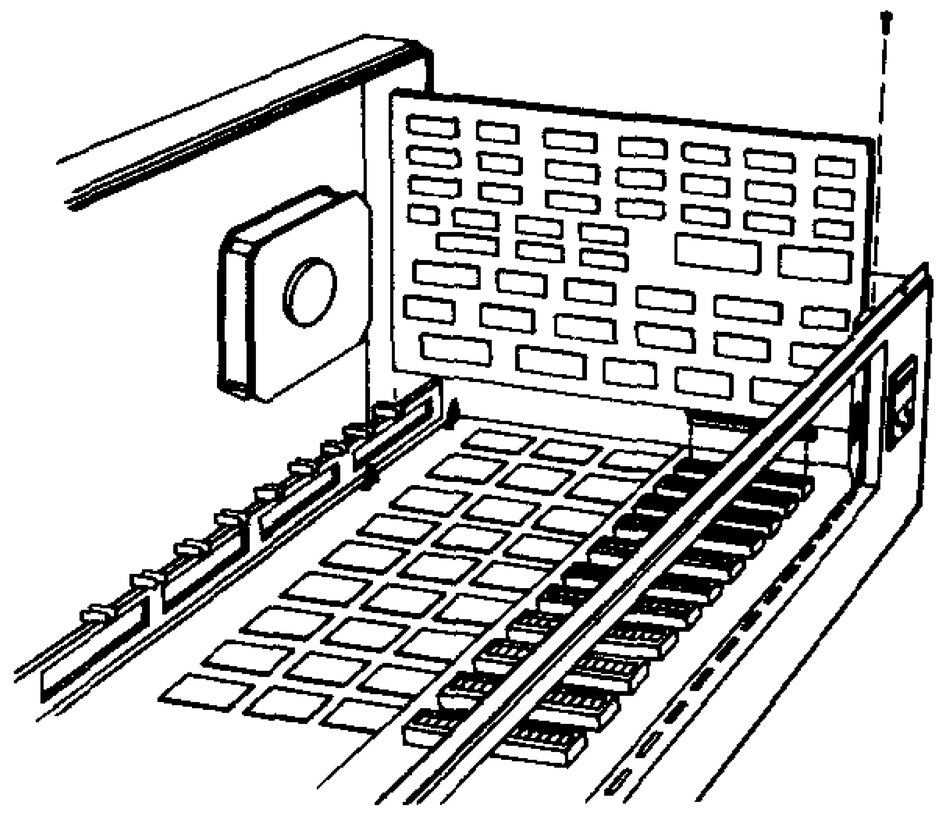

2. Lift the workstation PCB to disconnect it from the bus PCB socket, and continue lifting to remove the workstation PCB from the central module.

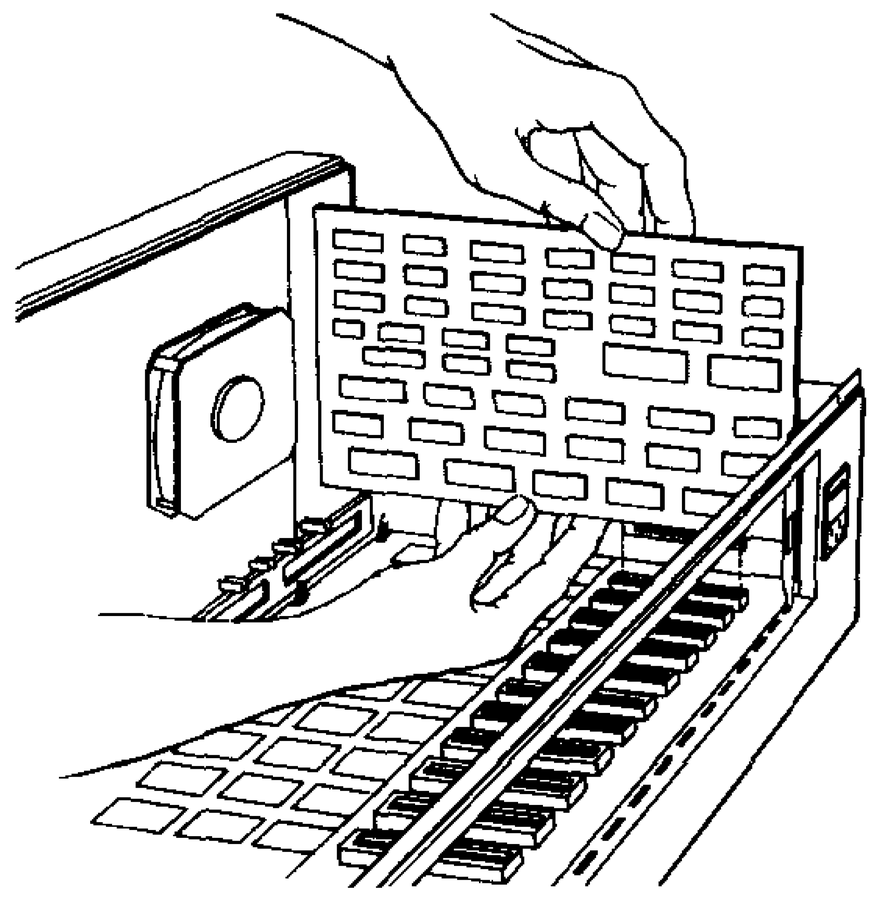

Introduction Use this procedure to remove a workstation 128K or 384K memory PCB from the central module.

Procedure: Workstation 128K/384K Memory PCB Removal

1. Remove the workstation PCB which contains the 128K/384K memory PCB from the central module.

2. Place the workstation PCB on a flat surface.

3. While lifting the appropriate corners of the 128K/384K memory PCB, squeeze the flanges of the two nylon standoffs until the memory PCB is released.

4. Lift the 128K/384K memory PCB from its socket on the workstation PCB, and continue lifting until the two circuit boards are separated.

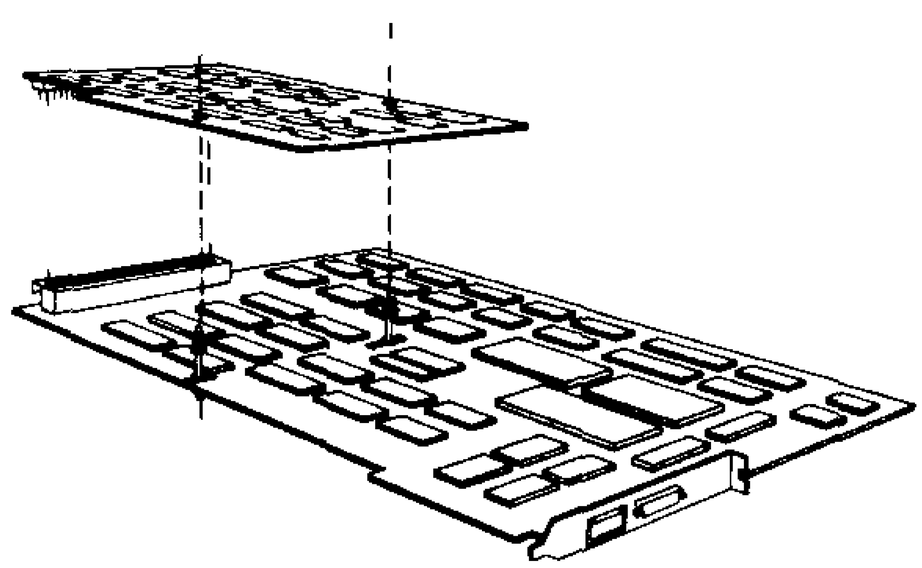

Introduction Use this procedure to remove the power supply subassembly from the central module.

Procedure: **Power Supply Removal**

1. Remove the workstation PCB from position #1 in the central module.

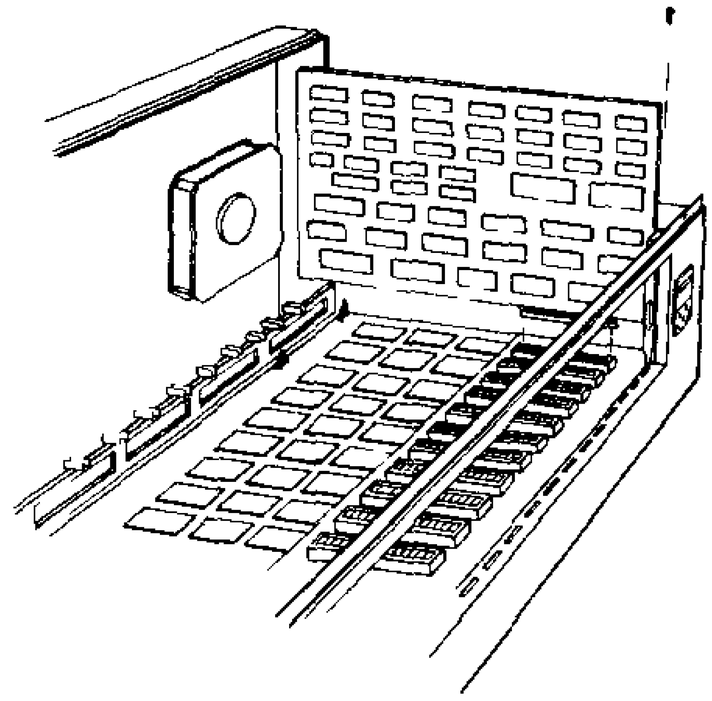

2. Remove the #6 nut and screw which fasten the rear edge of the power supply shield to the rear panel of the central module cabinet.

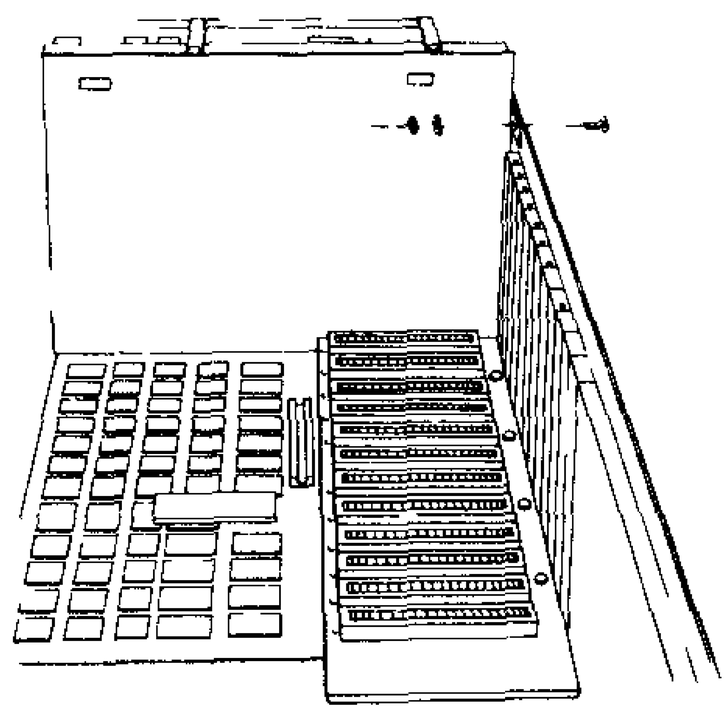

--->

Procedure: Power Supply Removal

3. Remove the nut which fastens the power supply shield and two ground wires to the base panel of the central module.

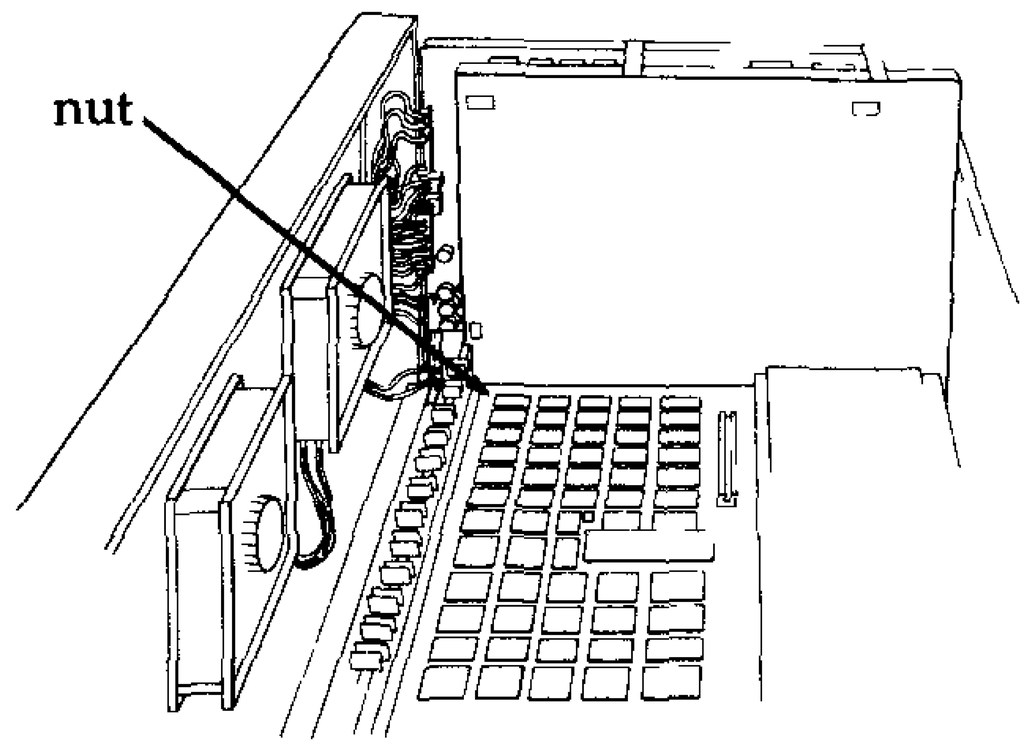

4. Remove the two screws which fasten the top of the power supply shield to the frame of the power supply.

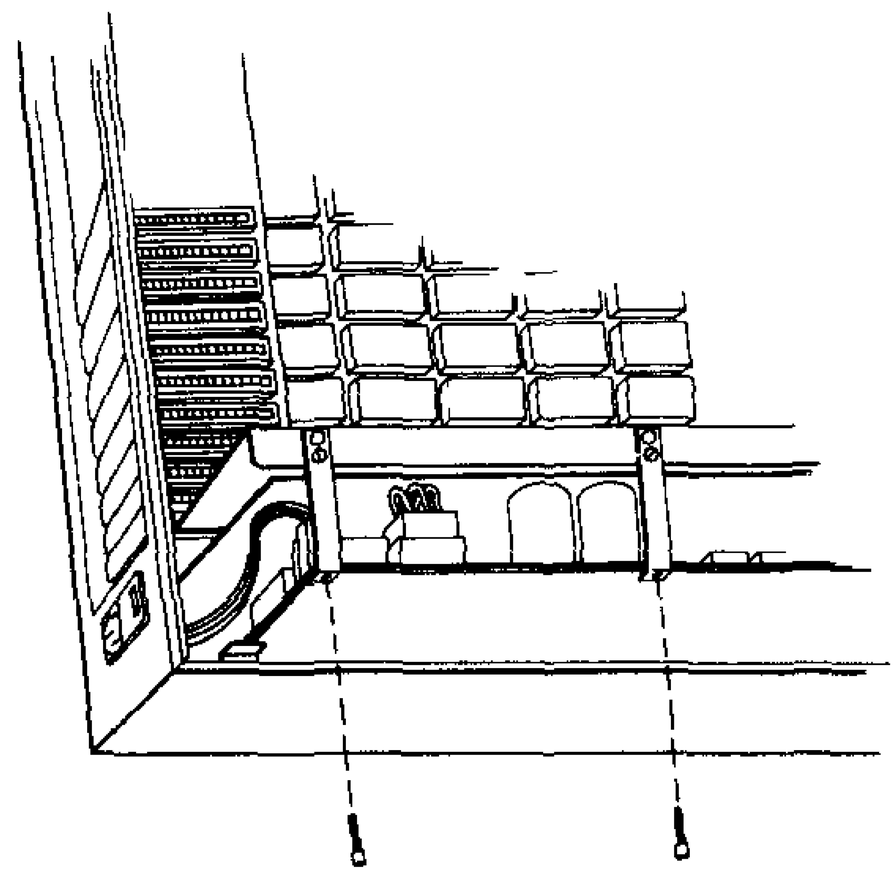

---->>

Procedure: Power Supply Removal

5. Lift and remove the power supply shield and its two insulator sheets.

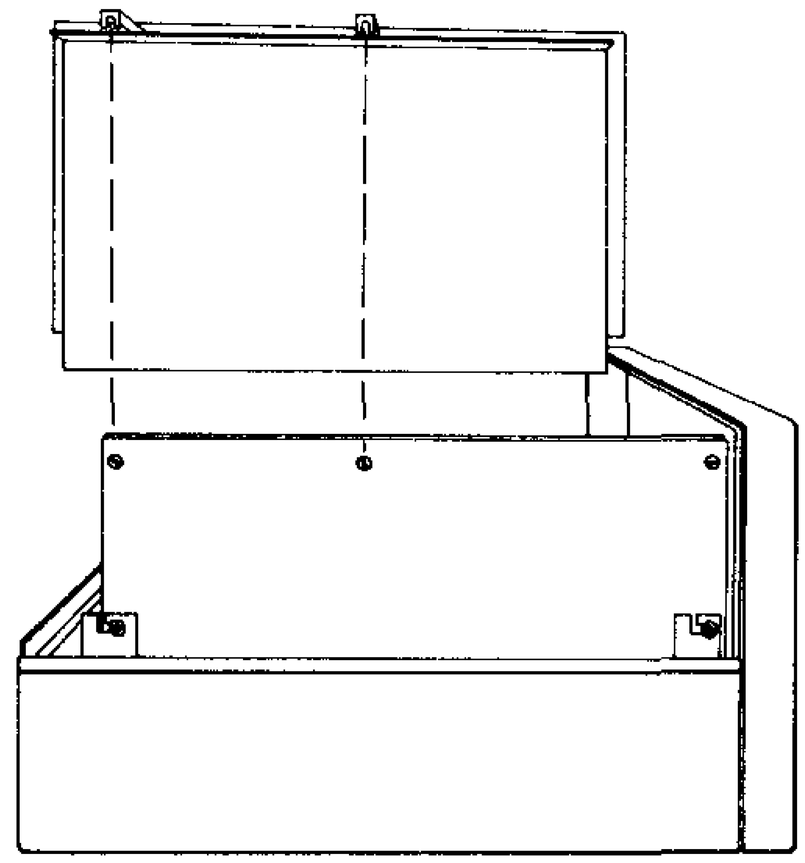

6. Loosen the two #6 nuts which fasten the frame of the power supply to the side panel of the central module.

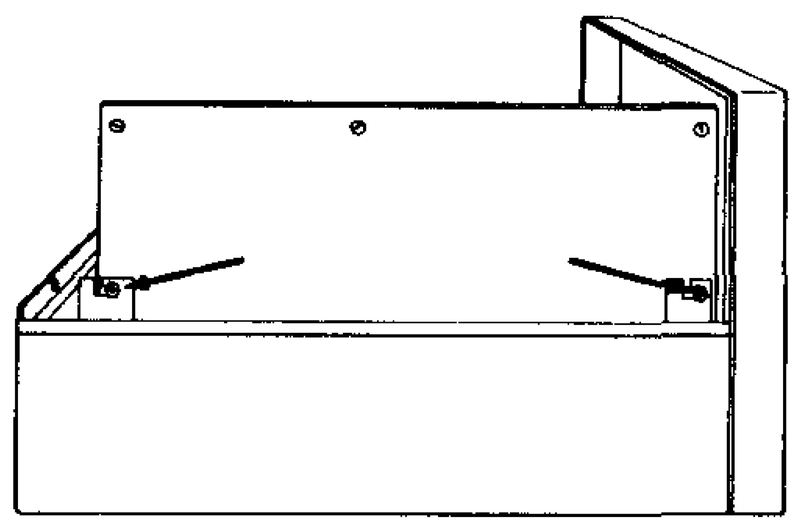

7. Loosen the two 5/32" hex screws which fasten the base of the power supply assembly to the base panel of the central module.

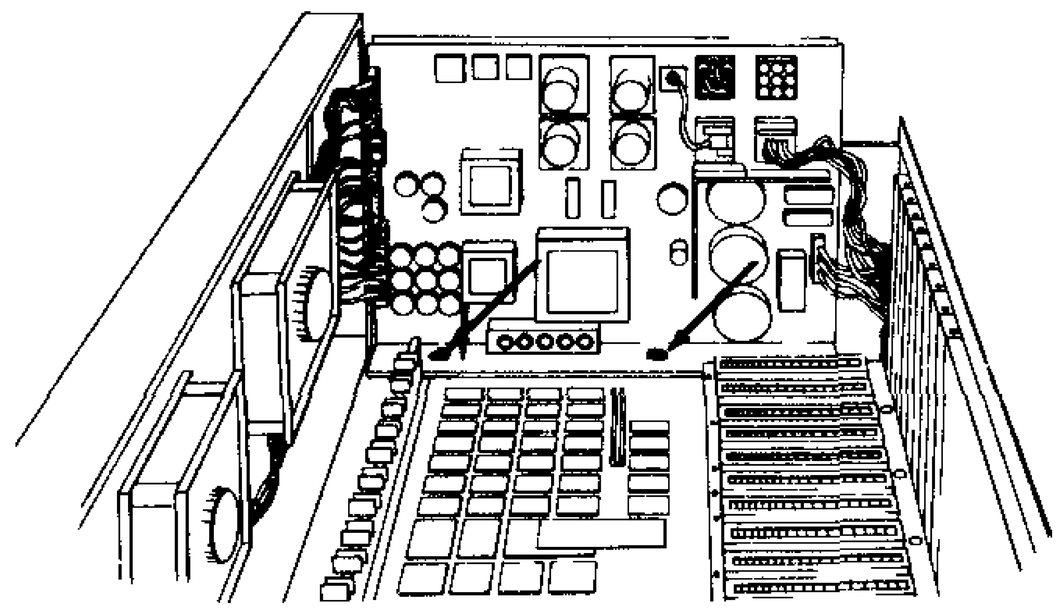

---->>

Procedure: Power Supply Removal

8. Remove the five plugs (P44, P45, P46, P47 and P48) and two red and two black leads from the front edge of the power supply assembly.

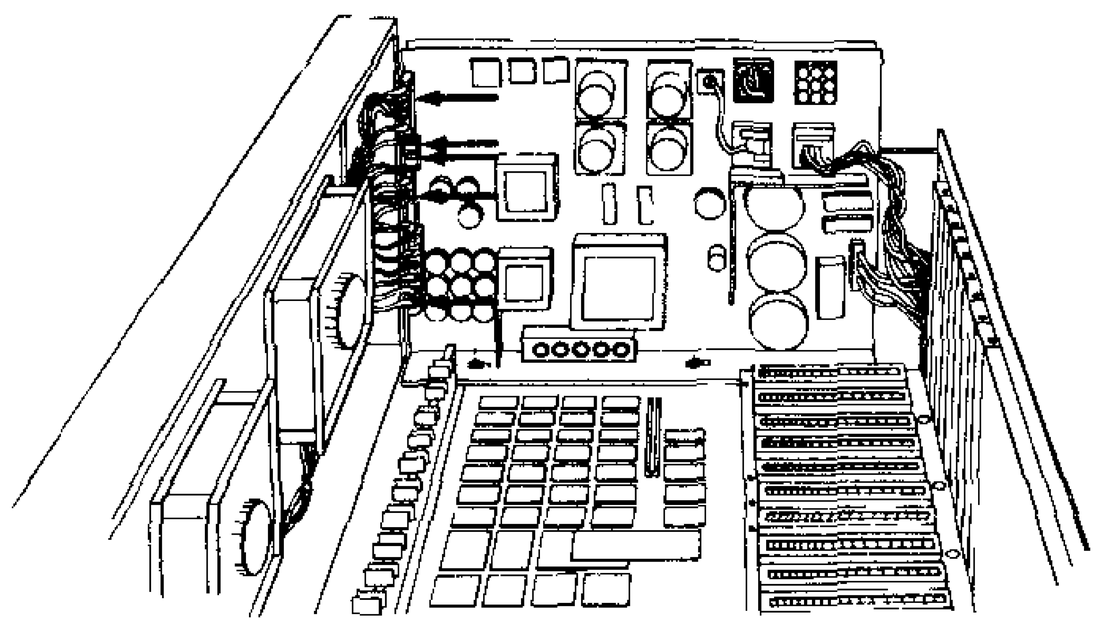

9. Remove the two plugs (P41 and P43) from the rear edge of the power supply assembly.

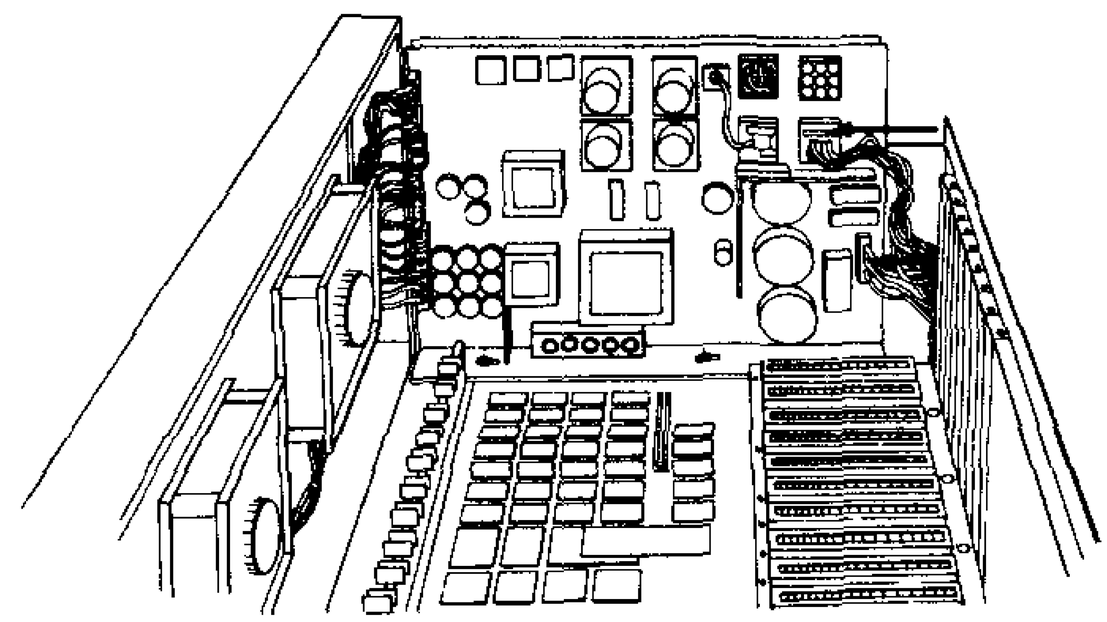

Procedure: Power Supply Removal

10. Slide the power supply assembly slightly to the rear, and lift it out of the central module.

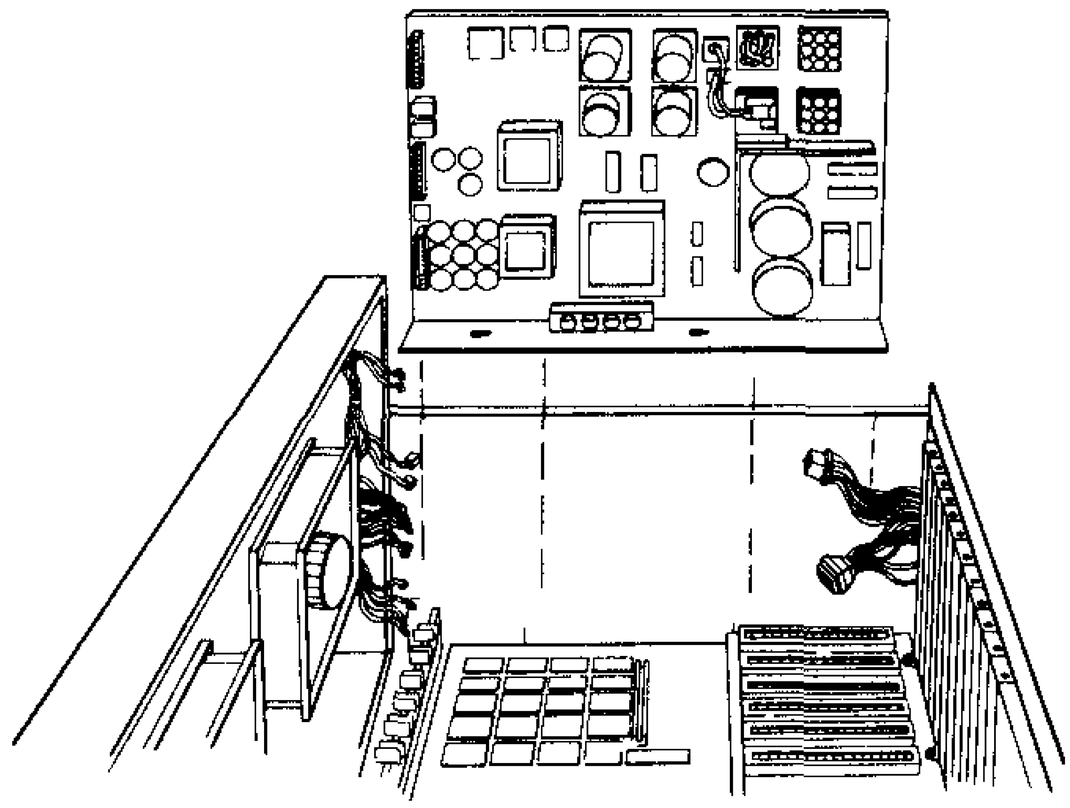

Introduction Use this procedure to remove the central RAM expansion PCB from the central module.

Procedure: **Central RAM Expansion PCB Removal**

1. Remove the workstation PCB's from positions #1 through #5 from the central module.

2. While lifting the appropriate corners of the RAM expansion PCB, squeeze the flanges of the two nylon standoffs until the RAM expansion PCB is released.

3. Lift the RAM expansion PCB from its socket on the central PCB, and continue lifting until the two circuit boards are separated.

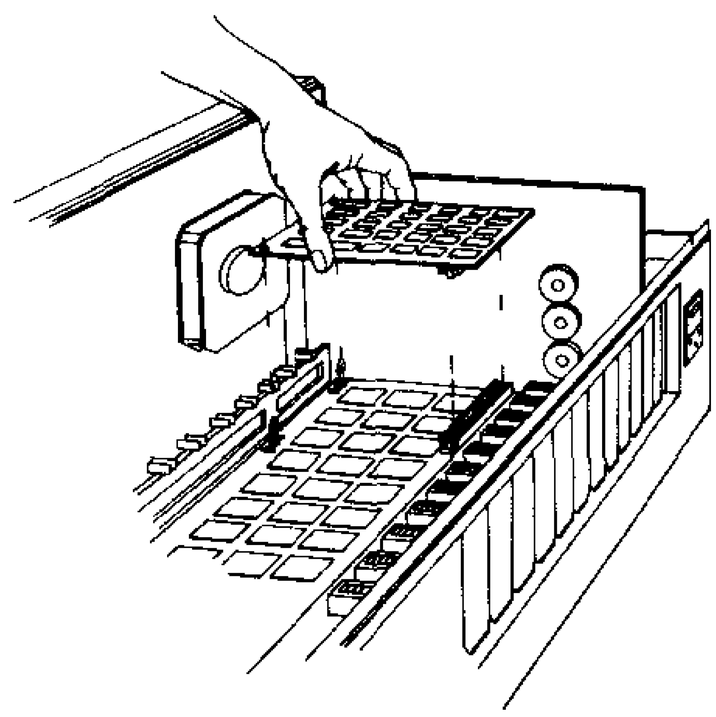

Introduction Use this procedure to remove the bus PCB from the central module.

Procedure: **Bus PCB Removal**

1. Remove all workstation PCB's from the central module.

2. Loosen the five Phillips screws which fasten the two red +5VDC leads and the three black ground leads to the front edge of the bus PCB.

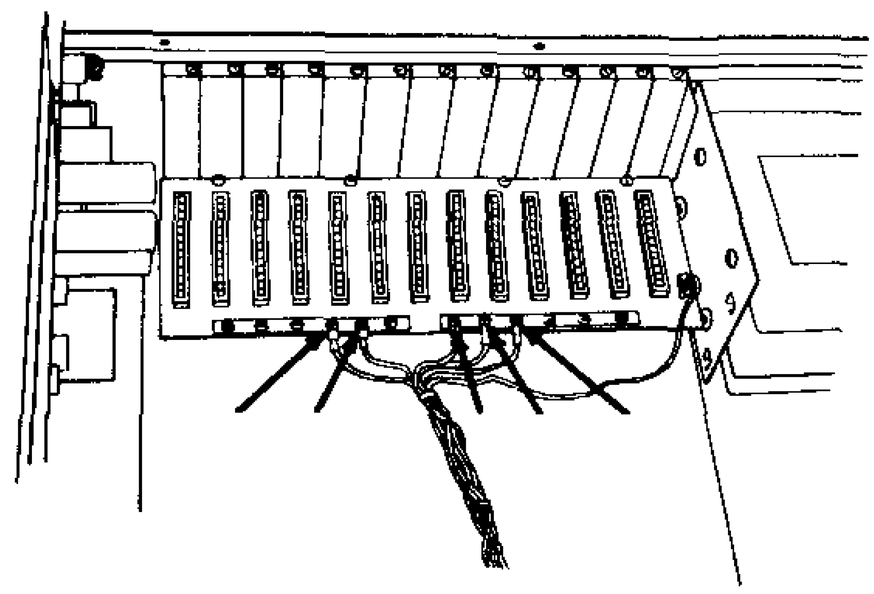

3. Disconnect the +5VDC and ground leads from the bus PCB.

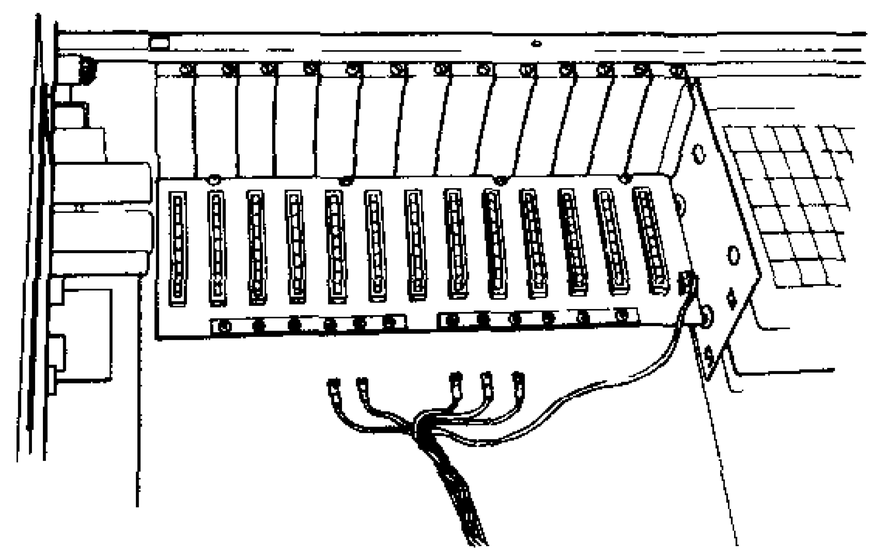

4. Unplug the yellow +12VDC lead from the right edge of the bus PCB.

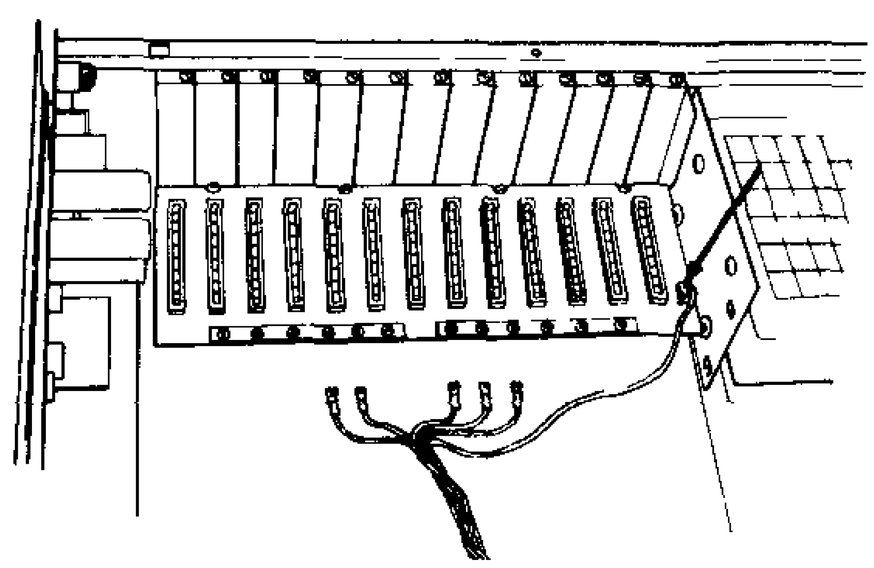

--->

Procedure: Bus PCB Removal

5. Remove the four Phillips screws from the rear edge of the bus PCB.

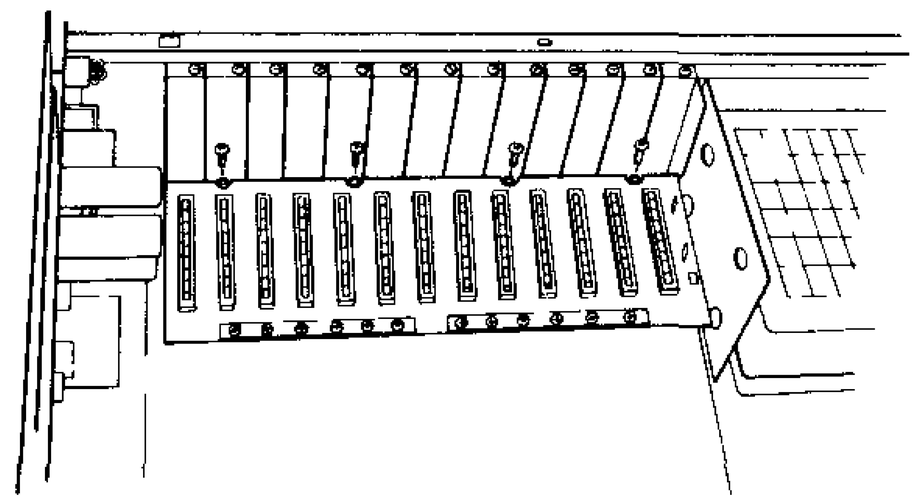

6. While lifting the front edge of the bus PCB, squeeze the flanges of the three nylon standoffs which fasten the front edge of the bus PCB to the central PCB.

   Lift the bus PCB from its socket on the central PCB socket, and continue lifting until the two circuit boards are separated.

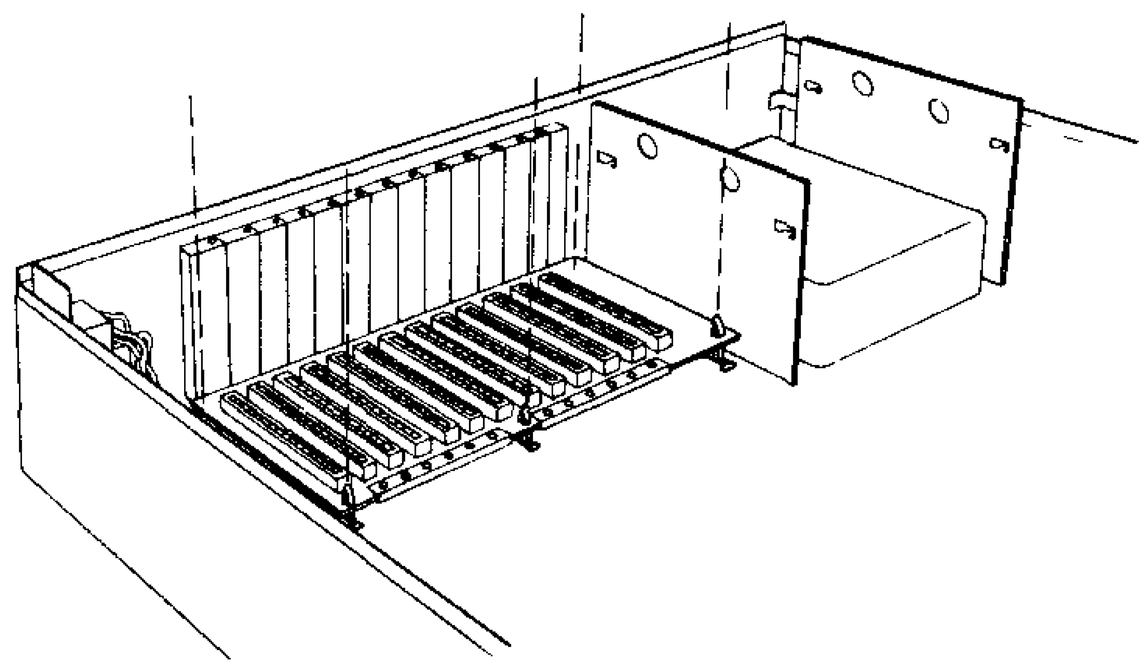

Introduction Use this procedure to remove the central PCB from the central module.

Note: Read the final subsection of this chapter (Installing a New Central PCB) before re-installing the central PCB. This circuit board may be damaged easily if you do not exercise care during replacement.

Procedure: Central PCB Removal

1. Remove all workstation PCB's from the central module.

2. Remove the bus PCB from the central module.

3. Remove the five plugs which are fastened to the front edge of the central PCB.

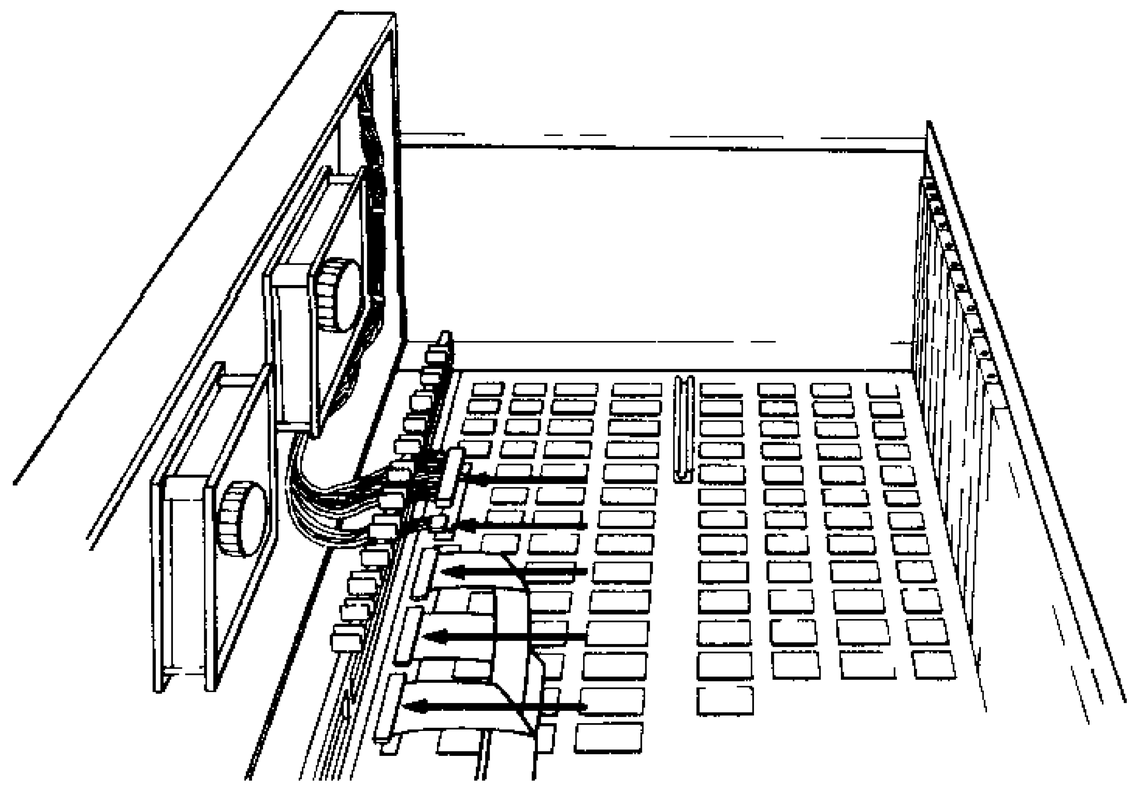

4. Remove the two Phillips screws which fasten the rear edge of the central PCB to the rear panel of the central module.

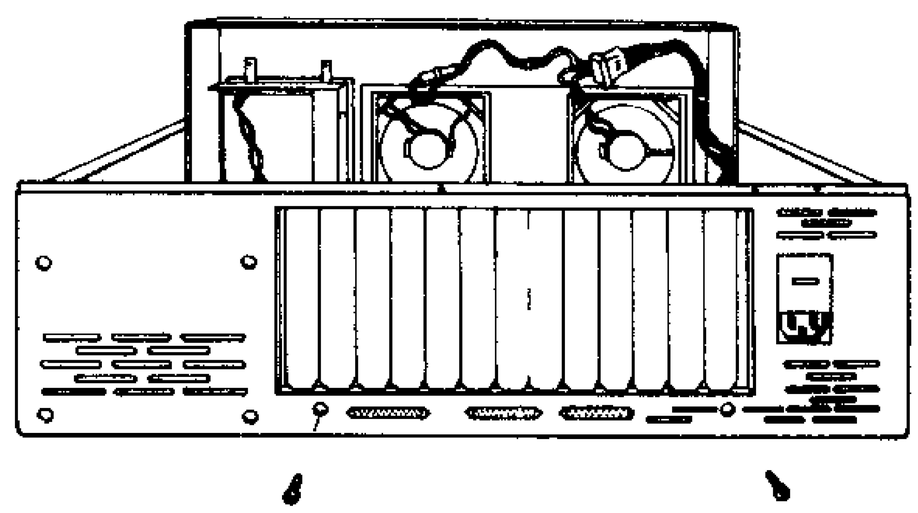

---->>

Procedure: Central PCB Removal

5. While lifting at a spot near each standoff, squeeze the flanges of the five nylon standoffs which fasten the central PCB to the base of the central module.

   Note: After the central PCB has been disconnected from all of the standoffs, slide the circuit board toward the front of the central module until the rear edge of the circuit board clears the rear panel of the central module.

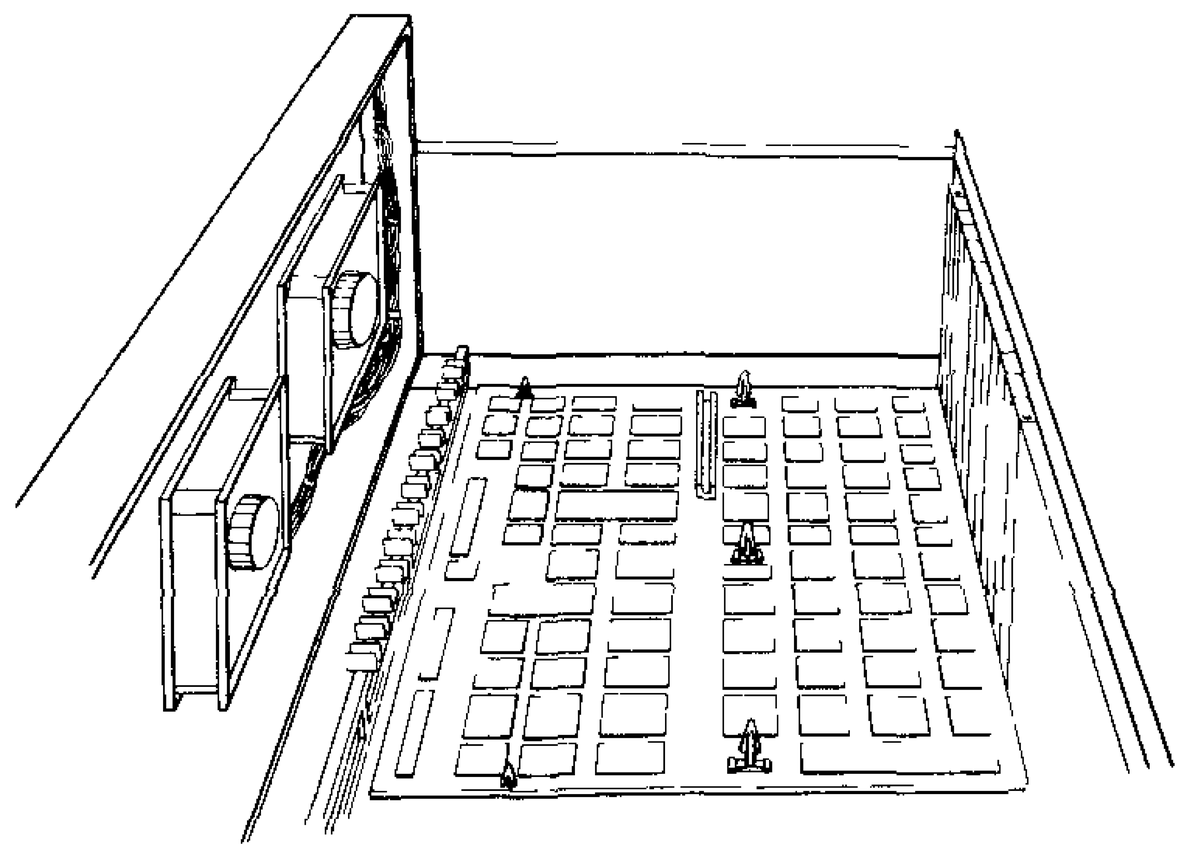

6. Lift the central PCB straight up to remove it from the central module.

   Note: There may be jumper wires soldered to the underside of the circuit board. When lifting the PCB, look carefully and make certain that no wires are catching on nylon standoffs, screw heads, cabinet protrusions, etc.

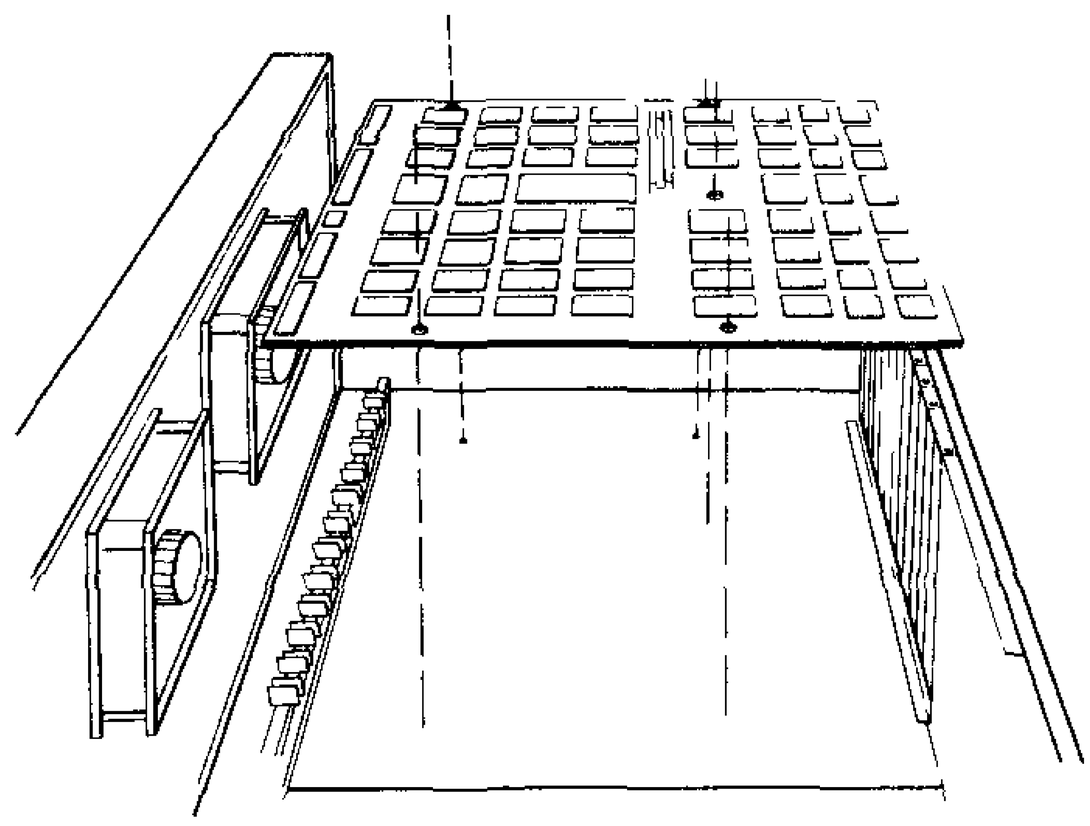

Introduction Use the following procedure to remove the diskette drive from the central module.

In order to remove the diskette drive, first remove the drive mount bracket in which the drive is mounted.

Procedure: **Diskette Drive Removal**

1. Loosen the four Phillips screws which fasten the drive mount bracket to the base panel of the central module.

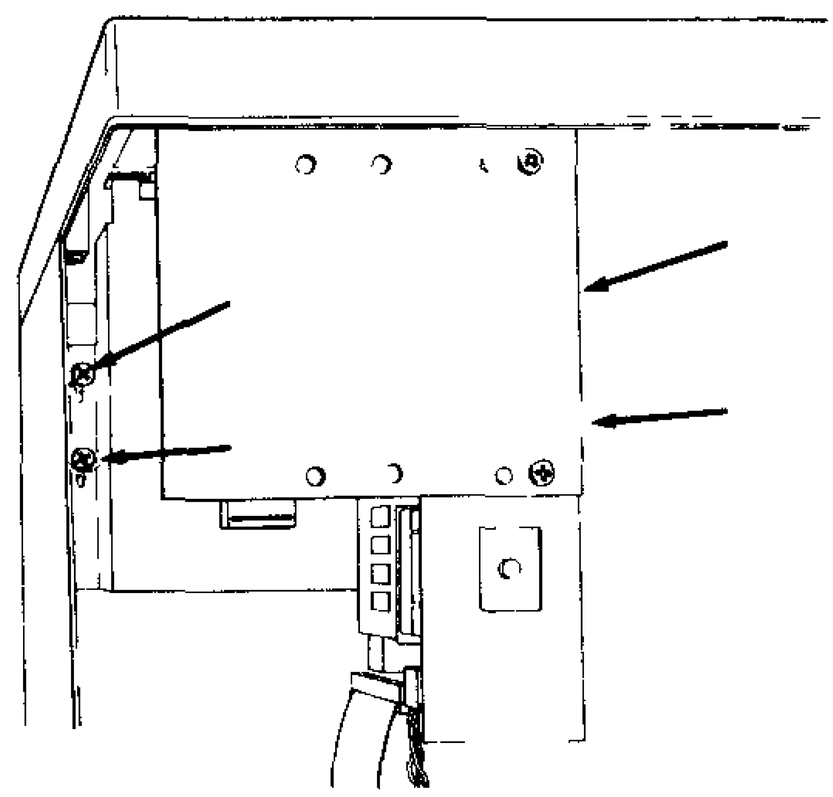

2. Disconnect the DC power and signal harnesses from the rear edges of the tape back-up and diskette drives.

   Note: If there are spare DC power harnesses tie-wrapped to the bracket, cut the tie wrap.

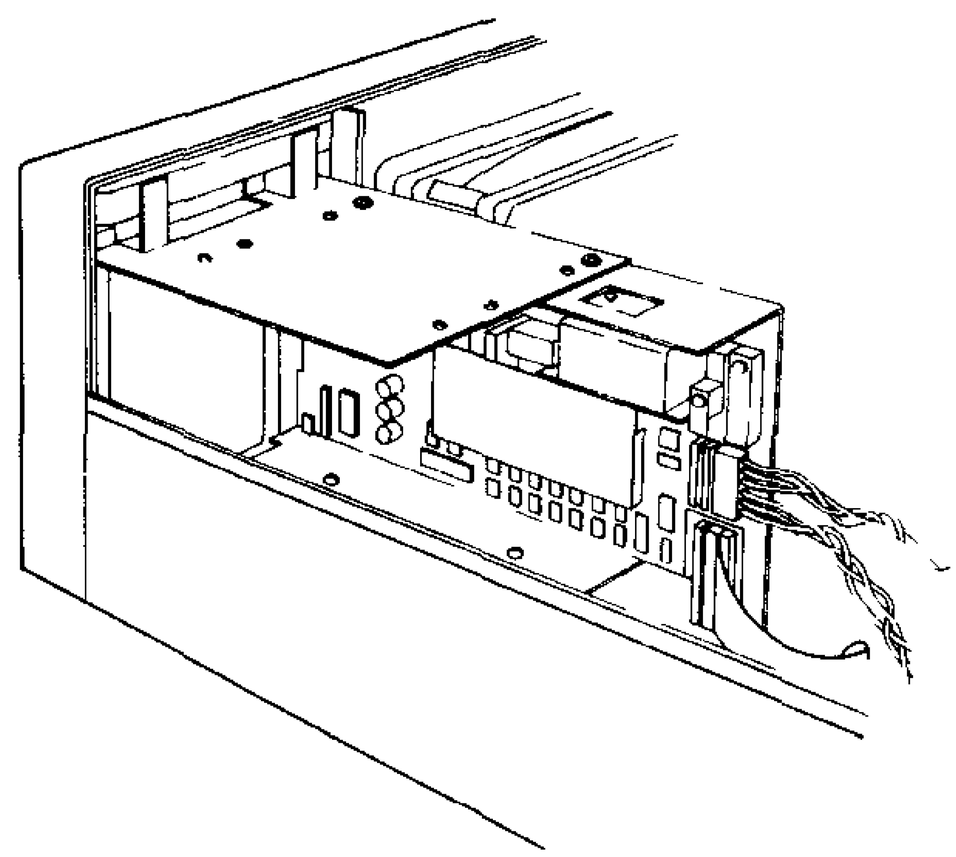

---->>

Procedure: Diskette Drive Removal

3. Slide the drive mount bracket toward the rear of the central module, and lift the bracket straight out of the central module.

4. Bow the front panel mask and remove it from beneath the diskette drive bezel (and tape back-up drive bezel, if one is installed).

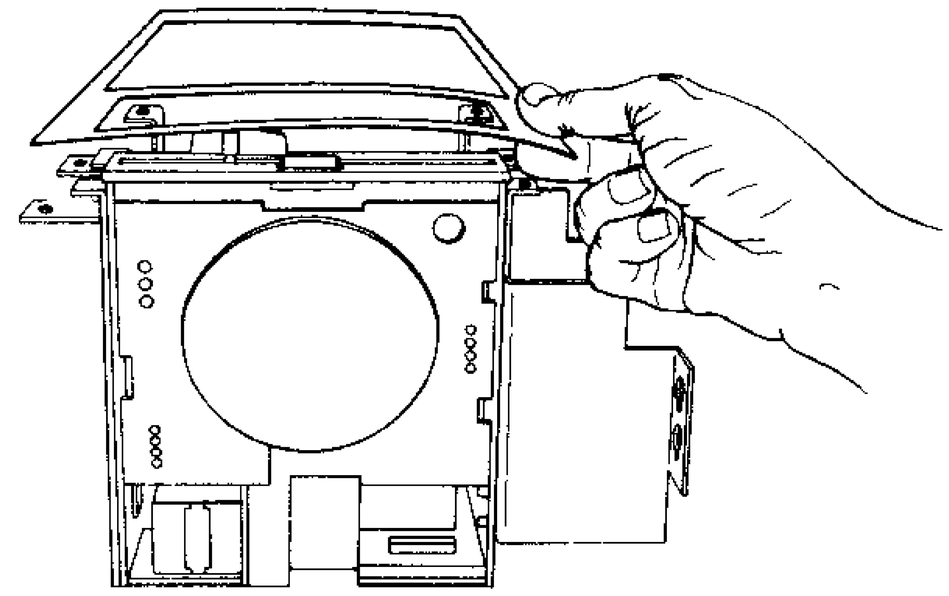

5. Remove the four Phillips screws which fasten the diskette drive to the drive mount bracket.

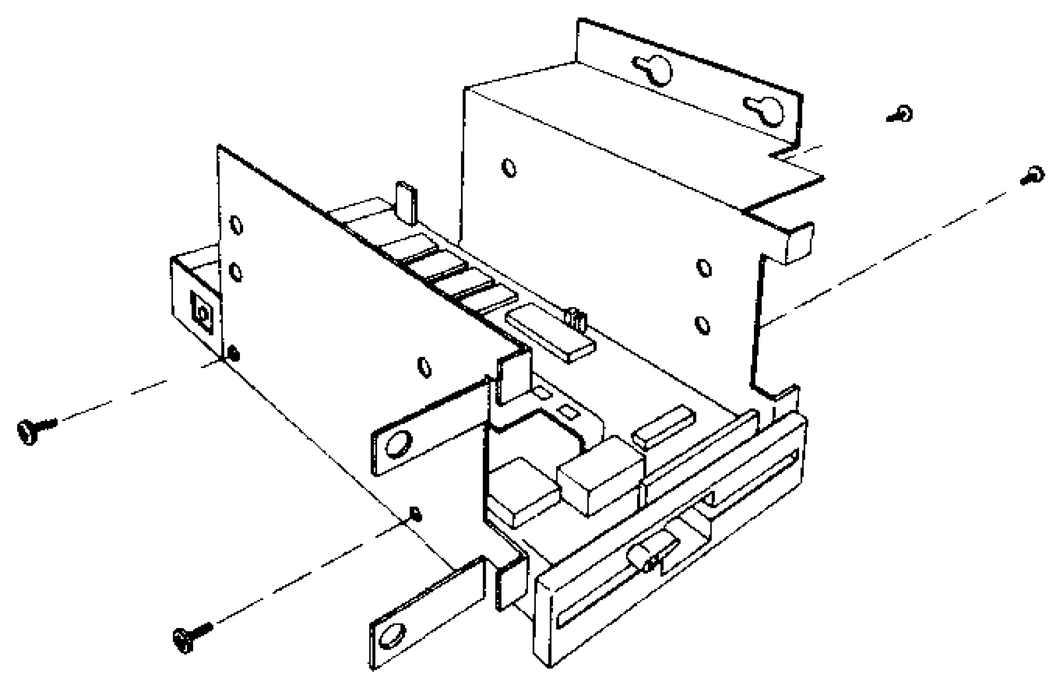

6. Remove the diskette drive from the drive mount bracket.

Introduction Use this procedure to remove fixed disk drives from the central module.

In order to remove the fixed disk drives, first remove the drive mount bracket in which the drives are mounted.

Procedure: **Fixed Disk Drive Removal**

1. Remove the four Phillips screws which fasten the rear panel of the drive mount bracket to the rear panel of the central module.

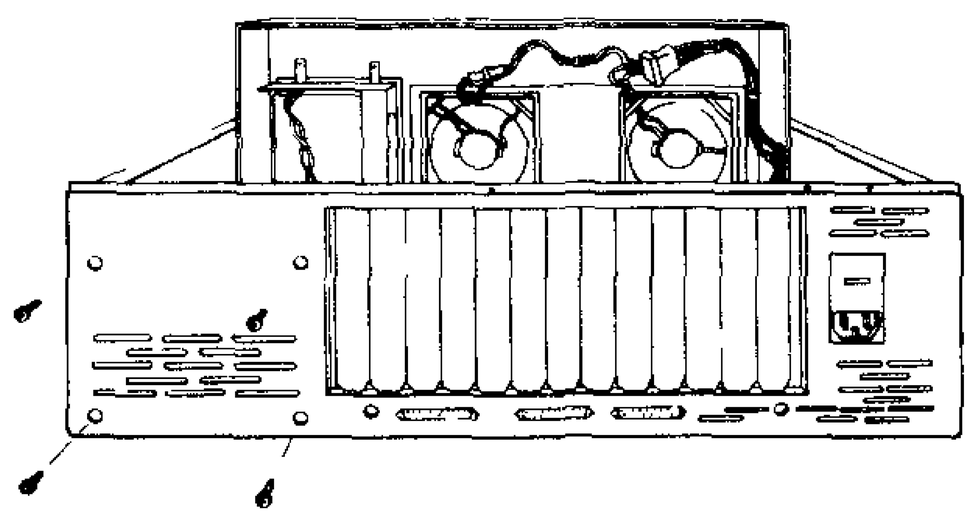

2. Disconnect the DC power, signal and control harnesses from the rear of the fixed disk drive.

   Note: If there is a spare DC power harness tie-wrapped to the drive mount bracket, cut the tie wrap.

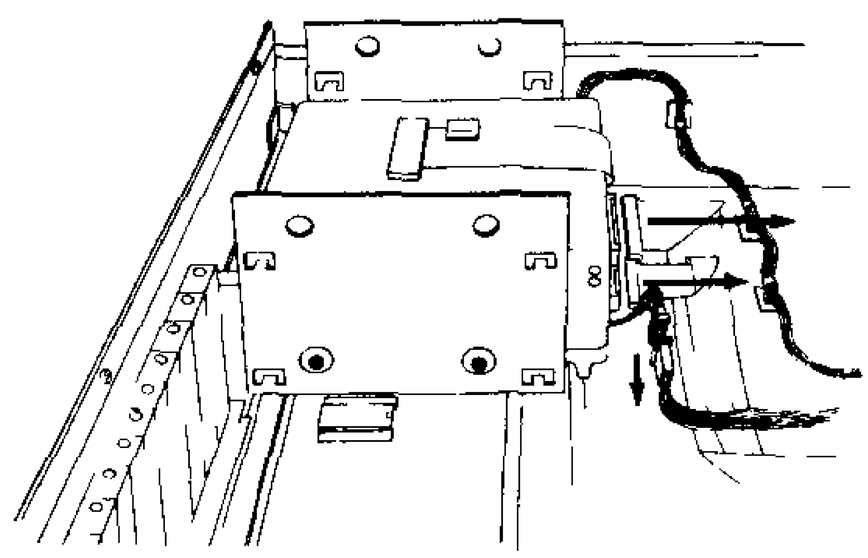

---->>

Procedure: Fixed Disk Drive Removal

3. Slide the drive mount bracket toward the front of the central module to disconnect the bracket from the central module base panel.

   Lift the drive mount bracket up and out of the central module.

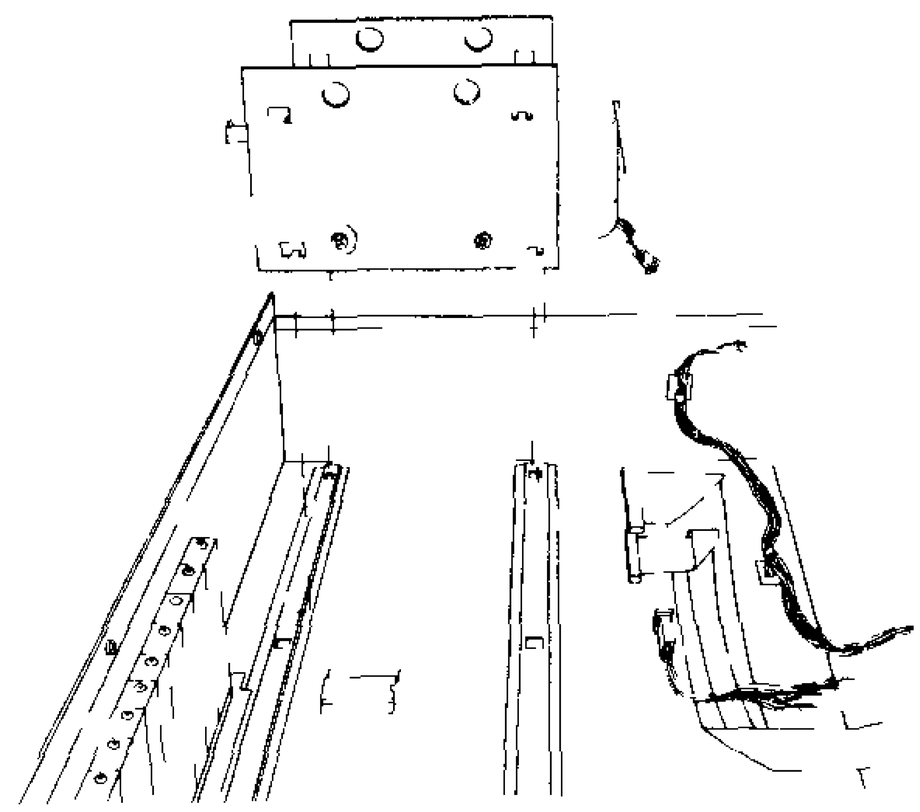

4. Remove the four Phillips screws which fasten the fixed disk drive to the drive mount bracket.

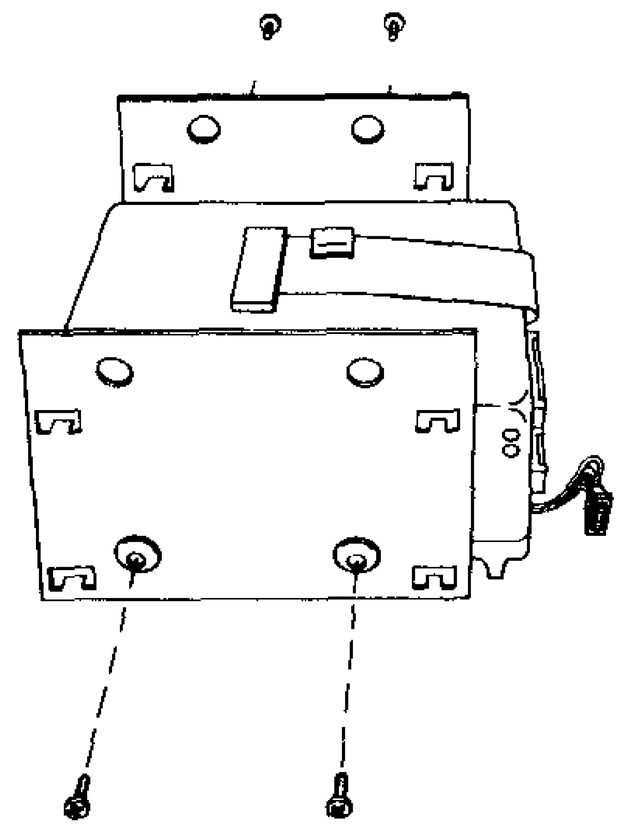

5. Remove the fixed disk drive from the drive mount bracket.

Introduction The central PCB is more difficult to replace than other circuit boards because its replacement involves more than a simple reversal of the removal procedure. Follow the steps below, and do not attempt to replace the PCB before reading through the entire procedure.

Procedure: **Installing a New Central PCB**

1. Check and replace any defective nylon standoffs used to support and attach the new central PCB to the central module base. Be certain all five standoffs are completely seated and biased toward the rear of the central module.

2. Check and replace any defective nylon standoffs used to support and attach the bus and central RAM expansion PCB's to the central PCB.

3. Hold the new central PCB near its final assembly position, and elevate the front edge of the circuit board. Slide the board toward the rear of the central module, and fit the printer ports through the appropriate slots in the central module rear panel.

4. After biasing the circuit board against the central module rear panel, gently press the PCB onto the nylon standoffs.

   Note: Do not allow to PCB to slide forward after you have seated it.

5. While continuing to press the PCB against the central module rear panel, insert the two screws through the rear panel into the circuit board.

---->

Procedure: Installing a New Central PCB

6. Attach the diskette drive and fixed disk drive signal and control cables to the front edge connectors of the central PCB.

   Note: The diskette cable connector is located nearest the drive mount brackets. The signal and control cable red leads are located nearest the power supply assembly.

7. Remove the workstation PCB support rail from the old central PCB by lifting it straight up while working it from side-to-side. Install this support rail by positioning it over the new PCB, pressing down and firmly snapping it in place.

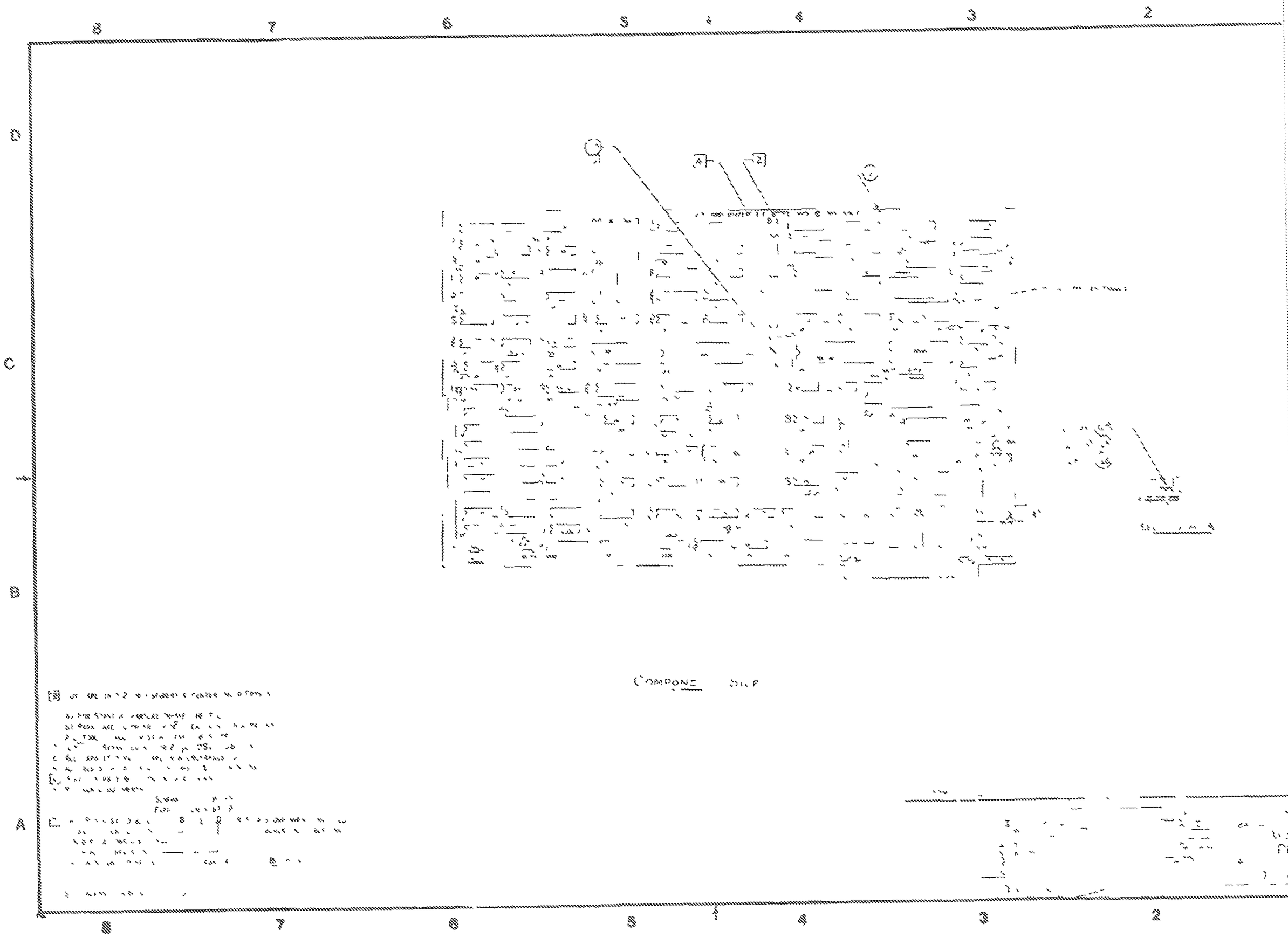
COMPONENT SIDE

MAJOR SUBASSEMBLY PARTS LISTS

Introduction This appendix contains lists of parts and part numbers used in the DIMENSION computer. The lists are divided by subassembly and include assembly drawings which show the location of each part.

ITEM	PART #	DESCRIPTION	REFERENCE
1	03471	Assembly, PCB, Workstation, DIMENSION	D03471
3	03469	Schematic, Workstation PCB	D03469
5	03470	FAB-A/W, Workstation PCB	D03470
6	00947-35	SPEC-A/W, Label, PCB S/N "DIMENSION Workstation"	00947-xx
10	01016	Capacitor, 470 pF	C4
11	01020	Capacitor, .01uF	C3
13	01131	Capacitor, 1.0uF, 10%, Axial, Tantalum	C5-C12
15	01135	Capacitor, 18pF, 5%, Ceramic	C1, C2
17	01179	Capacitor, .1uF, 25/50V, Ceramic, 0.170" * Bypass	
21	15008	Crystal, 3.6864MHz.	Y1
25	19008	Delay Line, 75ns, DIP, 14 Pin	U46
27	43105	IC, 74LS10	U84
28	43002	IC, 74LS02	U43
29	43012	IC, 74LS32	U22
33	43001	IC, 74LS00	U53, U99
34	43006	IC, 74LS08	U112
35	43020	IC, 74LS136	U127
36	43021	IC, 74LS138	U4
37	43024	IC, 74LS151	U129
38	43027	IC, 74LS161	U15, U76
39	43028	IC, 74LS164	U88
40	43029	IC, 74LS169/669	U89
41	43031	IC, 74LS175	U28
42	43039	IC, 74LS273	U6, U29, U39, U115
43	43041	IC, 74LS352	U131

ITEM	PART #	DESCRIPTION	REFERENCE
44	43043	IC, 74LS373	U85, U87, U126
45	43044	IC, 74LS393	U21, U74, U135
46	43070	IC, MC1488	U132
47	43077	IC, 6301-1, Bipolar PROM	U23
48	43106	IC, 74LS20	U124
49	43112	IC, 74LS244	U47, U86, U100, U104, U105, U141
51	43116	IC, 74LS670	U19, U33, U42, U51
52	43146	IC, 74LS166	U1, U11, U12, U24, U56
53	43150	IC, 26LS32, Quad Line Receiver	U106
54	43151	IC, 74LS193	U48
55	43163	IC, 74LS257A	U10, U20
56	43169	IC, 74LS86	U52
57	43170	IC, 74LS245	U17, U31, U70
58	43177	IC, 8088-2, HMOS Microprocessor	U75
59	43179	IC, 74LS155	U130
60	43185	IC, 74LS74A	U27, U37, U114
61	43189	IC, DRAM, 64K x 1, 150ns	U77-U79, U90, U91, U93, U94, U101, U102, U107, U108, U116-U121, U133, U134
66	43025	IC, 74LS157	U7

ITEM	PART #	DESCRIPTION	REFERENCE
68	43192	IC, 74F153	U16, U30, U40, U49, U96, U110, U111, U122, U137
70	43194	IC, 2681, DUART, Interface	U60
71	43196	IC, 74F08	U66, U113
72	43204	IC, 74F00	U8, U14, U25, U125, U140
73	43207	IC, 74F138	U72
74	43208	IC, 74F280	U80
75	43210	IC, 74F74	U2, U13, U56, U64, U138, U139
76	43211	IC, 74F109	U55, U98
77	43213	IC, 74F10	U82
78	43214	IC, 74F02	U26, U57, U65, U73, U83
79	43215	IC, 8254	U58
80	43216	IC, 68845 Microprocessor Peripheral, CRT Controller, 2MHz	U5
81	43220	IC, 74S436	U67-U69
82	43222	IC, 74F32	U38
83	43223	IC, DRAM, 16K x 4, 150ns, 4416	U18, U32, U41, U50, U92, U95, U103, U109
85	43224	IC, 2764, 61K (8K x 8), 250ns	U34
86	43225	IC, Driver, Octal, Integral Resistor, 2965	U136
87	43229	IC, 74LS15	U128
88	43230	IC, 74F174	U71
89	43231	IC, 74F175	U63
90	43232	IC, 74F139	U9, U81
91	43233	IC, 74F194	U3, U44
92	43234	IC, 74LS195A	U123

ITEM	PART #	DESCRIPTION	REFERENCE
93	43235	IC, 74LS379	U35
94	43236	IC, 74LS390	U45
95	43237	IC, 74LS399	U54
96	43241	IC, 8255A-5	U59
97	43242	IC, 8259A	U61
98	43245	IC, 25LS2538	U97
99	43246	IC, 74LS221	U62
101	61002	Resistor Network, 1K Ohm, 10 Pin, SIP	RN3
103	61078	Resistor Network, 1K Ohm, 8 Pin, SIP	RN1, RN2, RN4, RN5, RN9, RN10
105	61006	Resistor Network, 4.7K Ohm, 10 Pin, SIP	RN7, RN8
106	61135	Resistor Network, 100 Ohm, 8 Pin, SIP	RN6
107	61010	Resistor, 22 Ohm, 1/4W, 5%	R16
108	61011	Resistor, 100 Ohm, 1/4W, 5%, Carbon Film	R4, R15, R30, R31
110	61032	Resistor, 27K Ohm, 1/4W, 5%	R5
111	61049	Resistor, 16.9K Ohm, 1/4W, 1%	R9, R20, R21
112	61093	Resistor, 1.8K Ohm, 1/4W, 5%, Carbon Film	R1
116	65012	Transistor, 2N3904	Q1
120	68028	Switch, Thumbwheel	S1
121	38065-04	Washer, Flat, #4	P1 MTG (2)
122	38085-04	Nut, Hex, #4-40 w/lockwasher	P1 MTG
123	38087-06	Screw, Machine, Phillips, XREC	P1 MTG (2)
125	13028	Socket, IC, 16 Pin	U23
128	13034	Socket, IC, 28 Pin	U34
129	13036	Socket, IC, 40 Pin	U75
130	38147	Tape, Double-coated	For Y1
133	13111	Connector, Female, Right-angle, 15 Position, w/cap nut	P1

NORTH STAR

ITEM	PART #	DESCRIPTION	REFERENCE
138	13172	Connector, PCB, Female, 17 Pin, .1 CTR	J1, J2
141	61018	Resistor, 1K Ohm, 1/4W, 5%	R11, R12, R29, R32
143	61024	Resistor, 4.7K Ohm, 1/4W, 5%	R13, R17
145	61028	Resistor, 10K Ohm, 1/4W, 5%	R18, R19
146	61055	Resistor, 120 Ohm, 1/4W, 5%	R24
147	61086	Resistor, 0 Ohm, 1/4W, 5%	R2, R7, R8, R10, R22, R23, R25-R28
148	61134	Resistor, 75 Ohm, 1/4W, 5%	R3
149	61132	Resistor, 150 Ohm, 1/4W, 5%	R6
150	61133	Resistor, 390 Ohm, 1/4W, 5%	R14

ITEM	PART #	DESCRIPTION	REFERENCE
1	03320	Assembly, PCB, Central, DIMENSION	D03320
3	03318	Schematic, PCB, Central	D03318
5	03319	FAB-A/W, PCB, Central	D03319
7	03429	SPEC-CONT, I.C., Gate Array	U95
11	01138	Capacitor, 33pF, 50V, 5%, Ceramic	C28
12	01070	Capacitor, .1uF, 50V, Ceramic	* Bypass, C24, C25, C34
13	01071	Capacitor, 150pF, 100V, 10%, Ceramic	C23
14	01075	Capacitor, 330pF, 100V, 10%, Ceramic	C27, C29
15	01077	Capacitor, 470pF, 100V, 10%, Ceramic	C7-C12
17	01091	Capacitor, .0068uF, 100V, 10%, Ceramic	C26
18	01093	Capacitor, .01uF, 50V, 10%, Ceramic	C4
21	01131	Capacitor, 1.0uF, 20V, ±10%, Axial Tantalum	C13-C15, C18-C20, C30-C33, C35
23	01135	Capacitor, 18pF, 50V, 5%, Ceramic	C1, C2, C16, C17
24	01137	Capacitor, 27pF, 50V, 5%, Ceramic	C22
25	01144	Capacitor, 100pF, 50V, 5%, Ceramic	C5, C6
30	19005	Delay Line, 100ns	U96
31	19009	Delay Line, 60ns	U99
33	43001	IC, 74LS00	U37, U39, U98, U121, U122, U169
34	43002	IC, 74LS02	U54, U88

ITEM	PART #	DESCRIPTION	REFERENCE
35	43004	IC, 74LS04	U4, U36, U40, U75, U168, U181
36	43005	IC, 74LS05	U93
37	43006	IC, 74LS08	U53, U89, U148
38	43007	IC, 74LS11	U11, U68, U76
39	43009	IC, 74LS14	U167
40	43011	IC, 74LS30	U38
41	43012	IC, 74LS32	U44, U58, U104, U166, U183, U184
42	43017	IC, 74LS109	U30, U69
43	43021	IC, 74LS138	U5, U43, U70, U72, U77, U145
44	43024	IC, 74LS151	U33, U34, U119, U141, U149
45	43027	IC, 74LS161	U126
46	43030	IC, 74LS174	U106, U120, U150
47	43031	IC, 74LS175	U164
48	43036	IC, 74LS258A	U55, U63, U64, U73, U84
49	43038	IC, 74LS259	U41, U42, U59
50	43039	IC, 74LS273	U142, U146
51	43043	IC, 74LS373	U20, U28, U29, U35, U51
52	43044	IC, 74LS393	U61, U82, U83, U124
53	43059	IC, 7438	U185, U186
54	43070	IC, 1488	U13, U16
55	43071	IC, 1489	U12, U14, U17

ITEM	PART #	DESCRIPTION	REFERENCE
56	43105	IC, 74LS10	U9, U57, U105
57	43106	IC, 74LS20	U10, U56
58	43112	IC, 74LS244	U18, U62, U45-U47, U163
59	43113	IC, 74LS153	U15
60	43117	IC, 74S04	U161
61	43134	IC, 74LS125	U165
64	43154	IC, 26LS31	U162
65	43165	IC, 6116, 200ns	U101
67	43170	IC, 74LS245	U8, U19, U22-U23, U25-U27, U85, U102
68	43176	IC, 8274	U31
69	43180	IC, 75175	U179
70	43185	IC, 74LS74	U2, U123, U125
71	43164	IC, 4164, 200ns	U108-U116, U127-U135, U151-U159, U170-U178
73	43193	IC, 74F240	U90, U91, U94
74	43195	IC, 7406	U180, U182
75	43196	IC, 74F08	U79, U136
77	43204	IC, 74F00	U92, U138
78	43206	IC, 74F11	U81, U97
79	43207	IC, 74F138	U65, U71, U103
80	43208	IC, 74F280	U66, U67
81	43210	IC, 74F74	U118
82	43211	IC, 74F109	U32, U117
83	43212	IC, 74F04	U80, U137
84	43215	IC, 8254	U100

ITEM	PART #	DESCRIPTION	REFERENCE
85	43217	IC, 186, 6MHz	U52
86	43218	IC, MC146818	U7
88	43221	IC, 74HC10	U6
89	43222	IC, 74F32	U78
91	43238	IC, uPD765A	U147
92	43239	IC, WD1010-05	U143
93	43240	IC, 74LS629	U160
95	43243	IC, CD4007	U1
96	43244	IC, 74LS240	U21, U144
97	43250	IC, 74F244	U48
98	43050	IC, 74S74	U139
101	61001	Resistor Network, 22 Ohm, 16 Pin, DIP	RN3-RN5, RN7, RN9
102	61002	Resistor Network, 1K Ohm, 10 Pin, SIP	RN6, RN8
103	61006	Resistor Network, 4.7K Ohm, 10 Pin, SIP	RN2
104	61010	Resistor, 22 Ohm, 1/4W, 5%, CF	R31-R34
105	61011	Resistor, 100 Ohm, 1/4W, 5%, CF	R4, R11, R59, R64, R67, R69, R74, R81, R86, R87
107	61014	Resistor, 330 Ohm, 1/4W, 5%, CF	R15, R16, R61, R82
108	61015	Resistor, 470 Ohm, 1/4W, 5%, CF	R66, R68, R70, R77, R78
109	61017	Resistor, 680 Ohm, 1/4W, 5%, CF	R60
110	61018	Resistor, 1K Ohm, 1/4W, 5%, CF	R19, R25, R28, R35, R51-R53, R65, R75, R76, R79, R80, R88, R89
111	61019	Resistor, 1.2K Ohm, 1/4W, 5%, CF	R48, R49, R50
112	61021	Resistor, 3.3K Ohm, 1/4W, 5%, CF	R5, R14

ITEM	PART #	DESCRIPTION	REFERENCE
113	61024	Resistor, 4.7K Ohm, 1/4W, 5%, CF	R18, R23, R24, R26, R27, R29, R30, R71, R36-R47, R84, R85
114	61028	Resistor, 10K Ohm, 1/4W, 5%, CF	R7-R10, R12, R17, R20-R22
117	61052	Resistor Network, 220/330 Ohm, 8 Pin, SIP	RN10-RN12
118	61053	Resistor, 10 Ohm, 1/4W, 5%, CF	R55
119	61073	Resistor, 470K Ohm, 1/4W, 5%, CF	R1
122	61085	Resistor, 5K Ohm, Potentiometer	R83
123	61091	Resistor, 619 Ohm, 1/8W, 1%, MF	R62, R63
124	61092	Resistor, 10K Ohm, 1/4W, 1%, MF	R58
125	61094	Resistor, 13.3K Ohm, 1/8W, 1%, MF	R56
126	61114	Resistor, 100K Ohm, 1/8W, 1%, MF	R3, R6, R13
128	61127	Resistor Network, 10K Ohm, 10 Pin, SIP	RN1
130	61129	Resistor, 22 MegOhm	R2
133	65002	Regulator, LM340T-5	VR1
135	65006	Regulator, 79L05	VR2
137	65009	Diode, 1N4148	CR1-CR7
140	15004	Crystal, 10MHz	Y3
141	15005	Crystal, 32.768KHz	Y1
142	15009	Oscillator, 14.31818MHz	U60
143	15011	Oscillator, 8MHz	U87
144	15012	Crystal, 12MHz	Y2

ITEM	PART #	DESCRIPTION	REFERENCE
151	13010	Connector, 34 Pin (.100 x 100 Matrix)	J13, J14
152	13087	Housing--"Mini-jumper"	W1-W4, W8, W9
153	13092-01	Header, Single-row, 1 Position	T1-T27
154	13092-02	Header, Single-row, 2 Position	W1, W6, W7
155	13092-03	Header, Single-row, 3 Position	W2-W4, W8, W9
158	13093-10	Header, Double-row, 10 Position	J11
159	13103	Connector, 20 Pin, Right-angle	J12
161	13193	Connector, 25 Pin, Right-angle, D Type, Female	J1, J2
163	13156	Header, 12 Pin, Right-angle	J9
164	13159	Connector, 64 Pin, Male, DIN	J6, J7
165	13164	Header, 3 Pin, Right-angle	J10
166	13192	Connector, 25 Pin, Right-angle, D Type, Male	J3
169	13034	Socket, IC, 28 Pin	For U49, U50
170	13154	Socket, IC, 68 Pin	For U52
171	13155	Socket, IC, 48 Pin	For U95
175	75001	Battery, 3.6V, NICAD	
178	38147	Tape, Double-stick	For Y2, Y3
179	38152	Standoff, PCB, 5/8", Nylon	RAM Expan. PCB
181	38143	Standoff, PCB, 1", Nylon	Bus Expan. PCB
183	03585	Assembly, DIMENSION Central PLL PROM	U107
184	03584-1	Source Listing, PLL PROM	

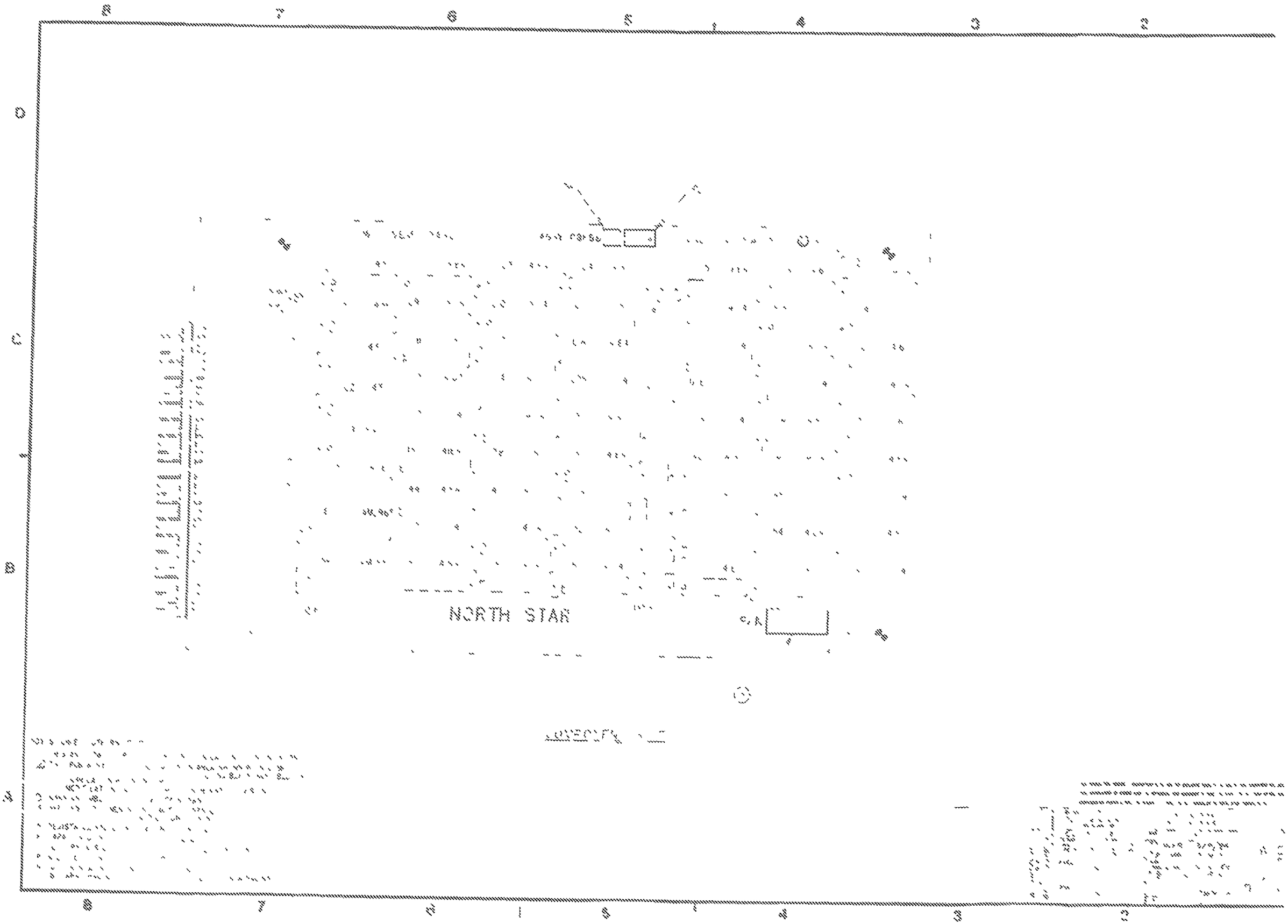
NORTH STAR

ITEM	PART #	DESCRIPTION	REFERENCE
1	03558	Workstation Memory Assembly	D03556
2	03556	Schematic	D03556
3	03557	Fabrication	D03557
5	00947-36	STSC-A'W, Label, "W/S MEM 128K"	A and B 00947-xx
11	01179	Capacitor, 0.1uF, 25/50V, Ceramic, Axial	* Bypass
12	01131	Capacitor, 1.0uF, 20V, 20%, Axial	C1, C3
16	13171	Connector, PCB, Male, 17 Position, .1 Ctr	P1, P2
18	43169	IC, DRAM, 64K x 1, 150ns	U2, U3, U9, U10, U16, U17, U23, U24, U30, U31, U37, U38, U44, U45, U50, U51, U57, U58
24	43225	IC, AM2965	U43
26	43220	IC, 8436	U1, U8
29	61015	Resistor, 18 Ohm, 1, 4W, 5%	R2

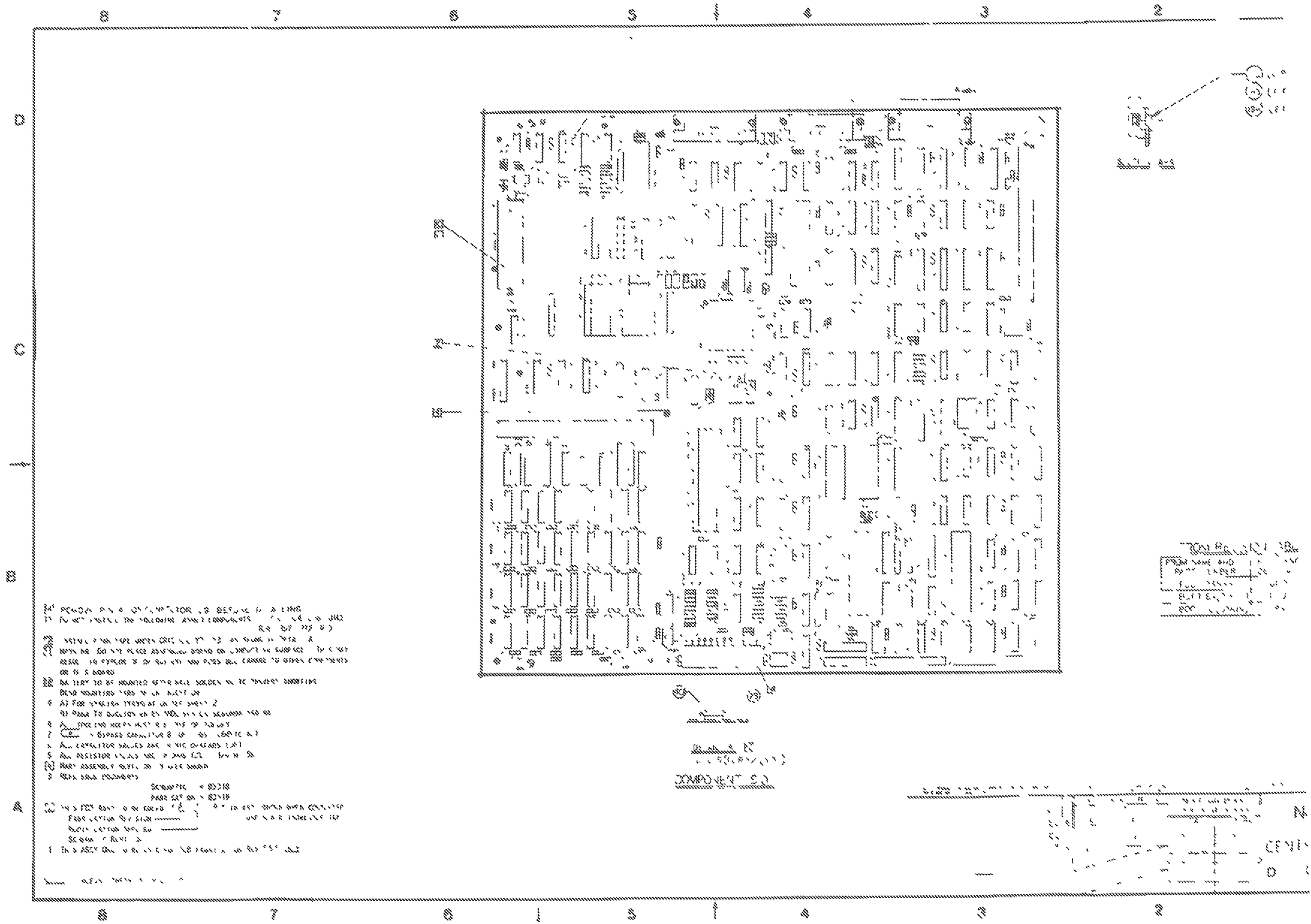

ITEM	PART #	DESCRIPTION	REFERENCE
1	03558	Workstation Memory Assembly	D03558
2	03556	Schematic	D03556
3	03557	Fabrication	D03557
5	00947-3?	SPEC-A/W, Label, "W/S MEM 384R"	A and B 00947-xx
11	01179	Capacitor, 0.1uF, 25/50V, Ceramic, Axial	* Bypass
12	01132	Capacitor, 1.0uF, 20V, 30%, Axial	C1-C4
16	13171	Connector, PCB, Male, 17 Position, .1 Ctr	P1, P2
18	43189	IC, DRAM, 64K x 1, 150ns	U2-U7, U9-U14, U16-U21, U23-U28, U30-U35, U37-U42, U44-U49, U50-U55, U57-U62
24	43225	IC, AM2981	U43, U56
26	43220	IC, S438	U1, U8, U15, U22, U29, U36
28	61U56	Resistor, 0 Ohm, 1/8W, 5%	R1
29	61U18	Resistor, 1K Ohms, 1/8W, 5%	R2

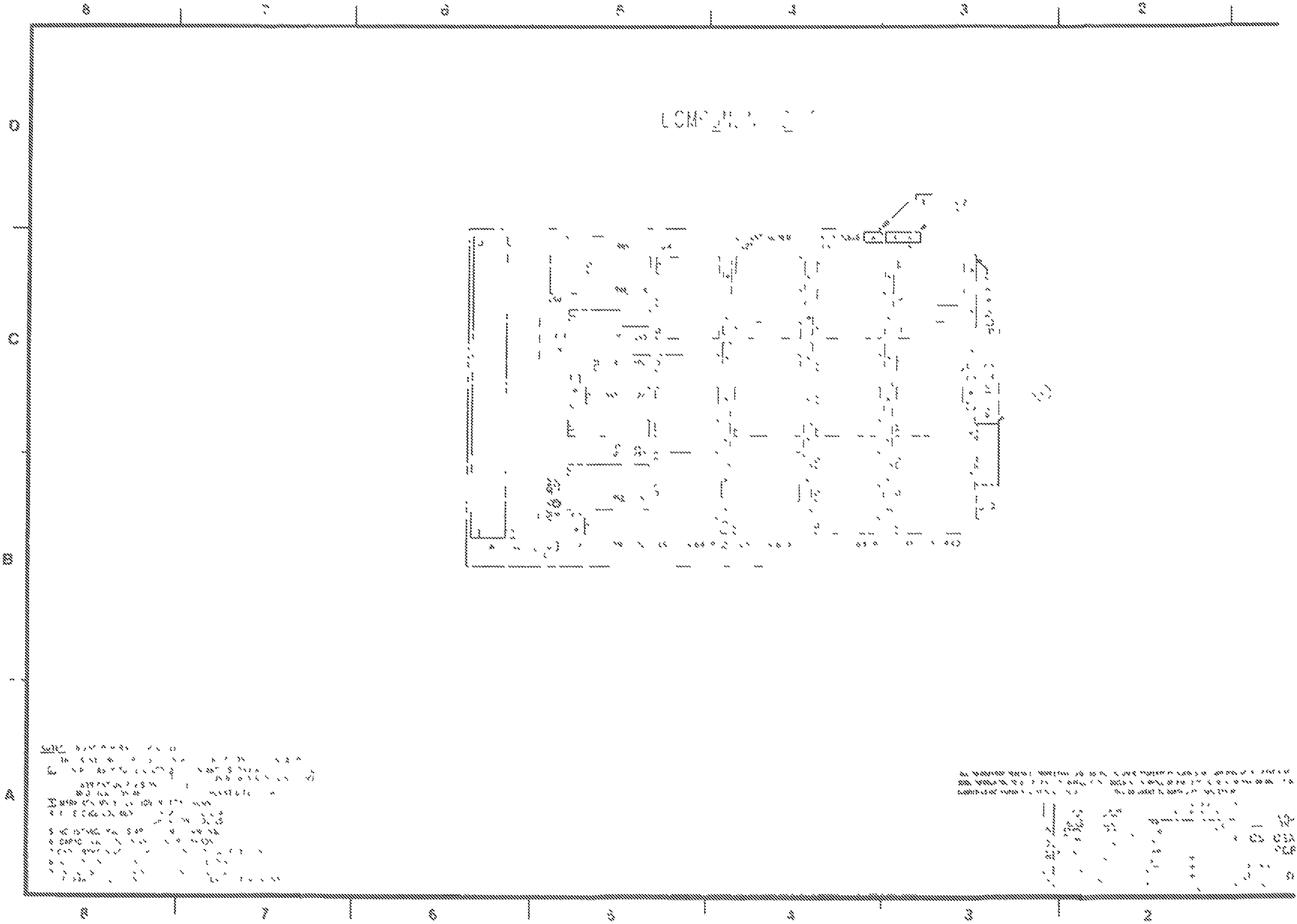

ITEM	PART #	DESCRIPTION	REFERENCE
186	03617	Assembly, DIMENSION Central Boot PROM--Even	U50
187	03619	Assembly, DIMENSION Central Boot PROM--Odd	U49
188	03616	Source Listing, DIMENSION Central Boot PROM	
190	00947-32	SPEC-A/W, PCB Serial Number Label	
192	38065-04	Washer, Flat, #4-40	J1-J3, 2 each
193	38085-04	Nut, SEP, #4-40	J1-J3, 2 each
194	38037-06	Screw, Machine, Phillips, XPEC, #4-40, 3/8"	J1-J3, 2 each

ITEM	PART #	DESCRIPTION	REFERENCE
1	02826	DIMENSION Central RAM Expansion PCB Assy	C02826
3	02824	Schematic, PCB, Central RAM Expansion	D02824
5	02825	FAB-A/W, PCB, Central RAM Expansion	D02325
9	01070	Capacitor, 0.1uF, 50V, Axial, Ceramic	* Bypass
11	01130	Capacitor, 6.8uF, 15V, ±10%, Axial, Tantalum	C1-C5
16	43005	IC, 74LS05	U1
18	43164	IC, 4164, 200ns	U6-U41
20	43193	IC, 74F240	U2, U3, U5
22	43204	IC, 74F00	U4
26	61001	Resistor Network, 22 Ohm, DIP, 16 Pin	RN1, RN3, RN5
27	61002	Resistor Network, 1K Ohm, SIP, 10 Pin	RN2, RN4
31	13159	Connector, Male, 64 Pin	J1
33	13140	Connector, Female, 64 Pin	J2
36	39152	Standoff, PCB, 3/8", Nylon	

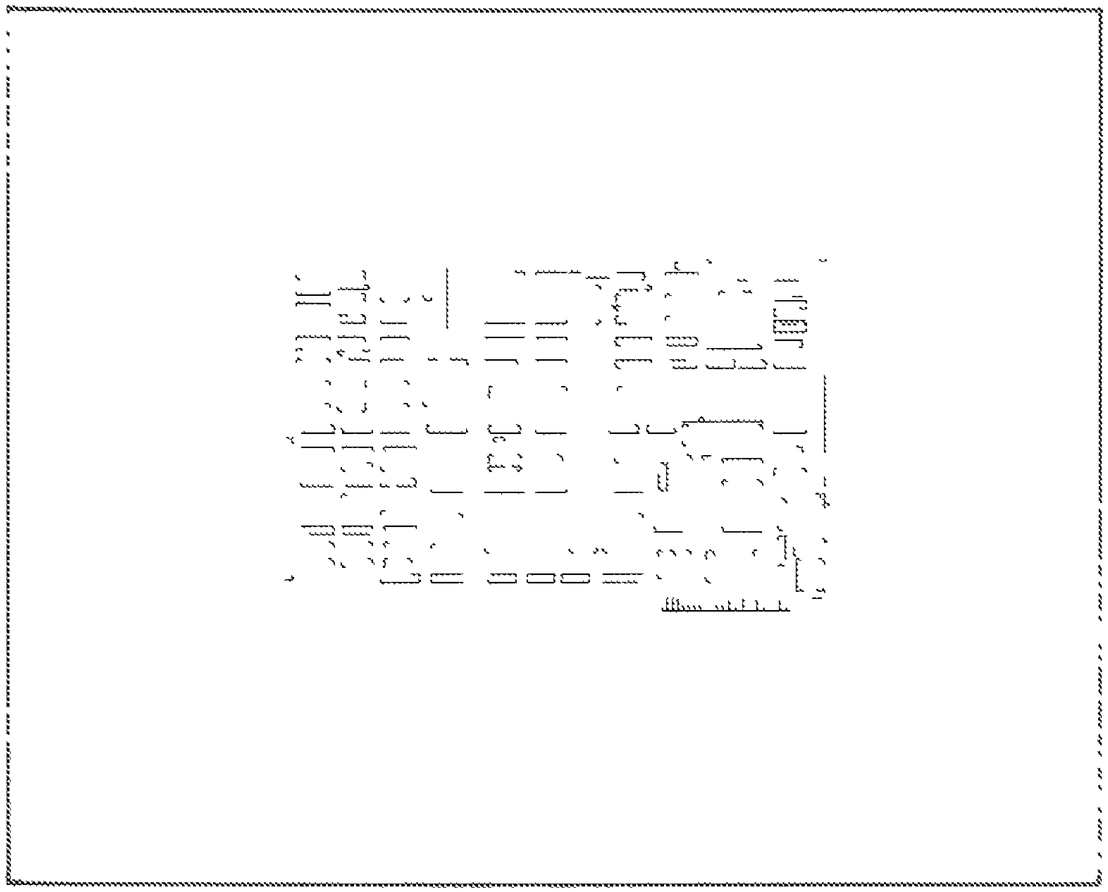

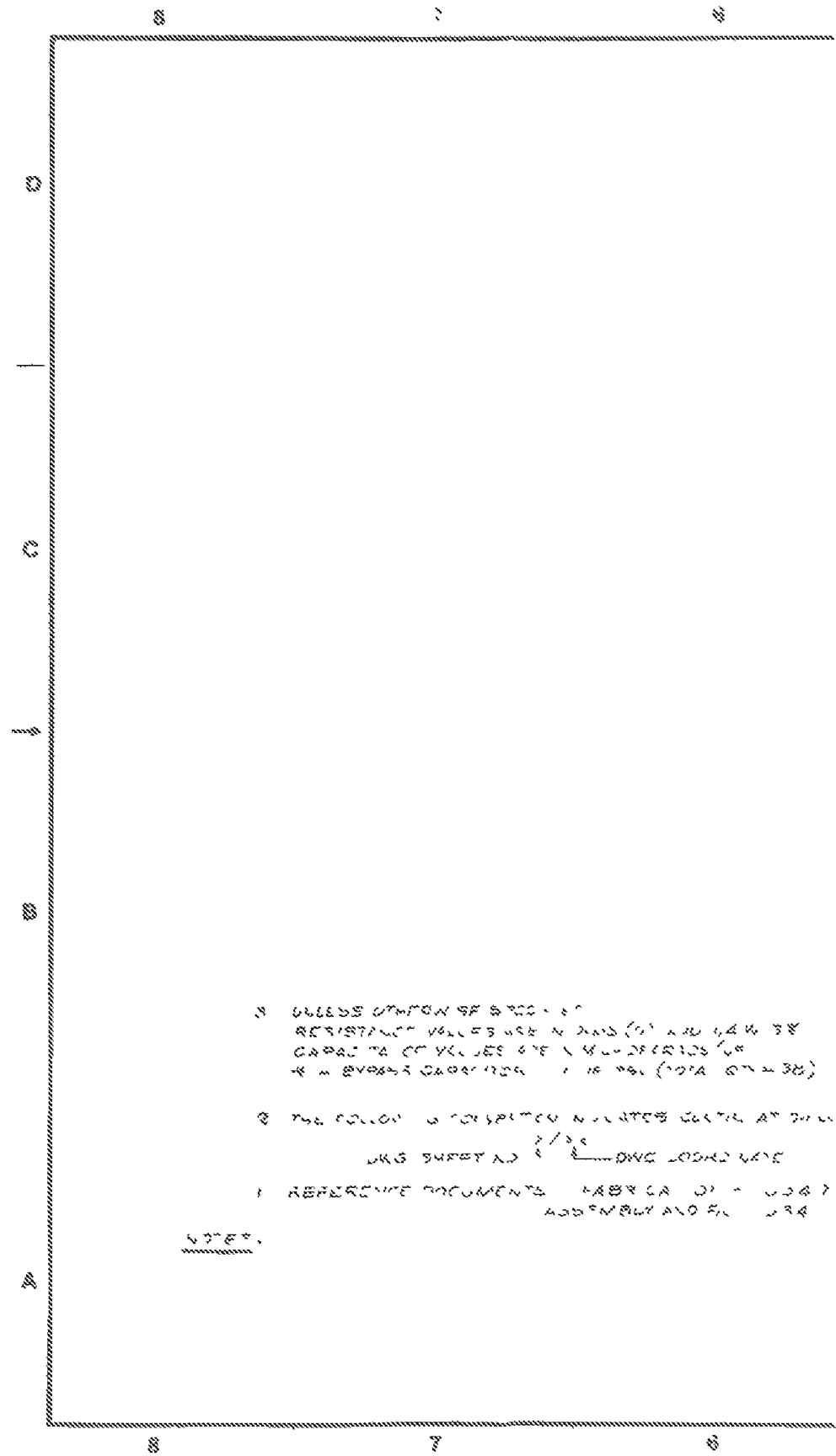

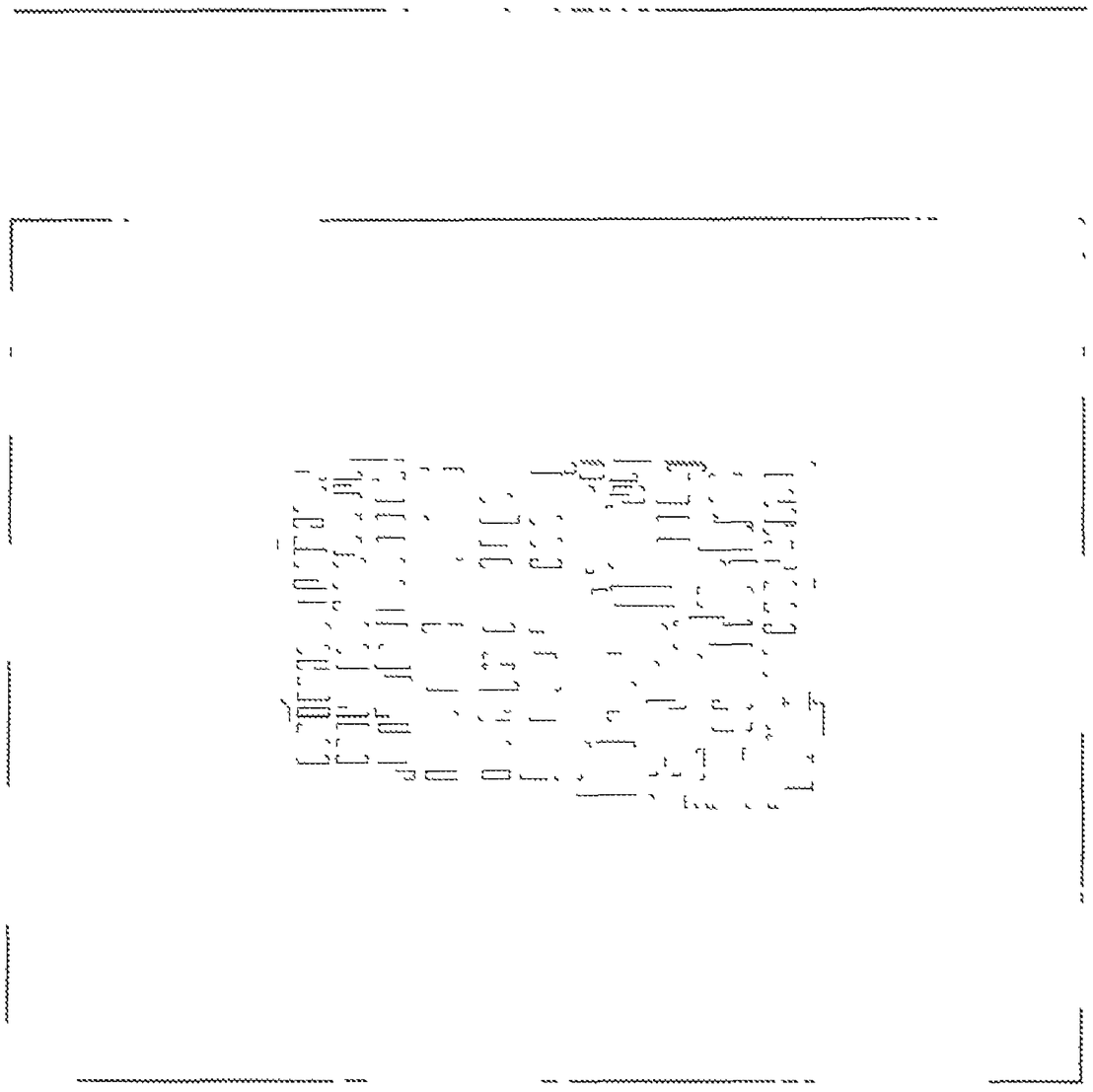

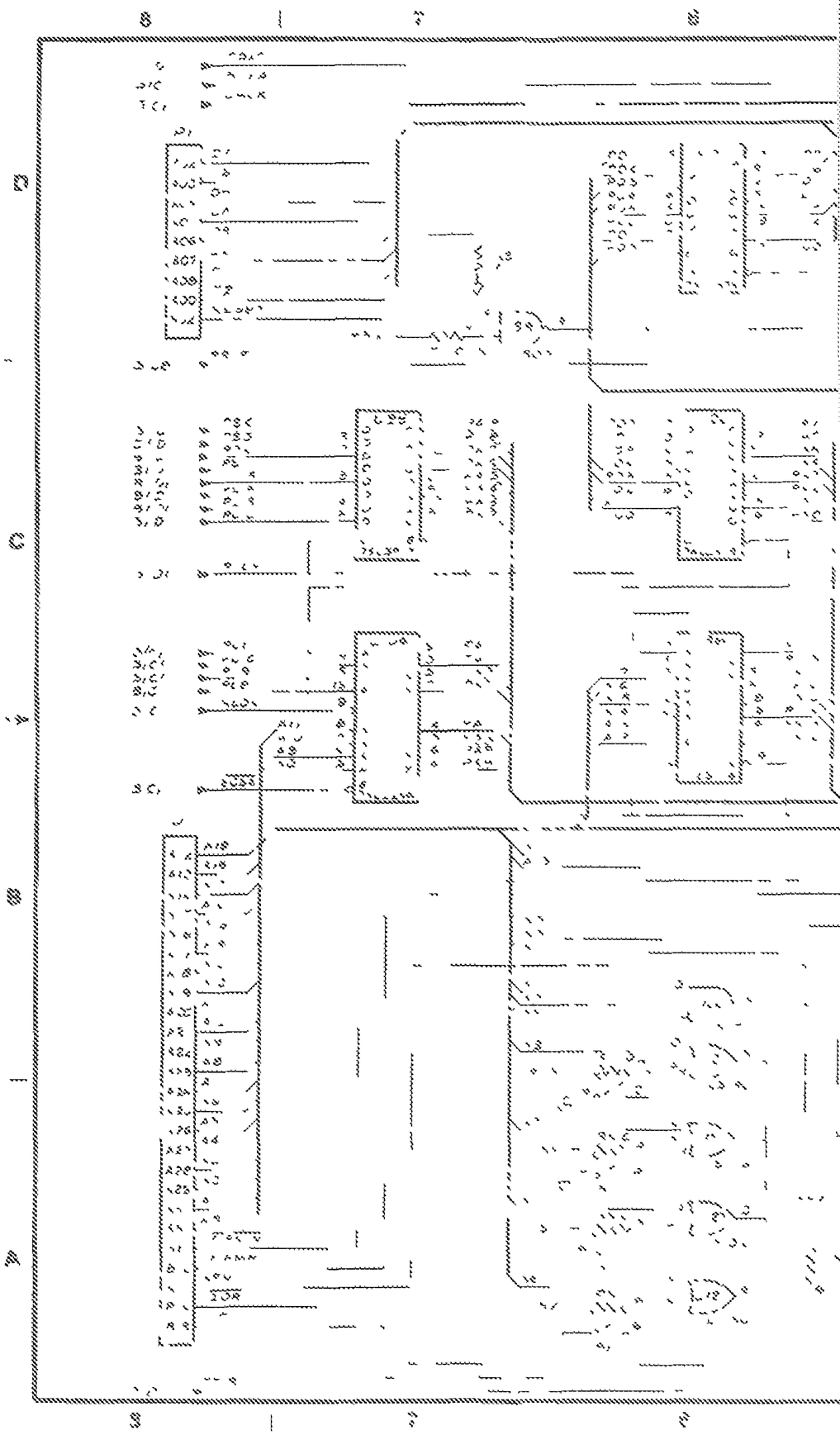

ITEM	PART #	DESCRIPTION	REFERENCE
1	03646	DIMENSION Station Interconnect PCB Assy	03646
3	03644	Schematic, PCB, Station Interconnect	03657
5	03645	FAB-A/W, PCB, Station Interconnect	B03645
7	00947-XX	SPEC-A/W, Label, PCB Serial Number, DIMENSION	
10	01070	Capacitor, .1uF, 50V, Axial, Ceramic	C1
14	61013	Resistor, 220 Ohm, 1/4W, 5%, Carbon Film	R2
15	61020	Resistor, 2.2K Ohm, 1/4W, 5%, Carbon Film	R1
16	61025	Resistor, 5.6K Ohm, 1/4W, 5%, Carbon Film	
18	65014	Transistor, 2N2222	Q1
19	65037	Diode, P6KE16	CR1
21	75002	Speaker, Piezo Ceramic	LS1
24	13192	Connector, Male, D-type, Right-angle, 25-Pin	P1
26	13187	Telephone Jack, 6 Pin	

ITEM	PART #	DESCRIPTION	REFERENCE
1	03289	FAB, Louvre, Fan	
2	03290	FAB, Bracket, HD Drive	
3	03291	FAB, Drive Support, Bottom	
4	03376	FAB, Louvre, TBU	
5	03377	FAB, PCB Support	
6	03378	FAB, Flange, Drive Bezel	
7	03385	FAB, Drive Support, Top	
8	03463	SPEC-CONT, Cable, HD Control	
9	03480	FAB, Back Panel, Blank	
10	03464	SPEC-CONT, Cable, HD Read/Write	
11	03465	SPEC-CONT, Cable, Floppy Drive, Signal	
12	03468	FAB, Standoff, Keyhole	
13	03479	FAB, Back Panel, Workstation PCB	
14	03523	SPEC-CONT, Harness, AC Power	
15	03524	SPEC-CONT, Harness, DC Power	
16	03532	SPEC-CONT, Cable, 100 Foot Extension	
17	03534	FAB, Clip, Chassis Ground	
18	03604	SPEC-CONT, Cable, 25 Foot Workstation	
19	03631	FAB, Spring, Flat Panel	
20	03674	FAB, Jumper Bus Bar	
21	03675	FAB, Power Bus Bar	
22	03676	FAB, Stiffener Bar	
23	03677	SPEC-CONT, Harness, AC Input	
24	03681	SPEC-CONT, Foam Strip, Front	
25	03682	SPEC-CONT, Foam Strip, Rear	
26	03714	SPEC-CONT, Cable, Parallel Printer	
27	03715	SPEC-CONT, Fastener, Dual Lock	
28	03736	SPEC-CONT, Harness, LED Cable	
29	03720	FAB, Tilt Support, W/S (VDU), DIMENSION	
30	03285	Weldment, Bottom Cover, DIMENSION Central Module	
31	03286	Weldmemt, Top Cover, DIMENSION Central Module	
32	03634	FAB, Interconnect Box, Top, Workstation	
33	03685	Weldment, Shield, Power Supply	
34	03557	FAB-AW, PCB, Workstation Memory, DIMENSION	

SCHEMATIC DRAWINGS

Introduction

This chapter of the manual contains schematic drawings for all circuit boards used in the DIMENSION computer except those associated with the floppy and fixed disk drives.

Note: A circuit name may be found on the lower right-hand corner of the workstation PCB and central PCB schematic diagrams. This feature simplifies use of the schematics and eliminates the need to block sections for discussion.

LSI SPECIFICATIONS

Introduction

Many of the LSI's used in the North Star DIMENSION are state-of-the-art components, and their specification sheets are preliminary. The available data is extensive and includes information far beyond the scope of this technical manual.

Due to absence of accurate final data and the comprehensive nature of the currently available information booklets, specifications for the LSI's are not included in this release of the Technical Manual.

We have listed some of the socketed devices which are employed in the design of the DIMENSION central and workstation circuit boards. The list includes the name and address of the manufacturer and the current name of the data sheet supplied by that manufacturer.

Devices

LSI Device	Manufacturer
80186, Microprocessor	Intel Corporation Literature Department SV3-3 3065 Bowers Avenue Santa Clara, Ca. 95051
SCN2682, DUART	Signetics Corporation 811 East Arques Avenue P.O. Box 409 Sunnyvale, Ca. 94086
uPD765A, Single/Double Density Floppy Disk Controller	NEC Electronics USA Inc. Microcomputer Division Communications Dept. One Natick Executive Park Natick, Mass. 01760
WD1010-00, 01 Winchester Disk Controller	Western Digital Corp. Marketing Communications Manager 2445 McCabe Way Irvine, Ca. 92714

Do you think the level of the manual is appropriate for you? _____

Did you find the information well-organized? _____

Could you follow the procedures? _____

Were there enough procedures? _____

Please explain any "no" answers _____

_____

_____

_____

_____

Please list specific points that need clarification or any errors found in the manual

Page Problem

Devices	LSI Device	Manufacturer
	MC6845, CRT Controller (CRTC)	Motorola Semiconductor Products 3501 Ed Bluestein Blvd. Austin, Texas 78721
	8254, Programmable Interval Timer	Intel Corporation
	2732A, 32K (4K x 8) UV Erasable PROM	Intel Corporation
	2764, (8K x 8) UV Erasable PROM	Intel Corporation
	8274, Multi-protocol Serial Controller (MPSC)	Intel Corporation
	8255A/8255A-5, Programmable Peripheral Interface	Intel Corporation
	8259A/8259A-2/8259A-8, Programmable Interrupt Controller	Intel Corporation
	MC146818, Real-Time Clock plus RAM (RTC)	Motorola Semiconductor Products

FOLD

FOLD

NO POSTAGE NECESSARY IF MAILED IN THE UNITED STATES

BUSINESS REPLY MAIL

LSI SPECIFICATIONS

Introduction

Many of the LSI's used in the North Star DIMENSION are state-of-the-art components, and their specification sheets are preliminary. The available data is extensive and includes information far beyond the scope of this technical manual.

Due to absence of accurate final data and the comprehensive nature of the currently available information booklets, specifications for the LSI's are not included in this release of the Technical Manual.

We have listed some of the socketed devices which are employed in the design of the DIMENSION central and workstation circuit boards. The list includes the name and address of the manufacturer and the current name of the data sheet supplied by that manufacturer.

Devices

LSI Device	Manufacturer
80186, Microprocessor	Intel Corporation Literature Department SV3-3 3065 Bowers Avenue Santa Clara, Ca. 95051
SCN2682, DUART	Signetics Corporation 811 East Arques Avenue P.O. Box 409 Sunnyvale, Ca. 94086
uPD765A, Single/Double Density Floppy Disk Controller	NEC Electronics USA Inc. Microcomputer Division Communications Dept. One Natick Executive Park Natick, Mass. 01760
WD1010-00, 01 Winchester Disk Controller	Western Digital Corp. Marketing Communications Manager 2445 McCabe Way Irvine, Ca. 92714

Devices	LSI Device	Manufacturer
	MC6845, CRT Controller (CRTC)	Motorola Semiconductor Products 3501 Ed Bluestein Blvd. Austin, Texas 78721
	8254, Programmable Interval Timer	Intel Corporation
	2732A, 32K (4K x 8) UV Erasable PROM	Intel Corporation
	2764, (8K x 8) UV Erasable PROM	Intel Corporation
	8274, Multi-protocol Serial Controller (MPSC)	Intel Corporation
	8255A/8255A-5, Programmable Peripheral Interface	Intel Corporation
	8259A/8259A-2/8259A-8, Programmable Interrupt Controller	Intel Corporation
	MC146818, Real-Time Clock plus RAM (RTC)	Motorola Semiconductor Products