dynabook

PARTS LIST

Model Name:	A30-J
SKUNo [Short]:	PSZ30E, PSZ31E

SeqNo	LocNo	ToshibaPN	ODMCODE	Category	Description	VendorPN
1	01-G	P000832010	A5A004678010	PCB	MOTHER BOARD ASSY	A5A004678010
2	01-G	P000837710	G80C0003U098	PCB	MOTHER BOARD ASSY	A5A004678010
3	01-G	P000839590	A5A004755010	PCB	MOTHER BOARD ASSY	A5A004755010
4	03-A	P000839240	G33C000AW110	LCD	LCD 13.3 FHD 470	LQ133M1JW64
5	03-A	P000783300	G33C0009Q110	LCD	LCD 13.3 FHD 470	LQ133M1JW41
6	05-A	P000811300	G8BC000CL510	SSD	SSD M.2 512GB	MZVLQ512HALU-00000
7	05-A	P000835320	G8BC000CT510	SSD	SSD M.2 512GB	MZVLQ512HBLU-00B00
8	05-A	P000823450	G8BC000CN510	SSD	SSD M.2 512GB	FSGPMMC-512G
9	05-A	P000828500	G8BC000CJ511	SSD	SSD M.2 512GB	C-E80T512G4-P3D3B3E13_
10	05-A	P000830030	G8BC000CD511	SSD	SSD M.2 512GB	KBG40ZNV512G_
11	07-A	P000824210	G4BC0003G8H0	MEM	MEMORY DDR4 3200 8GB	HMA81GS6DJR8N-XN
12	07-A	P000848480	G4BC0003F8M2	MEM	MEMORY DDR4 3200 8GB	MTA8ATF1G64HZ-3G2R1
13	07-A	P000824230	G4BC0003F8M1	MEM	MEMORY DDR4 3200 8GB	MTA4ATF1G64HZ-3G2E2
14	07-A	P000824220	G4BC0003E8S0	MEM	MEMORY DDR4 3200 8GB	M471A1G44AB0-CWE
15	07-A	P000845430	G4BC0003P8S0	MEM	MEMORY DDR4 3200 8GB	M471A1K43EB1-CWE
16	07-A	P000845410	G4BC0003N8S0	MEM	MEMORY DDR4 3200 8GB	M471A1G44BB0-CWE
17	08-A	P000834070	G71C000H0810	ADP	AC ADAPTOR-L 3P 45W 2.37A	A045R014L-DA01
18	08-A	P000823380	G71C000H0710	ADP	AC ADAPTOR-L 3P 45W 2.37A	A045R014L-DA01
19	09-E	P000537110	GDM900001221	ACC	AC CORD SET(3WIRE)	063013/8
20	09-E	P000644720	GDM900003015	ACC	AC CORD SET(3WIRE)	200-15532
21	09-L	P000554120	GDM900002250	ACC	AC CODE SET 3PIN	102927/8
22	10-A	P000833360	G71C000LY210	LIB	BATTERY PACK 4CELL U30	P71C000LY2AA
23	10-A	P000833350	G71C000LN610	LIB	BATTERY PACK 4CELL U30	P71C000LN6AA
24	11-L	P000839720	GM90442131FR	KB	KEYBOARD UNIT(FR) BLACK	AM90442131FR
25	11-L	P000839730	GM90442130FR	KB	KEYBOARD UNIT(FR) BLACK	AM90442130FR
26	12	P000816110	G86C0007TD10	COM	WLAN+BT COMBO MODULE	AX201.NGWG.NVW
27	13	P000793720	G9BC0006B110	COM	HD CAMERA MODULE	C7FIH3621004910LH
28	14	P000843120	G86C0007W310	COM	3G/LTE MODULE	1104514 REV01
29	14	P000804480	G86C0007W110	COM	3G/LTE MODULE	SIERRA WIRELESS
30	15	P000794350	G61C0004B210	FAN	COOLING FAN	EC184S01
31	16	P000831080	G61C0004Z210	ETC	HEAT SINK	PHPK20XB1012Z
32	17	P000793730	GDM300000444	SPK	SPEAKER	PB2514KCG04L-9-9AAG-1
33	19	P000793740	G83C000HV370	TP	SECUREPAD	TM-03267-007
34	19	P000749330	G83C000HV340	TP	SECURE PAD	TM-03267-004
35	20	P000793750	GDM900003826	HAR	DC-IN HARNESS	WDMDAUX-TD001-DH
36	21-A	P000793760	GDM900003913	HAR	LCD HD_CAMERA HARNESS	MH791
37	21-D	P000832000	GDM900004108	HAR	LCD HD_CAMERA HARNESS	CBAMF-138-201B
38	22-A	P000797200	GDM900003903	ANT	W-LAN/LTE MAIN ANTENNA	FXV1-SZ-LM-001
39	23-A	P000797210	GDM900003904	ANT	W-LAN/LTE AUX ANTENNA	FXV1-SZ-LA-001
40	24	P000793790	G28C0004N110	HAR	FPC SYSTEM-USB/LAN	25101D
41	25	P000793800	GDM900003919	HAR	FFC CLICK PAD-SYS PCB	JSFFCASZ-7671
42	25	P000799100	GDM900003928	HAR	FFC CLICK PAD-SYS PCB	JXHQ-PI-1002818
43	26	P000799110	GDM900003929	HAR	FFC FINGER PRINT-SYS PCB	JXHQ-PI-1002819
44	26	P000793810	GDM900003920	HAR	FFC FINGER PRINT-SYS PCB	JSFFCASZ-7672
45	27	P000797220	GDM250000350	ETC	SIM TRAY	39136-VP001
46	30	P000793820	GM9043280111	BH	HINGE L ASSY	PM9043280111
47	31	P000793830	GM9043283111	BH	HINGE R ASSY	PM9043283111
48	32	P000795560	GD9C00013Z210	ETC	GASKET	P1ZJ110100008004
49	33	P000799120	GM9043393111	INS	INSU PCB GASKET	PM9043393111
50	35	P000808910	GM9043547111	INS	INSU PCB BATT HNS	PM9043547111
51	36	P000793840	GD9C00013P10	ETC	GASKET	P1ZJ105030005002
52	37	P000793850	GM9042990131	INS	INSULATOR SQUARE	PM9042990131
53	38	P000793860	GM9043375111	INS	INSULATOR BH R	PM9043375111
54	39	P000858850	GM9043383121	INS	INSU BH L	PM9043383121
55	40	P000793880	GM904329111A	COV	BASE ASSY	PM904329111A
56	40	P000821780	GM904329111B	COV	BASE ASSY	PM904329111B
57	40A	P000834420	GM904327811A	CUS	BOTTOM CUSHION F	PM904327811A
58	40B	P000834430	GM904327911A	CUS	BOTTOM CUSHION B	PM904327911A
59	40C	P000859930				
60	40D	P000859940				
61	43	P000795500	GM9043462111	CUS	INSU LCD COV FHD	PM9043462111
62	45	P000795510	GM9042992191	ETC	AL TAPE	PM9042992191
63	48	P000588500	GM9030874611	CUS	LCD PROTECT	PM9030874611
64	49	P000795130	GM9042991181	CUS	SQUARE CUSHION	PM9042991181
65	50-EA/50-[illegible]	P000841380	GD9C00017P10	ETC	GASKET	MF050001(T=3.0)6X6
66	50-G	P000795940	GM904329321A	COV	LCD COVER ASSY	PM904329321A
67	50-G	P000821820	GM904329321B	COV	LCD COVER ASSY	PM904329321B
68	51	P000821900	GM904329511B	COV	LCD MASK ASSY	PM904329511B
69	51	P000793930	GM904329511A	COV	LCD MASK ASSY	PM904329511A
70	52	P000793940	GD9C00013T10	ETC	GASKET	P1ZJ107050004003
71	53	P000793950	GM9043371111	ETC	AL TAPE	PM9043371111
72	54	P000793960	GM904346811A	COV	HINGE CAP L ASSY	PM904346811A
73	55	P000793970	GM904346911A	COV	HINGE CAP R ASSY	PM904346911A
74	56	P000795520	GM9043396112	CUS	CUSHION MIC	PM9043396112
75	59	P000788830	GM904298411A	ETC	CAMERA PANEL	PM904298411A
76	60-E	P000795540	GM904329241A	COV	COVER ASSY	PM904329241A
77	60-E	P000821810	GM904329241B	COV	COVER ASSY	PM904329241B
78	60A	P000794000	GM9042980111	ETC	D TAPE PAD	PM9042980111
79	60B	P000794970	GM9042989251	ETC	D STICK TAPE	PM9042989251
80	60C	P000794980	GM9042989271	ETC	D STICK TAPE	PM9042989271
81	60D	P000794990	GM9042989221	ETC	D STICK TAPE	PM9042989221
82	60F	P000795100	GM9042989211	ETC	D STICK TAPE	PM9042989211
83	60G	P000854250	GD9C00017K10	ETC	GASKET	MF050001(T=0.5)5X8
84	62	P000808920	GM9043546111	INS	INSU PCB PIPE 20	PM9043546111
85	63	P000794020	GM9042977111	INS	INSULATOR PCB SSD	PM9042977111
86	64	P000804330	GM9042992181	ETC	AL TAPE	PM9042992181
87	65	P000795730	GM9042991242	CUS	SQUARE CUSHION	PM9042991242
88	66	P000794040	GM9042992171	ETC	AL TAPE	PM9042992171
89	67	P000797130	GM9042991252	CUS	SQUARE CUSHION	PM9042991252
90	68	P000795140	GM9043208111	INS	SPACER FHD	PM9043208111
91	69	P000797140	GM9042993161	CUS	LCD PROTECT	PM9042993161
92	71	P000795550	GM9042992131	ETC	AL TAPE	PM9042992131
93	74	P000797230	GM9043363111	INS	INSU LTE HNS HOLD	PM9043363111
94	77	P000858840	GM9043461151	ETC	RUBBER SQUARE	PM9043461151
95	80-A	P000839660	A5A004744010	PCB	USB/LTE BOARD ASSY	A5A004744010
96	80-A	P000839670	A5A004646010	PCB	USB BOARD ASSY	A5A004646010
97	80-A	P000839680				
98	81	P000794060	A5A004586010	PCB	MIC BOARD ASSY	A5A004586010
99	90-C	P000523000	GM9021049211	LAB	CAUTION LABEL	PM9021049211
100	92-A	P000817500	GM90243116FB	ETC	PRODUCT BADGE	PM90243116FB
101	A01	P000839230	GM9042989321	ETC	D STICK TAPE	PM9042989321
102	A02	P000845050	GM9043429111	INS	INSU ANT HOLD	PM9043429111
103	S01	P000572130	GDM640000531	SCR	SCREW M2.5X2.5 FLAT HEAD	TGRFLT2.5X2.5 SNI
104	S02	P000714010	GDM640000651	SCR	SCREW M2.5X4 FLAT HEAD	YJ-NYGTHICK-M2.5X4BNI
105	S03	P000714020	GDM640000652	SCR	SCREW M2.5X6 FLAT HEAD	YJ-NYGTHICK-M2.5X6BNI
106	S04	P000794070	GDM640000729	SCR	SCREW M2X2.3 FLAT HEAD	+IM2X2.3-D4.5T0.5ZN
107	S05	P000716570	GDM640000653	SCR	TSCREW M2X3 3CR	+IM2-0.4*3.0L
108	S06	P000674990	GDM640000587	SCR	G SCREW M2X2.5SBNI	SGRSTH2-2.5 SBNI

dynabook

DRAWING

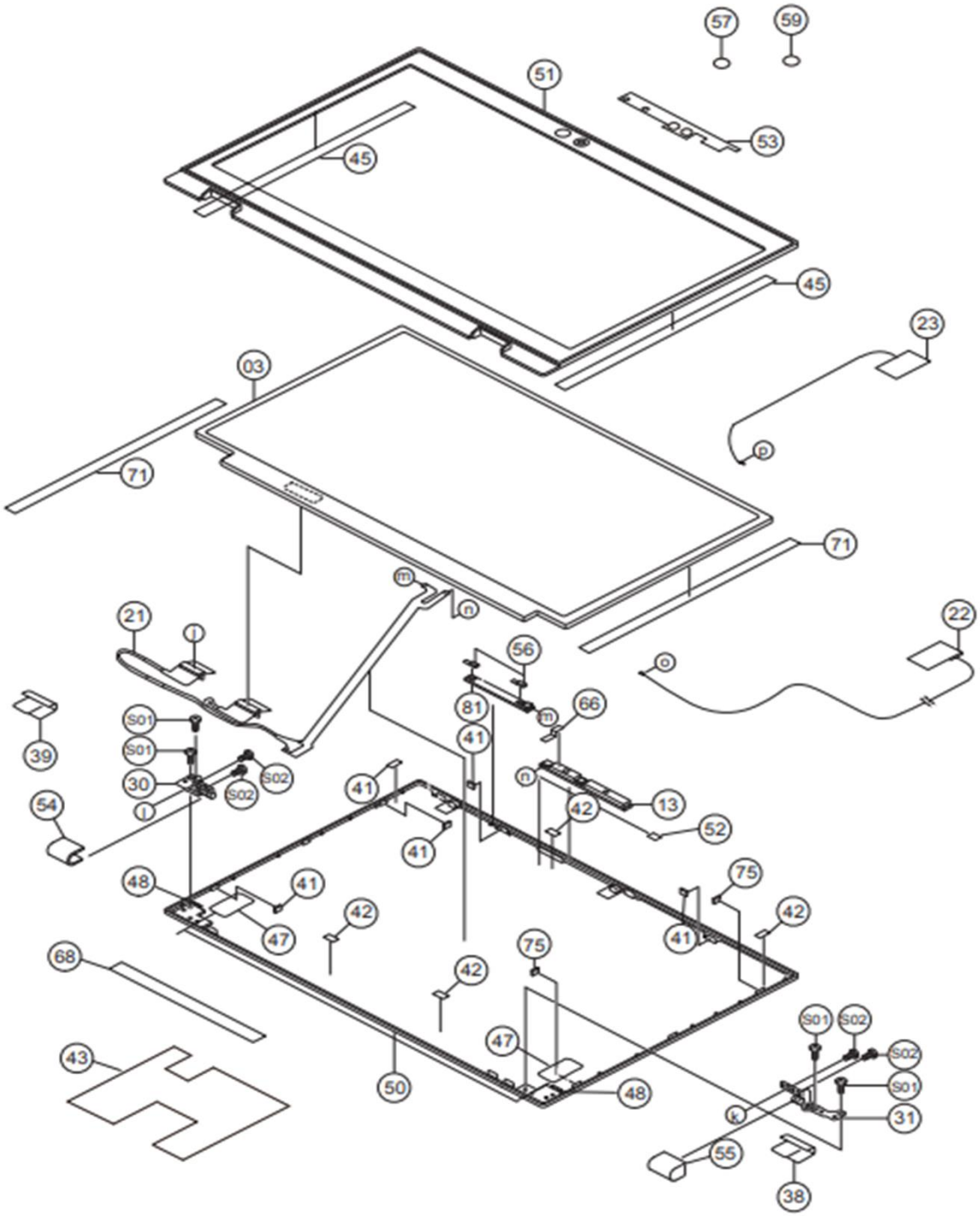

dynabook
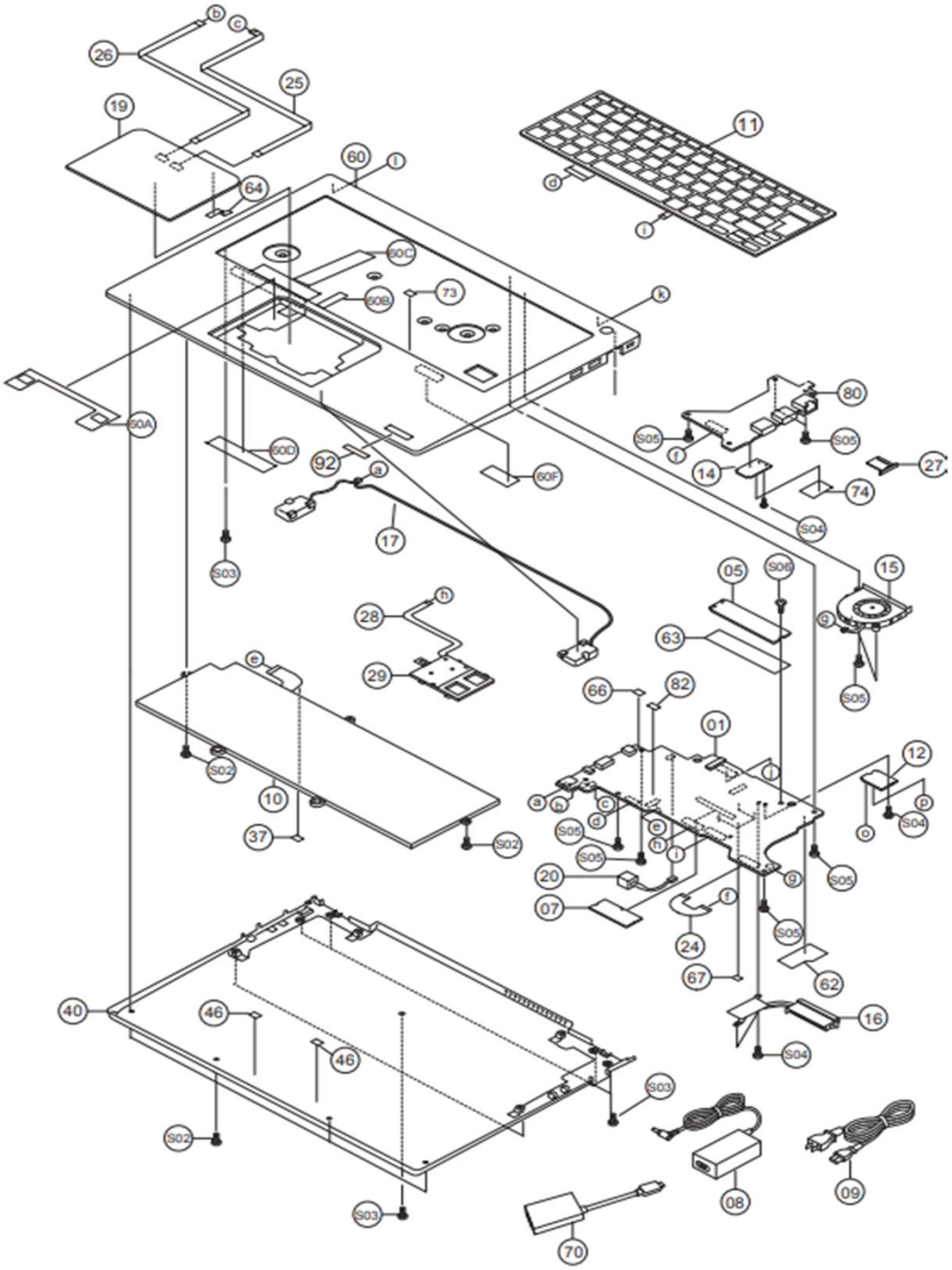
DRAWING