STORMWATER POLLUTION PREVENTION PLAN

for

California Polytechnic State University - Campus Dining Facility

RISK LEVEL 2

Legally Responsible Person [LRP):

California Polytechnic State University, San Luis Obispo
Approved Signatory: Kenneth Judd, Assistant Director
(805) 756-5765

Project Address:

1 Grand Avenue, Building 112
San Luis Obispo, CA 93407

SWPPP Prepared by:

Rick Engineering Company
711 Tank Farm Road, Suite 110
San Luis Obispo, CA 93401
Cristi E. Fry, RCE, QSD/QSP

SWPPP Preparation Date

June 2016

Estimated Project Dates:

Start of Construction	**July 1, 2016**	Completion of Construction	**January 1, 2017**

DRAFT FOR BID PURPOSES ONLY

Table of Contents

Qualified SWPPP Developer **1**
Legally Responsible Person **1**
Amendment Log **2**
Section 1 SWPPP Requirements **3**
1.1 Introduction 3
1.2 Permit Registration Documents 3
1.3 SWPPP Availability and Implementation 4
1.4 SWPPP Amendments 4
1.5 Retention of Records 5
1.6 Required Non-Compliance Reporting 6
1.7 Annual Report 6
1.8 Changes to Permit Coverage 6
1.9 Notice of Termination 6
Section 2 Project Information **7**
2.1 Project and Site Description 7
2.1.1 Site Description 7
2.1.2 Existing Conditions 7
2.1.3 Existing Drainage 7
2.1.4 Geology and Groundwater 7
2.1.5 Project Description 7
2.1.6 Developed Condition 8
2.2 Permits and Governing Documents 8
2.3 Stormwater Run-On from Offsite Areas 9
2.4 Findings of the Construction Site Sediment and Receiving Water Risk Determination 9
2.5 Construction Schedule 10
2.6 Potential Construction Activity and Pollutant Sources 10
2.7 Identification of Non-Stormwater Discharges 10
2.8 Required Site Map Information 11

DRAFT FOR BID PURPOSES ONLY

Section 3 Best Management Practices 13
3.1 Schedule for BMP Implementation 13
3.2 Erosion and Sediment Control 14
3.2.1 Erosion Control 14
3.2.2 Sediment Controls 17
3.3 Non-Stormwater Controls and Waste and Materials Management 19
3.3.1 Non-Stormwater Controls 19
3.3.2 Materials Management and Waste Management 21
3.4 Post construction Stormwater Management Measures 24
Section 4 BMP Inspection, and Maintenance, and Rain Event Action Plan 25
4.1 BMP Inspection and Maintenance 25
4.2 Rain Event Action Plans 25
Section 5 Training 26
Section 6 Responsible Parties and Operators 27
6.1 Responsible Parties 27
6.2 Contractor List 27
Section 7 Construction Site Monitoring Program 28
7.1 Purpose 28
7.2 Applicability of Permit Requirements 28
7.3. Weather and Rain Event Tracking 29
7.3.1 Weather Tracking 29
7.3.2 Rain Gauges 29
7.4 Monitoring Locations 29
7.5 Safety and Monitoring Exemptions 29
7.6 Visual Monitoring 30
7.6.1 Routine Observations and Inspections 31
7.6.1.1 Routine BMP Inspections 31
7.6.1.2 Non-Stormwater Discharge Observations 31
7.6.2 Rain-Event Triggered Observations and Inspections 31
7.6.2.1 Visual Observations Prior to a Forecasted Qualifying Rain Event 31
7.6.2.2 BMP Inspections During an Extended Storm Event 32
7.6.2.3 Visual Observations Following a Qualifying Rain Event 32

DRAFT FOR BID PURPOSES ONLY

7.6.3 Visual Monitoring Procedures 32
7.6.4 Visual Monitoring Follow-Up and Reporting 33
7.6.5 Visual Monitoring Locations 33
7.7 Water Quality Sampling and Analysis 34
7.7.1 Sampling and Analysis Plan for Non-Visible Pollutants in Stormwater Runoff Discharges 34
7.7.1.1 Sampling Schedule 34
7.7.1.2 Sampling Locations 35
7.7.1.3 Monitoring Preparation 37
7.7.1.4 Analytical Constituents 37
7.7.1.5 Sample Collection 38
7.7.1.6 Sample Analysis 38
7.7.1.7 Data Evaluation and Reporting 42
7.7.2 Sampling and Analysis Plan for pH and Turbidity in Stormwater Runoff Discharges 42
7.7.2.1 Sampling Schedule 42
7.7.2.2 Sampling Locations 43
7.7.2.3 Monitoring Preparation 44
7.7.2.4 Field Parameters 44
7.7.2.5 Sample Collection 44
7.7.2.6 Field Measurements 44
7.7.2.7 Data Evaluation and Reporting 45
7.7.3 Sampling and Analysis Plan for pH, Turbidity, and SSC in Receiving Water 46
7.7.4 Sampling and Analysis Plan for Non-Stormwater Discharges 46
7.7.4.1 Sampling Schedule 47
7.7.4.2 Sampling Locations 47
7.7.4.3 Monitoring Preparation 47
7.7.4.4 Analytical Constituents 47
7.7.4.5 Sample Collection 47
7.7.4.6 Sample Analysis 48
7.7.4.7 Data Evaluation and Reporting 48
7.7.5 Sampling and Analysis Plan for Other Pollutants Required by the Regional Water Board 49

DRAFT FOR BID PURPOSES ONLY

7.7.6 Training of Sampling Personnel 49
7.7.7 Sample Collection and Handling 49
7.7.7.1 Sample Collection 49
7.7.7.2 Sample Handling 50
7.7.7.3 Sample Documentation Procedures 50
7.8 Active Treatment System Monitoring 51
7.9 Bioassessment Monitoring 51
7.10 Watershed Monitoring Option 51
7.11 Quality Assurance and Quality Control 51
7.11.1 Field Logs 51
7.11.2 Clean Sampling Techniques 52
7.11.3 Chain of Custody 52
7.11.4 QA/QC Samples 52
7.11.4.1 Field Duplicates 52
7.11.4.2 Equipment Blanks 52
7.11.4.3 Field Blanks 53
7.11.4.4 Travel Blanks 53
7.11.5 Data Verification 53
7.12 Records Retention 54

Attachments

CSMP Attachment 1: Weather Reports

CSMP Attachment 2: Monitoring Records

CSMP Attachment 3: Example Forms

CSMP Attachment 4: Field Meter Instructions

CSMP Attachment 5: Supplemental Information

Section 8 References

Appendix A: Calculations

Appendix B: Site Maps

Appendix C: Permit Registration Documents

Appendix D: SWPPP Amendment Certifications

DRAFT FOR BID PURPOSES ONLY

Appendix E: Submitted Changes to PRDs

Appendix F: Construction Schedule

Appendix G: Construction Activities, Materials Used, and Associated Pollutants

Appendix H: CASQA Stormwater BMP Handbook Portal: Construction Fact Sheets

Appendix I: BMP Inspection Form

Appendix J: Project Specific Rain Event Action Plan Template

Appendix K: Training Reporting Form

Appendix L: Responsible Parties

Appendix M: Contractors and Subcontractors

Appendix N: Construction General Permit

DRAFT FOR BID PURPOSES ONLY

Qualified SWPPP Developer

Approval and Certification of the Stormwater Pollution Prevention Plan

Project Name:	*Campus Dining Facility, San Luis Obispo, WDID #*
Project Number/ID	*Rick Engineering Job No. 17443*

"This Stormwater Pollution Prevention Plan and Attachments were prepared under my direction to meet the requirements of the California Construction General Permit (SWRCB Orders No. 2009-009-DWQ as amended by Order 2010-0014-DWQ and Order 2012-0006-DWQ). I certify that I am a Qualified SWPPP Developer in good standing as of the date signed below."

QSD Signature	*Date*
6/15/2016	
Cristi E. Fry	21373
QSD Name	*QSD Certificate Number*
Principal Project Manager	805-544-0707
Title and Affiliation	*Telephone Number*
cfry@rickengineering.com	
Email	

DRAFT FOR BID PURPOSES ONLY

Legally Responsible Person

Approval and Certification of the Stormwater Pollution Prevention Plan

Project Name: *Campus Dining Facility, San Luis Obispo, WDID #*

Project Number/ID *Rick Engineering Job No. 17443*

"I certify under penalty of law that this document and all Attachments were prepared under my direction or supervision in accordance with a system designed to assure that qualified personnel properly gather and evaluate the information submitted. Based on my inquiry of the person or persons who manage the system or those persons directly responsible for gathering the information, to the best of my knowledge and belief, the information submitted is, true, accurate, and complete. I am aware that there are significant penalties for submitting false information, including the possibility of fine and imprisonment for knowing violations."

Signature of Authorized Representative of Legally Responsible Person or Approved Signatory	Date
Kenneth Judd	805-756-5765
Name of Authorized Representative of Legally Responsible Person or Approved Signatory	Telephone Number

The Approved Signatory or Authorized Representative for the Legally Responsible Person is required to have the appropriate credentials as described in CGP Appendix 5: Glossary and shall agree to provide the supporting documentation upon request.

DRAFT FOR BID PURPOSES ONLY

Amendment Log

Project Name: Campus Dining Facility, San Luis Obispo WDID #

Project Number/ID Rick Engineering Job No. 17443

Amendment No.	Date	Brief Description of Amendment, include section and page number	Prepared and Approved By
			Name: QSD#
			Name: QSD#
			Name: QSD#
			Name: QSD#
			Name: QSD#
			Name: QSD#
			Name: QSD#
			Name: QSD#
			Name: QSD#
			Name: QSD#
			Name: QSD#

DRAFT FOR BID PURPOSES ONLY

Section 1 SWPPP Requirements

1.1 INTRODUCTION

The Campus Dining Facility project comprises approximately 1.7 acres and is located on the California Polytechnic State University campus in San Luis Obispo, California. The project location is shown on the Site Map in Appendix B.

This Stormwater Pollution Prevention Plan (SWPPP) is designed to comply with California's General Permit for Stormwater Discharges Associated with Construction and Land Disturbance Activities (General Permit) Order No. 2009-0009-DWQ as amended in 2010 and 2012 (NPDES No. CAS000002) issued by the State Water Resources Control Board (State Water Board). This SWPPP has been prepared following the SWPPP Template provided on the California Stormwater Quality Association Stormwater *Best Management Practice Handbook Portal: Construction* (CASQA, 2012). In accordance with the General Permit, Section XIV, this SWPPP is designed to address the following:

- Pollutants and their sources, including sources of sediment associated with construction, construction site erosion and other activities associated with construction activity are controlled;
- Where not otherwise required to be under a Regional Water Quality Control Board (Regional Water Board) permit, all non-stormwater discharges are identified and either eliminated, controlled, or treated;
- Site BMPs are effective and result in the reduction or elimination of pollutants in stormwater discharges and authorized non-stormwater discharges from construction activity to the Best Available Technology/Best Control Technology (BAT/BCT) standard;

Calculations and design details as well as BMP controls for are complete and correct, Appendix A.

Information regarding requirements for the Rain Event Action Plan (REAP) can be found in Section 4.2.

1.2 PERMIT REGISTRATION DOCUMENTS

Required Permit Registration Documents (PRDs) shall be submitted to the State Water Board via the Stormwater Multi Application and Report Tracking System (SMARTS) by the Legally Responsible Person (LRP), or authorized personnel (i.e., Approved Signatory) under the direction of the LRP. The project-specific PRDs include:

1. Notice of Intent (NOI);
2. Risk Assessment (Construction Site Sediment and Receiving Water Risk Determination);
3. Site Map;
4. Annual Fee;
5. Signed Certification Statement (LRP Certification is provided electronically with SMARTS PRD submittal); and

DRAFT FOR BID PURPOSES ONLY

6. SWPPP.

Site Maps can be found in Appendix B. A copy of the submitted PRDs shall also be kept in Appendix C along with the Waste Discharge Identification (WDID) confirmation.

1.3 SWPPP AVAILABILITY AND IMPLEMENTATION

The discharger shall make the SWPPP available at the construction site during working hours (see Section 7.5 of CSMP for working hours) while construction is occurring and shall be made available upon request by a State or Municipal inspector. When the original SWPPP is retained by a crewmember in a construction vehicle and is not currently at the construction site, current copies of the BMPs and map/drawing will be left with the field crew and the original SWPPP shall be made available via a request by radio/telephone. (CGP Section XIV.C)

The SWPPP shall be implemented concurrently with the start of ground disturbing activities.

1.4 SWPPP AMENDMENTS

The SWPPP should be revised when:

- If there is a General Permit violation.
- When there is a reduction or increase in total disturbed acreage (General Permit Section II Part C).
- BMPs do not meet the objectives of reducing or eliminating pollutants in stormwater discharges.

Additionally, the SWPPP shall be amended when:

- There is a change in construction or operations which may affect the discharge of pollutants to surface waters, groundwater(s), or a municipal separate storm sewer system (MS4);
- When there is a change in the project duration that changes the project's risk level; or
- When deemed necessary by the QSD. The QSD has determined that the changes listed in Table 1.1 can be field determined by the QSP. All other changes shall be made by the QSD as formal amendments to the SWPPP.

The following items shall be included in each amendment:

- Who requested the amendment;
- The location of proposed change;
- The reason for change;
- The original BMP proposed, if any; and
- The new BMP proposed.

Amendment shall be logged at the front of the SWPPP and certification kept in Appendix D. The SWPPP text shall be revised replaced, and/or hand annotated as necessary to properly convey the amendment. SWPPP amendments must be made by a QSD. The following changes

DRAFT FOR BID PURPOSES ONLY

have been designated by the QSD as "to be field determined" and constitute minor changes that the QSP may implement based on field conditions.

Table 1.1 List of Changes to be Field Determined

Candidate changes for field location or determination by QSP[(1)]	Check changes that can be field located or field determined by QSP
Increase quantity of an Erosion or Sediment Control Measure	*X*
Relocate/Add stockpiles or stored materials	*X*
Relocate or add toilets	*X*
Relocate vehicle storage and/or fueling locations	*X*
Relocate areas for waste storage	*X*
Relocate water storage and/or water transfer location	*X*
Changes to access points (entrance/exits)	*X*
Change type of Erosion or Sediment Control Measure	*X*
Changes to location of erosion or sediment control	*X*
Minor changes to schedule or phases	*X*
Changes in construction materials	*X*
(1) Any field changes not identified for field location or field determination by QSP must be approved by QSD	

1.5 RETENTION OF RECORDS

Paper or electronic records of documents required by this SWPPP shall be retained for a minimum of three years from the date generated or date submitted, whichever is later, for the following items:

- Copies of NAL Exceedance Reports shall be retained for a minimum of three years after the date generated or the date the Annual Report is filed, whichever is last.

These records shall be available at the Site until construction is complete. Records assisting in the determination of compliance with the General Permit shall be made available within a reasonable time, to the Regional Water Board, State Water Board or U.S. Environmental Protection Agency (EPA) upon request. Requests by the Regional Water Board for retention of records for a period longer than three years shall be adhered to.

DRAFT FOR BID PURPOSES ONLY

1.6 REQUIRED NON-COMPLIANCE REPORTING

If a General Permit discharge violation occurs the QSP shall immediately notify the LRP. The LRP shall include information on the violation with the Annual Report. Corrective measures will be implemented immediately following identification of the discharge or written notice of non-compliance from the Regional Water Board. Discharges and corrective actions must be documented on the NAL Exceedance Site Evaluation Report Form in CSMP Attachment 3 "Example Forms".

The report to the LRP and the Regional Water Board will include the following items:

- The date, time, location, nature of operation and type of unauthorized discharge.
- The cause or nature of the notice or order.
- The control measures (BMPs) deployed before the discharge event, or prior to receiving notice or order.
- The date of deployment and type of control measures (BMPs) deployed after the discharge event, or after receiving the notice or order, including additional measures installed or planned to reduce or prevent re-occurrence.

Reporting requirements for Numeric Action Levels (NALs) exceedances are discussed in Section 7.7.2.7.

1.7 ANNUAL REPORT

The General Permit requires that permittees prepare, certify, and electronically submit an Annual Report no later than September 1st of each year. Reporting requirements are identified in Section XVI of the General Permit. Annual reports will be filed in SMARTS and in accordance with information required by the on-line forms.

1.8 CHANGES TO PERMIT COVERAGE

The General Permit allows for the reduction or increase of the total acreage covered under the General Permit when: a portion of the project is complete and/or conditions for termination of coverage have been met; when ownership of a portion of the project is purchased by a different entity; or when new acreage is added to the project.

Modified PRDs shall be filed electronically within 30 days of a reduction or increase in total disturbed area if a change in permit covered acreage is to be sought. The SWPPP shall be modified appropriately, shall be logged at the front of the SWPPP and cetrification of SWPPP amendments are to be kept in Appendix D. Updated PRDs submitted electronically via SMARTS can be found in Appendix E.

1.9 NOTICE OF TERMINATION

A Notice of Termination (NOT) must be submitted electronically by the LRP via SMARTS to terminate coverage under the General Permit. The NOT must include a final Site Map and representative photographs of the project site that demonstrate final stabilization has been achieved. The NOT shall be submitted within 90 days of completion of construction. The Regional Water Board will consider a construction site complete when the conditions of the General Permit, Section II.D have been met.

DRAFT FOR BID PURPOSES ONLY

Section 2 Project Information

2.1 PROJECT AND SITE DESCRIPTION

2.1.1 Site Description

The Campus Dining Facility project comprises approximately 1.7 acres and is located on the California Polytechnic State University campus, in San Luis Obispo, California. The project is located approximately 1.0 mile northeast of the intersection of Highway 1 and Highway 101, and approximately 0.3 miles northwest of the Grand Avenue entrance to the university campus. The project is located approximately 0.6 miles northeast of Stenner Creek. The project coordinates are 35.299290/-120.655836.

2.1.2 Existing Conditions

As of the initial date of this SWPPP, the project site is currently developed as an on campus dining facility made up of one structure, concrete patios, sidewalks, a commercial loading dock with paved parking, curbs, and landscape areas with grass, bark, and trees. The project site was previously undeveloped before the current structure was built in the early 1970s. There are no known historic sources of contamination at the site, but the geotechnical report claims that mold growth or microbial contamination has an increased potential if there is excess water above the vapor retarder from the structure.

2.1.3 Existing Drainage

The project site is generally sloping from east to west. The elevation of the project site ranges from 392 to 412 feet above mean sea level (msl). Surface drainage at the site currently flows to area drains throughout the site before entering the onsite storm drain system, and eventually towards the university ~~and City of San Luis Obispo~~ storm drain systems ~~respectively.~~ Stormwater discharges, from the site, are not considered direct discharges, as defined by the State Water Board. Existing site topography, drainage patterns, and stormwater conveyance systems are shown on the Demolition Package – Bid Set.

The project discharges to Stenner Creek which is listed for water quality impairment on the most recent 303(d)-list for:

- Fecal Coliform

2.1.4 Geology and Groundwater

The site geology is characterized by clayey, sand topsoil or clayey, sand fill on top of sandstone bedrock ranging from soft to hard per the soils report in Appendix A. Subsurface water occurs beneath the site at approximately 15.5 feet below ground surface. It is assumed the groundwater gradient is toward the west since that is the direction of surface runoff.

2.1.5 Project Description

The existing Vista Grande Dining facility on the campus of California Polytechnic State University, San Luis Obispo is a 1970s era facility that has outgrown its ability to service the

DRAFT FOR BID PURPOSES ONLY

numbers of students necessary, or provide the variety of food offerings that modern students could and should expect at a world-class university.

The Campus Replacement Dining Facility will involve the complete demolition of the existing dining facility and the construction of a new venue on the site of the existing. The new facility will be a 3-story solution that will contain in addition to campus dining, approximately 7,000 square feet of new office space for the Cal Poly Corporation on the third floor of the building.

Project grading will occur on approximately 1.35 Acres of the project, which comprises approximately 80 percent of the total area. The limits of grading are shown on the Interim Grading Plan, Sheet CD3.1 of the Demolition Package in Appendix B. Grading will include both cut and fill activities, with the total graded material estimated to be approximately 3500 cubic yards. Graded materials are expected to be balanced onsite. Soil will be stockpiled within the construction limit as shown on Erosion Control Plan in Appendix B. Construction activities will include two phases:

- Demolition Phase: This phase will include all demolition and improvement-related activities per the Demolition Package. There will be an NOT submitted following this work, and the site will be stabilized before the next phase of the common development.
- Improvement Phase: A new NOI will be opened for this phase which includes all demolition and improvement-related activities per the Improvement Package. This SWPPP will either be revised or a new SWPPP and WDID will be assigned for the Improvement Phase.

2.1.6 Developed Condition

Post construction surface drainage will generally be directed toward the West as surface flow with graded swales and the onsite existing storm drain system. Storm water will discharge to the university storm drain network before discharging ~~to the City of San Luis Obispo storm drain system, and~~ ultimately to ~~either~~ Stenner Creek.

Post construction drainage patterns and conveyance systems are presented on the Improvement Plans.

2.2 PERMITS AND GOVERNING DOCUMENTS

In addition to the General Permit, the following documents have been taken into account while preparing this SWPPP

- Regional Water Board requirements
- Basin Plan requirements
- Contract Documents
- Air Quality Regulations and Permits
- Federal Endangered Species Act

DRAFT FOR BID PURPOSES ONLY

2.3 STORMWATER RUN-ON FROM OFFSITE AREAS

Run-on to the site is generated by stormwater that enters into two existing storm drain inlets at the northern end of the project limits: one in a concrete v-gutter, and the other in a landscaped area just east of the first inlet. Both inlets feed into the same storm drain network that the rest of the onsite stormwater leads to.

The stormwater runoff drainage area contributing to offsite run-on is estimated to be approximately 0.4 acres. The anticipated runoff coefficients range from 0.5-0.85. The anticipated off-site run-on to the project site is estimated to be 0.15*I cubic feet per second (where "I" is in units of in/hr).

The General Permit requires that temporary BMPs be implemented to direct offsite run-on away from disturbed areas through the use of runoff controls. The temporary BMPs to be implemented are shown on the Erosion Control Plan in Appendix B.

2.4 FINDINGS OF THE CONSTRUCTION SITE SEDIMENT AND RECEIVING WATER RISK DETERMINATION

A construction site risk assessment has been performed for the project and the resultant risk level is Risk Level 2 due to medium sediment risk and low receiving water risk assessment.

The risk level was determined through the use of the K, LS provided in SMARTS and the calculated R-Factor. The risk level is based on project duration, location, proximity to impaired receiving waters and soil conditions. A copy of the Risk Level determination submitted on SMARTS with the PRDs is included in Appendix C.

Risk Level 2 sites are subject to both the narrative effluent limitations and numeric effluent standards. The narrative effluent limitations require stormwater discharges associated with construction activity to minimize or prevent pollutants in stormwater and authorized non-stormwater through the use of controls, structures and best management practices. Discharges from Risk Level 2 site are subject to NALs for pH and turbidity shown in Table 2.4. This SWPPP has been prepared to address Risk Level 2 requirements (General Permit Attachment D).

DRAFT FOR BID PURPOSES ONLY

Table 2.4 Numeric Action Levels

Parameter	Unit	Numeric Action Level Daily Average
pH	pH units	Lower NAL = 6.5 Upper NAL = 8.5
Turbidity	NTU	250 NTU

2.5 CONSTRUCTION SCHEDULE

The site sediment risk was initially determined based on construction taking place between July 1, 2016 and January 1, 2017. Modification or extension of the schedule (start and end dates) may affect risk determination and permit requirements. The LRP shall contact the QSD if the schedule changes during construction to address potential impact to the SWPPP. The estimated schedule for planned work can be found in Appendix F.

2.6 POTENTIAL CONSTRUCTION ACTIVITY AND POLLUTANT SOURCES

Appendix G includes a list of construction activities and associated materials that are anticipated to be used onsite. These activities and associated materials will or could potentially contribute pollutants, other than sediment, to stormwater runoff.

The anticipated activities and associated pollutants were used in Section 3 to select the Best Management Practices for the project. Location of anticipated pollutants and associated BMPs are shown on the Site Map in Appendix B.

For sampling requirements for non-visible pollutants associated with construction activity please refer to Section 7.7.1. For a full and complete list of onsite pollutants, refer to the Material Safety Data Sheets (MSDS), which are retained onsite at the construction trailer.

2.7 IDENTIFICATION OF NON-STORMWATER DISCHARGES

Non-stormwater discharges consist of discharges which do not originate from precipitation events. The General Permit provides allowances for specified non-stormwater discharges that do not cause erosion or carry other pollutants.

Non-stormwater discharges into storm drainage systems or waterways, which are not authorized under the General Permit and listed in the SWPPP, or authorized under a separate NPDES permit, are prohibited.

Non-stormwater discharges that are authorized from this project site include the following:

- None

Activities at this site that may result in unauthorized non-stormwater discharges include:

DRAFT FOR BID PURPOSES ONLY

- Vehicle and equipment cleaning, fueling, and maintenance
- Slurries from concrete or motor mixing
- Runoff from dust control
- Sanitary and septic wastes
- Chemical leaks and/or spills of any kind including but not limited to petroleum, paints, cure compounds, etc.

Steps will be taken, including the implementation of appropriate BMPs, to ensure that unauthorized discharges are eliminated, controlled, disposed, or treated on-site.

Discharges of construction materials and wastes, such as fuel or paint, resulting from dumping, spills, or direct contact with rainwater or stormwater runoff, are also prohibited.

2.8 REQUIRED SITE MAP INFORMATION

The construction project's Site Map(s) showing the project location, surface water boundaries, geographic features, construction site perimeter and general topography and other requirements identified in Attachment B of the General Permit is located in Appendix B. Table 2.5 identifies Map or Sheet Nos. where required elements are illustrated.

Table 2.5 Required Map Information

Included on Map/Plan Sheet No. (1)	Required Element
Plan sheet CD0.1	The project's surrounding area (vicinity)
Plan sheet CD0.1	Site layout
Plan sheet CD3.1	Construction site boundaries
Erosion Control Plan	Drainage areas
Erosion Control Plan	Discharge locations
Erosion Control Plan	Sampling locations
Plan Sheet CD3.1	Areas of soil disturbance (temporary or permanent)
Plan Sheet CD3.1	Active areas of soil disturbance (cut or fill)
Erosion Control Plan	Locations of runoff BMPs
Erosion Control Plan	Locations of erosion control BMPs
Erosion Control Plan	Locations of sediment control BMPs
N/A	ATS location (if applicable)
N/A	Locations of sensitive habitats, watercourses, or other features which are not to be disturbed
Erosion Control Plan	Locations of all post construction BMPs

DRAFT FOR BID PURPOSES ONLY

Table 2.5 Required Map Information

Included on Map/Plan Sheet No. (1)	Required Element
Erosion Control Plan	Waste storage areas
Erosion Control Plan	Vehicle storage areas
Erosion Control Plan	Material storage areas
Erosion Control Plan	Entrance and Exits
Erosion Control Plan	Fueling Locations

Notes: (1) Indicate maps or drawings that information is included on (e.g., Vicinity Map, Site Map, Drainage Plans, Grading Plans, Progress Maps, etc.)

DRAFT FOR BID PURPOSES ONLY

Section 3 Best Management Practices

3.1 SCHEDULE FOR BMP IMPLEMENTATION

DRAFT FOR BID PURPOSES ONLY

Table 3.1 BMP Implementation Schedule

	BMP	Implementation	Duration
Erosion Control	EC-1, Scheduling	Prior to Construction	Entirety of Project
	EC-2, Preservation of Existing Vegetation	Start of Construction	Entirety of Project
	EC-4, Hydroseeding	During Construction (if needed)	As Needed
	EC-5, Soil Binders	During Construction (if needed)	As Needed
Sediment Control	SE-1, Silt Fence	Start of Construction	Entirety of Project
	SE-4, Check Dams	Start of Construction	Entirety of Project
	SE-5, Fiber Rolls	Start of Construction	Entirety of Project
	SE-7, Street Sweeping & Vacuuming	Start of Construction	Entirety of Project
	SE-10, Storm Drain Inlet Protection	Start of Construction	Entirety of Project
Tracking Control	TC-1, Stabilized Construction Entrance and Exit	Start of Construction	Entirety of Project
	TC-2, Stabilized Construction Roadway	Start of Construction	Entirety of Project
Wind Erosion	WE-1, Wind Erosion Control	Start of Construction	Entirety of Project

DRAFT FOR BID PURPOSES ONLY

3.2 EROSION AND SEDIMENT CONTROL

Erosion and sediment controls are required by the General Permit to provide effective reduction or elimination of sediment related pollutants in stormwater discharges and authorized non-stormwater discharges from the Site. Applicable BMPs are identified in this section for erosion control, sediment control, tracking control, and wind erosion control.

3.2.1 Erosion Control

Erosion control, also referred to as soil stabilization, consists of source control measures that are designed to prevent soil particles from detaching and becoming transported in stormwater runoff. Erosion control BMPs protect the soil surface by covering and/or binding soil particles.

This construction project will implement the following practices to provide effective temporary and final erosion control during construction:

1. Preserve existing vegetation where required and when feasible.
2. The area of soil disturbing operations shall be controlled such that the Contractor is able to implement erosion control BMPs quickly and effectively.
3. Stabilize non-active areas within 14 days of cessation of construction activities or sooner if stipulated by local requirements.
4. Control erosion in concentrated flow paths by applying erosion control blankets, check dams, erosion control seeding or alternate methods.
5. Prior to the completion of construction, apply permanent erosion control to remaining disturbed soil areas.

Sufficient erosion control materials shall be maintained onsite to allow implementation in conformance with this SWPPP.

The following temporary erosion control BMP selection table indicates the BMPs that shall be implemented to control erosion on the construction site. Fact Sheets for temporary erosion control BMPs are provided in Appendix H.

DRAFT FOR BID PURPOSES ONLY

Table 3.2 Temporary Erosion Control BMPs

CASQA Fact Sheet	BMP Name	Meets a Minimum Requirement[1]	BMP Used		If not used, state reason
			YES	NO	
EC-1	Scheduling	✓	X		
EC-2	Preservation of Existing Vegetation	✓	X		
EC-3	Hydraulic Mulch	✓[2]	X		
EC-4	Hydroseed	✓[2]	X		
EC-5	Soil Binders	✓[2]	X		
EC-6	Straw Mulch	✓[2]	X		
EC-7	Geotextiles and Mats	✓[2]	X		
EC-8	Wood Mulching	✓[2]		X	Not a desirable means to control erosion
EC-9	Earth Dike and Drainage Swales	✓[3]	X		
EC-10	Velocity Dissipation Devices			X	No outlets onsite
EC-11	Slope Drains		X		
EC-12	Stream Bank Stabilization			X	Construction does not involve a stream
EC-14	Compost Blankets	✓[2]		X	Commercial area
EC-15	Soil Preparation-Roughening		X		
EC-16	Non-Vegetated Stabilization	✓[2]		X	Not applicable to site
WE-1	Wind Erosion Control	✓	X		
Alternate BMPs Used:					**If used, state reason:**

[1] Applicability to a specific project shall be determined by the QSD.
[2] The QSD shall ensure implementation of one of the minimum measures listed or a combination thereof to achieve and maintain the Risk Level requirements.
[3] Run-on from offsite shall be directed away from all disturbed areas, diversion of offsite flows may require design/analysis by a licensed civil engineer and/or additional environmental permitting

DRAFT FOR BID PURPOSES ONLY

These temporary erosion control BMPs shall be implemented in conformance with the following guidelines and as outlined in the BMP Factsheets provided in Appendix H. If there is a conflict between documents, the Site Map will prevail over narrative in the body of the SWPPP or guidance in the BMP Fact Sheets. Site specific details in the Site Map prevail over standard details included in the Site Map. The narrative in the body of the SWPPP prevails over guidance in the BMP Fact Sheets.

Scheduling

Limit excavation and grading activities to dry weather conditions. This reduces the chance of severe erosion from intense rainfall and surface runoff, as well as the potential for soil saturation in swale areas.

Preservation of Existing Vegetation

Protect existing trees in place as called out in the Demolition Package.

Hydroseed

To achieve site stabilization or protect any inactive areas, use hydroseed per the Erosion Control Plan as necessary.

Soil Binders

To achieve site stabilization or protect any inactive areas, use soil binders per the Erosion Control Plan as necessary.

Wind Erosion Control

Air deposition of materials from construction activities shall be minimized. Measures to minimize air deposition of site materials shall include the following:

- A water truck shall be present at all times to keep dust to a minimum.
- Vehicles shall be operated on the site and on any access roads at a speed low enough to maintain firm traction and minimize any dust plume.
- Stockpiled soil shall be stabilized by means of tarping, mulching, compaction, wetting, or a combination of these or other means at the end of the day and when wind is capable of mobilizing the material.

3.2.2 Sediment Controls

Sediment controls are temporary or permanent structural measures that are intended to complement the selected erosion control measures and reduce sediment discharges from active construction areas. Sediment controls are designed to intercept and settle out soil particles that have been detached and transported by the force of water.

The following sediment control BMP selection table indicates the BMPs that shall be implemented to control sediment on the construction site. Fact Sheets for temporary sediment control BMPs are provided in Appendix H.

DRAFT FOR BID PURPOSES ONLY

Table 3.3 Temporary Sediment Control BMPs

CASQA Fact Sheet	BMP Name	Meets a Minimum Requirement[1]	BMP used		If not used, state reason
			YES	NO	
SE-1	Silt Fence	✓[2] [3]	X		
SE-2	Sediment Basin			X	No sediment basin onsite
SE-3	Sediment Trap			X	No sediment trap onsite
SE-4	Check Dams		X		
SE-5	Fiber Rolls	✓[2][3]	X		
SE-6	Gravel Bag Berm	✓[3]		X	Not used in lieu of SE-5
SE-7	Street Sweeping	✓	X		
SE-8	Sandbag Barrier			X	Not used in lieu of SE-5
SE-9	Straw Bale Barrier			X	Not used in lieu of SE-5
SE-10	Storm Drain Inlet Protection	✓ RL2&3	X		
SE-11	ATS			X	Labor intensive operation and maintenance
SE-12	Manufactured Linear Sediment Controls			X	Not used in lieu of SE-1 and SE-5
SE-13	Compost Sock and Berm	✓[3]		X	Not used in lieu of SE-5
SE-14	Biofilter Bags	✓[3]		X	Not used in lieu of SE-5 and SE-10
TC-1	Stabilized Construction Entrance and Exit	✓	X		
TC-2	Stabilized Construction Roadway		X		
TC-3	Entrance Outlet Tire Wash			X	Not applicable to site
Alternate BMPs Used:					**If used, state reason:**

[1] Applicability to a specific project shall be determined by the QSD
[2] The QSD shall ensure implementation of one of the minimum measures listed or a combination thereof to achieve and maintain the Risk Level requirements
[3]Risk Level 2 &3 shall provide linear sediment control along toe of slope, face of slope, and at the grade breaks of exposed slope

DRAFT FOR BID PURPOSES ONLY

These temporary sediment control BMPs shall be implemented in conformance with the following guidelines and in accordance with the BMP Fact Sheets provided in Appendix H. If there is a conflict between documents, the Site Map will prevail over narrative in the body of the SWPPP or guidance in the BMP Fact Sheets. Site specific details in the Site Map prevail over standard details included in the Site Map. The narrative in the body of the SWPPP prevails over guidance in the BMP Fact Sheets.

Perimeter Controls

Effective perimeter controls, including silt fence, fiber rolls, and construction entrances and exits shall be employed to sufficiently control erosion and sediment discharges from the site.

Linear Sediment Controls

Effective linear sediment controls, including fiber rolls, gravel bags, silt fence shall be employed to sufficiently prevent erosion of sediment.

Maintain and Protect BMPs

Storm drain inlets, perimeter controls, runoff control BMPs, and pollutant controls at entrances and exits shall be maintained and protected from activities that reduce their effectiveness.

Construction Activity

Construction activity traffic to and from the project shall be limited to the site's construction entrance to prevent offsite tracking of sediment.

Daily Access Road Inspection

Adjacent access roads shall be inspected on a daily basis. At a minimum daily (when necessary), and prior to any rain event, the discharge shall remove any sediment or other construction activity-related materials that are deposited on the roads (by vacuuming or sweeping).

3.3 NON-STORMWATER CONTROLS AND WASTE AND MATERIALS MANAGEMENT

3.3.1 Non-Stormwater Controls

Non-stormwater discharges into storm drainage systems or waterways, which are not authorized under the General Permit, are prohibited. Non-stormwater discharges for which a separate NPDES permit is required by the local Regional Water Board are prohibited unless coverage under the separate NPDES permit has been obtained for the discharge. The selection of non-stormwater BMPs is based on the list of construction activities with a potential for non-stormwater discharges identified in Section 2.7 of this SWPPP.

The following non-stormwater control BMP selection table indicates the BMPs that shall be implemented to control sediment on the construction site. Fact Sheets for temporary non-stormwater control BMPs are provided in Appendix H.

DRAFT FOR BID PURPOSES ONLY

Table 3.4 Temporary Non-Stormwater BMPs

CASQA Fact Sheet	BMP Name	Meets a Minimum Requirement[(1)]	BMP used		If not used, state reason
			YES	NO	
NS-1	Water Conservation Practices	✓	X		
NS-2	Dewatering Operation			X	Not applicable to site
NS-3	Paving and Grinding Operation		X		
NS-4	Temporary Stream Crossing			X	Not applicable to site
NS-5	Clear Water Diversion			X	Not applicable to site
NS-6	Illicit Connection/Discharge	✓	X		
NS-7	Potable Water/Irrigation		X		
NS-8	Vehicle and Equipment Cleaning	✓	X		
NS-9	Vehicle and Equipment Fueling	✓	X		
NS-10	Vehicle and Equipment Maintenance	✓	X		
NS-11	Pile Driving Operation			X	Not applicable to site
NS-12	Concrete Curing		X		
NS-13	Concrete Finishing		X		
NS-14	Material and Equipment Use Over Water			X	Not applicable to site
NS-15	Demolition Removal Adjacent to Water			X	Not applicable to site
NS-16	Temporary Batch Plants			X	Not applicable to site
Alternate BMPs Used:			**If used, state reason:**		

[(1)] Applicability to a specific project shall be determined by the QSD

DRAFT FOR BID PURPOSES ONLY

Non-stormwater BMPs shall be implemented in conformance with the following guidelines and in accordance with the BMP Fact Sheets provided in Appendix H. If there is a conflict between documents, the Site Map will prevail over narrative in the body of the SWPPP or guidance in the BMP Fact Sheets. Site specific details in the Site Map prevail over standard details included in the Site Map. The narrative in the body of the SWPPP prevails over guidance in the BMP Fact Sheets.

Tracked Mud and Dirt

Tracking of mud and dirt onto adjacent residential streets shall be prevented or minimized.

3.3.2 Materials Management and Waste Management

Materials management control practices consist of implementing procedural and structural BMPs for handling, storing and using construction materials to prevent the release of those materials into stormwater discharges. The amount and type of construction materials to be utilized at the Site will depend upon the type of construction and the length of the construction period. The materials may be used continuously, such as fuel for vehicles and equipment, or the materials may be used for a discrete period, such as soil binders for temporary stabilization.

Waste management consist of implementing procedural and structural BMPs for handling, storing and ensuring proper disposal of wastes to prevent the release of those wastes into stormwater discharges.

Materials and waste management pollution control BMPs shall be implemented to minimize stormwater contact with construction materials, wastes and service areas; and to prevent materials and wastes from being discharged off-site. The primary mechanisms for stormwater contact that shall be addressed include:

- Direct contact with precipitation
- Contact with stormwater run-on and runoff
- Wind dispersion of loose materials
- Direct discharge to the storm drain system through spills or dumping
- Extended contact with some materials and wastes, such as asphalt cold mix and treated wood products, which can leach pollutants into stormwater.

A list of construction activities is provided in Section 2.6. The following Materials and Waste Management BMP selection table indicates the BMPs that shall be implemented to handle materials and control construction site wastes associated with these construction activities. Fact Sheets for Materials and Waste Management BMPs are provided in Appendix H.

DRAFT FOR BID PURPOSES ONLY

Table 3.5 Temporary Materials Management BMPs

CASQA Fact Sheet	BMP Name	Meets a Minimum Requirement[(1)]	BMP used		If not used, state reason
			YES	NO	
WM-01	Material Delivery and Storage	✓	X		
WM-02	Material Use	✓	X		
WM-03	Stockpile Management	✓	X		
WM-04	Spill Prevention and Control	✓	X		
WM-05	Solid Waste Management	✓	X		
WM-06	Hazardous Waste Management	✓	X		
WM-07	Contaminated Soil Management			X	No contaminated soil anticipated
WM-08	Concrete Waste Management	✓	X		
WM-09	Sanitary-Septic Waste Management	✓	X		
WM-10	Liquid Waste Management			X	No drilling or dredging to occur
Alternate BMPs Used:				**If used, state reason:**	

[(1)] Applicability to a specific project shall be determined by the QSD.

DRAFT FOR BID PURPOSES ONLY

Material management BMPs shall be implemented in conformance with the following guidelines and in accordance with the BMP Fact Sheets provided in Appendix H. If there is a conflict between documents, the Site Map will prevail over narrative in the body of the SWPPP or guidance in the BMP Fact Sheets. Site specific details in the Site Map prevail over standard details included in the Site Map. The narrative in the body of the SWPPP prevails over guidance in the BMP Fact Sheets.

Spill Prevention and Control

The potential for hazardous and non-hazardous spills is from concrete or wash water spills and from leaking fuels, lubricants, and fluids from motorized equipment.

Any spill of vehicle fuel, lubricant or fluid shall be stopped as soon as it is discovered, and immediate action will be taken to catch, contain, and remove any fuel, lubricant or fluid from the soil. All contaminated soil shall be immediately excavated and placed in waste containers or removed from the site At least one vehicle at the active work location within the site shall contain at the minimum, the following supplies for containment and abatement of such spills:

- 2-square-blade shovels
- 5 lbs. of granular commercial absorbent material such as cat litter or oil absorbent
- 5 gal. (2/3 cf) of dry, clean rags, disposable diapers, or other absorbent cloth.
- 10-33-gallon or larger plastic bags of a thickness of 1.0 mil or greater.

At all times when construction personnel are on site, at least one trained person shall be present and assigned to respond immediately to any spill of the nature described in section f above.

Vehicle Storage and Maintenance

Mechanical Equipment

Mechanical equipment shall be parked overnight at designated places with a plastic sheet underneath each piece of machinery.

Fueling areas

Fueling of equipment shall take place only at designated places. Drip pans shall be in place during vehicle fueling.

Inspection

All vehicles and construction equipment shall be inspected for signs of leaks of fuel, oil, and other fluids on a daily basis.

Maintenance and fueling area

Vehicles to be maintained (other than washing) or fueled shall be parked on plastic sheeting arranged such that potential spills will be contained.

No vehicle washing

Vehicle washing will not be permitted on site except to prevent tracking of soil.

Leak and spill cleanup

All leaked fluids or spills, along with any contaminated soil, debris, or other material, shall be picked up and disposed of immediately.

Sanitary-Septic Waste Management

DRAFT FOR BID PURPOSES ONLY

At least one portable toilet shall be provided. The portable toilet shall be equipped with or retrofitted with secondary containment. Portable toilets shall be free from leaks and shall be maintained on a regular service schedule which shall be posted on the unit. The portable toilet shall be inspected regularly.

3.4 POST CONSTRUCTION STORMWATER MANAGEMENT MEASURES

Post construction BMPs are permanent measures installed during construction, designed to reduce or eliminate pollutant discharges from the site after construction is completed.

This site is located in an area subject to a Phase I or Phase II Municipal Separate Storm Sewer System (MS4) permit approved Stormwater Management Plan. ☒ Yes ☐ No

Post construction runoff reduction requirements have been satisfied through the MS4 program, this project is exempt from provision XIII A of the General Permit.The following source control post construction BMPs to comply with General Permit Section XIII.B and local requirements have been identified for the site:

- Post construction BMPs are not proposed because the impervious area is being reduced during the Demolition Phase, and this state will remain in an interim condition before the common development begins the Improvement Phase.

A plan for the post construction funding and maintenance of these BMPs has been developed to address at minimum five years following construction. The post construction BMPs that are described above shall be funded and maintained by the LRP. If required, post construction funding and maintenance will be submitted with the NOT.

DRAFT FOR BID PURPOSES ONLY

Section 4 BMP Inspection, and Maintenance, and Rain Event Action Plans

4.1 BMP INSPECTION AND MAINTENANCE

The General Permit requires routine weekly inspections of BMPs, along with inspections before, during, and after qualifying rain events. A BMP inspection checklist must be filled out for inspections and maintained on-site with the SWPPP. The inspection checklist includes the necessary information covered in Section 7.6. A blank inspection checklist can be found in Appendix I. Completed checklists shall be kept in CSMP Attachment 2 "Monitoring Records.

BMPs shall be maintained regularly to ensure proper and effective functionality. If necessary, corrective actions shall be implemented within 72 hours of identified deficiencies and associated amendments to the SWPPP shall be prepared by the QSD.

Specific details for maintenance, inspection, and repair of Construction Site BMPs can be found in the BMP Factsheets in Appendix H.

4.2 RAIN EVENT ACTION PLANS

The Rain Event Action Plan (REAP) is a written document designed to be used as a planning tool by the QSP to protect exposed portions of project sites and to ensure that the discharger has adequate materials, staff, and time to implement erosion and sediment control measures. These measures are intended to reduce the amount of sediment and other pollutants that could be generated during the rain event. It is the responsibility of the QSP to be aware of precipitation forecast and to obtain and print copies of forecasted precipitation from NOAA's National Weather Service Forecast Office.

The SWPPP includes REAP templates but the QSP will need to customize them for each rain event. Site-specific REAP templates for each applicable project phase can be found in Appendix J. The QSP shall maintain a paper copy of completed REAPs in compliance with the record retention requirements Section 1.5 of this SWPPP. Completed REAPs shall be maintained in Appendix J.

The QSP will develop an event specific REAP 48 hours in advance of a precipitation event forecast to have a 50% or greater chance of producing precipitation in the project area. The REAP will be onsite and be implemented 24 hours in advance of any the predicted precipitation event.

DRAFT FOR BID PURPOSES ONLY

Section 5 Training

Appendix L identifies the QSP(s) for the project. To promote stormwater management awareness specific for this project, periodic training of job-site personnel shall be included as part of routine project meetings (e.g. daily/weekly tailgate safety meetings), or task specific trainings as needed.

The QSP shall be responsible for providing this information at the meetings, and subsequently completing the training logs shown in Appendix K, which identifies the site-specific stormwater topics covered as well as the names of site personnel who attended the meeting. Tasks may be delegated to trained employees by the QSP provided adequate supervision and oversight is provided. Training shall correspond to the specific task delegated including: SWPPP implementation; BMP inspection and maintenance; and record keeping.

Documentation of training activities (formal and informal) is retained in SWPPP Appendix K.

DRAFT FOR BID PURPOSES ONLY

Section 6 Responsible Parties and Operators

6.1 RESPONSIBLE PARTIES

Approved Signatories who are responsible for SWPPP implementation and have authority to sign permit-related documents are listed Appendix L. Authorizations from the LRP for these individuals are assumed to be provided and/or the individual is certified through the process of being linked to the project as an Approved Signatory in SMARTS. The Approved Signatories assigned to this project are listed Appendix L.

QSPs identified for the project are identified in Appendix L. The QSP shall have primary responsibility and significant authority for the implementation, maintenance and inspection/monitoring of SWPPP requirements. The QSP will be available at all times throughout the duration of the project. Duties of the QSP include but are not limited to:

- Implementing all elements of the General Permit and SWPPP, including but not limited to:
  - Ensuring all BMPs are implemented, inspected, and properly maintained;
  - Performing non-stormwater and stormwater visual observations and inspections;
  - Performing non-stormwater and storm sampling and analysis, as required;
  - Performing routine inspections and observations;
  - Implementing non-stormwater management, and materials and waste management activities such as: monitoring discharges; general Site clean-up; vehicle and equipment cleaning, fueling and maintenance; spill control; ensuring that no materials other than stormwater are discharged in quantities which will have an adverse effect on receiving waters or storm drain systems; etc.;
- The QSP may delegate these inspections and activities to an appropriately trained employee, but shall ensure adequacy and adequate deployment.
- Ensuring elimination of unauthorized discharges.
- The QSPs shall be assigned authority by the LRP to mobilize crews in order to make immediate repairs to the control measures.
- Coordinate with the Contractor(s) to assure all of the necessary corrections/repairs are made immediately and that the project complies with the SWPPP, the General Permit and approved plans at all times.
- Notifying the LRP or Authorized Signatory immediately of off-site discharges or other non-compliance events.

6.2 CONTRACTOR LIST

The contractor is listed in Appendix L.

DRAFT FOR BID PURPOSES ONLY

Section 7 Construction Site Monitoring Program

7.1 Purpose

This Construction Site Monitoring Program was developed to address the following objectives:

1. To demonstrate that the site is in compliance with the Discharge Prohibitions and Numeric Action Levels (NALs) of the Construction General Permit;
2. To determine whether non-visible pollutants are present at the construction site and are causing or contributing to exceedances of water quality objectives;
3. To determine whether immediate corrective actions, additional Best Management Practices (BMP) implementation, or SWPPP revisions are necessary to reduce pollutants in stormwater discharges and authorized non-stormwater discharges;
4. To determine whether BMPs included in the SWPPP and REAP are effective in preventing or reducing pollutants in stormwater discharges and authorized non-stormwater discharges.

7.2 Applicability of Permit Requirements

This project has been determined to be a Risk Level 2 project. The General Permit identifies the following types of monitoring as being applicable for a Risk Level 2 project.

Risk Level 2

- Visual inspections of Best Management Practices (BMPs);
- Visual monitoring of the site related to qualifying storm events;
- Visual monitoring of the site for non-stormwater discharges;
- Sampling and analysis of construction site runoff for pH and turbidity;
- Sampling and analysis of construction site runoff for non-visible pollutants when applicable; and
- Sampling and analysis of non-stormwater discharges when applicable.

DRAFT FOR BID PURPOSES ONLY

7.3. Weather and Rain Event Tracking

Visual monitoring, inspections, and sampling requirements of the General Permit are triggered by a qualifying rain event. The General Permit defines a qualifying rain event as any event that produces ½ inch of precipitation. A minimum of 48 hours of dry weather will be used to distinguish between separate qualifying storm events.

7.3.1 Weather Tracking

The QSP should daily consult the National Oceanographic and Atmospheric Administration (NOAA) for the weather forecasts. These forecasts can be obtained at http://www.srh.noaa.gov/. Weather reports should be printed and maintained with the SWPPP in CSMP Attachment 1 "Weather Reports".

7.3.2 Rain Gauges

The QSP shall install one rain gauge on the project site. Locate the gauge in an open area away from obstructions such as trees or overhangs. Mount the gauge on a post at a height of 3 to 5 feet with the gauge extending several inches beyond the post. Make sure that the top of the gauge is level. Make sure the post is not in an area where rainwater can indirectly splash from sheds, equipment, trailers, etc.

The rain gauge(s) shall be read daily during normal site scheduled hours. The rain gauge should be read at approximately the same time every day and the date and time of each reading recorded. Log rain gauge readings in CSMP Attachment 1 "Weather Records". Follow the rain gauge instructions to obtain accurate measurements.

Once the rain gauge reading has been recorded, accumulated rain shall be emptied and the gauge reset.

For comparison with the site rain gauge, the nearest appropriate governmental rain gauge(s) is located at San Luis Obispo, http://www.wrh.noaa.gov/lox/scripts/getlocal.php?prod=LAXRRMSLO.

The rain gauge location is shown on the site maps in Appendix B.

7.4 Monitoring Locations

Monitoring locations are shown on the Site Maps in Appendix B. Monitoring locations are described in the Sections 7.6 and 7.7.

Whenever changes in the construction site might affect the appropriateness of sampling locations, the sampling locations shall be revised accordingly. All such revisions shall be implemented as soon as feasible and the SWPPP amended. Temporary changes that result in a one-time additional sampling location do not require a SWPPP amendment.

7.5 Safety and Monitoring Exemptions

Safety practices for sample collection will be in accordance with the QSD/QSP safety plan. A summary of the safety requirements that apply to sampling personnel is provided below.

DRAFT FOR BID PURPOSES ONLY

- Ensure that all conditions are safe – e.g. weather conditions, icy conditions, etc.
- Ensure that all slopes and/or embankments are stable
- Avoid interference with any traffic. If necessary, hazard lights and traffic cones must be used to alert oncoming traffic of your presence
- Ensure that all Personal Protective Equipment is being utilized

This project is not required to collect samples or conduct visual observations (inspections) under the following conditions:

- During dangerous weather conditions such as flooding and electrical storms.
- Outside of scheduled site business hours.

Scheduled site business hours are: 7 AM – 5 PM.

If monitoring (visual monitoring or sample collection) of the site is unsafe because of the dangerous conditions noted above then the QSP shall document the conditions for why an exception to performing the monitoring was necessary. The exemption documentation shall be filed in CSMP Attachment 2 "Monitoring Records".

7.6 Visual Monitoring

Visual monitoring includes observations and inspections. Inspections of BMPs are required to identify and record BMPs that need maintenance to operate effectively, that have failed, or that could fail to operate as intended. Visual observations of the site are required to observe storm water drainage areas to identify any spills, leaks, or uncontrolled pollutant sources.

Table 7.1 identifies the required frequency of visual observations and inspections. Inspections and observations will be conducted at the locations identified in Section 7.6.3.

Table 7.1 Summary of Visual Monitoring and Inspections

Type of Inspection	Frequency
Routine Inspections	
BMP Inspections	Weekly[1]
BMP Inspections – Tracking Control	Daily
Non-Stormwater Discharge Observations	Quarterly during daylight hours
Vehicle and Equipment Cleaning	Daily while non-stormwater discharges occur
Vehicle and Equipment Fueling	Daily for leaks each day of use
Rain Event Triggered Inspections	
Site Inspections Prior to a Qualifying Event	Within 48 hours of a qualifying event [2]
BMP Inspections During an Extended Storm Event	Every 24-hour period of a rain event[3]
Site Inspections Following a Qualifying Event	Within 48 hours of a qualifying event[2]

[1] Most BMPs must be inspected weekly; those identified below must be inspected more frequently.

DRAFT FOR BID PURPOSES ONLY

Table 7.1 Summary of Visual Monitoring and Inspections	
Type of Inspection	**Frequency**
[2] Inspections are required during scheduled site operating hours.	
[3] Inspections are required during scheduled site operating hours regardless of the amount of precipitation on any given day.	

7.6.1 Routine Observations and Inspections

Routine site inspections and visual monitoring are necessary to ensure that the project is in compliance with the requirements of the Construction General Permit.

7.6.1.1 Routine BMP Inspections

Inspections of BMPs are conducted to identify and record:

- BMPs that are properly installed;
- BMPs that need maintenance to operate effectively;
- BMPs that have failed; or
- BMPs that could fail to operate as intended.

7.6.1.2 Non-Stormwater Discharge Observations

Each drainage area will be inspected for the presence of or indications of prior unauthorized and authorized non-stormwater discharges. Inspections will record:

- Presence or evidence of any non-stormwater discharge (authorized or unauthorized);
- Pollutant characteristics (floating and suspended material, sheen, discoloration, turbidity, odor, etc.); and
- Source of discharge.

7.6.2 Rain-Event Triggered Observations and Inspections

Visual observations of the site and inspections of BMPs are required prior to a qualifying rain event; following a qualifying rain event, and every 24-hour period during a qualifying rain event. Pre-rain inspections will be conducted after consulting NOAA and determining that a precipitation event with a 50% or greater probability of precipitation has been predicted.

7.6.2.1 Visual Observations Prior to a Forecasted Qualifying Rain Event

Within 48-hours prior to a qualifying event a stormwater visual monitoring site inspection will include observations of the following locations:

- Stormwater drainage areas to identify any spills, leaks, or uncontrolled pollutant sources;
- BMPs to identify if they have been properly implemented;
- Any stormwater storage and containment areas to detect leaks and ensure maintenance of adequate freeboard.

Consistent with guidance from the State Water Resources Control Board, pre-rain BMP inspections and visual monitoring will be triggered by a NOAA forecast that indicates a probability of precipitation of 50% or more in the project area.

DRAFT FOR BID PURPOSES ONLY

7.6.2.2 BMP Inspections During an Extended Storm Event

During an extended rain event BMP inspections will be conducted to identify and record:

- BMPs that are properly installed;
- BMPs that need maintenance to operate effectively;
- BMPs that have failed; or
- BMPs that could fail to operate as intended.

If the construction site is not accessible during the rain event, the visual inspections shall be performed at all relevant outfalls, discharge points, downstream locations. The inspections should record any projected maintenance activities.

7.6.2.3 Visual Observations Following a Qualifying Rain Event

Within 48 hours following a qualifying rain event (0.5 inches of rain) a stormwater visual monitoring site inspection is required to observe:

- Stormwater drainage areas to identify any spills, leaks, or uncontrolled pollutant sources;
- BMPs to identify if they have been properly designed, implemented, and effective;
- Need for additional BMPs;
- Any stormwater storage and containment areas to detect leaks and ensure maintenance of adequate freeboard; and
- Discharge of stored or contained rain water.

7.6.3 Visual Monitoring Procedures

Visual monitoring shall be conducted by the QSP or staff trained by and under the supervision of the QSP.

The name(s) and contact number(s) of the site visual monitoring personnel are listed in Appendix L, and their training qualifications are provided in Appendix K.

Stormwater observations shall be documented on the *Visual Inspection Field Log Sheet* (see CSMP Attachment 3 "Example Forms"). BMP inspections shall be documented on the site specific BMP inspection checklist. Any photographs used to document observations will be referenced on stormwater site inspection report and maintained with the Monitoring Records in Attachment 2.

The completed reports will be kept in CSMP Attachment 2 "Monitoring Records" and uploaded to SMARTS as required. Upon failure, proper authorities will be notified.

DRAFT FOR BID PURPOSES ONLY

7.6.4 Visual Monitoring Follow-Up and Reporting

Correction of deficiencies identified by the observations or inspections, including required repairs or maintenance of BMPs, shall be initiated and completed as soon as possible.

If identified deficiencies require design changes, including additional BMPs, the implementation of changes will be initiated within 72 hours of identification and be completed as soon as possible. When design changes to BMPs are required, the SWPPP shall be amended to reflect the changes.

Deficiencies identified in site inspection reports and correction of deficiencies will be tracked on the *Inspection Field Log Sheet* or *BMP Inspection Report* and shall be submitted to the QSP and shall be kept in CSMP Attachment 2 "Monitoring Records".

Results of visual monitoring must be summarized and reported in the Annual Report.

7.6.5 Visual Monitoring Locations

The inspections and observations identified in Sections 7.6.1 and 7.6.2 will be conducted at the locations identified in this section.

BMP locations are shown on the Site Maps in SWPPP Appendix B.

There is one drainage area on the project site and the contractor's yard, staging areas, and storage areas. The drainage area is shown on the Site Maps in Appendix B and Table 7.2 identifies each drainage area by location.

Table 7.2 Site Drainage Areas

Location No.	Location
1	Total property since one discharge location

There is no stormwater storage or containment areas are on the project site.

There are two discharge locations on the project site. The site stormwater discharge locations are shown on the Site Maps in Appendix B and Table 7.3 identifies each stormwater discharge location.

Table 7.3 Site Stormwater Discharge Locations

Location No.	Location
S1	Newly installed temporary storm drain inlet located near Deer Rd & Grand Ave intersection, behind the original back of sidewalk.
S2	Existing storm drain inlet located near the Southern-most portion of the project limits.

DRAFT FOR BID PURPOSES ONLY

If there is a discrepancy between the locations described in this section and those shown on the site maps in Appendix B, the site maps in Appendix B will govern.

7.7 Water Quality Sampling and Analysis

7.7.1 Sampling and Analysis Plan for Non-Visible Pollutants in Stormwater Runoff Discharges

This Sampling and Analysis Plan for Non-Visible Pollutants describes the sampling and analysis strategy and schedule for monitoring non-visible pollutants in stormwater runoff discharges from the project site.

Sampling for non-visible pollutants will be conducted when (1) a breach, leakage, malfunction, or spill is observed; and (2) the leak or spill has not been cleaned up prior to the rain event; and (3) there is the potential for discharge of non-visible pollutants to surface waters or drainage system.

The construction materials, wastes, or activities, as identified in Section 2.6, are potential sources of non-visible pollutants to stormwater discharges from the project, and are identified in Appendix G. Storage, use, and operational locations are shown on the Site Maps in Appendix B.

The following existing site features, as identified in Section 2.6, are potential sources of non-visible pollutants to stormwater discharges from the project. Locations of existing site features contaminated with non-visible pollutants are shown on the Site Maps in Appendix B.

- None

The following soil amendments have the potential to change the chemical properties, engineering properties, or erosion resistance of the soil and will be used on the project site. Locations of soil amendment application are shown on the Site Maps in Appendix B.

- None

The project has the potential to receive stormwater run-on from the locations, described in Section 2.3, with the potential to contribute non-visible pollutants to stormwater discharges from the project. Locations of such run-on to the project site are shown on the Site Maps in Appendix B. If the run-on location narratives differ from those shown on the site maps in Appendix B, then the site maps in Appendix B will govern.

7.7.1.1 Sampling Schedule

Samples for the potential non-visible pollutant(s) and a sufficiently large unaffected background sample shall be collected during the first two hours of discharge from rain events that result in a sufficient discharge for sample collection. Samples shall be collected during the site's scheduled hours and shall be collected regardless of the time of year and phase of the construction.

DRAFT FOR BID PURPOSES ONLY

Collection of discharge samples for non-visible pollutant monitoring will be triggered when any of the following conditions are observed during site inspections conducted prior to or during a rain event.

- Materials or wastes containing potential non-visible pollutants are not stored under watertight conditions. Watertight conditions are defined as (1) storage in a watertight container, (2) storage under a watertight roof or within a building, or (3) protected by temporary cover and containment that prevents stormwater contact and runoff from the storage area.
- Materials or wastes containing potential non-visible pollutants are stored under watertight conditions, but (1) a breach, malfunction, leakage, or spill is observed, (2) the leak or spill is not cleaned up prior to the rain event, and (3) there is the potential for discharge of non-visible pollutants to surface waters or a storm drain system.
- A construction activity, including but not limited to those in Section 2.6, with the potential to contribute non-visible pollutants (1) was occurring during or within 24 hours prior to the rain event, (2) BMPs were observed to be breached, malfunctioning, or improperly implemented, and (3) there is the potential for discharge of non-visible pollutants to surface waters or a storm drain system.
- Soil amendments that have the potential to change the chemical properties, engineering properties, or erosion resistance of the soil have been applied, and there is the potential for discharge of non-visible pollutants to surface waters or a storm drain system.
- Stormwater runoff from an area contaminated by historical usage of the site has been observed to combine with stormwater runoff from the site, and there is the potential for discharge of non-visible pollutants to surface waters or a storm drain system.

7.7.1.2 Sampling Locations

Sampling locations are based on proximity to planned non-visible pollutant storage, occurrence or use; accessibility for sampling, and personnel safety. Planned non-visible pollutant sampling locations are shown on the Site Maps in Appendix B and include the locations identified in Tables 7.5 through 7.9.

One sampling location on the project site and the contractor's yard has been identified for observation, and the collection of samples of runoff, if necessary, from planned material and waste storage areas and areas where non-visible pollutant producing construction activities are planned.

DRAFT FOR BID PURPOSES ONLY

Table 7.5 Non-Visible Pollutant Sample Locations – Contractors' Yard		
Sample Location Number	**Sample Location Description**	**Sample Location Latitude and Longitude** (Decimal Degrees)
S1	Newly installed temporary storm drain inlet located near Deer Rd & Grand Ave intersection, behind the original back of sidewalk.	35.299311 N 120.65633 W
S2	Existing storm drain inlet located near the Southern-most portion of the project limits.	35.29895 N 120.65567 W

Two sampling locations have been identified for the collection of samples of runoff from drainage areas where soil amendments will be applied that have the potential to affect water quality. These are the same locations as shown in Table 7.5.

Two sampling locations have been identified for the collection of an uncontaminated sample of runoff as a background sample for comparison with the samples being analyzed for non-visible pollutants. These locations were selected such that the sample will not have come in contact with the operations, activities, or areas identified in Section 7.7.1 or with disturbed soils areas.

Table 7.8 Non-Visible Pollutant Sample Locations – Background (Unaffected Sample)		
Sample Location Number	**Sample Location**	**Sample Location Latitude and Longitude** (Decimal Degrees)
R1	At the northeastern limit of the project, located in a concrete v-gutter.	35.29965 N 120.65546 W
R2	At the northeastern-most limit of the project, located in a landscaped area just east of the concrete v-gutter.	35.29959 N 120.65537 W

Two sampling locations have been identified for the collection of samples of run-on to the project site. Run-on from these locations has the potential to combine with discharges from the site being sampled for non-visible pollutants. These samples are intended to identify potential sources of non-visible pollutants that originate off the project site.

DRAFT FOR BID PURPOSES ONLY

Table 7.9 Non-Visible Pollutant Sample Locations – Site Run-On

Sample Location Number	Sample Location	Sample Location Latitude and Longitude (Decimal Degrees)
R1	At the northeastern limit of the project, located in a concrete v-gutter.	35.29965 N 120.65546 W
R2	At the northeastern-most limit of the project, located in a landscaped area just east of the concrete v-gutter.	35.29959 N 120.65537 W

If a stormwater visual monitoring site inspection conducted prior to or during a storm event identifies the presence of a material storage, waste storage, or operations area with spills or the potential for the discharge of non-visible pollutants to surface waters or a storm drain system that is at a location not listed above and has not been identified on the Site Maps, sampling locations will be selected by the QSP using the same rationale as that used to identify planned locations. Non-visible pollutant sampling locations shall be identified by the QSP on the pre-rain event inspection form and/or Rain Event Action Plan prior to a forecasted qualifying rain event.

7.7.1.3 Monitoring Preparation

Non-visible pollutant samples will be collected by:

Contractor ☐ Yes ☒ No

Consultant ☒ Yes ☐ No

Laboratory ☐ Yes ☒ No

Samples on the project site will be collected by the QSP, who is shown in Appendix L, or a appointed representative trained by the QSP.

The QSP or his/her designee will respond 24 hours prior to a predicted rain event or for an unpredicted event, as soon as a rain event begins if one of the triggering conditions is identified during an inspection to ensure that adequate sample collection personnel and supplies for monitoring non-visible pollutants are available and will be mobilized to collect samples on the project site in accordance with the sampling schedule.

7.7.1.4 Analytical Constituents

Table 7.10 lists the specific sources and types of potential non-visible pollutants on the project site and the water quality indicator constituent(s) for that pollutant.

Table 7.10 Potential Non-Visible Pollutants and Water Quality Indicator Constituents

Pollutant Source	Pollutant	Water Quality Indicator Constituent
Adhesives	Adhesives	COD, Phenols, SVOCs
Grading/Earthworks	Gypsum / Lime	pH

DRAFT NOT FOR BID PURPOSES ONLY

Table 7.10 Potential Non-Visible Pollutants and Water Quality Indicator Constituents

Pollutant Source	Pollutant	Water Quality Indicator Constituent
	amendments	
Heating, Ventilation, Air Conditioning	Heating, Ventilation, Air Conditioning	Freon
Landscaping/Vegetation	Fertilizers	TKN, NO_3, BOD, COD, DOC, Sulfate, NH_3, Phosphate, Potassium
Removal of Existing Structures	Waste from demolition	Zn, VOCs, PCBs
Sanitary Waste	Sewer line breaks and Portable Toilets (using clear fluid – blue fluid is visible if discharged)	BOD, Total/Fecal coliform
Soil Preparation	Polymer/Co-polymers	TKN, NO_3, BOD, COD, DOC, Sulfate, Ni
Soil Preparation	Lignin sulfate	TDS, alkalinity
Soil Preparation	Psyllium	COD, TOC
Soil Preparation	Guar/Plant Gums	COD, TOC, Ni
Solid Waste	Leakage	BOD
Vehicle and Equipment Use	Batteries	Sulfuric acid; Pb, pH

DRAFT FOR BID PURPOSES ONLY

7.7.1.5 Sample Collection

Samples of discharge shall be collected at the designated non-visible pollutant sampling locations shown on the Site Maps in Appendix B or in the locations determined by observed breaches, malfunctions, leakages, spills, operational areas, soil amendment application areas, and historical site usage areas that triggered the sampling event.

Grab samples shall be collected and preserved in accordance with the methods identified in the Table, "Sample Collection, Preservation and Analysis for Monitoring Non-Visible Pollutants" provided in Section 7.7.1.6. Only the QSP, or personnel trained in water quality sampling under the direction of the QSP shall collect samples.

Sample collection and handling requirements are described in Section 7.7.7.

7.7.1.6 Sample Analysis

Samples shall be analyzed using the analytical methods identified in the Table 7.11.

Samples will be analyzed by:

Laboratory Name: Abalone Coast Analytical

Street Address:	141 Suburban Road
City, State Zip:	San Luis Obispo, CA 93401
Telephone Number:	805-595-1080
Point of Contact:	Amanda Smith
ELAP Certification Number:	2661

Samples will be delivered to the laboratory by:

Driven by Contractor	☒ Yes	☐ No
Picked up by Laboratory Courier	☒ Yes	☐ No
Shipped	☐ Yes	☒ No

DRAFT FOR BID PURPOSES ONLY

Table 7.11 Sample Collection, Preservation and Analysis for Monitoring Non-Visible Pollutants

Constituent	Analytical Method	Minimum Sample Volume	Sample Containers	Sample Preservation	Reporting Limit	Maximum Holding Time
VOCs-Solvents	EPA 8260B	3 x 40 mL	VOA-glass	Store at 4° C, HCl to pH<2	1 µg/L	14 days
SVOCs	EPA 8270C	1 L	Glass-Amber	Store at 4° C	10 µg/L	7 days
Phenols	EPA 420.1	500 mL	Glass-Amber	Store at 4° C, H_2SO_4 to pH<2	0.1 µg/L	28 days
Pesticides/PCBs	EPA 8081A/8082	1 L	Glass-Amber	Store at 4° C	0.1 µg/L	7 days
Anions (chloride, sulfate)	EPA 300	500 mL	PE	Store at 4° C	1 mg/L	28 days
TDS	EPA 160.1	100 mL	Glass or PE	Store at 4° C	1 mg/L	7 days
BOD	EPA 405.1	500 mL	Glass or PE	Store at 4° C	1 mg/L	48 hours
COD	EPA 410.1	100 mL	Glass or PE	Store at 4° C, H_2SO_4 to pH<2	10 mg/L	28 days
TOC/DOC	EPA 415.1	100 mL	Glass or PE	Store at 4° C, H_2SO_4 to pH<2	1 mg/L	28 days
TKN (organic nitrogen)	EPA 351.3	100 mL	Glass or PE	Store at 4° C, H_2SO_4 to pH<2	0.1 mg/L	28 days
NO_3-N (nitrate – inorganic nitrogen)	EPA 300.0	100 mL	Glass or PE	Store at 4° C, H_2SO_4 to pH<2	0.1 mg/L	48 hours
Phosphate (inorganic phosphorus)	EPA 300	100 mL	Glass or PE	Store at 4° C	0.1 mg/L	48 hours
pH	EPA 150.1	100 mL	Glass or PE	None	0.01 pH units	Immediate
Alkalinity	SM 2320B	250 mL	Glass or PE	Store at 4° C	1 mg/L	14 days

DRAFT FOR BID PURPOSES ONLY

Table 7.11 Sample Collection, Preservation and Analysis for Monitoring Non-Visible Pollutants

Constituent	Analytical Method	Minimum Sample Volume	Sample Containers	Sample Preservation	Reporting Limit	Maximum Holding Time
Metals (Pb, Ni, etc)	EPA 200.8	250 mL	Borosilicate glass or PE	Store at 4° C, HNO_3 to pH<2	1 µg/L	6 months
Coliform Bacteria (total/fecal)	SM 9221B/9221E	200 mL	Sterile glass or plastic	Store at 4° C, sodium thiosulfate in presence of chlorine	1 MPN/100 mL	6 hours

Notes:

^{o}C	-	Degrees Celsius	µg/L	-	Micrograms per Liter
BOD	-	Biochemical Oxygen Demand	mL	-	Milliliter
PE	-	Polyethylene plastic	PCB	-	Polychlorinated Biphenyl
EPA	-	Environmental Protection Agency	SM	-	Standard Method
HCl	-	Hydrogen Chloride	VOC	-	Volatile Organic Compound
H_2SO_4	-	Hydrogen Sulfide	HMO_3	-	Nitric Acid
L	-	Liter	mg/L	-	Milligrams per Liter
SVOC	-	Semi-Volatile Organic Compound	MPN	-	Most probable number
TKN	-	Total Kjeldahl nitrogen	COD	-	Chemical oxygen demand
TOC	-	Total organic compound	DOC	-	Dissolved organic compound

DRAFT FOR BID PURPOSES ONLY

7.7.1.7 Data Evaluation and Reporting

The QSP shall complete an evaluation of the water quality sample analytical results.

Runoff/downgradient results shall be compared with the associated upgradient/unaffected results and any associated run-on results. Should the runoff/downgradient sample show an increased level of the tested analyte relative to the unaffected background sample, which cannot be explained by run-on results, the BMPs, site conditions, and surrounding influences shall be assessed to determine the probable cause for the increase.

As determined by the site and data evaluation, appropriate BMPs shall be repaired or modified to mitigate discharges of non-visible pollutant concentrations. Any revisions to the BMPs shall be recorded as an amendment to the SWPPP.

The General Permit prohibits the storm water discharges that contain hazardous substances equal to or in excess of reportable quantities established in 40 C.F.R. §§ 117.3 and 302.4. The results of any non-stormwater discharge results that indicate the presence of a hazardous substance in excess of established reportable quantities shall be immediately reported to the Regional Water Board and other agencies as required by 40 C.F.R. §§ 117.3 and 302.4.

Results of non-visible pollutant monitoring shall be reported in the Annual Report.

7.7.2 Sampling and Analysis Plan for pH and Turbidity in Stormwater Runoff Discharges

Sampling and analysis of runoff for pH and turbidity is required for this project. This Sampling and Analysis Plan describes the strategy for monitoring turbidity and pH levels of stormwater runoff discharges from the project site and run-on that may contribute to an exceedance of a Numeric Action Level (NAL).

Samples for turbidity will be collected from all drainage areas with disturbed soil areas and samples for pH will be collected from all drainage areas with a high risk of pH altering discharge.

7.7.2.1 Sampling Schedule

Stormwater runoff samples shall be collected for turbidity from each day of a qualifying rain event that results in a discharge from the project site. At minimum, turbidity samples will be collected from each site discharge location draining a disturbed area. A minimum of three samples will be collected per day of discharge during a qualifying event. Samples should be representative of the total discharge from the project each day of discharge during the qualifying event. Typically representative samples will be spaced in time throughout the daily discharge event.

Stormwater runoff samples shall be collected for pH from each day of qualifying rain events that result in a discharge from the project site. Note that pH samples are only required to be collected during project phases and from drainage areas with a high risk of pH altering discharge. A minimum of three samples will be collected per day of discharge during a qualifying event. Samples should be representative of the total discharge from the location each day of discharge during the qualifying event. Typically representative samples will be spaced in time throughout the daily discharge event.

DRAFT FOR BID PURPOSES ONLY

Stored or collected water from a qualifying storm event when discharged shall be tested for turbidity and pH (when applicable). Stored or collected water from a qualifying event may be sampled at the point it is released from the storage or containment area or at the site discharge location.

Run-on samples shall be collected whenever the QSP identifies that run-on has the potential to contribute to an exceedance of a NAL.

7.7.2.2 Sampling Locations

Sampling locations are based on the site runoff discharge locations and locations where run-on enters the site; accessibility for sampling; and personnel safety. Planned pH and turbidity sampling locations are shown on the Site Maps in Appendix B and include the locations identified in Table 7.13 and Table 7-14.

Two sampling locations on the project site and the contractor's yard have been identified for the collection of runoff samples. Table 7.12 also provides an estimate of the site's area that drains to each location.

Table 7.12 Turbidity and pH Runoff Sample Locations

Sample Location Number	Sample Location	Estimate of Site (%)
S1	Newly installed temporary storm drain inlet located near Deer Rd & Grand Ave intersection, behind the original back of sidewalk.	55%
S2	Existing storm drain inlet located near the Southern-most portion of the project limits.	45%

Two sampling locations have been identified for the collection of run-on samples where the run-on has the potential to contribute to an exceedance of an NAL or a Receiving Water Monitoring Trigger. Table 7.13 identifies the run-on sample locations.

Table 7.13 Turbidity and pH Run-On Sample Locations

Sample Location Number	Sample Location	Sample Location Latitude and Longitude (Decimal Degrees)
R1	At the northeastern limit of the project, located in a concrete v-gutter.	35.29965 N 120.65546 W
R2	At the northeastern-most limit of the project, located in a landscaped area just east of the concrete v-gutter.	35.29959 N 120.65537 W

DRAFT FOR MD PURPOSES ONLY

7.7.2.3 Monitoring Preparation

Turbidity and pH samples will be collected and analyzed by:

Contractor	☐ Yes	☐ No
Consultant	☒ Yes	☐ No
Laboratory	☐ Yes	☐ No

Samples on the project site will be collected in a consistent manner as described in Section 7.7.1.3.

7.7.2.4 Field Parameters

Samples shall be analyzed for the constituents indicated in the Table 7.14.

Table 7.14 Sample Collection and Analysis for Monitoring Turbidity and pH

Parameter	Test Method	Minimum Sample Volume[(1)]	Sample Collection Container Type	Detection Limit (minimum)
Turbidity	Field meter/probe with calibrated portable instrument	500 mL	Polypropylene or Glass (Do not collect in meter sample cells)	1 NTU
pH	Field meter/probe with calibrated portable instrument or calibrated pH test kit	100 mL	Polypropylene	0.2 pH units

Notes: [1] Minimum sample volume recommended. Specific volume requirements will vary by instrument; check instrument manufacturer instructions.

L – Liter
mL – Milliliter
NTU – Nephelometric Turbidity Unit

7.7.2.5 Sample Collection

Samples of discharge shall be collected at the designated runoff and run-on sampling locations shown on the Site Maps in Appendix B. Run-on samples shall be collected within close proximity of the point of run-on to the project.

Only personnel trained in water quality sampling and field measurements working under the direction of the QSP shall collect samples.

Sample collection and handling requirements are described in Section 7.7.7.

7.7.2.6 Field Measurements

Samples collected for field analysis, collection, analysis and equipment calibration shall be in accordance with the field instrument manufacturer's specifications.

Immediately following collection, samples for field analysis shall be tested in accordance with the field instrument manufacturer's instructions and results recorded on the *Effluent Sampling Field Log Sheet*.

DRAFT FOR BID PURPOSES ONLY

The field instrument(s) listed in Table 7.15 will be used to analyze the following constituents:

Table 7.15 Field Instruments

Field Instrument (Manufacturer and Model)	Constituent
ECO TESTR pH 2	pH
Hach 2100Q Portable Turbidimeter	Turbidity

The manufacturers' instructions are included in CSMP Attachment 4 "Field Meter Instructions". Field sampling staff shall review the instructions prior to each sampling event and follow the instructions in completing measurement of the samples.

- The instrument(s) shall be maintained in accordance with manufacturer's instructions.
- The instrument(s) shall be calibrated before each sampling and analysis event.
- Maintenance and calibration records shall be maintained with the SWPPP.

The QSP may authorize alternate equipment provided that the equipment meets the Construction General Permit's requirements and the manufacturers' instructions for calibration and use are added to CSMP Attachment 4 "Field Meter Instructions".

7.7.2.7 Data Evaluation and Reporting

Immediately upon completing the measurements for the sampling event, provide the *Effluent Sampling Field Log Sheets* to the QSP for evaluation.

Numeric Action Levels

This project is subject to NALs for pH and turbidity (Table 7.16). Compliance with the NAL for pH and turbidity is based on a daily average. Upon receiving the field log sheets, the QSP shall immediately calculate the arithmetic average of the turbidity samples, and the arithmetic average of the pH samples to determine if the NALs, shown in the table below, have been exceeded.

Table 7.16 Numeric Action Levels

Parameter	Unit	Daily Average
pH	pH units	Lower NAL = 6.5 Upper NAL = 8.5
Turbidity	NTU	250 NTU

The QSP shall within 5 days of the sample collection submit copies of the completed *Effluent Sampling Field Log Sheets* to the contractor, as listed in Appendix L.

In the event that the pH or turbidity NAL is exceeded, the QSP shall immediately notify owner's representative, as listen in Appendix L, and investigate the cause of the exceedance and identify corrective actions.

Exceedances of NALs shall be electronically reported to the State Water Board by the QSP, as listed in Appendix L, through the SMARTs system within 10 days of the conclusion of the storm

DRAFT FOR BID PURPOSES ONLY

event. If requested by the Regional Board, a NAL Exceedance report will be submitted. The NAL Exceedance Report must contain the following information:

- Analytical method(s), method reporting unit(s), and MDL(s) of each parameter;
- Date, place, time of sampling, visual observation, and/or measurements, including precipitation; and
- Description of the current BMPs associated with the sample that exceeded the NAL and the proposed corrective actions taken.

Receiving Water Monitoring Triggers

This project is not subject to Receiving Water Monitoring Triggers because it does not have a direct discharge to the receiving water.

7.7.3 Sampling and Analysis Plan for pH, Turbidity, and SSC in Receiving Water

This project is not subject to Receiving Water Monitoring.

7.7.4 Sampling and Analysis Plan for Non-Stormwater Discharges

This Sampling and Analysis Plan for non-stormwater discharges describes the sampling and analysis strategy and schedule for monitoring pollutants in authorized and unauthorized non-stormwater discharges from the project site in accordance with the requirements of the Construction General Permit.

Sampling of non-stormwater discharges will be conducted when an authorized or unauthorized non-stormwater discharge is observed discharging from the project site. In the event that non-stormwater discharges run-on to the project site from offsite locations, and this run-on has the potential to contribute to a violation of a NAL, the run-on will also be sampled.

The following authorized non-stormwater discharges identified in Section 2.7, have the potential to be discharged from the project site.

- None

In addition to the above authorized stormwater discharges, some construction activities have the potential to result in an unplanned (unauthorized) non-stormwater discharge if BMPs fail. These activities include:

- Vehicle and equipment cleaning, fueling, and maintenance
- Slurries from concrete or motor mixing
- Runoff from dust control
- Sanitary and septic wastes
- Chemical leaks and/or spills of any kind including but not limited to petroleum, paints, cure compounds, etc.

DRAFT FOR BID PURPOSES ONLY

7.7.4.1 Sampling Schedule

Samples of authorized or unauthorized non-stormwater discharges shall be collected when they are observed.

7.7.4.2 Sampling Locations

Samples shall be collected from the discharge point of the construction site where the non-stormwater discharge is running off the project site. Site discharge locations are shown on the Site Maps in SWPPP Appendix A and include the locations identified below.

Sampling locations on the project site and the contractor's yard have been identified in Section 7.7.1.2 and Section 7.7.2.2.

7.7.4.3 Monitoring Preparation

Samples on the project site will be collected in a consistent manner as described in Section 7.7.1.3.

7.7.4.4 Analytical Constituents

All non-stormwater discharges that flow through a disturbed area shall, at minimum, be monitored for turbidity.

All non-stormwater discharges that flow through an area where they are exposed to pH altering materials shall be monitored for pH.

The QSP shall identify additional pollutants to be monitored for each non-stormwater discharge incident based on the source of the non-stormwater discharge. If the source of an unauthorized non-stormwater discharge is not known, monitoring for pH, turbidity, MBAS, TOC, and residual chlorine or chloramines is recommended to help identify the source of the discharge.

Non-stormwater discharge run-on shall be monitored, at minimum, for pH and turbidity. The QSP shall identify additional pollutants to be monitored for each non-stormwater discharge incident based on the source of the non-stormwater discharge. If the source of an unauthorized non-stormwater discharge is not known, monitoring for pH, turbidity, MBAS, TOC, and residual chlorine or chloramines is recommended to help identify the source of the discharge.

Table 7.10 in Section 7.7.1.4 lists the specific sources and types of potential non-visible pollutants on the project site and the water quality indicator constituent(s) for that pollutant.

7.7.4.5 Sample Collection

Samples shall be collected at the discharge locations where the non-stormwater discharge is leaving the project site. Potential discharge locations are shown on the Site Maps in Appendix B and identified in Section 7.7.4.2.

Grab samples shall be collected and preserved in accordance with the methods identified in Table 7.11 in Section 7.7.1.6. Only personnel trained in water quality sampling under the direction of the QSP shall collect samples.

Sample collection and handling requirements are described in Section 7.7.7.

DRAFT FOR BID PURPOSES ONLY

7.7.4.6 Sample Analysis

Samples shall be analyzed using the analytical methods identified in Table 7.11 in Section 7.7.1.6.

7.7.4.7 Data Evaluation and Reporting

The QSP shall complete an evaluation of the water quality sample analytical results.

Turbidity and pH results shall be evaluated for compliance with NALs as identified in Section 7.7.2.7.

Runoff results shall also be evaluated for the constituents suspected in the non-stormwater discharge. Should the runoff sample indicate the discharge of a pollutant which cannot be explained by run-on results, the BMPs, site conditions, and surrounding influences shall be assessed to determine the probable cause for the increase.

As determined by the site and data evaluation, appropriate BMPs shall be repaired or modified to mitigate discharges of non-visible pollutant concentrations. Any revisions to the BMPs shall be recorded as an amendment to the SWPPP.

Non-storm water discharge results shall be submitted with the Annual Report.

The General Permit prohibits the non-storm water discharges that contain hazardous substances equal to or in excess of reportable quantities established in 40 C.F.R. §§ 117.3 and 302.4. The results of any non-stormwater discharge results that indicate the presence of a hazardous substance in excess of established reportable quantities shall be immediately reported to the Regional Water Board.

DRAFT FOR BID PURPOSES ONLY

7.7.5 Sampling and Analysis Plan for Other Pollutants Required by the Regional Water Board

The Regional Water Board has not specified monitoring for additional pollutants.

7.7.6 Training of Sampling Personnel

Sampling personnel shall be trained to collect, maintain, and ship samples in accordance with the Surface Water Ambient Monitoring program (SWAMP) 2008 Quality Assurance Program Plan (QAPrP). Training records of designated contractor sampling personnel are provided in Appendix K.

7.7.7 Sample Collection and Handling

7.7.7.1 Sample Collection

Samples shall be collected at the designated sampling locations shown on the Site Maps and listed in the preceding sections. Samples shall be collected, maintained and shipped in accordance with the SWAMP 2008 Quality Assurance Program Plan (QAPrP).

Grab samples shall be collected and preserved in accordance with the methods identified in preceding sections.

To maintain sample integrity and prevent cross-contamination, sample collection personnel shall follow the protocols below.

- Collect samples (for laboratory analysis) only in analytical laboratory-provided sample containers;
- Wear clean, powder-free nitrile gloves when collecting samples;
- Change gloves whenever something not known to be clean has been touched;
- Change gloves between sites;
- Decontaminate all equipment (e.g. bucket, tubing) prior to sample collection using a trisodium phosphate water wash, distilled water rinse, and final rinse with distilled water. (Dispose of wash and rinse water appropriately, i.e., do not discharge to storm drain or receiving water). Do not decontaminate laboratory provided sample containers;
- Do not smoke during sampling events;
- Never sample near a running vehicle;
- Do not park vehicles in the immediate sample collection area (even non-running vehicles);
- Do not eat or drink during sample collection; and
- Do not breathe, sneeze, or cough in the direction of an open sample container.

The most important aspect of grab sampling is to collect a sample that represents the entire runoff stream. Typically, samples are collected by dipping the collection container in the runoff flow paths and streams as noted below.

i. For small streams and flow paths, simply dip the bottle facing upstream until full.

DRAFT FOR BID PURPOSES ONLY

ii. For larger stream that can be safely accessed, collect a sample in the middle of the flow stream by directly dipping the mouth of the bottle. Once again making sure that the opening of the bottle is facing upstream as to avoid any contamination by the sampler.
iii. For larger streams that cannot be safely waded, pole-samplers may be needed to safely access the representative flow.
iv. Avoid collecting samples from ponded, sluggish or stagnant water.
v. Avoid collecting samples directly downstream from a bridge as the samples can be affected by the bridge structure or runoff from the road surface.

Note, that depending upon the specific analytical test, some containers may contain preservatives. These containers should **never** be dipped into the stream, but filled indirectly from the collection container.

7.7.7.2 Sample Handling

Turbidity and pH measurements must be conducted immediately. Do not store turbidity or pH samples for later measurement.

Samples for laboratory analysis must be handled as follows. Immediately following sample collection:

- Cap sample containers;
- Complete sample container labels;
- Sealed containers in a re-sealable storage bag;
- Place sample containers into an ice-chilled cooler;
- Document sample information on the *Effluent Sampling Field Log Sheet*; and
- Complete the CoC.

All samples for laboratory analysis must be maintained between 0-6 degrees Celsius during delivery to the laboratory. Samples must be kept on ice, or refrigerated, from sample collection through delivery to the laboratory. Place samples to be shipped inside coolers with ice. Make sure the sample bottles are well packaged to prevent breakage and secure cooler lids with packaging tape.

Ship samples that will be laboratory analyzed to the analytical laboratory right away. Hold times are measured from the time the sample is collected to the time the sample is analyzed. The General Permit requires that samples be received by the analytical laboratory within 48 hours of the physical sampling (unless required sooner by the analytical laboratory).

Use the laboratory shown in Section 7.7.1.6.

7.7.7.3 Sample Documentation Procedures

All original data documented on sample bottle identification labels, *Effluent Sampling Field Log Sheet*, and CoCs shall be recorded using waterproof ink. These shall be considered accountable documents. If an error is made on an accountable document, the individual shall make corrections by lining through the error and entering the correct information. The erroneous information shall not be obliterated. All corrections shall be initialed and dated.

Duplicate samples shall be identified consistent with the numbering system for other samples to prevent the laboratory from identifying duplicate samples. Duplicate samples shall be identified in the Effluent Sampling Field Log Sheet.

DRAFT FOR BID PURPOSES ONLY

Sample documentation procedures include the following:

Sample Bottle Identification Labels: Sampling personnel shall attach an identification label to each sample bottle. Sample identification shall uniquely identify each sample location.

Field Log Sheets: Sampling personnel shall complete the *Effluent Sampling Field Log Sheet* and *Receiving Water Sampling Field Log Sheet* for each sampling event, as appropriate.

Chain of Custody: Sampling personnel shall complete the CoC for each sampling event for which samples are collected for laboratory analysis. The sampler will sign the CoC when the sample(s) is turned over to the testing laboratory or courier.

7.8 Active Treatment System Monitoring

An Active Treatment System (ATS) will be deployed on the site?

☐ Yes ☒ No

This project does not require a project specific Sampling and Analysis Plan for an ATS because deployment of an ATS is not planned.

7.9 Bioassessment Monitoring

This project is not subject to bioassessment monitoring because it is not a Risk Level 3 project.

7.10 Watershed Monitoring Option

This project is not participating in a watershed monitoring option.

7.11 Quality Assurance and Quality Control

An effective Quality Assurance and Quality Control (QA/QC) plan shall be implemented as part of the CSMP to ensure that analytical data can be used with confidence. QA/QC procedures to be initiated include the following:

- Field logs;
- Clean sampling techniques;
- CoCs;
- QA/QC Samples; and
- Data verification.

Each of these procedures is discussed in more detail in the following sections.

7.11.1 Field Logs

The purpose of field logs is to record sampling information and field observations during monitoring that may explain any uncharacteristic analytical results. Sampling information to be included in the field log include the date and time of water quality sample collection, sampling personnel, sample container identification numbers, and types of samples that were collected. Field observations should be noted in the field log for any abnormalities at the sampling location (color, odor, BMPs, etc.). Field measurements for pH and turbidity should also be recorded in

DRAFT FOR BID PURPOSES ONLY

the field log. A Visual Inspection Field Log and an Effluent Sampling Field Log Sheet are included in CSMP Attachment 3 "Example Forms".

7.11.2 Clean Sampling Techniques

Clean sampling techniques involve the use of certified clean containers for sample collection and clean powder-free nitrile gloves during sample collection and handling. As discussed in Section 7.7.7, adoption of a clean sampling approach will minimize the chance of field contamination and questionable data results.

7.11.3 Chain of Custody

The sample CoC is an important documentation step that tracks samples from collection through analysis to ensure the validity of the sample. Sample CoC procedures include the following:

- Proper labeling of samples;
- Use of CoC forms for all samples; and
- Prompt sample delivery to the analytical laboratory.

Analytical laboratories usually provide CoC forms to be filled out for sample containers. An example CoC is included in CSMP Attachment 3 "Example Forms".

7.11.4 QA/QC Samples

QA/QC samples provide an indication of the accuracy and precision of the sample collection; sample handling; field measurements; and analytical laboratory methods. The following types of QA/QC will be conducted for this project:

☒ Field Duplicates ☐ Equipment Blanks

☐ Field Blanks ☐ Travel Blanks

7.11.4.1 Field Duplicates

Field duplicates provide verification of laboratory or field analysis and sample collection. Duplicate samples shall be collected, handled, and analyzed using the same protocols as primary samples. The sample location where field duplicates are collected shall be randomly selected from the discharge locations. Duplicate samples shall be collected immediately after the primary sample has been collected. Duplicate samples must be collected in the same manner and as close in time as possible to the original sample. Duplicate samples shall not influence any evaluations or conclusion.

7.11.4.2 Equipment Blanks

Equipment blanks provide verification that equipment has not introduced a pollutant into the sample. Equipment blanks are typically collected when:

- New equipment is used;
- Equipment that has been cleaned after use at a contaminated site;
- Equipment that is not dedicated for surface water sampling is used; or
- Whenever a new lot of filters is used when sampling metals.

DRAFT FOR BID PURPOSES ONLY

7.11.4.3 Field Blanks

Field blanks assess potential sample contamination levels that occur during field sampling activities. De-ioninzed water field blanks are taken to the field, transferred to the appropriate container, and treated the same as the corresponding sample type during the course of a sampling event.

7.11.4.4 Travel Blanks

Travel blanks assess the potential for cross-contamination of volatile constituents between sample containers during shipment from the field to the laboratory. De-ioninzed water blanks are taken along for the trip and held unopened in the same cooler with the VOC samples.

7.11.5 Data Verification

After results are received from the analytical laboratory, the QSP shall verify the data to ensure that it is complete, accurate, and the appropriate QA/QC requirements were met. Data must be verified as soon as the data reports are received. Data verification shall include:

- Check the CoC and laboratory reports.
  Make sure all requested analyses were performed and all samples are accounted for in the reports.
- Check laboratory reports to make sure hold times were met and that the reporting levels meet or are lower than the reporting levels agreed to in the contract.
- Check data for outlier values and follow up with the laboratory.
  Occasionally typographical errors, unit reporting errors, or incomplete results are reported and should be easily detected. These errors need to be identified, clarified, and corrected quickly by the laboratory. The QSP should especially note data that is an order of magnitude or more different than similar locations, or is inconsistent with previous data from the same location.
- Check laboratory QA/QC results.
  EPA establishes QA/QC checks and acceptable criteria for laboratory analyses. These data are typically reported along with the sample results. The QSP shall evaluate the reported QA/QC data to check for contamination (method, field, and equipment blanks), precision (laboratory matrix spike duplicates), and accuracy (matrix spikes and laboratory control samples). When QA/QC checks are outside acceptable ranges, the laboratory must flag the data, and usually provides an explanation of the potential impact to the sample results.
- Check the data set for outlier values and, accordingly, confirm results and re-analyze samples where appropriate.
  Sample re-analysis should only be undertaken when it appears that some part of the QA/QC resulted in a value out of the accepted range. Sample results may not be discounted unless the analytical laboratory identifies the required QA/QC criteria were not met and confirms this in writing.

Field data including inspections and observations must be verified as soon as the field logs are received, typically at the end of the sampling event. Field data verification shall include:

- Check field logs to make sure all required measurements were completed and appropriately documented;

DRAFT FOR BID PURPOSES ONLY

- Check reported values that appear out of the typical range or inconsistent; Follow-up immediately to identify potential reporting or equipment problems, if appropriate, recalibrate equipment after sampling;
- Verify equipment calibrations;
- Review observations noted on the field logs; and
- Review notations of any errors and actions taken to correct the equipment or recording errors.

7.12 Records Retention

All records of stormwater monitoring information and copies of reports (including Annual Reports) must be retained for a period of at least three years from date of submittal or longer if required by the Regional Water Board.

Results of visual monitoring, field measurements, and laboratory analyses must be kept in the SWPPP along with CoCs, and other documentation related to the monitoring.

Records are to be kept onsite while construction is ongoing. Records to be retained include:

- The date, place, and time of inspections, sampling, visual observations, and/or measurements, including precipitation;
- The individual(s) who performed the inspections, sampling, visual observation, and/or field measurements;
- The date and approximate time of field measurements and laboratory analyses;
- The individual(s) who performed the laboratory analyses;
- A summary of all analytical results, the method detection limits and reporting limits, and the analytical techniques or methods used;
- Rain gauge readings from site inspections;
- QA/QC records and results;
- Calibration records;
- Visual observation and sample collection exemption records;
- The records of any corrective actions and follow-up activities that resulted from analytical results, visual observations, or inspections; and NAL Exceedance Reports

DRAFT FOR BID PURPOSES ONLY

CSMP Attachment 1: Weather Reports

DRAFT FOR BID PURPOSES ONLY

CSMP Attachment 2: Monitoring Records

DRAFT FOR BID PURPOSES ONLY

CSMP Attachment 3: Example Forms

DRAFT FOR BID PURPOSES ONLY

Rain Gauge Log Sheet				
Construction Site Name:				
WDID #:				
Date (mm/dd/yy)	Time (24-hr)	Initials	Rainfall Depth (Inches)	Notes:

DRAFT FOR BID PURPOSES ONLY

Risk Level 1, 2, 3 ***Visual Inspection Field Log Sheet***						
Date and Time of Inspection:				Report Date:		
Inspection Type:	☐ Weekly	☐ Before predicted rain	☐ During rain event	☐ Following qualifying rain event	☐ Contained stormwater release	☐ Quarterly non-stormwater

Site Information	
Construction Site Name:	
Construction stage and completed activities:	Approximate area of exposed site:

Weather and Observations			
Date Rain Predicted to Occur:		Predicted % chance of rain:	
Estimate storm beginning: _____ (date and time)	Estimate storm duration:_____ (hours)	Estimate time since last storm: _____ (days or hours)	Rain gauge reading:_____ (inches)

Observations: If yes identify location		
Odors	Yes ☐	No ☐
Floating material	Yes ☐	No ☐
Suspended Material	Yes ☐	No ☐
Sheen	Yes ☐	No ☐
Discolorations	Yes ☐	No ☐
Turbidity	Yes ☐	No ☐

Site Inspections			
Outfalls or BMPs Evaluated		**Deficiencies Noted**	
(add additional sheets or attached detailed BMP Inspection Checklists)			
Photos Taken:	Yes ☐	No ☐	Photo Reference IDs:

Corrective Actions Identified (note if SWPPP/REAP change is needed)

Inspector Information	
Inspector Name:	Inspector Title:

DRAFT FOR BID PURPOSES ONLY

Signature:	Date:

Risk Level 2
Effluent Sampling Field Log Sheets

Construction Site Name:	Date:	Time Start:
Sampler:		

Sampling Event Type:	☐ Stormwater	☐ Non-stormwater	☐ Non-visible pollutant

Field Meter Calibration

pH Meter ID No./Desc.: Calibration Date/Time:	Turbidity Meter ID No./Desc.: Calibration Date/Time:

Field pH and Turbidity Measurements

Discharge Location Description	pH	Turbidity	Time

Grab Samples Collected

Discharge Location Description	Sample Type	Time

Additional Sampling Notes:

Time End:

DRAFT FOR BID PURPOSES ONLY

NAL Exceedance Evaluation Summary Report	Page __ of __
Project Name	
Project WDID	
Project Location	
Date of Exceedance	
Type of Exceedance	**NAL Daily Average** ☐ **pH** ☐ **Turbidity** ☐ **Other (specify) _____**
Measurement or Analytical Method	☐ **Field meter** **(Sensitivity: _____)** ☐ **Lab method (specify) _____** **(Reporting Limit: _____)** **(MDL: _____)**
Calculated Daily Average	☐ **pH _____ pH units** ☐ **Turbidity _____ NTU**
Rain Gauge Measurement	**_____ inches**
Compliance Storm Event	**_____ inches (5-year, 24-hour event)**
Visual Observations on Day of Exceedance	

DRAFT FOR BID PURPOSES ONLY

NAL Exceedance Evaluation Summary Report	Page __ of __
Description of BMPs in Place at Time of Event	
Initial Assessment of Cause	
Corrective Actions Taken (deployed after exceedance)	
Additional Corrective Actions Proposed	
Report Completed By	_____ **(Print Name, Title)**
Signature	_____

DRAFT FOR BID PURPOSES ONLY

CHAIN-OF-CUSTODY **DATE:** **Lab ID:**

DESTINATION LAB: ATTN: **ADDRESS:** **Office Phone:** **Cell Phone:**							REQUESTED ANALYSIS				Notes:	
SAMPLED BY:												
Contact:												
Project Name												
Client Sample ID	**Sample Date**	**Sample Time**	**Sample Matrix**	**Container #**	**Container Type**	**Container Pres.**						
SENDER COMMENTS:							**RELINQUISHED BY**					
							Signature:					
							Print:					
							Company:					
							Date:			TIME:		
LABORATORY COMMENTS:							**RECEIVED BY**					
							Signature:					
							Print:					
							Company:					
							Date:			TIME:		

FOR PURPOSES ONLY

CSMP Attachment 4: Field Meter Instructions

DRAFT FOR BID PURPOSES ONLY

Operating Instructions EcoTestr pH 2 Waterproof Pocket Tester

Before First Use: Precipitation of the sensor electrolyte may cause white crystals to form around the cap. This is normal and does not affect the tester's performance.

Conditioning: Condition the tester before first use. Remove the transparent cap and fill with tap water to a height of 20 mm. Recap the tester and soak* sensor for one hour. This will activate the sensor and dissolve any crystals present. Rinse the cap after use.

Calibration: This tester allows up to 3-point calibration. Start with pH 7.0 buffer • Press **on/off** button to power on. Immerse sensor in about 20 mm of buffer and stir gently. Wait for displayed value to stabilize at or near pH 7.0 • Press **cal** button to enter calibration sequence. **CAL** will flash momentarily and then show a flashing default reading • To complete the first calibration point, press **hold/ent** button to confirm (**Ent**). If necessary, proceed to next buffer value (pH 4.0 or pH 10.0) and repeat the calibration procedure to obtain your second and third calibration point • To abort calibration, press **cal** button to escape (**ESC**). You have successfully calibrated the instrument.
Note: If no button is pressed for 15 seconds, tester will automatically confirm calibration.

pH Testing: Remove cap and press **on/off** button to turn on the tester • Dip the sensor in at least 20 mm of test solution • Stir once and let the reading stabilize. Note the pH value • Press **hold/ent** button to hold (**HO**) the reading. Annunciator will flash to indicate reading is in hold mode. Press **hold/ent** again to cancel (**HC**) the hold mode • Press the **on/off** button to shut tester off.
Note: Tester automatically shuts off after 8.5 minutes of non-use to conserve batteries.

Maintenance: Rinse the sensor in tap water after use. In harsh samples, take readings quickly, then rinse sensor immediately afterwards with de-ionized water to remove residues and prevent electrode contamination.

Useful Notes: • To avoid cross-contamination, rinse sensor between samples and buffer with de-ionized water • To maintain tester accuracy, use tester regularly or calibrate at regular intervals as required • For long-term storage, fill the cap with 20 mm of storage solution (NOT de-ionized water), and replace cap*. This will keep the sensor conditioned and ready for next use.

** The tester cap is not leak-proof. Please keep tester upright during soaking.*

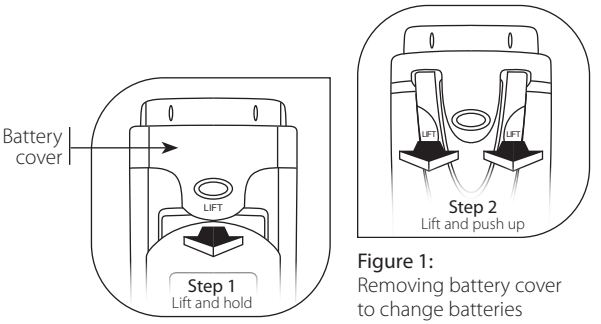

Figure 1:
Removing battery cover to change batteries

Changing Batteries: To remove batteries, lift up front battery cover and hold in position before lifting two sides of the pocket clip (Figure 1). Remove old batteries and replace with fresh ones. Note polarity as shown in battery compartment. No re-calibration is required after battery change since tester's non-volatile memory function retains calibration.

Error Messages: bAt – Batteries are weak and need replacement. **Err** – Wrong or bad buffer value (out of range) and/or the sensor is failing. Use fresh buffer. **Or/Ur** – Over or Under range signal or sensor is contaminated/damaged/not fully immersed.

Reset Option: Reset option allows you to restore the calibration back to factory default settings • Press **on/off** to turn off tester • Press and hold **hold/ent** button and then switch on using the **on/off** button. The display shows a flashing **rSt** (reset) • Press **hold/ent** button again to confirm (**Ent**) reset or press the **cal** button to escape (**ESC**) reset option.

Warranty: This tester is supplied with a warranty against manufacturing defects for a period of ONE year from date of purchase.

Accessories:

Eutech Order Code	Oakton Order Code	Description
ECBU4BT	00654-00	pH 4.01 buffer solution, 480 ml bottle
ECBU7BT	00654-04	pH 7.00 buffer solution, 480 ml bottle
ECBU10BT	00654-08	pH 10.01 buffer solution, 480 ml bottle
ECRE005	00653-04	Storage solution for pH sensor, 480 ml bottle
ECDPCBT	00653-06	Protein remover solution, 480 ml bottle

DOC022.97.80041

2100Q and 2100Q*is*

04/2013, Edition 2

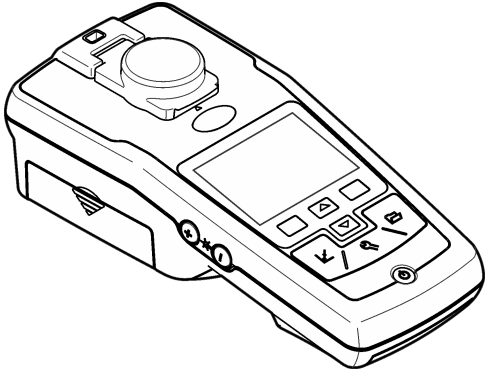

Basic User Manual
Manuel d'utilisation de base
Manual básico del usuario
Manual Básico do Usuário
基本用户手册
基本取扱説明書
기본 사용 설명서

Specifications

Specifications are subject to change without notice.

Specification	Details
Measurement method	Ratio turbidimetric determination using a primary nephelometric light scatter signal (90°) to the transmitted light scatter signal.
Regulatory	**2100Q:** Meets EPA Method 180.1 **2100Q*is*:** Meets ISO 7027
Lamp source	**2100Q:** Tungsten filament lamp **2100Q*is*:** Light-emitting diode (LED) at 860 nm
Range	0–1000 NTU (FNU)
Accuracy	±2% of reading plus stray light from 0–1000 NTU (FNU)
Repeatability	±1% of reading or 0.01 NTU (FNU), whichever is greater
Resolution	0.01 NTU on lowest range
Stray light	≤ 0.02 NTU (FNU)
Signal averaging	Selectable on or off
Detector	Silicon Photodiode
Reading modes	Normal (Push to Read), Signal Averaging or Rapidly Settling Turbidity™
Calibration options	Single step RapidCal™ for Low-Level Regulatory Reporting from 0–40 NTU (FNU) Full range calibration from 0–1000 NTU (FNU) Calibration to degrees of turbidity
Calibration logger	Records the last 25 successful calibrations
Verification logger	Logs the last 250 successful verifications
Data logger	500 records
Power requirement	AC 100–240 V , 50/60 Hz (with power or USB/power module) 4 AA alkaline batteries Rechargeable NiMH (for use with USB/power module)
Operating conditions	Temperature: 0 to 50 °C (32 to 122 °F) Relative Humidity: 0–90% at 30 °C, 0–80% at 40 °C, 0–70% at 50 °C, noncondensing
Storage conditions	–40 to 60 °C (–40 to 140 °F), instrument only
Interface	Optional USB
Sample required	15 mL (0.5 oz.)
Sample cells	Round cells 60 x 25 mm (2.36 x 1 in.) borosilicate glass with screw caps
Dimensions	22.9 x 10.7 x 7.7 cm (9.0 x 4.2 x 3.0 in.)
Weight	530 g (1.17 lb) without batteries 620 g (1.37 lb) with four AA alkaline batteries
Meter enclosure rating	IP67 (closed lid, battery and module compartment excluded)
Protection class	Power supply: Class II
Certification	CE certified
Warranty	1 year (EU: 2 years)

General information

In no event will the manufacturer be liable for direct, indirect, special, incidental or consequential damages resulting from any defect or omission in this manual. The manufacturer reserves the right to make changes in this manual and the products it describes at any time, without notice or obligation. Revised editions are found on the manufacturer's website.

Safety information

NOTICE

The manufacturer is not responsible for any damages due to misapplication or misuse of this product including, without limitation, direct, incidental and consequential damages, and disclaims such damages to the full extent permitted under applicable law. The user is solely responsible to identify critical application risks and install appropriate mechanisms to protect processes during a possible equipment malfunction.

Please read this entire manual before unpacking, setting up or operating this equipment. Pay attention to all danger and caution statements. Failure to do so could result in serious injury to the operator or damage to the equipment.

Make sure that the protection provided by this equipment is not impaired. Do not use or install this equipment in any manner other than that specified in this manual.

Use of hazard information

⚠DANGER

Indicates a potentially or imminently hazardous situation which, if not avoided, will result in death or serious injury.

⚠WARNING

Indicates a potentially or imminently hazardous situation which, if not avoided, could result in death or serious injury.

⚠CAUTION

Indicates a potentially hazardous situation that may result in minor or moderate injury.

NOTICE

Indicates a situation which, if not avoided, may cause damage to the instrument. Information that requires special emphasis.

Precautionary labels

Read all labels and tags attached to the instrument. Personal injury or damage to the instrument could occur if not observed. A symbol on the instrument is referenced in the manual with a precautionary statement.

	This is the safety alert symbol. Obey all safety messages that follow this symbol to avoid potential injury. If on the instrument, refer to the instruction manual for operation or safety information.
	This symbol indicates that a risk of electrical shock and/or electrocution exists.
	Electrical equipment marked with this symbol may not be disposed of in European public disposal systems after 12 August of 2005. In conformity with European local and national regulations (EU Directive 2002/96/EC), European electrical equipment users must now return old or end-of-life equipment to the Producer for disposal at no charge to the user. ***Note:*** *For return for recycling, please contact the equipment producer or supplier for instructions on how to return end-of-life equipment, producer-supplied electrical accessories, and all auxiliary items for proper disposal.*

Certification

Canadian Radio Interference-Causing Equipment Regulation, IECS-003, Class A:

Supporting test records reside with the manufacturer.

This Class A digital apparatus meets all requirements of the Canadian Interference-Causing Equipment Regulations.

Cet appareil numérique de classe A répond à toutes les exigences de la réglementation canadienne sur les équipements provoquant des interférences.

FCC Part 15, Class "A" Limits

Supporting test records reside with the manufacturer. The device complies with Part 15 of the FCC Rules. Operation is subject to the following conditions:

1. The equipment may not cause harmful interference.

2. The equipment must accept any interference received, including interference that may cause undesired operation.

Changes or modifications to this equipment not expressly approved by the party responsible for compliance could void the user's authority to operate the equipment. This equipment has been tested and found to comply with the limits for a Class A digital device, pursuant to Part 15 of the FCC rules. These limits are designed to provide reasonable protection against harmful interference when the equipment is operated in a commercial environment. This equipment generates, uses and can radiate radio frequency energy and, if not installed and used in accordance with the instruction manual, may cause harmful interference to radio communications. Operation of this equipment in a residential area is likely to cause harmful interference, in which case the user will be required to correct the interference at their expense. The following techniques can be used to reduce interference problems:

1. Disconnect the equipment from its power source to verify that it is or is not the source of the interference.
2. If the equipment is connected to the same outlet as the device experiencing interference, connect the equipment to a different outlet.
3. Move the equipment away from the device receiving the interference.
4. Reposition the receiving antenna for the device receiving the interference.
5. Try combinations of the above.

Product overview

The 2100Q and 2100Q*is* portable turbidimeters measure turbidity from 0 to 1000 NTU (FNU). Primarily for field use, the portable meter operates on four AA batteries. Data can be stored and transferred to a printer, computer or USB storage device.

Figure 1 Product overview

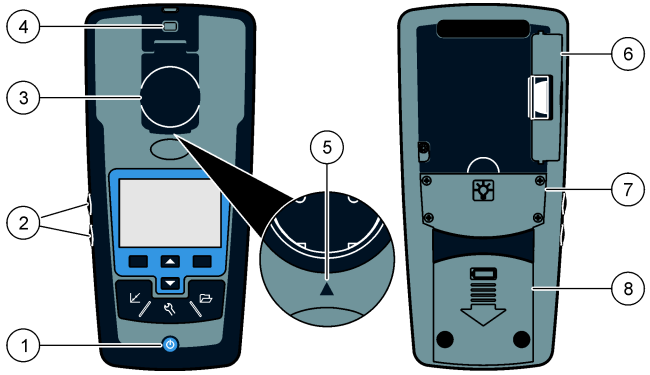

1	Power on or off	**5**	Alignment arrow
2	Backlight keys (+ and -)	**6**	Module
3	Sample cell holder with lid	**7**	Lamp compartment
4	Attachment for lanyard	**8**	Battery compartment

Product components

Refer to Figure 2 to make sure that all components have been received. If any of these items are missing or damaged, contact the manufacturer or a sales representative immediately.

Figure 2 2100Q and 2100Q*is* components

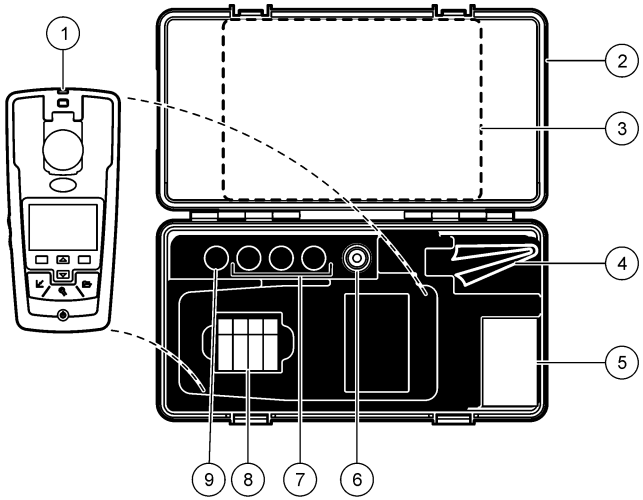

1 2100Q or 2100Q*is* turbidimeter	**6** Silicone oil
2 Carrying case	**7** 20, 100 and 800 NTU StablCal calibration standards
3 User manual and Quick reference guide	**8** AA alkaline batteries (pk/4)
4 Oiling cloth	**9** StablCal 10 NTU verification standard
5 1" sample cell (10 mL) with cap (pk/6)	

Installation

⚠ CAUTION

Multiple hazards. Only qualified personnel must conduct the tasks described in this section of the document.

Install the battery

⚠ WARNING

Explosion hazard. An expired battery can cause hydrogen gas buildup inside the instrument. Replace the battery before it expires. Do not store the instrument for long periods with a battery installed.

⚠ WARNING

Potential fire hazard. Use only alkaline or nickel metal hydride batteries (NiMH) in the meter. Other battery types or incorrect installation can cause a fire. Never mix battery types in the meter.

NOTICE

The battery compartment is not waterproof. If the battery compartment becomes wet, remove and dry the batteries and dry the interior of the compartment. Check the battery contacts for corrosion and clean them if necessary.

NOTICE

When using nickel metal hydride (NiMH) batteries, the battery icon will not indicate a full charge after freshly charged batteries have been inserted (NiMH batteries are 1.2 V versus 1.5 V for alkaline batteries). Even though the icon does not indicate complete charge, 2300 mAH NiMH batteries will achieve 90% of instrument operation lifetime (before recharge) versus new alkaline batteries.

NOTICE

To avoid potential damage to the meter from battery leakage, remove the meter batteries prior to extended periods of non-use.

The meter can be powered with AA alkaline or rechargeable NiMH batteries. To conserve battery life, the meter will power off after 10 minutes of inactivity, the backlight powers off after 30 seconds. This time can be changed in the Power Management menu.
Note: *Rechargeable batteries will only be recharged with the USB/power module. Refer to the module documentation for further information.*

For battery installation refer to Figure 3.

1. Remove the battery cover.
2. Install 4 AA alkaline or 4 AA nickel metal hydride (NiMH) batteries. Make sure that the batteries are installed in the correct orientation.
3. Replace the battery cover.

Figure 3 Battery installation

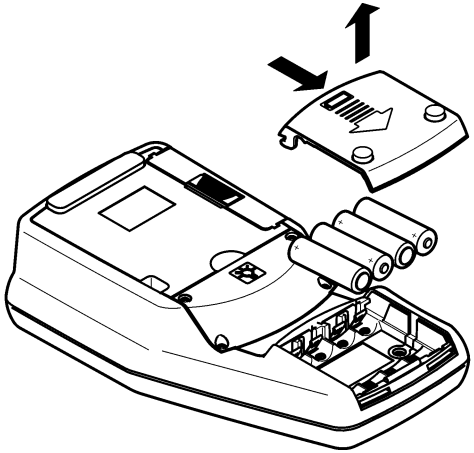

User interface and navigation

User interface

Figure 4 Keypad description

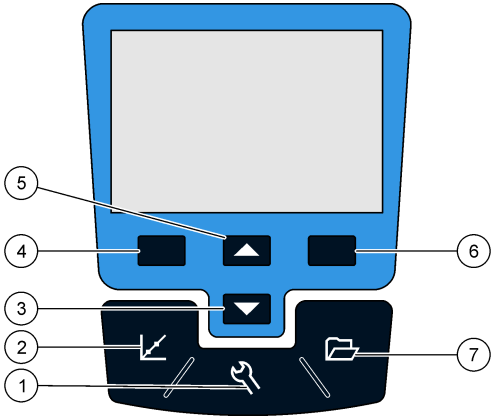

1 **SETTINGS** key: select menu options for setting up the meter	5 **UP** key: scroll through menus, enter numbers and letters
2 **CALIBRATION** key: shows calibration screen, start calibration, select cal options	6 **RIGHT** key (contextual): read turbidity sample, selects or confirms options, opens/jumps to sub-menus
3 **DOWN** key: scroll through menus, enter numbers and letters	7 **DATA MANAGEMENT** key: view, delete or transfer stored data
4 **LEFT** key (contextual): access for calibration verification, cancels or exits the current menu screen to the previous menu screen	

Display description

The measurement screen shows the turbidity, unit, calibration status, date and time, operator ID (if setup) and sample ID (if setup). Refer to Figure 5.

Figure 5 Single screen display

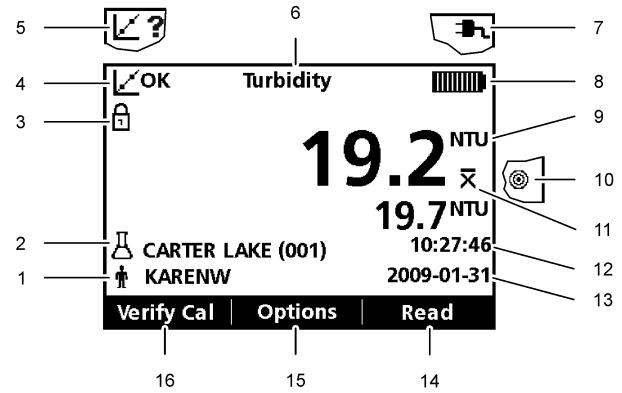

1 Operator identification	**9** NTU (Nephelometric Turbidity Unit) or FNU (Formazin Turbidity Unit)
2 Sample identification	**10** Reading mode: Rapidly Settling Turbidity (Target icon)
3 Stability or display lock indicator	**11** Reading mode: Signal Average (X-bar icon)
4 Calibration status indicator (Calibration OK=pass)	**12** Time
5 Calibration status indicator (Calibration ?=fail)	**13** Date
6 Parameter title	**14** Read (contextual: OK, Select)
7 AC power icon	**15** Options (contextual)
8 Battery icon	**16** Verification calibration

Navigation

The meter contains a Settings menu, Reading Options menu, Calibration Options menu and Calibration Verification Options menu to change various options. Use the **UP** and **DOWN** keys to highlight different options. Push the **RIGHT** key to select an option. There are two ways to change options:

1. Select an option from a list: Use the **UP** and **DOWN** keys to select an option. If check boxes are shown, more than one option can be selected. Push the **LEFT** key under Select.

   Note: *To deselect check boxes, push the **LEFT** key under Deselect.*
2. Enter an option value using the arrow keys:
   Push the **UP** and **DOWN** keys to enter or change a value.
3. Push the **RIGHT** key to advance to the next space.
4. Push the **RIGHT** key under **OK** to accept the value.

Startup

Turn the meter on and off

Push the **ON/OFF** key to turn on or turn off the meter. If the meter does not turn on, make sure that the batteries, or the module, are properly installed or that the AC power supply is properly connected to an electrical outlet.

Note: *The Auto-Shutoff option can also be used to turn off the meter. Additional information is available on the manufacturer's website.*

Change the language

There are three options to set the language:

- The display language is selected when the meter is powered on for the first time.
- The display language is selected when the power key is pushed and held.
- The language can be changed from the Settings menu.

1. Select a language from the list. Confirm with **OK**.
2. Push **Done** when the update is complete.

Change the date and time

The date and time can be changed from the Date & Time menu.

1. Push the **SETTINGS** key and select Date & Time.
2. Update the time and date information:

Option	Description
Format	Select one of the formats for the date and time: yyyy-mm-dd 24h yyyy-mm-dd 12h dd-mm-yyyy 24h dd-mm-yyyy 12h mm/dd/yyyy 24h mm/dd/yyyy 12h
Date	Enter the current date
Time	Enter the current time

The current date and time will be shown on the display.

After the date and time setup, the meter is ready to take a reading.

Standard operation

Use a sample ID

The sample ID tag is used to associate readings with a particular sample location. If assigned, stored data will include this ID.

1. Select **Sample ID** in the Settings menu.
2. Select, create or delete a sample ID:

Option	Description
Current ID	Select an ID from a list. The current ID will be associated with sample data until a different ID is selected.
Create a New Sample ID	Enter a name for a new sample ID.
Delete Sample ID	Delete an existing sample ID.

Use an operator ID

The operator ID tag associates readings with an individual operator. All stored data will include this ID.

1. Select **Operator ID** in the Settings menu.
2. Select, create or delete an operator ID:

Option	Description
Current ID	Select an ID from a list. The current ID will be associated with sample data until a different ID is selected.
Create a New Operator ID	Enter a name for a new operator ID (maximum 10 names can be entered).
Delete Operator ID	Delete an existing operator ID.

Advanced operation

Calibrate the turbidimeter with StablCal® Standards

Note: *For best accuracy use the same sample cell or four matched sample cells for all readings during calibration. Insert the sample cell in the instrument cell compartment so the diamond or orientation mark aligns with the raised orientation mark in front of the cell compartment.*

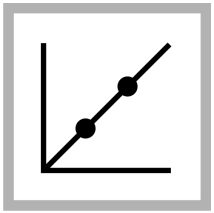

1. Push the **CALIBRATION** key to enter the Calibration mode. Follow the instructions on the display.
Note: *Gently invert each standard before inserting the standard.*

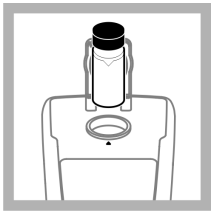

2. Insert the 20 NTU StablCal Standard and close the lid.
Note: *The standard to be inserted is bordered.*

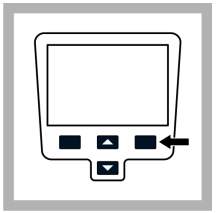

3. Push **Read**. The display shows Stabilizing and then shows the result.

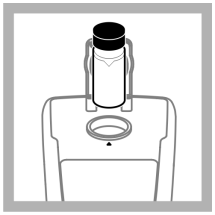

4. Repeat Step 2 and 3 with the 100 NTU and 800 NTU StablCal Standard.
Note: *Push **Done** to complete a 2 point calibration.*

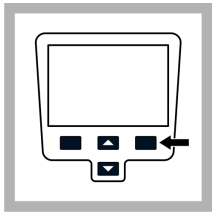

5. Push **Done** to review the calibration details.

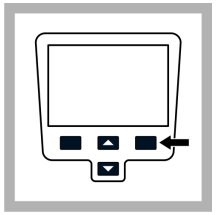

6. Push **Store** to save the results.
After a calibration is complete, the meter automatically goes into the Verify Cal mode. Additional information is available on the manufacturer's website.

Reading modes

1. Push the **UP** or **DOWN** key to enter the Reading Options menu.
2. Select Reading Mode to select one of the following options:

Option	Description
Normal (Default setting)	The normal mode reads and averages three readings. The result is shown after the reading.

Option	Description
Signal Average	The Signal Average mode compensates for reading fluctuations caused by drifting of sample particles through the light path. The X-bar icon is shown on the display when signal averaging is on. The Signal Average mode measures 12 times and starts to show the average after three readings. The final result is the average of all 12 readings.
Rapidly Settling Turbidity™ (RST)	The Rapidly Settling Turbidity (RST) mode calculates and continuously updates the turbidity reading of the sample to a confidence of 95%, based on the accumulated trend of the real time measured values. The RST mode is best used on samples that settle rapidly and continuously change in value. The reading is based on a correctly prepared sample that is homogeneous at the beginning of the reading. It is best applied to samples that are greater than 20 NTU. The sample must be mixed thoroughly by inversion immediately before inserting it into the meter. The target icon is shown on the display when the Rapidly Settling Turbidity is on. The Rapidly Settling Turbidity reads and calculates five readings while showing intermediate results.

Maintenance

⚠ CAUTION

Multiple hazards. Only qualified personnel must conduct the tasks described in this section of the document.

Clean the meter

The meter is designed to be maintenance-free and does not require regular cleaning for normal operation. Exterior surfaces of the meter may be cleaned as necessary.

Note: *Do not clean the meter with solvents to avoid damaging the material.*

1. Clean the meter with a dust- and lint-free dry or slightly damp cloth. A mild soap solution can also be used for liposoluble contamination.

Apply silicone oil to a sample cell

Sample cells and caps must be extremely clean and free from significant scratches. Apply a thin coating of silicone oil on the outside of the sample cells to mask minor imperfections and scratches that may contribute to light scattering.

Note: *Use only the provided silicone oil. This silicone oil has the same refractive index as the sample cell glass.*

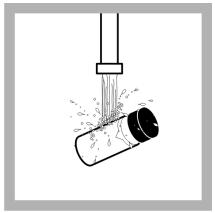

1. Clean the inside and outside of the cells and caps by washing with a laboratory glass cleaning detergent. Follow with multiple rinses with distilled or demineralized water.

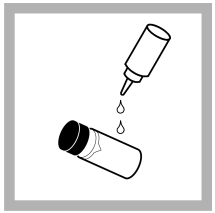

2. Apply a small bead of silicone oil from the top to the bottom of the cell.

3. Use the provided oiling cloth to spread the oil uniformly. Wipe off the excess so that only a thin coat of oil is left. Make sure that the sample cell is almost dry with little or no visible oil.

Note: *Store the oiling cloth in a plastic storage bag to keep the cloth clean.*

Store the sample cells

NOTICE

Do not air dry the sample cells.

Note: *Always store the sample cells with caps on to prevent the cells from drying.*

1. Fill the sample cells with distilled or demineralized water.
2. Cap and store the sample cells.
3. Wipe the outside of the sample cells dry with the a soft cloth.

Replace the battery

⚠WARNING

Explosion hazard. An expired battery can cause hydrogen gas buildup inside the instrument. Replace the battery before it expires. Do not store the instrument for long periods with a battery installed.

⚠WARNING

Potential fire hazard. Use only alkaline or nickel metal hydride batteries (NiMH) in the meter. Other battery types or incorrect installation can cause a fire. Never mix battery types in the meter.

For battery replacement refer to Install the battery on page 6.

1. Remove the battery cover.
2. Remove the batteries.
3. Install 4 AA alkaline or 4 AA nickel metal hydride (NiMH) batteries. Make sure that the batteries are installed in the correct orientation.
4. Replace the battery cover.

Replace the lamp

⚠CAUTION

Burn Hazard. Wait until lamp cools down. Contact with the hot lamp can cause burns.

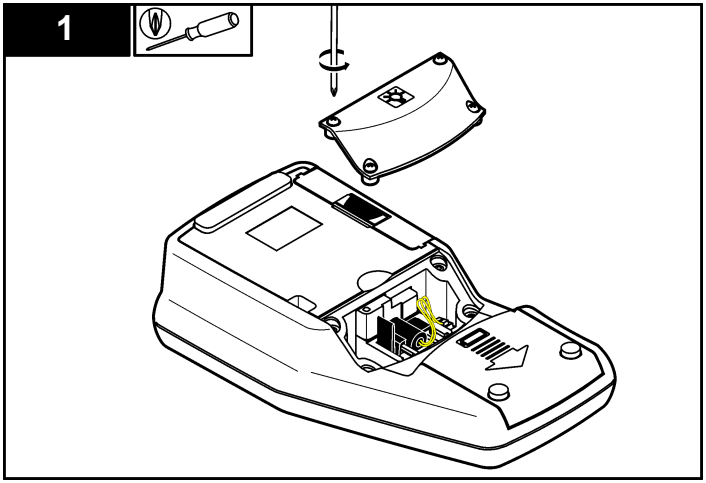
1

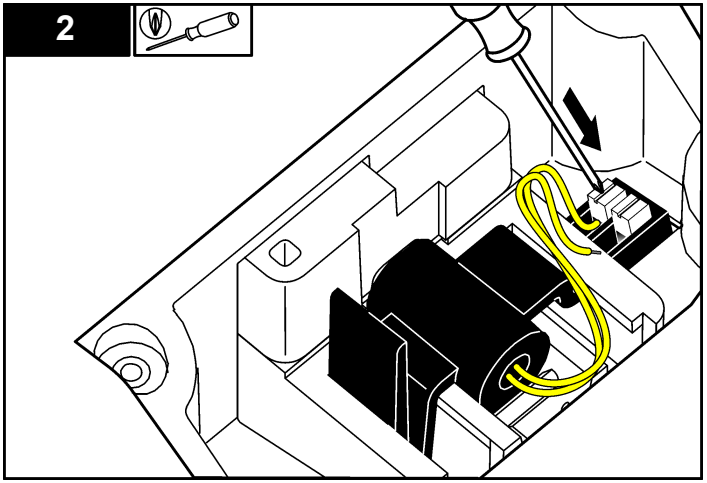
2

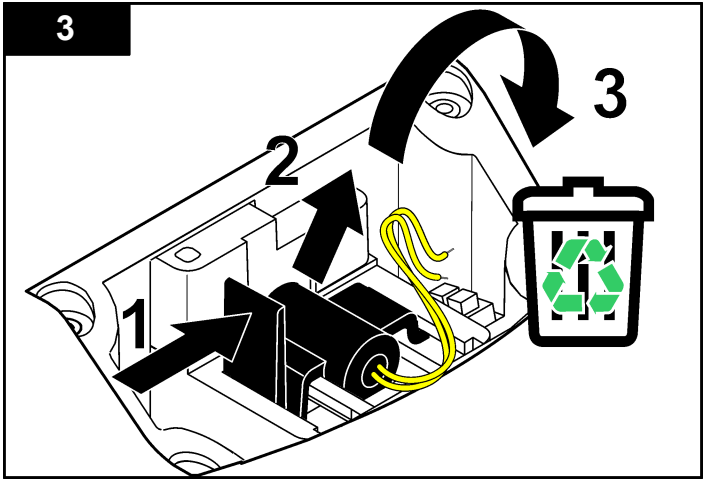
3
2
3
1

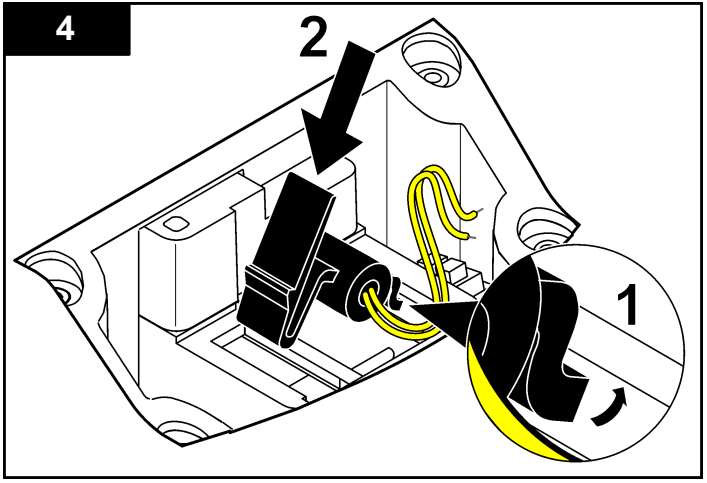
4
2
1

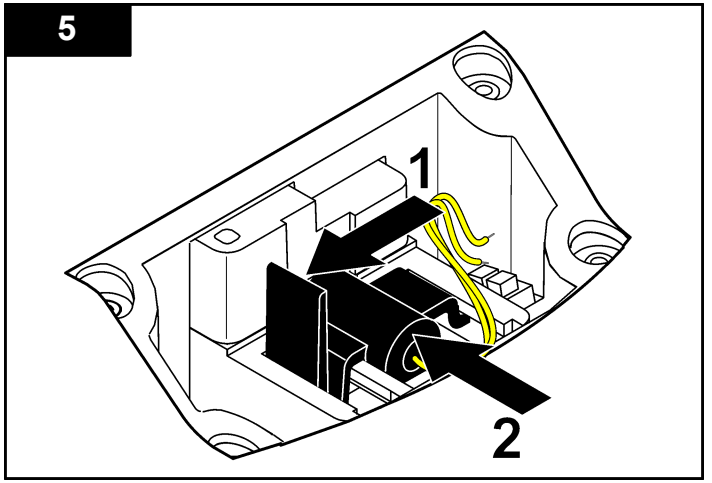
5
1
2

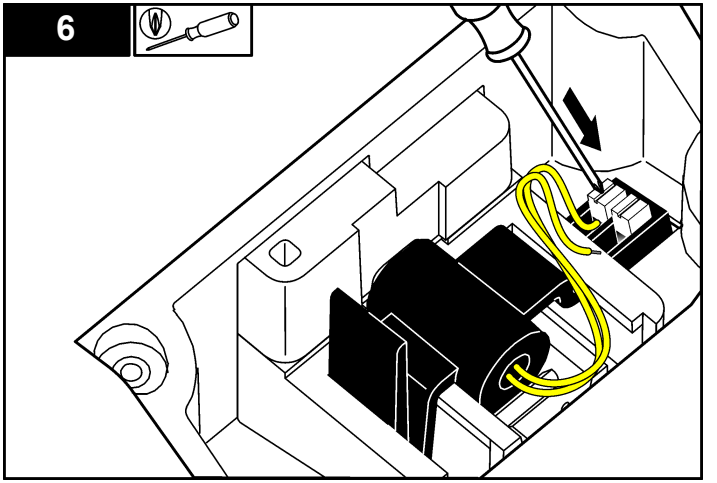
6

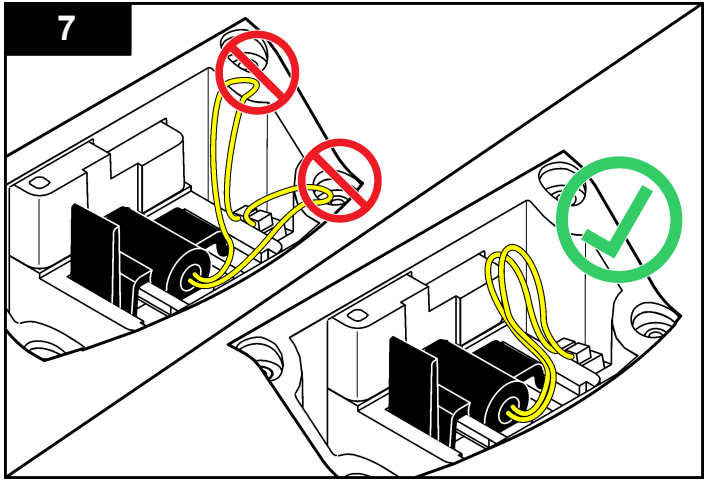
7

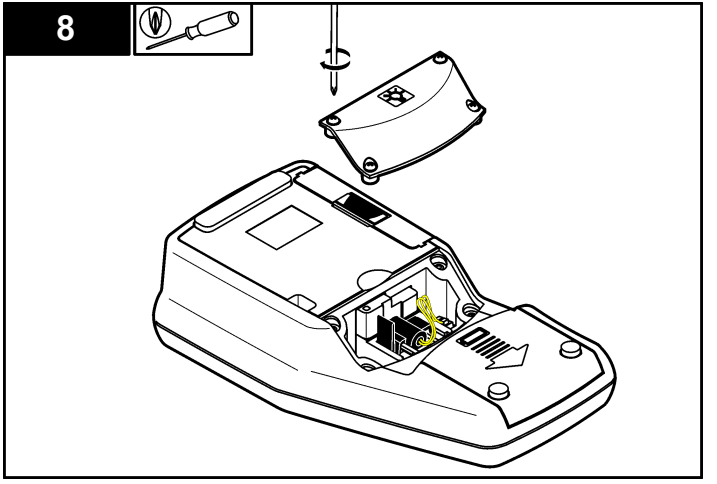
8

Troubleshooting

Refer to the following table for common problem messages or symptoms, possible causes and corrective actions.

Error/Warning	Description	Solution
Close lid and push Read.	The lid is open or lid detection failed.	Make sure that the lid is closed during reading and re-read.
Low Battery!	Battery is low.	• Insert new batteries • Connect USB/power module if rechargeable batteries are used
ADC Failure!	Hardware error causing reading to fail.	Repeat the reading.
Detector signal too low!	Insufficient light on the 180° detector.	• Check for obstructed light path. • Check the lamp.
Overrange!	Turbidity too high-caused probably by calibrating with RapidCal™ only.	• Calibrate the upper range. • Dilute the sample.
Underrange!	The measured absorbance is below the calibration range.	Repeat calibration
Please check the lamp!	Signals are too low on the 90° and 180° detector.	**2100Q:** The lamp is defective. Change the lamp (refer to Replace the lamp on page 12). **2100Q*is*:** Contact technical support.
Temperature too high! Switch off instrument.	Temperature has exceeded the meter limits (>60 °C or >140 °F).	Turn off the meter and let it cool down.
RST: Average value!	Solids are settling too slowly. The reading mode is not suitable for this sample.	Select Normal or Signal Average reading mode.
Confidence level is < 95%	The reading mode Rapidly Settling Turbidity did not meet the range of ≥ 95% confidence.	• Invert the sample several times so that the solids allocate. Repeat the reading again. • Switch to the Normal reading mode if the sample is stable and does not have settable solids.
Standard value out of range. Insert standard and push Read	Used incorrect standard value for the reading.	Insert the appropriate standard and read again.
ID already in use. Enter new ID	The Operator or Sample ID is unavailable as it is already assigned.	Create a new ID.
Error - Security Please set password before activating security	No password is created.	Create a new password.
Please enter at least one character.	Password must contain minimum of one character.	Create a password of at least one character.
Password incorrect. Please retry.	Incorrect password was entered.	Enter the appropriate password.

Error/Warning	Description	Solution
Please disconnect the USB cable from your computer.	Data storage does not respond while connected to the meter and the computer.	Disconnect the USB cable from the meter and try sending data again.
USB module memory full. Delete data and try again.	Data storage is full.	**1.** Connect USB/power module to the computer. **2.** Download the stored data to the computer. **3.** Delete Data Log on the module.
Delete Last Reading Failed!	Error in the data storage.	Turn the meter off and on. If the error message still occurs, contact technical support.
Delete Data Log failed!		
Can't read data set!		
Can't store data!		
Can't store to the Reading Log!		
Can't store to the Verify Cal Log!		
Error storing data!		
Error reading data!		

CSMP Attachment 5: Supplemental Information

DRAFT FOR BID PURPOSES ONLY

Section 8 References

Project Plans and Specifications No. prepared by Rick Engineering Company

State Water Resources Control Board (2009). Order 2009-0009-DWQ, NPDES General Permit No. CAS000002: National Pollutant Discharges Elimination System (NPDES) California General Permit for Storm Water Discharge Associated with Construction and Land Disturbing Activities. Available on-line at: http://www.waterboards.ca.gov/water_issues/programs/stormwater/construction.shtml.

State Water Resources Control Board (2010). Order 2010-0014-DWQ, NPDES General Permit No. CAS000002: National Pollutant Discharges Elimination System (NPDES) California General Permit for Storm Water Discharge Associated with Construction and Land Disturbing Activities. Available on-line at: http://www.waterboards.ca.gov/water_issues/programs/stormwater/construction.shtml.

State Water Resources Control Board (2012). Order 2012-0006-DWQ, NPDES General Permit No. CAS000002: National Pollutant Discharges Elimination System (NPDES) California General Permit for Storm Water Discharge Associated with Construction and Land Disturbing Activities. Available on-line at: http://www.waterboards.ca.gov/water_issues/programs/stormwater/construction.shtml.

CASQA 2009, *Stormwater BMP Handbook Portal: Construction*, November 2009, www.casqa.org

DRAFT FOR BID PURPOSES ONLY

Appendix A: Calculations

DRAFT FOR BID PURPOSES ONLY

Appendix B: Site Maps

DRAFT FOR BID PURPOSES ONLY

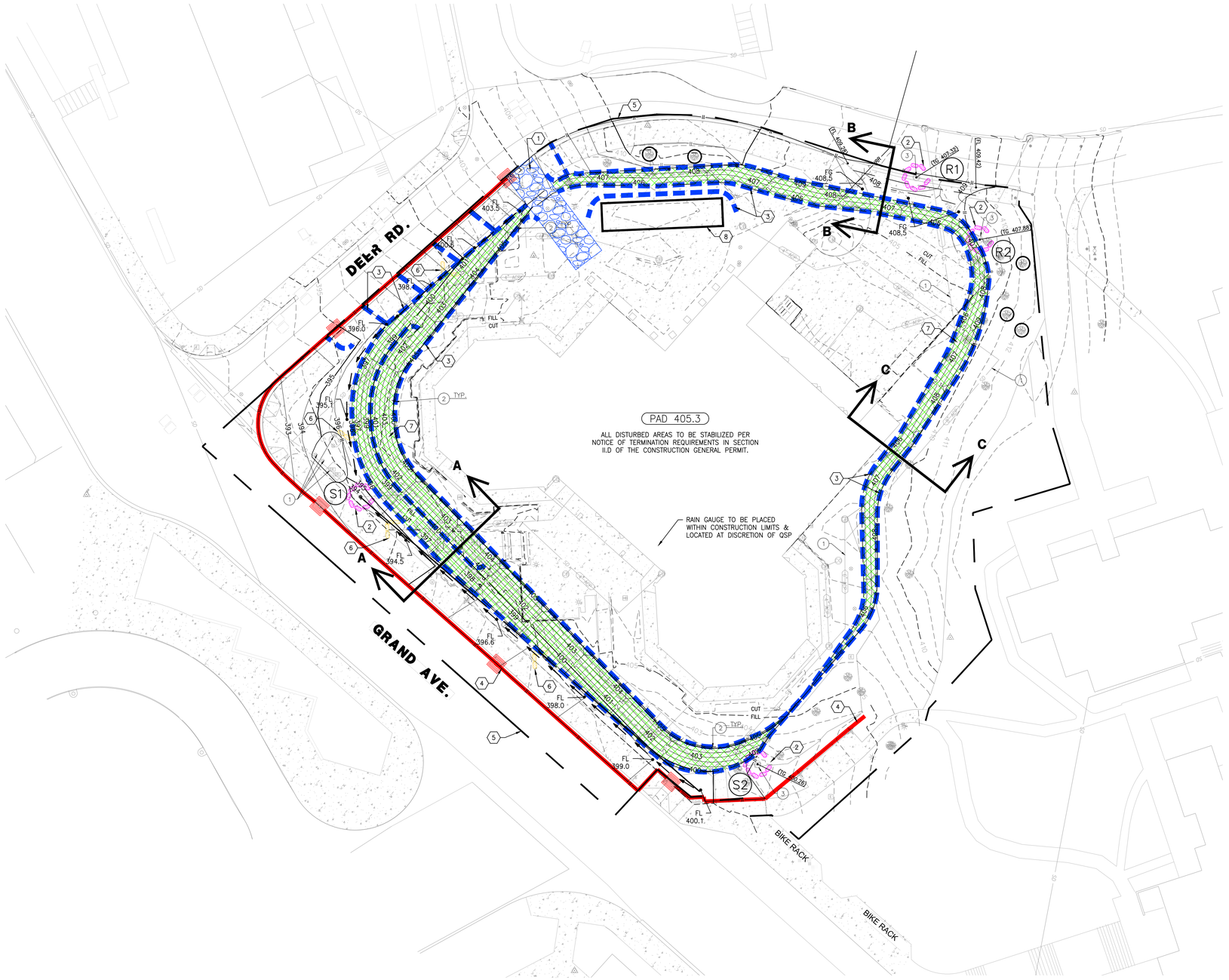

GRADING KEY NOTES

1. EXISTING UTILITY TO REMAIN. PROTECT IN PLACE PER SHEET CD2.1.
2. CONSTRUCT 6" BERM PER DETAIL ON THIS SHEET.
3. EXISTING CATCH BASIN TO BE PROTECTED IN PLACE.

GENERAL NOTES:

ALL CLEARING, GRUBBING, SITE PREPARATION, OVER-EXCAVATION, EARTHWORK, ENGINEERED FILL, AND MATERIAL TESTING SHALL BE IN COMPLIANCE WITH THE GEOTECHNICAL ENGINEERING REPORT.

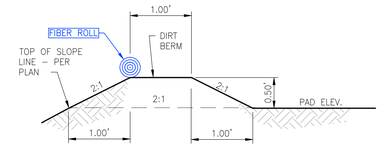

BERM AT TOP OF SLOPE
NOT TO SCALE

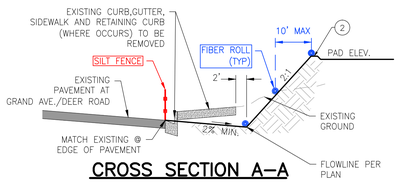

CROSS SECTION A-A
NOT TO SCALE

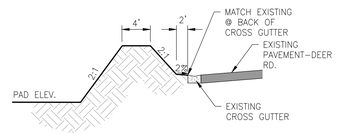

CROSS SECTION B-B
NOT TO SCALE

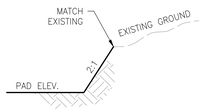

CROSS SECTION C-C
NOT TO SCALE

EROSION CONTROL LEGEND

- CONSTRUCTION LIMIT/ TEMPORARY FENCING
- FIBER ROLL
- SILT FENCE
- GRAVEL BAG CHECK DAM
- STORM DRAIN INLET PROTECTION
- BONDED FIBER MATRIX/ TACKIFIER
- STABILIZED CONSTRUCTION ENTRANCE
- CONSTRUCTION STAGING AREA
- MONITORING LOCATION FOR SAMPLING (S#)
- MONITORING LOCATION FOR RUN-ON SAMPLING (R#)

SEE SWPPP FOR MOST CURRENT SITE MAPS AND BMP'S

EROSION CONTROL KEY NOTES

1. INSTALL STABILIZED CONSTRUCTION ENTRANCE PER CASQA BMP HANDBOOK DETAIL TC-1
2. INSTALL STORM DRAIN INLET PROTECTION PER CASQA BMP HANDBOOK DETAIL SE-10
3. INSTALL FIBER ROLL PER CASQA BMP HANDBOOK DETAIL SE-5
4. INSTALL SILT FENCE PER CASQA BMP HANDBOOK DETAIL SE-1
5. INSTALL TEMPORARY FENCING PER APPROVED DEMOLITION PLAN
6. INSTALL GRAVEL BAG CHECK DAM PER CASQA BMP HANDBOOK DETAIL SE-4
7. SLOPE TO BE SEEDED AND PROTECTED WITH BONDED FIBER MATRIX, OR IRRIGATED AND HYDROSEEDED IF SLOPE IS TO REMAIN INACTIVE LONGER THAN 14 DAYS PER CASQA BMP HANDBOOK DETAIL EC-4 OR EC-7, OR PERMANENTLY LANDSCAPED PER LANDSCAPE PLANS
8. CONSTRUCTION STAGING AREA TO BE USED FOR MATERIAL STORAGE/STOCKPILES, VEHICLE STORAGE & MAINTENANCE, WASTE STORAGE, AND CONCRETE WASHOUT PER CASQA BMP HANDBOOK DETAIL NS-8, WM-3, WM-5, WM-6, WM-8, AND WM-10

GENERAL EROSION CONTROL NOTES

1. BMP'S SHALL NOT BE LIMITED TO THOSE SHOWN HEREON. ALTERNATE, MORE EFFECTIVE EROSION CONTROL MAY BE REQUIRED IF RECOMMENDED BY EITHER THE GEOTECHNICAL ENGINEER, THE PROJECT CIVIL ENGINEER, OR THE QUALIFIED SWPPP DEVELOPER.
2. SEE SWPPP DOCUMENT FOR BMP'S, DETAILS, AND EROSION AND SEDIMENTATION CONTROL NOTES.
3. ALL ACCESS ROADS SHALL BE INSPECTED DAILY (AS NECESSARY) AND PRIOR TO EACH QUALIFYING RAIN EVENT. SEDIMENT OR OTHER CONSTRUCTION ACTIVITY RELATED MATERIALS THAT ARE DEPOSITED ON THE ROADS SHALL BE REMOVED BY VACUUMING OR SWEEPING.

BMP AND SWPPP GENERAL NOTES

1. CONTRACTOR SHALL PROVIDE SOIL STABILIZATION AND SEDIMENT CONTROL PRACTICES DURING CONSTRUCTION.
2. SCHEDULE CONSTRUCTION WORK TO AVOID EXCESS EXPOSURE DURING RAIN EVENTS PER CASQA BMP HANDBOOK DETAIL EC-1.
3. CONSTRUCTION ENTRANCE TO BE PLACED AS NECESSARY BY CONTRACTOR.
4. ALL STORM DRAIN INLETS SHALL BE PROTECTED PRIOR TO GRADING OPERATIONS AND DURING CONSTRUCTION.
5. FIBER ROLLS SHALL BE PLACED DOWN SLOPE OF DISTURBED AREAS AS NECESSARY.
6. FIBER ROLLS ON SLOPES SHALL BE INSTALLED PER RISK LEVEL 2 MAXIMUM SHEET FLOW LENGTHS.
7. ROCK CHECK DAMS SHALL BE PLACED IN DRAINAGE SWALES OR GUTTERS AS NECESSARY TO ALTER RUNOFF.
8. CONCRETE, PAINT, MORTAR, GROUT, ETC. MUST HAVE A DESIGNATED CLEAN UP AREA.
9. DUST CONTROL SHALL CONSIST OF APPLYING WATER TO ALLEVIATE OR PREVENT DUST NUISANCE.
10. HYDROSEEDING SHALL BE APPLIED TO SLOPES FOR STABILIZATION.
11. STREET SWEEPING AT LOCATIONS WHERE TRUCKS AND EQUIPMENT CROSS FROM SOIL DISTURBED AREAS TO PAVEMENT.
12. CONTRACTOR'S MATERIAL AND EQUIPMENT STORAGE AREA LOCATION TO BE IN AN APPROVED STAGING AREA.
13. SITE INSPECTIONS INCLUDE "REAPs" AND A MINIMUM OF WEEKLY AND PRE/POST RAIN DURING WET WEATHER.

STORM WATER POLLUTION PREVENTION PLAN:

THE STORM WATER POLLUTION PREVENTION PLAN FOR THIS PROJECT, PREPARED BY RICK ENGINEERING COMPANY, WDID NO. XXXXXXXXXX, DATED JUNE 2016, SHALL BE A PART OF THIS PLAN, AND THE CONTRACTOR SHALL BE RESPONSIBLE FOR FOLLOWING ALL RECOMMENDATIONS THERIN. THE CONTRACTOR IS RESPONSIBLE FOR IMPLEMENTING AND MONITORING THE EROSION AND SEDIMENTATION CONTROL PROVIDED WITHIN THE SWPPP. IF DISCREPANCIES ARE FOUND BETWEEN THIS PLAN AND THE SWPPP, THE SWPPP SHALL SUPERSEDE THIS PLAN.

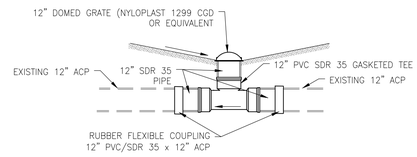

12" TEMPORARY DRAIN
NOT TO SCALE

20 10 0 20
GRAPHIC SCALE: 1"=20'

REGISTERED PROFESSIONAL ENGINEER
DONALD A. DRUSE
No. 44519
CIVIL
STATE OF CALIFORNIA

DEMOLITION PACKAGE - BID SET

SCALE: 1"=20'
DATE: 6/15/2016
DRAWN BY: BWC
CHECKED BY: MRW
JOB NO: 17443

RICK ENGINEERING COMPANY
711 TANK FARM ROAD, SUITE 110
SAN LUIS OBISPO, CA 93401
805.544.4700
FAX 805.544.3052
rickengineering.com

EROSION CONTROL PLAN
Campus Dining Facility
California Polytechnic State University San Luis Obispo

CD4.1
75-15217-00
09/01/2015
Revisions

DLR Group
Architecture Engineering Planning Interiors

©2015, DLR Group Inc. of California, a California corporation. ALL RIGHTS RESERVED

DEMOLITION PLANS

FOR

CALIFORNIA POLYTECHNIC STATE UNIVERSITY - CAMPUS DINING FACILITY

SAN LUIS OBISPO, CA

RICK ENGINEERING COMPANY SPECIAL NOTES:

1. CONTRACTOR AGREES THAT HE SHALL ASSUME SOLE AND COMPLETE RESPONSIBILITY FOR JOBSITE CONDITIONS DURING THE COURSE OF CONSTRUCTION OF THIS PROJECT, INCLUDING SAFETY OF ALL PERSONS AND PROPERTY.
2.
3. NEITHER THE OWNER, NOR THE ENGINEER OF WORK WILL ENFORCE SAFETY MEASURES OR REGULATIONS. THE CONTRACTOR SHALL DESIGN, CONSTRUCT, AND MAINTAIN ALL SAFETY DEVICES, INCLUDING SHORING, AND SHALL BE SOLELY RESPONSIBLE FOR CONFORMING TO ALL LOCAL, STATE, AND FEDERAL SAFETY AND HEALTH STANDARDS, LAWS AND REGULATIONS.
4. THE CONTRACTOR SHALL FOLLOW THE GUIDELINES AND REGULATIONS AS SET FORTH BY OSHA.
5. THE CONTRACTOR SHALL BE RESPONSIBLE TO ENSURE THAT ALL UTILITIES ARE BUILT IN ACCORDANCE WITH THESE PLANS. IF THERE ARE ANY QUESTIONS REGARDING THESE PLANS OR FIELD STAKES, THE CONTRACTOR SHALL REQUEST AN INTERPRETATION BEFORE DOING ANY WORK.
6. THE CONTRACTOR SHALL TAKE THE NECESSARY STEPS TO PROTECT THE PROJECT AND ADJACENT PROPERTY FROM ANY EROSION AND SILTATION THAT RESULT FROM HIS OPERATIONS BY APPROPRIATE MEANS (SAND BAGS, HAY BALES, TEMPORARY DESILTING BASINS, DIKES, SHORING, ETC.) UNTIL SUCH TIME THAT THE PROJECT IS COMPLETED AND ACCEPTED FOR MAINTENANCE BY OWNER. THE CONTRACTOR IS RESPONSIBLE TO ADHERE TO THE PROJECT SWPPP AT ALL TIMES.
7. LOCATION AND ELEVATION OF IMPROVEMENTS TO BE MET BY WORK TO BE DONE SHALL BE CONFIRMED BY FIELD MEASUREMENTS PRIOR TO CONSTRUCTION OF NEW WORK.
8. WHERE TRENCHES ARE WITHIN EASEMENTS OR WITHIN 10' OF ANY BUILDING, A SOILS REPORT SHALL BE SUBMITTED TO THE ENGINEER OF WORK BY A QUALIFIED SOILS ENGINEER OR SPECIAL INSPECTOR WHICH INDICATES THAT TRENCH BACKFILL WAS COMPACTED UNDER THE OBSERVATION OF THE SOILS ENGINEER/SPECIAL INSPECTOR AND IN ACCORDANCE WITH THE PROJECT SPECIFICATIONS.
9. ALL FRAMES, COVERS, VALVE BOXES AND MANHOLES SHALL BE ADJUSTED TO FINISHED GRADE UPON COMPLETION OF PAVING OR RELATED CONSTRUCTION.

EXISTING UTILITY NOTES:

1. THE EXISTENCE AND LOCATION OF UNDERGROUND UTILITIES SHOWN ON THESE PLANS WERE OBTAINED FROM THE CAMPUS FACILITY DEPARTMENT ELECTRONIC UTILITY ATLAS. THE CONTRACTOR IS RESPONSIBLE FOR FIELD LOCATING ALL UNDERGROUND FACILITIES PRIOR TO CONSTRUCTION AND TO NOTIFY THE ENGINEER OF WORK OF ANY CHANGES IN FIELD CONDITIONS.
2. THE CONTRACTOR SHALL TAKE PRECAUTIONARY MEASURES TO PROTECT THE UTILITY LINES SHOWN HEREON AND ANY OTHER NOT OF RECORD OR NOT SHOWN ON THESE PLANS. ALL DAMAGES CAUSED BY THE CONTRACTOR SHALL BE REPAIRED TO THE APPROPRIATE SPECIFICATIONS AND AT THE EXPENSE OF THE CONTRACTOR.
3. U.S.A./811 DIG ALERT WILL ONLY MARK PUBLIC UTILITIES. MOST UTILITIES ON CAMPUS ARE PRIVATELY OWNED BY THE UNIVERSITY. FACILITIES STAFF WILL BE AVAILABLE TO ASSIST THE CONTRACTOR IN LOCATING UNDERGROUND UTILITIES.

BENCH MARK:

ELEVATIONS ARE REFERENCED TO THE CITY OF SAN LUIS OBISPO BENCHMARK SYSTEM (NAVD 88).

THIS SURVEY IS TIED TO BENCHMARK #214. A LEAD AND TACK LOCATED AT THE SOUTHWEST CURB RETURN AT LONGVIEW AND HATHAWAY, HAVING PUBLISHED ELEVATION OF 346.02.

BASIS OF BEARINGS:

THE BASIS OF BEARINGS FOR THIS SURVEY ARE ASSUMED COORDINATES DERIVED FROM TOPOGRAPHIC SURVEY FOR STUDENT HOUSING SOUTH (R2–G1) PARKING LOT, CAL POLY SAN LUIS OBISPO, COMPLETED BY NORTH COAST ENGINEERING INC. ON 3–21–2015. THIS SURVEY HELD THE CONTROL POINTS 111, 113 AND 114 PER SAID SURVEY.

DESCRIPTION OF PROJECT LIMITS

COMMENCING AT CONTROL POINT #114, AS SHOWN ON TOPOGRAPHIC SURVEY FOR STUDENT HOUSING SOUTH (R2–G1) PARKING LOT, CAL POLY SAN LUIS OBISPO, PREPARED BY NORTH COAST ENGINEERING INC. DATED 3–21–13;

THENCE N 87°17'06" E 224.26 FEET TO CONTROL POINT #113, AS SHOWN ON THE ABOVE DESCRIBED TOPOGRAPHIC SURVEY;

THENCE N 28°07'26" E 80.04 FEET, TO THE TRUE POINT OF BEGINNING,

THENCE N 48°05'30" W 221.00 FEET TO THE BEGINNING OF A TANGENT CURVE CONCAVE EASTERLY, HAVING A RADIUS OF 24.00 FEET;

THENCE NORTHWESTERLY AND NORTHEASTERLY ALONG SAID CURVE, THROUGH A CENTRAL ANGLE OF 96°30'39", A DISTANCE OF 40.43 FEET;

THENCE N 48°25'09" E 130.00 FEET TO THE BEGINNING OF A TANGENT CURVE CONCAVE SOUTHERLY, HAVING A RADIUS OF 110.00';

THENCE NORTHEASTERLY ALONG SAID CURVE, THROUGH A CENTRAL ANGLE OF 59°26'37", A DISTANCE OF 114.12 FEET;

THENCE S 72°08'14" E 50.00 FEET TO THE BEGINNING OF A TANGENT CURVE CONCAVE NORTHERLY, HAVING A RADIUS OF 195.00 FEET;

THENCE NORTHEASTERLY ALONG SAID CURVE, THROUGH A CENTRAL ANGLE OF 16°38'41", A DISTANCE OF 56.65' TO THE BEGINNING OF A REVERSE CURVE CONCAVE SOUTHWESTERLY, HAVING A RADIUS OF 20.00';

THENCE EASTERLY AND SOUTHEASTERLY ALONG SAID REVERSE CURVE, THROUGH A CENTRAL ANGLE OF 84°00'45", A DISTANCE OF 29.33';

THENCE, S 4°46'10" E 50.00 FEET;

THENCE S 31°01'25" W 59.99 FEET TO THE BEGINNING OF A TANGENT CURVE CONCAVE EASTERLY, HAVING A RADIUS OF 100.00';

THENCE SOUTHERLY ALONG SAID CURVE, THROUGH A CENTRAL ANGLE OF 22°07'10", A DISTANCE OF 38.61 FEET;

THENCE S 8°54'15" W 70.00 FEET TO THE BEGINNING OF A NON–TANGENT CURVE CONCAVE SOUTHERLY, HAVING A RADIUS OF 38.00' (A RADIAL LINE TO THE BEGINNING OF SAID CURVE BEARS N 8°54'15" E);
THENCE SOUTHWESTERLY ALONG SAID CURVE, THROUGH A CENTRAL ANGLE OF 49°00'00", A DISTANCE OF 32.50 FEET;

THENCE S 49°54'15" W 47.06 FEET;

THENCE S 85°07'40" W 45.50 FEET TO THE TRUE POINT OF BEGINNING. CONTAINING 1.51 ACRES.

END OF DESCRIPTION.

FENCING AND PRESERVATION NOTES FOR EXISTING TREES

1. TREES SHALL NOT BE PRUNED WITHOUT PERMISSION OF THE UNIVERSITY ARBORIST. IF PRUNING OF EXISTING TREES IS REQUIRED TO ENABLE CONSTRUCTION ACCESS, IT SHALL BE DONE PRIOR TO THE START OF DEMOLITION BY A LICENSED TREE SERVICE UNDER THE DIRECTION OF A LICENSED ARBORIST ONLY. NO PRUNING SHALL BE DONE BY UNQUALIFIED PERSONNEL.
2. IF IT IS NECESSARY TO PRUNE OR CUT ROOTS LARGER THAN 1" IN DIAMETER, THE ROOTS SHALL BE CUT CLEANLY.
3. DEMOLITION SHALL NOT COMMENCE UNTIL THE UNIVERSITY HAS IDENTIFIED THE TREES THAT ARE TO REMAIN AND TREE PROTECTION FENCING HAS BEEN INSTALLED BY THE CONTRACTOR. THE LOCATIONS OF THE TREE PROTECTION FENCING SHALL BE AS DIRECTED BY THE UNIVERSITY.
4. TEMPORARY TREE PROTECTION FENCING SHALL REMAIN IN PLACE CONTINUOUSLY THROUGHOUT CONSTRUCTION. IT SHALL BE REMOVED ONLY FOR THE FINAL PHASE OF LANDSCAPE CONSTRUCTION.
5. THE CONTRACTOR SHALL PROVIDE A TEMPORARY AUTOMATIC IRRIGATION SYSTEM FOR ALL TREES DESIGNATED TO REMAIN. CONTRACTOR SHALL SUBMIT DETAILS TO UNIVERSITY FOR APPROVAL.
6. IF IT BECOMES NECESSARY TO ADJUST LOCATIONS OF TREE PROTECTION FENCES TO ACCOMMODATE WORK OF THE CONTRACT, THE FENCE SHALL BE MOVED ONLY IN THE PRESENCE AND UNDER THE DIRECTION OF THE UNIVERSITY ARBORIST. CONTRACTOR SHALL PROVIDE A MINIMUM 72–HOUR NOTICE TO THE UNIVERSITY REQUESTING ARBORIST ON SITE.
7. TEMPORARY TREE PROTECTION FENCING SHALL BE A MINIMUM OF 6 FEET HIGH.
8. THE PROTECTION ZONE DELINEATED BY THE TREE PROTECTION FENCE SHALL BE POSTED WITH SIGNS STATING "TREE PROTECTION ZONE – NO CONSTRUCTION OR STORAGE PERMITTED".
9. THE GRADE BETWEEN THE DRIPLINE AND ROOT CROWN OF THE TREES SHALL NOT BE CUT AND CAN BE FILLED ONLY 3" EXCEPT WITHIN 5' OF THE TRUNK WHERE THE TRUNK GRADE SHALL NOT BE DISTURBED.
10. IRRIGATION AND RAIN WATER SHALL BE ABLE TO DRAIN AWAY FROM THE ROOT CROWN OF THE TREE.
11. CONTRACTORS SHALL NOT DRIVE OR PARK VEHICLES WITHIN THE DRIPLINE AREA OF THE TREES.
12. CONTRACTORS SHALL NOT DUMP WASTE CONCRETE, PLASTER, ETC. UNDER THE DRIPLINE OF TREES. PAINTERS OR OTHERS SHALL NOT CLEAN EQUIPMENT UNDER DRIPLINE, OR UPHILL OF EXISTING TREES WHERE NATURAL DRAINAGE WOULD CAUSE WASTE TO RUN WITHIN DRIPLINE. CONTRACTOR SHALL NOT ALLOW ANY WASTE TO BE DUMPED ON SOIL ON SITE.
13. NO BURNING OR USE OF EQUIPMENT WITH AN OPEN FLAME SHALL OCCUR NEAR OR WITHIN THE DRIPLINE OF EXISTING TREES.
14. ALL BRUSH, EARTH AND OTHER DEBRIS SHALL BE REMOVED IN A MANNER WHICH PREVENTS INJURY TO THE PROTECTED TREES AND/OR PLANTING.
15. NO IRRIGATION SHALL BE INSTALLED WITHIN 5'–0" OF THE TRUNK. NO SPRAY SHALL HIT THE TRUNKS OF TREES. ALL TRENCHING WITHIN DRIPLINE SHALL BE DONE BY HAND. ALL PIPING SHALL RUN PERPENDICULAR TO THE TRUNK WITHIN THE DRIPLINE EXCEPT AT FACE OF CURB, PLANTER OR PAVING.

KEY MAP

SCALE 1"=40'

SHEET INDEX

SHEET NO.	TITLE
CD0.1	CIVIL TITLE
CD1.1	TOPOGRAPHIC SURVEY
CD2.1	DEMOLITION PLAN
CD3.1	INTERIM GRADING PLAN

VICINITY MAP

NOT TO SCALE

WORK TO BE DONE:

THE IMPROVEMENTS CONSIST OF THE FOLLOWING WORK TO BE DONE ACCORDING TO THESE PLANS AND THE SPECIFICATIONS AND STANDARD DRAWINGS BELOW.

STANDARD SPECIFICATIONS:

1. CAMPUS DINING FACILITY PROJECT SPECIFICATIONS
2. STATE STANDARD SPECIFICATIONS 2010 (CALTRANS)
3. CITY OF SAN LUIS OBISPO STANDARD SPECIFICATIONS 2014
4. COUNTY OF SAN LUIS OBISPO PUBLIC IMPROVEMENT STANDARDS 2014

STANDARD DRAWINGS:

1. STATE STANDARD SPECIFICATIONS 2010 (CALTRANS)
2. CITY OF SAN LUIS OBISPO STANDARD SPECIFICATIONS 2014
3. COUNTY OF SAN LUIS OBISPO PUBLIC IMPROVEMENT STANDARDS 2014

LEGEND

WATER LINE	W
FIRE SERVICE LINE	FS
SANITARY SEWER LINE	S
STORM DRAIN LINE	SD
GAS LINE	G
ELECTRIC LINE	E
TELEPHONE LINE	T
HOT WATER LINE	HW
CHILL WATER LINE	CW
MAJOR CONTOURS (EXISTING)	
MINOR CONTOURS (EXISTING)	
MAJOR CONTOURS (INTERIM)	
MINOR CONTOURS (INTERIM)	
EXISTING ABANDONED UTILITY LINE	
REMOVE ABANDONED UTILITY LINE	
WALL	
STORM DRAIN LINE TO BE REMOVED	
WATER LINE TO BE REMOVED	
LIMITS OF DEMOLITION	
DAYLIGHT LINE	
GRASS–LINED SWALE	
SLOPE	TOP OF SLOPE
GRADE BREAK LINE	
GRAVEL BAG	
EXISTING TREE TO BE PROTECTED IN PLACE	
EXISTING TREE TO BE REMOVED	
EXISTING CONCRETE TO BE REMOVED	
EXISTING ASPHALT TO BE REMOVED	
ELECTRICAL PULL BOX	E
HOSE BIB	HB
BOLLARD	
ELECTRIC RISER	ER
GAS METER	GM
UNKNOWN VAULT	UV
SIGN	
MONUMENT/CONTROL POINT	
LIGHT	
CONCRETE	
BUILDING	
WATER METER	WM
WATER VALVE	
IRRIGATION VALVE	IRR
WATER METER	WM
SANITARY SEWER MANHOLE	S
SANITARY SEWER CLEANOUT	CO
PRESSURE REDUCING DETECTOR ASSEMBLY	
CATCH BASIN	CB
FIRE HYDRANT	
WATER METER	WM
INVERT ELEVATION	IE
WATER LINE	WL
STORM DRAIN	SD
SANITARY SEWER	SS
FINISHED SURFACE	FS
FINISHED FLOOR ELEVATION	FF
TOP OF GRATE	TG
FLOW LINE	FL
TOP OF WALL	TOW
HIGH POINT	HP
LOW POINT	LP

DEMOLITION PACKAGE - BID SET

SCALE: N.T.S
DATE: 5/23/2016
DRAWN BY: BWC
CHECKED BY: MRW
JOB NO: 17443

RICK ENGINEERING COMPANY
711 TANK FARM ROAD - SUITE 110
SAN LUIS OBISPO, CA 93401
805.544.0707
(FAX)805.544.2052
rickengineering.com

CIVIL TITLE
Campus Dining Facility
California Polytechnic State University San Luis Obispo

CD0.1
75-15217-00
09/01/2015
Revisions

DLR Group
Architecture Engineering Planning Interiors

© 2015, DLR Group inc. of California, a California corporation, ALL RIGHTS RESERVED

5/23/2016 - l:\17443 vista grande dining facility\civil\sheets\demolition plans\17443-cd-titl01.dwg

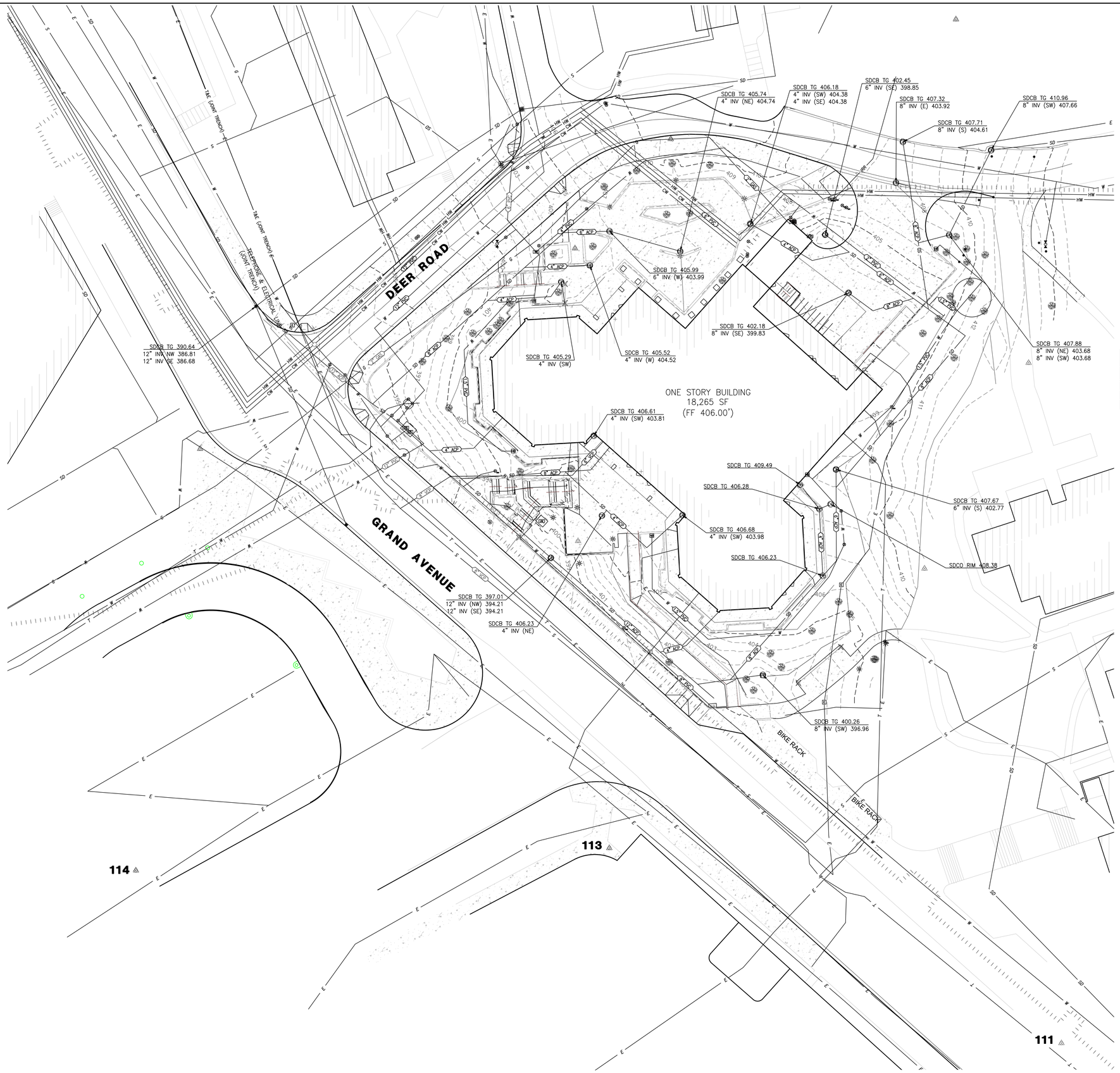

SURVEY NOTES

1. THE CONTOUR INTERVAL IS 1 FOOT.
2. EASEMENTS AFFECTING THE PROPERTY SHOWN HEREON MAY EXIST. NO TITLE INFORMATION WAS PROVIDED. NO ATTEMPT HAS BEEN MADE TO PLOT EASEMENTS.
3. UTILITY LOCATIONS WERE PLOTTED FROM THE CAL POLY UTILITY ATLAS – E-ATLAS 2 DATED 1-2-2015. ACTUAL UTILITY LOCATIONS MAY DIFFER. ADDITIONAL UNDERGROUND UTILITY LINES MAY EXIST. FOR INFORMATION REGARDING UTILITY LOCATION, SIZE, DEPTH, CONDITION, AND CAPACITY CONTACT CAMPUS FACILITIES STAFF.
4. FIELD SURVEY PERFORMED BY RICK ENGINEERING CO. ON 5-13-2015.

BENCHMARK

ELEVATIONS ARE REFERENCED TO THE CITY OF SAN LUIS OBISPO BENCHMARK SYSTEM (NAVD 88).

THIS SURVEY IS TIED TO BENCHMARK #214, A LEAD AND TACK LOCATED AT THE SOUTHWEST CURB RETURN AT LONGVIE HATHAWAY, HAVING PUBLISHED ELEVATION OF 346.02.

BASIS OF BEARINGS

THE BASIS OF BEARINGS FOR THIS SURVEY ARE ASSUMED COORDINATES DERIVED FROM TOPOGRAPHIC SURVEY FOR STUDENT HOUSING SOUTH (R2-G1) PARKING LOT, CAL POLY SAN LUIS OBISPO, COMPLETED BY NORTH COAST ENGINEERING INC. ON 3-21-2015. THIS SURVEY HELD THE CONTROL POINTS 111, 113 AND 114 PER SAID SURVEY.

SURVEY CONTROL POINTS

POINT	NORTHING	EASTING	ELEVATION	DESCRIPTION
111	2305393.55	5769466.72	401.00	WPX
113	2305494.12	5769233.72	398.54	WPX
114	2305482.55	5768989.73	387.07	WPX

20 10 0 20
GRAPHIC SCALE: 1"=20'

DEMOLITION PACKAGE - BID SET

SCALE: 1"=20'
DATE: 5/23/2016
DRAWN BY: BWC
CHECKED BY: MRW
JOB NO: 17443

RICK ENGINEERING COMPANY
711 TANK FARM ROAD, SUITE 110
SAN LUIS OBISPO, CA 93401
805.544.4044 805.544.2052
rickengineering.com

TOPOGRAPHIC SURVEY
Campus Dining Facility
California Polytechnic State University San Luis Obispo

CD1.1
75-15217-00
09/01/2015
Revisions

DLR Group
Architecture Engineering Planning Interiors

©2015, DLR Group Inc. of California, a California corporation. ALL RIGHTS RESERVED

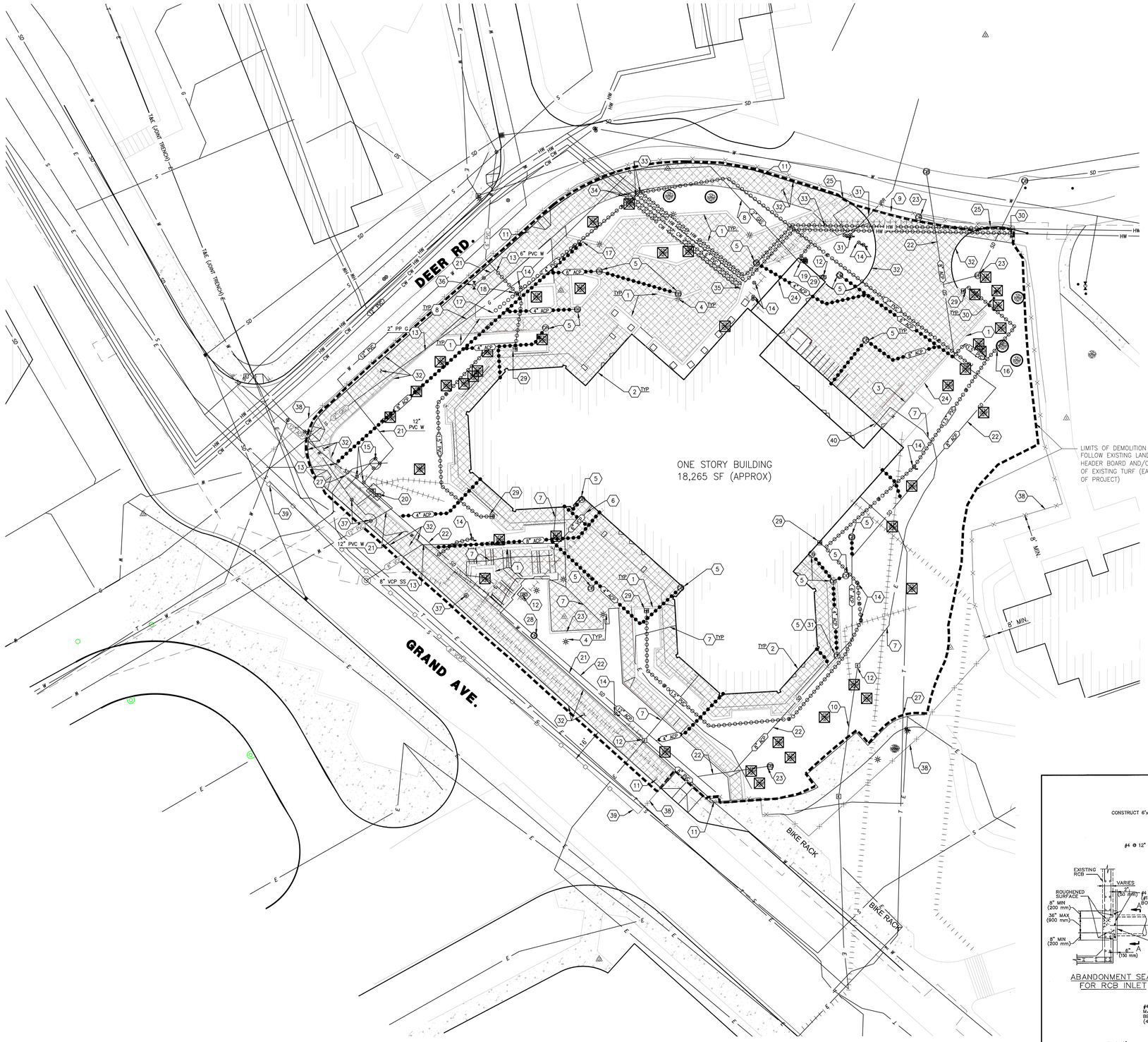

APPROXIMATE DEMOLITION QUANTITIES

4"–8" ACP STORM DRAIN	1,670	LF
WATER LINE	1,245	LF
SEWER LINE	90	LF
ABANDON LINE	675	LF
CATCH BASIN/INLET	14	EA
HOSE BIB	6	EA
ELECTRICAL RISER & PULL BOX	2	EA
TREE REMOVAL	41	EA
TREE PROTECTION	5	EA
GAS LINE	215	LF
LIGHT & FOUNDATION	8	EA
WATER METER	1	EA
IRR & WATER VALVES	12	EA
CONCRETE (AROUND BLDG)	14,685	SF
GAS METER	1	EA
BOLLARDS	3	EA
RETAINING WALLS	190	LF
LANDSCAPE WALLS	526	LF
FENCE	22	LF
CONCRETE CURB	377	LF
CURB & GUTTER (@ STREET FRONTAGE)	530	LF
SIDEWALK (@ STREET FRONTAGE)	5300	SF

GENERAL DEMOLITION NOTES

1. ALL CLEARING, GRUBBING, SITE PREPARATION, OVER–EXCAVATION, EARTHWORK, ENGINEERED FILL, AND MATERIAL TESTING SHALL BE IN COMPLIANCE WITH THE GEOTECHNICAL ENGINEERING REPORT AND SPECIFICATIONS.
2. ALL EXISTING IMPROVEMENTS OUTSIDE THE LIMIT OF DEMOLITION SHALL BE PROTECTED IN PLACE UNLESS OTHERWISE NOTED.
3. PROPOSED SUBSTITUTIONS OF UTILITY ABANDONMENT, IN LIEU OF REMOVALS, SHALL BE VERIFIED BY CONTRACTOR THAT THEY ARE OUTSIDE OF THE NEW BUILDING ZONE OF INFLUENCE PRIOR TO ACCEPTANCE.
4. EXISTING UNDERGROUND UTILITY INFORMATION SHOWN ARE FROM CAL POLY ELECTRONIC (CAD) UTILITY FILES. CONTRACTOR TO CONTACT CAL POLY FACILITIES STAFF AND/OR DIG ALERT PRIOR TO CONSTRUCTION TO VERIFY HORIZONTAL AND VERTICAL LOCATIONS OF ALL UTILITIES.
5. EXACT LOCATION OF TEMPORARY ELECTRICAL (CONSTRUCTION) TRANSFORMER SHOWN SHALL BE COORDINATED WITH OWNER.
6. CONTRACTOR SHALL BE RESPONSIBLE FOR THE METHOD OF REMOVAL FOR THE BUILDING, RETAINING WALLS AND ASSOCIATED FOOTINGS.
7. CONTRACTOR SHALL TAKE ALL NECESSARY PRECAUTIONS AND FOLLOW ALL APPLICABLE STATE AND FEDERAL REGULATIONS FOR INVESTIGATION, REMOVAL AND DISPOSAL OF ASBESTOS CONCRETE PIPE.
8. EXISTING TREES ARE TO BE REMOVED, UNLESS OTHERWISE NOTED.
9. REMOVAL OR PRESERVATION OF TREES SHALL BE COMPLETED IN CONFORMANCE TO THE TREE PROTECTION NOTES ON SHEET 1.
10. REMOVAL OF UTILITIES INCLUDE ALL PIPE MATERIAL, FITTINGS, APPURTENANCES, NON–NATIVE TRENCH MATERIAL.

DEMOLITION KEY NOTES

1. REMOVE PLANTER WALL
2. REMOVE BUILDING
3. REMOVE FENCE
4. REMOVE LIGHT & FOUNDATION.
5. REMOVE STORM DRAIN CATCH BASIN/CLEANOUT
6. REMOVE SANITARY SEWER PIPE
7. REMOVE UNDERGROUND ELECTRICAL LINE
8. REMOVE GAS SERVICE
9. EXISTING CONCRETE GUTTER TO REMAIN–PROTECT IN PLACE
10. APPROXIMATE LOCATION OF TEMPORARY ELECTRICAL TRANSFORMER–CONTRACTOR TO COORDINATE WITH CAMPUS FACILITIES STAFF ON EXACT LOCATION.
11. EXISTING SIGN TO REMAIN – PROTECT IN PLACE
12. REMOVE EXISTING ELECTRICAL RISER/PULL BOX
13. CUT AND PLUG EXISTING UTILITY PER SPPWC STD. PLAN 381–2
14. REMOVE WATER/IRRIGATION VALVE
15. EXISTING PRESSURE REDUCING VALVE ASSEMBLY AND ASSOCIATED VALVES TO REMAIN– PROTECT IN PLACE.
16. REMOVE EXISTING WATERLINE. IF REMOVAL IMPACTS PROTECTED TREE, ABANDON WATERLINE WITHIN 10 FEET OF PROTECTED TREE AND REMOVE REMAINDER. CONTRACTOR TO COORDINATE WITH CAMPUS LANDSCAPE STAFF IN FIELD TO VERIFY POTENTIAL IMPACT TO TREE.
17. PRIOR TO DEMOLITION, CONTRACTOR TO VERIFY WITH UNIVERSITY REPRESENTATIVE THAT UTILITY LINE DOES NOT CONTINUE TO ADDITIONAL SERVICES BEYOND THIS POINT.
18. REMOVE EXISTING WATER METER
19. REMOVE EXISTING GAS METER
20. EXISTING ELECTRICAL PEDESTAL TO REMAIN– PROTECT IN PLACE.
21. EXISTING WATER LINE TO REMAIN– PROTECT IN PLACE
22. EXISTING STORM DRAIN TO REMAIN – PROTECT LINE IN PLACE
23. EXISTING STORM DRAIN INLET TO REMAIN – PROTECT IN PLACE
24. REMOVE RETAINING WALL
25. EXISTING CURB TO REMAIN TO REAR JOINT OF CROSS GUTTER–PROTECT IN PLACE
26. CUT AND CAP TO ABANDON EXISTING UTILITY LINE
27. REMOVE EXISTING TELEPHONE LINE. CONTRACTOR TO COORDINATE WITH CAMPUS FACILITIES DEPARTMENT ON LIMITS OF REMOVAL.
28. REMOVE EXISTING STORM DRAIN INLET/CATCH BASIN AND SEAL PER SPPWC STD. PLAN 381–2.
29. REMOVE HOSE BIBS
30. REMOVE BOLLARDS
31. PROTECT EXISTING IRRIGATION LINE AND ASSOCIATED VALVES IN PLACE. REMOVE VALVES NOT REQUIRED FOR FUTURE CONNECTION.
32. REMOVE CONCRETE CURB, GUTTER, SIDEWALK, RAMPS AND RETAINING CURB (WHERE OCCURS) AROUND PERIMETER OF PROJECT
33. CONTRACTOR TO DISCONNECT HOT WATER LINES AT BUILDING. HOT WATER LINES TO BE REMOVED/RELOCATED AND ISOLATION VALVES INSTALLED AT BACK OF EXISTING SIDEWALK AS A PART OF CAMPUS UTILODOR PROJECT. CONTRACTOR TO COORDINATE WITH UTILIDOR PROJECT TEAM TO COORDINATE WORK.
34. INSTALL NEW ISOLATION VALVES FOR TERMINATION OF CHILLED WATER SUPPLY RUNOUTS. VALVES TO BE LOCATED AT BACK OF SIDEWALK.
35. CHILLED WATER DIFFERENTIAL PRESSURE SENSORS AND CONTROLS SHALL BE REMOVED AND SALVAGED.
36. EXISTING FIRE HYDRANT AND VALVE TO REMAIN– PROTECT IN PLACE
37. EXISTING VAULT/MANHOLE/VALVE TO REMAIN–PROTECT IN PLACE
38. INSTALL TEMPORARY FENCING (CHAINLINK) PER PROJECT SPECIFICATIONS
39. INSTALL TEMPORARY FENCING (K–RAIL) PER PROJECT SPECIFICATIONS
40. CAMPUS FACILITIES STAFF TO REMOVE AND SALVAGE UNIT SUBSTATION. CONTRACTOR TO COORDINATE AND REMOVE REMAINDER OF ELECTRICAL SYSTEM.

DEMOLITION LEGEND

- LIMITS OF DEMOLITION AREA. CLEARING AND GRUBBING OF LANDSCAPED AREAS, BUILDINGS, STRUCTURES, FENCING/RAILING, CURB, GUTTER, SIDEWALK, CONCRETE PAVING AND EXISTING UTILITIES TO BE REMOVED, UNLESS OTHERWISE NOTED.
- EXISTING ABANDONED UTILITY LINE
- REMOVE EXISTING ABANDONED UTILITY LINE (WITHIN LIMITS OF DEMOLITION
- STORM DRAIN TO BE REMOVED
- WATER LINE TO BE REMOVED
- TEMPORARY FENCING (K–RAIL WITH CHAINLINK ON TOP–GRAND AVE ONLY)
- TEMPORARY FENCING (CHAINLINK)
- EXISTING TREE TO BE PROTECTED IN PLACE. REFER TO TREE PROTECTION NOTES ON SHEET 1
- EXISTING TREE TO BE REMOVED
- EXISTING CONCRETE TO BE REMOVED

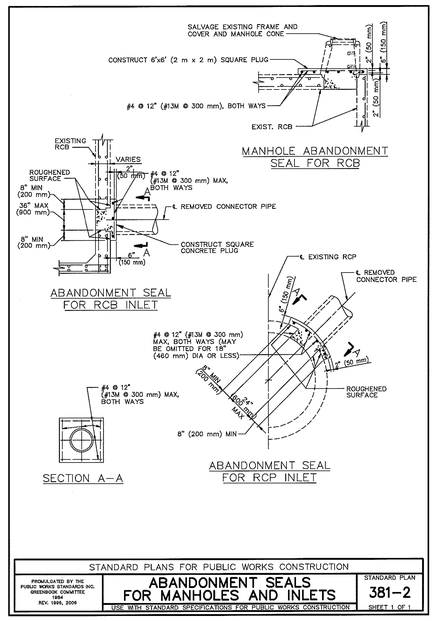

STANDARD PLANS FOR PUBLIC WORKS CONSTRUCTION

PROMULGATED BY THE PUBLIC WORKS STANDARDS INC. GREENBOOK COMMITTEE 1994 REV. 1995, 2009

ABANDONMENT SEALS FOR MANHOLES AND INLETS

USE WITH STANDARD SPECIFICATIONS FOR PUBLIC WORKS CONSTRUCTION

STANDARD PLAN 381–2 SHEET 1 OF 1

20 10 0 20
GRAPHIC SCALE: 1"=20'

REGISTERED PROFESSIONAL ENGINEER DONALD A. DRURY No. 44519 CIVIL STATE OF CALIFORNIA

DEMOLITION PACKAGE - BID SET

SCALE: 1"=20'
DATE: 5/23/2016
DRAWN BY: KS
CHECKED BY: MRW
JOB NO: 17443

RICK ENGINEERING COMPANY
711 TANK FARM ROAD, SUITE 110
SAN LUIS OBISPO, CA 93401
805.544.3276 FAX 805.544.3052
rickengineering.com

DEMOLITION PLAN
Campus Dining Facility
California Polytechnic State University San Luis Obispo

CD2.1
75-15217-00
09/01/2015
Revisions

DLR Group
Architecture Engineering Planning Interiors

©2015, DLR Group Inc. of California, a California corporation. ALL RIGHTS RESERVED

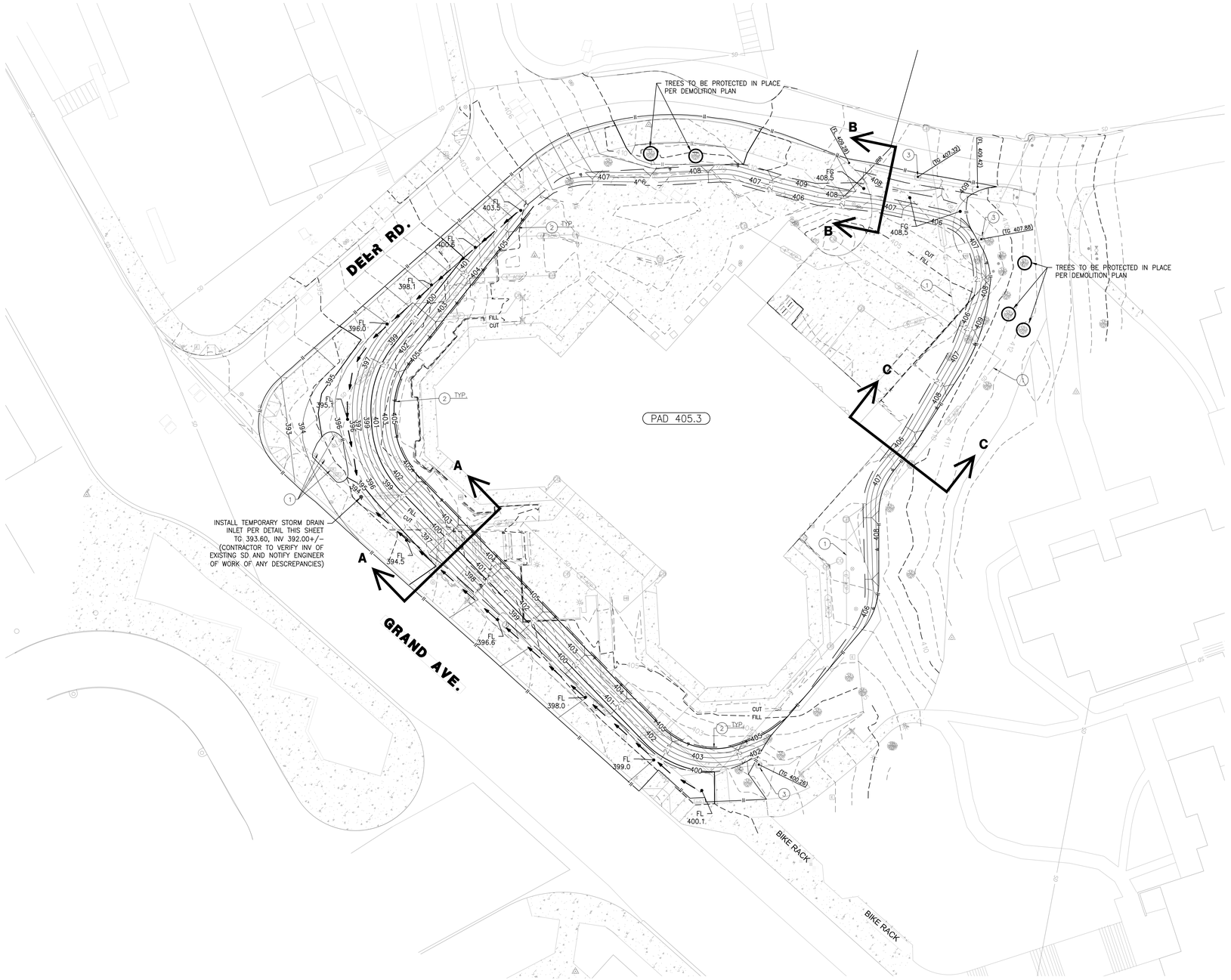

GRADING KEY NOTES

1. EXISTING UTILITY TO REMAIN. PROTECT IN PLACE PER SHEET CD2.1.
2. CONSTRUCT 6" BERM PER DETAIL ON THIS SHEET.
3. EXISTING CATCH BASIN TO BE PROTECTED IN PLACE.

GENERAL NOTES:

ALL CLEARING, GRUBBING, SITE PREPARATION, OVER-EXCAVATION, EARTHWORK, ENGINEERED FILL, AND MATERIAL TESTING SHALL BE IN COMPLIANCE WITH THE GEOTECHNICAL ENGINEERING REPORT.

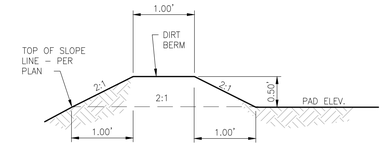

BERM AT TOP OF SLOPE
NOT TO SCALE

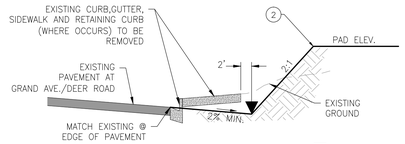

CROSS SECTION A-A
NOT TO SCALE

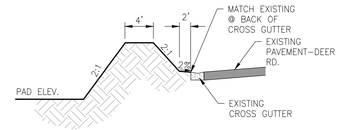

CROSS SECTION B-B
NOT TO SCALE

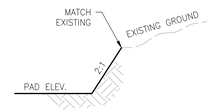

CROSS SECTION C-C
NOT TO SCALE

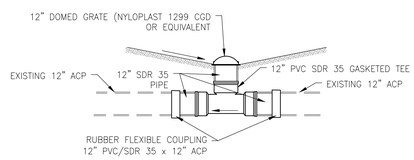

12" TEMPORARY DRAIN
NOT TO SCALE

20 10 0 20
GRAPHIC SCALE: 1"=20'

REGISTERED PROFESSIONAL ENGINEER
DONALD A. DRUSE
No. 44510
CIVIL
STATE OF CALIFORNIA

DEMOLITION PACKAGE - BID SET

SCALE: 1"=20'
DATE: 5/23/2016
DRAWN BY: BWC
CHECKED BY: MRW
JOB NO: 17443

RICK ENGINEERING COMPANY
711 TANK FARM ROAD, SUITE 110
SAN LUIS OBISPO, CA 93401
805.544.3277
805.544.2052
rickengineering.com

INTERIM GRADING PLAN
Campus Dining Facility
California Polytechnic State University San Luis Obispo

CD3.1
75-15217-00
09/01/2015
Revisions

DLR Group
Architecture Engineering Planning Interiors

© 2015, DLR Group Inc. of California, a California corporation, ALL RIGHTS RESERVED

Appendix C: Permit Registration Documents

DRAFT FOR BID PURPOSES ONLY

Permit Registration Documents included in this Appendix

Y/N	Permit Registration Document
	Notice of Intent
Y	Risk Assessment
Y	Certification
N/A	Post Construction Water Balance
	Copy of Annual Fee Receipt
N/A	ATS Design Documents
Y	Site Map, see Appendix B

DRAFT FOR BID PURPOSES ONLY

Qualified SWPPP Developer

Approval and Certification of the Stormwater Pollution Prevention Plan

Project Name:	*Campus Dining Facility, San Luis Obispo, WDID #*
Project Number/ID	*Rick Engineering Job No. 17443*

"This Stormwater Pollution Prevention Plan and Attachments were prepared under my direction to meet the requirements of the California Construction General Permit (SWRCB Orders No. 2009-009-DWQ as amended by Order 2010-0014-DWQ and Order 2012-0006-DWQ). I certify that I am a Qualified SWPPP Developer in good standing as of the date signed below."

QSD Signature	6/15/2016 *Date*
Cristi E. Fry *QSD Name*	21373 *QSD Certificate Number*
Principal Project Manager *Title and Affiliation*	805-544-0707 *Telephone Number*
cfry@rickengineering.com *Email*	

Combined Risk Level Matrix

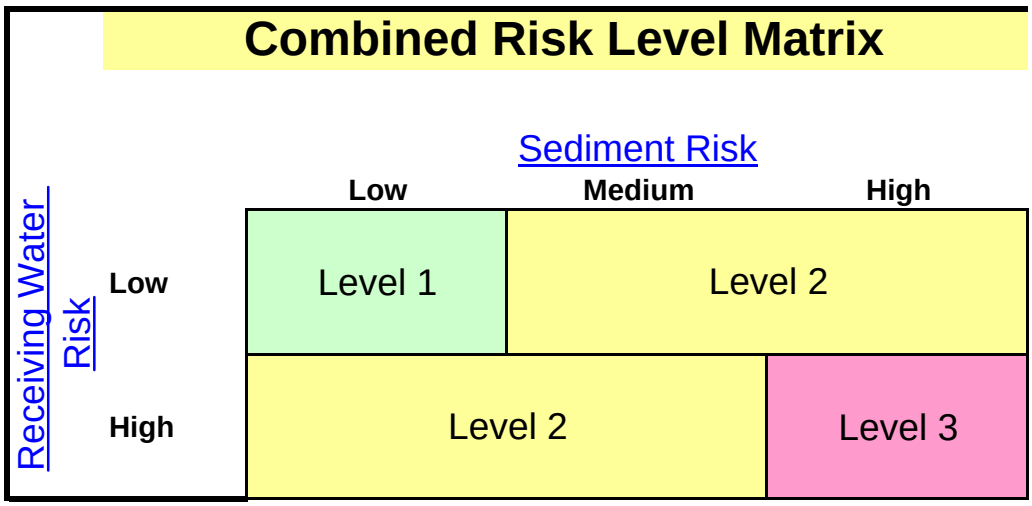

Project Sediment Risk:	**Medium**
Project RW Risk:	**High**
Project Combined Risk:	**Level 2**

	A	B	C
1	**Sediment Risk Factor Worksheet**		**Entry**
2	**A) R Factor**		
3	Analyses of data indicated that when factors other than rainfall are held constant, soil loss is directly proportional to a rainfall factor composed of total storm kinetic energy (E) times the maximum 30-min intensity (I30) (Wischmeier and Smith, 1958). The numerical value of R is the average annual sum of EI30 for storm events during a rainfall record of at least 22 years. "Isoerodent" maps were developed based on R values calculated for more than 1000 locations in the Western U.S. Refer to the link below to determine the R factor for the project site.		
4	http://cfpub.epa.gov/npdes/stormwater/LEW/lewCalculator.cfm		
5	**R Factor Value**		24.92
6	**B) K Factor (weighted average, by area, for all site soils)**		
7	The soil-erodibility factor K represents: (1) susceptibility of soil or surface material to erosion, (2) transportability of the sediment, and (3) the amount and rate of runoff given a particular rainfall input, as measured under a standard condition. Fine-textured soils that are high in clay have low K values (about 0.05 to 0.15) because the particles are resistant to detachment. Coarse-textured soils, such as sandy soils, also have low K values (about 0.05 to 0.2) because of high infiltration resulting in low runoff even though these particles are easily detached. Medium-textured soils, such as a silt loam, have moderate K values (about 0.25 to 0.45) because they are moderately susceptible to particle detachment and they produce runoff at moderate rates. Soils having a high silt content are especially susceptible to erosion and have high K values, which can exceed 0.45 and can be as large as 0.65. Silt-size particles are easily detached and tend to crust, producing high rates and large volumes of runoff. Use Site-specific data must be submitted.		
8	Site-specific K factor guidance		
9	**K Factor Value**		0.24
10	**C) LS Factor (weighted average, by area, for all slopes)**		
11	The effect of topography on erosion is accounted for by the LS factor, which combines the effects of a hillslope-length factor, L, and a hillslope-gradient factor, S. Generally speaking, as hillslope length and/or hillslope gradient increase, soil loss increases. As hillslope length increases, total soil loss and soil loss per unit area increase due to the progressive accumulation of runoff in the downslope direction. As the hillslope gradient increases, the velocity and erosivity of runoff increases. Use the LS table located in separate tab of this spreadsheet to determine LS factors. Estimate the weighted LS for the site prior to construction.		
12	LS Table		
13	**LS Factor Value**		3.28
14			
15	**Watershed Erosion Estimate (=RxKxLS) in tons/acre**		19.617024
16	**Site Sediment Risk Factor**		**Medium**
17	Low Sediment Risk: < 15 tons/acre		
18	Medium Sediment Risk: >=15 and <75 tons/acre		
19	High Sediment Risk: >= 75 tons/acre		
20			

Facility Information

- Start Date: 07/01/2016
- End Date: 01/01/2017
- Latitude: 35.2992
- Longitude: -120.6558

Erosivity Index Calculator Results

AN EROSIVITY INDEX VALUE OF **24.92** HAS BEEN DETERMINED FOR THE CONSTRUCTION PERIOD OF **07/01/2016 - 01/01/2017**.

A rainfall erosivity factor of 5.0 or greater has been calculated for your site and period of construction. **You do NOT qualify for a waiver from NPDES permitting requirements**.

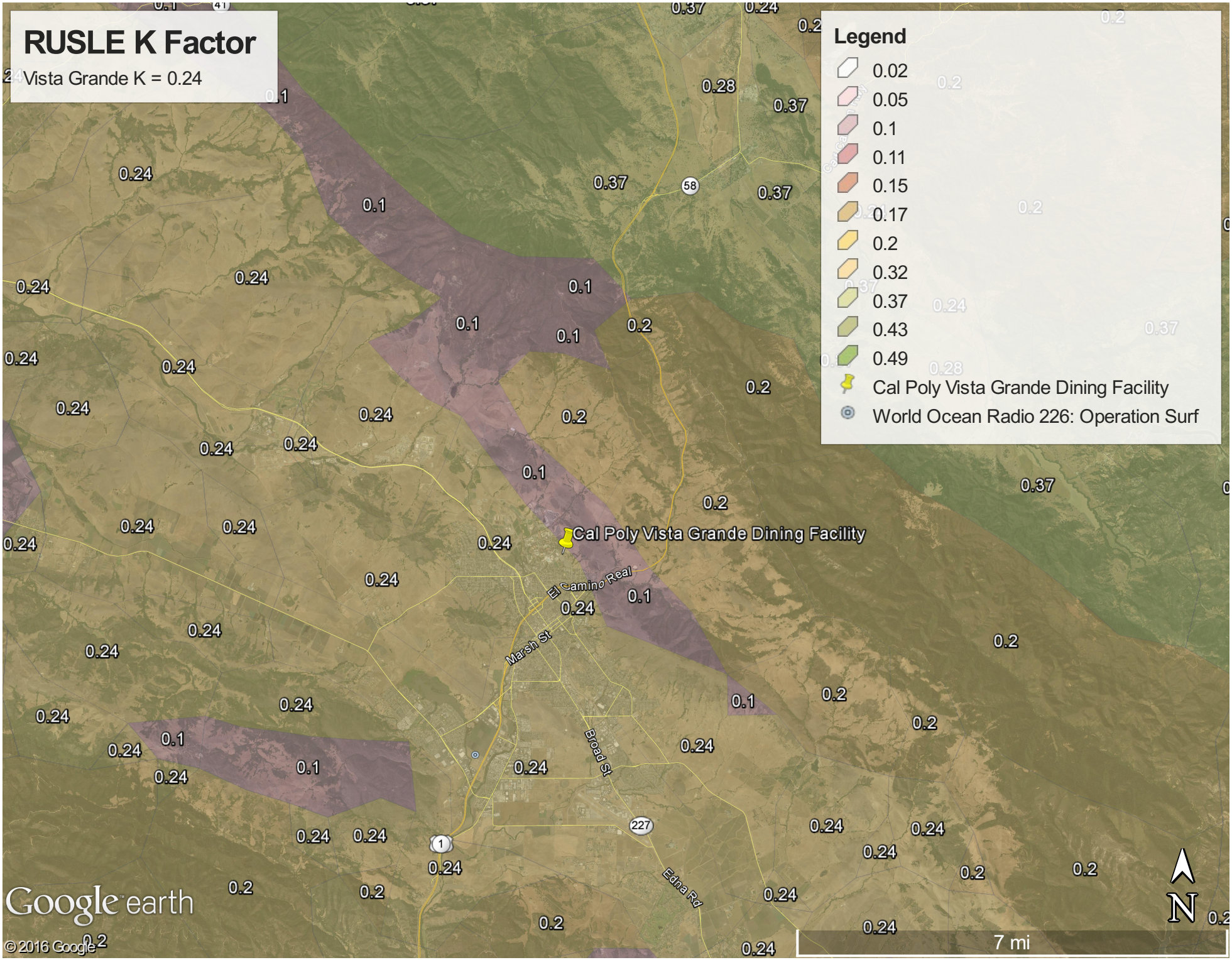
RUSLE K Factor
Vista Grande K = 0.24
Legend
0.02
0.05
0.1
0.11
0.15
0.17
0.2
0.32
0.37
0.43
0.49
Cal Poly Vista Grande Dining Facility
World Ocean Radio 226: Operation Surf
Cal Poly Vista Grande Dining Facility
El Camino Real
Marsh St
Broad St
Edna Rd
58
227
1
Google earth
© 2016 Google
N
7 mi

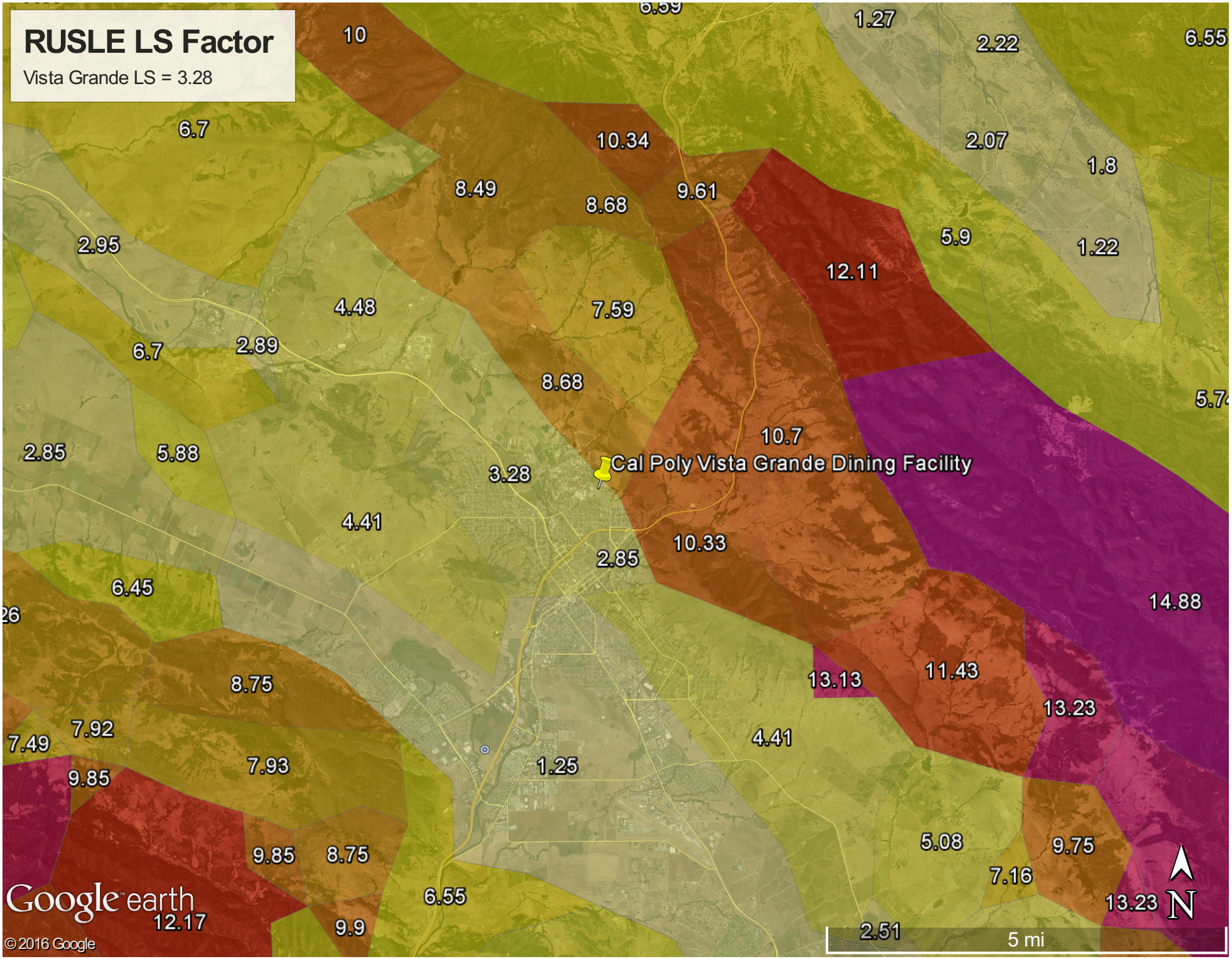
RUSLE LS Factor
Vista Grande LS = 3.28
Cal Poly Vista Grande Dining Facility
10
6.59
1.27
2.22
6.55
6.7
10.34
2.07
1.8
8.49
8.68
9.61
2.95
5.9
1.22
12.11
4.48
7.59
6.7
2.89
8.68
5.74
10.7
2.85
5.88
3.28
4.41
10.33
2.85
6.45
14.88
26
8.75
13.13
11.43
13.23
7.92
7.49
4.41
7.93
1.25
9.85
5.08
9.75
9.85
8.75
7.16
6.55
13.23
12.17
9.9
2.51
5 mi
N
Google earth
© 2016 Google

Receiving Water (RW) Risk Factor Worksheet	Entry	Score
A. Watershed Characteristics	**yes/no**	
A.1. Does the disturbed area discharge (either directly or indirectly) to a **303(d)-listed waterbody impaired by sediment** (For help with impaired waterbodies please visit the link below) or has a **USEPA approved TMDL implementation plan for sediment**?:	**Yes**	**High**
http://www.waterboards.ca.gov/water_issues/programs/tmdl/integrated2010.shtml		
OR		
A.2. Does the disturbed area discharge to a waterbody with designated beneficial uses of SPAWN & COLD & MIGRATORY? (For help please review the appropriate Regional Board Basin Plan)		
http://www.waterboards.ca.gov/waterboards_map.shtml		
Region 1 Basin Plan		
Region 2 Basin Plan		
Region 3 Basin Plan		
Region 4 Basin Plan		
Region 5 Basin Plan		
Region 6 Basin Plan		
Region 7 Basin Plan		
Region 8 Basin Plan		
Region 9 Basin Plan		

Appendix D: SWPPP Amendment Certifications

DRAFT FOR BID PURPOSES ONLY

SWPPP Amendment No. _____

Project Name: _____

Project Number: _____

Qualified SWPPP Developer's Certification of the Stormwater Pollution Prevention Plan Amendment

"This Stormwater Pollution Prevention Plan and attachments were prepared under my direction to meet the requirements of the California Construction General Permit (SWRCB Order No. 2009-009-DWQ as amended by 2010-0014-DWQ and 2012-0006-DWQ). I certify that I am a Qualified SWPPP Developer in good standing as of the date signed below."

QSD's Signature	Date
QSD Name	QSD Certificate Number
Title and Affiliation	Telephone
Address	Email

DRAFT FOR BID PURPOSES ONLY

Appendix E: Submitted Changes to PRDs

DRAFT FOR BID PURPOSES ONLY

Log of Updated PRDs

The General Permit allows for the reduction or increase of the total acreage covered under the General Permit when a portion of the project is complete and/or conditions for termination of coverage have been met; when ownership of a portion of the project is purchased by a different entity; or when new acreage is added to the project.

Modified PRDs shall be filed electronically within 30 days of a reduction or increase in total disturbed area if a change in permit covered acreage is to be sought. The SWPPP shall be modified appropriately, with revisions and amendments recorded in Appendix C. Updated PRDs submitted electronically via SMARTS can be found in this Appendix.

This appendix includes all of the following updated PRDs (check all that apply):

☐ Revised Notice of Intent (NOI);

☐ Revised Site Map;

☐ Revised Risk Assessment;

☐ New landowner's information (name, address, phone number, email address); and

☐ New signed certification statement.

Legally Responsible Person if Organization

Signature of Authorized Representative of Legally Responsible Person or Approved Signatory

Date

Name of Authorized Representative of Legally Responsible Person or Approved Signatory

Telephone Number

DRAFT FOR BID PURPOSES ONLY

Appendix F: Construction Schedule

The table below shows the approximate schedule of construction.

Construction Activity	Approximate Start Date	Approximate End Date
Demolition of site	July 1, 2016	July 31, 2016
Grading and installation of interim improvements	August 1, 2016	August 31, 2016
Final site stabilization	September 1, 2016	September 31, 2016

DRAFT FOR BID PURPOSES ONLY

Appendix G: Construction Activities, Materials Used, and Associated Pollutants

DRAFT FOR BID PURPOSES ONLY

Table G.1 Construction Activities and Associated Pollutants

Phase	Activity	Associated Materials or Pollutants	Pollutant Category[(1)]
Grading and Land Development	Vehicle and equipment use	• Equipment operation • Equipment maintenance • Equipment washing • Equipment fueling	Oil and Grease
	Soil preparation/amendments	• Use of soil additives/amendments	Nutrients
Demolition Phase	Removal of existing structures	• Demolition of asphalt, concrete, masonry, framing, roofing, metal structures.	Metals, Oil and Grease, Synthetic Organics
	Solid waste	• Litter, trash and debris • Vegetation	Gross Pollutants
Landscaping and Site Stabilization Phase	Planting / Vegetation Management	• Vegetation control (pesticides/herbicides) • Planting • Plant maintenance • Vegetation removal	Nutrients, Metals, Synthetic Organics

(1) Categories per CASQA BMP Handbook (i.e., Sediment, Nutrients, Bacteria and Viruses, Oil and Grease, Metals, Synthetic Organics, Pesticides, Gross Pollutants, and Vector Production)

DRAFT FOR BID PURPOSES ONLY

Appendix H: CASQA Stormwater BMP Handbook Portal: Construction Fact Sheets

DRAFT FOR BID PURPOSES ONLY

Scheduling EC-1

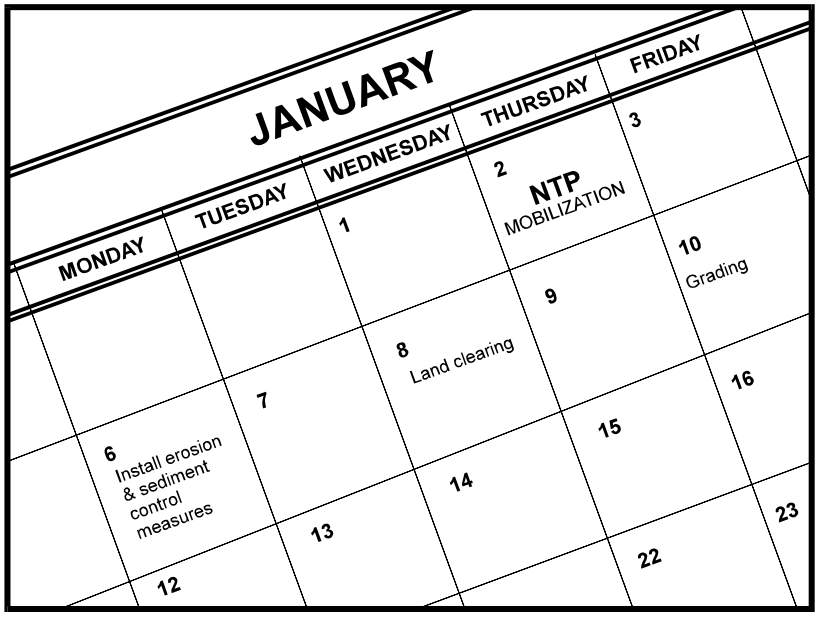

Description and Purpose

Scheduling is the development of a written plan that includes sequencing of construction activities and the implementation of BMPs such as erosion control and sediment control while taking local climate (rainfall, wind, etc.) into consideration. The purpose is to reduce the amount and duration of soil exposed to erosion by wind, rain, runoff, and vehicle tracking, and to perform the construction activities and control practices in accordance with the planned schedule.

Suitable Applications

Proper sequencing of construction activities to reduce erosion potential should be incorporated into the schedule of every construction project especially during rainy season. Use of other, more costly yet less effective, erosion and sediment control BMPs may often be reduced through proper construction sequencing.

Limitations

- Environmental constraints such as nesting season prohibitions reduce the full capabilities of this BMP.

Implementation

- Avoid rainy periods. Schedule major grading operations during dry months when practical. Allow enough time before rainfall begins to stabilize the soil with vegetation or physical means or to install sediment trapping devices.

- Plan the project and develop a schedule showing each phase of construction. Clearly show how the rainy season relates

Categories

EC	Erosion Control	☑
SE	Sediment Control	☒
TC	Tracking Control	☒
WE	Wind Erosion Control	☒
NS	Non-Stormwater Management Control	
WM	Waste Management and Materials Pollution Control	

Legend:

☑ **Primary Objective**

☒ **Secondary Objective**

Targeted Constituents

Sediment	☑
Nutrients	
Trash	
Metals	
Bacteria	
Oil and Grease	
Organics	

Potential Alternatives

None

If User/Subscriber modifies this fact sheet in any way, the CASQA name/logo and footer below must be removed from each page and not appear on the modified version.

CASQA
CALIFORNIA STORMWATER QUALITY ASSOCIATION

to soil disturbing and re-stabilization activities. Incorporate the construction schedule into the SWPPP.

- Include on the schedule, details on the rainy season implementation and deployment of:
  - Erosion control BMPs
  - Sediment control BMPs
  - Tracking control BMPs
  - Wind erosion control BMPs
  - Non-stormwater BMPs
  - Waste management and materials pollution control BMPs
- Include dates for activities that may require non-stormwater discharges such as dewatering, sawcutting, grinding, drilling, boring, crushing, blasting, painting, hydro-demolition, mortar mixing, pavement cleaning, etc.
- Work out the sequencing and timetable for the start and completion of each item such as site clearing and grubbing, grading, excavation, paving, foundation pouring utilities installation, etc., to minimize the active construction area during the rainy season.
  - Sequence trenching activities so that most open portions are closed before new trenching begins.
  - Incorporate staged seeding and re-vegetation of graded slopes as work progresses.
  - Schedule establishment of permanent vegetation during appropriate planting time for specified vegetation.
- Non-active areas should be stabilized as soon as practical after the cessation of soil disturbing activities or one day prior to the onset of precipitation.
- Monitor the weather forecast for rainfall.
- When rainfall is predicted, adjust the construction schedule to allow the implementation of soil stabilization and sediment treatment controls on all disturbed areas prior to the onset of rain.
- Be prepared year round to deploy erosion control and sediment control BMPs. Erosion may be caused during dry seasons by un-seasonal rainfall, wind, and vehicle tracking. Keep the site stabilized year round, and retain and maintain rainy season sediment trapping devices in operational condition.
- Apply permanent erosion control to areas deemed substantially complete during the project's defined seeding window.

Costs

Construction scheduling to reduce erosion may increase other construction costs due to reduced economies of scale in performing site grading. The cost effectiveness of scheduling techniques should be compared with the other less effective erosion and sedimentation controls to achieve a cost effective balance.

Inspection and Maintenance

- Verify that work is progressing in accordance with the schedule. If progress deviates, take corrective actions.
- Amend the schedule when changes are warranted.
- Amend the schedule prior to the rainy season to show updated information on the deployment and implementation of construction site BMPs.

References

Stormwater Quality Handbooks Construction Site Best Management Practices (BMPs) Manual, State of California Department of Transportation (Caltrans), November 2000.

Stormwater Management for Construction Activities Developing Pollution Prevention Plans and Best Management Practices (EPA 832-R-92-005), U.S. Environmental Protection Agency, Office of Water, September 1992.

Preservation Of Existing Vegetation EC-2

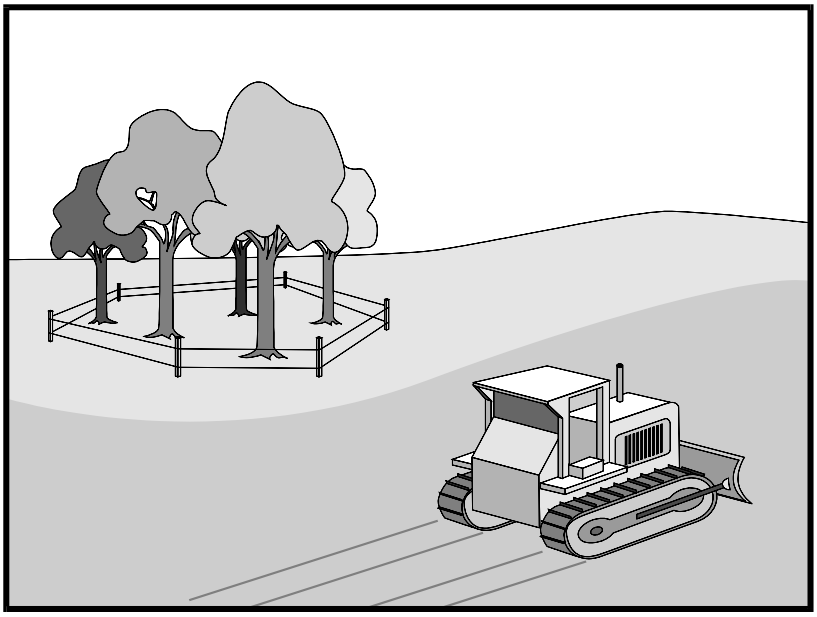

Categories

EC	Erosion Control	☑
SE	Sediment Control	
TC	Tracking Control	
WE	Wind Erosion Control	
NS	Non-Stormwater Management Control	
WM	Waste Management and Materials Pollution Control	

Legend:

☑ **Primary Objective**

☒ **Secondary Objective**

Targeted Constituents

Sediment	☑
Nutrients	
Trash	
Metals	
Bacteria	
Oil and Grease	
Organics	

Potential Alternatives

None

Description and Purpose

Carefully planned preservation of existing vegetation minimizes the potential of removing or injuring existing trees, vines, shrubs, and grasses that protect soil from erosion.

Suitable Applications

Preservation of existing vegetation is suitable for use on most projects. Large project sites often provide the greatest opportunity for use of this BMP. Suitable applications include the following:

- Areas within the site where no construction activity occurs, or occurs at a later date. This BMP is especially suitable to multi year projects where grading can be phased.
- Areas where natural vegetation exists and is designated for preservation. Such areas often include steep slopes, watercourse, and building sites in wooded areas.
- Areas where local, state, and federal government require preservation, such as vernal pools, wetlands, marshes, certain oak trees, etc. These areas are usually designated on the plans, or in the specifications, permits, or environmental documents.
- Where vegetation designated for ultimate removal can be temporarily preserved and be utilized for erosion control and sediment control.

If User/Subscriber modifies this fact sheet in any way, the CASQA name/logo and footer below must be removed from each page and not appear on the modified version.

Preservation Of Existing Vegetation EC-2

Limitations

- Requires forward planning by the owner/developer, contractor, and design staff.
- Limited opportunities for use when project plans do not incorporate existing vegetation into the site design.
- For sites with diverse topography, it is often difficult and expensive to save existing trees while grading the site satisfactory for the planned development.

Implementation

The best way to prevent erosion is to not disturb the land. In order to reduce the impacts of new development and redevelopment, projects may be designed to avoid disturbing land in sensitive areas of the site (e.g., natural watercourses, steep slopes), and to incorporate unique or desirable existing vegetation into the site's landscaping plan. Clearly marking and leaving a buffer area around these unique areas during construction will help to preserve these areas as well as take advantage of natural erosion prevention and sediment trapping.

Existing vegetation to be preserved on the site must be protected from mechanical and other injury while the land is being developed. The purpose of protecting existing vegetation is to ensure the survival of desirable vegetation for shade, beautification, and erosion control. Mature vegetation has extensive root systems that help to hold soil in place, thus reducing erosion. In addition, vegetation helps keep soil from drying rapidly and becoming susceptible to erosion. To effectively save existing vegetation, no disturbances of any kind should be allowed within a defined area around the vegetation. For trees, no construction activity should occur within the drip line of the tree.

Timing

- Provide for preservation of existing vegetation prior to the commencement of clearing and grubbing operations or other soil disturbing activities in areas where no construction activity is planned or will occur at a later date.

Design and Layout

- Mark areas to be preserved with temporary fencing. Include sufficient setback to protect roots.
  - Orange colored plastic mesh fencing works well.
  - Use appropriate fence posts and adequate post spacing and depth to completely support the fence in an upright position.
- Locate temporary roadways, stockpiles, and layout areas to avoid stands of trees, shrubs, and grass.
- Consider the impact of grade changes to existing vegetation and the root zone.
- Maintain existing irrigation systems where feasible. Temporary irrigation may be required.
- Instruct employees and subcontractors to honor protective devices. Prohibit heavy equipment, vehicular traffic, or storage of construction materials within the protected area.

Costs

There is little cost associated with preserving existing vegetation if properly planned during the project design, and these costs may be offset by aesthetic benefits that enhance property values. During construction, the cost for preserving existing vegetation will likely be less than the cost of applying erosion and sediment controls to the disturbed area. Replacing vegetation inadvertently destroyed during construction can be extremely expensive, sometimes in excess of $10,000 per tree.

Inspection and Maintenance

During construction, the limits of disturbance should remain clearly marked at all times. Irrigation or maintenance of existing vegetation should be described in the landscaping plan. If damage to protected trees still occurs, maintenance guidelines described below should be followed:

- Verify that protective measures remain in place. Restore damaged protection measures immediately.
- Serious tree injuries shall be attended to by an arborist.
- Damage to the crown, trunk, or root system of a retained tree shall be repaired immediately.
- Trench as far from tree trunks as possible, usually outside of the tree drip line or canopy. Curve trenches around trees to avoid large roots or root concentrations. If roots are encountered, consider tunneling under them. When trenching or tunneling near or under trees to be retained, place tunnels at least 18 in. below the ground surface, and not below the tree center to minimize impact on the roots.
- Do not leave tree roots exposed to air. Cover exposed roots with soil as soon as possible. If soil covering is not practical, protect exposed roots with wet burlap or peat moss until the tunnel or trench is ready for backfill.
- Cleanly remove the ends of damaged roots with a smooth cut.
- Fill trenches and tunnels as soon as possible. Careful filling and tamping will eliminate air spaces in the soil, which can damage roots.
- If bark damage occurs, cut back all loosened bark into the undamaged area, with the cut tapered at the top and bottom and drainage provided at the base of the wood. Limit cutting the undamaged area as much as possible.
- Aerate soil that has been compacted over a trees root zone by punching holes 12 in. deep with an iron bar, and moving the bar back and forth until the soil is loosened. Place holes 18 in. apart throughout the area of compacted soil under the tree crown.
- Fertilization
  - Fertilize stressed or damaged broadleaf trees to aid recovery.
  - Fertilize trees in the late fall or early spring.

- Apply fertilizer to the soil over the feeder roots and in accordance with label instructions, but never closer than 3 ft to the trunk. Increase the fertilized area by one-fourth of the crown area for conifers that have extended root systems.

- Retain protective measures until all other construction activity is complete to avoid damage during site cleanup and stabilization.

References

County of Sacramento Tree Preservation Ordinance, September 1981.

Stormwater Quality Handbooks Construction Site Best Management Practices (BMPs) Manual, State of California Department of Transportation (Caltrans), November 2000.

Stormwater Management of the Puget Sound Basin, Technical Manual, Publication #91-75, Washington State Department of Ecology, February 1992.

Water Quality Management Plan for The Lake Tahoe Region, Volume II, Handbook of Management Practices, Tahoe Regional Planning Agency, November 1988.

Hydraulic Mulch EC-3

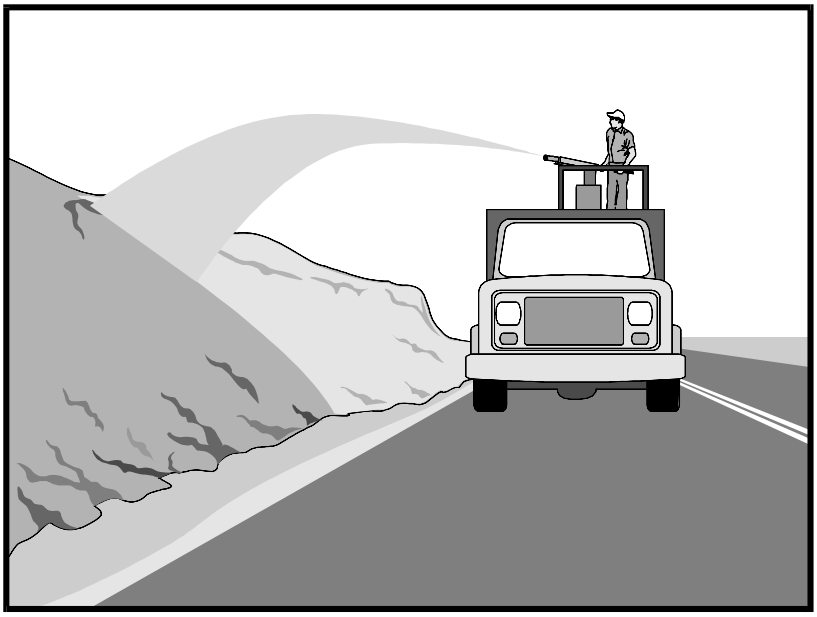

Description and Purpose

Hydraulic Mulch consists of various types of fibrous materials mixed with water and sprayed onto the soil surface in slurry form to provide a layer of temporary protection from wind and water erosion.

Suitable Applications

Hydraulic mulch as a temporary, stand alone, erosion control BMP is suitable for disturbed areas that require temporary protection from wind and water erosion until permanent soil stabilization activities commence. Examples include:

- Rough-graded areas that will remain inactive for longer than permit-required thresholds (e.g., 14 days) or otherwise require stabilization to minimize erosion or prevent sediment discharges.
- Soil stockpiles.
- Slopes with exposed soil between existing vegetation such as trees or shrubs.
- Slopes planted with live, container-grown vegetation or plugs.
- Slopes burned by wildfire.

Categories

EC	Erosion Control	☑
SE	Sediment Control	
TC	Tracking Control	
WE	Wind Erosion Control	☒
NS	Non-Stormwater Management Control	
WM	Waste Management and Materials Pollution Control	

Legend:

☑ **Primary Category**

☒ **Secondary Category**

Targeted Constituents

Sediment	☑
Nutrients	
Trash	
Metals	
Bacteria	
Oil and Grease	
Organics	

Potential Alternatives

EC-4 Hydroseeding

EC-5 Soil Binders

EC-6 Straw Mulch

EC-7 Geotextiles and Mats

EC-8 Wood Mulching

EC-14 Compost Blanket

EC-16 Non-Vegetative Stabilization

If User/Subscriber modifies this fact sheet in any way, the CASQA name/logo and footer below must be removed from each page and not appear on the modified version.

Hydraulic mulch can also be applied to augment other erosion control BMPs such as:

- In conjunction with straw mulch (see EC-6 Straw Mulch) where the rate of hydraulic mulch is reduced to 100-500 lbs per acre and the slurry is applied over the straw as a tackifying agent to hold the straw in place.
- Supplemental application of soil amendments, such as fertilizer, lime, gypsum, soil bio-stimulants or compost.

Limitations

In general, hydraulic mulch is not limited by slope length, gradient or soil type. However, the following limitations typically apply:

- Most hydraulic mulch applications, particularly bonded fiber matrices (BFMs), require at least 24 hours to dry before rainfall occurs.
- Temporary applications (i.e., without a vegetative component) may require a second application in order to remain effective for an entire rainy season.
- Treatment areas must be accessible to hydraulic mulching equipment.
- Availability of water sources in remote areas for mixing and application.
- As a stand-alone temporary BMP, hydraulic mulches may need to be re-applied to maintain their erosion control effectiveness, typically after 6-12 months depending on the type of mulch used.
- Availability of hydraulic mulching equipment may be limited just prior to the rainy season and prior to storms due to high demand.
- Cellulose fiber mulches alone may not perform well on steep slopes or in course soils.
- This BMP consists of a mixture of several constituents (e.g., fibers/mulches, tackifiers, and other chemical constituents), some of which may be proprietary and may come pre-mixed by the manufacturer. The water quality impacts of these constituents are relatively unknown and some may have water quality impacts due to their chemical makeup. Refer to specific chemical properties identified in the product Material Safety Data Sheet; products should be evaluated for project-specific implementation by the SWPPP Preparer. Refer to factsheet EC-05 for further guidance on selecting soil binders.

Implementation

- Where feasible, it is preferable to prepare soil surfaces prior to application by roughening embankments and fill areas with a crimping or punching type roller or by track walking.
- The majority of hydraulic mulch applications do not necessarily require surface/soil preparation (See EC-15 Soil Preparation) although in almost every case where re-vegetation is included as part of the practice, soil preparation can be beneficial. One of the advantages of hydraulic mulch over other erosion control methods is that it can be applied in areas where soil preparation is precluded by site conditions, such as steep slopes, rocky soils, or inaccessibility.

- Avoid mulch over spray onto roads, sidewalks, drainage channels, existing vegetation, etc.
- Hydraulic mulching is generally performed utilizing specialized machines that have a large water-holding/mixing tank and some form of mechanical agitation or other recirculation method to keep water, mulch and soil amendments in suspension. The mixed hydraulic slurry can be applied from a tower sprayer on top of the machine or by extending a hose to areas remote from the machine.
- Where possible apply hydraulic mulch from multiple directions to adequately cover the soil. Application from a single direction can result in shadowing, uneven coverage and failure of the BMP.
- Hydraulic mulch can also include a vegetative component, such as seed, rhizomes, or stolons (see EC-4 Hydraulic Seed).
- Typical hydraulic mulch application rates range from 2,000 pounds per acre for standard mulches (SMs) to 3,500 pounds per acre for BFMs. However, the required amount of hydraulic mulch to provide adequate coverage of exposed topsoil may appear to exceed the standard rates when the roughness of the soil surface is changed due to soil preparation methods (see EC-15 Soil Preparation) or by slope gradient.
- Other factors such as existing soil moisture and soil texture can have a profound effect on the amount of hydraulic mulch required (i.e. application rate) applied to achieve an erosion-resistant covering.
- Avoid use of mulch without a tackifier component, especially on slopes.
- Mulches used in the hydraulic mulch slurry can include:
  - Cellulose fiber
  - Thermally-processed wood fibers
  - Cotton
  - Synthetics
  - Compost (see EC-14, Compost Blanket)
- Additional guidance on the comparison and selection of temporary slope stabilization methods is provided in Appendix F of the Handbook.

Categories of Hydraulic Mulches

Standard Hydraulic Mulch (SM)

Standard hydraulic mulches are generally applied at a rate of 2,000 pounds per acre and are manufactured containing around 5% tackifier (i.e. soil binder), usually a plant-derived guar or psyllium type. Most standard mulches are green in color derived from food-color based dyes.

Hydraulic Matrices (HM) and Stabilized Fiber Matrices (SFM)

Hydraulic matrices and stabilized fiber matrices are slurries which contain increased levels of tackifiers/soil binders; usually 10% or more by weight. HMs and SFMs have improved performance compared to a standard hydraulic mulch (SM) because of the additional percentage of tackifier and because of their higher application rates, typically 2,500 – 4,000 pounds per acre. Hydraulic matrices can include a mixture of fibers, for example, a 50/50 blend of paper and wood fiber. In the case of an SFM, the tackifier/soil binder is specified as a polyacrylamide (PAM).

Bonded Fiber Matrix (BFM)

Bonded fiber matrices (BFMs) are hydraulically-applied systems of fibers, adhesives (typically guar based) and chemical cross-links. Upon drying, the slurry forms an erosion-resistant blanket that prevents soil erosion and promotes vegetation establishment. The cross-linked adhesive in the BFM should be biodegradable and should not dissolve or disperse upon re-wetting. BFMs are typically applied at rates from 3,000 to 4,000 lbs/acre based on the manufacturer's recommendation. BFMs should not be applied immediately before, during or immediately after rainfall or if the soil is saturated. Depending on the product, BFMs typically require 12 to 24 hours to dry and become effective.

Mechanically-Bonded Fiber Matrices (MBFM)

Mechanically-bonded fiber matrices (MBFMs) are hydraulically applied systems similar to BFM that use crimped synthetic fibers and PAM and are typically applied to a slope at a higher application rate than a standard BFM.

Hydraulic Compost Matrix (HCM)

Hydraulic compost matrix (HCM) is a field-derived practice whereby finely graded or sifted compost is introduced into the hydraulic mulch slurry. A guar-type tackifier can be added for steeper slope applications as well as any specified seed mixtures. A HCM can help to accelerate seed germination and growth. HCMs are particularly useful as an in-fill for three-dimensional re-vegetation geocomposites, such as turf reinforcement mats (TRM) (see EC-7 Geotextiles and Mats).

Costs

Average installed costs for hydraulic mulch categories are is provided in Table 1, below.

Table 1
HYDRAULIC MULCH BMPs
INSTALLED COSTS

BMP	Installed Cost/Acre
Standard Hydraulic Mulching (SM)	$1,700 - $3,600 per acre
Hydraulic Matrices (HM) and Stabilized Fiber Matrices	
Guar-based	$2,000 - $4,000 per acre
PAM-based	$2,500 - $5,610 per acre
Bonded Fiber Matrix (BFM)	$3,900 - $6,900 per acre
Mechanically Bonded Fiber Matrix (MBFM)	$4,500 - $6,000 per acre
Hydraulic Compost Matrix (HCM)	$3,000 - $3,500 per acre

Source: Cost information received from individual product manufacturers solicited by Geosyntec Consultants (2004)

Inspection and Maintenance

- Maintain an unbroken, temporary mulched ground cover throughout the period of construction when the soils are not being reworked.
- BMPs must be inspected in accordance with General Permit requirements for the associated project type and risk level. It is recommended that at a minimum, BMPs be inspected weekly, prior to forecasted rain events, daily during extended rain events, and after the conclusion of rain events.
- Areas where erosion is evident should be repaired and BMPs re-applied as soon as possible. Care should be exercised to minimize the damage to protected areas while making repairs, as any area damaged will require re-application of BMPs.
- Compare the number of bags or weight of applied mulch to the area treated to determine actual application rates and compliance with specifications.

References

Soil Stabilization BMP Research for Erosion and Sediment Controls: Cost Survey Technical Memorandum, State of California Department of Transportation (Caltrans), July 2007.

Controlling Erosion of Construction Sites, Agricultural Information #347, U.S. Department of Agriculture (USDA), Natural Resources Conservation Service (NRCS) (formerly Soil Conservation Service – SCS).

Guides for Erosion and Sediment Control in California, USDA Soils Conservation Service, January 1991.

Manual of Standards of Erosion and Sediment Control Measures, Association of Bay Area Governments, May 1995.

Sedimentation and Erosion Control, An Inventory of Current Practices Draft, US EPA, April 1990.

Soil Erosion by Water, Agriculture Information Bulletin #513, U.S. Department of Agriculture, Soil Conservation Service.

Stormwater Quality Handbooks Construction Site Best Management Practices (BMPs) Manual, State of California Department of Transportation (Caltrans), March 2003.

Guidance Document: Soil Stabilization for Temporary Slopes, State of California Department of Transportation (Caltrans), November 1999

Stormwater Management of the Puget Sound Basin, Technical Manual, Publication #91-75, Washington State Department of Ecology, February 1992.

Water Quality Management Plan for the Lake Tahoe Region, Volume II, Handbook of Management Practices, Tahoe Regional Planning Agency, November 1988.

Hydroseeding EC-4

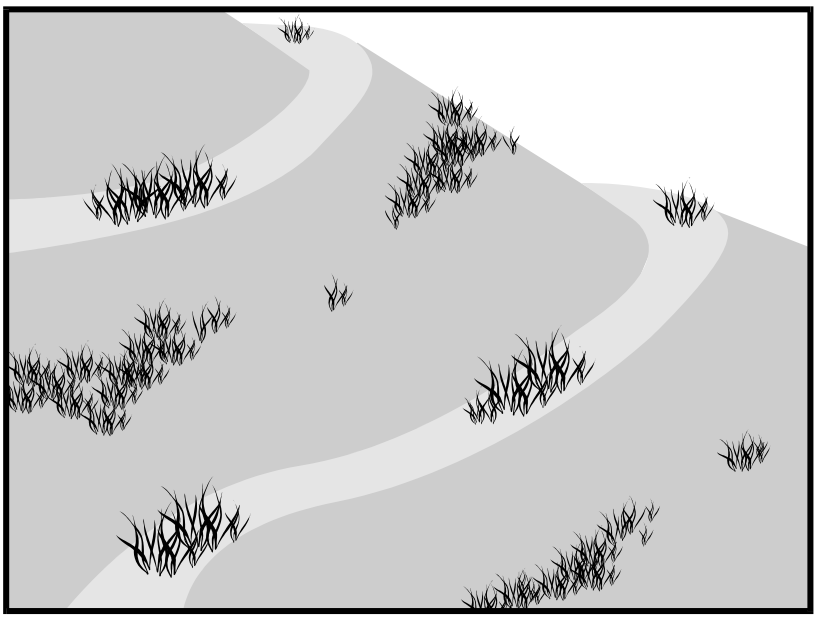

Description and Purpose

Hydroseeding typically consists of applying a mixture of a hydraulic mulch, seed, fertilizer, and stabilizing emulsion with a hydraulic mulcher, to temporarily protect exposed soils from erosion by water and wind. Hydraulic seeding, or hydroseeding, is simply the method by which temporary or permanent seed is applied to the soil surface.

Suitable Applications

Hydroseeding is suitable for disturbed areas requiring temporary protection until permanent stabilization is established, for disturbed areas that will be re-disturbed following an extended period of inactivity, or to apply permanent stabilization measures. Hydroseeding without mulch or other cover (e.g. EC-7, Erosion Control Blanket) is not a stand-alone erosion control BMP and should be combined with additional measures until vegetation establishment.

Typical applications for hydroseeding include:

- Disturbed soil/graded areas where permanent stabilization or continued earthwork is not anticipated prior to seed germination.
- Cleared and graded areas exposed to seasonal rains or temporary irrigation.
- Areas not subject to heavy wear by construction equipment or high traffic.

Categories

EC	Erosion Control	☑
SE	Sediment Control	
TC	Tracking Control	
WE	Wind Erosion Control	☒
NS	Non-Stormwater Management Control	
WM	Waste Management and Materials Pollution Control	

Legend:
☑ **Primary Category**
☒ **Secondary Category**

Targeted Constituents

Sediment	☑
Nutrients	
Trash	
Metals	
Bacteria	
Oil and Grease	
Organics	

Potential Alternatives

EC-3 Hydraulic Mulch
EC-5 Soil Binders
EC-6 Straw Mulch
EC-7 Geotextiles and Mats
EC-8 Wood Mulching
EC-14 Compost Blanket
EC-16 Non-Vegetative Stabilization

If User/Subscriber modifies this fact sheet in any way, the CASQA name/logo and footer below must be removed from each page and not appear on the modified version.

Limitations

- Availability of hydroseeding equipment may be limited just prior to the rainy season and prior to storms due to high demand.
- Hydraulic seed should be applied with hydraulic mulch or a stand-alone hydroseed application should be followed by one of the following:
    - Straw mulch (see Straw Mulch EC-6)
    - Rolled erosion control products (see Geotextiles and Mats EC-7)
    - Application of Compost Blanket (see Compost Blanket EC-14)

  Hydraulic seed may be used alone only on small flat surfaces when there is sufficient time in the season to ensure adequate vegetation establishment and coverage to provide adequate erosion control.
- Hydraulic seed without mulch does not provide immediate erosion control.
- Temporary seeding may not be appropriate for steep slopes (i.e., slopes readily prone to rill erosion or without sufficient topsoil).
- Temporary seeding may not be appropriate in dry periods without supplemental irrigation.
- Temporary vegetation may have to be removed before permanent vegetation is applied.
- Temporary vegetation may not be appropriate for short term inactivity (i.e. less than 3-6 months).
- This BMP consists of a mixture of several constituents (e.g., fibers/mulches, tackifiers, and other chemical constituents), some of which may be proprietary and may come pre-mixed by the manufacturer. The water quality impacts of these constituents are relatively unknown and some may have water quality impacts due to their chemical makeup. Additionally these constituents may require non-visible pollutant monitoring. Refer to specific chemical properties identified in the product Material Safety Data Sheet; products should be evaluated for project-specific implementation by the SWPPP Preparer. Refer to factsheet EC-05 for further guidance on selecting soil binders.

Implementation

In order to select appropriate hydraulic seed mixtures, an evaluation of site conditions should be performed with respect to:

- Soil conditions
- Site topography and exposure (sun/wind)
- Season and climate
- Vegetation types
- Maintenance requirements
- Sensitive adjacent areas
- Water availability
- Plans for permanent vegetation

The local office of the U.S.D.A. Natural Resources Conservation Service (NRCS), Resource Conservation Districts and Agricultural Extension Service can provide information on appropriate seed mixes.

The following steps should be followed for implementation:

- Where appropriate or feasible, soil should be prepared to receive the seed by disking or otherwise scarifying (See EC-15, Soil Preparation) the surface to eliminate crust, improve air and water infiltration and create a more favorable environment for germination and growth.
- Avoid use of hydraulic seed in areas where the BMP would be incompatible with future earthwork activities.
- Hydraulic seed can be applied using a multiple step or one step process.
  - In a multiple step process, hydraulic seed is applied first, followed by mulch or a Rolled Erosion Control Product (RECP).
  - In the one step process, hydraulic seed is applied with hydraulic mulch in a hydraulic matrix. When the one step process is used to apply the mixture of fiber, seed, etc., the seed rate should be increased to compensate for all seeds not having direct contact with the soil.
- All hydraulically seeded areas should have mulch, or alternate erosion control cover to keep seeds in place and to moderate soil moisture and temperature until the seeds germinate and grow.
- All seeds should be in conformance with the California State Seed Law of the Department of Agriculture. Each seed bag should be delivered to the site sealed and clearly marked as to species, purity, percent germination, dealer's guarantee, and dates of test. The container should be labeled to clearly reflect the amount of Pure Live Seed (PLS) contained. All legume seed should be pellet inoculated. Inoculant sources should be species specific and should be applied at a rate of 2 lb of inoculant per 100 lb seed.
- Commercial fertilizer should conform to the requirements of the California Food and Agricultural Code, which can be found at http://www.leginfo.ca.gov/.html/fac_table_of_contents.html. Fertilizer should be pelleted or granular form.
- Follow up applications should be made as needed to cover areas of poor coverage or germination/vegetation establishment and to maintain adequate soil protection.
- Avoid over spray onto roads, sidewalks, drainage channels, existing vegetation, etc.
- Additional guidance on the comparison and selection of temporary slope stabilization methods is provided in Appendix F of the Handbook.

Costs

Average cost for installation and maintenance may vary from as low as $1,900 per acre for flat slopes and stable soils, to $4,000 per acre for moderate to steep slopes and/or erosive soils. Cost of seed mixtures vary based on types of required vegetation.

BMP	Installed Cost per Acre
Hydraulic Seed	$1,900-$4,000

Source: Cost information received from individual product manufacturers solicited by Geosyntec Consultants (2004).

Inspection and Maintenance

- BMPs must be inspected in accordance with General Permit requirements for the associated project type and risk level. It is recommended that at a minimum, BMPs be inspected weekly, prior to forecasted rain events, daily during extended rain events, and after the conclusion of rain events.
- Areas where erosion is evident should be repaired and BMPs re-applied as soon as possible. Care should be exercised to minimize the damage to protected areas while making repairs, as any area damaged will require re-application of BMPs.
- Where seeds fail to germinate, or they germinate and die, the area must be re-seeded, fertilized, and mulched within the planting season, using not less than half the original application rates.
- Irrigation systems, if applicable, should be inspected daily while in use to identify system malfunctions and line breaks. When line breaks are detected, the system must be shut down immediately and breaks repaired before the system is put back into operation.
- Irrigation systems should be inspected for complete coverage and adjusted as needed to maintain complete coverage.

References

Soil Stabilization BMP Research for Erosion and Sediment Controls: Cost Survey Technical Memorandum, State of California Department of Transportation (Caltrans), July 2007.

Stormwater Quality Handbooks Construction Site Best Management Practices (BMPs) Manual, State of California Department of Transportation (Caltrans), March 2003.

Guidance Document: Soil Stabilization for Temporary Slopes, State of California Department of Transportation (Caltrans), November 1999.

Soil Binders EC-5

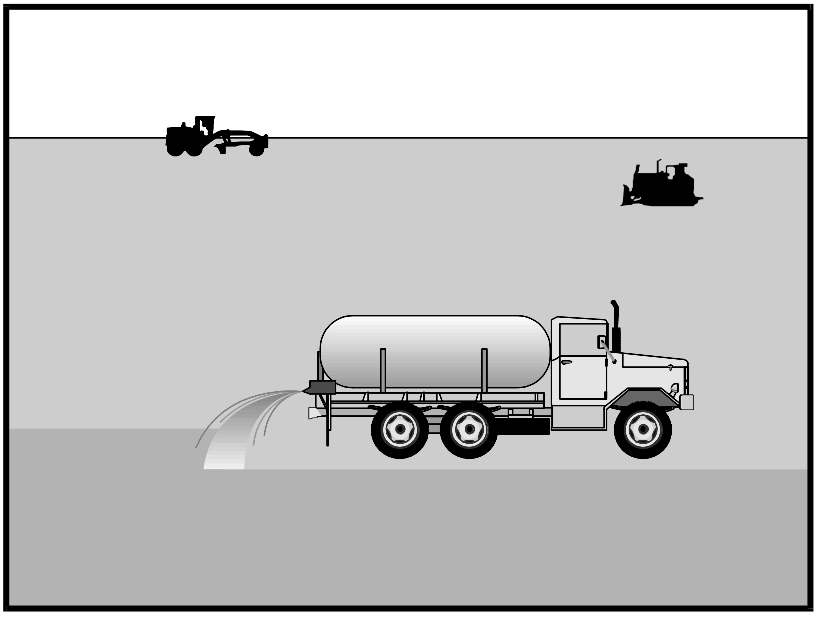

Categories

EC	Erosion Control	☑
SE	Sediment Control	
TC	Tracking Control	
WE	Wind Erosion Control	☒
NS	Non-Stormwater Management Control	
WM	Waste Management and Materials Pollution Control	

Legend:
☑ **Primary Category**
☒ **Secondary Category**

Targeted Constituents

Sediment	☑
Nutrients	
Trash	
Metals	
Bacteria	
Oil and Grease	
Organics	

Potential Alternatives

EC-3 Hydraulic Mulch
EC-4 Hydroseeding
EC-6 Straw Mulch
EC-7 Geotextiles and Mats
EC-8 Wood Mulching

If User/Subscriber modifies this fact sheet in any way, the CASQA name/logo and footer below must be removed from each page and not appear on the modified version.

Description and Purpose

Soil binding consists of application and maintenance of a soil stabilizer to exposed soil surfaces. Soil binders are materials applied to the soil surface to temporarily prevent water and wind induced erosion of exposed soils on construction sites.

Suitable Applications

Soil binders are typically applied to disturbed areas requiring temporary protection. Because soil binders, when used as a stand-alone practice, can often be incorporated into the soil, they are a good alternative to mulches in areas where grading activities will soon resume. Soil binders are commonly used in the following areas:

- Rough graded soils that will be inactive for a short period of time
- Soil stockpiles
- Temporary haul roads prior to placement of crushed rock
- Compacted soil road base
- Construction staging, materials storage, and layout areas

Limitations

- Soil binders are temporary in nature and may need reapplication.
- Soil binders require a minimum curing time until fully effective, as prescribed by the manufacturer. Curing time

may be 24 hours or longer. Soil binders may need reapplication after a storm event.

- Soil binders will generally experience spot failures during heavy rainfall events. If runoff penetrates the soil at the top of a slope treated with a soil binder, it is likely that the runoff will undercut the stabilized soil layer and discharge at a point further down slope.
- Plant-material-based soil binders do not generally hold up to pedestrian or vehicular traffic across treated areas as well as polymeric emulsion blends or cementitious-based binders.
- Soil binders may not sufficiently penetrate compacted soils.
- Some soil binders are soil texture specific in terms of their effectiveness. For example, polyacrylamides (PAMs) work very well on silt and clayey soils but their performance decreases dramatically in sandy soils.
- Some soil binders may not perform well with low relative humidity. Under rainy conditions, some agents may become slippery or leach out of the soil.
- Soil binders may not cure if low temperatures occur within 24 hours of application.
- The water quality impacts of some chemical soil binders are relatively unknown and some may have water quality impacts due to their chemical makeup. Additionally, these chemical may require non-visible pollutant monitoring. Products should be evaluated for project-specific implementation by the SWPPP Preparer. Refer to the product Material Safety Data Sheet for chemical properties.

Implementation

General Considerations

- Soil binders should conform to local municipality specifications and requirements.
- Site soil types will dictate appropriate soil binders to be used.
- A soil binder must be environmentally benign (non-toxic to plant and animal life), easy to apply, easy to maintain, economical, and should not stain paved or painted surfaces. Soil binders should not pollute stormwater when cured. Obtain a Material Safety Data Sheet (MSDS) from the manufacturer to ensure non-toxicity.
- Stormwater runoff from PAM treated soils should pass through one of the following sediment control BMP prior to discharging to surface waters.
    - When the total drainage area is greater than or equal to 5 acres, PAM treated areas should drain to a sediment basin.
    - Areas less than 5 acres should drain to sediment control BMPs, such as a sediment trap, or a series of check dams. The total number of check dams used should be maximized to achieve the greatest amount of settlement of sediment prior to discharging from the site. Each check dam should be spaced evenly in the drainage channel through which stormwater flows are discharged off site.

- Performance of soil binders depends on temperature, humidity, and traffic across treated areas.
- Avoid over spray onto roads, sidewalks, drainage channels, existing vegetation, etc.
- Additional guidance on the comparison and selection of temporary slope stabilization methods is provided in Appendix F of the Handbook.

Selecting a Soil Binder

Properties of common soil binders used for erosion control are provided on Table 1 at the end of this Fact Sheet. Use Table 1 to select an appropriate soil binder. Refer to WE-1, Wind Erosion Control, for dust control soil binders.

Factors to consider when selecting a soil binder include the following:

- Suitability to situation - Consider where the soil binder will be applied, if it needs a high resistance to leaching or abrasion, and whether it needs to be compatible with any existing vegetation. Determine the length of time soil stabilization will be needed, and if the soil binder will be placed in an area where it will degrade rapidly. In general, slope steepness is not a discriminating factor for the listed soil binders.
- Soil types and surface materials - Fines and moisture content are key properties of surface materials. Consider a soil binder's ability to penetrate, likelihood of leaching, and ability to form a surface crust on the surface materials.
- Frequency of application - The frequency of application is related to the functional longevity of the binder, which can be affected by subgrade conditions, surface type, climate, and maintenance schedule.
- Frequent applications could lead to high costs. Application frequency may be minimized if the soil binder has good penetration, low evaporation, and good longevity. Consider also that frequent application will require frequent equipment clean up.

Plant-Material-Based (Short Lived, <6 months) Binders

Guar: Guar is a non-toxic, biodegradable, natural galactomannan-based hydrocolloid treated with dispersant agents for easy field mixing. It should be mixed with water at the rate of 11 to 15 lb per 1,000 gallons. Recommended minimum application rates are as follows:

Application Rates for Guar Soil Stabilizer

Slope (H:V):	Flat	4:1	3:1	2:1	1:1
lb/acre:	40	45	50	60	70

Psyllium: Psyllium is composed of the finely ground muciloid coating of plantago seeds that is applied as a dry powder or in a wet slurry to the surface of the soil. It dries to form a firm but rewettable membrane that binds soil particles together, but permits germination and growth of seed. Psyllium requires 12 to 18 hours drying time. Application rates should be from 80 to 200 lb/acre, with enough water in solution to allow for a uniform slurry flow.

Starch: Starch is non-ionic, cold water soluble (pre-gelatinized) granular cornstarch. The material is mixed with water and applied at the rate of 150 lb/acre. Approximate drying time is 9 to 12 hours.

Plant-Material-Based (Long Lived, 6-12 months) Binders

Pitch and Rosin Emulsion: Generally, a non-ionic pitch and rosin emulsion has a minimum solids content of 48%. The rosin should be a minimum of 26% of the total solids content. The soil stabilizer should be non-corrosive, water dilutable emulsion that upon application cures to a water insoluble binding and cementing agent. For soil erosion control applications, the emulsion is diluted and should be applied as follows:

- For clayey soil: 5 parts water to 1 part emulsion
- For sandy soil: 10 parts water to 1 part emulsion

Application can be by water truck or hydraulic seeder with the emulsion and product mixture applied at the rate specified by the manufacturer.

Polymeric Emulsion Blend Binders

Acrylic Copolymers and Polymers: Polymeric soil stabilizers should consist of a liquid or solid polymer or copolymer with an acrylic base that contains a minimum of 55% solids. The polymeric compound should be handled and mixed in a manner that will not cause foaming or should contain an anti-foaming agent. The polymeric emulsion should not exceed its shelf life or expiration date; manufacturers should provide the expiration date. Polymeric soil stabilizer should be readily miscible in water, non-injurious to seed or animal life, non-flammable, should provide surface soil stabilization for various soil types without totally inhibiting water infiltration, and should not re-emulsify when cured. The applied compound typically requires 12 to 24 hours drying time. Liquid copolymer should be diluted at a rate of 10 parts water to 1 part polymer and the mixture applied to soil at a rate of 1,175 gallons/acre.

Liquid Polymers of Methacrylates and Acrylates: This material consists of a tackifier/sealer that is a liquid polymer of methacrylates and acrylates. It is an aqueous 100% acrylic emulsion blend of 40% solids by volume that is free from styrene, acetate, vinyl, ethoxylated surfactants or silicates. For soil stabilization applications, it is diluted with water in accordance with the manufacturer's recommendations, and applied with a hydraulic seeder at the rate of 20 gallons/acre. Drying time is 12 to 18 hours after application.

Copolymers of Sodium Acrylates and Acrylamides: These materials are non-toxic, dry powders that are copolymers of sodium acrylate and acrylamide. They are mixed with water and applied to the soil surface for erosion control at rates that are determined by slope gradient:

Slope Gradient (H:V)	lb/acre
Flat to 5:1	3.0 – 5.0
5:1 to 3:1	5.0 – 10.0
2:1 to 1:1	10.0 – 20.0

Poly-Acrylamide (PAM) and Copolymer of Acrylamide**:** Linear copolymer polyacrylamide for use as a soil binder is packaged as a dry flowable solid, as a liquid. Refer to the manufacturer's recommendation for dilution and application rates as they vary based on liquid or dry form, site conditions and climate.

- Limitations specific to PAM are as follows:
  - Do not use PAM on a slope that flows into a water body without passing through a sediment trap or sediment basin.
  - The specific PAM copolymer formulation must be anionic. Cationic PAM should not be used in any application because of known aquatic toxicity problems. Only the highest drinking water grade PAM, certified for compliance with ANSI/NSF Standard 60 for drinking water treatment, should be used for soil applications.
  - PAM designated for erosion and sediment control should be "water soluble" or "linear" or "non-cross linked".
  - PAM should not be used as a stand-alone BMP to protect against water-based erosion. When combined with mulch, its effectiveness increases dramatically.

Hydro-Colloid Polymers: Hydro-Colloid Polymers are various combinations of dry flowable poly-acrylamides, copolymers and hydro-colloid polymers that are mixed with water and applied to the soil surface at rates of 55 to 60 lb/acre. Drying times are 0 to 4 hours.

Cementitious-Based Binders

Gypsum: This is a formulated gypsum based product that readily mixes with water and mulch to form a thin protective crust on the soil surface. It is composed of high purity gypsum that is ground, calcined and processed into calcium sulfate hemihydrate with a minimum purity of 86%. It is mixed in a hydraulic seeder and applied at rates 4,000 to 12,000 lb/acre. Drying time is 4 to 8 hours.

Applying Soil Binders

After selecting an appropriate soil binder, the untreated soil surface must be prepared before applying the soil binder. The untreated soil surface must contain sufficient moisture to assist the agent in achieving uniform distribution. In general, the following steps should be followed:

- Follow manufacturer's written recommendations for application rates, pre-wetting of application area, and cleaning of equipment after use.
- Prior to application, roughen embankment and fill areas.
- Consider the drying time for the selected soil binder and apply with sufficient time before anticipated rainfall. Soil binders should not be applied during or immediately before rainfall.
- Avoid over spray onto roads, sidewalks, drainage channels, sound walls, existing vegetation, etc.

- Soil binders should not be applied to frozen soil, areas with standing water, under freezing or rainy conditions, or when the temperature is below 40°F during the curing period.
- More than one treatment is often necessary, although the second treatment may be diluted or have a lower application rate.
- Generally, soil binders require a minimum curing time of 24 hours before they are fully effective. Refer to manufacturer's instructions for specific cure time.
- For liquid agents:
  - Crown or slope ground to avoid ponding.
  - Uniformly pre-wet ground at 0.03 to 0.3 gal/yd^2 or according to manufacturer's recommendations.
  - Apply solution under pressure. Overlap solution 6 to 12 in.
  - Allow treated area to cure for the time recommended by the manufacturer; typically at least 24 hours.
  - Apply second treatment before first treatment becomes ineffective, using 50% application rate.
  - In low humidities, reactivate chemicals by re-wetting with water at 0.1 to 0.2 gal/yd^2.

Costs

Costs vary according to the soil stabilizer selected for implementation. The following are approximate installed costs:

Soil Binder	Cost per Acre (2004)[1]	Estimated Cost per Acre (2009)[2]
Plant-Material-Based (Short Lived) Binders	$700-$900	$770-$990
Plant-Material-Based (Long Lived) Binders	$1,200-$1,500	$1,320-$1,650
Polymeric Emulsion Blend Binders	$700 -$1,500	$770-$1,650
Cementitious-Based Binders	$800-$1,200	$880-$1,350

1. Source: Cost information received from individual product manufacturers solicited by Geosyntec Consultants (2004).

2. 2009 costs reflect a 10% escalation over year 2004 costs. Escalation based on informal survey of industry trends. Note: Expected cost increase is offset by competitive economic conditions.

Inspection and Maintenance

- BMPs must be inspected in accordance with General Permit requirements for the associated project type and risk level. It is recommended that at a minimum, BMPs be inspected weekly, prior to forecasted rain events, daily during extended rain events, and after the conclusion of rain events.

- Areas where erosion is evident should be repaired and BMPs re-applied as soon as possible. Care should be exercised to minimize the damage to protected areas while making repairs, as any area damaged will require re-application of BMPs.
- Reapply the selected soil binder as needed to maintain effectiveness.

Table 1 Properties of Soil Binders for Erosion Control

Evaluation Criteria	Binder Type			
	Plant Material Based (Short Lived)	**Plant Material Based (Long Lived)**	**Polymeric Emulsion Blends**	**Cementitious-Based Binders**
Relative Cost	Low	Moderate to High	Low to High	Low to Moderate
Resistance to Leaching	High	High	Low to Moderate	Moderate
Resistance to Abrasion	Moderate	Low	Moderate to High	Moderate to High
Longevity	Short to Medium	Medium	Medium to Long	Medium
Minimum Curing Time before Rain	9 to 18 hours	19 to 24 hours	0 to 24 hours	4 to 8 hours
Compatibility with Existing Vegetation	Good	Poor	Poor	Poor
Mode of Degradation	Biodegradable	Biodegradable	Photodegradable/ Chemically Degradable	Photodegradable/ Chemically Degradable
Labor Intensive	No	No	No	No
Specialized Application Equipment	Water Truck or Hydraulic Mulcher	Water Truck or Hydraulic Mulcher	Water Truck or Hydraulic Mulcher	Water Truck or Hydraulic Mulcher
Liquid/Powder	Powder	Liquid	Liquid/Powder	Powder
Surface Crusting	Yes, but dissolves on rewetting	Yes	Yes, but dissolves on rewetting	Yes
Clean Up	Water	Water	Water	Water
Erosion Control Application Rate	Varies (1)	Varies (1)	Varies (1)	4,000 to 12,000 lbs/acre

(1) See Implementation for specific rates.

References

Erosion Control Pilot Study Report, State of California Department of Transportation (Caltrans), June 2000.

Manual of Standards of Erosion and Sediment Control Measures, Association of Bay Area Governments, May 1995.

Sedimentation and Erosion Control, An Inventory of Current Practices Draft, US EPA, April 1990.

Stormwater Quality Handbooks Construction Site Best Management Practices (BMPs) Manual, State of California Department of Transportation (Caltrans), March 2003.

Guidance Document: Soil Stabilization for Temporary Slopes, State of California Department of Transportation (Caltrans), November 1999.

Stormwater Management for Construction Activities, Developing Pollution Prevention Plans and Best Management Practices, EPA 832-R-92005; USEPA, April 1992.

Straw Mulch EC-6

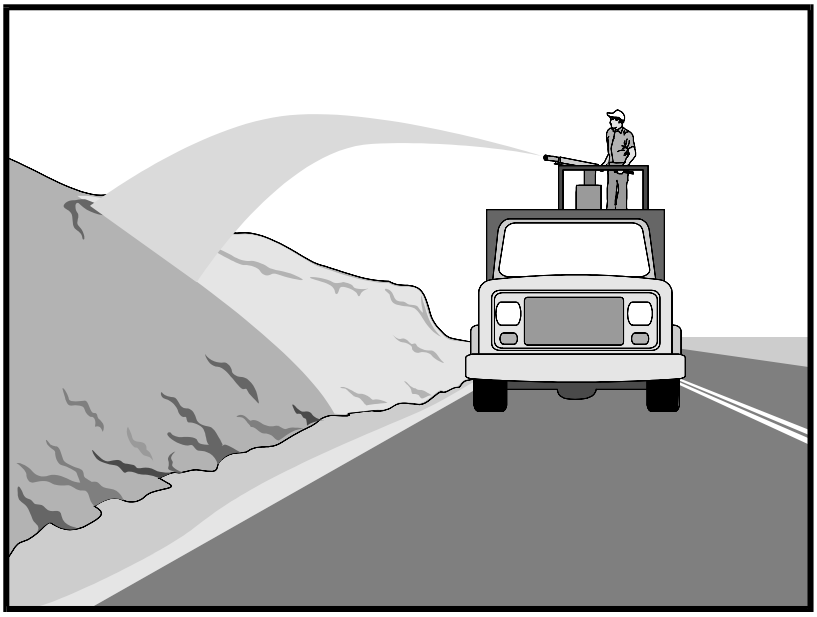

Categories

EC	Erosion Control	☑
SE	Sediment Control	
TC	Tracking Control	
WE	Wind Erosion Control	☒
NS	Non-Stormwater Management Control	
WM	Waste Management and Materials Pollution Control	

Legend:
☑ **Primary Category**
☒ **Secondary Category**

Targeted Constituents

Sediment	☑
Nutrients	
Trash	
Metals	
Bacteria	
Oil and Grease	
Organics	

Potential Alternatives

EC-3 Hydraulic Mulch
EC-4 Hydroseeding
EC-5 Soil Binders
EC-7 Geotextiles and Mats
EC-8 Wood Mulching
EC-14 Compost Blanket

If User/Subscriber modifies this fact sheet in any way, the CASQA name/logo and footer below must be removed from each page and not appear on the modified version.

Description and Purpose

Straw mulch consists of placing a uniform layer of straw and incorporating it into the soil with a studded roller or crimper, or anchoring it with a tackifier or stabilizing emulsion. Straw mulch protects the soil surface from the impact of rain drops, preventing soil particles from becoming dislodged.

Suitable Applications

Straw mulch is suitable for disturbed areas requiring temporary protection until permanent stabilization is established. Straw mulch can be specified for the following applications:

- As a stand-alone BMP on disturbed areas until soils can be prepared for permanent vegetation. The longevity of straw mulch is typically less than six months.
- Applied in combination with temporary seeding strategies
- Applied in combination with permanent seeding strategies to enhance plant establishment and final soil stabilization
- Applied around containerized plantings to control erosion until the plants become established to provide permanent stabilization

Limitations

Availability of straw and straw blowing equipment may be limited just prior to the rainy season and prior to storms due to high demand.

- There is a potential for introduction of weed seed and unwanted plant material if weed-free agricultural straw is not specified.
- Straw mulch applied by hand is more time intensive and potentially costly.
- Wind may limit application of straw and blow straw into undesired locations.
- May have to be removed prior to permanent seeding or prior to further earthwork.
- "Punching" of straw does not work in sandy soils, necessitating the use of tackifiers.
- Potential fugitive dust control issues associated with straw applications can occur. Application of a stabilizing emulsion or a water stream at the same time straw is being blown can reduce this problem.
- Use of plastic netting should be avoided in areas where wildlife may be entrapped and may be prohibited for projects in certain areas with sensitive wildlife species, especially reptiles and amphibians.

Implementation

- Straw should be derived from weed-free wheat, rice, or barley. Where required by the plans, specifications, permits, or environmental documents, native grass straw should be used.
- Use tackifier to anchor straw mulch to the soil on slopes.
- Crimping, punch roller-type rollers, or track walking may also be used to incorporate straw mulch into the soil on slopes. Track walking can be used where other methods are impractical.
- Avoid placing straw onto roads, sidewalks, drainage channels, sound walls, existing vegetation, etc.
- Straw mulch with tackifier should not be applied during or immediately before rainfall.
- Additional guidance on the comparison and selection of temporary slope stabilization methods is provided in Appendix F of the Handbook.

Application Procedures

- When using a tackifier to anchor the straw mulch, roughen embankment or fill areas by rolling with a crimping or punching-type roller or by track walking before placing the straw mulch. Track walking should only be used where rolling is impractical.
- Apply straw at a rate of between 3,000 and 4,000 lb/acre, either by machine or by hand distribution and provide 100% ground cover. A lighter application is used for flat surfaces and a heavier application is used for slopes.
- Evenly distribute straw mulch on the soil surface.
- Anchoring straw mulch to the soil surface by "punching" it into the soil mechanically (incorporating) can be used in lieu of a tackifier.

- Methods for holding the straw mulch in place depend upon the slope steepness, accessibility, soil conditions, and longevity.

  - A tackifier acts to glue the straw fibers together and to the soil surface. The tackifier should be selected based on longevity and ability to hold the fibers in place. A tackifier is typically applied at a rate of 125 lb/acre. In windy conditions, the rates are typically 180 lb/acre.

  - On very small areas, a spade or shovel can be used to punch in straw mulch.

  - On slopes with soils that are stable enough and of sufficient gradient to safely support construction equipment without contributing to compaction and instability problems, straw can be "punched" into the ground using a knife blade roller or a straight bladed coulter, known commercially as a "crimper."

Costs

Average annual cost for installation and maintenance is included in the table below. Application by hand is more time intensive and potentially more costly.

BMP	Unit Cost per Acre
Straw mulch, crimped or punched	$2,458-$5,375
Straw mulch with tackifier	$1,823-$4,802

Source: Cost information received from individual product suppliers solicited by Geosyntec Consultants (2004).

Inspection and Maintenance

- BMPs must be inspected in accordance with General Permit requirements for the associated project type and risk level. It is recommended that at a minimum, BMPs be inspected weekly, prior to forecasted rain events, daily during extended rain events, and after the conclusion of rain events.

- Areas where erosion is evident should be repaired and BMPs re-applied as soon as possible. Care should be exercised to minimize the damage to protected areas while making repairs, as any area damaged will require re-application of BMPs.

- The key consideration in inspection and maintenance is that the straw needs to last long enough to achieve erosion control objectives. Straw mulch as a stand-alone BMP is temporary and is not suited for long-term erosion control.

- Maintain an unbroken, temporary mulched ground cover while disturbed soil areas are inactive. Repair any damaged ground cover and re-mulch exposed areas.

- Reapplication of straw mulch and tackifier may be required to maintain effective soil stabilization over disturbed areas and slopes.

References

Soil Stabilization BMP Research for Erosion and Sediment Controls: Cost Survey Technical Memorandum, State of California Department of Transportation (Caltrans), July 2007.

Erosion and Sediment Control Manual, Oregon Department of Environmental Quality, February 2005.

Controlling Erosion of Construction Sites, Agricultural Information Bulletin #347, U.S. Department of Agriculture (USDA), Natural Resources Conservation Service (NRCS) (formerly Soil Conservation Service – SCS).

Guides for Erosion and Sediment Control in California, USDA Soils Conservation Service, January 1991.

Manual of Standards of Erosion and Sediment Control Measures, Association of Bay Area Governments, May 1995.

Soil Erosion by Water, Agricultural Information Bulletin #513, U.S. Department of Agriculture, Soil Conservation Service.

Stormwater Quality Handbooks Construction Site Best Management Practices (BMPs) Manual, State of California Department of Transportation (Caltrans), March 2003.

Stormwater Management of the Puget Sound Basin, Technical Manual, Publication #91-75, Washington State Department of Ecology, February 1992.

Water Quality Management Plan for the Lake Tahoe Region, Volume II, Handbook of Management Practices, Tahoe Regional Planning Agency, November 1988.

Geotextiles and Mats EC-7

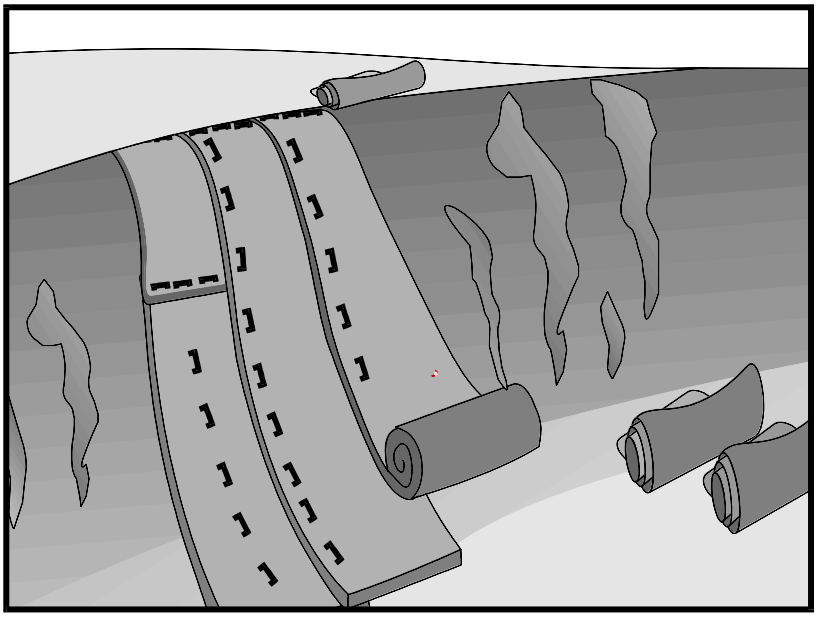

Categories		
EC	Erosion Control	☑
SE	Sediment Control	
TC	Tracking Control	
WE	Wind Erosion Control	☒
NS	Non-Stormwater Management Control	
WM	Waste Management and Materials Pollution Control	

Legend:
☑ **Primary Category**
☒ **Secondary Category**

Targeted Constituents	
Sediment	☑
Nutrients	
Trash	
Metals	
Bacteria	
Oil and Grease	
Organics	

Potential Alternatives

EC-3 Hydraulic Mulch

EC-4 Hydroseeding

If User/Subscriber modifies this fact sheet in any way, the CASQA name/logo and footer below must be removed from each page and not appear on the modified version.

Description and Purpose

Mattings, or Rolled Erosion Control Products (RECPs), can be made of natural or synthetic materials or a combination of the two. RECPs are used to cover the soil surface to reduce erosion from rainfall impact, hold soil in place, and absorb and hold moisture near the soil surface. Additionally, RECPs may be used to stabilize soils until vegetation is established or to reinforce non-woody surface vegetation.

Suitable Applications

RECPs are typically applied on slopes where erosion hazard is high and vegetation will be slow to establish. Mattings are also used on stream banks, swales and other drainage channels where moving water at velocities between 3 ft/s and 6 ft/s are likely to cause scour and wash out new vegetation, and in areas where the soil surface is disturbed and where existing vegetation has been removed. RECPs may also be used when seeding cannot occur (e.g., late season construction and/or the arrival of an early rain season). RECPs should be considered when the soils are fine grained and potentially erosive. RECPs should be considered in the following situations.

- Steep slopes, generally steeper than 3:1 (H:V)
- Slopes where the erosion potential is high
- Slopes and disturbed soils where mulch must be anchored
- Disturbed areas where plants are slow to develop

- Channels with flows exceeding 3.3 ft/s
- Channels to be vegetated
- Stockpiles
- Slopes adjacent to water bodies

Limitations

- RECP installed costs are generally higher than other erosion control BMPs, limiting their use to areas where other BMPs are ineffective (e.g. channels, steep slopes).
- RECPs may delay seed germination, due to reduction in soil temperature.
- RECPs are generally not suitable for excessively rocky sites or areas where the final vegetation will be mowed (since staples and netting can catch in mowers). If a staple or pin cannot be driven into the soil because the underlying soil is too hard or rocky, then an alternative BMP should be selected.
- If used for temporary erosion control, RECPs should be removed and disposed of prior to application of permanent soil stabilization measures.
- The use of plastic should be limited to covering stockpiles or very small graded areas for short periods of time (such as through one imminent storm event) until more environmentally friendly measures, such as seeding and mulching, may be installed.
    - Plastic sheeting is easily vandalized, easily torn, photodegradable, and must be disposed of at a landfill.
    - Plastic sheeting results in 100% runoff, which may cause serious erosion problems in the areas receiving the increased flow.
- RECPs may have limitations based on soil type, slope gradient, or channel flow rate; consult the manufacturer for proper selection.
- Not suitable for areas that have foot traffic (tripping hazard) – e.g., pad areas around buildings under construction.
- RECPs that incorporate a plastic netting (e.g. straw blanket typically uses a plastic netting to hold the straw in place) may not be suitable near known wildlife habitat. Wildlife can become trapped in the plastic netting.
- RECPs may have limitations in extremely windy climates. However, when RECPs are properly trenched at the top and bottom and stapled in accordance with the manufacturer's recommendations, problems with wind can be minimized.

Implementation

Material Selection

- Natural RECPs have been found to be effective where re-vegetation will be provided by re-seeding. The choice of material should be based on the size of area, side slopes, surface conditions such as hardness, moisture, weed growth, and availability of materials.

- Additional guidance on the comparison and selection of temporary slope stabilization methods is provided in Appendix F of the Handbook.

- The following natural and synthetic RECPs are commonly used:

Geotextiles

- Material can be a woven or a non-woven polypropylene fabric with minimum thickness of 0.06 in., minimum width of 12 ft and should have minimum tensile strength of 150 lbs (warp), 80 lbs (fill) in conformance with the requirements in ASTM Designation: D 4632. The permittivity of the fabric should be approximately 0.07 sec^{-1} in conformance with the requirements in ASTM Designation: D4491. The fabric should have an ultraviolet (UV) stability of 70 percent in conformance with the requirements in ASTM designation: D4355. Geotextile blankets must be secured in place with wire staples or sandbags and by keying into tops of slopes to prevent infiltration of surface waters under geotextile. Staples should be made of minimum 11 gauge steel wire and should be U-shaped with 8 in. legs and 2 in. crown.

- Geotextiles may be reused if they are suitable for the use intended.

Plastic Covers

- Generally plastic sheeting should only be used as stockpile covering or for very small graded areas for short periods of time (such as through one imminent storm event). If plastic sheeting must be used, choose a plastic that will withstand photo degradation.

- Plastic sheeting should have a minimum thickness of 6 mils, and must be keyed in at the top of slope (when used as a temporary slope protection) and firmly held in place with sandbags or other weights placed no more than 10 ft apart. Seams are typically taped or weighted down their entire length, and there should be at least a 12 in. to 24 in. overlap of all seams. Edges should be embedded a minimum of 6 in. in soil (when used as a temporary slope protection).

- All sheeting must be inspected periodically after installation and after significant rainstorms to check for erosion, undermining, and anchorage failure. Any failures must be repaired immediately. If washout or breakages occur, the material should be re-installed after repairing the damage to the slope.

Erosion Control Blankets/Mats

- Biodegradable RECPs are typically composed of jute fibers, curled wood fibers, straw, coconut fiber, or a combination of these materials. In order for an RECP to be considered 100% biodegradable, the netting, sewing or adhesive system that holds the biodegradable mulch fibers together must also be biodegradable. See typical installation details at the end of this fact sheet.

- **Jute** is a natural fiber that is made into a yarn that is loosely woven into a biodegradable mesh. The performance of jute as a stand-alone RECP is low. Most other RECPs outperform jute as a temporary erosion control product and therefore jute is not commonly used. It is designed to be used in conjunction with vegetation. The material is supplied in rolled strips, which should be secured to the soil with U-shaped staples or stakes in accordance with manufacturers' recommendations.

- **Excelsior** (curled wood fiber) blanket material should consist of machine produced mats of curled wood excelsior with 80 percent of the fiber 6 in. or longer. The excelsior blanket should be of consistent thickness. The wood fiber must be evenly distributed over the entire area of the blanket. The top surface of the blanket should be covered with a photodegradable extruded plastic mesh. The blanket should be smolder resistant without the use of chemical additives and should be non-toxic and non-injurious to plant and animal life. Excelsior blankets should be furnished in rolled strips, a minimum of 48 in. wide, and should have an average weight of 0.8 lb/yd^2, ±10 percent, at the time of manufacture. Excelsior blankets must be secured in place with wire staples. Staples should be made of minimum 11 gauge steel wire and should be U-shaped with 8 in. legs and 2 in. crown.

- **Straw blanket** should be machine produced mats of straw with a lightweight biodegradable netting top layer. The straw should be attached to the netting with biodegradable thread or glue strips. The straw blanket should be of consistent thickness. The straw should be evenly distributed over the entire area of the blanket. Straw blanket should be furnished in rolled strips a minimum of 6.5 ft wide, a minimum of 80 ft long and a minimum of 0.5 lb/yd^2. Straw blankets must be secured in place with wire staples. Staples should be made of minimum 11 gauge steel wire and should be U-shaped with 8 in. legs and 2 in. crown.

- **Wood fiber blanket** is composed of biodegradable fiber mulch with extruded plastic netting held together with adhesives. The material is designed to enhance re-vegetation. The material is furnished in rolled strips, which must be secured to the ground with U-shaped staples or stakes in accordance with manufacturers' recommendations.

- **Coconut fiber blanket** should be a machine produced mat of 100 percent coconut fiber with biodegradable netting on the top and bottom. The coconut fiber should be attached to the netting with biodegradable thread or glue strips. The coconut fiber blanket should be of consistent thickness. The coconut fiber should be evenly distributed over the entire area of the blanket. Coconut fiber blanket should be furnished in rolled strips with a minimum of 6.5 ft wide, a minimum of 80 ft. long and a minimum of 0.5 lb/yd^2. Coconut fiber blankets must be secured in place with wire staples. Staples should be made of minimum 11 gauge steel wire and should be U-shaped with 8 in. legs and 2 in. crown.

- **Coconut fiber mesh** is a thin permeable membrane made from coconut or corn fiber that is spun into a yarn and woven into a biodegradable mat. It is designed to be used in conjunction with vegetation and typically has longevity of several years. The material is supplied in rolled strips, which must be secured to the soil with U-shaped staples or stakes in accordance with manufacturers' recommendations.

- **Straw coconut fiber blanket** should be machine produced mats of 70 percent straw and 30 percent coconut fiber with a biodegradable netting top layer and a biodegradable bottom net. The straw and coconut fiber should be attached to the netting with biodegradable thread or glue strips. The straw coconut fiber blanket should be of consistent thickness. The straw and coconut fiber should be evenly distributed over the entire area of the blanket. Straw coconut fiber blanket should be furnished in rolled strips a minimum of 6.5 ft wide, a minimum of 80 ft long and a minimum of 0.5 lb/yd^2. Straw coconut fiber blankets must be secured in place with wire staples. Staples should be made of minimum 11 gauge steel wire and should be U-shaped with 8 in. legs and 2 in. crown.

- Non-biodegradable RECPs are typically composed of polypropylene, polyethylene, nylon or other synthetic fibers. In some cases, a combination of biodegradable and synthetic fibers is used to construct the RECP. Netting used to hold these fibers together is typically non-biodegradable as well.

  - **Plastic netting** is a lightweight biaxially oriented netting designed for securing loose mulches like straw or paper to soil surfaces to establish vegetation. The netting is photodegradable. The netting is supplied in rolled strips, which must be secured with U-shaped staples or stakes in accordance with manufacturers' recommendations.

  - **Plastic mesh** is an open weave geotextile that is composed of an extruded synthetic fiber woven into a mesh with an opening size of less than ¼ in. It is used with re-vegetation or may be used to secure loose fiber such as straw to the ground. The material is supplied in rolled strips, which must be secured to the soil with U-shaped staples or stakes in accordance with manufacturers' recommendations.

  - **Synthetic fiber with netting** is a mat that is composed of durable synthetic fibers treated to resist chemicals and ultraviolet light. The mat is a dense, three dimensional mesh of synthetic (typically polyolefin) fibers stitched between two polypropylene nets. The mats are designed to be re-vegetated and provide a permanent composite system of soil, roots, and geomatrix. The material is furnished in rolled strips, which must be secured with U-shaped staples or stakes in accordance with manufacturers' recommendations.

  - **Bonded synthetic fibers** consist of a three dimensional geomatrix nylon (or other synthetic) matting. Typically it has more than 90 percent open area, which facilitates root growth. It's tough root reinforcing system anchors vegetation and protects against hydraulic lift and shear forces created by high volume discharges. It can be installed over prepared soil, followed by seeding into the mat. Once vegetated, it becomes an invisible composite system of soil, roots, and geomatrix. The material is furnished in rolled strips that must be secured with U-shaped staples or stakes in accordance with manufacturers' recommendations.

  - **Combination synthetic and biodegradable RECPs** consist of biodegradable fibers, such as wood fiber or coconut fiber, with a heavy polypropylene net stitched to the top and a high strength continuous filament geomatrix or net stitched to the bottom. The material is designed to enhance re-vegetation. The material is furnished in rolled strips,

which must be secured with U-shaped staples or stakes in accordance with manufacturers' recommendations.

Site Preparation

- Proper soil preparation is essential to ensure complete contact of the RECP with the soil. Soil Roughening is not recommended in areas where RECPs will be installed.
- Grade and shape the area of installation.
- Remove all rocks, clods, vegetation or other obstructions so that the installed blankets or mats will have complete, direct contact with the soil.
- Prepare seedbed by loosening 2 to 3 in. of topsoil.

Seeding/Planting

Seed the area before blanket installation for erosion control and re-vegetation. Seeding after mat installation is often specified for turf reinforcement application. When seeding prior to blanket installation, all areas disturbed during blanket installation must be re-seeded. Where soil filling is specified for turf reinforcement mats (TRMs), seed the matting and the entire disturbed area after installation and prior to filling the mat with soil.

Fertilize and seed in accordance with seeding specifications or other types of landscaping plans. The protective matting can be laid over areas where grass has been planted and the seedlings have emerged. Where vines or other ground covers are to be planted, lay the protective matting first and then plant through matting according to design of planting.

Check Slots

Check slots shall be installed as required by the manufacturer.

Laying and Securing Matting

- Before laying the matting, all check slots should be installed and the seedbed should be friable, made free from clods, rocks, and roots. The surface should be compacted and finished according to the requirements of the manufacturer's recommendations.
- Mechanical or manual lay down equipment should be capable of handling full rolls of fabric and laying the fabric smoothly without wrinkles or folds. The equipment should meet the fabric manufacturer's recommendations or equivalent standards.

Anchoring

- U-shaped wire staples, metal geotextile stake pins, or triangular wooden stakes can be used to anchor mats and blankets to the ground surface.
- Wire staples should be made of minimum 11 gauge steel wire and should be U-shaped with 8 in. legs and 2 in. crown.
- Metal stake pins should be 0.188 in. diameter steel with a 1.5 in. steel washer at the head of the pin, and 8 in. in length.
- Wire staples and metal stakes should be driven flush to the soil surface.

Installation on Slopes

Installation should be in accordance with the manufacturer's recommendations. In general, these will be as follows:

- Begin at the top of the slope and anchor the blanket in a 6 in. deep by 6 in. wide trench. Backfill trench and tamp earth firmly.
- Unroll blanket down slope in the direction of water flow.
- Overlap the edges of adjacent parallel rolls 2 to 3 in. and staple every 3 ft (or greater, per manufacturer's specifications).
- When blankets must be spliced, place blankets end over end (shingle style) with 6 in. overlap. Staple through overlapped area, approximately 12 in. apart.
- Lay blankets loosely and maintain direct contact with the soil. Do not stretch.
- Staple blankets sufficiently to anchor blanket and maintain contact with the soil. Staples should be placed down the center and staggered with the staples placed along the edges. Steep slopes, 1:1 (H:V) to 2:1 (H:V), require a minimum of 2 staples/yd^2. Moderate slopes, 2:1 (H:V) to 3:1 (H:V), require a minimum of 1 ½ staples/yd^2. Check manufacturer's specifications to determine if a higher density staple pattern is required.

Installation in Channels

Installation should be in accordance with the manufacturer's recommendations. In general, these will be as follows:

- Dig initial anchor trench 12 in. deep and 6 in. wide across the channel at the lower end of the project area.
- Excavate intermittent check slots, 6 in. deep and 6 in. wide across the channel at 25 to 30 ft intervals along the channels.
- Cut longitudinal channel anchor trenches 4 in. deep and 4 in. wide along each side of the installation to bury edges of matting, whenever possible extend matting 2 to 3 in. above the crest of the channel side slopes.
- Beginning at the downstream end and in the center of the channel, place the initial end of the first roll in the anchor trench and secure with fastening devices at 12 in. intervals. Note: matting will initially be upside down in anchor trench.
- In the same manner, position adjacent rolls in anchor trench, overlapping the preceding roll a minimum of 3 in.
- Secure these initial ends of mats with anchors at 12 in. intervals, backfill and compact soil.
- Unroll center strip of matting upstream. Stop at next check slot or terminal anchor trench. Unroll adjacent mats upstream in similar fashion, maintaining a 3 in. overlap.

- Fold and secure all rolls of matting snugly into all transverse check slots. Lay mat in the bottom of the slot then fold back against itself. Anchor through both layers of mat at 12 in. intervals, then backfill and compact soil. Continue rolling all mat widths upstream to the next check slot or terminal anchor trench.
- Alternate method for non-critical installations: Place two rows of anchors on 6 in. centers at 25 to 30 ft. intervals in lieu of excavated check slots.
- Staple shingled lap spliced ends a minimum of 12 in. apart on 12 in. intervals.
- Place edges of outside mats in previously excavated longitudinal slots; anchor using prescribed staple pattern, backfill, and compact soil.
- Anchor, fill, and compact upstream end of mat in a 12 in. by 6 in. terminal trench.
- Secure mat to ground surface using U-shaped wire staples, geotextile pins, or wooden stakes.
- Seed and fill turf reinforcement matting with soil, if specified.

Soil Filling (if specified for turf reinforcement mat (TRM))

Installation should be in accordance with the manufacturer's recommendations. Typical installation guidelines are as follows:

- After seeding, spread and lightly rake ½-3/4 inches of fine topsoil into the TRM apertures to completely fill TRM thickness. Use backside of rake or other flat implement.
- Alternatively, if allowed by product specifications, spread topsoil using lightweight loader, backhoe, or other power equipment. Avoid sharp turns with equipment.
- Always consult the manufacturer's recommendations for installation.
- Do not drive tracked or heavy equipment over mat.
- Avoid any traffic over matting if loose or wet soil conditions exist.
- Use shovels, rakes, or brooms for fine grading and touch up.
- Smooth out soil filling just exposing top netting of mat.

Temporary Soil Stabilization Removal

- Temporary soil stabilization removed from the site of the work must be disposed of if necessary.

Costs

Installed costs can be relatively high compared to other BMPs. Approximate costs for installed materials are shown below:

Rolled Erosion Control Products		Installed Cost per Acre (2004)[1]	Estimated Cost per Acre (2009)[2]
Biodegradable	Jute Mesh	$6,000-$7,000	$6,600-$7,700
	Curled Wood Fiber	$8,000-$10,500	$8,800-$11,050
	Straw	$8,000-$10,500	$8,800-$11,050
	Wood Fiber	$8,000-$10,500	$8,800-$11,050
	Coconut Fiber	$13,000-$14,000	$14,300-$15,400
	Coconut Fiber Mesh	$30,000-$33,000	$33,000-$36,300
	Straw Coconut Fiber	$10,000-$12,000	$11,000-$13,200
Non-Biodegradable	Plastic Netting	$2,000-$2,200	$2,200-$2,220
	Plastic Mesh	$3,000-$3,500	$3,300-$3,850
	Synthetic Fiber with Netting	$34,000-$40,000	$37,400-$44,000
	Bonded Synthetic Fibers	$45,000-$55,000	$49,500-$60,500
	Combination with Biodegradable	$30,000-$36,000	$33,000-$39,600

1. Source: Cost information received from individual product manufacturers solicited by Geosyntec Consultants (2004).

2. 2009 costs reflect a 10% escalation over year 2004 costs. Escalation based on informal survey of industry trends. Note: Expected cost increase is offset by competitive economic conditions.

Inspection and Maintenance

- RECPs must be inspected in accordance with General Permit requirements for the associated project type and risk level. It is recommended that at a minimum, BMPs be inspected weekly, prior to forecasted rain events, daily during extended rain events, and after the conclusion of rain events.
- Areas where erosion is evident shall be repaired and BMPs reapplied as soon as possible. Care should be exercised to minimize the damage to protected areas while making repairs, as any area damaged will require reapplication of BMPs.
- If washout or breakage occurs, re-install the material after repairing the damage to the slope or channel.
- Make sure matting is uniformly in contact with the soil.
- Check that all the lap joints are secure.
- Check that staples are flush with the ground.

References

Erosion and Sediment Control Manual, Oregon Department of Environmental Quality, February 2005

Erosion Control Pilot Study Report, State of California Department of Transportation (Caltrans), June 2000.

Guides for Erosion and Sediment Controls in California, USDA Soils Conservation Service, January 1991.

National Management Measures to Control Nonpoint Source Pollution from Urban Areas, United States Environmental Protection Agency, 2002.

Stormwater Quality Handbooks Construction Site Best Management Practices (BMPs) Manual, State of California Department of Transportation (Caltrans), March 2003.

Guidance Document: Soil Stabilization for Temporary Slopes, State of California Department of Transportation (Caltrans), November 1999.

Stormwater Management of the Puget Sound Basin, Technical Manual, Publication #91-75, Washington State Department of Ecology, February 1992.

Water Quality Management Plan for The Lake Tahoe Region, Volume II, Handbook of Management Practices, Tahoe Regional Planning Agency, November 1988.

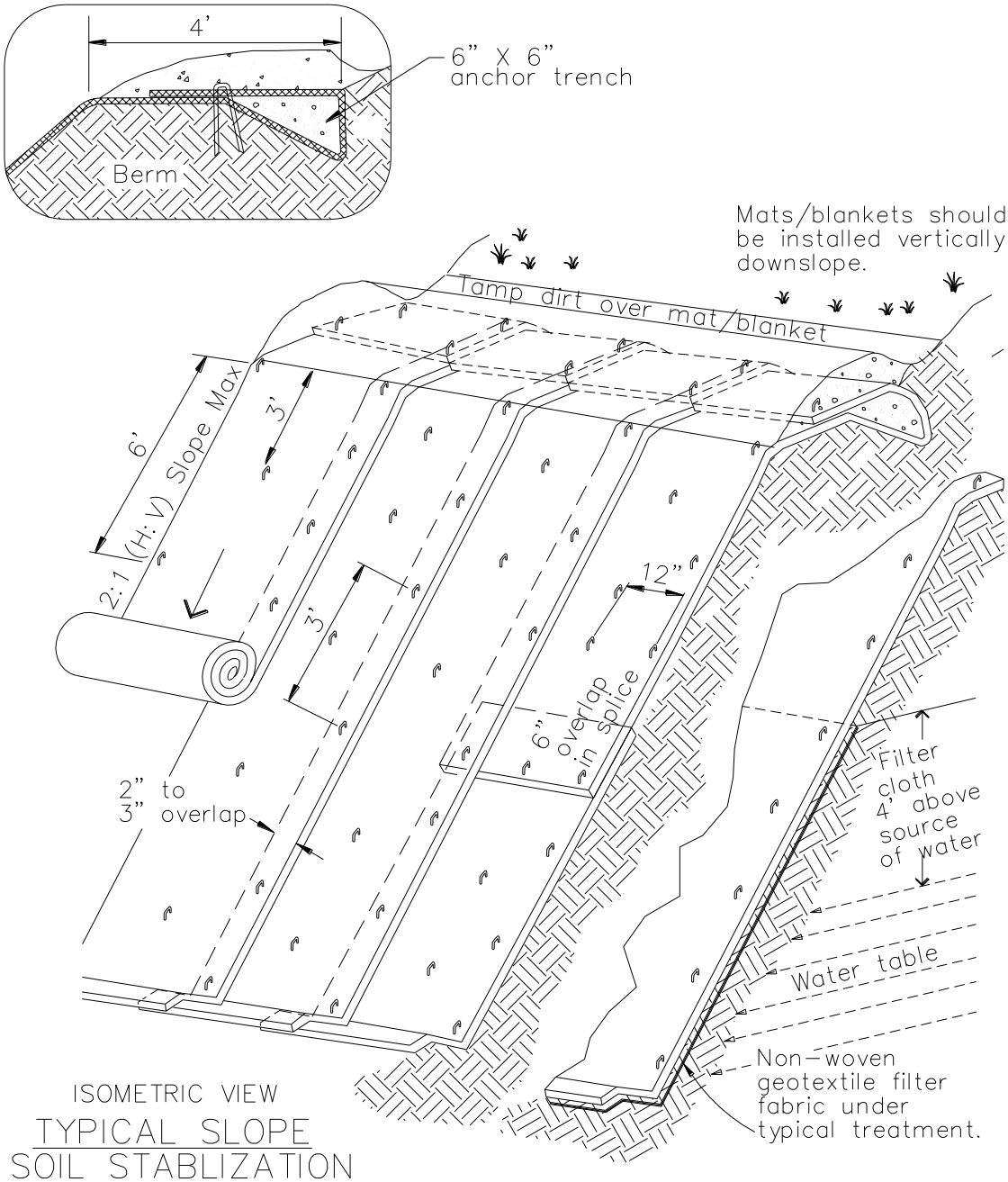

ISOMETRIC VIEW

TYPICAL SLOPE
SOIL STABLIZATION
NTS

WET SLOPE LINING
NTS

NOTES:

1. Slope surface shall be free of rocks, clods, sticks and grass. Mats/blankets shall have good soil contact.
2. Lay blankets loosely and stake or staple to maintain direct contact with the soil. Do not stretch.
3. Install per manufacturer's recommendations

TYPICAL INSTALLATION DETAIL

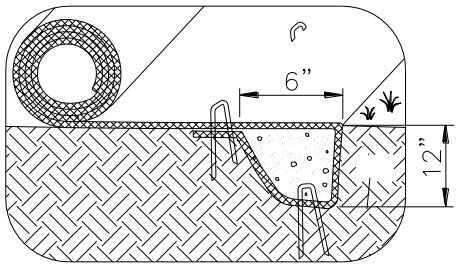

INITIAL CHANNEL ANCHOR TRENCH
NTS

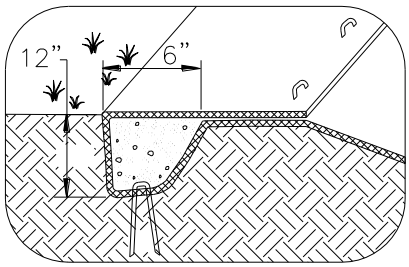

TERMINAL SLOPE AND CHANNEL ANCHOR TRENCH
NTS

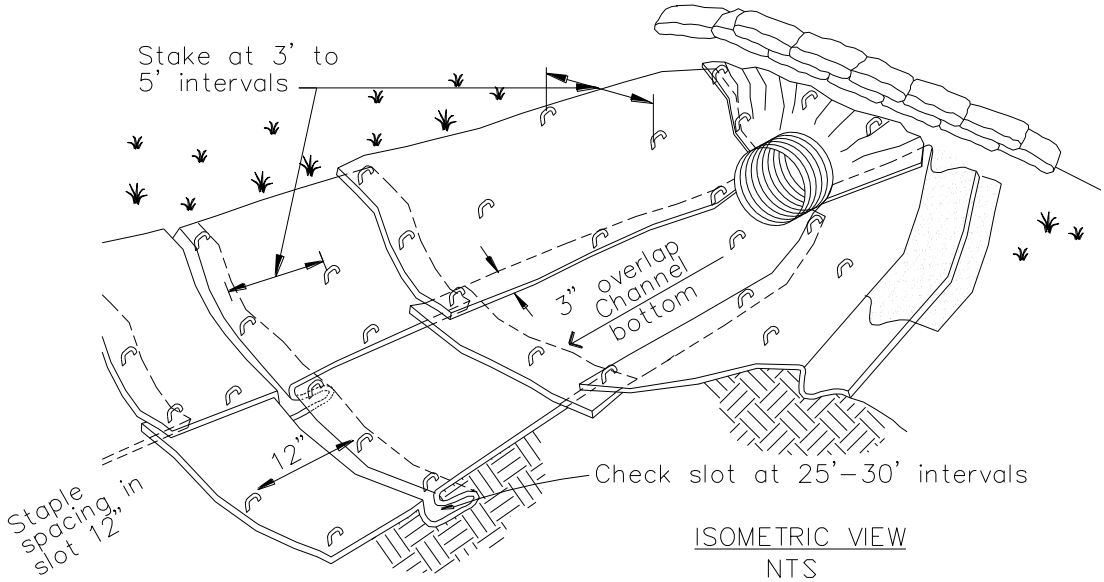

ISOMETRIC VIEW
NTS

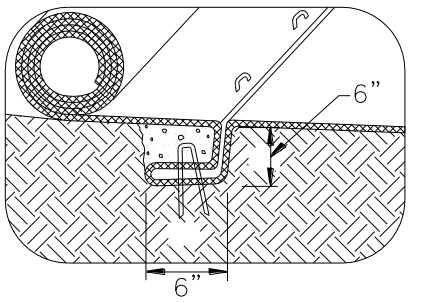

INTERMITTENT CHECK SLOT
NTS

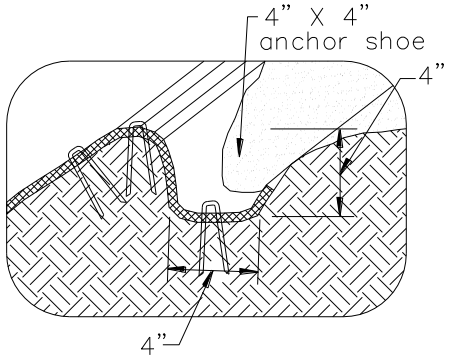

LONGITUDINAL ANCHOR TRENCH
NTS

NOTES:
1. Check slots to be constructed per manufacturers specifications.
2. Staking or stapling layout per manufacturers specifications.
3. Install per manufacturer's recommendations

TYPICAL INSTALLATION DETAIL

Wood Mulching EC-8

Description and Purpose

Wood mulching consists of applying a mixture of shredded wood mulch, bark or compost to disturbed soils. The primary function of wood mulching is to reduce erosion by protecting bare soil from rainfall impact, increasing infiltration, and reducing runoff.

Suitable Applications

Wood mulching is suitable for disturbed soil areas requiring temporary protection until permanent stabilization is established.

Limitations

- Not suitable for use on slopes steeper than 3:1 (H:V). Best suited to flat areas or gentle slopes or 5:1 (H:V) or flatter.
- Wood mulch and compost may introduce unwanted species.
- Not suitable for areas exposed to concentrated flows.
- May need to be removed prior to further earthwork.

Implementation

Mulch Selection

There are many types of mulches. Selection of the appropriate type of mulch should be based on the type of application, site conditions, and compatibility with planned or future uses.

Categories

EC	Erosion Control	☑
SE	Sediment Control	
TC	Tracking Control	
WE	Wind Erosion Control	☒
NS	Non-Stormwater Management Control	
WM	Waste Management and Materials Pollution Control	

Legend:

☑ **Primary Objective**

☒ **Secondary Objective**

Targeted Constituents

Sediment	☑
Nutrients	
Trash	
Metals	
Bacteria	
Oil and Grease	
Organics	

Potential Alternatives

EC-3 Hydraulic Mulch

EC-4 Hydroseeding

EC-5 Soil Binders

EC-6 Straw Mulch

EC-7 Geotextiles and Mats

If User/Subscriber modifies this fact sheet in any way, the CASQA name/logo and footer below must be removed from each page and not appear on the modified version.

CASQA
CALIFORNIA STORMWATER QUALITY ASSOCIATION

Application Procedures

Prior to application, after existing vegetation has been removed, roughen embankment and fill areas by rolling with a device such as a punching type roller or by track walking. The construction application procedures for mulches vary significantly depending upon the type of mulching method specified. Two methods are highlighted here:

- Green Material: This type of mulch is produced by the recycling of vegetation trimmings such as grass, shredded shrubs, and trees. Methods of application are generally by hand although pneumatic methods are available.
  - Green material can be used as a temporary ground cover with or without seeding.
  - The green material should be evenly distributed on site to a depth of not more than 2 in.
- Shredded Wood: Suitable for ground cover in ornamental or revegetated plantings.
  - Shredded wood/bark is conditionally suitable. See note under limitations.
  - Distribute by hand or use pneumatic methods.
  - Evenly distribute the mulch across the soil surface to a depth of 2 to 3 in.
- Avoid mulch placement onto roads, sidewalks, drainage channels, existing vegetation, etc.

Costs

Average annual cost for installation and maintenance (3-4 months useful life) is around $4,000 per acre, but cost can increase if the source is not close to the project site.

Inspection and Maintenance

- Inspect BMPs in accordance with General Permit requirements for the associated project type and risk level. It is recommended that at a minimum, BMPs be inspected weekly, prior to forecasted rain events, daily during extended rain events, and after the conclusion of rain events.
- Areas where erosion is evident shall be repaired and BMPs reapplied as soon as possible. Care should be exercised to minimize the damage to protected areas while making repairs, as any area damaged will require reapplication of BMPs.
- Regardless of the mulching technique selected, the key consideration in inspection and maintenance is that the mulch needs to last long enough to achieve erosion control objectives. If the mulch is applied as a stand alone erosion control method over disturbed areas (without seed), it should last the length of time the site will remain barren or until final re-grading and revegetation.
- Where vegetation is not the ultimate cover, such as ornamental and landscape applications of bark or wood chips, inspection and maintenance should focus on longevity and integrity of the mulch.
- Reapply mulch when bare earth becomes visible.

References

Controlling Erosion of Construction Sites Agriculture Information Bulletin #347, U.S. Department of Agriculture (USDA), Natural Resources Conservation Service (NRCS) (formerly Soil Conservation Service – SCS).

Guides for Erosion and Sediment Control in California, USDA Soils Conservation Service, January 1991.

Manual of Standards of Erosion and Sediment Control Measures, Association of Bay Area Governments, May 1995.

Proposed Guidance Specifying Management Measures for Sources of Nonpoint Pollution in Coastal Waters, Work Group Working Paper, USEPA, April 1992.

Sedimentation and Erosion Control, An Inventory of Current Practices Draft, U.S. EPA, April 1990.

Soil Erosion by Water Agricultural Information Bulletin #513, U.S. Department of Agriculture, Soil Conservation Service.

Stormwater Quality Handbooks Construction Site Best Management Practices (BMPs) Manual, State of California Department of Transportation (Caltrans), November 2000.

Water Quality Management Plan for the Lake Tahoe Region, Volume II, Handbook of Management Practices, Tahoe Regional Planning Agency, November 1988.

Earth Dikes and Drainage Swales EC-9

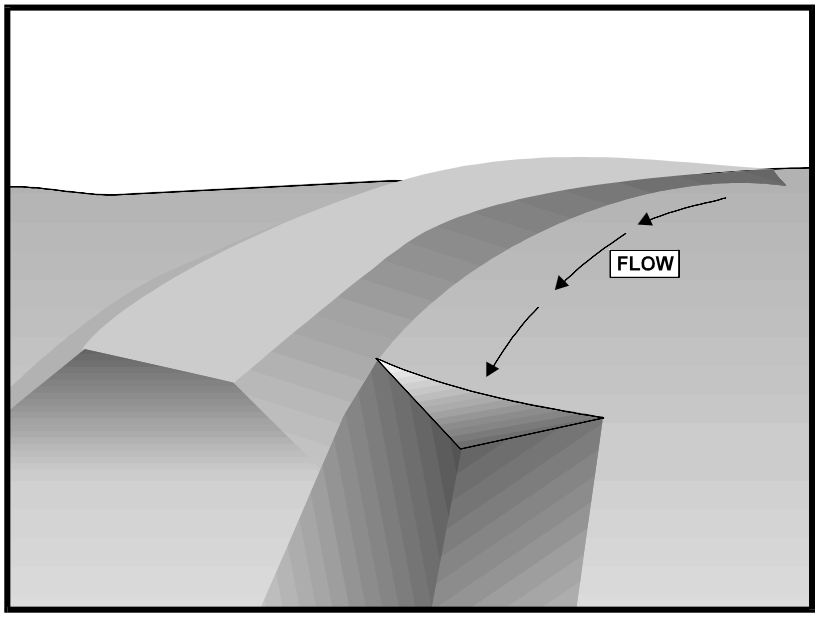

Description and Purpose

An earth dike is a temporary berm or ridge of compacted soil used to divert runoff or channel water to a desired location. A drainage swale is a shaped and sloped depression in the soil surface used to convey runoff to a desired location. Earth dikes and drainage swales are used to divert off site runoff around the construction site, divert runoff from stabilized areas and disturbed areas, and direct runoff into sediment basins or traps.

Suitable Applications

Earth dikes and drainage swales are suitable for use, individually or together, where runoff needs to be diverted from one area and conveyed to another.

- Earth dikes and drainage swales may be used:
  - To convey surface runoff down sloping land
  - To intercept and divert runoff to avoid sheet flow over sloped surfaces
  - To divert and direct runoff towards a stabilized watercourse, drainage pipe or channel
  - To intercept runoff from paved surfaces
  - Below steep grades where runoff begins to concentrate
  - Along roadways and facility improvements subject to flood drainage

Categories

EC	Erosion Control	☑
SE	Sediment Control	
TC	Tracking Control	
WE	Wind Erosion Control	
NS	Non-Stormwater Management Control	
WM	Waste Management and Materials Pollution Control	

Legend:

☑ **Primary Objective**

☒ **Secondary Objective**

Targeted Constituents

Sediment	☑
Nutrients	
Trash	
Metals	
Bacteria	
Oil and Grease	
Organics	

Potential Alternatives

None

If User/Subscriber modifies this fact sheet in any way, the CASQA name/logo and footer below must be removed from each page and not appear on the modified version.

- At the top of slopes to divert runon from adjacent or undisturbed slopes
- At bottom and mid slope locations to intercept sheet flow and convey concentrated flows
- Divert sediment laden runoff into sediment basins or traps

Limitations

Dikes should not be used for drainage areas greater than 10 acres or along slopes greater than 10 percent. For larger areas more permanent drainage structures should be built. All drainage structures should be built in compliance with local municipal requirements.

- Earth dikes may create more disturbed area on site and become barriers to construction equipment.
- Earth dikes must be stabilized immediately, which adds cost and maintenance concerns.
- Diverted stormwater may cause downstream flood damage.
- Dikes should not be constructed of soils that may be easily eroded.
- Regrading the site to remove the dike may add additional cost.
- Temporary drains and swales or any other diversion of runoff should not adversely impact upstream or downstream properties.
- Temporary drains and swales must conform to local floodplain management requirements.
- Earth dikes/drainage swales are not suitable as sediment trapping devices.
- It may be necessary to use other soil stabilization and sediment controls such as check dams, plastics, and blankets, to prevent scour and erosion in newly graded dikes, swales, and ditches.
- Sediment accumulation, scour depressions, and/or persistent non-stormwater discharges can result in areas of standing water suitable for mosquito production in drainage swales.

Implementation

The temporary earth dike is a berm or ridge of compacted soil, located in such a manner as to divert stormwater to a sediment trapping device or a stabilized outlet, thereby reducing the potential for erosion and offsite sedimentation. Earth dikes can also be used to divert runoff from off site and from undisturbed areas away from disturbed areas and to divert sheet flows away from unprotected slopes.

An earth dike does not itself control erosion or remove sediment from runoff. A dike prevents erosion by directing runoff to an erosion control device such as a sediment trap or directing runoff away from an erodible area. Temporary diversion dikes should not adversely impact adjacent properties and must conform to local floodplain management regulations, and should not be used in areas with slopes steeper than 10%.

Slopes that are formed during cut and fill operations should be protected from erosion by runoff. A combination of a temporary drainage swale and an earth dike at the top of a slope can divert

runoff to a location where it can be brought to the bottom of the slope (see EC-11, Slope Drains). A combination dike and swale is easily constructed by a single pass of a bulldozer or grader and compacted by a second pass of the tracks or wheels over the ridge. Diversion structures should be installed when the site is initially graded and remain in place until post construction BMPs are installed and the slopes are stabilized.

Diversion practices concentrate surface runoff, increasing its velocity and erosive force. Thus, the flow out of the drain or swale must be directed onto a stabilized area or into a grade stabilization structure. If significant erosion will occur, a swale should be stabilized using vegetation, chemical treatment, rock rip-rap, matting, or other physical means of stabilization. Any drain or swale that conveys sediment laden runoff must be diverted into a sediment basin or trap before it is discharged from the site.

General

- Care must be applied to correctly size and locate earth dikes, drainage swales. Excessively steep, unlined dikes, and swales are subject to erosion and gully formation.
- Conveyances should be stabilized.
- Use a lined ditch for high flow velocities.
- Select flow velocity based on careful evaluation of the risks due to erosion of the measure, soil types, overtopping, flow backups, washout, and drainage flow patterns for each project site.
- Compact any fills to prevent unequal settlement.
- Do not divert runoff onto other property without securing written authorization from the property owner.
- When possible, install and utilize permanent dikes, swales, and ditches early in the construction process.
- Provide stabilized outlets.

Earth Dikes

Temporary earth dikes are a practical, inexpensive BMP used to divert stormwater runoff. Temporary diversion dikes should be installed in the following manner:

- All dikes should be compacted by earth moving equipment.
- All dikes should have positive drainage to an outlet.
- All dikes should have 2:1 or flatter side slopes, 18 in. minimum height, and a minimum top width of 24 in. Wide top widths and flat slopes are usually needed at crossings for construction traffic.
- The outlet from the earth dike must function with a minimum of erosion. Runoff should be conveyed to a sediment trapping device such as a Sediment Trap (SE-3) or Sediment Basin

(SE-2) when either the dike channel or the drainage area above the dike are not adequately stabilized.

- Temporary stabilization may be achieved using seed and mulching for slopes less than 5% and either rip-rap or sod for slopes in excess of 5%. In either case, stabilization of the earth dike should be completed immediately after construction or prior to the first rain.
- If riprap is used to stabilize the channel formed along the toe of the dike, the following typical specifications apply:

Channel Grade	Riprap Stabilization
0.5-1.0%	4 in. Rock
1.1-2.0%	6 in. Rock
2.1-4.0%	8 in. Rock
4.1-5.0%	8 in. -12 in. Riprap

- The stone riprap, recycled concrete, etc. used for stabilization should be pressed into the soil with construction equipment.
- Filter cloth may be used to cover dikes in use for long periods.
- Construction activity on the earth dike should be kept to a minimum.

Drainage Swales

Drainage swales are only effective if they are properly installed. Swales are more effective than dikes because they tend to be more stable. The combination of a swale with a dike on the downhill side is the most cost effective diversion.

Standard engineering design criteria for small open channel and closed conveyance systems should be used (see the local drainage design manual). Unless local drainage design criteria state otherwise, drainage swales should be designed as follows:

- No more than 5 acres may drain to a temporary drainage swale.
- Place drainage swales above or below, not on, a cut or fill slope.
- Swale bottom width should be at least 2 ft
- Depth of the swale should be at least 18 in.
- Side slopes should be 2:1 or flatter.
- Drainage or swales should be laid at a grade of at least 1 percent, but not more than 15 percent.
- The swale must not be overtopped by the peak discharge from a 10-year storm, irrespective of the design criteria stated above.

- Remove all trees, stumps, obstructions, and other objectionable material from the swale when it is built.
- Compact any fill material along the path of the swale.
- Stabilize all swales immediately. Seed and mulch swales at a slope of less than 5 percent, and use rip-rap or sod for swales with a slope between 5 and 15 percent. For temporary swales, geotextiles and mats (EC-7) may provide immediate stabilization.
- Irrigation may be required to establish sufficient vegetation to prevent erosion.
- Do not operate construction vehicles across a swale unless a stabilized crossing is provided.
- Permanent drainage facilities must be designed by a professional engineer (see the local drainage design criteria for proper design).
- At a minimum, the drainage swale should conform to predevelopment drainage patterns and capacities.
- Construct the drainage swale with a positive grade to a stabilized outlet.
- Provide erosion protection or energy dissipation measures if the flow out of the drainage swale can reach an erosive velocity.

Costs

- Cost ranges from $15 to $55 per ft for both earthwork and stabilization and depends on availability of material, site location, and access.
- Small dikes: $2.50 - $6.50/linear ft; Large dikes: $2.50/yd^3.
- The cost of a drainage swale increases with drainage area and slope. Typical swales for controlling internal erosion are inexpensive, as they are quickly formed during routine earthwork.

Inspection and Maintenance

- Inspect BMPs prior to forecast rain, daily during extended rain events, after rain events, weekly during the rainy season, and at two-week intervals during the non-rainy season.
- Inspect BMPs subject to non-stormwater discharges daily while non-stormwater discharges occur.
- Inspect ditches and berms for washouts. Replace lost riprap, damaged linings or soil stabilizers as needed.
- Inspect channel linings, embankments, and beds of ditches and berms for erosion and accumulation of debris and sediment. Remove debris and sediment and repair linings and embankments as needed.
- Temporary conveyances should be completely removed as soon as the surrounding drainage area has been stabilized or at the completion of construction

References

Erosion and Sediment Control Handbook, S.J. Goldman, K. Jackson, T.A. Bursetynsky, P.E., McGraw Hill Book Company, 1986.

Manual of Standards of Erosion and Sediment Control Measures, Association of Bay Area Governments, May 1995.

Metzger, M.E. 2004. Managing mosquitoes in stormwater treatment devices. University of California Division of Agriculture and Natural Resources, Publication 8125. On-line: http://anrcatalog.ucdavis.edu/pdf/8125.pdf

National Association of Home Builders (NAHB). Stormwater Runoff & Nonpoint Source Pollution Control Guide for Builders and Developers. National Association of Home Builders, Washington, D.C., 1995

National Management Measures to Control Nonpoint Source Pollution from Urban Areas, United States Environmental Protection Agency, 2002.

Southeastern Wisconsin Regional Planning Commission (SWRPC). Costs of Urban Nonpoint Source Water Pollution Control Measures. Technical Report No. 31. Southeastern Wisconsin Regional Planning Commission, Waukesha, WI. 1991

Stormwater Quality Handbooks Construction Site Best Management Practices (BMPs) Manual, State of California Department of Transportation (Caltrans), November 2000.

Stormwater Management of the Puget Sound Basin, Technical Manual, Publication #91-75, Washington State Department of Ecology, February 1992.

Water Quality Management Plan for the Lake Tahoe Region, Volume II, Handbook of Management Practices, Tahoe Regional Planning Agency, November 1988.

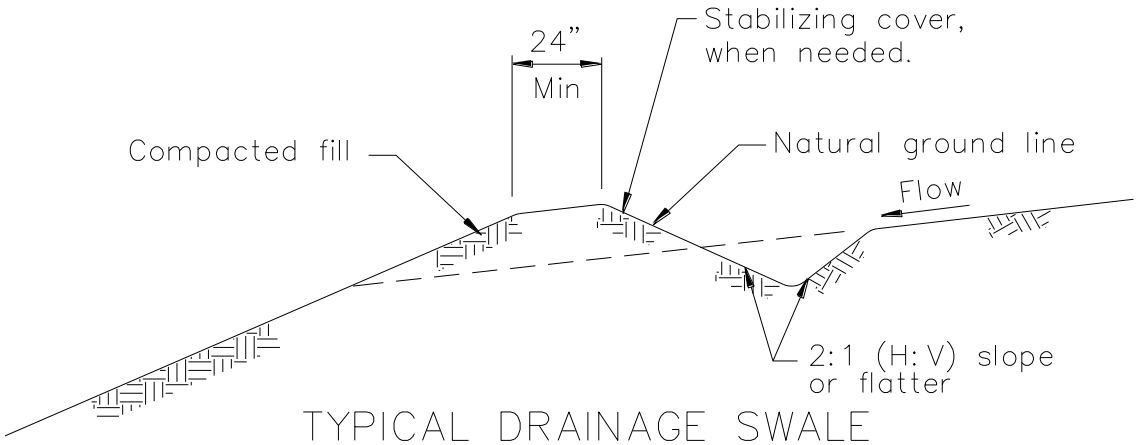

TYPICAL DRAINAGE SWALE
NOT TO SCALE

NOTES:

1. Stabilize inlet, outlets and slopes.
2. Properly compact the subgrade.

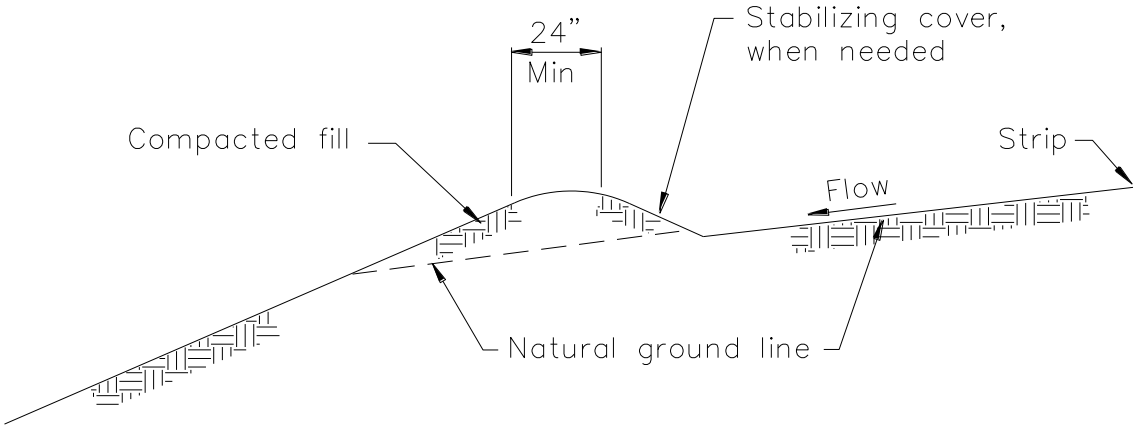

TYPICAL EARTH DIKE
NOT TO SCALE

Velocity Dissipation Devices EC-10

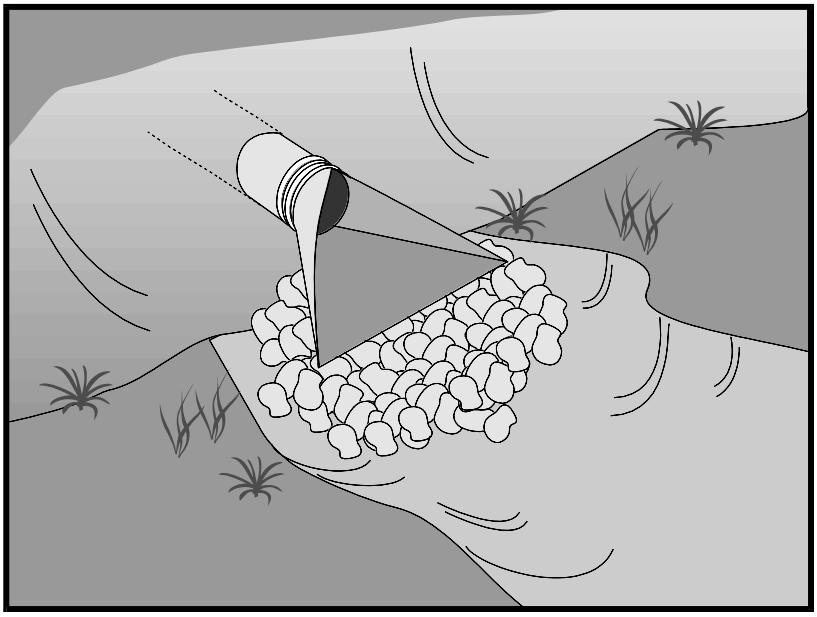

Categories

EC	Erosion Control	☑
SE	Sediment Control	
TC	Tracking Control	
WE	Wind Erosion Control	
NS	Non-Stormwater Management Control	
WM	Waste Management and Materials Pollution Control	

Legend:

☑ **Primary Objective**

☒ **Secondary Objective**

Targeted Constituents

Sediment	☑
Nutrients	
Trash	
Metals	
Bacteria	
Oil and Grease	
Organics	

Potential Alternatives

None

If User/Subscriber modifies this fact sheet in any way, the CASQA name/logo and footer below must be removed from each page and not appear on the modified version.

Description and Purpose

Outlet protection is a physical device composed of rock, grouted riprap, or concrete rubble, which is placed at the outlet of a pipe or channel to prevent scour of the soil caused by concentrated, high velocity flows.

Suitable Applications

Whenever discharge velocities and energies at the outlets of culverts, conduits, or channels are sufficient to erode the next downstream reach. This includes temporary diversion structures to divert runon during construction.

- These devices may be used at the following locations:
  - Outlets of pipes, drains, culverts, slope drains, diversion ditches, swales, conduits, or channels.
  - Outlets located at the bottom of mild to steep slopes.
  - Discharge outlets that carry continuous flows of water.
  - Outlets subject to short, intense flows of water, such as flash floods.
  - Points where lined conveyances discharge to unlined conveyances

Limitations

- Large storms or high flows can wash away the rock outlet protection and leave the area susceptible to erosion.

- Sediment captured by the rock outlet protection may be difficult to remove without removing the rock.
- Outlet protection may negatively impact the channel habitat.
- Grouted riprap may break up in areas of freeze and thaw.
- If there is not adequate drainage, and water builds up behind grouted riprap, it may cause the grouted riprap to break up due to the resulting hydrostatic pressure.
- Sediment accumulation, scour depressions, and/or persistent non-stormwater discharges can result in areas of standing water suitable for mosquito production in velocity dissipation devices.

Implementation

General

Outlet protection is needed where discharge velocities and energies at the outlets of culverts, conduits or channels are sufficient to erode the immediate downstream reach. This practice protects the outlet from developing small eroded pools (plange pools), and protects against gully erosion resulting from scouring at a culvert mouth.

Design and Layout

As with most channel design projects, depth of flow, roughness, gradient, side slopes, discharge rate, and velocity should be considered in the outlet design. Compliance to local and state regulations should also be considered while working in environmentally sensitive streambeds. General recommendations for rock size and length of outlet protection mat are shown in the rock outlet protection figure in this BMP and should be considered minimums. The apron length and rock size gradation are determined using a combination of the discharge pipe diameter and estimate discharge rate: Select the longest apron length and largest rock size suggested by the pipe size and discharge rate. Where flows are conveyed in open channels such as ditches and swales, use the estimated discharge rate for selecting the apron length and rock size. Flows should be same as the culvert or channel design flow but never the less than the peak 5 year flow for temporary structures planned for one rainy season, or the 10 year peak flow for temporary structures planned for two or three rainy seasons.

- There are many types of energy dissipaters, with rock being the one that is represented in the attached figure.
- Best results are obtained when sound, durable, and angular rock is used.
- Install riprap, grouted riprap, or concrete apron at selected outlet. Riprap aprons are best suited for temporary use during construction. Grouted or wired tied rock riprap can minimize maintenance requirements.
- Rock outlet protection is usually less expensive and easier to install than concrete aprons or energy dissipaters. It also serves to trap sediment and reduce flow velocities.
- Carefully place riprap to avoid damaging the filter fabric.

- Stone 4 in. to 6 in. may be carefully dumped onto filter fabric from a height not to exceed 12 in.

- Stone 8 in. to 12 in. must be hand placed onto filter fabric, or the filter fabric may be covered with 4 in. of gravel and the 8 in. to 12 in. rock may be dumped from a height not to exceed 16 in.

- Stone greater than 12 in. shall only be dumped onto filter fabric protected with a layer of gravel with a thickness equal to one half the D_{50} rock size, and the dump height limited to twice the depth of the gravel protection layer thickness.

- For proper operation of apron: Align apron with receiving stream and keep straight throughout its length. If a curve is needed to fit site conditions, place it in upper section of apron.

- Outlets on slopes steeper than 10 percent should have additional protection.

Costs

Costs are low if material is readily available. If material is imported, costs will be higher. Average installed cost is $150 per device.

Inspection and Maintenance

- Inspect BMPs in accordance with General Permit requirements for the associated project type and risk level. It is recommended that at a minimum, BMPs be inspected weekly, prior to forecasted rain events, daily during extended rain events, and after the conclusion of rain events.

- Inspect BMPs subjected to non-stormwater discharges daily while non-stormwater discharges occur. Minimize areas of standing water by removing sediment blockages and filling scour depressions.

- Inspect apron for displacement of the riprap and damage to the underlying fabric. Repair fabric and replace riprap that has washed away. If riprap continues to wash away, consider using larger material.

- Inspect for scour beneath the riprap and around the outlet. Repair damage to slopes or underlying filter fabric immediately.

- Temporary devices should be completely removed as soon as the surrounding drainage area has been stabilized or at the completion of construction.

References

County of Sacramento Improvement Standards, Sacramento County, May 1989.

Erosion and Sediment Control Handbook, S.J. Goldman, K. Jackson, T.A. Bursztynsky, P.E., McGraw Hill Book Company, 1986.

Handbook of Steel Drainage & Highway Construction, American Iron and Steel Institute, 1983.

Manual of Standards of Erosion and Sediment Control Measures, Association of Bay Area Governments, May 1995.

Metzger, M.E. 2004. Managing mosquitoes in stormwater treatment devices. University of California Division of Agriculture and Natural Resources, Publication 8125. On-line: http://anrcatalog.ucdavis.edu/pdf/8125.pdf

Stormwater Quality Handbooks Construction Site Best Management Practices (BMPs) Manual, state of California Department of Transportation (Caltrans), November 2000.

Stormwater Management of the Puget Sound Basin, Technical Manual, Publication #91-75, Washington State Department of Ecology, February 1992.

Water Quality Management Plan for the Lake Tahoe Region, Volume II, Handbook of Management Practices, Tahoe Regional Planning Agency, November 1988.

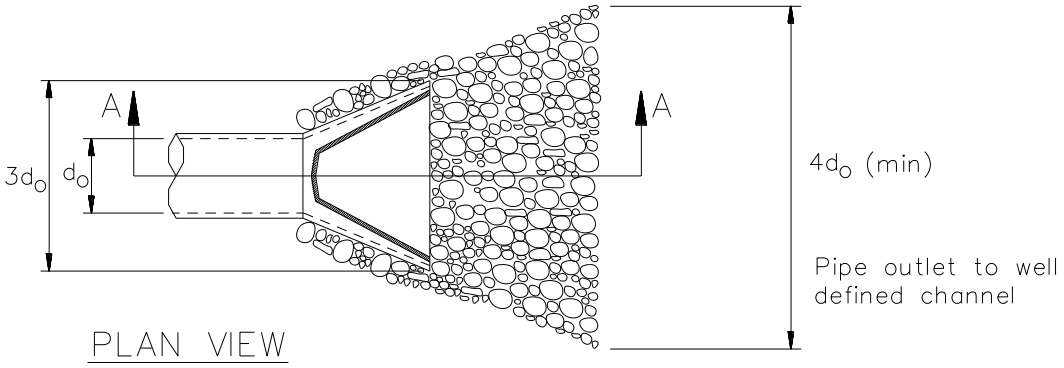

PLAN VIEW

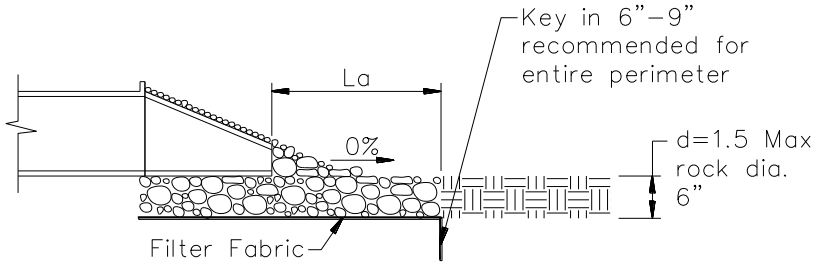

SECTION A–A

Pipe Diameter inches	Discharge ft³/s	Apron Length, La ft	Rip Rap D_{50} Diameter Min inches
12	5	10	4
	10	13	6
18	10	10	6
	20	16	8
	30	23	12
	40	26	16
24	30	16	8
	40	26	8
	50	26	12
	60	30	16

For larger or higher flows consult a Registered Civil Engineer
Source: USDA - SCS

Slope Drains EC-11

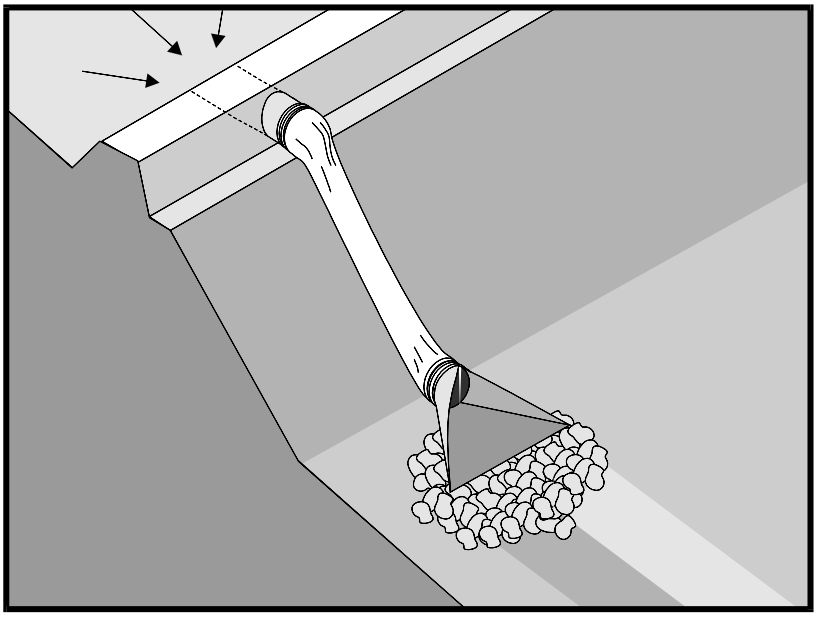

Description and Purpose

A slope drain is a pipe used to intercept and direct surface runoff or groundwater into a stabilized watercourse, trapping device, or stabilized area. Slope drains are used with earth dikes and drainage ditches to intercept and direct surface flow away from slope areas to protect cut or fill slopes.

Suitable Applications

- Where concentrated flow of surface runoff must be conveyed down a slope in order to prevent erosion.
- Drainage for top of slope diversion dikes or swales.
- Drainage for top of cut and fill slopes where water can accumulate.
- Emergency spillway for a sediment basin.

Limitations

Installation is critical for effective use of the pipe slope drain to minimize potential gully erosion.

- Maximum drainage area per slope drain is 10 acres. (For large areas use a paved chute, rock lined channel, or additional pipes.)
- Severe erosion may result when slope drains fail by overtopping, piping, or pipe separation.

Categories

EC	Erosion Control	☑
SE	Sediment Control	
TC	Tracking Control	
WE	Wind Erosion Control	
NS	Non-Stormwater Management Control	
WM	Waste Management and Materials Pollution Control	

Legend:

☑ **Primary Objective**

☒ **Secondary Objective**

Targeted Constituents

Sediment	☑
Nutrients	
Trash	
Metals	
Bacteria	
Oil and Grease	
Organics	

Potential Alternatives

EC-9 Earth Dike, Drainage Swales

If User/Subscriber modifies this fact sheet in any way, the CASQA name/logo and footer below must be removed from each page and not appear on the modified version.

  - During large storms, pipe slope drains may become clogged or over charged, forcing water around the pipe and causing extreme slope erosion.

  - If the sectional downdrain is not sized correctly, the runoff can spill over the drain sides causing gully erosion and potential failure of the structure.

- Dissipation of high flow velocities at the pipe outlet is required to avoid downstream erosion.

- Sediment accumulation, scour depressions, and/or persistent non-stormwater discharges can result in areas of standing water suitable for mosquito production in energy dissipaters associated with slope drain outlets.

Implementation

General

The slope drain is applicable for any construction site where concentrated surface runoff can accumulate and must be conveyed down the slope in order to prevent erosion. The slope drain is effective because it prevents the stormwater from flowing directly down the slope by confining all the runoff into an enclosed pipe or channel. Due to the time lag between grading slopes and installation of permanent stormwater collection systems and slope stabilization measures, temporary provisions to intercept runoff are sometimes necessary. Particularly in steep terrain, slope drains can protect unstabilized areas from erosion.

Installation

The slope drain may be a rigid pipe, such as corrugated metal, a flexible conduit, or a lined terrace drain with the inlet placed on the top of a slope and the outlet at the bottom of the slope. This BMP typically is used in combination with a diversion control, such as an earth dike or drainage swale at the top of the slope.

The following criteria must be considered when siting slope drains.

- Permanent structures included in the project plans can often serve as construction BMPs if implemented early. However, the permanent structure must meet or exceed the criteria for the temporary structure.

- Inlet structures must be securely entrenched and compacted to avoid severe gully erosion.

- Slope drains must be securely anchored to the slope and must be adequately sized to carry the capacity of the design storm and associated forces.

- Outlets must be stabilized with riprap, concrete or other type of energy dissipator, or directed into a stable sediment trap or basin. See EC-10, Velocity Dissipation Devices.

- Debris racks are recommended at the inlet. Debris racks located several feet upstream of the inlet can usually be larger than racks at the inlet, and thus provide enhanced debris protection and less plugging.

- Safety racks are also recommended at the inlet and outlet of pipes where children or animals could become entrapped.

- Secure inlet and surround with dikes to prevent gully erosion and anchor pipe to slope.

- When using slope drains, limit drainage area to 10 acres per pipe. For larger areas, use a rock lined channel or a series of pipes.
- Size to convey at least the peak flow of a 10-year storm. The design storm is conservative due to the potential impact of system failures.
- Maximum slope generally limited to 2:1 (H:V) as energy dissipation below steeper slopes is difficult.
- Direct surface runoff to slope drains with interceptor dikes. See BMP EC-9, Earth Dikes and Drainage Swales. Top of interceptor dikes should be 12 in. higher than the top of the slope drain.
- Slope drains can be placed on or buried underneath the slope surface.
- Recommended materials include both metal and plastic pipe, either corrugated or smooth wall. Concrete pipe can also be used.
- When installing slope drains:
  - Install slope drains perpendicular to slope contours.
  - Compact soil around and under entrance, outlet, and along length of pipe.
  - Securely anchor and stabilize pipe and appurtenances into soil.
  - Check to ensure that pipe connections are watertight.
  - Protect area around inlet with filter cloth. Protect outlet with riprap or other energy dissipation device. For high energy discharges, reinforce riprap with concrete or use reinforced concrete device.
  - Protect outlet of slope drains using a flared end section when outlet discharges to a flexible energy dissipation device.
  - A flared end section installed at the inlet will improve flow into the slope drain and prevent erosion at the pipe entrance. Use a flared end section with a 6 in. minimum toe plate to help prevent undercutting. The flared section should slope towards the pipe inlet.

Design and Layout

The capacity for temporary drains should be sufficient to convey at least the peak runoff from a 10-year rainfall event. The pipe size may be computed using the Rational Method or a method established by the local municipality. Higher flows must be safely stored or routed to prevent any offsite concentration of flow and any erosion of the slope. The design storm is purposely conservative due to the potential impacts associated with system failures.

As a guide, temporary pipe slope drains should not be sized smaller than shown in the following table:

Minimum Pipe Diameter (Inches)	Maximum Drainage Area (Acres)
12	1.0
18	3.0
21	5.0
24	7.0
30	10.0

Larger drainage areas can be treated if the area can be subdivided into areas of 10 acres or less and each area is treated as a separate drainage. Drainage areas exceeding 10 acres must be designed by a Registered Civil Engineer and approved by the agency that issued the grading permit.

Materials:

Soil type, rainfall patterns, construction schedule, local requirements, and available supply are some of the factors to be considered when selecting materials. The following types of slope drains are commonly used:

- **Rigid Pipe:** This type of slope drain is also known as a pipe drop. The pipe usually consists of corrugated metal pipe or rigid plastic pipe. The pipe is placed on undisturbed or compacted soil and secured onto the slope surface or buried in a trench. Concrete thrust blocks must be used when warranted by the calculated thrust forces. Collars should be properly installed and secured with metal strappings or watertight collars.

- **Flexible Pipe**: The flexible pipe slope drain consists of a flexible tube of heavy duty plastic, rubber, or composite material. The tube material is securely anchored onto the slope surface. The tube should be securely fastened to the metal inlet and outlet conduit sections with metal strappings or watertight collars.

- **Section Downdrains**: The section downdrain consists of pre-fabricated, section conduit of half round or third round material. The sectional downdrain performs similar to a flume or chute. The pipe must be placed on undisturbed or compacted soil and secured into the slope.

- **Concrete-lined Terrace Drain:** This is a concrete channel for draining water from a terrace on a slope to the next level. These drains are typically specified as permanent structures and if installed early, can serve as slope drains during construction, which should be designed according to local drainage design criteria.

Costs

- Cost varies based on pipe selection and selected outlet protection.

Corrugated Steel Pipes, Per Foot	
Size	Supplied and Installed Cost (No Trenching Included)
12”	$19.60 per LF
15”	$22.00
18”	$26.00
24”	$32.00
30”	$50.00
PVC Pipes, Per Foot	
Size	Supplied and Installed Cost (No Trenching Included)
12”	$24.50
14”	$49.00
16”	$51.00
18”	$54.00
20”	$66.00
24”	$93.00
30”	$130.00

Inspection and Maintenance

- Inspect BMPs in accordance with General Permit requirements for the associated project type and risk level. It is recommended that at a minimum, BMPs be inspected weekly, prior to forecasted rain events, daily during extended rain events, and after the conclusion of rain events.
- Inspect BMPs subjected to non-stormwater discharges daily while non-stormwater discharges occur. Minimize areas of standing water by removing sediment blockages and filling scour depressions.
- Inspect outlet for erosion and downstream scour. If eroded, repair damage and install additional energy dissipation measures. If downstream scour is occurring, it may be necessary to reduce flows being discharged into the channel unless other preventative measures are implemented.
- Insert inlet for clogging or undercutting. Remove debris from inlet to maintain flows. Repair undercutting at inlet and if needed, install flared section or rip rap around the inlet to prevent further undercutting.
- Inspect pipes for leakage. Repair leaks and restore damaged slopes.
- Inspect slope drainage for accumulations of debris and sediment.

- Remove built up sediment from entrances and outlets as required. Flush drains if necessary; capture and settle out sediment from discharge.
- Make sure water is not ponding onto inappropriate areas (e.g., active traffic lanes, material storage areas, etc.).
- Pipe anchors must be checked to ensure that the pipe remains anchored to the slope. Install additional anchors if pipe movement is detected.

References

Draft – Sedimentation and Erosion Control, An Inventory of Current Practices, U.S.E.P.A., April 1990.

Metzger, M.E. 2004. Managing mosquitoes in stormwater treatment devices. University of California Division of Agriculture and Natural Resources, Publication 8125. On-line: http://anrcatalog.ucdavis.edu/pdf/8125.pdf

National Association of Home Builders (NAHB). Stormwater Runoff & Nonpoint Source Pollution Control Guide for Builders and Developers. National Association of Home Builders, Washington, D.C., 1995

National Management Measures to Control Nonpoint Source Pollution from Urban Areas, United States Environmental Protection Agency, 2002.

Stormwater Quality Handbooks Construction Site Best Management Practices (BMPs) Manual, State of California Department of Transportation (Caltrans), November 2000.

Stormwater Management of the Puget Sound Basin, Technical Manual, Publication #91-75, Washington State Department of Ecology, February 1992.

Water Quality Management Plan for the Lake Tahoe Region, Volume II, Handbook of Management Practices, Tahoe Regional Planning Agency, November 1988.

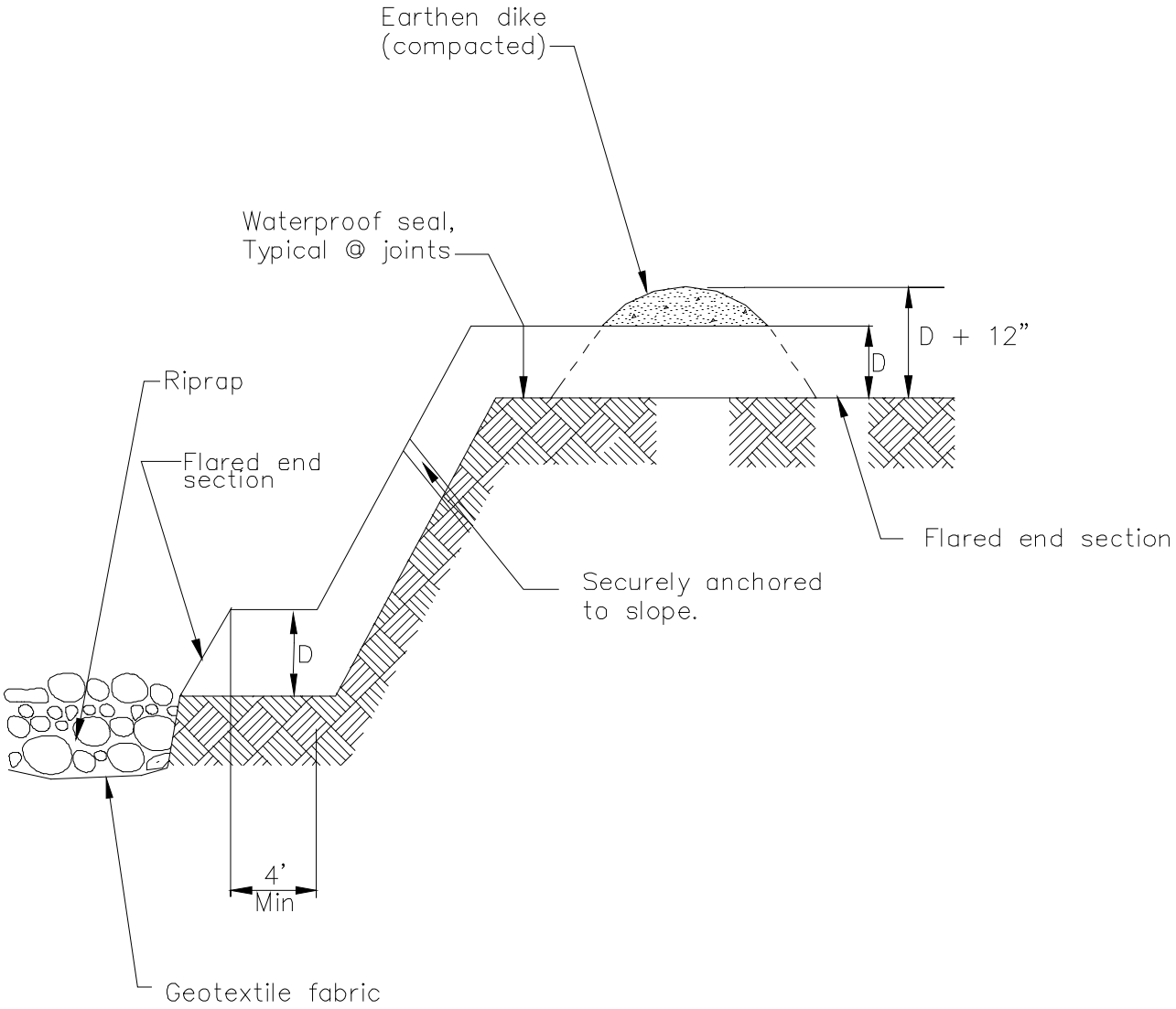

TYPICAL SLOPE DRAIN
NOT TO SCALE

Streambank Stabilization EC-12

Categories

EC	Erosion Control	☑
SE	Sediment Control	☒
TC	Tracking Control	
WE	Wind Erosion Control	
NS	Non-Stormwater Management Control	☒
WM	Waste Management and Materials Pollution Control	

Legend:

☑ **Primary Objective**

☒ **Secondary Objective**

Targeted Constituents

Sediment	☑
Nutrients	
Trash	
Metals	
Bacteria	
Oil and Grease	
Organics	

Potential Alternatives

Combination of erosion and sediment controls.

If User/Subscriber modifies this fact sheet in any way, the CASQA name/logo and footer below must be removed from each page and not appear on the modified version.

Description and Purpose

Stream channels, streambanks, and associated riparian areas are dynamic and sensitive ecosystems that respond to changes in land use activity. Streambank and channel disturbance resulting from construction activities can increase the stream's sediment load, which can cause channel erosion or sedimentation and have adverse affects on the biotic system. BMPs can reduce the discharge of sediment and other pollutants to minimize the impact of construction activities on watercourses. Streams on the 303(d) list and listed for sediment may require numerous measures to prevent any increases in sediment load to the stream.

Suitable Applications

These procedures typically apply to all construction projects that disturb or occur within stream channels and their associated riparian areas.

Limitations

Specific permit requirements or mitigation measures such as Regional Water Quality Control Board (RWQCB) 401 Certification, U.S. Army Corps of Engineers 404 permit and approval by California Department of Fish and Game supercede the guidance in this BMP.

- If numerical based water quality standards are mentioned in any of these and other related permits, testing and sampling may be required. Streams listed as 303(d) impaired for sediment, silt, or turbidity, are required to

conduct sampling to verify that there is no net increase in sediment load due to construction activities.

Implementation

Planning

- Proper planning, design, and construction techniques can minimize impacts normally associated with in stream construction activities. Poor planning can adversely affect soil, fish, wildlife resources, land uses, or land users. Planning should take into account: scheduling; avoidance of in-stream construction; minimizing disturbance area and construction time period; using pre-disturbed areas; selecting crossing location; and selecting equipment.

Scheduling

- Construction activities should be scheduled according to the relative sensitivity of the environmental concerns and in accordance with EC-1, Scheduling. Scheduling considerations will be different when working near perennial streams vs. ephemeral streams and are as follows.

- When in-stream construction is conducted in a perennial stream, work should optimally be performed during the rainy season. This is because in the summer, any sediment-containing water that is discharged into the watercourse will cause a large change in both water clarity and water chemistry. During the rainy season, there is typically more and faster flowing water in the stream so discharges are diluted faster. However, should in-stream work be scheduled for summer, establishing an isolation area, or diverting the stream, will significantly decrease the amount of sediment stirred up by construction work. Construction work near perennial streams should optimally be performed during the dry season (see below).

- When working in or near ephemeral streams, work should be performed during the dry season. By their very nature, ephemeral streams are usually dry in the summer, and therefore, in-stream construction activities will not cause significant water quality problems. However, when tying up the site at the end of the project, wash any fines (see Washing Fines) that accumulated in the channel back into the bed material, to decrease pollution from the first rainstorm of the season.

- When working near ephemeral or perennial streams, erosion and sediment controls (see silt fences, straw bale barriers, etc.) should be implemented to keep sediment out of stream channel.

Minimize Disturbance

- Minimize disturbance through: selection of the narrowest crossing location; limiting the number of equipment trips across a stream during construction; and, minimizing the number and size of work areas (equipment staging areas and spoil storage areas). Place work areas at least 50 ft from stream channel. Field reconnaissance should be conducted during the planning stage to identify work areas.

Use of Pre-Disturbed Areas

- Locate project sites and work areas in areas disturbed by prior construction or other activity when possible.

Selection of Project Site

- Avoid steep and unstable banks, highly erodible or saturated soils, or highly fractured rock.
- Select project site that minimizes disturbance to aquatic species or habitat.

Equipment Selection

- Select equipment that reduces the amount of pressure exerted on the ground surface, and therefore, reduces erosion potential and/or use overhead or aerial access for transporting equipment across drainage channels. Use equipment that exerts ground pressures of less than 5 or 6 lb/in^2, where possible. Low ground pressure equipment includes: wide or high flotation tires (34 to 72 in. wide); dual tires; bogie axle systems; tracked machines; lightweight equipment; and, central tire inflation systems.

Streambank Stabilization

Preservation of Existing Vegetation

- Preserve existing vegetation in accordance with EC-2, Preservation of Existing Vegetation. In a streambank environment, preservation of existing vegetation provides the following benefits.

Water Quality Protection

- Vegetated buffers on slopes trap sediment and promote groundwater recharge. The buffer width needed to maintain water quality ranges from 15 to 100 ft. On gradual slopes, most of the filtering occurs within the first 30 ft. Steeper slopes require a greater width of vegetative buffer to provide water quality benefits.

Streambank Stabilization

- The root system of riparian vegetation stabilizes streambanks by increasing tensile strength in the soil. The presence of vegetation modifies the moisture condition of slopes (infiltration, evapo transpiration, interception) and increases bank stability.

Riparian Habitat

- Buffers of diverse riparian vegetation provide food and shelter for riparian and aquatic organisms. Minimizing impacts to fisheries habitat is a major concern when working near streams and rivers. Riparian vegetation provides shade, shelter, organic matter (leaf detritus and large woody debris), and other nutrients that are necessary for fish and other aquatic organisms. Buffer widths for habitat concerns are typically wider than those recommended for water quality concerns (100 to 1500 ft).
- When working near watercourses, it is important to understand the work site's placement in the watershed. Riparian vegetation in headwater streams has a greater impact on overall water quality than vegetation in downstream reaches. Preserving existing vegetation upstream is necessary to maintain water quality, minimize bank failure, and maximize riparian habitat, downstream of the work site.

Limitations

- Local county and municipal ordinances regarding width, extent and type of vegetative buffer required may exceed the specifications provided here; these ordinances should be investigated prior to construction.

Streambank Stabilization Specific Installation

- As a general rule, the width of a buffer strip between a road and the stream is recommended to be 50 ft plus four times the percent slope of the land, measured between the road and the top of stream bank.

Hydraulic Mulch

- Apply hydraulic mulch on disturbed streambanks above mean high water level in accordance with EC-3, Hydraulic Mulch to provide temporary soil stabilization.

Limitations

- Do not place hydraulic mulch or tackifiers below the mean high water level, as these materials could wash into the channel and impact water quality or possibly cause eutrophication (eutrophication is an algal bloom caused by excessively high nutrient levels in the water).

Hydroseeding

- Hydroseed disturbed streambanks in accordance with EC-4, Hydroseeding.

Limitations

- Do not place tackifiers or fertilizers below the mean high water level, as these materials could wash into the channel and impact water quality or possibly cause eutrophication.

Soil Binders

- Apply soil binders to disturbed streambanks in accordance with EC-5, Soil Binders.

Limitations

- Do not place soil binders below the mean high water level. Soil binder must be environmentally benign and non-toxic to aquatic organisms.

Straw Mulch

- Apply straw mulch to disturbed streambanks in accordance with EC-6, Straw Mulch.

Limitations

- Do not place straw mulch below the mean high water level, as this material could wash into the channel and impact water quality or possibly cause eutrophication.

Geotextiles and Mats

- Install geotextiles and mats as described in EC-7, Geotextiles and Mats, to stabilize disturbed channels and streambanks. Not all applications should be in the channel, for example, certain geotextile netting may snag fish gills and are not appropriate in fish bearing streams. Geotextile fabrics that are not biodegradable are not appropriate for in stream use. Additionally, geotextile fabric or blankets placed in channels must be adequate to sustain anticipated hydraulic forces.

Earth Dikes, Drainage Swales, and Lined Ditches

- Convey, intercept, or divert runoff from disturbed streambanks using EC-9, Earth Dikes and Drainage Swales.

Limitations

- Do not place earth dikes in watercourses, as these structures are only suited for intercepting sheet flow, and should not be used to intercept concentrated flow.

- Appropriately sized velocity dissipation devices (EC-10) must be placed at outlets to minimize erosion and scour.

Velocity Dissipation Devices

- Place velocity dissipation devices at outlets of pipes, drains, culverts, slope drains, diversion ditches, swales, conduits or channels in accordance with EC-10, Velocity Dissipation Devices.

Slope Drains

- Use slope drains to intercept and direct surface runoff or groundwater into a stabilized watercourse, trapping device or stabilized area in accordance with EC-11, Slope Drains.

Limitations

- Appropriately sized outlet protection and velocity dissipation devices (EC-10) must be placed at outlets to minimize erosion and scour.

Streambank Sediment Control

Silt Fences

- Install silt fences in accordance with SE-1, Silt Fence, to control sediment. Silt fences should only be installed where sediment laden water can pond, thus allowing the sediment to settle out.

Fiber Rolls

- Install fiber rolls in accordance with SE-5, Fiber Rolls, along contour of slopes above the high water level to intercept runoff, reduce flow velocity, release the runoff as sheet flow and provide removal of sediment from the runoff. In a stream environment, fiber rolls should be used in conjunction with other sediment control methods such as SE-1, Silt Fence or SE-9 Straw Bale Barrier. Install silt fence, straw bale barrier, or other erosion control method along toe of slope above the high water level.

Gravel Bag Berm

- A gravel bag berm or barrier can be utilized to intercept and slow the flow of sediment laden sheet flow runoff in accordance with SE-6, Gravel Bag Berm. In a stream environment gravel bag barriers can allow sediment to settle from runoff before water leaves the construction site and can be used to isolate the work area from the live stream.

Limitations

- Gravel bag barriers are not recommended as a perimeter sediment control practice around streams.

Straw Bale Barrier

- Install straw bale barriers in accordance with SE-9, Straw Bale Barrier, to control sediment. Straw bale barriers should only be installed where sediment laden water can pond, thus allowing the sediment to settle out. Install a silt fence in accordance with SE-1, Silt Fence,

on down slope side of straw bale barrier closest to stream channel to provide added sediment control.

Rock Filter

Description and Purpose

Rock filters are temporary erosion control barriers composed of rock that is anchored in place. Rock filters detain the sediment laden runoff, retain the sediment, and release the water as sheet flow at a reduced velocity. Typical rock filter installations are illustrated at the end of this BMP.

Applications

- Near the toe of slopes that may be subject to flow and rill erosion.

Limitations

- Inappropriate for contributing drainage areas greater than 5 acres.
- Requires sufficient space for ponded water.
- Ineffective for diverting runoff because filters allow water to slowly seep through.
- Rock filter berms are difficult to remove when construction is complete.
- Unsuitable in developed areas or locations where aesthetics is a concern.

Specifications

- Rock: open graded rock, 0.75 to 5 in. for concentrated flow applications.
- Woven wire sheathing: 1 in. diameter, hexagonal mesh, galvanized 20gauge (used with rock filters in areas of concentrated flow).
- In construction traffic areas, maximum rock berm heights should be 12 in. Berms should be constructed every 300 ft on slopes less than 5%, every 200 ft on slopes between 5% and 10%, and every 100 ft on slopes greater than 10%.

Maintenance

- Inspect and verify that activity-based BMPs are in place prior to the commencement of associated activities. While activities associated with the BMP are under way, inspect weekly during the rainy season and at two-week intervals in the non-rainy season to verify continued BMP implementation.
- Inspect BMPs subject to non-stormwater discharges daily while non-stormwater discharges occur.
- Reshape berms as needed and replace lost or dislodged rock, and filter fabric.
- Sediment that accumulates in the BMP must be periodically removed in order to maintain BMP effectiveness. Sediment should be removed when the sediment accumulation reaches one third of the barrier height. Sediment removed during maintenance may be incorporated into earthwork on the site or disposed at an appropriate location.

K-rail

Description and Purpose

This is temporary sediment control that uses K-rails to form the sediment deposition area, or to isolate the near bank construction area. Install K-rails at toe of slope in accordance with procedures described in NS-5, Clear Water Diversion.

Barriers are placed end to end in a pre-designed configuration and gravel filled bags are used at the toe of the barrier and at their abutting ends to seal and prevent movement of sediment beneath or through the barrier walls.

Appropriate Applications

- This technique is useful at the toe of embankments, cuts or fills slopes.

Limitations

- The K-rail method should not be used to dewater a project site, as the barrier is not watertight.

Implementation

- Refer to NS-5, Clear Water Diversion, for implementation requirements.

Instream Construction Sediment Control

There are three different options currently available for reducing turbidity while working in a stream or river. The stream can be isolated from the area in which work is occurring by means of a water barrier, the stream can be diverted around the work site through a pipe or temporary channel, or one can employ construction practices that minimize sediment suspension.

Whatever technique is implemented, an important thing to remember is that dilution can sometimes be the solution. A probable "worst time" to release high TSS into a stream system might be when the stream is very low; summer low flow, for example. During these times, the flow may be low while the biological activity in the stream is very high. Conversely, the addition of high TSS or sediment during a big storm discharge might have a relatively low impact, because the stream is already turbid, and the stream energy is capable of transporting both suspended solids, and large quantities of bedload through the system. The optimum time to "pull" in-stream structures may be during the rising limb of a storm hydrograph.

Techniques to minimize Total Suspended Solids (TSS)

- **Padding** - Padding laid in the stream below the work site may trap some solids that are deposited in the stream during construction. After work is done, the padding is removed from the stream, and placed on the bank to assist in re-vegetation.

- **Clean, washed gravel** - Using clean, washed gravel decreases solid suspension, as there are fewer small particles deposited in the stream.

- **Excavation using a large bucket** - Each time a bucket of soil is placed in the stream, a portion is suspended. Approximately the same amount is suspended whether a small amount of soil is placed in the stream, or a large amount. Therefore, using a large excavator bucket instead of a small one, will reduce the total amount of soil that washes downstream.

- **Use of dozer for backfilling** - Using a dozer for backfilling instead of a backhoe follows the same principles – the fewer times soil is deposited in the stream, the less soil will be suspended.

- **Partial dewatering with a pump** - Partially dewatering a stream with a pump reduces the amount of water, and thus the amount of water that can suspend sediment.

Washing Fines

Definition and Purpose

- Washing fines is an "in-channel" sediment control method, which uses water, either from a water truck or hydrant, to wash stream fines that were brought to the surface of the channel bed during restoration, back into the interstitial spaces of the gravel and cobbles.

- The purpose of this technique is to reduce or eliminate the discharge of sediment from the channel bottom during the first seasonal flow. Sediment should not be allowed into stream channels; however, occasionally in-channel restoration work will involve moving or otherwise disturbing fines (sand and silt sized particles) that are already in the stream, usually below bankfull discharge elevation. Subsequent re-watering of the channel can result in a plume of turbidity and sedimentation.

- This technique washes the fines back into the channel bed. Bedload materials, including gravel cobbles, boulders and those fines, are naturally mobilized during higher storm flows. This technique is intended to delay the discharge until the fines would naturally be mobilized.

Appropriate Applications

- This technique should be used when construction work is required in channels. It is especially useful in intermittent or ephemeral streams in which work is performed "in the dry", and which subsequently become re-watered.

Limitations

- The stream must have sufficient gravel and cobble substrate composition.

- The use of this technique requires consideration of time of year and timing of expected stream flows.

- The optimum time for the use of this technique is in the fall, prior to winter flows.

- Consultation with, and approval from the Department of Fish and Game and the Regional Water Quality Control Board may be required.

Implementation

- Apply sufficient water to wash fines, but not cause further erosion or runoff.

- Apply water slowly and evenly to prevent runoff and erosion.

- Consult with Department of Fish and Game and the Regional Water Quality Control Board for specific water quality requirements of applied water (e.g. chlorine).

Inspection and Maintenance

- None necessary

Costs

Cost may vary according to the combination of practices implemented.

Inspection and Maintenance

- Inspect and verify that activity-based BMPs are in place prior to the commencement of associated activities. While activities associated with the BMP are under way, inspect BMPs in accordance with General Permit requirements for the associated project type and risk level. It is recommended that at a minimum, BMPs be inspected weekly, prior to forecasted rain events, daily during extended rain events, and after the conclusion of rain events until final stabilization is achieved.

- Inspect BMPs subject to non-stormwater discharges daily while non-stormwater discharges occur.

- Inspect and repair equipment (for damaged hoses, fittings, and gaskets).

References

Manual of Standards of Erosion and Sediment Control Measures, Association of Bay Area Governments, May 1995.

Proposed Guidance Specifying Management Measures for Sources of Nonpoint Pollution in Coastal Waters, Work Group Working Paper, USEPA, April 1992.

Sedimentation and Erosion Control Practices, An Inventory of Current Practices (Draft), UESPA, 1990.

Stormwater Quality Handbooks Construction Site Best Management Practices (BMPs) Manual, State of California Department of Transportation (Caltrans), November 2000.

Stormwater Management for Construction Activities, Developing Pollution Prevention Plans and Best Management Practices, EPA 832-R-92005; USEPA, April 1992.

Water Quality Management Plan for the Lake Tahoe Region, Volume II, Handbook of Management Practices, Tahoe Regional Planning Agency, November 1988.

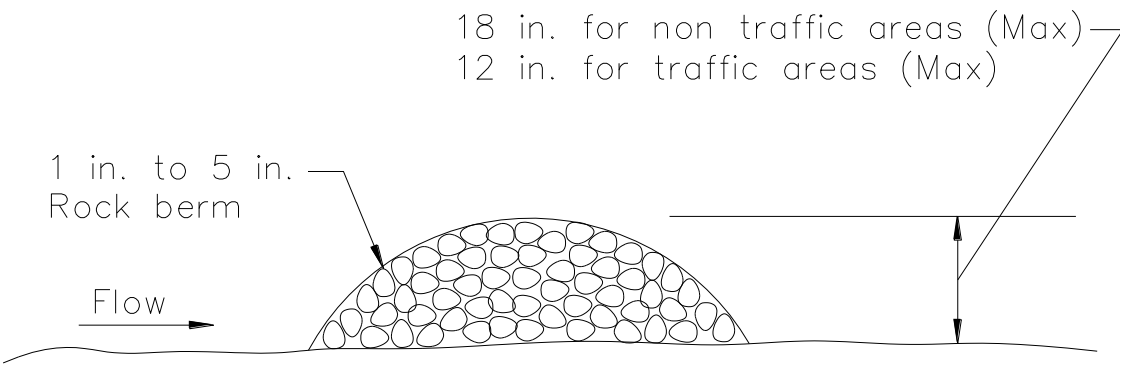

SECTION

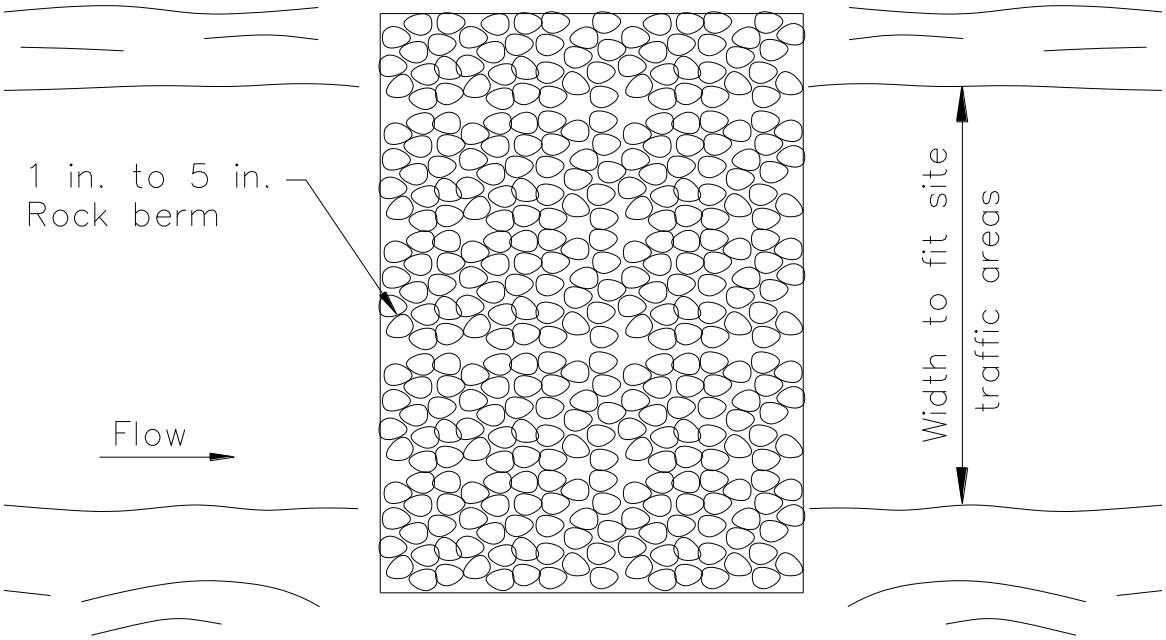

PLAN

TYPICAL ROCK FILTER
NOT TO SCALE

Reserved EC-13

BMP Factsheet removed in 2009.
Formerly PAM. See SE-11, Active Treatment Systems.

Categories

EC	Erosion Control
SE	Sediment Control
TC	Tracking Control
WE	Wind Erosion Control
NS	Non-Stormwater Management Control
WM	Waste Management and Materials Pollution Control

Legend:

☑ **Primary Category**

☒ **Secondary Category**

Targeted Constituents

Sediment
Nutrients
Trash
Metals
Bacteria
Oil and Grease
Organics

Potential Alternatives

If User/Subscriber modifies this fact sheet in any way, the CASQA name/logo and footer below must be removed from each page and not appear on the modified version.

Compost Blanket EC-14

Categories

EC	Erosion Control	☑
SE	Sediment Control	
TC	Tracking Control	
WE	Wind Erosion Control	
NS	Non-Stormwater Management Control	
WM	Waste Management and Materials Pollution Control	

Legend:

☑ **Primary Category**

☒ **Secondary Category**

Targeted Constituents

Sediment	☑
Nutrients	
Trash	
Metals	
Bacteria	
Oil and Grease	
Organics	

Potential Alternatives

EC-3 Hydraulic Mulch

EC-4 Hydroseeding

EC-5 Soil Binders

EC-7 Geotextiles and Mats

EC-8 Wood Mulching

If User/Subscriber modifies this fact sheet in any way, the CASQA name/logo and footer below must be removed from each page and not appear on the modified version.

Description and Purpose

A compost blanket is applied to slopes and earth disturbed areas to prevent erosion, and in some cases, increase infiltration and/or establish vegetation. The compost blanket can be applied by hand, conveyor system, compost spreader, or pneumatic delivery (blower) system. The blanket thickness is determined from the slope steepness and anticipated precipitation. A compost blanket protects the soil surface from raindrop erosion, particularly rills and gullies that may form under other methods of erosion control.

A compost blanket, if properly installed, can be very successful at vegetation establishment, weed suppression and erosion control. The compost blanket comes into direct contact with the underlying soil, reducing rill formation. Furthermore, compost provides organic matter and nutrients important for vegetation growth. The compost blanket provides soil structure that allows water to infiltrate the soil surface and retain moisture, which also promotes seed germination and vegetation growth, in addition to reducing runoff.

Compost is typically derived from combinations of feedstocks, biosolids, leaf and yard trimmings, manure, wood, or mixed solid waste. Many types of compost are products of municipal recycle or "Greenwaste" programs. Compost is organic and biodegradable and can be left onsite. There are many types of compost with a variety of properties with specific functions, and accordingly, compost selection is an important design consideration in the application of this type of erosion control.

Suitable Applications

A compost blanket is appropriate for slopes and earth disturbed areas requiring protection until permanent stabilization is established. A compost blanket can also used in combination with temporary and/or permanent seeding strategies to enhance plant establishment. Examples include:

- Rough-graded areas that will remain inactive for longer than 14 days
- Soil stockpiles
- Slopes with exposed soil between existing vegetation such as trees or shrubs
- Slopes planted with live, container-grown vegetation
- Disturbed areas where plants are slow to develop

A compost blanket is typically used on slopes of 2:1 (H:V) or gentler. However, a compost blanket can be effective when applied to slopes as steep as 1:1 (H:V) with appropriate design considerations including slope length, blanket thickness, adding components such as a tackifier, or using compost blankets in conjunction with other techniques, such as compost socks and berms or fiber rolls.

Compost can be pre-seeded prior to application to the soil (recommended by the EPA for construction site stormwater runoff control) or seeded after the blanket has been installed. The compost medium can also remove pollutants in stormwater including heavy metals; oil and grease; and hydrocarbons (USEPA, 1998).

Limitations

- Compost can potentially leach nutrients (dissolved phosphorus and nitrogen) into runoff and potentially impact water quality. Compost should not be used directly upstream from nutrient impaired waterbodies (Adams et. al, 2008).
- Compost may also contain other undesirable constituents that are detrimental to water quality. Carefully consider the qualifications and experience of any compost producer/supplier.
- A compost blanket applied by hand is more time intensive and potentially costly. Using a pneumatic blower truck is the recommended cost effective method of application.
- When blowers are used, the treatment areas should be within 300 ft of a road or surface capable of supporting trucks.
- Wind may limit application of compost and result in application to undesired locations.
- Compost blankets should not be applied in areas of concentrated flows.
- Steeper slopes may require additional blanket thickness and other stability measures such as using tackifiers or slope interruption devices (compost socks and berms, or fiber rolls). The same applies for sites with high precipitation totals or during the rainy season.

Implementation

- Additional guidance on the comparison and selection of temporary slope stabilization methods is provided in Appendix F of the Handbook.

Compost Materials

- California Compost Regulations (Title 14, California Code of Regulations, Division 7, Chapter 3.1, Article 7, Section 17868.3) define and require a quality of compost for application. Compost should comply with all physical and chemical requirements. Specific requirements are provided in Table 1 below, taken from Caltrans Standard Special Provision 10-1 (SSP 10-1), Erosion Control (Compost Blanket).

- The compost producer should be fully permitted as specified under the California Integrated Waste Management Board, Local Enforcement Agencies and any other State and Local Agencies that regulate Solid Waste Facilities. If exempt from State permitting requirements, the composting facility should certify that it follows guidelines and procedures for production of compost meeting the environmental health standards of Title 14, California Code of Regulations, Division 7, Chapter 3.1, Article 7.

- The compost producer should be a participant in United States Composting Council's Seal of Testing Assurance program.

- Compost moisture should be considered for composition quality and application purposes. A range of 30-50% is typical. Compost that is too dry is hard to apply and compost that is too wet is more difficult (and more expensive) to transport. For arid or semi-arid areas, or for application during the dry season, use compost with greater moisture content than areas with wetter climates. For wetter or more humid climates or for application during the wet season, drier composts can be used as the compost will absorb moisture from the ambient air.

- Organic content of the compost is also important and should range from 30 to 65% depending on site conditions.

- Compost should be high-quality mature compost. Immature compost can potentially leach nutrients.

- Compost should not be derived from mixed municipal solid waste and should be free of visible contaminants.

- Compost should not contain paint, petroleum products, pesticides or any other chemical residues harmful to animal life or plant growth. Metal concentrations in compost should not exceed the maximum metal concentrations listed under Title 14, California Code of Regulations, Division 7, Chapter 3.1, Section 17868.2.

- Compost should not possess objectionable odors.

- Compost should be weed free.

Table 1. Physical/Chemical Requirements of Compost
Reference - Caltrans SSP-10 Erosion Control Blanket (Compost)

Property	Test Method	Requirement
pH	*TMECC 04.11-A Elastometric pH 1:5 Slurry Method pH Units	6.0–8.0
Soluble Salts	TMECC 04.10-A Electrical Conductivity 1:5 Slurry Method dS/m (mmhos/cm)	0-10.0
Moisture Content	TMECC 03.09-A Total Solids & Moisture at 70+/- 5 deg C % Wet Weight Basis	30-60
Organic Matter Content	TMECC 05.07-A Loss-On-Ignition Organic Matter Method (LOI) % Dry Weight Basis	30–65
Maturity	TMECC 05.05-A Germination and Vigor Seed Emergence Seedling Vigor % Relative to Positive Control	 80 or Above 80 or Above
Stability	TMECC 05.08-B Carbon Dioxide Evolution Rate mg CO_2-C/g OM per day	8 or below
Particle Size	TMECC 02.02-B Sample Sieving for Aggregate Size Classification % Dry Weight Basis	100% Passing, 3 inch 90-100% Passing, 1 inch 65-100% Passing, 3/4 inch 0 - 75% Passing, 1/4 inch Maximum length 6 inches
Pathogen	TMECC 07.01-B Fecal Coliform Bacteria < 1000 MPN/gram dry wt.	Pass
Pathogen	TMECC 07.01-B Salmonella < 3 MPN/4 grams dry wt.	Pass
Physical Contaminants	TMECC 02.02-C Man Made Inert Removal and Classification: Plastic, Glass and Metal % > 4mm fraction	Combined Total: < 1.0
Physical Contaminants	TMECC 02.02-C Man Made Inert Removal and Classification: Sharps (Sewing needles, straight pins and hypodermic needles) % > 4mm fraction	None Detected

*TMECC refers to "Test Methods for the Examination of Composting and Compost," published by the United States Department of Agriculture and the United States Compost Council (USCC).

Installation

- Prior to compost application, prepare the slope by removing loose rocks, roots, stumps, and other debris greater than 2" in diameter. Prepare the slope area surface by scarifying or track walking/roughening if necessary.
- Select method to apply the compost blanket. A pneumatic blower is most cost effective and most adaptive in applying compost to steep, rough terrain, and hard to reach locations.
- A compost blanket thickness of 1" to 4" should be applied to slopes of 2:1 (H:V) or gentler, based on site-specific conditions. Increase blanket thickness with increased slope steepness and/or during installation during the rainy season (for example, 2" to 3" should be used for a

3:1 slope, while 1" to 2" can be used for a 4:1 slope). Erosion control using a compost blanket is not recommended for slopes greater than 1:1 (H:V).

- For steeper slopes, tackifiers should be utilized and/or other stabilization techniques employed. For example, compost socks or berms can be installed at intervals over the compost blanket (in a similar manner as Fiber Rolls, SE-5).
- Compost socks or berms (or equivalent linear sediment control BMP) should be placed at the top and/or bottom of the slope for additional erosion control performance.
- For optimum vegetation establishment, a blanket thickness of 1" to 2" is recommended. If vegetation establishment is not the primary function of the compost blanket, a thicker blanket may be recommended based on slope or rainfall conditions.
- Evenly distribute compost on the soil surface to the desired blanket thickness (1/2" to 4" as calculated prior based on site conditions and objectives). Even distribution is an important factor in preventing future rill and gully erosion.
- The compost blanket should extend 3 to 6 feet over the top of the shoulder of the slope. A compost sock or compost berm can be used at the top of the slope as an auxiliary technique to prevent runoff from flowing underneath the compost blanket.
- Use additional anchoring and erosion control BMPs in conjunction of the compost blanket as needed.

Costs

The cost associated with a compost blanket is similar to that of a straw mat and generally less expensive than a geotextile blanket (USEPA, 2009). Caltrans has provided a recent estimate for $5,000 to $8,000 per acre for application of an unseeded 1 inch compost blanket (Caltrans Compost Specifications, 2009). Recently obtained vendor costs indicate that proprietary blends of compost that are seeded and contain a nutrient rich "tackifier" can cost approximately $0.35 per square foot, or approximately $15,000 per acre for a 2 inch blanket. Application by hand is more time intensive and likely more costly.

Inspection and Maintenance

- BMPs must be inspected in accordance with General Permit requirements for the associated project type and risk level. It is recommended that at a minimum, BMPs be inspected weekly, prior to forecasted rain events, daily during extended rain events, and after the conclusion of rain events.
- Areas where erosion is evident, another layer of compost should be reapplied as soon as possible. It may be necessary to install an additional type of stormwater BMP at the top of slope or as a slope interrupter to control flow, such as a fiber roll (SE-5) or compost sock (SE-11).
- Care should be exercised to minimize the damage to protected areas while making repairs, as any area damaged will require reapplication of BMPs.
- Limit or prohibit foot traffic to minimize damage to BMP or impede vegetation establishment.

References

An Analysis of Composting as an Environmental Remediation Technology, U.S. Environmental Protection Agency (USEPA), Solid Waste and Emergency Response (5305W), EPA530-R-8-008, 1998.

Characteristics of Compost: Moisture Holding and Water Quality Improvement, Center for Research in Water Resources, Kirchoff, C., Malina, J., and Barrett, M., 2003.

Compost Utilization for Erosion Control, The University of Georgia College of Agricultural and Environmental Sciences, pubs.caes.uga.edu/caespubs/pubcd/B1200.htm, Faucette, B. and Risse, M., 2009.

Demonstration Project Using Yard Debris Compost for Erosion Control, Final Report, presented to Metropolitan Service District, W&H Pacific, 1993.

Erosion and Sediment Control Manual, Oregon Department of Environmental Quality, 2005.

Standard Special Provision 10-1, Erosion Control (Compost Blanket), California Department of Transportation (Caltrans). 2007 Update.

Evaluation of Environmental Benefits and Impacts of Compost and Industry Standard Erosion and Sediment Controls Measures Used in Construction Activities, Dissertation, Institute of Ecology, University of Georgia, Faucette, B., 2004.

Filter Sock Presentation provided at Erosion, Sediment Control and Stormwater Management with Compost BMPs Workshop, U.S. Composting Council 13th Annual Conference and Trade Show, McCoy, S., 2005.

National Pollutant Discharge Elimination System (NPDES), Compost Blankets, U.S. Environmental Protection Agency (USEPA). http://cfpub.epa.gov/npdes/stormwater/menuofbmps/index.cfm?action=factsheet_results&view=specific&bmp=118, 2009.

Standard Specifications for Transportation Materials and Methods of Sampling and Testing Designation M10-03, Compost for Erosion/Sediment Control (Compost Blankets), Provisional, American Association of State Highway Transportation Officials (AASHTO), 2003.

Stormwater Best Management Practices (BMPs) Field Trials of Erosion Control Compost in Reclamation of Rock Quarry Operations, Nonpoint Source Protection Program CWA §319(h), Texas Commission on Environmental Quality, Adams, T., McFarland, A., Hauck, L., Barrett, M., and Eck, B., 2008.

Soil Preparation/Roughening EC-15

Description and Purpose

Soil Preparation/Roughening involves assessment and preparation of surface soils for BMP installation. This can include soil testing (for seed base, soil characteristics, or nutrients), as well as roughening surface soils by mechanical methods (including sheepsfoot rolling, track walking, scarifying, stair stepping, and imprinting) to prepare soil for additional BMPs, or to break up sheet flow. Soil Preparation can also involve tilling topsoil to prepare a seed bed and/or incorporation of soil amendments, to enhance vegetative establishment.

Suitable Applications

Soil preparation: Soil preparation is essential to proper vegetative establishment. In particular, soil preparation (i.e. tilling, raking, and amendment) is suitable for use in combination with any soil stabilization method, including RECPs or sod. Soil preparation should not be confused with roughening.

Roughening: Soil roughening is generally referred to as track walking (sometimes called imprinting) a slope, where treads from heavy equipment run parallel to the contours of the slope and act as mini terraces. Soil preparation is most effective when used in combination with erosion controls. Soil Roughening is suitable for use as a complementary process for controlling erosion on a site. Roughening is not intended to be used as a stand-alone BMP, and should be used with perimeter controls, additional erosion control measures, grade breaks, and vegetative establishment for maximum effectiveness. Roughening is intended to only affect surface soils and should not compromise slope stability or overall compaction. Suitable applications for soil roughening include:

Categories

EC	Erosion Control	☑
SE	Sediment Control	☒
TC	Tracking Control	
WE	Wind Erosion Control	
NS	Non-Stormwater Management Control	
WM	Waste Management and Materials Pollution Control	

Legend:
☑ **Primary Category**
☒ **Secondary Category**

Targeted Constituents

Sediment	☑
Nutrients	
Trash	
Metals	
Bacteria	
Oil and Grease	
Organics	

Potential Alternatives

EC-3 Hydraulic Mulch

EC-5 Soil Binders

EC-7 Geotextiles and Mats

If User/Subscriber modifies this fact sheet in any way, the CASQA name/logo and footer below must be removed from each page and not appear on the modified version.

CASQA
CALIFORNIA STORMWATER QUALITY ASSOCIATION

- Along any disturbed slopes, including temporary stockpiles, sediment basins, or compacted soil diversion berms and swales.

- Roughening should be used in combination with hydraulically applied stabilization methods, compost blanket, or straw mulch; but should not be used in combination with RECPs or sod because roughening is intended to leave terraces on the slope.

Limitations

- Preparation and roughening must take place prior to installing other erosion controls (such as hydraulically applied stabilizers) or sediment controls (such as fiber rolls) on the faces of slopes.

- In such cases where slope preparation is minimal, erosion control/revegetation BMPs that do not require extensive soil preparation - such as hydraulic mulching and seeding applications - should be employed.

- Consideration should be given to the type of erosion control BMP that follows surface preparation, as some BMPs are not designed to be installed over various types of tillage/roughening, i.e., RECPs (erosion control blankets) should not be used with soil roughening due to a "bridging" effect, which suspends the blanket above the seed bed.

- Surface roughness has an effect on the amount of mulch material that needs to be applied, which shows up as a general increase in mulch material due to an increase in surface area (Topographic Index -see EC-3 Hydraulic Mulching).

Implementation

- Additional guidance on the comparison and selection of temporary slope stabilization methods is provided in Appendix F of the Handbook.

General

A roughened surface can significantly reduce erosion. Based on tests done at the San Diego State Erosion Research Laboratory, various roughening techniques on slopes can result in a 12 - 76% reduction in the erosion rate versus smooth slopes.

Materials

Minimal materials are required unless amendments and/or seed are added to the soil. The majority of soil roughening/preparation can be done with equipment that is on hand at a normal construction site, such as bull dozers and compaction equipment.

Installation Guidelines

Soil Preparation

- Where appropriate or feasible, soil should be prepared to receive the seed by disking or otherwise scarifying the surface to eliminate crust, improve air and water infiltration and create a more favorable environment for germination and growth.

- Based upon soil testing conducted, apply additional soil amendments (e.g. fertilizers, additional seed) to the soil to help with germination. Follow EC-4, Hydroseeding, when selecting and applying seed and fertilizers.

Cut Slope Roughening:

- Stair-step grade or groove the cut slopes that are steeper than 3:1.
- Use stair-step grading on any erodible material soft enough to be ripped with a bulldozer. Slopes consisting of soft rock with some subsoil are particularly suited to stair-step grading.
- Make the vertical cut distance less than the horizontal distance, and slightly slope the horizontal position of the "step" in toward the vertical wall.
- Do not make individual vertical cuts more than 2 feet (0.6 m) high in soft materials or more than 3 feet (0.9 m) high in rocky materials.
- Groove the slope using machinery to create a series of ridges and depressions that run across the slope, on the contour.

Fill Slope Roughening:

- Place on fill slopes with a gradient steeper than 3:1 in lifts not to exceed 8 inches (0.2 m), and make sure each lift is properly compacted.
- Ensure that the face of the slope consists of loose, uncompacted fill 4-6 inches (0.1-0.2 m) deep.
- Use grooving or tracking to roughen the face of the slopes, if necessary.
- Do not blade or scrape the final slope face.

Roughening for Slopes to be Mowed:

- Slopes which require mowing activities should not be steeper than 3:1.
- Roughen these areas to shallow grooves by track walking, scarifying, sheepsfoot rolling, or imprinting.
- Make grooves close together (less than 10 inches), and not less than 1 inch deep, and perpendicular to the direction of runoff (i.e., parallel to the slope contours).
- Excessive roughness is undesirable where mowing is planned.

Roughening With Tracked Machinery:

- Limit roughening with tracked machinery to soils with a sandy textural component to avoid undue compaction of the soil surface.
- Operate tracked machinery up and down the slope to leave horizontal depressions in the soil. Do not back-blade during the final grading operation.
- Seed and mulch roughened areas as soon as possible to obtain optimum seed germination and growth.

Costs

Costs are based on the additional labor of tracking or preparation of the slope plus the cost of any required soil amendment materials.

Inspection and Maintenance

- BMPs must be inspected in accordance with General Permit requirements for the associated project type and risk level. It is recommended that at a minimum, BMPs be inspected weekly, prior to forecasted rain events, daily during extended rain events, and after the conclusion of rain events.
- Check the seeded slopes for signs of erosion such as rills and gullies. Fill these areas slightly above the original grade, then reseed and mulch as soon as possible.
- Inspect BMPs weekly during normal operations, prior to forecasted rain events, daily during extended rain events, and after the conclusion of rain events.

References

Soil Stabilization BMP Research for Erosion and Sediment Controls: Cost Survey Technical Memorandum, State of California Department of Transportation (Caltrans), July 2007.

Erosion and Sediment Control Manual, Oregon Department of Environmental Quality, February 2005.

Non-Vegetative Stabilization EC-16

Description and Purpose

Non-vegetative stabilization methods are used for temporary or permanent stabilization of areas prone to erosion and should be used only where vegetative options are not feasible; examples include:

- Areas of vehicular or pedestrian traffic such as roads or paths;
- Arid environments where vegetation would not provide timely ground coverage, or would require excessive irrigation;
- Rocky substrate, infertile or droughty soils where vegetation would be difficult to establish; and
- Areas where vegetation will not grow adequately within the construction time frame.

There are several non-vegetative stabilization methods and selection should be based on site-specific conditions.

Decomposed Granite (DG) is a permanent erosion protection method that consists of a layer of stabilized decomposed granite placed over an erodible surface.

Degradable Mulches of various types (see EC-3, EC-6, EC-8) can be used for temporary non-vegetative stabilization; examples include straw mulch, compost, wood chips or hydraulic mulch.

Geotextiles and Mats can be used for temporary non-vegetative stabilization (see EC-7). These BMPs are typically manufactured from degradable or synthetic materials and are

Categories

EC	Erosion Control	☑
SE	Sediment Control	☒
TR	Tracking Control	
WE	Wind Erosion Control	☒
NS	Non-Stormwater Management Control	
WM	Waste Management and Materials Pollution Control	

Legend:

☑ **Primary Category**

☒ **Secondary Category**

Targeted Constituents

Sediment	☑
Nutrients	
Trash	
Metals	
Bacteria	
Oil and Grease	
Organics	

Potential Alternatives

None

If User/Subscriber modifies this fact sheet in any way, the CASQA name/logo and footer below must be removed from each page and not appear on the modified version.

designed and specified based on their functional longevity, i.e., how long they will persist and provide erosion protection. All geotextiles and mats should be replaced when they exceed their functional longevity or when permanent stabilization methods are instituted.

Gravel Mulch is a non-degradable erosion control product that is composed of washed and screened coarse to very coarse gravel, 16 mm to 64 mm (0.6" - 2.5"), similar to an AASHTO No. 3 coarse aggregate.

Rock Slope Protection consists of utilizing large rock or rip-rap (4"- 24") to stabilize slopes with a high erosion potential and those subject to scour along waterways.

Soil Binders can be used for temporary non-vegetative stabilization (see EC-5). The key to their use is functional longevity. In most cases, the soil binder will need to be routinely monitored and re-applied to maintain an erosion-resistant coverage.

Suitable Applications

Non-vegetated stabilization methods are suitable for use on disturbed soil areas and on material stockpiles that need to be temporarily or permanently protected from erosion by water and wind. Non-vegetated stabilization should only be utilized when vegetation cannot be established in the required timeframe, due to soil or climactic conditions, or where vegetation may be a potential fire hazard.

Decomposed Granite (DG) and Gravel Mulch are suitable for use in areas where vegetation establishment is difficult, on flat surfaces, trails and pathways, and when used in conjunction with a stabilizer or tackifier, on shallow slopes (i.e., 10:1 [H:V]). DG and gravel can also be used on shallow rocky slopes where vegetation cannot be established for permanent erosion control.

Degradable Mulches can be used to cover and protect soil surfaces from erosion both in temporary and permanent applications. In many cases, the use of mulches by themselves requires routine inspection and re-application. See EC-3 Hydraulic Mulch, EC-6 Straw Mulch, EC-8 Wood Mulch, or EC-14 Compost Blankets for more information.

Geotextiles and Mats can be used as a temporary stand-alone soil stabilization method. Depending on material selection, geotextiles and mats can be a short-term (3 mos – 1 year) or long-term (1-2 years) temporary stabilization method. For more information on geotextiles and mats see EC-7 Geotextiles and Mats.

Rock Slope Protection can be used when the slopes are subject to scour or have a high erosion potential, such as slopes adjacent to flowing waterways or slopes subject to overflow from detention facilities (spillways).

Soil Binders can be used for temporary stabilization of stockpiles and disturbed areas not subject to heavy traffic. See EC-5 Soil Binders for more information.

Limitations

General

- Refer to EC-3, EC-6, EC-8, and EC-14 for limitations on use of mulches. Refer to EC-7 for limitations on use of geotextiles and mats. Refer to EC-5 for limitations on use of Soil Binders.

Decomposed Granite

- Not available in some geographic regions.
- If not tackified, material may be susceptible to erosion even on slight slopes (e.g., 30:1 [H:V]).
- Installed costs may be more expensive than vegetative stabilization methods.

Gravel Mulch

- Availability is limited in some geographic regions.
- If not properly screened and washed, can contain fine material that can erode and/or create dust problems.
- If inadequately sized, material may be susceptible to erosion on sloped areas.
- Pore spaces fill with dirt and debris over time; may provide a growing medium for weeds.

Rock Slope Protection

- Installation is labor intensive.
- Installed costs can be significantly higher than vegetative stabilization methods.
- Rounded stones may not be used on slopes greater than 2:1 [H:V].

Implementation

General

Non-vegetated stabilization should be used in accordance with the following general guidance:

- Should be used in conjunction with other BMPs, including drainage, erosion controls and sediment controls.
- Refer to EC-3, EC-6, EC-8, and EC-14 for implementation details for mulches. Refer to EC-7 for implementation details for geotextiles and mats. Refer to EC-5 for implementation details for soil binders.
- Non-vegetated stabilization measures should be implemented as soon as the disturbance in the areas they are intended to protect has ceased.
- Additional guidance on the comparison and selection of temporary slope stabilization methods is provided in Appendix F of the Handbook.

Decomposed Granite Stabilization

- If used for a road or path should be installed on a prepared base.
- Should be mixed with a stabilizer if used for roads or pathways, or on slope applications.
- Though porous it is recommended to prevent standing water on or next to a decomposed granite road or pathway.

Gravel Mulch

- Should be sized based on slope, rainfall, and upgradient run-on conditions. Stone size should be increased as potential for erosion increases (steeper slopes, high intensity rainfall).
- If permanent, a weed control fabric should be placed prior to installation.
- Should be installed at a minimum 2" depth.
- Should completely cover all exposed surfaces.

Rock Slope Protection

- Rock slope protection installation should follow Caltrans Standard Specification 72-2: Rock Slope Protection. Refer to the specification for rock conformity requirements and installation methods.
- When using rock slope protection, rock size and installation method should be specified by an Engineer.
- A geotextile fabric should be placed prior to installation.

Costs

- Costs are highly variable depending not only on technique chosen, but also on materials chosen within specific techniques. In addition, availability of certain materials will vary by region/location, which will also affect the cost. Costs of mulches, geotextiles and mats, and soil binders are presented in their respective fact sheets. Costs for decomposed granite, gravel mulch stabilization and rock slope protection may be higher depending on location and availability of materials. Caltrans has provided an estimate for gravel mulch of \$10 - \$15/yd^2 in flat areas and \$11 - \$23/yd^2 on side slopes.

Inspection and Maintenance

General

- BMPs must be inspected in accordance with General Permit requirements for the associated project type and risk level. It is recommended that at a minimum, BMPs be inspected weekly, prior to forecasted rain events, daily during extended rain events, and after the conclusion of rain events.
- For permanent installation, require inspection periodically and after major storm events to look for signs of erosion or damage to the stabilization.
- All damage should be repaired immediately.
- Refer to EC-3, EC-6, EC-8, and EC-14 for inspection and maintenance requirements for mulches. Refer to EC-7 for inspection and maintenance requirements for geotextiles and mats. Refer to EC-5 for inspection and maintenance requirements for soil binders.

Decomposed Granite and Gravel Mulch Stabilization

- Rake out and add decomposed granite or gravel as needed to areas subject to rill erosion. Inspect upgradient drainage controls and repair/modify as necessary.

- Should remain stable under loose surface material. Any significant problem areas should be repaired to restore uniformity to the installation.

References

Arid Zone Forestry: A Guide for Field Technicians. Food and Agriculture Organization of the United Nations, 1989.

Design of Roadside Channels with Flexible Linings, Hydraulic Engineering Circular Number 15, Third Edition, Federal Highway Administration, 2007.

Design Standards for Urban Infrastructure - Soft Landscape Design, Department of Territory and Municipal Services - Australian Capital Territory http://www.tams.act.gov.au/work/standards_and_procedures/design_standards_for_urban_infrastructure

Erosion and Sediment Control Handbook: A Guide for Protection of State Waters through the use of Best Management Practices during Land Disturbing Activities, Tennessee Department of Environment and Conservation, 2002.

Gravel Mulch, Landscape Architecture Non-Standard Specification 10-2, California Department of Transportation (Caltrans), http://www.dot.ca.gov/hq/LandArch/roadside/detail-gm.htm

Maine Erosion and Sediment Control BMPs, DEPLW0588, Maine Department of Environmental Protection: Bureau of Land and Water Quality, 2003.

National Menu of Best Management Practices, US Environmental Protection Agency, 2006.

Standard Specification 72-2: Rock Slope Protection. California Department of Transportation, 2006.

Stormwater Quality Handbooks Construction Site Best Management Practices (BMPs) Manual, State of California Department of Transportation (Caltrans), March 2003.

Water Conservation Practices NS-1

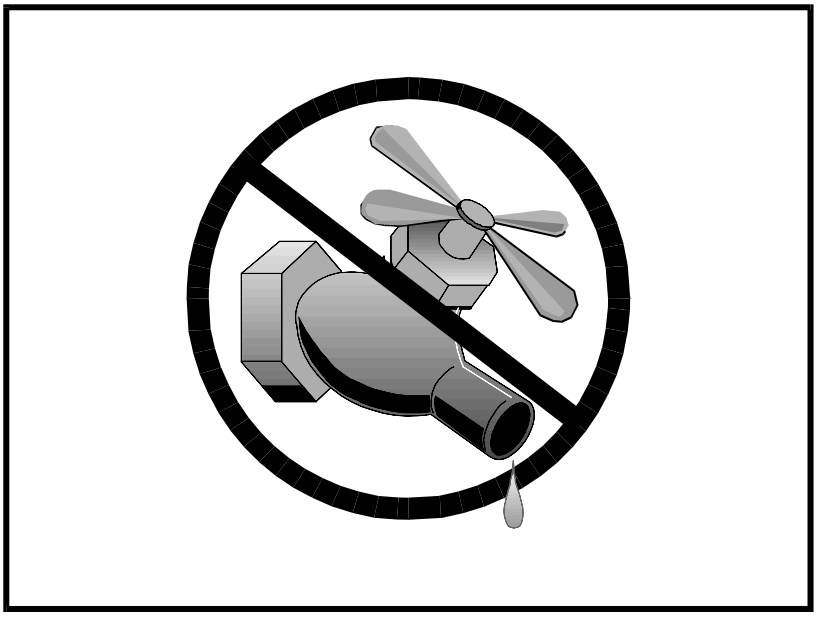

Categories

EC	Erosion Control	☒
SE	Sediment Control	☒
TC	Tracking Control	
WE	Wind Erosion Control	
NS	Non-Stormwater Management Control	☑
WM	Waste Management and Materials Pollution Control	

Legend:

☑ **Primary Objective**

☒ **Secondary Objective**

Targeted Constituents

Sediment	☑
Nutrients	
Trash	
Metals	
Bacteria	
Oil and Grease	
Organics	

Potential Alternatives

None

Description and Purpose

Water conservation practices are activities that use water during the construction of a project in a manner that avoids causing erosion and the transport of pollutants offsite. These practices can reduce or eliminate non-stormwater discharges.

Suitable Applications

Water conservation practices are suitable for all construction sites where water is used, including piped water, metered water, trucked water, and water from a reservoir.

Limitations

- None identified.

Implementation

- Keep water equipment in good working condition.
- Stabilize water truck filling area.
- Repair water leaks promptly.
- Washing of vehicles and equipment on the construction site is discouraged.
- Avoid using water to clean construction areas. If water must be used for cleaning or surface preparation, surface should be swept and vacuumed first to remove dirt. This will minimize amount of water required.

If User/Subscriber modifies this fact sheet in any way, the CASQA name/logo and footer below must be removed from each page and not appear on the modified version.

- Direct construction water runoff to areas where it can soak into the ground or be collected and reused.
- Authorized non-stormwater discharges to the storm drain system, channels, or receiving waters are acceptable with the implementation of appropriate BMPs.
- Lock water tank valves to prevent unauthorized use.

Costs

The cost is small to none compared to the benefits of conserving water.

Inspection and Maintenance

- Inspect and verify that activity based BMPs are in place prior to the commencement of authorized non-stormwater discharges.
- Inspect BMPs in accordance with General Permit requirements for the associated project type and risk level. It is recommended that at a minimum, BMPs be inspected weekly, prior to forecasted rain events, daily during extended rain events, and after the conclusion of rain events.
- Inspect BMPs subject to non-stormwater discharges daily while non-stormwater discharges are occuring.
- Repair water equipment as needed to prevent unintended discharges.
  - Water trucks
  - Water reservoirs (water buffalos)
  - Irrigation systems
  - Hydrant connections

References

Stormwater Quality Handbooks - Construction Site Best Management Practices (BMPs) Manual, State of California Department of Transportation (Caltrans), November 2000.

Dewatering Operations NS-2

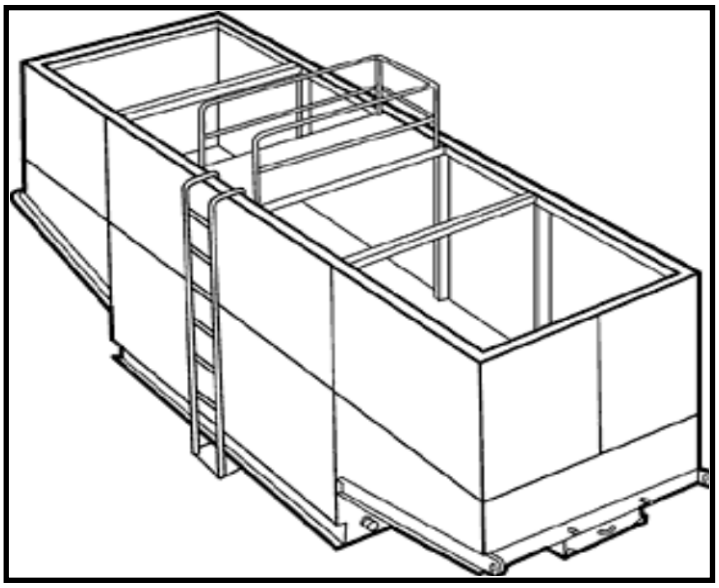

Categories		
EC	Erosion Control	
SE	Sediment Control	☒
TC	Tracking Control	
WE	Wind Erosion Control	
NS	Non-Stormwater Management Control	☑
WM	Waste Management and Materials Pollution Control	

Legend:
☑ **Primary Category**
☒ **Secondary Category**

Targeted Constituents	
Sediment	☑
Nutrients	
Trash	
Metals	
Bacteria	
Oil and Grease	☑
Organics	

Potential Alternatives

SE-5: Fiber Roll

SE-6: Gravel Bag Berm

If User/Subscriber modifies this fact sheet in any way, the CASQA name/logo and footer below must be removed from each page and not appear on the modified version.

Description and Purpose

Dewatering operations are practices that manage the discharge of pollutants when non-stormwater and accumulated precipitation (stormwater) must be removed from a work location to proceed with construction work or to provide vector control.

The General Permit incorporates Numeric Action Levels (NAL) for turbidity (see Section 2 of this handbook to determine your project's risk level and if you are subject to these requirements).

Discharges from dewatering operations can contain high levels of fine sediment that, if not properly treated, could lead to exceedances of the General Permit requirements or Basin Plan standards.

The dewatering operations described in this fact sheet are not Active Treatment Systems (ATS) and do not include the use of chemical coagulations, chemical flocculation or electrocoagulation.

Suitable Applications

These practices are implemented for discharges of non-stormwater from construction sites. Non-stormwaters include, but are not limited to, groundwater, water from cofferdams, water diversions, and waters used during construction activities that must be removed from a work area to facilitate construction.

Practices identified in this section are also appropriate for implementation when managing the removal of accumulated

CASQA
CALIFORNIA STORMWATER QUALITY ASSOCIATION

precipitation (stormwater) from depressed areas at a construction site.

Stormwater mixed with non-stormwater should be managed as non-stormwater.

Limitations

- Dewatering operations will require, and should comply with applicable local and project-specific permits and regulations. In some areas, all dewatering activities, regardless of the discharge volume, require a dewatering permit.
- Site conditions will dictate design and use of dewatering operations.
- The controls discussed in this fact sheet primarily address sediment. Other secondary pollutant removal benefits are discussed where applicable.
- The controls detailed in this fact sheet only allow for minimal settling time for sediment particles. Use only when site conditions restrict the use of the other control methods.
- Avoid dewatering discharges where possible by using the water for dust control.

Implementation

- A Construction Site Monitoring Plan (CSMP) should be included in the project Stormwater Pollution Prevention Plan (SWPPP).
- Regional Water Quality Control Board (RWQCB) Regions may require notification and approval prior to any discharge of water from construction sites.
- The destination of discharge from dewatering activities will typically determine the type of permit required for the discharge. For example, when discharging to a water of the U.S., a dewatering permit may be required through the site's governing RWQCB. When discharging to a sanitary sewer or Municipal Separate Storm Sewer System (MS4), a permit may need to be obtained from the owner of the sanitary sewer or MS4 in addition to obtaining an RWQCB dewatering permit. Additional permits or permissions from other agencies may be required for dewatering cofferdams or diversions.
- Dewatering discharges should not cause erosion at the discharge point. Appropriate BMPs should be implemented to maintain compliance with all applicable permits.
- Maintain dewatering records in accordance with all local and project-specific permits and regulations.

Sediment Treatment

A variety of methods can be used to treat water during dewatering operations. Several devices are presented below and provide options to achieve sediment removal. The sediment particle size and permit or receiving water limitations on sediment or turbidity are key considerations for selecting sediment treatment option(s); in some cases, the use of multiple devices may be appropriate. Use of other enhanced treatment methods (i.e., introduction of chemicals or electric current to enhance flocculation and removal of sediment) must comply with: 1) for storm drain or surface water discharges, the requirements for Active Treatment Systems (see SE-11); or 2) for sanitary sewer discharges, the requirements of applicable sanitary sewer discharge permits.

Sediment Basin (see also SE-2)

Description:

- A sediment basin is a temporary basin with a controlled release structure that is formed by excavation or construction of an embankment to detain sediment-laden runoff and allow sediment to settle out before discharging. Sediment basins are generally larger than Sediment Traps (SE-3) and have a designed outlet structure.

Appropriate Applications:

- Effective for the removal of trash, gravel, sand, silt, some metals that settle out with the sediment.

Implementation:

- Excavation and construction of related facilities is required.
- Temporary sediment basins should be fenced if safety is a concern.
- Outlet protection is required to prevent erosion at the outfall location.

Maintenance:

- Maintenance is required for safety fencing, vegetation, embankment, inlet and outlet, as well as other features.
- Removal of sediment is required when the storage volume is reduced by one-third.

Sediment Trap (See also SE-3)

Description:

- A sediment trap is a temporary basin formed by excavation and/or construction of an earthen embankment across a waterway or low drainage area to detain sediment-laden runoff and allow sediment to settle out before discharging. Sediment traps are generally smaller than Sediment Basins (SE-2) and do not have a designed outlet (but do have a spillway or overflow).

Appropriate Applications:

Effective for the removal of large and medium sized particles (sand and gravel) and some metals that settle out with the sediment.

Implementation:

- Excavation and construction of related facilities is required.
- Trap inlets should be located to maximize the travel distance to the trap outlet.
- Use rock or vegetation to protect the trap outlets against erosion.

Maintenance:

- Maintenance is required for vegetation, embankment, inlet and outfall structures, as well as other features.
- Removal of sediment is required when the storage volume is reduced by one-third.

Weir Tanks

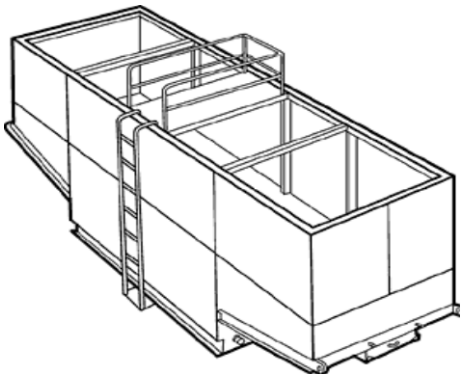

Description:

- A weir tank separates water and waste by using weirs. The configuration of the weirs (over and under weirs) maximizes the residence time in the tank and determines the waste to be removed from the water, such as oil, grease, and sediments.

Appropriate Applications:

- The tank removes trash, some settleable solids (gravel, sand, and silt), some visible oil and grease, and some metals (removed with sediment). To achieve high levels of flow, multiple tanks can be used in parallel. If additional treatment is desired, the tanks can be placed in series or as pre-treatment for other methods.

Implementation:

- Tanks are delivered to the site by the vendor, who can provide assistance with set-up and operation.
- Tank size will depend on flow volume, constituents of concern, and residency period required. Vendors should be consulted to appropriately size tank.
- Treatment capacity (i.e., volume and number of tanks) should provide at a minimum the required volume for discrete particle settling for treatment design flows.

Maintenance:

- Periodic cleaning is required based on visual inspection or reduced flow.
- Oil and grease disposal should be conducted by a licensed waste disposal company.

Dewatering Tanks

Description:

- A dewatering tank removes debris and sediment. Flow enters the tank through the top, passes through a fabric filter, and is discharged through the bottom of the tank. The filter separates the solids from the liquids.

Appropriate Applications:

- The tank removes trash, gravel, sand, and silt, some visible oil and grease, and some metals (removed with sediment). To achieve high levels of flow, multiple tanks can be used in parallel. If additional treatment is desired, the tanks can be placed in series or as pre-treatment for other methods.

Implementation:

- Tanks are delivered to the site by the vendor, who can provide assistance with set-up and operation.
- Tank size will depend on flow volume, constituents of concern, and residency period required. Vendors should be consulted to appropriately size tank.

Maintenance:

- Periodic cleaning is required based on visual inspection or reduced flow.
- Oil and grease disposal should be conducted by licensed waste disposal company.

Gravity Bag Filter

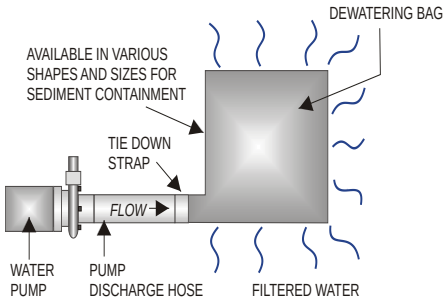

Description:

- A gravity bag filter, also referred to as a dewatering bag, is a square or rectangular bag made of non-woven geotextile fabric that collects gravel, sand, silt, and fines.

Appropriate Applications:

- Effective for the removal of sediments (gravel, sand, silt, and fines). Some metals are removed with the sediment.

Implementation:

- Water is pumped into one side of the bag and seeps through the top, bottom, and sides of the bag.
- Place filter bag on pavement or a gravel bed or paved surface. Avoid placing a dewatering bag on unprotected bare soil. If placing the bag on bare soil is unavoidable, a secondary barrier should be used, such as a rock filter bed placed beneath and beyond the edges of the bag to, prevent erosion and capture sediments that escape the bag.
- Perimeter control around the downstream end of the bag should be implemented. Secondary sediment controls are important especially in the initial stages of discharge, which tend to allow fines to pass through the bag.

Maintenance:

- Inspection of the flow conditions, bag condition, bag capacity, and the secondary barrier (as applicable) is required.
- Replace the bag when it no longer filters sediment or passes water at a reasonable rate.
- Caution should be taken when removing and disposing of the bag, to prevent the release of captured sediment
- Properly dispose of the bag offsite. If sediment is removed from the bag prior to disposal (bags can potentially be reused depending upon their condition), dispose of sediment in accordance with the general maintenance procedures described at the end of this BMP Fact Sheet.

Sand Media Particulate Filter

Description:

- Water is treated by passing it through canisters filled with sand media. Generally, sand filters provide a final level of treatment. They are often used as a secondary or higher level of treatment after a significant amount of sediment and other pollutants have been removed using other methods.

Appropriate Applications:

- Effective for the removal of trash, gravel, sand, and silt and some metals, as well as the reduction of biochemical oxygen demand (BOD) and turbidity.
- Sand filters can be used for stand-alone treatment or in conjunction with bag and cartridge filtration if further treatment is required.
- Sand filters can also be used to provide additional treatment to water treated via settling or basic filtration.

Implementation:

- The filters require delivery to the site and initial set up. The vendor can provide assistance with installation and operation.

Maintenance:

- The filters require regular service to monitor and maintain the level of the sand media. If subjected to high loading rates, filters can plug quickly.
- Venders generally provide data on maximum head loss through the filter. The filter should be monitored daily while in use, and cleaned when head loss reaches target levels.
- If cleaned by backwashing, the backwash water may need to be hauled away for disposal, or returned to the upper end of the treatment train for another pass through the series of dewatering BMPs.

Pressurized Bag Filter

Description:

- A pressurized bag filter is a unit composed of single filter bags made from polyester felt material. The water filters through the unit and is discharged through a header. Vendors provide bag filters in a variety of configurations. Some units include a combination of bag filters and cartridge filters for enhanced contaminant removal.

Appropriate Applications:

- Effective for the removal of sediment (sand and silt) and some metals, as well as the reduction of BOD, turbidity, and hydrocarbons. Oil absorbent bags are available for hydrocarbon removal.

- Filters can be used to provide secondary treatment to water treated via settling or basic filtration.

Implementation:

- The filters require delivery to the site and initial set up. The vendor can provide assistance with installation and operation.

Maintenance:

- The filter bags require replacement when the pressure differential equals or exceeds the manufacturer's recommendation.

Cartridge Filter

Description:

- Cartridge filters provide a high degree of pollutant removal by utilizing a number of individual cartridges as part of a larger filtering unit. They are often used as a secondary or higher (polishing) level of treatment after a significant amount of sediment and other pollutants are removed. Units come with various cartridge configurations (for use in series with bag filters) or with a larger single cartridge filtration unit (with multiple filters within).

Appropriate Applications:

- Effective for the removal of sediment (sand, silt, and some clays) and metals, as well as the reduction of BOD, turbidity, and hydrocarbons. Hydrocarbons can effectively be removed with special resin cartridges.

- Filters can be used to provide secondary treatment to water treated via settling or basic filtration.

Implementation:

- The filters require delivery to the site and initial set up. The vendor can provide assistance.

Maintenance:

- The cartridges require replacement when the pressure differential equals or exceeds the manufacturer's recommendation.

Costs

- Sediment control costs vary considerably depending on the dewatering and sediment treatment system that is selected. Pressurized filters tend to be more expensive than gravity settling, but are often more effective. Simple tanks are generally rented on a long-term basis (one or more months) and can range from $360 per month for a 1,000 gallon tank to $2,660 per month for a 10,000 gallon tank. Mobilization and demobilization costs vary considerably.

Inspection and Maintenance

- Inspect and verify that dewatering BMPs are in place and functioning prior to the commencement of activities requiring dewatering.

- Inspect dewatering BMPs daily while dewatering activities are being conducted.

- Inspect all equipment before use. Monitor dewatering operations to ensure they do not cause offsite discharge or erosion.
- Sample dewatering discharges as required by the General Permit.
- Unit-specific maintenance requirements are included with the description of each unit.
- Sediment removed during the maintenance of a dewatering device may be either spread onsite and stabilized, or disposed of at a disposal site as approved by the owner.
- Sediment that is commingled with other pollutants should be disposed of in accordance with all applicable laws and regulations and as approved by the owner.

References

Blueprint for a Clean Bay: Best Management Practices to Prevent Stormwater Pollution from Construction Related Activities; Santa Clara Valley Nonpoint Source Pollution Control Program, 1995.

Stormwater Quality Handbooks - Construction Site Best Management Practices (BMPs) Manual, State of California Department of Transportation (Caltrans), March 2003; Updated March 2004.

Stormwater Management for Construction Activities, Developing Pollution Prevention Plans and Best Management Practices, EPA 832-R-92005; USEPA, April 1992.

Labor Surcharge & Equipment Rental Rates, April 1, 2002 through March 31, 2003, California Department of Transportation (Caltrans).

Erosion and Sediment Control Manual, Oregon Department of Environmental Quality, February 2005.

Paving and Grinding Operations NS-3

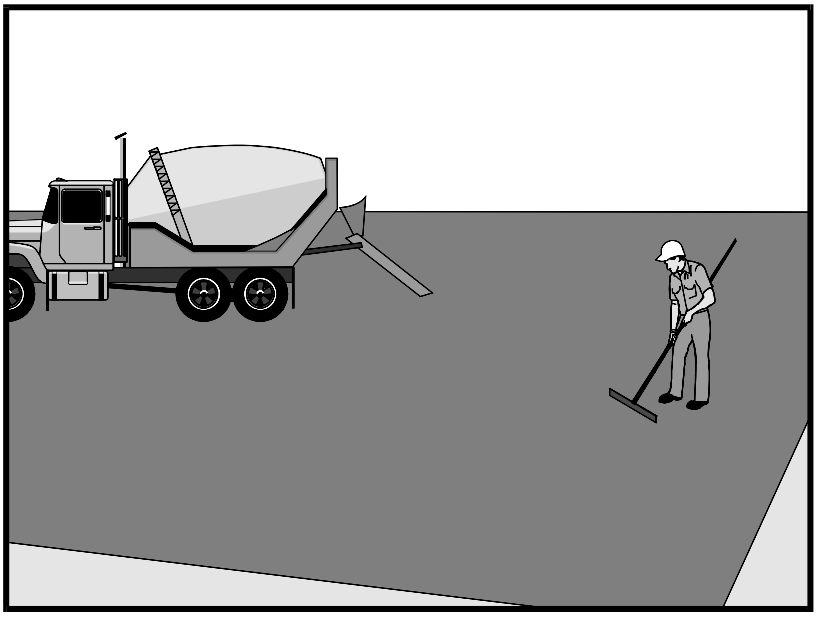

Categories

EC	Erosion Control	
SE	Sediment Control	
TC	Tracking Control	
WE	Wind Erosion Control	
NS	Non-Stormwater Management Control	☑
WM	Waste Management and Materials Pollution Control	☒

Legend:

☑ **Primary Category**

☒ **Secondary Category**

Targeted Constituents

Sediment	☑
Nutrients	
Trash	
Metals	
Bacteria	
Oil and Grease	☑
Organics	

Potential Alternatives

None

If User/Subscriber modifies this fact sheet in any way, the CASQA name/logo and footer below must be removed from each page and not appear on the modified version.

Description and Purpose

Prevent or reduce the discharge of pollutants from paving operations, using measures to prevent runon and runoff pollution, properly disposing of wastes, and training employees and subcontractors.

The General Permit incorporates Numeric Action Levels (NAL) for pH and turbidity (see Section 2 of this handbook to determine your project's risk level and if you are subject to these requirements).

Many types of construction materials associated with paving and grinding operations, including mortar, concrete, and cement and their associated wastes have basic chemical properties that can raise pH levels outside of the permitted range. Additional care should be taken when managing these materials to prevent them from coming into contact with stormwater flows, which could lead to exceedances of the General Permit requirements.

Suitable Applications

These procedures are implemented where paving, surfacing, resurfacing, or sawcutting, may pollute stormwater runoff or discharge to the storm drain system or watercourses.

Limitations

- Paving opportunities may be limited during wet weather.

  Discharges of freshly paved surfaces may raise pH to environmentally harmful levels and trigger permit violations.

CASQA
CALIFORNIA STORMWATER QUALITY ASSOCIATION

Implementation

General

- Avoid paving during the wet season when feasible.
- Reschedule paving and grinding activities if rain is forecasted.
- Train employees and sub-contractors in pollution prevention and reduction.
- Store materials away from drainage courses to prevent stormwater runon (see WM-1, Material Delivery and Storage).
- Protect drainage courses, particularly in areas with a grade, by employing BMPs to divert runoff or to trap and filter sediment.
- Stockpile material removed from roadways away from drain inlets, drainage ditches, and watercourses. These materials should be stored consistent with WM-3, Stockpile Management.
- Disposal of PCC (Portland cement concrete) and AC (asphalt concrete) waste should be in conformance with WM-8, Concrete Waste Management.

Saw Cutting, Grinding, and Pavement Removal

- Shovel or vacuum saw-cut slurry and remove from site. Cover or barricade storm drains during saw cutting to contain slurry.
- When paving involves AC, the following steps should be implemented to prevent the discharge of grinding residue, uncompacted or loose AC, tack coats, equipment cleaners, or unrelated paving materials:
  - AC grindings, pieces, or chunks used in embankments or shoulder backing should not be allowed to enter any storm drains or watercourses. Install inlet protection and perimeter controls until area is stabilized (i.e. cutting, grinding or other removal activities are complete and loose material has been properly removed and disposed of)or permanent controls are in place. Examples of temporary perimeter controls can be found in EC-9, Earth Dikes and Drainage Swales; SE-1, Silt Fence; SE-5, Fiber Rolls, or SE-13 Compost Socks and Berms
  - Collect and remove all broken asphalt and recycle when practical. Old or spilled asphalt should be recycled or disposed of properly.
- Do not allow saw-cut slurry to enter storm drains or watercourses. Residue from grinding operations should be picked up by a vacuum attachment to the grinding machine, or by sweeping, should not be allowed to flow across the pavement, and should not be left on the surface of the pavement. See also WM-8, Concrete Waste Management, and WM-10, Liquid Waste Management.
- Pavement removal activities should not be conducted in the rain.
- Collect removed pavement material by mechanical or manual methods. This material may be recycled for use as shoulder backing or base material.

- If removed pavement material cannot be recycled, transport the material back to an approved storage site.

Asphaltic Concrete Paving

- If paving involves asphaltic cement concrete, follow these steps:

  - Do not allow sand or gravel placed over new asphalt to wash into storm drains, streets, or creeks. Vacuum or sweep loose sand and gravel and properly dispose of this waste by referring to WM-5, Solid Waste Management.

  - Old asphalt should be disposed of properly. Collect and remove all broken asphalt from the site and recycle whenever possible.

Portland Cement Concrete Paving

- Do not wash sweepings from exposed aggregate concrete into a storm drain system. Collect waste materials by dry methods, such as sweeping or shoveling, and return to aggregate base stockpile or dispose of properly. Allow aggregate rinse to settle. Then, either allow rinse water to dry in a temporary pit as described in WM-8, Concrete Waste Management, or pump the water to the sanitary sewer if authorized by the local wastewater authority.

Sealing Operations

- During chip seal application and sweeping operations, petroleum or petroleum covered aggregate should not be allowed to enter any storm drain or water courses. Apply temporary perimeter controls until structure is stabilized (i.e. all sealing operations are complete and cured and loose materials have been properly removed and disposed).

- Inlet protection (SE-10, Storm Drain Inlet Protection) should be used during application of seal coat, tack coat, slurry seal, and fog seal.

- Seal coat, tack coat, slurry seal, or fog seal should not be applied if rainfall is predicted to occur during the application or curing period.

Paving Equipment

- Leaks and spills from paving equipment can contain toxic levels of heavy metals and oil and grease. Place drip pans or absorbent materials under paving equipment when not in use. Clean up spills with absorbent materials and dispose of in accordance with the applicable regulations. See NS-10, Vehicle and Equipment Maintenance, WM-4, Spill Prevention and Control, and WM-10, Liquid Waste Management.

- Substances used to coat asphalt transport trucks and asphalt spreading equipment should not contain soap and should be non-foaming and non-toxic.

- Paving equipment parked onsite should be parked over plastic to prevent soil contamination.

- Clean asphalt coated equipment offsite whenever possible. When cleaning dry, hardened asphalt from equipment, manage hardened asphalt debris as described in WM-5, Solid Waste Management. Any cleaning onsite should follow NS-8, Vehicle and Equipment Cleaning.

Thermoplastic Striping

- Thermoplastic striper and pre-heater equipment shutoff valves should be inspected to ensure that they are working properly to prevent leaking thermoplastic from entering drain inlets, the stormwater drainage system, or watercourses.
- Pre-heaters should be filled carefully to prevent splashing or spilling of hot thermoplastic. Leave six inches of space at the top of the pre-heater container when filling thermoplastic to allow room for material to move.
- Do not pre-heat, transfer, or load thermoplastic near drain inlets or watercourses.
- Clean truck beds daily of loose debris and melted thermoplastic. When possible, recycle thermoplastic material.

Raised/Recessed Pavement Marker Application and Removal

- Do not transfer or load bituminous material near drain inlets, the stormwater drainage system, or watercourses.
- Melting tanks should be loaded with care and not filled to beyond six inches from the top to leave room for splashing.
- When servicing or filling melting tanks, ensure all pressure is released before removing lids to avoid spills.
- On large-scale projects, use mechanical or manual methods to collect excess bituminous material from the roadway after removal of markers.

Costs

- All of the above are low cost measures.

Inspection and Maintenance

- Inspect and verify that activity-based BMPs are in place prior to the commencement of paving and grinding operations.
- BMPs must be inspected in accordance with General Permit requirements for the associated project type and risk level. It is recommended that at a minimum, BMPs be inspected weekly, prior to forecasted rain events, daily during extended rain events, and after the conclusion of rain events.
- Sample stormwater runoff required by the General Permit.
- Keep ample supplies of drip pans or absorbent materials onsite.
- Inspect and maintain machinery regularly to minimize leaks and drips.

References

Blueprint for a Clean Bay: Best Management Practices to Prevent Stormwater Pollution from Construction Related Activities; Santa Clara Valley Nonpoint Source Pollution Control Program, 1995.

Hot Mix Asphalt-Paving Handbook AC 150/5370-14, Appendix I, U.S. Army Corps of Engineers, July 1991.

Stormwater Quality Handbooks - Construction Site Best Management Practices (BMPs) Manual, State of California Department of Transportation (Caltrans), March 2003.

Erosion and Sediment Control Manual, Oregon Department of Environmental Quality, February 2005.

Temporary Stream Crossing NS-4

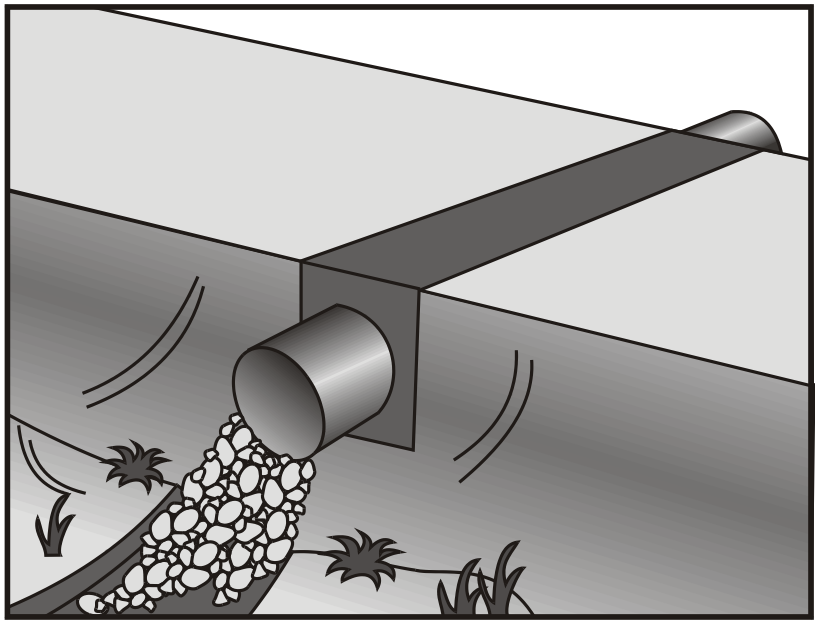

Categories		
EC	Erosion Control	☒
SE	Sediment Control	☒
TC	Tracking Control	☒
WE	Wind Erosion Control	
NS	Non-Stormwater Management Control	☑
WM	Waste Management and Materials Pollution Control	

Legend:
☑ **Primary Objective**
☒ **Secondary Objective**

Targeted Constituents	
Sediment	☑
Nutrients	
Trash	
Metals	
Bacteria	
Oil and Grease	
Organics	

Potential Alternatives

None

If User/Subscriber modifies this fact sheet in any way, the CASQA name/logo and footer below must be removed from each page and not appear on the modified version.

Description and Purpose

A temporary stream crossing is a temporary culvert, ford or bridge placed across a waterway to provide access for construction purposes for a period of less than one year. Temporary access crossings are not intended to maintain traffic for the public. The temporary access will eliminate erosion and downstream sedimentation caused by vehicles.

Suitable Applications

Temporary stream crossings should be installed at all designated crossings of perennial and intermittent streams on the construction site, as well as for dry channels that may be significantly eroded by construction traffic.

Temporary streams crossings are installed at sites:

- Where appropriate permits have been secured (404 Permits, and 401 Certifications)
- Where construction equipment or vehicles need to frequently cross a waterway
- When alternate access routes impose significant constraints
- When crossing perennial streams or waterways causes significant erosion
- Where construction activities will not last longer than one year

CASQA
CALIFORNIA STORMWATER QUALITY ASSOCIATION

- Where appropriate permits have been obtained for the stream crossing

Limitations

The following limitations may apply:

- Installation and removal will usually disturb the waterway.
- Installation may require Regional Water Quality Control Board (RWQCB) 401 Certification, U.S. Army Corps of Engineers 404 permit and approval by California Department of Fish and Game. If numerical-based water quality standards are mentioned in any of these and other related permits, testing and sampling may be required.
- Installation may require dewatering or temporary diversion of the stream. See NS-2, Dewatering Operations and NS-5, Clear Water Diversion.
- Installation may cause a constriction in the waterway, which can obstruct flood flow and cause flow backups or washouts. If improperly designed, flow backups can increase the pollutant load through washouts and scouring.
- Use of natural or other gravel in the stream for construction of Cellular Confinement System (CCS) ford crossing will be contingent upon approval by fisheries agencies.
- Ford crossings may degrade water quality due to contact with vehicles and equipment.
- May be expensive for a temporary improvement.
- Requires other BMPs to minimize soil disturbance during installation and removal.
- Fords should only be used in dry weather.

Implementation

General

The purpose of this BMP is to provide a safe, erosion-free access across a stream for construction equipment. Minimum standards and specifications for the design, construction, maintenance, and removal of the structure should be established by an engineer registered in California. Temporary stream crossings may be necessary to prevent construction equipment from causing erosion of the stream and tracking sediment and other pollutants into the stream.

Temporary stream crossings are used as access points to construction sites when other detour routes may be too long or burdensome for the construction equipment. Often heavy construction equipment must cross streams or creeks, and detour routes may impose too many constraints such as being too narrow or poor soil strength for the equipment loadings. Additionally, the contractor may find a temporary stream crossing more economical for light–duty vehicles to use for frequent crossings, and may have less environmental impact than construction of a temporary access road.

Location of the temporary stream crossing should address:

- Site selection where erosion potential is low.

- Areas where the side slopes from site runoff will not spill into the side slopes of the crossing.

The following types of temporary stream crossings should be considered:

- **Culverts** – A temporary culvert is effective in controlling erosion but will cause erosion during installation and removal. A temporary culvert can be easily constructed and allows for heavy equipment loads.

- **Fords** - Appropriate during the dry season in arid areas. Used on dry washes and ephemeral streams, and low-flow perennial streams. CCS, a type of ford crossing, is also appropriate for use in streams that would benefit from an influx of gravels. A temporary ford provides little sediment and erosion control and is ineffective in controlling erosion in the stream channel. A temporary ford is the least expensive stream crossing and allows for maximum load limits. It also offers very low maintenance. Fords are more appropriate during the dry ice season and in arid areas of California.

- **Bridges** - Appropriate for streams with high flow velocities, steep gradients and where temporary restrictions in the channel are not allowed.

Design

During the long summer construction season in much of California, rainfall is infrequent and many streams are dry. Under these conditions, a temporary ford may be sufficient. A ford is not appropriate if construction will continue through the winter rainy season, if summer thunderstorms are likely, or if the stream flows during most of the year. Temporary culverts and bridges should then be considered and, if used, should be sized to pass a significant design storm (i.e., at least a 10-year storm). The temporary stream crossing should be protected against erosion, both to prevent excessive sedimentation in the stream and to prevent washout of the crossing.

Design and installation requires knowledge of stream flows and soil strength. Designs should be prepared under direction of, and approved by, a registered civil engineer and for bridges, a registered structural engineer. Both hydraulic and construction loading requirements should be considered with the following:

- Comply with any special requirements for culvert and bridge crossings, particularly if the temporary stream crossing will remain through the rainy season.

- Provide stability in the crossing and adjacent areas to withstand the design flow. The design flow and safety factor should be selected based on careful evaluation of the risks due to over topping, flow backups, or washout.

- Install sediment traps immediately downstream of crossings to capture sediments. See SE-3, Sediment Trap.

- Avoid oil or other potentially hazardous materials for surface treatment.

- Culverts are relatively easy to construct and able to support heavy equipment loads.

- Fords are the least expensive of the crossings, with maximum load limits.

- CCS crossing structures consist of clean, washed gravel and cellular confinement system blocks. CCS are appropriate for streams that would benefit from an influx of gravel; for example, salmonid streams, streams or rivers below reservoirs, and urban, channelized streams. Many urban stream systems are gravel-deprived due to human influences, such as dams, gravel mines, and concrete channels.
- CCS allow designers to use either angular or naturally occurring rounded gravel, because the cells provide the necessary structure and stability. In fact, natural gravel is optimal for this technique, because of the habitat improvement it will provide after removal of the CCS.
- A gravel depth of 6 to 12 in. for a CCS structure is sufficient to support most construction equipment.
- An advantage of a CCS crossing structure is that relatively little rock or gravel is needed, because the CCS provides the stability.
- Bridges are generally more expensive to design and construct, but provide the least disturbance of the streambed and constriction of the waterway flows.

Construction and Use

- Stabilize construction roadways, adjacent work area, and stream bottom against erosion.
- Construct during dry periods to minimize stream disturbance and reduce costs.
- Construct at or near the natural elevation of the streambed to prevent potential flooding upstream of the crossing.
- Install temporary erosion control BMPs in accordance with erosion control BMP fact sheets to minimize erosion of embankment into flow lines.
- Any temporary artificial obstruction placed within flowing water should only be built from material, such as clean gravel or sandbags, that will not introduce sediment or silt into the watercourse.
- Temporary water body crossings and encroachments should be constructed to minimize scour. Cobbles used for temporary water body crossings or encroachments should be clean, rounded river cobble.
- Vehicles and equipment should not be driven, operated, fueled, cleaned, maintained, or stored in the wet or dry portions of a water body where wetland vegetation, riparian vegetation, or aquatic organisms may be destroyed.
- The exterior of vehicles and equipment that will encroach on the water body within the project should be maintained free of grease, oil, fuel, and residues.
- Drip pans should be placed under all vehicles and equipment placed on docks, barges, or other structures over water bodies when the vehicle or equipment is planned to be idle for more than one hour.

- Disturbance or removal of vegetation should not exceed the minimum necessary to complete operations. Precautions should be taken to avoid damage to vegetation by people or equipment. Disturbed vegetation should be replaced with the appropriate soil stabilization measures.

- Riparian vegetation, when removed pursuant to the provisions of the work, should be cut off no lower than ground level to promote rapid re-growth. Access roads and work areas built over riparian vegetation should be covered by a sufficient layer of clean river run cobble to prevent damage to the underlying soil and root structure. The cobble must be removed upon completion of project activities.

- Conceptual temporary stream crossings are shown in the attached figures.

Costs

Caltrans Construction Cost index for temporary bridge crossings is $45-$95/ft^2.

Inspection and Maintenance

- Inspect and verify that activity-based BMPs are in place prior to the commencement of associated activities. While activities associated with the BMP are under way, inspect BMPs in accordance with General Permit requirements for the associated project type and risk level. It is recommended that at a minimum, BMPs be inspected weekly, prior to forecasted rain events, daily during extended rain events, and after the conclusion of rain events.

- Check for blockage in the channel, sediment buildup or trapped debris in culverts, blockage behind fords or under bridges.

- Check for erosion of abutments, channel scour, riprap displacement, or piping in the soil.

- Check for structural weakening of the temporary crossings, such as cracks, and undermining of foundations and abutments.

- Remove sediment that collects behind fords, in culverts, and under bridges periodically.

- Replace lost or displaced aggregate from inlets and outlets of culverts and cellular confinement systems.

- Remove temporary crossing promptly when it is no longer needed.

References

California Bank and Shore Rock Slope Protection Design – Practitioners Guide and Field Evaluations of Riprap Methods, Caltrans Study No. F90TL03, October 2000.

Stormwater Quality Handbooks - Construction Site Best Management Practices (BMPs) Manual, State of California Department of Transportation (Caltrans), November 2000.

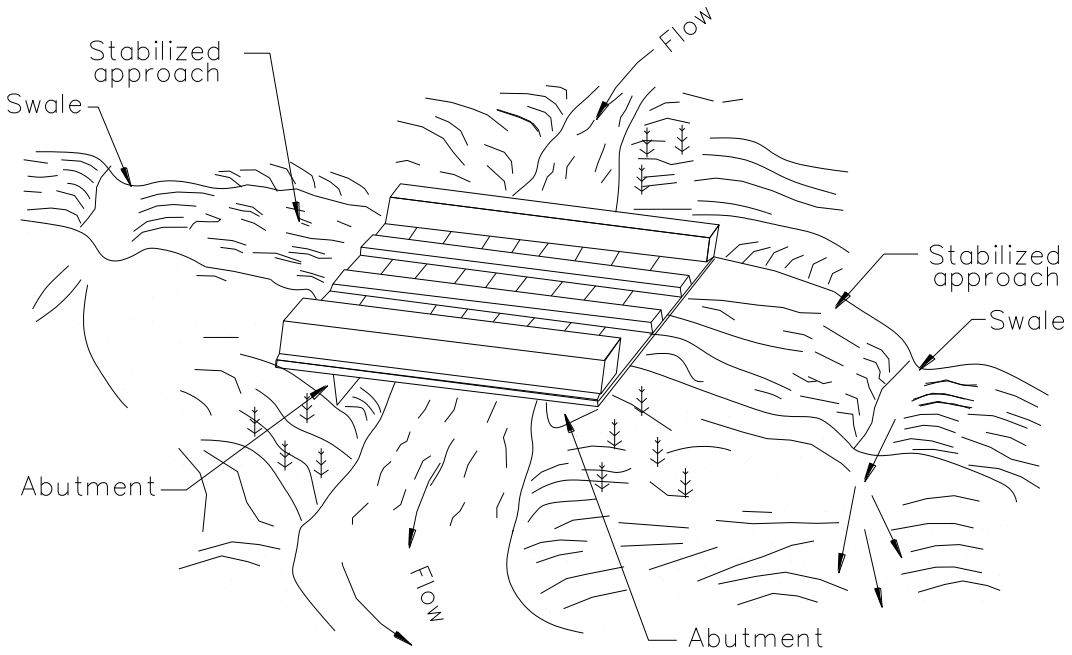

NOTE:
Surface flow of road diverted by swale and/or dike.

TYPICAL BRIDGE CROSSING
NOT TO SCALE

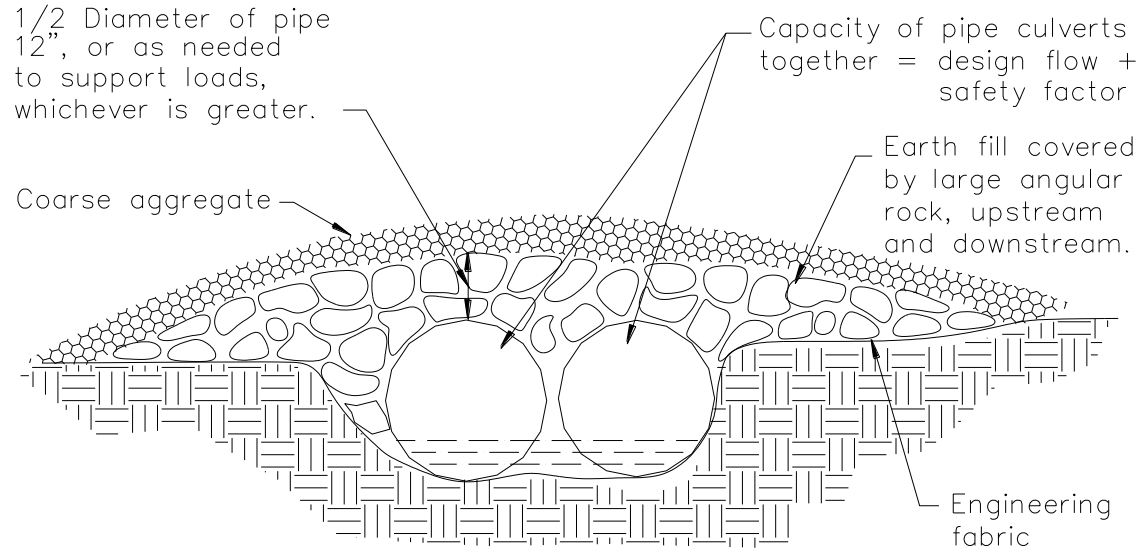

ELEVATION

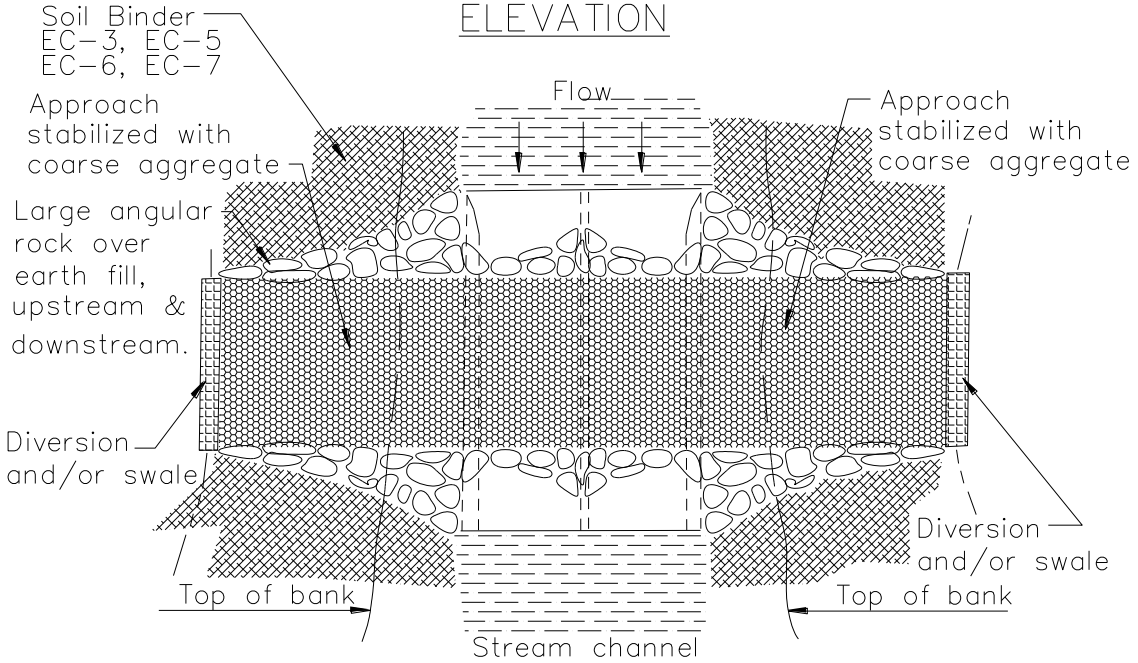

PLAN VIEW

TYPICAL CULVERT CROSSING
NOT TO SCALE

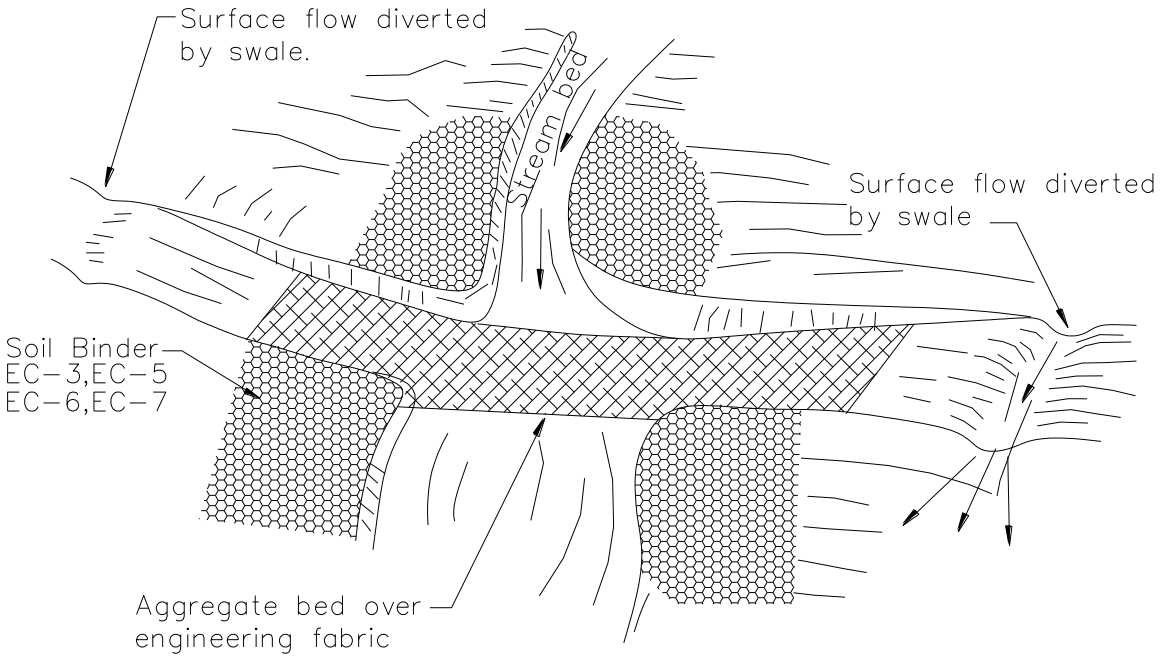

Aggregate approch
1:5 (V:H) Maximum slope on road

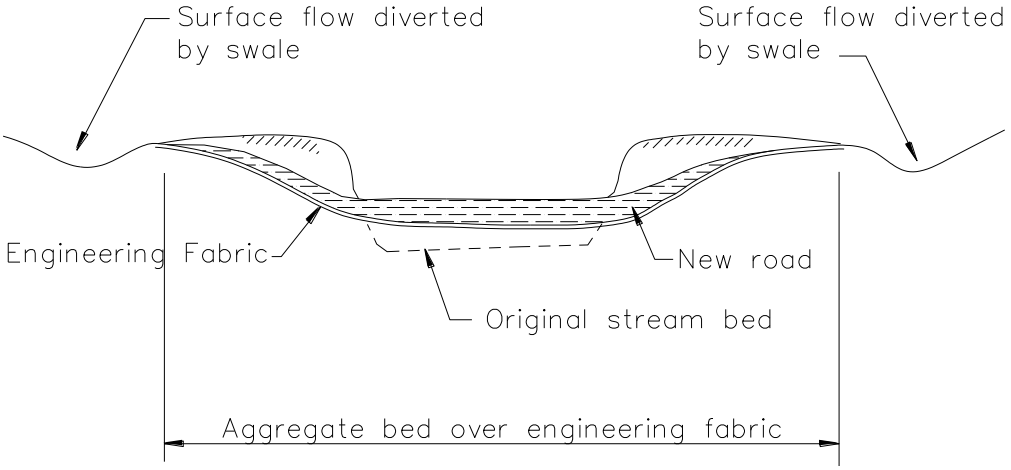

TYPICAL FORD CROSSING
NOT TO SCALE

Clear Water Diversion NS-5

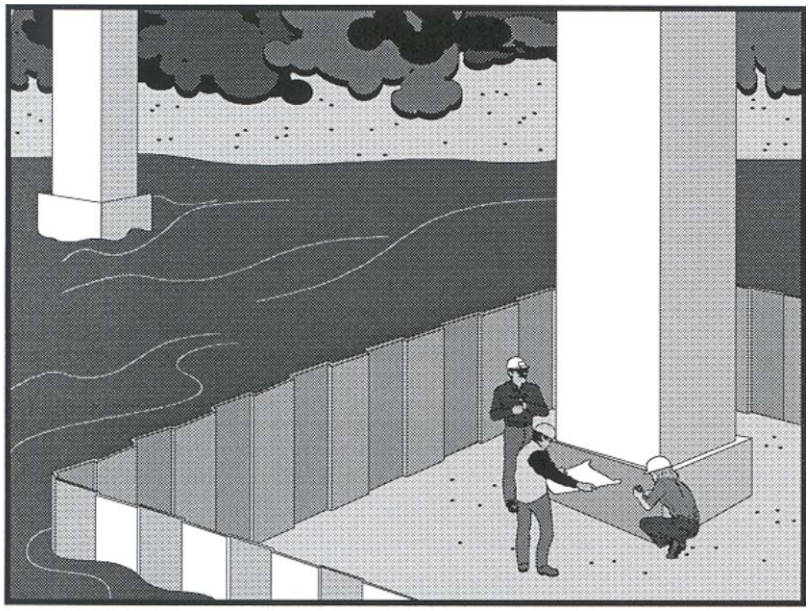

Categories		
EC	Erosion Control	
SE	Sediment Control	
TC	Tracking Control	
WE	Wind Erosion Control	
NS	Non-Stormwater Management Control	☑
WM	Waste Management and Materials Pollution Control	

Legend:
☑ **Primary Objective**
☒ **Secondary Objective**

Targeted Constituents	
Sediment	☑
Nutrients	
Trash	
Metals	
Bacteria	
Oil and Grease	
Organics	

Potential Alternatives

None

If User/Subscriber modifies this fact sheet in any way, the CASQA name/logo and footer below must be removed from each page and not appear on the modified version.

Description and Purpose

Clear water diversion consists of a system of structures and measures that intercept clear surface water runoff upstream of a project, transport it around the work area, and discharge it downstream with minimal water quality degradation from either the project construction operations or the construction of the diversion. Clear water diversions are used in a waterway to enclose a construction area and reduce sediment pollution from construction work occurring in or adjacent to water. Structures commonly used as part of this system include diversion ditches, berms, dikes, slope drains, rock, gravel bags, wood, aqua barriers, cofferdams, filter fabric or turbidity curtains, drainage and interceptor swales, pipes, or flumes.

Suitable Applications

A clear water diversion is typically implemented where appropriate permits (1601 Agreement) have been secured and work must be performed in a flowing stream or water body.

- Clear water diversions are appropriate for isolating construction activities occurring within or near a water body such as streambank stabilization, or culvert, bridge, pier or abutment installation. They may also be used in combination with other methods, such as clear water bypasses and/or pumps.
- Pumped diversions are suitable for intermittent and low flow streams.
- Excavation of a temporary bypass channel, or passing the flow through a heavy pipe (called a "flume") with a trench

CASQA
CALIFORNIA STORMWATER QUALITY ASSOCIATION

excavated under it, is appropriate for the diversion of streams less than 20 ft wide, with flow rates less than 100 cfs.

- Clear water diversions incorporating clean washed gravel may be appropriate for use in salmonid spawning streams.

Limitations

- Diversion and encroachment activities will usually disturb the waterway during installation and removal of diversion structures.
- Installation may require Regional Water Quality Control Board (RWQCB) 401 Certification, U.S. Army Corps of Engineers 404 permit and approval by California Department of Fish and Game. If numerical-based water quality standards are mentioned in any of these and other related permits, testing and sampling may be required.
- Diversion and encroachment activities may constrict the waterway, which can obstruct flood flows and cause flooding or washouts. Diversion structures should not be installed without identifying potential impacts to the stream channel.
- Diversion or isolation activities are not appropriate in channels where there is insufficient stream flow to support aquatic species in the area dewatered as a result of the diversion.
- Diversion or isolation activities are inappropriate in deep water unless designed or reviewed by an engineer registered in California.
- Diversion or isolation activities should not completely dam stream flow.
- Dewatering and removal may require additional sediment control or water treatment. See NS-2, Dewatering Operations.
- Not appropriate if installation, maintenance, and removal of the structures will disturb sensitive aquatic species of concern.

Implementation

General

- Implement guidelines presented in EC-12, Streambank Stabilization to minimize impacts to streambanks.
- Where working areas encroach on flowing streams, barriers adequate to prevent the flow of muddy water into streams should be constructed and maintained between working areas and streams. During construction of the barriers, muddying of streams should be held to a minimum.
- Diversion structures must be adequately designed to accommodate fluctuations in water depth or flow volume due to tides, storms, flash floods, etc.
- Heavy equipment driven in wet portions of a water body to accomplish work should be completely clean of petroleum residue, and water levels should be below the fuel tanks, gearboxes, and axles of the equipment unless lubricants and fuels are sealed such that inundation by water will not result in discharges of fuels, oils, greases, or hydraulic fluids.

- Excavation equipment buckets may reach out into the water for the purpose of removing or placing fill materials. Only the bucket of the crane/ excavator/backhoe may operate in a water body. The main body of the crane/excavator/backhoe should not enter the water body except as necessary to cross the stream to access the work site.

- Stationary equipment such as motors and pumps located within or adjacent to a water body, should be positioned over drip pans.

- When any artificial obstruction is being constructed, maintained, or placed in operation, sufficient water should, at all times, be allowed to pass downstream to maintain aquatic life.

- Equipment should not be parked below the high water mark unless allowed by a permit.

- Disturbance or removal of vegetation should not exceed the minimum necessary to complete operations. Precautions should be taken to avoid damage to vegetation by people or equipment. Disturbed vegetation should be replaced with the appropriate erosion control measures.

- Riparian vegetation approved for trimming as part of the project should be cut off no lower than ground level to promote rapid re-growth. Access roads and work areas built over riparian vegetation should be covered by a sufficient layer of clean river run cobble to prevent damage to the underlying soil and root structure. The cobble should be removed upon completion of project activities.

- Drip pans should be placed under all vehicles and equipment placed on docks, barges, or other structures over water bodies when the vehicle or equipment is planned to be idle for more than 1 hour.

- Where possible, avoid or minimize diversion and encroachment impacts by scheduling construction during periods of low flow or when the stream is dry. Scheduling should also consider seasonal releases of water from dams, fish migration and spawning seasons, and water demands due to crop irrigation.

- Construct diversion structures with materials free of potential pollutants such as soil, silt, sand, clay, grease, or oil.

Temporary Diversions and Encroachments

- Construct diversion channels in accordance with EC-9, Earth Dikes and Drainage Swales.

- In high flow velocity areas, stabilize slopes of embankments and diversion ditches using an appropriate liner, in accordance with EC-7, Geotextiles and Mats, or use rock slope protection.

- Where appropriate, use natural streambed materials such as large cobbles and boulders for temporary embankment and slope protection, or other temporary soil stabilization methods.

- Provide for velocity dissipation at transitions in the diversion, such as the point where the stream is diverted to the channel and the point where the diverted stream is returned to its natural channel. See also EC-10, Velocity Dissipation Devices.

Temporary Dry Construction Areas

- When dewatering behind temporary structures to create a temporary dry construction area, such as cofferdams, pass pumped water through a sediment-settling device, such as a portable tank or settling basin, before returning water to the water body. See also NS-2, Dewatering Operations.

- Any substance used to assemble or maintain diversion structures, such as form oil, should be non-toxic and non-hazardous.

- Any material used to minimize seepage underneath diversion structures, such as grout, should be non-toxic, non-hazardous, and as close to a neutral pH as possible.

Comparison of Diversion and Isolation Techniques:

- Gravel bags are relatively inexpensive, but installation and removal can be labor intensive. It is also difficult to dewater the isolated area. Sandbags should not be used for this technique in rivers or streams, as sand should never be put into or adjacent to a stream, even if encapsulated in geotextile.

- Gravel Bag Berms (SE-6) used in conjunction with an impermeable membrane are cost effective, and can be dewatered relatively easily. If spawning gravel is used, the impermeable membrane can be removed from the stream, and the gravel can be spread out and left as salmonid spawning habitat if approved in the permit. Only clean, washed gravel should be used for both the gravel bag and gravel berm techniques.

- Cofferdams are relatively expensive, but frequently allow full dewatering. Also, many options now available are relatively easy to install.

- Sheet pile enclosures are a much more expensive solution, but do allow full dewatering. This technique is not well suited to small streams, but can be effective on large rivers or lakes, and where staging and heavy equipment access areas are available.

- K-rails are an isolation method that does not allow full dewatering, but can be used in small to large watercourses, and in fast-water situations.

- A relatively inexpensive isolation method is filter fabric isolation. This method involves placement of gravel bags or continuous berms to 'key-in' the fabric, and subsequently staking the fabric in place. This method should be used in relatively calm water, and can be used in smaller streams. Note that this is not a dewatering method, but rather a sediment isolation method.

- Turbidity curtains should be used where sediment discharge to a stream is unavoidable. They can also be used for in-stream construction, when dewatering an area is not required.

- When used in watercourses or streams, cofferdams must be used in accordance with permit requirements.

- Manufactured diversion structures should be installed following manufacturer's specifications.

- Filter fabric and turbidity curtain isolation installation methods can be found in the specific technique descriptions that follow.

Filter Fabric Isolation Technique

Definition and Purpose

A filter fabric isolation structure is a temporary structure built into a waterway to enclose a construction area and reduce sediment pollution from construction work in or adjacent to water. This structure is composed of filter fabric, gravel bags, and steel t-posts.

Appropriate Applications

- Filter fabric may be used for construction activities such as streambank stabilization, or culvert, bridge, pier or abutment installation. It may also be used in combination with other methods, such as clean water bypasses and/or pumps.
- Filter fabric isolation is relatively inexpensive. This method involves placement of gravel bags or continuous berms to 'key-in' the fabric, and subsequently staking the fabric in place.
- If spawning gravel is used, all other components of the isolation can be removed from the stream, and the gravel may be spread out and left as salmonid spawning habitat if approved in the permit. Whether spawning gravel or other types of gravel are used, only clean washed gravel should be used as infill for the gravel bags or continuous berm.
- This method should be used in relatively calm water, and can be used in smaller streams. This is not a dewatering method, but rather a sediment isolation method.
- Water levels inside and outside the fabric curtain must be about the same, as differential heads will cause the curtain to collapse.

Limitations

- Do not use if the installation, maintenance and removal of the structures will disturb sensitive aquatic species of concern.
- Filter fabrics are not appropriate for projects where dewatering is necessary.
- Filter fabrics are not appropriate to completely dam stream flow.

Design and Installation

- For the filter fabric isolation method, a non-woven or heavy-duty fabric is recommended over standard silt fence. Using rolled geotextiles allows non-standard widths to be used.
- Anchor filter fabric with gravel bags filled with clean, washed gravel. Do not use sand. If a bag should split open, the gravel can be left in the stream, where it can provide aquatic habitat benefits. If a sandbag splits open in a watercourse, the sand could cause a decrease in water quality, and could bury sensitive aquatic habitat.
- Another anchor alternative is a continuous berm, made with the Continuous Berm Machine. This is a gravel-filled bag that can be made in very long segments. The length of the berms is usually limited to 18 ft for ease of handling (otherwise, it gets too heavy to move).

- Place the fabric on the bottom of the stream, and place either a bag of clean, washed gravel or a continuous berm over the bottom of the silt fence fabric, such that a bag-width of fabric lies on the stream bottom. The bag should be placed on what will be the outside of the isolation area.
- Pull the fabric up, and place a metal t-post immediately behind the fabric, on the inside of the isolation area; attach the silt fence to the post with three diagonal nylon ties.
- Continue placing fabric as described above until the entire work area has been isolated, staking the fabric at least every 6 ft.

Inspection and Maintenance

- Immediately repair any gaps, holes or scour.
- Remove and properly dispose of sediment buildup.
- Remove BMP upon completion of construction activity. Recycle or reuse if applicable.
- Revegetate areas disturbed by BMP removal if needed.

Turbidity Curtain Isolation Technique

Definition and Purpose

A turbidity curtain is a fabric barrier used to isolate the near shore work area. The barriers are intended to confine the suspended sediment. The curtain is a floating barrier, and thus does not prevent water from entering the isolated area; rather, it prevents suspended sediment from getting out.

Appropriate Applications

Turbidity curtains should be used where sediment discharge to a stream is unavoidable. They are used when construction activities adjoin quiescent waters, such as lakes, ponds, and slow flowing rivers. The curtains are designed to deflect and contain sediment within a limited area and provide sufficient retention time so that the sediment particles will fall out of suspension.

Limitations

- Turbidity curtains should not be used in flowing water; they are best suited for use in ponds, lakes, and very slow-moving rivers.
- Turbidity curtains should not be placed across the width of a channel.
- Removing sediment that has been deflected and settled out by the curtain may create a discharge problem through the resuspension of particles and by accidental dumping by the removal equipment.

Design and Installation

- Turbidity curtains should be oriented parallel to the direction of flow.
- The curtain should extend the entire depth of the watercourse in calm-water situations.
- In wave conditions, the curtain should extend to within 1 ft of the bottom of the watercourse, such that the curtain does not stir up sediment by hitting the bottom repeatedly. If it is

desirable for the curtain to reach the bottom in an active-water situation, a pervious filter fabric may be used for the bottom 1 ft.

- The top of the curtain should consist of flexible flotation buoys, and the bottom should be held down by a load line incorporated into the curtain fabric. The fabric should be a brightly colored impervious mesh.
- The curtain should be held in place by anchors placed at least every 100 ft.
- First, place the anchors, then tow the fabric out in a furled condition, and connect to the anchors. The anchors should be connected to the flotation devices, and not to the bottom of the curtain. Once in place, cut the furling lines, and allow the bottom of the curtain to sink.
- Consideration must be given to the probable outcome of the removal procedure. It must be determined if it will create more of a sediment problem through re-suspension of the particles or by accidental dumping of material during removal. It is recommended that the soil particles trapped by the turbidity curtain only be removed if there has been a significant change in the original contours of the affected area in the watercourse.
- Particles should always be allowed to settle for a minimum of 6 to 12 hours prior to their removal or prior to removal of the turbidity curtain.

Maintenance and Inspection:

- The curtain should be inspected for holes or other problems, and any repairs needed should be made promptly.
- Allow sediment to settle for 6 to 12 hours prior to removal of sediment or curtain. This means that after removing sediment, wait an additional 6 to 12 hours before removing the curtain.
- To remove, install furling lines along the curtain, detach from anchors, and tow out of the water.

K-rail River Isolation

Definition and Purpose

This temporary sediment control or stream isolation method uses K-rails to form the sediment deposition area, or to isolate the in-stream or near-bank construction area.

Barriers are placed end-to-end in a pre-designed configuration and gravel-filled bags are used at the toe of the barrier and at their abutting ends to seal and prevent movement of sediment beneath or through the barrier walls.

Appropriate Applications

The K-rail isolation can be used in streams with higher water velocities than many other isolation techniques.

- This technique is also useful at the toe of embankments, and cut or fill slopes.

Limitations

- The K-rail method should not be used to dewater a project site, as the barrier is not watertight.

Design and Installation

- To create a floor for the K-rail, move large rocks and obstructions. Place washed gravel and gravel-filled bags to create a level surface for K-rails to sit. Washed gravel should always be used.
- Place the bottom two K-rails adjacent to each other, and parallel to the direction of flow; fill the center portion with gravel bags. Then place the third K-rail on top of the bottom two. There should be sufficient gravel bags between the bottom K-rails such that the top rail is supported by the gravel. Place plastic sheeting around the K-rails, and secure at the bottom with gravel bags.
- Further support can be added by pinning and cabling the K-rails together. Also, large riprap and boulders can be used to support either side of the K-rail, especially where there is strong current.

Inspection and Maintenance:

- The barrier should be inspected and any leaks, holes, or other problems should be addressed immediately.
- Sediment should be allowed to settle for at least 6 to 12 hours prior to removal of sediment, and for 6 to 12 hours prior to removal of the barrier.

Stream Diversions

The selection of which stream diversion technique to use will depend upon the type of work involved, physical characteristics of the site, and the volume of water flowing through the project.

Advantages of a Pumped Diversion

- Downstream sediment transport can be nearly eliminated.
- Dewatering of the work area is possible.
- Pipes can be moved around to allow construction operations.
- The dams can serve as temporary access to the site.
- Increased flows can be managed by adding more pumping capacity.

Disadvantages of a Pumped Diversion

- Flow volume is limited by pump capacity.
- A pumped diversion requires 24 hour monitoring of pumps.
- Sudden rain could overtop dams.
- Erosion at the outlet.

- Minor in-stream disturbance is required to install and remove dams.

Advantages of Excavated Channels and Flumes

- Excavated channels isolate work from water flow and allow dewatering.
- Excavated channels can handle larger flows than pumps.

Disadvantages of Excavated Channels and Flumes

- Bypass channel or flume must be sized to handle flows, including possible floods.
- Channels must be protected from erosion.
- Flow diversion and re-direction with small dams involves in-stream disturbance and mobilization of sediment.

Design and Installation

- Installation guidelines will vary based on existing site conditions and type of diversion used.
- Pump capacity must be sufficient for design flow.
- A standby pump is required in case a primary pump fails.
- Dam materials used to create dams upstream and downstream of diversion should be erosion resistant; materials such as steel plate, sheet pile, sandbags, continuous berms, inflatable water bladders, etc., would be acceptable.

When constructing a diversion channel, begin excavation of the channel at the proposed downstream end, and work upstream. Once the watercourse to be diverted is reached and the excavated channel is stable, breach the upstream end and allow water to flow down the new channel. Once flow has been established in the diversion channel, install the diversion weir in the main channel; this will force all water to be diverted from the main channel.

Inspection and Maintenance

- Pumped diversions require 24 hour monitoring of pumps.
- Inspect embankments and diversion channels for damage to the linings, accumulating debris, sediment buildup, and adequacy of the slope protection. Remove debris and repair linings and slope protection as required. Remove holes, gaps, or scour.
- Upon completion of work, the diversion or isolation structure should be removed and flow should be redirected through the new culvert or back into the original stream channel. Recycle or reuse if applicable.
- Revegetate areas disturbed by BMP removal if needed.

Costs

Costs of clear water diversion vary considerably and can be very high.

Inspection and Maintenance

- Inspect and verify that activity-based BMPs are in place prior to the commencement of associated activities. While activities associated with the BMP are under way, inspect BMPs in accordance with General Permit requirements for the associated project type and risk level. It is recommended that at a minimum, BMPs be inspected weekly, prior to forecasted rain events, daily during extended rain events, and after the conclusion of rain events.
- Inspect BMPs subject to non-stormwater discharges daily while non-stormwater discharges occur.
- Refer to BMP-specific inspection and maintenance requirements.

References

California Bank and Shore Rock Slope Protection Design – Practitioners Guide and Field Evaluations of Riprap Methods, Caltrans Study No. F90TL03, October, 2000.

Stormwater Quality Handbooks - Construction Site Best Management Practices (BMPs) Manual, State of California Department of Transportation (Caltrans), November 2000.

Illicit Connection / Discharge NS-6

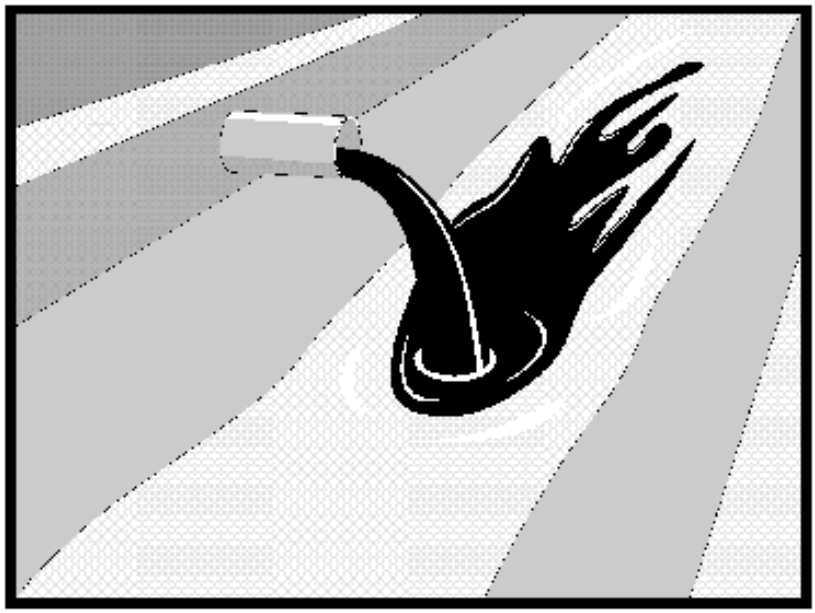

Categories

EC	Erosion Control	
SE	Sediment Control	
TC	Tracking Control	
WE	Wind Erosion Control	
NS	Non-Stormwater Management Control	☑
WM	Waste Management and Materials Pollution Control	

Legend:

☑ **Primary Objective**

☒ **Secondary Objective**

Targeted Constituents

Sediment	
Nutrients	☑
Trash	☑
Metals	☑
Bacteria	☑
Oil and Grease	☑
Organics	☑

Potential Alternatives

None

If User/Subscriber modifies this fact sheet in any way, the CASQA name/logo and footer below must be removed from each page and not appear on the modified version.

Description and Purpose

Procedures and practices designed for construction contractors to recognize illicit connections or illegally dumped or discharged materials on a construction site and report incidents.

Suitable Applications

This best management practice (BMP) applies to all construction projects. Illicit connection/discharge and reporting is applicable anytime an illicit connection or discharge is discovered or illegally dumped material is found on the construction site.

Limitations

Illicit connections and illegal discharges or dumping, for the purposes of this BMP, refer to discharges and dumping caused by parties other than the contractor. If pre-existing hazardous materials or wastes are known to exist onsite, they should be identified in the SWPPP and handled as set forth in the SWPPP.

Implementation

Planning

- Review the SWPPP. Pre-existing areas of contamination should be identified and documented in the SWPPP.
- Inspect site before beginning the job for evidence of illicit connections, illegal dumping or discharges. Document any pre-existing conditions and notify the owner.

CASQA
CALIFORNIA STORMWATER QUALITY ASSOCIATION

- Inspect site regularly during project execution for evidence of illicit connections, illegal dumping or discharges.
- Observe site perimeter for evidence for potential of illicitly discharged or illegally dumped material, which may enter the job site.

Identification of Illicit Connections and Illegal Dumping or Discharges

- **General –** unlabeled and unidentifiable material should be treated as hazardous.
- **Solids** - Look for debris, or rubbish piles. Solid waste dumping often occurs on roadways with light traffic loads or in areas not easily visible from the traveled way.
- **Liquids** - signs of illegal liquid dumping or discharge can include:
  - Visible signs of staining or unusual colors to the pavement or surrounding adjacent soils
  - Pungent odors coming from the drainage systems
  - Discoloration or oily substances in the water or stains and residues detained within ditches, channels or drain boxes
  - Abnormal water flow during the dry weather season
- **Urban Areas** - Evidence of illicit connections or illegal discharges is typically detected at storm drain outfall locations or at manholes. Signs of an illicit connection or illegal discharge can include:
  - Abnormal water flow during the dry weather season
  - Unusual flows in sub drain systems used for dewatering
  - Pungent odors coming from the drainage systems
  - Discoloration or oily substances in the water or stains and residues detained within ditches, channels or drain boxes
  - Excessive sediment deposits, particularly adjacent to or near active offsite construction projects
- **Rural Areas** - Illicit connections or illegal discharges involving irrigation drainage ditches are detected by visual inspections. Signs of an illicit discharge can include:
  - Abnormal water flow during the non-irrigation season
  - Non-standard junction structures
  - Broken concrete or other disturbances at or near junction structures

Reporting

Notify the owner of any illicit connections and illegal dumping or discharge incidents at the time of discovery. For illicit connections or discharges to the storm drain system, notify the local stormwater management agency. For illegal dumping, notify the local law enforcement agency.

Cleanup and Removal

The responsibility for cleanup and removal of illicit or illegal dumping or discharges will vary by location. Contact the local stormwater management agency for further information.

Costs

Costs to look for and report illicit connections and illegal discharges and dumping are low. The best way to avoid costs associated with illicit connections and illegal discharges and dumping is to keep the project perimeters secure to prevent access to the site, to observe the site for vehicles that should not be there, and to document any waste or hazardous materials that exist onsite before taking possession of the site.

Inspection and Maintenance

- Inspect and verify that activity-based BMPs are in place prior to the commencement of associated activities. While activities associated with the BMP are under way, inspect BMPs in accordance with General Permit requirements for the associated project type and risk level. It is recommended that at a minimum, BMPs be inspected weekly, prior to forecasted rain events, daily during extended rain events, and after the conclusion of rain events.
- Inspect the site regularly to check for any illegal dumping or discharge.
- Prohibit employees and subcontractors from disposing of non-job related debris or materials at the construction site.
- Notify the owner of any illicit connections and illegal dumping or discharge incidents at the time of discovery.

References

Blueprint for a Clean Bay: Best Management Practices to Prevent Stormwater Pollution from Construction Related Activities; Santa Clara Valley Nonpoint Source Pollution Control Program, 1995.

Stormwater Quality Handbooks - Construction Site Best Management Practices (BMPs) Manual, State of California Department of Transportation (Caltrans), November 2000.

Stormwater Management for Construction Activities, Developing Pollution Prevention Plans and Best Management Practices, EPA 832-R-92005; USEPA, April 1992.

Potable Water / Irrigation NS-7

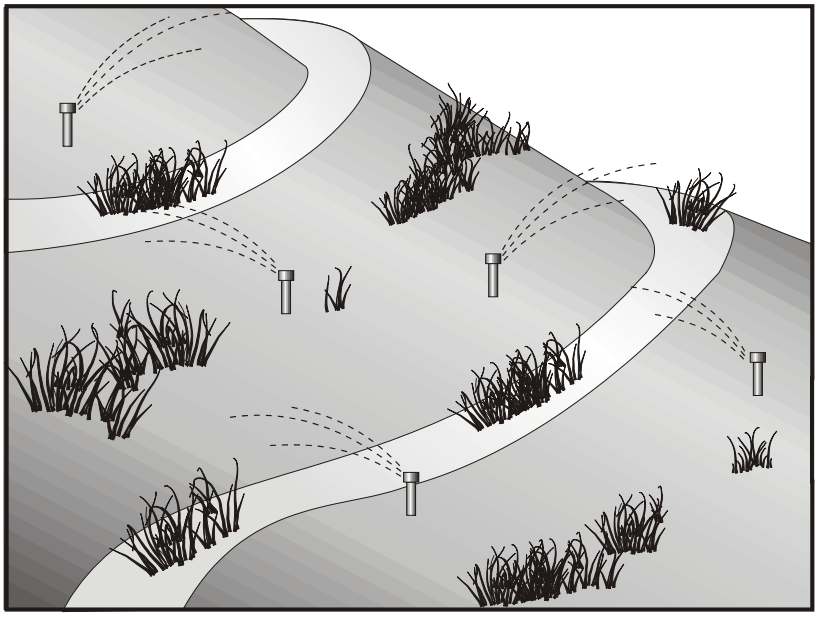

Categories

EC	Erosion Control	
SE	Sediment Control	
TC	Tracking Control	
WE	Wind Erosion Control	
NS	Non-Stormwater Management Control	☑
WM	Waste Management and Materials Pollution Control	

Legend:

☑ **Primary Objective**

☒ **Secondary Objective**

Targeted Constituents

Sediment	☑
Nutrients	☑
Trash	
Metals	☑
Bacteria	
Oil and Grease	
Organics	☑

Potential Alternatives

None

Description and Purpose

Potable Water/Irrigation consists of practices and procedures to manage the discharge of potential pollutants generated during discharges from irrigation water lines, landscape irrigation, lawn or garden watering, planned and unplanned discharges from potable water sources, water line flushing, and hydrant flushing.

Suitable Applications

Implement this BMP whenever potable water or irrigation water discharges occur at or enter a construction site.

Limitations

None identified.

Implementation

- Direct water from offsite sources around or through a construction site, where feasible, in a way that minimizes contact with the construction site.
- Discharges from water line flushing should be reused for landscaping purposes where feasible.
- Shut off the water source to broken lines, sprinklers, or valves as soon as possible to prevent excess water flow.
- Protect downstream stormwater drainage systems and watercourses from water pumped or bailed from trenches excavated to repair water lines.

If User/Subscriber modifies this fact sheet in any way, the CASQA name/logo and footer below must be removed from each page and not appear on the modified version.

- Inspect irrigated areas within the construction limits for excess watering. Adjust watering times and schedules to ensure that the appropriate amount of water is being used and to minimize runoff. Consider factors such as soil structure, grade, time of year, and type of plant material in determining the proper amounts of water for a specific area.

Costs

Cost to manage potable water and irrigation are low and generally considered to be a normal part of related activities.

Inspection and Maintenance

- Inspect and verify that activity-based BMPs are in place prior to the commencement of associated activities. While activities associated with the BMP are under way, inspect BMPs in accordance with General Permit requirements for the associated project type and risk level. It is recommended that at a minimum, BMPs be inspected weekly, prior to forecasted rain events, daily during extended rain events, and after the conclusion of rain events..
- Inspect BMPs subject to non-stormwater discharges daily while non-stormwater discharges occur.
- Repair broken water lines as soon as possible.
- Inspect irrigated areas regularly for signs of erosion and/or discharge.

References

Blueprint for a Clean Bay: Best Management Practices to Prevent Stormwater Pollution from Construction Related Activities; Santa Clara Valley Nonpoint Source Pollution Control Program, 1995.

Stormwater Quality Handbooks - Construction Site Best Management Practices (BMPs) Manual, State of California Department of Transportation (Caltrans), November 2000.

Stormwater Management for Construction Activities, Developing Pollution Prevention Plans and Best Management Practices, EPA 832-R-92005; USEPA, April 1992.

Vehicle and Equipment Cleaning NS-8

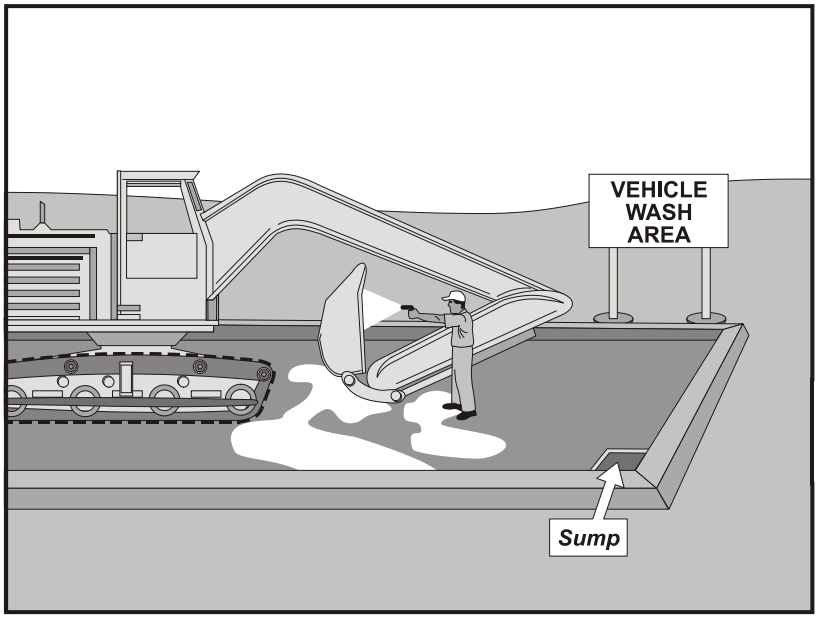

Categories

EC	Erosion Control	
SE	Sediment Control	
TC	Tracking Control	
WE	Wind Erosion Control	
NS	Non-Stormwater Management Control	☑
WM	Waste Management and Materials Pollution Control	

Legend:

☑ **Primary Objective**

☒ **Secondary Objective**

Targeted Constituents

Sediment	☑
Nutrients	☑
Trash	
Metals	
Bacteria	
Oil and Grease	☑
Organics	☑

Potential Alternatives

None

Description and Purpose

Vehicle and equipment cleaning procedures and practices eliminate or reduce the discharge of pollutants to stormwater from vehicle and equipment cleaning operations. Procedures and practices include but are not limited to: using offsite facilities; washing in designated, contained areas only; eliminating discharges to the storm drain by infiltrating the wash water; and training employees and subcontractors in proper cleaning procedures.

Suitable Applications

These procedures are suitable on all construction sites where vehicle and equipment cleaning is performed.

Limitations

Even phosphate-free, biodegradable soaps have been shown to be toxic to fish before the soap degrades. Sending vehicles/equipment offsite should be done in conjunction with TC-1, Stabilized Construction Entrance/Exit.

Implementation

Other options to washing equipment onsite include contracting with either an offsite or mobile commercial washing business. These businesses may be better equipped to handle and dispose of the wash waters properly. Performing this work offsite can also be economical by eliminating the need for a separate washing operation onsite.

If washing operations are to take place onsite, then:

If User/Subscriber modifies this fact sheet in any way, the CASQA name/logo and footer below must be removed from each page and not appear on the modified version.

- Use phosphate-free, biodegradable soaps.
- Educate employees and subcontractors on pollution prevention measures.
- Do not permit steam cleaning onsite. Steam cleaning can generate significant pollutant concentrates.
- Cleaning of vehicles and equipment with soap, solvents or steam should not occur on the project site unless resulting wastes are fully contained and disposed of. Resulting wastes should not be discharged or buried, and must be captured and recycled or disposed according to the requirements of WM-10, Liquid Waste Management or WM-6, Hazardous Waste Management, depending on the waste characteristics. Minimize use of solvents. Use of diesel for vehicle and equipment cleaning is prohibited.
- All vehicles and equipment that regularly enter and leave the construction site must be cleaned offsite.
- When vehicle and equipment washing and cleaning must occur onsite, and the operation cannot be located within a structure or building equipped with appropriate disposal facilities, the outside cleaning area should have the following characteristics:
  - Located away from storm drain inlets, drainage facilities, or watercourses
  - Paved with concrete or asphalt and bermed to contain wash waters and to prevent runon and runoff
  - Configured with a sump to allow collection and disposal of wash water
  - No discharge of wash waters to storm drains or watercourses
  - Used only when necessary
- When cleaning vehicles and equipment with water:
  - Use as little water as possible. High-pressure sprayers may use less water than a hose and should be considered
  - Use positive shutoff valve to minimize water usage
  - Facility wash racks should discharge to a sanitary sewer, recycle system or other approved discharge system and must not discharge to the storm drainage system, watercourses, or to groundwater

Costs

Cleaning vehicles and equipment at an offsite facility may reduce overall costs for vehicle and equipment cleaning by eliminating the need to provide similar services onsite. When onsite cleaning is needed, the cost to establish appropriate facilities is relatively low on larger, long-duration projects, and moderate to high on small, short-duration projects.

Inspection and Maintenance

- Inspect and verify that activity-based BMPs are in place prior to the commencement of associated activities. While activities associated with the BMP are under way, inspect BMPs in accordance with General Permit requirements for the associated project type and risk level. It is recommended that at a minimum, BMPs be inspected weekly, prior to forecasted rain events, daily during extended rain events, and after the conclusion of rain events.
- Inspect BMPs subject to non-stormwater discharges daily while non-stormwater discharges occur.
- Inspection and maintenance is minimal, although some berm repair may be necessary.
- Monitor employees and subcontractors throughout the duration of the construction project to ensure appropriate practices are being implemented.
- Inspect sump regularly and remove liquids and sediment as needed.
- Prohibit employees and subcontractors from washing personal vehicles and equipment on the construction site.

References

Stormwater Quality Handbooks - Construction Site Best Management Practices (BMPs) Manual, State of California Department of Transportation (Caltrans), November 2000.

Swisher, R.D. Surfactant Biodegradation, Marcel Decker Corporation, 1987.

Vehicle and Equipment Fueling NS-9

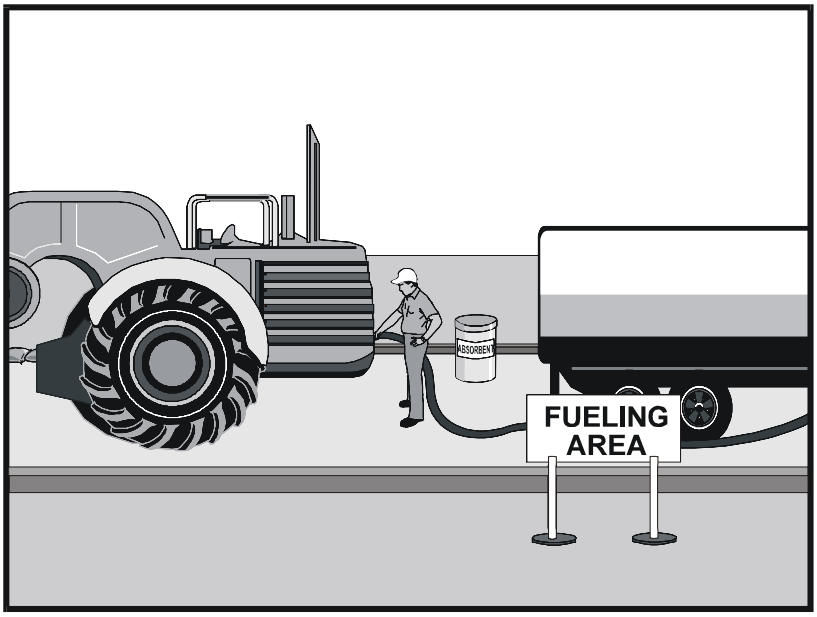

Categories

EC	Erosion Control	
SE	Sediment Control	
TC	Tracking Control	
WE	Wind Erosion Control	
NS	Non-Stormwater Management Control	☑
WM	Waste Management and Materials Pollution Control	

Legend:

☑ **Primary Objective**

☒ **Secondary Objective**

Targeted Constituents

Sediment	
Nutrients	
Trash	
Metals	
Bacteria	
Oil and Grease	☑
Organics	

Potential Alternatives

None

If User/Subscriber modifies this fact sheet in any way, the CASQA name/logo and footer below must be removed from each page and not appear on the modified version.

Description and Purpose

Vehicle equipment fueling procedures and practices are designed to prevent fuel spills and leaks, and reduce or eliminate contamination of stormwater. This can be accomplished by using offsite facilities, fueling in designated areas only, enclosing or covering stored fuel, implementing spill controls, and training employees and subcontractors in proper fueling procedures.

Suitable Applications

These procedures are suitable on all construction sites where vehicle and equipment fueling takes place.

Limitations

Onsite vehicle and equipment fueling should only be used where it is impractical to send vehicles and equipment offsite for fueling. Sending vehicles and equipment offsite should be done in conjunction with TC-1, Stabilized Construction Entrance/ Exit.

Implementation

- Use offsite fueling stations as much as possible. These businesses are better equipped to handle fuel and spills properly. Performing this work offsite can also be economical by eliminating the need for a separate fueling area at a site.
- Discourage "topping-off" of fuel tanks.

- Absorbent spill cleanup materials and spill kits should be available in fueling areas and on fueling trucks, and should be disposed of properly after use.
- Drip pans or absorbent pads should be used during vehicle and equipment fueling, unless the fueling is performed over an impermeable surface in a dedicated fueling area.
- Use absorbent materials on small spills. Do not hose down or bury the spill. Remove the adsorbent materials promptly and dispose of properly.
- Avoid mobile fueling of mobile construction equipment around the site; rather, transport the equipment to designated fueling areas. With the exception of tracked equipment such as bulldozers and large excavators, most vehicles should be able to travel to a designated area with little lost time.
- Train employees and subcontractors in proper fueling and cleanup procedures.
- When fueling must take place onsite, designate an area away from drainage courses to be used. Fueling areas should be identified in the SWPPP.
- Dedicated fueling areas should be protected from stormwater runon and runoff, and should be located at least 50 ft away from downstream drainage facilities and watercourses. Fueling must be performed on level-grade areas.
- Protect fueling areas with berms and dikes to prevent runon, runoff, and to contain spills.
- Nozzles used in vehicle and equipment fueling should be equipped with an automatic shutoff to control drips. Fueling operations should not be left unattended.
- Use vapor recovery nozzles to help control drips as well as air pollution where required by Air Quality Management Districts (AQMD).
- Federal, state, and local requirements should be observed for any stationary above ground storage tanks.

Costs

- All of the above measures are low cost except for the capital costs of above ground tanks that meet all local environmental, zoning, and fire codes.

Inspection and Maintenance

- Inspect BMPs in accordance with General Permit requirements for the associated project type and risk level. It is recommended that at a minimum, BMPs be inspected weekly, prior to forecasted rain events, daily during extended rain events, and after the conclusion of rain events.
- Vehicles and equipment should be inspected each day of use for leaks. Leaks should be repaired immediately or problem vehicles or equipment should be removed from the project site.
- Keep ample supplies of spill cleanup materials onsite.

- Immediately clean up spills and properly dispose of contaminated soil and cleanup materials.

References

Blueprint for a Clean Bay: Best Management Practices to Prevent Stormwater Pollution from Construction Related Activities; Santa Clara Valley Nonpoint Source Pollution Control Program, 1995.

Coastal Nonpoint Pollution Control Program: Program Development and Approval Guidance, Working Group Working Paper; USEPA, April 1992.

Stormwater Quality Handbooks - Construction Site Best Management Practices (BMPs) Manual, State of California Department of Transportation (Caltrans), November 2000.

Stormwater Management for Construction Activities, Developing Pollution Prevention Plans and Best Management Practices, EPA 832-R-92005; USEPA, April 1992.

Vehicle & Equipment Maintenance NS-10

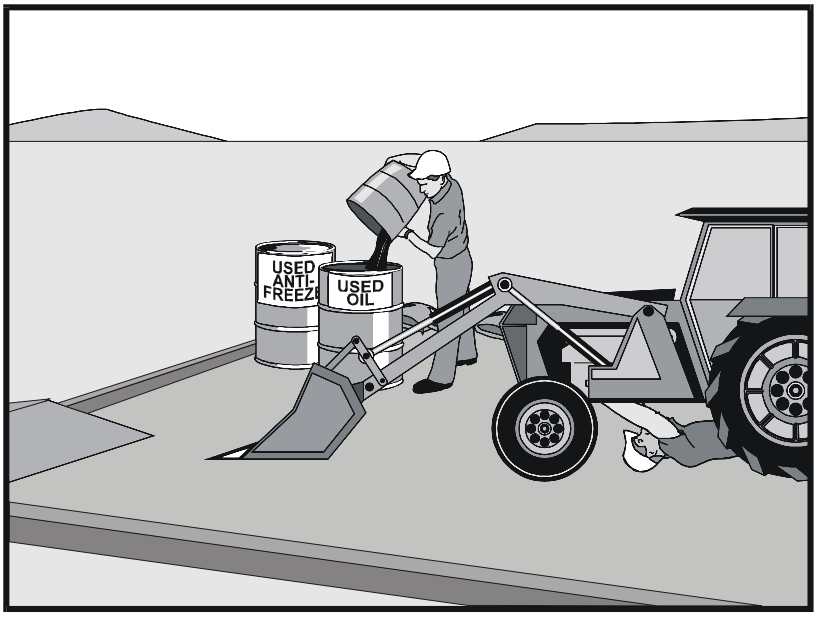

Categories

EC	Erosion Control	
SE	Sediment Control	
TC	Tracking Control	
WE	Wind Erosion Control	
NS	Non-Stormwater Management Control	☑
WM	Waste Management and Materials Pollution Control	

Legend:

☑ **Primary Objective**

☒ **Secondary Objective**

Targeted Constituents

Sediment	
Nutrients	☑
Trash	☑
Metals	
Bacteria	
Oil and Grease	☑
Organics	☑

Potential Alternatives

None

Description and Purpose

Prevent or reduce the contamination of stormwater resulting from vehicle and equipment maintenance by running a "dry and clean site". The best option would be to perform maintenance activities at an offsite facility. If this option is not available then work should be performed in designated areas only, while providing cover for materials stored outside, checking for leaks and spills, and containing and cleaning up spills immediately. Employees and subcontractors must be trained in proper procedures.

Suitable Applications

These procedures are suitable on all construction projects where an onsite yard area is necessary for storage and maintenance of heavy equipment and vehicles.

Limitations

Onsite vehicle and equipment maintenance should only be used where it is impractical to send vehicles and equipment offsite for maintenance and repair. Sending vehicles/equipment offsite should be done in conjunction with TC-1, Stabilized Construction Entrance/Exit.

Outdoor vehicle or equipment maintenance is a potentially significant source of stormwater pollution. Activities that can contaminate stormwater include engine repair and service, changing or replacement of fluids, and outdoor equipment storage and parking (engine fluid leaks). For further information on vehicle or equipment servicing, see NS-8,

If User/Subscriber modifies this fact sheet in any way, the CASQA name/logo and footer below must be removed from each page and not appear on the modified version.

Vehicle and Equipment Cleaning, and NS-9, Vehicle and Equipment Fueling.

Implementation

- Use offsite repair shops as much as possible. These businesses are better equipped to handle vehicle fluids and spills properly. Performing this work offsite can also be economical by eliminating the need for a separate maintenance area.
- If maintenance must occur onsite, use designated areas, located away from drainage courses. Dedicated maintenance areas should be protected from stormwater runon and runoff, and should be located at least 50 ft from downstream drainage facilities and watercourses.
- Drip pans or absorbent pads should be used during vehicle and equipment maintenance work that involves fluids, unless the maintenance work is performed over an impermeable surface in a dedicated maintenance area.
- Place a stockpile of spill cleanup materials where it will be readily accessible.
- All fueling trucks and fueling areas are required to have spill kits and/or use other spill protection devices.
- Use adsorbent materials on small spills. Remove the absorbent materials promptly and dispose of properly.
- Inspect onsite vehicles and equipment daily at startup for leaks, and repair immediately.
- Keep vehicles and equipment clean; do not allow excessive build-up of oil and grease.
- Segregate and recycle wastes, such as greases, used oil or oil filters, antifreeze, cleaning solutions, automotive batteries, hydraulic and transmission fluids. Provide secondary containment and covers for these materials if stored onsite.
- Train employees and subcontractors in proper maintenance and spill cleanup procedures.
- Drip pans or plastic sheeting should be placed under all vehicles and equipment placed on docks, barges, or other structures over water bodies when the vehicle or equipment is planned to be idle for more than 1 hour.
- For long-term projects, consider using portable tents or covers over maintenance areas if maintenance cannot be performed offsite.
- Consider use of new, alternative greases and lubricants, such as adhesive greases, for chassis lubrication and fifth-wheel lubrication.
- Properly dispose of used oils, fluids, lubricants, and spill cleanup materials.
- Do not place used oil in a dumpster or pour into a storm drain or watercourse.
- Properly dispose of or recycle used batteries.
- Do not bury used tires.

- Repair leaks of fluids and oil immediately.

Listed below is further information if you must perform vehicle or equipment maintenance onsite.

Safer Alternative Products

- Consider products that are less toxic or hazardous than regular products. These products are often sold under an "environmentally friendly" label.
- Consider use of grease substitutes for lubrication of truck fifth-wheels. Follow manufacturers label for details on specific uses.
- Consider use of plastic friction plates on truck fifth-wheels in lieu of grease. Follow manufacturers label for details on specific uses.

Waste Reduction

Parts are often cleaned using solvents such as trichloroethylene, trichloroethane, or methylene chloride. Many of these cleaners are listed in California Toxic Rule as priority pollutants. These materials are harmful and must not contaminate stormwater. They must be disposed of as a hazardous waste. Reducing the number of solvents makes recycling easier and reduces hazardous waste management costs. Often, one solvent can perform a job as well as two different solvents. Also, if possible, eliminate or reduce the amount of hazardous materials and waste by substituting non-hazardous or less hazardous materials. For example, replace chlorinated organic solvents with non-chlorinated solvents. Non-chlorinated solvents like kerosene or mineral spirits are less toxic and less expensive to dispose of properly. Check the list of active ingredients to see whether it contains chlorinated solvents. The "chlor" term indicates that the solvent is chlorinated. Also, try substituting a wire brush for solvents to clean parts.

Recycling and Disposal

Separating wastes allows for easier recycling and may reduce disposal costs. Keep hazardous wastes separate, do not mix used oil solvents, and keep chlorinated solvents (like,-trichloroethane) separate from non-chlorinated solvents (like kerosene and mineral spirits). Promptly transfer used fluids to the proper waste or recycling drums. Don't leave full drip pans or other open containers lying around. Provide cover and secondary containment until these materials can be removed from the site.

Oil filters can be recycled. Ask your oil supplier or recycler about recycling oil filters.

Do not dispose of extra paints and coatings by dumping liquid onto the ground or throwing it into dumpsters. Allow coatings to dry or harden before disposal into covered dumpsters.

Store cracked batteries in a non-leaking secondary container. Do this with all cracked batteries, even if you think all the acid has drained out. If you drop a battery, treat it as if it is cracked. Put it into the containment area until you are sure it is not leaking.

Costs

All of the above are low cost measures. Higher costs are incurred to setup and maintain onsite maintenance areas.

Inspection and Maintenance

- Inspect and verify that activity-based BMPs are in place prior to the commencement of associated activities. While activities associated with the BMP are under way, inspect BMPs in accordance with General Permit requirements for the associated project type and risk level. It is recommended that at a minimum, BMPs be inspected weekly, prior to forecasted rain events, daily during extended rain events, and after the conclusion of rain events.
- Inspect BMPs subject to non-stormwater discharges daily while non-stormwater discharges occur.
- Keep ample supplies of spill cleanup materials onsite.
- Maintain waste fluid containers in leak proof condition.
- Vehicles and equipment should be inspected on each day of use. Leaks should be repaired immediately or the problem vehicle(s) or equipment should be removed from the project site.
- Inspect equipment for damaged hoses and leaky gaskets routinely. Repair or replace as needed.

References

Blueprint for a Clean Bay: Best Management Practices to Prevent Stormwater Pollution from Construction Related Activities; Santa Clara Valley Nonpoint Source Pollution Control Program, 1995.

Coastal Nonpoint Pollution Control Program; Program Development and Approval Guidance, Working Group, Working Paper; USEPA, April 1992.

Stormwater Quality Handbooks - Construction Site Best Management Practices (BMPs) Manual, State of California Department of Transportation (Caltrans), November 2000.

Pile Driving Operations NS-11

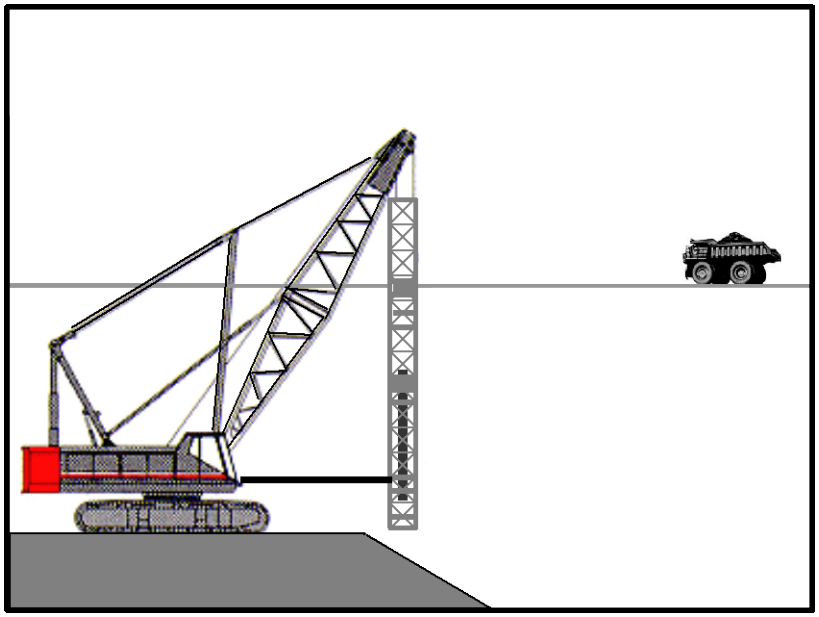

Categories		
EC	Erosion Control	
SE	Sediment Control	
TC	Tracking Control	
WE	Wind Erosion Control	
NS	Non-Stormwater Management Control	☑
WM	Waste Management and Materials Pollution Control	

Legend:
☑ **Primary Objective**
☒ **Secondary Objective**

Targeted Constituents	
Sediment	☑
Nutrients	
Trash	
Metals	
Bacteria	
Oil and Grease	☑
Organics	

Potential Alternatives

None

If User/Subscriber modifies this fact sheet in any way, the CASQA name/logo and footer below must be removed from each page and not appear on the modified version.

Description and Purpose

The construction and retrofit of bridges and retaining walls often include driving piles for foundation support and shoring operations. Driven piles are typically constructed of precast concrete, steel, or timber. Driven sheet piles are also used for shoring and cofferdam construction. Proper control and use of equipment, materials, and waste products from pile driving operations will reduce or eliminate the discharge of potential pollutants to the storm drain system, watercourses, and waters of the United States.

Suitable Applications

These procedures apply to all construction sites near or adjacent to a watercourse or groundwater where permanent and temporary pile driving (impact and vibratory) takes place, including operations using pile shells as well as construction of cast-in-steel-shell and cast-in-drilled-hole piles.

Limitations

None identified.

Implementation

- Use drip pans or absorbent pads during vehicle and equipment operation, maintenance, cleaning, fueling, and storage. Refer to NS-8, Vehicle and Equipment Cleaning, NS-9, Vehicle and Equipment Fueling, and NS-10, Vehicle and Equipment Maintenance.

CASQA
CALIFORNIA STORMWATER QUALITY ASSOCIATION

- Have spill kits and cleanup materials available at all locations of pile driving. Refer to WM-4, Spill Prevention and Control.
- Equipment that is stored or in use in streambeds, or on docks, barges, or other structures over water bodies should be kept leak free.
- Park equipment over plastic sheeting or equivalent where possible. Plastic is not a substitute for drip pans or absorbent pads. The storage or use of equipment in streambeds or other bodies of water must comply with all applicable permits.
- Implement other BMPs as applicable, such as NS-2, Dewatering Operations, WM-5, Solid Waste Management, WM-6, Hazardous Waste Management, and WM-10, Liquid Waste Management.
- When not in use, store pile-driving equipment away from concentrated flows of stormwater, drainage courses, and inlets. Protect hammers and other hydraulic attachments from runon and runoff by placing them on plywood and covering them with plastic or a comparable material prior to the onset of rain.
- Use less hazardous products, e.g., vegetable oil, when practicable.

Costs

All of the above measures can be low cost.

Inspection and Maintenance

- Inspect and verify that activity-based BMPs are in place prior to the commencement of associated activities. While activities associated with the BMP are under way, inspect BMPs in accordance with General Permit requirements for the associated project type and risk level. It is recommended that at a minimum, BMPs be inspected weekly, prior to forecasted rain events, daily during extended rain events, and after the conclusion of rain events.
- Inspect BMPs subject to non-stormwater discharges daily while non-stormwater discharges occur.
- Inspect equipment every day at startup and repair equipment as needed (i.e., worn or damaged hoses, fittings, and gaskets). Recheck equipment at shift changes or at the end of the day and scheduled repairs as needed.

References

Stormwater Quality Handbooks - Construction Site Best Management Practices (BMPs) Manual, State of California Department of Transportation (Caltrans), November 2000.

Stormwater Management for Construction Activities, Developing Pollution Prevention Plans and Best Management Practices, EPA 832-R-92005; USEPA, April 1992.

Concrete Curing NS-12

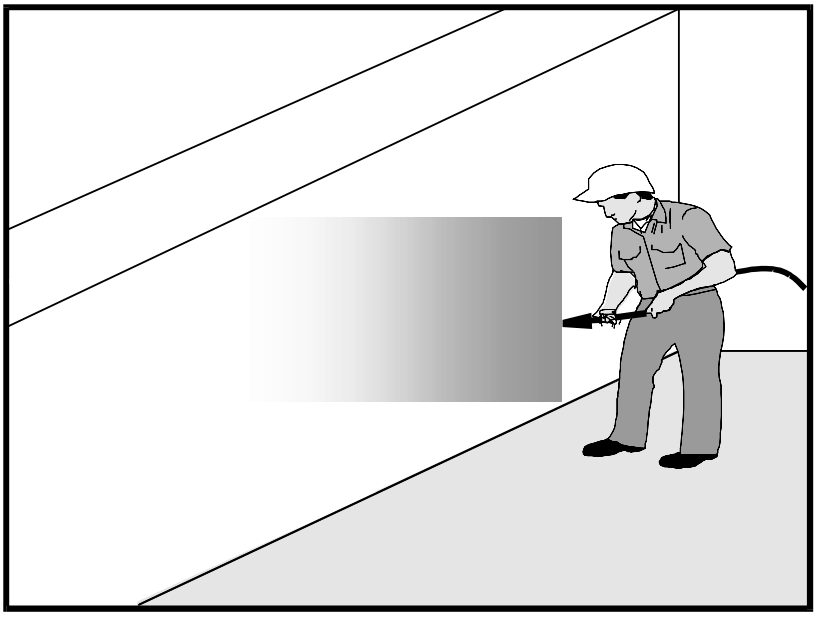

Categories		
EC	Erosion Control	
SE	Sediment Control	
TC	Tracking Control	
WE	Wind Erosion Control	
NS	Non-Stormwater Management Control	☑
WM	Waste Management and Materials Pollution Control	☑

Legend:
☑ **Primary Category**
☒ **Secondary Category**

Targeted Constituents	
Sediment	☑
Nutrients	
Trash	
Metals	☑
Bacteria	
Oil and Grease	☑
Organics	

Potential Alternatives

None

If User/Subscriber modifies this fact sheet in any way, the CASQA name/logo and footer below must be removed from each page and not appear on the modified version.

Description and Purpose

Concrete curing is used in the construction of structures such as bridges, retaining walls, pump houses, large slabs, and structured foundations. Concrete curing includes the use of both chemical and water methods.

Concrete and its associated curing materials have basic chemical properties that can raise the pH of water to levels outside of the permitted range. Discharges of stormwater and non-stormwater exposed to concrete during curing may have a high pH and may contain chemicals, metals, and fines. The General Permit incorporates Numeric Action Levels (NAL) for pH (see Section 2 of this handbook to determine your project's risk level and if you are subject to these requirements).

Proper procedures and care should be taken when managing concrete curing materials to prevent them from coming into contact with stormwater flows, which could result in a high pH discharge.

Suitable Applications

Suitable applications include all projects where Portland Cement Concrete (PCC) and concrete curing chemicals are placed where they can be exposed to rainfall, runoff from other areas, or where runoff from the PCC will leave the site.

Limitations

- Runoff contact with concrete waste can raise pH levels in the water to environmentally harmful levels and trigger permit violations.

Implementation

Chemical Curing

- Avoid over spray of curing compounds.
- Minimize the drift by applying the curing compound close to the concrete surface. Apply an amount of compound that covers the surface, but does not allow any runoff of the compound.
- Use proper storage and handling techniques for concrete curing compounds. Refer to WM-1, Material Delivery and Storage.
- Protect drain inlets prior to the application of curing compounds.
- Refer to WM-4, Spill Prevention and Control.

Water Curing for Bridge Decks, Retaining Walls, and other Structures

- Direct cure water away from inlets and watercourses to collection areas for evaporation or other means of removal in accordance with all applicable permits. See WM-8 Concrete Waste Management.
- Collect cure water at the top of slopes and transport to a concrete waste management area in a non-erosive manner. See EC-9 Earth Dikes and Drainage Swales, EC-10, Velocity Dissipation Devices, and EC-11, Slope Drains.
- Utilize wet blankets or a similar method that maintains moisture while minimizing the use and possible discharge of water.

Education

- Educate employees, subcontractors, and suppliers on proper concrete curing techniques to prevent contact with discharge as described herein.
- Arrange for the QSP or the appropriately trained contractor's superintendent or representative to oversee and enforce concrete curing procedures.

Costs

All of the above measures are generally low cost.

Inspection and Maintenance

- Inspect and verify that activity-based BMPs are in place prior to the commencement of associated activities.
- BMPs must be inspected in accordance with General Permit requirements for the associated project type and risk level. It is recommended that at a minimum, BMPs be inspected weekly, prior to forecasted rain events, daily during extended rain events, and after the conclusion of rain events.
- Inspect BMPs subject to non-stormwater discharges daily while non-stormwater discharges occur.

- Sample non-stormwater discharges and stormwater runoff that contacts uncured and partially cured concrete as required by the General Permit.
- Ensure that employees and subcontractors implement appropriate measures for storage, handling, and use of curing compounds.
- Inspect cure containers and spraying equipment for leaks.

References

Blue Print for a Clean Bay-Construction-Related Industries: Best Management Practices for Stormwater Pollution Prevention; Santa Clara Valley Non Point Source Pollution Control Program, 1992.

Stormwater Quality Handbooks - Construction Site Best Management Practices (BMPs) Manual, State of California Department of Transportation (Caltrans), March 2003.

Stormwater Management for Construction Activities, Developing Pollution Prevention Plans and Best Management Practices, EPA 832-R-92005; USEPA, April 1992.

Erosion and Sediment Control Manual, Oregon Department of Environmental Quality, February 2005.

Concrete Finishing NS-13

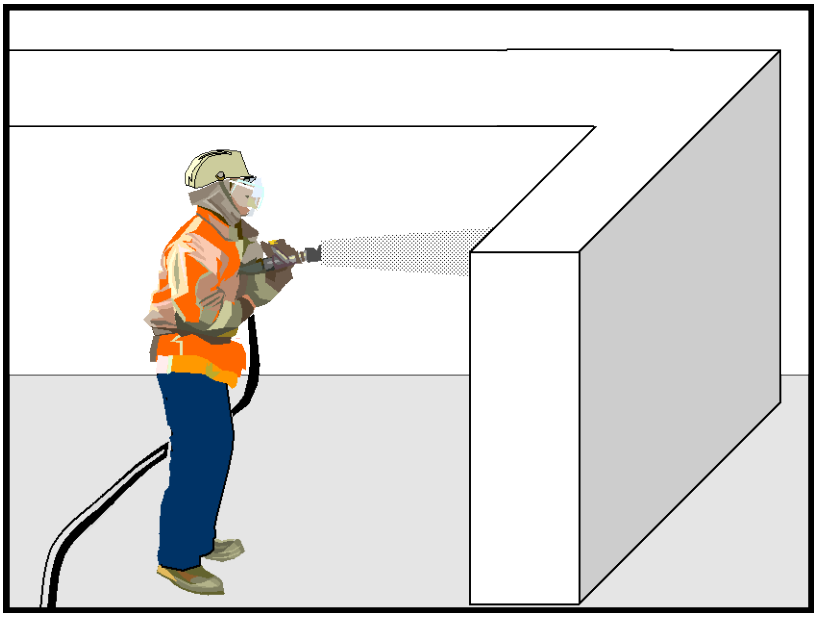

Categories

EC	Erosion Control	
SE	Sediment Control	
TC	Tracking Control	
WE	Wind Erosion Control	
NS	Non-Stormwater Management Control	☑
WM	Waste Management and Materials Pollution Control	☑

Legend:

☑ **Primary Category**

☒ **Secondary Category**

Targeted Constituents

Sediment	☑
Nutrients	
Trash	
Metals	☑
Bacteria	
Oil and Grease	
Organics	☑

Potential Alternatives

None

Description and Purpose

Concrete finishing methods are used for bridge deck rehabilitation, paint removal, curing compound removal, and final surface finish appearances. Methods include sand blasting, shot blasting, grinding, or high pressure water blasting. Stormwater and non-stormwater exposed to concrete finishing by-products may have a high pH and may contain chemicals, metals, and fines. Proper procedures and implementation of appropriate BMPs can minimize the impact that concrete-finishing methods may have on stormwater and non-stormwater discharges.

The General Permit incorporates Numeric Action Levels (NAL) for pH (see Section 2 of this handbook to determine your project's risk level and if you are subject to these requirements).

Concrete and its associated curing materials have basic chemical properties that can raise pH levels outside of the permitted range. Additional care should be taken when managing these materials to prevent them from coming into contact with stormwater flows, which could lead to exceedances of the General Permit requirements.

Suitable Applications

These procedures apply to all construction locations where concrete finishing operations are performed.

If User/Subscriber modifies this fact sheet in any way, the CASQA name/logo and footer below must be removed from each page and not appear on the modified version.

Limitations

- Runoff contact with concrete waste can raise pH levels in the water to environmentally harmful levels and trigger permit violations.

Implementation

- Collect and properly dispose of water from high-pressure water blasting operations.
- Collect contaminated water from blasting operations at the top of slopes. Transport or dispose of contaminated water while using BMPs such as those for erosion control. Refer to EC-9, Earth Dikes and Drainage Swales, EC-10, Velocity Dissipation Devices, and EC-11, Slope Drains.
- Direct water from blasting operations away from inlets and watercourses to collection areas for infiltration or other means of removal (dewatering). Refer to NS-2 Dewatering Operations.
- Protect inlets during sandblasting operations. Refer to SE-10, Storm Drain Inlet Protection.
- Refer to WM-8, Concrete Waste Management for disposal of concrete debris.
- Minimize the drift of dust and blast material as much as possible by keeping the blasting nozzle close to the surface.
- When blast residue contains a potentially hazardous waste, refer to WM-6, Hazardous Waste Management.

Education

- Educate employees, subcontractors, and suppliers on proper concrete finishing techniques to prevent contact with discharge as described herein.
- Arrange for the QSP or the appropriately trained contractor's superintendent or representative to oversee and enforce concrete finishing procedures.

Costs

These measures are generally of low cost.

Inspection and Maintenance

- Inspect and verify that activity-based BMPs are in place prior to the commencement of associated activities.
- BMPs must be inspected in accordance with General Permit requirements for the associated project type and risk level. It is recommended that at a minimum, BMPs be inspected weekly, prior to forecasted rain events, daily during extended rain events, and after the conclusion of rain events.
- Inspect BMPs subject to non-stormwater discharges daily while non-stormwater discharges occur.
- Sample non-stormwater discharges and stormwater runoff that contacts concrete dust and debris as required by the General Permit.

- Sweep or vacuum up debris from sandblasting at the end of each shift.
- At the end of each work shift, remove and contain liquid and solid waste from containment structures, if any, and from the general work area.
- Inspect containment structures for damage prior to use and prior to onset of forecasted rain.

References

Blueprint for a Clean Bay: Best Management Practices to Prevent Stormwater Pollution from Construction Related Activities; Santa Clara Valley Nonpoint Source Pollution Control Program, 1995.

Stormwater Quality Handbooks - Construction Site Best Management Practices (BMPs) Manual, State of California Department of Transportation (Caltrans), March 2003.

Stormwater Management for Construction Activities, Developing Pollution Prevention Plans and Best Management Practices, EPA 832-R-92005; USEPA, April 1992.

Material Over Water NS-14

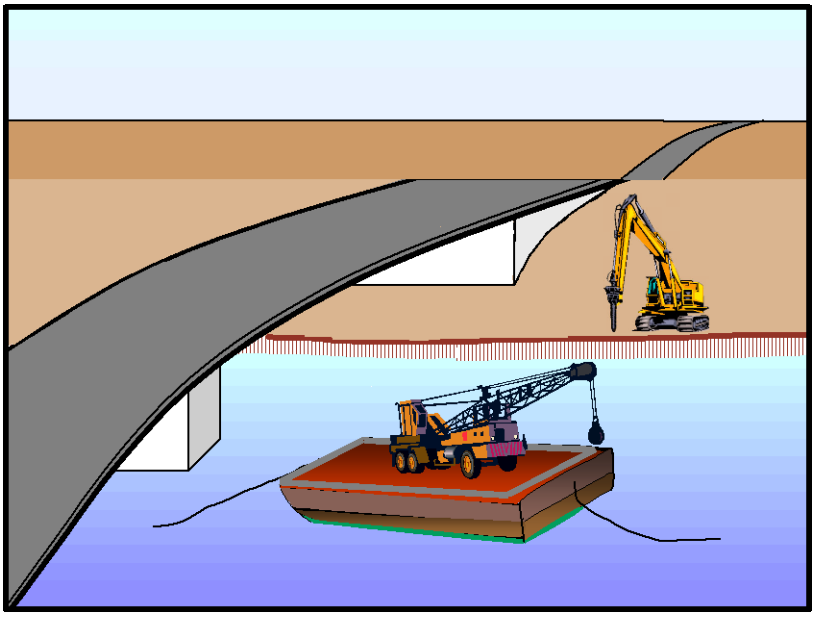

Categories

EC	Erosion Control	
SE	Sediment Control	
TC	Tracking Control	
WE	Wind Erosion Control	
NS	Non-Stormwater Management Control	☑
WM	Waste Management and Materials Pollution Control	☑

Legend:

☑ **Primary Objective**

☒ **Secondary Objective**

Targeted Constituents

Sediment	☑
Nutrients	☑
Trash	☑
Metals	☑
Bacteria	☑
Oil and Grease	☑
Organics	☑

Potential Alternatives

None

If User/Subscriber modifies this fact sheet in any way, the CASQA name/logo and footer below must be removed from each page and not appear on the modified version.

Description and Purpose

Procedures for the proper use, storage, and disposal of materials and equipment on barges, boats, temporary construction pads, or similar locations that minimize or eliminate the discharge of potential pollutants to a watercourse.

Suitable Applications

Applies where materials and equipment are used on barges, boats, docks, and other platforms over or adjacent to a watercourse including waters of the United States. These procedures should be implemented for construction materials and wastes (solid and liquid), soil or dredging materials, or any other materials that may cause or contribute to exceedances of water quality standards.

Limitations

Dredge and fill activities are regulated by the US Army Corps of Engineers and Regional Boards under Section 404/401 of the Clean Water Act.

Implementation

- Refer to WM-1, Material Delivery and Storage and WM-4, Spill Prevention and Control.
- Use drip pans and absorbent materials for equipment and vehicles and ensure that an adequate supply of spill clean up materials is available.
- Drip pans should be placed under all vehicles and equipment placed on docks, barges, or other structures over

CASQA
CALIFORNIA STORMWATER QUALITY ASSOCIATION

water bodies when the vehicle or equipment is expected to be idle for more than 1 hour.

- Maintain equipment in accordance with NS-10, Vehicle and Equipment Maintenance. If a leaking line cannot be repaired, remove equipment from over the water.
- Provide watertight curbs or toe boards to contain spills and prevent materials, tools, and debris from leaving the barge, platform, dock, etc.
- Secure all materials to prevent discharges to receiving waters via wind.
- Identify types of spill control measures to be employed, including the storage of such materials and equipment. Ensure that staff is trained regarding the use of the materials, deployment and access of control measures, and reporting measures.
- In case of spills, contact the local Regional Board as soon as possible but within 48 hours.
- Refer to WM-5, Solid Waste Management (non-hazardous) and WM-6, Hazardous Waste Management. Ensure the timely and proper removal of accumulated wastes
- Comply with all necessary permits required for construction within or near the watercourse, such as Regional Water Quality Control Board, U.S. Army Corps of Engineers, Department of Fish and Game or and other local permitting.
- Discharges to waterways should be reported to the Regional Water Quality Control Board immediately upon discovery. A written discharge notification must follow within 7 days. Follow the spill reporting procedures contained in SWPPP.

Costs

These measures are generally of low to moderate cost. Exceptions are areas for temporary storage of materials, engine fluids, or wastewater pump out.

Inspection and Maintenance

- Inspect and verify that activity–based BMPs are in place prior to the commencement of associated activities. While activities associated with the BMP are under way, inspect BMPs in accordance with General Permit requirements for the associated project type and risk level. It is recommended that at a minimum, BMPs be inspected weekly, prior to forecasted rain events, daily during extended rain events, and after the conclusion of rain events.
- Inspect BMPs subject to non-stormwater discharge daily while non-stormwater discharges occur.
- Ensure that employees and subcontractors implement the appropriate measures for storage and use of materials and equipment.
- Inspect and maintain all associated BMPs and perimeter controls to ensure continuous protection of the water courses, including waters of the United States.

References

Stormwater Quality Handbooks - Construction Site Best Management Practices (BMPs) Manual, State of California Department of Transportation (Caltrans), November 2000.

Stormwater Management for Construction Activities, Developing Pollution Prevention Plans and Best Management Practices, EPA 832-R-92005; USEPA, April 1992.

Demolition Adjacent to Water NS-15

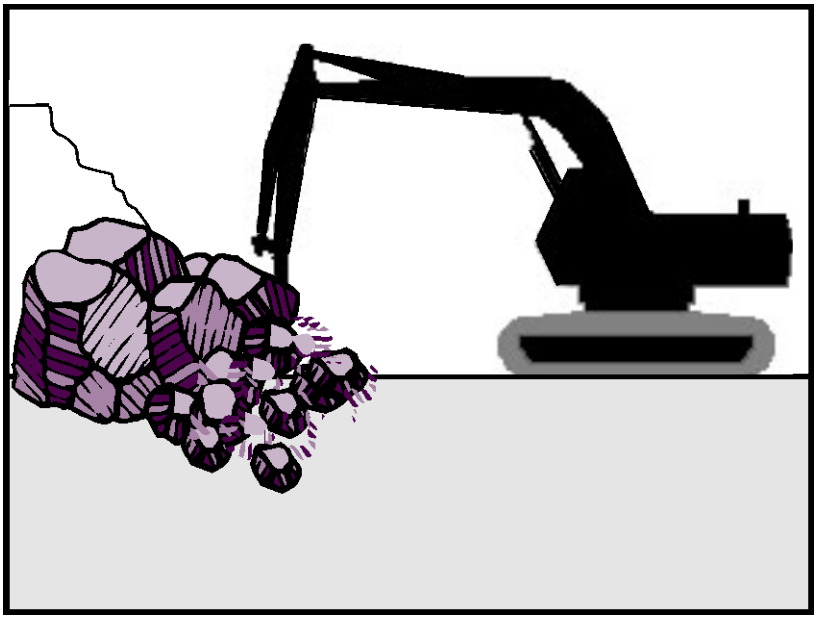

Categories		
EC	Erosion Control	
SE	Sediment Control	
TC	Tracking Control	
WE	Wind Erosion Control	
NS	Non-Stormwater Management Control	☑
WM	Waste Management and Materials Pollution Control	

Legend:
☑ **Primary Objective**
☒ **Secondary Objective**

Targeted Constituents	
Sediment	☑
Nutrients	☑
Trash	☑
Metals	☑
Bacteria	☑
Oil and Grease	☑
Organics	☑

Potential Alternatives

None

If User/Subscriber modifies this fact sheet in any way, the CASQA name/logo and footer below must be removed from each page and not appear on the modified version.

Description and Purpose

Procedures to protect water bodies from debris and wastes associated with structure demolition or removal over or adjacent to watercourses.

Suitable Applications

Full bridge demolition and removal, partial bridge removal (barrier rail, edge of deck) associated with bridge widening projects, concrete channel removal, or any other structure removal that could potentially affect water quality.

Limitations

None identified.

Implementation

- Refer to NS-5, Clear Water Diversion, to direct water away from work areas.
- Use attachments on construction equipment such as backhoes to catch debris from small demolition operations.
- Use covers or platforms to collect debris.
- Platforms and covers are to be approved by the owner.
- Stockpile accumulated debris and waste generated during demolition away from watercourses and in accordance with WM-3, Stockpile Management.
- Ensure safe passage of wildlife, as necessary.

CASQA
CALIFORNIA STORMWATER QUALITY ASSOCIATION

- Discharges to waterways shall be reported to the Regional Water Quality Control Board immediately upon discovery. A written discharge notification must follow within 7 days. Follow the spill reporting procedures in the SWPPP.

- For structures containing hazardous materials, i.e., lead paint or asbestos, refer to BMP WM-6, Hazardous Waste Management. For demolition work involving soil excavation around lead-painted structures, refer to WM-7, Contaminated Soil Management.

Costs

Cost may vary according to the combination of practices implemented.

Inspection and Maintenance

- Inspect and verify that activity–based BMPs are in place prior to the commencement of associated activities. While activities associated with the BMP are under way, inspect BMPs in accordance with General Permit requirements for the associated project type and risk level. It is recommended that at a minimum, BMPs be inspected weekly, prior to forecasted rain events, daily during extended rain events, and after the conclusion of rain events.

- Inspect BMPs subject to non-stormwater discharge daily while non-stormwater discharges occur.

- Any debris-catching devices shall be emptied regularly. Collected debris shall be removed and stored away from the watercourse and protected from runon and runoff.

References

Stormwater Quality Handbooks - Construction Site Best Management Practices (BMPs) Manual, State of California Department of Transportation (Caltrans), November 2000.

Stormwater Management for Construction Activities, Developing Pollution Prevention Plans and Best Management Practices, EPA 832-R-92005; USEPA, April 1992.

Temporary Batch Plants NS-16

Categories

EC	Erosion Control	
SE	Sediment Control	
TC	Tracking Control	
WE	Wind Erosion Control	
NS	Non-Stormwater Management Control	☑
WM	Waste Management and Materials Pollution Control	

Legend:

☑ **Primary Category**

☒ **Secondary Category**

Targeted Constituents

Sediment	☑
Nutrients	
Trash	☑
Metals	☑
Bacteria	
Oil and Grease	
Organics	

Potential Alternatives

None

Description and Purpose

The construction of roads, bridges, retaining walls, and other large structures in remote areas, often requires temporary batch plant facilities to manufacture Portland Cement Concrete (PCC) or asphalt cement (AC). Temporary batch plant facilities typically consist of silos containing fly ash, lime, and cement; heated tanks of liquid asphalt; sand and gravel material storage areas; mixing equipment; above ground storage tanks containing concrete additives and water; and designated areas for sand and gravel truck unloading, concrete truck loading, and concrete truck washout. Proper control and use of equipment, materials, and waste products from temporary batch plant facilities will reduce the discharge of potential pollutants to the storm drain system or watercourses, reduce air emissions, and mitigate noise impacts.

The General Permit draft incorporates Numeric Action Levels (NAL) for pH (see Section 2 of this handbook to determine your project's risk level and if you are subject to these requirements). Many types of batch plant materials, including mortar, concrete, cement and block and their associated wastes have basic chemical properties that can raise pH levels outside of the permitted range. Additional care should be taken when managing these materials to prevent them from coming into contact with stormwater flows which may cause an exceedance of the General Permit requirements.

Suitable Applications

These procedures typically apply to construction sites where temporary batch plant facilities are used; however, some of the

If User/Subscriber modifies this fact sheet in any way, the CASQA name/logo and footer below must be removed from each page and not appear on the modified version.

practices described are applicable to construction sites with general concrete use.

Limitations

The General Permit for discharges of stormwater associated with industrial activities (General Industrial Permit) may be applicable to temporary batch plants.

Specific permit requirements or mitigation measures such as Air Resources Board (ARB), Air Quality Management District (AQMD), Air Pollution Control District (APCD, Regional Water Quality Control Board (RWQCB), county ordinances and city ordinances may require alternative mitigation measures for temporary batch plants. Contact the local regulatory agencies to determine if a permit is required.

Implementation

Planning

- Temporary batch plants may be subject to the General Industrial Permit. To obtain a copy of this permit and the application forms, visit http://www.waterboards.ca.gov or contact the State Water Resources Control Board.
- Proper planning, design, and construction of temporary batch plants should be implemented to minimize potential water quality, air pollution, and noise impacts associated with temporary batch plants.
- BMPs and a Construction Site Monitoring Plan (CSMP) should be included in the project Stormwater Pollution Prevention Plan (SWPPP). BMPs should be implemented, inspected, and maintained in accordance with these plans.
- Temporary batch plants should be managed to comply with AQMD Statewide Registration Program and/or local AQMD Portable Equipment Registration requirements.
- Construct temporary batch plants downwind of existing developments whenever possible.
- Placement of access roads should be planned to mitigate water and air quality impacts.

Layout and Design

- Temporary batch plants should be properly located and designed to mitigate water quality impacts to receiving water bodies. Batch plants should be located away from watercourses, drainage courses, and drain inlets. Batch plants should be located to minimize the potential for stormwater runon onto the site.
- Temporary batch plant facilities (including associated stationary equipment and stockpiles) should be located at least 300 ft from any recreational area, school, residence, or other structure not associated with the construction project.
- Construct continuous interior AC or PCC berms around batch plant equipment (mixing equipment, silos, concrete drop points, conveyor belts, admixture tanks, etc.) to facilitate proper containment and cleanup of releases. Rollover or flip top curbs or dikes should be placed at ingress and egress points (SE-12, Temporary Silt Dike).
- Direct runoff from the paved or unpaved portion of the batch plant into a sump and pipe to a lined washout area or dewatering tank.

- Direct stormwater and non-stormwater runoff from unpaved portions of batch plant facility to catchment ponds or tanks.
- Construct and remove concrete washout facilities in accordance with WM-8, Concrete Waste Management.
- Layout of a typical batch plant and associated BMP is located at the end of this BMP fact sheet.

Operational Procedures

- Washout of concrete trucks should be conducted in a designated area in accordance with WM-8, Concrete Waste Management.
- Do not dispose of concrete into drain inlets, the stormwater drainage system, or watercourses.
- Washing of concrete mixing and transport equipment (including concrete truck washout) should occur in a designated area in accordance with WM-8, Concrete Waste Management.
- Washing equipment, tools, or vehicles to remove PCC should be conducted in accordance with NS-7, Potable Water/Irrigation, NS-8, Vehicle and Equipment Cleaning, and WM-8, Concrete Waste Management..
- All dry material transfer points should be ducted through a fabric or cartridge type filter unless there are no visible emissions from the transfer point.
- Equip all bulk storage silos, including auxiliary bulk storage trailers, with fabric or cartridge type filter(s).
- Maintain silo vent filters in proper operating condition.
- Equip silos and auxiliary bulk storage trailers with dust-tight service hatches.
- Fabric dust collection system should be capable of controlling particulate matter in accordance with the California Air Resources Control Board and local Air Pollution Control District Regulations.
- Fabric dust collectors (except for vent filters) should be equipped with an operational pressure differential gauge to measure the pressure drop across the filters.
- All transfer points should be equipped with a wet suppression system to control fugitive particulate emissions unless there are no visible emissions.
- All conveyors should be covered, unless the material being transferred results in no visible emissions.
- There should be no visible emissions beyond the property line, while the equipment is being operated.
- Collect dust emissions from the loading of open-bodied trucks, at the drip point of dry batch plants, or dust emissions from the drum feed for central mix plants.

- Equip silos and auxiliary bulk storage trailers with a visible and/or audible warning mechanism to warn operators that the silo or trailer is full.

- All open-bodied vehicles transporting material should be loaded with a final layer of wet sand and the truck should be covered with a tarp to reduce emissions.

Tracking Control

- Plant roads (batch truck and material delivery truck roads) and areas between stockpiles and conveyor hoppers should be stabilized (TC-2, Stabilized Construction Roadway), watered, treated with dust-suppressant chemicals (WE-1, Wind Erosion Control), or paved with a cohesive hard surface that can be repeatedly swept, maintained intact, and cleaned as necessary to control dust emissions.

- Trucks should not track PCC from plants onto public roads. Use appropriate practices from TC-1, Stabilized Construction Entrance/Exit, to prevent tracking.

Materials Storage

- WM-1, Material Delivery and Storage, should be implemented at all batch plants using concrete components or compounds. An effective strategy is to cover and contain materials.

- WM-2, Material Use should be conducted in a way to minimize or eliminate the discharge of materials to storm drain system or watercourse.

- Ensure that finer materials are not dispersed into the air during operations, such as unloading of cement delivery trucks.

- Stockpiles should be covered and enclosed with perimeter sediment barriers per WM-3, Stockpile Management. Uncovered stockpiles should be sprayed with water and/or dust-suppressant chemicals as necessary to control dust emissions, unless the stockpiled material results in no visible emissions. An operable stockpile watering system should be onsite at all times.

- Store bagged and boxed materials on pallets and cover or store in a completely enclosed storage area on non-working days and prior to rain.

- Minimize stockpiles of demolished PCC by recycling them in a timely manner.

- Provide secondary containment for liquid materials (WM-1, Material Delivery and Storage, WM-10, Liquid Waste Management). Containment should provide sufficient volume to contain precipitation from a 25-year storm plus 10% of the aggregate volume of all containers or plus 100% of the largest container, whichever is greater.

- Handle solid and liquid waste in accordance with WM-5, Solid Waste Management, WM-10, Liquid Waste Management, and WM-8, Concrete Waste Management.

- Maintain adequate supplies of spill cleanup materials and train staff to respond to spills per WM-4, Spill Prevention and Control.

- Immediately contain and clean up spilled cement and fly ash and contain.

Equipment Maintenance

- Equipment should be maintained to prevent fluid leaks and spills per NS-9, Vehicle and Equipment Fueling, and NS-10, Vehicle and Equipment Maintenance.
- Maintain adequate supplies of spill cleanup materials and train staff to respond to spills per WM-4, Spill Prevention and Control.
- Incorporate other BMPs such as WM-5, Solid Waste Management, WM-6, Hazardous Waste Management, and WM-10, Liquid Waste Management.

Costs

Costs will vary depending on the size of the facility and combination of BMPs implemented.

Inspection and Maintenance

- Inspect and verify that activity–based BMPs are in place prior to the commencement of associated activities.
- BMPs must be inspected in accordance with General Permit requirements for the associated project type and risk level. It is recommended that at a minimum, BMPs be inspected weekly, prior to forecasted rain events, daily during extended rain events, and after the conclusion of rain events.
- Inspect BMPs subject to non-stormwater discharge daily while non-stormwater discharges occur.
- Sample non-stormwater discharges and stormwater runoff that contacts cementitious materials or fly ash as required by the General Permit.
- Inspect and repair equipment (for damaged hoses, fittings, and gaskets).
- Inspect and maintain a Stabilized Construction Entrance/Exit (TC-1) as needed.
- Inspect and maintain stabilized haul roads as needed (TC-2, Stabilized Construction Roadway).
- Inspect and maintain materials and waste storage areas as needed.

References

Stormwater Quality Handbooks - Construction Site Best Management Practices (BMPs) Manual, State of California Department of Transportation (Caltrans), March 2003.

Stormwater Management for Construction Activities, Developing Pollution Prevention Plans and Best Management Practices, EPA 832-R-92005; USEPA, April 1992.

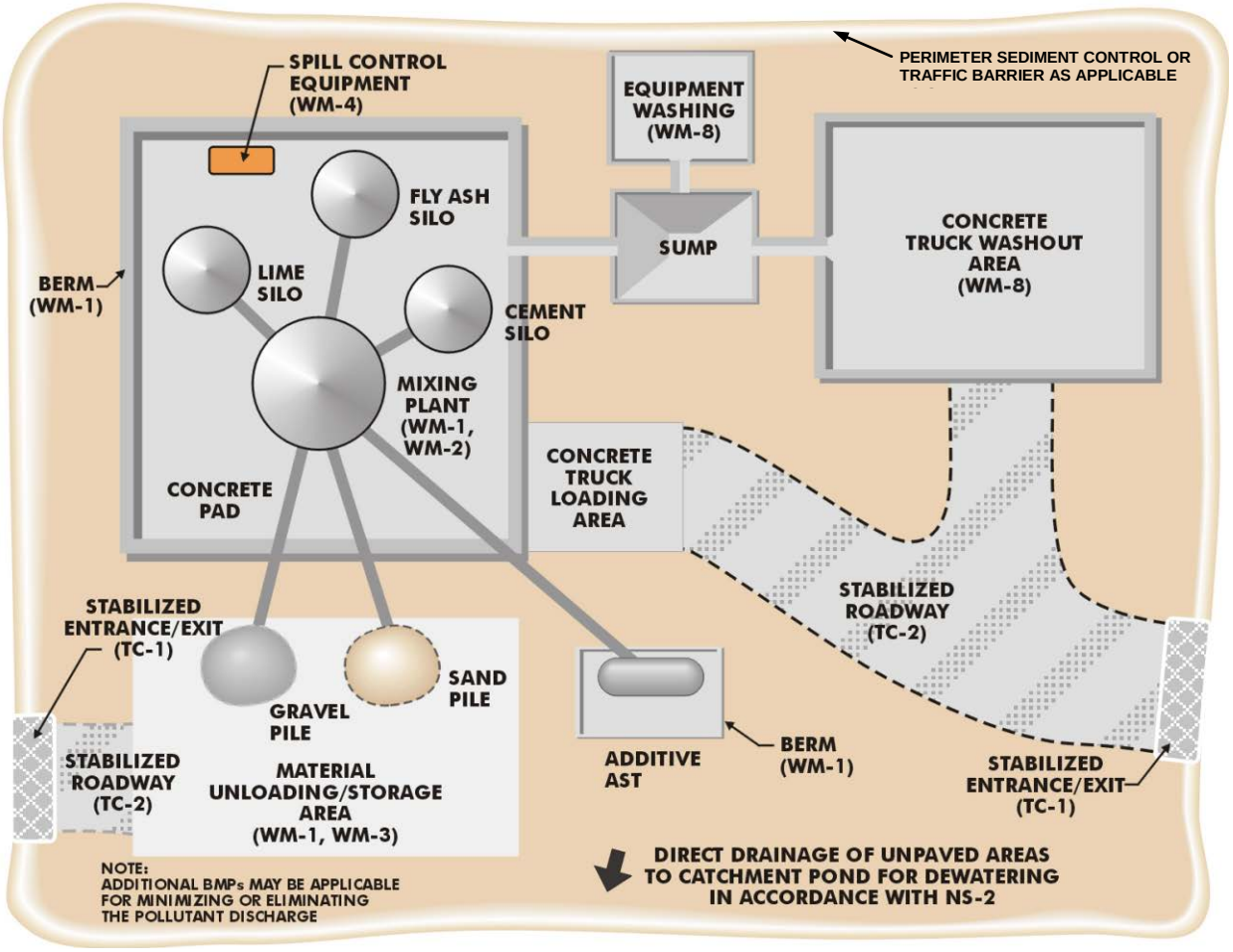

Typical Temporary Batch

Silt Fence SE-1

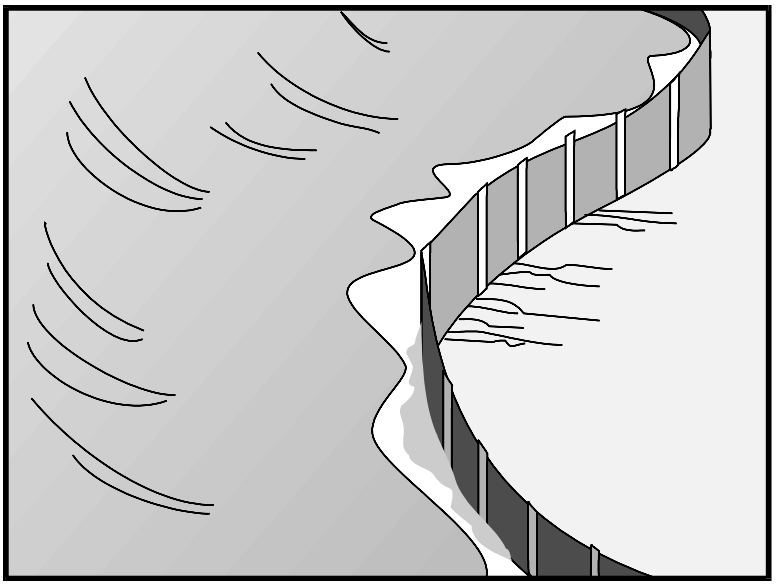

Categories

EC	Erosion Control	
SE	Sediment Control	☑
TC	Tracking Control	
WE	Wind Erosion Control	
NS	Non-Stormwater Management Control	
WM	Waste Management and Materials Pollution Control	

Legend:

☑ **Primary Category**

☒ **Secondary Category**

Description and Purpose

A silt fence is made of a woven geotextile that has been entrenched, attached to supporting poles, and sometimes backed by a plastic or wire mesh for support. The silt fence detains water, promoting sedimentation of coarse sediment behind the fence. Silt fence does not retain soil fine particles like clays or silts.

Suitable Applications

Silt fences are suitable for perimeter control, placed below areas where sheet flows discharge from the site. They could also be used as interior controls below disturbed areas where runoff may occur in the form of sheet and rill erosion and around inlets within disturbed areas (SE-10). Silt fences should not be used in locations where the flow is concentrated. Silt fences should always be used in combination with erosion controls. Suitable applications include:

- At perimeter of a project.
- Below the toe or down slope of exposed and erodible slopes.
- Along streams and channels.
- Around temporary spoil areas and stockpiles.
- Around inlets.
- Below other small cleared areas.

Targeted Constituents

Sediment (coarse sediment)	☑
Nutrients	
Trash	
Metals	
Bacteria	
Oil and Grease	
Organics	

Potential Alternatives

SE-5 Fiber Rolls

SE-6 Gravel Bag Berm SE-12 Manufactured Linear Sediment Controls

SE-13 Compost Socks and Berms

SE-14 Biofilter Bags

If User/Subscriber modifies this fact sheet in any way, the CASQA name/logo and footer below must be removed from each page and not appear on the modified version.

Limitations

- Do not use in streams, channels, drain inlets, or anywhere flow is concentrated.
- Do not use in locations where ponded water may cause a flooding hazard.
- Do not use silt fence to divert water flows or place across any contour line.
- Improperly installed fences are subject to failure from undercutting, overtopping, or collapsing.
- Must be trenched and keyed in.
- Not intended for use as a substitute for Fiber Rolls (SE-5), when fiber rolls are being used as a slope interruption device.
- Do not use on slopes subject to creeping, slumping, or landslides.

Implementation

General

A silt fence is a temporary sediment barrier consisting of woven geotextile stretched across and attached to supporting posts, trenched-in, and, depending upon the strength of fabric used, supported with plastic or wire mesh fence. Silt fences trap coarse sediment by intercepting and detaining sediment-laden runoff from disturbed areas in order to promote sedimentation behind the fence.

The following layout and installation guidance can improve performance and should be followed:

- Silt fence should be used in combination with erosion controls up-slope in order to provide the most effective sediment control.
- Silt fence alone is not effective at reducing turbidity. (Barrett and Malina, 2004)
- Designers should consider diverting sediment laden water to a temporary sediment basin or trap. (EPA, 2012)
- Use principally in areas where sheet flow occurs.
- Install along a level contour, so water does not pond more than 1.5 ft at any point along the silt fence.
- Provide sufficient room for runoff to pond behind the fence and to allow sediment removal equipment to pass between the silt fence and toes of slopes or other obstructions. About 1200 ft^2 of ponding area should be provided for every acre draining to the fence.
- Efficiency of silt fences is primarily dependent on the detention time of the runoff behind the control. (Barrett and Malina, 2004)
- The drainage area above any fence should not exceed a quarter of an acre. (Rule of Thumb-100-feet of silt fence per 10,000 square feet of disturbed area.) (EPA 2012)

- The maximum length of slope draining to any point along the silt fence should be 100 ft per foot of silt fence.
- Turn the ends of the filter fence uphill to prevent stormwater from flowing around the fence.
- Leave an undisturbed or stabilized area immediately down slope from the fence where feasible.
- Silt fences should remain in place until the disturbed area draining to the silt fence is permanently stabilized, after which, the silt fence fabric and posts should be removed and properly disposed.
- J-Hooks, which have ends turning up the slope to break up long runs of fence and provide multiple storage areas that work like mini-retention areas, may be used to increase the effectiveness of silt fence.
- Be aware of local regulations regarding the type and installation requirements of silt fence, which may differ from those presented in this fact sheet.

Design and Layout

In areas where high winds are anticipated the fence should be supported by a plastic or wire mesh. The geotextile fabric of the silt fence should contain ultraviolet inhibitors and stabilizers to provide longevity equivalent to the project life or replacement schedule.

- Layout in accordance with the attached figures.
- For slopes that contain a high number of rocks or large dirt clods that tend to dislodge, it may be necessary to protect silt fence from rocks (e.g., rockfall netting) ensure the integrity of the silt fence installation.

Standard vs. Heavy Duty Silt Fence

Standard Silt Fence

- Generally applicable in cases where the area draining to fence produces moderate sediment loads.

Heavy Duty Silt Fence

- Heavy duty silt fence usually has 1 or more of the following characteristics, not possessed by standard silt fence.
  - Fabric is reinforced with wire backing or additional support.
  - Posts are spaced closer than pre-manufactured, standard silt fence products.
- Use is generally limited to areas affected by high winds.
- Area draining to fence produces moderate sediment loads.

Materials

Standard Silt Fence

- Silt fence material should be woven geotextile with a minimum width of 36 in. The fabric should conform to the requirements in ASTM designation D6461.
- Wooden stakes should be commercial quality lumber of the size and shape shown on the plans. Each stake should be free from decay, splits or cracks longer than the

thickness of the stake or other defects that would weaken the stakes and cause the stakes to be structurally unsuitable.

- Staples used to fasten the fence fabric to the stakes should be not less than 1.75 in. long and should be fabricated from 15 gauge or heavier wire. The wire used to fasten the tops of the stakes together when joining two sections of fence should be 9 gauge or heavier wire. Galvanizing of the fastening wire will not be required.

Heavy-Duty Silt Fence

- Some silt fence has a wire backing to provide additional support, and there are products that may use prefabricated plastic holders for the silt fence and use metal posts instead of wood stakes.

Installation Guidelines – Traditional Method

Silt fences are to be constructed on a level contour. Sufficient area should exist behind the fence for ponding to occur without flooding or overtopping the fence.

- A trench should be excavated approximately 6 in. wide and 6 in. deep along the line of the proposed silt fence (trenches should not be excavated wider or deeper than necessary for proper silt fence installation).
- Bottom of the silt fence should be keyed-in a minimum of 12 in.
- Posts should be spaced a maximum of 6 ft apart and driven securely into the ground a minimum of 18 in. or 12 in. below the bottom of the trench.
- When standard strength geotextile is used, a plastic or wire mesh support fence should be fastened securely to the upslope side of posts using heavy–duty wire staples at least 1 in. long. The mesh should extend into the trench.
- When extra-strength geotextile and closer post spacing are used, the mesh support fence may be eliminated.
- Woven geotextile should be purchased in a long roll, then cut to the length of the barrier. When joints are necessary, geotextile should be spliced together only at a support post, with a minimum 6 in. overlap and both ends securely fastened to the post.
- The trench should be backfilled with native material and compacted.
- Construct the length of each reach so that the change in base elevation along the reach does not exceed 1/3 the height of the barrier; in no case should the reach exceed 500 ft.
- Cross barriers should be a minimum of 1/3 and a maximum of ½ the height of the linear barrier.
- See typical installation details at the end of this fact sheet.

Installation Guidelines - Static Slicing Method

- Static Slicing is defined as insertion of a narrow blade pulled behind a tractor, similar to a plow blade, at least 10 inches into the soil while at the same time pulling silt geotextile fabric into the ground through the opening created by the blade to the depth of the blade. Once the geotextile is installed, the soil is compacted using tractor tires.
- This method will not work with pre-fabricated, wire backed silt fence.
- Benefits:
    - Ease of installation (most often done with a 2 person crew).
    - Minimal soil disturbance.
    - Better level of compaction along fence, less susceptible to undercutting
    - Uniform installation.
- Limitations:
    - Does not work in shallow or rocky soils.
    - Complete removal of geotextile material after use is difficult.
    - Be cautious when digging near potential underground utilities.

Costs

- It should be noted that costs vary greatly across regions due to available supplies and labor costs.
- Average annual cost for installation using the traditional silt fence installation method (assumes 6 month useful life) is $7 per linear foot based on vendor research. Range of cost is $3.50 - $9.10 per linear foot.

Inspection and Maintenance

- BMPs must be inspected in accordance with General Permit requirements for the associated project type and risk level. It is recommended that at a minimum, BMPs be inspected weekly, prior to forecasted rain events, daily during extended rain events, and after the conclusion of rain events.
- Repair undercut silt fences.
- Repair or replace split, torn, slumping, or weathered fabric. The lifespan of silt fence fabric is generally 5 to 8 months.
- Silt fences that are damaged and become unsuitable for the intended purpose should be removed from the site of work, disposed, and replaced with new silt fence barriers.
- Sediment that accumulates in the BMP should be periodically removed in order to maintain BMP effectiveness. Sediment should be removed when the sediment accumulation reaches 1/3 of the barrier height.
- Silt fences should be left in place until the upgradient area is permanently stabilized. Until then, the silt fence should be inspected and maintained regularly.

- Remove silt fence when upgradient areas are stabilized. Fill and compact post holes and anchor trench, remove sediment accumulation, grade fence alignment to blend with adjacent ground, and stabilize disturbed area.

References

Manual of Standards of Erosion and Sediment Control Measures, Association of Bay Area Governments, May 1995.

Monitoring Data on Effectiveness of Sediment Control Techniques, Proceedings of World Water and Environmental Resources Congress, Barrett M. and Malina J. 2004.

National Management Measures to Control Nonpoint Source Pollution from Urban Areas, United States Environmental Protection Agency, 2002.

Proposed Guidance Specifying Management Measures for Sources of Nonpoint Pollution in Coastal Waters, Work Group-Working Paper, USEPA, April 1992.

Sedimentation and Erosion Control Practices, and Inventory of Current Practices (Draft), USEPA, 1990.

Southeastern Wisconsin Regional Planning Commission (SWRPC). Costs of Urban Nonpoint Source Water Pollution Control Measures. Technical Report No. 31. Southeastern Wisconsin Regional Planning Commission, Waukesha, WI. 1991.

Stormwater Quality Handbooks - Construction Site Best Management Practices (BMPs) Manual, State of California Department of Transportation (Caltrans), March 2003.

Stormwater Management Manual for The Puget Sound Basin, Washington State Department of Ecology, Public Review Draft, 1991.

U.S. Environmental Protection Agency (USEPA). Stormwater Best Management Practices: Silt Fences. U.S. Environmental Protection Agency, Office of Water, Washington, DC, 2012.

U.S. Environmental Protection Agency (USEPA). Stormwater Management for Industrial Activities: Developing Pollution Prevention Plans and Best Management Practices. U.S. Environmental Protection Agency, Office of Water, Washington, DC, 1992.

Water Quality Management Plan for the Lake Tahoe Region, Volume II, Handbook of Management Practices, Tahoe Regional Planning Agency, November 1988.

Soil Stabilization BMP Research for Erosion and Sediment Controls: Cost Survey Technical Memorandum, State of California Department of Transportation (Caltrans), July 2007.

Erosion and Sediment Control Manual, Oregon Department of Environmental Quality, February 2005.

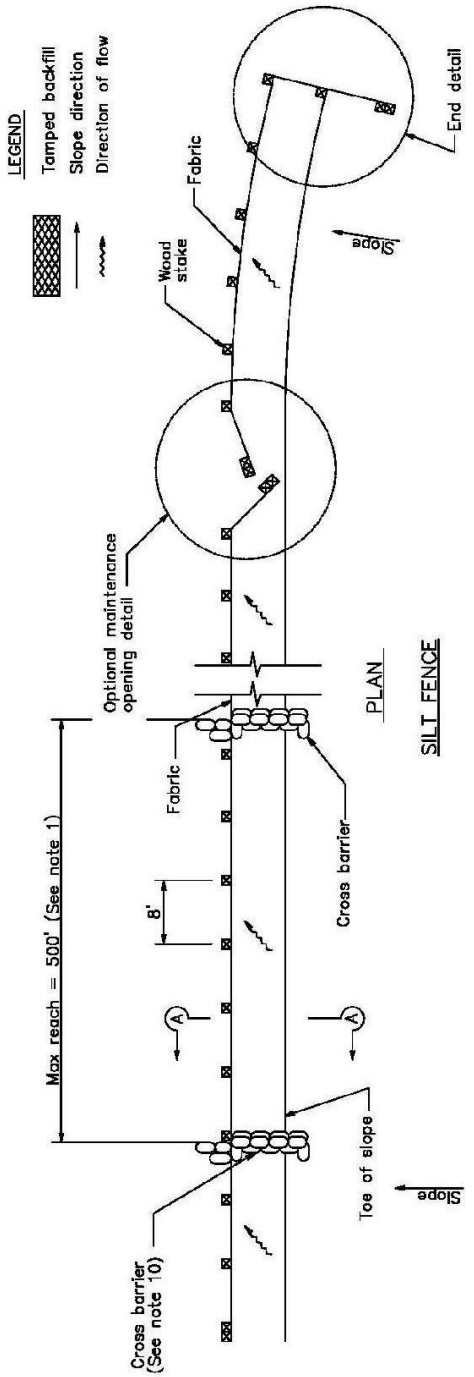

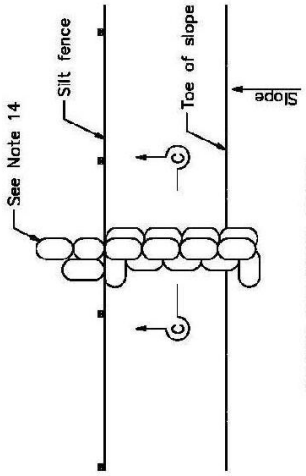

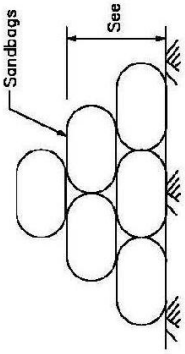

NOTES

1. Construct the length of each reach so that the change in base elevation along the reach does not exceed 1/3 the height of the linear barrier, in no case shall the reach length exceed 500'.
2. The last 8'–0" of fence shall be turned up slope.
3. Stake dimensions are nominal.
4. Dimension may vary to fit field condition.
5. Stakes shall be spaced at 8'–0" maximum and shall be positioned on downstream side of fence.
6. Stakes to overlap and fence fabric to fold around each stake one full turn. Secure fabric to stake with 4 staples.
7. Stakes shall be driven tightly together to prevent potential flow–through of sediment at joint. The tops of the stakes shall be secured with wire.
8. For end stake, fence fabric shall be folded around two stakes one full turn and secured with 4 staples.
9. Minimum 4 staples per stake. Dimensions shown are typical.
10. Cross barriers shall be a minimum of 1/3 and a maximum of 1/2 the height of the linear barrier.
11. Maintenance openings shall be constructed in a manner to ensure sediment remains behind silt fence.
12. Joining sections shall not be placed at sump locations.
13. Sandbag rows and layers shall be offset to eliminate gaps.
14. Add 3–4 bags to cross barrier on downgradient side of silt fence as needed to prevent bypass or undermining and as allowable based on site limits of disturbance.

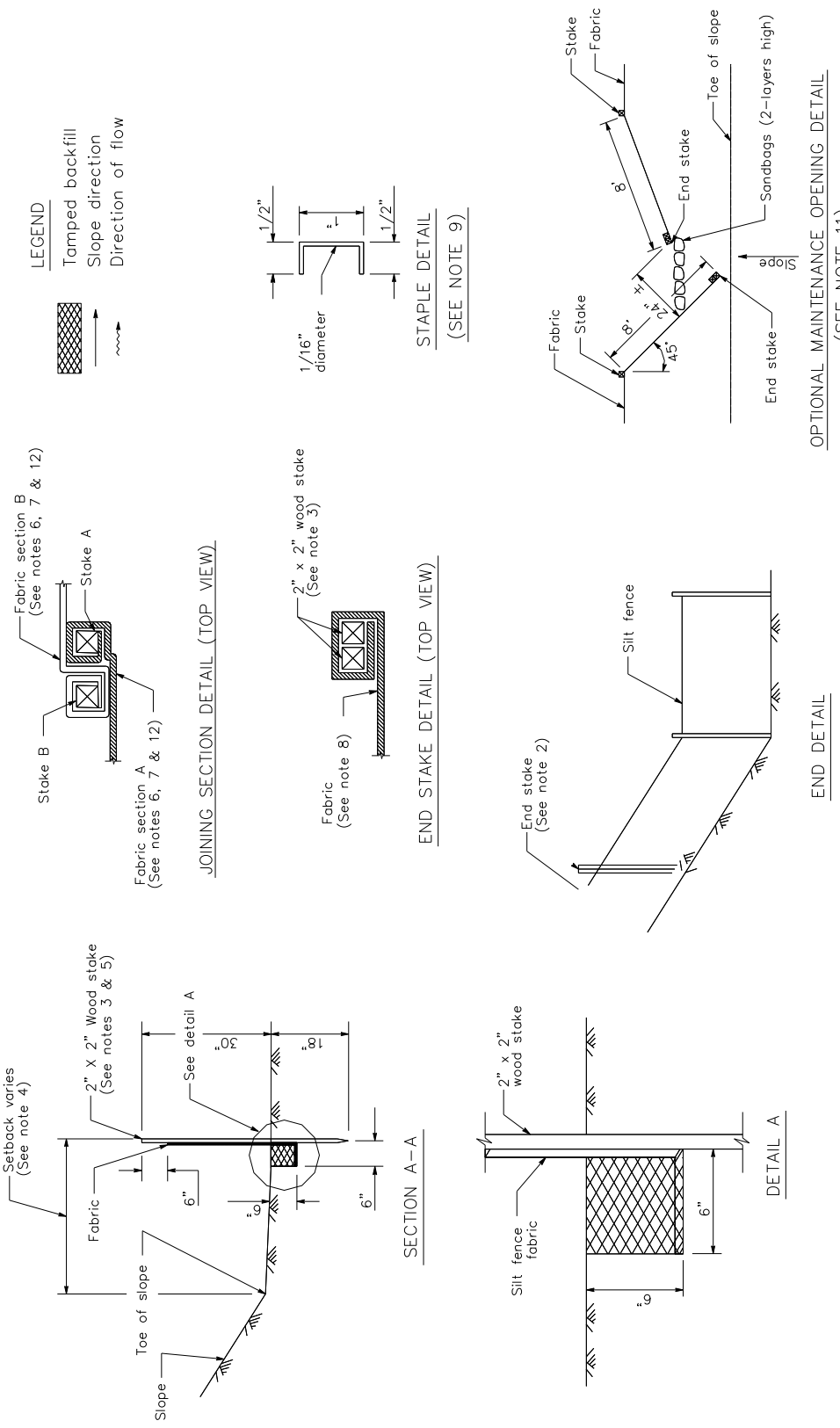
LEGEND
Tamped backfill
Slope direction
Direction of flow
1/2"
1"
1/2"
1/16" diameter
STAPLE DETAIL
(SEE NOTE 9)
Stake
Fabric
Toe of slope
8'
End stake
Sandbags (2-layers high)
Slope
Fabric
Stake
8'
4'
2'
45°
End stake
OPTIONAL MAINTENANCE OPENING DETAIL
(SEE NOTE 11)
Fabric section B
(See notes 6, 7 & 12)
Stake A
Stake B
Fabric section A
(See notes 6, 7 & 12)
JOINING SECTION DETAIL (TOP VIEW)
2" x 2" wood stake
(See note 3)
Fabric
(See note 8)
END STAKE DETAIL (TOP VIEW)
Silt fence
End stake
(See note 2)
END DETAIL
Setback varies
(See note 4)
2" X 2" Wood stake
(See notes 3 & 5)
See detail A
30"
18"
Fabric
6"
6"
6"
Toe of slope
Slope
SECTION A-A
2" x 2"
wood stake
Silt fence
fabric
6"
6"
DETAIL A

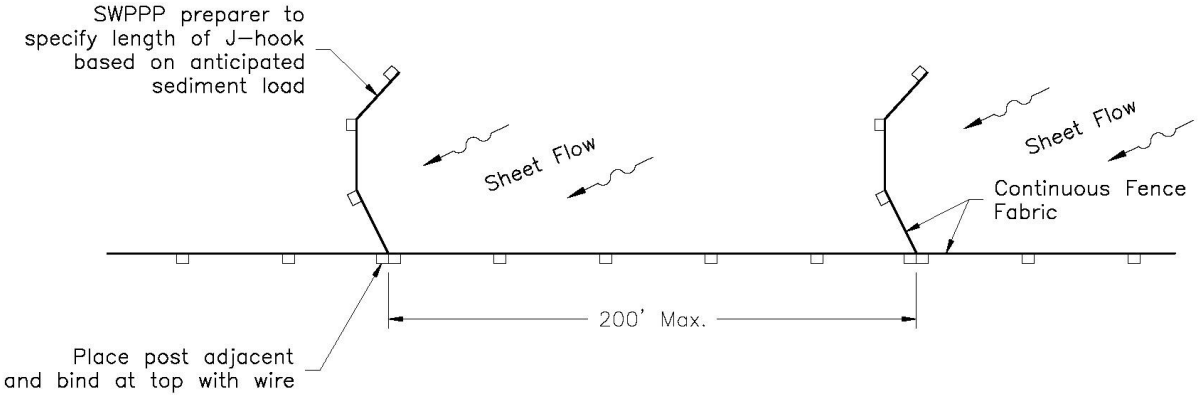
SWPPP preparer to specify length of J–hook based on anticipated sediment load
Sheet Flow
Sheet Flow
Continuous Fence Fabric
200' Max.
Place post adjacent and bind at top with wire

Plan

J–HOOK

Sediment Basin SE-2

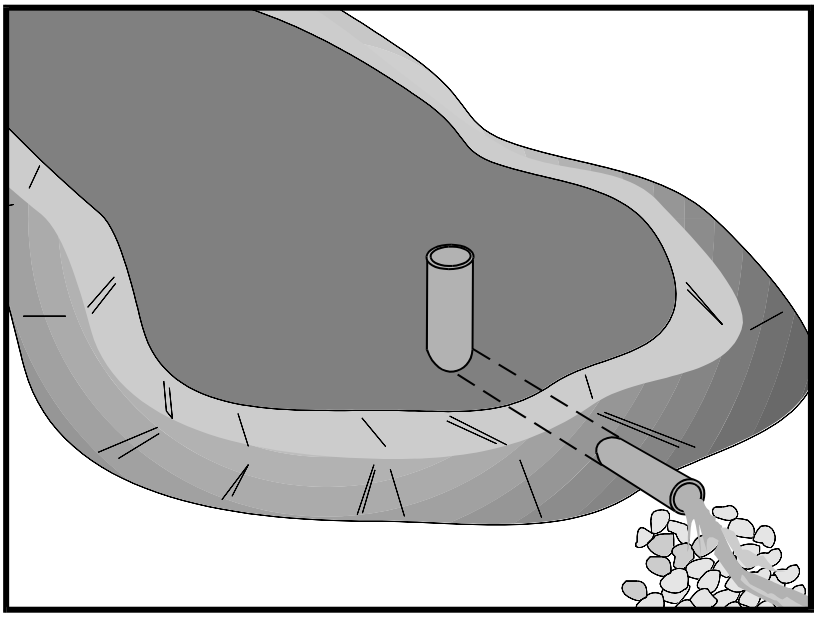

Description and Purpose

A sediment basin is a temporary basin formed by excavation or by constructing an embankment so that sediment-laden runoff is temporarily detained under quiescent conditions, allowing sediment to settle out before the runoff is released.

Sediment basin design guidance presented in this fact sheet is intended to provide options, methods, and techniques to optimize temporary sediment basin performance and basin sediment removal. Basin design guidance provided in this fact sheet is not intended to guarantee basin effluent compliance with numeric discharge limits (numeric action levels or numeric effluent limits for turbidity). Compliance with discharge limits requires a thoughtful approach to comprehensive BMP planning, implementation, and maintenance. Therefore, optimally designed and maintained sediment basins should be used in conjunction with a comprehensive system of BMPs that includes:

- Diverting runoff from undisturbed areas away from the basin
- Erosion control practices to minimize disturbed areas on-site and to provide temporary stabilization and interim sediment controls (e.g., stockpile perimeter control, check dams, perimeter controls around individual lots) to reduce the basin's influent sediment concentration.

At some sites, sediment basin design enhancements may be required to adequately remove sediment. Traditional

Categories

EC	Erosion Control	
SE	Sediment Control	☑
TC	Tracking Control	
WE	Wind Erosion Control	
NS	Non-Stormwater Management Control	
WM	Waste Management and Materials Pollution Control	

Legend:

☑ **Primary Category**

☒ **Secondary Category**

Targeted Constituents

Sediment	☑
Nutrients	
Trash	☑
Metals	
Bacteria	
Oil and Grease	
Organics	

Potential Alternatives

SE-3 Sediment Trap (for smaller areas)

If User/Subscriber modifies this fact sheet in any way, the CASQA name/logo and footer below must be removed from each page and not appear on the modified version.

(a.k.a. "physical") enhancements such as alternative outlet configurations or flow deflection baffles increase detention time and other techniques such as outlet skimmers preferentially drain flows with lower sediment concentrations. These "physical" enhancement techniques are described in this fact sheet. To further enhance sediment removal particularly at sites with fine soils or turbidity sensitive receiving waters, some projects may need to consider implementing Active Treatment Systems (ATS) whereby coagulants and flocculants are used to enhance settling and removal of suspended sediments. Guidance on implementing ATS is provided in SE-11.

Suitable Applications

Sediment basins may be suitable for use on larger projects with sufficient space for constructing the basin. Sediment basins should be considered for use:

- Where sediment-laden water may enter the drainage system or watercourses
- On construction projects with disturbed areas during the rainy season
- At the outlet of disturbed watersheds between 5 acres and 75 acres and evaluated on a site by site basis
- Where post construction detention basins are required
- In association with dikes, temporary channels, and pipes used to convey runoff from disturbed areas

Limitations

Sediment basins must be installed only within the property limits and where failure of the structure will not result in loss of life, damage to homes or buildings, or interruption of use or service of public roads or utilities. In addition, sediment basins are attractive to children and can be very dangerous. Local ordinances regarding health and safety must be adhered to. If fencing of the basin is required, the type of fence and its location should be shown in the SWPPP and in the construction specifications.

- As a general guideline, sediment basins are suitable for drainage areas of 5 acres or more, but not appropriate for drainage areas greater than 75 acres. However, the tributary area should be evaluated on a site by site basis.
- Sediment basins may become an "attractive nuisance" and care must be taken to adhere to all safety practices. If safety is a concern, basin may require protective fencing.
- Sediment basins designed according to this fact sheet are only effective in removing sediment down to about the silt size fraction. Sediment-laden runoff with smaller size fractions (fine silt and clay) may not be adequately treated unless chemical (or other appropriate method) treatment is used in addition to the sediment basin.
- Basins with a height of 25 ft or more or an impounding capacity of 50 ac-ft or more must obtain approval from California Department of Water Resources Division of Safety of Dams (http://www.water.ca.gov/damsafety/).

- Water that stands in sediment basins longer than 96 hours may become a source of mosquitoes (and midges), particularly along perimeter edges, in shallow zones, in scour or below-grade pools, around inlet pipes, along low-flow channels, and among protected habitats created by emergent or floating vegetation (e.g. cattails, water hyacinth), algal mats, riprap, etc.
- Basins require large surface areas to permit settling of sediment. Size may be limited by the available area.

Implementation

General

A sediment basin is a controlled stormwater release structure formed by excavation or by construction of an embankment of compacted soil across a drainage way, or other suitable location. It is intended to trap sediment before it leaves the construction site. The basin is a temporary measure expected to be used during active construction in most cases and is to be maintained until the site area is permanently protected against erosion or a permanent detention basin is constructed.

Sediment basins are suitable for nearly all types of construction projects. Whenever possible, construct the sediment basins before clearing and grading work begins. Basins should be located at the stormwater outlet from the site but not in any natural or undisturbed stream. A typical application would include temporary dikes, pipes, and/or channels to convey runoff to the basin inlet.

Many development projects in California are required by local ordinances to provide a stormwater detention basin for post-construction flood control, desilting, or stormwater pollution control. A temporary sediment basin may be constructed by rough grading the post-construction control basins early in the project.

Sediment basins if properly designed and maintained can trap a significant amount of the sediment that flows into them. However, traditional basins do not remove all inflowing sediment. Therefore, they should be used in conjunction with erosion control practices such as temporary seeding, mulching, diversion dikes, etc., to reduce the amount of sediment flowing into the basin.

Planning

To improve the effectiveness of the basin, it should be located to intercept runoff from the largest possible amount of disturbed area. Locations best suited for a sediment basin are generally in lower elevation areas of the site (or basin tributary area) where site drainage would not require significant diversion or other means to direct water to the basin but outside jurisdictional waterways. However, as necessary, drainage into the basin can be improved by the use of earth dikes and drainage swales (see BMP EC-9). . The basin should not be located where its failure would result in the loss of life or interruption of the use or service of public utilities or roads.

Construct before clearing and grading work begins when feasible.

- Do not locate the basin in a jurisdictional stream.

- Basin sites should be located where failure of the structure will not cause loss of life, damage to homes or buildings, or interruption of use or service of public roads or utilities.
- Basins with a height of 25 ft or more or an impounding capacity of 50 ac-ft must obtain approval from the Division of Dam Safety. Local dam safety requirements may be more stringent.
- Limit the contributing area to the sediment basin to only the runoff from the disturbed soil areas. Use temporary concentrated flow conveyance controls to divert runoff from undisturbed areas away from the sediment basin.
- The basin should be located: (1) by excavating a suitable area or where a low embankment can be constructed across a swale, (2) where post-construction (permanent) detention basins will be constructed, and (3) where the basins can be maintained on a year-round basis to provide access for maintenance, including sediment removal and sediment stockpiling in a protected area, and to maintain the basin to provide the required capacity.

Design

When designing a sediment basin, designers should evaluate the site constraints that could affect the efficiency of the BMP. Some of these constraints include: the relationship between basin capacity, anticipated sediment load, and freeboard, available footprint for the basin, maintenance frequency and access, and hydraulic capacity and efficiency of the temporary outlet infrastructure. Sediment basins should be designed to maximize sediment removal and to consider sediment load retained by the basin as it affects basin performance.

Three Basin Design Options (Part A) are presented below along with a Typical Sediment/Detention Basin Design Methodology (Part B). Regardless of the design option that is selected, designers also need to evaluate the sediment basin capacity with respect to sediment accumulation (See "*Step 3. Evaluate the Capacity of the Sediment Basin"),* and should incorporate approaches identified in "*Step 4. Other Design Considerations*" to enhance basin performance.

A) Basin Design Options:

Option 1:

Design sediment basin(s) using the standard equation:

$$A_s = \frac{1.2Q}{V_s} \qquad \text{(Eq. 1)}$$

Where:

A_s = Minimum surface area for trapping soil particles of a certain size

V_s = Settling velocity of the design particle size chosen (V_s = 0.00028 ft/s for a design particle size of 0.01 mm at 68°F)

1.2 = Factor of safety recommended by USEPA to account for the reduction in basin efficiency caused due to turbulence and other non ideal conditions.

$Q = CIA$ (Eq.2)

Where

Q = Peak basin influent flow rate measured in cubic feet per second (ft^3/s)

C = Runoff coefficient (unitless)

I = Peak rainfall intensity for the 10-year, 6-hour rain event (in/hr)

A = Area draining into the sediment basin in acres

The design particle size should be the smallest soil grain size determined by wet sieve analysis, or the fine silt sized (0.01 mm [or 0.0004 in.]) particle, and the Vs used should be 100 percent of the calculated settling velocity.

This sizing basin method is dependent on the outlet structure design or the total basin length with an appropriate outlet. If the designer chooses to utilize the outlet structure to control the flow duration in the basin, the basin length (distance between the inlet and the outlet) should be a minimum of twice the basin width; the depth should not be less than 3 ft nor greater than 5 ft for safety reasons and for maximum efficiency (2 ft of sediment storage, 2 ft of capacity). If the designer chooses to utilize the basin length (with appropriate basin outlet) to control the flow duration in the basin, the basin length (distance between the inlet and the outlet) should be a specifically designed to capture 100% of the design particle size; the depth should not be less than 3 ft nor greater than 5 ft for safety reasons and for maximum efficiency (2 ft of sediment storage, 2 ft of capacity).

Basin design guidance provided herein assumes standard water properties (e.g., estimated average water temperature, kinematic viscosity, etc.) as a basis of the design. Designers can use an alternative design (Option 3) with site specific water properties as long as the design is as protective as Option 1.

The design guidance uses the peak influent flow rate to size sediment basins. Designers can use an alternative design (Option 3) with site specific average flow rates as long as the design is as protective as Option 1.

The basin should be located on the site where it can be maintained on a year-round basis and should be maintained on a schedule to retain the 2 ft of capacity.

Option 2:

Design pursuant to local ordinance for sediment basin design and maintenance, provided that the design efficiency is as protective or more protective of water quality than Option 1.

Option 3:

The use of an equivalent surface area design or equation provided that the design efficiency is as protective or more protective of water quality than Option 1.

B) Typical Sediment/Detention Basin Design Methodology:

Design of a sediment basin requires the designer to have an understanding of the site constraints, knowledge of the local soil (e.g., particle size distribution of potentially contributing soils), drainage area of the basin, and local hydrology. Designers should not assume that a sediment basin for location A is applicable to location B. Therefore, designers can use this factsheet as guidance but will need to apply professional judgment and knowledge of the site to design an effective and efficient sediment basin. The following provides a general overview of typical design methodologies:

Step 1. Hydrologic Design

- Evaluate the site constraints and assess the drainage area for the sediment basin. Designers should consider on- and off-site flows as well as changes in the drainage area associated with site construction/disturbance. To minimize additional construction during the course of the project, the designer should consider identifying the maximum drainage area when calculating the basin dimensions.

- If a local hydrology manual is not available it is recommended to follow standard rational method procedures to estimate the flow rate. The references section of this factsheet provides a reference to standard hydrology textbooks that can provide standard methodologies. If local rainfall depths are not available, values can be obtained from standard precipitation frequency maps from NOAA (downloaded from http://www.wrcc.dri.edu/pcpnfreq.html).

Step 2. Hydraulic Design

- Calculate the surface area required for the sediment basin using Equation 1. In which the flow rate is estimated for a 10-yr 6-hr event using rational method procedure listed in local hydrology manual and Vs is estimated using Stokes Law presented in Equation 3.

$$V_s = 2.81d^2 \qquad \text{(Eq.3)}$$

Where

V_s = Settling velocity in feet per second at 68˚F

d = diameter of sediment particle in millimeters (smallest soil grain size determined by wet sieve analysis or fine silt (0.01 mm [or 0.0004 in.])

- In general the basin outlet design requires an iterative trial and error approach that considered the maximum water surface elevation, the elevation versus volume (stage-storage) relationship, the elevation verses basin outflow (a.k.a.-discharge) relationship, and the estimated inflow hydrograph. To adequately design the basins to settle sediment, the outlet configuration and associated outflow rates can be estimated by numerous methodologies. The following provides some guidance for design the basin outlet:

  - An outlet should have more than one orifice.

  - An outlet design typically utilizes multiple horizontal rows of orifices (approximately 3 or more) with at least 2 orifices per row (see Figures 1 and 2 at the end of this fact sheet).

- Orifices can vary in shape.
- Select the appropriate orifice diameter and number of perforations per row with the objective of minimizing the number of rows while maximizing the detention time.
- The diameter of each orifice is typically a maximum of 3-4 inches and a minimum of 0.25-0.5 inches.
- If a rectangular orifice is used, it is recommended to have minimum height of 0.5 inches and a maximum height of 6 inches.
- Rows are typically spaced at three times the diameter center to center vertically with a minimum distance of approximately 4 inches on center and a maximum distance of 1 foot on center.
- To estimate the outflow rate, each row is calculated separately based on the flow through a single orifice then multiplied by the number of orifices in the row. This step is repeated for each of the rows. Once all of the orifices are estimated, the total outflow rate versus elevation (stage-discharge curve) is developed to evaluate the detention time within the basin.
- Flow through a single orifice can be estimated using an Equation 4:

$$Q = BC'A(2gH)^{0.5} \qquad \text{(Eq.4)}$$

Where
Q = Outflow rate in ft^3/s
C′ = Orifice coefficient (unitless)
A = Area of the orifice (ft^2)
g = acceleration due to gravity (ft^3/s)
H = Head above the orifice (ft)
B = Anticipated Blockage or clogging factor (unitless), It is dependent on anticipated sediment and debris load, trash rack configuration etc, so the value is dependent on design engineers professional judgment and/or local requirements (B is never greater than 1 and a value of 0.5 is generally used)

- Care must be taken in the selection of orifice coefficient ("C′"); 0.60 is most often recommended and used. However, based on actual tests, Young and Graziano (1989), "Outlet Hydraulics of Extended Detention Facilities for Northern Virginia Planning District Commission", recommends the following:
  - C′ = 0.66 for thin materials; where the thickness is equal to or less than the orifice diameter, or
  - C′ = 0.80 when the material is thicker than the orifice diameter
- If different sizes of orifices are used along the riser then they have to be sized such that not more than 50 percent of the design storm event drains in one-third of the drawdown time (to provide adequate settling time for events smaller than the design storm event)

and the entire volume drains within 96 hours or as regulated by the local vector control agency. If a basin fails to drain within 96 hours, the basin must be pumped dry.

- Because basins are not maintained for infiltration, water loss by infiltration should be disregarded when designing the hydraulic capacity of the outlet structure.

- Floating Outlet Skimmer: The floating skimmer (see Figure 3 at the end of this fact sheet is an alternative outlet configuration (patented) that drains water from upper portion of the water column. This configuration has been used for temporary and permanent basins and can improve basin performance by eliminating bottom orifices which have the potential of discharging solids. Some design considerations for this alternative outlet device includes the addition of a sand filter or perforated under drain at the low point in the basin and near the floating skimmer. These secondary drains allow the basin to fully drain. More detailed guidelines for sizing the skimmer can be downloaded from http://www.fairclothskimmer.com/.

- Hold and Release Valve: An ideal sediment/detention basin would hold all flows to the design storm level for sufficient time to settle solids, and then slowly release the storm water. Implementing a reliable valve system for releasing detention basins is critical to eliminate the potential for flooding in such a system. Some variations of hold and release valves include manual valves, bladder devices or electrically operated valves. When a precipitation event is forecast, the valve would be close for the duration of the storm and appropriate settling time. When the settling duration is met (approximately 24 or 48 hours), the valve would be opened and allow the stormwater to be released at a rate that does not resuspend settled solids and in a non-erosive manner. If this type of system is used the valve should be designed to empty the entire basin within 96 hours or as stipulated by local vector control regulations.

Step 3. Evaluate the Capacity of the Sediment Basin

- Typically, sediment basins do not perform as designed when they are not properly maintained or the sediment yield to the basin is larger than expected. As part of a good sediment basin design, designers should consider maintenance cycles, estimated soil loss and/or sediment yield, and basin sediment storage volume. The two equations below can be used to quantify the amount of soil entering the basin.

- The Revised Universal Soil Loss Equation (RUSLE, Eq.5) can be used to estimate annual soil loss and the Modified Universal Soil Equation (MUSLE, Eq.6) can be used to estimate sediment yield from a single storm event.

$$A = R \times K \times LS \times C \times P \qquad \text{(Eq.5)}$$

$$Y = 95(Q \times q_p)^{0.56} \times K \times LS \times C \times P \qquad \text{(Eq.6)}$$

Where:

A = annual soil loss, tons/acre-year

R = rainfall erosion index, in 100 ft.tons/acre.in/hr

K = soil erodibility factor, tons/acre per unit of R

LS = slope length and steepness factor (unitless)

C = vegetative cover factor (unitless)

P = erosion control practice factor (unitless)

Y = single storm sediment yield in tons

Q = runoff volume in acre-feet

q_p = peak flow in cfs

- Detailed descriptions and methodologies for estimating the soil loss can be obtained from standard hydrology text books (See References section).
- Determination of the appropriate equation should consider construction duration and local environmental factors (soils, hydrology, etc.). For example, if a basin is planned for a project duration of 1 year and the designer specifies one maintenance cycle, RUSLE could be used to estimate the soil loss and thereby the designer could indicate that the sediment storage volume would be half of the soil loss value estimated. As an example for use of MUSLE, a project may have a short construction duration thereby requiring fewer maintenance cycles and a reduced sediment storage volume. MUSLE would be used to estimate the anticipated soil loss based on a specific storm event to evaluate the sediment storage volume and appropriate maintenance frequency.
- The soil loss estimates are an essential step in the design and it is essential that the designer provide construction contractors with enough information to understand maintenance frequency and/or depths within the basin that would trigger maintenance. Providing maintenance methods, frequency and specification should be included in design bid documents such as the SWPPP Site Map.
- Once the designer has quantified the amount of soil entering the basin, the depth required for sediment storage can be determined by dividing the estimated sediment loss by the surface area of the basin.

Step 4. Other Design Considerations

- Consider designing the volume of the settling zone for the total storm volume associated with the 2-year event or other appropriate design storms specified by the local agency. This volume can be used as a guide for sizing the basin without iterative routing calculations. The depth of the settling zone can be estimated by dividing the estimated 2-yr storm volume by the surface area of the basin.
- The basin volume consists of two zones:
  - A sediment storage zone at least 1 ft deep.
  - A settling zone at least 2 ft deep.

- The basin depth must be no less than 3 ft (not including freeboard).

- Proper hydraulic design of the outlet is critical to achieving the desired performance of the basin. The outlet should be designed to drain the basin within 24 to 96 hours (also referred to as "drawdown time"). The 24-hour limit is specified to provide adequate settling time; the 96-hour limit is specified to mitigate vector control concerns.

- Confirmation of the basin performance can be evaluated by routing the design storm (10-yr 6-hr, or as directed by local regulations) through the basin based on the basin volume (stage-storage curve) and the outlet design (stage-discharge curve based on the orifice configuration or equivalent outlet design).

- Sediment basins, regardless of size and storage volume, should include features to accommodate overflow or bypass flows that exceed the design storm event.

  - Include an emergency spillway to accommodate flows not carried by the principal spillway. The spillway should consist of an open channel (earthen or vegetated) over undisturbed material (not fill) or constructed of a non-erodible riprap (or equivalent protection) on fill slopes.

  - The spillway control section, which is a level portion of the spillway channel at the highest elevation in the channel, should be a minimum of 20 ft in length.

- Rock, vegetation or appropriate erosion control should be used to protect the basin inlet, outlet, and slopes against erosion.

- The total depth of the sediment basin should include the depth required for sediment storage, depth required for settling zone and freeboard of at least 1 foot or as regulated by local flood control agency for a flood event specified by the local agency.

- The basin alignment should be designed such that the length of the basin is more than twice the width of the basin; the length should be determined by measuring the distance between the inlet and the outlet. If the site topography does not allow for this configuration baffles should be installed so that the ratio is satisfied. If a basin has more than one inflow point, any inflow point that conveys more than 30 percent of the total peak inflow rate has to meet the required length to width ratio.

- An alternative basin sizing method proposed by Fifield (2004) can be consulted to estimate an alternative length to width ratio and basin configuration. These methods can be considered as part of Option 3 which allows for alternative designs that are protective or more protective of water quality.

- Baffles (see Figure 4 at the end of this fact sheet) can be considered at project sites where the existing topography or site constraints limit the length to width ratio. Baffles should be constructed of earthen berms or other structural material within the basin to divert flow in the basin, thus increasing the effective flow length from the basin inlet to the outlet riser. Baffles also reduce the change of short circuiting and allows for settling throughout the basin.

- Baffles are typically constructed from the invert of the basin to the crest of the emergency spillway (i.e., design event flows are meant to flow around the baffles and flows greater than the design event would flow over the baffles to the emergency spillway).
- Use of other materials for construction of basin baffles (such as silt fence) may not be appropriate based on the material specifications and will require frequent maintenance (maintain after every storm event). Maintenance may not be feasible when required due to flooded conditions resulting from frequent (i.e., back to back) storm events. Use of alternative baffle materials should not deviate from the intended purpose of the material, as described by the manufacturer.
- Sediment basins are best used in conjunction with erosion controls.
- Basins with an impounding levee greater than 4.5 ft tall, measured from the lowest point to the impounding area to the highest point of the levee, and basins capable of impounding more than 35,000 ft^3, should be designed by a Registered Civil Engineer. The design should include maintenance requirements, including sediment and vegetation removal, to ensure continuous function of the basin outlet and bypass structures.
- A forebay, constructed upstream of the basin, may be provided to remove debris and larger particles.
- The outflow from the sediment basin should be provided with velocity dissipation devices (see BMP EC-10) to prevent erosion and scouring of the embankment and channel.
- The principal outlet should consist of a corrugated metal, high density polyethylene (HDPE), or reinforced concrete riser pipe with dewatering holes and an anti-vortex device and trash rack attached to the top of the riser, to prevent floating debris from flowing out of the basin or obstructing the system. This principal structure should be designed to accommodate the inflow design storm.
- A rock pile or rock-filled gabions can serve as alternatives to the debris screen, although the designer should be aware of the potential for extra maintenance involved should the pore spaces in the rock pile clog.
- The outlet structure should be placed on a firm, smooth foundation with the base securely anchored with concrete or other means to prevent floatation.
- Attach riser pipe (watertight connection) to a horizontal pipe (barrel). Provide anti-seep collars on the barrel.
- Cleanout level should be clearly marked on the riser pipe.

Installation

- Securely anchor and install an anti-seep collar on the outlet pipe/riser and provide an emergency spillway for passing major floods (see local flood control agency).
- Areas under embankments must be cleared and stripped of vegetation.

- Chain link fencing should be provided around each sediment basin to prevent unauthorized entry to the basin or if safety is a concern.

Costs

The cost of a sediment basin is highly variable and is dependent of the site configuration. To decrease basin construction costs, designers should consider using existing site features such as berms or depressed area to site the sediment basin. Designers should also consider potential savings associated with designing the basin to minimize the number of maintenance cycles and siting the basin in a location where a permanent BMP (e.g., extended detention basin) is required for the project site.

Inspection and Maintenance

- BMPs must be inspected in accordance with General Permit requirements for the associated project type and risk level and as required by local requirements. It is recommended that at a minimum, basins be inspected weekly, prior to forecasted rain events, daily during extended rain events, and after the conclusion of rain events.
- Examine basin banks for seepage and structural soundness.
- Check inlet and outlet structures and spillway for any damage or obstructions. Repair damage and remove obstructions as needed.
- Check inlet and outlet area for erosion and stabilize if required.
- Check fencing for damage and repair as needed.
- Sediment that accumulates in the basin must be periodically removed in order to maintain BMP effectiveness. Sediment should be removed when sediment accumulation reaches one-half the designated sediment storage volume. Sediment removed during maintenance should be managed properly. The sediment should be appropriately evaluated and used or disposed of accordingly. Options include: incorporating sediment into earthwork on the site (only if there is no risk that sediment is contaminated); or off-site export/disposal at an appropriate location (e.g., sediment characterization and disposal to an appropriate landfill).
- Remove standing water from basin within 96 hours after accumulation.
- If the basin does not drain adequately (e.g., due to storms that are more frequent or larger than the design storm or other unforeseen site conditions), dewatering should be conducted in accordance with appropriate dewatering BMPs (see NS-2) and in accordance with local permits as applicable.
- To minimize vector production:
  - Remove accumulation of live and dead floating vegetation in basins during every inspection.
  - Remove excessive emergent and perimeter vegetation as needed or as advised by local or state vector control agencies.

References

A Current Assessment of Urban Best Management Practices: Techniques for Reducing Nonpoint Source Pollution in the Coastal Zones, Metropolitan Washington Council of Governments, March 1992.

Draft-Sedimentation and Erosion Control, an Inventory of Current Practices, USEPA. April 1990.

U.S. Environmental Protection Agency (USEPA). Erosion and Sediment Control, Surface Mining in the Eastern U.S., U.S. Environmental Protection Agency, Office of Water, Washington, DC,Washington, D.C., 1976.

Fifield, J.S. Designing for Effective Sediment and Erosion Control on Construction Sites. Forester Press, Santa Barbara, CA. 2004.

Goldman S.J., Jackson K. and Bursztynsky T.A. Erosion and Sediment Control Handbook. McGraw-Hill Book Company, 1986.

U.S. Environmental Protection Agency (USEPA). Guidance Specifying Management Measures for Nonpoint Pollution in Coastal Waters. EPA 840-B-9-002. U.S. Environmental Protection Agency, Office of Water, Washington, DC, 1993.

Guidelines for the Design and Construction of Small Embankment Dams, Division of Safety of Dams, California Department of Water Resources, March 1986.

Haan C.T., Barfield B.J. and Hayes J.C. Design Hydrology and Sedimentology for Small Catchments. Academic Press. 1994.

Inlet/Outlet Alternatives for Extended Detention Basins. State of California Department of Transportation (Caltrans), 2001.

Manual of Standards of Erosion and Sediment Control Measures, Association of Bay Area Governments, May 1995.

McLean, J., 2000. Mosquitoes in Constructed Wetlands: A Management Bugaboo? In T.R. Schueler and H.K. Holland [eds.], The Practice of Watershed Protection. pp. 29-33. Center for Watershed Protection, Ellicott City, MD, 2000.

Metzger, M.E., D. F. Messer, C. L. Beitia, C. M. Myers, and V. L. Kramer. The Dark Side of Stormwater Runoff Management: Disease Vectors Associated with Structural BMPs, 2002.

National Management Measures to Control Nonpoint Source Pollution from Urban Areas, United States Environmental Protection Agency, 2002.

Proposed Guidance Specifying Management Measures for Sources of Nonpoint Pollution in Coastal Water, Work Group-Working Paper, USEPA, April 1992.

Stormwater Management of the Puget Sound Basin, Technical Manual, Publication #91-75, Washington State Department of Ecology, February 1992.

Stormwater Quality Handbooks - Construction Site Best Management Practices (BMPs) Manual, State of California Department of Transportation (Caltrans), November 2000.

Water Quality Management Plan for the Lake Tahoe Region, Volume II Handbook of Management Practices, Tahoe Regional Planning Agency, November 1988.

Young, G.K. and Graziano, F., Outlet Hydraulics of Extended Detention Facilities for Northern Virginia Planning District Commission, 1989.

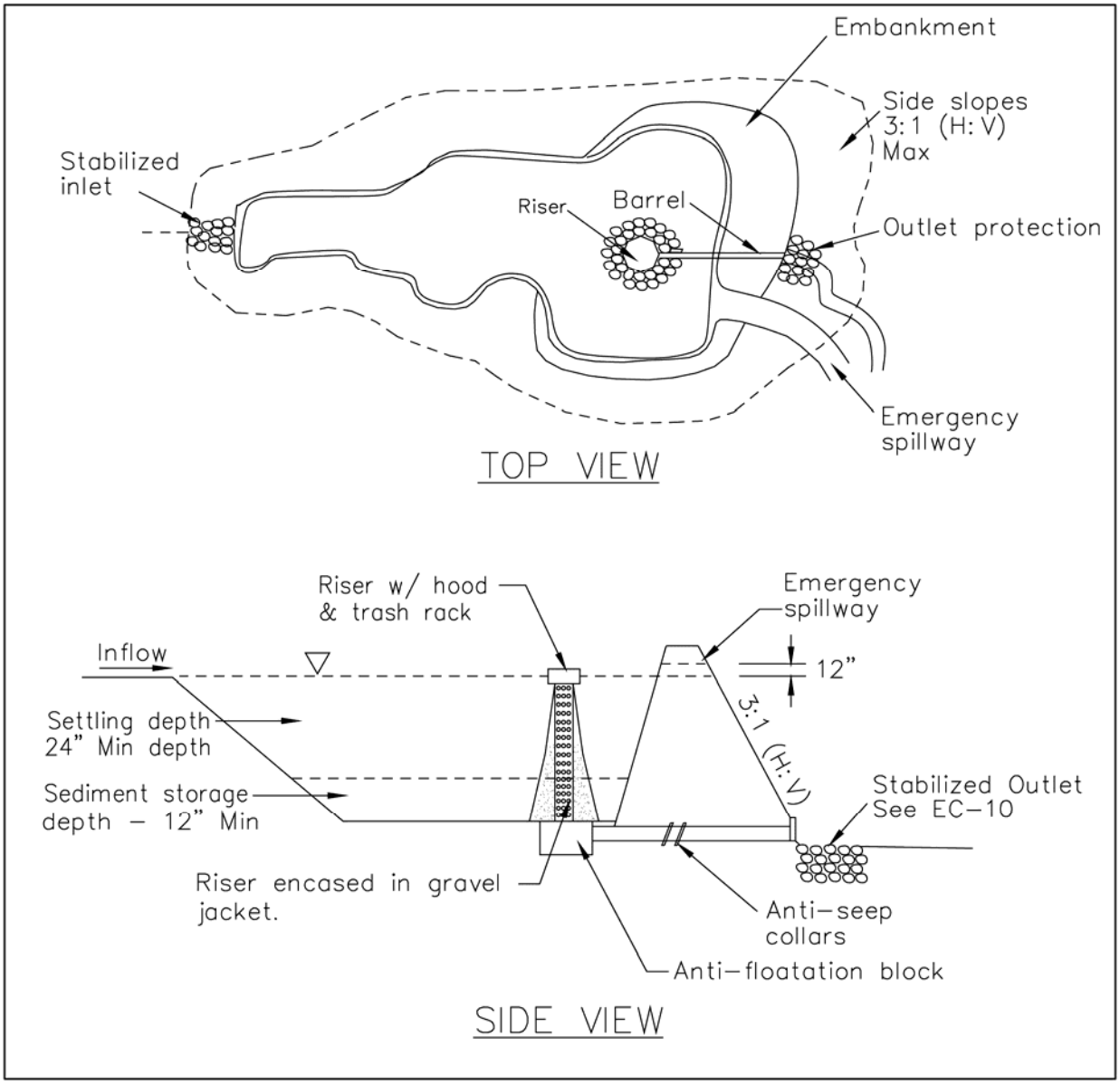

FIGURE 1: TYPICAL TEMPORARY SEDIMENT BASIN
MULTIPLE ORIFICE DESIGN
NOT TO SCALE

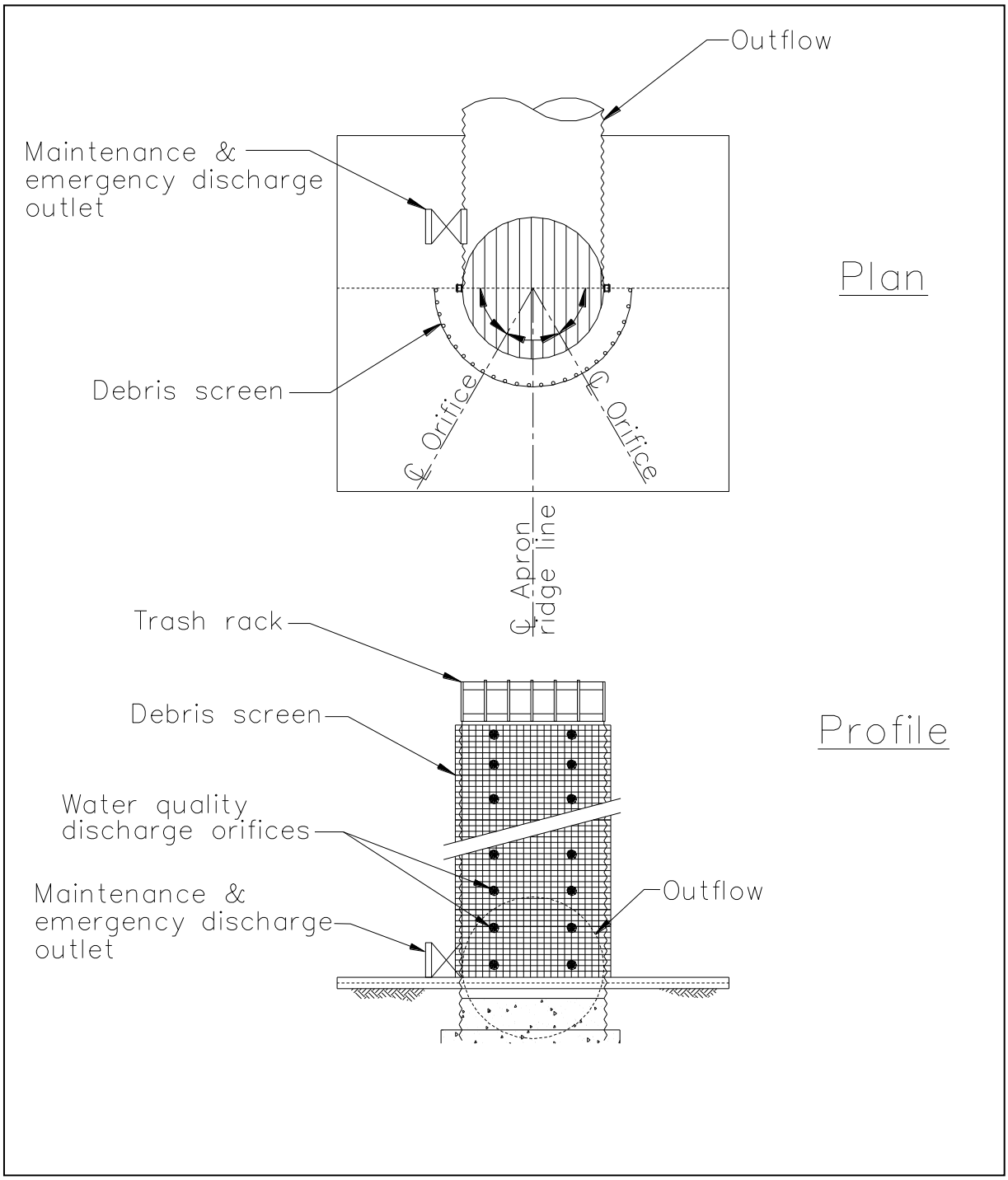

FIGURE 2: MULTIPLE ORIFICE OUTLET RISER
NOT TO SCALE

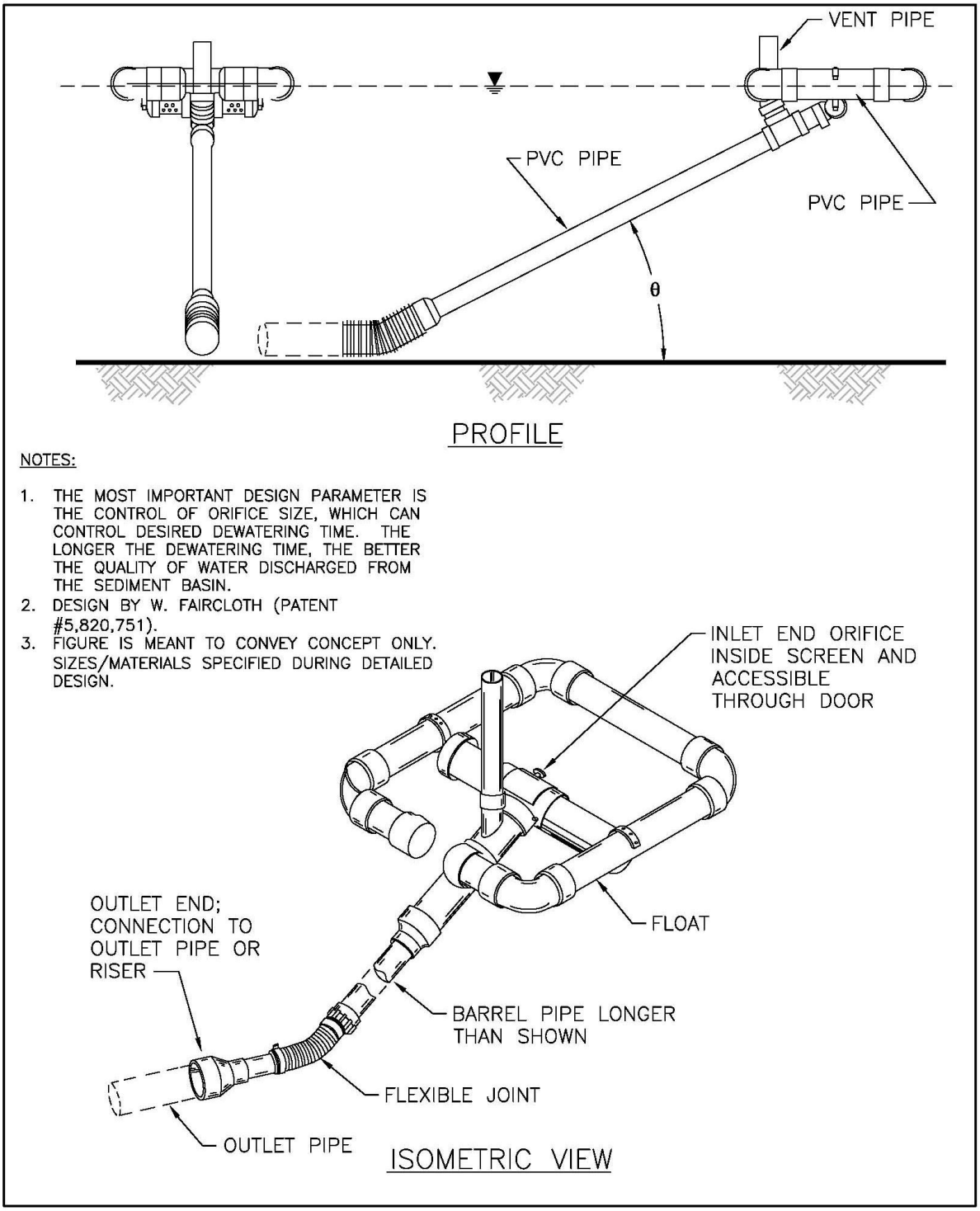

FIGURE 3: TYPICAL SKIMMER
NOT TO SCALE

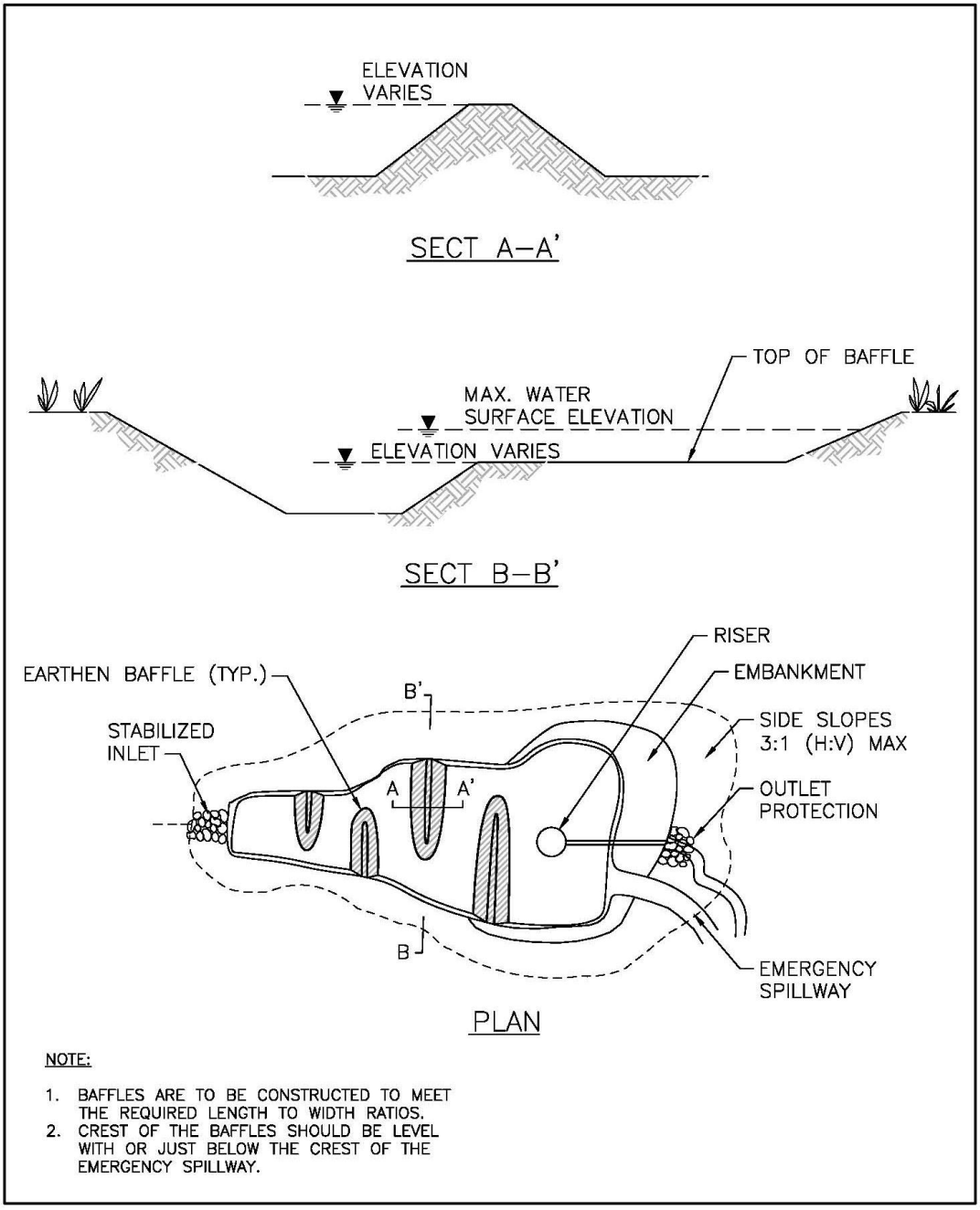

FIGURE 4: TYPICAL TEMPORARY SEDIMENT BASIN WITH BAFFLES
NOT TO SCALE

Sediment Trap SE-3

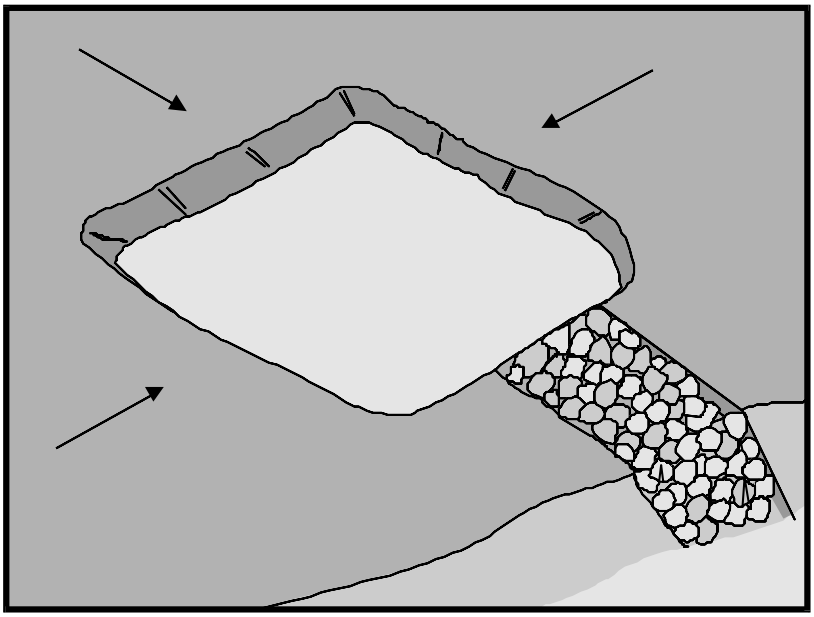

Description and Purpose

A sediment trap is a containment area where sediment-laden runoff is temporarily detained under quiescent conditions, allowing sediment to settle out or before the runoff is discharged by gravity flow. Sediment traps are formed by excavating or constructing an earthen embankment across a waterway or low drainage area.

Trap design guidance provided in this fact sheet is not intended to guarantee compliance with numeric discharge limits (numeric action levels or numeric effluent limits for turbidity). Compliance with discharge limits requires a thoughtful approach to comprehensive BMP planning, implementation, and maintenance. Therefore, optimally designed and maintained sediment traps should be used in conjunction with a comprehensive system of BMPs.

Suitable Applications

Sediment traps should be considered for use:

- At the perimeter of the site at locations where sediment-laden runoff is discharged offsite.
- At multiple locations within the project site where sediment control is needed.
- Around or upslope from storm drain inlet protection measures.
- Sediment traps may be used on construction projects where the drainage area is less than 5 acres. Traps would be

Categories

EC	Erosion Control	
SE	Sediment Control	☑
TC	Tracking Control	
WE	Wind Erosion Control	
NS	Non-Stormwater Management Control	
WM	Waste Management and Materials Pollution Control	

Legend:

☑ **Primary Objective**

☒ **Secondary Objective**

Targeted Constituents

Sediment	☑
Nutrients	
Trash	☑
Metals	
Bacteria	
Oil and Grease	
Organics	

Potential Alternatives

SE-2 Sediment Basin (for larger areas)

If User/Subscriber modifies this fact sheet in any way, the CASQA name/logo and footer below must be removed from each page and not appear on the modified version.

placed where sediment-laden stormwater may enter a storm drain or watercourse. SE-2, Sediment Basins, must be used for drainage areas greater than 5 acres.

- As a supplemental control, sediment traps provide additional protection for a water body or for reducing sediment before it enters a drainage system.

Limitations

- Requires large surface areas to permit infiltration and settling of sediment.
- Not appropriate for drainage areas greater than 5 acres.
- Only removes large and medium sized particles and requires upstream erosion control.
- Attractive and dangerous to children, requiring protective fencing.
- Conducive to vector production.
- Should not be located in live streams.

Implementation

Design

A sediment trap is a small temporary ponding area, usually with a gravel outlet, formed by excavation or by construction of an earthen embankment. Its purpose is to collect and store sediment from sites cleared or graded during construction. It is intended for use on small drainage areas with no unusual drainage features and projected for a quick build-out time. It should help in removing coarse sediment from runoff. The trap is a temporary measure with a design life of approximately six months to one year and is to be maintained until the site area is permanently protected against erosion by vegetation and/or structures.

Sediment traps should be used only for small drainage areas. If the contributing drainage area is greater than 5 acres, refer to SE-2, Sediment Basins, or subdivide the catchment area into smaller drainage basins.

Sediment usually must be removed from the trap after each rainfall event. The SWPPP should detail how this sediment is to be disposed, such as in fill areas onsite, or removal to an approved offsite dump. Sediment traps used as perimeter controls should be installed before any land disturbance takes place in the drainage area.

Sediment traps are usually small enough that a failure of the structure would not result in a loss of life, damage to home or buildings, or interruption in the use of public roads or utilities. However, sediment traps are attractive to children and can be dangerous. The following recommendations should be implemented to reduce risks:

- Install continuous fencing around the sediment trap or pond. Consult local ordinances regarding requirements for maintaining health and safety.
- Restrict basin side slopes to 3:1 or flatter.

Sediment trap size depends on the type of soil, size of the drainage area, and desired sediment removal efficiency (see SE-2, Sediment Basin). As a rule of thumb, the larger the basin volume

the greater the sediment removal efficiency. Sizing criteria are typically established under the local grading ordinance or equivalent. The runoff volume from a 2-year storm is a common design criteria for a sediment trap. The sizing criteria below assume that this runoff volume is 0.042 acre-ft/acre (0.5 in. of runoff). While the climatic, topographic, and soil type extremes make it difficult to establish a statewide standard, the following criteria should trap moderate to high amounts of sediment in most areas of California:

- Locate sediment traps as near as practical to areas producing the sediment.
- Trap should be situated according to the following criteria: (1) by excavating a suitable area or where a low embankment can be constructed across a swale, (2) where failure would not cause loss of life or property damage, and (3) to provide access for maintenance, including sediment removal and sediment stockpiling in a protected area.
- Trap should be sized to accommodate a settling zone and sediment storage zone with recommended minimum volumes of 67 yd^3/acre and 33 yd^3/acre of contributing drainage area, respectively, based on 0.5 in. of runoff volume over a 24-hour period. In many cases, the size of an individual trap is limited by available space. Multiple traps or additional volume may be required to accommodate specific rainfall, soil, and site conditions.
- Traps with an impounding levee greater than 4.5 ft tall, measured from the lowest point to the impounding area to the highest point of the levee, and traps capable of impounding more than 35,000 ft^3, should be designed by a Registered Civil Engineer. The design should include maintenance requirements, including sediment and vegetation removal, to ensure continuous function of the trap outlet and bypass structures.
- The outlet pipe or open spillway must be designed to convey anticipated peak flows.
- Use rock or vegetation to protect the trap outlets against erosion.
- Fencing should be provided to prevent unauthorized entry.

Installation

Sediment traps can be constructed by excavating a depression in the ground or creating an impoundment with a small embankment. Sediment traps should be installed outside the area being graded and should be built prior to the start of the grading activities or removal of vegetation. To minimize the area disturbed by them, sediment traps should be installed in natural depressions or in small swales or drainage ways. The following steps must be followed during installation:

- The area under the embankment must be cleared, grubbed, and stripped of any vegetation and root mat. The pool area should be cleared.
- The fill material for the embankment must be free of roots or other woody vegetation as well as oversized stones, rocks, organic material, or other objectionable material. The embankment may be compacted by traversing with equipment while it is being constructed.
- All cut-and-fill slopes should be 3:1 or flatter.
- When a riser is used, all pipe joints must be watertight.

- When a riser is used, at least the top two-thirds of the riser should be perforated with 0.5 in. diameter holes spaced 8 in. vertically and 10 to 12 in. horizontally. See SE-2, Sediment Basin.
- When an earth or stone outlet is used, the outlet crest elevation should be at least 1 ft below the top of the embankment.
- When crushed stone outlet is used, the crushed stone used in the outlet should meet AASHTO M43, size No. 2 or 24, or its equivalent such as MSHA No. 2. Gravel meeting the above gradation may be used if crushed stone is not available.

Costs

Average annual cost per installation and maintenance (18 month useful life) is $0.73 per ft^3 ($1,300 per drainage acre). Maintenance costs are approximately 20% of installation costs.

Inspection and Maintenance

- Inspect BMPs in accordance with General Permit requirements for the associated project type and risk level. It is recommended that at a minimum, BMPs be inspected weekly, prior to forecasted rain events, daily during extended rain events, and after the conclusion of rain events.
- Inspect outlet area for erosion and stabilize if required.
- Inspect trap banks for seepage and structural soundness, repair as needed.
- Inspect outlet structure and spillway for any damage or obstructions. Repair damage and remove obstructions as needed.
- Inspect fencing for damage and repair as needed.
- Inspect the sediment trap for area of standing water during every visit. Corrective measures should be taken if the BMP does not dewater completely in 96 hours or less to prevent vector production.
- Sediment that accumulates in the BMP must be periodically removed in order to maintain BMP effectiveness. Sediment should be removed when the sediment accumulation reaches one-third of the trap capacity. Sediment removed during maintenance may be incorporated into earthwork on the site or disposed of at an appropriate location.
- Remove vegetation from the sediment trap when first detected to prevent pools of standing water and subsequent vector production.
- BMPs that require dewatering shall be continuously attended while dewatering takes place. Dewatering BMPs per NS-2 shall be implemented at all times during dewatering activities.

References

Brown, W., and T. Schueler. The Economics of Stormwater BMPs in the Mid-Atlantic Region. Prepared for Chesapeake Research Consortium, Edgewater, MD, by the Center for Watershed Protection, Ellicott City, MD, 1997.

Draft – Sedimentation and Erosion Control, an Inventory of Current Practices, USEPA, April 1990.

Manual of Standards of Erosion and Sediment Control Measures, Association of Bay Area Governments, May 1995.

Metzger, M.E., D.F. Messer, C.L. Beitia, C.M. Myers, and V.L. Kramer, The Dark Side of Stormwater Runoff Management: Disease Vectors Associated with Structural BMPs, 2002.

National Management Measures to Control Nonpoint Source Pollution from Urban Areas, United States Environmental Protection Agency, 2002.

Proposed Guidance Specifying Management Measures for Sources of Nonpoint Pollution in Coastal Waters, Work Group-Working Paper, USEPA, April 1992.

Stormwater Quality Handbooks - Construction Site Best Management Practices (BMPs) Manual, State of California Department of Transportation (Caltrans), November 2000.

Stormwater Management Manual for The Puget Sound Basin, Washington State Department of Ecology, Public Review Draft, 1991.

U.S. Environmental Protection Agency (USEPA). Guidance Specifying Management Measures for Nonpoint Pollution in Coastal Waters. EPA 840-B-9-002. U.S. Environmental Protection Agency, Office of Water, Washington, DC, 1993.

Water Quality Management Plan for the Lake Tahoe Region, Volume II, Handbook of Management Practices, Tahoe Regional Planning Agency, November 1988.

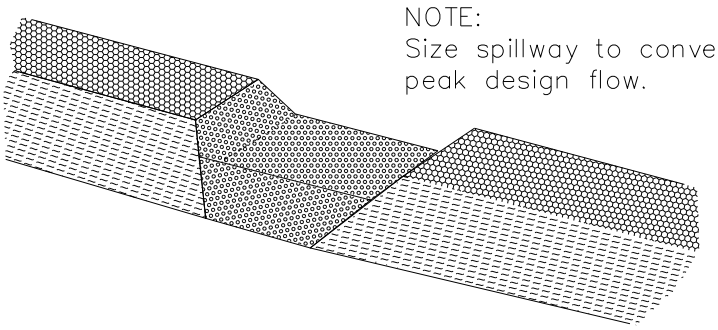

TYPICAL OPEN SPILLWAY

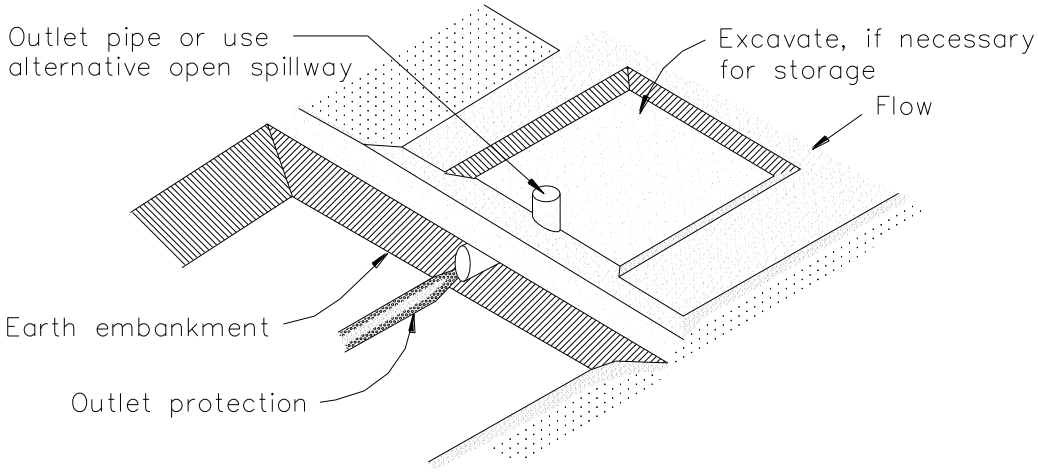

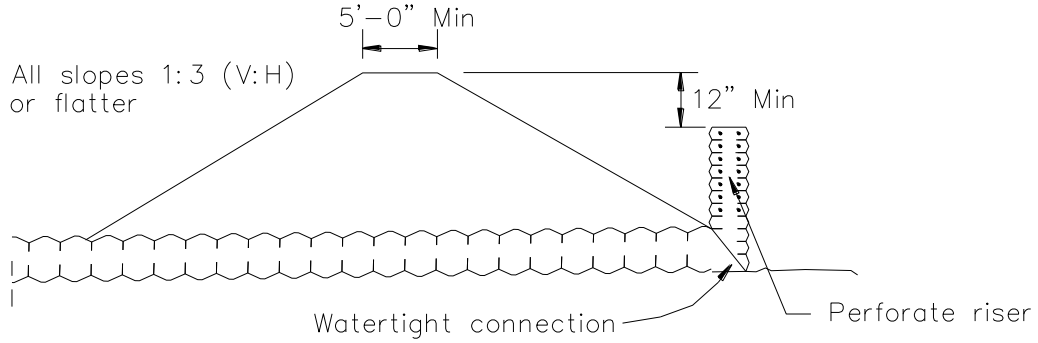

EMBANKMENT SECTION THRU RISER

TYPICAL SEDIMENT TRAP
NOT TO SCALE

Check Dams SE-4

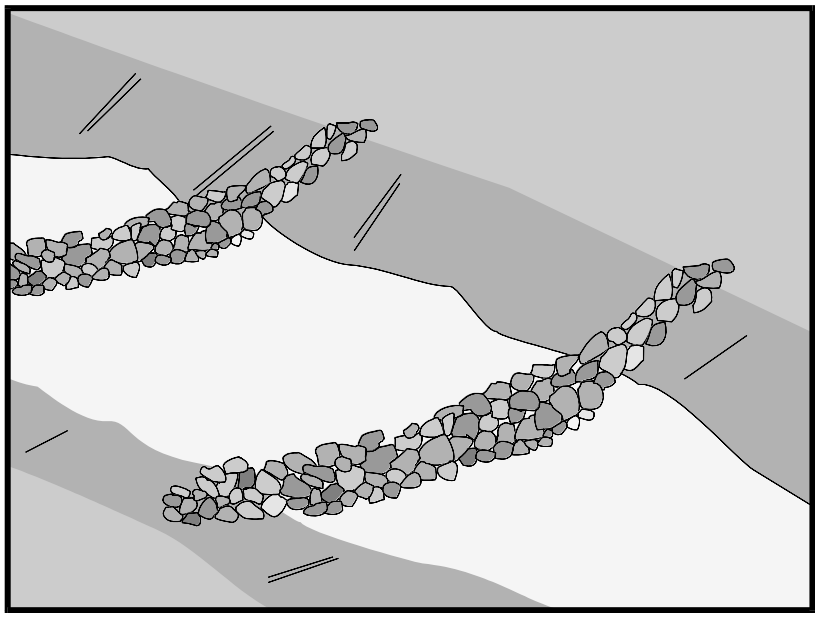

Description and Purpose

A check dam is a small barrier constructed of rock, gravel bags, sandbags, fiber rolls, or other proprietary products, placed across a constructed swale or drainage ditch. Check dams reduce the effective slope of the channel, thereby reducing scour and channel erosion by reducing flow velocity and increasing residence time within the channel, allowing sediment to settle.

Suitable Applications

Check dams may be appropriate in the following situations:

- To promote sedimentation behind the dam.
- To prevent erosion by reducing the velocity of channel flow in small intermittent channels and temporary swales.
- In small open channels that drain 10 acres or less.
- In steep channels where stormwater runoff velocities exceed 5 ft/s.
- During the establishment of grass linings in drainage ditches or channels.
- In temporary ditches where the short length of service does not warrant establishment of erosion-resistant linings.
- To act as a grade control structure.

Categories

EC	Erosion Control	☒
SE	Sediment Control	☑
TC	Tracking Control	
WE	Wind Erosion Control	
NS	Non-Stormwater Management Control	
WM	Waste Management and Materials Pollution Control	

Legend:

☑ **Primary Category**

☒ **Secondary Category**

Targeted Constituents

Sediment	☑
Nutrients	
Trash	
Metals	
Bacteria	
Oil and Grease	
Organics	

Potential Alternatives

SE-5 Fiber Rolls

SE-6 Gravel Bag Berm

SE-8 Sandbag Barrier

SE-12 Manufactured Linear Sediment Controls

SE-14 Biofilter Bags

If User/Subscriber modifies this fact sheet in any way, the CASQA name/logo and footer below must be removed from each page and not appear on the modified version.

Limitations

- Not to be used in live streams or in channels with extended base flows.
- Not appropriate in channels that drain areas greater than 10 acres.
- Not appropriate in channels that are already grass-lined unless erosion potential or sediment-laden flow is expected, as installation may damage vegetation.
- Require extensive maintenance following high velocity flows.
- Promotes sediment trapping which can be re-suspended during subsequent storms or removal of the check dam.
- Do not construct check dams with straw bales or silt fence.
- Water suitable for mosquito production may stand behind check dams, particularly if subjected to daily non-stormwater discharges.

Implementation

General

Check dams reduce the effective slope and create small pools in swales and ditches that drain 10 acres or less. Using check dams to reduce channel slope reduces the velocity of stormwater flows, thus reducing erosion of the swale or ditch and promoting sedimentation. Thus, check dams are dual-purpose and serve an important role as erosion controls as well as as sediment controls. Note that use of 1-2 isolated check dams for sedimentation will likely result in little net removal of sediment because of the small detention time and probable scour during longer storms. Using a series of check dams will generally increase their effectiveness. A sediment trap (SE-3) may be placed immediately upstream of the check dam to increase sediment removal efficiency.

Design and Layout

Check dams work by decreasing the effective slope in ditches and swales. An important consequence of the reduced slope is a reduction in capacity of the ditch or swale. This reduction in capacity should be considered when using this BMP, as reduced capacity can result in overtopping of the ditch or swale and resultant consequences. In some cases, such as a "permanent" ditch or swale being constructed early and used as a "temporary" conveyance for construction flows, the ditch or swale may have sufficient capacity such that the temporary reduction in capacity due to check dams is acceptable. When check dams reduce capacities beyond acceptable limits, either:

- Don't use check dams. Consider alternative BMPs, or.
- Increase the size of the ditch or swale to restore capacity.

Maximum slope and velocity reduction is achieved when the toe of the upstream dam is at the same elevation as the top of the downstream dam (see "Spacing Between Check Dams" detail at the end of this fact sheet). The center section of the dam should be lower than the edge sections (at least 6 inches), acting as a spillway, so that the check dam will direct flows to the center of

the ditch or swale (see "Typical Rock Check Dam" detail at the end of this fact sheet). Bypass or side-cutting can occur if a sufficient spillway is not provided in the center of the dam.

Check dams are usually constructed of rock, gravel bags, sandbags, and fiber rolls. A number of products can also be used as check dams (e.g. HDPE check dams, temporary silt dikes (SE-12)), and some of these products can be removed and reused. Check dams can also be constructed of logs or lumber, and have the advantage of a longer lifespan when compared to gravel bags, sandbags, and fiber rolls. Check dams should not be constructed from straw bales or silt fences, since concentrated flows quickly wash out these materials.

Rock check dams are usually constructed of 8 to 12 in. rock. The rock is placed either by hand or mechanically, but never just dumped into the channel. The dam should completely span the ditch or swale to prevent washout. The rock used should be large enough to stay in place given the expected design flow through the channel. It is recommended that abutments be extended 18 in. into the channel bank. Rock can be graded such that smaller diameter rock (e.g. 2-4 in) is located on the upstream side of larger rock (holding the smaller rock in place); increasing residence time.

Log check dams are usually constructed of 4 to 6 in. diameter logs, installed vertically. The logs should be embedded into the soil at least 18 in. Logs can be bolted or wired to vertical support logs that have been driven or buried into the soil.

See fiber rolls, SE-5, for installation of fiber roll check dams.

Gravel bag and sand bag check dams are constructed by stacking bags across the ditch or swale, shaped as shown in the drawings at the end of this fact sheet (see "Gravel Bag Check Dam" detail at the end of this fact sheet).

Manufactured products, such as temporary silt dikes (SE-12), should be installed in accordance with the manufacturer's instructions. Installation typically requires anchoring or trenching of products, as well as regular maintenance to remove accumulated sediment and debris.

If grass is planted to stabilize the ditch or swale, the check dam should be removed when the grass has matured (unless the slope of the swales is greater than 4%).

The following guidance should be followed for the design and layout of check dams:

- Install the first check dam approximately 16 ft from the outfall device and at regular intervals based on slope gradient and soil type.
- Check dams should be placed at a distance and height to allow small pools to form between each check dam.
- For multiple check dam installation, backwater from a downstream check dam should reach the toes of the upstream check dam.
- A sediment trap provided immediately upstream of the check dam will help capture sediment. Due to the potential for this sediment to be resuspended in subsequent storms, the sediment trap should be cleaned following each storm event.

- High flows (typically a 2-year storm or larger) should safely flow over the check dam without an increase in upstream flooding or damage to the check dam.
- Where grass is used to line ditches, check dams should be removed when grass has matured sufficiently to protect the ditch or swale.

Materials

- Rock used for check dams should typically be 8-12 in rock and be sufficiently sized to stay in place given expected design flows in the channel. Smaller diameter rock (e.g. 2 to 4 in) can be placed on the upstream side of larger rock to increase residence time.
- Gravel bags used for check dams should conform to the requirements of SE-6, Gravel Bag Berms.
- Sandbags used for check dams should conform to SE-8, Sandbag Barrier.
- Fiber rolls used for check dams should conform to SE-5, Fiber Rolls.
- Temporary silt dikes used for check dams should conform to SE-12, Temporary Silt Dikes.

Installation

- Rock should be placed individually by hand or by mechanical methods (no dumping of rock) to achieve complete ditch or swale coverage.
- Tightly abut bags and stack according to detail shown in the figure at the end of this section (pyramid approach). Gravel bags and sandbags should not be stacked any higher than 3 ft.
- Upper rows or gravel and sand bags shall overlap joints in lower rows.
- Fiber rolls should be trenched in, backfilled, and firmly staked in place.
- Install along a level contour.
- HDPE check dams, temporary silt dikes, and other manufactured products should be used and installed per manufacturer specifications.

Costs

Cost consists of labor costs if materials are readily available (such as gravel on-site). If material must be imported, costs will increase. For other material and installation costs, see SE-5, SE-6, SE-8, SE-12, and SE-14.

Inspection and Maintenance

- BMPs must be inspected in accordance with General Permit requirements for the associated project type and risk level. It is recommended that at a minimum, BMPs be inspected weekly, prior to forecasted rain events, daily during extended rain events, and after the conclusion of rain events.
- Replace missing rock, bags, rolls, etc. Replace bags or rolls that have degraded or have become damaged.

- If the check dam is used as a sediment capture device, sediment that accumulates behind the BMP should be periodically removed in order to maintain BMP effectiveness. Sediment should be removed when the sediment accumulation reaches one-third of the barrier height.
- If the check dam is used as a grade control structure, sediment removal is not required as long as the system continues to control the grade.
- Inspect areas behind check dams for pools of standing water, especially if subjected to daily non-stormwater discharges.
- Remove accumulated sediment prior to permanent seeding or soil stabilization.
- Remove check dam and accumulated sediment when check dams are no longer needed.

References

Draft – Sedimentation and Erosion Control, and Inventory of Current Practices, USEPA, April 1990.

Manual of Standards of Erosion and Sediment Control Measures, Association of Bay Area Governments, May 1995.

Stormwater Quality Handbooks - Construction Site Best Management Practices (BMPs) Manual, State of California Department of Transportation (Caltrans), March 2003.

Stormwater Management of the Puget Sound Basin, Technical Manual, Publication #91-75, Washington State Department of Ecology, February 1992.

Erosion and Sediment Control Manual, Oregon Department of Environmental Quality, February 2005.

Metzger, M.E. 2004. Managing mosquitoes in stormwater treatment devices. University of California Division of Agriculture and Natural Resources, Publication 8125. On-line: http://anrcatalog.ucdavis.edu/pdf/8125.pdf

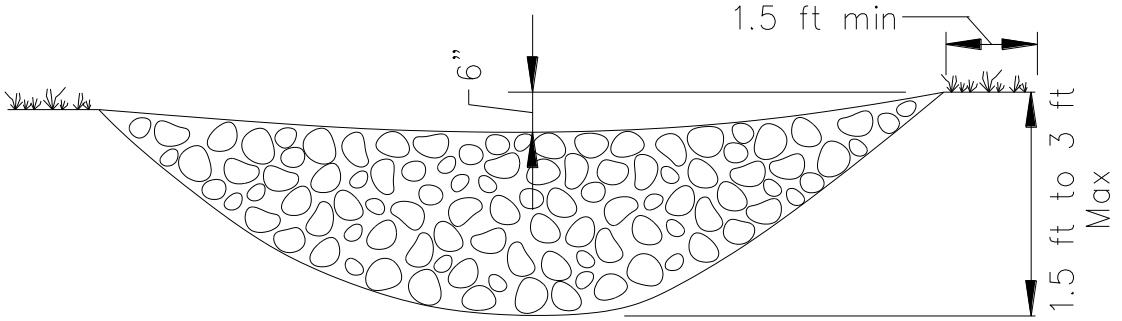

ELEVATION

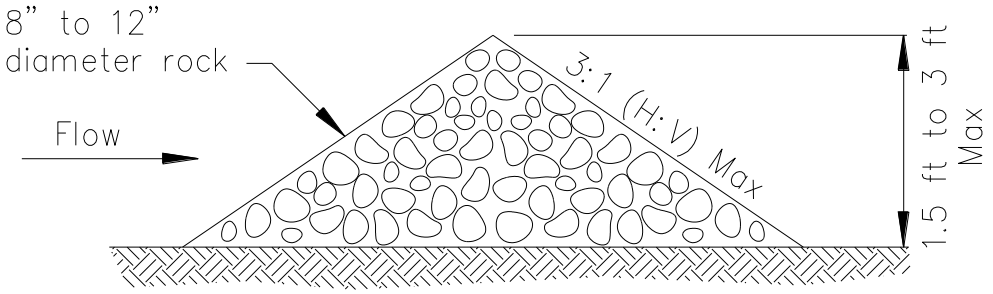

TYPICAL ROCK CHECK DAM SECTION

ROCK CHECK DAM
NOT TO SCALE

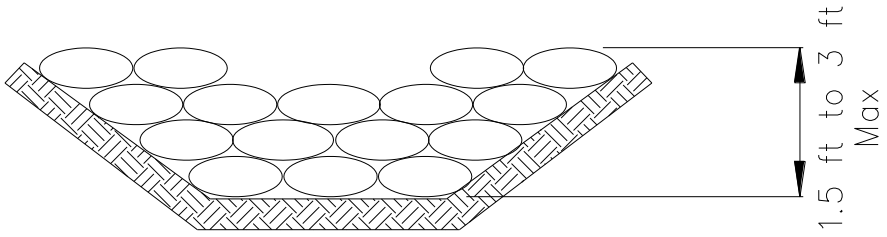

GRAVEL BAG CHECK DAM ELEVATION
NOT TO SCALE

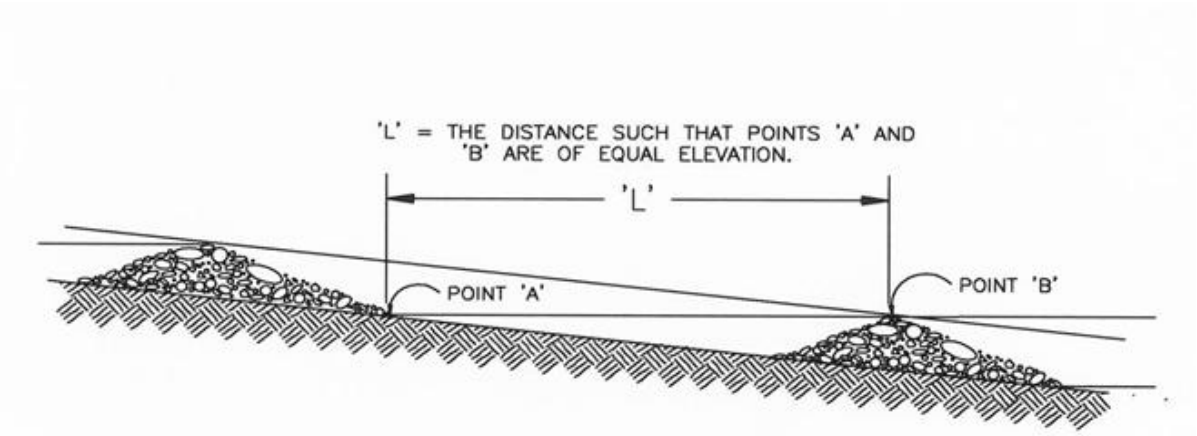

SPACING BETWEEN CHECK DAMS

Fiber Rolls SE-5

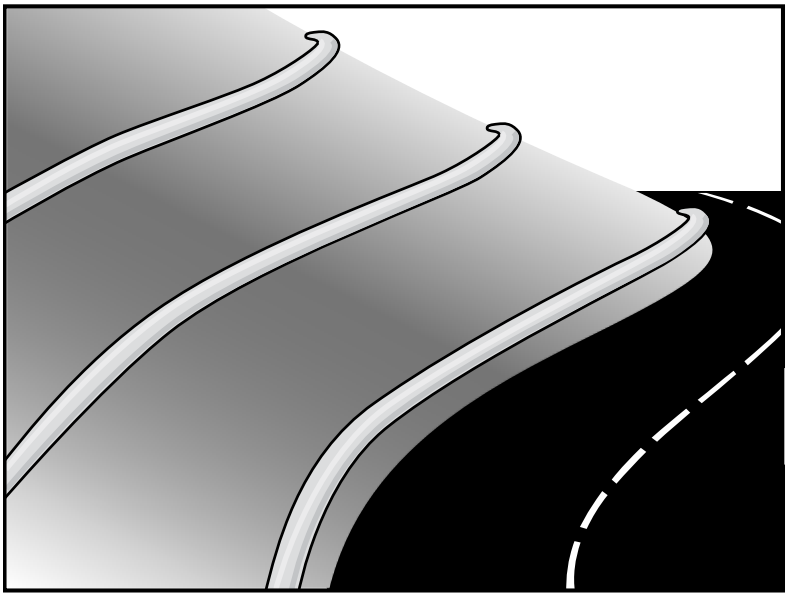

Description and Purpose

A fiber roll consists of straw, coir, or other biodegradable materials bound into a tight tubular roll wrapped by netting, which can be photodegradable or natural. Additionally, gravel core fiber rolls are available, which contain an imbedded ballast material such as gravel or sand for additional weight when staking the rolls are not feasible (such as use as inlet protection). When fiber rolls are placed at the toe and on the face of slopes along the contours, they intercept runoff, reduce its flow velocity, release the runoff as sheet flow, and provide removal of sediment from the runoff (through sedimentation). By interrupting the length of a slope, fiber rolls can also reduce sheet and rill erosion until vegetation is established.

Suitable Applications

Fiber rolls may be suitable:

- Along the toe, top, face, and at grade breaks of exposed and erodible slopes to shorten slope length and spread runoff as sheet flow.
- At the end of a downward slope where it transitions to a steeper slope.
- Along the perimeter of a project.
- As check dams in unlined ditches with minimal grade.
- Down-slope of exposed soil areas.
- At operational storm drains as a form of inlet protection.

Categories

EC	Erosion Control	☒
SE	Sediment Control	☑
TC	Tracking Control	
WE	Wind Erosion Control	
NS	Non-Stormwater Management Control	
WM	Waste Management and Materials Pollution Control	

Legend:

☑ **Primary Category**

☒ **Secondary Category**

Targeted Constituents

Sediment	☑
Nutrients	
Trash	
Metals	
Bacteria	
Oil and Grease	
Organics	

Potential Alternatives

SE-1 Silt Fence

SE-6 Gravel Bag Berm

SE-8 Sandbag Barrier

SE-12 Manufactured Linear Sediment Controls

SE-14 Biofilter Bags

If User/Subscriber modifies this fact sheet in any way, the CASQA name/logo and footer below must be removed from each page and not appear on the modified version.

- Around temporary stockpiles.

Limitations

- Fiber rolls are not effective unless trenched in and staked.
- Not intended for use in high flow situations.
- Difficult to move once saturated.
- If not properly staked and trenched in, fiber rolls could be transported by high flows.
- Fiber rolls have a very limited sediment capture zone.
- Fiber rolls should not be used on slopes subject to creep, slumping, or landslide.
- Rolls typically function for 12-24 months depending upon local conditions.

Implementation

Fiber Roll Materials

- Fiber rolls should be prefabricated.
- Fiber rolls may come manufactured containing polyacrylamide (PAM), a flocculating agent within the roll. Fiber rolls impregnated with PAM provide additional sediment removal capabilities and should be used in areas with fine, clayey or silty soils to provide additional sediment removal capabilities. Monitoring may be required for these installations.
- Fiber rolls are made from weed free rice straw, flax, or a similar agricultural material bound into a tight tubular roll by netting.
- Typical fiber rolls vary in diameter from 9 in. to 20 in. Larger diameter rolls are available as well.

Installation

- Locate fiber rolls on level contours spaced as follows:
  - Slope inclination of 4:1 (H:V) or flatter: Fiber rolls should be placed at a maximum interval of 20 ft.
  - Slope inclination between 4:1 and 2:1 (H:V): Fiber Rolls should be placed at a maximum interval of 15 ft. (a closer spacing is more effective).
  - Slope inclination 2:1 (H:V) or greater: Fiber Rolls should be placed at a maximum interval of 10 ft. (a closer spacing is more effective).
- Prepare the slope before beginning installation.
- Dig small trenches across the slope on the contour. The trench depth should be ¼ to 1/3 of the thickness of the roll, and the width should equal the roll diameter, in order to provide area to backfill the trench.

- It is critical that rolls are installed perpendicular to water movement, and parallel to the slope contour.
- Start building trenches and installing rolls from the bottom of the slope and work up.
- It is recommended that pilot holes be driven through the fiber roll. Use a straight bar to drive holes through the roll and into the soil for the wooden stakes.
- Turn the ends of the fiber roll up slope to prevent runoff from going around the roll.
- Stake fiber rolls into the trench.
  - Drive stakes at the end of each fiber roll and spaced 4 ft maximum on center.
  - Use wood stakes with a nominal classification of 0.75 by 0.75 in. and minimum length of 24 in.
- If more than one fiber roll is placed in a row, the rolls should be overlapped, not abutted.
- See typical fiber roll installation details at the end of this fact sheet.

Removal

- Fiber rolls can be left in place or removed depending on the type of fiber roll and application (temporary vs. permanent installation). Typically, fiber rolls encased with plastic netting are used for a temporary application because the netting does not biodegrade. Fiber rolls used in a permanent application are typically encased with a biodegradeable material and are left in place. Removal of a fiber roll used in a permanent application can result in greater disturbance.
- Temporary installations should only be removed when up gradient areas are stabilized per General Permit requirements, and/or pollutant sources no longer present a hazard. But, they should also be removed before vegetation becomes too mature so that the removal process does not disturb more soil and vegetation than is necessary.

Costs

Material costs for regular fiber rolls range from $20 - $30 per 25 ft roll.

Material costs for PAM impregnated fiber rolls range between 7.00-$9.00 per linear foot, based upon vendor research.

Inspection and Maintenance

- BMPs must be inspected in accordance with General Permit requirements for the associated project type and risk level. It is recommended that at a minimum, BMPs be inspected weekly, prior to forecasted rain events, daily during extended rain events, and after the conclusion of rain events.
- Repair or replace split, torn, unraveling, or slumping fiber rolls.
- If the fiber roll is used as a sediment capture device, or as an erosion control device to maintain sheet flows, sediment that accumulates in the BMP should be periodically removed

in order to maintain BMP effectiveness. Sediment should be removed when sediment accumulation reaches one-third the designated sediment storage depth.

- If fiber rolls are used for erosion control, such as in a check dam, sediment removal should not be required as long as the system continues to control the grade. Sediment control BMPs will likely be required in conjunction with this type of application.
- Repair any rills or gullies promptly.

References

Stormwater Quality Handbooks - Construction Site Best Management Practices (BMPs) Manual, State of California Department of Transportation (Caltrans), March 2003.

Erosion and Sediment Control Manual, Oregon Department of Environmental Quality, February 2005.

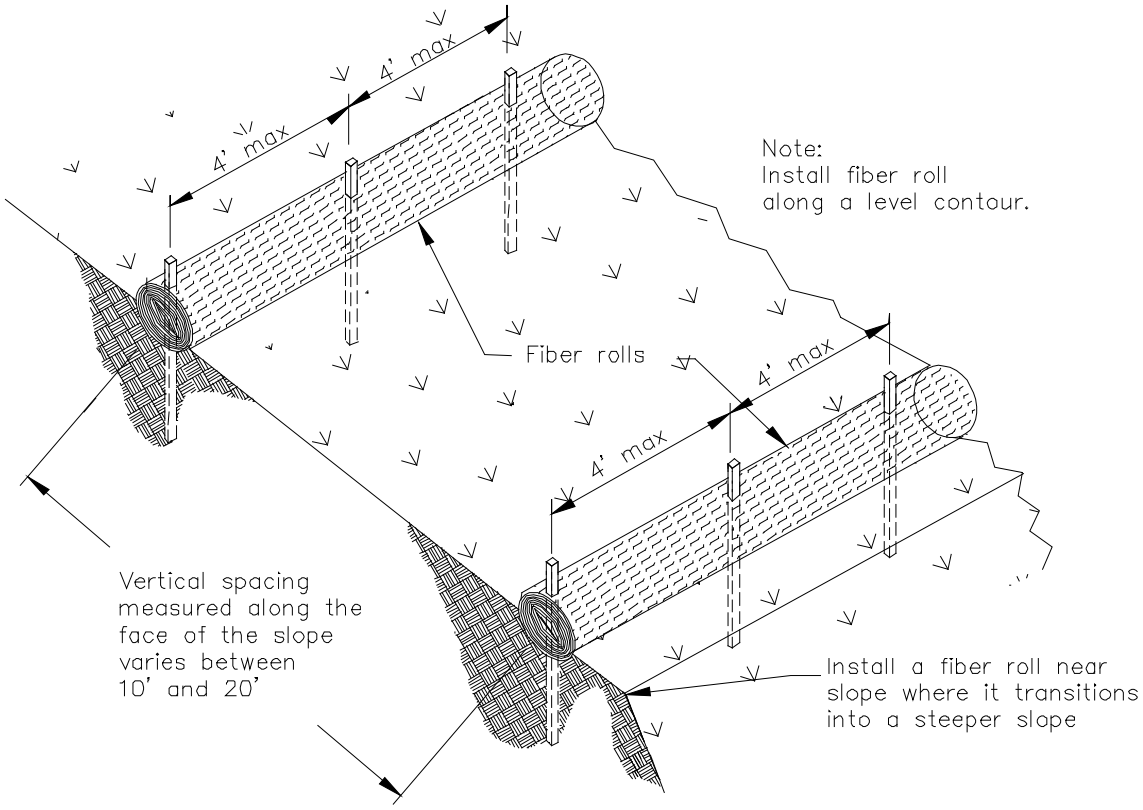

TYPICAL FIBER ROLL INSTALLATION
N.T.S.

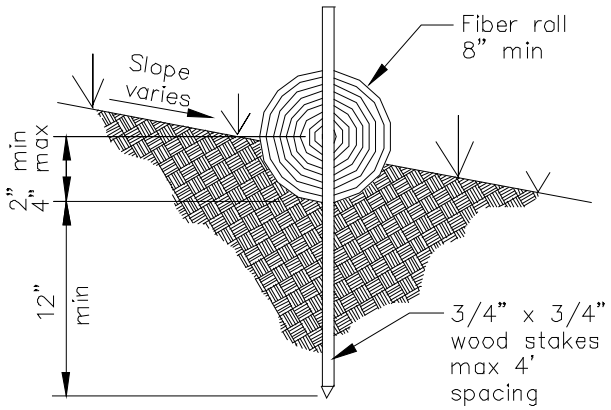

ENTRENCHMENT DETAIL
N.T.S.

Gravel Bag Berm SE-6

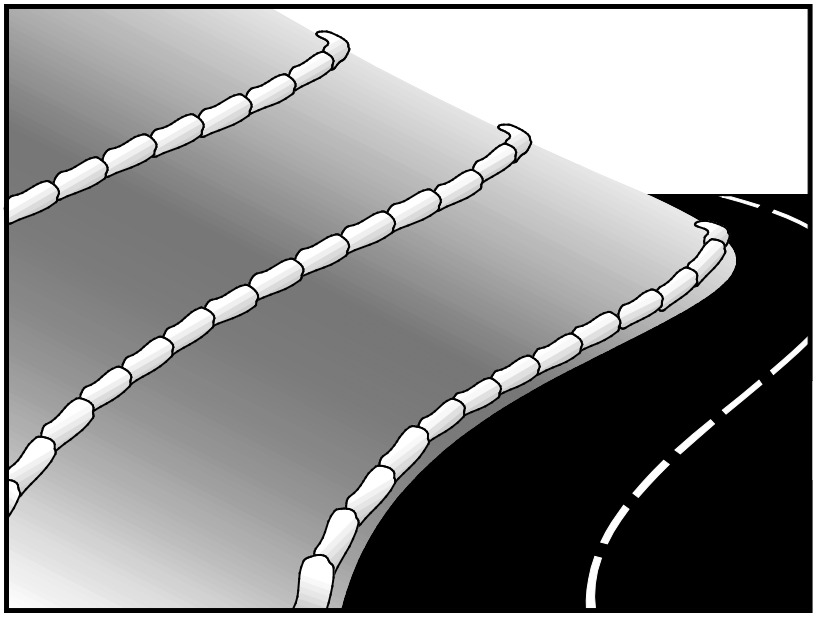

Description and Purpose

A gravel bag berm is a series of gravel-filled bags placed on a level contour to intercept sheet flows. Gravel bags pond sheet flow runoff, allowing sediment to settle out, and release runoff slowly as sheet flow, preventing erosion.

Suitable Applications

Gravel bag berms may be suitable:

- As a linear sediment control measure:
  - Below the toe of slopes and erodible slopes
  - As sediment traps at culvert/pipe outlets
  - Below other small cleared areas
  - Along the perimeter of a site
  - Down slope of exposed soil areas
  - Around temporary stockpiles and spoil areas
  - Parallel to a roadway to keep sediment off paved areas
  - Along streams and channels
- As a linear erosion control measure:
  - Along the face and at grade breaks of exposed and erodible slopes to shorten slope length and spread runoff as sheet flow.

Categories

EC	Erosion Control	☒
SE	Sediment Control	☑
TC	Tracking Control	
WE	Wind Erosion Control	
NS	Non-Stormwater Management Control	
WM	Waste Management and Materials Pollution Control	

Legend:

☑ **Primary Category**

☒ **Secondary Category**

Targeted Constituents

Sediment	☑
Nutrients	
Trash	
Metals	
Bacteria	
Oil and Grease	
Organics	

Potential Alternatives

SE-1 Silt Fence

SE-5 Fiber Roll

SE-8 Sandbag Barrier

SE-12 Temporary Silt Dike

SE-14 Biofilter Bags

If User/Subscriber modifies this fact sheet in any way, the CASQA name/logo and footer below must be removed from each page and not appear on the modified version.

- At the top of slopes to divert runoff away from disturbed slopes.
- As chevrons (small check dams) across mildly sloped construction roads. For use check dam use in channels, see SE-4, Check Dams.

Limitations

- Gravel berms may be difficult to remove.
- Removal problems limit their usefulness in landscaped areas.
- Gravel bag berm may not be appropriate for drainage areas greater than 5 acres.
- Runoff will pond upstream of the berm, possibly causing flooding if sufficient space does not exist.
- Degraded gravel bags may rupture when removed, spilling contents.
- Installation can be labor intensive.
- Durability of gravel bags is somewhat limited and bags may need to be replaced when installation is required for longer than 6 months.
- Easily damaged by construction equipment.
- When used to detain concentrated flows, maintenance requirements increase.

Implementation

General

A gravel bag berm consists of a row of open graded gravel-filled bags placed on a level contour. When appropriately placed, a gravel bag berm intercepts and slows sheet flow runoff, causing temporary ponding. The temporary ponding allows sediment to settle. The open graded gravel in the bags is porous, which allows the ponded runoff to flow slowly through the bags, releasing the runoff as sheet flows. Gravel bag berms also interrupt the slope length and thereby reduce erosion by reducing the tendency of sheet flows to concentrate into rivulets, which erode rills, and ultimately gullies, into disturbed, sloped soils. Gravel bag berms are similar to sand bag barriers, but are more porous. Generally, gravel bag berms should be used in conjunction with temporary soil stabilization controls up slope to provide effective erosion and sediment control.

Design and Layout

- Locate gravel bag berms on level contours.
- When used for slope interruption, the following slope/sheet flow length combinations apply:
  - Slope inclination of 4:1 (H:V) or flatter: Gravel bags should be placed at a maximum interval of 20 ft, with the first row near the slope toe.
  - Slope inclination between 4:1 and 2:1 (H:V): Gravel bags should be placed at a maximum interval of 15 ft. (a closer spacing is more effective), with the first row near the slope toe.

Slope inclination 2:1 (H:V) or greater: Gravel bags should be placed at a maximum interval of 10 ft. (a closer spacing is more effective), with the first row near the slope toe.

- Turn the ends of the gravel bag barriers up slope to prevent runoff from going around the berm.
- Allow sufficient space up slope from the gravel bag berm to allow ponding, and to provide room for sediment storage.
- For installation near the toe of the slope, gravel bag barriers should be set back from the slope toe to facilitate cleaning. Where specific site conditions do not allow for a set-back, the gravel bag barrier may be constructed on the toe of the slope. To prevent flows behind the barrier, bags can be placed perpendicular to a berm to serve as cross barriers.
- Drainage area should not exceed 5 acres.
- In Non-Traffic Areas:
  - Height = 18 in. maximum
  - Top width = 24 in. minimum for three or more layer construction
  - Top width = 12 in. minimum for one or two layer construction
  - Side slopes = 2:1 (H:V) or flatter
- In Construction Traffic Areas:
  - Height = 12 in. maximum
  - Top width = 24 in. minimum for three or more layer construction.
  - Top width = 12 in. minimum for one or two layer construction.
  - Side slopes = 2:1 (H:V) or flatter.
- Butt ends of bags tightly.
- On multiple row, or multiple layer construction, overlap butt joints of adjacent row and row beneath.
- Use a pyramid approach when stacking bags.

Materials

- ***Bag Material:*** Bags should be woven polypropylene, polyethylene or polyamide fabric or burlap, minimum unit weight of 4 ounces/yd^2, Mullen burst strength exceeding 300 lb/in^2 in conformance with the requirements in ASTM designation D3786, and ultraviolet stability exceeding 70% in conformance with the requirements in ASTM designation D4355.

- ***Bag Size:*** Each gravel-filled bag should have a length of 18 in., width of 12 in., thickness of 3 in., and mass of approximately 33 lbs. Bag dimensions are nominal, and may vary based on locally available materials.

- ***Fill Material:*** Fill material should be 0.5 to 1 in. crushed rock, clean and free from clay, organic matter, and other deleterious material, or other suitable open graded, non-cohesive, porous gravel.

Costs

Material costs for gravel bags are average and are dependent upon material availability. $2.50-3.00 per filled gravel bag is standard based upon vendor research.

Inspection and Maintenance

- BMPs must be inspected in accordance with General Permit requirements for the associated project type and risk level. It is recommended that at a minimum, BMPs be inspected weekly, prior to forecasted rain events, daily during extended rain events, and after the conclusion of rain events.

- Gravel bags exposed to sunlight will need to be replaced every two to three months due to degrading of the bags.

- Reshape or replace gravel bags as needed.

- Repair washouts or other damage as needed.

- Sediment that accumulates in the BMP should be periodically removed in order to maintain BMP effectiveness. Sediment should be removed when the sediment accumulation reaches one-third of the barrier height.

- Remove gravel bag berms when no longer needed and recycle gravel fill whenever possible and properly dispose of bag material. Remove sediment accumulation and clean, re-grade, and stabilize the area.

References

Handbook of Steel Drainage and Highway Construction, American Iron and Steel Institute, 1983.

Stormwater Quality Handbooks - Construction Site Best Management Practices (BMPs) Manual, State of California Department of Transportation (Caltrans), March 2003.

Stormwater Pollution Plan Handbook, First Edition, State of California, Department of Transportation Division of New Technology, Materials and Research, October 1992.

Erosion and Sediment Control Manual, Oregon Department of Environmental Quality, February 2005.

Street Sweeping and Vacuuming SE-7

Categories

EC	Erosion Control	
SE	Sediment Control	☒
TC	Tracking Control	☑
WE	Wind Erosion Control	
NS	Non-Stormwater Management Control	
WM	Waste Management and Materials Pollution Control	

Legend:
☑ **Primary Objective**
☒ **Secondary Objective**

Targeted Constituents

Sediment	☑
Nutrients	
Trash	☑
Metals	
Bacteria	
Oil and Grease	☑
Organics	

Potential Alternatives

None

Description and Purpose

Street sweeping and vacuuming includes use of self-propelled and walk-behind equipment to remove sediment from streets and roadways, and to clean paved surfaces in preparation for final paving. Sweeping and vacuuming prevents sediment from the project site from entering storm drains or receiving waters.

Suitable Applications

Sweeping and vacuuming are suitable anywhere sediment is tracked from the project site onto public or private paved streets and roads, typically at points of egress. Sweeping and vacuuming are also applicable during preparation of paved surfaces for final paving.

Limitations

Sweeping and vacuuming may not be effective when sediment is wet or when tracked soil is caked (caked soil may need to be scraped loose).

Implementation

- Controlling the number of points where vehicles can leave the site will allow sweeping and vacuuming efforts to be focused, and perhaps save money.
- Inspect potential sediment tracking locations daily.
- Visible sediment tracking should be swept or vacuumed on a daily basis.

If User/Subscriber modifies this fact sheet in any way, the CASQA name/logo and footer below must be removed from each page and not appear on the modified version.

- Do not use kick brooms or sweeper attachments. These tend to spread the dirt rather than remove it.
- If not mixed with debris or trash, consider incorporating the removed sediment back into the project

Costs

Rental rates for self-propelled sweepers vary depending on hopper size and duration of rental. Expect rental rates from $58/hour (3 yd^3 hopper) to $88/hour (9 yd^3 hopper), plus operator costs. Hourly production rates vary with the amount of area to be swept and amount of sediment. Match the hopper size to the area and expect sediment load to minimize time spent dumping.

Inspection and Maintenance

- Inspect BMPs in accordance with General Permit requirements for the associated project type and risk level. It is recommended that at a minimum, BMPs be inspected weekly, prior to forecasted rain events, daily during extended rain events, and after the conclusion of rain events.
- When actively in use, points of ingress and egress must be inspected daily.
- When tracked or spilled sediment is observed outside the construction limits, it must be removed at least daily. More frequent removal, even continuous removal, may be required in some jurisdictions.
- Be careful not to sweep up any unknown substance or any object that may be potentially hazardous.
- Adjust brooms frequently; maximize efficiency of sweeping operations.
- After sweeping is finished, properly dispose of sweeper wastes at an approved dumpsite.

References

Stormwater Quality Handbooks - Construction Site Best Management Practices (BMPs) Manual, State of California Department of Transportation (Caltrans), November 2000.

Labor Surcharge and Equipment Rental Rates, State of California Department of Transportation (Caltrans), April 1, 2002 – March 31, 2003.

Sandbag Barrier SE-8

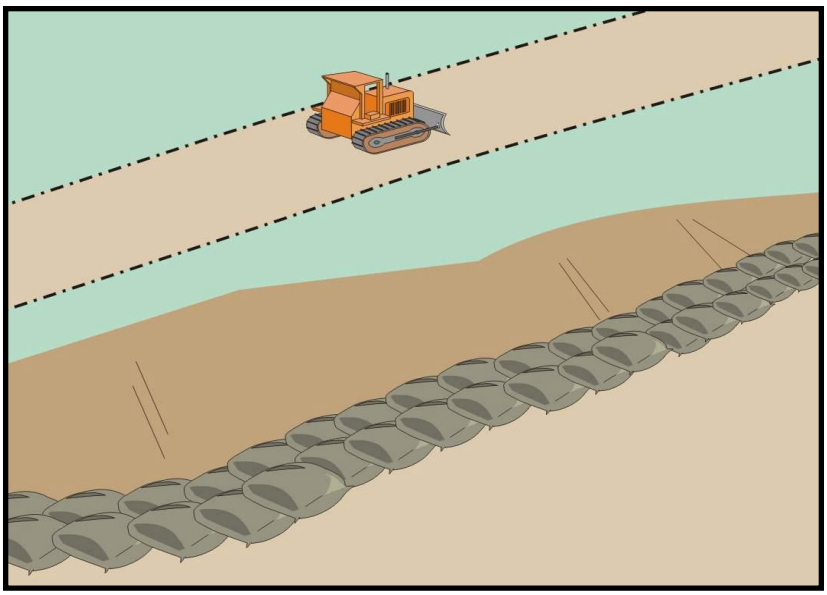

Categories		
EC	Erosion Control	☒
SE	Sediment Control	☑
TC	Tracking Control	
WE	Wind Erosion Control	
NS	Non-Stormwater Management Control	
WM	Waste Management and Materials Pollution Control	

Legend:
☑ **Primary Category**
☒ **Secondary Category**

Description and Purpose

A sandbag barrier is a series of sand-filled bags placed on a level contour to intercept or to divert sheet flows. Sandbag barriers placed on a level contour pond sheet flow runoff, allowing sediment to settle out.

Suitable Applications

Sandbag barriers may be a suitable control measure for the applications described below. It is important to consider that sand bags are less porous than gravel bags and ponding or flooding can occur behind the barrier. Also, sand is easily transported by runoff if bags are damaged or ruptured. The SWPPP Preparer should select the location of a sandbag barrier with respect to the potential for flooding, damage, and the ability to maintain the BMP.

- As a linear sediment control measure:
  - Below the toe of slopes and erodible slopes.
  - As sediment traps at culvert/pipe outlets.
  - Below other small cleared areas.
  - Along the perimeter of a site.
  - Down slope of exposed soil areas.
  - Around temporary stockpiles and spoil areas.
  - Parallel to a roadway to keep sediment off paved areas.
  - Along streams and channels.

Targeted Constituents	
Sediment	☑
Nutrients	
Trash	
Metals	
Bacteria	
Oil and Grease	
Organics	

Potential Alternatives

SE-1 Silt Fence

SE-5 Fiber Rolls

SE-6 Gravel Bag Berm

SE-12 Manufactured Linear Sediment Controls

SE-14 Biofilter Bags

If User/Subscriber modifies this fact sheet in any way, the CASQA name/logo and footer below must be removed from each page and not appear on the modified version.

- As linear erosion control measure:
  - Along the face and at grade breaks of exposed and erodible slopes to shorten slope length and spread runoff as sheet flow.
  - At the top of slopes to divert runoff away from disturbed slopes.
  - As check dams across mildly sloped construction roads.

Limitations

- It is necessary to limit the drainage area upstream of the barrier to 5 acres.
- Sandbags are not intended to be used as filtration devices.
- Easily damaged by construction equipment.
- Degraded sandbags may rupture when removed, spilling sand.
- Installation can be labor intensive.
- Durability of sandbags is somewhat limited and bags will need to be replaced when there are signs of damage or wear.
- Burlap should not be used for sandbags.

Implementation

General

A sandbag barrier consists of a row of sand-filled bags placed on a level contour. When appropriately placed, a sandbag barrier intercepts and slows sheet flow runoff, causing temporary ponding. The temporary ponding allows sediment to settle. Sand-filled bags have limited porosity, which is further limited as the fine sand tends to quickly plug with sediment, limiting or completely blocking the rate of flow through the barrier. If a porous barrier is desired, consider SE-1, Silt Fence, SE-5, Fiber Rolls, SE-6, Gravel Bag Berms or SE-14, Biofilter Bags. Sandbag barriers also interrupt the slope length and thereby reduce erosion by reducing the tendency of sheet flows to concentrate into rivulets which erode rills, and ultimately gullies, into disturbed, sloped soils. Sandbag barriers are similar to gravel bag berms, but less porous. Generally, sandbag barriers should be used in conjunction with temporary soil stabilization controls up slope to provide effective erosion and sediment control.

Design and Layout

- Locate sandbag barriers on a level contour.
- When used for slope interruption, the following slope/sheet flow length combinations apply:
  - Slope inclination of 4:1 (H:V) or flatter: Sandbags should be placed at a maximum interval of 20 ft, with the first row near the slope toe.
  - Slope inclination between 4:1 and 2:1 (H:V): Sandbags should be placed at a maximum interval of 15 ft. (a closer spacing is more effective), with the first row near the slope toe.

  - Slope inclination 2:1 (H:V) or greater: Sandbags should be placed at a maximum interval of 10 ft. (a closer spacing is more effective), with the first row near the slope toe.

- Turn the ends of the sandbag barrier up slope to prevent runoff from going around the barrier.
- Allow sufficient space up slope from the barrier to allow ponding, and to provide room for sediment storage.
- For installation near the toe of the slope, sand bag barriers should be set back from the slope toe to facilitate cleaning. Where specific site conditions do not allow for a set-back, the sand bag barrier may be constructed on the toe of the slope. To prevent flows behind the barrier, bags can be placed perpendicular to a berm to serve as cross barriers.
- Drainage area should not exceed 5 acres.
- Butt ends of bags tightly.
- Overlap butt joints of row beneath with each successive row.
- Use a pyramid approach when stacking bags.
- In non-traffic areas
  - Height = 18 in. maximum
  - Top width = 24 in. minimum for three or more layer construction
  - Side slope = 2:1 (H:V) or flatter
- In construction traffic areas
  - Height = 12 in. maximum
  - Top width = 24 in. minimum for three or more layer construction.
  - Side slopes = 2:1 (H:V) or flatter.
- See typical sandbag barrier installation details at the end of this fact sheet.

Materials

- ***Sandbag Material:*** Sandbag should be woven polypropylene, polyethylene or polyamide fabric, minimum unit weight of 4 ounces/yd^2, Mullen burst strength exceeding 300 lb/in^2 in conformance with the requirements in ASTM designation D3786, and ultraviolet stability exceeding 70% in conformance with the requirements in ASTM designation D4355. Use of burlap is not an acceptable substitute, as sand can more easily mobilize out of burlap.
- ***Sandbag Size:*** Each sand-filled bag should have a length of 18 in., width of 12 in., thickness of 3 in., and mass of approximately 33 lbs. Bag dimensions are nominal, and may vary based on locally available materials.

- ***Fill Material:*** All sandbag fill material should be non-cohesive, Class 3 (Caltrans Standard Specification, Section 25) or similar permeable material free from clay and deleterious material, such as recycled concrete or asphalt.

Costs

Empty sandbags cost $0.25 - $0.75. Average cost of fill material is $8 per yd^3. Additional labor is required to fill the bags. Pre-filled sandbags are more expensive at $1.50 - $2.00 per bag. These costs are based upon vendor research.

Inspection and Maintenance

- BMPs must be inspected in accordance with General Permit requirements for the associated project type and risk level. It is recommended that at a minimum, BMPs be inspected weekly, prior to forecasted rain events, daily during extended rain events, and after the conclusion of rain events.
- Sandbags exposed to sunlight will need to be replaced every two to three months due to degradation of the bags.
- Reshape or replace sandbags as needed.
- Repair washouts or other damage as needed.
- Sediment that accumulates behind the BMP should be periodically removed in order to maintain BMP effectiveness. Sediment should be removed when the sediment accumulation reaches one-third of the barrier height.
- Remove sandbags when no longer needed and recycle sand fill whenever possible and properly dispose of bag material. Remove sediment accumulation, and clean, re-grade, and stabilize the area.

References

Standard Specifications for Construction of Local Streets and Roads, California Department of Transportation (Caltrans), July 2002.

Stormwater Quality Handbooks - Construction Site Best Management Practices (BMPs) Manual, State of California Department of Transportation (Caltrans), March 2003.

Erosion and Sediment Control Manual, Oregon Department of Environmental Quality, February 2005.

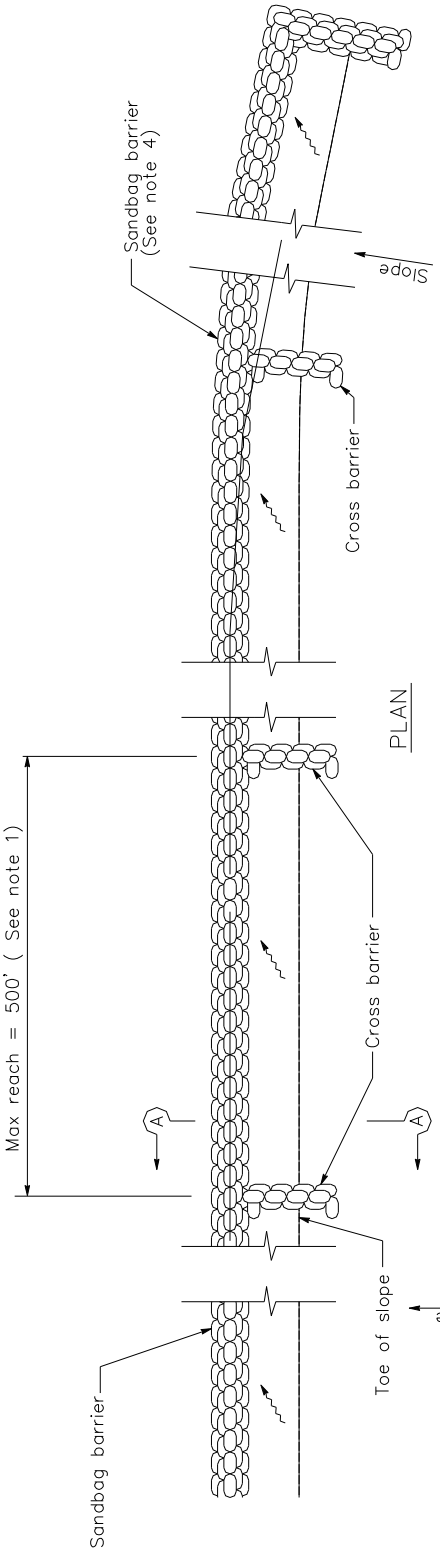

SANDBAG BARRIER

NOTES

1. Construct the length of each reach so that the change in base elevation along the reach does not exceed 1/2 the height of the linear barrier. In no case shall the reach length exceed 500'.
2. Place sandbags tightly.
3. Dimension may vary to fit field condition.
4. Sandbag barrier shall be a minimum of 3 bags high.
5. The end of the barrier shall be turned up slope.
6. Cross barriers shall be a min of 1/2 and a max of 2/3 the height of the linear barrier.
7. Sandbag rows and layers shall be staggered to eliminate gaps.

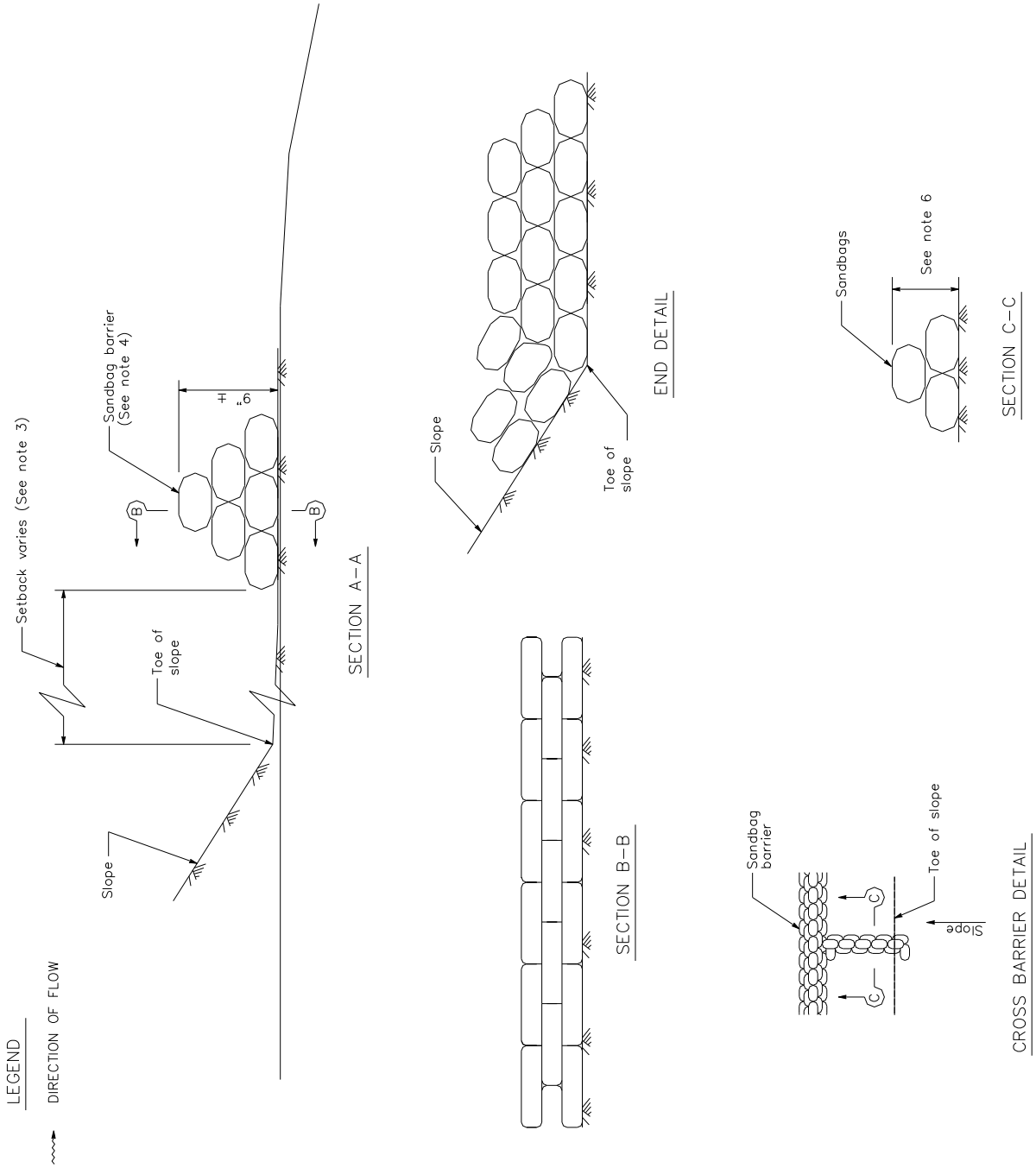
LEGEND
DIRECTION OF FLOW
Setback varies (See note 3)
Sandbag barrier (See note 4)
H
B
B
Toe of slope
Slope
SECTION A-A
Slope
Toe of slope
END DETAIL
SECTION B-B
Sandbags
See note 6
SECTION C-C
Sandbag barrier
C
C
Toe of slope
Slope
CROSS BARRIER DETAIL

Straw Bale Barrier SE-9

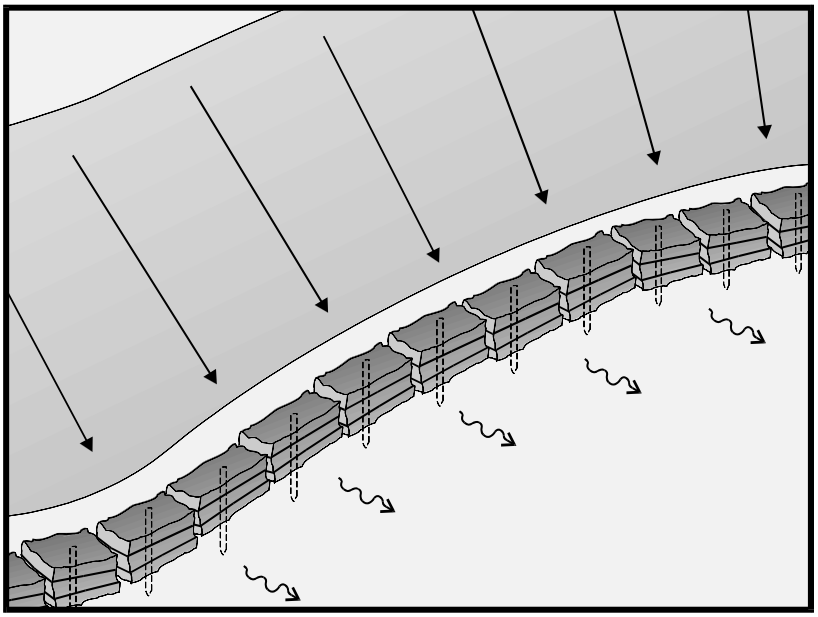

Description and Purpose

A straw bale barrier is a series of straw bales placed on a level contour to intercept sheet flows. Straw bale barriers pond sheet-flow runoff, allowing sediment to settle out.

Suitable Applications

Straw bale barriers may be suitable:

- As a linear sediment control measure:
  - Below the toe of slopes and erodible slopes
  - As sediment traps at culvert/pipe outlets
  - Below other small cleared areas
  - Along the perimeter of a site
  - Down slope of exposed soil areas
  - Around temporary stockpiles and spoil areas
  - Parallel to a roadway to keep sediment off paved areas
  - Along streams and channels
- As linear erosion control measure:
  - Along the face and at grade breaks of exposed and erodible slopes to shorten slope length and spread runoff as sheet flow

Categories

EC	Erosion Control	☒
SE	Sediment Control	☑
TC	Tracking Control	
WE	Wind Erosion Control	
NS	Non-Stormwater Management Control	
WM	Waste Management and Materials Pollution Control	

Legend:

☑ **Primary Objective**

☒ **Secondary Objective**

Targeted Constituents

Sediment	☑
Nutrients	
Trash	
Metals	
Bacteria	
Oil and Grease	
Organics	

Potential Alternatives

SE-1 Silt Fence

SE-5 Fiber Rolls

SE-6 Gravel Bag Berm

SE-8 Sandbag Barrier

SE-12 Temporary Silt Dike

SE-14 Biofilter Bags

If User/Subscriber modifies this fact sheet in any way, the CASQA name/logo and footer below must be removed from each page and not appear on the modified version.

- At the top of slopes to divert runoff away from disturbed slopes
- As check dams across mildly sloped construction roads

Limitations

Straw bale barriers:

- Are not to be used for extended periods of time because they tend to rot and fall apart
- Are suitable only for sheet flow on slopes of 10 % or flatter
- Are not appropriate for large drainage areas, limit to one acre or less
- May require constant maintenance due to rotting
- Are not recommended for concentrated flow, inlet protection, channel flow, and live streams
- Cannot be made of bale bindings of jute or cotton
- Require labor-intensive installation and maintenance
- Cannot be used on paved surfaces
- Should not to be used for drain inlet protection
- Should not be used on lined ditches
- May introduce undesirable non-native plants to the area

Implementation

General

A straw bale barrier consists of a row of straw bales placed on a level contour. When appropriately placed, a straw bale barrier intercepts and slows sheet flow runoff, causing temporary ponding. The temporary ponding provides quiescent conditions allowing sediment to settle. Straw bale barriers also interrupt the slope length and thereby reduce erosion by reducing the tendency of sheet flows to concentrate into rivulets, which erode rills, and ultimately gullies, into disturbed, sloped soils.

Straw bale barriers have not been as effective as expected due to improper use. These barriers have been placed in streams and drainage ways where runoff volumes and velocities have caused the barriers to wash out. In addition, failure to stake and entrench the straw bale has allowed undercutting and end flow. Use of straw bale barriers in accordance with this BMP should produce acceptable results.

Design and Layout

- Locate straw bale barriers on a level contour.
  - Slopes up to 10:1 (H:V): Straw bales should be placed at a maximum interval of 50 ft (a closer spacing is more effective), with the first row near the toe of slope.
  - Slopes greater than 10:1 (H:V): Not recommended.

- Turn the ends of the straw bale barrier up slope to prevent runoff from going around the barrier.
- Allow sufficient space up slope from the barrier to allow ponding, and to provide room for sediment storage.
- For installation near the toe of the slope, consider moving the barrier away from the slope toe to facilitate cleaning. To prevent flow behind the barrier, sand bags can be placed perpendicular to the barrier to serve as cross barriers.
- Drainage area should not exceed 1 acre, or 0.25 acre per 100 ft of barrier.
- Maximum flow path to the barrier should be limited to 100 ft.
- Straw bale barriers should consist of two parallel rows.
  - Butt ends of bales tightly
  - Stagger butt joints between front and back row
  - Each row of bales must be trenched in and firmly staked
- Straw bale barriers are limited in height to one bale laid on its side.
- Anchor bales with either two wood stakes or four bars driven through the bale and into the soil. Drive the first stake towards the butt joint with the adjacent bale to force the bales together.
- See attached figure for installation details.

Materials

- ***Straw Bale Size:*** Each straw bale should be a minimum of 14 in. wide, 18 in. in height, 36 in. in length and should have a minimum mass of 50 lbs. The straw bale should be composed entirely of vegetative matter, except for the binding material.
- ***Bale Bindings:*** Bales should be bound by steel wire, nylon or polypropylene string placed horizontally. Jute and cotton binding should not be used. Baling wire should be a minimum diameter of 14 gauge. Nylon or polypropylene string should be approximately 12 gauge in diameter with a breaking strength of 80 lbs force.
- ***Stakes:*** Wood stakes should be commercial quality lumber of the size and shape shown on the plans. Each stake should be free from decay, splits or cracks longer than the thickness of the stake, or other defects that would weaken the stakes and cause the stakes to be structurally unsuitable. Steel bar reinforcement should be equal to a #4 designation or greater. End protection should be provided for any exposed bar reinforcement.

Costs

Straw bales cost $5 - $7 each. Adequate labor should be budgeted for installation and maintenance.

Inspection and Maintenance

Maintenance

- Inspect BMPs in accordance with General Permit requirements for the associated project type and risk level. It is recommended that at a minimum, BMPs be inspected weekly, prior to forecasted rain events, daily during extended rain events, and after the conclusion of rain events.
- Straw bales degrade, especially when exposed to moisture. Rotting bales will need to be replaced on a regular basis.
- Replace or repair damaged bales as needed.
- Repair washouts or other damages as needed.
- Sediment that accumulates in the BMP must be periodically removed in order to maintain BMP effectiveness. Sediment should be removed when the sediment accumulation reaches one-third of the barrier height. Sediment removed during maintenance may be incorporated into earthwork on the site or disposed at an appropriate location.
- Remove straw bales when no longer needed. Remove sediment accumulation, and clean, re-grade, and stabilize the area. Removed sediment should be incorporated in the project or disposed of.

References

Stormwater Quality Handbooks - Construction Site Best Management Practices (BMPs) Manual, State of California Department of Transportation (Caltrans), November 2000.

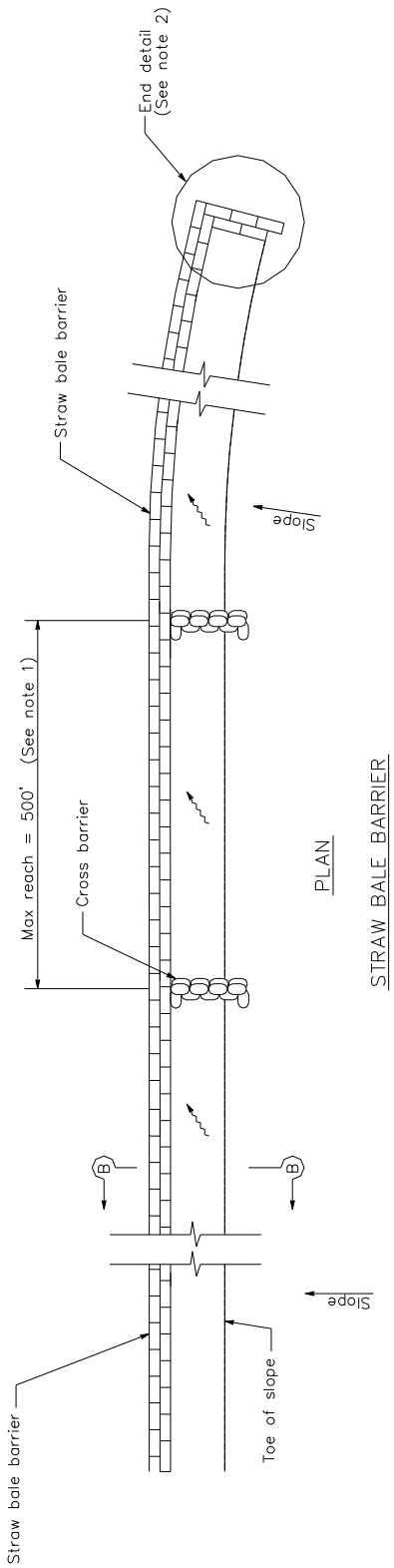

PLAN

STRAW BALE BARRIER

LEGEND

DIRECTION OF FLOW

NOTES

1. Construct the length of each reach so that the change in base elevation along the reach does not exceed 1/2 the height of the linear barrier. In no case shall the reach length exceed 500'.
2. The end of barrier shall be turned up slope.
3. Dimension may vary to fit field condition.
4. Stake dimensions are nominal.
5. Place straw bales tightly together.
6. Tamp embedment spoils against sides of installed bales.
7. Drive angled wood stake before vertical stake to ensure tight abutment to adjacent bale.
8. Sandbag cross barriers should be a min of 1/2 and a max of 2/3 the height of the linear barrier.
9. Sandbag rows and layers should be offset to eliminate gaps.

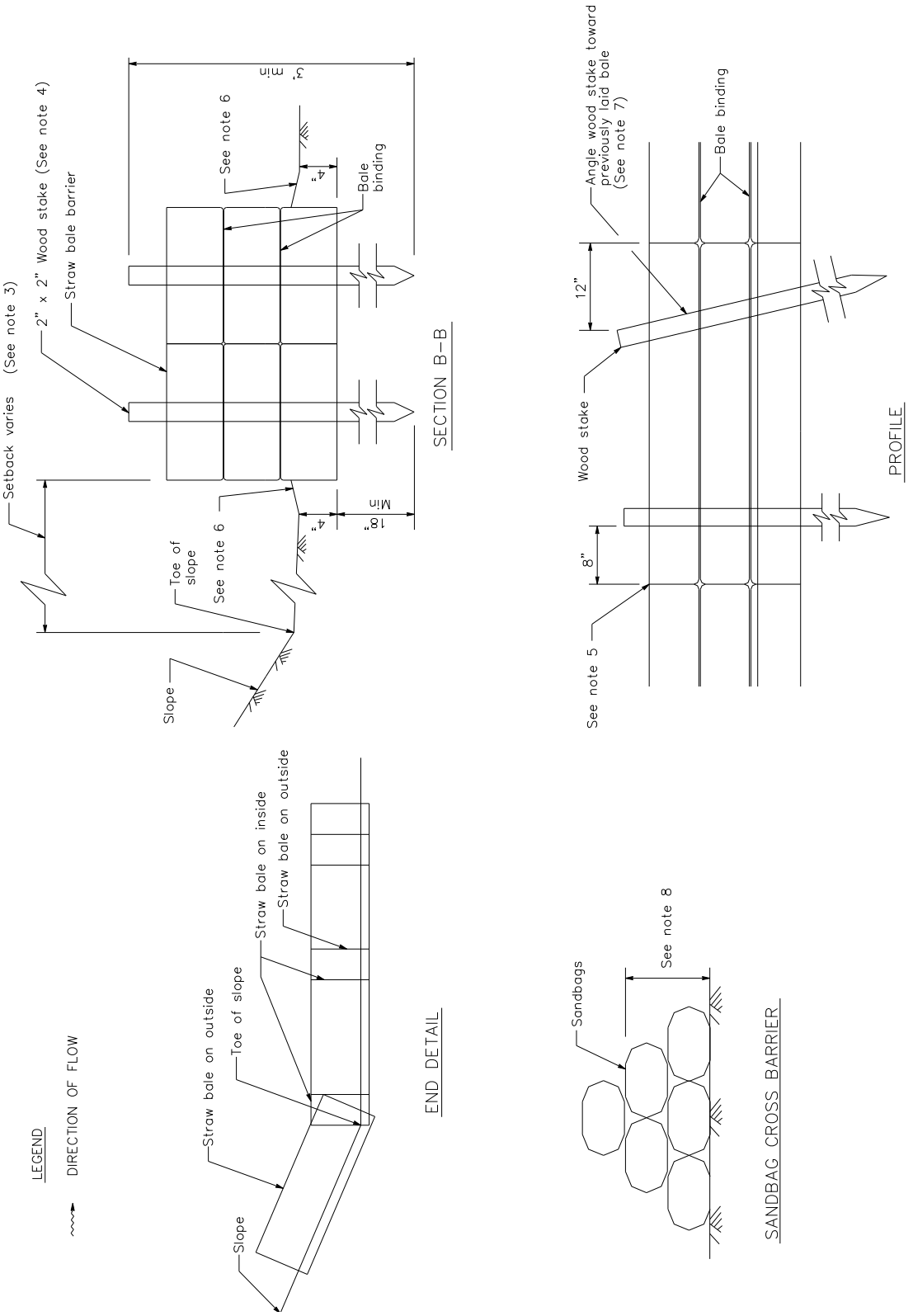

Setback varies (See note 3)
2" x 2" Wood stake (See note 4)
Straw bale barrier
See note 6
3' min
4"
Bale binding
Toe of slope
See note 6
4"
18" Min
Slope
SECTION B-B
Angle wood stake toward previously laid bale (See note 7)
Bale binding
12"
Wood stake
8"
See note 5
PROFILE
LEGEND
DIRECTION OF FLOW
Straw bale on outside
Toe of slope
Straw bale on inside
Straw bale on outside
Slope
END DETAIL
Sandbags
See note 8
SANDBAG CROSS BARRIER

Storm Drain Inlet Protection SE-10

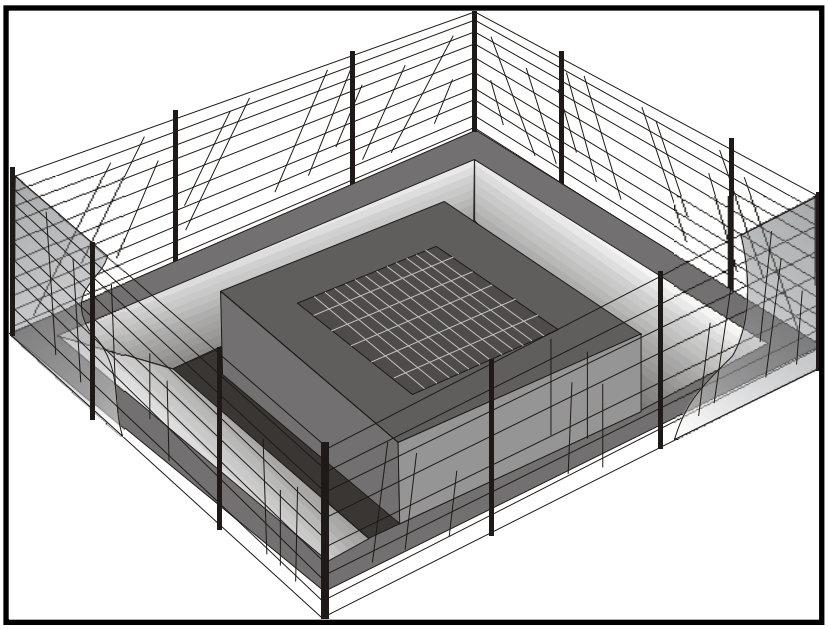

Categories

EC	Erosion Control	
SE	Sediment Control	☑
TC	Tracking Control	
WE	Wind Erosion Control	
NS	Non-Stormwater Management Control	
WM	Waste Management and Materials Pollution Control	

Legend:

☑ **Primary Category**

☒ **Secondary Category**

Targeted Constituents

Sediment	☑
Nutrients	
Trash	☒
Metals	
Bacteria	
Oil and Grease	
Organics	

Potential Alternatives

SE-1 Silt Fence

SE-5 Fiber Rolls

SE-6 Gravel Bag Berm

SE-8 Sandbag Barrier

SE-14 Biofilter Bags

SE-13 Compost Socks and Berms

If User/Subscriber modifies this fact sheet in any way, the CASQA name/logo and footer below must be removed from each page and not appear on the modified version.

Description and Purpose

Storm drain inlet protection consists of a sediment filter or an impounding area in, around or upstream of a storm drain, drop inlet, or curb inlet. Storm drain inlet protection measures temporarily pond runoff before it enters the storm drain, allowing sediment to settle. Some filter configurations also remove sediment by filtering, but usually the ponding action results in the greatest sediment reduction. Temporary geotextile storm drain inserts attach underneath storm drain grates to capture and filter storm water.

Suitable Applications

- Every storm drain inlet receiving runoff from unstabilized or otherwise active work areas should be protected. Inlet protection should be used in conjunction with other erosion and sediment controls to prevent sediment-laden stormwater and non-stormwater discharges from entering the storm drain system.

Limitations

- Drainage area should not exceed 1 acre.
- In general straw bales should not be used as inlet protection.
- Requires an adequate area for water to pond without encroaching into portions of the roadway subject to traffic.
- Sediment removal may be inadequate to prevent sediment discharges in high flow conditions or if runoff is heavily sediment laden. If high flow conditions are expected, use

other onsite sediment trapping techniques in conjunction with inlet protection.

- Frequent maintenance is required.
- Limit drainage area to 1 acre maximum. For drainage areas larger than 1 acre, runoff should be routed to a sediment-trapping device designed for larger flows. See BMPs SE-2, Sediment Basin, and SE-3, Sediment Traps.
- Excavated drop inlet sediment traps are appropriate where relatively heavy flows are expected, and overflow capability is needed.

Implementation

General

Inlet control measures presented in this handbook should not be used for inlets draining more than one acre. Runoff from larger disturbed areas should be first routed through SE-2, Sediment Basin or SE-3, Sediment Trap and/or used in conjunction with other drainage control, erosion control, and sediment control BMPs to protect the site. Different types of inlet protection are appropriate for different applications depending on site conditions and the type of inlet. Alternative methods are available in addition to the methods described/shown herein such as prefabricated inlet insert devices, or gutter protection devices.

Design and Layout

Identify existing and planned storm drain inlets that have the potential to receive sediment-laden surface runoff. Determine if storm drain inlet protection is needed and which method to use.

- The key to successful and safe use of storm drain inlet protection devices is to know where runoff that is directed toward the inlet to be protected will pond or be diverted as a result of installing the protection device.
  - Determine the acceptable location and extent of ponding in the vicinity of the drain inlet. The acceptable location and extent of ponding will influence the type and design of the storm drain inlet protection device.
  - Determine the extent of potential runoff diversion caused by the storm drain inlet protection device. Runoff ponded by inlet protection devices may flow around the device and towards the next downstream inlet. In some cases, this is acceptable; in other cases, serious erosion or downstream property damage can be caused by these diversions. The possibility of runoff diversions will influence whether or not storm drain inlet protection is suitable; and, if suitable, the type and design of the device.
- The location and extent of ponding, and the extent of diversion, can usually be controlled through appropriate placement of the inlet protection device. In some cases, moving the inlet protection device a short distance upstream of the actual inlet can provide more efficient sediment control, limit ponding to desired areas, and prevent or control diversions.
- Seven types of inlet protection are presented below. However, it is recognized that other effective methods and proprietary devices exist and may be selected.

- Silt Fence: Appropriate for drainage basins with less than a 5% slope, sheet flows, and flows under 0.5 cfs.

- Excavated Drop Inlet Sediment Trap: An excavated area around the inlet to trap sediment (SE-3).

- Gravel bag barrier: Used to create a small sediment trap upstream of inlets on sloped, paved streets. Appropriate for sheet flow or when concentrated flow may exceed 0.5 cfs, and where overtopping is required to prevent flooding.

- Block and Gravel Filter: Appropriate for flows greater than 0.5 cfs.

- Temporary Geotextile Storm drain Inserts: Different products provide different features. Refer to manufacturer details for targeted pollutants and additional features.

- Biofilter Bag Barrier: Used to create a small retention area upstream of inlets and can be located on pavement or soil. Biofilter bags slowly filter runoff allowing sediment to settle out. Appropriate for flows under 0.5 cfs.

- Compost Socks: Allow filtered run-off to pass through the compost while retaining sediment and potentially other pollutants (SE-13). Appropriate for flows under 1.0 cfs.

- Select the appropriate type of inlet protection and design as referred to or as described in this fact sheet.

- Provide area around the inlet for water to pond without flooding structures and property.

- Grates and spaces around all inlets should be sealed to prevent seepage of sediment-laden water.

- Excavate sediment sumps (where needed) 1 to 2 ft with 2:1 side slopes around the inlet.

Installation

- ***DI Protection Type 1 - Silt Fence -*** Similar to constructing a silt fence; see BMP SE-1, Silt Fence. Do not place fabric underneath the inlet grate since the collected sediment may fall into the drain inlet when the fabric is removed or replaced and water flow through the grate will be blocked resulting in flooding. See typical Type 1 installation details at the end of this fact sheet.

  1. Excavate a trench approximately 6 in. wide and 6 in. deep along the line of the silt fence inlet protection device.

  2. Place 2 in. by 2 in. wooden stakes around the perimeter of the inlet a maximum of 3 ft apart and drive them at least 18 in. into the ground or 12 in. below the bottom of the trench. The stakes should be at least 48 in.

  3. Lay fabric along bottom of trench, up side of trench, and then up stakes. See SE-1, Silt Fence, for details. The maximum silt fence height around the inlet is 24 in.

  4. Staple the filter fabric (for materials and specifications, see SE-1, Silt Fence) to wooden stakes. Use heavy-duty wire staples at least 1 in. in length.

5. Backfill the trench with gravel or compacted earth all the way around.

- ***DI Protection Type 2 - Excavated Drop Inlet Sediment Trap -*** Install filter fabric fence in accordance with DI Protection Type 1. Size excavated trap to provide a minimum storage capacity calculated at the rate 67 yd^3/acre of drainage area. See typical Type 2 installation details at the end of this fact sheet.

- ***DI Protection Type 3 - Gravel bag -*** Flow from a severe storm should not overtop the curb. In areas of high clay and silts, use filter fabric and gravel as additional filter media. Construct gravel bags in accordance with SE-6, Gravel Bag Berm. Gravel bags should be used due to their high permeability. See typical Type 3 installation details at the end of this fact sheet.

  1. Construct on gently sloping street.

  2. Leave room upstream of barrier for water to pond and sediment to settle.

  3. Place several layers of gravel bags – overlapping the bags and packing them tightly together.

  4. Leave gap of one bag on the top row to serve as a spillway. Flow from a severe storm (e.g., 10 year storm) should not overtop the curb.

- ***DI Protection Type 4 – Block and Gravel Filter -*** Block and gravel filters are suitable for curb inlets commonly used in residential, commercial, and industrial construction. See typical Type 4 installation details at the end of this fact sheet.

  1. Place hardware cloth or comparable wire mesh with 0.5 in. openings over the drop inlet so that the wire extends a minimum of 1 ft beyond each side of the inlet structure. If more than one strip is necessary, overlap the strips. Place woven geotextile over the wire mesh.

  2. Place concrete blocks lengthwise on their sides in a single row around the perimeter of the inlet, so that the open ends face outward, not upward. The ends of adjacent blocks should abut. The height of the barrier can be varied, depending on design needs, by stacking combinations of blocks that are 4 in., 8 in., and 12 in. wide. The row of blocks should be at least 12 in. but no greater than 24 in. high.

  3. Place wire mesh over the outside vertical face (open end) of the concrete blocks to prevent stone from being washed through the blocks. Use hardware cloth or comparable wire mesh with 0.5 in. opening.

  4. Pile washed stone against the wire mesh to the top of the blocks. Use 0.75 to 3 in.

- ***DI Protection Type 5 – Temporary Geotextile Insert (proprietary) –*** Many types of temporary inserts are available. Most inserts fit underneath the grate of a drop inlet or inside of a curb inlet and are fastened to the outside of the grate or curb. These inserts are removable and many can be cleaned and reused. Installation of these inserts differs between manufacturers. Please refer to manufacturer instruction for installation of proprietary devices.

- ***DI Protection Type 6 - Biofilter bags*** – Biofilter bags may be used as a substitute for gravel bags in low-flow situations. Biofilter bags should conform to specifications detailed in SE-14, Biofilter bags.

    1. Construct in a gently sloping area.
    2. Biofilter bags should be placed around inlets to intercept runoff flows.
    3. All bag joints should overlap by 6 in.
    4. Leave room upstream for water to pond and for sediment to settle out.
    5. Stake bags to the ground as described in the following detail. Stakes may be omitted if bags are placed on a paved surface.

- ***DI Protection Type 7 – Compost Socks*** – A compost sock can be assembled on site by filling a mesh sock (e.g., with a pneumatic blower). Compost socks do not require special trenching compared to other sediment control methods (e.g., silt fence). Compost socks should conform to specification detailed in SE-13, Compost Socks and Berms.

Costs

- Average annual cost for installation and maintenance of DI Type 1-4 and 6 (one year useful life) is $200 per inlet.
- Temporary geotextile inserts are proprietary and cost varies by region. These inserts can often be reused and may have greater than 1 year of use if maintained and kept undamaged. Average cost per insert ranges from $50-75 plus installation, but costs can exceed $100. This cost does not include maintenance.
- See SE-13 for Compost Sock cost information.

Inspection and Maintenance

- BMPs must be inspected in accordance with General Permit requirements for the associated project type and risk level. It is recommended that at a minimum, BMPs be inspected weekly, prior to forecasted rain events, daily during extended rain events, and after the conclusion of rain events.
- Silt Fences. If the fabric becomes clogged, torn, or degrades, it should be replaced. Make sure the stakes are securely driven in the ground and are in good shape (i.e., not bent, cracked, or splintered, and are reasonably perpendicular to the ground). Replace damaged stakes. At a minimum, remove the sediment behind the fabric fence when accumulation reaches one-third the height of the fence or barrier height.
- Gravel Filters. If the gravel becomes clogged with sediment, it should be carefully removed from the inlet and either cleaned or replaced. Since cleaning gravel at a construction site may be difficult, consider using the sediment-laden stone as fill material and put fresh stone around the inlet. Inspect bags for holes, gashes, and snags, and replace bags as needed. Check gravel bags for proper arrangement and displacement.

- Sediment that accumulates in the BMP should be periodically removed in order to maintain BMP effectiveness. Sediment should be removed when the sediment accumulation reaches one-third of the barrier height.
- Inspect and maintain temporary geotextile insert devices according to manufacturer's specifications.
- Remove storm drain inlet protection once the drainage area is stabilized.
    - Clean and regrade area around the inlet and clean the inside of the storm drain inlet, as it should be free of sediment and debris at the time of final inspection.

References

Stormwater Quality Handbooks - Construction Site Best Management Practices (BMPs) Manual, State of California Department of Transportation (Caltrans), March 2003.

Stormwater Management Manual for The Puget Sound Basin, Washington State Department of Ecology, Public Review Draft, 1991.

Erosion and Sediment Control Manual, Oregon Department of Environmental Quality, February 2005.

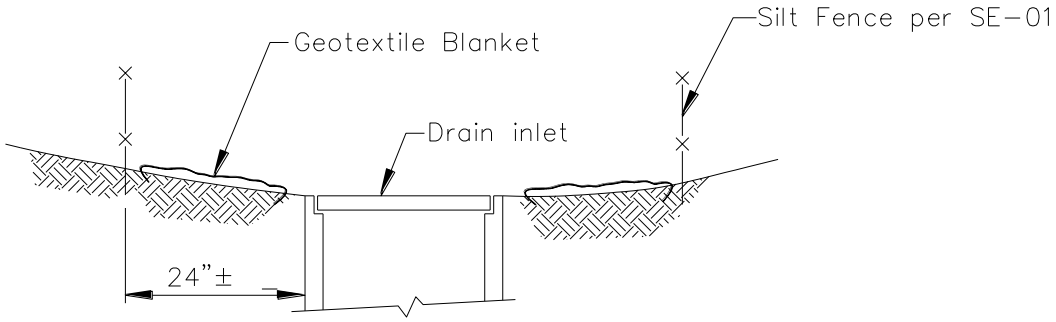

SECTION A–A

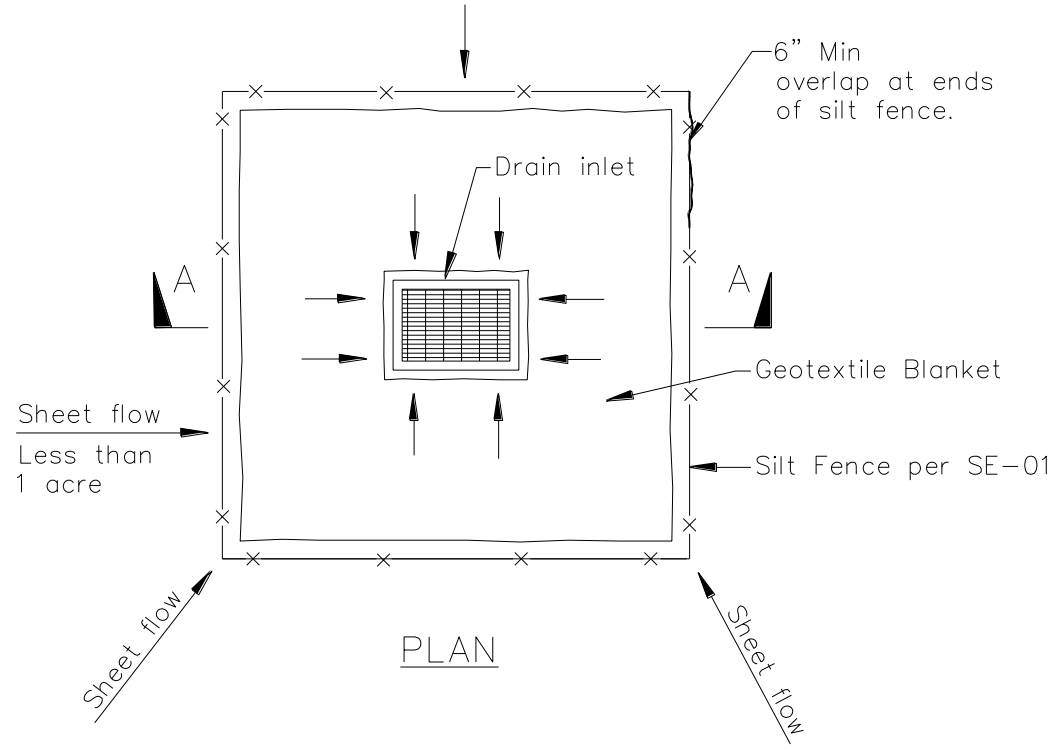

PLAN

DI PROTECTION TYPE 1
NOT TO SCALE

NOTES:

1. For use in areas where grading has been completed and final soil stabilization and seeding are pending.
2. Not applicable in paved areas.
3. Not applicable with concentrated flows.

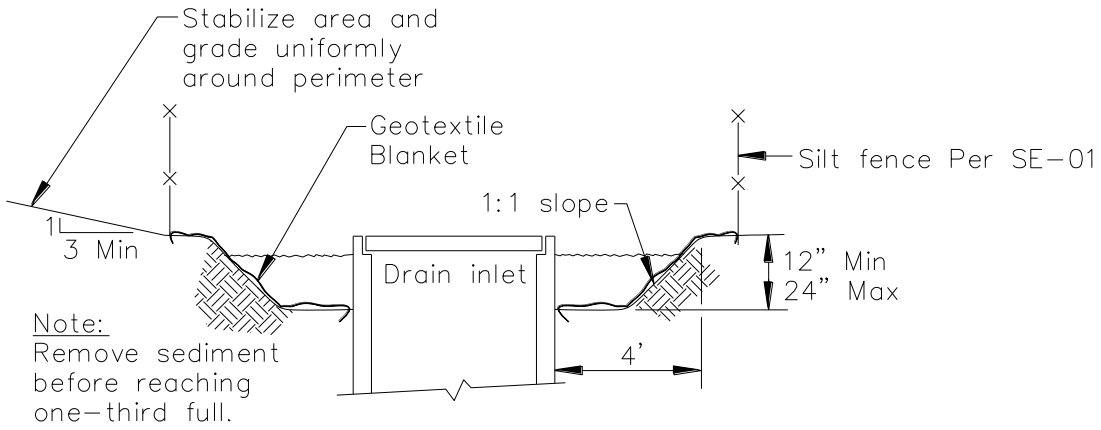

Section A–A

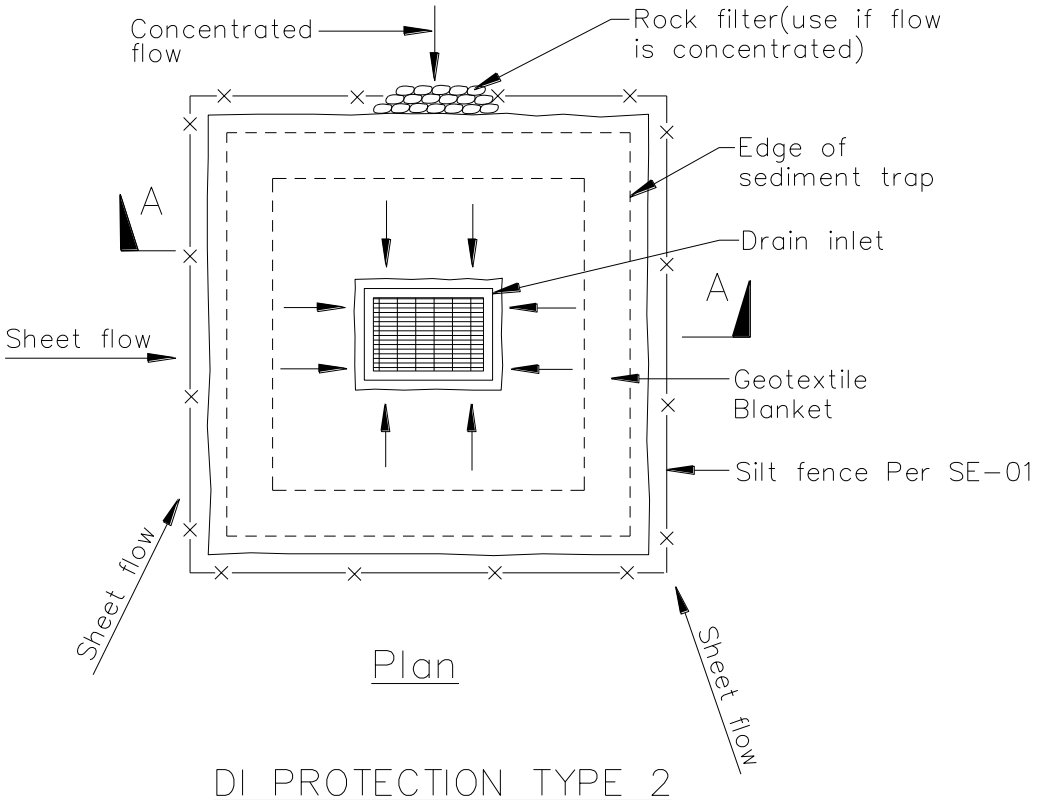

Plan

DI PROTECTION TYPE 2
NOT TO SCALE

Notes
1. For use in cleared and grubbed and in graded areas.
2. Shape basin so that longest inflow area faces longest length of trap.
3. For concentrated flows, shape basin in 2:1 ratio with length oriented towards direction of flow.

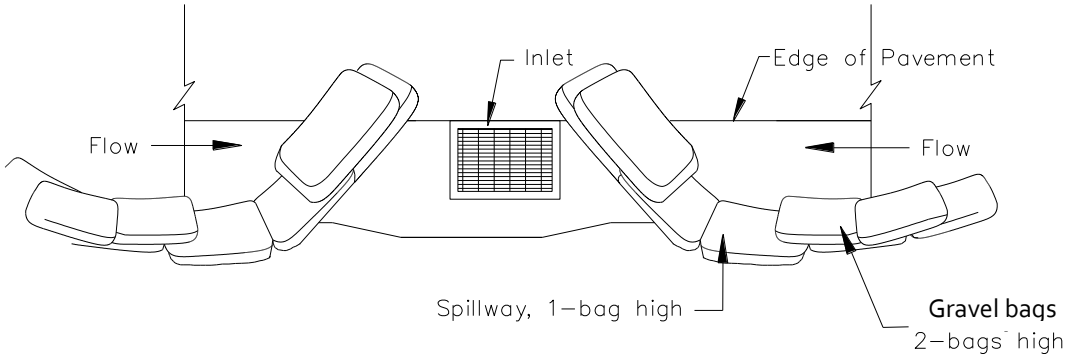

TYPICAL PROTECTION FOR INLET ON SUMP

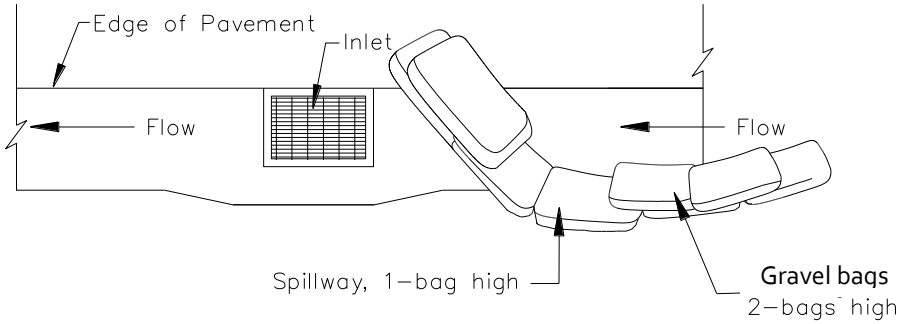

TYPICAL PROTECTION FOR INLET ON GRADE

NOTES:

1. Intended for short-term use.
2. Use to inhibit non-storm water flow.
3. Allow for proper maintenance and cleanup.
4. Bags must be removed after adjacent operation is completed
5. Not applicable in areas with high silts and clays without filter fabric.
6. Protection can be effective even if it is not immediately adjacent to the inlet provided that the inlet is protected from potential sources of pollution.

DI PROTECTION TYPE 3
NOT TO SCALE

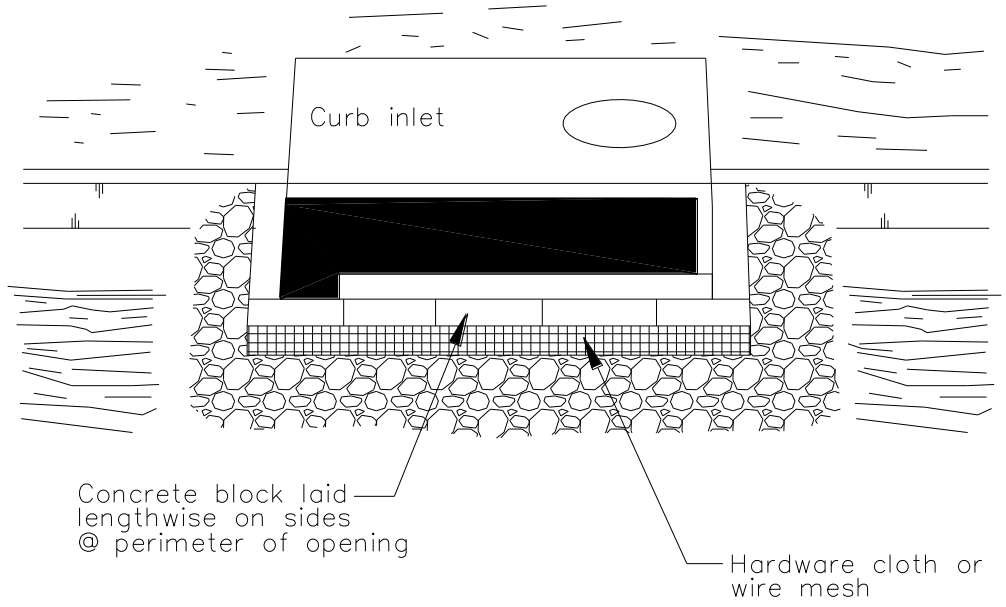

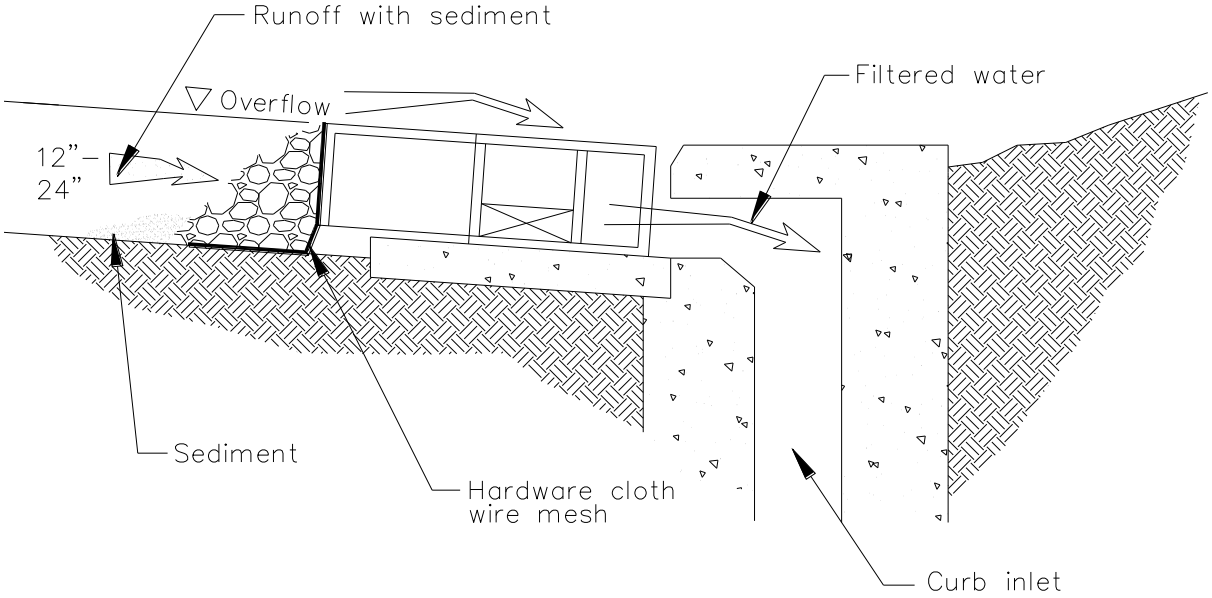

DI PROTECTION – TYPE 4

NOT TO SCALE

Active Treatment Systems SE-11

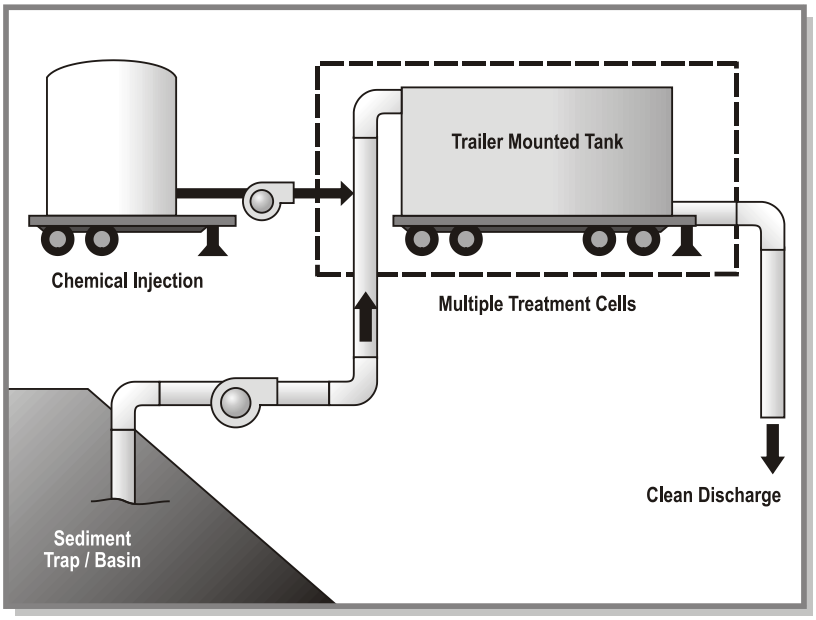

Categories

EC	Erosion Control	☑
SE	Sediment Control	
TC	Tracking Control	
WE	Wind Erosion Control	
NS	Non-Stormwater Management Control	
WM	Waste Management and Materials Pollution Control	

Legend:
☑ **Primary Category**
☒ **Secondary Category**

Targeted Constituents

Sediment	☑
Nutrients	
Trash	
Metals	
Bacteria	
Oil and Grease	
Organics	

Potential Alternatives

None

If User/Subscriber modifies this fact sheet in any way, the CASQA name/logo and footer below must be removed from each page and not appear on the modified version.

Description and Purpose

Active Treatment Systems (ATS) reduce turbidity of construction site runoff by introducing chemicals to stormwater through direct dosing or an electrical current to enhance flocculation, coagulation, and settling of the suspended sediment. Coagulants and flocculants are used to enhance settling and removal of suspended sediments and generally include inorganic salts and polymers (USACE, 2001). The increased flocculation aids in sedimentation and ability to remove fine suspended sediments, thus reducing stormwater runoff turbidity and improving water quality.

Suitable Applications

ATS can reliably provide exceptional reductions of turbidity and associated pollutants and should be considered where turbid discharges to sediment and turbidity sensitive waters cannot be avoided using traditional BMPs. Additionally, it may be appropriate to use an ATS when site constraints inhibit the ability to construct a correctly sized sediment basin, when clay and/or highly erosive soils are present, or when the site has very steep or long slope lengths.

Limitations

Dischargers choosing to utilize chemical treatment in an ATS must follow all guidelines of the Construction General Permit Attachment F – Active Treatment System Requirements. General limitations are as follows:

- Numeric Effluent Limit (NEL) for all discharges (10 NTU daily flow-weighted average)
- Limited availability of chemical residual testing procedures that meet permit requirements for flow-through treatment
- Specific field and classroom ATS training required to operate equipment
- Batch treatment requires extensive toxicity testing of effluent
- Batch treatment requires large footprint to accommodate treatment cells
- Requires additional filtration to remove residual floc and treatment chemicals prior to discharge
- Petroleum based polymers should not be used
- Requires site-specific design and equipment
- Limited discharge rates depending on receiving water body
- Labor intensive operation and maintenance
- ATS costs are higher on a unit basis for smaller sites that would be expected to have a lower volume of treated runoff
- ATS costs are seasonably variable due to increases or decreases in rainfall volumes

Implementation

Turbidity is difficult to control once fine particles are suspended in stormwater runoff from a construction site. Sedimentation ponds are effective at removing larger particulate matter by gravity settling, but are ineffective at removing smaller particulates such as clay and fine silt. Sediment ponds are typically designed to remove sediment no smaller than medium silt (0.02 mm). ATS may be used to reduce the turbidity of stormwater runoff. With an ATS, very high turbidities can be reduced to levels comparable to what is found in streams during dry weather.

Criteria for ATS Product Use

Chemically treated stormwater discharged from construction sites must be non-toxic to aquatic organisms. The following protocol should be used to evaluate chemicals proposed for stormwater treatment at construction sites. Authorization to use a chemical in the field based on this protocol does not relieve the applicant from responsibility for meeting all discharge and receiving water criteria applicable to a site.

- An ATS Plan, which includes an Operation and Maintenance component, a Monitoring, Sampling and Reporting component, a Health and Safety component, and a Spill Prevention component must be prepared and submitted to the Regional Water Quality Control Board (RWQCB).

- Treatment chemicals should be approved by EPA for potable water use or otherwise be demonstrated to be protective of human health and the environment. Chemical residual or whole effluent toxicity testing is required.

- Prior to field use of chemical treatment, jar tests are to be conducted to demonstrate that turbidity reduction necessary to meet the NELs and receiving water criteria can be achieved. Test conditions, including but not limited to raw water quality and jar test procedures, should be indicative of field conditions. Although these small-scale tests cannot be expected to reproduce performance under field conditions, they are indicative of treatment capability. A minimum of six site-specific jar tests must be conducted per chemical.

- The proposed maximum dosage should be at least a factor of five lower than the no observed effects concentration (NOEC).

- Effluent discharge from an ATS to a receiving water is conditional upon the favorable results of full-scale whole effluent bioassay/toxicity testing for batch treatment systems and upon chemical residuals testing for flow-through systems.

- Contact the RWQCB for a list of treatment chemicals that may be pre-approved for use.

Active Treatment System Design Considerations

The design and operation of an ATS should take into consideration the factors that determine optimum, cost-effective performance. While site characteristics will influence system design, it is important to recognize the following overriding considerations:

- The right chemical must be used at the right dosage. A dosage that is either too low or too high will not produce the lowest turbidity. There is an optimum dosage rate. This is a situation where the adage "adding more is always better" is not the case.

- The coagulant must be mixed rapidly into the water to insure proper dispersion.

- The mixing system for batch treatment must be sized to provide adequate mixing for the design storage volume. Lack of adequate mixing during the flocculation phase results in flocs that are too small and/or insufficiently dense. Too much mixing can rapidly destroy floc as it is formed.

- Care must be taken in the design of the withdrawal system to minimize outflow velocities and to prevent floc discharge. The discharge should be directed through a filtration system such as sand, bag, or cartridge filter that would catch any unintended floc discharge.

- ATS is also regulated for pH of the discharge. A pH-adjusting chemical should be added into the treated water to control pH if the selected coagulant requires alteration of the pH of the discharge outside of the acceptable range.

Active Treatment System Design

ATS can be designed as batch treatment systems using either ponds or portable trailer-mounted tanks, or as flow-through systems using any number of proprietary designed systems.

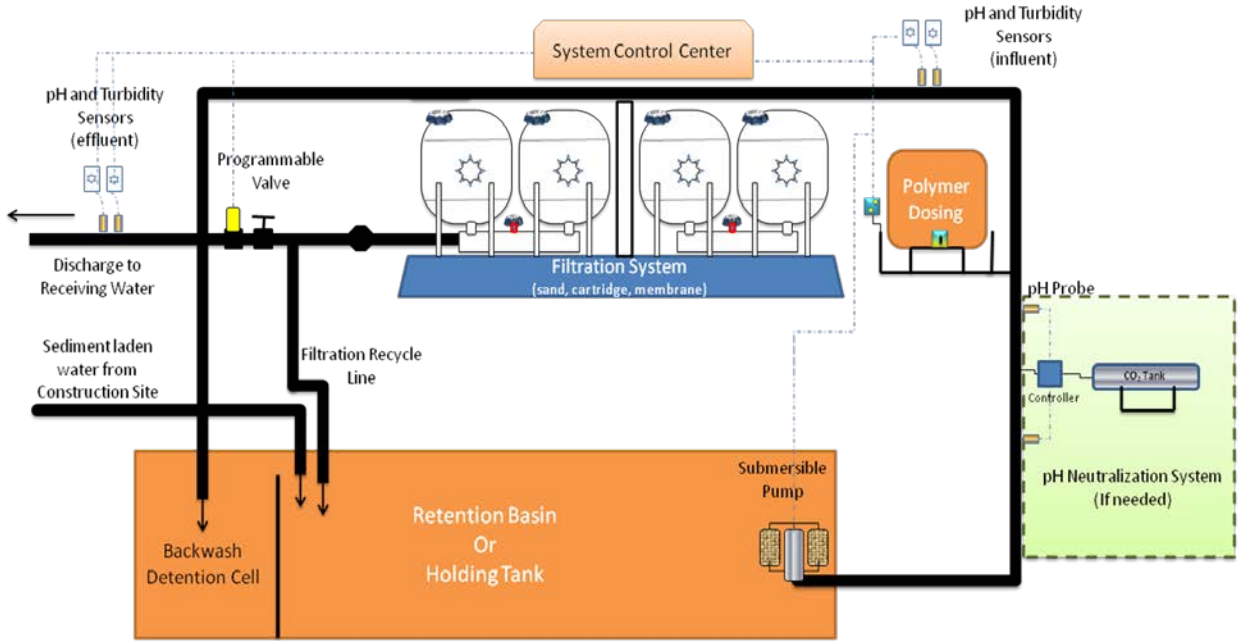

Figure has been adapted from Port of Seattle response to Washington Dept. of Ecology Action Order 2948

Batch Treatment

Batch Treatment systems consist of the stormwater collection system (either temporary diversion or the permanent site drainage system); a sediment basin, trap or holding tanks; pumps; a chemical feed system; treatment cells; and, interconnecting piping.

Batch treatment systems should use a minimum of two lined treatment cells. Multiple treatment cells allow for clarification of treated water while other cells are being filled or emptied. Treatment cells may be basins, traps, or tanks. Portable tanks may also be suitable for some sites.

The following equipment should be located in a secured, covered location:

- The chemical injector
- Secondary contaminant for acid, caustic, buffering compound, and treatment chemical
- Emergency shower and eyewash
- Monitoring equipment which consists of a pH meter and a turbidimeter (if not already within the instrumentation panel of the chemical injector)

Flow-through Treatment

At a minimum, a flow-through ATS system consists of the stormwater collection system (either temporary diversion or the permanent site drainage system), an untreated stormwater storage pond or holding tank, and a chemically enhanced filtration system.

Stormwater is collected at interception point(s) on the site and is diverted by gravity or by pumping to an untreated stormwater storage pond or other untreated stormwater holding area.

The stormwater is stored until treatment occurs. It is important that the holding pond be large enough to provide adequate storage.

Stormwater is then pumped from the untreated stormwater storage pond to the chemically enhanced filtration system where polymer is added. Adjustments to pH may be necessary before chemical addition. The filtration system continually monitors the stormwater for turbidity and pH. If the discharge water is out of the acceptable turbidity or pH range, the water is recycled to the untreated stormwater pond (or holding tank) where it can be retreated. Flow through systems must ensure that:

- Cumulative flow volume shall be recorded daily. The data recording system shall have the capacity to record a minimum of seven days of continuous data.
- Instrumentation systems are interfaced with system control to provide auto shutoff or recirculation in the event that effluent measurements exceed turbidity or pH.
- Upon system upset, power failure, or other catastrophic event, the ATS will default to a recirculation mode or safe shut down.
- The instrumentation system provides a method for controlling coagulant dose, to prevent potential overdosing.

Sizing Criteria

An ATS shall be designed and approved by a Certified Professional in Erosion and Sediment Control (CPESC), a Certified Professional in Storm Water Quality (CPSWQ); a California registered civil engineer; or any other California registered engineer.

ATS must be designed to capture and treat (within 72 hours) runoff from the 10-year 24-hour storm event. The runoff volume of the watershed area to be treated from this size storm event is required to be calculated using the Rational Method with a runoff coefficient of 1.

If sediment basins are used to capture flow-through or batch treatment, see SE-2, Sediment Basin, for design criteria. Bypass should be provided around the ATS to accommodate extreme storm events. Primary settling should be encouraged in the sediment basin/storage pond. A forebay with access for maintenance may be beneficial.

The permissible discharge rate governed by potential downstream effect should be used to calculate the recommended size of the treatment cells. Local requirements related to Phase I or Phase II NPDES permit thresholds should be considered in developing maximum discharge rates the ATS Plan.

Costs

Costs for ATS may be significant due to equipment rental requirements and cost of chemicals. ATS cost is lower on a treated unit-basis for large construction sites with large volumes of runoff.

Inspection and Maintenance

ATS must be operated and maintained by individuals with experience in their use and trained in accordance with training requirements below. ATS should be monitored continuously while in

use. A designated responsible person shall be on site daily at all times during treatment operations. Daily on-site visual monitoring of the system for proper performance shall be conducted and recorded in the project data log. The name, phone number, and training documentation of the person responsible for system operation and monitoring shall be included in the project data log.

The following monitoring requirements and results should be recorded in the data log:

Operational and Compliance Monitoring

- Effluent flow rate and volume shall be continuously monitored and recorded at 15- minute or less intervals.
- Influent and effluent pH must be continuously monitored and recorded at 15-minute or less intervals.
- Influent and effluent turbidity (expressed in NTU) must be continuously monitored and recorded at 15-minute or less intervals.
- The type and amount of chemical used for pH adjustment, if any, shall be monitored and recorded.
- Dose rate of chemical used in the ATS system (expressed in mg/L) shall be monitored and reported 15-minutes after startup and every 8 hours of operation.
- Laboratory duplicates – monthly laboratory duplicates for residual coagulant analysis must be performed and records shall be maintained onsite.
- Effluent shall be monitored and recorded for residual chemical/additive levels.
- If a residual chemical/additive test does not exist and the ATS is operating in a batch treatment mode of operation refer to the toxicity monitoring requirements below.

Toxicity Monitoring

Batch Treatment

Toxicity testing for systems operated in batch treatment mode should be made in accordance with the following:

- Acute toxicity testing on effluent samples representing effluent from each batch prior to discharge shall be undertaken. All bioassays shall be sent to a laboratory certified by the Department of Health Services (DHS) Environmental Laboratory Accreditation Program (ELAP). The required field of testing number for Whole Effluent Toxicity (WET) testing is E113.
- Acute toxicity tests shall be conducted with the following species and protocols. The methods to be used in the acute toxicity testing shall be those outlined for a 96-hour acute test in "Methods for Measuring the Acute Toxicity of Effluents and Receiving Water to Freshwater and Marine Organisms, USEPA-841-R-02-012" for Fathead minnow, *Pimephales promelas*. Rainbow trout, *Oncorhynchus mykiss*, may be used as a substitute for fathead minnow.

All toxicity tests shall meet quality assurance criteria and test acceptability criteria in the most recent versions of the EPA test method for WET testing.

Flow-through Treatment

Toxicity testing for systems operated in flow-through treatment mode should be made in accordance with the following:

- A residual chemical test method shall be used that has a method detection limit (MDL) of 10% or less than the maximum allowable threshold concentration (MATC) for the specific coagulant in use and for the most sensitive species of the chemical used. The MATC is equal to the geometric mean of the No Observed Effect Concentration (NOEC) and Lowest Observed Effect Concentration (LOEC) Acute and Chronic toxicity results for most sensitive species determined for the specific coagulant.
- The residual chemical test method shall produce a result within one hour of sampling.
- A California State certified laboratory shall validate the selected residual chemical test. Specifically the lab will review the test protocol, test parameters, and the detection limit of the coagulant. The discharger shall electronically submit this documentation as part of the ATS Plan.

Numeric Effluent Limit (NEL) Compliance:

All chemically treated stormwater must be sampled and tested for compliance with pH and turbidity limits. These limits have been established by the Construction General Permit. Sampling and testing for other pollutants may also be necessary at some sites. Turbidity limits have been set as 10 NTU as a daily flow-weighted average or 20 NTU from a single sample. pH must be within the range of 6.0 to 9.0 standard units. It is often possible to discharge treated stormwater that has a lower turbidity than the receiving water and that matches the pH.

Treated stormwater samples and measurements should be taken from the discharge pipe or another location representative of the nature of the treated stormwater discharge. Samples used for determining compliance with the water quality standards in the receiving water should not be taken from the treatment pond prior to decanting. Compliance with the water quality standards is determined in the receiving water.

Operator Training:

Operators shall have training specific to using an ATS and liquid coagulants for stormwater discharges in California. The training shall be in the form of a formal class with a certificate and requirements for testing and certificate renewal. Training shall include a minimum of eight hours classroom and 32 hours field training.

Standard BMPs:

Erosion and sediment control BMPs should be implemented throughout the site to prevent erosion and discharge of sediment to the ATS. Some types of chemical coagulation and flocculation are only achievable in water below a certain turbidity; therefore minimizing the amount of sediment reaching the system will increase the likelihood of meeting effluent limits and will potentially lower costs of chemical dosing.

Sediment Removal and Disposal

- Sediment shall be removed from the storage or treatment cells as necessary to ensure that the cells maintain their required water storage (i.e., volume) capability.
- Handling and disposal of all solids generated during ATS operations shall be done in accordance with all local, state, and federal laws and regulations.
- If sediment is determined to be non-toxic, it may be incorporated into the site away from drainages.

References

Engineering and Design – Precipitation/Coagulation/Flocculation. United States Army Corps of Engineers, EM 1110-1-4012, 2001.

Evaluation of Active Treatment Systems (ATS) for Construction Site Runoff. California Building and Industry Association (prepared by Geosyntec Consultants), 2008.

Stormwater Management Manual for Western Washington, Volume II – Construction Stormwater Pollution Prevention, Washington State Department of Ecology, August 2001.

Stormwater Quality Handbooks - Construction Site Best Management Practices (BMPs) Manual, State of California Department of Transportation (Caltrans), November 2000.

Manufactured Linear Sediment Controls (MLSC) SE-12

Categories

EC	Erosion Control	☒
SE	Sediment Control	☑
TC	Tracking Control	
WE	Wind Erosion Control	
NS	Non-Stormwater Management Control	
WM	Waste Management and Materials Pollution Control	☑

Legend:

☑ **Primary Category**

☒ **Secondary Category**

Targeted Constituents

Sediment	☑
Nutrients	
Trash	☒
Metals	
Bacteria	
Oil and Grease	
Organics	

Potential Alternatives

SE-1 Silt Fence

SE-5 Fiber Roll

SE-6 Gravel Bag Berm

SE-8 Sandbag Barrier

If User/Subscriber modifies this fact sheet in any way, the CASQA name/logo and footer below must be removed from each page and not appear on the modified version.

Description and Purpose

Manufactured linear sediment controls (MLSC) are pre-manufactured devices that are typically specified and installed for drainage and sediment control on the perimeter of disturbed sites or stockpiles and as check dams within channels. Typically, MLSCs can be reused.

This fact sheet is intended to provide guidance on BMP selection and implementation of proprietary or vendor-supplied products, for sediment control. Products should be evaluated for project-specific implementation and used if determined to be appropriate by the SWPPP Preparer.

Suitable Applications

MLSCs are generally used in areas as a substitute for fiber rolls and silt fences in sediment control applications to slow down runoff water, divert drainage or contain fines and sediment. MLSCs are a linear control and application suitability varies based on the specific product type. They may be suitable:

- On paved surfaces for perimeter protection.
- As check structures in channels.
- Along the perimeter of disturbed sites in lieu of silt fence.

CASQA
CALIFORNIA STORMWATER QUALITY ASSOCIATION

- At operational storm drains as a form of inlet protection.
- Around temporary stockpiles or material/equipment storage areas.
- At the interface between graveled driveways and pavement.
- Along the toe of exposed and erodible slopes.

Limitations

- Limitations vary by product. Product manufacturer's printed product use instructions should be reviewed by the SWPPP Preparer to determine the project-specific applicability of MLSCs.

Implementation

General

When appropriately placed, MLSCs intercept and slow sheet flow runoff, causing temporary ponding. The temporary ponding provides quiescent conditions allowing sediment to settle. The device is porous, which allows the ponded runoff to flow slowly through the device, releasing the runoff as sheet flows. Generally, MLSCs should be used in conjunction with temporary soil stabilization controls up-slope to provide an effective combination of erosion and sediment control.

Design and Layout

- MLSCs used on soil should be trenched or attached to the ground per manufacturer specifications in a manner that precludes runoff or ponded water from flowing around or under the device.
- MLSCs designed for use on asphalt or concrete may be attached using a variety of methods, including nailing the device to the pavement, or using a high strength adhesive.
- Follow manufacturer written specifications when installing MLSCs.
- Allow sufficient space up-slope from the silt dike to allow ponding, and to provide room for sediment storage.
- For installation near the toe of the slope, MLSCs should be set back 3 feet from the slope toe to facilitate cleaning. Where site conditions do not allow set back, the sediment control may be constructed on the toe of the slope. To prevent flows behind the barrier, sand or gravel bags can be placed perpendicular and between the sediment control and slope to serve as a barrier to parallel flow.
- Drainage area should not exceed 5 acres.

Materials

- Several manufactured products are available. The following search terms or combination of terms can be used with an internet search engine to find manufactured linear sediment controls:

- "silt barrier"
- "reusable silt fence"
- "silt fence alternative" or
- "perimeter sediment control"

Costs

Manufacturers should be contacted directly for current pricing.

Inspection and Maintenance

- BMPs must be inspected in accordance with General Permit requirements for the associated project type and risk level. It is recommended that at a minimum, BMPs be inspected weekly, prior to forecasted rain events, daily during extended rain events, and after the conclusion of rain events.
- Reshape or replace sections of damaged MLSCs as needed.
- Repair washouts or other damage as needed.
- Sediment that accumulates behind the BMP should be periodically removed in order to maintain BMP effectiveness. Sediment should be removed when the sediment accumulation reaches one-third of the barrier height.
- Remove MLSCs when no longer needed. Remove sediment accumulation and clean, re-grade, and stabilize the area. Removed sediment should be incorporated in the project or disposed of properly.

References

City of Elko Construction Site Best Management Practices Handbook, December 2005.

Construction Site Best Management Practices Handbook, June 2008 Update, Truckee Meadows Regional Stormwater Quality Management Program, June 2008.

Complying with the Edwards Aquifer Rules Technical Guidance on Best Management Practices, Texas Commission on Environmental Quality, Revised July 2005, Addendum Sheet, January26, 2011.

Stormwater Management Manual for Western Washington Volume II, Construction Stormwater Pollution Prevention, Washington State Department of Ecology, February 2005.

Compost Socks and Berms SE-13

Categories

EC	Erosion Control	☒
SE	Sediment Control	☑
TC	Tracking Control	
WE	Wind Erosion Control	
NS	Non-Stormwater Management Control	
WM	Waste Management and Materials Pollution Control	

Legend:
☑ **Primary Category**
☒ **Secondary Category**

Targeted Constituents

Sediment	☑
Nutrients	
Trash	
Metals	☒
Bacteria	☒
Oil and Grease	☒
Organics	

Potential Alternatives

SE-1 Silt Fence

SE-5 Fiber Roll

SE-6 Gravel Bag Berm

SE-8 Sandbag Barrier

SE-14 Biofilter Bags

If User/Subscriber modifies this fact sheet in any way, the CASQA name/logo and footer below must be removed from each page and not appear on the modified version.

Description and Purpose

Compost socks and berms act as three-dimensional biodegradable filtering structures to intercept runoff where sheet flow occurs and are generally placed at the site perimeter or at intervals on sloped areas. Compost socks are generally a mesh sock containing compost and a compost berm is a dike of compost, trapezoidal in cross section. When employed to intercept sheet flow, both BMPs are placed perpendicular to the flow of runoff, allowing filtered runoff to pass through the compost and retaining sediment (and potentially other pollutants). A compost sock can be assembled on site by filling a mesh sock (e.g. with a pneumatic blower). The compost berm should be constructed using a backhoe or equivalent and/or a pneumatic delivery (blower) system and should be properly compacted. Compost socks and berms act as filters, reduce runoff velocities, and in some cases, aid in establishing vegetation.

Compost is organic, biodegradable, and renewable. Compost provides soil structure that allows water to infiltrate the compost medium which helps prevent rill erosion and the retained moisture promotes seed germination and vegetation growth, in addition to providing organic matter and nutrients important for fostering vegetation. Compost improves soil quality and productivity, as well as erosion and sediment control.

The compost of the compost sock or berm can be selected that targets site specific objectives in capturing sediment and other pollutants, supporting vegetation, or additional erosion control.

Compost is typically derived from combinations of feedstocks, biosolids, leaf and yard trimmings, manure, wood, or mixed solid waste. Many types of compost are products of municipal recycle or "Greenwaste" programs. Compost is organic and biodegradable and can be left onsite. There are many types of compost with a variety of properties with specific functions, and accordingly compost selection is an important design consideration in the application of this type of erosion and sediment control.

Suitable Applications

- Along the toe, top, face, and at grade breaks of exposed and erodible slopes to shorten slope length and spread runoff as sheet flow (compost berms should only be used at the top of slopes or on slopes 4:1 (H:V) or flatter, all other slope applications should use compost socks)
- Along the perimeter of a project
- As check dams in unlined ditches (compost socks only)
- Down-slope of exposed soil areas
- At operational storm drains as a form of inlet protection (compost socks only)
- Around temporary stockpiles

Compost socks and berms do not require special trenching or BMP removal compared to other sediment control methods (e.g. silt fence or fiber rolls). Compost socks and berms can remain in place after earth disturbing activities are completed or the compost components can be spread over the site providing nutrients for plant growth and augmenting soil structure. BMPs that remain in place are particularly advantageous below embankments, especially adjacent streams, by limiting re-entry and the disturbance to sensitive areas.

Compost can be pre-seeded prior to application (recommended by the EPA for construction site stormwater runoff control and required for compost socks) or seeded after installation (for compost berms only). The compost medium can also remove pollutants in stormwater including heavy metals; oil and grease; and hydrocarbons.

Limitations

- Compost can potentially leach nutrients (dissolved phosphorus and nitrogen) into runoff and potentially impact water quality. Compost should not be used directly upstream from nutrient impaired waterbodies (Adams et. al, 2008).
- Compost may also contain other undesirable constituents that are detrimental to water quality. Compost should be obtained from a supplier certified by the California Integrated Waste Management Board or compost should otherwise meet the environmental health standards of Title 14, California Code of Regulations, Division 7, Chapter 3.1, Article 7. Carefully consider the qualifications and experience of any compost producer/supplier.

- Application by hand is more time intensive and potentially costly. Using a pneumatic blower truck is the recommended cost effective method of assembly.
- Compost socks and berms should not be employed at the base of slopes greater than 2:1 (H:V). They can be employed with other erosion control methods for steeper slopes.
- Difficult to move once saturated.
- Compost berms should not be applied in areas of concentrated flows.
- Compost socks and berms are easy to fix; however, they are susceptible to damage by frequent traffic. Compost socks can be used around heavy machinery, but regular disturbance decreases sock performance.

Implementation

Compost Materials

- California Compost Regulations (Title 14, California Code of Regulations, Division 7, Chapter 3.1, Article 7, Section 17868.3) define and require a quality of compost for application. Compost should comply with all physical and chemical requirements. Specific requirements are provided in **Table 1**, taken from Caltrans Standard Special Provision 10-1 (SSP 10-1), Erosion Control (Compost Blanket).
- The compost producer should be fully permitted as specified under the California Integrated Waste Management Board, Local Enforcement Agencies and any other State and Local Agencies that regulate Solid Waste Facilities. If exempt from State permitting requirements, the composting facility should certify that it follows guidelines and procedures for production of compost meeting the environmental health standards of Title 14, California Code of Regulations, Division 7, Chapter 3.1, Article 7.
- The compost producer should be a participant in United States Composting Council's Seal of Testing Assurance program.
- Compost medium parameter specifications for compost socks and berms have been developed to assist in compost selection, such as those provided by the American Association of State Highway Transportation Officials (AASHTO).
- Particle size is important parameter for selecting compost. Well consolidated coarser grades of compost (e.g. small and large pieces) perform better for filtration objectives, while finer grades better support vegetation. Particle size of the compost should be selected based on site conditions, such as expected precipitation, and filtration goals and / or long term plant nutrients.
- Compost moisture should be considered for composition quality and application purposes. A range of 30-50% is typical. Compost that is too dry is hard to apply and compost that is too wet is more difficult (and more expensive) to transport. For arid or semi-arid areas, or for application during the dry season, use compost with greater moisture content than areas with wetter climates. For wetter or more humid climates or for application during the wet season, drier composts can be used as the compost will absorb moisture from the ambient air.

- If vegetation establishment is a desired function of the compost, a compost sample should be inspected by a qualified individual. Vegetation has different nutrient and moisture needs.
- Organic content of the compost is also important and should range from 30 to 65% depending on site conditions.
- Compost should not be derived from mixed municipal solid waste and should be reasonably free of visible contaminates.
- Compost should not contain paint, petroleum products, pesticides or any other chemical residues harmful to animal life or plant growth. Metal concentrations in compost should not exceed the maximum metal concentrations listed under Title 14, California Code of Regulations, Division 7, Chapter 3.1, Section 17868.2.
- Compost should not possess objectionable odors.
- Compost should be weed free.

Table 1. Physical/Chemical Requirements of Compost
Reference - Caltrans SSP-10 Erosion Control Blanket (Compost)

Property	Test Method	Requirement
pH	*TMECC 04.11-A Elastometric pH 1:5 Slurry Method pH Units	6.0–8.0
Soluble Salts	TMECC 04.10-A Electrical Conductivity 1:5 Slurry Method dS/m (mmhos/cm)	0-10.0
Moisture Content	TMECC 03.09-A Total Solids & Moisture at 70+/- 5 deg C % Wet Weight Basis	30-60
Organic Matter Content	TMECC 05.07-A Loss-On-Ignition Organic Matter Method (LOI) % Dry Weight Basis	30–65
Maturity	TMECC 05.05-A Germination and Vigor Seed Emergence Seedling Vigor % Relative to Positive Control	 80 or Above 80 or Above
Stability	TMECC 05.08-B Carbon Dioxide Evolution Rate mg CO_2-C/g OM per day	8 or below
Particle Size	TMECC 02.02-B Sample Sieving for Aggregate Size Classification % Dry Weight Basis	100% Passing, 3 inch 90-100% Passing, 1 inch 65-100% Passing, 3/4 inch 0 - 75% Passing, 1/4 inch Maximum length 6 inches
Pathogen	TMECC 07.01-B Fecal Coliform Bacteria < 1000 MPN/gram dry wt.	Pass
Pathogen	TMECC 07.01-B Salmonella < 3 MPN/4 grams dry wt.	Pass
Physical Contaminants	TMECC 02.02-C Man Made Inert Removal and Classification: Plastic, Glass and Metal % > 4mm fraction	Combined Total: < 1.0
Physical Contaminants	TMECC 02.02-C Man Made Inert Removal and Classification: Sharps (Sewing needles, straight pins and hypodermic needles) % > 4mm fraction	None Detected

*TMECC refers to "Test Methods for the Examination of Composting and Compost," published by the United States Department of Agriculture and the United States Compost Council (USCC).

Installation

- Prior to application, prepare locations for socks and berms by removing brush and thick vegetation. The compost of the sock and/or berm should be allowed to come in full contact with the ground surface.

- Select method to apply the compost sock or berm. A pneumatic blower is most cost effective and most adaptive in applying compost to steep, rough terrain, and hard to reach locations.

- The compost of the berm should be distributed evenly to the surface, compacted, and shaped trapezoidal in cross section. Berm design is generally consists of a base two times the height. AASHTO specification MP 9-03 provides compost berm dimensions based on anticipated

site precipitation (AASHTO, 2003 and USEPA, 2009). State agencies, such as Oregon Department of Environmental Quality (ODEQ) have developed berm dimension based on slope steepness and length (ODEQ, 2004).

- Compost socks can be assembled on site by filling mesh socks with the selected compost. Mesh socks can be tied at one end, filled, and then tied at the other end. The ends of socks can be interlocked until the desired length is achieved. The sock diameter is a function of slope steepness and length. Again, ASSHTO provides specifications for various parameters. Compost socks range from 8" to 18", but are typically 12" to 18" in diameter.

- Compost socks are typically placed in contours perpendicular to sheet flow. They can also be placed in V formation on a slope. Compost socks need to be anchored, typically stakes, through the center of the sock. To prevent water flowing around them, the ends of compost socks should be placed upslope.

- Locate compost socks and berms on level contours spaced as follows:

  - Slope inclination of 4:1 (H:V) or flatter: Socks and/or berms should be placed at a maximum interval of 20 ft.

  - Slope inclination between 4:1 and 2:1 (H:V): Socks should be placed at a maximum interval of 15 ft. (a closer spacing is more effective).

  - Slope inclination 2:1 (H:V) or greater: Socks should be placed at a maximum interval of 10 ft. (a closer spacing is more effective).

- Place perimeter socks and berms using a j-hook installation. Use of vegetation will also provide additional anchoring.

- Compost socks and berms can be placed around the perimeter of an affected area, like a silt fence, if the area is flat or on a contour. Do not place these socks and berms where ponded water could become an issue.

- If used at the toe of slopes, the compost sock or berm should at a minimum of 5 to 10 feet away.

- Use additional anchoring and erosion control BMPs in conjunction of the compost socks and berms as needed.

- Consider using compost berms or socks as necessary at the top and/or bottom of the slope for additional erosion control performance.

- Compost socks and berms can also be effective over rocky and frozen ground if installed properly.

- It is recommended that the drainage areas of these compost BMPs do not exceed 0.25 acre per 100 feet placement interval and runoff does not exceed 1 cubic foot per second.

Costs

Recently obtained vendor costs indicated $3.50 per linear foot for compost berm application and $2.00 per linear foot for 8" socks and $2.50 per linear foot for 12"socks. Costs do not include final compost sock or berm functions at the end of construction activities, including spreading or removal, if required. ODEQ estimates that compost berms cost 30 percent less than silt fences to install.

Inspection and Maintenance

- BMPs must be inspected in accordance with General Permit requirements for the associated project type and risk level. It is recommended that at a minimum, BMPs be inspected weekly, prior to forecasted rain events, daily during extended rain events, and after the conclusion of rain events.

- Once damage is identified, mend or reapply the sock or berm as needed. Washed out areas should be replaced. If the sock or berm height is breached during a storm, an additional sock can be stacked to increase the sock height and similarly the berm dimensions can be increased, as applicable. An additional sock or berm may be installed upslope, as needed. It may be necessary to apply an additional type of stormwater BMP, such as a compost blanket.

- Sediment contained by the sock or berm should be removed prior reaching 1/3 of the exposed height of the BMP. The sediment can be stabilized with the compost sock or berm with vegetation at the end of construction activities.

- Care should be exercised to minimize the damage to protected areas while making repairs, as any area damaged will require reapplication of BMPs.

- Limit traffic to minimize damage to BMPs or impede vegetation establishment.

References

An analysis of Composting as an Environmental Remediation Technology, U.S. Environmental Protection Agency (USEPA), Solid Waste and Emergency Response (5305W), EPA530-R-8-008, 1998.

Characteristics of Compost: Moisture Holding and Water Quality Improvement, Center for Research in Water Resources, Kirchoff, C., Malina, J., and Barrett, M., 2003.

Compost Utilization for Erosion Control, The University of Georgia College of Agricultural and Environmental Sciences, pubs.caes.uga.edu/caespubs/pubcd/B1200.htm, Faucette, B. and Risse, M., 2001.

Erosion and Sediment Control Manual, Oregon Department of Environmental Quality, February 2005.

Standard Special Provision 10-1, Erosion Control (Compost Blanket), State of California Department of Transportation (Caltrans). 2007 Update.

Evaluation of Environmental Benefits and Impacts of Compost and Industry Standard Erosion and Sediment Controls Measures Used in Construction Activities, Dissertation, Institute of Ecology, University of Georgia, Faucette, B., 2004.

National Pollutant Discharge Elimination System (NPDES), Compost Blankets, U.S. Environmental Protection Agency (USEPA). http://cfpub.epa.gov/npdes/stormwater/menuofbmps/index.cfm?action=factsheet_results&view=specific&bmp=118, 2009.

Standard Specifications for Transportation Materials and Methods of Sampling and Testing, Designation MP-9, Compost for Erosion/Sediment Control (Filter Berms), Provisional, American Association of State Highway Transportation Officials (AASHTO), 2003.

Stormwater Best Management Practices (BMPs) Field Trials of Erosion Control Compost in Reclamation of Rock Quarry Operations, Nonpoint Source Protection Program CWA §319(h), Texas Commission on Environmental Quality, Adams, T., McFarland, A., Hauck, L., Barrett, M., and Eck, B., 2008.

Biofilter Bags SE-14

Description and Purpose

Biofilter bags, or bio-bags, are a multi-purpose sediment control BMP consisting of a plastic mesh bag filled with 100% recycled wood product waste. Biofilter bags come in a variety of sizes (30" x 18" and 30" x 9" being common) and generally have between 1-2 cubic yards of recycled wood waste (or wood chips). Biofilter bags work by detaining flow and allowing a slow rate of discharge through the wood media. This action removes suspended sediment through gravity settling of the detained water and filtration within the bag.

Suitable Applications

Biofilter bags are a short-term BMP that can be rapidly deployed, maintained, and replaced. Biofilter bags can be an effective short-term solution to place in developed rills to prevent further erosion until permanent measures can be established. Suitable short-term applications include:

- As a linear sediment control measure:
  - Below the toe of slopes and erodible slopes
  - Below other small cleared areas
  - Along the perimeter of a site (with low-expected flow)
  - Down slope of exposed soil areas
  - Around temporary stockpiles and spoil areas
  - Parallel to a roadway to keep sediment off paved areas

Categories

EC	Erosion Control	
SE	Sediment Control	☑
TR	Tracking Control	
WE	Wind Erosion Control	
NS	Non-Stormwater Management Control	
WM	Waste Management and Materials Pollution Control	

Legend:

☑ **Primary Category**

☒ **Secondary Category**

Targeted Constituents

Sediment	☑
Nutrients	
Trash	
Metals	
Bacteria	
Oil and Grease	
Organics	

Potential Alternatives

SE-1 Silt Fence

SE-4 Check Dams

SE-5 Fiber Roll

SE-6 Gravel Bag Berm

SE-8 Sandbag Barrier

SE-10 Storm Drain Inlet Protection

If User/Subscriber modifies this fact sheet in any way, the CASQA name/logo and footer below must be removed from each page and not appear on the modified version.

- Along streams and channels

- As linear erosion control measure:
  - Along the face and at grade breaks of exposed and erodible slopes to shorten slope length and spread runoff as sheet flow
  - At the top of slopes to divert runoff away from disturbed slopes
  - As check dams across mildly sloped construction roads
- Inlet Protection (See SE-10)
- Supplement to silt fences or other sediment control devices

Limitations

- Short life-span (maximum usefulness of 2-3 months and should be replaced more frequently if needed); regular maintenance and replacement required to ensure effectiveness. Bags will rapidly fill with sediment and reduce permeability.
- Easily damaged by construction vehicles.
- If not properly staked, will fail on slope applications.
- If improperly installed can allow undercutting or side-cutting flow.
- Not effective where water velocities or volumes are high.
- Potentially buoyant and easily displaced if not properly installed.

Implementation

General

Biofilter bags are a relatively low cost temporary BMP that are easily deployed and have a simple installation that can be performed by hand. Without proper installation, however, biofilter bags can fail due to their light weight, potential displacement, and multiple joint locations. One of the benefits of utilizing biofilter bags is that the media (wood-product) can be recycled or used onsite when no longer needed (where acceptable).

Design and Layout – Linear control

- Locate biofilter bags on level contours.
  - Slopes between 20:1 and 4:1 (H:V): Biofilter bags should be placed at a maximum interval of 20 ft, with the first row near the slope toe.
  - Slopes between 4:1 and 2:1 (H:V): Biofilter bags should be placed at a maximum interval of 15 ft, with the first row near the slope toe.
  - Slopes 2:1 (H:V) or steeper: Biofilter bags should be placed at a maximum interval of 10 ft., with the first row placed the slope toe.

- Turn the ends of the biofilter bag barriers up slope to prevent runoff from going around the berm.
- Allow sufficient space up slope from the biofilter bag berm to allow ponding, and to provide room for sediment storage.
- Stake biofilter bags into a 1 to 2 in. deep trench with a width equal to the bag.
  - Drive one stake at each end of the bag.
  - Use wood stakes with a nominal classification of 0.75 by 0.75 in. and minimum length of 24 in.
- Biofilter bags should be overlapped (6 in.), not abutted.

Costs

Pre-filled biofilter bags cost approximately $2.50-$3.50 per bag, dependent upon size.

Inspection and Maintenance

- BMPs must be inspected in accordance with General Permit requirements for the associated project type and risk level. It is recommended that at a minimum, BMPs be inspected weekly, prior to forecasted rain events, daily during extended rain events, and after the conclusion of rain events.
- Biofilter bags exposed to sunlight will need to be replaced every two to three months due to degrading of the bags.
- Reshape or replace biofilter bags as needed.
- Repair washouts or other damage as needed.
- Sediment that is retained by the BMP should be periodically removed in order to maintain BMP effectiveness. Sediment should be removed when the sediment accumulation reaches one-third of the barrier height.
- Remove biofilter bag berms when no longer needed. Remove sediment accumulation and clean, re-grade, and stabilize the area. Biofilter media may be used on-site, if allowed.

References

Catalog of Stormwater Best Management Practices for Idaho Cities and Counties. Volume 2, Section 7, BMP 34 – Biofilter Bags, Idaho Department of Environmental Quality, 2005.

Erosion and Sediment Control Manual, Oregon Department of Environmental Quality, February 2005.

Stormwater Quality Handbooks Construction Site Best Management Practices (BMPs) Manual, State of California Department of Transportation (Caltrans), March 2003.

Stabilized Construction Entrance / Exit TC-1

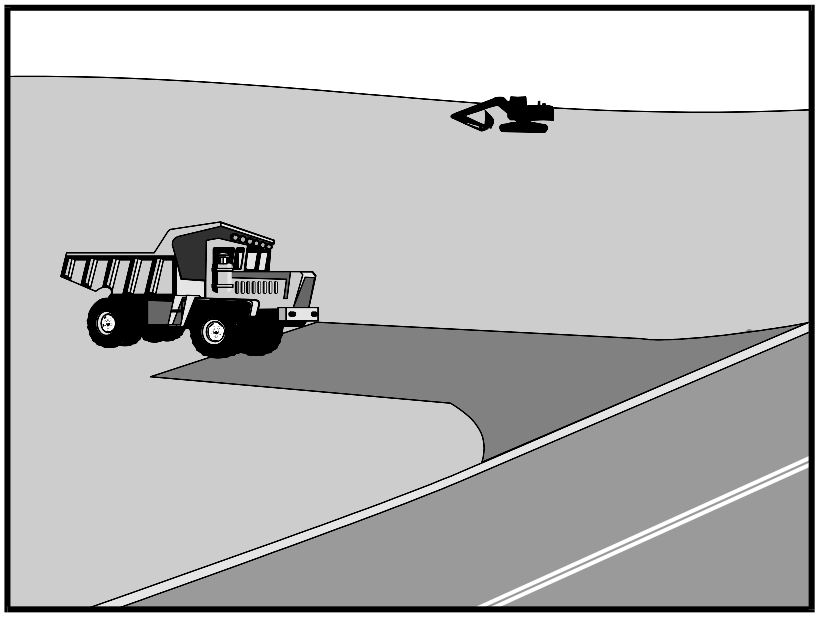

Categories

EC	Erosion Control	☒
SE	Sediment Control	☒
TC	Tracking Control	☑
WE	Wind Erosion Control	
NS	Non-Stormwater Management Control	
WM	Waste Management and Materials Pollution Control	

Legend:

☑ **Primary Objective**

☒ **Secondary Objective**

Targeted Constituents

Sediment	☑
Nutrients	
Trash	
Metals	
Bacteria	
Oil and Grease	
Organics	

Potential Alternatives

None

If User/Subscriber modifies this fact sheet in any way, the CASQA name/logo and footer below must be removed from each page and not appear on the modified version.

Description and Purpose

A stabilized construction access is defined by a point of entrance/exit to a construction site that is stabilized to reduce the tracking of mud and dirt onto public roads by construction vehicles.

Suitable Applications

Use at construction sites:

- Where dirt or mud can be tracked onto public roads.
- Adjacent to water bodies.
- Where poor soils are encountered.
- Where dust is a problem during dry weather conditions.

Limitations

- Entrances and exits require periodic top dressing with additional stones.
- This BMP should be used in conjunction with street sweeping on adjacent public right of way.
- Entrances and exits should be constructed on level ground only.
- Stabilized construction entrances are rather expensive to construct and when a wash rack is included, a sediment trap of some kind must also be provided to collect wash water runoff.

Implementation

General

A stabilized construction entrance is a pad of aggregate underlain with filter cloth located at any point where traffic will be entering or leaving a construction site to or from a public right of way, street, alley, sidewalk, or parking area. The purpose of a stabilized construction entrance is to reduce or eliminate the tracking of sediment onto public rights of way or streets. Reducing tracking of sediments and other pollutants onto paved roads helps prevent deposition of sediments into local storm drains and production of airborne dust.

Where traffic will be entering or leaving the construction site, a stabilized construction entrance should be used. NPDES permits require that appropriate measures be implemented to prevent tracking of sediments onto paved roadways, where a significant source of sediments is derived from mud and dirt carried out from unpaved roads and construction sites.

Stabilized construction entrances are moderately effective in removing sediment from equipment leaving a construction site. The entrance should be built on level ground. Advantages of the Stabilized Construction Entrance/Exit is that it does remove some sediment from equipment and serves to channel construction traffic in and out of the site at specified locations. Efficiency is greatly increased when a washing rack is included as part of a stabilized construction entrance/exit.

Design and Layout

- Construct on level ground where possible.
- Select 3 to 6 in. diameter stones.
- Use minimum depth of stones of 12 in. or as recommended by soils engineer.
- Construct length of 50 ft or maximum site will allow, and 10 ft minimum width or to accommodate traffic.
- Rumble racks constructed of steel panels with ridges and installed in the stabilized entrance/exit will help remove additional sediment and to keep adjacent streets clean.
- Provide ample turning radii as part of the entrance.
- Limit the points of entrance/exit to the construction site.
- Limit speed of vehicles to control dust.
- Properly grade each construction entrance/exit to prevent runoff from leaving the construction site.
- Route runoff from stabilized entrances/exits through a sediment trapping device before discharge.
- Design stabilized entrance/exit to support heaviest vehicles and equipment that will use it.

- Select construction access stabilization (aggregate, asphaltic concrete, concrete) based on longevity, required performance, and site conditions. Do not use asphalt concrete (AC) grindings for stabilized construction access/roadway.
- If aggregate is selected, place crushed aggregate over geotextile fabric to at least 12 in. depth, or place aggregate to a depth recommended by a geotechnical engineer. A crushed aggregate greater than 3 in. but smaller than 6 in. should be used.
- Designate combination or single purpose entrances and exits to the construction site.
- Require that all employees, subcontractors, and suppliers utilize the stabilized construction access.
- Implement SE-7, Street Sweeping and Vacuuming, as needed.
- All exit locations intended to be used for more than a two-week period should have stabilized construction entrance/exit BMPs.

Inspection and Maintenance

- Inspect and verify that activity–based BMPs are in place prior to the commencement of associated activities. While activities associated with the BMPs are under way, inspect BMPs in accordance with General Permit requirements for the associated project type and risk level. It is recommended that at a minimum, BMPs be inspected weekly, prior to forecasted rain events, daily during extended rain events, and after the conclusion of rain events.
- Inspect local roads adjacent to the site daily. Sweep or vacuum to remove visible accumulated sediment.
- Remove aggregate, separate and dispose of sediment if construction entrance/exit is clogged with sediment.
- Keep all temporary roadway ditches clear.
- Check for damage and repair as needed.
- Replace gravel material when surface voids are visible.
- Remove all sediment deposited on paved roadways within 24 hours.
- Remove gravel and filter fabric at completion of construction

Costs

Average annual cost for installation and maintenance may vary from $1,200 to $4,800 each, averaging $2,400 per entrance. Costs will increase with addition of washing rack, and sediment trap. With wash rack, costs range from $1,200 - $6,000 each, averaging $3,600 per entrance.

References

Manual of Standards of Erosion and Sediment Control Measures, Association of Bay Area Governments, May 1995.

National Management Measures to Control Nonpoint Source Pollution from Urban Areas, USEPA Agency, 2002.

Proposed Guidance Specifying Management Measures for Sources of Nonpoint Pollution in Coastal Waters, Work Group Working Paper, USEPA, April 1992.

Stormwater Quality Handbooks Construction Site Best Management Practices (BMPs) Manual, State of California Department of Transportation (Caltrans), November 2000.

Stormwater Management of the Puget Sound Basin, Technical Manual, Publication #91-75, Washington State Department of Ecology, February 1992.

Virginia Erosion and Sedimentation Control Handbook, Virginia Department of Conservation and Recreation, Division of Soil and Water Conservation, 1991.

Guidance Specifying Management Measures for Nonpoint Pollution in Coastal Waters, EPA 840-B-9-002, USEPA, Office of Water, Washington, DC, 1993.

Water Quality Management Plan for the Lake Tahoe Region, Volume II, Handbook of Management Practices, Tahoe Regional Planning Agency, November 1988.

Stabilized Construction Entrance / Exit TC-1

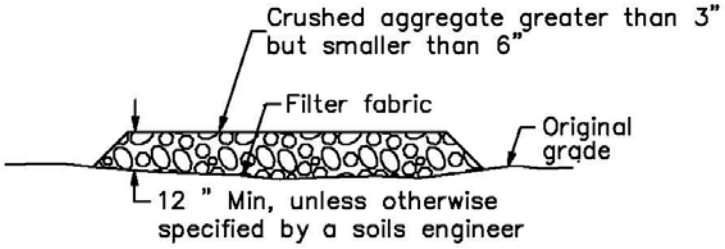

SECTION B–B
NTS

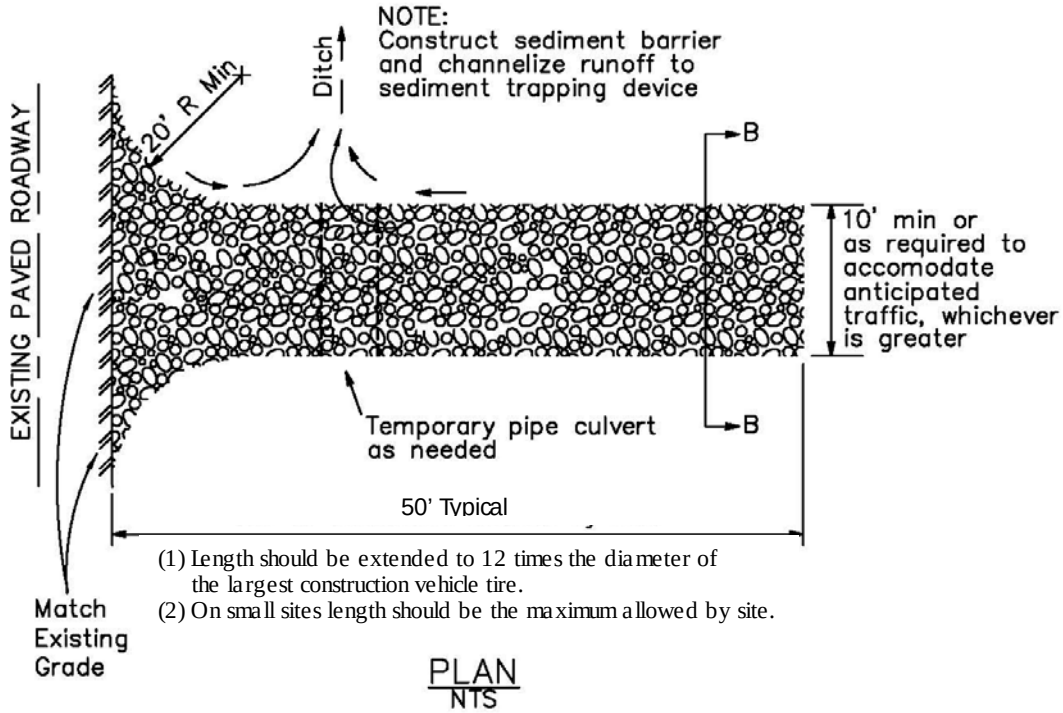

(1) Length should be extended to 12 times the diameter of the largest construction vehicle tire.
(2) On small sites length should be the maximum allowed by site.

PLAN
NTS

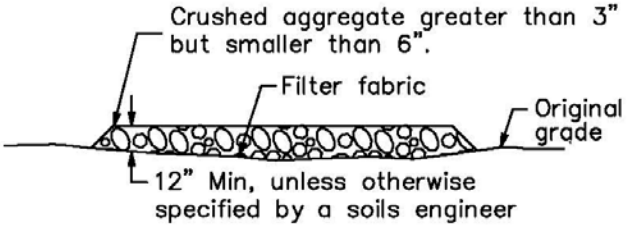

SECTION B–B
NTS

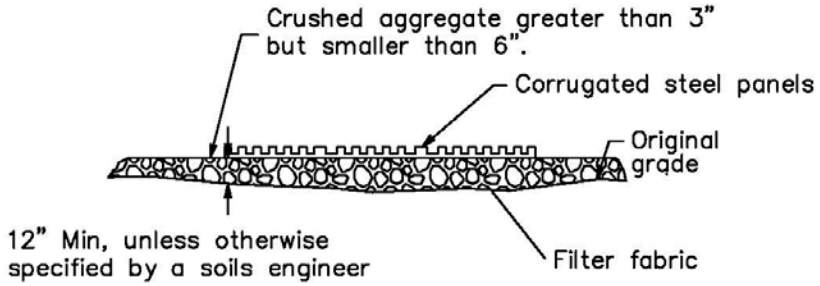

SECTION A–A
NOT TO SCALE

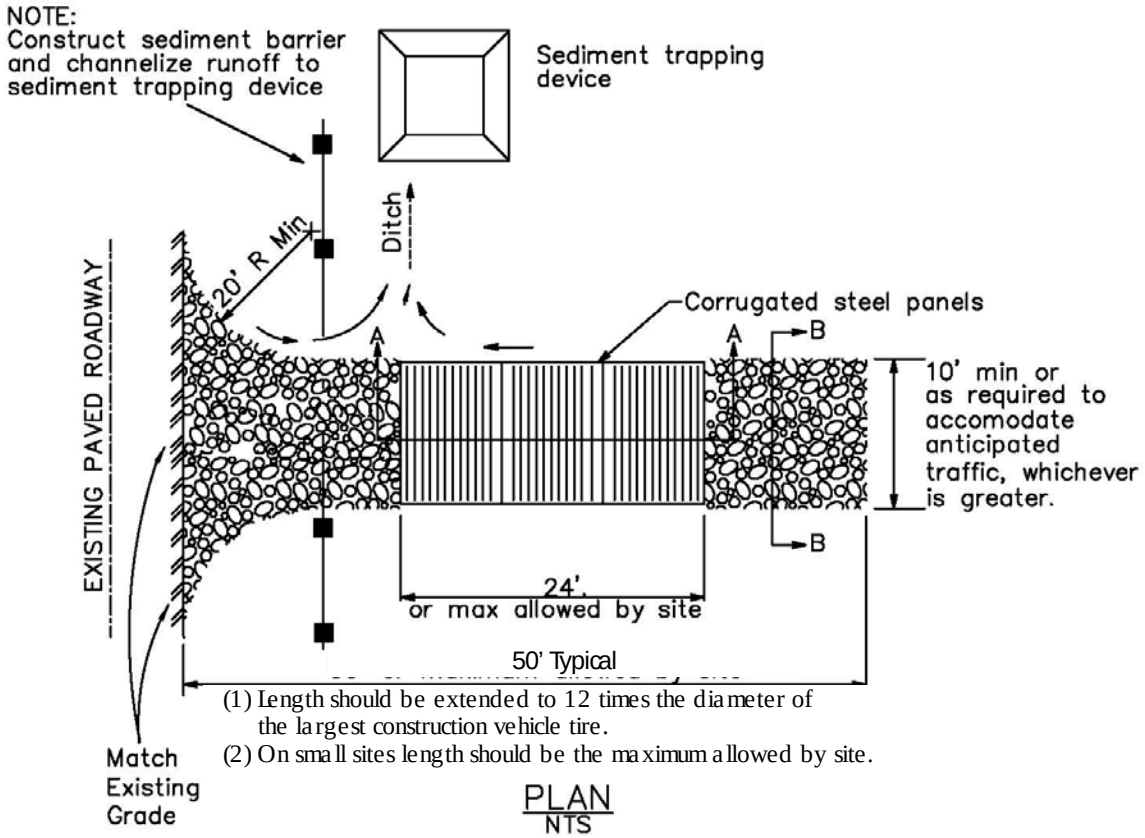

(1) Length should be extended to 12 times the diameter of the largest construction vehicle tire.
(2) On small sites length should be the maximum allowed by site.

PLAN
NTS

Stabilized Construction Roadway TC-2

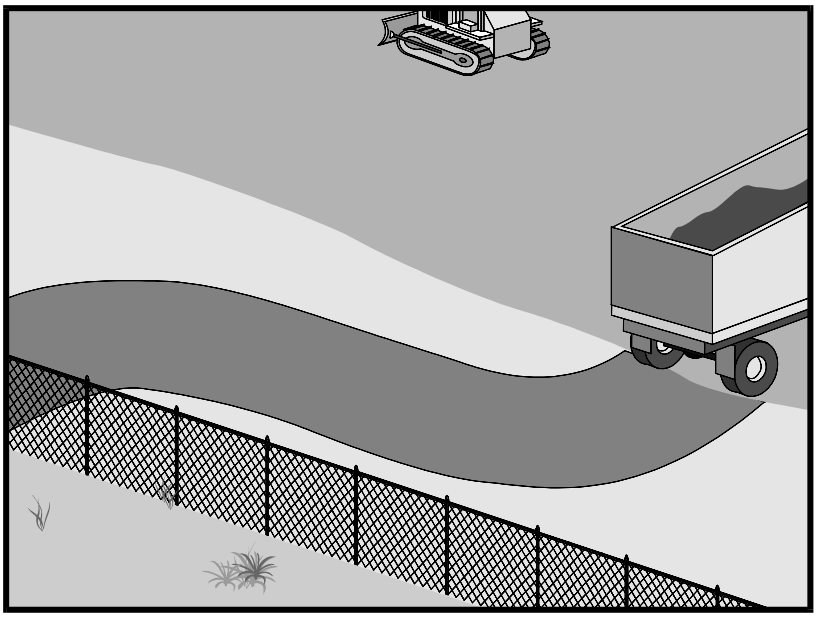

Description and Purpose

Access roads, subdivision roads, parking areas, and other onsite vehicle transportation routes should be stabilized immediately after grading, and frequently maintained to prevent erosion and control dust.

Suitable Applications

This BMP should be applied for the following conditions:

- Temporary Construction Traffic:
  - Phased construction projects and offsite road access
  - Construction during wet weather
- Construction roadways and detour roads:
  - Where mud tracking is a problem during wet weather
  - Where dust is a problem during dry weather
  - Adjacent to water bodies
  - Where poor soils are encountered

Limitations

- The roadway must be removed or paved when construction is complete.

Categories

EC	Erosion Control	☒
SE	Sediment Control	☒
TC	Tracking Control	☑
WE	Wind Erosion Control	
NS	Non-Stormwater Management Control	
WM	Waste Management and Materials Pollution Control	

Legend:

☑ **Primary Objective**

☒ **Secondary Objective**

Targeted Constituents

Sediment	☑
Nutrients	
Trash	
Metals	
Bacteria	
Oil and Grease	
Organics	

Potential Alternatives

None

If User/Subscriber modifies this fact sheet in any way, the CASQA name/logo and footer below must be removed from each page and not appear on the modified version.

- Certain chemical stabilization methods may cause stormwater or soil pollution and should not be used. See WE-1, Wind Erosion Control.
- Management of construction traffic is subject to air quality control measures. Contact the local air quality management agency.
- Materials will likely need to be removed prior to final project grading and stabilization.
- Use of this BMP may not be applicable to very short duration projects.

Implementation

General

Areas that are graded for construction vehicle transport and parking purposes are especially susceptible to erosion and dust. The exposed soil surface is continually disturbed, leaving no opportunity for vegetative stabilization. Such areas also tend to collect and transport runoff waters along their surfaces. During wet weather, they often become muddy quagmires that generate significant quantities of sediment that may pollute nearby streams or be transported offsite on the wheels of construction vehicles. Dirt roads can become so unstable during wet weather that they are virtually unusable.

Efficient construction road stabilization not only reduces onsite erosion but also can significantly speed onsite work, avoid instances of immobilized machinery and delivery vehicles, and generally improve site efficiency and working conditions during adverse weather

Installation/Application Criteria

Permanent roads and parking areas should be paved as soon as possible after grading. As an alternative where construction will be phased, the early application of gravel or chemical stabilization may solve potential erosion and stability problems. Temporary gravel roadway should be considered during the rainy season and on slopes greater than 5%.

Temporary roads should follow the contour of the natural terrain to the maximum extent possible. Slope should not exceed 15%. Roadways should be carefully graded to drain transversely. Provide drainage swales on each side of the roadway in the case of a crowned section or one side in the case of a super elevated section. Simple gravel berms without a trench can also be used.

Installed inlets should be protected to prevent sediment laden water from entering the storm sewer system (SE-10, Storm Drain Inlet Protection). In addition, the following criteria should be considered.

- Road should follow topographic contours to reduce erosion of the roadway.
- The roadway slope should not exceed 15%.
- Chemical stabilizers or water are usually required on gravel or dirt roads to prevent dust (WE-1, Wind Erosion Control).
- Properly grade roadway to prevent runoff from leaving the construction site.
- Design stabilized access to support heaviest vehicles and equipment that will use it.

- Stabilize roadway using aggregate, asphalt concrete, or concrete based on longevity, required performance, and site conditions. The use of cold mix asphalt or asphalt concrete (AC) grindings for stabilized construction roadway is not allowed.
- Coordinate materials with those used for stabilized construction entrance/exit points.
- If aggregate is selected, place crushed aggregate over geotextile fabric to at least 12 in. depth. A crushed aggregate greater than 3 in. but smaller than 6 in. should be used.

Inspection and Maintenance

- Inspect and verify that activity–based BMPs are in place prior to the commencement of associated activities. While activities associated with the BMP are under way, inspect BMPs in accordance with General Permit requirements for the associated project type and risk level. It is recommended that at a minimum, BMPs be inspected weekly, prior to forecasted rain events, daily during extended rain events, and after the conclusion of rain events.
- Keep all temporary roadway ditches clear.
- When no longer required, remove stabilized construction roadway and re-grade and repair slopes.
- Periodically apply additional aggregate on gravel roads.
- Active dirt construction roads are commonly watered three or more times per day during the dry season.

Costs

Gravel construction roads are moderately expensive, but cost is often balanced by reductions in construction delay. No additional costs for dust control on construction roads should be required above that needed to meet local air quality requirements.

References

Blueprint for a Clean Bay: Best Management Practices to Prevent Stormwater Pollution from Construction Related Activities; Santa Clara Valley Nonpoint Source Pollution Control Program, 1995.

Coastal Nonpoint Pollution Control Program; Program Development and Approval Guidance, Working Group, Working Paper; USEPA, April 1992.

Manual of Standards of Erosion and Sediment Control Measures, Association of Bay Area Governments, May 1995.

Stormwater Quality Handbooks Construction Site Best Management Practices (BMPs) Manual, State of California Department of Transportation (Caltrans), November 2000.

Stormwater Management for Construction Activities, Developing Pollution Prevention Plans and Best Management Practices, EPA 832-R-92005; USEPA, April 1992.

Stormwater Management of the Puget Sound Basin, Technical Manual, Publication #91-75, Washington State Department of Ecology, February 1992.

Virginia Erosion and Sedimentation Control Handbook, Virginia Department of Conservation and Recreation, Division of Soil and Water Conservation, 1991.

Water Quality Management Plan for the Lake Tahoe Region, Volume II, Handbook of Management Practices, Tahoe Regional Planning Agency, November 1988.

Entrance/Outlet Tire Wash TC-3

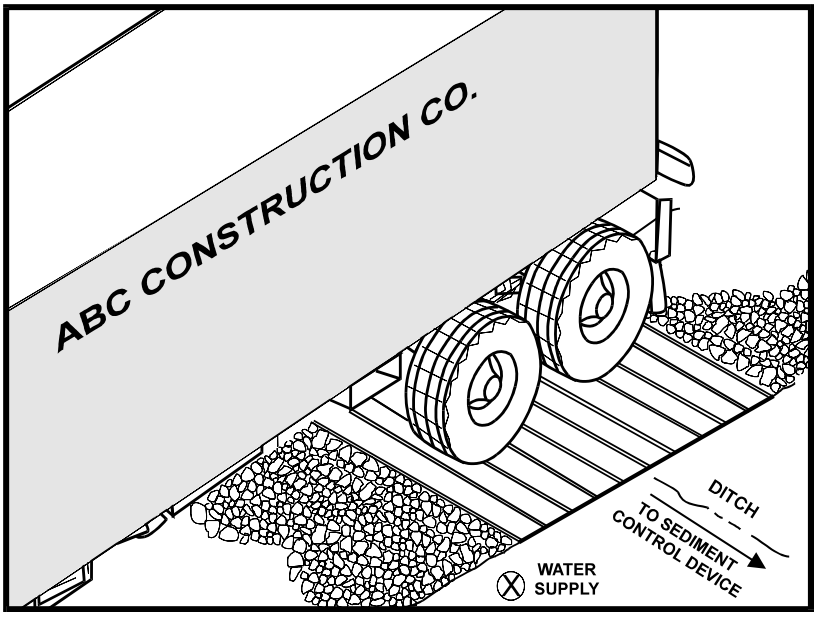

Description and Purpose

A tire wash is an area located at stabilized construction access points to remove sediment from tires and under carriages and to prevent sediment from being transported onto public roadways.

Suitable Applications

Tire washes may be used on construction sites where dirt and mud tracking onto public roads by construction vehicles may occur.

Limitations

- The tire wash requires a supply of wash water.
- A turnout or doublewide exit is required to avoid having entering vehicles drive through the wash area.
- Do not use where wet tire trucks leaving the site leave the road dangerously slick.

Implementation

- Incorporate with a stabilized construction entrance/exit. See TC-1, Stabilized Construction Entrance/Exit.
- Construct on level ground when possible, on a pad of coarse aggregate greater than 3 in. but smaller than 6 in. A geotextile fabric should be placed below the aggregate.
- Wash rack should be designed and constructed/manufactured for anticipated traffic loads.

Categories

EC	Erosion Control	
SE	Sediment Control	☒
TC	Tracking Control	☑
WE	Wind Erosion Control	
NS	Non-Stormwater Management Control	
WM	Waste Management and Materials Pollution Control	

Legend:

☑ **Primary Objective**

☒ **Secondary Objective**

Targeted Constituents

Sediment	☑
Nutrients	
Trash	
Metals	
Bacteria	
Oil and Grease	
Organics	

Potential Alternatives

TC-1 Stabilized Construction Entrance/Exit

If User/Subscriber modifies this fact sheet in any way, the CASQA name/logo and footer below must be removed from each page and not appear on the modified version.

- Provide a drainage ditch that will convey the runoff from the wash area to a sediment trapping device. The drainage ditch should be of sufficient grade, width, and depth to carry the wash runoff.
- Use hoses with automatic shutoff nozzles to prevent hoses from being left on.
- Require that all employees, subcontractors, and others that leave the site with mud caked tires and undercarriages to use the wash facility.
- Implement SC-7, Street Sweeping and Vacuuming, as needed.

Costs

Costs are low for installation of wash rack.

Inspection and Maintenance

- Inspect and verify that activity–based BMPs are in place prior to the commencement of associated activities. While activities associated with the BMP are under way, inspect BMPs in accordance with General Permit requirements for the associated project type and risk level. It is recommended that at a minimum, BMPs be inspected weekly, prior to forecasted rain events, daily during extended rain events, and after the conclusion of rain events.
- Inspect BMPs subject to non-stormwater discharge daily while non-stormwater discharges occur.
- Remove accumulated sediment in wash rack and/or sediment trap to maintain system performance.
- Inspect routinely for damage and repair as needed.

References

Blueprint for a Clean Bay: Best Management Practices to Prevent Stormwater Pollution from Construction Related Activities; Santa Clara Valley Nonpoint Source Pollution Control Program, 1995.

Coastal Nonpoint Pollution Control Program; Program Development and Approval Guidance, Working Group, Working Paper; USEPA, April 1992.

Manual of Standards of Erosion and Sediment Control Measures, Association of Bay Area Governments, May 1995.

Stormwater Quality Handbooks Construction Site Best Management Practices (BMPs) Manual, State of California Department of Transportation (Caltrans), November 2000.

Stormwater Management for Construction Activities, Developing Pollution Prevention Plans and Best Management Practices, EPA 832-R-92005; USEPA, April 1992.

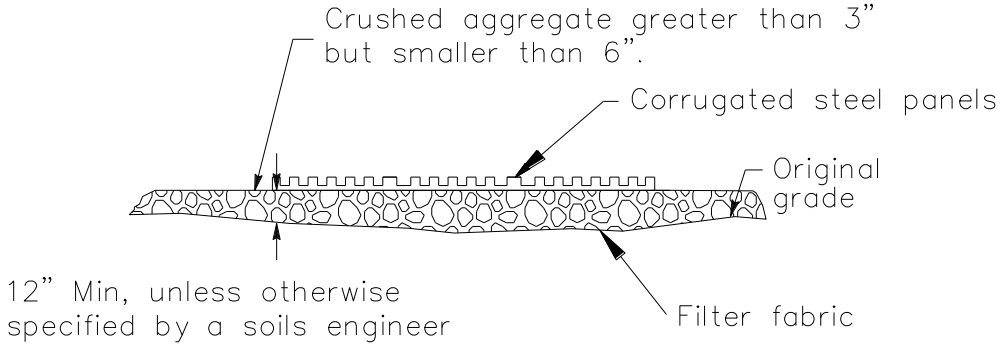

SECTION A–A
NOT TO SCALE

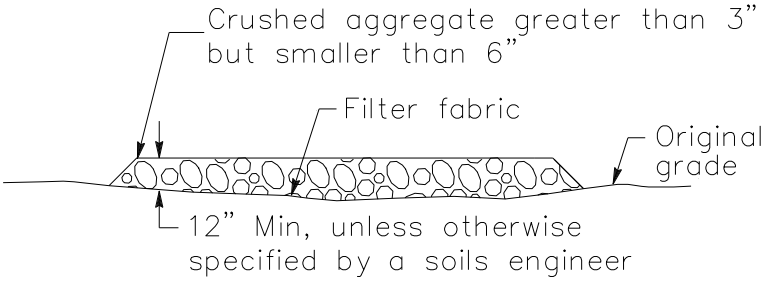

SECTION B–B
NTS

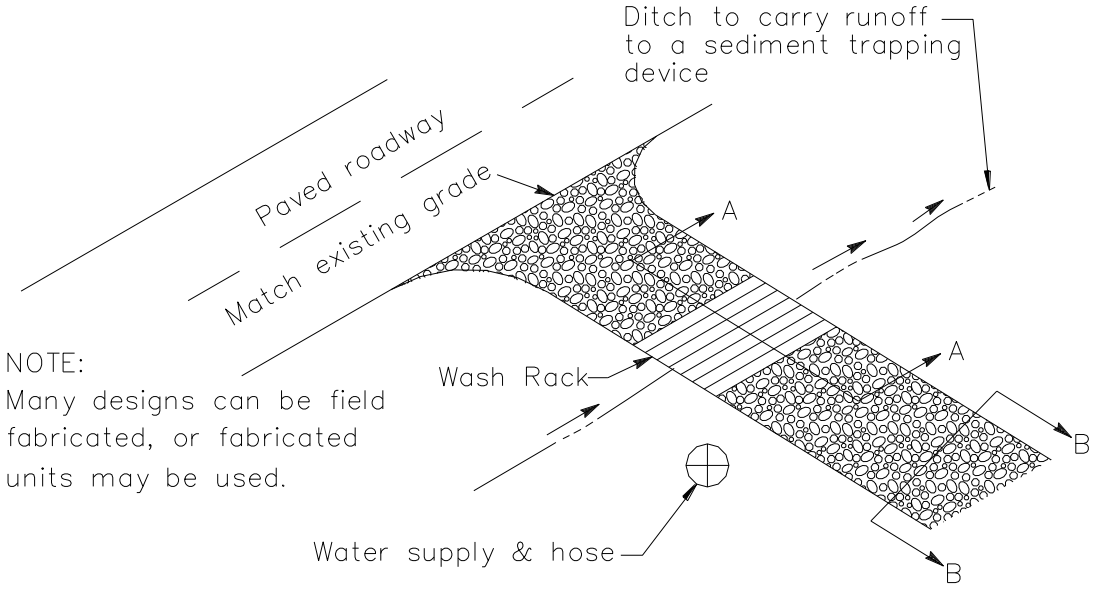

TYPICAL TIRE WASH
NOT TO SCALE

Wind Erosion Control WE-1

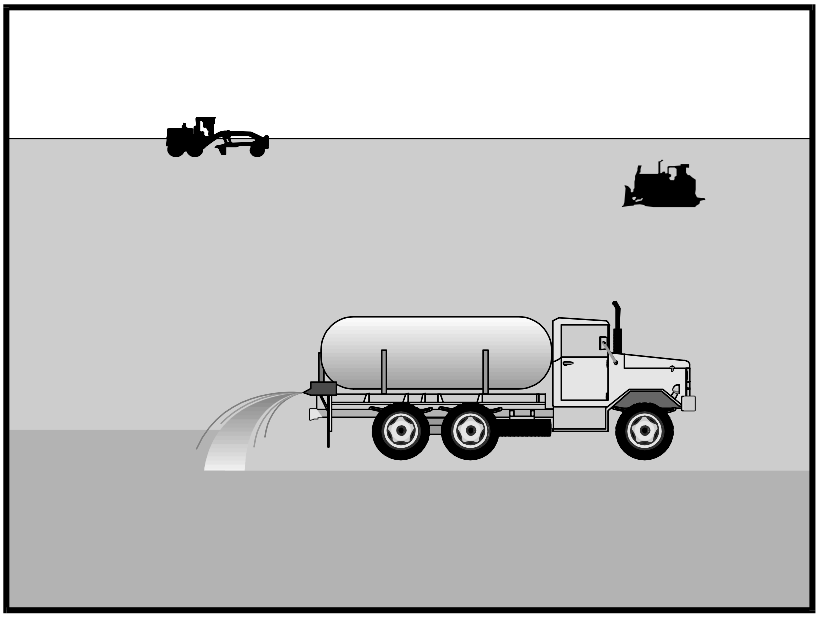

Categories

EC	Erosion Control	
SE	Sediment Control	☒
TC	Tracking Control	
WE	Wind Erosion Control	☑
NS	Non-Stormwater Management Control	
WM	Waste Management and Materials Pollution Control	

Legend:

☑ **Primary Category**

☒ **Secondary Category**

Targeted Constituents

Sediment	☑
Nutrients	
Trash	
Metals	
Bacteria	
Oil and Grease	
Organics	

Potential Alternatives

EC-5 Soil Binders

If User/Subscriber modifies this fact sheet in any way, the CASQA name/logo and footer below must be removed from each page and not appear on the modified version.

Description and Purpose

Wind erosion or dust control consists of applying water or other chemical dust suppressants as necessary to prevent or alleviate dust nuisance generated by construction activities. Covering small stockpiles or areas is an alternative to applying water or other dust palliatives.

California's Mediterranean climate, with a short "wet" season and a typically long, hot "dry" season, allows the soils to thoroughly dry out. During the dry season, construction activities are at their peak, and disturbed and exposed areas are increasingly subject to wind erosion, sediment tracking and dust generated by construction equipment. Site conditions and climate can make dust control more of an erosion problem than water based erosion. Additionally, many local agencies, including Air Quality Management Districts, require dust control and/or dust control permits in order to comply with local nuisance laws, opacity laws (visibility impairment) and the requirements of the Clean Air Act. Wind erosion control is required to be implemented at all construction sites greater than 1 acre by the General Permit.

Suitable Applications

Most BMPs that provide protection against water-based erosion will also protect against wind-based erosion and dust control requirements required by other agencies will generally meet wind erosion control requirements for water quality protection. Wind erosion control BMPs are suitable during the following construction activities:

CASQA
CALIFORNIA STORMWATER QUALITY ASSOCIATION

- Construction vehicle traffic on unpaved roads
- Drilling and blasting activities
- Soils and debris storage piles
- Batch drop from front-end loaders
- Areas with unstabilized soil
- Final grading/site stabilization

Limitations

- Watering prevents dust only for a short period (generally less than a few hours) and should be applied daily (or more often) to be effective.
- Over watering may cause erosion and track-out.
- Oil or oil-treated subgrade should not be used for dust control because the oil may migrate into drainageways and/or seep into the soil.
- Chemical dust suppression agents may have potential environmental impacts. Selected chemical dust control agents should be environmentally benign.
- Effectiveness of controls depends on soil, temperature, humidity, wind velocity and traffic.
- Chemical dust suppression agents should not be used within 100 feet of wetlands or water bodies.
- Chemically treated subgrades may make the soil water repellant, interfering with long-term infiltration and the vegetation/re-vegetation of the site. Some chemical dust suppressants may be subject to freezing and may contain solvents and should be handled properly.
- In compacted areas, watering and other liquid dust control measures may wash sediment or other constituents into the drainage system.
- If the soil surface has minimal natural moisture, the affected area may need to be pre-wetted so that chemical dust control agents can uniformly penetrate the soil surface.

Implementation

Dust Control Practices

Dust control BMPs generally stabilize exposed surfaces and minimize activities that suspend or track dust particles. The following table presents dust control practices that can be applied to varying site conditions that could potentially cause dust. For heavily traveled and disturbed areas, wet suppression (watering), chemical dust suppression, gravel asphalt surfacing, temporary gravel construction entrances, equipment wash-out areas, and haul truck covers can be employed as dust control applications. Permanent or temporary vegetation and mulching can be employed for areas of occasional or no construction traffic. Preventive measures include minimizing surface areas to be disturbed, limiting onsite vehicle traffic to 15 mph or less, and controlling the number and activity of vehicles on a site at any given time.

Chemical dust suppressants include: mulch and fiber based dust palliatives (e.g. paper mulch with gypsum binder), salts and brines (e.g. calcium chloride, magnesium chloride), non-petroleum based organics (e.g. vegetable oil, lignosulfonate), petroleum based organics (e.g. asphalt emulsion, dust oils, petroleum resins), synthetic polymers (e.g. polyvinyl acetate, vinyls, acrylic), clay additives (e.g. bentonite, montimorillonite) and electrochemical products (e.g. enzymes, ionic products).

Site Condition	Dust Control Practices							
	Permanent Vegetation	Mulching	Wet Suppression (Watering)	Chemical Dust Suppression	Gravel or Asphalt	Temporary Gravel Construction Entrances/Equipment Wash Down	Synthetic Covers	Minimize Extent of Disturbed Area
Disturbed Areas not Subject to Traffic	x	x	x	x	x			x
Disturbed Areas Subject to Traffic			x	x	x	x		x
Material Stockpiles		x	x	x			x	x
Demolition			x			x	x	
Clearing/ Excavation			x	x				x
Truck Traffic on Unpaved Roads			x	x	x	x	x	
Tracking					x	x		

Additional preventive measures include:

- Schedule construction activities to minimize exposed area (see EC-1, Scheduling).
- Quickly treat exposed soils using water, mulching, chemical dust suppressants, or stone/gravel layering.
- Identify and stabilize key access points prior to commencement of construction.
- Minimize the impact of dust by anticipating the direction of prevailing winds.
- Restrict construction traffic to stabilized roadways within the project site, as practicable.
- Water should be applied by means of pressure-type distributors or pipelines equipped with a spray system or hoses and nozzles that will ensure even distribution.
- All distribution equipment should be equipped with a positive means of shutoff.
- Unless water is applied by means of pipelines, at least one mobile unit should be available at all times to apply water or dust palliative to the project.
- If reclaimed waste water is used, the sources and discharge must meet California Department of Health Services water reclamation criteria and the Regional Water Quality

Control Board (RWQCB) requirements. Non-potable water should not be conveyed in tanks or drain pipes that will be used to convey potable water and there should be no connection between potable and non-potable supplies. Non-potable tanks, pipes, and other conveyances should be marked, "NON-POTABLE WATER - DO NOT DRINK."

- Pave or chemically stabilize access points where unpaved traffic surfaces adjoin paved roads.
- Provide covers for haul trucks transporting materials that contribute to dust.
- Provide for rapid clean up of sediments deposited on paved roads. Furnish stabilized construction road entrances and wheel wash areas.
- Stabilize inactive areas of construction sites using temporary vegetation or chemical stabilization methods.

For chemical stabilization, there are many products available for chemically stabilizing gravel roadways and stockpiles. If chemical stabilization is used, the chemicals should not create any adverse effects on stormwater, plant life, or groundwater and should meet all applicable regulatory requirements.

Costs

Installation costs for water and chemical dust suppression vary based on the method used and the length of effectiveness. Annual costs may be high since some of these measures are effective for only a few hours to a few days.

Inspection and Maintenance

- Inspect and verify that activity-based BMPs are in place prior to the commencement of associated activities.
- BMPs must be inspected in accordance with General Permit requirements for the associated project type and risk level. It is recommended that at a minimum, BMPs be inspected weekly, prior to forecasted rain events, daily during extended rain events, and after the conclusion of rain events.
- Check areas protected to ensure coverage.
- Most water-based dust control measures require frequent application, often daily or even multiple times per day. Obtain vendor or independent information on longevity of chemical dust suppressants.

References

Best Management Practices and Erosion Control Manual for Construction Sites, Flood Control District of Maricopa County, Arizona, September 1992.

California Air Pollution Control Laws, California Air Resources Board, updated annually.

Construction Manual, Chapter 4, Section 10, "Dust Control"; Section 17, "Watering"; and Section 18, "Dust Palliative", California Department of Transportation (Caltrans), July 2001.

Prospects for Attaining the State Ambient Air Quality Standards for Suspended Particulate Matter (PM10), Visibility Reducing Particles, Sulfates, Lead, and Hydrogen Sulfide, California Air Resources Board, April 1991.

Stormwater Quality Handbooks Construction Site Best Management Practices (BMPs) Manual, State of California Department of Transportation (Caltrans), March 2003.

Material Delivery and Storage WM-1

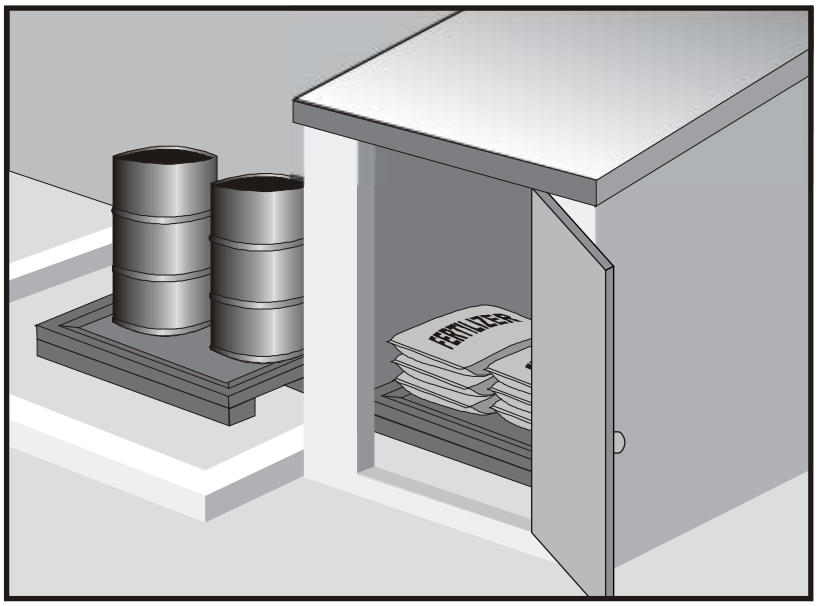

Categories

EC	Erosion Control	
SE	Sediment Control	
TC	Tracking Control	
WE	Wind Erosion Control	
NS	Non-Stormwater Management Control	
WM	Waste Management and Materials Pollution Control	☑

Legend:

☑ **Primary Category**

☒ **Secondary Category**

Description and Purpose

Prevent, reduce, or eliminate the discharge of pollutants from material delivery and storage to the stormwater system or watercourses by minimizing the storage of hazardous materials onsite, storing materials in watertight containers and/or a completely enclosed designated area, installing secondary containment, conducting regular inspections, and training employees and subcontractors.

This best management practice covers only material delivery and storage. For other information on materials, see WM-2, Material Use, or WM-4, Spill Prevention and Control. For information on wastes, see the waste management BMPs in this section.

Suitable Applications

These procedures are suitable for use at all construction sites with delivery and storage of the following materials:

- Soil stabilizers and binders
- Pesticides and herbicides
- Fertilizers
- Detergents
- Plaster
- Petroleum products such as fuel, oil, and grease

Targeted Constituents

Sediment	☑
Nutrients	☑
Trash	☑
Metals	☑
Bacteria	
Oil and Grease	☑
Organics	☑

Potential Alternatives

None

If User/Subscriber modifies this fact sheet in any way, the CASQA name/logo and footer below must be removed from each page and not appear on the modified version.

- Asphalt and concrete components
- Hazardous chemicals such as acids, lime, glues, adhesives, paints, solvents, and curing compounds
- Concrete compounds
- Other materials that may be detrimental if released to the environment

Limitations

- Space limitation may preclude indoor storage.
- Storage sheds often must meet building and fire code requirements.

Implementation

The following steps should be taken to minimize risk:

- Chemicals must be stored in water tight containers with appropriate secondary containment or in a storage shed.
- When a material storage area is located on bare soil, the area should be lined and bermed.
- Use containment pallets or other practical and available solutions, such as storing materials within newly constructed buildings or garages, to meet material storage requirements.
- Stack erodible landscape material on pallets and cover when not in use.
- Contain all fertilizers and other landscape materials when not in use.
- Temporary storage areas should be located away from vehicular traffic.
- Material Safety Data Sheets (MSDS) should be available on-site for all materials stored that have the potential to effect water quality.
- Construction site areas should be designated for material delivery and storage.
- Material delivery and storage areas should be located away from waterways, if possible.
    - Avoid transport near drainage paths or waterways.
    - Surround with earth berms or other appropriate containment BMP. See EC-9, Earth Dikes and Drainage Swales.
    - Place in an area that will be paved.
- Storage of reactive, ignitable, or flammable liquids must comply with the fire codes of your area. Contact the local Fire Marshal to review site materials, quantities, and proposed storage area to determine specific requirements. See the Flammable and Combustible Liquid Code, NFPA30.
- An up to date inventory of materials delivered and stored onsite should be kept.

- Hazardous materials storage onsite should be minimized.
- Hazardous materials should be handled as infrequently as possible.
- Keep ample spill cleanup supplies appropriate for the materials being stored. Ensure that cleanup supplies are in a conspicuous, labeled area.
- Employees and subcontractors should be trained on the proper material delivery and storage practices.
- Employees trained in emergency spill cleanup procedures must be present when dangerous materials or liquid chemicals are unloaded.
- If significant residual materials remain on the ground after construction is complete, properly remove and dispose of materials and any contaminated soil. See WM-7, Contaminated Soil Management. If the area is to be paved, pave as soon as materials are removed to stabilize the soil.

Material Storage Areas and Practices

- Liquids, petroleum products, and substances listed in 40 CFR Parts 110, 117, or 302 should be stored in approved containers and drums and should not be overfilled. Containers and drums should be placed in temporary containment facilities for storage.
- A temporary containment facility should provide for a spill containment volume able to contain precipitation from a 25 year storm event, plus the greater of 10% of the aggregate volume of all containers or 100% of the capacity of the largest container within its boundary, whichever is greater.
- A temporary containment facility should be impervious to the materials stored therein for a minimum contact time of 72 hours.
- A temporary containment facility should be maintained free of accumulated rainwater and spills. In the event of spills or leaks, accumulated rainwater and spills should be collected and placed into drums. These liquids should be handled as a hazardous waste unless testing determines them to be non-hazardous. All collected liquids or non-hazardous liquids should be sent to an approved disposal site.
- Sufficient separation should be provided between stored containers to allow for spill cleanup and emergency response access.
- Incompatible materials, such as chlorine and ammonia, should not be stored in the same temporary containment facility.
- Materials should be covered prior to, and during rain events.
- Materials should be stored in their original containers and the original product labels should be maintained in place in a legible condition. Damaged or otherwise illegible labels should be replaced immediately.

- Bagged and boxed materials should be stored on pallets and should not be allowed to accumulate on the ground. To provide protection from wind and rain throughout the rainy season, bagged and boxed materials should be covered during non-working days and prior to and during rain events.
- Stockpiles should be protected in accordance with WM-3, Stockpile Management.
- Materials should be stored indoors within existing structures or completely enclosed storage sheds when available.
- Proper storage instructions should be posted at all times in an open and conspicuous location.
- An ample supply of appropriate spill clean up material should be kept near storage areas.
- Also see WM-6, Hazardous Waste Management, for storing of hazardous wastes.

Material Delivery Practices

- Keep an accurate, up-to-date inventory of material delivered and stored onsite.
- Arrange for employees trained in emergency spill cleanup procedures to be present when dangerous materials or liquid chemicals are unloaded.

Spill Cleanup

- Contain and clean up any spill immediately.
- Properly remove and dispose of any hazardous materials or contaminated soil if significant residual materials remain on the ground after construction is complete. See WM-7, Contaminated Soil Management.
- See WM-4, Spill Prevention and Control, for spills of chemicals and/or hazardous materials.
- If spills or leaks of materials occur that are not contained and could discharge to surface waters, non-visible sampling of site discharge may be required. Refer to the General Permit or to your project specific Construction Site Monitoring Plan to determine if and where sampling is required.

Cost

- The largest cost of implementation may be in the construction of a materials storage area that is covered and provides secondary containment.

Inspection and Maintenance

- BMPs must be inspected in accordance with General Permit requirements for the associated project type and risk level. It is recommended that at a minimum, BMPs be inspected weekly, prior to forecasted rain events, daily during extended rain events, and after the conclusion of rain events.
- Keep storage areas clean and well organized, including a current list of all materials onsite.
- Inspect labels on containers for legibility and accuracy.

- Repair or replace perimeter controls, containment structures, covers, and liners as needed to maintain proper function.

References

Blueprint for a Clean Bay: Best Management Practices to Prevent Stormwater Pollution from Construction Related Activities; Santa Clara Valley Nonpoint Source Pollution Control Program, 1995.

Coastal Nonpoint Pollution Control Program: Program Development and Approval Guidance, Working Group Working Paper; USEPA, April 1992.

Stormwater Quality Handbooks - Construction Site Best Management Practices (BMPs) Manual, State of California Department of Transportation (Caltrans), March 2003.

Stormwater Management for Construction Activities; Developing Pollution Prevention Plans and Best Management Practice, EPA 832-R-92005; USEPA, April 1992.

Material Use WM-2

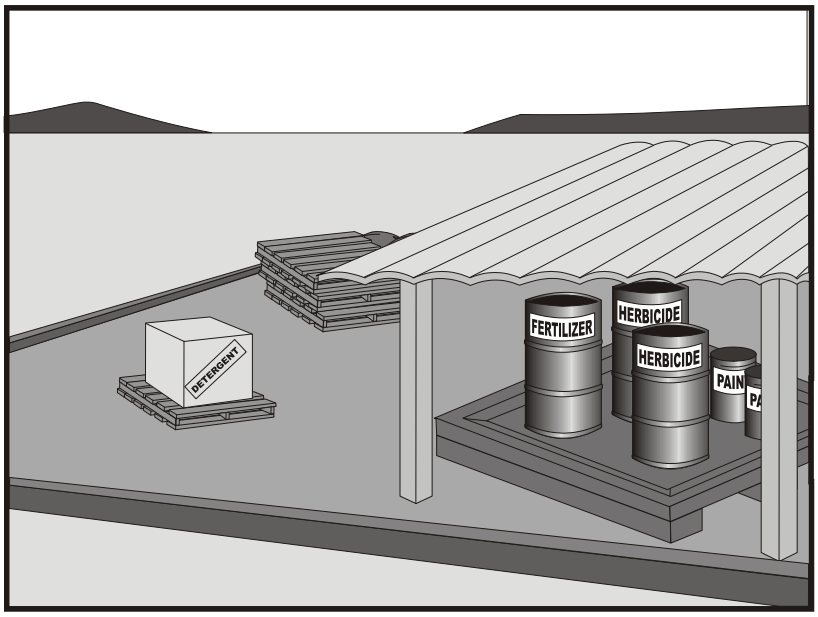

Categories

EC	Erosion Control	
SE	Sediment Control	
TC	Tracking Control	
WE	Wind Erosion Control	
NS	Non-Stormwater Management Control	
WM	Waste Management and Materials Pollution Control	☑

Legend:

☑ **Primary Category**

☒ **Secondary Category**

Description and Purpose

Prevent or reduce the discharge of pollutants to the storm drain system or watercourses from material use by using alternative products, minimizing hazardous material use onsite, and training employees and subcontractors.

Suitable Applications

This BMP is suitable for use at all construction projects. These procedures apply when the following materials are used or prepared onsite:

- Pesticides and herbicides
- Fertilizers
- Detergents
- Petroleum products such as fuel, oil, and grease
- Asphalt and other concrete components
- Other hazardous chemicals such as acids, lime, glues, adhesives, paints, solvents, and curing compounds
- Other materials that may be detrimental if released to the environment

Targeted Constituents

Sediment	☑
Nutrients	☑
Trash	☑
Metals	☑
Bacteria	
Oil and Grease	☑
Organics	☑

Potential Alternatives

None

If User/Subscriber modifies this fact sheet in any way, the CASQA name/logo and footer below must be removed from each page and not appear on the modified version.

Limitations

Safer alternative building and construction products may not be available or suitable in every instance.

Implementation

The following steps should be taken to minimize risk:

- Minimize use of hazardous materials onsite.
- Follow manufacturer instructions regarding uses, protective equipment, ventilation, flammability, and mixing of chemicals.
- Train personnel who use pesticides. The California Department of Pesticide Regulation and county agricultural commissioners license pesticide dealers, certify pesticide applicators, and conduct onsite inspections.
- The preferred method of termiticide application is soil injection near the existing or proposed structure foundation/slab; however, if not feasible, soil drench application of termiticides should follow EPA label guidelines and the following recommendations (most of which are applicable to most pesticide applications):
  - Do not treat soil that is water-saturated or frozen.
  - Application shall not commence within 24-hours of a predicted precipitation event with a 40% or greater probability. Weather tracking must be performed on a daily basis prior to termiticide application and during the period of termiticide application.
  - Do not allow treatment chemicals to runoff from the target area. Apply proper quantity to prevent excess runoff. Provide containment for and divert stormwater from application areas using berms or diversion ditches during application.
  - Dry season: Do not apply within 10 feet of storm drains. Do not apply within 25 feet of aquatic habitats (such as, but not limited to, lakes; reservoirs; rivers; permanent streams; marshes or ponds; estuaries; and commercial fish farm ponds).
  - Wet season: Do not apply within 50 feet of storm drains or aquatic habitats (such as, but not limited to, lakes; reservoirs; rivers; permanent streams; marshes or ponds; estuaries; and commercial fish farm ponds) unless a vegetative buffer is present (if so, refer to dry season requirements).
  - Do not make on-grade applications when sustained wind speeds are above 10 mph (at application site) at nozzle end height.
  - Cover treatment site prior to a rain event in order to prevent run-off of the pesticide into non-target areas. The treated area should be limited to a size that can be backfilled and/or covered by the end of the work shift. Backfilling or covering of the treated area shall be done by the end of the same work shift in which the application is made.
  - The applicator must either cover the soil him/herself or provide written notification of the above requirement to the contractor on site and to the person commissioning the

application (if different than the contractor). If notice is provided to the contractor or the person commissioning the application, then they are responsible under the Federal Insecticide Fungicide, and Rodenticide Act (FIFRA) to ensure that: 1) if the concrete slab cannot be poured over the treated soil within 24 hours of application, the treated soil is covered with a waterproof covering (such as polyethylene sheeting), and 2) the treated soil is covered if precipitation is predicted to occur before the concrete slab is scheduled to be poured.

- Do not over-apply fertilizers, herbicides, and pesticides. Prepare only the amount needed. Follow the recommended usage instructions. Over-application is expensive and environmentally harmful. Unless on steep slopes, till fertilizers into the soil rather than hydraulic application. Apply surface dressings in several smaller applications, as opposed to one large application, to allow time for infiltration and to avoid excess material being carried offsite by runoff. Do not apply these chemicals before predicted rainfall.
- Train employees and subcontractors in proper material use.
- Supply Material Safety Data Sheets (MSDS) for all materials.
- Dispose of latex paint and paint cans, used brushes, rags, absorbent materials, and drop cloths, when thoroughly dry and are no longer hazardous, with other construction debris.
- Do not remove the original product label; it contains important safety and disposal information. Use the entire product before disposing of the container.
- Mix paint indoors or in a containment area. Never clean paintbrushes or rinse paint containers into a street, gutter, storm drain, or watercourse. Dispose of any paint thinners, residue, and sludge(s) that cannot be recycled, as hazardous waste.
- For water-based paint, clean brushes to the extent practicable, and rinse to a drain leading to a sanitary sewer where permitted, or contain for proper disposal off site. For oil-based paints, clean brushes to the extent practicable, and filter and reuse thinners and solvents.
- Use recycled and less hazardous products when practical. Recycle residual paints, solvents, non-treated lumber, and other materials.
- Use materials only where and when needed to complete the construction activity. Use safer alternative materials as much as possible. Reduce or eliminate use of hazardous materials onsite when practical.
- Document the location, time, chemicals applied, and applicator's name and qualifications.
- Keep an ample supply of spill clean up material near use areas. Train employees in spill clean up procedures.
- Avoid exposing applied materials to rainfall and runoff unless sufficient time has been allowed for them to dry.
- Discontinue use of erodible landscape material within 2 days prior to a forecasted rain event and materials should be covered and/or bermed.

- Provide containment for material use areas such as masons' areas or paint mixing/preparation areas to prevent materials/pollutants from entering stormwater.

Costs

All of the above are low cost measures.

Inspection and Maintenance

- Inspect and verify that activity-based BMPs are in place prior to the commencement of associated activities.
- BMPs must be inspected in accordance with General Permit requirements for the associated project type and risk level. It is recommended that at a minimum, BMPs be inspected weekly, prior to forecasted rain events, daily during extended rain events, and after the conclusion of rain events.
- Ensure employees and subcontractors throughout the job are using appropriate practices.

References

Blueprint for a Clean Bay: Best Management Practices to Prevent Stormwater Pollution from Construction Related Activities; Santa Clara Valley Nonpoint Source Pollution Control Program, 1995.

Coastal Nonpoint Pollution Control Program: Program Development and Approval Guidance, Working Group Working Paper; USEPA, April 1992.

Comments on Risk Assessments Risk Reduction Options for Cypermethrin: Docket No. OPP–2005–0293; California Stormwater Quality Association (CASQA) letter to USEPA, 2006.Environmental Hazard and General Labeling for Pyrethroid Non-Agricultural Outdoor Products, EPA-HQ-OPP-2008-0331-0021; USEPA, 2008.

Stormwater Quality Handbooks - Construction Site Best Management Practices (BMPs) Manual, State of California Department of Transportation (Caltrans), March 2003.

Stormwater Management for Construction Activities; Developing Pollution Prevention Plans and Best Management Practice, EPA 832-R-92005; USEPA, April 1992.

Stockpile Management WM-3

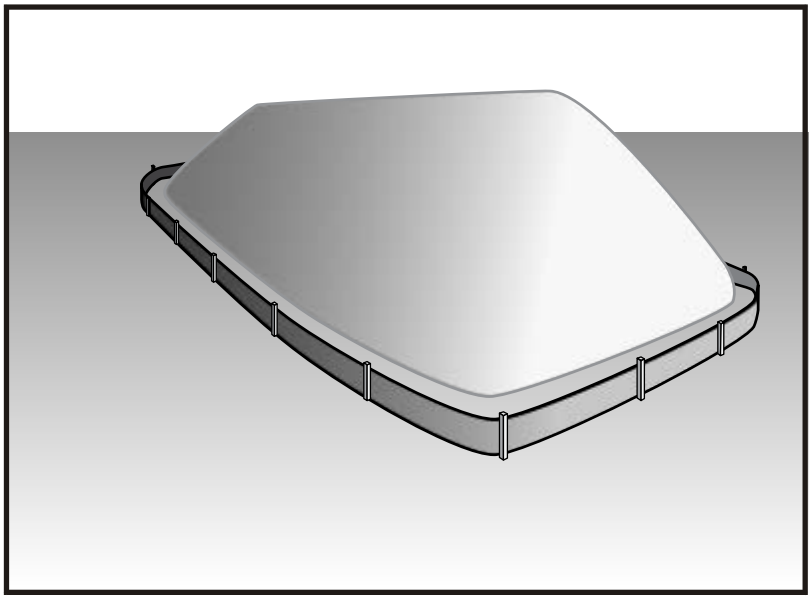

Categories		
EC	Erosion Control	
SE	Sediment Control	☒
TC	Tracking Control	
WE	Wind Erosion Control	
NS	Non-Stormwater Management Control	☒
WM	Waste Management and Materials Pollution Control	☑

Legend:
☑ **Primary Category**
☒ **Secondary Category**

Targeted Constituents	
Sediment	☑
Nutrients	☑
Trash	☑
Metals	☑
Bacteria	
Oil and Grease	☑
Organics	☑

Potential Alternatives

None

Description and Purpose

Stockpile management procedures and practices are designed to reduce or eliminate air and stormwater pollution from stockpiles of soil, soil amendments, sand, paving materials such as portland cement concrete (PCC) rubble, asphalt concrete (AC), asphalt concrete rubble, aggregate base, aggregate sub base or pre-mixed aggregate, asphalt minder (so called "cold mix" asphalt), and pressure treated wood.

Suitable Applications

Implement in all projects that stockpile soil and other loose materials.

Limitations

- Plastic sheeting as a stockpile protection is temporary and hard to manage in windy conditions. Where plastic is used, consider use of plastic tarps with nylon reinforcement which may be more durable than standard sheeting.
- Plastic sheeting can increase runoff volume due to lack of infiltration and potentially cause perimeter control failure.
- Plastic sheeting breaks down faster in sunlight.
- The use of Plastic materials and photodegradable plastics should be avoided.

Implementation

Protection of stockpiles is a year-round requirement. To properly manage stockpiles:

If User/Subscriber modifies this fact sheet in any way, the CASQA name/logo and footer below must be removed from each page and not appear on the modified version.

- On larger sites, a minimum of 50 ft separation from concentrated flows of stormwater, drainage courses, and inlets is recommended.
- After 14 days of inactivity, a stockpile is non-active and requires further protection described below. All stockpiles are required to be protected as non-active stockpiles immediately if they are not scheduled to be used within 14 days.
- Protect all stockpiles from stormwater runon using temporary perimeter sediment barriers such as compost berms (SE-13), temporary silt dikes (SE-12), fiber rolls (SE-5), silt fences (SE-1), sandbags (SE-8), gravel bags (SE-6), or biofilter bags (SE-14). Refer to the individual fact sheet for each of these controls for installation information.
- Implement wind erosion control practices as appropriate on all stockpiled material. For specific information, see WE-1, Wind Erosion Control.
- Manage stockpiles of contaminated soil in accordance with WM-7, Contaminated Soil Management.
- Place bagged materials on pallets and under cover.
- Ensure that stockpile coverings are installed securely to protect from wind and rain.
- Some plastic covers withstand weather and sunlight better than others. Select cover materials or methods based on anticipated duration of use.

Protection of Non-Active Stockpiles

A stockpile is considered non-active if it either is not used for 14 days or if it is scheduled not to be used for 14 days or more. Stockpiles need to be protected immediately if they are not scheduled to be used within 14 days. Non-active stockpiles of the identified materials should be protected as follows:

Soil stockpiles

- Soil stockpiles should be covered or protected with soil stabilization measures and a temporary perimeter sediment barrier at all times.
- Temporary vegetation should be considered for topsoil piles that will be stockpiled for extended periods.

Stockpiles of Portland cement concrete rubble, asphalt concrete, asphalt concrete rubble, aggregate base, or aggregate sub base

- Stockpiles should be covered and protected with a temporary perimeter sediment barrier at all times.

Stockpiles of "cold mix"

- Cold mix stockpiles should be placed on and covered with plastic sheeting or comparable material at all times and surrounded by a berm.

Stockpiles of fly ash, stucco, hydrated lime

- Stockpiles of materials that may raise the pH of runoff (i.e., basic materials) should be covered with plastic and surrounded by a berm.

Stockpiles/Storage of wood (Pressure treated with chromated copper arsenate or ammoniacal copper zinc arsenate

- Treated wood should be covered with plastic sheeting or comparable material at all times and surrounded by a berm.

Protection of Active Stockpiles

A stockpile is active when it is being used or is scheduled to be used within 14 days of the previous use. Active stockpiles of the identified materials should be protected as follows:

- All stockpiles should be covered and protected with a temporary linear sediment barrier prior to the onset of precipitation.
- Stockpiles of "cold mix" and treated wood, and basic materials should be placed on and covered with plastic sheeting or comparable material and surrounded by a berm prior to the onset of precipitation.
- The downstream perimeter of an active stockpile should be protected with a linear sediment barrier or berm and runoff should be diverted around or away from the stockpile on the upstream perimeter.

Costs

For cost information associated with stockpile protection refer to the individual erosion or sediment control BMP fact sheet considered for implementation (For example, refer to SE-1 Silt Fence for installation of silt fence around the perimeter of a stockpile.)

Inspection and Maintenance

- Stockpiles must be inspected in accordance with General Permit requirements for the associated project type and risk level. It is recommended that at a minimum, BMPs be inspected weekly, prior to forecasted rain events, daily during extended rain events, and after the conclusion of rain events.
- It may be necessary to inspect stockpiles covered with plastic sheeting more frequently during certain conditions (for example, high winds or extreme heat).
- Repair and/or replace perimeter controls and covers as needed to keep them functioning properly.
- Sediment shall be removed when it reaches one-third of the barrier height.

References

Stormwater Quality Handbooks - Construction Site Best Management Practices (BMPs) Manual, State of California Department of Transportation (Caltrans), March 2003.

Spill Prevention and Control WM-4

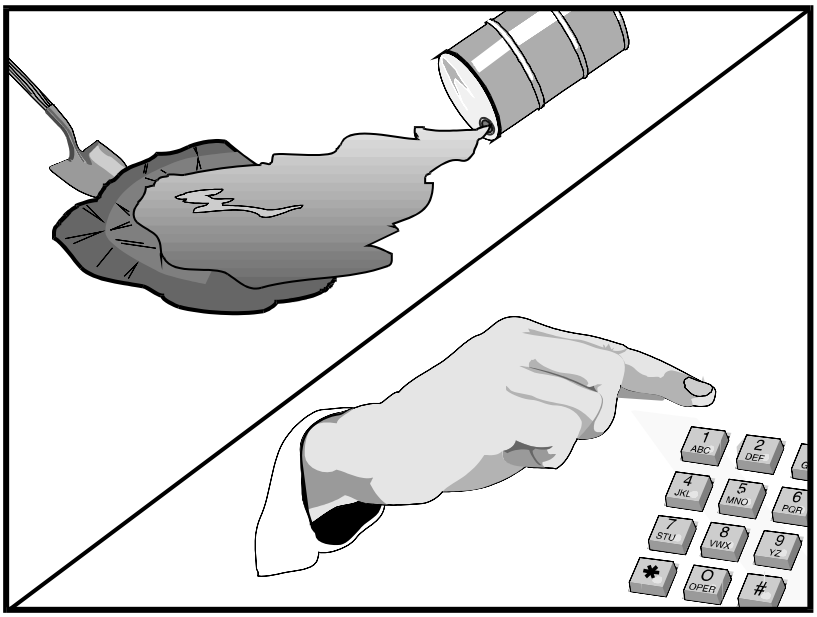

Description and Purpose

Prevent or reduce the discharge of pollutants to drainage systems or watercourses from leaks and spills by reducing the chance for spills, stopping the source of spills, containing and cleaning up spills, properly disposing of spill materials, and training employees.

This best management practice covers only spill prevention and control. However, WM-1, Materials Delivery and Storage, and WM-2, Material Use, also contain useful information, particularly on spill prevention. For information on wastes, see the waste management BMPs in this section.

Suitable Applications

This BMP is suitable for all construction projects. Spill control procedures are implemented anytime chemicals or hazardous substances are stored on the construction site, including the following materials:

- Soil stabilizers/binders
- Dust palliatives
- Herbicides
- Growth inhibitors
- Fertilizers
- Deicing/anti-icing chemicals

Categories

EC	Erosion Control	
SE	Sediment Control	
TC	Tracking Control	
WE	Wind Erosion Control	
NS	Non-Stormwater Management Control	
WM	Waste Management and Materials Pollution Control	☑

Legend:

☑ **Primary Objective**

☒ **Secondary Objective**

Targeted Constituents

Sediment	☑
Nutrients	☑
Trash	☑
Metals	☑
Bacteria	
Oil and Grease	☑
Organics	☑

Potential Alternatives

None

If User/Subscriber modifies this fact sheet in any way, the CASQA name/logo and footer below must be removed from each page and not appear on the modified version.

- Fuels
- Lubricants
- Other petroleum distillates

Limitations

- In some cases it may be necessary to use a private spill cleanup company.
- This BMP applies to spills caused by the contractor and subcontractors.
- Procedures and practices presented in this BMP are general. Contractor should identify appropriate practices for the specific materials used or stored onsite

Implementation

The following steps will help reduce the stormwater impacts of leaks and spills:

Education

- Be aware that different materials pollute in different amounts. Make sure that each employee knows what a "significant spill" is for each material they use, and what is the appropriate response for "significant" and "insignificant" spills.
- Educate employees and subcontractors on potential dangers to humans and the environment from spills and leaks.
- Hold regular meetings to discuss and reinforce appropriate disposal procedures (incorporate into regular safety meetings).
- Establish a continuing education program to indoctrinate new employees.
- Have contractor's superintendent or representative oversee and enforce proper spill prevention and control measures.

General Measures

- To the extent that the work can be accomplished safely, spills of oil, petroleum products, substances listed under 40 CFR parts 110,117, and 302, and sanitary and septic wastes should be contained and cleaned up immediately.
- Store hazardous materials and wastes in covered containers and protect from vandalism.
- Place a stockpile of spill cleanup materials where it will be readily accessible.
- Train employees in spill prevention and cleanup.
- Designate responsible individuals to oversee and enforce control measures.
- Spills should be covered and protected from stormwater runon during rainfall to the extent that it doesn't compromise clean up activities.
- Do not bury or wash spills with water.

- Store and dispose of used clean up materials, contaminated materials, and recovered spill material that is no longer suitable for the intended purpose in conformance with the provisions in applicable BMPs.
- Do not allow water used for cleaning and decontamination to enter storm drains or watercourses. Collect and dispose of contaminated water in accordance with WM-10, Liquid Waste Management.
- Contain water overflow or minor water spillage and do not allow it to discharge into drainage facilities or watercourses.
- Place proper storage, cleanup, and spill reporting instructions for hazardous materials stored or used on the project site in an open, conspicuous, and accessible location.
- Keep waste storage areas clean, well organized, and equipped with ample cleanup supplies as appropriate for the materials being stored. Perimeter controls, containment structures, covers, and liners should be repaired or replaced as needed to maintain proper function.

Cleanup

- Clean up leaks and spills immediately.
- Use a rag for small spills on paved surfaces, a damp mop for general cleanup, and absorbent material for larger spills. If the spilled material is hazardous, then the used cleanup materials are also hazardous and must be sent to either a certified laundry (rags) or disposed of as hazardous waste.
- Never hose down or bury dry material spills. Clean up as much of the material as possible and dispose of properly. See the waste management BMPs in this section for specific information.

Minor Spills

- Minor spills typically involve small quantities of oil, gasoline, paint, etc. which can be controlled by the first responder at the discovery of the spill.
- Use absorbent materials on small spills rather than hosing down or burying the spill.
- Absorbent materials should be promptly removed and disposed of properly.
- Follow the practice below for a minor spill:
  - Contain the spread of the spill.
  - Recover spilled materials.
  - Clean the contaminated area and properly dispose of contaminated materials.

Semi-Significant Spills

- Semi-significant spills still can be controlled by the first responder along with the aid of other personnel such as laborers and the foreman, etc. This response may require the cessation of all other activities.

- Spills should be cleaned up immediately:
  - Contain spread of the spill.
  - Notify the project foreman immediately.
  - If the spill occurs on paved or impermeable surfaces, clean up using "dry" methods (absorbent materials, cat litter and/or rags). Contain the spill by encircling with absorbent materials and do not let the spill spread widely.
  - If the spill occurs in dirt areas, immediately contain the spill by constructing an earthen dike. Dig up and properly dispose of contaminated soil.
  - If the spill occurs during rain, cover spill with tarps or other material to prevent contaminating runoff.

Significant/Hazardous Spills

- For significant or hazardous spills that cannot be controlled by personnel in the immediate vicinity, the following steps should be taken:
  - Notify the local emergency response by dialing 911. In addition to 911, the contractor will notify the proper county officials. It is the contractor's responsibility to have all emergency phone numbers at the construction site.
  - Notify the Governor's Office of Emergency Services Warning Center, (916) 845-8911.
  - For spills of federal reportable quantities, in conformance with the requirements in 40 CFR parts 110,119, and 302, the contractor should notify the National Response Center at (800) 424-8802.
  - Notification should first be made by telephone and followed up with a written report.
  - The services of a spills contractor or a Haz-Mat team should be obtained immediately. Construction personnel should not attempt to clean up until the appropriate and qualified staffs have arrived at the job site.
  - Other agencies which may need to be consulted include, but are not limited to, the Fire Department, the Public Works Department, the Coast Guard, the Highway Patrol, the City/County Police Department, Department of Toxic Substances, California Division of Oil and Gas, Cal/OSHA, etc.

Reporting

- Report significant spills to local agencies, such as the Fire Department; they can assist in cleanup.
- Federal regulations require that any significant oil spill into a water body or onto an adjoining shoreline be reported to the National Response Center (NRC) at 800-424-8802 (24 hours).

Use the following measures related to specific activities:

Vehicle and Equipment Maintenance

- If maintenance must occur onsite, use a designated area and a secondary containment, located away from drainage courses, to prevent the runon of stormwater and the runoff of spills.
- Regularly inspect onsite vehicles and equipment for leaks and repair immediately
- Check incoming vehicles and equipment (including delivery trucks, and employee and subcontractor vehicles) for leaking oil and fluids. Do not allow leaking vehicles or equipment onsite.
- Always use secondary containment, such as a drain pan or drop cloth, to catch spills or leaks when removing or changing fluids.
- Place drip pans or absorbent materials under paving equipment when not in use.
- Use absorbent materials on small spills rather than hosing down or burying the spill. Remove the absorbent materials promptly and dispose of properly.
- Promptly transfer used fluids to the proper waste or recycling drums. Don't leave full drip pans or other open containers lying around
- Oil filters disposed of in trashcans or dumpsters can leak oil and pollute stormwater. Place the oil filter in a funnel over a waste oil-recycling drum to drain excess oil before disposal. Oil filters can also be recycled. Ask the oil supplier or recycler about recycling oil filters.
- Store cracked batteries in a non-leaking secondary container. Do this with all cracked batteries even if you think all the acid has drained out. If you drop a battery, treat it as if it is cracked. Put it into the containment area until you are sure it is not leaking.

Vehicle and Equipment Fueling

- If fueling must occur onsite, use designate areas, located away from drainage courses, to prevent the runon of stormwater and the runoff of spills.
- Discourage "topping off" of fuel tanks.
- Always use secondary containment, such as a drain pan, when fueling to catch spills/ leaks.

Costs

Prevention of leaks and spills is inexpensive. Treatment and/ or disposal of contaminated soil or water can be quite expensive.

Inspection and Maintenance

- Inspect and verify that activity–based BMPs are in place prior to the commencement of associated activities. While activities associated with the BMP are under way, inspect BMPs in accordance with General Permit requirements for the associated project type and risk level. It is recommended that at a minimum, BMPs be inspected weekly, prior to forecasted rain events, daily during extended rain events, and after the conclusion of rain events.

- Inspect BMPs subject to non-stormwater discharge daily while non-stormwater discharges occur.
- Keep ample supplies of spill control and cleanup materials onsite, near storage, unloading, and maintenance areas.
- Update your spill prevention and control plan and stock cleanup materials as changes occur in the types of chemicals onsite.

References

Blueprint for a Clean Bay: Best Management Practices to Prevent Stormwater Pollution from Construction Related Activities; Santa Clara Valley Nonpoint Source Pollution Control Program, 1995.

Stormwater Quality Handbooks - Construction Site Best Management Practices (BMPs) Manual, State of California Department of Transportation (Caltrans), November 2000.

Stormwater Management for Construction Activities; Developing Pollution Prevention Plans and Best Management Practice, EPA 832-R-92005; USEPA, April 1992.

Solid Waste Management WM-5

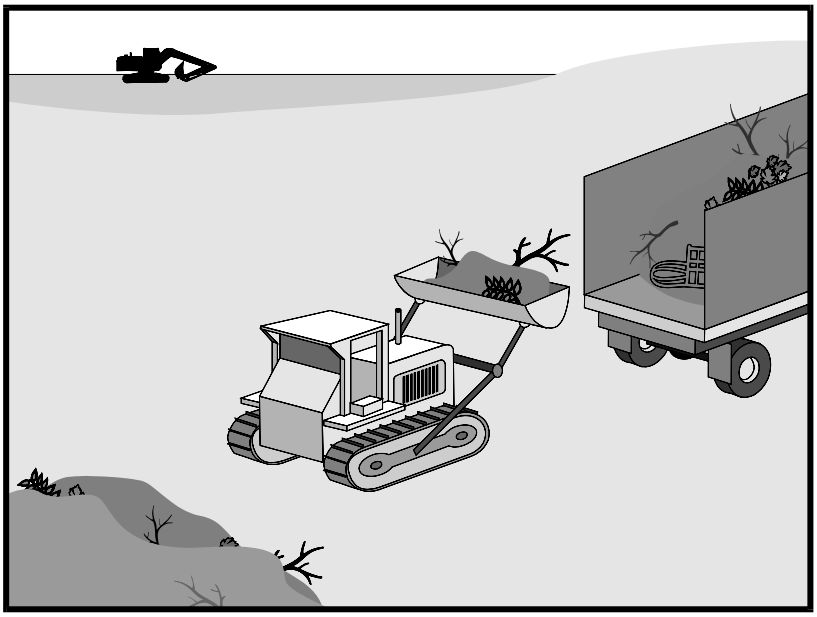

Categories

EC	Erosion Control	
SE	Sediment Control	
TC	Tracking Control	
WE	Wind Erosion Control	
NS	Non-Stormwater Management Control	
WM	Waste Management and Materials Pollution Control	☑

Legend:

☑ **Primary Objective**

☒ **Secondary Objective**

Targeted Constituents

Sediment	☑
Nutrients	☑
Trash	☑
Metals	☑
Bacteria	
Oil and Grease	☑
Organics	☑

Potential Alternatives

None

If User/Subscriber modifies this fact sheet in any way, the CASQA name/logo and footer below must be removed from each page and not appear on the modified version.

Description and Purpose

Solid waste management procedures and practices are designed to prevent or reduce the discharge of pollutants to stormwater from solid or construction waste by providing designated waste collection areas and containers, arranging for regular disposal, and training employees and subcontractors.

Suitable Applications

This BMP is suitable for construction sites where the following wastes are generated or stored:

- Solid waste generated from trees and shrubs removed during land clearing, demolition of existing structures (rubble), and building construction
- Packaging materials including wood, paper, and plastic
- Scrap or surplus building materials including scrap metals, rubber, plastic, glass pieces, and masonry products
- Domestic wastes including food containers such as beverage cans, coffee cups, paper bags, plastic wrappers, and cigarettes
- Construction wastes including brick, mortar, timber, steel and metal scraps, pipe and electrical cuttings, non-hazardous equipment parts, styrofoam and other materials used to transport and package construction materials

CASQA
CALIFORNIA STORMWATER QUALITY ASSOCIATION

- Highway planting wastes, including vegetative material, plant containers, and packaging materials

Limitations

Temporary stockpiling of certain construction wastes may not necessitate stringent drainage related controls during the non-rainy season or in desert areas with low rainfall.

Implementation

The following steps will help keep a clean site and reduce stormwater pollution:

- Select designated waste collection areas onsite.
- Inform trash-hauling contractors that you will accept only watertight dumpsters for onsite use. Inspect dumpsters for leaks and repair any dumpster that is not watertight.
- Locate containers in a covered area or in a secondary containment.
- Provide an adequate number of containers with lids or covers that can be placed over the container to keep rain out or to prevent loss of wastes when it is windy.
- Cover waste containers at the end of each work day and when it is raining.
- Plan for additional containers and more frequent pickup during the demolition phase of construction.
- Collect site trash daily, especially during rainy and windy conditions.
- Remove this solid waste promptly since erosion and sediment control devices tend to collect litter.
- Make sure that toxic liquid wastes (used oils, solvents, and paints) and chemicals (acids, pesticides, additives, curing compounds) are not disposed of in dumpsters designated for construction debris.
- Do not hose out dumpsters on the construction site. Leave dumpster cleaning to the trash hauling contractor.
- Arrange for regular waste collection before containers overflow.
- Clean up immediately if a container does spill.
- Make sure that construction waste is collected, removed, and disposed of only at authorized disposal areas.

Education

- Have the contractor's superintendent or representative oversee and enforce proper solid waste management procedures and practices.
- Instruct employees and subcontractors on identification of solid waste and hazardous waste.
- Educate employees and subcontractors on solid waste storage and disposal procedures.

- Hold regular meetings to discuss and reinforce disposal procedures (incorporate into regular safety meetings).
- Require that employees and subcontractors follow solid waste handling and storage procedures.
- Prohibit littering by employees, subcontractors, and visitors.
- Minimize production of solid waste materials wherever possible.

Collection, Storage, and Disposal

- Littering on the project site should be prohibited.
- To prevent clogging of the storm drainage system, litter and debris removal from drainage grates, trash racks, and ditch lines should be a priority.
- Trash receptacles should be provided in the contractor's yard, field trailer areas, and at locations where workers congregate for lunch and break periods.
- Litter from work areas within the construction limits of the project site should be collected and placed in watertight dumpsters at least weekly, regardless of whether the litter was generated by the contractor, the public, or others. Collected litter and debris should not be placed in or next to drain inlets, stormwater drainage systems, or watercourses.
- Dumpsters of sufficient size and number should be provided to contain the solid waste generated by the project.
- Full dumpsters should be removed from the project site and the contents should be disposed of by the trash hauling contractor.
- Construction debris and waste should be removed from the site biweekly or more frequently as needed.
- Construction material visible to the public should be stored or stacked in an orderly manner.
- Stormwater runon should be prevented from contacting stored solid waste through the use of berms, dikes, or other temporary diversion structures or through the use of measures to elevate waste from site surfaces.
- Solid waste storage areas should be located at least 50 ft from drainage facilities and watercourses and should not be located in areas prone to flooding or ponding.
- Except during fair weather, construction and highway planting waste not stored in watertight dumpsters should be securely covered from wind and rain by covering the waste with tarps or plastic.
- Segregate potentially hazardous waste from non-hazardous construction site waste.
- Make sure that toxic liquid wastes (used oils, solvents, and paints) and chemicals (acids, pesticides, additives, curing compounds) are not disposed of in dumpsters designated for construction debris.

- For disposal of hazardous waste, see WM-6, Hazardous Waste Management. Have hazardous waste hauled to an appropriate disposal and/or recycling facility.

- Salvage or recycle useful vegetation debris, packaging and surplus building materials when practical. For example, trees and shrubs from land clearing can be used as a brush barrier, or converted into wood chips, then used as mulch on graded areas. Wood pallets, cardboard boxes, and construction scraps can also be recycled.

Costs

All of the above are low cost measures.

Inspection and Maintenance

- Inspect and verify that activity–based BMPs are in place prior to the commencement of associated activities. While activities associated with the BMP are under way, inspect BMPs in accordance with General Permit requirements for the associated project type and risk level. It is recommended that at a minimum, BMPs be inspected weekly, prior to forecasted rain events, daily during extended rain events, and after the conclusion of rain events.

- Inspect BMPs subject to non-stormwater discharge daily while non-stormwater discharges occur

- Inspect construction waste area regularly.

- Arrange for regular waste collection.

References

Processes, Procedures and Methods to Control Pollution Resulting from All Construction Activity, 430/9-73-007, USEPA, 1973.

Stormwater Quality Handbooks - Construction Site Best Management Practices (BMPs) Manual, State of California Department of Transportation (Caltrans), November 2000.

Stormwater Management for Construction Activities; Developing Pollution Prevention Plans and Best Management Practice, EPA 832-R-92005; USEPA, April 1992.

Hazardous Waste Management WM-6

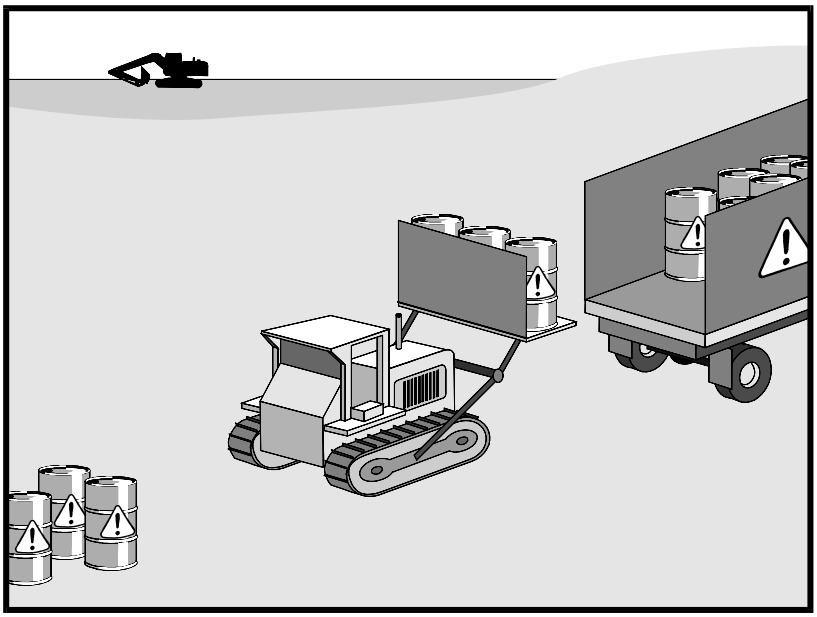

Categories

EC	Erosion Control	
SE	Sediment Control	
TC	Tracking Control	
WE	Wind Erosion Control	
NS	Non-Stormwater Management Control	
WM	Waste Management and Materials Pollution Control	☑

Legend:

☑ **Primary Objective**

☒ **Secondary Objective**

Targeted Constituents

Sediment	
Nutrients	☑
Trash	☑
Metals	☑
Bacteria	☑
Oil and Grease	☑
Organics	☑

Potential Alternatives

None

If User/Subscriber modifies this fact sheet in any way, the CASQA name/logo and footer below must be removed from each page and not appear on the modified version.

Description and Purpose

Prevent or reduce the discharge of pollutants to stormwater from hazardous waste through proper material use, waste disposal, and training of employees and subcontractors.

Suitable Applications

This best management practice (BMP) applies to all construction projects. Hazardous waste management practices are implemented on construction projects that generate waste from the use of:

- Petroleum Products
- Asphalt Products
- Concrete Curing Compounds
- Pesticides
- Palliatives
- Acids
- Septic Wastes
- Paints
- Stains
- Solvents
- Wood Preservatives
- Roofing Tar
- Any materials deemed a hazardous waste in California, Title 22 Division 4.5, or listed in 40 CFR Parts 110, 117, 261, or 302

CASQA
CALIFORNIA STORMWATER QUALITY ASSOCIATION

In addition, sites with existing structures may contain wastes, which must be disposed of in accordance with federal, state, and local regulations. These wastes include:

- Sandblasting grit mixed with lead-, cadmium-, or chromium-based paints
- Asbestos
- PCBs (particularly in older transformers)

Limitations

- Hazardous waste that cannot be reused or recycled must be disposed of by a licensed hazardous waste hauler.
- Nothing in this BMP relieves the contractor from responsibility for compliance with federal, state, and local laws regarding storage, handling, transportation, and disposal of hazardous wastes.
- This BMP does not cover aerially deposited lead (ADL) soils. For ADL soils refer to WM-7, Contaminated Soil Management.

Implementation

The following steps will help reduce stormwater pollution from hazardous wastes:

Material Use

- Wastes should be stored in sealed containers constructed of a suitable material and should be labeled as required by Title 22 CCR, Division 4.5 and 49 CFR Parts 172, 173, 178, and 179.
- All hazardous waste should be stored, transported, and disposed as required in Title 22 CCR, Division 4.5 and 49 CFR 261-263.
- Waste containers should be stored in temporary containment facilities that should comply with the following requirements:
  - Temporary containment facility should provide for a spill containment volume equal to 1.5 times the volume of all containers able to contain precipitation from a 25 year storm event, plus the greater of 10% of the aggregate volume of all containers or 100% of the capacity of the largest tank within its boundary, whichever is greater.
  - Temporary containment facility should be impervious to the materials stored there for a minimum contact time of 72 hours.
  - Temporary containment facilities should be maintained free of accumulated rainwater and spills. In the event of spills or leaks, accumulated rainwater and spills should be placed into drums after each rainfall. These liquids should be handled as a hazardous waste unless testing determines them to be non-hazardous. Non-hazardous liquids should be sent to an approved disposal site.
  - Sufficient separation should be provided between stored containers to allow for spill cleanup and emergency response access.

- Incompatible materials, such as chlorine and ammonia, should not be stored in the same temporary containment facility.

- Throughout the rainy season, temporary containment facilities should be covered during non-working days, and prior to rain events. Covered facilities may include use of plastic tarps for small facilities or constructed roofs with overhangs.

- Drums should not be overfilled and wastes should not be mixed.

- Unless watertight, containers of dry waste should be stored on pallets.

- Do not over-apply herbicides and pesticides. Prepare only the amount needed. Follow the recommended usage instructions. Over application is expensive and environmentally harmful. Apply surface dressings in several smaller applications, as opposed to one large application. Allow time for infiltration and avoid excess material being carried offsite by runoff. Do not apply these chemicals just before it rains. People applying pesticides must be certified in accordance with federal and state regulations.

- Paint brushes and equipment for water and oil based paints should be cleaned within a contained area and should not be allowed to contaminate site soils, watercourses, or drainage systems. Waste paints, thinners, solvents, residues, and sludges that cannot be recycled or reused should be disposed of as hazardous waste. When thoroughly dry, latex paint and paint cans, used brushes, rags, absorbent materials, and drop cloths should be disposed of as solid waste.

- Do not clean out brushes or rinse paint containers into the dirt, street, gutter, storm drain, or stream. "Paint out" brushes as much as possible. Rinse water-based paints to the sanitary sewer. Filter and reuse thinners and solvents. Dispose of excess oil-based paints and sludge as hazardous waste.

- The following actions should be taken with respect to temporary contaminant:

  - Ensure that adequate hazardous waste storage volume is available.

  - Ensure that hazardous waste collection containers are conveniently located.

  - Designate hazardous waste storage areas onsite away from storm drains or watercourses and away from moving vehicles and equipment to prevent accidental spills.

  - Minimize production or generation of hazardous materials and hazardous waste on the job site.

  - Use containment berms in fueling and maintenance areas and where the potential for spills is high.

  - Segregate potentially hazardous waste from non-hazardous construction site debris.

  - Keep liquid or semi-liquid hazardous waste in appropriate containers (closed drums or similar) and under cover.

- Clearly label all hazardous waste containers with the waste being stored and the date of accumulation.
- Place hazardous waste containers in secondary containment.
- Do not allow potentially hazardous waste materials to accumulate on the ground.
- Do not mix wastes.
- Use all of the product before disposing of the container.
- Do not remove the original product label; it contains important safety and disposal information.

Waste Recycling Disposal

- Select designated hazardous waste collection areas onsite.
- Hazardous materials and wastes should be stored in covered containers and protected from vandalism.
- Place hazardous waste containers in secondary containment.
- Do not mix wastes, this can cause chemical reactions, making recycling impossible and complicating disposal.
- Recycle any useful materials such as used oil or water-based paint.
- Make sure that toxic liquid wastes (used oils, solvents, and paints) and chemicals (acids, pesticides, additives, curing compounds) are not disposed of in dumpsters designated for construction debris.
- Arrange for regular waste collection before containers overflow.
- Make sure that hazardous waste (e.g., excess oil-based paint and sludge) is collected, removed, and disposed of only at authorized disposal areas.

Disposal Procedures

- Waste should be disposed of by a licensed hazardous waste transporter at an authorized and licensed disposal facility or recycling facility utilizing properly completed Uniform Hazardous Waste Manifest forms.
- A Department of Health Services certified laboratory should sample waste to determine the appropriate disposal facility.
- Properly dispose of rainwater in secondary containment that may have mixed with hazardous waste.
- Attention is directed to "Hazardous Material", "Contaminated Material", and "Aerially Deposited Lead" of the contract documents regarding the handling and disposal of hazardous materials.

Education

- Educate employees and subcontractors on hazardous waste storage and disposal procedures.
- Educate employees and subcontractors on potential dangers to humans and the environment from hazardous wastes.
- Instruct employees and subcontractors on safety procedures for common construction site hazardous wastes.
- Instruct employees and subcontractors in identification of hazardous and solid waste.
- Hold regular meetings to discuss and reinforce hazardous waste management procedures (incorporate into regular safety meetings).
- The contractor's superintendent or representative should oversee and enforce proper hazardous waste management procedures and practices.
- Make sure that hazardous waste is collected, removed, and disposed of only at authorized disposal areas.
- Warning signs should be placed in areas recently treated with chemicals.
- Place a stockpile of spill cleanup materials where it will be readily accessible.
- If a container does spill, clean up immediately.

Costs

All of the above are low cost measures.

Inspection and Maintenance

- Inspect and verify that activity–based BMPs are in place prior to the commencement of associated activities. While activities associated with the BMP are under way, inspect BMPs in accordance with General Permit requirements for the associated project type and risk level. It is recommended that at a minimum, BMPs be inspected weekly, prior to forecasted rain events, daily during extended rain events, and after the conclusion of rain events..
- Inspect BMPs subject to non-stormwater discharge daily while non-stormwater discharges occur
- Hazardous waste should be regularly collected.
- A foreman or construction supervisor should monitor onsite hazardous waste storage and disposal procedures.
- Waste storage areas should be kept clean, well organized, and equipped with ample cleanup supplies as appropriate for the materials being stored.
- Perimeter controls, containment structures, covers, and liners should be repaired or replaced as needed to maintain proper function.

- Hazardous spills should be cleaned up and reported in conformance with the applicable Material Safety Data Sheet (MSDS) and the instructions posted at the project site.
- The National Response Center, at (800) 424-8802, should be notified of spills of federal reportable quantities in conformance with the requirements in 40 CFR parts 110, 117, and 302. Also notify the Governors Office of Emergency Services Warning Center at (916) 845-8911.
- A copy of the hazardous waste manifests should be provided.

References

Blueprint for a Clean Bay: Best Management Practices to Prevent Stormwater Pollution from Construction Related Activities; Santa Clara Valley Nonpoint Source Pollution Control Program, 1995.

Processes, Procedures and Methods to Control Pollution Resulting from All Construction Activity, 430/9-73-007, USEPA, 1973.

Stormwater Quality Handbooks - Construction Site Best Management Practices (BMPs) Manual, State of California Department of Transportation (Caltrans), November 2000.

Stormwater Management for Construction Activities; Developing Pollution Prevention Plans and Best Management Practice, EPA 832-R-92005; USEPA, April 1992.

Contaminated Soil Management WM-7

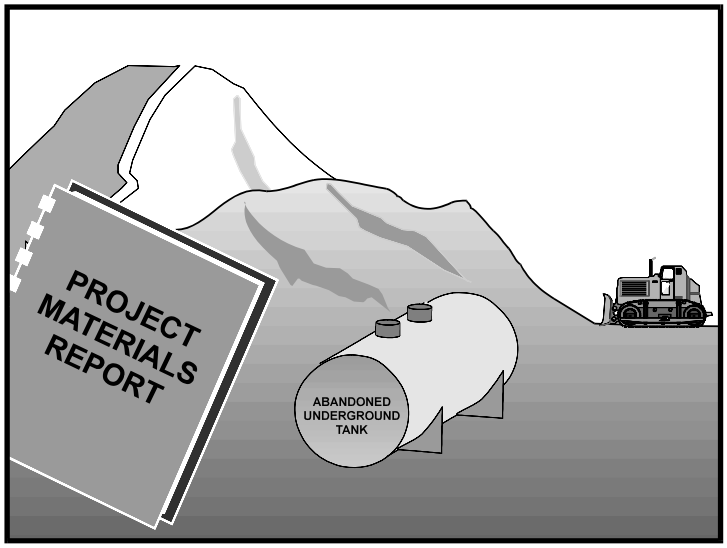

Categories		
EC	Erosion Control	
SE	Sediment Control	
TC	Tracking Control	
WE	Wind Erosion Control	
NS	Non-Stormwater Management Control	
WM	Waste Management and Materials Pollution Control	☑

Legend:
☑ **Primary Objective**
☒ **Secondary Objective**

Description and Purpose

Prevent or reduce the discharge of pollutants to stormwater from contaminated soil and highly acidic or alkaline soils by conducting pre-construction surveys, inspecting excavations regularly, and remediating contaminated soil promptly.

Suitable Applications

Contaminated soil management is implemented on construction projects in highly urbanized or industrial areas where soil contamination may have occurred due to spills, illicit discharges, aerial deposition, past use and leaks from underground storage tanks.

Limitations

Contaminated soils that cannot be treated onsite must be disposed of offsite by a licensed hazardous waste hauler. The presence of contaminated soil may indicate contaminated water as well. See NS-2, Dewatering Operations, for more information.

The procedures and practices presented in this BMP are general. The contractor should identify appropriate practices and procedures for the specific contaminants known to exist or discovered onsite.

Implementation

Most owners and developers conduct pre-construction environmental assessments as a matter of routine. Contaminated soils are often identified during project planning and development with known locations identified in the plans, specifications and in the SWPPP. The contractor should review applicable reports and investigate appropriate call-outs in the

Targeted Constituents	
Sediment	
Nutrients	☑
Trash	☑
Metals	☑
Bacteria	☑
Oil and Grease	☑
Organics	☑

Potential Alternatives

None

If User/Subscriber modifies this fact sheet in any way, the CASQA name/logo and footer below must be removed from each page and not appear on the modified version.

CASQA
CALIFORNIA STORMWATER QUALITY ASSOCIATION

plans, specifications, and SWPPP. Recent court rulings holding contractors liable for cleanup costs when they unknowingly move contaminated soil highlight the need for contractors to confirm a site assessment is completed before earth moving begins.

The following steps will help reduce stormwater pollution from contaminated soil:

- Conduct thorough, pre-construction inspections of the site and review documents related to the site. If inspection or reviews indicated presence of contaminated soils, develop a plan before starting work.
- Look for contaminated soil as evidenced by discoloration, odors, differences in soil properties, abandoned underground tanks or pipes, or buried debris.
- Prevent leaks and spills. Contaminated soil can be expensive to treat and dispose of properly. However, addressing the problem before construction is much less expensive than after the structures are in place.
- The contractor may further identify contaminated soils by investigating:
  - Past site uses and activities
  - Detected or undetected spills and leaks
  - Acid or alkaline solutions from exposed soil or rock formations high in acid or alkaline forming elements
  - Contaminated soil as evidenced by discoloration, odors, differences in soil properties, abandoned underground tanks or pipes, or buried debris.
  - Suspected soils should be tested at a certified laboratory.

Education

- Have employees and subcontractors complete a safety training program which meets 29 CFR 1910.120 and 8 CCR 5192 covering the potential hazards as identified, prior to performing any excavation work at the locations containing material classified as hazardous.
- Educate employees and subcontractors in identification of contaminated soil and on contaminated soil handling and disposal procedures.
- Hold regular meetings to discuss and reinforce disposal procedures (incorporate into regular safety meetings).

Handling Procedures for Material with Aerially Deposited Lead (ADL)

- Materials from areas designated as containing (ADL) may, if allowed by the contract special provisions, be excavated, transported, and used in the construction of embankments and/or backfill.
- Excavation, transportation, and placement operations should result in no visible dust.
- Caution should be exercised to prevent spillage of lead containing material during transport.

- Quality should be monitored during excavation of soils contaminated with lead.

Handling Procedures for Contaminated Soils

- Minimize onsite storage. Contaminated soil should be disposed of properly in accordance with all applicable regulations. All hazardous waste storage will comply with the requirements in Title 22, CCR, Sections 66265.250 to 66265.260.
- Test suspected soils at an approved certified laboratory.
- Work with the local regulatory agencies to develop options for treatment or disposal if the soil is contaminated.
- Avoid temporary stockpiling of contaminated soils or hazardous material.
- Take the following precautions if temporary stockpiling is necessary:
  - Cover the stockpile with plastic sheeting or tarps.
  - Install a berm around the stockpile to prevent runoff from leaving the area.
  - Do not stockpile in or near storm drains or watercourses.
- Remove contaminated material and hazardous material on exteriors of transport vehicles and place either into the current transport vehicle or into the excavation prior to the vehicle leaving the exclusion zone.
- Monitor the air quality continuously during excavation operations at all locations containing hazardous material.
- Procure all permits and licenses, pay all charges and fees, and give all notices necessary and incident to the due and lawful prosecution of the work, including registration for transporting vehicles carrying the contaminated material and the hazardous material.
- Collect water from decontamination procedures and treat or dispose of it at an appropriate disposal site.
- Collect non-reusable protective equipment, once used by any personnel, and dispose of at an appropriate disposal site.
- Install temporary security fence to surround and secure the exclusion zone. Remove fencing when no longer needed.
- Excavate, transport, and dispose of contaminated material and hazardous material in accordance with the rules and regulations of the following agencies (the specifications of these agencies supersede the procedures outlined in this BMP):
  - United States Department of Transportation (USDOT)
  - United States Environmental Protection Agency (USEPA)
  - California Environmental Protection Agency (CAL-EPA)

- California Division of Occupation Safety and Health Administration (CAL-OSHA)
- Local regulatory agencies

Procedures for Underground Storage Tank Removals

- Prior to commencing tank removal operations, obtain the required underground storage tank removal permits and approval from the federal, state, and local agencies that have jurisdiction over such work.
- To determine if it contains hazardous substances, arrange to have tested, any liquid or sludge found in the underground tank prior to its removal.
- Following the tank removal, take soil samples beneath the excavated tank and perform analysis as required by the local agency representative(s).
- The underground storage tank, any liquid or sludge found within the tank, and all contaminated substances and hazardous substances removed during the tank removal and transported to disposal facilities permitted to accept such waste.

Water Control

- All necessary precautions and preventive measures should be taken to prevent the flow of water, including ground water, from mixing with hazardous substances or underground storage tank excavations. Such preventative measures may consist of, but are not limited to, berms, cofferdams, grout curtains, freeze walls, and seal course concrete or any combination thereof.
- If water does enter an excavation and becomes contaminated, such water, when necessary to proceed with the work, should be discharged to clean, closed top, watertight transportable holding tanks, treated, and disposed of in accordance with federal, state, and local laws.

Costs

Prevention of leaks and spills is inexpensive. Treatment or disposal of contaminated soil can be quite expensive.

Inspection and Maintenance

- Inspect and verify that activity–based BMPs are in place prior to the commencement of associated activities. While activities associated with the BMP are under way, inspect BMPs in accordance with General Permit requirements for the associated project type and risk level. It is recommended that at a minimum, BMPs be inspected weekly, prior to forecasted rain events, daily during extended rain events, and after the conclusion of rain events.
- Arrange for contractor's Water Pollution Control Manager, foreman, and/or construction supervisor to monitor onsite contaminated soil storage and disposal procedures.
- Monitor air quality continuously during excavation operations at all locations containing hazardous material.
- Coordinate contaminated soils and hazardous substances/waste management with the appropriate federal, state, and local agencies.

- Implement WM-4, Spill Prevention and Control, to prevent leaks and spills as much as possible.

References

Blueprint for a Clean Bay: Best Management Practices to Prevent Stormwater Pollution from Construction Related Activities; Santa Clara Valley Nonpoint Source Pollution Control Program, 1995.

Processes, Procedures and Methods to Control Pollution Resulting from All Construction Activity, 430/9-73-007, USEPA, 1973.

Stormwater Quality Handbooks - Construction Site Best Management Practices (BMPs) Manual, State of California Department of Transportation (Caltrans), November 2000.

Stormwater Management for Construction Activities; Developing Pollution Prevention Plans and Best Management Practice, EPA 832-R-92005; USEPA, April 1992.

Concrete Waste Management WM-8

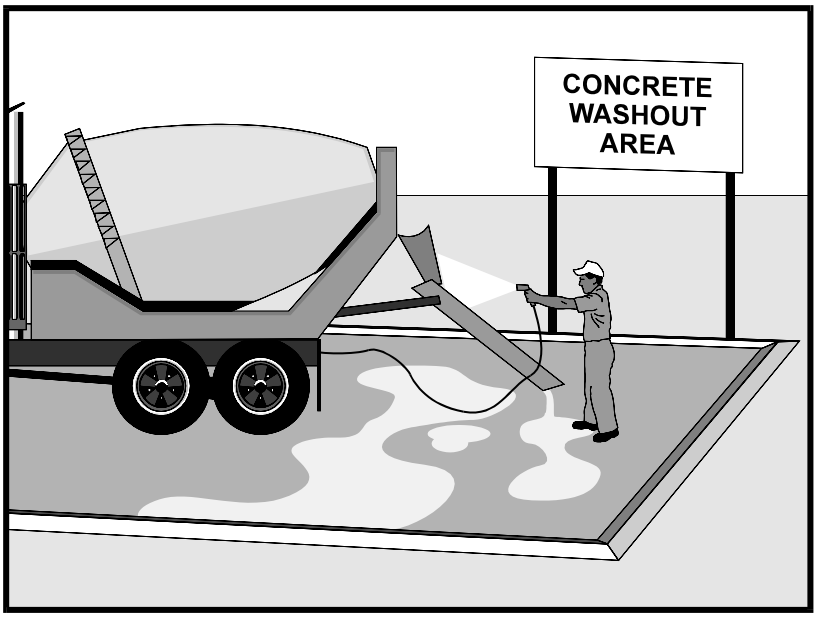

Categories

EC	Erosion Control	
SE	Sediment Control	
TC	Tracking Control	
WE	Wind Erosion Control	
NS	Non-Stormwater Management Control	☒
WM	Waste Management and Materials Pollution Control	☑

Legend:
☑ **Primary Category**
☒ **Secondary Category**

Targeted Constituents

Sediment	☑
Nutrients	
Trash	
Metals	☑
Bacteria	
Oil and Grease	
Organics	

Potential Alternatives

None

If User/Subscriber modifies this fact sheet in any way, the CASQA name/logo and footer below must be removed from each page and not appear on the modified version.

Description and Purpose

Prevent the discharge of pollutants to stormwater from concrete waste by conducting washout onsite or offsite in a designated area, and by employee and subcontractor training.

The General Permit incorporates Numeric Action Levels (NAL) for pH (see Section 2 of this handbook to determine your project's risk level and if you are subject to these requirements).

Many types of construction materials, including mortar, concrete, stucco, cement and block and their associated wastes have basic chemical properties that can raise pH levels outside of the permitted range. Additional care should be taken when managing these materials to prevent them from coming into contact with stormwater flows and raising pH to levels outside the accepted range.

Suitable Applications

Concrete waste management procedures and practices are implemented on construction projects where:

- Concrete is used as a construction material or where concrete dust and debris result from demolition activities.
- Slurries containing portland cement concrete (PCC) are generated, such as from saw cutting, coring, grinding, grooving, and hydro-concrete demolition.
- Concrete trucks and other concrete-coated equipment are washed onsite.

CASQA
CALIFORNIA STORMWATER QUALITY ASSOCIATION®

- Mortar-mixing stations exist.
- Stucco mixing and spraying.
- See also NS-8, Vehicle and Equipment Cleaning.

Limitations

- Offsite washout of concrete wastes may not always be possible.
- Multiple washouts may be needed to assure adequate capacity and to allow for evaporation.

Implementation

The following steps will help reduce stormwater pollution from concrete wastes:

- Incorporate requirements for concrete waste management into material supplier and subcontractor agreements.
- Store dry and wet materials under cover, away from drainage areas. Refer to WM-1, Material Delivery and Storage for more information.
- Avoid mixing excess amounts of concrete.
- Perform washout of concrete trucks in designated areas only, where washout will not reach stormwater.
- Do not wash out concrete trucks into storm drains, open ditches, streets, streams or onto the ground. Trucks should always be washed out into designated facilities.
- Do not allow excess concrete to be dumped onsite, except in designated areas.
- For onsite washout:
  - On larger sites, it is recommended to locate washout areas at least 50 feet from storm drains, open ditches, or water bodies. Do not allow runoff from this area by constructing a temporary pit or bermed area large enough for liquid and solid waste.
  - Washout wastes into the temporary washout where the concrete can set, be broken up, and then disposed properly.
  - Washouts shall be implemented in a manner that prevents leaching to underlying soils. Washout containers must be water tight and washouts on or in the ground must be lined with a suitable impervious liner, typically a plastic type material.
- Do not wash sweepings from exposed aggregate concrete into the street or storm drain. Collect and return sweepings to aggregate base stockpile or dispose in the trash.
- See typical concrete washout installation details at the end of this fact sheet.

Education

- Educate employees, subcontractors, and suppliers on the concrete waste management techniques described herein.

- Arrange for contractor's superintendent or representative to oversee and enforce concrete waste management procedures.

- Discuss the concrete management techniques described in this BMP (such as handling of concrete waste and washout) with the ready-mix concrete supplier before any deliveries are made.

Concrete Demolition Wastes

- Stockpile concrete demolition waste in accordance with BMP WM-3, Stockpile Management.

- Dispose of or recycle hardened concrete waste in accordance with applicable federal, state or local regulations.

Concrete Slurry Wastes

- PCC and AC waste should not be allowed to enter storm drains or watercourses.

- PCC and AC waste should be collected and disposed of or placed in a temporary concrete washout facility (as described in Onsite Temporary Concrete Washout Facility, Concrete Transit Truck Washout Procedures, below).

- A foreman or construction supervisor should monitor onsite concrete working tasks, such as saw cutting, coring, grinding and grooving to ensure proper methods are implemented.

- Saw-cut concrete slurry should not be allowed to enter storm drains or watercourses. Residue from grinding operations should be picked up by means of a vacuum attachment to the grinding machine or by sweeping. Saw cutting residue should not be allowed to flow across the pavement and should not be left on the surface of the pavement. See also NS-3, Paving and Grinding Operations; and WM-10, Liquid Waste Management.

- Concrete slurry residue should be disposed in a temporary washout facility (as described in Onsite Temporary Concrete Washout Facility, Concrete Transit Truck Washout Procedures, below) and allowed to dry. Dispose of dry slurry residue in accordance with WM-5, Solid Waste Management.

Onsite Temporary Concrete Washout Facility, Transit Truck Washout Procedures

- Temporary concrete washout facilities should be located a minimum of 50 ft from storm drain inlets, open drainage facilities, and watercourses. Each facility should be located away from construction traffic or access areas to prevent disturbance or tracking.

- A sign should be installed adjacent to each washout facility to inform concrete equipment operators to utilize the proper facilities.

- Temporary concrete washout facilities should be constructed above grade or below grade at the option of the contractor. Temporary concrete washout facilities should be constructed and maintained in sufficient quantity and size to contain all liquid and concrete waste generated by washout operations.

- Temporary washout facilities should have a temporary pit or bermed areas of sufficient volume to completely contain all liquid and waste concrete materials generated during washout procedures.
- Temporary washout facilities should be lined to prevent discharge to the underlying ground or surrounding area.
- Washout of concrete trucks should be performed in designated areas only.
- Only concrete from mixer truck chutes should be washed into concrete wash out.
- Concrete washout from concrete pumper bins can be washed into concrete pumper trucks and discharged into designated washout area or properly disposed of or recycled offsite.
- Once concrete wastes are washed into the designated area and allowed to harden, the concrete should be broken up, removed, and disposed of per WM-5, Solid Waste Management. Dispose of or recycle hardened concrete on a regular basis.
- Temporary Concrete Washout Facility (Type Above Grade)
  - Temporary concrete washout facility (type above grade) should be constructed as shown on the details at the end of this BMP, with a recommended minimum length and minimum width of 10 ft; however, smaller sites or jobs may only need a smaller washout facility. With any washout, always maintain a sufficient quantity and volume to contain all liquid and concrete waste generated by washout operations.
  - Materials used to construct the washout area should conform to the provisions detailed in their respective BMPs (e.g., SE-8 Sandbag Barrier).
  - Plastic lining material should be a minimum of 10 mil in polyethylene sheeting and should be free of holes, tears, or other defects that compromise the impermeability of the material.
  - Alternatively, portable removable containers can be used as above grade concrete washouts. Also called a “roll-off”; this concrete washout facility should be properly sealed to prevent leakage, and should be removed from the site and replaced when the container reaches 75% capacity.
- Temporary Concrete Washout Facility (Type Below Grade)
  - Temporary concrete washout facilities (type below grade) should be constructed as shown on the details at the end of this BMP, with a recommended minimum length and minimum width of 10 ft. The quantity and volume should be sufficient to contain all liquid and concrete waste generated by washout operations.
  - Lath and flagging should be commercial type.
  - Plastic lining material should be a minimum of 10 mil polyethylene sheeting and should be free of holes, tears, or other defects that compromise the impermeability of the material.

- The base of a washout facility should be free of rock or debris that may damage a plastic liner.

Removal of Temporary Concrete Washout Facilities

- When temporary concrete washout facilities are no longer required for the work, the hardened concrete should be removed and properly disposed or recycled in accordance with federal, state or local regulations. Materials used to construct temporary concrete washout facilities should be removed from the site of the work and properly disposed or recycled in accordance with federal, state or local regulations..

- Holes, depressions or other ground disturbance caused by the removal of the temporary concrete washout facilities should be backfilled and repaired.

Costs

All of the above are low cost measures. Roll-0ff concrete washout facilities can be more costly than other measures due to removal and replacement; however, provide a cleaner alternative to traditional washouts. The type of washout facility, size, and availability of materials will determine the cost of the washout.

Inspection and Maintenance

- BMPs must be inspected in accordance with General Permit requirements for the associated project type and risk level. It is recommended that at a minimum, BMPs be inspected weekly, prior to forecasted rain events, daily during extended rain events, and after the conclusion of rain events.

- Temporary concrete washout facilities should be maintained to provide adequate holding capacity with a minimum freeboard of 4 in. for above grade facilities and 12 in. for below grade facilities. Maintaining temporary concrete washout facilities should include removing and disposing of hardened concrete and returning the facilities to a functional condition. Hardened concrete materials should be removed and properly disposed or recycled in accordance with federal, state or local regulations.

- Washout facilities must be cleaned, or new facilities must be constructed and ready for use once the washout is 75% full.

- Inspect washout facilities for damage (e.g. torn liner, evidence of leaks, signage, etc.). Repair all identified damage.

References

Blueprint for a Clean Bay: Best Management Practices to Prevent Stormwater Pollution from Construction Related Activities; Santa Clara Valley Nonpoint Source Pollution Control Program, 1995.

Stormwater Quality Handbooks - Construction Site Best Management Practices (BMPs) Manual, State of California Department of Transportation (Caltrans), November 2000, Updated March 2003.

Stormwater Management for Construction Activities; Developing Pollution Prevention Plans and Best Management Practice, EPA 832-R-92005; USEPA, April 1992.

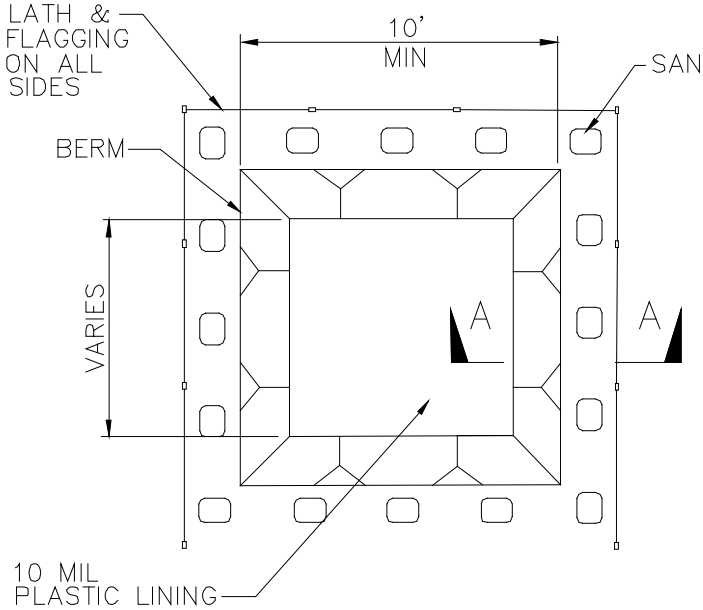

PLAN
NOT TO SCALE
TYPE "BELOW GRADE"

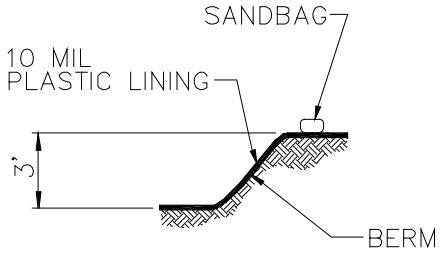

SECTION A–A
NOT TO SCALE

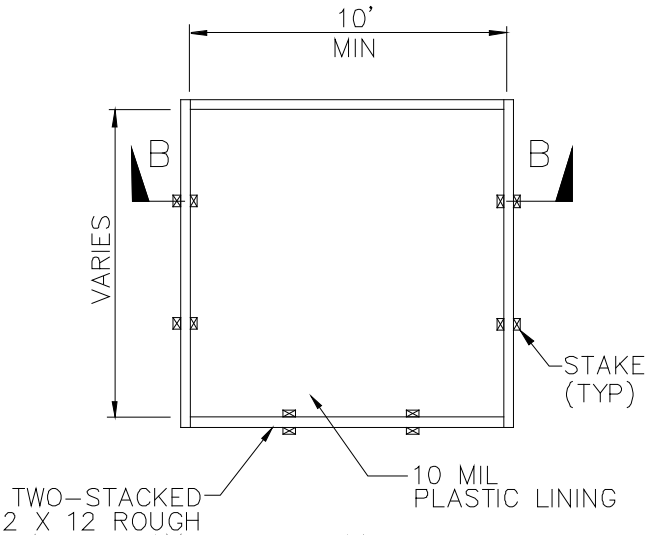

PLAN
NOT TO SCALE
TYPE "ABOVE GRADE"

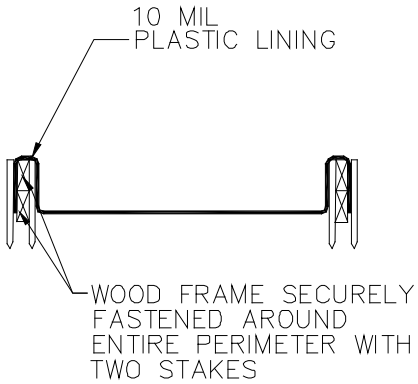

SECTION B–B
NOT TO SCALE

NOTES

1. ACTUAL LAYOUT DETERMINED IN FIELD.
2. THE CONCRETE WASHOUT SIGN SHALL BE INSTALLED WITHIN 30 FT. OF THE TEMPORARY CONCRETE WASHOUT FACILITY.

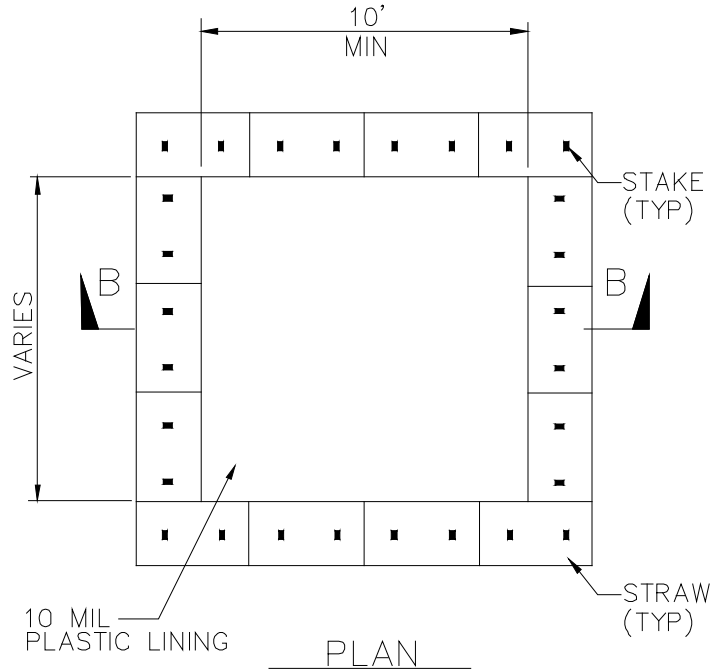

PLAN
NOT TO SCALE
TYPE "ABOVE GRADE"
WITH STRAW BALES

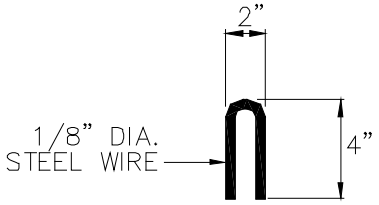

STAPLE DETAIL

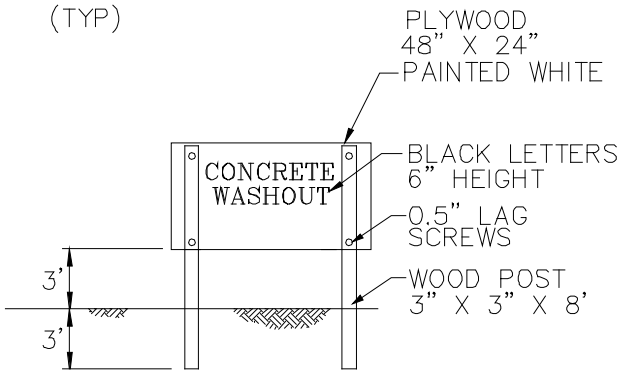

CONCRETE WASHOUT
SIGN DETAIL
(OR EQUIVALENT)

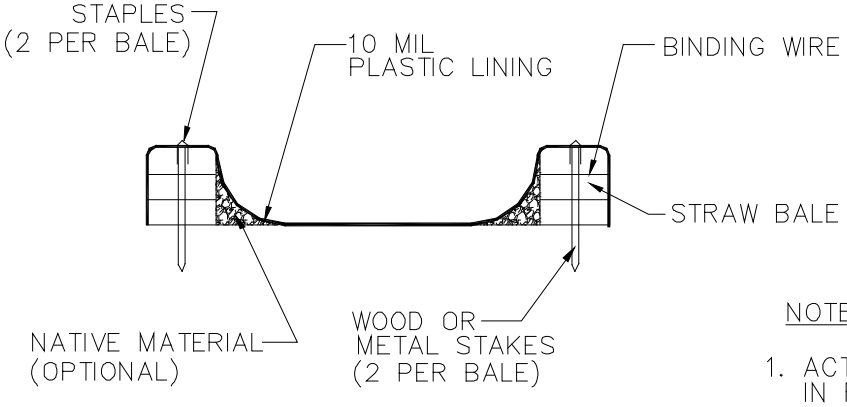

SECTION B–B
NOT TO SCALE

NOTES

1. ACTUAL LAYOUT DETERMINED IN FIELD.
2. THE CONCRETE WASHOUT SIGN SHALL BE INSTALLED WITHIN 30 FT. OF THE TEMPORARY CONCRETE WASHOUT FACILITY.

Sanitary/Septic Waste Management WM-9

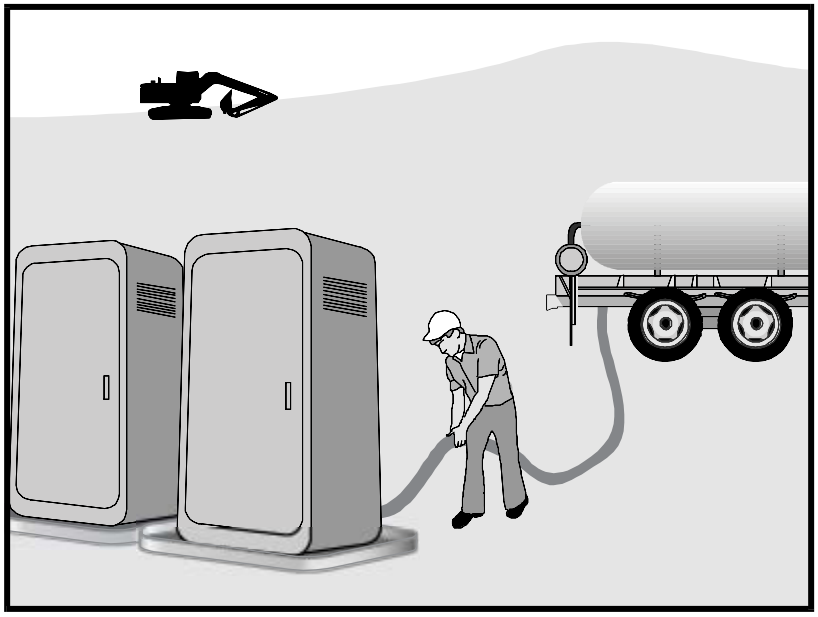

Categories

EC	Erosion Control	
SE	Sediment Control	
TC	Tracking Control	
WE	Wind Erosion Control	
NS	Non-Stormwater Management Control	
WM	Waste Management and Materials Pollution Control	☑

Legend:

☑ **Primary Category**

☒ **Secondary Category**

Targeted Constituents

Sediment	
Nutrients	☑
Trash	☑
Metals	
Bacteria	☑
Oil and Grease	
Organics	☑

Potential Alternatives

None

Description and Purpose

Proper sanitary and septic waste management prevent the discharge of pollutants to stormwater from sanitary and septic waste by providing convenient, well-maintained facilities, and arranging for regular service and disposal.

Suitable Applications

Sanitary septic waste management practices are suitable for use at all construction sites that use temporary or portable sanitary and septic waste systems.

Limitations

None identified.

Implementation

Sanitary or septic wastes should be treated or disposed of in accordance with state and local requirements. In many cases, one contract with a local facility supplier will be all that it takes to make sure sanitary wastes are properly disposed.

Storage and Disposal Procedures

- Temporary sanitary facilities should be located away from drainage facilities, watercourses, and from traffic circulation. If site conditions allow, place portable facilities a minimum of 50 feet from drainage conveyances and traffic areas. When subjected to high winds or risk of high winds, temporary sanitary facilities should be secured to prevent overturning.

If User/Subscriber modifies this fact sheet in any way, the CASQA name/logo and footer below must be removed from each page and not appear on the modified version.

- Temporary sanitary facilities must be equipped with containment to prevent discharge of pollutants to the stormwater drainage system of the receiving water.
- Consider safety as well as environmental implications before placing temporary sanitary facilities.
- Wastewater should not be discharged or buried within the project site.
- Sanitary and septic systems that discharge directly into sanitary sewer systems, where permissible, should comply with the local health agency, city, county, and sewer district requirements.
- Only reputable, licensed sanitary and septic waste haulers should be used.
- Sanitary facilities should be located in a convenient location.
- Temporary septic systems should treat wastes to appropriate levels before discharging.
- If using an onsite disposal system (OSDS), such as a septic system, local health agency requirements must be followed.
- Temporary sanitary facilities that discharge to the sanitary sewer system should be properly connected to avoid illicit discharges.
- Sanitary and septic facilities should be maintained in good working order by a licensed service.
- Regular waste collection by a licensed hauler should be arranged before facilities overflow.
- If a spill does occur from a temporary sanitary facility, follow federal, state and local regulations for containment and clean-up.

Education

- Educate employees, subcontractors, and suppliers on sanitary and septic waste storage and disposal procedures.
- Educate employees, subcontractors, and suppliers of potential dangers to humans and the environment from sanitary and septic wastes.
- Instruct employees, subcontractors, and suppliers in identification of sanitary and septic waste.
- Hold regular meetings to discuss and reinforce the use of sanitary facilities (incorporate into regular safety meetings).
- Establish a continuing education program to indoctrinate new employees.

Costs

All of the above are low cost measures.

Inspection and Maintenance

- BMPs must be inspected in accordance with General Permit requirements for the associated project type and risk level. It is recommended that at a minimum, BMPs be inspected weekly, prior to forecasted rain events, daily during extended rain events, and after the conclusion of rain events.
- Arrange for regular waste collection.
- If high winds are expected, portable sanitary facilities must be secured with spikes or weighed down to prevent over turning.
- If spills or leaks from sanitary or septic facilities occur that are not contained and discharge from the site, non-visible sampling of site discharge may be required. Refer to the General Permit or to your project specific Construction Site Monitoring Plan to determine if and where sampling is required.

References

Stormwater Quality Handbooks - Construction Site Best Management Practices (BMPs) Manual, State of California Department of Transportation (Caltrans), March 2003.

Stormwater Management for Construction Activities; Developing Pollution Prevention Plans and Best Management Practice, EPA 832-R-92005; USEPA, April 1992.

Liquid Waste Management WM-10

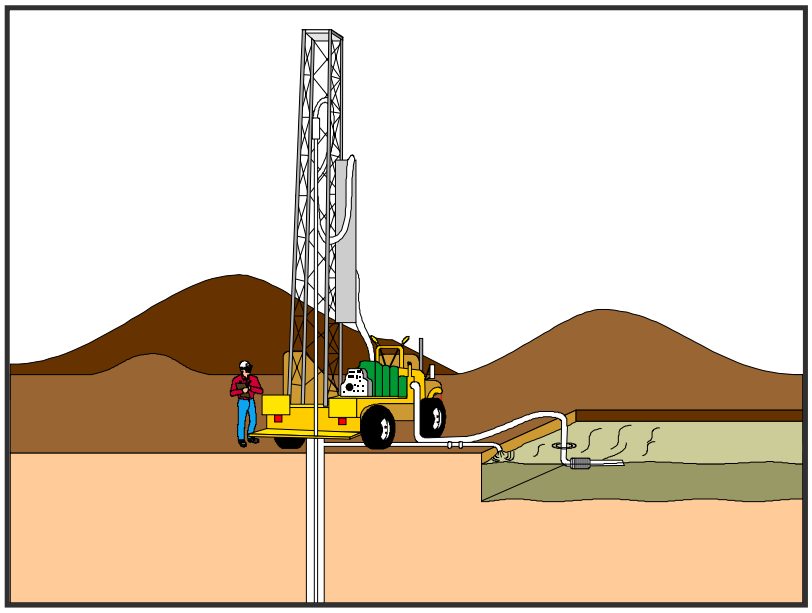

Categories

EC	Erosion Control	
SE	Sediment Control	
TC	Tracking Control	
WE	Wind Erosion Control	
NS	Non-Stormwater Management Control	
WM	Waste Management and Materials Pollution Control	☑

Legend:

☑ **Primary Objective**

☒ **Secondary Objective**

Targeted Constituents

Sediment	☑
Nutrients	☑
Trash	☑
Metals	☑
Bacteria	
Oil and Grease	☑
Organics	

Potential Alternatives

None

If User/Subscriber modifies this fact sheet in any way, the CASQA name/logo and footer below must be removed from each page and not appear on the modified version.

Description and Purpose

Liquid waste management includes procedures and practices to prevent discharge of pollutants to the storm drain system or to watercourses as a result of the creation, collection, and disposal of non-hazardous liquid wastes.

Suitable Applications

Liquid waste management is applicable to construction projects that generate any of the following non-hazardous by-products, residuals, or wastes:

- Drilling slurries and drilling fluids
- Grease-free and oil-free wastewater and rinse water
- Dredgings
- Other non-stormwater liquid discharges not permitted by separate permits

Limitations

- Disposal of some liquid wastes may be subject to specific laws and regulations or to requirements of other permits secured for the construction project (e.g., NPDES permits, Army Corps permits, Coastal Commission permits, etc.).
- Liquid waste management does not apply to dewatering operations (NS-2 Dewatering Operations), solid waste management (WM-5, Solid Waste Management), hazardous wastes (WM-6, Hazardous Waste Management), or

CASQA
CALIFORNIA STORMWATER QUALITY ASSOCIATION

concrete slurry residue (WM-8, Concrete Waste Management).

- Typical permitted non-stormwater discharges can include: water line flushing; landscape irrigation; diverted stream flows; rising ground waters; uncontaminated pumped ground water; discharges from potable water sources; foundation drains; irrigation water; springs; water from crawl space pumps; footing drains; lawn watering; flows from riparian habitats and wetlands; and discharges or flows from emergency fire fighting activities.

Implementation

General Practices

- Instruct employees and subcontractors how to safely differentiate between non-hazardous liquid waste and potential or known hazardous liquid waste.
- Instruct employees, subcontractors, and suppliers that it is unacceptable for any liquid waste to enter any storm drainage device, waterway, or receiving water.
- Educate employees and subcontractors on liquid waste generating activities and liquid waste storage and disposal procedures.
- Hold regular meetings to discuss and reinforce disposal procedures (incorporate into regular safety meetings).
- Verify which non-stormwater discharges are permitted by the statewide NPDES permit; different regions might have different requirements not outlined in this permit.
- Apply NS-8, Vehicle and Equipment Cleaning for managing wash water and rinse water from vehicle and equipment cleaning operations.

Containing Liquid Wastes

- Drilling residue and drilling fluids should not be allowed to enter storm drains and watercourses and should be disposed of.
- If an appropriate location is available, drilling residue and drilling fluids that are exempt under Title 23, CCR § 2511(g) may be dried by infiltration and evaporation in a containment facility constructed in conformance with the provisions concerning the Temporary Concrete Washout Facilities detailed in WM-8, Concrete Waste Management.
- Liquid wastes generated as part of an operational procedure, such as water-laden dredged material and drilling mud, should be contained and not allowed to flow into drainage channels or receiving waters prior to treatment.
- Liquid wastes should be contained in a controlled area such as a holding pit, sediment basin, roll-off bin, or portable tank.
- Containment devices must be structurally sound and leak free.
- Containment devices must be of sufficient quantity or volume to completely contain the liquid wastes generated.

- Precautions should be taken to avoid spills or accidental releases of contained liquid wastes. Apply the education measures and spill response procedures outlined in WM-4, Spill Prevention and Control.

- Containment areas or devices should not be located where accidental release of the contained liquid can threaten health or safety or discharge to water bodies, channels, or storm drains.

Capturing Liquid Wastes

- Capture all liquid wastes that have the potential to affect the storm drainage system (such as wash water and rinse water from cleaning walls or pavement), before they run off a surface.

- Do not allow liquid wastes to flow or discharge uncontrolled. Use temporary dikes or berms to intercept flows and direct them to a containment area or device for capture.

- Use a sediment trap (SE-3, Sediment Trap) for capturing and treating sediment laden liquid waste or capture in a containment device and allow sediment to settle.

Disposing of Liquid Wastes

- A typical method to handle liquid waste is to dewater the contained liquid waste, using procedures such as described in NS-2, Dewatering Operations, and SE-2, Sediment Basin, and dispose of resulting solids per WM-5, Solid Waste Management.

- Methods of disposal for some liquid wastes may be prescribed in Water Quality Reports, NPDES permits, Environmental Impact Reports, 401 or 404 permits, and local agency discharge permits, etc. Review the SWPPP to see if disposal methods are identified.

- Liquid wastes, such as from dredged material, may require testing and certification whether it is hazardous or not before a disposal method can be determined.

- For disposal of hazardous waste, see WM-6, Hazardous Waste Management.

- If necessary, further treat liquid wastes prior to disposal. Treatment may include, though is not limited to, sedimentation, filtration, and chemical neutralization.

Costs

Prevention costs for liquid waste management are minimal. Costs increase if cleanup or fines are involved.

Inspection and Maintenance

- Inspect and verify that activity–based BMPs are in place prior to the commencement of associated activities. While activities associated with the BMP are under way, inspect weekly during the rainy season and of two-week intervals in the non-rainy season to verify continued BMP implementation.

- Inspect BMPs subject to non-stormwater discharge daily while non-stormwater discharges occur.

- Remove deposited solids in containment areas and capturing devices as needed and at the completion of the task. Dispose of any solids as described in WM-5, Solid Waste Management.
- Inspect containment areas and capturing devices and repair as needed.

References

Stormwater Quality Handbooks - Construction Site Best Management Practices (BMPs) Manual, State of California Department of Transportation (Caltrans), November 2000.

Appendix I: BMP Inspection Form

DRAFT FOR BID PURPOSES ONLY

BMP INSPECTION REPORT

Date and Time of Inspection:			Date Report Written:	
Inspection Type: (Circle one)	Weekly *Complete Parts I,II,III and VII*	Pre-Storm *Complete Parts I,II,III,IV and VII*	During Rain Event *Complete Parts I, II, III, V, and VII*	Post-Storm *Complete Parts I,II,III,VI and VII*

Part I. General Information

Site Information

Construction Site Name:			
Construction stage and completed activities:			Approximate area of site that is exposed:
Photos Taken: (Circle one)	Yes	No	Photo Reference IDs:

Weather

Estimate storm beginning: (date and time)	Estimate storm duration: (hours)
Estimate time since last storm: (days or hours)	Rain gauge reading and location: (in)
Is a "Qualifying Event" predicted or did one occur (i.e., 0.5" rain with 48-hrs or greater between events)? (Y/N) If yes, summarize forecast:	

Exemption Documentation (explanation required if inspection could not be conducted). Visual inspections are not required outside of business hours or during dangerous weather conditions such as flooding or electrical storms.

Inspector Information

Inspector Name:	Inspector Title:
Signature:	Date:

DRAFT FOR BID PURPOSES ONLY

Part II. BMP Observations. Describe deficiencies in Part III.			
Minimum BMPs for Risk Level _____ Sites	Failures or other short comings (yes, no, N/A)	Action Required (yes/no)	Action Implemented (Date)
Good Housekeeping for Construction Materials			
Inventory of products (excluding materials designed to be outdoors)			
Stockpiled construction materials not actively in use are covered and bermed			
All chemicals are stored in watertight containers with appropriate secondary containment, or in a completely enclosed storage shed			
Construction materials are minimally exposed to precipitation			
BMPs preventing the off-site tracking of materials are implemented and properly effective			
Good Housekeeping for Waste Management			
Wash/rinse water and materials are prevented from being disposed into the storm drain system			
Portable toilets are contained to prevent discharges of waste			
Sanitation facilities are clean and with no apparent for leaks and spills			
Equipment is in place to cover waste disposal containers at the end of business day and during rain events			
Discharges from waste disposal containers are prevented from discharging to the storm drain system / receiving water			
Stockpiled waste material is securely protected from wind and rain if not actively in use			
Procedures are in place for addressing hazardous and non-hazardous spills			
Appropriate spill response personnel are assigned and trained			
Equipment and materials for cleanup of spills is available onsite			
Washout areas (e.g., concrete) are contained appropriately to prevent discharge or infiltration into the underlying soil			
Good Housekeeping for Vehicle Storage and Maintenance			
Measures are in place to prevent oil, grease, or fuel from leaking into the ground, storm drains, or surface waters			
All equipment or vehicles are fueled, maintained, and stored in a designated area with appropriate BMPs			
Vehicle and equipment leaks are cleaned immediately and disposed of properly			

DRAFT FOR BID PURPOSES ONLY

Part II. BMP Observations Continued. Describe deficiencies in Part III.			
Minimum BMPs for Risk Level _____ Sites	Adequately designed, implemented and effective (yes, no, N/A)	Action Required (yes/no)	Action Implemented (Date)
Good Housekeeping for Landscape Materials			
Stockpiled landscape materials such as mulches and topsoil are contained and covered when not actively in use			
Erodible landscape material has not been applied 2 days before a forecasted rain event or during an event			
Erodible landscape materials are applied at quantities and rates in accordance with manufacturer recommendations			
Bagged erodible landscape materials are stored on pallets and covered			
Good Housekeeping for Air Deposition of Site Materials			
Good housekeeping measures are implemented onsite to control the air deposition of site materials and from site operations			
Non-Stormwater Management			
Non-Stormwater discharges are properly controlled			
Vehicles are washed in a manner to prevent non-stormwater discharges to surface waters or drainage systems			
Streets are cleaned in a manner to prevent unauthorized non-stormwater discharges to surface waters or drainage systems.			
Erosion Controls			
Wind erosion controls are effectively implemented			
Effective soil cover is provided for disturbed areas inactive (i.e., not scheduled to be disturbed for 14 days) as well as finished slopes, open space, utility backfill, and completed lots			
The use of plastic materials is limited in cases when a more sustainable, environmentally friendly alternative exists.			
Sediment Controls			
Perimeter controls are established and effective at controlling erosion and sediment discharges from the site			
Entrances and exits are stabilized to control erosion and sediment discharges from the site			
Sediment basins are properly maintained			
Linear sediment control along toe of slope, face of slope an at grade breaks (Risk Level 2 & 3 Only)			
Limit construction activity to and from site to entrances and exits that employ effective controls to prevent offsite tracking (Risk Level 2 & 3 Only)			

NOT TO BE USED FOR BID PURPOSES ONLY

Ensure all storm, drain inlets and perimeter controls, runoff control BMPs and pollutants controls at entrances and exits are maintained and protected from activities the reduce their effectiveness (Risk Level 2 & 3 Only)			
Inspect all immediate access roads daily (Risk Level 2 & 3 Only)			
Run-On and Run-Off Controls			
Run-on to the site is effectively managed and directed away from all disturbed areas.			
Other			
Are the project SWPPP and BMP plan up to date, available on-site and being properly implemented?			

Part III. Descriptions of BMP Deficiencies

Deficiency	**Repairs Implemented: Note - Repairs must begin within 72 hours of identification and, complete repairs as soon as possible.**	
	Start Date	**Action**
1.		
2.		
3.		
4.		

Part IV. Additional Pre-Storm Observations. Note the presence or absence of floating and suspended materials, sheen, discoloration, turbidity, odors, and source(s) of pollutants(s).

	Yes, No, N/A
Do stormwater storage and containment areas have adequate freeboard? If no, complete Part III.	
Are drainage areas free of spills, leaks, or uncontrolled pollutant sources? If no, complete Part VII and describe below.	
Notes:	
Are stormwater storage and containment areas free of leaks? If no, complete Parts III and/or VII and describe below.	

DRAFT FOR BID PURPOSES ONLY

Notes:	

Part V. Additional During Storm Observations. If BMPs cannot be inspected during inclement weather, list the results of visual inspections at all relevant outfalls, discharge points, and downstream locations. Note odors or visible sheen on the surface of discharges. Complete Part VII (Corrective Actions) as needed.	
Outfall, Discharge Point, or Other Downstream Location	
Location	Description
Location	Description
Location	Description
Location	Description
Location	Description
Location	Description
Location	Description
Location	Description

DRAFT FOR BID PURPOSES ONLY

Part VI. Additional Post-Storm Observations. **Visually observe (inspect) stormwater discharges at all discharge locations within two business days (48 hours) after each qualifying rain event, and observe (inspect) the discharge of stored or contained stormwater that is derived from and discharged subsequent to a qualifying rain event producing precipitation of ½ inch or more at the time of discharge. Complete Part VII (Corrective Actions) as needed.**	
Discharge Location, Storage or Containment Area	**Visual Observation**

Part VII. Additional Corrective Actions Required. **Identify additional corrective actions not included with BMP Deficiencies (Part III) above. Note if SWPPP change is required.**	
Required Actions	**Implementation Date**

DRAFT FOR BID PURPOSES ONLY

Appendix J: Project Specific Rain Event Action Plan Template

DRAFT FOR BID PURPOSES ONLY

Rain Event Action Plan (REAP)

Date of REAP		**WDID Number:**	
Date Rain Predicted to Occur:		**Predicted % chance of rain:**	

Predicted Rain Event Triggered Actions

Below is a list of suggested actions and items to review for this project. Each active Trade should check all material storage areas, stockpiles, waste management areas, vehicle and equipment storage and maintenance, areas of active soil disturbance, and areas of active work to ensure the proper implementation of BMPs. Project-wide BMPs should be checked and cross-referenced to the BMP progress map.

Trade or Activity	Suggested action(s) to perform / item(s) to review prior to rain event
❑ Information & Scheduling	❑ Inform trade supervisors of predicted rain ❑ Check scheduled activities and reschedule as needed ❑ Alert erosion/sediment control provider ❑ Alert sample collection contractor (if applicable) ❑ Schedule staff for extended rain inspections ❑ Check Erosion and Sediment Control (ESC) material stock ❑ Review BMP progress map ❑ Other:_____ ❑ _____ ❑ _____
❑ Material storage areas	❑ Material under cover or in sheds (ex: treated woods and metals) ❑ Perimeter control around stockpiles ❑ Other:_____ ❑ _____ ❑ _____
❑ Waste management areas	❑ Dumpsters closed ❑ Drain holes plugged ❑ Recycling bins covered ❑ Sanitary stations bermed and protected from tipping ❑ Other:_____ ❑ _____ ❑ _____
❑ Trade operations	❑ Exterior operations shut down for event (e.g., no concrete pours or paving) ❑ Soil treatments (e.g., fertilizer) ceased within 24 hours of event ❑ Materials and equipment (e.g., tools) properly stored and covered ❑ Waste and debris disposed in covered dumpsters or removed from site ❑ Trenches and excavations protected ❑ Perimeter controls around disturbed areas ❑ Fueling and repair areas covered and bermed ❑ Other:_____ ❑ _____ ❑ _____
❑ Site ESC BMPs	❑ Adequate capacity in sediment basins and traps ❑ Site perimeter controls in place ❑ Catch basin and drop inlet protection in place and cleaned ❑ Temporary erosion controls deployed ❑ Temporary perimeter controls deployed around disturbed areas and stockpiles ❑ Roads swept; site ingress and egress points stabilized ❑ Other:_____ ❑ _____ ❑ _____
❑ Concrete rinse out area	❑ Adequate capacity for rain ❑ Wash-out bins covered ❑ Other:_____ ❑ _____ ❑ _____
❑ Spill and drips	❑ All incident spills and drips, including paint, stucco, fuel, and oil cleaned ❑ Drip pans emptied ❑ Other:_____ ❑ _____

DRAFT FOR BID PURPOSES ONLY

❑ Other / Discussion / Diagrams	❑ _____ ❑ _____ ❑ _____ ❑ _____ ❑ _____ ❑ _____ ❑ _____ ❑ _____ ❑ _____ ❑ _____ ❑ _____ ❑ _____ ❑ _____

Attach a printout of the weather forecast from the NOAA website to the REAP.

I certify under penalty of law that this Rain Event Action Plan (REAP) will be performed in accordance with the General Permit by me or under my direction or supervision in accordance with a system designed to assure that qualified personnel properly gathered and evaluated the information submitted. Based on my inquiry of the persons who manage the system, or those persons directly responsible for gathering the information, the information submitted is, to the best of my knowledge and belief, true, accurate, and complete. I am aware that there are significant penalties for submitting false information, including the possibility of fine and imprisonment for knowing violations.

_____Date: _____
Qualified SWPPP Practitioner (Use ink please)

DRAFT FOR BID PURPOSES ONLY

Appendix K: Training Reporting Form

DRAFT FOR BID PURPOSES ONLY

Trained Contractor Personnel Log

Stormwater Management Training Log and Documentation

Project Name: _____

WDID #: _____

Stormwater Management Topic: (check as appropriate)

☐ Erosion Control ☐ Sediment Control

☐ Wind Erosion Control ☐ Tracking Control

☐ Non-Stormwater Management ☐ Waste Management and Materials Pollution Control

☐ Stormwater Sampling

Specific Training Objective: _____

Location: _____ Date: _____

Instructor:_____ Telephone: _____

Course Length (hours): _____

Attendee Roster (Attach additional forms if necessary)

Name	Company	Phone

As needed, add proof of external training (e.g., course completion certificates, credentials for QSP, QSD).

DRAFT FOR BID PURPOSES ONLY

SWPPP TRAINING AND QUALIFICATIONS FORM (Store Completed Form in Appendix K)

Project Name Campus Dining Facility (RICK Job# 17443)

WDID Number

Qualified SWPPP Developer: Log of SWPPP Training Attended for Cristi E. Fry, P.E.

Date of Training Workshop	Title of Training Workshop	Location of Training Workshop
February 10, 2000	Central Coast Regional Water Quality Board's 2000 Erosion and Sediment Control for Construction Projects Workshop	Central Coast RWQCB
October 9, 2003	Addressing Urban Drainage	Bakersfield, CA
November 18, 2005	Moving Toward Sustainability: Advancing Low Impact Development, Smart Growth, and Integrated Regional Water Management on the Central Coast	San Luis Obispo, CA
January 13, 2010	Low Impact Development & Hydromodification Status and Direction	APWA San Luis Obispo, CA
May 5, 2010	Erosion and Sediment Control & Low Impact Development	Central Coast RWQCB
December 12, 2011	EnviroTech 3-Hour Sampling and Analysis Course	EnviroTech Services

CERTIFICATE OF TRAINING

CALIFORNIA CONSTRUCTION GENERAL PERMIT

QUALIFIED SWPPP DEVELOPER (QSD)
AND
QUALIFIED SWPPP PRACTITIONER (QSP)

Cristi Fry

Oct 16, 2015 - Oct 21, 2017

Certificate # 21373

CASQA
CALIFORNIA STORMWATER QUALITY ASSOCIATION

California Stormwater Quality Association and
California Construction General Permit Training Team

CERTIFICATE OF TRAINING

CALIFORNIA CONSTRUCTION GENERAL PERMIT

QUALIFIED SWPPP DEVELOPER (QSD)
AND
QUALIFIED SWPPP PRACTITIONER (QSP)

Cristi Fry

Oct 10, 2011 - Oct 10, 2013

Certificate # 21373

CASQA
CALIFORNIA STORMWATER QUALITY ASSOCIATION

California Stormwater Quality Association and
California Construction General Permit Training Team

CERTIFICATE OF COMPLETION

THIS CERTIFICATE IS AWARDED TO

Jon Goldstien

FOR ATTENDING THE

EnviroTech 3-Hour Sampling and Analysis Course

PRESENTED BY

ENVIROTECH SERVICES

David Franklin

12/12/2011

Staying current is important. EnviroTech Services recommends refresher training at least every two years.

www.envirotechservices.biz

(916) 849-2028

APPROVED TRAINING COURSE FOR QUALIFIED SWPPP DEVELOPER (QSD)

This Certifies That

Cristi Fry

Has Completed the 20.0 Hour Course
Held on September 14, 15, 16, 2011

Presented by:

JL STORMWATER CONSULTANTS, INC. AND

STRYKER SLEV LAW GROUP

Jane E. Ledford

Jane E. Ledford, CPSWQ, QSD, QSP, ToR

Dennis J. Stryker, Esq

Central Coast Regional
Water Quality Control Board
and
California Department of Transportation

Present this

Certificate of Completion

to

Cristi Fry

for

Erosion and Sediment Control & Low Impact Development

John McCullah, CPESC

Ed Othmer, PE, CPESC, CPSWQ

Darla Inglis, PhD

May 5, 2010

December 4, 2009
Express Newsletter

AMERICAN PUBLIC WORKS ASSOCIATION

APWA

CALIFORNIA CENTRAL COAST CHAPTER

JANUARY 2010 PROGRAM

What's new in this issue?

Historian's Corner

Chapter Historian, Lester Carter, fills us in on the early development of Central Coast Railroad. (Page 2)

Announcement

APWA Central Coast Chapter seeks interested candidates for the position of Secretary (Page 3)

Employment Opportunities

The City of Goleta seeks an Environmental Services Coordinator. (Page 3)

Oakdale Irrigation District seeks a Water Operations Manager. (Page 4)

Marketing Opportunity

2010 Professional Directory Advertisments (Page 5)

LOW IMPACT DEVELOPMENT & HYDROMODIFICATION STATUS AND DIRECTION

Speaker: Mark Hutchinson
Environmental Programs Manager
San Luis Obispo County
Department of Public Works

Topic: Hydromodification describes the alteration of the hydrologic characteristics of natural water ways which in turn could cause degradation of streamside habitats and water resources. Central coast agencies are working in concert with the Regional Water Quality Control Board to develop regional hydromodification standards for new and redevelopment that go beyond traditional Low Impact Development techniques.

Location: Cannon Corporation
1050 Southwood Drive
San Luis Obispo, CA 93401

Date: January 13, 2010

Time: 12:00 PM

Dues: $25

To RSVP for this, or any other events, please visit our website at http://centralcoast.apwa.net/.

Moving Toward Sustainability:

Advancing Low Impact Development, Smart Growth, and Integrated Regional Water Management On the Central Coast

Friday, November 18, 2005
8:30 AM – 4:30 PM
Embassy Suites
San Luis Obispo

WORKSHOP AGENDA

8:30 AM – 9:00 AM – Registration

9:00 AM – 9:05 AM – Welcome – James Patterson, Supervisor, District 5, County of San Luis Obispo

9:05 AM – 9:15 AM - *"Sustainability – Making the Connection: Integrating LID, Smart Growth, and IRWM Planning"* – Paavo Ogren, Deputy Director, Department of Public Works, County of San Luis Obispo with video introduction by **Shirley Bianchi,** Supervisor, District 2, County of San Luis Obispo

9:15 AM – 9:20 AM - *"Why LID, Smart Growth, and IRWM Planning are Important for the Central Coast"* – Roger Briggs, Executive Officer, Central Coast Regional Water Quality Control Board

9:30 AM – 10:45 AM - *"Success Stories: Seattle Case Study"* – Denise Andrews, Darla Inglis, and Tracy Tackett, City of Seattle. Conceptual and engineering LID design, social and political hurdles, solutions, and lessons learned from the City of Seattle's experience will be presented.

10:45 AM – 11:00 AM Break

11:00 AM – 11:45 AM - *"Success Stories from Prince Georges County, Maryland, and Village Homes, Davis, CA"* – Margarita Hill, Cal Poly, Department Head, Landscape Architecture Department, College of Architecture and Environmental Design. LID practices have multiple benefits especially when they are related to integrated strategies that are linked to multiple goals and objectives. This session will look at how LID strategies have been tied to community revitalization strategies in Maryland supporting smart growth efforts in Prince George's County. It will also examine how LID strategies in Davis, CA were used to give form to a new residential development that has become a national icon of sustainable development practices. Lessons learned from both of these examples will be highlighted.

Certificate of Attendance

CRISTI FRY

This is to certify attendance at the "Addressing Urban Drainage" seminar presented October 9, 2003 in Bakersfield, CA.

Lorman Business Center, Inc. is a State Bar of California approved MCLE sponsor and this course qualifies for 6.00 CLE hours. Sponsor # 1179.

Lorman Business Center, Inc. is a recognized provider registered with the PMI Registered Educational Provider Program (PMI R.E.P.). Lorman Business Center, Inc. accepts and adheres to all PMI R.E.P. Program policies, requirements and rules concerning the provision of professional education activities and materials. This course qualifies for 6.00 PDUs. Program Number: 000135.

"Lorman Business Center, Inc." is registered with the AIA Continuing Education System (AIA/CES). This 6.00 hour program offers 6.00 Learning Unit hours, which will be reported directly to the AIA/CES for AIA members. Provider Number: J206. Program Number: 100144.

Kari J. Campbell, CE Coordinator

LORMAN
EDUCATION SERVICES
A DIVISION OF LORMAN BUSINESS CENTER, INC
2510 ALPINE ROAD • EAU CLAIRE, WI 54703 • TELEPHONE (715) 833-3940 FAX (715) 833 3944
WEB SITE: www.lorman.com E-MAIL: ceinfo@lorman.com

(Please retain for your records.)

330901

Certificate of Completion

Presented to:

Central Coast
RWQCB

Cristi Fry

Gray Davis
Governor

For completion of the Central Coast Regional Water Quality Board's 2000 Erosion and Sediment Control for Construction Projects Workshop

Roger W. Briggs 2/10/00
Roger W. Briggs
Executive Officer

Jennifer J. Bitting 2/10/00
Jennifer Bitting
Water Resources Control Engineer

APPROVED TRAINING COURSE FOR QUALIFIED SWPPP DEVELOPER (QSD)

This Certifies That

Cristi Fry

Has Completed the 20.0 Hour Course
Held on September 14, 15, 16, 2011

Presented by:

JL STORMWATER CONSULTANTS, INC. AND

STRYKER SLEV LAW GROUP

Jane E. Ledford

Jane E. Ledford, CPSWQ, QSD, QSP, ToR

Dennis J. Stryker, Esq

Appendix L: Responsible Parties

DRAFT FOR BID PURPOSES ONLY

Identification of QSP

Project Name: _____

WDID #: _____

The following are QSPs associated with this project

Name of Personnel[(1)]	Company	As of Date

(1) If additional QSPs are required on the job site add additional lines and include information here

DRAFT FOR BID PURPOSES ONLY

Qualified SWPPP Developer

Approval and Certification of the Stormwater Pollution Prevention Plan

Project Name:	*Campus Dining Facility, San Luis Obispo, WDID #*
Project Number/ID	*Rick Engineering Job No. 17443*

"This Stormwater Pollution Prevention Plan and Attachments were prepared under my direction to meet the requirements of the California Construction General Permit (SWRCB Orders No. 2009-009-DWQ as amended by Order 2010-0014-DWQ and Order 2012-0006-DWQ). I certify that I am a Qualified SWPPP Developer in good standing as of the date signed below."

QSD Signature	6/15/2016 *Date*
Cristi E. Fry *QSD Name*	21373 *QSD Certificate Number*
Principal Project Manager *Title and Affiliation*	805-544-0707 *Telephone Number*
cfry@rickengineering.com *Email*	

SWPPP TRAINING AND QUALIFICATIONS FORM (Store Completed Form in Appendix L)

Project Name Campus Dining Facility (RICK Job# 17443)

WDID Number

Qualified SWPPP Developer (QSD) Qualifications for Cristi E. Fry

The Qualified SWPPP Developer (QSD) holds the following registration(s) and/or certification(s):
(Check all that apply and include a copy of the registration(s) and/or certification(s)):

- ☒ A California registered professional civil engineer;
- ☐ A California registered professional geologist or engineering geologist;
- ☐ A California registered landscape architect;
- ☐ A professional hydrologist registered through the American Institute of Hydrology;
- ☐ A Certified Professional in Erosion and Sediment Control (SPESC)™ registered through Enviro Cert, International, Inc.;
- ☐ A Certified Professional in Storm Water Quality (CPSWQ) ™ registered through Enviro Cert, International, Inc.; or
- ☐ A professional in erosion and sediment control registered through the National Institute for Certification in Engineering Technologies (NICET).

-- AND --

The QSD attended formal State Water Board sponsored or approved QSD training course on the following date *:

Date: September 14, 15 ,16, 2011

Name of Course: Approved Training Course For Qualified SWPPP Developer (QSD)

Presented by: JL Stormwater Consultants, INC. and Stryker Slev Law Group

A copy of the certification of attendance is attached.

* A requirement as of September 2, 2011

SWPPP TRAINING AND QUALIFICATIONS FORM (Store Completed Form in Appendix K)

Project Name Campus Dining Facility (RICK Job# 17443)

WDID Number

Qualified SWPPP Practitioner (QSP) Qualifications for Cristi E. Fry

The Qualified SWPPP Practitioner (QSP)* holds the following registration(s) and/or certification(s):
Check all that apply and include a copy of the registration(s) and/or certification(s):

☒ Qualified SWPPP Developer (QSD)

☐ A certified erosion, sediment and storm water inspector registered through Enviro Cert, International, Inc. (CESSWI); or

☐ A certified inspector of sediment and erosion control registered through Certified Inspector of Sediment and Erosion Control, Inc. (CISEC)

* A requirement as of September 2, 2011, the QSP shall be either a QSD or have one of the above certifications:

-- AND --

The QSP attended formal State Water Board sponsored or approved QSP training course on the following date **:

Date: September 14, 15 ,16, 2011

Name of Course: Approved Training Course For Qualified SWPPP Developer (QSD)

Presented by: JL Stormwater Consultants, INC. and Stryker Slev Law Group

A copy of the certification of attendance is attached.

** A requirement as of September 2, 2011

Appendix M: Contractors and Subcontractors

Contractor(s) and subcontractor(s) will be named at a later time.

DRAFT FOR BID PURPOSES ONLY

Appendix N: Construction General Permit

For the complete Construction General Permit, see separate binder onsite.

DRAFT FOR BID PURPOSES ONLY