BOOT BARN

#161R COLLEGE STATION, TX

ABBREVIATIONS

A.F.F.	ABOVE FINISHED FLOOR
A.F.C.	ABOVE FINISHED CEILING
AC.T.	ACOUSTICAL TILE
ADJ.	ADJACENT
ALT.	ALTERNATE
APPROX.	APPROXIMATE
ARCH.	ARCHITECT(URAL)
BLK.	BLOCK
BLKG.	BLOCKING
BD.	BOARD
B.O.	BOTTOM OF
CLG.	CEILING
CLG. HT.	CEILING HEIGHT
CLR.	CLEAR
CLO.	CLOSET
COL.	COLUMN
C.M.U.	CONCRETE MASONRY UNIT
CONST.	CONSTRUCTION
COORD.	COORDINATE
CORR.	CORRIDOR
CTR.	CENTER
C.T.	CERAMIC TILE
DET.	DETAIL
DIAG.	DIAGONAL
DIA.	DIAMETER
DIF.	DIFFUSER
DIM.	DIMENSION
DISP.	DISPENSER
DR.	DOOR
DWG.	DRAWING
ELEC.	ELECTRICAL
E.P.	ELECTRIC PANEL
ELEV.	ELEVATION
E.W.C.	ELECTRIC WATER COOLER
EXIST.	EXISTING
EQUIP.	EQUIPMENT
EXH.	EXHAUST
EXP. JT.	EXPANSION JOINT
E.I.F.S.	EXTERIOR INSULATION FINISHING SYSTEM
FIN.	FINISH(ED)
F.E.	FIRE EXTINGUISHER
FP.	FIREPROOFING
F.D.	FLOOR DRAIN
FLUOR.	FLUORESCENT
F.R.T.	FIRE RETARDANT TREATED
FURR.	FURRED, FURRING
GA.	GAUGE
GALV.	GALVANIZED
G.C.	GENERAL CONTRACTOR
G.F.R.G.	GLASS FIBER REINFORCED GYPSUM
GYP. BD.	GYPSUM BOARD
H.V.A.C.	HEATING/VENTILATION/AIR CONDITIONING
H.C.	HOLLOW CORE
H.M.	HOLLOW METAL
HORIZ.	HORIZONTAL
H.W.	HOT WATER
I.L.O.	IN LIEU OF
IN. (")	INCH
INST.	INSTALL(ED)
INT.	INTERIOR
JT.	JOINT
MFR.	MANUFACTURER
MAT'L.	MATERIAL
MECH.	MECHANICAL
MTL.	METAL
MEZZ.	MEZZANINE
MIN. (')	MINIMUM (MINUTE)
MISC.	MISCELLANEOUS
N.I.C.	NOT IN CONTRACT
N.T.S.	NOT TO SCALE
NO. or #	NUMBER
O.F.C.I.	OWNER FURNISHED, CONTRACTOR INSTALLED
O.F.O.I.	OWNER FURNISHED, OWNER INSTALLED
O.C.	ON CENTER(S)
OPP.	OPPOSITE
P.G.	PAINT GRADE
P.L.	PLASTIC LAMINATE
PLBG.	PLUMBING
PWD.	PLYWOOD
P.O.S.	POINT-OF-SALE
PVC.	POLYVINYL CHLORIDE
P.A.	PROJECT MANAGER
R.A.	RETURN AIR
R.C.P.	REFLECTED CEILING PLAN
REF.	REFERENCE
REG.	REGISTER
REINF.	REINFORCE(D), (ING)
REQ'D. (REQ.)	REQUIRED
REV.	REVISION(S), REVISED
R.O.	ROUGH OPENING
SHT.	SHEET
SIM.	SIMILAR
S.C.	SOLID CORE
S.S.	STAINLESS STEEL
STD.	STANDARD
STL.	STEEL
STO.	STORAGE
S.D.	STORM DRAIN
STRUCT.	STRUCTURE, STRUCTURAL
SUPP.	SUPPLY, SUPPLIED
SUSP.	SUSPENDED
T.B.D.	TO BE DETERMINED
TEL.	TELEPHONE
T.O.	TOP OF
T.S.	TUBE STEEL
TYP.	TYPICAL
U.N.O.	UNLESS NOTED OTHERWISE
VERT.	VERTICAL
VEST.	VESTIBULE
V.C.T.	VINYL COMPOSITION TILE
V.I.F.	VERIFY IN FIELD
W.C.	WATER CLOSET
WP.	WATERPROOF(ING)
WS.	WEATHERSTRIPPING
W/	WITH
W/O	WITHOUT
WD.	WOOD

GRAPHIC SYMBOLS

DETAIL NUMBER	3 A100
SHEET WHERE DETAIL IS SHOWN	
SECTION CUT	3 A100
BUILDING CROSS SECTION	4 A100
ELEVATION	4 A100
ROOM NUMBER	ROOM
KEY NOTE	2
PARTITION TYPE	2
DOOR NUMBER	4
ELEVATION BENCHMARK	
REVISION NUMBER	2

CODE REVIEW

CODES:

BUILDING:	2018 IBC
PLUMBING:	2018 IPC
MECHANICAL:	2018 IMC
FIRE:	2018 IFC
ELECTRICAL:	2017 NEC
ENERGY:	2018 IECC

CONSTRUCTION TYPE: IIB

USE GROUP CLASSIFICATION: M (MERCANTILE)

OCCUPANCY LOADS:

SALES AREA:	12,050 SQ. FT.	DIVIDED BY 60	= 201
FITTING ROOMS:	224 SQ. FT.	DIVIDED BY 60	= 4
STOCKROOM:	2,611 SQ. FT.	DIVIDED BY 300	= 9

NON OCCUPIABLE SPACE(S):
RESTROOMS: 150 SQ. FT.

TOTAL OCCUPANTS = 214

TOTAL SQ. FT. = 15,035 SQ. FT.

FIRE SUPPRESSION SYSTEM: YES ☒ NO ☐

CONTACTS

ARCHITECT
ARCVISION, INC.
1950 CRAIG RD. – SUITE 300
ST. LOUIS, MO 63146
(314) 415-2400
CONTACT: CODY MEYERS

PROJECT MANAGER
BOOT BARN
15345 BARRANCA PKWY.
IRVINE, CA 92618
(512) 897-0716
CONTACT: KENT KELLER

OWNER
BOOT BARN
15345 BARRANCA PKWY.
IRVINE, CA 92618

LANDLORD/TENANT COORD.
THE RETAIL PROPERTIES GROUP
4635 SOUTHWEST FREEWAY, STE. 950
HOUSTON, TX, 77207
CONTACT: BRAD D. SONDOCK
OFFICE: (713) 784-6404
MOBILE: (281) 844-6404

BUILDING DEPARTMENT
CITY OF COLLEGE STATION BUILDING DEPARTMENT
1101 TEXAS AVE.
COLLEGE STATION, TX 77842
(979) 764-3754
CONTACT: BENJAMIN MCCARTY

CONTRACTOR NOTES

1. WRITTEN DIMENSIONS HOLD PREFERENCE OVER SCALED DIMENSIONS. DO NOT SCALE DRAWINGS. CONTRACTORS MUST VISIT JOB SITE TO VERIFY ALL EXISTING CONDITIONS AND DIMENSIONS BEFORE SUBMITTING BIDS. REPORT ANY DISCREPANCIES OF ANY CONDITIONS WHICH MAY INTERFERE WITH THE PROPER EXECUTION OF, TO TENANT REPRESENTATIVE. REPORT DISCREPANCIES DURING BIDDING PROCESS AND BEFORE START OF CONSTRUCTION. EXTRAS WILL NOT BE ALLOWED FOR JOB OR CODE COMPLIANCE CONDITIONS AFTER COMMENCEMENT OF CONSTRUCTION.
2. FIXTURE PLAN, FLOOR PLAN, INTERIOR ELEVATION SHEET, REFLECTED CEILING PLAN, AND DEMOLITION PLAN ARE OF THIS SPECIFIC STORE. DETAIL SHEETS A41, A42, A70, AND A71 ARE GENERAL AND MAY OR MAY NOT BE STORE-SPECIFIC.

FIRE ALARM AND SPRINKLER NOTE

1. ALL FIRE ALARM AND FIRE SPRINKLER REQUIREMENTS ARE THE RESPONSIBILITY OF THE GC TO VERIFY PRIOR TO BID AND PROVIDE AS REQUIRED BY LOCAL AUTHORITY.
2. FIRE ALARM AND FIRE SPRINKLER WORK ARE DEFERRED SUBMITTALS

SITE LOCATION PLAN

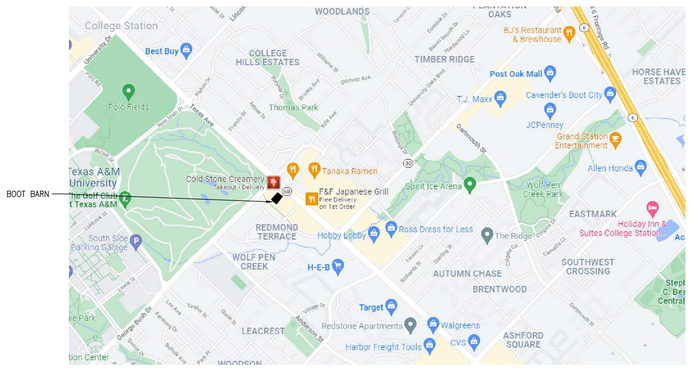

SPACE LOCATION PLAN

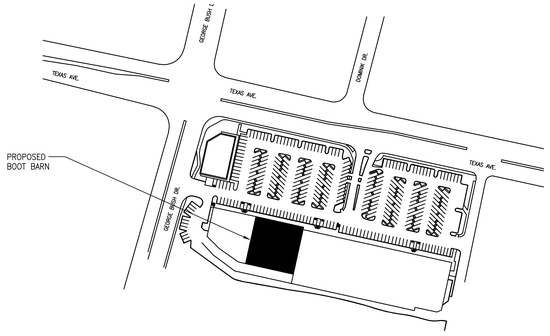

DRAWING INDEX

	SHT. NO.	DESCRIPTION	REV	DATE
1	T00	TITLE SHEET		
2	T10	SCHEDULES		
3	T20	ARCHITECTURAL SPECIFICATIONS		
4	T21	ARCHITECTURAL SPECIFICATIONS		
5	T22	ARCHITECTURAL SPECIFICATIONS		
6	T30	SITE PLAN		
7	D10	DEMOLITION PLAN		
8	A01	EGRESS PLAN		
9	A10	FLOOR PLAN		
10	A20	REFLECTED CEILING PLAN		
11	A21	REFLECTED CEILING DETAILS		
12	A30	FINISH AND IMAGE PLAN		
13	A40	FIXTURE PLAN		
14	A41	FIXTURE DETAILS		
15	A42	FIXTURE DETAILS		
16	A43	CASHWRAP DETAILS		
17	A50	EXTERIOR ELEVATIONS		
18	A60	INTERIOR ELEVATIONS		
19	A61	BACK OF HOUSE ELEVATIONS		
20	A62	BACK OF HOUSE ELEVATIONS		
21	A70	PARTITION TYPES AND DETAILS		
22	M00	MECHANICAL SPECIFICATIONS		
23	M10	MECHANICAL PLAN		
24	M20	MECHANICAL SCHEDULES		
25	E10	ELECTRICAL POWER PLAN		
26	E20	ELECTRICAL LIGHTING PLAN		
27	E30	ELECTRICAL SCHEDULES		
28	E40	ELECTRICAL SPECIFICATIONS		

REGISTRATION SEAL

ARCVISION
INCORPORATED
ARCHITECTURE • ENGINEERING • STORE PLANNING
SAINT LOUIS / DALLAS / LAS VEGAS / ORLANDO
1950 CRAIG ROAD, SUITE 300 ST. LOUIS, MO 63146
PH: (314) 415-2400 FAX: (314) 415-2300 www.arcv.com
TEXAS ENGINEERING FIRM #12793

BOOT BARN

BOOT BARN
1424 TEXAS AVE. CROSSING
COLLEGE STATION TX, 77840
STORE # 161R

REV	DATE	DESCRIPTION	NAME

PROJECT NO: 210627
DRAWN BY: KWL
CHECKED BY: CCM
ISSUE DATE: 02/04/22
TITLE SHEET

T00

VENDOR SCHEDULE

COMPANY	CONTACT	PHONE NUMBER	EMAIL ADDRESS
CARHARTT	GLORIA LEE	(415) 674-1022	glee@carhartt.com
CARHARTT	JEN KUPTZ	(313) 409-2523	jkuptz@carhartt.com
DDS/ BUNZL	JOSHUA BECKEY	(612) 813-5224	jbeckey@ddsjit.com
FLOOR AND DECOR	THERESA LAWRENCE	(404) 433-1326	theresa.lawrence@flooranddecor.com
ISS	CONNEE LISKA	(714) 894-3645	connee@isscorpus.com
ISS	KEITH KING	(562) 900-8683	keith@isscorpus.com
MIDWEST LIGHTING	ANO GULASARIAN	(323) 957-6031	ano@midwestlighting.com
PACIFIC NEON	RYAN DRURY	(800) 927-4762	ryan@pacificneon.com
SECURITAS ELETRONIC SECURITY	ROBERT BOOKOUT	(225) 252-9380	robert.bookout@securitases.com
SPACEWALL	SUE WALLER	(360) 886-1260	suewaller3@comcast.net
CPT	THOMAS WILDE	(630) 735-7013	bootbarn-project@cptnetworks.com
SHORT CIRCUIT (CAMERAS)	NIKKI MOBLEY	(816) 878-6742	nikki.mobley@seekc.com
VIRA INSIGHT	RICARDO SANTOS	(732) 877-6336	RSantos@virainsight.com

DOOR SCHEDULE

DOOR	LOCATION	SIZE	MATERIAL	FINISH	SUPP. BY	INST. BY	MATERIAL	FINISH	SUPP. BY	INST. BY	REMARKS
		DOOR					FRAME				
1	STOREFRONT ENTRY	(2) 3'-0" X 7'-0"	ALUM. & TEMP.GL.	MILL	G.C.	G.C.	ALUM.	MILL	G.C.	G.C.	KAWNEER OR APPROVED EQUAL TO MATCH EXISTING STOREFRONT SYSTEM
2	MANAGER'S OFFICE	EXISTING	–	P-6	–	–	–	P-6	–	–	G.C. TO REPAIR TO "LIKE NEW" CONDITION
3	STOCKROOM	(2) 3'-0" X 7'-0"	ALUM.	–	G.C.	G.C.	H.M.	P-6	G.C.	G.C.	ELIASON DOORS #SCP-6 IN #909-58 BLACK FORMICA WITH WINDOW LITE & HARDWARE
4	FITTING ROOMS	3'-0" X 6'-0" X 1¾"	S.C. WOOD	P-6	G.C.	G.C.	H.M.	P-6	G.C.	G.C.	FRAME OPENING IS 3'-0" X 7'-0". BOTTOM OF DOOR INSTALLED AT 1'-0" A.F.F.
5	RESTROOMS	3'-0" X 7'-0" X 1 ¾"	S.C P.G. WOOD	P-6	G.C.	G.C.	H.M.	P-6	G.C	G.C.	DOOR TO BE UNDERCUT 1" AS REQUIRED
6	REAR EXIT AT STOCKROOM	EXISTING	–	–	–	–	–	–	–	–	G.C. TO REPLACE HARDWARE
7	REAR EXIT AT SALES	EXISTING	–	–	–	–	–	–	–	–	G.C. TO REPLACE HARDWARE
8	ENTRY VESTIBULE TO SALES AREA	(2) 3'-0" X 7'-0"	ALUM. & TEMP.GL.	MILL	G.C.	G.C.	ALUM.	MILL	G.C.	G.C.	KAWNEER OR APPROVED EQUAL TO MATCH EXISTING STOREFRONT SYSTEM
9	ELECTRICAL ROOM	EXISTING	–	–	–	–	–	–	–	–	G.C. TO REPAIR TO "LIKE NEW" CONDITION, REPLACE HARDWARE AS REQUIRED
10	STOREFRONT ENTRY	EXISTING	–	–	–	–	–	–	–	–	G.C. TO REPAIR TO "LIKE NEW" CONDITION
11	UTILITY CLOSET	3'-0" X 7'-0" X 1 ¾"	S.C P.G. WOOD	P-1	G.C.	G.C.	H.M.	P-1	G.C	G.C.	
12	OVERHEAD DOOR	EXISTING	–	–	–	–	–	–	–	–	

NOTE: ALL LOCKS TO BE KEYED OR RE-KEYED TO BOOT BARN SPECIFICATIONS, COORDINATE WITH PM ON REQUIREMENTS AND QUANTITY OF COPIES
GC TO PROVIDE NON REMOVABLE PIN HINGES FOR ALL EXTERIOR DOORS IF NOT ALREADY EXISTING.

DOOR HARDWARE SCHEDULE

DOOR	DESCRIPTION	QUANTITY (EACH)	MODEL	FINISH	MANUFACTURER	SUPP. BY	INST. BY	REMARKS
1	HINGES	1½ PAIR	1279 - NRP	ANSI 626	HAGER	G.C.	G.C.	–
	PULL	1	TBF158	ANSI 630	ROCKWOOD	G.C.	G.C.	TYPE 12 MOUNTING
	PUSH BAR	1	SERIES 47, 36"	ANSI 630	ROCKWOOD	G.C.	G.C.	TYPE 8 MOUNTING
	CLOSER	1	PA-2313BC	ANSI 689	YALE	G.C.	G.C.	–
	THRESHOLD	1	2727A72	MILL ALUM.	PEMKO	G.C.	G.C.	–
	FLOOR STOP	1	FS438	ANSI 626	IVES	G.C.	G.C.	–
2	HINGES	1½ PAIR	1255	ANSI 626	HAGER	G.C.	G.C.	–
	LEVERSET	1	ND80PD RHO	ANSI 630	SCHLAGE	G.C.	G.C.	STOREROOM LOCK FUNCTION
	WALL BUMPER	1	WS402CCV	ANSI 626	IVES	G.C.	G.C.	–
3	HARDWARE BY DOOR MANUFACTURER							
4	HINGES	1½ PAIR	1255	ANSI 626	HAGER	G.C.	G.C.	–
	LEVERSET	1	ND53PD RHO	ANSI F109	SCHLAGE	G.C.	G.C.	ENTERANCE LOCK FUNCTION
	WALL BUMPER	1	WS402CCV	ANSI 626	IVES	G.C.	G.C.	–
5	HINGES	1½ PAIR	1255	ANSI 626	HAGER	G.C.	G.C.	–
	CLOSER	1	2713	ANSI 689	YALE	G.C.	G.C.	–
	LEVERSET	1	ND80PD RHO	ANSI 630	SCHLAGE	G.C.	G.C.	STOREROOM LOCK FUNCTION
	WALL BUMPER	–	WS402CCV	ANSI 626	IVES	G.C.	G.C.	–
	DEADBOLT	1	B571-626	ANSI 630	SCHLAGE	G.C.	G.C.	OCCUPIED/ UNOCCUPIED
6	HINGES	3 PAIR	1279 - NRP	ANSI 626	HAGER	G.C.	G.C.	–
	CLOSER	2	3513M	ANSI 689	YALE	G.C.	G.C.	–
	KICK PLATE	2	8400, 12" X 34"	ANSI 628	IVES	G.C.	G.C.	–
	PANIC HARDWARE	1	2670	ANSI 628	VON DUPRIN	G.C.	G.C.	–
	DOOR VIEWER	1	60MM ABS	SILVER ABS	NEW-VUE	G.C.	G.C.	WIDE-ANGLE, 2⅜"
	LATCH GUARD	2	341D	ANSI 630	HAGER	G.C.	G.C.	–
	THRESHOLD	1	2727A72	MILL ALUM.	PEMKO	G.C.	G.C.	–
	SWEEP	2	3151CN, 36"	MILL ALUM.	PEMKO	G.C.	G.C.	–
	WEATHERSEALS	2 SETS	HSS2000xS88BL	BLACK	PEMKO	G.C.	G.C.	–
7	HINGES	3 PAIR	1279 - NRP	ANSI 626	HAGER	G.C.	G.C.	–
	CLOSER	2	3513M	ANSI 689	YALE	G.C.	G.C.	–
	KICK PLATE	2	8400, 12" X 34"	ANSI 628	IVES	G.C.	G.C.	–
	PANIC HARDWARE	1	2670	ANSI 628	VON DUPRIN	G.C.	G.C.	–
	DOOR VIEWER	1	60MM ABS	SILVER ABS	NEW-VUE	G.C.	G.C.	WIDE-ANGLE, 2⅜"
	LATCH GUARD	2	341D	ANSI 630	HAGER	G.C.	G.C.	–
	THRESHOLD	1	2727A72	MILL ALUM.	PEMKO	G.C.	G.C.	–
	SWEEP	2	3151CN, 36"	MILL ALUM.	PEMKO	G.C.	G.C.	–
	WEATHERSEALS	2 SETS	HSS2000xS88BL	BLACK	PEMKO	G.C.	G.C.	–
8	NEW VESTIBULE DOORS TO MATCH EXISTING STOREFRONT SYSTEM							
9	HINGES	1½ PAIR	1255	ANSI 626	HAGER	G.C.	G.C.	–
	LEVERSET	1	ND80PD RHO	ANSI 630	SCHLAGE	G.C.	G.C.	STOREROOM LOCK FUNCTION
	WALL BUMPER	1	WS402CCV	ANSI 626	IVES	G.C.	G.C.	–
10	EXISTING TO REMAIN, G.C. TO PROVIDE NEW "BEST" 7-PIN CYLINDERS.							
11	HINGES	1½ PAIR	1255	ANSI 626	HAGER	G.C.	G.C.	–
	LEVERSET	1	ND80PD RHO	ANSI 630	SCHLAGE	G.C.	G.C.	STOREROOM LOCK FUNCTION
	WALL BUMPER	1	WS402CCV	ANSI 626	IVES	G.C.	G.C.	–
12	EXISTING TO REMAIN. G.C. TO REPLACE HARDWARE AS REQUIRED.							

FINISH SCHEDULE

TAG	DESCRIPTION	FINISH	MANUFACTURER	SUPP. BY	INST. BY	REMARKS
ACT-1	ACOUSTICAL TILE 2' X 4' X ⅝"	STYLE: RADAR CLIMAPLUS NO: 2410 COLOR: MIST (STANDARD COLOR)	USG CEILINGS	G.C.	G.C.	REPRESENTATIVE: MATT CRONIN, (248) 860-9900
	ACOUSTICAL TILE GRID	PROFILE: DX/DXL COLOR: MIST				
C-1A	CARPET TILE 24" X 24"	STYLE: CHENGDU NO: BT227 COLOR: 7885 CHOCOLATE	MOHAWK (BIGELOW)	TENANT	G.C.	REPRESENTATIVE: MICHELLE DAVIDSON, (248) 770-3636. G.C. TO INSTALL CARPET TILE 1/4 TURN TO ADJACENT CARPET TILE.
CG-1	CORNER GUARD 2" X 2" X 48"	STAINLESS STEEL	T.B.D.	G.C.	G.C.	
CS-1	CONCRETE SEALER	STYLE: SURPRO 44 MATTE ND SP-680 & SP-681	SURTEC	G.C.	G.C.	LOW-GLOSS, LOW-VOC 2-PART URETHANE PERMANENT SEAL/TOPCOAT. INSTALL AND MAINTAIN PER MANUFACTURER'S RECOMMENDATIONS.
EXT-1	STONE	STYLE: MOUNTAIN LEDGE COLOR: BITTEROOT	ELDORADO STONE OR APPROVED EQUAL	G.C.	G.C.	REPRESENTATIVE: (800) 745-8132.
EXT-2	20 GA. METAL PANEL 16" WIDE 40' MAX. LENGTH	STYLE: UNA-CLAD PROFILE: CFP-16F COLOR: REGAL RED SR	FIRESTONE METAL PRODUCTS	G.C.	G.C.	REPRESENTATIVE: LYNN RICE, (248) 442-0472
EXT-3	E.I.F.S.	COLOR: MATCH BOOT BARN BRAND RED TEXTURE: #534 SAND FINE	PAREX	G.C.	G.C.	REPRESENTATIVE: (866) 516-0061
EXT-4	20 GA METAL PANEL	STYLE: CORRUGATED METAL PANELS PROFILE: C COLOR: STANDARD "GREY" METAL	FIRESTONE METAL PRODUCTS	G.C.	G.C.	REPRESENTATIVE: LYNN RICE, (248) 442-0472
FRP-1	FIBERGLASS REINFORCED PLASTIC	STYLE: P100 COLOR: WHITE	MARLITE	G.C.	G.C.	SEE SIMILAR DETAIL 11/A70.
L-1	LAMINATE	NO: 8842-WR COLOR: WEATHERED ASH FINISH: WOODBRUSH	FORMICA	TENANT	G.C.	REPRESENTATIVE: (800) 367-6422
L-2	LAMINATE	NO: WZ0045T COLOR: VALIDATE WE DO FINISH: TEXTURE	NEVAMAR	G.C.	G.C.	REPRESENTATIVE: MARYBETH WATSON, (586) 863-6954
L-3	LAMINATE	NO: 845-58 COLOR: SPECTRUM RED FINISH: MATTE	FORMICA	G.C.	G.C.	REPRESENTATIVE: (800) 367-6422
L-4	LAMINATE	NO: PR2002T COLOR: PAPIER AU LAIT FINISH: TEXTURE (MATTE)	NEVAMAR	G.C.	G.C.	REPRESENTATIVE: MARYBETH WATSON, (586) 863-6954
L-5	LAMINATE	NO: 4871-60 COLOR: WESTERN SUEDE FINISH: MATTE	WILSONART	G.C.	G.C.	REPRESENTATIVE: (800) 433-3222
L-6	LAMINATE	NO: S0211 COLOR: INGOT GRAY FINISH: SUEDE	PIONITE	G.C.	G.C.	REPRESENTATIVE: MARYBETH WATSON, (586) 863-6954
M-1	CORRUGATED METAL PANELS	1/2" 22G90 (G.C. TO RUST/AGE METAL)	TBD	G.C.	G.C.	14'X2' SHEETS TO BE CUT IN FIELD AS NEEDED. PANELS TO BE INSTALLED VERTICALLY ON WALL.
P-1	PAINT	NO: 6695 COLOR: SLATE GRAY	BEHR	G.C.	G.C.	
P-2	PAINT	NO: AF-100 COLOR: PASHMINA	BENJAMIN MOORE OR APPROVED EQUAL			REPRESENTATIVE: (888) 236-6667 IF SPECIFIED PAINT MANUFACTURER IS UNAVAILABLE, CONTRACTOR TO COLOR MATCH AND SUBMIT SAMPLES FOR APPROVAL.
P-3	PAINT	COLOR TO MATCH PANTONE WHITE ALYSSUM 11-1001 TCX	SHERWIN WILLAMS OR APPROVED EQUAL	G.C.	G.C.	REPRESENTATIVE: (800) 321-8194 IF SPECIFIED PAINT MANUFACTURER IS UNAVAILABLE, CONTRACTOR TO COLOR MATCH AND SUBMIT SAMPLES FOR APPROVAL.
P-4	PAINT	NO: 2194-30 COLOR: BUTTERCUP	BENJAMIN MOORE OR APPROVED EQUAL			REPRESENTATIVE: (888) 236-6667 IF SPECIFIED PAINT MANUFACTURER IS UNAVAILABLE, CONTRACTOR TO COLOR MATCH AND SUBMIT SAMPLES FOR APPROVAL.
P-5	PAINT	NO: SW-6871 COLOR: "POSITIVE RED	SHERWIN WILLIAMS OR APPROVED EQUAL	G.C.	G.C.	REPRESENTATIVE: (800) 321-8194 IF SPECIFIED PAINT MANUFACTURER IS UNAVAILABLE, CONTRACTOR TO COLOR MATCH AND SUBMIT SAMPLES FOR APPROVAL.
P-6	PAINT	NO: TBD COLOR: BLACK				
P-9	PAINT	NO: SW-6000 COLOR: SNOWEALL				
P-10	PAINT	NO: SW-6004 COLOR: "MINK				
P-11	PAINT	NO: SW-6993 COLOR: "CHEERFUL				
PC-1	POWDER COAT	NO: PLFL91109PB COLOR: GINGER SPICE	IFS COATINGS	G.C.	G.C.	REPRESENTATIVE: BRANDON PHILLIPS, (616) 291-4126
PC-2	POWDER COAT	NO: PLBS90914PB COLOR: SMOKED BRONZE				
PT-1	PORCELAIN TILE COVE BASE 6" X 12" X ⅜"	STYLE: COTTO AMERICANA COVE BASE NO: AV173 COLOR: RED	CROSSVILLE	G.C.	G.C.	REPRESENTATIVE: KATHLEEN SOMERVELL, (248) 467-4362
	TEC GROUT	COLOR: #944 LIGHT CHOCOLATE				
PT-2	PORCELAIN TILE 12" X 12" X ⅜"	STYLE: COTTO AMERICANA NO: AV173 COLOR: RED				
	TEC GROUT	COLOR: #944 LIGHT CHOCOLATE				
SLT-1	SLATWALL 3" O.C.	STYLE: STEEL SLATWALL FINISH: #303 BRIGHT GALVANIZED	SPACEWALL	TENANT	G.C.	SUE WALLER: (360) 886-1260
SLT-2	SLATWALL 47½" X 95½"	STYLE: CONSTRUCTION SERIES - OSB FINISH: CLEAR COAT WITH SILVER METAL INSERTS	SPACEWALL	TENANT	G.C.	SUE WALLER: (360) 886-1260
UPH-1	UPHOLSTERY 54" WIDE	STYLE: LUGANO NO: UHM-LG-02 COLOR: MONTAGE	SOURCE ONE	G.C.	G.C.	REPRESENTATIVE: CHRISTY OPALKA, (313) 550-1714
VB-1	VINYL BASE 4" HIGH	COLOR: #201 CHOCOLATE	BURKE FLOORING	G.C.	G.C.	
VF-1A	VINYL TILE 9"x48"	STYLE: NATURAL CREATIONS ARBORART NO: TR064 COLOR: WOOD FINISH	ARMSTRONG	TENANT	G.C.	
WC-1	WALL COVERING 54" WIDE	PATTERN: BIRCH NO: G9339644 COLOR: WOODLAND	WOLF GORDON	TENANT	G.C.	REPRESENTATIVE: SCOTT HESLER, (317) 408-1723
WC-2	WALL COVERING 54" WIDE	PATTERN: T.B.D. NO: T.B.D. COLOR: T.B.D.	T.B.D.	TENANT	G.C.	
WC-3	WALLCOVERING	CUSTOM WALL COVERING - VENETIAN PLASTER	T.B.D.	TENANT	G.C.	
WD-2	FLAKEBOARD/STRANDBOARD	LIGHTLY SANDED TO SMOOTH SURFACE WITH CLEAR MATTE/SATIN FINISH	T.B.D.	TENANT	G.C.	
WD-4	WOOD (STAIN-GRADE PINE)			G.C.	G.C.	SEE ARCHITECTURAL PLANS FOR WOOD SIZE.
	STAIN	COLOR: CLASSIC GRAY 271 FINISH: SATIN COLOR	MINWAX	G.C.	G.C.	
WD-5	1x4 WOOD TRIM	–	–	G.C.	G.C.	
	STAIN	COLOR: EARLY AMERICAN	MINWAX	G.C.	G.C.	
WD-6	1x4 WOOD TRIM	–	–	G.C.	G.C.	
	STAIN	COLOR : DARK WALNUT	MINWAX	G.C.	G.C.	
RWD-1	RECLAIMED WOOD	–	–	TENANT	G.C.	

PAINT SHEEN SCHEDULE:

WALLS BELOW PAINT LINE:	EGGSHELL
WALL ABOVE PAINT LINE:	FLAT
CEILING/ DECK:	FLAT
DOORS & TRIM:	SEMI-GLOSS

FLAME SPREAD RATING:

INTERIOR EXIT STAIRWAYS, INTERIOR EXIT RAMPS AND EXIT PASSAGEWAYS:	CLASS B
CORRIDORS AND ENCLOSURE FOR EXIT ACCESS STAIRWAYS AND EXIT ACCESS RAMPS:	CLASS C
ROOMS AND ENCLOSED SPACES:	CLASS C

*SMOKE DEVELOPED INDEX OF FINISH MATERIALS SHALL BE NO GREATER THAN 450

ABBREVIATIONS:

L.L. – LAND LOARD
G.C. – GENERAL CONTRACTOR

RESPONSIBILITY SCHEDULE

DIVISION TITLE	N/A	EXISTING	FURNISH: TENANT	FURNISH: TENANT G.C.	FURNISH: LANDLORD	FURNISH: LL G.C.	INSTALL: TENANT	INSTALL: TENANT G.C.	INSTALL: LANDLORD	INSTALL: LL G.C.	REMARKS
DIVISION 1: GENERAL DATA											
PERMITS, FEES, AND INSURANCE				•				•			COORDINATE WITH PERMIT EXPEDITOR.
TEMPORARY UTILITIES				•				•			
PROFESSIONAL CLEANING				•				•			CLEANED PRIOR TO PUNCHLIST AND AGAIN BEFORE OPENING.
CERTIFICATE OF OCCUPANCY				•				•			
DUMPSTERS AND TRASH BINS				•				•			COORDINATE WITH MALL MANAGEMENT.
DIVISION 2: SITE WORK											
DEMOLITION				•				•			REFER TO SHEET D10 AND MEP DRAWINGS.
BARRICADE/BARRIER				•				•			COORDINATE WITH TENANT AND LANDLORD.
LANDSCAPING				•				•			
SITE LIGHTING				•				•			
CONCRETE PAVERS/SIDEWALK/PARKING/CURBS				•				•			
DIVISION 3: CONCRETE											
CONCRETE TOPPING/LEVELING/SLAB				•				•			AS REQUIRED
CONCRETE CUTTING AND CORING				•				•			
LATAPOXY TOPPING AND EAS				•				•			
PREPARATION AND SEALER				•				•			
FOOTINGS				•				•			
DIVISION 4: MASONRY											
STONE VENEER					•				•		
DIVISION 5: METALS											
METAL FRAMING				•				•			
DEMISING WALL METAL STUD FRAMING				•				•			
SHEET METAL BACKING				•				•			20 GAUGE MINIMUM. COORDINATE LOCATION WITH TENANT.
DIVISION 6: WOODS AND PLASTICS											
FIRE RETARDANT LUMBER/PLYWOOD				•				•			WHEN REQUIRED BY JURISDICTION.
UNLOAD AND UNCRATE FIXTURES				•				•			
CUSTOM WALL FIXTURES AND CABINETS			•					•			REFER TO FIXTURE PLAN.
CASHWRAP AND DISPLAY FIXTURES			•					•			REFER TO DRAWINGS FOR MORE INFORMATION.
CUSTOM FLOOR FIXTURES			•					•			REFER TO FIXTURE PLAN.
FITTING ROOM HOOKS				•				•			REFER TO DRAWINGS FOR MORE INFORMATION.
MERCHANDISE DISPLAY STANDARDS			•					•			REFER TO DRAWINGS FOR MORE INFORMATION.
ACCESSIBLE FITTING ROOM BENCH				•				•			REFER TO DRAWINGS FOR MORE INFORMATION.
DIVISION 7: THERMAL AND MOISTURE PROTECTION											
INSULATION				•				•			WHERE NOTED ON PLANS.
ROOF PENETRATION, CURB, AND FLASHING						•				•	REFER TO MECHANICAL DRAWINGS AND COORDINATE WITH LANDLORD.
SEALANTS AND CAULKING				•				•			
MOISTURE BARRIER				•				•			
FIRESTOPPING				•				•			INSTALL PER CODE REQUIREMENTS.
SPRAY-ON FIREPROOFING (PATCH AND REPAIR)				•				•			WHEN REQUIRED.
DIVISION 8: DOORS AND WINDOWS											
1. DOORS											
A. INTERIOR DOORS AND FRAMES				•				•			REFER TO DOOR SCHEDULE.
B. FITTING ROOM DOORS				•				•			REFER TO DOOR SCHEDULE.
C. RATED METAL DOORS AND FRAMES				•				•			REFER TO DOOR SCHEDULE.
D. REAR SERVICE DOOR(S) AND FRAME(S)				•				•			REFER TO DOOR SCHEDULE.
E. ENTRY DOORS				•				•			REFER TO DOOR SCHEDULE.
F. METAL CEILING ACCESS PANEL(S)				•				•			WHERE INDICATED ON PLANS. 24" X 24" MINIMUM.
2. HARDWARE AND SPECIALTIES											
A. DOOR HARDWARE				•				•			REFER TO DOOR SCHEDULE.
B. REAR SERVICE DOOR DEVICES				•				•			ALARM, EXIT, PUSH BAR, AND VIEWER. REFER TO DOOR SCHEDULE.
C. MASTER KEY SYSTEMS				•				•			
D. STOREFRONT TEMPERED GLAZING				•				•			
E. STOREFRONT GLAZING SYSTEM				•				•			SEE STOREFRONT DETAILS ON SHEET A51
3. MIRRORS											
A. MIRROR FIXTURES				•				•			FOR MIRRORS, REFER TO FIXTURE PLAN FOR RESPONSIBILITIES.
B. MIRROR GLASS				•				•			REFER TO FINISH PLAN.
DIVISION 9: FINISHES											
INTERIOR PARTITIONS - FRAMING AND GYP. BD.				•				•			REFER TO FLOOR PLAN.
RATED PARTITIONS - FRAMING AND GYP. BD.				•				•			REFER TO FLOOR PLAN.
DEMISING PARTITIONS - GYP. BD.				•				•			REFER TO FLOOR PLAN. G.C. TO PATCH GYP. BD.
STOREFRONT - FRAMING AND GYP. BD.				•				•			G.C. TO COORDINATE SIGNAGE WITH SIGNAGE CONTRACTOR AND ARCHITECT.
NEUTRAL PIER - FRAMING, GYP. BD., FACING				•				•			
DRYWALL COLUMN ENCLOSURES				•				•			REFER TO FLOOR PLAN. GFRG OR DRYWALL. COLUMNS BY G.C.
SUSPENDED GYP. BD. CEILING AND FRAMING				•				•			IF REQUIRED BY PLANS.
SUSPENDED ACOUSTICAL CEILING AND SUSPENSION				•				•			
PAINTING				•				•			
SHEET VINYL FLOORING AND BASE, VINYL TILE			•					•			
STONE, PORCELAIN, AND OTHER HARD SURFACES				•				•			
REDUCERS AND TRANSITION STRIPS				•				•			REFER TO DETAILS.
BASE AND SHOE MOLD				•				•			REFER TO FINISH PLAN AND SCHEDULE.
WAINSCOT (FRP)				•				•			REFER TO FINISH SCHEDULE AND INTERIOR ELEVATIONS.
WALL COVERINGS			•					•			REFER TO FINISH PLAN AND SCHEDULE, AND INTERIOR ELEVATIONS.
WALL TILE				•				•			WHEN REQUIRED, REFER TO FINISH PLAN AND SCHEDULE.
TILE ACCESSORIES				•				•			REFER TO FINISH PLAN.
WALK-OFF MAT			•					•			REFER TO FINISH PLAN.
DIVISION 10: SPECIALTIES											
STOREFRONT SIGN/SIGNAGE			•				•				G.C. SHALL COORDINATE WITH SIGN CONTRACTOR.
REAR SERVICE DOOR IDENTIFICATION				•				•			
ACCESSIBILITY SIGNAGE				•				•			ADA SIGNAGE AS REQUIRED BY CODE.
INTERIOR SIGNAGE/PLAQUES				•				•			
FIRE EXTINGUISHERS				•				•			TYPE AS REQUIRED PER APPLICABLE CODE. REFER TO SHEET A10.
SAFE (MANAGER'S DESK)			•					•			VERIFY LOCATION WITH TENANT.
TOILET ROOM ACCESSORIES (PAPER TOWEL HOLDER, TOILET PAPER HOLDER, SOAP DISPENSER)			•					•			REFER TO INTERIOR ELEVATIONS.
TOILET ROOM ACCESSORIES				•				•			REFER TO INTERIOR ELEVATIONS.
GRAB BARS AND RESTROOM MIRROR				•				•			REFER TO INTERIOR ELEVATIONS.
WALL/MIRROR GRAPHICS (VINYL)			•					•			REFER TO INTERIOR ELEVATIONS.
LOCKERS			•					•			G.C. TO SECURE TO FLOOR AND WALLS.
BACKWRAP SIGN			•					•			
DIVISION 12: FURNISHINGS											
CABINETS AND STORAGE			•					•			REFER TO FIXTURE PLAN.
SALES AREA FURNITURE			•					•			REFER TO FIXTURE PLAN.
CURTAINS, DRAPERIES, AND HARDWARE			•					•			REFER TO FIXTURE PLAN.
MISC. HARDWARE AND MERCHANDISE DISPLAY			•					•			REFER TO FIXTURE PLAN.
COUNTERTOPS			•					•			REFER TO FIXTURE PLAN.
SURFACE-MOUNTED STANDARDS, SHELVING AND BRACKETS			•					•			REFER TO FIXTURE PLAN.
IMAGES/GRAPHICS			•					•			REFER TO FINISH PLAN.
FLOOR FIXTURES			•					•			REFER TO FIXTURE PLAN.
TRIM FOR STANDARDS				•				•			REFER TO FIXTURE PLAN.
SLATWALL			•					•			REFER TO FIXTURE PLAN.
TRIM FOR SLATWALL				•				•			REFER TO FIXTURE PLAN.
TRIM AND WOOD PLANKS FOR FITTING ROOM DOORS (SALES AREA SIDE)				•				•			REFER TO A61 SHEET.
FITTING ROOM BENCH				•				•			REFER TO FIXTURE PLAN.
FITTING ROOM BENCH VENEER			•					•			

REGISTRATION SEAL

ARCVISION INCORPORATED
ARCHITECTURE, PLANNING, INTERIOR DESIGN
SAINT LOUIS • DALLAS • LAS VEGAS • ORLANDO
1959 CRAIG ROAD, SUITE 300 ST. LOUIS, MO 63146
PH: (314) 415-2400 FAX: (314) 415-2401 www.arcv.com
TEXAS ENGINEERING FIRM #12793

BOOT BARN

BOOT BARN
1424 TEXAS AVE. CROSSING
COLLEGE STATION TX, 77840
STORE # 161R

REV	DATE	DESCRIPTION	NAME

PROJECT NO: 210627
DRAWN BY: KWL
CHECKED BY: CCM
ISSUE DATE: 02/04/22

SCHEDULES

T10

SECTION 02230 - SITE CLEARING

PART 1 GENERAL

1.01 SECTION INCLUDES

A. Removal of surface debris.

B. Removal of sod.

1.02 RELATED SECTIONS

A. Section 02221 — Demolition.

B. Section 02310 — Earthwork.

1.03 PROJECT CONDITIONS

A. Conform to applicable regulations relating to environmental requirements and disposal of debris.
B. Coordinate clearing work with utility companies.
C. Protect utilities to remain from damage.

D. Protect bench marks and survey control points from damage or displacement.

PART 2 PRODUCTS

2.01 MATERIALS

A. Herbicide: "Roundup" by Monsanto chemical company.

PART 3 EXECUTION

3.01 PREPARATION

A. Locate and identify utilities to remain.

3.02 CLEARING

A. Clear areas required for access to site and execution of Work.

B. Clear undergrowth and deadwood without disturbing subsoil.

C. Apply herbicide to remaining stumps to inhibit growth.

D. Remove existing sod.

3.03 REMOVAL

A. Remove surface rock.

B. Remove debris from site.

END OF SECTION

SECTION 02310 - EARTHWORK

PART 1 GENERAL

1.01 SECTION INCLUDES

A. Removal and storage of topsoil.

C. Construction staking to control earthwork operations.

D. Provide temporary silt fencing and erosion control items as required during construction.

E. Rough grading the site for site structures, building pads, and paving.

F. Excavating for footings, slabs-on-grade, paving, and utilities within the building.

G. 'Reduction of all rippable rock materials encountered in the course of the work to sizes and grades suitable for rock fills and rip rap.

H. Ditching in areas of high moisture content to allow soils to drain prior to grading or excavation.

I. Borrow fill pit proctor testing and establishment of a shrinkage factor (if applicable).

J. Removal of excess and unsuitable soil (if applicable).

K. Filling, backfilling, and compacting for footings, slabs-on-grade, and paving.

L. Finish grading.

M. Excavation for detention pond.

1.02 RELATED SECTIONS

A. Section 02221 — Demolition.

B. Section 02230 — Site Clearing.

1.03 DEFINITIONS

A. Common: All materials encountered on the site that can be worked by acceptable construction practices using ordinary construction equipment up to and including a single-tooth ripper equipped crawler tractor equal to a Caterpillar D8 or a power shovel rated at three quarter yard capacity.

B. Finish Grade Elevations: Indicated on drawings.

C. Site Rock: Solid mineral material with a volume in excess of 1/3 cubic yard or solid material that cannot be removed with a 3/4 cubic yard capacity power shovel without drilling.

1.04 SUBMITTALS

A. Project Record Documents: Accurately record actual locations of utilities remaining by horizontal dimensions, elevations or inverts, and slope gradients.

B. Materials Sources: Submit name of imported materials source.

1.05 QUALITY ASSURANCE

A. Perform Work in accordance with State of which the project is located, Department of Transportation standards.

1.06 PROJECT CONDITIONS

A. Protect above and below grade utilities that remain.

B. Protect building from damage.

PART 2 PRODUCTS

2.01 SOIL MATERIALS

A. General Fill: Subsoil excavated on-site.

B. Granular Fill — Gravel: Pit run stone; free of shale, clay, friable material and debris.

C. Granular Fill — Pea Gravel: Natural stone; free of clay, shale, organic matter.

D. Topsoil: Topsoil excavated on-site.

2.02 EROSION CONTROL

A. Geotextile Fabric: non-biodegradable, woven.

2.03 SOURCE QUALITY CONTROL

A. Provide materials of each type from same source throughout the Work.

PART 3 EXECUTION

3.01 PREPARATION

A. Identify required lines, levels, contours, and datum.

B. Stake and flag locations of known utilities.

C. Locate, identify, and protect utilities that remain, from damage.

D. Notify utility company to remove and relocate utilities.

3.02 EROSION CONTROL

A. Temporary erosion control, if not already installed, shall take place prior to starting earthwork.

3.03 ROUGH GRADING

A. Remove topsoil from areas to be further excavated, re-landscaped, or re-graded, without mixing with foreign materials.

B. Do not remove topsoil when wet.

C. Subgrades to be held to the specified depth below sidewalks as shown on the drawings or otherwise

D. Do not remove wet subsoil.

3.04 EXCAVATING

A. Excavate to accommodate new sidewalk and construction operations.

B. Notify Program Manager/Project Manager of unexpected subsurface conditions and discontinue affected Work in area until notified to resume work.

C. Cut excavations clean with level bottoms.

D. Grade top perimeter of excavation to prevent surface water from draining into excavation.

E. Stockpile satisfactory excavated material until required for backfill or fill. Place, grade, and shape stockpiles for proper drainage and protect from erosion.

F. Remove excavated material that is unsuitable for re-use from site.

G. Remove excess excavated material from site.

3.05 FILLING

A. Fill up to subgrade elevations unless otherwise indicated.

C. Employ a placement method that does not disturb or damage other work.

D. Systematically fill to allow maximum time for natural settlement. Do not fill over porous, wet, frozen or spongy subgrade surfaces.

E. Slope grade away from building minimum 2 inches in 10 ft, unless noted otherwise. Make gradual grade changes. Blend slope into level areas.

3.06 FINISH GRADING

A. Before Finish Grading:
1 Verify subgrade has been contoured and compacted.
B. Place topsoil where required to level finish grade.
C. Place topsoil during dry weather.

3.07 TOLERANCES

A. Top Surface of Subgrade: Plus or minus 1/10 foot from required elevation.

B. Top Surface of Finish Grade: Plus or minus 1/2 inch.

3.14 CLEANING AND PROTECTION

A. Remove unused stockpiled subsoil. Grade stockpile area to prevent standing water.

B. Leave site clean and raked, ready to receive landscaping.

END OF SECTION

SECTION 02751 - SITE CONCRETE

PART 1 GENERAL

1.01 SECTION INCLUDES

A. Concrete sidewalks,

1.02 REFERENCES

A. ACI 211.1 — Standard Practice for Selecting Proportions for Normal, Heavyweight, and Mass Concrete; American Concrete Institute International; 1991 (Reapproved 2002).

B. ACI 304R — Guide for Measuring, Mixing, Transporting, and Placing Concrete; American Concrete Institute International; 2000.

G. ASTM C 94/C 94M — Standard Specification for Ready-Mixed Concrete; 2004a.

H. ASTM D 1751 — Standard Specification for Preformed Expansion Joint Filler for Concrete Paving and Structural Construction (nonextruding and Resilient Bituminous Types); 2004.

1.03 SUBMITTALS

A. Mix Design: Submit for each type and class of conctete. For prior mix designs, submit copies of previous break tests.

1.04 QUALITY ASSURANCE

A. Obtain cementitious materials from same source throughout.

1.05 WARRANTY

A. Provide one year warranty that all work has been done in strict accordance with the drawings and specifications and the work installed will fulfill the requirements of these specifications.

B. Any or all of the work which may prove to be defective within one year from date of final acceptance by the Owner shall be repaired or replaced at no cost to the Owner.

1.06 ENVIRONMENTAL REQUIREMENTS

A. Do not place concrete when base surface temperature is less than 40 degrees F, or surface is wet or frozen.

PART 2 PRODUCTS

2.01 FORM MATERIALS

A. Wood or metal form material, profiled to suit conditions.

B. Joint Filler: Preformed; non-extruding bituminous type (ASTM D 1751),
1. Thickness: 1/2 inch.

2.02 CONCRETE MATERIALS

A. Concrete Materials: As specified in Section 03300.

2.03 MIXING

A. Transit Mixers: Comply with ASTM C 94.

PART 3 EXECUTION

3.01 EXAMINATION

A. Verify compacted subgrade is acceptable and ready to support paving and imposed loads.

B. Verify gradients and elevations of base are correct.

3.02 SUBBASE

A. Prepare subbase in accordance with State of which the project is located Highways standards.

3.03 PREPARATION

A. Moisten base to minimize absorption of water from fresh concrete.

3.04 FORMING

A. Place and secure forms to correct location, dimension, profile, and gradient.

B. Place joint filler vertical in position, in straight lines. Secure to formwork during concrete placement.

C. Place expansion joints at as indicated on plans. Align curb, gutter, and sidewalk joints.

D. Place joint filler between paving components and building or other appurtenances, or a different day's pour.

3.05 PLACING CONCRETE

A. Place concrete in accordance with ACI 304R.

B. Ensure reinforcement, inserts, embedded parts, formed joints are not disturbed during concrete placement.

C. Place concrete continuously over the full width of the panel and between predetermined construction joints.

3.06 JOINTS

A. Align curb, gutter, and sidewalk joints.

3.07 FINISHING

A. Sidewalk Paving: Light broom, texture perpendicular to direction of travel with troweled and radiused edge 1/4 inch

3.08 TOLERANCES

A. Maximum Variation of Surface Flatness: 1/4 inch in 10 ft.

B. Maximum Variation From True Position: 1/4 inch.

3.09 PROTECTION

A. Immediately after placement, protect pavement from premature drying, excessive hot or cold temperatures, and mechanical injury.

B. Do not permit pedestrian or vehicular traffic over pavement for 7 days minimum after finishing.

END OF SECTION

SECTION 05400 - COLD FORMED METAL FRAMING

PART 1 GENERAL

1.01 SECTION INCLUDES

A. Formed steel stud exterior wall framing.

B. Formed steel joist framing and bridging.

1.02 RELATED REQUIREMENTS

A. Section 06100 — Rough Carpentry: Wood blocking and miscellaneous framing.

1.03 REFERENCE STANDARDS

A. AISI SG02-1 — North American Specification for the Design of Cold-Formed Steel Structural Members; American Iron and Steel Institute; 2001 with 2004 supplement. (replaced SG-971)

B AISI SG-973 — Cold-Formed Steel Design Manual; American Iron and Steel Institute; 1996.

C. ASTM A 153/A 153M — Standard Specification for Zinc Coating (Hot-Dip) on Iron and Steel Hardware; 2005.

D. ASTM A 123/A 123M — Standard Specification for Zinc (Hot-Dip Galvanized) Coatings on Iron and Steel Products; 1997a.

E ASTM A 653/A 653M — Standard Specification for Steel Sheet, Zinc-Coated (Galvanized) or Zinc-Iron Alloy-Coated (Galvannealed) by the Hot-Dip Process; 2006a.

F ASTM C 955 — Standard Specification for Load-Bearing (Transverse and Axial) Steel Studs, Runners (Tracks), and Bracing or Bridging for Screw Application of Gypsum Panel Products and Metal Plaster Bases; 2006.

G. AWS D1.1/D1.1M — Structural Welding Code — Steel; American Welding Society; 2006.

1.04 SYSTEM DESCRIPTION

A. Horizontal Deflection: Design to permit maximum deflection of 1/360 of span.

B. Design wall system to provide for movement of components without damage, failure of joint seals, undue stress on fasteners, or other detrimental effects when subject to seasonal or cyclic day/night temperature ranges.

C. Design system to accommodate construction tolerances, deflection of building structural members, and clearances of intended openings.

1.05 SUBMITTALS

A. Product Data: Provide four copies of data on standard framing members; describe materials and finish, product criteria, limitations.

B Manufacturer's Installation Instructions: Indicate special procedures, conditions requiring special attention.

1.06 WARRANTY

A. Provide one year warranty that all work has been done in strict accordance with the drawings and specifications and the work installed will fulfill the requirements of these specifications.

B. Any or all of the work which may prove to be defective within one year from date of final acceptance by the Owner shall be repaired or replaced at no cost to the Owner.

PART 2 PRODUCTS

2.01 FRAMING MATERIALS

A. Studs and Track: ASTM C 955; studs formed to channel, "C", or "Sigma" shape with punched web; U-shaped track in matching nominal width and compatible height.
1 Gage and depth: As required to meet specified performance levels.
2 Galvanized in accordance with ASTM A 653/A 653M G90/Z275 coating.
3 Provide components fabricated from ASTM A 1008/A 1008M, Designation SS steel.

2.02FASTENERS

A. Self-Drilling, Self-Tapping Screws, Bolts, Nuts and Washers: Hot dip galvanized per ASTM A 153/A 153M.

B. Anchorage Devices: Power actuated.

C. Welding: In conformance with AWS D1.1.

PART 3 EXECUTION

3.01 INSTALLATION OF STUDS

A. Install components in accordance with manufacturers' instructions.

B. Align floor and ceiling tracks; locate to wall layout. Secure in place with fasteners at maximum 24 inches on center. Coordinate installation of sealant with floor and ceiling tracks.

C. Place studs at 16 inches on center; not more than 2 inches from abutting walls and at each side of openings. Connect studs to tracks using clip and tie method.

D. Construct corners using minimum of three studs. Install double studs at wall openings, door and window jambs.

E. Install load bearing studs full length in one piece. Splicing of studs is not permitted.

F. Install load bearing studs, brace, and reinforce to develop full strength and achieve design requirements.

G. Coordinate placement of insulation in multiple stud spaces made inaccessible after erection.

H. Install intermediate studs above and below openings to align with wall stud spacing.

I. Provide deflection allowance in stud track, directly below horizontal building framing at non-load bearing framing.

J. Attach cross studs to studs for attachment of fixtures anchored to walls.

K. Install framing between studs for attachment of mechanical and electrical items, and to prevent stud rotation.

L. Touch-up field welds and damaged galvanized surfaces with primer.

END OF SECTION

SECTION 05580 - SHEET METAL FABRACATIONS

PART 1 — GENERAL

1.01 RELATED SECTIONS

A. The following sections contain requirements that relate to this section:
1) Division 7 Section "Flashing and Sheet Metal" for items made of sheet metal for flashing purposes.
2) Division 8 Section "Hollow Metal Doors and Frames" for stock doors and frames made of cold-formed sheet metal.

PART 2— PRODUCTS

2.01 MATERIALS

A. Sheet metal materials: Use materials selected for their surface flatness, smoothness and freedom from surface blemishes.
1) Galvanized sheet steel: ASTM A526, G90, mill phosphatized.
2) Aluminum sheet: ASTM B209, alloy and temper recommended by aluminum producer or finisher for use intended and finish indicated but not less than strength and durability of 5005-H15.

B. Miscellaneous materials: As follows:
1) Fasteners: Concealed, except as otherwise indicated, of type and alloy to match metal to be fastened; use Phillips flat-head screws for exposed fasteners where permitted, unless otherwise indicated.
2) Anchors and inserts: Furnish as required for installation in other construction. Use nonferrous or hot-dip galvanized units for exterior installation.
3) Flexible cellular neoprene gaskets: ASTM D1056, Type 1, Class A, Grade as recommended by gasket manufacturer to obtain airtight seal for application indicated.

PART 3 — EXECUTION

3.01 FABRICATION, GENERAL

A. Fabricate items from sheet metal of type, minimum nominal thickness, and finish as well as to dimensions and details indicated, to produce units of strength required for intended use and with exposed surfaces which are smooth, flat and free of imperfections.
1) Form sheet metal in maximum lengths and keep joints to a minimum, with cut edges concealed.
2) Continuously weld all joints and seams except as otherwise indicated.

B. Closures and trim: Formed to tightly close with adjoining construction, from the following metal:
1) Metal for Exterior Installation: Galvanized steel sheet, 0.0478 inch.
2) Metal for Interior Installations: Galvanized steel sheet, thickness as detailed or if not indicated 0.0516 inch, with weather tight joints.
3) Incorporate gaskets for continuos seal to abutting surfaces.

C. Finishes, general: Comply with NAAMM "Metal Finishes Manual" for application and designation of finishes. Protect finished metal items. Protect finished metal items.

D. Aluminum finishes: As follows (finish designations conform with system established by Aluminum Association):
1) Color: As selected by Architect from within standard industry colors and color density range.

3.01 INSTALLATION

A. Locate and place miscellaneous sheet metal items plumb and level; in alignment with, and securely attached to, adjoining construction.

3.02 PROTECTION

A. Protect aluminum surfaces from corrosion where in contact with dissimilar metals, concrete or masonry by coating contact surfaces with zinc chromate primer to bituminous paint.

B. Touch-up shop painted surfaces after installation, using same materials used in shop.

END OF SECTION

SECTION 06100 - ROUGH CARPENTRY

PART 1 — GENERAL

1.01 SUMMARY:

B. Furnish all labor, materials, equipment and services necessary complete all carpentry work indicated on the drawings and specified herein.

C. The extent of carpentry work shall be indicated of the drawings, and is defined to include, but not limited to the following:
1) Wood sheathing.
2) Temporary walls and partitions, covers, protections and sound, dust and weather barriers for the building as well as temporary fences and protective devices for the site, the public, adjacent property, and equipment.
3) Treated wood blocking, and nailers, as necessary for the installation of new work.
4) Hollow metal frames (installation only).
6) Finish and rough hardware (installation only).

C. The following related items are specified in other sections of this specification:
1) Section 03300 Cast-in-place Concrete — forming and shoring.
2) Section 06200 Finish Carpentry.
3) Section 06400 Architectural Woodwork.
4) Section 07210 Building Insulation.
5) Section 07530 Roofing — roof insulation.

1.02 SUBMITTALS:

B. Wood Treatment Data: Submit treatment manufacturer's instruction for proper use of each type of treated materials.
1) Pressure Treatment: For each type specified, include certification by treating plant stating chemicals and process used, net amount of preservative retained and conformance with applicable standards.
3) Fire Retardant Treatment: Include certification by treating plant that treatment material complies with governing ordinances and that treatment will not bleed through finished surfaces.

1.03 PRODUCT HANDLING:

A. Delivery and Storage: Keep materials under cover and dry. Protect against exposure to weather and contact with damp or wet surfaces. Stack lumber and plywood and other panels' provide air circulation within and around stacks and under temporary coverings including polyethylene and similar materials.

1.04 PROJECT CONDITIONS:

A. Coordination: Fit carpentry work to other work; scribe and cope as required for accurate fit. Correlate location of furring, nailers, blocking, grounds and similar supports to allow proper attachment of other work.

PART 2— PRODUCTS

2.01 LUMBER STANDARDS AND REQUIREMENTS:

A. Moisture Content: Not to exceed 16 percent for framing lumber.

B. Grade Stamps: Factory mark each piece of lumber with grade stamp of inspection agency evidencing compliance with grading rule requirements and identifying grading agency, grade, species, moisture content at time of surfacing, and mill.
1) For exposed lumber, apply grade stamps to ends or back of each piece, or omit grade stamps entirely and issue certificate of grade compliance from inspection agency in lieu of grade stamp.

C. Quality: Sound, thoroughly seasoned, well manufactured and free from warp that cannot be corrected in the process of bridging or nailing. Woodwork exposed to view shall be dressed.

D. Lumber Standards: Manufacture lumber to comply with PS 20 American Softwood Lumber Standard and with applicable grading rules of inspection agencies certified by American Lumber Standards Committee's (ALSC) Board of Review.

E. Plywood Product Standards: Comply with PS 1 (A199.1) or, for products not manufactured under PS 1 provisions, with applicable APA Performance Standard for type of panel indicated.

2.02 LUMBER:

A. Furnish grades and species of wood as indicated below, except grades and species identified for specific items shall govern. Furnish dressed lumber, S4S, unless otherwise indicated.

B. Wood Blocking, Nailers, and Edging Stripes: Standard and Better Fir, Spruce or Pine.

C. Exterior Plywood: Structural 1 C-C EXT-APA Preservative treated in accordance with AWPA C27.

2.03 MISCELLANEOUS LUMBER:

A. Wood Blocking, Nailers, and Grounds:
1) Provide wood blocking and nailers of size and shaped indicated and required to secure other work or equipment in place. Include rough hardware such as necessary bolts and anchoring devices to secure the blocking and nailers. Blocking or nailers on steel, concrete, or masonry shall be bolted in place.

B. Plywood Backing Panels: For mounting electrical or telephone equipment, provide fire retardant treated plywood panels with grade designation, APA C-D PLUGGED INT with exterior glue, not less than 1/2-inch thick.

2.04 MISCELLANEOUS MATERIALS:

A. Fasteners and Anchorages: Provide size, type, material and finish as indicated and as recommended by applicable standards, complying with applicable Federal Specifications for nails, staples, screws, bolts, nuts, washers and anchoring devices. Provide metal hangers and framing anchors of the size and type recommended by the manufacturer for each use including recommended nails.
1) Where rough carpentry work is exposed to weather, in ground contact, or in area of high relative humidity, provide fasteners and anchorages with a hot dip zinc coating (ASTM A 153).

2.05 PRESERVATIVE AND FIRE RETARDANT TREATMENT:

A. Unless noted to be fire retardant treated, provide preservative treatment for all exterior wood, concealed or exposed, including wood grounds, nailing strips, blocking, edging strips and plywood, per AWPA C9.

B. Net retention of preservative as follows:

PRESERVATIVE	LBS. PER CUBIC FOOT
Zinc Chloride	Dry salt 1.0
Zinc Metal Arsenite (ZMA)	Dry salt 0.3
Wolman Salts (Tenalith)	Dry salt 0.3
Chromated Zinc Chloride	Dry salt 0.3

C. Provide fire retardant treatment for all interior wood and plywood, concealed or exposed. Comply with AWPA standards for pressure impregnation with fire retardant chemicals to achieve a flame spread rating of not more than 25 when tested in accordance with UL 723, ASTM E 84, or NFPA 355. Wherever possible treat after fabrication to minimize cutting and jointing of treated material. Paint surfaces cut after treatment with heavy brush coat of same fire retardant chemical.

2.06 TEMPORARY PROTECTIONS:

A. Make door closures tight, with door and lock. Do not fasten to finished frame of permanent door.

B. Provide batter boards; erect and maintain as long as required, established building lines and elevations by means of batter boards and bench marks. Establish and lay out lines, levels and partitions as the work progresses, as a guide to the various trades.

PART 3 — EXECUTION

3.01 INSTALLATION, GENERAL:

A. Discard units of material with defects that might impair quality of work, and units that are too small to use in fabricating work with minimum joints or optimum joint arrangement.

B. Set carpentry work to required levels and lines, with members plumb, level and true, neatly cut and fitted in accordance with the details. Erect all members in as long lengths as practicable, with joints as inconspicuous as possible to allow for shrinkage. Miter outside corners and cope inside corners.

C. Securely attach carpentry work to substrate by anchoring and fastening as sown and as required by recognized standards. Countersink nail heads on exposed carpentry work and fill holes.

D. Use common wire nails, except as otherwise indicated. Use finishing nails for finish work. Select fasteners of size that will not penetrate members where opposite side will be exposed to view or will receive finish materials. Make tight connections between members. Install fasteners without splitting of wood, predrill as required.

E. Wood Nailers, and Blocking:
1) Provide wherever shown and where required for screwing or attachment of other work. Form to shapes as shown and cut as required for true line and level of work to be attached. Coordinate location with other work involved.
2) Attach to substrates as required to support applied loading. Countersink bolts and nuts flush with surfaces, unless otherwise shown.

G. Where shelving, wall cabinets and similar wall hung equipment is shown, nest 2 x 4 wood studs inside metal studs at 32 inches on center. Extend wood studs from floor to top of partition. Screw attached wood studs to metal studs.

3.02 CLEAN UP:

A. Clean premises on a daily basis. Remove rubbish from the site; do not burn rubbish on the premises.

END OF SECTION

SECTION 06200 - FINISH CARPENTRY

PART 1 — GENERAL

1.01 RELATED DOCUMENTS:

A. The following related items are specified in other sections of the specifications:
1) Section 06100 — Rough Carpentry.
2) Section 07900 — Joint Fillers and Sealants
3) Section 09900 — Painting
4) Section 08110 — Metal Doors and Frames
5) Section 08710 — Finish Hardware
6) Section 10800 — Toilet Room Accessories

1.02 SUMMARY:

A. Furnish all labor, materials, equipment and services necessary to complete all millwork, wood fabrications and finish carpentry indicated on the drawings and specified herein.

B. Finish Carpentry includes carpentry work which is exposed to view, is non-structural, and which is not specified as part of other sections.

C. The extent of millwork is indicated on the drawings and is defined to include, but is not limited to the following:
1) Interior standing and running trim.
2) Fiberglas Reinforced Paneling (FRP).

1.03 QUALITY ASSURANCE:

A. Factory mark each piece of lumber and plywood with type, grade, mill and grading agency identification; except omit marking from surfaces to receive transparent finishes and submit mill certification that material has been inspected and graded in accordance with requirements if it cannot be marked on a concealed surface.

1.04 JOB CONDITIONS:

A. Conditioning: Advise contractor of temperature and humidity requirements for finished carpentry installation areas. Do not install finish carpentry until required temperature and relative humidity conditions have been stabilized and will be maintained in installation areas.

PART 2 — PRODUCTS

2.01 WOOD PRODUCT QUALITY STANDARDS:

A. Softwood Lumber Standards: Comply with PS 20 and with applicable grading rules of the respective grading and inspecting agencies for the species and product indicated.

B. Plywood Standards: Comply with PS 1/ANSI A 199.1.

C. Hardwood Lumber Standards: Comply with National Hardwood Lumber Association (NHLA) rules.

D. Woodworking Standards: Comply with the provisions of Architectural Woodworking Institute (AWI) Quality Standards.

E Glued Up Lumber Standards: Comply with PA 56.

F. Woodworking Standard: Where indicated for specific products comply with specified provision of Architectural Woodwork Institute (AWI) Quality Standards.

2.02 MATERIALS:

A. Lumber for Transparent Finish (Stained or Clear): Use pieces made of solid lumber stock.

B. Lumber for Painted Finish: At contractor's option, use pieces that are either glued up lumber or solid stock.

C. Exterior Plywood (For Painted Finish): Any softwood species, exterior type, Medium Density Overlay (MDO/EXT-APA), of thickness indicated.

D. Moisture content of all millwork except as otherwise noted, shall not exceed 10%.

E. Unexposed Cores, Backings, Blocking and Stripping: Sound, stable, seasoned, kiln dried softwood.

F. Interior Standing and Running Trim: For trim in form of boards and worked products, provide lumber complying with the following requirements:
1) Species: Ponderosa Pine, WWPA.
2) Select Grade: B and better.
3) Texture: Surfaced (smooth)
4) Lumber for Painted Finish: glued-up lumber or solid lumber stock.

G. Wood Molding Patterns: For stock molding patterns included in Wood Molding and Millwork Producers Association WM 7 and graded under WM 4. Provide the following grade based on finish indicated and fabricated from species specified.
1) Moldings for Painted Finish: P-grade.

H. Shelving: 3/4 inch plywood with fir veneer both sides and hardwood edgebands all exposed edges. Fit to angle frames where detailed on the drawings.

I. Moisture content of all millwork except as otherwise noted, shall not exceed 10%.

J. Unexposed Cores, Backings, Blocking and Stripping: Sound, stable, seasoned, kiln dried softwood.

K. Fiberglass Reinforced Paneling shall be .060" thick, as manufactured by the Masonite Corporation or approved equal complete with matching moldings. Color shall be as scheduled. Sheets shall be furnished full height with no horizontal joints.

2.03 PRESERVATIVE TREATMENT:

A. Provide preservative treatment for all exterior plywood, per AWPA C 9.

2.04 FABRICATION:

A. Conform to design and details shown. Where practicable, finish and assemble work at mill. Finish millwork and trim smooth and free from machine or tool marks that will show through the finish. Set all nail heads to receive plastic wood putty.

B. Make all joints tight and form to conceal shrinkage. Shop miter 4 inches or more from heel to point shall be glued and locked. Make shop joints of interior work with waterproof glue or hot glue under pressure.

C. Running finish shall be long lengths and jointed only where solid fastenings can be made. End joints in built up members shall be well distributed.

D. Fabricate standing and running trim to the profiles shown on the drawings, accurately mitered, turned to walls where shown, with all sharp corners slightly rounded.

PART 3 — EXECUTION

3.01 PREPARATION:

A. Condition wood materials to average prevailing humidity conditions in installation areas prior to installing.

3.02 INSTALLATION:

A. Install work with joints true and tight with all items firmly attached and assembled in accordance with Drawings.

B. Jointing:
1) Standing and Running Trim: Install with a minimum number of joints possible, using full length pieces to the greatest possible extent. Stagger joints in adjacent and related members. Cope at returns, miter at corners, to produce tight fitting joints with full surface contact throughout length of joint. Use joints for end to end joints.

C. Fastening:
1) Discard units of material which are unsound, warped, bowed, twisted, improperly treated, not adequately seasoned or too small to fabricate work with minimum of joints or optimum jointing arrangements, or which are of defective manufacture with respect to surfaces, sizes or patterns.
2) Install the work plumb, level, true and straight with no distortions. Shim as required using concealed shims. Install to a tolerance of 1/8 inch in 8'-0" for plumb and level countertops; and with 1/16" maximum offset in flush adjoining 1/8" maximum offsets in revealed adjoining surfaces.
3) Scribe and cut work to fit adjoining work and refinish cut surfaces or repair damage to finish at cuts. neatly cope inside corners; do not miter.
4) Anchor finish carpentry work to anchorage devices or blocking built in or directly attached to substrates. Secure to grounds, stripping and blocking countersunk, concealed fasteners and blind nailing as required, use fine finishing nails for exposed nailing, countersunk and filled flush with finished surface, and matching final finish where transparent finish is indicated.
5) On exposed interior finish work, set nails for putty.
6) Install screws with a screwdriver. Do not drive into place.
7) Exterior plywood: Secure with galvanized casing nails with heads driven flush but not set. Do not install until both faces and all edges, including fresh cuts, have received the first coat of specified paint or satin finish.

3.03 INSTALLATION OF MATERIAL FURNISHED BY OTHERS

A. Steel frames: Set frames plumb and square, firmly anchored in place in accordance with fabricator's instructions. Neatly, caulk perimeters of exterior frames with caulking and remove excess caulk.

B. Install all other items furnished for installation hereunder and items not otherwise installed under other Sections. Install manufactured items in accordance with manufacturer's instructions. Install such items accurately set to line and level, firmly anchored to substrate.

3.04 ADJUSTMENT, CLEAN UP AND PROTECTION

A. Keep the premises in a neat, safe and orderly condition at all times during execution of the work, free from accumulation of sawdust, cut ends and debris.

B. Sweeping:
1) At the end of each working day, or more often if necessary, thoroughly sweep all surfaces where refuse from the work has settled.
2) Remove refuse to the area of the job site set aside for its storage.
3) Upon completion of the work, thoroughly broom clean floors. Wipe down and clean all other surfaces.

C. Repair damaged and defective finish carpentry works wherever possible to eliminate defects functionally and visually; where not possible to repair properly, replace woodwork. Adjust for uniform appearance.

D. Clean finish carpentry work on exposed and semi-exposed surfaces. Touch up shop applied finishes to restore damaged or soiled areas.

E. Remove all cartons, debris, sawdust, scraps, etc and leave spaces clear and all millwork ready for Owner's use.

F Protection: Installer of finish carpentry work shall advise Contractor of final protection and maintained conditions necessary to ensure that work will be without damage or deterioration at Date of Substantial Completion.

END OF SECTION

SECTION 06400 - ARCHITECTURAL WOODWORK

PART 1 — GENERAL

1.01 RELATED DOCUMENTS:

A. The following related items are specified in other sections of the specifications:
5) Section 06200 — Finish Carpentry.
6) Section 09900 — Painting

1.02 SUMMARY:

A. Work includes, but is not necessarily limited to, all plastic laminate covered case work, counter tops, shelving, and related wood work components, as shown on Drawings and described below.

B. Furnish all labor, materials, equipment and services necessary to complete all millwork, wood fabrications and finish carpentry indicated on the drawings and specified herein.

1.03 QUALITY ASSURANCE:

A. Manufacturer shall have produced the specified products for a period of five (5) years prior to beginning work of this section, and shall have the capability to produce the specified products to the delivery and quantity criteria of the project.

B. For fabrication and installation of work, use only personnel who are thoroughly trained and experienced in the skills required. Have similar applications of the specified products installed within one year prior to beginning work of this section. Personnel must be completely familiar with the manufacturers' recommended methods of installation as well as the requirements of this work.

1.04 REFERENCES

A. Organization and Trade Standards.
1) AWI (Architectural Woodwork Institute) "Manual of Millwork," latest edition.
2) National Particleboard Association, NPA 8086.

PART 2 — PRODUCTS

2.01 PLASTIC COVERED CASEWORK

A. General
1) All casework shall comply with referenced AWI Standards and as specified.
2) All laminated plastic shall be the product of a single manufacturer.

B. The same manufacturer shall supply all hardware of a single type.

C. Product Characteristics: Adjustable Shelf Standards
1) Manufacturer: Louis and Company or approved equal
2) Application: Casework Interior

2.02 OTHER PRODUCTS

A. Provide all other products necessary for complete installation and operation. Such products shall be subject to the review of the Architect.

2.03 PLASTIC LAMINATE CASEWORK FABRICATION

A. Shop fabricate casework to the greatest extent possible. Disassemble only as necessary for shipping and handling.

B. Fabricate in accordance with construction details and dimensions shown on the drawings and approved shop drawings. Verify all dimensions at the building prior to fabrication. Notify the Architect of any differences shown on the drawings and actual dimensions at the building before proceeding with the work.

C. Provide access panels and cutouts where indicated or required for other trades.

D. Shelf Standards: Rout end panels, back panels and dividers approximately 3/4-inch wide x 1/4-inch deep to receive shelf standards (flush mounted) where adjustable shelving is shown.

E. Finish all exterior exposed surfaces with high-pressure laminate unless otherwise indicated. Laminate plastic to particleboard core with balancing sheet using manufacturer's recommended resin.

PART 3 — EXECUTION

3.01 SURFACE CONDITIONS

A. Prior to fabrication and installation of architectural woodwork, carefully inspect the installed work of all other trades and verify installation may properly commence.
1) Verify that all work can be installed in strict accordance with all pertinent codes and regulations, the original design, reviewed submittals, and manufacturers' recommendations.

3.02 INSTALLATION:

A. Install all woodwork in accordance with referenced AWI Standards, approved submittals, and as specified.

B. Install all components into solid blocking plates or framing. Use of toggle bolts and "Molly" bolts for all attachment not acceptable.

C. Minimize use of adhesive on-site to maximum extent possible.

D. Woodwork and Counter Top Installation:
1) Install per AWI, Custom grade

3.03 CLEANING AND ADJUSTMENT

A. Dust all woodwork by vacuuming prior to project completion.

B. Clean and polish all surfaces and hardware.

END OF SECTION

SECTION 07410 - PREFORMED METAL WALL PANELS

1.01 SUMMARY:

A. Provide all labor, materials, equipment and services necessary to complete installation of all preformed metal roof panels shown on drawings and specified herein.

B. Extent of preformed metal panel wall system work is indicated on drawings and by provisions of this section, and is defined to include wall panel, flashing, and accessories integrally related to wall panel installation. Types of preformed metal panel wall required for project include, but are not limited to the following:
1) Preformed, prefinished standing seam metal wall and flashings.

C. The following related items are specified in other sections of the specifications:
1) Cold Form Steel Framing.
2) Miscellaneous metal fabrication.
3) Rough carpentry.
4) Vapor barrier
5) Sealants.

1.02 REFERENCES:

A. American Iron & Steel Institute (AISI) Specification for the Design of Cold formed Steel Structural Members.

B. ASTM A-525 Steel Sheet, Zinc-Coated (Galvanized)

C. ASTM E-283-84

D. ASTM E-331-86

E. ASTM E-330 (Modified)

F. SMACNA — Architectural Sheet Metal Manual.

G. Building Materials Directory — Underwriter's Laboratories, Test Procedure 580.

1.03 QUALITY ASSURANCE:

A. Installer qualifications: Engage an experienced installer to perform installation of preformed metal panel roofing work who has specialized in the installation of preformed metal panel wall systems similar to that required for this project and who is acceptable to manufacturer of primary materials.

1.04 SUBMITTALS:

A. Product data: Submit manufacturer's technical product data, installation instructions and recommendations for each type of preformed metal panel roofing product required. Include data substantiating that materials comply with requirements.

B. Submit a sample of wall panel, complete with finish for approval.

1.05 PROJECT CONDITIONS:

A. Weather condition limitations: Proceed with wall panel work only when existing and forecasted weather conditions will permit work to be performed in accordance with manufacturers recommendations and warranty requirements.

1.06 DELIVERY, STORAGE, AND HANDLING:

A. Upon receipt of panels and other materials, installer shall examine the shipment for damage and completeness.

B. Panels should be stored in a clean, dry place. One end should be elevated to allow moisture to run off.

C. Stack all materials to prevent damage and to allow for adequate ventilation.

1.07 WARRANTIES:

A. Manufacturer's warranty: Submit executed copy of preformed metal panel roofing manufacturer's standard Limited Service Warranty agreement including flashing endorsement, signed by an authorized representative of preformed metal panel roofing system manufacturer, on form which was published with product literature as of date of contract documents, for the following period of time:
1) Paint finish shall have a twenty-year guarantee against cracking, peeling and fade (not to exceed 5 N.B.S. units).

PART 2 — PRODUCTS

2.01 MATERIALS:

A. Standing Seam Panels
1) 24GA Panels shall have a 1-1/2" high vertical leg, spaced 16-1/2" on center. Color as shown on plans. Coordinate with Architect and Owner.
2) Standing seam to be of an interlocking, "snap-lock" design.
3) Panels shall be site-formed with Portable Roll Former in continuous length of wall panel
4) Vinyl Weatherseal to be factory/machine — installed over Continuous Cee Rib.

B. Finish shall be (full strength Kynar 500 Flouropolymer coating), applied by he manufacturer on a continuous coil coating line, with a sop side dry film thickness of 0.70 to 0.90 mil over 0.25 to 0.35 mil prime coat, to provide a total dry film thickness of 0.95 to 1.25 mil. Bottom side shall be coated with primer with a dry film thickness if 0.25 mil. Finish shall conform to all tests for adhesion, flexibility, and longevity as specified by the Kynar 500-finish supplier.

C. Strippable film shall be liquid applies to the topside of the painted coil to protect the finish during fabrication, shipping and filed handling. This strippable film must be removed before installation.

D. Accessory Materials:
1) Fasteners: Galvanized Steel with washers where required.
2) Sealant: As specified in Section 07900.

E. Fabrications:
1) All exposed adjacent flashing shall be of the same material and finish as the roof panels.
2) Hem all exposed edges of flashing on underside, 1/2 inch.

PART 3 — EXECUTION

3.01 EXAMINATION:

A. Examine substrate surfaces to receive preformed metal panel wall system and associated work and conditions under which wall panels will be installed. Do not proceed with wall panel until unsatisfactory conditions have been corrected in a manner acceptable to installer.

3.02 INSTALLATION, GENERAL:

A. Comply with manufacturers standard instructions and conform to standards set forth in the Architectural Sheet Metal Manual published by SMACNA, in order to achieve a watertight installation.

B. Install starter and edge trim before installing wall panels.

C. Remove protective strippable film prior to installation of roof panels.

D. Attach panels using manufacturer's standard clips and fasteners, spaced in accordance with approved shop drawings.

E. Do not allow panels or trim to come into contact with dissimilar materials.

F. Remove and replace any panels or components that are damaged beyond successful repair.

3.02 CLEANING:

A. Clean any grease, finger marks or stains from the panels per manufacturer's recommendations.

B. Remove all scrap and construction debris from the site.

END OF SECTION

SECTION 07600 - FLASHING AND SHEET METAL

PART 1 — GENERAL

1.01 SUMMARY:

A. Furnish all labor, materials, services and equipment necessary to complete all flashings and sheet metal work shown on the drawings and specified herein.

B. The extent of flashings and sheet metal work is shown on drawings and is defined to include, but is not limited to the following:
1) Sheet metal flashings and counterflashings.
2) Sheet metal copings at parapets.
4) Scupper and downspouts.

1.02 QUALITY ASSURANCE:

A. Conform to profiles and sizes and comply with the Architectural Sheet Metal Manual by SMACNA for each general work category.

1.03 SUBMITTALS:

A. Product Data: Flashing, Sheet Metal, Accessories: Submit manufacturer's product data, installation instructions and general recommendations for each specified sheet material and fabricated product.

1.04 JOB CONDITIONS:

A. Coordinate work of this section with interfacing and adjoining work for proper sequencing of each installation. Ensure best possible weather resistance and durability of work and protection of materials and finishes.

PART 2 — PRODUCTS

2.01 FLASHING AND SHEET METAL MATERIALS:

A. Aluminum: ASTM B 209, alloy 3003, temper H14, AA-C22A41 clear anodized finish; 0.032 inch thick (20 gauge).

B. Solder: for use with steel, provide 50-50 tin/lead solder (ASTM B 32), with rosin flux.

C. Fasteners: Same metal as flashing/sheet metal or, other noncorrosive metal as recommended by sheet manufacturer. Match finish of exposed heads with materials being fastened.

D Cleats: Same material as sheet being anchored, 2 inches wide, punched for 2 anchors.

E Mastic Sealant: Polyisobutylene; nonhardening, nonskinning, nondrying, nonmigrating sealant.

F. Metal Accessories: Provide sheet metal clips, straps, anchoring devices and similar accessory units as required for installation of work matching or compatible with material being installed, noncorrosive, size and gauge required for performance.

G. Elastomeric Sealant: Generic type recommended by manufacturer of metal and fabricator of components being sealed; comply with FS TT-S-0027, TT-S-00230, or TT-S-001543.

2.02 FABRICATED UNITS:

A. General Metal Fabrication: Shop fabricate work to greatest extent possible. Comply with details shown, and with applicable requirements of SMACNA Architectural Sheet Metal Manual and other recognized industry practices. Fabricate for waterproof and weather resistant performance; with expansion provisions for running work, sufficient to permanently prevent leakage, damage or deterioration of the work. Form work to fit substrates. Comply with material manufacturer instructions and recommendations for forming material. Form exposed sheet metal work without excessive oil canning, buckling and tool marks, true to line and levels indicated, and with exposed edges folded back to form hems.

B. Seams: Fabricate nonmoving seams in sheet metal with flat lock seams. For metal other than aluminum, tin edges to be seamed, form seams, and solder. Form aluminum seams with epoxy seam sealer; rivet joints for additional strength where required. Cap seal rivets.

C Expansion Provisions: Where lapped or bayonet type expansion provisions in work cannot be used, or would not be sufficiently water/weatherproof, form expansion joints of intermeshing hooked flanges, not less than 1 inch deep, filled with mastic sealant (concealed within joints).

D Sealant Joints: Where movable, nonexpansion type joints are indicated or required for proper performance of work form metal to provide for proper installation of elastomeric sealant, in compliance with SMACNA standards.

PART 3 — EXECUTION

3.01 INSTALLATION REQUIREMENTS:

A. Examine substrate and conditions under which sheet metal work will be installed, and notify Contractor in writing of unsatisfactory conditions. Do not proceed with installation until conditions have been corrected in an acceptable manner.

B. General: Comply with manufacturer's installation instructions and recommendations, and with SMACNA Architectural Sheet Metal Manual. Anchor units of work securely in place by methods indicated, providing for thermal expansion of metal units; conceal fasteners where possible and set units true to line and level as indicated. Install work with laps, joints and seams which will be permanently watertight and weatherproof.

C. Underlayment: Where sheet metal is to be installed directly on cementitious or wood substrates, install a slip sheet of red rosin paper and a course of polyethylene underlayment.

D. Bed flanges of work in a thick coat of bituminous roofing cement where required for waterproof performance.

E. Install reglets to receive counterflashing in manner and by methods indicated.
1) Install counter flashing in reglets, either by snap in seal arrangement, or by wedging in place for anchorage and filling reglet with mastic or elastomeric sealant, as indicated and depending on degree of sealant exposure.

F. Edge Strips: Provide continuous edge strips (cleats) at edges and drip strips for attaching exposed terminating edge of sheet metal in lengths of 8'0" or 10'0". Set edge strips straight and true and secure in place with nails of proper size and spaced not more than 6 inches apart.

G. Anchor work in place with non-corrosive fasteners, adhesives, setting compounds, tapes and other materials and devices as recommended by manufacturer of each material or system. Provide for thermal expansion and building movements. Comply with recommendations of Architectural Sheet Metal Manual by SMACNA.

H. Sheet Metal Copings and Roof Edges: Install sheet metal coping or roof edge at all parapets and canopies as indicated on drawings.
1) Form in 10'0" +/- lengths. Lap adjoining sheets 3 inches.
2) Install continuous cleats at exterior and interior of parapet where indicated and anchor as specified.
3) Provide separation sheets as required and install sheet metal copings, locking coping to cleats. Top of coping shall be fabricated in one piece.
4) Where counterflashing is indicated to join coping at interior side, use continuous cleat and lock seam method of installation.

3.02 CLEANING AND PROTECTION:

H. Clean exposed metal surfaces, removing substances that might cause corrosion of metal or deterioration of finishes.

I. Protection: Installer shall advise Contractor of required procedures for surveillance and protection of flashings and sheet metal work during construction, to ensure that work will be without damage or deterioration, other than natural weathering, at time of substantial completion.

END OF SECTION

REGISTRATION SEAL

ARCVISION
INCORPORATED
ARCHITECTURE • ENGINEERING • STORE PLANNING
SAINT LOUIS / DALLAS / LAS VEGAS / ORLANDO
1950 CRAIG ROAD, SUITE 300 ST. LOUIS, MO 63146
PH. (314) 415-2400 FAX (314) 415-2300 www.arcv.com
TEXAS ENGINEERING FIRM #12793

BOOT BARN

BOOT BARN
1424 TEXAS AVE. CROSSING
COLLEGE STATION TX, 77840
STORE # 161R

REV	DATE	DESCRIPTION	NAME

PROJECT NO: 210627
DRAWN BY: KWL
CHECKED BY: CCM
ISSUE DATE: 02/04/22

ARCHITECTURAL SPECIFICATIONS

T20

SECTION 08110 - STEEL DOORS AND FRAMES

1.01 RELATED DOCUMENTS:

A. The following related items are specified in other section of the specifications:

4) Section 08710 – Finish hardware

1.02 SUMMARY:

A. Provide all labor, materials, equipment, and services necessary to complete all steel doors and frames show on the drawings and specified herein.

B. The extent of steel doors and frames is shown on the drawings and schedules, is define to include, but not limited to the following:

1) Steel doors and frames for interior and exterior locations.

2) Accessories required a complete installation.

1.03 QUALITY ASSURANCE:

A. Provide doors and frames complying with Steel Door Institute Recommended Specifications: Standard Steel Doors and Frames (ANSI/SDI100) and as herein specified.

1.04 SUBMITTALS:

A. Product Data: Submit manufacturer's technical product data substantiating that products comply with requirements. Submit manufacture's fabrication data and installation instructions.

B. Shop drawings: Submit for fabrication and installation of steel doors and frames. Include details of each frame type, elevations of door design types, conditions at openings, details of construction, location and installation requirements of finish hardware and reinforcement, and details of joints and connections. Show anchorage and accessory items.

1.05 DELIVERY, STORAGE AND HANDLING:

A. Deliver hollow metal work carted or crated to provide protection during transit and job storage. Provide additional sealed plastic wrapping for factory finished doors.

B. Inspect hollow metal work upon delivery for damage. Minor damage may be repaired provide refinished items are equal in all respect to new work and acceptable to owner representative otherwise, remove and replace damaged items as directed.

C. Store doors and frames at building site under cover. Place units on minimum 4-inch high wood blocking. Avoid use of non-vented plastic or canvas shelters that could create humidity chamber. If cardboard wrapper on door becomes wet, remove carton immediately. Provide 1/4-inch spaces between stacked doors to promote air circulation.

1.06 PROJECT CONDITIONS

A. Examine conditions under which steel door and frames are to be installed and notify the Contractor of any conditions detrimental to the proper and timely completion of the work. Do not proceed until unsatisfactory conditions have been in an acceptable manner.

PART 2 – PRODUCTS

2.01 ACCEPTABLE MANUFACTURERS:

A. Manufacturers:Subject to compliance with requirements, provide steel doors and frames by one of the following:
Kewanee Corp.
Approved Equal

2.02 MATERIALS:

B. Cold Rolled Steel Sheets: Commercial quality carbon steel, complying with ASTM A 366 and ASTM A 568.

C. Galvanized Steel Sheets: Zinc coated carbon steel sheets of commercial quality, complying with ASTM A 526, with ASTM A 525, G60 zinc coated, mill phosphated.

D. Supports and Anchors: Fabricate from minimum 16 gage sheet metal. Galvanize after fabrication. Units to be built into exterior walls, complying with ASTM A 153, Class B.

E. Inserts, Bolts and fasteners: Manufacturer's standard units, except hot dip galvanized items to be built into exterior walls, complying with ASTM A 153, Class C or D as applicable.

F. Primer: Rust-inhibitive enamel or paint, either air-drying or baking, suitable as a base for specified finish paints complying with ANSI A224.1, "Test Procedure and Acceptance Criteria for Prime Painted Steel Surfaces for Steel Doors and Frames."

2.03 FABRICATION, GENERAL:

A. Fabricate steel door and frame units to be rigid, neat in appearance and free from defects, warp or buckle. Accurately form metal to required sizes and profiles. Where ever practicable, fit and assemble units in manufacturer's plant. Clearly identify work that cannot be permanently factory assembled before shipment, to assure proper assembly at project site. Use of metallic fillers to conceal manufacturing defects is unacceptable.

1) Interior Doors: Minimum 18 gage faces.

B. Fabricate exposed faces of doors and panels, including stiles and rails of non-flush units, from cold rolled steel.

C. Fabricate frames, concealed stiffeners, reinforcement, edge channels, louvers and molding from either cold rolled or hot rolled steel (at fabricator's option).

D. Exposed fasteners: Unless otherwise indicated, provide countersunk flat Phillips heads for exposed screws and bolts.

E.Finish Hardware Preparation: Prepare doors and frames to receive mortised and concealed finish hardware, include cutouts, in accordance with final Finish Hardware Schedule and templates provided by hardware supplier. Comply with applicable requirements of ANSI A115 series specification for door and frame preparation for hardware.

1) Drilling and tapping for surface applied hardware may be done at the project site.

2) Locate finish hardware as shown on final shop drawings, in a accordance with recommended locations for Builder's Hardware, published by National Builder's Hardware Association, and as otherwise specified.

2.04 STEEL DOORS:

A. Provide flush design steel doors, 1-3/4 inch thick, seamless hollow construction, unless otherwise indicated. For single acting doors, bevel both vertical edges 1/8 inch in 2 inches. Provide integral formed astragals where indicated.

B. Reinforce doors with rigid tubular steel frame where stiles and rails are less than 8 inches wide. Form tubular frame with 16-gauge steel, welded to outer sheets.

D. Finish Hardware Reinforcement: Reinforce doors for finish hardware installation.

E. Interior Doors: Fabricate interior doors of two- (2) outer cold rolled, stretcher leveled steel sheets not less than 18 gauge. Construct doors with smooth, flush surfaces, without visible joints or seams on exposed faces or stile edges, except around glazed or louvered panel inserts.

1) Reinforce tops and bottoms of doors with 18 gauge, horizontal steel channels, welded continuously to outer sheets.

2.05 STEEL FRAMES:

A Provide metal frame for doors. Conceal fastening, unless otherwise indicated. Fabricate frames of cold rolled furniture steel. Fabricate exterior frames using galvanized steel.

1) Interior Frames: 16 gauge for opening 4'0" wide and less. 14 gauge for opening over 4'0" wide.

F. Fabricate frame with mitered, reinforced and continuously welded corners. Knock down frames is not acceptable.

G. Finish Hardware Reinforcement: Provide reinforcement per manufactures instructions.

E. Jamb Anchors: Furnish jamb anchors as required to secure frames to adjacent construction, as follows:

1) Except as otherwise specified, furnish at least 3 anchors per jamb for openings 7'0" high and less; 4 anchors per jamb for openings 8'0" high and less; one additional anchor per jamb for each 24 inches or fraction thereof for openings over 8'0" high.

2) Gypsum Board/Metal Stud Construction: Manufacturer's standard channel type steel stud anchors, welded to frames.

F. Floor Anchors: Provide 14 gauge galvanized sheet steel floor anchors for each jamb and mullion.

G. Structural Reinforcing Members: Provide structural reinforcing members as part of frame assembly where indicated at mullions, heads and other locations.

H. Fabricate removable assemblies for field installation that allows for easy removal of equipment access.

PART 3 – EXECUTION

3.01 INSTALLATION

A Install standard steel doors, frames, and accessories in accordance with final shop drawings, manufacturer's data, and as herein specified.

B. Placing Frames: Comply with provisions of SDI-105 Recommended Erection Instructions For Steel Frames, unless otherwise indicated.

1) In metal stud partitions, install at least 3 wall anchors per jamb at hinge and strike levels. In open steel stud partitions, place studs in wall anchor notches and wire tie. In closed steel stud partitions, attach wall anchors to studs with tapping screws.

C. Door Installation: Fit hollow metal doors accurately in frames, within clearances specified in SDI-100.

3.02 ADJUST AND CLEAN:

A Prime coat Touch Up: Immediately after erection, sand smooth any rusted or damaged areas of prime coat and apply touch up of compatible air drying primer.

B Protection Removal: Immediately prior to final inspection, remove protective plastic wrappings from shop finished doors.

C. Final Adjustments: Check and readjust operating finish hardware items, leaving steel doors and frames undamaged and in complete and proper operating conditions. Remove and replace defective work, including doors and frames that are bowed, warped, twisted, cupped or otherwise unacceptable.

END OF SECTION

SECTION 08710- FINISH HARDWARE

PART 1 – GENERAL

1.02 SUMMARY:

A. Provide all labor, materials, equipment and services necessary to complete all finish hardware shown on the drawings and specified herein.

B. Extent of finish hardware required is indicated on drawing and in schedules and specified herein.

C. Should items of hardware not definitely specified be required for completion of the work, provide type and quality suitable to the service required, and of similar type and quality to specified hardware used in comparable applications.

1.03 SUBMITTALS:

A. Product data: Submit manufacturer's technical product data for each item of hardware in accordance with Division 1. Include whatever information may be necessary to show compliance with requirements, and include instructions for installation and for maintenance of operating parts and finish.

B. Hardware schedule: Submit six (6) copies of the final hardware schedule in manner indicated below. Coordinate hardware with doors, frames and related work to ensure proper size, thickness, hand function and finish of hardware. Based on builders hardware indicated, organize hardware schedule into "hardware sets" indicating complete designations of every item required for each door or opening. Employ NBHA and ASAHC Standards. Include the following information:

1) Type, style, function, size and finish of each hardware item.

2) Name and manufacturer of each item.

3) Fastenings and other pertinent information.

4) Location of hardware set cross referenced to indications on drawings both on floor plans and in door schedule

5) Explanation of all abbreviations, symbols, codes, etc. contained in schedule.

6) Mounting locations for hardware.

7) Door and frame sizes and materials.

8) Horizontal schedules will not be accepted.

C. Submittal sequence: Submit schedule at earliest possible date, particularly where acceptance of hardware schedule must precede fabrication of other work (e.g., hollow metal frames) which is critical in the project construction schedule. Include with the schedule, product data, samples, shop drawings of other work affected by finish hardware, and other information essential to the coordinated review of hardware schedule.

D. Keying schedule: Submit separate detailed keying schedule. Obtain keying instructions for the Owner Representative.

F. Templates: Furnish hardware templates to each fabricator of doors, frames and other work t be factory prepared for the installation of hardware. Upon request, check shop drawings of such other work, to confirm that adequate provisions are made for proper location and installation of hardware.

1.05 PRODUCT HANDLING:

A Tag each item or package separately, with identification related to final hardware schedule, and include basic installation instructions with each item or package.

C. Provide secure lock up for hardware delivered to the project, but not yet installed. Control handling and installation of hardware items which are not immediately replaceable, so that completion of the work will not be delayed by hardware losses, both before and after installation.

1.06 PROJECT CONDITIONS:

A. Coordination: Coordinate hardware with other work. Tag each item or package separately, with identification related to the final hardware schedule, and include basic installation instructions in the package. Furnish hardware items of proper design for use on doors and frames of the thickness, profile, swing, security and similar requirements indicated, as necessary for proper installation and function. Deliver individually packaged hardware items at the proper times to the proper locations (shop or project site) for installation.

PART 2 – PRODUCTS

2.01 SCHEDULED HARDWARE:

A. Requirements for design, grade, function, finish, size and other distinctive qualities of each type of finish hardware are indicated in the hardware schedule on architectural plans.

2.02 MATERIALS:

A. Hand of door: Drawings show direction of slide, swing or hand of each door leaf. Furnish each item of hardware for proper installation and operation of door movement as shown.

B. Manufacturer's name plate: Do not use manufacturer's products which have manufacturer's name or trade name displayed in a visible location (omit removable nameplates), except in conjunction with required UL labels and as otherwise acceptable to Owner Representative.

1) Manufacturer's identification will be permited on rim of lock cylinders only.

C. Base metals: Produce hardware units of basic metal and forming method inducted, using manufacturer's standard metal alloy, composition, temper and hardness, but in no case of lesser commercially recognized quality than specified for the applicable hardware units by applicable ANSI A156 series standard for each type hardware item and with ANSI A156.18 for finish designations indicated. Do not furnish optional materials or forming methods for those indicted, except as otherwise specified.

D. Fasteners: Provide hardware manufactured to conform to published templates generally prepared for machine screw installation. Do not provide hardware which has been prepared for self tapping sheet metal screws, except as specifically indicated.

E. Furnish screws for installation, with each hardware item. Provide Phillips flat head screws except as otherwise indicated. Finished exposed (exposed under any condition) screws to match hardware finish or, if exposed in surfaces of other work, to match finish of such other work as closely as possible, including prepared for paint in surfaces to receive painted finish.

F. Provide concealed fasteners for hardware units that are exposed when door is closed, except to the extent no standard units of the type specified are available with concealed fasteners. Do not use thru bolts for installation where bolt head or nut on opposite face is exposed in other work, except where it is not feasible to adequately reinforce the work. In such cases, provide sleeves for each thru bolt or use sex screw fasteners.

2.03 HINGES, BUTTS AND PIVOTS:

A Templates: Provide only template produced units.

2.04 LOCKS AND KEYING:

A. Locksets and latches shall be cylindrical type, product on one manufacturer.

B. Supplier to meet with Owner to determine keying. Provide 6 pin system with uncommon keyway. Provide quantity of keys as required.

2.05 EXIT DEVICES:

A. Provide Von Duprin, Sargent, Precision.

2.06 OVERHEAD DOOR CLOSERS:

A. All closures shall meet handicapped requirements. Manufacturer's representative shall check and adjust all closers after installation is complete and provide Owner with pamphlets and brochures explaining each type of closer. Provide LCN, Sargent, Corbin Russwin.

2.07 KICK PLATES:

A. All kick and armor plates shall be B & S 16 gauge or 18 gauge, with four (4) sides beveled.

B. Fasteners: Provide manufacturer's standard exposed fasteners for trim units (kick plates and similar units); either machine screws or self tapping screws.

2.08 DOOR SILENCER:

A. Furnish as applicable to meet specifications; floor stops and wall stops as required to suit conditions. Provide risers where required.

2.09 THRESHOLDS AND WEATHERSTRIPPING:

A. Provide as indicated in hardware schedule.

2.10 HARDWARE FINISHES:

A. Provide matching finishes for hardware units at each door or opening, to the greatest extent possible and except as otherwise indicated. Reduce differences in color and textures as much as commercially possible where the base metal or metal forming process is different for individual units of hardware exposed at the same door or opening. In general, match items to the manufacturer's standard finish for the latch and lock set for color and texture.

B. Provide finishes that match those established by BHMA.

C. Provide quality of finish, including thickness of plating or coating (if any), composition, hardness and other qualities complying with manufacturer's standards, but in no case less than specified for the applicable units of hardware by referenced standards.

D. The designations used in schedules and elsewhere to indicate hardware finishes are the industry recognized standard commercial finishes, except as otherwise noted.

PART 3 – EXECUTION

3.01 INSTALLATION

A. Mount hardware units at heights indicated in Recommended Locations for Builders Hardware for Standard Steel Doors and Frames by the Door and Hardware Institute, except as specifically indicated or required to comply with governing regulations, and except as may be otherwise directed by Owner Representative.

B. Install each hardware item in compliance with the manufacturers' instructions and recommendations. Wherever cutting and fitting is required to install hardware onto or into surfaces which are later to be painted or finished in another way, coordinate removal, storage and reinstallation or application of surface protections with finishing work specified in the Division 9 sections. Do not install surface mounted items until finishes have been completed on the substrate.

C. Set units level, plumb and true to line and location. Adjust and reinforce the attachment substrate as necessary for proper installation and operation.

D Drill and countersink units that are not factory prepared for anchorage fasteners. Space fasteners and anchors in accordance with industry standards.

3.02 ADJUST AND CLEAN:

A. Adjust and check each operating item of hardware and each door, to ensure proper operation or function of every unit. Replace those that cannot be adjusted to operate freely and smoothly as intended for the application made.

B. Clean adjacent surfaces soiled by hardware installation.

C. Final adjustment: Wherever hardware installation is made more than one month prior to acceptance or occupancy of a space or area, return to the work during the week prior to acceptance or occupancy, and make final check and adjustment of all hardware items in such space or area. Clean operating items as necessary to restore proper function and finish of hardware and doors. Adjust door control devices to compensate for final operation of heating and ventilating equipment.

D. Instruct Owner's personnel in proper adjustment and maintenance of hardware and hardware finishes, during the final adjustment of hardware.

END OF SECTION

SECTION 09250 - GYPSUM DRYWALL

PART 1 – GENERAL

1.01 RELATED DOCUMENTS:

A. The following sections contain requirements that related to this Section:

1) Division 5 Section "Cold-Formed Metal Framing" for load-bearing steel framing.

2) Division 6 Section "Rough Carpentry" for the following:

a) Gypsum sheathing applied over steel framing.

3) Division 9 Section "Tile" for cementitious backer units installed as substrates for ceramic tile.

4) Division 9 Section "Painting, finishing and wall coverings".

1.02 SUMMARY:

A. Furnish all labor, materials, equipment and services necessary to complete all gypsum drywall and stud framing indicated on the drawings and specified herein.

B. The extent of gypsum drywall and metal stud partitions is indicated on t the drawings and is defined to include, but is not limited to the following:

1) Gypsum drywall and screw type metal stud system.

2) Drywall finishing (joint tape and compound treatment).

3) All necessary items and accessories for a complete installation.

1.03 DEFINITIONS:

A. Gypsum Board Construction Terminology: Refer to ASTM C 11 and GA 505 for definitions of terms for gypsum board construction not otherwise defined in this section or other referenced standards.

1.04 QUALITY ASSURANCE:

A. Single Source Responsibility: Obtain each type of gypsum board, steel framing and related joint treatment materials from a single manufacturer.

1.05 SUBMITTALS:

A. Product data from manufacturers for each type of product specified.

1.06 DELIVERY, STORAGE, AND HANDLING:

A. Deliver materials in original packages, containers or bundles bearing brand name and identification of manufacturer or supplier.

B. Store materials inside under cover and keep them dry and protected against damage from weather, direct sunlight, surface contamination, corrosion, construction traffic and other causes. Neatly stack gypsum boards flat to prevent sagging.

C. Handle gypsum boards to prevent damage to edges, ends and surfaces. Do not bend or otherwise damage metal corner beads and trim.

1.07 PROJECT CONDITIONS:

A. Environmental Conditions, General: Establish and maintain environmental conditions for application and finishing gypsum board to comply with ASTM C 840 and with gypsum board manufacturer's recommendations.

PART 2 – PRODUCTS

2.01 STEEL FRAMING FOR WALLS AND PARTITIONS:

A. General: Provide steel framing members complying with the following requirements:

1) Component Sizes and Spacings: As indicated but not less than that required to comply with ASTM C 754 under the following maximum deflections and lateral loading conditions.

2) Maximum Deflection: L/240 at 5 lbf per sq. ft.

3) Protective Coating: Manufacturers standard corrosion-resistant coating.

B. Steel Studs and Runners: ASTM C 645, with flange edges of studs bent back 90 degrees and doubled over to form 3/16 inch wide minimum lip (return) and complying with the following requirements for minimum thickness of base (uncoated) metal and for depth.

1) Thickness: 0.0179 inch, unless otherwise indicated.

2) Depth: 3-5/8 inches, unless otherwise indicated.

3) Depth: 6 inches where indicated.

C. Fasteners for Metal Framing: Provide fasteners of type, material, size, corrosion resistance, holding power and other properties required to fasten steel framing and furring members securely to substrates involved; complying with the recommendations of gypsum drywall manufacturers for applications indicated.

2.02 GYPSUM BOARD:

A General: Provide gypsum board of types indicated in maximum lengths available to minimize end to end joints. Provide gypsum board in thickness indicated.

B Gypsum Wallboard: ASTM C 36 and as follows:

1) Type: Regular, unless otherwise indicated.

3) Edges: Tapered

4) Thickness: as indicated.

2.03 TRIM ACCESSORIES:

A. Accessories for Interior Installation: Corner beads, edge trim and control joints complying with ASTM C 1047 and requirements indicated below:

1) Material: Formed metal or metal combined with paper, with metal complying with the following requirements:

2) Sheet steel coated with zinc by hot-dip or electrolytic processes or with aluminum or rolled zinc.

3) Shapes indicated below by reference to Fig. 1 designations in ASTM C 1047:

4) Cornerbead on outside corners, unless otherwise indicated.

5) LC-bead with both face and back flanges; face flange formed to receive joint compound. Use LC-beads for edge trim unless otherwise indicated.

2.04 JOINT TREATMENT MATERIALS:

A. Provide materials complying with ASTM C 475, ASTM C 840 and recommendations of manufacturer of both gypsum board and joint treatment materials for the application indicated.

B. Joint tape for Gypsum Board: Paper reinforcing tape, unless otherwise indicated.

1) Use pressure sensitive or staple-attached open-weave glass fiber reinforcing tape with compatible joint compound where recommended by manufacturer of gypsum board and joint treatment materials for application indicated.

C. Setting Type Joint Compounds for Gypsum Board: factory-packaged, job-mixed, chemical-hardening powder products formulated for uses indicated.

1) Where setting-type joint compounds are indicated as a taping compound only for taping and filling only, use formulation that is compatible with other joint compounds applied over it.

2) For prefilling gypsum board joints, use formulation recommended by gypsum board manufacturer for this purpose.

3) For topping compound, use sandable formulation.

2.05 MISCELLANEOUS MATERIALS:

A. General: Provide auxiliary materials for gypsum drywall construction that comply with referenced standards and the recommendations of gypsum board manufacturer.

B. Steel drill screws complying with ASTM C 1002 for the following applications:

1) Fastening gypsum board to steel members less than 0.03 inch thick.

C. Steel drill screws complying with ASTM C 954 for fastening gypsum board to steel members from 0.033 to 0.112 inch thick.

PART 3 – EXECUTION

3.01 EXAMINATION:

A. Examine substrates to which drywall construction attaches or abuts, preset hollow metal frames, cast in anchors, and structural framing, with Installer present, for compliance with requirements for installation tolerances and other conditions affecting performance of drywall construction. Do not proceed with installation until unsatisfactory conditions have been corrected.

3.02 INSTALLATION OF STEEL FRAMING, GENERAL:

A. Steel Framing Installation Standard: Install steel framing to comply with ASTM C 754 and with ASTM C 840 requirements that apply to framing installation.

B. Install supplementary framing, blocking and bracing at penetrations in the work and for support of fixtures, equipment services, heavy trim, grab bars, toilet accessories, furnishings, and similar construction to comply with details indicated and with recommendations of gypsum board manufacturer, or if none available, with Gypsum Construction Handbook published by United States Gypsum Co.

3.03 APPLICATION AND FINISHING OF GYPSUM BOARD, GENERAL:

A. Gypsum Board Application and Finishing Standard: Install and finish gypsum board to comply with ASTM C 840 and GA 216.

B. Locate exposed end butt joints as far from center of walls and ceilings as possible, and stagger not less than 16 inches in alternate courses of board.

C. Install wall/partition boards in manner that minimizes the number of end butt joints or avoids them entirely where possible.

D. Install exposed gypsum board with face side out. Do not install imperfect, damaged or damp boards. Butt boards together for a light contact at edges and ends with not more than 1/16-inch open space between boards. Do not force into place.

ELocate either edge or end joints over supports, except in horizontal applications or where intermediate supports or gypsum board back blocking is provided behind end joints. Position boards so those like edges join. Tapered edges against tapered edges and mill cut or field cut ends against mill cut of field cut ends. Do no place tapered edges against cut edges or ends. Stagger vertical joints over different studs on opposite sides of partitions. Avoid joists at corners of framed openings where possible.

F. Attach gypsum board to steel studs to that leading edge or end of each board is attached to open (unsupported) edge of stud flange first.

G. Attach gypsum board to supplementary framing and blocking provided for additional support at openings and cutouts.

(I)Spot grout hollow metal door frames for hollow metal doors and doors over 32 inches wide. Apply spot grout at each jamb anchor clip just before inserting board into frame.

H. Space fasteners in gypsum boards in accordance with referenced gypsum board application and finishing standard and manufacturer's recommendations.

3.04 INSTALLATION OF DRYWALL TRIM ACCESSORIES:

A. General: Where feasible, use the same fasteners to anchor trim accessory flanges as required to fasten gypsum board to the supports. Otherwise, fasten flanges to comply with manufacturer's recommendations.

B. Install corner beads at external corners.

3.05 PROTECTION AND CLEAN-UP:

A. Promptly remove any residual joint compound from adjacent surfaces.

B Provide final protection and maintain conditions, in a manner suitable to Installer, which ensures gypsum drywall construction being without damage or deterioration at Time of Substantial Completion.

C After completion of drywall installation, remove all debris and equipment from the area, protect work from damage or deterioration until acceptance of the work.

END OF SECTION

SECTION 09300 - FLOOR TILE

PART 1 GENERAL

1.01 SECTION INCLUDES

A. Paver tile for thinset floor applications.

B. Tile edging material.

C. Crack isolation membrane.

1.02 REFERENCES

A. ANSI A108 Series/A118 Series/A136.1 – American National Standard Specifications for the Installation of Ceramic Tile (Compendium); 1992.

1. ANSI A108.10 – American National Standard Specifications for Installation of Grout in Tilework; 1992.

B. TCA (HB) – Handbook for Ceramic Tile Installation; Tile Council of America, Inc.; 1997.

1.03 SUBMITTALS

A. Shop Drawings: Indicate tile layout.

B. Product Data: Provide four copies of instructions for using grouts, isolation membranes, and adhesives.

C. Samples: Provide three full size samples of each tile illustrating pattern, color variations and texture. Provide three samples of grout illustrating color and texture.

D. Manufacturer's Certificate: Certify that products meet or exceed specified requirements.

E. Maintenance Data: Provide two copies to include recommended cleaning methods, cleaning materials, stain removal methods, and polishes and waxes.

1.04 QUALITY ASSURANCE

A. Perform work in accordance with TCA Handbook and ANSI A108 Series/A118.

B. Installer Qualifications: Company specializing in performing the work of this section with minimum 3 years experience.

1.05 DELIVERY, STORAGE, AND HANDLING

A. Protect adhesives from freezing or overheating in accordance with manufacturer's instructions.

1.06 ENVIRONMENTAL REQUIREMENTS

A. Do not install adhesives in an unventilated environment.

B. Maintain ambient and substrate temperature of 50 degrees F during installation of mortar materials.

1.06 EXTRA MATERIALS

A. Provide 2 percent of each size, color, and surface finish of tile specified, but not less than 10 of each type.

PART 2 PRODUCTS

2.01 TILE

A. Manufacturers: Refer to room finish schedule.

2.02 CRACK ISOLATION MEMBRANE

A. Mapei: Product: Mapelastic SM

B. The Noble Company: Product: Nobleseal CIS

C. Custom Building Products: Product: CrackBuster crack prevention underlayment

D. Schluter: Product: DITRA

2.03 ADHESIVE MATERIALS

A. Manufacturers:

1 W.R. Bonsal Co.

2 Bostik.

3 Custom Building Products.

B. Organic Adhesive: ANSI A136.1, thinset bond type; use Type I in areas subject to prolonged moisture exposure.

C. Epoxy Adhesive: ANSI A118.3, thinset bond type.

D. Tile Setting Adhesive: Elastomeric, waterproof, liquid applied, for use on wall tile only.

2.04 GROUT MATERIALS

A. Refer to room finish schedule.

2.05 ACCESSORY MATERIALS

A. Refer to room finish schedule.

PART 3 EXECUTION

3.01 EXAMINATION

A. Verify that concrete sub-floor surfaces are ready for tile installation by testing for moisture emission rate and alkalinity; obtain instructions if test results are not within limits recommended by tile manufacturer and setting materials manufacturer.

B. Verify that required floor-mounted utilities are in correct location.

3.02 PREPARATION

A. Protect surrounding work from damage.

B. Vacuum clean surfaces and damp clean.

C. Seal and prime surface with Primer Patch and Filler TA-861.Allow primer to dry to a clear film before applying isolation membrane.

D. Install Crack Isolation Membrane over entire surface as recommended by the manufacuturer. Allow to cure to walkable hardness before setting tile.

E. Prepare substrate surfaces for adhesive installation in accordance with adhesive manufacturer's instructions.

3.03 INSTALLATION – GENERAL

A. Install tile and grout in accordance with applicable requirements of ANSI A108.1 through A108.10, manufacturer's instructions, and TCA Handbook recommendations.

B. Lay tile to pattern indicated. Do not interrupt tile pattern through openings.

C. Place edge strips at exposed tile edges.

D. Cut and fit tile to penetrations through tile, leaving sealant joint space. Form corners neatly.

E. Place tile joints uniform in width, subject to variance in tolerance allowed in tile size. Make joints watertight, without voids, cracks, excess mortar, or excess grout.

F. Sound tile after setting. Replace hollow sounding units.

G. Allow tile to set for a minimum of 48 hours prior to grouting.

H. Grout tile joints.

I. Apply sealant to junction of tile and dissimilar materials and junction of dissimilar planes.

3.04 INSTALLATION – FLOORS – THIN-SET METHODS

A. Over exterior concrete substrates, install in accordance with TCA Handbook Method F102, with standard grout.

B. Over interior concrete substrates, install in accordance with TCA Handbook Method F113, dry-set or latex-portland cement bond coat, with standard grout, unless otherwise indicated.

3.05 CLEANING

A. Clean tile and grout surfaces.

3.06 PROTECTION OF FINISHED WORK

A. Do not permit traffic over finished floor surface for 4 days after installation.

END OF SECTION

SECTION 09650 - RESILIENT FLOORING

PART 1 GENERAL

1.01 SECTION INCLUDES

A. Linoleum sheet flooring

C. Resilient base.

E. Installation accessories.

1.02 REFERENCE STANDARDS

A. ASTM F 710 – Standard Practice for Preparing Concrete Floors to Receive Resilient Flooring; 2005.

B. ASTM F 1861 – Standard Specification for Resilient Wall Base; 2002.

C. FS SS-T-312 – Tile, Floor: Asphalt, Rubber, Vinyl, and Vinyl Composition; Federal Specifications and Standards; Revision B, 1974, and Amendment 1, 1979.

1.03 SUBMITTALS

A. Product Data: Provide four copies of data on specified products, describing physical and performance characteristics; including sizes, patterns and colors available; and installation instructions.

B. Verification Samples: Submit three samples, 2 x 2 inch in size illustrating color and pattern for each resilient flooring and one sample for each base and transition strip.

C. Maintenance Data: Include maintenance procedures, recommended maintenance materials, and suggested schedule for cleaning, stripping, and re-waxing.

1.04 WARRANTY

A. Provide limited five (5) year warranty.

1.05 DELIVERY, STORAGE, AND HANDLING

A. Delivered in unopened cartons with clear and legible identification.

1.06 FIELD CONDITIONS

A. Maintain temperature in storage area between 55 degrees F and 90 degrees F.

B. Store materials for not less than 48 hours prior to installation in area of installation at a temperature of 70 degrees F to achieve temperature stability. Thereafter, maintain conditions above 55 degrees F.

1.07 EXTRA MATERIALS

A. Provide 24 sq ft of flooring, 12 lineal feet of base, of each type and color specified.

PART 2 PRODUCTS

2.01 MATERIALS – SHEET FLOORING

A. Linoleum Sheet Flooring: Homogeneous wear layer bonded to backing, with color and pattern through wear layer thickness:

1 3.2 mm homogeneous floor covering of all natural materials consisting of linseed oil, cork, wood flour, resin binders, dry pigments, mixed and calendered onto natural jute backing.

2 Pattern and color shall extend throughout total thickness of material.

3 Backing: Jute fabric.

4 Sheet Width: 79 inch, minimum.

5 Pattern: As scheduled.

6 Manufacturers:

a. Refer to Room Finish Schedule.

2.02 MATERIALS – TILE FLOORING

A. Refer to Room Finish Schedule.

2.03 MATERIALS – WALK OFF MAT

A. Refer to Room Finish Schedule.

2.04 MATERIALS – BASE

A. Coved and straight set-on type, 4" high rubber, as manufactured by Goodrich Flooring Co., or approved equal.

B. Include all necessary returns at corners, door jambs, closers, etc.

C. Adhesive as recommended by tile manufacturer.

2.05 COMPONENTS – TRANSITION STRIPS

A. Refer to Room Finish Schedule.

2.06 ACCESSORIES

A. Subfloor Filler: White premix latex; type recommended by adhesive material manufacturer.

B. Primers, Adhesives, and Seaming Materials: Waterproof; types recommended by flooring manufacturer.

C. Moldings and Edge Strips: As scheduled.

D. Filler for Coved Base: Plastic.

E. Sealer and Wax: Types recommended by flooring manufacturer.

PART 3 EXECUTION

3.01 EXAMINATION

A. Verify that sub-floor surfaces are smooth and flat within the tolerances specified for that type of work and are ready to receive resilient flooring.

B. Verify that sub-floor surfaces are dust-free and free of substances that could impair bonding of adhesive materials to sub-floor surfaces.

C. Verify that concrete sub-floor surfaces are ready for resilient flooring installation by testing for moisture emission rate and alkalinity in accordance with ASTM F 710; obtain instructions if test results are not within limits recommended by resilient flooring manufacturer and adhesive materials manufacturer.

D. Verify that required floor-mounted utilities are in correct location.

3.02 PREPARATION

A. Remove sub-floor ridges and bumps. Fill minor low spots, cracks, joints, holes, and other defects with sub-floor filler to achieve smooth, flat, hard surface.

B. Prohibit traffic until filler is cured.

C. Clean substrate.

D. Apply primer as required to prevent "bleed-through" or interference with adhesion by substances that cannot be removed.

E. Remove any imperfections or other defects and fill base substrate to achieve a smooth surface to avoid telegraphing through the base material.

3.03 INSTALLATION – SHEET FLOORING

A. Install in accordance with manufacturer's instructions.

B. Spread only enough adhesive to permit installation of materials before initial set.

C. Set flooring in place, press with heavy roller to attain full adhesion.

D. Lay flooring with joints and seams parallel to longer room dimensions, to produce minimum number of seams. Lay out seams to avoid widths less than 1/3 of roll width; match patterns carefully at seams.

E. Double cut sheet at seams.

F. Lay flooring with tightly butted seams, without any seam sealer unless otherwise indicated.

G. Double cut sheet; provide heat welded seams.

H. Use Marmoweld color matched welding rod as manufactured by Forbo for heat welded seams.

I. Where floor finishes are different on opposite sides of door, terminate flooring under centerline of door.

J. Install edge strips at unprotected or exposed edges, where flooring terminates, and where indicated. Secure resilient strips by adhesive.

K. Scribe flooring to walls, columns, cabinets, floor outlets, and other appurtenances to produce tight joints.

L. Immediately after installation is completed, initial maintenance procedures must be implementd. See manufacturer's maintenance instructions for details.

3.04 INSTALLATION – TILE FLOORING

A. Install in accordance with manufacturer's instructions.

B. Mix tile from container to ensure shade variations are consistent when tile is placed.

C. Spread only enough adhesive to permit installation of materials before initial set.

D. Set flooring in place, press with heavy roller to attain full adhesion.

E. Lay flooring with joints and seams parallel to building lines to produce symmetrical tile pattern.

F. Install tile to grid pattern. Allow minimum 1/2 full size tile width at room or area perimeter.

G. Where floor finishes are different on opposite sides of door, terminate flooring under centerline of door.

H. Install edge strips at unprotected or exposed edges, where flooring terminates, and where indicated.

I. Scribe flooring to walls, columns, cabinets, floor outlets, and other appurtenances to produce tight joints.

3.05 INSTALLATION – WALK OFF MAT

A. Install according to manufacturer's instructions.

3.06 INSTALLATION – BASE

A. Fit joints tightly and make vertical. Maintain minimum dimension of 18 inches between joints.

B. Miter internal corners. At external corners, use premolded units. At exposed ends, use premolded units.

C. Install base on solid backing. Bond tightly to wall and floor surfaces.

D. Press base in place with roller with top edge level and bottom edge in contact with floor.

E. Scribe and fit to door frames, walls and other interruptions.

3.07 CLEANING

A. Remove excess adhesive from floor, base, and wall surfaces without damage.

B. Clean, seal, and wax resilient flooring products in accordance with manufacturer's instructions.

3.08 PROTECTION

A. Prohibit traffic on resilient flooring for 48 hours after installation.

3.09 SCHEDULE

A. Refer to Drawings.

END OF SECTION

SECTION 09680 - CARPET

PART 1 GENERAL

1.01 SECTION INCLUDES

A. Carpet, fully adhered.

B. Accessories.

1.02 REFERENCE STANDARDS

A. ASTM D 2859 – Standard Test Method for Ignition Characteristics of Finished Textile Floor Covering Materials; 2006.

B. ASTM E 84 – Standard Test Method for Surface Burning Characteristics of Building Materials; 2005.

C. ASTM E 648 – Standard Test Method for Critical Radiant Flux of Floor Covering Systems Using a Radiant Heat Energy Source; 2006a.

D. CRI 104 – Standard for Installation of Commercial Textile Floorcovering Materials; Carpet and Rug Institute; 2002.

E. NFPA 253 – Standard Method of Test for Critical Radiant Flux of Floor Covering Systems Using a Radiant Heat Energy Source; National Fire Protection Association; 2006.

1.03 SUBMITTALS

A. Submit three 12 x 12 inch strike-offs of carpeting, showing pattern and color. Samples to be submitted with sufficient time for manufacturing and delivery to meet project schedule.

B. Submit two copies of the carpet manufacturer's printed instructions for installation of the specified carpet.

C. Submit one copiy of manufacturer's printed instructions for maintenance of the carpet.

D. Submit four copies of descriptive literature of the accessories proposed for use.

E. In lieu of literature, three samples of each accessory may be submitted for approval.

F. Submit four copies of shop drawings (seaming diagram) or "carpet take-off drawings(s)" for review by the Interior Designer.

1.04 QUALITY ASSURANCE

A. Manufacturer Qualifications: Company specializing in manufacturing specified carpet with minimum three years experience.

1 Mill is to supply carpeting of same dye lot for installation. If this is not possible, notify Interior Designer prior to shipment.

2 Except for approved cut pieces, the mill shall ship carpet in full rolls of 100 feet minimum only.

B. Installer Qualifications: Company specializing in installing carpet with minimum three years experience.

1. Carpet installer shall verify that all rolls of carpeting used in one space are of the same dye lot. If any rolls containing different dye lots are found, notify the Project Manager before installation.

1.05 FIELD CONDITIONS

A. Store materials in area of installation for minimum period of 24 hours prior to installation.

B. Maintain minimum 70 degrees F ambient temperature 24 hours prior to, during and 24 hours after installation.

C. Ventilate installation area during installation and for 72 hours after installation.

1.06 DELIVERY AND STORAGE

A. Coordinate delivery with job progress to avoid extra handling and damage.

B. All material shall be delivered in original mill wrappings with each roll having its mill register number properly attached.

C. Store under cover in a protected area. Maintain protective wrapping and store on pallets or other suitable supports minimum 4 inches above floor.

1.07 EXTRA MATERIALS

A. Provide a minimum of 9 square yards of carpeting of each type, color, and pattern specified.

B. Any scraps larger than one square yard and all remnants shall be given to the Project Manager for disposition.

1.08 WARRANTY

A. The carpet manufacturer shall warrant that the materials furnished are free of manufacturing defects such as: delamination, latex voids, holes in primary backing, streaks, folds in backing, plus any other defect attributed to failure to comply with the detailed specification.

B. The installer shall warrant that the work has been installed as specified and will adjust, restretch, align, or otherwise correct any deficiencies in installation for a period of one year from the date of substantial completion.

PART 2 PRODUCTS

2.01 CARPET

A. Manufacturer and material as specified in the schedule.

2.02 ACCESSORIES

A. Sub-Floor Filler: Non-crumbling, non-staining type recommended by carpet manufacturer.

B. Tackless Strip: Carpet gripper, as manufactured by Roberts Smooth Edge, Los Angeles, CA, or type recommended by carpet manufacturer to suit application, with attachment devices.

C. Moldings and Edge Strips: Vinyl, color as selected.

D. Adhesives: Non-staining, non-bleeding strippable type as recommended by the carpet manufacturer.

E. Floor Leveling material: as recommended by carpet manufacturer.

F. Seam Adhesive: Recommended by manufacturer.

G. Contact Adhesive: Compatible with carpet material; releasable type.

PART 3 EXECUTION

3.01 EXAMINATION

A. Verify that sub-floor surfaces are smooth and flat within the tolerances specified for that type of work and are ready to receive carpet.

B. Verify that concrete sub-floor surfaces are ready for carpet installation by testing for moisture emission rate and alkalinity; obtain instructions if test results are not within limits recommended by carpet manufacturer and adhesive materials manufacturer.

C. Verify that required floor-mounted utilities are in correct location.

D. Inspect all floor surfaces to receive carpet at least three days prior to the scheduled installation and notify the Project Manager of any deficiencies in floor surfaces or areas so that conditions may be corrected. Commencement of work will be considered as acceptance of job conditions.

3.02 PREPARATION

A. Refer to floor plans for location of area to be carpeted and to schedule for types of carpeting to be installed.

B. Remove sub-floor ridges and bumps. Fill minor or local low spots, cracks, joints, holes, and other defects with sub-floor filler.

C. Apply, trowel, and float filler to achieve smooth, flat, hard surface. Prohibit traffic until filler is cured.

D. Sweep and clean surfaces of all foreign material which would interfere with satisfactory installation of the carpeting.

3.03 INSTALLATION – GENERAL

A. Install carpet in accordance with manufacturer's instructions.

B. Verify carpet match before cutting to ensure minimal variation between dye lots.

C. Lay out carpet and locate seams in accordance with shop drawings or "Carpet Take-off Drawing approved by the Interior Department.

1 Bring any job conditions at variance with the drawings to the attention of the Project Manager.

2 Locate seams in area of least traffic, out of areas of pivoting traffic, and parallel to main traffic. Butt seams are not allowed.

3 Do not locate seams perpendicular through door openings.

4 Align run of pile in same direction as anticipated traffic and in same direction on adjacent pieces.

5 Locate change of color or pattern between rooms under door centerline.

6 Provide monolithic color, pattern, and texture match within any one area.

7 Seams in areas not noted on the drawing will not be acceptable.

D. Install carpet tight and flat on subfloor, well fastened at edges, with a uniform appearance.

E. Carpet installer shall check all dimensions for proper fit and installation of carpet, and be responsible for all measurements.

F. Carpeting that has a loop/cut loop construction is to be seamed loop to loop or loop to cut. No other seaming will be allowed.

G. All seams to be expertly bound together with hot melt tape seamed with a breaking strength of not less than 100 pounds. All cut edges shall be trued and treated to form non-raveling joints where exposed.

H. Doorway seams to be centered under doors.

I. Where carpet meets raised surfaces, make an even surface between the two. Where carpet meets resilient flooring, use specified transition strips (see room finish schedule).

J. Unsatisfactory installation resulting from work performed not in accordance with the manufacturer's recommendations shall be the responsibility of the carpet installer and may result in removal and relaying of carpeting at the expense of the installer.

K. Head or butt seams are not permitted.

3.04 DIRECT-GLUED CARPET

A. Unroll carpeting face up to determine cuts and placement of seams, taking care that all patterns match and that pile runs in same direction. Allow for off-square walls. Roll back carpeting from area to be treated with adhesive.

B. Double cut carpet seams, with accurate pattern match. Make cuts straight, true, and unfrayed. Apply seam adhesive to cut edges of woven carpet immediately.

C. Apply contact adhesive to floor uniformly at rate recommended by manufacturer. After sufficient open time, press carpet into adhesive.

REGISTRATION SEAL

ARCVISION
I N C O R P O R A T E D
ARCHITECTURE • ENGINEERING • STORE PLANNING
SAINT LOUIS / DALLAS / LAS VEGAS / ORLANDO
1950 CRAIG ROAD, SUITE 300 ST. LOUIS, MO 63146
PH. (314) 415-2400 FAX (314) 415-2300 www.arcv.com
TEXAS ENGINEERING FIRM #12793

BOOT BARN

BOOT BARN
1424 TEXAS AVE. CROSSING
COLLEGE STATION TX, 77840
STORE # 161R

REV	DATE	DESCRIPTION	NAME

PROJECT NO: 210627
DRAWN BY: KWL
CHECKED BY: CCM
ISSUE DATE: 02/04/22

ARCHITECTURAL SPECIFICATIONS

T21

D. Apply seam adhesive to the base of the edge glued down. Lay adjoining piece with seam straight, not overlapped or peaked, and free of gaps.
E. Roll with appropriate roller, 75 pounds or heavier, for complete contact of adhesive to carpet backing. Roll out all air bubbles to produce a smooth, level finish.
F. Trim carpet neatly at walls and around interruptions.
G. Complete installation of edge strips, concealing exposed edges. Bind cut edges where not concealed by edge strips.

3.05 CLEANING
A. Remove excess adhesive from floor and wall surfaces without damage. Adhesive shall be removed from carpet face immediately after installation with remover provided by manufacturer.
B. Clean and vacuum carpet surfaces.

3.06 SCHEDULE
A. Refer to room finish schedule

END OF SECTION

SECTION 09900 - PAINTS AND COATINGS

PART 1 GENERAL
1.01 SECTION INCLUDES
A. Surface preparation.
B. Field application of paints, stains, and varnishes.
C. Scope: Finish all interior and exterior surfaces exposed to view, unless fully factory–finished and unless otherwise indicated, including the following:
D. Do Not Paint or Finish the Following Items:
1 Items fully factory–finished unless specifically so indicated; materials and products having factory–applied primers are not considered factory finished.
2 Items indicated to receive other finishes.
3 Items indicated to remain unfinished.
4 Fire rating labels, equipment serial number and capacity labels, and operating parts of equipment.
5 Floors, unless specifically so indicated.
6 Glass.
7 Concealed pipes, ducts, and conduits.

1.02 REFERENCE STANDARDS
A. 40 CFR 59, Subpart D – National Volatile Organic Compound Emission Standards for Architectural Coatings; U.S. Environmental Protection Agency; current edition.
B. ASTM D 4442 – Standard Test Methods for Direct Moisture Content Measurement of Wood and Wood–Base Materials; 1992 (Reapproved 2003).

1.03 SUBMITTALS
A. Product Data: Provide four copies of data on all finishing products. Indicate manufacturer, product name, quality, and type of finish proposed for all surfaces to be finished. Product data shall be submitted, whether or not the specified product is proposed for use.
B. Samples: Submit four paper chip samples, 8 x 8 inch in size illustrating colors and textures proposed for each surface finishing product scheduled.
C. Maintenance Data: Submit data on cleaning, touch–up, and repair of painted and coated surfaces.

1.04 QUALITY ASSURANCE
A. Manufacturer Qualifications: Company specializing in manufacturing the products specified, with minimum 10 years experience.
B. Acceptable paint and varnish manufacturers:
1 Benjamin Moore Co.
2 Glidden–ICI Paints.
3 Martin–Senour Co.
4 PPG Industries
5 Pratt & Lambert, Inc.
6 Sherwin–Williams Co.
7 Duron

1.05 DELIVERY, STORAGE, AND HANDLING
A. Deliver products to site in sealed and labeled containers; inspect to verify acceptability.
B. Container Label: Include manufacturer's name, type of paint, brand name, lot number, brand code, coverage, surface preparation, drying time, cleanup requirements, color designation, and instructions for mixing and reducing.
1. Do not reduce, thin, or dilute coatings or add materials to coatings unless such procedure is specifically described in manufacturer's product instructions.
B. Primers: Where the manufacturer offers options on primers for a particular substrate, use primer categorized as "best" by the manufacturer.
C. Quality Standards for Paints and Coatings:
1. Exterior:
a. Benjamin Moore Aura Waterborne Exterior Paint Semi Gloss Finish 632
b. Sherwin Williams Duration Exterior Latex Coating, K34 Series.
c. Porter Permanizer Exterior Acrylic Coating.
2. Interior:
a. Benjamin Moore Aura Matte Waterborne Interior Paint 522
b. Porter Silken Touch Vinyl Suede Interior Latex Wall Paint.
c. Deep Colors: Sherwin Williams ColorAccents Interior Latex, Y10 Series.
D. Volatile Organic Compound (VOC) Content:
1. Provide coatings that comply with the most stringent requirements specified in the following:
a. 40 CFR 59, Subpart D––National Volatile Organic Compound Emission Standards for Architectural Coatings.
2. Determination of VOC Content: Testing and calculation in accordance with 40 CFR 59, Subpart D (EPA Method 24), exclusive of colorants added to a tint base and water added at project site; or other method acceptable to authorities having jurisdiction.

2.01 PAINT SYSTEMS – EXTERIOR
A. Wood, Opaque, Latex, 3 Coat:
1 One coat of latex primer sealer.
2 Gloss: Two coats of latex enamel.
B. Paint WE–TR–VS – Wood, Transparent, Varnish, Stain:
1 Filler coat (for open grained wood only).
2 One coat of stain.
3 One coat sealer.
4 Satin: Two coats of varnish.
C. Masonry/Concrete, Opaque, Latex, 3 Coat:
1 One coat of block filler.
2 Gloss: Two coats of latex.
D. Gypsum Board and Plaster, Opaque, Latex, 3 Coat:
1 One coat of latex primer sealer.
2 Gloss: Two coats of latex.
E. Ferrous Metals, Unprimed, Alkyd, 3 Coat:
1 One coat of alkyd primer.
2 Gloss: Two coats of alkyd enamel.
F. Ferrous Metals, Primed, Alkyd, 2 Coat:
1 Touch–up with rust–inhibitive primer recommended by top coat manufacturer.
2 Gloss: Two coats of alkyd enamel.
G. Aluminum, Unprimed, Latex, 2 Coat:
1. Gloss: Two coats of latex enamel.
H. Copper, Latex, 3 coat.
1 One coat wash primer for copper, brass and tin.
2 Gloss: Two coats of latex enamel.

2.04 PAINT SYSTEMS – INTERIOR
A. Wood, Opaque, Alkyd, 3 Coat:
1 One coat alkyd primer sealer.
2 Semi–gloss: Two coats of alkyd enamel.
B. Paint WI–TR–VS – Wood, Transparent, Varnish, Stain:
1 Filler coat (for open grained wood only).
2 One coat of stain.
3 One coat sealer.
4 Satin: Two coats of varnish.
C. Ferrous Metals, Unprimed, Alkyd, 3 Coat:
1 One coat of alkyd primer.
2 Semi–gloss: Two coats of alkyd enamel.
D. Ferrous Metals, Primed, Alkyd, 2 Coat: RCB Bank PAINTS AND COATINGS Edmond, Oklahoma 09900 IBT/110K02
1 Touch–up with alkyd primer.
2 Semi–gloss: Two coats of alkyd enamel.
E. Aluminum, Unprimed, Latex, 2 Coat:
1. Semi–gloss: Two coats of latex enamel.
F. Concrete/Masonry, Latex, 3 Coat:
1 One coat of block filler.
2 Gloss: Two coats of latex.
G. Gypsum Board/Plaster, Latex, 3 Coat:
1 One coat of latex primer sealer.
2 Eggshell (use in wet areas only): Two coats of latex.
3 Flat: Two coats of latex.
H. Gypsum Board/Plaster, Latex (at wallcovering): Latex Primer, 1 Coat:
1. One coat of latex primer sealer.

2.02 ACCESSORY MATERIALS
A. Accessory Materials: Provide all primers, sealers, cleaning agents, cleaning cloths, sanding materials, and clean–up materials required to achieve the finishes specified whether specifically indicated or not; commercial quality.
B. Patching Material: Latex filler.
C. Fastener Head Cover Material: Latex filler.

PART 3 EXECUTION
3.01 EXAMINATION
A. Verify that surfaces are ready to receive work as instructed by the product manufacturer.
B. Examine surfaces scheduled to be finished prior to p commencement of work. Report any condition that may potentially affect proper application. Reexamine surfaces scheduled to be finished after application of first coat of primer and prior to commencement of final coat(s). Report any conditions that may potentially affect application. Any surface repairs or preparation after application of second coat is the responsibility of the paint contractor at no extra cost to the owners or Program Manager.
C. Surfaces receiving finishes shall be dry and free from all debris, oils, dust or other deleterious materials. If, after application of paint or varnish, the finish blisters, cracks, peels, or otherwise shows indication of dampness or irregular condition of surface, the applied treatment shall be removed and the surface refinished at no additional cost.
D. Test shop–applied primer for compatibility with subsequent cover materials.
E. Measure moisture content of surfaces using an electronic moisture meter. Do not apply finishes unless moisture content of surfaces are below the following maximums:
1 Gypsum Wallboard: 12 percent.
2 Masonry, Concrete, and Concrete Unit Masonry: 12 percent.
3 Interior Wood: 15 percent, measured in accordance with ASTM D 4442.
4 Exterior Wood: 15 percent, measured in accordance with ASTM D 4442.

3.02 PREPARATION
A. Clean surfaces thoroughly and correct defects prior to coating application.
B. Prepare surfaces using the methods recommended by the manufacturer for achieving the best result for the substrate under the project conditions.
C. Remove surface appurtenances, including electrical plates, hardware, light fixture trim, escutcheons, and fittings, prior to preparing surfaces or finishing.
D. Surfaces: Correct defects and clean surfaces which affect work of this section.
E. Surfaces receiving finishes shall be dry and free from all debris, oils, dust, or other deleterious materials. If, after application of paint or varnish, the finish blisters, cracks, peels, or otherwise shows indication of dampness or irregular condition of surface, the finish shall be removed and surface refinished by this contractor at no additional cost.
F. Marks: Seal with shellac or Kilz those which may bleed through surface finishes.
G. Remove mildew from impervious surfaces by scrubbing with solution of tetra–sodium phosphate and bleach. Rinse with clean water and allow surface to dry.
H. Concrete and Unit Masonry Surfaces to be Painted: Remove dirt, loose mortar, scale, salt or alkali powder, and other foreign matter. Fill irregularities with cement grout. Remove oil and grease with a solution of tri–sodium phosphate; rinse well and allow to dry. Remove stains caused by weathering of corroding metals with a solution of sodium metasilicate after thoroughly wetting with water. Allow to dry.
I. Gypsum Board Surfaces to be Painted: Fill narrow shallow cracks, small holes, and minor defects with filler compound. Allow to dry and sand smooth without raising any wallboard paper. Spot prime defects after repair. Sand between coats.
J. Aluminum Surfaces to be Painted: Remove surface contamination by steam or high pressure water. Remove oxidation with acid etch and solvent washing.
K. Galvanized Surfaces to be Painted: Remove surface contamination and oils and wash with solvent, Xylol or equal, to remove grease, oil, and other contaminants. Wipe dry with clean cloth. Apply coat of etching primer.
L. Uncorroded Uncoated Steel and Iron Surfaces to be Painted: Remove grease, mill scale, weld splatter, dirt, and rust. Where heavy coatings of scale are evident, remove by hand wire brushing or sandblasting; clean by washing with solvent. Apply a treatment of phosphoric acid solution, ensuring weld joints, bolts, and nuts are similarly cleaned. Prime paint entire surface; spot prime after repairs.
M. Shop–Primed Steel Surfaces to be Finish Painted: Sand and scrape to remove loose primer and rust. Feather edges to make touch–up patches inconspicuous. Clean surfaces with solvent. Prime bare steel surfaces. Re–prime entire shop–primed item.
N. Interior Wood Items to Receive Opaque Finish: Wipe off dust and grit prior to priming. Seal knots, pitch streaks, and sappy sections with sealer. Treat mildewed surfaces with a solution of one quart hypochlorite bleach to half cup of detergent in one gallon of water. Rinse and allow to dry thoroughly before painting. Fill nail holes, cracks, joints, and other defects after primer has dried; sand between coats.
O. Exterior Wood Surfaces to Receive Opaque Finish: Remove dust, grit, and foreign matter. Seal knots, pitch streaks, and sappy sections. Fill nail holes with tinted exterior calking compound after prime coat has been applied. Back prime concealed surfaces before installation.
P. Wood Doors to be Field–Finished: Seal wood door top and bottom edge surfaces with clear sealer.
Q. Metal Doors to be Painted: Prime metal door top and bottom edge surfaces.

3.03 APPLICATION – PAINT
A. Exterior Wood to Receive Opaque Finish: If final painting must be delayed more than 2 weeks after installation of woodwork, apply primer within 2 weeks and final coating within 4 weeks.
B. Apply products in accordance with manufacturer's instructions.
C. Where adjacent sealant is to be painted, do not apply finish coats until sealant is applied.
D. Do not apply finishes to surfaces that are not dry. Allow applied coats to dry before next coat is applied.
E. Apply paint only when moisture content of surfaces is within manufacturer's recommended limits.
F. Apply paint materials with clean brushes, rollers, or spraying equipment.
G. Primer shall be white, undercoat shall be 1/2 tint of Final color.
H. Apply each coat to uniform appearance.
I. Sand wood and metal surfaces lightly between coats to achieve required finish.
J. Vacuum clean surfaces of loose particles. Use tack cloth to remove dust and particles just prior to applying next coat.
K. All painted interior and exterior millwork and doors shall have primer and first coat spray applied prior to installation and final coat brush applied after installation.
L. All exterior wood trim shall be back primed or sealed.
M. Finish coats shall be smooth, free from brush marks, streaks, laps or build–up of paint, skips, or missed areas. For certain colors, more than two finish coats may be required to achieve an acceptable quality. Need for additional coats shall be determined by the Project Manager.
N. Patch wall after primer and after first coat of paint and just prior to final coat.
O. Final coat of wall paint shall be applied after other trades work has been completed except for the installation of resilient base.
P. Do not apply additional coats until completed coat has been inspected by the Project Manager. Only completed coats of paint that have been inspected shall be considered in determining number of coats applied.
Q. Finish tops and bottoms of all doors in same manner as door faces.
R. Make edges of paint adjoining other materials or colors clean and sharp without overlapping.
S. Where a portion of finish on drywall partition is damaged or unacceptable, refinish entire surface of partition.
T. Wood to Receive Transparent Finishes: Tint fillers to match wood. Work fillers into the grain before set. Wipe excess from surface.
U. Reinstall electrical cover plates, hardware, light fixture trim, escutcheons, and fittings removed prior to finishing.

3.04 FINISHING MECHANICAL AND ELECTRICAL EQUIPMENT
A. Paint shop–primed equipment, where indicated.
B. Remove unfinished louvers, grilles, covers, and access panels on mechanical and electrical components and paint separately.
C. Paint interior surfaces of all ductwork that are visible through registers or grilles with a flat, non–specklar black paint.
D. Size and treat all walls which are to receive wall covering in preparation for the hanging of the wall covering.
E. Reinstall electrical cover plates, hardware, light fixture trim, escutcheons, and fittings which were removed prior to finishing.

3.05 CLEANING
A. As work proceeds, promptly remove any spilled, splashed, or splattered paint or other coating product.
B. Collect waste material that could constitute a fire hazard, place in closed metal containers, and remove daily from site.

3.06 SCHEDULE – SURFACES TO BE FINISHED
A. Do Not Paint or Finish the Following Items:
1 Items fully factory–finished unless specifically noted.
2 Fire rating labels, equipment serial number and capacity labels.
3 Stainless steel items.
B. Mechanical and Electrical: Use paint systems defined for the substrates to be finished.
1 Paint shop–primed items occurring in finished areas.
2 Paint interior surfaces of air ducts that are visible through grilles and louvers with one coat of flat black paint to visible surfaces.
3 Paint dampers exposed behind louvers, grilles, to match face panels.
C. Paint both sides and edges of plywood backboards for electrical and telephone equipment before installing equipment.

3.07 EXTERIOR PAINTING
A. Exposed piping, metal flashing or trim without a factory finish:
1. Finish to match adjacent building material colors.
B. Wood cornice and trim, columns, bollards, doors and frames, wood soffits and trim, and metal island forms.
1. Color: Refer to drawings.

3.08 SCHEDULE – INTERIOR PAINT
A. Refer to room finish schedule.

END OF SECTION

SECTION 10523 - FIRE EXTINGUISHERS AND CABINETS

PART 1 GENERAL
1.01 SECTION INCLUDES
A. Fire extinguishers.
B. Fire extinguisher cabinets.

1.02 REFERENCES
A. NFPA 10 – Standard for Portable Fire Extinguishers; National Fire Protection Association; 1998.
B. UL(FPED) – Fire Protection Equipment Directory;Underwriters Laboratories Inc.; current edition.

1.03 SUBMITTALS
A. Product Data: Provide extinguisher operational features and cabinet physical dimensions

PART 2 PRODUCTS
2.01 MANUFACTURERS
A. Fire Extinguishers:
1 JL Industries, Inc.
2 Larsen's Manufacturing Co.
B. Fire Extinguisher Cabinets:
1 Larsen's Manufacturing Co.
2 Apex

2.02 FIRE EXTINGUISHERS
A. Dry Chemical Type: Cast steel tank, with pressure gage.
1 Class ABC.
2 Size 10 lb.
3 Finish: Baked enamel, red color.

2.03 FIRE EXTINGUISHER CABINETS
A. Manufacturer: Larsen's Vertical Duo Series or approved equal.
B. Type: Model No. AL2409–6R, Duo, DSA Glass with clean satin anodized trim and door, aluminum rug and Futura "Fire" handle by Larsen's Mfg. Co., or approved equal.
C. Metal: Formed primed steel sheet; 0.036 inch thick base metal.
D. Cabinet Configuration: Semi–recessed type.
1 Sized to accommodate accessories.
2 Trim: Returned to wall surface, with 2 1/2 inch projection, 2 inch wide face.
E. Door:.0958 inch thick, reinforced for flatness and rigidity; latch. Hinge doors for 180 degree opening with two butt hinge. Provide nylon catch.
F. Door Glazing: Glass, clear, 1/8 inch thick float. Set in resilient channel gasket glazing.
G. Finish of Cabinet Exterior Trim and Door: Primed for field paint finish.
H. Finish of Cabinet Interior: White enamel.

PART 3 EXECUTION
3.01 EXAMINATION
A. Verify existing conditions before starting work.
B. Verify rough openings for cabinet are correctly sized and located.

3.02 INSTALLATION
A. Install in accordance with manufacturer's instructions and where indicated on drawings.
B. Install cabinet plumb and level, with top of cabinet at 52 inches above finished floor.

3.03 SCHEDULES
A. Locations: Refer to drawings and as directed by the local Fire Marshal.

END OF SECTION

SECTION 10800 - TOILET ACCESSORIES

PART 1 GENERAL
1.01 SECTION INCLUDES
A. Accessories for toilet rooms and utility rooms and janitor's closet(s).
B. Grab bars.

1.02 REFERENCES
A. ASTM A 123/A 123M – Standard Specification for Zinc (Hot–Dip Galvanized) Coatings on Iron and Steel Products; 1997a.
B. ASTM A 269 – Standard Specification for Seamless and Welded Austenitic Stainless Steel Tubing for General Service; 1996.

1.03 SUBMITTALS
A. Product Data: Provide four copies of data on accessories describing size, finish, details of function, attachment methods.
B. Manufacturer's Installation Instructions: Provide two copies. Indicate special procedures and conditions requiring special attention.

1.04 DELIVERY, STORAGE, AND HANDLING
A. Deliver in protective cartons, with item and manufacturer's identification.
B. Store under security in a dry location.

PART 2 PRODUCTS
2.01 MANUFACTURERS
A. Products listed are made by Bobrick Washroom Equipment, Inc.

2.02 MATERIALS
A. Accessories – General: Shop assembled, free of dents and scratches and packaged complete with anchors and fittings, steel anchor plates, adapters, and anchor components for installation.
B. Stainless Steel Sheet: ASTM A 167, Type 304.
C. Stainless Steel Tubing: ASTM A 269.
D. Adhesive: Two component epoxy type, waterproof.
E. Fasteners, Screws, and Bolts: Hot dip galvanized, tamper–proof.

2.03 FINISHES
A. Stainless Steel: No. 4 satin brushed finish for accessories. Brushed finish for grab bars.
B. Galvanizing for items other than Sheet: ASTM A 123/A 123M to 1.3 oz/sq yd. Galvanize ferrous metal and fastening devices.
C. Shop Primed Ferrous Metals: Pretreat and clean, spray apply one coat primer and bake.

2.04 TOILET ROOM ACCESSORIES
A. Refer to drawings.

2.05 UTILITY ROOM ACCESSORIES
A. Mop and Broom Holder: 0.05 inch thick stainless steel, Type 304, hat–shaped channel.
1 Holders: 3 spring–loaded rubber cam holders.
2 Length: Manufacturer's standard length for number of holders.

PART 3 EXECUTION
3.01 EXAMINATION
A. Verify existing conditions before starting work.
B. Verify exact location of accessories for installation.

3.02 PREPARATION
A. Deliver inserts and rough–in frames to site for timely installation.
B. Provide templates and rough–in measurements as required.

3.03 INSTALLATION
A. Install accessories in accordance with manufacturers' instructions.
B. Install plumb and level, securely and rigidly anchored to substrate.
C. Mounting Heights and Locations: As required by accessibility regulations and as indicated on drawings

3.04 SCHEDULE
A. Refer to drawings

END OF SECTION

REGISTRATION SEAL

ARCVISION INCORPORATED
ARCHITECTURE, ENGINEERING, STORE PLANNING
SAINT LOUIS, DALLAS, LAS VEGAS, ORLANDO
1950 CRAIG ROAD, SUITE 300 ST. LOUIS, MO 63146
PH. (314) 415-2400 FAX (314) 415-2401 www.arcv.com
TEXAS ENGINEERING FIRM #12793

BOOT BARN

BOOT BARN
1424 TEXAS AVE. CROSSING
COLLEGE STATION TX. 77840
STORE # 16IR

REV	DATE	DESCRIPTION	NAME

PROJECT NO: 210627
DRAWN BY: KWL
CHECKED BY: CCM
ISSUE DATE: 02/04/22

ARCHITECTURAL SPECIFICATIONS

T22

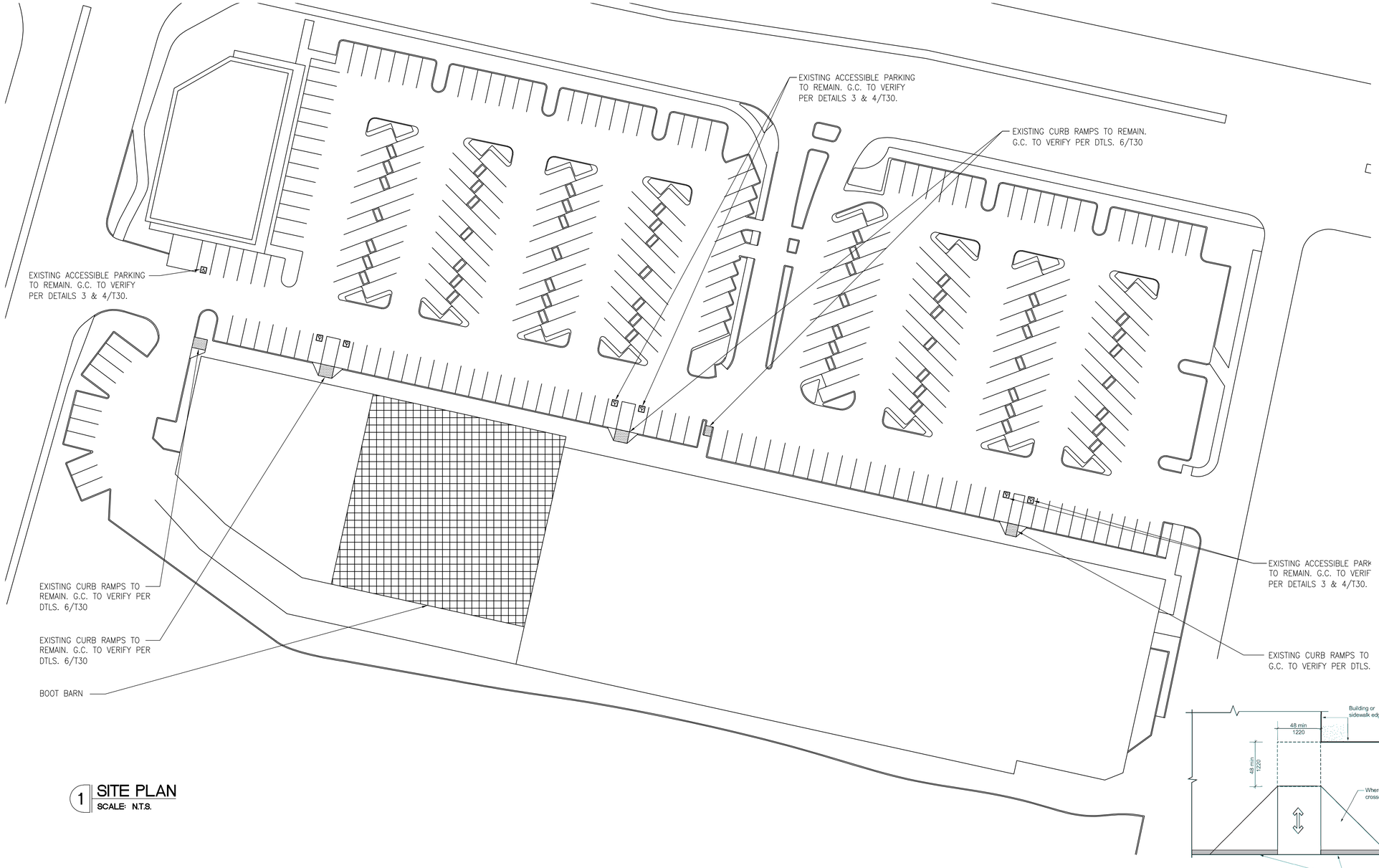

1 SITE PLAN
SCALE: N.T.S.

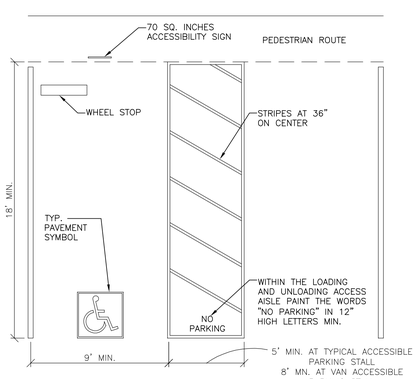

2 ADA PARKING DIAGRAM
SCALE: 1/4"=1'-0"

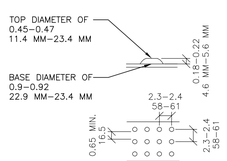

4 TRUNCATED DOMES
SCALE: 1"=1'-0"

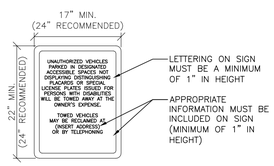

3 ADA PARKING SIGNAGE - UNAUTHORIZED
SCALE: 1"=1'-0"

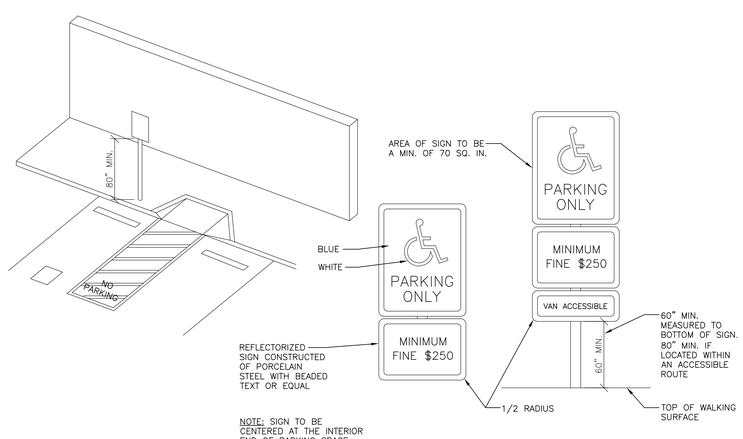

5 ADA PARKING SIGNAGE
SCALE: 1"=1'-0"

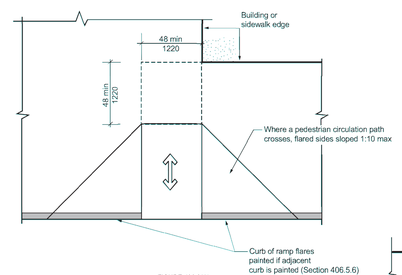

FIGURE 406.2(A)
PERPENDICULAR CURB RAMP

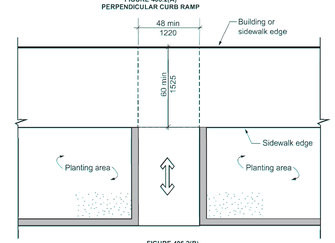

FIGURE 406.2(B)
PERPENDICULAR CURB RAMP

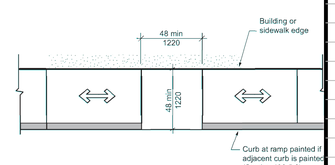

FIGURE 406.3(A)
PARALLEL CURB RAMP

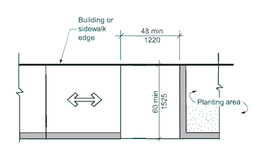

FIGURE 406.3(B)
PARALLEL CURB RAMP

406.2 Perpendicular curb ramps. Perpendicular curb ramps shall comply with Sections 406.2 and 406.5.

406.2.1 Landings. A landing 48 inches (1220 mm) minimum by 48 inches (1220 mm) minimum shall be provided at the top of a curb ramp. The landing shall be permitted to overlap pedestrian routes and clear spaces. Where the landing is constrained at the back-of-sidewalk, the landing shall be 48 inches (1220 mm) minimum by 60 inches (1525 mm) minimum. The 60-inch (1525 mm) dimension shall be provided in the direction of the curb ramp run. The slope of landings shall be 1:48 maximum in all directions.

406.2.2 Running slope. The running slope of a curb ramp shall cut through or shall be built up to the curb at right angles or shall meet the gutter grade break at right angles where the curb is curved. The running slope of a curb ramp shall be 1:20 minimum and 1:12 maximum. The curb ramp run length shall not be required to exceed 15 feet (4570 mm).

406.2.3 Flared sides. Where a pedestrian circulation path crosses a curb ramp, flared sides shall be provided and shall be sloped 10 percent maximum.

406.3 Parallel curb ramps. Parallel curb ramps shall comply with Sections 406.3 and 406.5.

406.3.1 Landing. A landing 48 inches (1220 mm) minimum by 48 inches (1220 mm) minimum shall be provided at the bottom of a curb ramp. The landing shall be permitted to overlap pedestrian routes and clear spaces. Where the landing is constrained on two or more sides, the landing shall be 48 inches (1220 mm) minimum by 60 inches (1525 mm) minimum. The 60 inches (1525 mm) dimension shall be provided in the direction of the pedestrian street crossing. The slope of landings shall be 1:48 maximum in all directions.

406.3.2 Running slope. The running slope of a curb ramp shall be in line with the direction of sidewalk travel. The running slope of a curb ramp shall be 1:20 minimum and 1:12 maximum. The curb ramp run length shall not be required to exceed 15 feet (4570 mm).

6 CURB RAMP DETAIL
SCALE: 1/4"=1'-0"

REGISTRATION SEAL

ARCVISION INCORPORATED
ARCHITECTURE / ENGINEERING / STORE PLANNING
SAINT LOUIS / DALLAS / LAS VEGAS / ORLANDO
1950 CRAIG ROAD, SUITE 300 ST. LOUIS, MO 63146
PH. (314) 415-2400 FAX (314) 415-2401 www.arcv.com
TEXAS ENGINEERING FIRM #12793

BOOT BARN

BOOT BARN
1424 TEXAS AVE. CROSSING
COLLEGE STATION TX. 77840
STORE # 16IR

REV	DATE	DESCRIPTION	NAME

PROJECT NO: 210627
DRAWN BY: KWL
CHECKED BY: CCM
ISSUE DATE: 02/04/22
SITE PLAN

T30

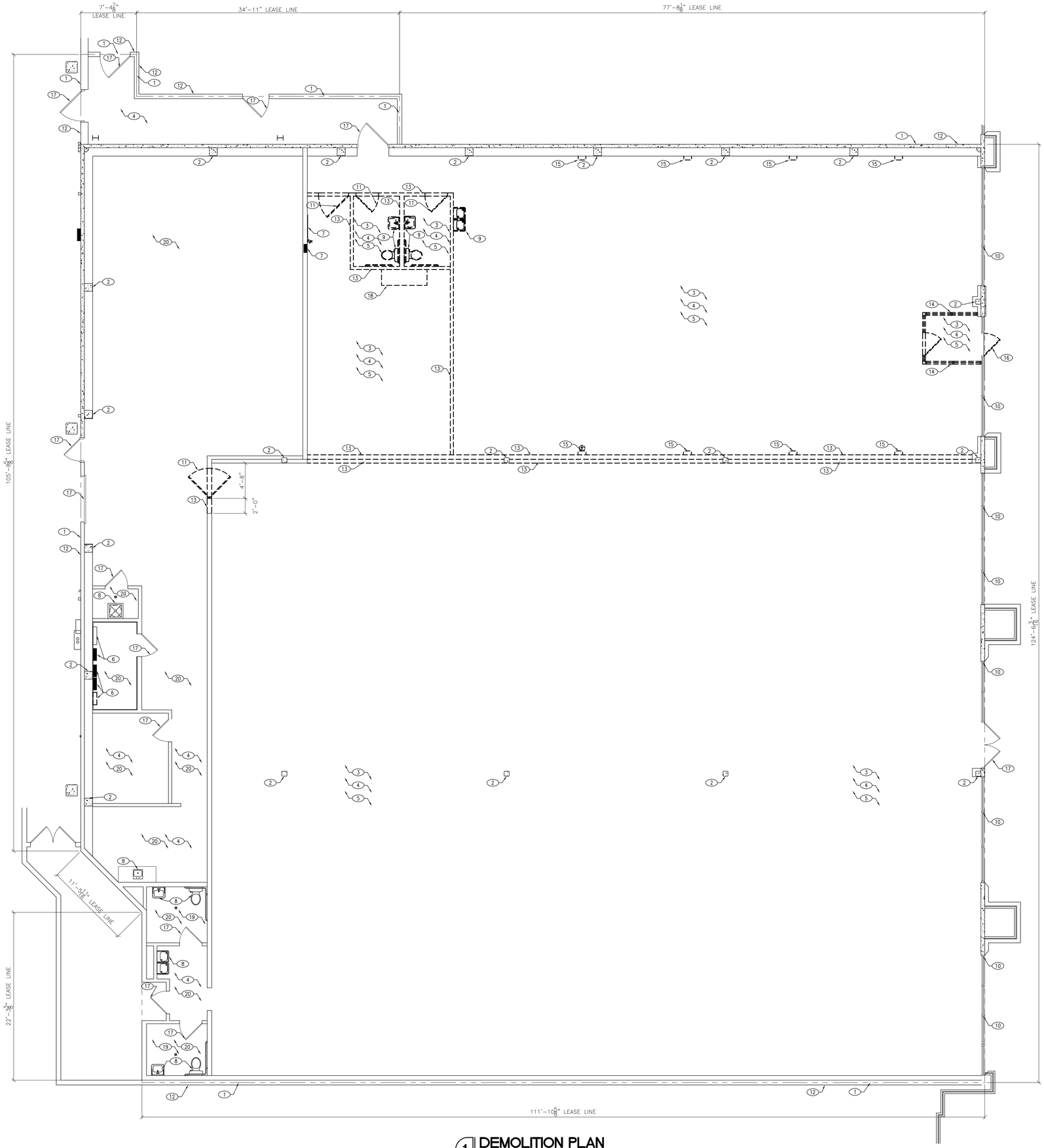

1 DEMOLITION PLAN
SCALE: 3/16" = 1'-0"

KEYED NOTES

SYMBOL	DESCRIPTION
1	LEASE LINE, TYP.
2	EXISTING STRUCTURAL COLUMN TO REMAIN, TYP.
3	DASHED LINES INDICATE EXISTING WALLS, DOORS, AND OTHER CONSTRUCTION TO BE REMOVED, U.N.O. TYPICAL THIS SHEET.
4	REMOVE EXISTING FLOORING TO SLAB. CLEAN AND PREP TO RECEIVE NEW FLOORING. SEE FINISH PLAN.
5	REMOVE EXISTING CEILING AND LIGHTING, INCLUDING ALL HANGER WIRE, ETC.
6	EXISTING ELECTRICAL EQUIPMENT TO REMAIN.
7	REMOVE EXISTING ELECTRICAL EQUIPMENT.
8	EXISTING PLUMBING FIXTURES AND ACCESSORIES TO REMAIN.
9	REMOVE EXISTING PLUMBING FIXTURES AND ACCESSORIES.
10	EXISTING STOREFRONT FRAMING, GLAZING, AND DOORS TO REMAIN.
11	EXISTING DOOR AND FRAME TO BE REMOVED
12	EXISTING DEMISING WALL TO REMAIN.
13	EXISTING INTERIOR WALL TO BE REMOVED, TYP.
14	EXISTING VESTIBULe TO BE REMOVED.
15	REMOVE EXISTING FURRING.
16	EXISTING DOOR TO BE LOCKED AND WELDED SHUT
17	EXISTING DOOR AND FRAME TO REMAIN, TYP.
18	EXISTING FIXTURE TO BE REMOVED.
19	EXISTING RESTROOM TILE TO REMAIN
20	EXISTING CEILING/LIGHTS TO REMAIN

EXIST. RESTROOM NOTES

G.C. TO CAMERA ALL EXISTING SANITARY LINES IN SPACE TO MAIN PRIOR TO DEMO AND PROVIDE REPORT OF EXISTING CONDITION TO BOOT BARN PM WITHIN ONE WEEK OF DEMO START.

GENERAL NOTES

1. G.C. TO VERIFY ALL DIMENSIONS WITHIN (1) WEEK OF START OF PROJECT AND/OR BEFORE ANY NEW CONSTRUCTION BEGINS. ANY DISCREPANCIES TO BE RESOLVED WITH BOOT BARN PROJECT MANAGER PRIOR TO START OF FRAMING OR ROUGH-IN.
2. G.C. TO INSTALL TENANT PROVIDED GRAPHICS 48 HOURS AFTER START DATE, BARRICADE CONSTRUCTION OR RECEIPT OF GRAPHICS.
3. CONTRACTOR TO VERIFY, PRIOR TO BIDDING, COMPLETE SCOPE OF DEMOLITION. ALL REQUIRED DEMOLITION TO BE INCLUDED IN THE BASE BID. DEMOLITION PLAN IS ONLY AN ESTIMATE OF SCOPE OF WORK.
4. G.C. TO VERIFY ALL BARRICADE REQUIREMENTS WITH MALL MANAGER PRIOR TO BID.

DEMOLITION NOTES

1. EXISTING DEMISING WALLS – REMOVE ALL EXISTING FIXTURES ON WALLS – REPAIR, REPLACE OR INSTALL NEW 5/8" TYPE "X" GYPSUM BOARD.
2. REMOVE ANY EXISTING FIXTURES AND MATERIALS IN SPACE. REMOVE EXISTING CEILING AND GRID. REMOVE ALL FLOORING AND SUBFLOOR DOWN TO SLAB. REMOVE GLUE AND THINSET COMPOUNDS.
3. CONTRACTOR TO VERIFY CONDITION OF ANY EXISTING DOORS TO REMAIN. VERIFY CONDITION OF HARDWARE. REPLACE IF NECESSARY. PROVIDE HARDWARE AS SPECIFIED ON DRAWINGS.
4. SEE MECHANICAL AND ELECTRICAL DRAWINGS FOR FURTHER DEMOLITION WORK.
5. G.C. TO VERIFY AND REMOVE ADDITIONAL ITEMS PER PLANS AS REQUIRED.
6. GENERAL CONTRACTOR TO MAINTAIN THE INTEGRITY OF ALL FIRE-RATED CONSTRUCTION.
7. REMOVE ALL DEMOLITION MATERIALS INCLUDING RUBBISH AND DEBRIS PRIOR TO NEW CONSTRUCTION.
8. G.C. TO REMOVE ALL FLOORING & SUB-FLOORING MATERIAL DOWN TO THE SLAB. G.C. TO BEAD BLAST EXISTING SLAB.
9. ANY WALLS THAT REMAIN – G.C. SHALL INSPECT CONDITION AND REPAIR AS NEEDED TO BRING BACK TO "LIKE NEW" CONDITION.

REGISTRATION SEAL

ARCVISION INCORPORATED
ARCHITECTURE • ENGINEERING • STORE PLANNING
SAINT LOUIS, DALLAS, LAS VEGAS, ORLANDO
1950 CRAIG ROAD, SUITE 300 ST. LOUIS, MO 63146
PH: (314) 415-2400 FAX: (314) 415-2001 www.arcv.com
TEXAS ENGINEERING FIRM #12793

BOOT BARN

BOOT BARN
1424 TEXAS AVE. CROSSING
COLLEGE STATION TX, 77840
STORE # 16R

REV	DATE	DESCRIPTION	NAME

PROJECT NO: 210627
DRAWN BY: BLF
CHECKED BY: CCM
ISSUE DATE: 02/04/22
DEMOLITION PLAN

D10

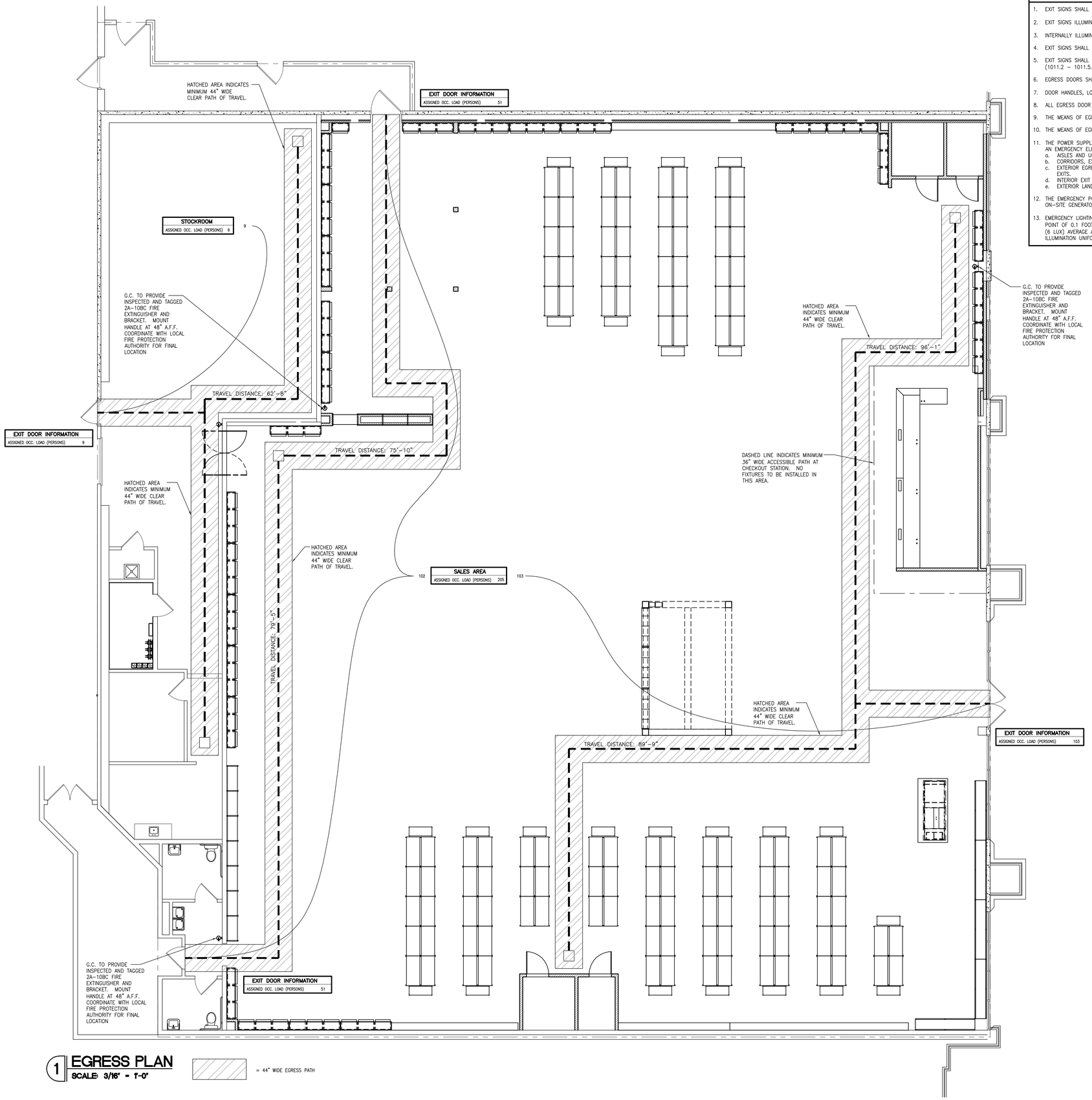

1 EGRESS PLAN

SCALE: 3/16" = 1'-0"

= 44" WIDE EGRESS PATH

MEANS OF EGRESS NOTES

1. EXIT SIGNS SHALL BE INTERNALLY OR EXTERNALLY ILLUMINATED.
2. EXIT SIGNS ILLUMINATED BY AN EXTERNAL SOURCE SHALL HAVE AN INTENSITY OF NOT LESS THAN 5 FOOT-CANDLES (54 LUX).
3. INTERNALLY ILLUMINATED SIGNS SHALL BE LISTED AND LABELED AND SHALL BE INSTALLED IN ACCORDANCE WITH THE MANUFACTURER'S INSTRUCTIONS AND SECTION 2702.
4. EXIT SIGNS SHALL BE ILLUMINATED AT ALL TIMES.
5. EXIT SIGNS SHALL BE CONNECTED TO AN EMERGENCY POWER SYSTEM THAT WILL PROVIDE ILLUMINATION OF NOT LESS THAN 90 MINUTES IN CASE OF PRIMARY POWER LOSS (1011.2 – 1011.5.3).
6. EGRESS DOORS SHALL BE READILY OPENABLE FROM THE EGRESS SIDE WITHOUT THE USE OF A KEY OR SPECIAL KNOWLEDGE OR EFFORT. SEE 1008.1.8.3 FOR EXCEPTIONS.
7. DOOR HANDLES, LOCK AND OTHER OPERATING DEVICES SHALL BE INSTALLED AT A MIN. 34" AND A MAX. 44" ABOVE THE FINISHED FLOOR.
8. ALL EGRESS DOOR OPERATION SHALL ALSO COMPLY WITH SECTION 1008.1.8 – 1008.1.8.6.
9. THE MEANS OF EGRESS, INCLUDING THE EXIT DISCHARGE, SHALL BE ILLUMINATED AT ALL TIMES THE BUILDING SPACE SERVED BY THE MEANS OF EGRESS IS OCCUPIED.
10. THE MEANS OF EGRESS ILLUMINATION LEVEL SHALL NOT BE LESS THAN 1 FOOT-CANDLE AT THE WALKING SURFACE.
11. THE POWER SUPPLY FOR MEANS OF EGRESS ILLUMINATION SHALL NORMALLY BE PROVIDED BY THE PREMISES' ELECTRICAL SUPPLY. IN THE EVENT OF POWER SUPPLY FAILURE, AN EMERGENCY ELECTRICAL SYSTEM SHALL AUTOMATICALLY ILLUMINATE THE FOLLOWING AREAS:
    a. AISLES AND UNENCLOSED EGRESS STAIRWAYS IN ROOMS AND SPACES THAT REQUIRE TWO OR MORE MEANS OF EGRESS.
    b. CORRIDORS, EXIT ENCLOSURES AND EXIT PASSAGEWAYS IN BUILDINGS REQUIRED TO HAVE TWO OR MORE EXITS.
    c. EXTERIOR EGRESS COMPONENTS AT OTHER THAN THE LEVEL OF EXIT DISCHARGE UNTIL EXIT DISCHARGE IS ACCOMPLISHED FOR BUILDINGS REQUIRED TO HAVE TWO OR MORE EXITS.
    d. INTERIOR EXIT DISCHARGE ELEMENTS, AS PERMITTED IN SECTION 1024.1, IN BUILDINGS REQUIRED TO HAVE TWO OR MORE EXITS.
    e. EXTERIOR LANDINGS, AS REQUIRED BY SECTION 1008.1.5, FOR EXIT DISCHARGE DOORWAYS IN BUILDINGS REQUIRED TO HAVE TWO OR MORE EXITS.
12. THE EMERGENCY POWER SYSTEM SHALL PROVIDE POWER FOR A DURATION OF NOT LESS THAN 90 MINUTES AND SHALL CONSIST OF STORAGE BATTERIES, UNIT EQUIPMENT OR AN ON-SITE GENERATOR. THE INSTALLATION OF THE EMERGENCY POWER SYSTEM SHALL BE IN ACCORDANCE WITH SECTION 2702.
13. EMERGENCY LIGHTING FACILITIES SHALL BE ARRANGED TO PROVIDE INITIAL ILLUMINATION THAT IS AT LEAST AN AVERAGE OF 1 FOOT-CANDLE (11 LUX) AND A MINIMUM AT ANY POINT OF 0.1 FOOT-CANDLE (1 LUX) MEASURED ALONG THE PATH OF EGRESS AT FLOOR LEVEL. ILLUMINATION LEVELS SHALL BE PERMITTED TO DECLINE TO 0.6 FOOT-CANDLE (6 LUX) AVERAGE AND A MINIMUM AT ANY POINT OF 0.06 FOOT-CANDLE (0.6 LUX) AT THE END OF THE EMERGENCY LIGHTING TIME DURATION. A MAXIMUM-TO-MINIMUM ILLUMINATION UNIFORMITY RATIO OF 40 TO 1 SHALL NOT BE EXCEEDED.

THE EXIT PATH SHALL BE IDENTIFIED BY EXIT SIGNS CONFORMING TO THE REQUIREMENTS OF SECTION 1011. EXIT SIGNS SHALL BE READILY VISIBLE FROM ANY DIRECTION OF APPROACH. EXIT SIGNS SHALL BE LOCATED AS NECESSARY TO CLEARLY INDICATE THE DIRECTION OF EGRESS TRAVEL. NO POINT SHALL BE MORE THAN 100 FEET FROM THE NEAREST VISIBLE SIGN. (1011)

REGISTRATION SEAL

ARCVISION INCORPORATED
ARCHITECTURE, ENGINEERING, STORE PLANNING
SAINT LOUIS • DALLAS • LAS VEGAS • ORLANDO
1950 CRAIG ROAD, SUITE 300 ST. LOUIS, MO 63146
PH: (314) 415-2400 FAX: (314) 415-2200 www.arcv.com
TEXAS ENGINEERING FIRM #12793

BOOT BARN

BOOT BARN
1424 TEXAS AVE. CROSSING
COLLEGE STATION TX. 77840

STORE # 161R

REV	DATE	DESCRIPTION	NAME

PROJECT NO: 210627
DRAWN BY: KWL
CHECKED BY: CCM
ISSUE DATE: 02/04/22
EGRESS PLAN

A01

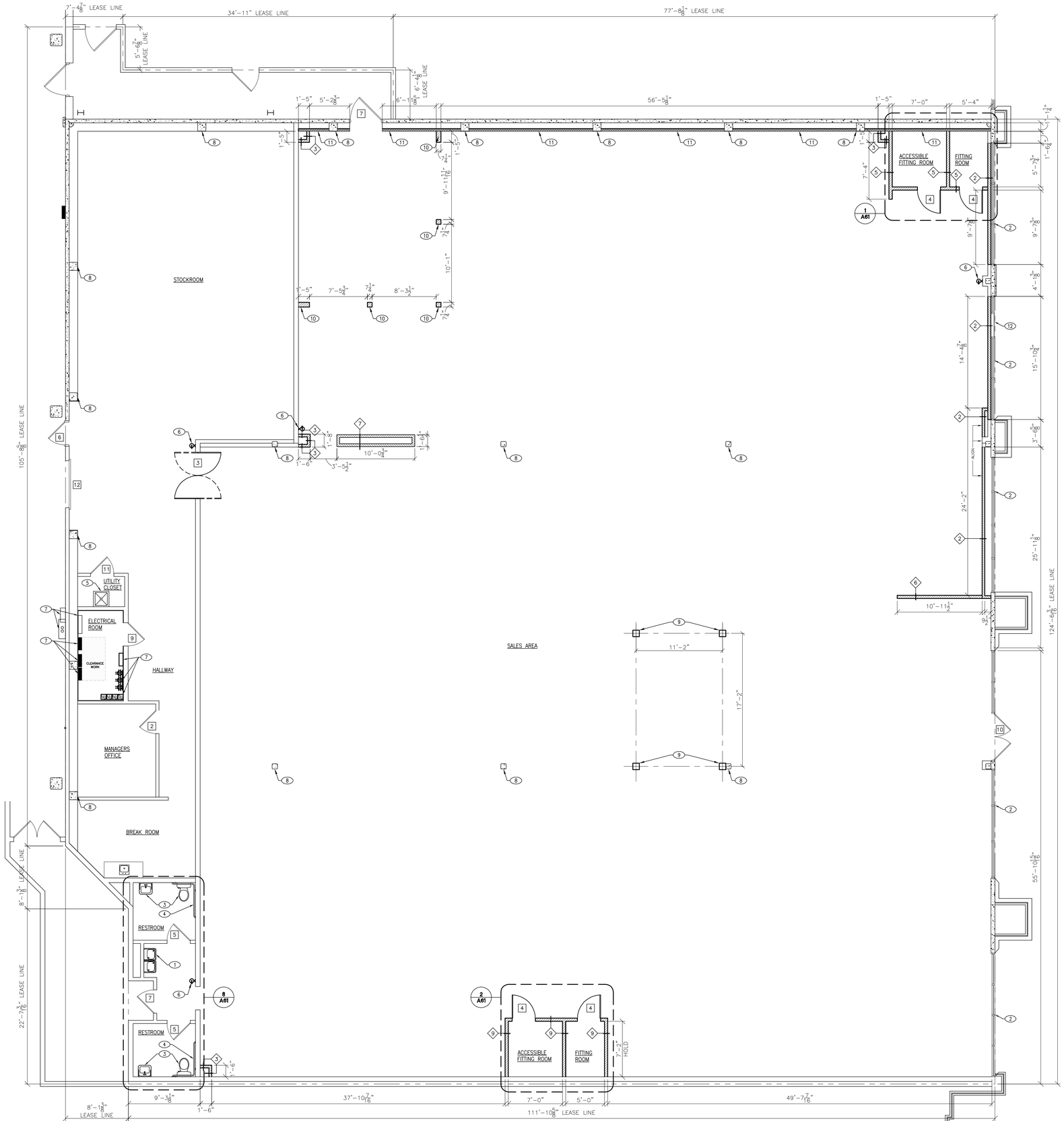

1 **FLOOR PLAN**
SCALE: 3/16" = 1'-0"

GENERAL NOTES

1. CONTRACTOR TO INCLUDE IN BASE BID TO PATCH, FLOAT OR REPLACE GYP. BD. ON DEMISING WALLS WHERE GYP. BD. IS DAMAGED, UNSIGHTLY, OR MISSING FOR A "AS NEW" FINISH SURFACE.
2. WRITTEN DIMENSIONS HOLD PREFERENCE OVER SCALED DIMENSIONS. DO NOT SCALE DRAWINGS. CONTRACTORS MUST VISIT JOB SITE TO VERIFY ALL EXISTING CONDITIONS PRIOR TO SUBMITTING BIDS.
3. G.C. TO VERIFY ALL DIMENSIONS WITHIN (1) WEEK OF START OF PROJECT. ANY DISCREPANCIES TO BE RESOLVED WITH BOOT BARN PROJECT MANAGER PRIOR TO START OF FRAMING OR ROUGH-IN.

PARTITION LEGEND

ITEM	DESCRIPTION
	LEASE LINE
	NEW FULL-HEIGHT EXTERIOR PARTITION, METAL STUDS, E.I.F.S., AND FINISH.
	NEW FULL-HEIGHT INTERIOR PARTITION, METAL STUDS, AND FINISH.
	NEW PARTITION, METAL STUDS AND/OR GYP. BD. STOPS AT OR BELOW CEILING/DECK.
	EXISTING CONCRETE MASONRY WALL.
	EXTENDED METAL STUDS AND GYP. BD. TO 13" A.F.F.
X	PARTITION TYPE. SEE SHEET A70.
X	DOOR TYPE. SEE SHEET T10.

KEYED NOTES

SYMBOL	DESCRIPTION
1	EXISTING HI-LO DRINKING FOUNTAIN TO REMAIN. SEE INTERIOR ELEVATIONS.
2	EXISTING STOREFRONT TO REMAIN
3	EXISTING WATER CLOSET/ LAVATORY. SEE INTERIOR ELEVATIONS.
4	EXISTING GRAB BARS. SEE INTERIOR ELEVATIONS.
5	EXISTING MOP SINK TO REMAIN. SEE INTERIOR ELEVATIONS.
6	NEW FIRE EXTINGUISHER.
7	ELECTRICAL EQUIPMENT.
8	EXISTING STRUCTURAL COLUMN TO REMAIN
9	10" X 10" JUNGLE GYM FIXTURE BEAMS BY G.C.
10	ARCHWAY FRAMED BY G.C. CLADDING BY VENDOR
11	G.C. TO EXTEND EXISTING METAL STUDS AND GYP. BD. TO 13" A.F.F. AS REQUIRED.
12	EXISTING DOOR TO LOCKED AND WELDED SHUT.

SQUARE FOOTAGES

SALES –	12,050 SQ. FT.
FITTING ROOMS –	224 SQ. FT.
RESTROOM –	150 SQ. FT.
OFFICE –	147 SQ. FT.
UTILITY CLOSET –	34 SQ. FT.
HALLWAY–	94 SQ. FT.
EGRESS HALLWAY –	340 SQ. FT.
ELECTRICAL ROOM –	94 SQ. FT.
BREAK ROOM –	170 SQ. FT.
STOCKROOM –	1,732 SQ. FT.
TOTAL –	15,035 SQ. FT.

REGISTRATION SEAL

ARCVISION INCORPORATED
ARCHITECTURE • ENGINEERING • STORE PLANNING
SAINT LOUIS, DALLAS, LAS VEGAS, ORLANDO
1950 CRAIG ROAD, SUITE 300 ST. LOUIS, MO 63146
PH: (314) 415-2400 FAX: (314) 415-2420 www.arcv.com
TEXAS ENGINEERING FIRM #12753

BOOT BARN

BOOT BARN
1424 TEXAS AVE. CROSSING
COLLEGE STATION TX. 77840
STORE # 161R

REV	DATE	DESCRIPTION	NAME

PROJECT NO: 210627
DRAWN BY: KWL
CHECKED BY: CCM
ISSUE DATE: 02/04/22
FLOOR PLAN

A10

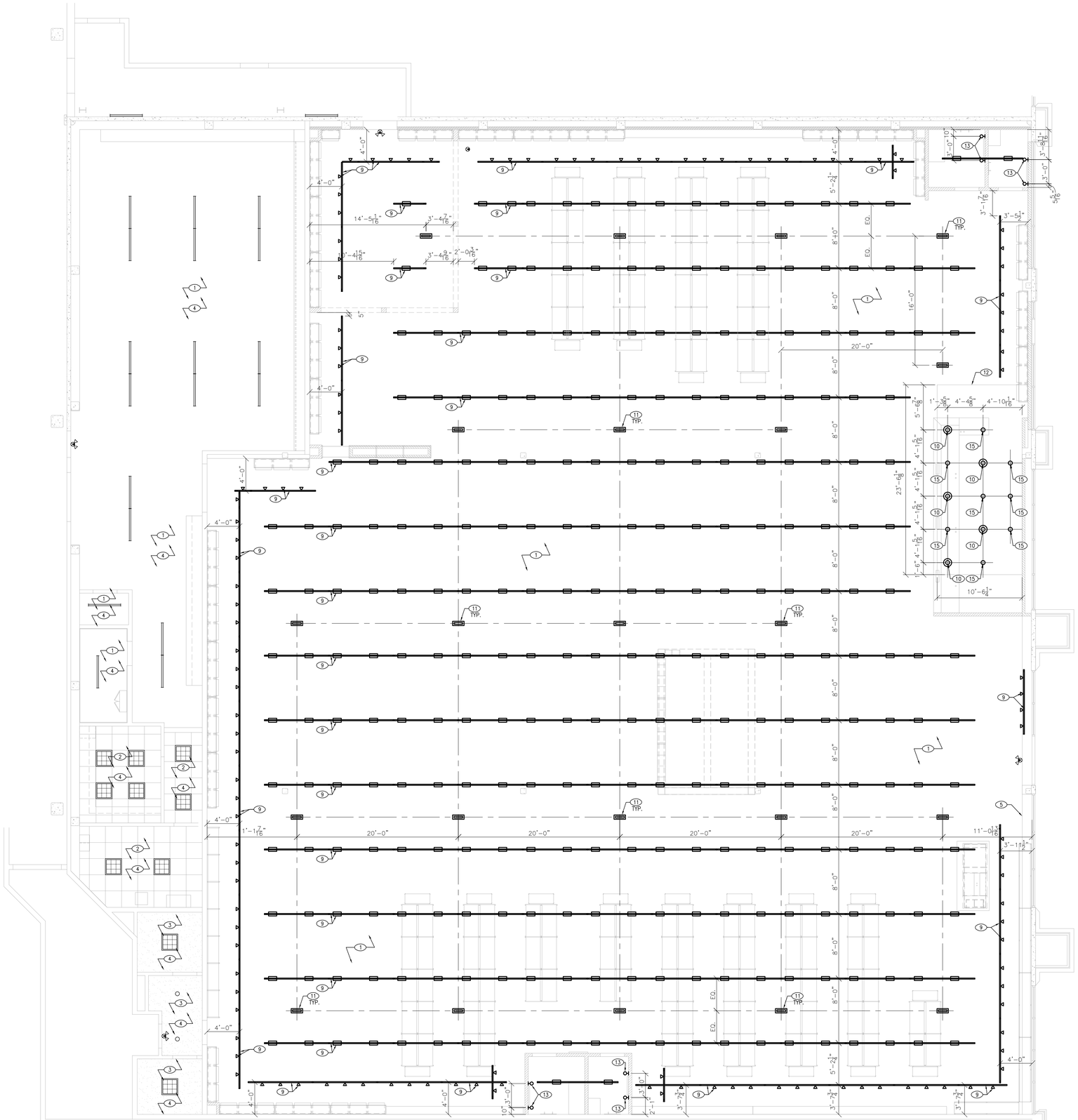

1 REFLECTED CEILING PLAN
SCALE: 3/16" = 1'-0"

REFLECTED CEILING PLAN NOTE

1. THE REFLECTED CEILING PLAN SHALL GOVERN ALL CEILING PENETRATION LOCATIONS. MECHANICAL DUCTWORK AND ALL ELECTRICAL CONDUITS SHALL BE RUN TO AVOID CONFLICT WITH THE REFLECTED CEILING PLAN. G.C. SHALL NOTIFY TENANT UPON START OF PROJECT IF EXISTING DUCTWORK, CONDUIT, OR OTHER EXISTING SYSTEMS WILL CONFLICT WITH THE PROPOSED REFLECTED CEILING PLAN. NO MODIFICATIONS TO THE REFLECTED CEILING PLAN WILL BE ACCEPTED DUE TO INSTALLATION OF CONTRACTOR-PROVIDED SYSTEMS OR EQUIPMENT.

OPEN TO DECK CEILING NOTES

1. ANY EXISTING DUCTWORK IS TO BE RESECURED AS REQUIRED, AND IS TO BE CLEANED THOROUGHLY. ANY EXTERIOR INSULATION IS TO BE REMOVED.
2. G.C. TO REMOVE ALL ABANDONED OR UNUSED DUCTWORK, PIPING, CONDUIT, INSULATION, ETC. FROM THE SALES AREA, FITTING ROOMS, AND STOCKROOM.
3. ALL NEW CONDUIT, ETC. TO BE PLACED IN AN ORGANIZED MANNER RUNNING IN STRAIGHT LINES OR 90 DEGREE ANGLES. HOLD CONDUIT AS TIGHT AS POSSIBLE TO UNDERSIDE OF EXISTING JOISTS.
4. G.C. TO RESECURE ALL EXISTING EQUIPMENT.
5. EXISTING STRUCTURE TO BE CLEANED THOROUGHLY. PAINT P-1.
6. ALL CONDUIT, DUCTWORK, JOISTS, ETC. TO BE PAINTED P-1.

GENERAL NOTE

1. G.C. TO SUPPLY AND INSTALL CONDUIT FOR LOW VOLTAGE WIRING AS REQUIRED. COORDINATE WITH BOOT BARN PROJECT MANAGER.

KEYED NOTES

SYMBOL	DESCRIPTION
1	NO CEILING. OPEN TO DECK ABOVE. PAINT P-1 13' A.F.F. TO DECK.
2	EXISTING ACT CEILING TO REMAIN. G.C. TO REPLACE ANY DAMAGED OR MISSING TILES AS REQUIRED.
3	EXISTING GYP. BD. CEILING TO REMAIN. PAINT P-1.
4	EXISTING LIGHTING TO REMAIN.
5	EXISTING GYP. BD. SOFFIT TO REMAIN.
6	NOT USED.
7	NOT USED.
8	NOT USED.
9	TRACK LIGHT FIXTURES. MOUNT TRACK AT 13'-0" A.F.F. SEE DETAIL 7/A21.
10	PENDANT LIGHT FIXTURE OVER CASHWRAP.
11	NEW EMERGENCY LIGHTING - SEE ELECTRICAL FOR MORE INFORMATION.
12	CASHWRAP SOFFIT AT 11'-0" AFF - SEE SHEET A44.
13	WALL-MOUNTED LIGHT FIXTURE. SEE INTERIOR ELEVATIONS AND ELECTRICAL DRAWINGS.
14	NOT USED.
15	NEW RECESS CAN LIGHT.

REGISTRATION SEAL

ARCVISION INCORPORATED
ARCHITECTURE • ENGINEERING • STORE PLANNING
SAINT LOUIS, DALLAS, LAS VEGAS, ORLANDO
1950 CRAIG ROAD, SUITE 300 ST. LOUIS, MO 63146
PH: (314) 415-2400 FAX: (314) 415-2420 www.arcv.com
TEXAS ENGINEERING FIRM #12753

BOOT BARN

BOOT BARN
1424 TEXAS AVE. CROSSING
COLLEGE STATION TX. 77840
STORE # 161R

REV.	DATE	DESCRIPTION	NAME

PROJECT NO: 210627
DRAWN BY: KWL
CHECKED BY: CCM
ISSUE DATE: 02/04/22

REFLECTED CEILING PLAN

A20

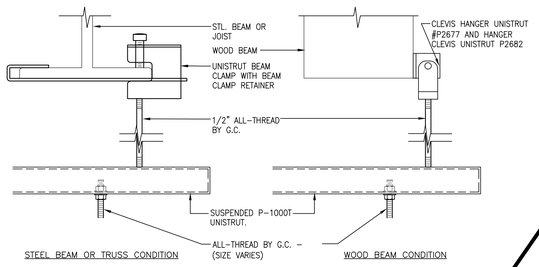

1 UNISTRUT ATTACHMENT DETAIL
SCALE: 3" = 1'-0"

NOT USED

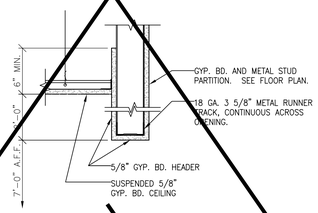

2 SOFFIT DETAIL
SCALE: 1 1/2" = 1'-0"

NOT USED

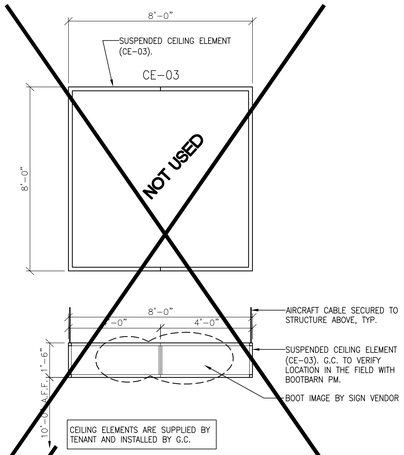

3 CEILING ELEMENT DETAIL (CE-03)
SCALE: 3/8" = 1'-0"

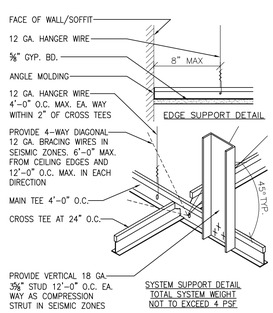

NOTES:

ALL BRACING WIRE TO BE ATTACHED PARALLEL TO THE COMPONENT AND AT MAX. 45° ANGLE TO THE CEILING.

ALL SUPPORT WIRES TO BE TAUT AND TIED BOTH ENDS WITH A MINIMUM OF (3) TURNS.

SECURE ALL WIRES TO THE STRUCTURE ABOVE.

WHERE WIRE MUST BEAR AGAINST PIPES AND DUCTS, APPLY DUCT TAPE FRICTION PROTECTION TO PIPES AND DUCTS.

SEISMICALLY BRACE LIGHT FIXTURES, DIFFUSERS, ETC. IN ACCORDANCE WITH LOCAL CODE IN SEISMIC ZONES. SEE COVER SHEET FOR SEISMIC ZONE INDICATION.

SEE TYPICAL FRAMING DETAILS IN THIS DWG. SET FOR COMPRESSION STRUT ATTACHMENT TO STRUCTURE.

4 GYP. BD. CEILING DETAIL
SCALE: 1 1/2" = 1'-0"

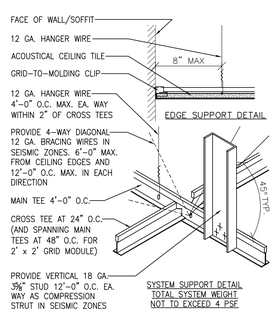

NOTES:

ALL BRACING WIRE TO BE ATTACHED PARALLEL TO THE COMPONENT AND AT MAX. 45° ANGLE TO THE CEILING.

ALL SUPPORT WIRES TO BE TAUT AND TIED BOTH ENDS WITH A MINIMUM OF (3) TURNS.

SECURE ALL WIRES TO THE STRUCTURE ABOVE.

WHERE WIRE MUST BEAR AGAINST PIPES AND DUCTS, APPLY DUCT TAPE FRICTION PROTECTION TO PIPES AND DUCTS.

SEISMICALLY BRACE LIGHT FIXTURES, DIFFUSERS, ETC. IN ACCORDANCE WITH LOCAL CODE IN SEISMIC ZONES. SEE COVER SHEET FOR SEISMIC ZONE INDICATION.

SEE TYPICAL FRAMING DETAILS IN THIS DWG. SET FOR COMPRESSION STRUT ATTACHMENT TO STRUCTURE.

5 ACOUSTICAL CEILING DETAIL
SCALE: 1 1/2" = 1'-0"

NOT USED

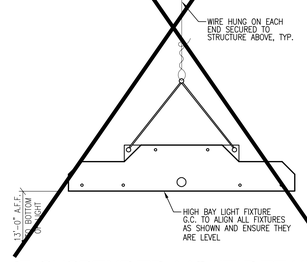

6 SUSPENDED LIGHT DETAIL
SCALE: 1" = 1'-0"

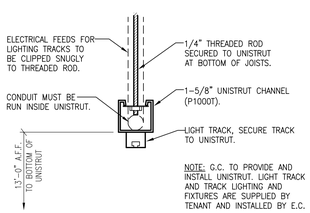

NOTE: G.C. TO PROVIDE AND INSTALL UNISTRUT. LIGHT TRACK AND TRACK LIGHTING AND FIXTURES ARE SUPPLIED BY TENANT AND INSTALLED BY E.C.

7 SUSPENDED TRACK DETAIL
SCALE: 3" = 1'-0"

REGISTRATION SEAL

ARCVISION INCORPORATED
ARCHITECTURE • ENGINEERING • STORE PLANNING
SAINT LOUIS / DALLAS / LAS VEGAS / ORLANDO
1950 CRAIG ROAD, SUITE 300 ST. LOUIS, MO 63146
PH: (314) 415-2400 FAX: (314) 415-2001 www.arcv.com
TEXAS ENGINEERING FIRM #12753

BOOT BARN

BOOT BARN
1424 TEXAS AVE. CROSSING
COLLEGE STATION TX, 77840
STORE # 161R

REV	DATE	DESCRIPTION	NAME

PROJECT NO: 210627
DRAWN BY: KWL
CHECKED BY: CCM
ISSUE DATE: 02/04/22

REFLECTED CEILING DETAILS

A21

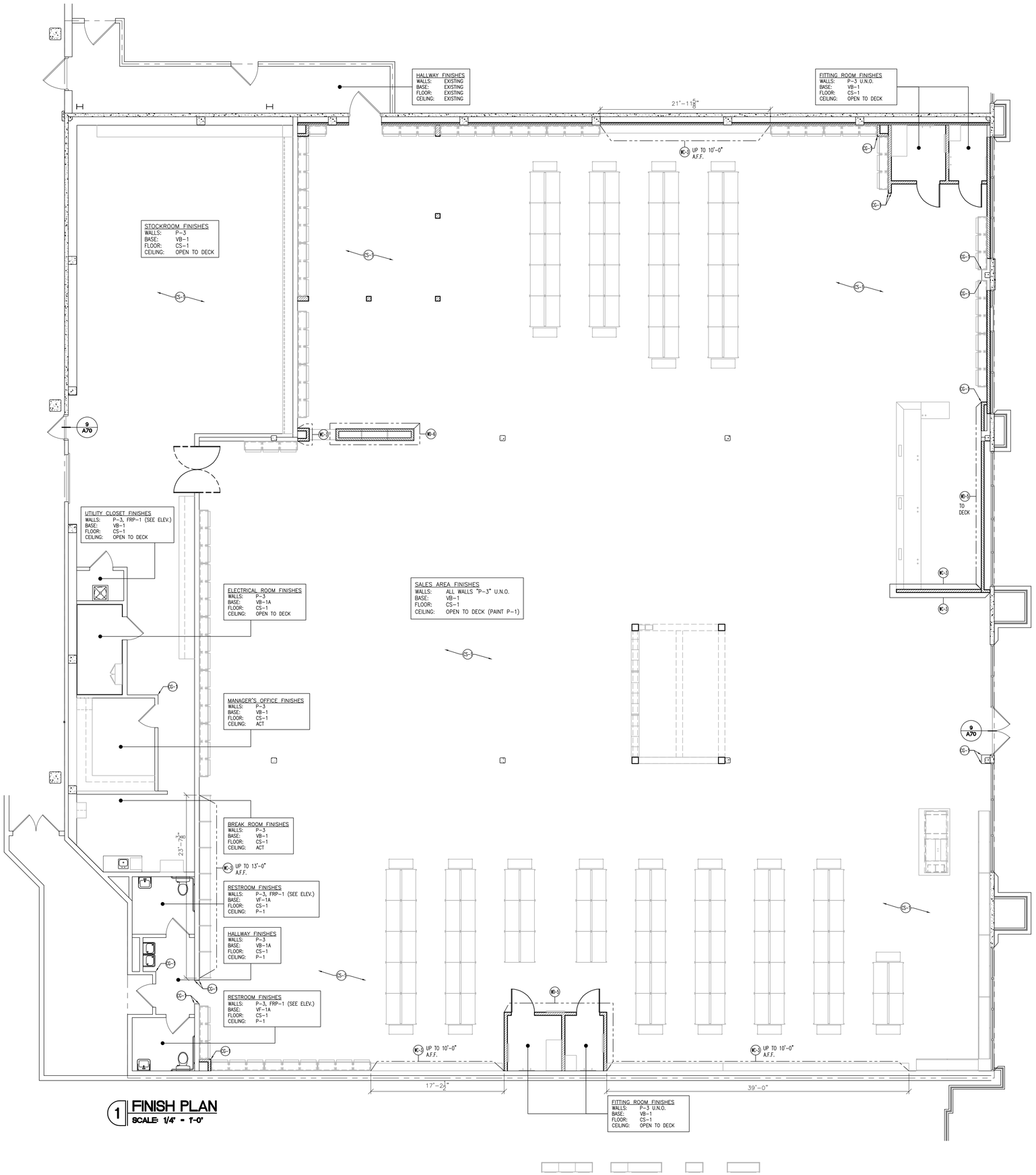

1 FINISH PLAN
SCALE: 1/4" = 1'-0"

CONCRETE SEALER NOTES
(STOCKROOM, JANITOR CLOSET, AND UTILITY ROOM ONLY)

1. DIAMOND-GRIND THE FLOOR TO REMOVE ANY SEALER OR CURING COMPOUND, AND TO OPEN THE PORES OF THE CONCRETE.
2. VACUUM CLEAN AND DAMP MOP THE FLOOR TO BECOME DUST-FREE.
3. USE A URETHANE-BASED CAULK FOR CONTROL JOINTS AND FILLING CRACKS.
4. FOR ANY AREAS REQUIRING PATCHING, USE ONE OF THE FOLLOWING MAXXON PRODUCTS:
   a. LEVEL-RIGHT WEAR TOP
   b. LEVEL-RIGHT FS-10
   c. LEVEL-RIGHT FEATHEREDGE
5. SAND SMOOTH ANY AREAS THAT WERE PATCHED, AND VACUUM CLEAN AND DAMP MOP TO BECOME DUST-FREE.
6. APPLY (2) COATS OF PRIMER AND (3) COATS OF SEALER:
   CHEM-COAT CCI 5000
   CHEM-COAT INDUSTRIES (800) 511-2769
7. BUFF ENTIRE FLOOR TO REDUCE HIGH-GLOSS FINISH.

REGISTRATION SEAL

ARCVISION INCORPORATED
ARCHITECTURE • ENGINEERING • STORE PLANNING
SAINT LOUIS / DALLAS / LAS VEGAS / ORLANDO
1950 CRAIG ROAD, SUITE 300 ST. LOUIS, MO 63146
PH: (314) 415-2400 FAX: (314) 415-2001 www.arcv.com
TEXAS ENGINEERING FIRM #12753

BOOT BARN

BOOT BARN
1424 TEXAS AVE. CROSSING
COLLEGE STATION TX, 77840
STORE # 161R

REV	DATE	DESCRIPTION	NAME

PROJECT NO: 210627
DRAWN BY: KWL
CHECKED BY: CCM
ISSUE DATE: 02/04/22

FINISH AND IMAGE PLAN

A30

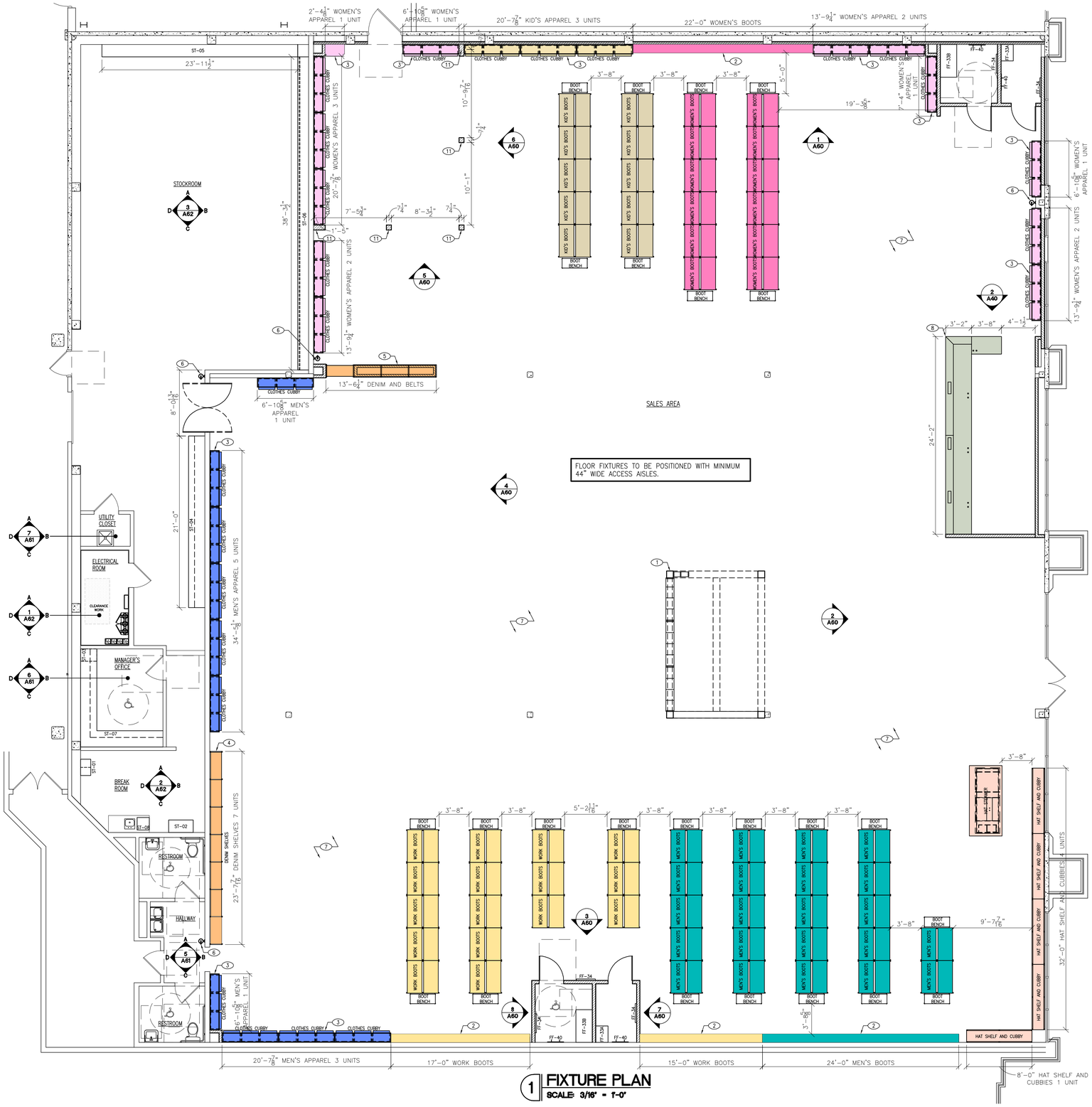

1 FIXTURE PLAN

SCALE: 3/16" = 1'-0"

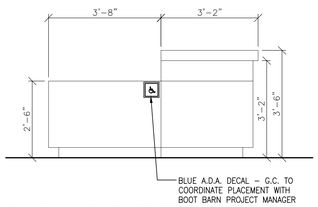

2 CASHWRAP ELEVATION

SCALE: 1/2" = 1'-0"

LEGEND

CARHARTT WALL	MEN'S BOOTS
CASHWRAP	MEN'S DEPARTMENT
KID'S BOOTS	WOMEN'S BOOTS
KID'S DEPARTMENT	WOMEN'S DEPARTMENT
HATS, GIFTS, TYPICAL SLATWALL	WORK BOOTS
HAT STEAMER	WORK DEPARTMENT
JEANS	HAWX

FIXTURE SCHEDULE

NAME	QUANTITY	DESCRIPTION	NAME	QUANTITY	DESCRIPTION	NAME	QUANTITY	DESCRIPTION
–	1	CASHWRAP. SEE SHEET A43.	–	1	DENIM AND BELT CUBBY. SEE DETAIL 5 OR 6/A42	ST-01	1	EMPLOYEE LOCKERS
–	1	JUNGLE GYM	–	23	ADULT CLOTHES CUBBY. SEE DETAIL 5/A41	ST-02	1	REFRIGERATOR
		BOOT RACK ENDCAP – MIRROR/SLATWALL	–	3	KIDS CLOTHES CUBBY. SEE DETAIL 5/A41	ST-03	1	UNDER-COUNTER SAFE
		BOOT RACK ENDCAP – MIRROR/PEGBOARD	–	5	HAT SHELVES AND CUBBY. SEE DETAIL 7/A41	ST-04	SEE PLAN	SHIPPING AND RECEIVING COUNTER. SEE DETAIL 1/A42.
–	10	KIDS BOOT FLOOR FIXTURES. SEE DETAIL 9/A41	FF-33A	2	FITTING ROOM BENCH. SEE INTERIOR ELEVATIONS.	ST-05	SEE PLAN	STORAGE SHELVING. SEE DETAIL 2/A42.
–	34	ADULT BOOT FLOOR FIXTURES. SEE DETAIL 9/A41	FF-33B	2	24"x48" ACCESSIBLE FITTING ROOM BENCH. SEE INTERIOR ELEVATIONS.	ST-06	SEE PLAN	STORAGE HANGERS. SEE DETAIL 3/A42.
–	16	WORK BOOT FLOOR FIXTURES. SEE DETAIL 10/A41	FF-34	5	FITTING ROOM MIRROR. SEE INTERIOR ELEVATIONS AND DETAIL 1/A41.	ST-07	SEE PLAN	MANAGER'S DESK AND SHELVING. SEE DETAIL 4/A42.
–	24	BOOT BENCH	FF-40	6	FITTING ROOM GARMENT HOOK. SEE DETAIL 12/A41.	ST-08	1	MICROWAVE
		DENIM TABLE	–	1	HAT STEAMER			
–	7	DENIM SHELVES. SEE DETAIL 6/A41						

KEYED NOTES

SYMBOL	DESCRIPTION
1	JUNGLE GYM FIXTURE.
2	BOOT WALL – SEE DETAIL 4/A41.
3	CLOTHES CUBBIES – SEE DETAIL 5/A41.
4	DENIM SHELVES – SEE DETAIL 6/A41.
5	DENIM AND BELT CUBBY – SEE DETAILS 5/A42 OR 6/A42.
6	FIRE EXTINGUISHER.
7	O.F.O.I. DISPLAY FIXTURE.
8	O.F.C.I. CASHWRAP – SEE SHEET A43.
9	NOT USED.
10	NOT USED.
11	ARCHWAY FRAMED BY G.C., CLADDED BY VENDOR.

REGISTRATION SEAL

ARCVISION INCORPORATED
ARCHITECTURE, ENGINEERING, STORE PLANNING
SAINT LOUIS, DALLAS, LAS VEGAS, ORLANDO
1950 CRAIG ROAD, SUITE 300 ST. LOUIS, MO 63146
PH: (314) 415-2400 FAX: (314) 415-2200 www.arcv.com
TEXAS ENGINEERING FIRM #12733

BOOT BARN

BOOT BARN
1424 TEXAS AVE. CROSSING
COLLEGE STATION TX, 77840
STORE # 161R

REV	DATE	DESCRIPTION	NAME

PROJECT NO: 210627
DRAWN BY: KWL
CHECKED BY: CCM
ISSUE DATE: 02/04/22

FIXTURE PLAN

A40

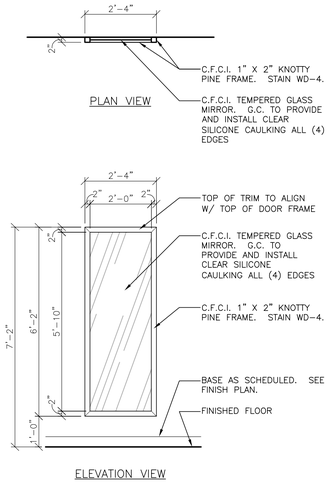

1 MIRROR DETAIL (FF-34)
SCALE: 1/2" = 1'-0"

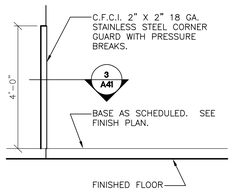

2 CORNER GUARD DETAIL
SCALE: 1/2" = 1'-0"

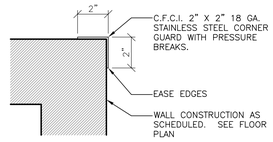

3 CORNER GUARD DETAIL
SCALE: 3" = 1'-0"

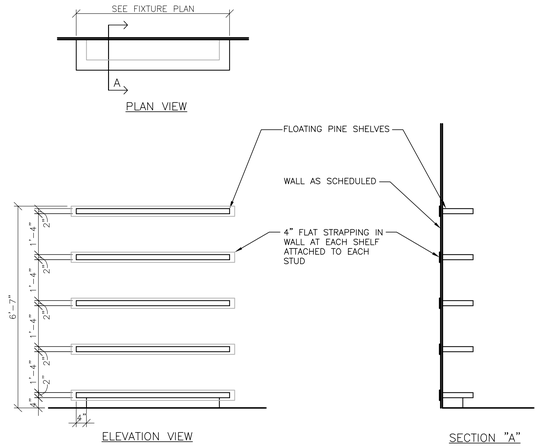

4 BOOT WALL
SCALE: 1/2" = 1'-0"

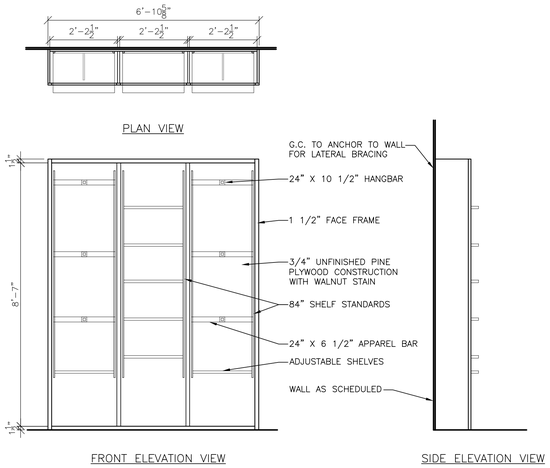

5 CLOTHES CUBBY
SCALE: 1/2" = 1'-0"

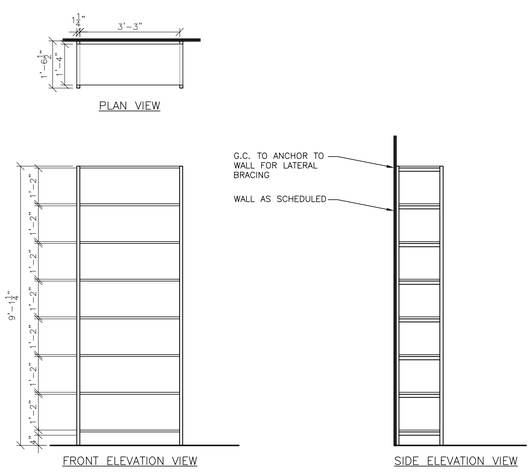

6 DENIM SHELVES
SCALE: 1/2" = 1'-0"

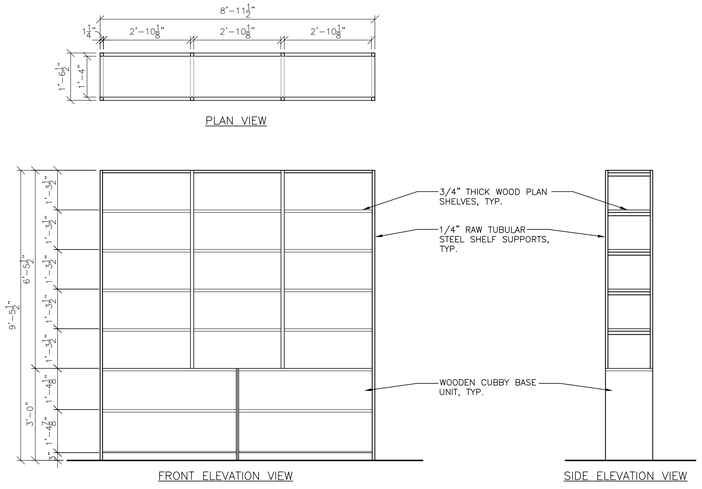

7 HAT SHELF AND CUBBY
SCALE: 1/2" = 1'-0"

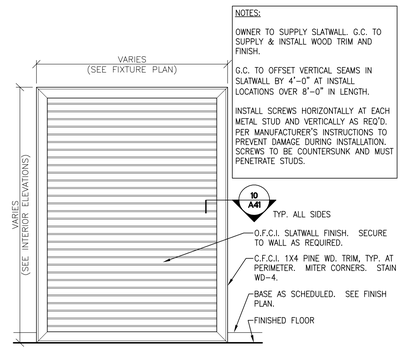

NOTES:

OWNER TO SUPPLY SLATWALL. G.C. TO SUPPLY & INSTALL WOOD TRIM AND FINISH.

G.C. TO OFFSET VERTICAL SEAMS IN SLATWALL BY 4'-0" AT INSTALL LOCATIONS OVER 8'-0" IN LENGTH.

INSTALL SCREWS HORIZONTALLY AT EACH METAL STUD AND VERTICALLY AS REQ'D. PER MANUFACTURER'S INSTRUCTIONS TO PREVENT DAMAGE DURING INSTALLATION. SCREWS TO BE COUNTERSUNK AND MUST PENETRATE STUDS.

8 SLATWALL DETAIL
SCALE: 1/2" = 1'-0"

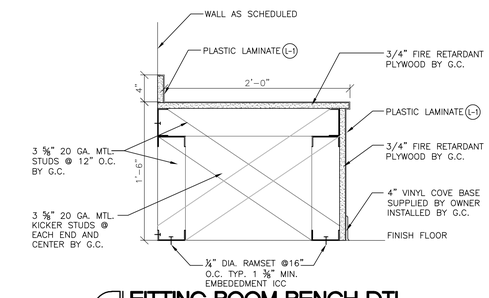

14 FITTING ROOM BENCH DTL.
SCALE: 1 1/2" = 1'-0"

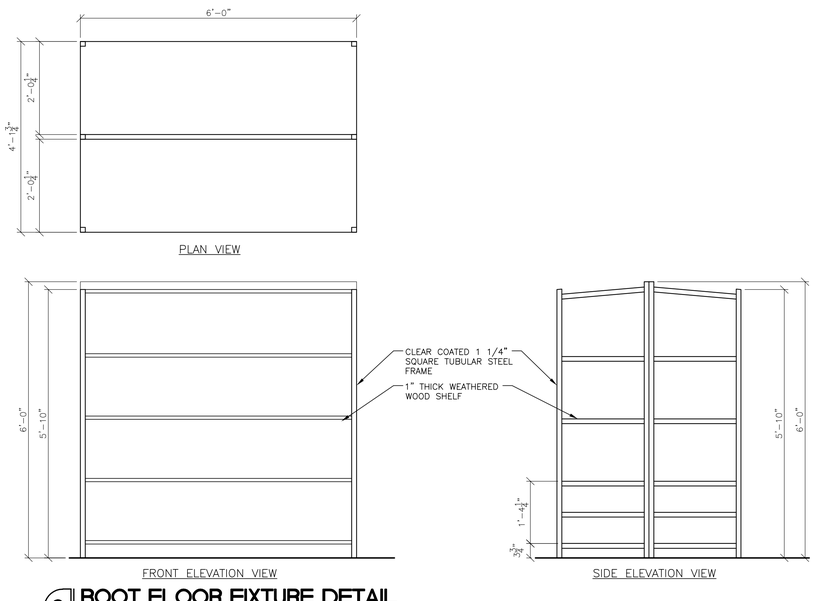

9 BOOT FLOOR FIXTURE DETAIL
SCALE: 3/4" = 1'-0"

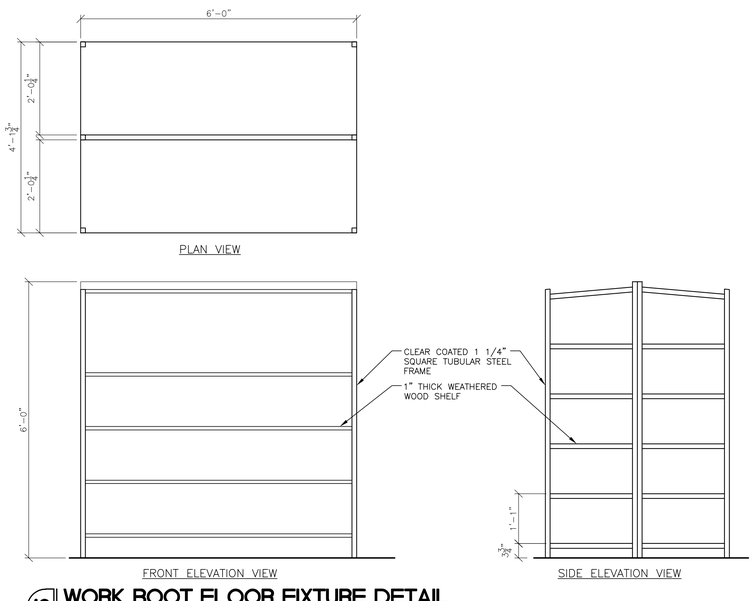

10 WORK BOOT FLOOR FIXTURE DETAIL
SCALE: 3/4" = 1'-0"

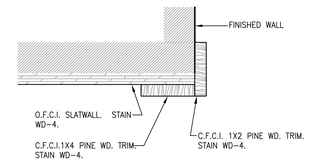

11 SLATWALL TRIM DETAIL
SCALE: 3" = 1'-0"

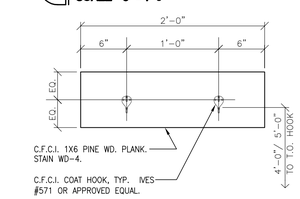

12 FITTING ROOM HOOK (FF-40)
SCALE: 1 1/2" = 1'-0"

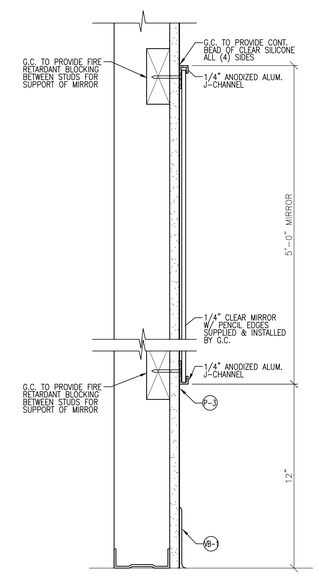

13 COLUMN MIRROR DETAIL
SCALE: 3" = 1'-0"

REGISTRATION SEAL

ARCVISION INCORPORATED
ARCHITECTURE • PLANNING
SAINT LOUIS • DALLAS • LAS VEGAS • ORLANDO
1950 CRAIG ROAD, SUITE 300 ST. LOUIS, MO 63146
PH. (314) 415-2400 FAX (314) 415-2401 www.arcv.com
TEXAS ENGINEERING FIRM #12793

BOOT BARN

BOOT BARN
1424 TEXAS AVE. CROSSING
COLLEGE STATION TX, 77840
STORE # 161R

REV	DATE	DESCRIPTION	NAME

PROJECT NO: 210627
DRAWN BY: WRL
CHECKED BY: CCM
ISSUE DATE: 02/04/22
FIXTURE DETAILS

A41

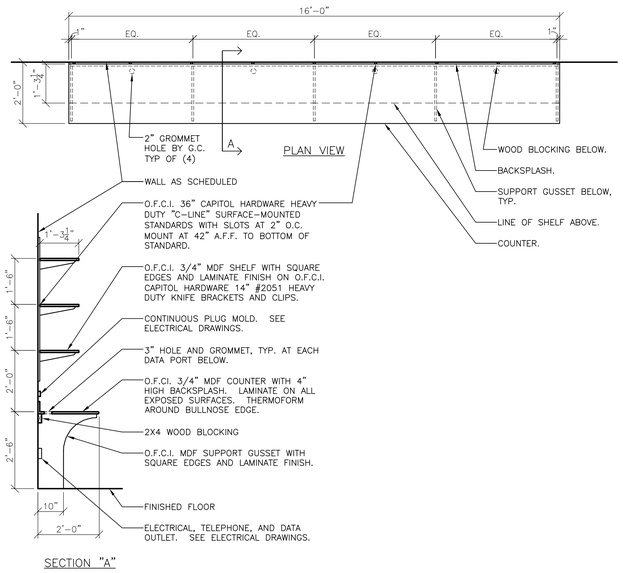

1 SHIPPING AND RECEIVING COUNTER DETAIL (ST-04)

SCALE: 1/2" = 1'-0"

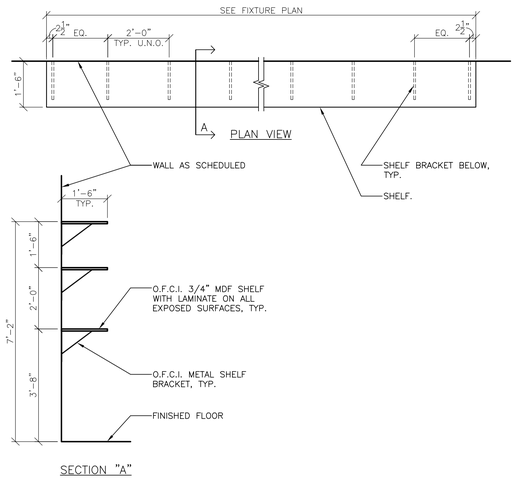

2 STORAGE SHELVING DETAIL (ST-05)

SCALE: 1/2" = 1'-0"

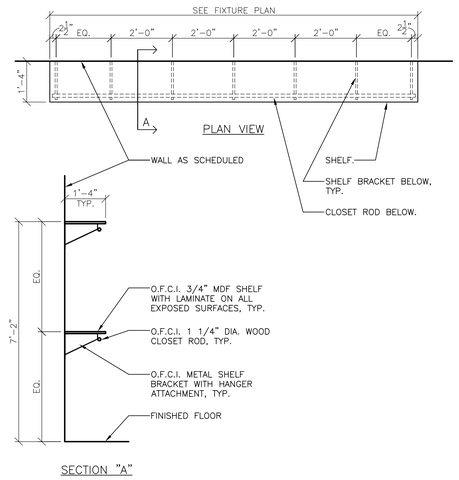

3 HANGER DETAIL (ST-06)

SCALE: 1/2" = 1'-0"

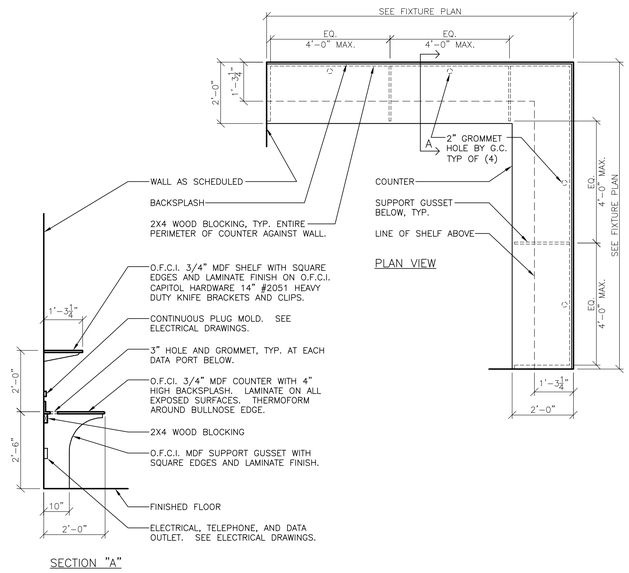

4 MANAGER'S DETAIL (ST-07)

SCALE: 1/2" = 1'-0"

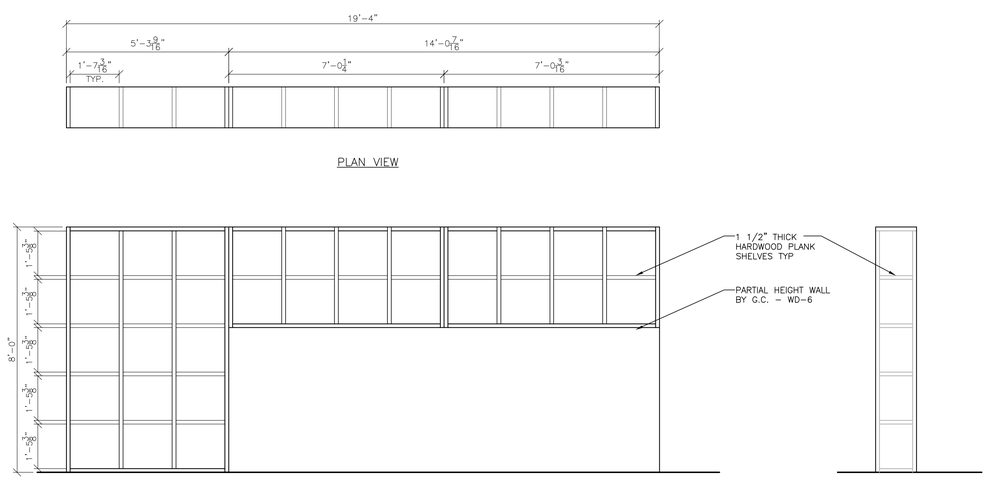

5 DENIM AND BELT CUBBY, OPT. 1

SCALE: 1/2" = 1'-0"

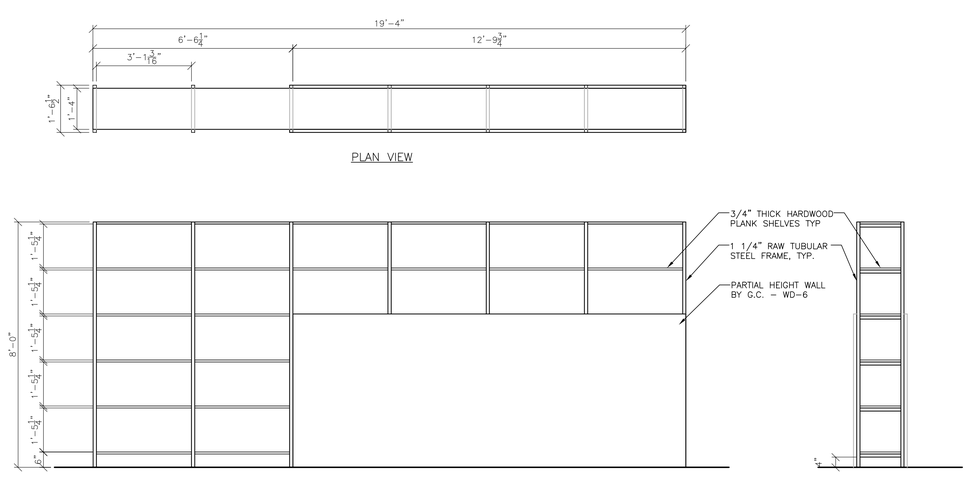

6 DENIM AND BELT CUBBY, OPT. 2

SCALE: 1/2" = 1'-0"

REGISTRATION SEAL

ARCVISION INCORPORATED
ARCHITECTURE / ENGINEERING / STORE PLANNING
SAINT LOUIS / DALLAS / LAS VEGAS / ORLANDO
1950 CRAIG ROAD, SUITE 300 St LOUIS, MO 63146
PH: (314) 415-2400 FAX (314) 415-2020 www.arcv.com
TEXAS ENGINEERING FIRM #12793

BOOT BARN

BOOT BARN
1424 TEXAS AVE. CROSSING
COLLEGE STATION TX, 77840
STORE # 161R

REV	DATE	DESCRIPTION	NAME

PROJECT NO: 210627
DRAWN BY: KWL
CHECKED BY: CCM
ISSUE DATE: 02/04/22

FIXTURE DETAILS

A42

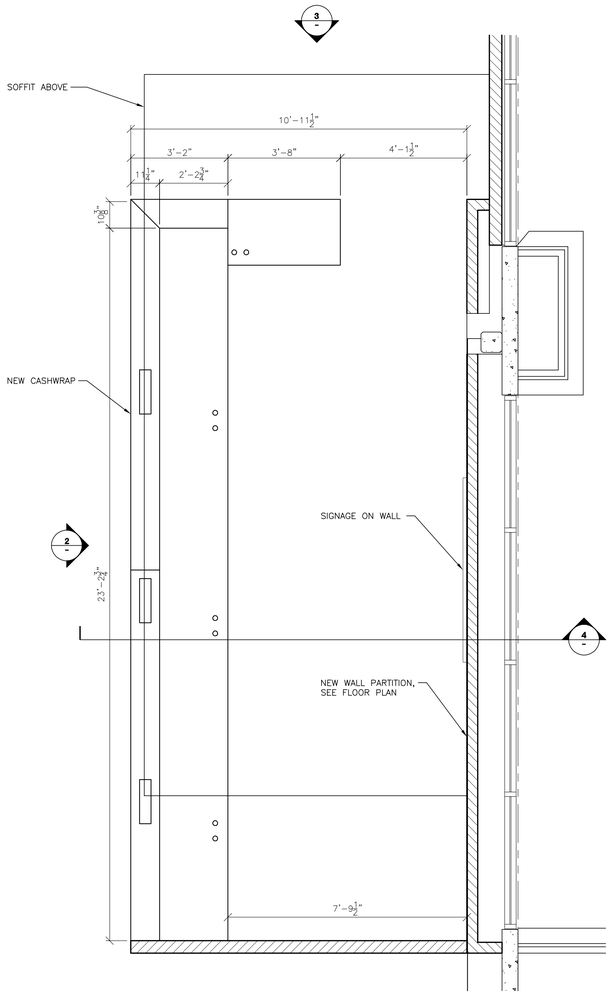

1 CASHWRAP PLAN VIEW
SCALE: 1/2" = 1'-0"

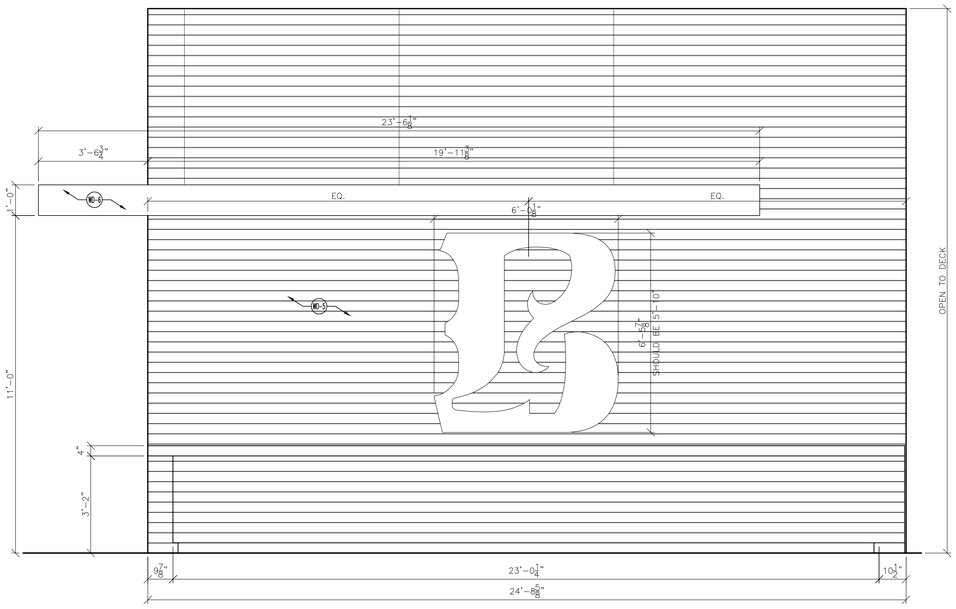

2 CASHWRAP ELEVATION
SCALE: 1/2" = 1'-0"

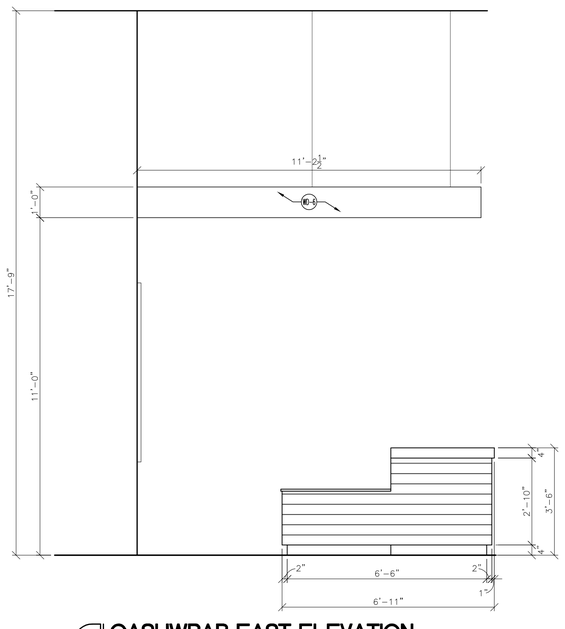

3 CASHWRAP EAST ELEVATION
SCALE: 1/2" = 1'-0"

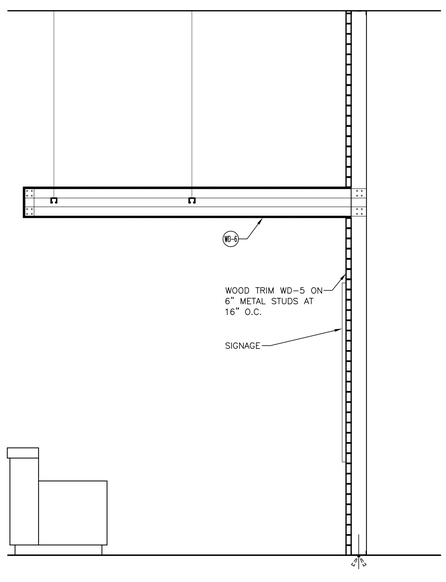

4 CASHWRAP WEST SECTION
SCALE: 1/2" = 1'-0"

REGISTRATION SEAL

ARCVISION INCORPORATED
ARCHITECTURE • ENGINEERING • STORE PLANNING
SAINT LOUIS / DALLAS / LAS VEGAS / ORLANDO
1950 CRAIG ROAD, SUITE 300 / ST. LOUIS, MO 63146
PH: (314) 415-2400 - FAX (314) 415-2200 www.arcv.com
TEXAS ENGINEERING FIRM #12793

BOOT BARN

BOOT BARN
1424 TEXAS AVE. CROSSING
COLLEGE STATION TX, 77840
STORE # 161R

REV	DATE	DESCRIPTION	NAME

PROJECT NO: 210627
DRAWN BY: KWL
CHECKED BY: CCM
ISSUE DATE: 02/04/22

CASHWRAP DETAILS

A43

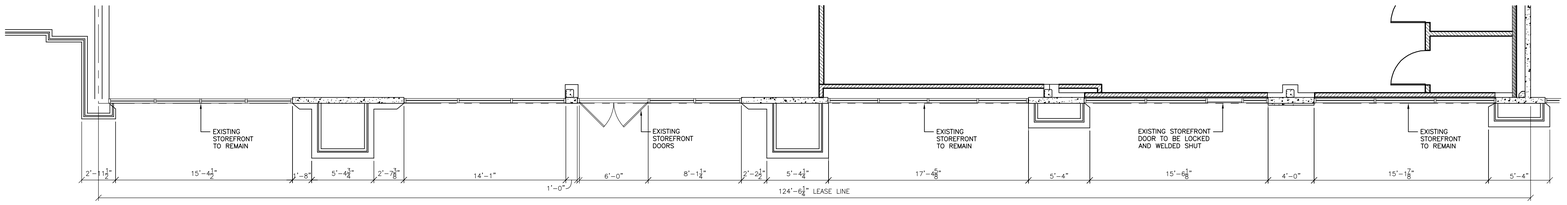

1 **STOREFRONT PLAN**
SCALE: 1/4" = 1'-0"

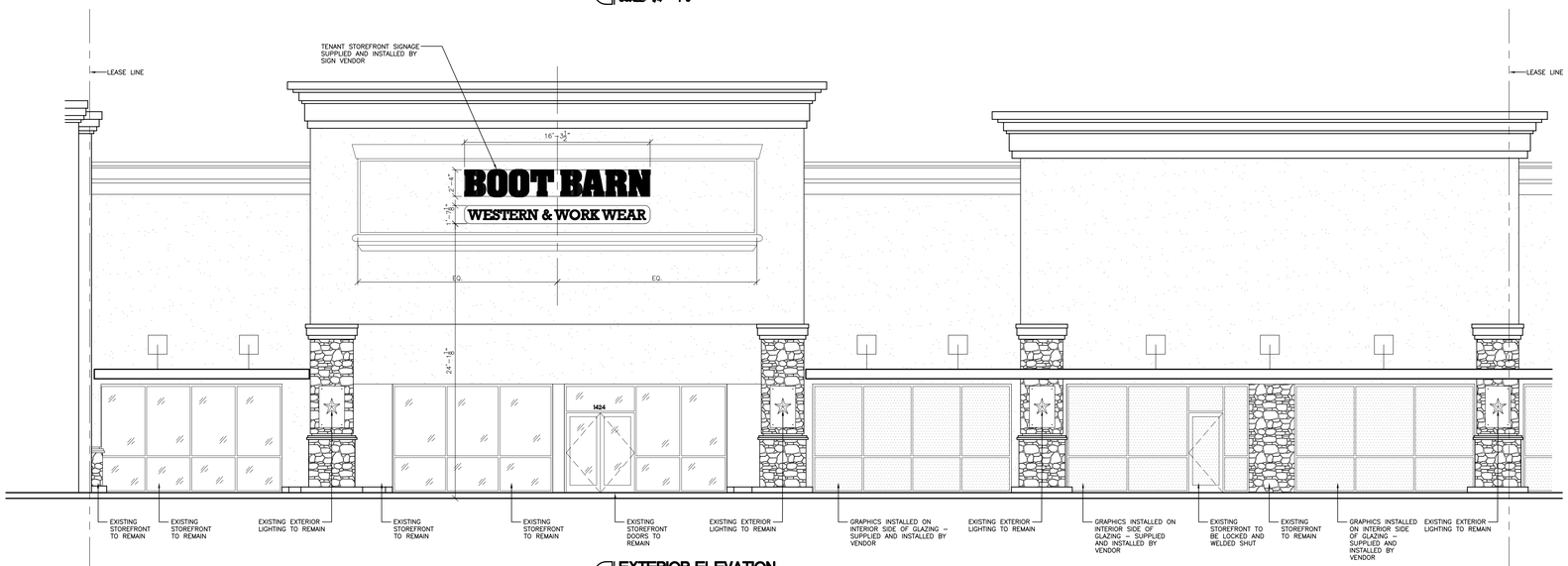

2 **EXTERIOR ELEVATION**
SCALE: 1/4" = 1'-0"

SIGNAGE NOTES

1. SIGN AND SIGN PERMIT BY SIGN MANUFACTURER.
2. G.C. TO REFER TO APPROVED SIGN SHOP DRAWINGS FOR FINAL PLACEMENT PRIOR TO STOREFRONT CONSTRUCTION.

CONTRACTOR'S NOTES

1. WRITTEN DIMENSIONS HOLD PREFERENCE OVER SCALED DIMENSIONS. DO NOT SCALE DRAWINGS. CONTRACTORS MUST VISIT JOB SITE TO VERIFY ALL EXISTING CONDITIONS AND DIMENSIONS BEFORE SUBMITTING BIDS. REPORT ANY DISCREPANCIES OF ANY CONDITIONS WHICH MAY INTERFERE WITH THE PROPER EXECUTION OF, TO TENANT REPRESENTATIVE. REPORT DISCREPANCIES DURING BIDDING PROCESS AND BEFORE START OF CONSTRUCTION. EXTRAS WILL NOT BE ALLOWED FOR JOB OR CODE COMPLIANCE CONDITIONS AFTER COMMENCEMENT OF CONSTRUCTION.
2. FIXTURE PLAN, FLOOR PLAN, INTERIOR ELEVATION SHEET, REFLECTED CEILING PLAN, AND DEMOLITION PLAN ARE OF THIS SPECIFIC STORE. DETAIL SHEETS A42 AND A71 ARE GENERAL AND MAY OR MAY NOT BE STORE–SPECIFIC.

REGISTRATION SEAL

ARCVISION
INCORPORATED
ARCHITECTURE • ENGINEERING • STORE PLANNING
SAINT LOUIS, DALLAS, LAS VEGAS, ORLANDO
1950 CRAIG ROAD, SUITE 300 ST. LOUIS, MO 63146
PH: (314) 415-2400 FAX: (314) 415-2001 www.arcv.com
TEXAS ENGINEERING FIRM #12753

BOOT BARN

BOOT BARN
1424 TEXAS AVE. CROSSING
COLLEGE STATION TX. 77840
STORE # 16R

REV	DATE	DESCRIPTION	NAME

PROJECT NO: 210627
DRAWN BY: KWL
CHECKED BY: CCM
ISSUE DATE: 02/04/22
EXTERIOR ELEVATIONS

A50

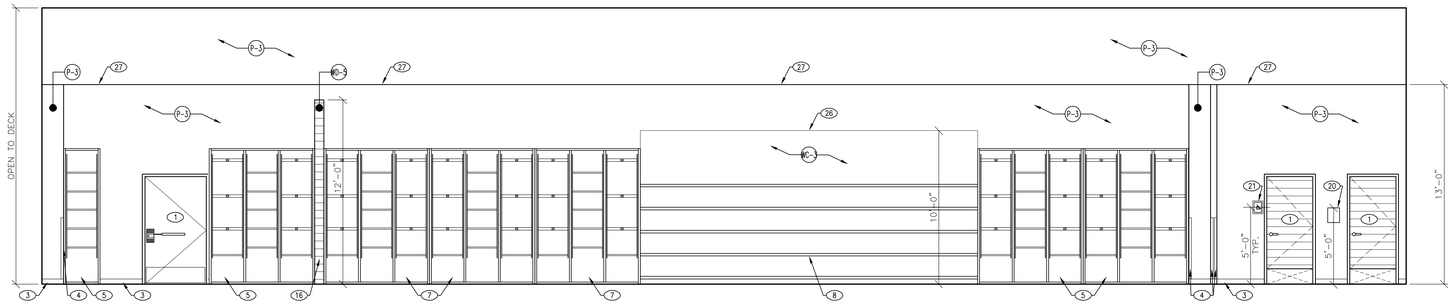

1 SALES AREA ELEVATION
SCALE: 1/4" = 1'-0"

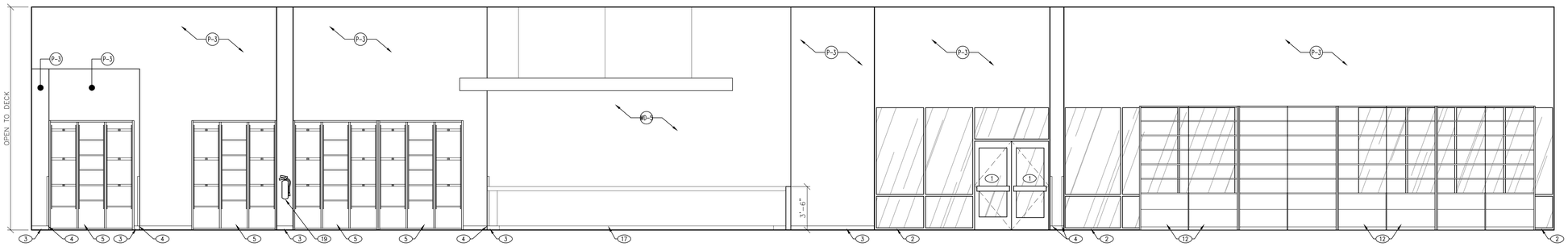

2 SALES AREA ELEVATION
SCALE: 1/4" = 1'-0"

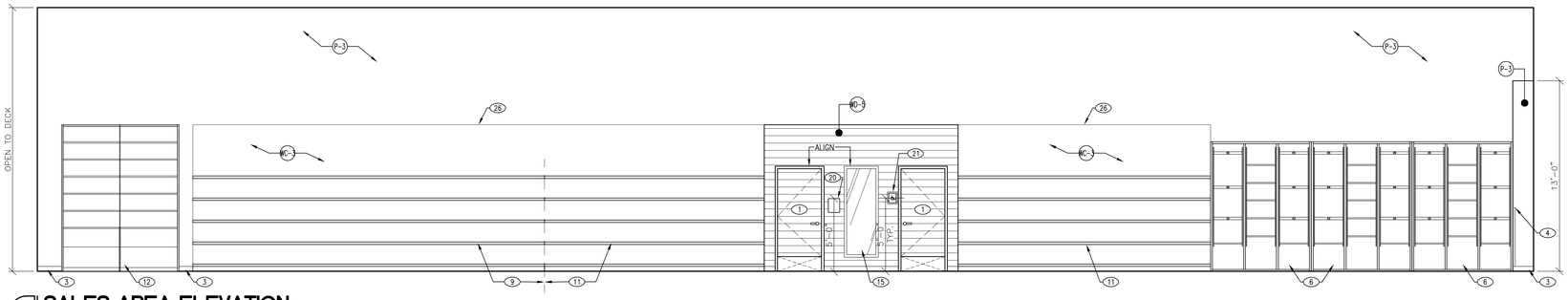

3 SALES AREA ELEVATION
SCALE: 1/4" = 1'-0"

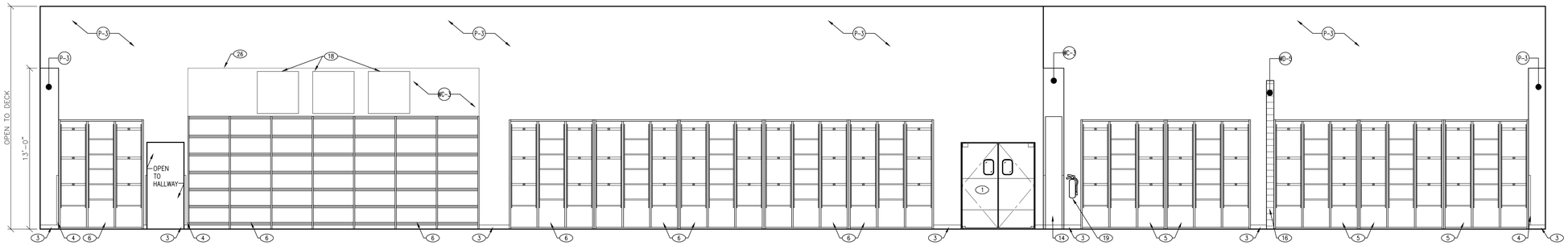

4 SALES AREA ELEVATION
SCALE: 1/4" = 1'-0"

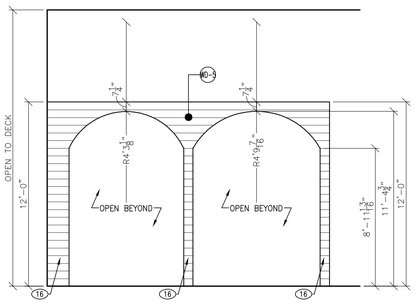

5 SALES AREA ELEVATION
SCALE: 1/4" = 1'-0"

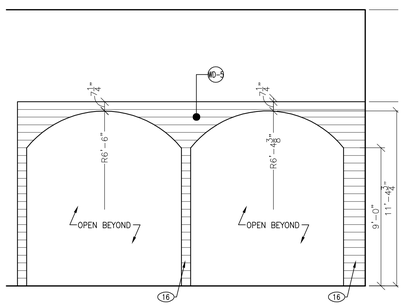

6 SALES AREA ELEVATION
SCALE: 1/4" = 1'-0"

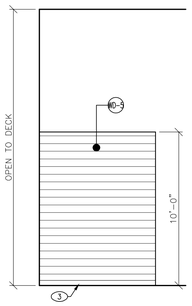

7 SALES AREA ELEVATION
SCALE: 1/4" = 1'-0"

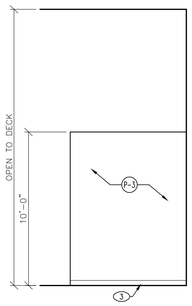

8 SALES AREA ELEVATION
SCALE: 1/4" = 1'-0"

KEYED NOTES

SYMBOL	DESCRIPTION
1	DOOR(S) AS SCHEDULED. SEE FLOOR PLAN.
2	STOREFRONT GLAZING.
3	BASE AS SCHEDULED. SEE FINISH PLAN.
4	CORNER GUARD. SEE DETAIL 2/A41.
5	WOMEN'S CLOTHES CUBBY SEE DETAIL 5/A41
6	MEN'S CLOTHES CUBBY SEE DETAIL 5/A41
7	KID'S CLOTHES CUBBY SEE DETAIL 5/A41
8	WOMEN'S BOOT WALL SHELVING. SEE DETAIL 4/A41.
9	MEN'S BOOT WALL SHELVING. SEE DETAIL 4/A41.
10	NOT USED.
11	WORK BOOT WALL SHELVING. SEE DETAIL 4/A41.
12	HAT SHELVES AND CUBBIES. SEE DETAIL 7/A41.
13	DENIM SHELVES. SEE DETAIL 6/A41.
14	DENIM AND BELT CUBBY. SEE DETAIL 5 OR 6/A42.
15	FITTING ROOM MIRROR AS SCHEDULED. SEE DETAIL 1/A41.
16	ARCHWAY.
17	CASHWRAP. SEE SHEET A43.
18	DENIM AREA GRAPHICS.
19	FIRE EXTINGUISHER. SEE EGRESS PLAN.
20	TELEPHONE MOUNTED TO WALL. SEE ELECTRICAL DRAWINGS.
21	ACCESSIBILITY SIGNAGE, SUPPLIED AND INSTALLED BY G.C. SEE DETAIL 10/A70.
22	NOT USED.
23	NOT USED.
24	NOT USED.
25	NOT USED.
26	PAINT/WALL COVERING TRANSITION LINE.
27	WALL FURRING. SEE SHEET A10 FOR MORE INFORMATION.

REGISTRATION SEAL

ARCVISION INCORPORATED
ARCHITECTURE / ENGINEERING / STORE PLANNING
SAINT LOUIS / DALLAS / LAS VEGAS / ORLANDO
1950 CRAIG ROAD, SUITE 300 / ST. LOUIS, MO 63146
PH: (314) 415-2400 / FAX: (314) 415-2300 www.arcv.com
TEXAS ENGINEERING FIRM #12793

BOOT BARN

BOOT BARN
1424 TEXAS AVE. CROSSING
COLLEGE STATION TX. 77840
STORE # 161R

REV	DATE	DESCRIPTION	NAME

PROJECT NO: 210627
DRAWN BY: KWL
CHECKED BY: CCM
ISSUE DATE: 02/04/22

SALES AREA INTERIOR ELEVATIONS

A60

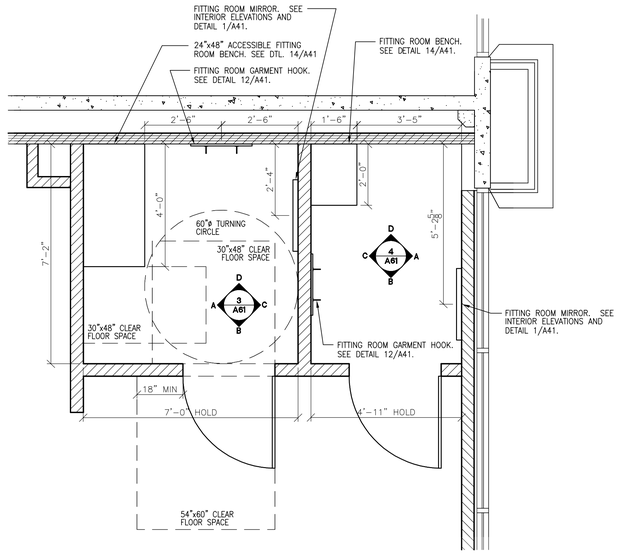

1 ENLARGED FITTING ROOM PLANS
SCALE: 1/2" = 1'-0"

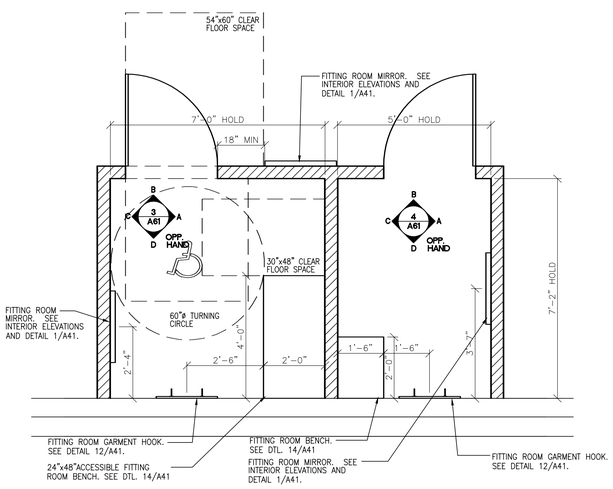

2 ENLARGED FITTING ROOM PLANS
SCALE: 1/2" = 1'-0"

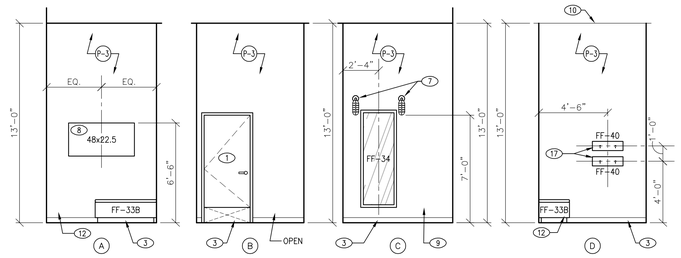

3 ACCESSIBLE FITTING ROOM ELEVATIONS
SCALE: 1/4" = 1'-0"

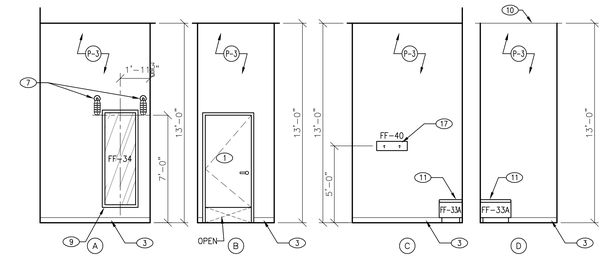

4 FITTING ROOM ELEVATIONS
SCALE: 1/4" = 1'-0"

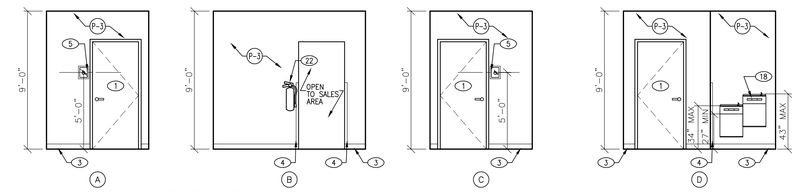

5 HALLWAY ELEVATIONS
SCALE: 1/4" = 1'-0"

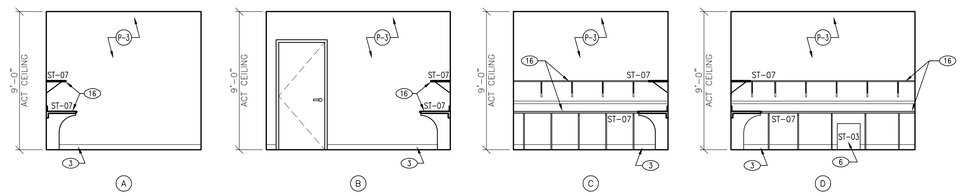

6 MANAGER'S OFFICE ELEVATIONS
SCALE: 1/4" = 1'-0"

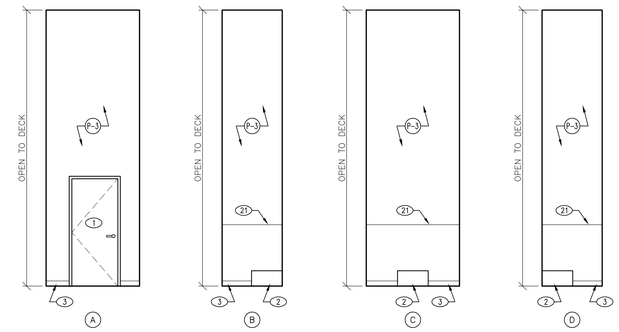

7 UTILITY CLOSET ELEVATIONS
SCALE: 1/4" = 1'-0"

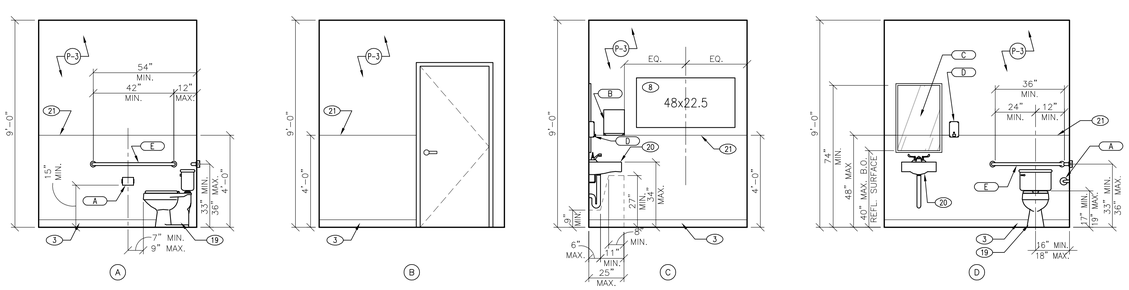

9 RESTROOM ELEVATIONS
SCALE: 3/8" = 1'-0"

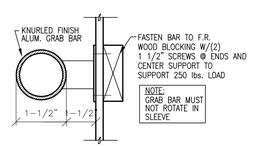

SECTION A-A

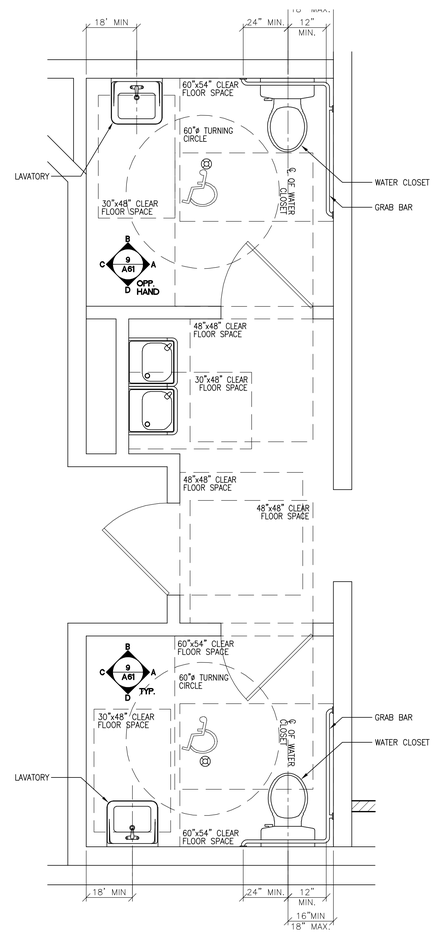

8 ENLARGED RESTROOMS PLANS
SCALE: 1/2" = 1'-0"

KEYED NOTES

SYMBOL	DESCRIPTION
1	DOOR(S) AS SCHEDULED. SEE FLOOR PLAN.
2	MOP SINK.
3	BASE AS SCHEDULED. SEE FINISH PLAN.
4	CORNER GUARD. SEE DETAIL 2/A41.
5	ACCESSIBILITY SIGNAGE, SUPPLIED AND INSTALLED BY G.C. SEE DETAIL 10/A70.
6	STOCK/B.O.H. FIXTURE AS SCHEDULED. SEE FIXTURE PLAN.
7	WALL SCONCE.
8	IMAGE.
9	FITTING ROOM MIRROR AS SCHEDULED. SEE DETAIL 1/A41.
10	PAINT LINE.
11	FITTING ROOM BENCH AS SCHEDULED. SUPL'D & INSTL'D BY G.C. – SEE DTL. 14/A41.
12	ACCESSIBLE FITTING ROOM BENCH AS SCHEDULED. SUPL'D & INSTL'D BY G.C. – SEE DTL. 14/A41.
13	SHIPPING AND RECEIVING COUNTER AS SCHEDULED. SEE DETAIL 1/A42.
14	STORAGE SHELVING AS SCHEDULED. SEE DETAIL 2/A42.
15	STORAGE HANGERS AS SCHEDULED. SEE DETAIL 2/A42.
16	MANAGER'S DESK AND SHELVING AS SCHEDULED. SEE DETAIL 4/A42.
17	FITTING ROOM GARMENT HOOKS AS SCHEDULED. SEE DETAIL 12/A41.
18	NEW HI-LO DRINKING FOUNTAIN.
19	EXISTING WATER CLOSET.
20	EXISTING LAVATORY.
21	F.R.P. PANELING AND TRIM AS SCHEDULED. SEE FINISH PLAN.
22	FIRE EXTINGUISHER. SEE EGRESS PLAN.
23	ELECTRICAL EQUIPMENT – SEE ELECTRICAL SHEETS.
24	TAG NOTE PLANS (NO-A)
25	1/4" MIN. GRAINS W/ 1/2" GROUND FROM APPLIED TO FACE OF DOOR, SUPPLIED BY TENANT & INSTALLED BY G.C.

RESTROOM ACCESSORIES

ITEM	DESCRIPTION
A	TOILET PAPER DISPENSER – SUPPLIED BY OWNER AND INSTALLED BY G.C.
B	PAPER TOWEL DISPENSER – SUPPLIED BY OWNER AND INSTALLED BY G.C.
C	18" X 34" MIRROR, BOBRICK #B-165-1824 – SUPPLIED AND INSTALLED BY G.C.
D	SOAP DISPENSER – SUPPLIED BY OWNER AND INSTALLED BY G.C.
E	GRAB BAR, SEE SECTION A-A.

REGISTRATION SEAL

ARCVISION INCORPORATED
ARCHITECTURE • ENGINEERING • STORE PLANNING
SAINT LOUIS, DALLAS, LAS VEGAS, ORLANDO
1950 CRAIG ROAD, SUITE 300 ST. LOUIS, MO 63146
PH: (314) 415-2400 FAX: (314) 415-2401 www.arcv.com
TEXAS ENGINEERING FIRM #12793

BOOT BARN

BOOT BARN
1424 TEXAS AVE. CROSSING
COLLEGE STATION TX, 77840
STORE # 16R

REV	DATE	DESCRIPTION	NAME

PROJECT NO: 210627
DRAWN BY: KWL
CHECKED BY: CCM
ISSUE DATE: 02/04/22

B.O.H. ELEVATIONS AND TOILET DETAILS

A61

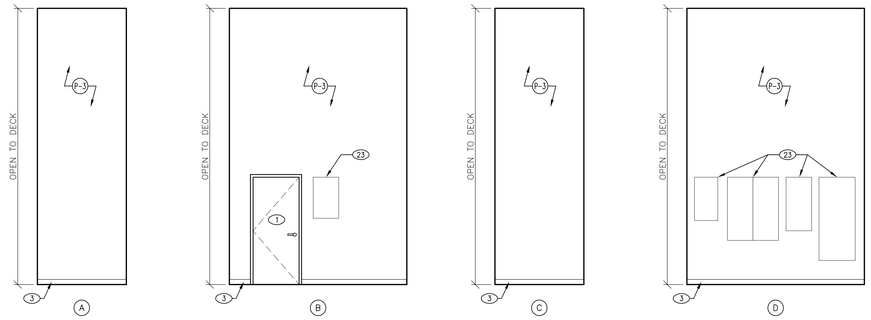

1 ELECTRICAL ROOM ELEVATIONS

SCALE: 1/4" = 1'-0"

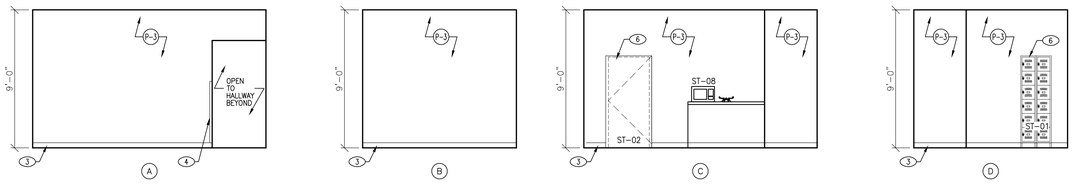

2 BREAK ROOM ELEVATIONS

SCALE: 1/4" = 1'-0"

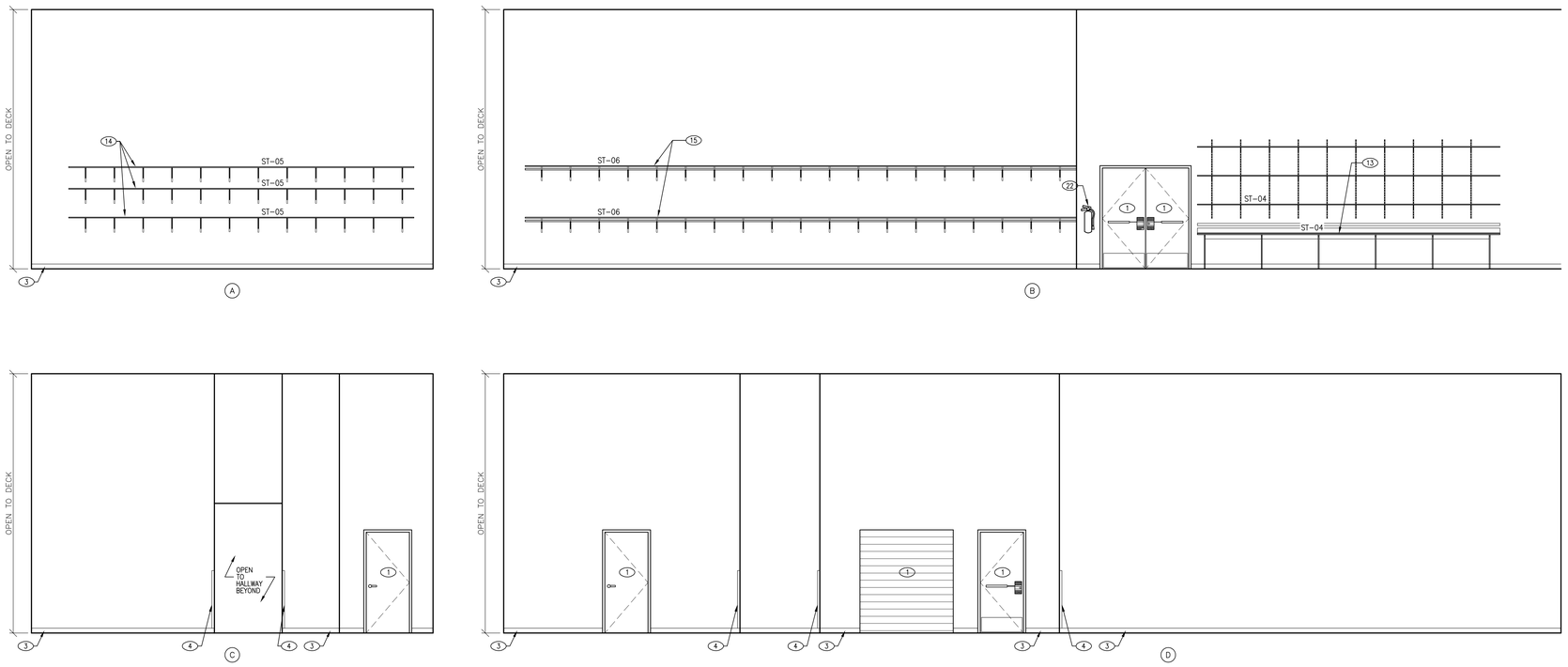

3 STOCKROOM ELEVATIONS

SCALE: 1/4" = 1'-0"

KEYED NOTES

SYMBOL	DESCRIPTION
1	DOOR(S) AS SCHEDULED. SEE FLOOR PLAN.
2	MOP SINK.
3	BASE AS SCHEDULED. SEE FINISH PLAN.
4	CORNER GUARD. SEE DETAIL 2/A41.
5	ACCESSIBILITY SIGNAGE SUPPLIED AND INSTALLED BY G.C. SEE DETAIL 10/A70.
6	STOCK/B.O.H. FIXTURE AS SCHEDULED. SEE EXCUBE PLAN.
7	WALL SCONCE.
8	MAGE.
9	FITTING ROOM MIRROR AS SCHEDULED. SEE DETAIL 7/A41.
10	PAINT LINE.
11	FITTING ROOM BENCH AS SCHEDULED. SUPLI'D & INSTLI'D BY G.C. SEE DTL. 14/A41.
12	ACCESSIBLE FITTING ROOM BENCH AS SCHEDULED. SUPLI'D & INSTLI'D BY G.C. SEE DTL. 14/A41.
13	SHIPPING AND RECEIVING COUNTER AS SCHEDULED. SEE DETAIL 1/A42.
14	STORAGE SHELVING AS SCHEDULED. SEE DETAIL 2/A42.
15	STORAGE HANGERS AS SCHEDULED. SEE DETAIL 3/A42.
16	MANAGER'S DESK AND SHELVING AS SCHEDULED. SEE DETAIL 4/A42.
17	FITTING ROOM GARMENT HOOKS AS SCHEDULED. SEE DETAIL 12/A41.
18	NEW HI-LO DRINKING FOUNTAIN.
19	EXISTING WATER CLOSET.
20	EXISTING LAVATORY.
21	FACE FINISHING AND TRIM AS SCHEDULED. SEE FINISH PLAN.
22	FIRE EXTINGUISHER. SEE EGRESS PLAN.
23	ELECTRICAL EQUIPMENT - SEE ELECTRICAL SHEETS.
24	1x6 T&G WOOD PLANKS (NO-4).
25	1x6 WD. PLANKS W/ 1/2" ROUND TRIM APPLIED TO FACE OF DOOR. SUPPLIED BY TENANT & INSTALLED BY G.C.

REGISTRATION SEAL

ARCVISION INCORPORATED

ARCHITECTURE • ENGINEERING • STORE PLANNING
SAINT LOUIS / DALLAS / LAS VEGAS / ORLANDO
1950 CRAIG ROAD, SUITE 300 ST. LOUIS, MO 63146
PH: (314) 415-2400 FAX: (314) 415-2200 www.arcv.com
TEXAS ENGINEERING FIRM #12793

BOOT BARN

BOOT BARN
1424 TEXAS AVE. CROSSING
COLLEGE STATION TX, 77840
STORE # 161R

REV	DATE	DESCRIPTION	NAME

PROJECT NO: 210627
DRAWN BY: KWL
CHECKED BY: CCM
ISSUE DATE: 02/04/22

B.O.H. ELEVATIONS AND TOILET DETAILS

A62

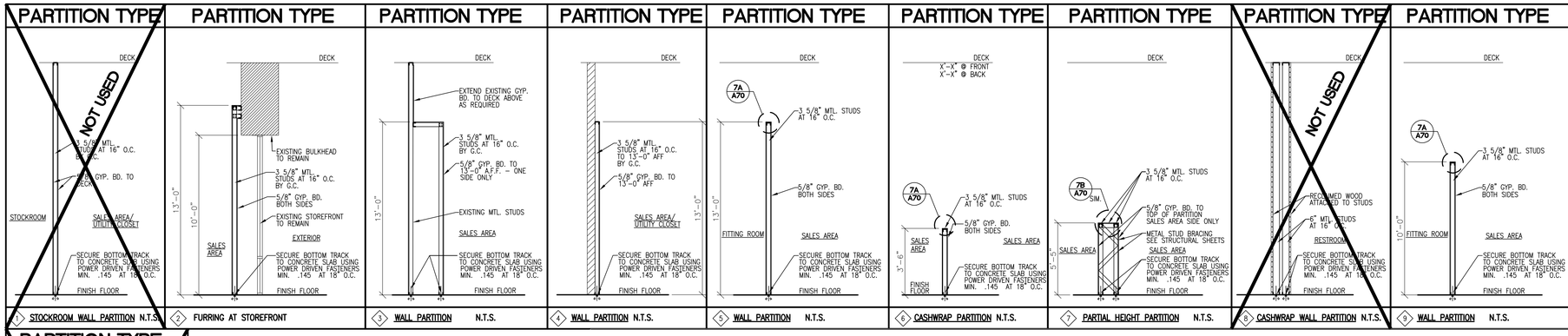

STUD GA. LIMITING HT. SCHEDULE

A. TABLE BELOW IS BASED ON UNIVERSAL INDUSTRIES, UNIMAST (USC) CORPORATION'S LIMITING HEIGHT TABLES FOR UNBRACED STUDS SPACED 16" AND 24" O.C. (SYSTEM FOLDER SA-923-1990 EDITION). REQUIREMENT FOR 5 PSF LATERAL PRESSURE AND 1/240 ALLOWABLE DEFLECTION FOR FLEXIBLE FINISHES, WITH 1 LAYER OF GYP. BD. PER SIDE OF STUD.

B. SCHEDULED HEIGHTS MAY BE INCREASED BY 50% WHERE THE STUDS ARE DIAGONALLY BRACED AT THE MAXIMUM HEIGHT POINT TO THE STRUCTURE ABOVE @ 4'-0" O.C.

C. CAUTION: WHEN USING STUDS MANUFACTURED BY A COMPANY OTHER THEN USC, VERIFY MANUFACTURERS STUD STRENGTH AND LIMITING HEIGHT, ADJUST GAUGE AND MAXIMUM HEIGHT RECOMMENDED BY MANUFACTURER'S CURRENT PRINTED SPECIFICATION.

Stud Width	Stud Type	Stud Gauge	Stud Spacing	Maximum Height
1-5/8"	158ST25	25	16"	9'-6"
	158ST25	25	24"	7'-3"
2-1/2"	212ST25	25	16"	12'-6"
	212ST25	25	24"	10'-9"
	212ST22	22	16"	13'-0"
	212ST22	22	24"	11'-6"
	212ST20	20	16"	14'-0"
	212ST20	20	24"	12'-3"
3-5/8"	358ST25	25	16"	16'-0"
	358ST25	25	24"	13'-6"
	358ST22	22	16"	17'-3"
	358ST22	22	24"	15'-0"
	358ST20	20	16"	18'-3"
	358ST20	20	24"	16'-0"
6"	600ST25	25	16"	20'-0"
	600ST25	25	24"	15'-0"

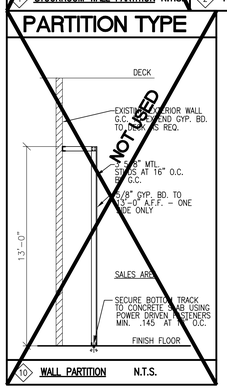

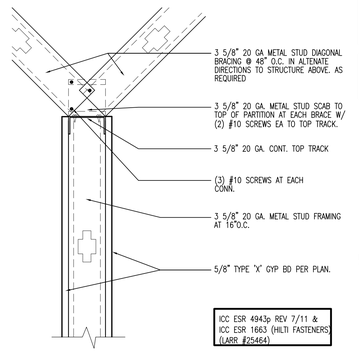

VERIFY THAT THE SHOWN METHOD OF ATTACHMENT IS ACCEPTABLE WITH THE ON-SITE COORDINATOR. IF NOT, CONTACT ARCHITECT FOR ALTERNATE DETAIL.

SEE STUD GA. LIMITING HT. SCHEDULE ON SHEET A1 FOR ADDITIONAL INFO.

1 TYP. INTERIOR PARTITION AT TOP
SCALE: 1" = 1'-0"

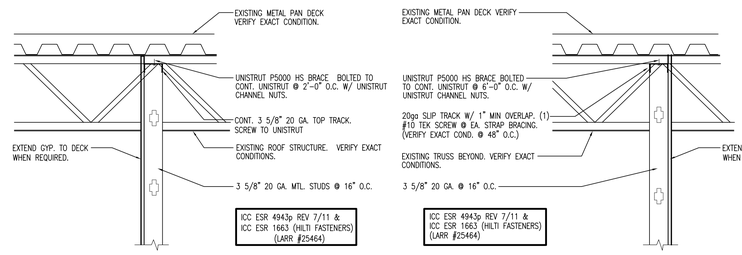

2 SOFFIT CONNECTION
SCALE: 1" = 1'-0"

3 TOP OF FULL HEIGHT. INT. PARTITION
SCALE: 1" = 1'-0"

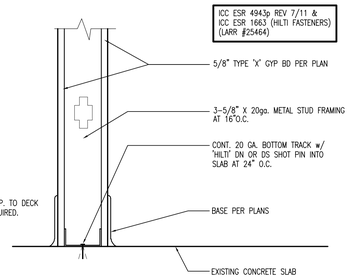

4 BOTTOM OF INT. PARTITION
SCALE: 1 1/2" = 1'-0"

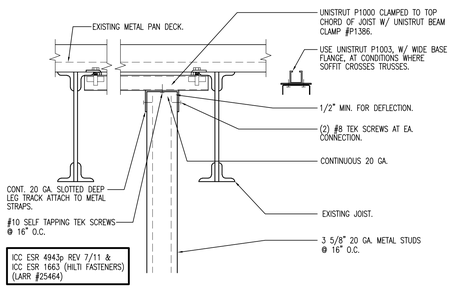

5 TOP OF INT. WALL TO STRUCTURE
SCALE: 3" = 1'-0"

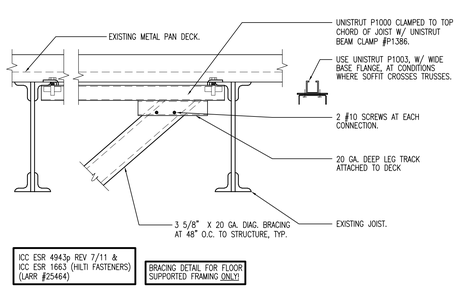

6 TYP. DIAG. BRACING CONN. TO DECK
SCALE: 1" = 1'-0"

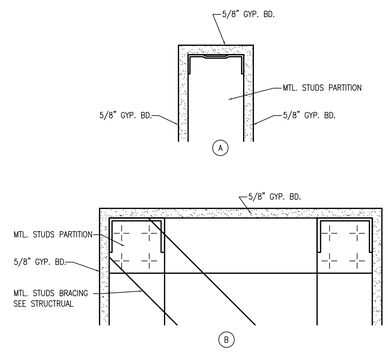

7 TOP OF PARTITION DTL.
SCALE: 3" = 1'-0"

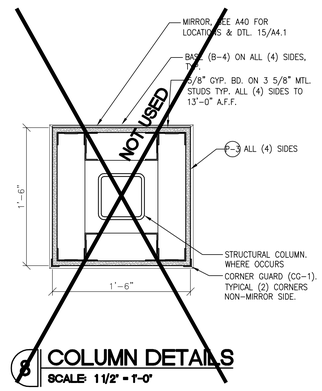

8 COLUMN DETAILS
SCALE: 1 1/2" = 1'-0"

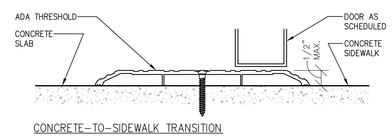

9 FLOORING TRANSITION DETAILS
SCALE: 6" = 1'-0"

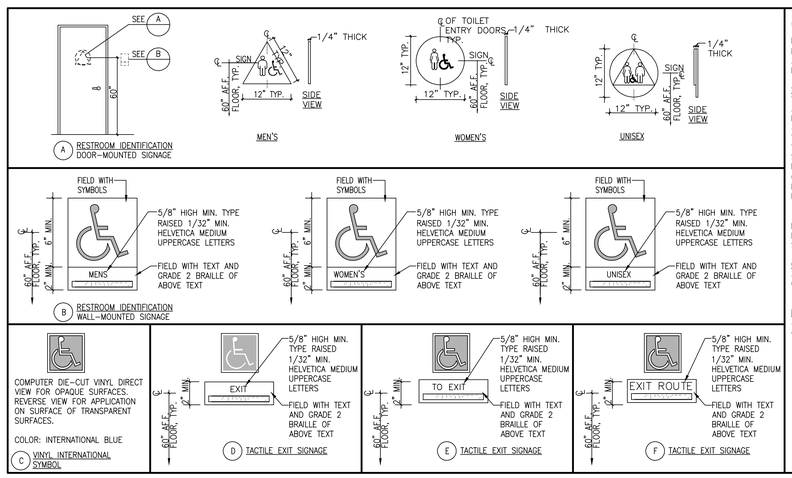

ADA SIGNAGE NOTES:

ENTIRE FACILITY SHALL CONFORM TO THE MINIMUM REQUIREMENTS OF THE AMERICANS WITH DISABILITY ACT (ADA), ACCESSIBILITY STANDINGS, AND ALL LOCAL GOVERNING REGULATIONS.

SIGNS & IDENTIFICATION:
WHEN PERMANENT IDENTIFICATION IS PROVIDED FOR ROOMS AND SPACES, RAISED LETTERS SHALL BE PROVIDED AND SHALL BE ACCOMPANIED BY BRAILLE IN CONFORMANCE WITH SECTION 4.30.4 OF THE ADA. SIGNS SHALL BE INSTALLED ON THE WALL ADJACENT TO THE LATCH OUTSIDE OF THE DOOR. WHERE THERE IS NO WALL SPACE ON THE LATCH SIDE, INCLUDING AT DOUBLE LEAF DOORS, SIGNS SHALL BE PLACED ON THE NEAREST ADJACENT WALL, PREFERABLY ON THE RIGHT. MOUNTING HEIGHT SHALL BE 60" ABOVE THE FINISHED FLOOR TO THE CENTERLINE OF THE SIGN. MOUNTING LOCATION SHALL BE DETERMINED SO THAT A

PERSON MAY APPROACH WITHIN 3" OF SIGNAGE WITHOUT ENCOUNTERING PROTRUDING OBJECTS OR STANDING WITHIN THE SWING OF A DOOR. SEC. 4.30.6 OF THE ADA.

CASHWRAP:
ALL CASHWRAPS ARE TO BE ACCESSIBLE TO DISABLED CUSTOMERS PER ADA REQUIREMENTS.

NOTE:
ALL ADA SIGNAGE REQUIRED BY LOCAL AUTHORITIES HAVING JURISDICTION IS TO BE SUPPLIED AND INSTALLED BY G.C.

10 ADA SIGNAGE
SCALE: N.T.S.

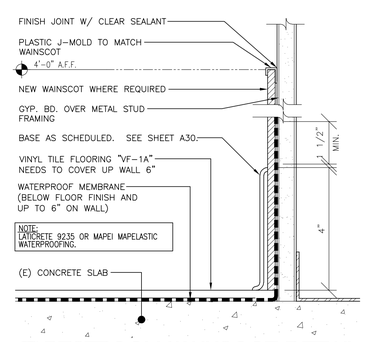

11 RESTROOM WAINSCOT DETAIL
SCALE: 6" = 1'-0"
IF REQUIRED

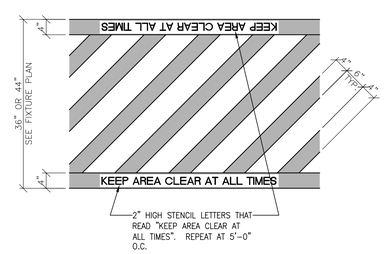

12 TYP. FLOOR STRIPING DETAIL
SCALE: 3/4" = 1'-0"
••• WHEN REQUIRED •••

REGISTRATION SEAL

ARCVISION INCORPORATED
ARCHITECTURE • STORE PLANNING
SAINT LOUIS, DALLAS, LAS VEGAS, ORLANDO
1950 CRAIG ROAD, SUITE 300 ST. LOUIS, MO 63146
PH. (314) 415-2400 FAX (314) 415-2401 www.arcv.com
TEXAS ENGINEERING FIRM #12793

BOOT BARN

BOOT BARN
1424 TEXAS AVE. CROSSING
COLLEGE STATION TX. 77840
STORE # 161R

REV	DATE	DESCRIPTION	NAME

PROJECT NO: 210627
DRAWN BY: KWL
CHECKED BY: CCM
ISSUE DATE: 02/04/22

PARTITION TYPES AND DETAILS

A70

GENERAL
A. THE GENERAL CONDITIONS OF THE GENERAL SPECIFICATIONS, ALONG WITH ALL APPLICABLE INSTRUCTIONS TO BIDDERS, SHALL FORM A PART OF THIS SECTION OF THE SPECIFICATIONS.
B. REFERENCE IS MADE TO REQUISITES FOR BIDDERS AND CONTRACTORS UNDER OTHER SECTIONS OF THESE SPECIFICATIONS, WHICH SHALL BE CONSIDERED BINDING, UNLESS OTHERWISE NOTED UNDER THIS SECTION.

SCOPE
EACH CONTRACTOR SHALL THOROUGHLY ACQUAINT HIMSELF WITH THE CONSTRUCTION DETAILS, BOTH ON TENANT CONSTRUCTION DRAWINGS AND LANDLORD'S AS REFERRED TO, BEFORE SUBMITTING HIS BID AS NO ALLOWANCES WILL BE MADE BECAUSE OF CONTRACTOR'S UNFAMILIARITY WITH THESE DETAILS. ALL PERFORMANCE OF CONSTRUCTION SHALL BE AS REQUIRED BY THE PACE OF THE GENERAL CONSTRUCTION.

INSPECTION OF SITE
ALL PROPOSALS SHALL PRECLUDE THAT CONTRACTOR IS FAMILIAR WITH JOBSITE CONDITIONS AND UTILITY LOCATIONS AND THE LACK OF SPECIFIC INFORMATION ON THE DRAWINGS SHALL NOT RELIEVE THE CONTRACTOR OF ANY RESPONSIBILITY.

PERMITS
ALL PERMITS AND LICENSES NECESSARY FOR THE PROPER EXECUTION OF THE WORK SHALL BE SECURED AND PAID FOR BY THE SUBCONTRACTOR INVOLVED.

CODE REQUIREMENTS
ALL WORK UNDER THIS CONTRACT SHALL COMPLY WITH THE PROVISIONS OF THE SPECIFICATIONS, DRAWINGS OR AS DIRECTED BY THE OWNER, AND SHALL SATISFY ALL APPLICABLE CODES, ORDINANCES, AND/OR REGULATIONS OF THE GOVERNING BODIES, WHETHER SO SHOWN OR NOT, AND ALL MODIFICATIONS REQUIRED BY SUCH AUTHORITIES SHALL BE MADE BY THE CONTRACTOR WITHOUT ANY ADDITIONAL COST TO OWNER.

MATERIALS AND WORKMANSHIP
A. ALL MANUFACTURED ARTICLES, MATERIALS, AND EQUIPMENT SHALL BE APPLIED AS RECOMMENDED BY THE MANUFACTURERS, AND UNLESS OTHERWISE SPECIFIED SHALL BE NEW, AND FREE FROM ANY AND ALL DEFECTS. LIKE MATERIALS USED SHALL BE OF THE SAME MANUFACTURE AND QUALITY UNLESS OTHERWISE SPECIFIED.
B. ALL WORK UNDER THIS CONTRACT SHALL BE PERFORMED BY COMPETENT WORKMEN AND EXECUTED IN A NEAT AND WORKMANLIKE MANNER. WORK SHALL BE PROPERLY PROTECTED DURING CONSTRUCTION AND COMPLETION, INSTALLATION SHALL BE THOROUGHLY CLEANED OF ALL DEBRIS PRESENT AS A RESULT OF THIS CONTRACT AND SHALL BE REMOVED FROM THE PREMISES, DO NOT ABANDON.

CODES AND REGULATIONS
EACH SUBCONTRACTOR SHALL COMPLY WITH ALL LAWS, ORDINANCES, RULES AND REGULATIONS BEARING ON THE CONDUCT OF THE WORK AS DRAWN AND SPECIFIED. IF A SUBCONTRACTOR OBSERVES THAT THE DRAWINGS AND SPECIFICATIONS ARE AT A VARIANCE, HE SHALL PROMPTLY NOTIFY THE GENERAL CONTRACTOR AND THE TENANT IN WRITING. IF ANY SUBCONTRACTOR PERFORMS ANY WORK KNOWING IT TO BE CONTRARY TO LAWS, ORDINANCES, RULES AND REGULATIONS AND WITHOUT GIVING SUCH NOTICE, THE SUBCONTRACTOR SHALL BEAR ALL COSTS ARISING THEREFROM.

PROTECTION OF WORK AND PROPERTY
A. EACH SUBCONTRACTOR SHALL CONTINUOUSLY MAINTAIN ADEQUATE PROTECTION OF ALL HIS WORK FROM DAMAGE AND SHALL PROTECT THE OWNER'S PROPERTY FROM INJURY OR LOSS ARISING FROM HIS WORK. ANY SUCH DAMAGE, INJURY, OR LOSS, EXCEPT SUCH AS MAY BE DIRECTLY DUE TO CAUSES BEYOND HIS CONTROL AND NOT TO HIS FAULT OR NEGLIGENCE, SHALL BE THE RESPONSIBILITY OF THE SUBCONTRACTOR. HE SHALL ADEQUATELY PROTECT ADJACENT PROPERTY AS WELL.
B. EACH SUBCONTRACTOR SHALL TAKE ALL NECESSARY PRECAUTIONS FOR THE SAFETY OF THEIR EMPLOYEES ON THE WORK AND SHALL COMPLY WITH ALL PROVISIONS OF FEDERAL, STATE AND LOCAL BUILDING CODES AND SAFETY LAWS TO PREVENT ACCIDENTS OR INJURY TO PERSONS ON OR ADJACENT TO THE PREMISES WHERE THE WORK IS BEING PERFORMED. EACH SUBCONTRACTOR SHALL MAINTAIN ALL INSURANCE REQUIRED TO PROTECT HIMSELF, THE OWNER AND TENANT FOR THE DURATION OF THE WORK AGAINST PROPERTY DAMAGE AND PUBLIC LIABILITY.

CHANGES IN THE WORK
THE TENANT, WITHOUT INVALIDATING THE CONTRACT, MAY ORDER EXTRA WORK OR MAKE CHANGES BY ALTERING, ADDING TO, OR DEDUCTING FROM THE WORK, WITH CONTRACT SUM BEING ADJUSTED ACCORDINGLY.

COOPERATION
ALL WORK UNDER THESE SPECIFICATIONS SHALL BE ACCOMPLISHED IN CONJUNCTION WITH OTHER CONTRACTORS AND TRADES OF THIS PROJECT IN A MANNER WHICH WILL ALLOW EACH CONTRACTOR AND TRADE SUFFICIENT TIME AT THE PROPER STAGE OF CONSTRUCTION TO FULFILL HIS CONTRACTS. CONTRACTORS SHALL CONTACT OWNER FOR INSTRUCTIONS SHOULD ANY QUESTIONS ARISE BETWEEN TRADES AS TO THE INSTALLATION OF LINES, DUCTS, CONDUITS, FIXTURES, OR EQUIPMENT, OR SHOULD IT APPEAR DESIRABLE TO ANY GENERAL CONSTRUCTION WHICH WOULD AFFECT THE APPEARANCE OR STRENGTH OF THE STRUCTURE.

SUBSTITUTION OF MATERIALS
MANUFACTURERS ARE LISTED ON PLANS TO ESTABLISH A STANDARD. THE PRODUCTS OF OTHER MANUFACTURERS WILL BE ACCEPTABLE, IF IN THE OPINION OF THE TENANT, THE SUBSTITUTE MATERIAL IS OF QUALITY EQUAL TO OR BETTER THAN THE MATERIAL SPECIFIED, AND WILL SERVE WITH EQUAL EFFICIENCY AND DEPENDABILITY, FOR THE PURPOSE OF WHICH THE ITEMS SPECIFIED WERE INTENDED.

SHOP DRAWINGS
SHOP DRAWINGS AND CATALOG DATA ON ALL MAJOR ITEMS OF EQUIPMENT AND SYSTEMS, AND OTHER SUCH ILLUSTRATIVE MATERIAL THAT MAY BE CONSIDERED NECESSARY BY THE TENANT, SHALL BE SUBMITTED BY THIS CONTRACTOR IN ADEQUATE TIME TO PREVENT DELAY AND/OR CONSTRUCTION MODIFICATIONS.

DRAWINGS AND SPECIFICATIONS
A. THE DRAWINGS DIAGRAMMATICALLY INDICATE THE LOCATIONS OF THE VARIOUS LINES, DUCTS, CONDUITS, FIXTURES, AND EQUIPMENT AND THE METHOD OF CONNECTING AND CONTROLLING THEM. IT IS NOT INTENDED TO SHOW EVERY CONNECTION IN DETAIL AND ALL FITTINGS REQUIRED FOR A COMPLETE SYSTEM.
B. SHOULD ANY CHANGES BE DEEMED NECESSARY BY THE CONTRACTOR, TO ANY ITEMS SHOWN ON CONTRACT DRAWINGS, SHOP DRAWINGS, DESCRIPTIONS, AND THE REASON FOR THE PROPOSED CHANGES SHALL BE SUBMITTED TO THE OWNER FOR APPROVAL.

RESPONSIBILITY
A. THE CONTRACTOR WILL BE HELD RESPONSIBLE FOR THE SATISFACTORY AND COMPLETE EXECUTION OF ALL WORK INCLUDED IN HIS CONTRACT. HE SHALL PRODUCE COMPLETE AND FULLY OPERATIONAL SYSTEMS AND PROVIDE ALL INCIDENTAL ITEMS REQUIRED AS PART OF HIS WORK, REGARDLESS OF WHETHER SUCH ITEM IS PARTICULARLY SPECIFIED OR INDICATED. FOR EXAMPLE, ON SINK INSTALLATIONS, ESCUTCHEONS SHALL BE PROVIDED FOR COUNTERTOP PENETRATIONS, ALTHOUGH THEY WERE NOT SPECIFICALLY IDENTIFIED IN THE CONTRACT DOCUMENTS.
B. CONTRACTOR SHALL SUPPLY TO LANDLORD AND TENANT A CERTIFIED AIR BALANCE REPORT AT COMPLETION OF PROJECT. THIS SHALL BE REQUIRED FOR BOTH REMODELED AND NEW STORES.

HEATING, VENTILATING AND AIR CONDITIONING

GENERAL
A. THE WORK COVERED BY THIS SECTION OF THESE SPECIFICATIONS SHALL BE ACCOMPLISHED IN ACCORDANCE WITH THE RESPECTIVE DRAWINGS, INFORMATION OR INSTRUCTIONS TO BIDDERS, GENERAL CONDITIONS, ADDENDA, OR DIRECTIVES WHICH MAY BE ISSUED BY THE OWNER, SHALL BE COMPLIED WITH IN EVERY ASPECT.
B. THE LISTING HEREIN OF AN ARTICLE OR MATERIAL, OPERATION OR METHOD, REQUIRES THAT THE CONTRACTOR SHALL FURNISH AND INSTALL EACH ITEM LISTED, UNLESS SPECIFICALLY NOTED TO THE CONTRARY. THE CONTRACTOR SHALL PERFORM EACH OPERATION PRESCRIBED OR LISTED ACCORDING TO THE CONDITIONS STATED.

EXAMINATION OF SITE
ALL CONTRACTORS SUBMITTING PROPOSALS FOR THIS WORK SHALL FIRST EXAMINE THE SITE AND ALL EXISTING CONDITIONS AFFECTING HIS WORK. ALL PROPOSALS SHALL SPECIFY, IN WRITING, ALL SUCH CONDITIONS THAT MAY ALTER OR AFFECT THE WORK UNDER THIS CONTRACT.

SCOPE
FURNISH ALL MATERIALS, EQUIPMENT, AND LABOR NECESSARY FOR A COMPLETE AND FULLY OPERATIONAL HEATING, VENTILATING, AND AIR CONDITIONING SYSTEM EXCEPT AS SPECIFICALLY EXCLUDED BY DRAWINGS AND/OR BY TENANT'S DIRECTIONS.

EQUIPMENT
A. ROOFTOP UNITS:
1. EXSITING GAS HEAT ROOFTOP UNITS TO REMAIN
2. EXISTING ELECTRIC HEAT ROOFTOP UNITS TO REMAIN
3. REFER TO RTU SCHEDULES
B. FILTERS – FILTERS SHALL BE OF THE THROW AWAY TYPE WHEREVER POSSIBLE. IF THE FILTERS ARE IN FRAME HOLDERS, HOLDERS SHALL BE PROVIDED WITH A LIFT HANDLE.
C. THE HVAC SUBCONTRACTOR SHALL IDENTIFY ALL ROOF MOUNTED HVAC EQUIPMENT AND RELATED ACCESSORIES WITH 2" HIGH PAINTED STENCILED LETTERS OF THE STORE NAME ON ALL SIDES OF EQUIPMENT.
D. EXHAUST FANS – EXISTING CEILING MOUNTED EXHAUST FANS TO REMAIN – REFER TO M10 SHEET FOR ADDITIONAL INFORMATION.
E. THERMOSTATS: EXISTING TO REMAIN

COOLING:
75°F MAXIMUM OCCUPIED COOLING TEMPERATURE
85°F COOLING NIGHT SETBACK.

HEATING:
70°F MAXIMUM OCCUPIED HEATING TEMPERATURE
60°F HEATING NIGHT SETBACK.

FAN: CONTINUOUS IN OCCUPIED AND RECOVERY MODE AND WITH HEATING OR COOLING EQUIPMENT IN UNOCCUPIED MODE.

DEADBAND: CAPABLE OF MAINTAINING A 5°F DEADBAND.

CAPABLE OF MAINTAINING PROGRAMMED SETTING FOR AT LEAST 24 HOURS WITHOUT POWER.

T–STAT SHALL BE INSTALLED PER MANUFACTURERS RECOMMENDATIONS AND MOUNTED SO THAT THE HIGHEST OPERABLE CONTROL IS NOT MORE THAN 48" A.F.F.

NEW DUCTWORK

A. SQUARE AND RECTANGULAR DUCTWORK SHALL BE CONSTRUCTED OF NEW GALVANIZED PRIME GRADE SHEET STEEL PER THE LATEST EDITION OF THE SMACNA STANDARDS. ALL ROUND DUCTWORK SHALL BE SPIRAL SEAM.

B. ALL SUPPLY AND RETURN AIR DUCTS DUCTS IN CEILING PLENUMS SHALL BE GALVANIZED STEEL WITH 1–1/2" THICK (MINIMUM R–4.2) EXTERNAL ACOUSTICAL AND THERMAL INSULATION. (PLENUM IS INDIRECTLY CONDITIONED SPACE).

C. ALL OUTSIDE AIR DUCTS DUCTS SHALL BE GALVANIZED STEEL WITH 3" THICK (MINIMUM R–8) EXTERNAL ACOUSTICAL AND THERMAL INSULATION.

D. CONTRACTOR SHALL SUPPLY AND INSTALL INSECT SCREENS ON ALL DUCT OPENINGS WHICH TERMINATE OUTDOORS. INSECT SCREENS SHALL BE 10 GAUGE, ONE–HALF INCH (1/2") MESH IN REMOVABLE GALVANIZED STEEL FRAMES.

E. ALL DUCTWORK SHALL BE DESIGNED IN ACCORDANCE WITH THE PROCEDURES DESCRIBED IN THE LATEST EDITION OF THE AMERICAN SOCIETY OF HEATING REFRIGERATION AND AIR CONDITIONING ENGINEERS GUIDE (ASHRAE), FABRICATED AND INSTALLED IN ACCORDANCE WITH THE METHODS RECOMMENDED IN THE LATEST EDITION OF THE SHEET METAL AND AIR CONDITIONING CONTRACTORS NATIONAL ASSOCIATION (SMACNA) HVAC DUCT CONSTRUCTION STANDARDS – METAL AND FLEXIBLE.

1. ALL JOINTS, LONGITUDINAL AND TRANSVERSE SEAMS, AND CONNECTIONS IN DUCTWORK MUST BE SECURELY SEALED USING WELDMENTS, MECHANICAL FASTENERS WITH SEALS, GASKETS, OR MASTICS, MESH AND MASTIC SEALING SYSTEMS, OR TAPES. TAPES AND MASTICS MUST BE LISTED AND LABELED IN ACCORDANCE WITH UL 181A OR UL 181B. ALL LONGITUDINAL AND TRANSVERSE JOINTS, SEAMS AND CONNECTIONS OF SUPPLY AND RETURN DUCTS OPERATING AT STATIC PRESSURES LESS THAN OR EQUAL TO 2" W.G. SHALL BE SECURELY FASTENED AND SEALED WITH WELDS GASKETS, MASTICS (ADHESIVES), MASTIC–PLUS–EMBEDDED FABRIC SYSTEMS OR TAPES INSTALLED IN ACCORDANCE WITH MANUFACTURER'S INSTALLATION INSTRUCTIONS.

2. MECHANICAL FLEXIBLE CONNECTORS (FASTENERS AND SEALS, MASTICS, OR GASKETS) MUST BE USED WHEN CONNECTING DUCTS TO FANS AND OTHER AIR DISTRIBUTION EQUIPMENT.

F. FLEXIBLE AIR DUCT FOR CONNECTIONS BETWEEN MAINS AND DIFFUSER SHALL BE AIR DUCT LISTED BY UNDERWRITERS LABORATORIES UNDER UL STANDARD 181 AS A CLASS 1 FLEXIBLE AIR DUCT AND COMPLYING WITH NFPA STANDARDS 90A AND 90B. DUCT SHALL BE FACTORY MADE AND COMPOSED OF A CPE LINER DUCT PERMANENTLY BOUNDED TO A COATED SPRING STEEL WIRE HELIX AND SUPPORTING A FIBER GLASS INSULATING BLANKET R.–6.0 LOW PERMEABILITY OUTER VAPOR BARRIER OF FIBER GLASS REINFORCED FILM LAMINATE SHALL COMPLETE THE COMPOSITE. MAX LENGTH SHALL BE 5'–0". WHEN FLEXIBLE RUN INCLUDES AN ELBOW, IT SHALL HAVE REINFORCEMENT EQUAL TO TITUS FLEXRIGHT.

G. EXCEPTION: DUCTWORK FOR EXHAUST OR OUTSIDE SUPPLY AIR SHALL BE ALL METAL AND CONSTRUCTED ACCORDING TO RECOMMENDED PRACTICES OF THE LATEST ISSUE OF ASHRAE.

NEW HANGERS AND SUPPORTS

A. HANGER DESIGN SHALL BE AS DESCRIBED IN THE LATEST EDITION OF THE "SMACNA" MANUAL. REINFORCEMENT MEMBERS MAY BE USED TO SUPPORT DUCT SYSTEM PROVIDED DETAILS OUTLINED IN THE "SMACNA" MANUAL ARE ADHERED TO.

B. ALL DUCTS SHALL BE REINFORCED ACCORDING TO THE LATEST EDITION OF SMACNA MANUAL. MATERIALS FOR REINFORCEMENT MEMBERS SHALL BE GALVANIZED STEEL. ALL SCREWS AND WASHERS SHALL BE PLATED OR GALVANIZED.

C. ALL HORIZONTAL DUCTS HAVING A DIMENSION OF 40 INCHES AND LESS SHALL BE SUPPORTED BY MEANS OF BAND IRON HANGERS OF NO. 18 U.S. GAUGE ATTACHED TO DUCT BY MEANS OF RIVETS, SCREWS OR CLAMPS, AND FASTENED TO STRUCTURE ABOVE BY TOGGLE BOLTS OR OTHER MEANS. ALL HORIZONTAL DUCTS HAVING A DIMENSION OF 40 INCHES AND MORE SHALL BE SUPPORTED BY MEANS OF ANGLE IRON TRAPEZE HANGERS.

D. DUCTS SHALL BE SUPPORTED AT ALL TURNS AND TRANSITIONS AND NOT MORE THAN 8'–0" O.C. STRAIGHT DUCTS UP TO 59" MAX. DIMENSIONS SHALL BE SUPPORTED 6'–0" O.C. DUCTS OVER 60" MAX. DIMENSIONS SHALL BE SUPPORTED AT 4'–0" O.C.

E. EACH SECTION OF DUCTWORK SHALL HAVE AT LEAST ONE PAIR OF SUPPORTS.

F. VERTICAL DUCTS SHALL BE SUPPORTED WITH 1–1/4" x 1–1/4" x 1/4" ANGLES AT FLOOR PENETRATIONS.

NEW FLASHING

A. CONTRACTOR SHALL PROVIDE WATER TIGHT 24 GA. SHEET METAL FLASHINGS AT ALL EXTERIOR WALLS AND ROOF PENETRATIONS.

B. ALL CUTTING OF ROOF OPENINGS, SUPPORTS FOR ROOF OPENINGS, PITCH PANS, ROOF CURBS, FLASHINGS, COUNTER FLASHINGS, REPAIR TO ROOF, ETC. ASSOCIATED WITH HVAC SUBCONTRACTOR SHALL BE INCLUDED IN THE RESPONSIBILITY OF THE HVAC SUBCONTRACTOR. HE SHALL EMPLOY THE LANDLORD'S ROOFERS FOR THIS WORK TO MAINTAIN THE ROOF WARRANTY.

NEW DAMPERS

A. SPLITTER DAMPERS SHALL BE FABRICATED OF SHEET STEEL NOT LESS THAN NO. 16 U.S. GAUGE WITH THE LEADING EDGE HEMMED. EACH DAMPER TO BE SIZED ADEQUATELY TO COVER THE SMALLER OF THE TWO OPENINGS IT CONTROLS. DAMPERS SHALL BE CONTROLLED AS FOLLOWS:

1. EXPOSED OR ACCESSIBLE DUCTWORK – LOCKING QUADRANTS EQUAL TO YOUNG REGULATOR NO. 1 WITH DAMPER ROD END BEARINGS ON OPPOSITE END.

2. CONCEALED DUCTWORK – LOCKING QUADRANT EQUAL TO YOUNG REGULATOR NO. 315 (CHROMIUM PLATED WITH DAMPER ROD END BEARINGS ON BOTH ENDS).

B. FIELD FABRICATED TURNING VANES SHALL BE ACCEPTABLE IN SQUARE ELBOWS. PROVIDE AND INSTALL BARBER–COLMAN AIRTURNS OR EQUAL. TURNING VANES SHALL BE OF THE SAME GAUGE METAL AS THE DUCT IN WHICH THEY ARE INSTALLED. RADIUS ELBOWS SHALL HAVE A CENTER LINE RADIUS OF ONE AND ONE–HALF (1–1/2) TIMES THE DUCT WIDTH.

C. VOLUME DAMPERS SHALL BE OF THE OPPOSED INTERLOCKING TYPE AS MANUFACTURED BY AMERICAN FOUNDRY AND FURNACES CO. (AFFCO) OR EQUAL. BLADES SHALL BE OF NO. 16 GAUGE SHEET METAL AND SHALL NOT EXCEED 48" IN LENGTH OR 12" IN WIDTH. BLADES SHALL BE ON ONE–HALF INCH (1/2") DIAMETER RUSTPROOF AXLE. BEARINGS TO BE OF THE SELF–LUBRICATING FERRULE TYPE.

D. FIRE DAMPERS (WHEN REQUIRED) SHALL BE SUPPLIED AND INSTALLED BY HVAC CONTRACTOR AT DUCT PENETRATIONS IN FIRE RATED WALLS, FLOORS, CEILINGS AND ROOF AS REQUIRED. COORDINATE WITH LANDLORD, LOCAL FIRE MARSHALL AND ALL CODES AND GOVERNING AUTHORITIES HAVING JURISDICTION.

1. RECTANGULAR FIRE DAMPERS: RUSKIN MODEL DIBD20 STYLE B CURTAIN TYPE DYNAMIC FIRE DAMPER, OR APPROVED EQUAL. DAMPER SHALL BE B WITH DAMPER OUT OF AIR STREAM IN OPEN POSITION. 165 DEGREE FUSIBLE LINK AND 12" SLEEVE.

2. ROUND FIRE DAMPERS: RUSKIN MODEL DIBD20 STYLE CR CURTAIN TYPE DYNAMIC FIRE DAMPER, OR APPROVED EQUAL. DAMPER SHALL BE CR WITH DAMPER OUT OF AIR STREAM IN OPEN POSITION. 165 DEGREE FUSIBLE LINK AND 12" SLEEVE.

GAS PIPING:

A. EXISTING TO REMAIN INCLUSIVE OF METER ON REAR WALL AND PIPING RUN ON ROOF

NEW ACCESSORY ITEMS

ALL MANUAL DAMPERS, FIRE DAMPERS, TURNING VANES, REGISTER CONNECTIONS, ACCESS DOORS OR OTHER ASSOCIATED ACCESSORIES SHALL BE INSTALLED ACCORDING TO THE LATEST EDITION OF "SMACNA" MANUAL.

TESTING AND ADJUSTING

A. TEST AND BALANCE REPORT MUST BE COMPLETED BY AN INDEPENDENT CONTRACTOR THAT IS LICENSED AND CERTIFED BY NEBB, AABC, OR TABB.

B. CONTRACTOR SHALL DEMONSTRATE OPERATION OF SYSTEM TO FULL SATISFACTION OF TENANT, SHALL BALANCE AIR FLOW IN ACCORDANCE WITH AIR QUANTITIES ON DRAWINGS AND SHALL RECORD VOLUME READINGS IN ACCORDANCE WITH ASHRAE AND PROVIDE SAME TO TENANT.

C. OPERATION AND MAINTENANCE DOCUMENTATION MUST BE PROVIDED TO THE OWNER THAT INCLUDES AT LEAST THE FOLLOWING INFORMATION:
1. EQUIPMENT CAPACITY (INPUT AND OUTPUT) INCLUSIVE OF ENTERING AND LEAVING TEMPERATURES OF BOTH COIL AND UNIT AND REQUIRED MAINTENANCE ACTIONS.
2. EQUIPMENT OPERATION AND MAINTENANCE MANUALS.
3. HVAC SYSTEM CONTROL MAINTENANCE AND CALIBRATION INFORMATION, INCLUDING WIRING DIAGRAMS, SCHEMATICS, AND CONTROL SEQUENCE DESCRIPTIONS; DESIRED OR FIELD–DETERMINED SET POINTS MUST BE PERMANENTLY RECORDED ON CONTROL DRAWINGS, AT CONTROL DEVICES, OR, FOR DIGITAL CONTROL SYSTEMS, IN PROGRAMMING COMMENTS.
4. COMPLETE NARRATIVE OF HOW EACH SYSTEM IS INTENDED TO OPERATE.
5. PROVIDE COMPLETE DATA INDICATING SYSTEM AIR BALANCE IN THE DEMISED SPACE AND A CERTIFIED THIRD PARTY BALANCE REPORT NO MORE THAN 10 DAYS AFTER OPENING.

D. ALL PIPING SHALL WITHSTAND AIR PRESSURE TESTING PER GOVERNING PLUMBING CODE.

GUARANTEE

ALL NEW MATERIALS, EQUIPMENT, AND WORKMANSHIP SHALL BE GUARANTEED FOR A PERIOD OF ONE (1) YEAR AFTER DATE OF ACCEPTANCE. THE COMPLETED SYSTEM SHALL BE FULLY OPERATIONAL AND ACCEPTANCE BY TENANT SHALL BE A CONDITION OF THIS CONTRACT. ALL WORK FOUND TO BE DEFECTIVE SHALL BE REPAIRED OR REPLACED BY THIS SUBCONTRACTOR WITHOUT ADDITIONAL COST TO THE TENANT.

FIRE PROTECTION SPRINKLER DESIGN CRITERIA

EXISTING SPRINKLER SYSTEM TO REMAIN. VERIFY IN GOOD CONDITION. REPLACE SPRINKLER HEADS AS REQUIRED. ANY NEW HEADS SHALL MATCH EXISTING.

ANY NEW SPRINKLER HEADS SHALL BE APPROVED STANDARD TYPES, PENDANT AND UPRIGHT, AND DESIGNED FOR ORDINARY HAZARD COVERAGE. CHROME PLATED "GRINNELL", "VIKING", "STAR" OR EQUAL. SPRINKLER HEAD TYPES SHALL BE AS FOLLOWS:

a. HALLWAY, VESTIBULE, GYPSUM BOARD CEILINGS IN SALES AND STOREFRONT:
CONCEALED, CAP TO BE BLACK
b. PUBLIC AREAS WITH OPEN TO DECK CEILINGS:
CHROME, UPRIGHT
c. STOCK AREAS OPEN TO DECK:
BRASS, UPRIGHT
d. MANAGER'S OFFICE, RESTROOMS, LAY–IN TILE CEILINGS:
SEMI RECESSED, ESCUTCHEON CUP TO MATCH CEILING COLOR
e. WHEN EXISTING HEADS ARE IN PLACE, NEW HEADS IN SAME AREA/ CEILING TO MATCH.

NOTE FOR GENERAL CONTRACTOR:
IT IS THE RESPONSIBILITY OF THE TENANT'S GENERAL CONTRACTOR TO MAKE USE OF APPLICABLE NOTES AND SPECIFICATIONS LISTED ON THIS SHEET AS THEY MAY PERTAIN TO THE SPECIFIC JOB.

SEQUENCE OF OPERATION
FAN CONTROL: THE SUPPLY FAN IS TO RUN CONTINUOUSLY DURING THE OCCUPIED MODE AND WILL CYCLE ON AND OFF DURING THE UNOCCUPIED MODE BASED ON A CALL FOR HEATING OR COOLING.

UNOCCUPIED SET POINT FOR COOLING WILL BE 85 DEGREES FAHRENHEIT
UNOCCUPIED SET POINT FOR HEATING WILL BE 60 DEGREES FAHRENHEIT

THERMOSTAT: THE ADJUSTABLE ROOM THERMOSTAT WITH AUTOMATIC HEATING/ COOLING CHANGEOVER SHALL CONTROL THE SPACE TEMPERATURE BASED ON SET POINT VIA INPUT FROM REMOTE SENSOR. THE CONTROL OF THE OCCUPIED/ UNOCCUPIED SETBACK MODE SHALL BE THROUGH THE PROGRAMMABLE FUNCTION OF THE THE THERMOSTAT.

SAFETIES: THE UNIT SHALL BE TOTALLY DISABLED WHEN THE DUCT MOUNTED SMOKE DETECTOR IS ACTIVATED. PROVIDE REMOTE TEST STATION/ ALARM WHEN REQUIRED BY CODE. PROVIDE LANDLORD REQUIRED SEQUENCE OR INTERFACE AS REQUIRED.

COOLING CONTROL: UPON A CALL FOR COOLING, THE FIRST STAGE OF COOLING WILL BE ENABLED AND WILL OPERATE UNTIL THE SPACE TEMPERATURE IS SATISFIED. IF THE SPACE TEMPERATURE CONTINUES TO INCREASE THEN THE SECOND STAGE OF COOLING WILL BE ENABLED (IF APPLICABLE).

HEATING CONTROL: UPON A CALL FOR HEATING, THE FIRST STAGE OF HEATING WILL BE ENABLED AND WILL OPERATE UNTIL THE SPACE TEMPERATURE IS SATISFIED. IF THE SPACE TEMPERATURE CONTINUES TO DECREASE THEN THE SECOND STAGE OF HEATING WILL BE ENABLED (IF APPLICABLE).

VENTILATION/ECONOMIZER CONTROL: THE OUTSIDE AIR DAMPER SHALL BE OPEN DURING THE OCCUPIED HEATING AND COOLING MODES FOR CODE REQUIRED MINIMUM OUTSIDE AIR VENTILATION AND SHALL REMAIN CLOSED DURING THE UNOCCUPIED MODE. THE ECONOMIZER MODE IS DIFFERENTIAL ENTHALPY WILL BE OPERATIONAL WHENEVER COOLING IS REQUIRED AND THE OUTSIDE AIR ENTHALPY IS AT OR BELOW THE RETURN AIR ENTHAPY AND THE OUTSIDE AIR TEMPERATURE IS LESS THAN 75°F AND THE COIL LAT IS ABOVE 45°F.

THE OCCUPIED MODE SHALL BE SCHEDULED FOR 1 HOUR PRIOR TO SCHEDULED OCCUPANCY TO OPEN THE OUTSIDE AIR DAMPER AND ALLOW FOR A SYSTEM PURGE.

THE BAROMETRIC RELIEF SHALL OPERATE WHENEVER THE OUTSIDE AIR DAMPER IS OPEN.

POWER EXHAUST SHALL ACTIVATE WHENEVER ECONOMIZER MODE IS IN OPERATION.

NOTE FOR GENERAL CONTRACTOR:
IT IS THE RESPONSIBILITY OF THE TENANT'S GENERAL CONTRACTOR TO MAKE USE OF APPLICABLE NOTES AND SPECIFICATIONS LISTED ON THIS SHEET AS THEY MAY PERTAIN TO THE SPECIFIC JOB.

AIR DEVICE SCHEDULE

PLAN MARK	QTY.	*TITUS MODEL NO.	FACE SIZE	NECK SIZE	FLEX SIZE	TYPE	NOTES
A	1	*AES MODEL ADB–1–15–3	40"x40"	30"X30"	N/A	DIFF.	4
B	1	*AES MODEL ADB–1–10–3	35"x35"	28"X28"	N/A	DIFF.	4
C	1	*AES MODEL ADB–1–5–3	28"x28"	19"X19"	N/A	DIFF.	4
D	4	300RS	12"X8"	10"X6"	N/A	S.G.	1, 2
E	2	300RS	20"x14"	18"X12"	N/A	S.G.	2, 3
F	1	TMR	13–1/2"ø	6"ø	N/A	DIFF.	1, 2
G	2	300RS	16"X8"	14"x6"	N/A	S.G.	2, 3
H	2	350RL	30"X24"	28"x22"	N/A	T.G.	3

NOTES:
1. DUCT MOUNTED
2. PROVIDE & INSTALL MANUAL VOLUME DAMPER
3. WALL MOUNTED
4. CONCENTRIC DIFFUSER, HOLD AT 13'–6" A.F.F., SUPPORT FROM ALL 4 CORNERS

* OR APPROVED EQUAL

ROOFTOP UNIT SCHEDULE (E)RTU-1,2

MFR.	MODEL NO.	APPROX. UNIT WT.	UNIT SIZE	VOLTS	HZ	PH	MCA	MIN. OUTSIDE AIR CFM	TOTAL CFM	FILTERS NO.	FILTERS SIZE	FILTERS TYPE
LENNOX	LGA120H2BH3Y	1536 LBS.	10 TONS	208	60	3	55	935	4000	4	18X24X2	T/A

COOLING COIL TOTAL	SENSIBLE	EDB/EWB	SIZE	ROWS	EER/IEER	MAX GAS HEAT INPUT	OUTPUT	STAGES	SSE%	EVAPORATOR FAN MOTOR
99.72 MBH	48.68 MBH	78.8/65.4	10.5 SQ.FT.	4	11/11.8	180 MBH	144 MBH	2	80	2 HP

ACCESSORIES:
EXISTING TO REMAIN. FIELD VERIFY ECONOMIZER AND BAROMETRIC RELIEF
FIELD VERIFY FLOAT SWITCH IN MAIN DRAIN PAN TO SHUT DOWN UNIT IF PAN FILLS AS SECONDARY CONDENSATE
RTU–1 SERIAL NO. 5604K04543
RTU–2 SERIAL NO. 5604K04544
PROVIDE 2 SETS OF MERV13 FILTERS, USE 1 AFTER CONSTRUCTION AND PRIOR TO OCCUPANCY, LEAVE THE 2ND SET FOR OWNER WITH RECOMMENDED REPLACEMENT SCHEDULE

ROOFTOP UNIT SCHEDULE (E)RTU-3

MFR.	MODEL NO. SERIAL NO.	APPROX. UNIT WT.	UNIT SIZE	VOLTS	HZ	PH	MCA	MIN. OUTSIDE AIR CFM	TOTAL CFM	FILTERS NO.	FILTERS SIZE	FILTERS TYPE
LENNOX	LGA180H2BH2Y 5604K06945	2631 LBS.	15 TONS	208	60	3	83	1400	6000	6	24X24X2	T/A

COOLING COIL TOTAL	SENSIBLE	EDB/EWB	SIZE	ROWS	EER/IEER	MAX GAS HEAT INPUT	OUTPUT	STAGES	SSE%	EVAPORATOR FAN MOTOR
192.61 MBH	114.91 MBH	78.8/65.4	22.3 SQ.FT.	3	11.8/13.3	480 MBH	384 MBH	2	80	5 HP

ACCESSORIES:
EXISTING TO REMAIN. FIELD VERIFY ECONOMIZER AND BAROMETRIC RELIEF
FIELD VERIFY FLOAT SWITCH IN MAIN DRAIN PAN TO SHUT DOWN UNIT IF PAN FILLS AS SECONDARY CONDENSATE

PROVIDE 2 SETS OF MERV13 FILTERS, USE 1 AFTER CONSTRUCTION AND PRIOR TO OCCUPANCY, LEAVE THE 2ND SET FOR OWNER WITH RECOMMENDED REPLACEMENT SCHEDULE

ROOFTOP UNIT SCHEDULE (E)RTU-4

MFR.	MODEL NO. SERIAL NO.	BASE UNIT WT.	UNIT SIZE	VOLTS	HZ	PH	MCA	MIN. OUTSIDE AIR CFM	TOTAL CFM	FILTERS NO.	FILTERS SIZE	FILTERS TYPE
CARRIER	50TC–A07A2A5A0A0A0 2416C79691	802 LBS.	6 TONS	208	60	3	34	470	2000	4	16X16X2	T/A

COOLING COIL TOTAL	SENSIBLE	EDB/EWB	SIZE	ROWS	EER/IEER	ELEC HEAT NOM/APP	MBH	STAGES	EVAPORATOR FAN MOTOR	TYPE
70.75 MBH	45.60 MBH	79.9/67.9	7.3 SQ.FT.	4	11/11.2	6.5/4.9 KW	16.7	1	2.9 HP	CV

ACCESSORIES:
1. ECONOMIZER, ELECTRIC HEATER, SINGLE POINT KIT
2. RETURN AIR SMOKE DETECTOR
3. PROVIDE 2 SETS OF MERV13 FILTERS, USE 1 AFTER CONSTRUCTION AND PRIOR TO OCCUPANCY, LEAVE THE 2ND SET FOR OWNER WITH RECOMMENDED REPLACEMENT SCHEDULE.

OUTSIDE AIR SCHEDULE

DESC.	AREA (SQ. FT.)	AREA OUTDOOR AIR RATE PER TABLE 403.3 (RA)	AREA OUTDOOR AIR (RaAz)	OCCUPANT LOAD RATE PER TABLE 403.3 (PEOPLE/1000 SQ.FT.)	OCCUPANCY C x F/1000 (Pz)	OCCUPANT OUTDOOR AIR RATE PER TABLE 403.3 (Rp)	OCCUPANT OUTDOOR AIR (RpPz)	BREATHING ZONE OUTDOOR AIR (Vbz = RpPz + RaAz)	ZONE AIR DISTRIBUTION EFFECTIVENESS (Ez)	ZONE OUTDOOR AIR (Voz = Vbz/Ez)	ZONE OUTDOOR AIR PROVIDED
SALES	11847	0.12	1421.6	15	177.7	7.5	1335.0	2756.6	0.8	3446	3450
STOCK RM	1536	0.12	184.3		0.0		0.0	184.3	0.8	231	235
HALL 1	53	0.12	6.4		0.0		0.0	6.4	0.8	8	10
HALL 2	57	0.12	6.8		0.0		0.0	6.8	0.8	9	10
MGR OFFICE	121	0.06	7.3	5	0.6	5	3.0	10.3	0.8	13	15
BREAK	153	0.06	9.2	5	0.8	5	3.8	13.0	0.8	17	20
TOTALS	13767									3724	3740

TOTAL REQUIRED OUTDOOR AIR 3724 TOTAL OUTDOOR AIR PROVIDED BY HVAC UNITS 3740
CALCULATIONS BASED ON 2018 IMC WITH LOCAL AMENDMENTS
NOTE: TOILET ROOMS AND UTILITY ROOMS SQ. FT. NOT INCLUDED

HVAC CALCULATIONS ((E)RTU-1,2,3,4)

	DESIGN COOLING			DESIGN HEATING		
	COOLING DATA AT Jun 1500 COOLING OA DB / WB 95.0 °F / 77.0 °F			HEATING DATA AT DES HTG HEATING OA DB / WB 27.0 °F / 22.7 °F		
ZONE LOADS	Details	Sensible (BTU/hr)	Latent (BTU/hr)	Details	Sensible (BTU/hr)	Latent (BTU/hr)
Window & Skylight Solar Loads	354 ft²	11197	-	354 ft²	-	-
Wall Transmission	3253 ft²	9270	-	3253 ft²	15844	-
Roof Transmission	13973 ft²	34900	-	13973 ft²	25432	-
Window Transmission	354 ft²	4104	-	354 ft²	8940	-
Skylight Transmission	0 ft²	0	-	0 ft²	0	-
Door Loads	135 ft²	2500	-	135 ft²	2584	-
Floor Transmission	13973 ft²	0	-	13973 ft²	6639	-
Partitions	1068 ft²	2154	-	1068 ft²	7006	-
Ceiling	231 ft²	466	-	231 ft²	1515	-
Overhead Lighting	16265 W	49182	-	0	0	-
Task Lighting	0 W	0	-	0	0	-
Electric Equipment	3177 W	9894	-	0	0	-
People	187	39601	50561	0	0	0
Infiltration	-	0	0	-	0	0
Miscellaneous	-	1500	0	-	0	0
Safety Factor	10% / 10%	16477	5056	0%	0	0
>> Total Zone Loads	-	181242	55617	-	67960	0
Zone Conditioning	-	199944	55617	-	65062	0
Plenum Wall Load	0%	0	-	0	0	-
Plenum Roof Load	0%	0	-	0	0	-
Plenum Lighting Load	0%	0	-	0	0	-
Return Fan Load	16000 CFM	0	-	16000 CFM	0	-
Ventilation Load	3740 CFM	85664	77767	3740 CFM	170355	0
Supply Fan Load	16000 CFM	17792	-	16000 CFM	-17792	-
Space Fan Coil Fans	-	0	-	-	0	-
Duct Heat Gain / Loss	0%	0	-	0%	0	-
>> Total System Loads	-	303400	133383	-	217626	0
Central Cooling Coil	-	303400	133389	-	0	0
Central Heating Coil	-	0	-	-	217626	-
>> Total Conditioning	-	303400	133389	-	217626	0
Key:	Positive values are clg loads Negative values are htg loads			Positive values are htg loads Negative values are clg loads		

WEATHER DATA

City Name	College Station	
Location	Texas	
Latitude	30.6	Deg.
Longitude	96.3	Deg.
Elevation	312.0	ft
Summer Design Dry-Bulb	96.0	°F
Summer Coincident Wet-Bulb	77.0	°F
Summer Daily Range	18.2	°F
Winter Design Dry-Bulb	27.0	°F
Winter Design Wet-Bulb	22.7	°F
Atmospheric Clearness Number	0.90	
Average Ground Reflectance	0.20	
Soil Conductivity	0.800	BTU/(hr·ft·°F)
Local Time Zone (GMT +/- N hours)	6.0	hours
Consider Daylight Savings Time	No	
Simulation Weather Data	N/A	
Current Data is	User Modified	
Design Cooling Months	January to December	

REUSE OF EXISTING EQUIPMENT

1. EXISTING AIR CONDITIONING EQUIPMENT SHALL BE REUSED AS INDICATED ON THE DRAWINGS. POINTS OF SERVICE SHALL INCLUDE, BUT NOT BE LIMITED TO, THE FOLLOWING:
2. REMOVE EXISTING AIR FILTERS AND REPLACE WITH NEW PLEATED AIR FILTERS. THOROUGHLY CLEAN ALL INTAKE LOUVERS OR SCREENS AND BOTH SIDES OF EVAPORATOR AND CONDENSING COILS.
3. CHECK ALL BELTS FOR WEAR, ALIGNMENT AND PROPER TENSION (ADJUST AND REPLACE AS NEEDED).
4. TIGHTEN MOTOR MOUNTS AS REQUIRED.
5. INSPECT AND LUBRICATE MOTORS, BEARINGS, AND SHAFTS AS PER MANUFACTURERS REQUIREMENTS.
6. INSPECT REFRIGERANT SYSTEM FOR LEAKS AND PROPER CHARGE, REPAIR LINES AND ADD REFRIGERANT IF NECESSARY. INSPECT FILTER/DRYER AND REPAIR/REPLACE AS REQUIRED.
7. THOROUGHLY CLEAN INTERIOR OF UNIT, INCLUDING COILS, CONDENSATE DRAIN PAN(VERIFY DRAINS PROPERLY), BLOWER WHEEL, AND DAMPER BLADES.
8. CONTRACTOR MAY CLEAN AND REUSE EXISTING DUCTWORK, SUPPLY AIR DIFFUSERS, RETURN AIR GRILLES AND THERMOSTAT IF THEY ARE IN GOOD CONDITION AND MATCH THE SIZE AND SPECIFICATIONS OF WHAT IS CALLED OUT ON THESE CONSTRUCTION DOCUMENTS.
9. CONTRACTOR SHALL PROVIDE NEW DUCTWORK, SUPPLY DIFFUSERS AND RETURN GRILLES AS NECESSARY TO SATISFY THE INTENT OF THESE DRAWINGS.
10. ENTIRE HVAC SYSTEM SHALL CONFORM TO THE EXISTING BUILDING CONSTRUCTION AND ALL APPLICABLE STATE AND LOCAL CODES AND ALL LANDLORD CRITERIA.
11. THE MECHANICAL CONTRACTOR MUST VERIFY ALL EXISTING CONDITIONS AND SERVICES AT THE JOB SITE.
12. ALL WORK SHALL BE SCHEDULED SO AS NOT TO INTERRUPT THE NORMAL OPERATION OF OTHER CONTRACTORS.
13. VERIFY AND RESET O/A THRU RTU TO SPACE AS SCHEDULED.
14. REUSE EXISTING THERMOSTATS. ENSURE PROPER WORKING CONDITIONS. RELOCATE AS SHOWN.
15. ALL WORK, EQUIPMENT AND ACCESSORIES TO BRING EXISTING SYSTEM TO GOOD WORKING CONDITION SHALL BE COVERED UNDER CONTRACTOR'S ORIGINAL BID AND AT NOT ADDITIONAL EXPENSE. CONTRACTOR SHALL VERIFY ALL ON SITE CONDITIONS PRIOR TO BID.

REGISTRATION SEAL

ARCVISION
INCORPORATED
ARCHITECTURE • ENGINEERING • STORE PLANNING
SAINT LOUIS / DALLAS / LAS VEGAS / ORLANDO
1950 CRAIG ROAD, SUITE 300 ST. LOUIS, MO 63146
PH. (314) 415–2400 FAX (314) 415–2300 www.arcv.com
TEXAS ENGINEERING FIRM #12793

BOOT BARN

BOOT BARN
1424 TEXAS AVE. CROSSING
COLLEGE STATION TX, 77840
STORE # 161R

REV	DATE	DESCRIPTION	NAME

PROJECT NO: 210627
DRAWN BY: SGT
CHECKED BY: SLP
ISSUE DATE: 02/04/22

MECHANICAL SPECIFICATIONS

M00

HVAC CONTRACTOR'S NOTES

ALL OF THE MECHANICAL AND SPRINKLER WORK IS NOT NECESSARILY SHOWN OR NOTED ON THESE DRAWINGS. THE CONTRACTORS SHALL VISIT THE JOB SITE AND VERIFY ALL EXISTING CONDITIONS RELATED TO THE WORK PRIOR TO BIDDING. THOSE ITEMS NOT SHOWN OR NOTED, BUT ARE DEEMED NECESSARY FOR REMOVAL OR RELOCATION BY THE OWNER OR HIS REPRESENTATIVE, SHALL BE PART OF THIS CONTRACT. THE SUBMISSION OF THE PROPOSALS SHALL BE CONSIDERED AS EVIDENCE THAT THE CONTRACTORS HAVE VISITED THE SITE. NO EXTRA PAYMENTS WILL BE ALLOWED, DUE TO EXTRA WORK MADE NECESSARY BY THE CONTRACTOR'S FAILURE TO VISIT THE JOB SITE.

HVAC SYMBOLS

	SUPPLY AIR DUCT	SD	SMOKE DETECTOR
O.A.	OUTDOOR AIR	R.A.G.	RETURN AIR GRILLE
R.A.	RETURN AIR	DIFF.	DIFFUSER
S.A.	SUPPLY AIR	M.D.	MANUAL DAMPER
	RETURN AIR DUCT	F.D.	FIRE DAMPER
RTU	ROOFTOP UNIT	F.C.	FLEXIBLE CONNECTION
TE	TOILET EXHAUST	S.E.	SMOKE EXHAUST
T	THERMOSTAT		AIR DEVICE TYPE
	FIRE DAMPER		AIR VOLUME IN CUBIC FEET/MINUTE (CFM)
	CONNECT TO EXISTING		

EXISTING EQUIPMENT NOTE:

PRIOR TO FABRICATION OF INSTALLATION OF ANY DUCTWORK OR EQUIPMENT CONTRACTOR SHALL VISIT JOB SITE AND VERIFY ALL EXISTING STRUCTURE. CONTRACTOR SHALL COORDINATE ALL NEW DUCTWORK SIZES AND ROUTING WITH EXISTING STRUCTURE. CONTRACTOR SHALL BE RESPONSIBLE FOR ANY CHANGES TO DUCTWORK DUE TO EXISTING STRUCTURE.

CONTRACTOR TO TEST EXISTING EQUIPMENT WITHIN THE FIRST WEEK OF CONSTRUCTION AND REPORT ANY DEFICIENCIES TO GENERAL CONTRACTOR.

COORDINATION NOTE

WHEN THERE ARE LOW STRUCTURAL HEIGHTS, COORDINATION BETWEEN TRADES IS CRITICAL. VERIFY EXACT HEIGHTS IN FIELD; AND INFORM ARCHITECTURAL IF DUCTWORK, LIGHTS, AND CEILING MOUNTED FIXTURES ARE NOT ABLE TO BE MOUNTED AT THE INDICATED HEIGHTS ON PLAN.

PROVIDE TURNING VANES IN ALL 90° DUCT FITTINGS

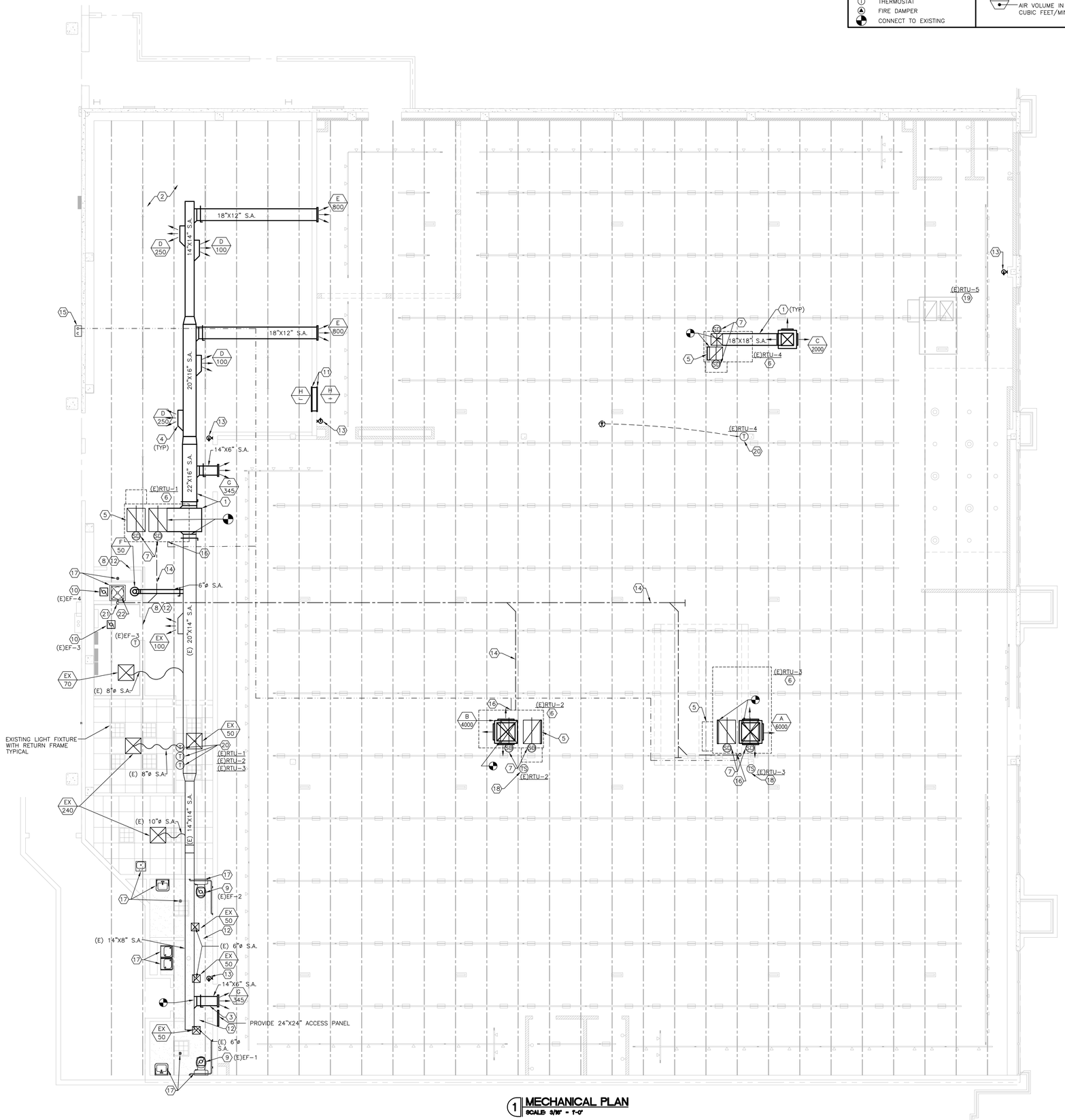

1 MECHANICAL PLAN
SCALE: 3/16" = 1'-0"

HVAC + SPRINKLER KEYED NOTES

1. NEW SUPPLY AIR DUCT INSTALLED BY HVAC CONTRACTOR. PROVIDE TRANSITIONS, SUPPORTS, ETC. AS REQUIRED, DUCT DIMENSIONS ARE CLEAR INTERNAL AIR PATH DIMENSIONS. HOLD ALL DUCTWORK AS HIGH AS POSSIBLE/PRACTICAL IN JOIST SPACE.
2. DUCTWORK IN CONDITIONED AREAS DOES NOT REQUIRE INSULATION.
3. NEW SUPPLY AIR DUCT IN INDIRECTLY CONDITIONED CEILING AREA EXTERNALLY INSULATED (MIN. R-4.2) SUPPLIED AND INSTALLED BY HVAC CONTRACTOR.
4. PROVIDE MANUAL VOLUME DAMPER AT ALL DIFFUSER CONNECTIONS WITHOUT AIR SCOOPS (TYPICAL)
5. REMOVE EXISTING RETURN DUCTWORK, PROVIDE NEW LINED RETURN ELBOW WITH SCREENED OPENING IN JOIST SPACE.
6. EXISTING ROOFTOP UNIT TO REMAIN. SEE SCHEDULES AND REUSE OF EQUIPMENT NOTES ON SHEET M00. SEE EXISTING EQUIPMENT NOTE
7. EXISTING SUPPLY AND RETURN AIR DUCT SMOKE DETECTION DEVICE TO REMAIN. INSPECT AND TEST. SMOKE DETECTION DEVICE IS TO BE INTERLOCKED WITH ROOFTOP UNIT TO SHUT THE UNIT DOWN UPON THE DETECTION OF SMOKE. ACTIVATION OF A SMOKE DETECTOR SHALL ACTIVATE A VISIBLE AND AUDIBLE SIGNAL IN AUDIBLE/VISUAL/TEST/RESET STATION IN AN APPROVED LOCATION. COORDINATE WITH ELECTRICAL CONTRACTOR.
8. PROVIDE NEW 12"X12" TRANSFER GRILLE CENTERED IN BOTTOM OF DOOR. IF EXISTING TRANSFER IS FIELD VERIFIED, IT MAY BE OMITTED.
9. EXISTING CEILING MOUNTED EXHAUST FAN (E)EF-1 AND (E)EF-2, BROAN MODEL 672, 100 CFM, AND DUCT SYSTEM TO REMAIN. FIELD VERIFY MAKE, MODEL, EXACT LOCATION, AND CONDITION. CLEAN AND REPAIR AS REQUIRED. VERIFY EXHAUST FAN IS WIRED TO OPERATE WITH LIGHT SWITCH. INSPECT AND PROVIDE GENERAL MAINTENANCE FOR FAN, DUCT, AND ROOF CAP. REPAIR IF REQUIRED.
10. EXISTING CEILING MOUNTED EXHAUST FAN (E)EF-3 AND (E)EF-4, BROAN MODEL 504, 350 CFM, AND DUCT SYSTEM TO REMAIN. FIELD VERIFY MAKE, MODEL, EXACT LOCATION, AND CONDITION. CLEAN AND REPAIR AS REQUIRED. VERIFY EXHAUST FAN (E)EF-3 IS WIRED TO OPERATE WITH THERMOSTAT. VERIFY EXHAUST FAN (E)EF-4 IS WIRED TO OPERATE ON TIMECLOCK CIRCUIT TO BE ON DURING OCCUPIED HOURS. INSPECT AND PROVIDE GENERAL MAINTENANCE FOR FAN, DUCT, AND ROOF CAP. REPAIR IF REQUIRED.
11. NEW TRANSFER AIR GRILLE SUPPLIED AND INSTALLED BY MECHANICAL CONTRACTOR. INSTALL AS HIGH AS POSSIBLE/PRACTICAL IN WALL. COORDINATE WITH GENERAL CONTRACTOR. PAINT GRILLE FACE TO MATCH ADJACENT SURFACE. REFER TO AIR DEVICE SCHEDULE FOR SIZES. INSTALL GRILLE WITH OPENINGS FACING UP ON BOTH SIDES OF WALL.
12. VERIFY DOOR TO BE UNDERCUT 1" TO FACILITATE AIR FLOW. COORDINATE WITH GENERAL CONTRACTOR.
13. NEW FIRE EXTINGUISHER PROVIDED BY GENERAL CONTRACTOR, SEE SHEET A10, SHOWN FOR REFERENCE ONLY.
14. EXISTING CONDENSATE DRAIN TO BE INSPECTED, CLEANED, REPAIRED AND OR REPLACED AS REQUIRED. ENSURE 4" MIN P-TRAP WITH CLEANOUT AND VENT REUSING EXISTING DISCHARGE.
15. EXISTING GAS METER ON EXTERIOR WALL AND GAS SUPPLY LINE RUN ON ROOF TO REMAIN AND SERVE EXISTING RTUS. FIELD VERIFY GAS METER, PRESSURE, AND GAS PIPING SIZES PER DESIGN DOCUMENTS. REPLACE AS REQUIRED. INSPECT AND PAINT PIPING PER SPECIFICATIONS.
16. EXISTING GAS CONNECTION TO RTU TO REMAIN, ENSURE PROPER DIRTLEG, UNIION, SHUTOFF, REGULATOR, AND FLEX CONNECTOR AS REQUIRED BY CODE.
17. EXISTING PLUMBING FIXTURES REMAINING TO BE CLEANED AND HAVE GENERAL MAINTENANCE PROVIDED INCLUDING (2) ADA FLUSH TANK TOILETS, (3) EMERGENCY FLOOR DRAINS WITH TRAP PRIMER (FIELD VERIFY INTEGRITY OF PRIMER), (3) ADA LAVS WITH SINGLE HANDLE FAUCETS AND ADA PIPE WRAP (PROVIDE ASSE 1070 MIXING VALVE AS REQUIRED), (1) ADA DUAL HEIGHT DRINKING FOUNTAIN, (1) 24x24 MOP BASIN AND FAUCET WITH INTEGRAL VACUUM BREAKER, (1) SINGLE COMPARTMENT SS BREAK ROOM SINK WITH SINGLE LEVER HANDLE. FIELD VERIFY MAKE, MODEL, EXACT LOCATION, AND CONDITION OF FIXTURES. CLEAN AND REPAIR AS REQUIRED.
18. RELOCATED REMOTE TEMPERATURE SENSOR FOR THERMOSTAT MOUNTED 5'-6" AFF.
19. EXISTING ROOFTOP UNIT TO BE ABANDONED IN PLACE. DISCONNECT ELECTRICAL. MARK AS ABANDONED. REMOVE DUCT RUNOUTS AND CAP DUCT DROPS AIR TIGHT IN JOIST SPACE.
20. EXISTING THERMOSTAT TO REMAIN OR BE RELOCATED BY HVAC CONTRACTOR. COORDINATE LOCATION SHOWN WITH ARCHITECTURAL FIXTURE PLAN AND BOOT BARN PM PRIOR TO RE-LOCATING THERMOSTATS. MOUNTING HEIGHT 4'-0" AFF. PROVIDE LOCKING LUCITE COVER; GIVE KEY TO STORE MANAGER. COORDINATE WITH ELECTRICAL CONTRACTOR.
21. EXISTING MOP SINK SERVES CONDENSATE DISPOSAL.
22. EXISTING ELECTRIC WATER HEATER (10 GAL, 2 KW @ 120/1) ON SHELF TO REMAIN. FIELD VERIFY MAKE, MODEL, EXACT LOCATION, AND CONDITION. CLEAN AND REPAIR AS REQUIRED. PROVIDE EXPANSION TANK EQUAL TO AMTROL MODEL ST-5.

REGISTRATION SEAL

ARCVISION INCORPORATED
ARCHITECTURE, ENGINEERING
SAINT LOUIS, DALLAS, LAS VEGAS, ORLANDO, STATE COLLEGE, FLAGSTAFF
1950 CRAIG ROAD, SUITE 300 ST. LOUIS, MO 63146
PH. (314) 415-2400 FAX (314) 415-2401 www.arcv.com
TEXAS ENGINEERING FIRM #12793

BOOT BARN

BOOT BARN
1424 TEXAS AVE. CROSSING
COLLEGE STATION TX, 77840

REV	DATE	DESCRIPTION	NAME

PROJECT NO: 210627
DRAWN BY: SGT
CHECKED BY: SP
ISSUE DATE: 01/05/22

MECHANICAL PLAN

M10

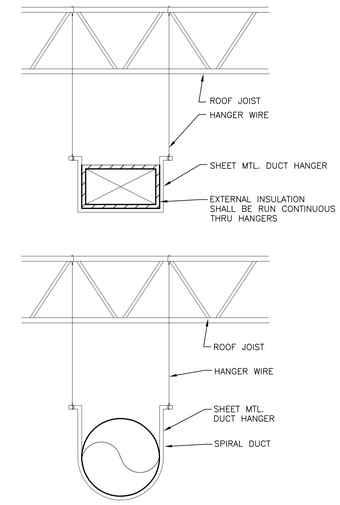

1 DUCT HANGER DETAIL

SCALE: NONE

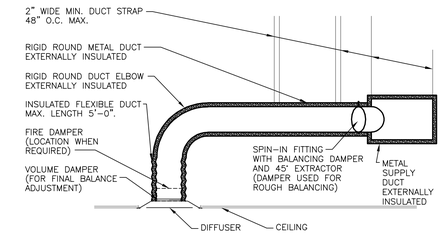

2 HVAC DUCTWORK DETAIL-PLENUM AREAS

SCALE: NONE

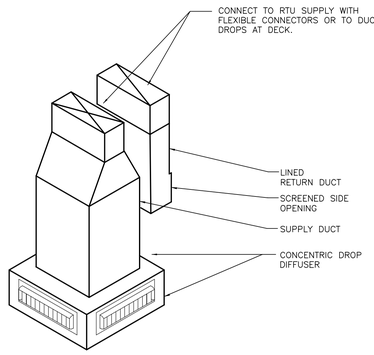

3 CONCENTRIC DIFFUSER DETAIL

SCALE: NONE

REGISTRATION SEAL

ARCVISION INCORPORATED
ARCHITECTURE • ENGINEERING • STORE PLANNING
SAINT LOUIS • DALLAS • LAS VEGAS • ORLANDO
1950 CRAIG ROAD, SUITE 300 ST. LOUIS, MO 63146
PH: (314) 415-2400 • FAX: (314) 415-2001 www.arcv.com
TEXAS ENGINEERING FIRM #12793

BOOT BARN

BOOT BARN
1424 TEXAS AVE. CROSSING
COLLEGE STATION TX, 77840
STORE # 161R

REV	DATE	DESCRIPTION	NAME

PROJECT NO: 210627
DRAWN BY: SGT
CHECKED BY: SLP
ISSUE DATE: 02/04/22

MECHANICAL DETAILS

M20

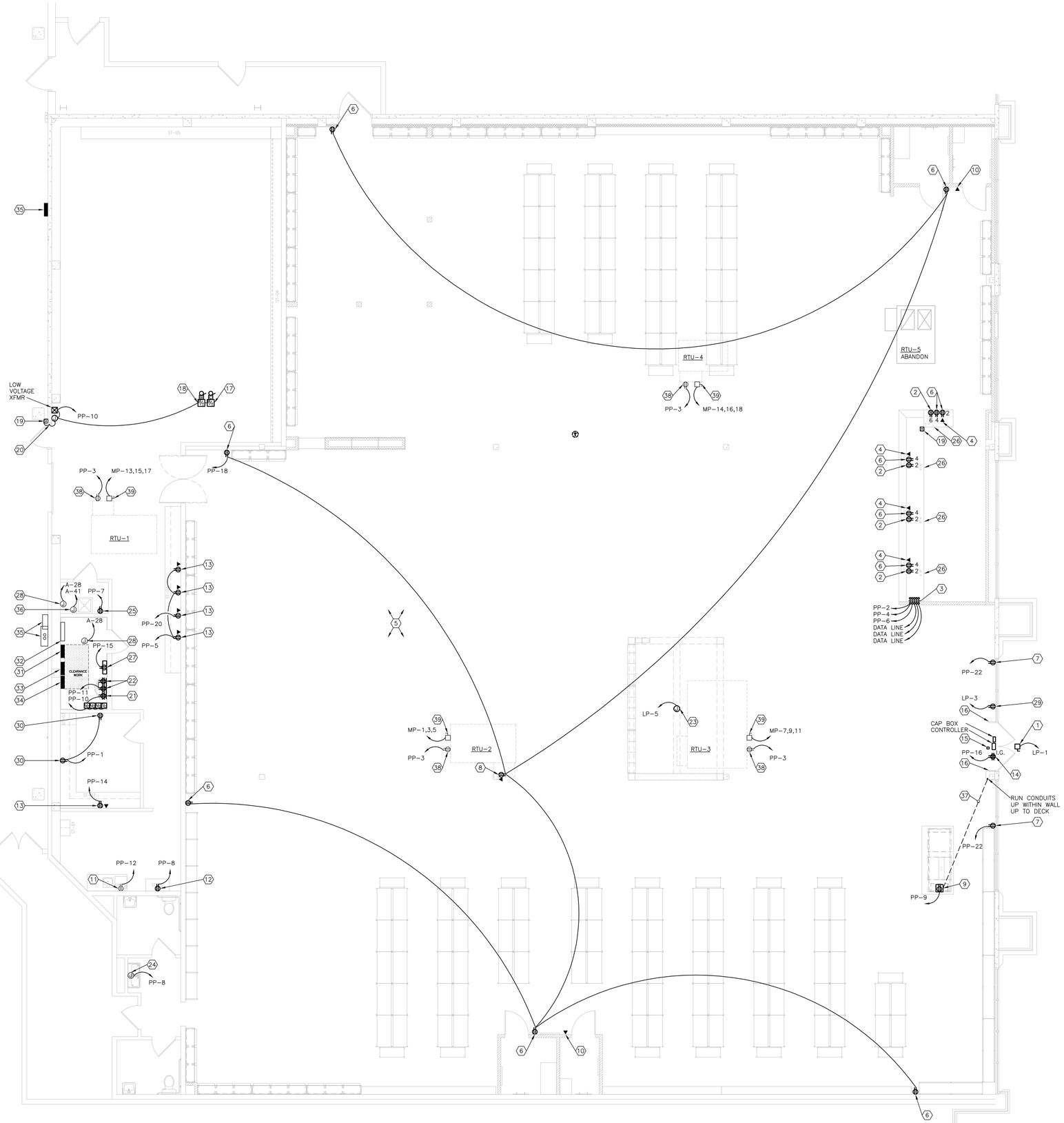

1 POWER PLAN
SCALE: 3/16" = 1'-0"

POWER KEYED NOTES

1. E.C. SHALL INSTALL DISCONNECT SWITCH FOR SIGNAGE CIRCUIT(S) AS REQUIRED BY N.E.C. 600. REFER TO PLANS FOR NUMBER OF CIRCUITS REQUIRED. E.C. TO INSTALL PHOTOCELL SENSOR AND MAKE ALL CONNECTIONS TO SIGN.
2. THE CIRCUITS USED TO POWER THE ELECTRONIC CASH REGISTERS SHALL NOT BE USED FOR ANY OTHER PURPOSE. CIRCUITS SHALL NOT SHARE NEUTRAL OR GROUND WITH OTHER EQUIPMENT. SEPARATE POWER, NEUTRAL, AND DEDICATED GROUND WIRES, MINIMUM SIZE #12 AWG SHALL BE RUN TO THE CIRCUIT BREAKER PANEL BOARD WHERE GROUND WIRE SHALL BE TIED TO THE GROUND TERMINAL. DO NOT USE CONDUIT FOR GROUNDING AS THIS MAY NOT BE CONTINUOUS. CASH REGISTER CIRCUIT SHALL BE RUN IN SEPARATE CONDUIT. RECEPTACLE AND COVER PLATE TO BE BLACK.
3. PROVIDE 1" CONDUIT AND WIRE FOR POWER TO P.O.S. AND GENERAL RECEPTACLES AND TELEPHONE OUTLETS TO BE LOCATED AT CABINET BOTTOM. ROUTE CONDUITS AS SHOWN ON PLAN DOWN WALL OR COLUMN AND BY SAW CUTTING OR CORE DRILLING FLOOR AS REQUIRED BY LANDLORD. PATCH FLOOR AS REQUIRED. LEAVE A (12) TWELVE FOOT FLEX WHIP FOR EACH POWER CIRCUIT CONDUIT REQUIRED. COORDINATE EXACT CONFIGURATION WITH TENANT REP. AND LOCATION WITH FIXTURE INSTALLER.
4. E.C. TO INSTALL TWO CONTINUOUS 1" CONDUIT FOR DATA WITH (3) CAT 6 CABLES AND PULL STRING FROM THE PHONE BOARD INTO THE P.O.S SECTION OF THE CASHWRAP WITH 12'-0" OF SLACK ON EACH CABLE AND LABEL "POS/PHONES" EACH.
5. E.C. SHALL FIELD VERIFY EXACT REQUIREMENTS FOR SMOKE/FIRE ALARM SYSTEM. REUSE ANY EXISTING DETECTION SYSTEM. REPLACE ANY DEFECTIVE DEVICES. IF THERE IS NOT AN EXISTING SYSTEM, E.C. SHALL SUPPLY AND INSTALL ALL NECESSARY EQUIPMENT (SMOKE DETECTORS, AUDIO/VISUAL ALARMS, FIRE ALARM PANEL, CONDUIT, WIRE, ETC.) FOR A NEW SYSTEM AS MAY BE REQUIRED BY LANDLORD AND/OR LOCAL FIRE MARSHALL. INSTALL SMOKE DETECTORS IN SUPPLY OR RETURN DUCTWORK AS REQUIRED BY LOCAL AUTHORITY. FIELD VERIFY AND COORDINATE. IF FIRE PANEL REQUIRED, G.C. TO USE BOSCH, FIRELITE, OR SILENT KNIGHT ONLY.
6. DUPLEX RECEPTACLE FLUSH MOUNTED VERTICAL IN WALL AT 18" A.F.F. FOR GENERAL USE. RECEPTACLE AND COVER PLATE TO BE WHITE.
7. DUPLEX RECEPTACLE FLUSH MOUNTED PER N.E.C. 210-62.
8. DUPLEX RECEPTACLE AND DATA OUTLET FLUSH MOUNTED VERTICAL IN COLUMN AT 18" A.F.F. FOR BOOT FINDER KIOSK. RECEPTACLE AND COVER PLATE TO BE WHITE. VERIFY FINAL LOCATION.
9. DUPLEX RECEPTACLE MOUNTED UNDER CABINET FOR STEAMER. COORDINATE EXACT CONFIGURATION WITH TENANT REP. AND LOCATION WITH FIXTURE INSTALLER.
10. DATA OUTLET FOR WALL MOUNTED PHONE AT 60" A.F.F. FIELD VERIFY EXACT LOCATION AND REQUIREMENTS.
11. 20A RATED @ +42" FOR MICROWAVE, COORDINATE EXACT LOCATION.
12. 20A RATED @ +15" FOR REFRIGERATOR, COORDINATE EXACT LOCATION.
13. DUPLEX RECEPTACLE AND DATA OUTLET MOUNTED AT 18" A.F.F. E.C. SHALL PROVIDE (1) CAT 6 PLENUM RATED CABLE FROM THE PHONE BOARD IN CONTINUOUS 1" CONDUIT TO DATA OUTLET UNDER COUNTER WITH 6'-0" OF SLACK AT EACH END AND LABEL "STK/MNGR DATA" EACH END.
14. 20A RATED QUAD DEDICATED RECEPTACLE WITH ISOLATED GROUND ABOVE CEILING FOR EAS SYSTEM. THE AC SOURCE MUST BE A 3-WIRE 24 HOUR UNSWITCHED OUTLET WITH LESS THAN 0.5 VAC BETWEEN NEUTRAL AND GROUND. UNSHARED NEUTRAL AND GROUND MUST BE FROM THE DEDICATED QUADPLEX TO THE CIRCUIT BREAKER PANEL IN THE BACK. PROVIDE "LOCK-ON" DEVICE ON BREAKER AT PANEL. PROVIDE 1" OR 3/4" CONDUIT FROM POWER PACK ABOVE CEILING DOWN TO EACH ANTENNA. CONDUIT RUN CANNOT EXCEED 30 FEET AND MUST BE HIDDEN IN WALLS OR MULLION. VERIFY EXACT SPECS WITH EAS ELECTRONIC CORPORATION. SEE DETAIL ON SHEET E30.
15. EAS ALARM BOX MOUNTED ON THE CEILING NEAR THE EXIT SIGN. VERIFY AND COORDINATE EXACT LOCATION AND OTHER RELATED ELECTRICAL REQUIREMENTS.
16. EAS PEDISTALS. SEE DETAIL ON THIS SHEET. GC TO PRE-DRILL 3/4" HOLE AT 15"A.F.F. OF EACH MULLION WITH PULL STRING TO CEILING ABOVE.
17. LOW VOLTAGE CHIME MOUNTED IN STOCKROOM CEILING, ACTIVATED BY A PUSH BUTTON SWITCH MOUNTED IN CASHWRAP (MOTHER STATION), SEE DETAIL ON SHEET E30.
18. LOW VOLTAGE BUZZER MOUNTED IN STOCKROOM CEILING AND ANOTHER BUZZER LOCATED IN CASHWRAP (MOTHER STATION) TO BE ACTIVATED BY A PUSH BUTTON SWITCH AT BACK DOOR. SEE DETAILS ON SHEET E30.
19. PROVIDE PUSH-BUTTON FOR BUZZER AT BACK DOOR AND PROVIDE PUSH-BUTTON FOR CHIME AT CASHWRAP SEE DETAILS ON THIS SHEET. E.C. SHALL SUPPLY AND INSTALL THE FOLLOWING SERVICE BELL SYSTEM:
    a) EDWARDS #852 PUSHBUTTON
    b) EDWARDS #88-50 TRANSFORMER
    c) EDWARDS #340A-G5 BUZZER
    d) EDWARDS #338-G5 CHIME
20. DOOR ALARM CONTACT MOUNTED IN HEAD OF DOOR FRAME WITH MAGNET MOUNTED IN TOP OF DOOR AT BACK OF HOUSE. PROVIDE JUNCTION BOX ABOVE CEILING WITH 1/2" CONDUIT STUBBED INTO HEAD OF DOOR FRAME.
21. FIELD VERIFY EXACT LOCATION OF LANDLORD TELEPHONE SERVICE STUB-IN AND EXTEND AS REQUIRED FOR CONNECTION TO TENANT TELEPHONE EQUIPMENT. PROVIDE PLYWOOD BACKBOARD ON FINISHED WALL FOR MOUNTING OF TELEPHONE EQUIPMENT. SIZE AND SECURE AS REQUIRED. PROVIDE DEDICATED GROUND QUADPLEX RECEPTACLE FOR POWER TO TELEPHONE EQUIPMENT. PROVIDE FOUR 3/4" CONDUIT WITH PULL STRING FROM ABOVE CEILING TO "IT" CABINET BELOW.
22. PROVIDE QUADPLEX RECEPTACLE VERIFY EXACT LOCATION WITH FIXTURE VENDOR.
23. JUNCTION FOR CONNECTION OF FUTURE SIGNAGE. FIELD VERIFY LOCATION.
24. EXISTING CONNECTION FOR WATER FOUNTAIN TO REMAIN. RECIRCUIT AS INDICATED.
25. G.F.I. RECEPTACLE AT 36" A.F.F.. COORDINATE EXACT LOCATION.
26. CASHWRAP IS FURNISHED WITH J-BOXES E.C. TO MAKE ALL FINAL CONNECTIONS.
27. DUPLEX RECEPTACLE FOR SECURITY PANEL. FIELD VERIFY LOCATION WITH SECURITY SYSTEM VENDOR.
28. EXISTING CONNECTION FOR EXHAUST FAN TO REMAIN. RECIRCUIT AS INDICATED. FIELD VERIFY CONTROLS WITH MECHANICAL CONTRACTOR.
29. DUPLEX RECEPTACLE FLUSH MOUNTED IN CEILING FOR NEON "OPEN" SIGN.
30. PROVIDE RECEPTACLE MARKED CONTROLLED RECEPTACLE LEVITON #5362-S2 SERIES (NEMA 5-20R) CONTROLLED BY TIME CLOCK PER LOCAL ENERGY CODE. FIELD VERIFY AND COORDINATE.
31. PANEL "LP". REFER TO PANEL SCHEDULE.
32. PANEL "MP". REFER TO PANEL SCHEDULE.
33. PANEL "PP". REFER TO PANEL SCHEDULE.
34. PANEL "A". REFER TO PANEL SCHEDULE.
35. EXISTING EXTERIOR ELECTRICAL EQUIPMENT TO REMAIN.
36. EXISTING CONNECTION TO WATER HEATER TO REMAIN.
37. CORE DRILL FLOOR OR TRENCH FOR INSTALLATION OF IN-FLOOR CONDUITS. PATCH FLOOR TO MATCH SURROUNDING FLOOR AREA. PRIOR TO TRENCHING, OR CORE DRILLING OBTAIN LANDLORD APPROVAL. CONFIRM WITH LANDLORD CORE DRILLING OR TRENCHING LOCATIONS DO NOT CROSS EXISTING UNDERGROUND UTILITIES.
38. EXISTING WEATHERPROOF G.F.C.I. RECEPTACLE TO REMAIN. RECIRCUIT AS INDICATED.
39. EXISTING HVAC DISCONNECT TO REMAIN.

REGISTRATION SEAL

ARCVISION INCORPORATED
ARCHITECTURE, ENGINEERING, STORE PLANNING
SAINT LOUIS, DALLAS, LAS VEGAS, ORLANDO
1950 CRAIG ROAD, SUITE 300 ST. LOUIS, MO 63146
PH. (314) 415-2400 FAX (314) 415-2200 www.arcv.com
TEXAS ENGINEERING FIRM #12793

BOOT BARN

BOOT BARN
1424 TEXAS AVE. CROSSING
COLLEGE STATION TX. 77840
STORE # 16IR

REV	DATE	DESCRIPTION	NAME

PROJECT NO: 210627
DRAWN BY: CBS
CHECKED BY: CW
ISSUE DATE: 02/04/22
POWER PLAN

E10

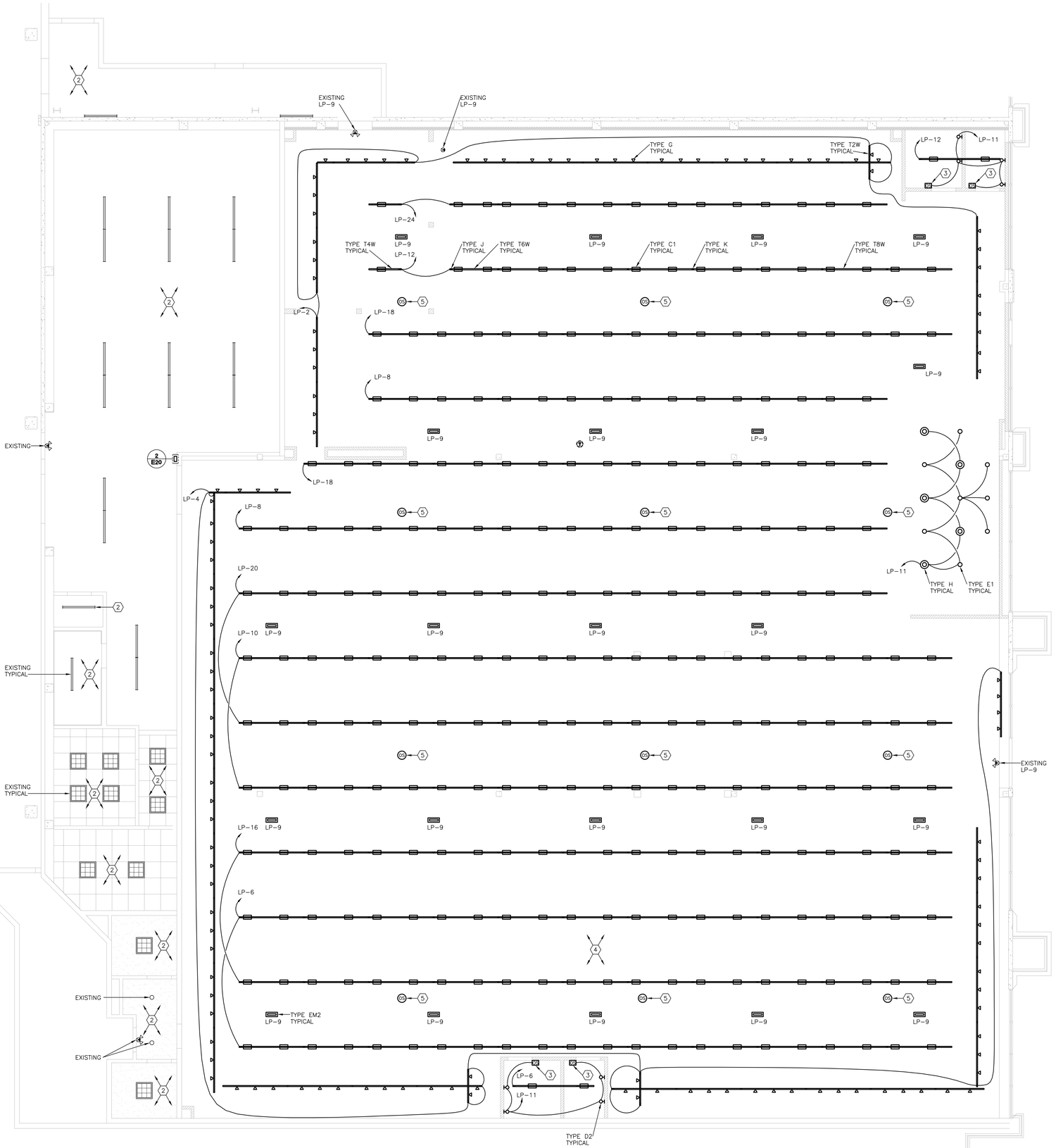

1 LIGHTING PLAN
SCALE: 3/16" = 1'-0"

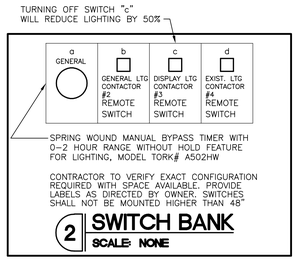

2 SWITCH BANK
SCALE: NONE

GENERAL ELECTRICAL NOTES

1. ELECTRICAL CONTRACTOR SHALL FIELD VERIFY ALL EXISTING CONDITIONS AND SHALL IMMEDIATELY NOTIFY THE OWNER'S PROJECT MANAGER OF ANY DISCREPANCIES.
2. ALL CONDUITS ARE TO BE CONCEALED IN WALLS OR ABOVE CEILINGS. CONDUITS IN EXPOSED CEILING AREAS SHALL EXIT WALLS AS CLOSE TO ROOF/FLOOR STRUCTURAL DECK AS POSSIBLE.
3. ANY EXISTING MATERIALS OR EQUIPMENT NOT TO BE REUSED MUST BE COMPLETELY REMOVED AND DISPOSED OF PROPERLY THROUGH THE LANDLORD'S DESIGNATED AND APPROVED HAULER. NO EQUIPMENT OR COMPONENTS MAY BE ABANDONED WITHOUT WRITTEN PERMISSION OF THE LANDLORD.
4. ANY PENETRATIONS THROUGH FIRE RATED WALLS NEED TO BE APPROPRIATELY FIRE STOPPED TO RETAIN THE WALL'S RATING.
5. CONTRACTOR SHALL ENSURE LOADS BETWEEN PHASES ON PANEL BOARDS ARE BALANCED WITHIN 10%.
6. ALL LOW VOLTAGE WIRING IN CEILING PLENUM (INCLUDING TELEPHONE, DATA, ALARM AND TEMP. CONTROL WIRING) SHALL BE UL LISTED TEFLON PLENUM CABLE.

LIGHTING PLAN KEYED NOTES

1. PROVIDE HOT, UNSWITCHED CONDUCTOR TO EMERGENCY/NIGHT LIGHT TO RENDER FIXTURE OPERATIONAL 24HRS A DAY.
2. ELECTRICAL CONTRACTOR TO CLEAN, RE-LAMP AS NECESSARY (AND RE-BALLAST IF NECESSARY) ALL EXISTING FIXTURES AS REQUIRED TO ENSURE THAT ALL FIXTURES ARE FULLY FUNCTIONAL. REPLACE ANY BROKEN LENSES. NEW LAMPS, LENSES AND BALLAST IF NECESSARY WILL BE SUPPLIED BY ELECTRICAL CONTRACTOR. ALL LIGHTING CONTROLS AND CIRCUITRY IN THIS AREA ARE EXISTING TO REMAIN AND E.C. TO ENSURE ALL IS FULLY FUNCTIONAL.
3. PROVIDE OCCUPANCY SENSOR FOR LIGHTING CONTROL.
4. SECURITY CAMERAS AND CCTV SUPPLIED AND INSTALLED VENDOR. E.C. SHALL SUPPLY AND INSTALL J-BOX WITH PULL STRING IN 3/4"C. E.C. TO COORDINATE EXACT LOCATION AND HEIGHT WITH BOOT BARN P.M. PRIOR TO INSTALL.
5. OCCUPANCY SENSOR TO CONTROL GENERAL EGRESS LIGHTING CIRCUITS FOR NON-BUSINESS HOURS EGRESS LIGHTING. SEE 'TIMECLOCK AND LIGHTING CONTROL DIAGRAM' ON SHEET THIS SHEET.

REGISTRATION SEAL

ARCVISION INCORPORATED
ARCHITECTURE • ENGINEERING • STORE PLANNING
SAINT LOUIS, DALLAS, LAS VEGAS, ORLANDO
1950 CRAIG ROAD, SUITE 300 ST. LOUIS, MO 63146
PH: (314) 415-2400 FAX: (314) 415-2200 www.arcv.com
TEXAS ENGINEERING FIRM #12793

BOOT BARN

BOOT BARN
1424 TEXAS AVE. CROSSING
COLLEGE STATION TX. 77840
STORE # 161R

REV	DATE	DESCRIPTION	NAME

PROJECT NO: 210627
DRAWN BY: CBS
CHECKED BY: CW
ISSUE DATE: 02/04/22
LIGHTING PLAN

E20

GENERAL ELECTRICAL NOTES

1. ELECTRICAL CONTRACTOR SHALL FIELD VERIFY ALL EXISTING CONDITIONS AND SHALL IMMEDIATELY NOTIFY THE OWNER'S PROJECT MANAGER OF ANY DISCREPANCIES.
2. ALL CONDUITS ARE TO BE CONCEALED IN WALLS OR ABOVE CEILINGS. CONDUITS IN EXPOSED CEILING AREAS SHALL EXIT WALLS AS CLOSE TO ROOF/FLOOR STRUCTURAL DECK AS POSSIBLE.
3. ANY EXISTING MATERIALS OR EQUIPMENT NOT TO BE REUSED MUST BE COMPLETELY REMOVED AND DISPOSED OF PROPERLY THROUGH THE LANDLORD'S DESIGNATED AND APPROVED HAULER. NO EQUIPMENT OR COMPONENTS MAY BE ABANDONED WITHOUT WRITTEN PERMISSION OF THE LANDLORD.
4. ANY PENETRATIONS THROUGH FIRE RATED WALLS NEED TO BE APPROPRIATELY FIRE STOPPED TO RETAIN THE WALL'S RATING.
5. CONTRACTOR SHALL ENSURE LOADS BETWEEN PHASES ON PANEL BOARDS ARE BALANCED WITHIN 10%.
6. ALL LOW VOLTAGE WIRING IN CEILING PLENUM (INCLUDING TELEPHONE. DATA, ALARM AND TEMP. CONTROL WIRING) SHALL BE UL LISTED TEFLON PLENUM CABLE.

WHEN REUSING EXISTING PANELS, E.C. SHALL VERIFY THE CONDITION AND QUANTITY OF ALL EXISTING CIRCUIT BREAKERS. REPLACE DAMAGED BREAKERS WITH NEW. PROVIDE ANY ADDITIONAL OR BREAKERS OF DIFFERENT AMPERAGE OR POLE AS REQUIRED TO MEET THE END RESULT INDICATED IN THE PANEL SCHEDULE. NEW BREAKERS SHALL BE OF THE SAME MFG AND CHARACTERISTICS OF THE EXISTING. THE SUBMISSION OF THE BID PROPOSALS SHALL BE CONSIDERED EVIDENCE THAT THE CONTRACTORS HAVE VISITED THE SITE. NO EXTRA PAYMENTS WILL BE ALLOWED TO THESE CONTRACTORS ON ACCOUNT OF EXTRA WORK MADE NECESSARY BY HIS FAILURE TO VISIT THE SITE.

PANELBOARD DESIGNATION **"MP"** NEW INSTALL ___ EXIST LOCATION **X** RELOCATED EXIST ___
120/208 VOLTS **3** PHASE **4** WIRE, SOLID NEUTRAL **600** AMPERE BUS **600** AMPERE MAIN **LUG**
FLUSH MTD ___ SURFACE MTD **X**

CKT #	DESCRIPTION	WATTS	LOAD TYPE	WIRE SIZE	BRKR SIZE	POLE	A	B	C	POLE	BRKR SIZE	WIRE SIZE	LOAD TYPE	WATTS	DESCRIPTION	CKT #
1	RTU-2	5952	H	6	60	3	10896			3	100	*	–	4944	PANEL "A"	2
3		5952						10526						4574		4
5		5952							12236					6284		6
7	RTU-3	9384	H	3	90	3	14581			3	100	*	–	5197	PANEL "LP"	8
9		9384						14765						5381		10
11		9384							14828					5444		12
13	RTU-1	5952	H	6	60	3	9492			3	50	6	H	3540	RTU-4	14
15		5952						9492						3540		16
17		5952							9492					3540		18
19	SPARE	--	–	–	200	3	--			–	–	–	–	--	BLANK	20
21		--						--		–	–	–	–	--	BLANK	22
23		--							--	–	–	–	–	--	BLANK	24

34969 | 34783 | 36556 SUB TOTALS

CONNECTED LOAD **106308**
PHASE BALANCE **4.9%**

L = LTG OR SIGNAGE
R = RECEPTACLE
M = MISCELLANEOUS
H = H.V.A.C.
K = KITCHEN

NOTE: ALL BREAKERS SHALL BE BOLT-ON, UNLESS OTHERWISE NOTED.
● – INDICATES THIS CIRCUIT TO RECEIVE HANDLE LOCK-ON CLIP
* – REFER TO ONE-LINE DIAGRAM FOR WIRE SIZE TO THIS EQUIPMENT

WHEN REUSING EXISTING PANELS, E.C. SHALL VERIFY THE CONDITION AND QUANTITY OF ALL EXISTING CIRCUIT BREAKERS. REPLACE DAMAGED BREAKERS WITH NEW. PROVIDE ANY ADDITIONAL OR BREAKERS OF DIFFERENT AMPERAGE OR POLE AS REQUIRED TO MEET THE END RESULT INDICATED IN THE PANEL SCHEDULE. NEW BREAKERS SHALL BE OF THE SAME MFG AND CHARACTERISTICS OF THE EXISTING. THE SUBMISSION OF THE BID PROPOSALS SHALL BE CONSIDERED EVIDENCE THAT THE CONTRACTORS HAVE VISITED THE SITE. NO EXTRA PAYMENTS WILL BE ALLOWED TO THESE CONTRACTORS ON ACCOUNT OF EXTRA WORK MADE NECESSARY BY HIS FAILURE TO VISIT THE SITE.

PANELBOARD DESIGNATION **"LP"** NEW INSTALL ___ EXIST LOCATION **X** RELOCATED EXIST ___
120/208 VOLTS **3** PHASE **4** WIRE, SOLID NEUTRAL **225** AMPERE BUS **225** AMPERE MAIN **LUG**
FLUSH MTD ___ SURFACE MTD **X**

CKT #	DESCRIPTION	WATTS	LOAD TYPE	WIRE SIZE	BRKR SIZE	POLE	A	B	C	POLE	BRKR SIZE	WIRE SIZE	LOAD TYPE	WATTS	DESCRIPTION	CKT #
● 1	SIGN-STOREFRONT FRONT	1200	L	12	20	1	1999			1	15	12	L	799	LTG-TRK WALL DISP RT	2
3	SIGN-NEON "OPEN" SIGN	180	L	12	20	1		1540		1	15	12	L	1360	LTG-TRK WALL DISP LFT	4
5	SIGN-"FUTURE"	180	L	12	20	1			2066	1	20	12	L	1886	LTG-TRK GEN EGRESS LFT	6 ●
7	SPARE	--	–	–	20	1	1476			1	20	12	L	1476	LTG-TRK GEN EGRESS MID RT	8 ●
● 9	LTG-SALES/EM/EX	233	L	12	20	1		2037		1	20	12	L	1804	LTG-TRK GEN EGRESS CEN	10 ●
11	LTG-CWRAP/FIT	508	L	12	20	1			1287	1	20	12	L	779	LTG-TRK GEN EGRESS RT	12 ●
13	SPARE	--	–	–	20	1	--			1	20	–	–	--	SPARE	14
15	SPARE	--	–	–	20	1		1804		1	20	12	L	1804	LTG-TRK FLR DISP LFT	16
17	SPARE	--	–	–	20	1			1476	1	20	12	L	1476	LTG-TRK FLR DISP MID RT	18
19	SPARE	--	–	–	20	1	1722			1	20	12	L	1722	LTG-TRK FLR DISP CEN	20
21	SPARE	--	–	–	20	1		--		1	20	–	–	--	SPARE	22
23	SPARE	--	–	–	20	1			615	1	20	12	L	615	LTG-TRK FLR DISP RT	24
25	SPARE	--	–	–	20	1	--			1	20	–	–	--	SPARE	26
27	SPARE	--	–	–	20	1		--		1	20	–	–	--	SPARE	28
29	SPARE	--	–	–	20	1			--	1	20	–	–	--	SPARE	30
31	SPARE	--	–	–	20	1	--			1	20	–	–	--	SPARE	32
33	SPARE	--	–	–	20	1		--		1	20	–	–	--	SPARE	34
35	SPARE	--	–	–	20	1			--	1	20	–	–	--	SPARE	36
37	SPARE	--	–	–	20	1	--			1	20	–	–	--	SPARE	38
39	SPARE	--	–	–	20	1		--		1	20	–	–	--	SPARE	40
41	SPARE	--	–	–	20	1			--	1	20	–	–	--	SPARE	42

5197 | 5381 | 5444 SUB TOTALS

CONNECTED LOAD **16022**
PHASE BALANCE **4.5%**

L = LTG OR SIGNAGE
R = RECEPTACLE
M = MISCELLANEOUS
H = H.V.A.C.
K = KITCHEN

NOTE: ALL BREAKERS SHALL BE BOLT-ON, UNLESS OTHERWISE NOTED.
● – INDICATES THIS CIRCUIT TO RECEIVE HANDLE LOCK-ON CLIP
* – REFER TO ONE-LINE DIAGRAM FOR WIRE SIZE TO THIS EQUIPMENT

WHEN REUSING EXISTING PANELS, E.C. SHALL VERIFY THE CONDITION AND QUANTITY OF ALL EXISTING CIRCUIT BREAKERS. REPLACE DAMAGED BREAKERS WITH NEW. PROVIDE ANY ADDITIONAL OR BREAKERS OF DIFFERENT AMPERAGE OR POLE AS REQUIRED TO MEET THE END RESULT INDICATED IN THE PANEL SCHEDULE. NEW BREAKERS SHALL BE OF THE SAME MFG AND CHARACTERISTICS OF THE EXISTING. THE SUBMISSION OF THE BID PROPOSALS SHALL BE CONSIDERED EVIDENCE THAT THE CONTRACTORS HAVE VISITED THE SITE. NO EXTRA PAYMENTS WILL BE ALLOWED TO THESE CONTRACTORS ON ACCOUNT OF EXTRA WORK MADE NECESSARY BY HIS FAILURE TO VISIT THE SITE.

PANELBOARD DESIGNATION **"PP"** NEW INSTALL ___ EXIST LOCATION **X** RELOCATED EXIST ___
120/208 VOLTS **3** PHASE **4** WIRE, SOLID NEUTRAL **225** AMPERE BUS **225** AMPERE MAIN **LUG**
FLUSH MTD ___ SURFACE MTD **X**

CKT #	DESCRIPTION	WATTS	LOAD TYPE	WIRE SIZE	BRKR SIZE	POLE	A	B	C	POLE	BRKR SIZE	WIRE SIZE	LOAD TYPE	WATTS	DESCRIPTION	CKT #
1	REC-MANAGER'S DESK CNTRL	360	R	12	20	1	1080			1	20	12	R	720	REC-CASHWRAP	2 ●
3	REC-HVAC	720	R	12	20	1		1440		1	20	12	R	720	REC-CASHWRAP GENERAL	4
● 5	REC-STOCKROOM DESK	540	R	12	20	1			1040	1	20	12	R	500	REC-CASHWRAP PRINTER	6
7	REC-UTILITY	1400	R	12	20	1	2440			1	20	12	R	1040	REC-FRIDGE/WTR. FOUNT.	8
9	REC-HAT STEAMER	1000	R	12	20	1		1720		1	20	12	M	720	REC-PH.BD./BUZZER/TC	10 ●
● 11	REC-IT CABINET	720	R	12	20	1			1920	1	20	12	R	1200	REC-MICROWAVE	12
13	SPARE	--	–	–	20	1	180			1	20	12	R	180	REC-MANAGER'S DESK	14 ●
● 15	REC-SECURITY	180	R	12	20	1		540		1	20	12	R	360	REC-DOORMAX SYSTEM	16 ●
17	SPARE	--	–	–	20	1			1260	1	20	12	R	1260	REC-SALES GENERAL	18
19	SPARE	--	–	–	20	1	500			1	20	12	R	500	REC-STOCK PRINTER	20
21	BLANK	--	–	–	–	–		360		1	20	12	R	360	REC-SHOWWINDOW	22
23	BLANK	--	–	–	–	–			--	1	20	–	–	--	SPARE	24
25	BLANK	--	–	–	–	–	--			1	20	–	–	--	SPARE	26
27	BLANK	--	–	–	–	–		--		1	20	–	–	--	SPARE	28
29	BLANK	--	–	–	–	–			--	–	–	–	–	--	BLANK	30
31	BLANK	--	–	–	–	–	--			–	–	–	–	--	BLANK	32
33	BLANK	--	–	–	–	–		--		–	–	–	–	--	BLANK	34
35	BLANK	--	–	–	–	–			--	–	–	–	–	--	BLANK	36
37	BLANK	--	–	–	–	–	--			–	–	–	–	--	BLANK	38
39	BLANK	--	–	–	–	–		--		–	–	–	–	--	BLANK	40
41	BLANK	--	–	–	–	–			--	–	–	–	–	--	BLANK	42

4200 | 4060 | 4220 SUB TOTALS

CONNECTED LOAD **12480**
PHASE BALANCE **3.8%**

L = LTG OR SIGNAGE
R = RECEPTACLE
M = MISCELLANEOUS
H = H.V.A.C.
K = KITCHEN

NOTE: ALL BREAKERS SHALL BE BOLT-ON, UNLESS OTHERWISE NOTED.
● – INDICATES THIS CIRCUIT TO RECEIVE HANDLE LOCK-ON CLIP
* – REFER TO ONE-LINE DIAGRAM FOR WIRE SIZE TO THIS EQUIPMENT

PANEL A DEMAND

DESCRIPTION	TOTAL WATTS
ACTUAL LIGHTING LOAD	1322
25% CONTINUOUS LOAD	331
WATER HEATER	2000
PANEL PP	12480
TOTAL DEMAND WATTS	**16133**
TOTAL DEMAND AMPS	**44.8**

PANEL PP DEMAND

DESCRIPTION	TOTAL WATTS
RECEPTACLES	11760
MISCELLANEOUS	720
TOTAL DEMAND WATTS	**12480**
TOTAL DEMAND AMPS	**34.7**

PANEL LP DEMAND

DESCRIPTION	TOTAL WATTS
TRACK LIGHTING 190A X 120V	22800
25% CONTINUOUS LOAD	5700
ACTUAL LIGHTING LOAD	2301
25% CONTINUOUS LOAD	575
TOTAL DEMAND WATTS	**31376**
TOTAL DEMAND AMPS	**87.2**

PANEL MP DEMAND

DESCRIPTION	TOTAL WATTS	TOTAL WATTS
PANEL "A"	16133	16133
PANEL "LP"	31376	31376
RTU-1 COMP. LOAD	12456	
RTU-1 COND. LOAD	1728	
RTU-1 FAN LOAD	3672	3672
RTU-2 COMP. LOAD	12456	
RTU-2 COND. LOAD	1728	
RTU-2 FAN LOAD	3672	3672
RTU-3 COMP. LOAD	18684	
RTU-3 COND. LOAD	3456	
RTU-3 FAN LOAD	6012	6012
RTU-4 COMP. LOAD	7056	
RTU-4 COND. LOAD	540	
RTU-4 FAN LOAD	3024	3024
RTU-4 HEATER		4896
25% LARGEST MOTOR	1764	1503
DEMAND W/ A/C LOAD	**123757w 343.8a**	
DEMAND W/ HTR LOAD		**70288w 195.2a**

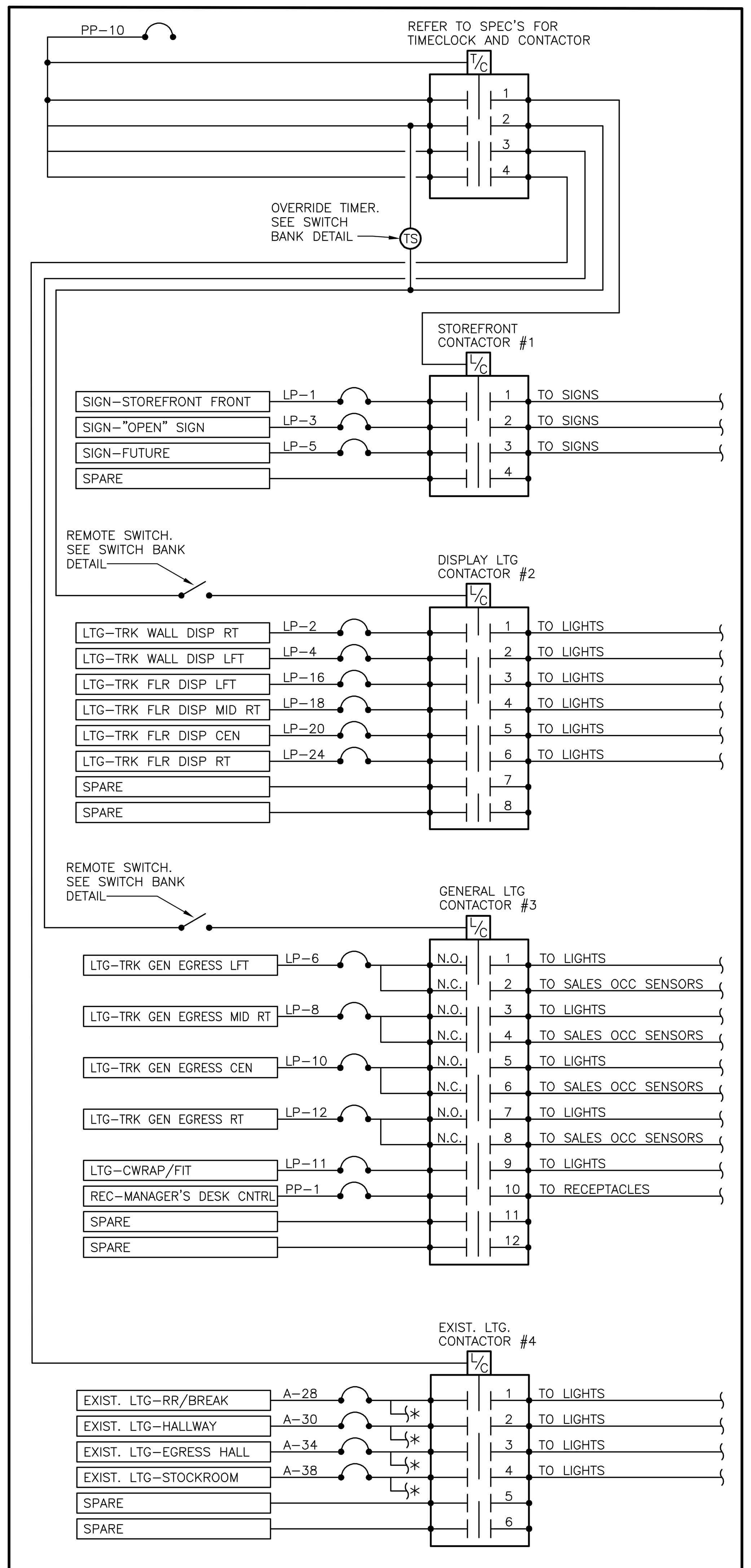

2 TIMECLOCK AND LIGHTING CONTACTOR CONTROL DIAGRAM

SCALE: NONE

* – UNSWITCHED LEG TO FIXTURES REQUIRING 24HR. OPERATION.

TIMECLOCK AND CONTACTOR FOR AUTOMATIC SHUT OFF OF ALL SPACE LIGHTING AS REQUIRED BY ENERGY CODE

SYMBOL LEGEND

SYMBOL	DESCRIPTION
	UNIPLEX RECEPTACLE (SINGLE)
	DUPLEX RECEPTACLE
	DUPLEX FLOOR MOUNTED
	DUPLEX ISOLATED GROUND
	DUPLEX FLOOR MTD ISO GRD
	DUPLEX SPECIAL LOCATION
	QUADPLEX RECEPTACLE
	QUADPLEX FLOOR MOUNTED
	QUADPLEX ISOLATED GROUND
	QUADPLEX FLOOR MTD ISO GRD
	QUADPLEX SPECIAL LOCATION
	SPECIAL VOLTAGE OR AMPERAGE
	SPECIAL VOLTAGE OR AMPERAGE
	MULTI-OUTLET PLUGMOLD
	TELEPHONE OUTLET
J	JUNCTION BOX
D	DATA OUTLET
	DOORBELL PUSHBUTTON
	DOORBELL
	DOORBELL LOW-VOLT TRANS
	LOW-VOLTAGE TRANSFORMER
	DISCONNECT SWITCH
	TELEPHONE BOARD
	ELECTRICAL PANEL
KVA	TRANSFORMER
T/C	24HR 7 DAY-TIME CLOCK
L/C	LIGHTING CONTACTOR
$	WALL SWITCH
OS	OCCUPANCY WALL SWITCH
OS	OCCUPANCY CEILING SENSOR
	CIRCUIT HOME RUN
	CONDUIT THRU/BELOW FLOOR
	CONDUIT STUBBED UP/DOWN
N.L.	NIGHT LIGHT
VIA T/C	TIMECLOCK CONTROLLED CIRCUIT

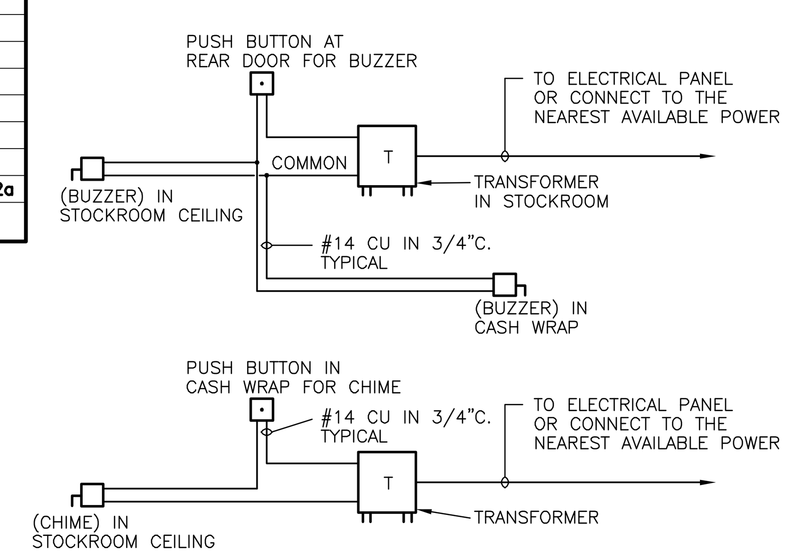

3 BUZZER AND CHIME SCHEMATIC

SCALE: NONE

1. BUZZER RINGS AT CASHWRAP AND IN STOCKROOM FROM REAR DOOR. CHIME RINGS IN STOCKROOM FROM CASHWRAP.

Antenna Overview

Part of an Ultra•Max® EAS security system, Digital Door-Max antennas attach to the wall or doorframe surrounding an exit. Up to two Door-Max antennas (Figure 1) can be used as transmitters, receivers, or transceivers by connecting them to either a Digital 216 or Ultra•Post Plus controller.

- Wide exits can be covered when a FloorMax Plus antenna is added.
- Antenna configurations are listed in Table 1. Other antenna configurations or additional antennas require the use of a second controller.

Figure 1. Digital Door-Max antenna locations

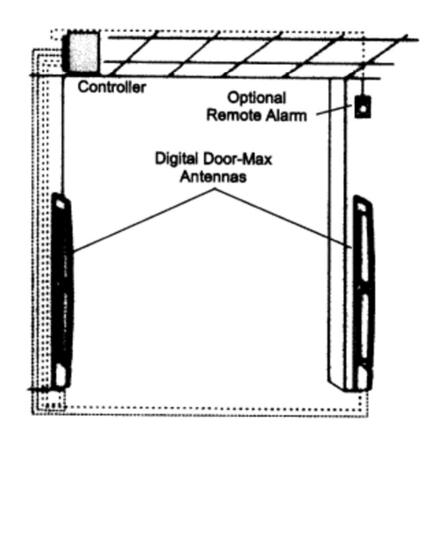

Table 1. Antenna configurations

Door-Max Antenna w/Digital 216 Controller

System	Components Supplied
1 Door-Max (ZADDM-1)	A, F, H, I
1 Door-Max w/Rangers (ZADDM-1-R)	A, C, F, H, I
1 Door-Max w/Satellite Receiver (ZADDM-1-SR)	A, D, F, H, I
2 Door-Max (ZADDM-2)	B, F, H, J

Door-Max Antenna w/Ultra•Post Plus Controller

System	Components Supplied
1 Door-Max Transceiver	A, G, H, K, L, M, N
1 Door-Max Transceiver with 1 Satellite Receiver	A, D, G, H, K, L, M, N
1 Door-Max Transceiver with 1 Ranger Receiver	A, C, G, H, K, L, M, N
2 Door-Max Transceivers	B, G, H, K, L, M, N
2 Door-Max Receivers with 1 FloorMax Plus Transmitter	B, E, G, H, K, L, M, N

A. 1 Digital Door-Max Antenna (ZSDDM)
B. 2 Digital Door-Max Antennas (ZSDDM)
C. 1 Pair Ranger Antennas (ZKRANGER-1)
D. 1 Satellite Receiver (ZKRXMULLMT)
E. 1 FloorMax Plus Antenna
F. 1 Digital 216 Controller (ZED216)
G. 1 Ultra•Post Plus Controller (ZEUPPLUS-E3) and 1 Enclosure Assembly (ZPDFM-E)
H. 1 Power Cord
- EMC USA 125 V Power Cord (0351-2179-01)
- "B" Schuko (EUR) 250V Power Cord (0351-0547-02)
- "D" UK 250V Power Cord (0351-0547-03)
- "J" Japan 125 V Power Cord (0351-0547-04)
- Australia to IEC 32 Power Cord (0351-0547-07)

I. 1 Mounting Kit (ZPDDM-M1 or ZPDDM-M2)
J. 2 Mounting Kits (ZPDDM-M1 or ZPDDM-M2)
K. 8 Contact Sockets (2109-0282-26)
L. 2 Connectors, HSG, 4-Pin (2109-0282-04)
M. 2 TM, QD, 1/4x.032, RCP, INS, 22-18 (2103-0098-01)
N. Filter, EMI, FR, 10MID, 2000 (2700-0034-01)

4 DIGITAL DOOR-MAX SYSTEM

SCALE: NONE

WHEN REUSING EXISTING PANELS, E.C. SHALL VERIFY THE CONDITION AND QUANTITY OF ALL EXISTING CIRCUIT BREAKERS. REPLACE DAMAGED BREAKERS WITH NEW. PROVIDE ANY ADDITIONAL OR BREAKERS OF DIFFERENT AMPERAGE OR POLE AS REQUIRED TO MEET THE END RESULT INDICATED IN THE PANEL SCHEDULE. NEW BREAKERS SHALL BE OF THE SAME MFG AND CHARACTERISTICS OF THE EXISTING. THE SUBMISSION OF THE BID PROPOSALS SHALL BE CONSIDERED EVIDENCE THAT THE CONTRACTORS HAVE VISITED THE SITE. NO EXTRA PAYMENTS WILL BE ALLOWED TO THESE CONTRACTORS ON ACCOUNT OF EXTRA WORK MADE NECESSARY BY HIS FAILURE TO VISIT THE SITE.

PANELBOARD DESIGNATION **"A"** NEW INSTALL ___ EXIST LOCATION **X** RELOCATED EXIST ___
120/208 VOLTS **3** PHASE **4** WIRE, SOLID NEUTRAL **225** AMPERE BUS **225** AMPERE MAIN **LUG**
FLUSH MTD ___ SURFACE MTD **X**

CKT #	DESCRIPTION	WATTS	LOAD TYPE	WIRE SIZE	BRKR SIZE	POLE	A	B	C	POLE	BRKR SIZE	WIRE SIZE	LOAD TYPE	WATTS	DESCRIPTION	CKT #
1	SPARE	--	–	–	20	1	--			1	20	–	–	--	SPARE	2
3	SPARE	--	–	–	20	1		--		1	20	–	–	--	SPARE	4
5	SPARE	--	–	–	20	1			--	1	20	–	–	--	SPARE	6
7	SPARE	--	–	–	20	1	--			1	20	–	–	--	SPARE	8
9	SPARE	--	–	–	20	1		--		1	20	–	–	--	SPARE	10
11	SPARE	--	–	–	20	1			--	1	20	–	–	--	SPARE	12
13	SPARE	--	–	–	20	1	--			1	20	–	–	--	SPARE	14
15	SPARE	--	–	–	20	1		--		1	20	–	–	--	SPARE	16
17	SPARE	--	–	–	20	1			--	1	20	–	–	--	SPARE	18
19	SPARE	--	–	–	20	1	--			1	20	–	–	--	SPARE	20
21	SPARE	--	–	–	20	1		--		1	20	–	–	--	SPARE	22
23	SPARE	--	–	–	20	1			--	1	20	–	–	--	SPARE	24
25	SPARE	--	–	–	20	1	--			1	20	–	–	--	SPARE	26
27	SPARE	--	–	–	20	1		391		1	20	12	L	390	EXIST. LTG-RR/BREAK	28
29	SPARE	--	–	–	20	1			64	1	20	12	L	64	EXIST. LTG-HALLWAY	30
31	SPARE	--	–	–	20	1	--			1	20	–	–	--	SPARE	32
33	SPARE	--	–	–	20	1		124		1	20	12	L	124	EXIST. LTG-EGRESS HALL	34
35	SPARE	--	–	–	20	1			--	1	20	–	–	--	SPARE	36
37	SPARE	--	–	–	20	1	744			1	20	12	L	744	EXIST. LTG-STOCKROOM	38
39	SPARE	--	–	–	20	1		--		1	20	–	–	--	SPARE	40
41	WATER HEATER	2000	M	10	20	1			2000	1	20	–	–	--	SPARE	42

4200 | 4060 | 4220 FEED THRU LUG PANEL "PP"
4944 | 4574 | 6284 SUB TOTALS

CONNECTED LOAD **15802**

L = LTG OR SIGNAGE
R = RECEPTACLE
M = MISCELLANEOUS
H = H.V.A.C.
K = KITCHEN

NOTE: ALL BREAKERS SHALL BE BOLT-ON, UNLESS OTHERWISE NOTED.
● – INDICATES THIS CIRCUIT TO RECEIVE HANDLE LOCK-ON CLIP
* – REFER TO ONE-LINE DIAGRAM FOR WIRE SIZE TO THIS EQUIPMENT

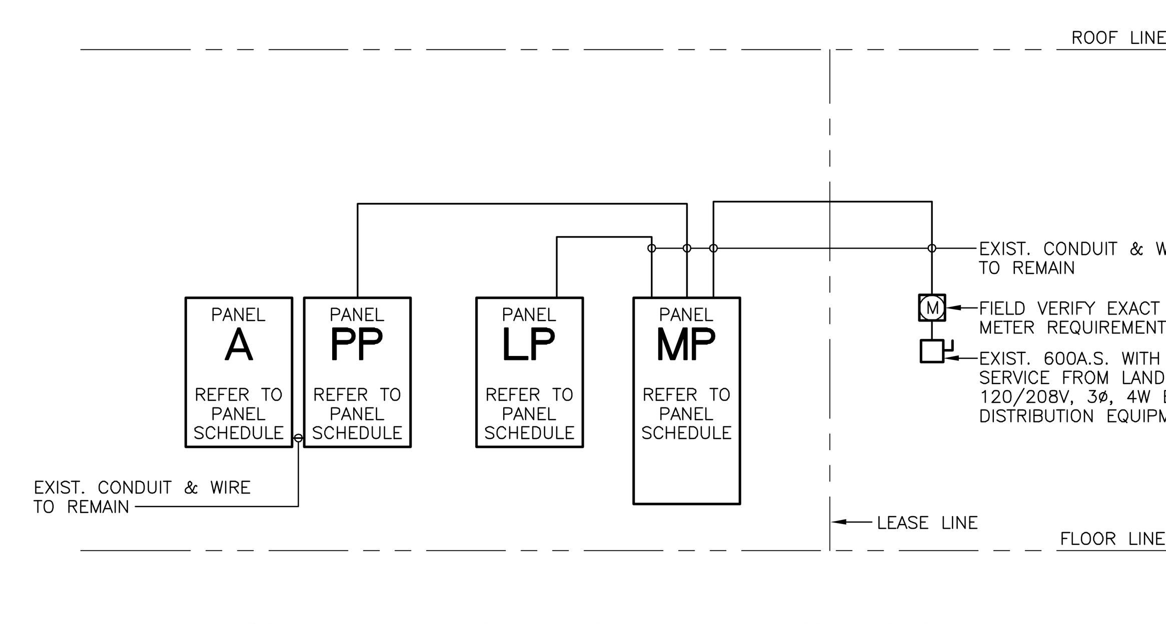

1 ELECTRICAL ONE-LINE DIAGRAM

SCALE: NONE

1. ALL WIRE SHALL BE COPPER ONLY, THW, THWN, THHW, OR NEC APPROVED EQUAL OR BETTER. ALL WIRING SHALL BE IN CONDUIT. WIRE AMPACITY BASED ON NEC 110-14c AND TABLE 310-16.
2. E.C. SHALL FURNISH ALL NEW ELECTRICAL EQUIP. (PANELS, TRANSFORMER, CONDUITS, WIRE, METERS, SERVICE FEEDERS AND CONDUIT, DISC SWITCHES, CONTACTORS, TIMECLOCKS, ETC) AS REQUIRED, UNLESS NOTED OTHERWISE.
3. ALL ELECTRICAL EQUIPMENT (PANELS, TRANSFORMER, LIGHTS, DEVICES, CONDUIT, WIRE, ETC.) NOT BEING USED SHALL BE REMOVED FROM THE SITE. DO NOT ABANDON IN PLACE.
4. E.C. SHALL FIELD VERIFY ALL EXISTING ELECTRICAL EQUIPMENT. ALSO FIELD VERIFY THAT ANY EXISTING ELEC. EQUIPMENT TO BE REUSED IS OF ADEQUATE SIZE AND CONDITION TO MAINTAIN SAFE OPERATION. IF DISCREPANCIES ARISE CONTACT PROJECT REP.

LIGHT FIXTURE SCHEDULE / LAMP SCHEDULE

QTY.	SYMBOL	TYPE	MANUFACTURER	CATALOG NO.	DESCRIPTION	REF NOTES	VOLTS	REC	SUR	PEN	WAL	LAMP/ FIXT	WATTS/ LAMP	FIXTURE WATTS	MANUFACTURER/ CATALOG NO.
282		C1	JUNO	T259LG2-3K-WH --	LED WALL WASH --	1,2,3	120		X			1	41	41	INCLUDED --
8		D2	HI-LITE	H-LCGU-1B-91-FR/ GU24-26W RATED	SAUCER VAPOR JAR FITTING ROOM LIGHT	1,2,3	120		X			1	10	10	TCP LED10A19GUDOD30K
8		E1	JUNO	TC22LED-G4-14LM-30K 90CRI-MVOLTZT10	6" LED DOWNLIGHT --	1,2,3,5	120	X				1	16	16	INCLUDED --
127		G	JUNO	R534WH --	PAR38 GIMBAL WHITE --	1,2,3	120		X			1	17	17	TCP LED17P38D30KNFL
5		H	AQLIGHTING	AQ-PENST-1464 --	12 INCH COMMERCIAL PENDANT --	1,2,3	120			X		1	60	60	TBD --
37		J	JUNO	R38WH	LIVE END POWER FEED TRACK ACCESSORY	1	120			X		NOT APPLICABLE			
159		K	JUNO	R23WH	MINIATURE CONNECTOR TRACK ACCESSORY	1	120			X		NOT APPLICABLE			
12		T2W	JUNO	R2WH --	2' WHITE TRACK --	1,2,3	120		X			NOT APPLICABLE			
3		T4W	JUNO	R4WH --	4' WHITE TRACK --	1,2,3	120		X			NOT APPLICABLE			
4		T6W	JUNO	R6WH --	6' WHITE TRACK --	1,2,3	120		X			NOT APPLICABLE			
175		T8W	JUNO	R8WH --	8' WHITE TRACK --	1,2,3	120		X			NOT APPLICABLE			
21		EM2	BEGHELLI TEMPESTA	TA-LED-ECO- SE-UNV-AT	EMERGENCY LIGHT CEILING MOUNTED	1,4,3	UNIV	X				1	10	10	INCLUDED --

NOTES:
1. INSTALLATION OF LIGHTING FIXTURES SHALL BE ACCORDING TO MANUFACTURER'S RECOMMENDATIONS AND ACCORDING TO CODE REQUIREMENTS.
2. ALL NEW LIGHTING FIXTURES, LAMP, AND BALLAST ARE FURNISHED BY BOOTBARN AND INSTALLED BY ELECTRICAL CONTRACTOR, UNLESS NOTED OTHERWISE.
3. EC SHALL VERIFY ALL MOUNTING HEIGHTS WITH ARCHITECTURAL PLANS. COORDINATE ANY DISCREPANCIES WITH ARCHITECTURAL SHEETS AND OWNER.
4. ALL EMERGENCY LIGHTING AND EXIT SIGNAGE SHALL BE PROVIDED WITH 90 MINUTE BATTERY BACK-UP.
5. FIXTURES SHOWN WITH CROSS-HATCH ARE TO BE NIGHT LIGHTS, FIXTURES USED FOR EXIT, EMERGENCY, OR NIGHT LIGHTING TO BE ON LOCKOUT CIRCUIT.

REGISTRATION SEAL

ARCVISION
INCORPORATED
ARCHITECTURE • ENGINEERING • STORE PLANNING
SAINT LOUIS / DALLAS / LAS VEGAS / ORLANDO
1950 CRAIG ROAD, SUITE 300 ST. LOUIS, MO 63146
PH. (314) 415-2400 FAX (314) 415-2300 www.arcv.com
TEXAS ENGINEERING FIRM #12793

BOOT BARN

BOOT BARN
1424 TEXAS AVE. CROSSING
COLLEGE STATION TX, 77840
STORE # 161R

REV	DATE	DESCRIPTION	NAME

PROJECT NO: 210627
DRAWN BY: CBS
CHECKED BY: CW
ISSUE DATE: 02/04/22

ELECTRICAL SCHEDULES

E30

1. GENERAL REQUIREMENTS

THE GENERAL PROVISIONS OF THE CONTRACT INCLUDING ANY GENERAL AND SUPPLEMENTAL CONDITIONS AND GENERAL REQUIREMENTS APPLY TO THE WORK IN THIS SECTION. BEFORE SUBMITTING A BID, EXAMINE ALL MECHANICAL, ARCHITECTURAL, AND/OR STRUCTURAL DOCUMENTS, VISIT THE SITE AND GET ACQUAINTED WITH ALL CONDITIONS THAT MAY IN ANY WAY WHATSOEVER AFFECT THE EXECUTION OF THIS CONTRACT. TAKE MEASUREMENTS AND BE RESPONSIBLE FOR EXACT SIZE AND LOCATIONS OF ALL OPENINGS REQUIRED FOR THE INSTALLATION OF WORK. FIGURED DIMENSIONS ARE REASONABLY ACCURATE AND SHOULD GOVERN IN SETTING OUT WORK. WHERE DETAILED METHOD OF INSTALLATION IS NOT INDICATED OR WHERE VARIATIONS EXIST BETWEEN DESCRIBED WORK AND APPROVED PRACTICE, DIRECTION OF THE OWNER'S REPRESENTATIVE ON JOB SITE SHALL BE FOLLOWED.

THE CONTRACT INCLUDES ALL ITEMS OF MATERIAL AND LABOR REQUIRED FOR THE COMPLETE INSTALLATION AND FULL OPERATION OF THE ELECTRICAL WORK AS SHOWN ON THE DRAWINGS AND HEREINAFTER SPECIFIED. ALL WORK, MATERIALS, AND EQUIPMENT SHALL HAVE A ONE YEAR WARRANTY AFTER ACCEPTANCE OF THE WORK BY THE OWNER. ANY DEFECTIVE ITEMS SHALL BE REMOVED AND REPLACED AT THE ELECTRICAL SUB-CONTRACTOR'S EXPENSE AND TO THE SATISFACTION OF THE ENGINEER.

PERFORM WORK UNDER THIS CONTRACT IN CLOSE HARMONY WITH OTHER CONTRACTORS SO COMPLETED WORK SHALL PRESENT A NEAT AND WORKMANLIKE INSTALLATION. EXPOSED FINISHED MATERIALS AND EQUIPMENT SHALL BE CAREFULLY CLEANED AND WIPED TO REMOVE GREASE, SMUDGES, DUST AND OTHER SPOTS AND LEFT SMOOTH AND CLEAN. DURING THE PROGRESS OF THE WORK, THE ELECTRICAL SUB-CONTRACTOR SHALL CAREFULLY CLEAN UP AFTER HIS MEN AND SHALL LEAVE THE PREMISES AND ALL PORTIONS OF THE BUILDING IN WHICH HE IS WORKING FREE OF DEBRIS AND IN A CLEAN AND SAFE CONDITION.

TIGHTEN ELECTRICAL CONNECTORS AND TERMINALS, INCLUDING SCREWS AND BOLTS, IN ACCORDANCE WITH EQUIPMENT MANUFACTURER'S PUBLISHED TORQUE TIGHTENING VALUES FOR EQUIPMENT CONNECTORS. WHERE MANUFACTURER'S TORQUING REQUIREMENTS ARE NOT INDICATED, TIGHTEN CONNECTORS AND TERMINALS TO COMPLY WITH TIGHTENING TORQUES SPECIFIED IN APPLICABLE UL AND NEC STANDARDS.

WHENEVER THE WORDS "CONTRACTOR", "THIS CONTRACTOR", ETC. APPEAR ON DRAWINGS OR IN THESE SPECIFICATIONS FOR THE ELECTRICAL WORK, IT SHALL REFER TO THE ELECTRICAL SUB-CONTRACTOR. WHENEVER THE WORD "PROVIDE" APPEARS IN THESE DOCUMENTS, IT SHALL BE INTERPRETED TO MEAN "FURNISH & INSTALL".

OUTLET MOUNTING HEIGHTS AS INDICATED ON THE PLANS ARE APPROXIMATE TO BE USED FOR BIDDING PURPOSES ONLY. THE EXACT MOUNTING HEIGHT OF OUTLETS SHALL BE DETERMINED IN THE FIELD WITH RELATION TO ARCHITECTURAL DETAILS AND EQUIPMENT BEING SERVED. IT SHALL BE THE RESPONSIBILITY OF THIS CONTRACTOR TO COORDINATE OUTLET LOCATION WITH EQUIPMENT. THE OWNER'S REPRESENTATIVE SHALL BE PERMITTED TO RELOCATE ANY OUTLET PRIOR TO INSTALLATION WITHIN A 15 FOOT LIMIT AT NO ADDITIONAL CHARGE IN CONTRACT PRICE. ALL FASTENERS, HANGERS AND METHODS OF HANGING EXPOSED WORK IN FINISHED AREAS SHALL BE SUBMITTED TO THE OWNER'S REPRESENTATIVE FOR APPROVAL BEFORE INSTALLATION. IF DURING CONSTRUCTION IF BECOMES APPARENT THAT CERTAIN MINOR CHANGES IN LAYOUT WILL EFFECT A NEATER JOB OR BETTER ARRANGEMENT, SUCH ALTERATIONS SHALL BE MADE AS PART OF THE CONTRACT. ENGINEER'S APPROVAL SHALL BE OBTAINED BEFORE MAKING SUCH CHANGES. WORKMANSHIP THROUGHOUT SHALL CONFORM TO THE STANDARDS OF BEST PRACTICE. MARKS, DENTS OR FINISH SCRATCHES WILL NOT BE PERMITTED ON ANY EXPOSED MATERIALS, FIXTURES OR FITTINGS. INSIDE OF PANELS & EQUIPMENT BOXES SHALL BE LEFT CLEAN.

THE SYSTEM SHALL RING ENTIRELY FREE FROM GROUND WHEN TESTED OUT IN THE PRESENCE OF THE OWNER'S REPRESENTATIVE. THIS CONTRACTOR SHALL BE RESPONSIBLE FOR THE PROPER INSTRUCTION OF EACH SYSTEM TO THE SATISFACTION OF THE OWNER'S REPRESENTATIVE. UPON COMPLETION OF THE JOB, THIS CONTRACTOR SHALL FURNISH THE OWNER WITH A COMPLETE SET OF OPERATING INSTRUCTIONS ON ALL ELECTRICAL SYSTEMS INSTALLED.

THE ELECTRICAL CONTRACTOR SHALL CONSULT THE PLANS OF ALL OTHER TRADES IN ALL INSTANCES BEFORE INSTALLING HIS WORK SO THAT HIS PIPING WILL NOT INTERFERE WITH THOSE BRANCHES. IN THE EVENT OF A CONFLICT, THIS CONTRACTOR SHALL REPORT TO THE OWNER'S REPRESENTATIVE AT ONCE AND DO NO FURTHER WORK TO BE INSTALLED UNTIL A SATISFACTORY ARRANGEMENT IS DECIDED UPON. ANY WORK DONE, OR EQUIPMENT PLACED IN POSITION BY THIS CONTRACTOR, CREATING A CONFLICT IN VIOLATION HEREOF, SHALL BE READJUSTED TO THE SATISFACTION OF THE OWNER'S REPRESENTATIVE AT THE EXPENSE OF THE CONTRACTOR. THE DECISION OF THE OWNER'S REPRESENTATIVE SHALL BE FINAL IN REGARD TO CHANGES DUE TO CONFLICTING CONDITIONS.

2. SHOP DRAWINGS

THE CONTRACTOR SHALL SUBMIT SHOP DRAWINGS ONLY FOR ITEMS OF MATERIAL AND EQUIPMENT DIFFERENT THEN THOSE ALREADY CALLED FOR WITHIN THESE DRAWINGS FOR APPROVAL BY THE ENGINEER. THE CONTRACTOR IS NOT AUTHORIZED TO PURCHASE ANY MATERIAL UNTIL SUCH APPROVAL IS OBTAINED. A MINIMUM OF SIX SEPARATE SETS OF DRAWINGS IS REQUIRED AND WILL BE DISTRIBUTED AS FOLLOWS: 1 COPY FOR ENGINEER'S FILE; 1 COPY FOR ARCHITECT'S FILE; 2 COPIES FOR THE OWNER'S FILE; 2 COPIES FOR THE CONTRACTOR. SHOP DRAWINGS SHALL BE NEATLY BOUND IN A FLAT RING BINDER HAVING JOB NAME AND CONTRACTOR'S NAME ON COVER. A SINGLE SUBMISSION IS PREFERRED HAVING ALL ITEMS INCLUDED. LOOSE SHEET OR INCOMPLETE SUBMITTALS WILL NOT BE ACCEPTED. ALL ITEMS OF MATERIAL TO BE SUPPLIED WHICH DO NOT REQUIRE SHOP DRAWING SUBMISSION SUCH AS CONDUIT, WIRE, BOXES, ETC., SHALL BE LISTED AS SEPARATE MATERIAL SHOWING MANUFACTURER'S NAME AND CATALOG NUMBER AND TYPE AND SHALL BE INCLUDED WITH SHOP DRAWINGS SUBMITTAL.

3. RECORD DRAWINGS AND OPERATING INSTRUCTIONS & SERVICE MANUAL

TWO SETS OF MECHANICAL/ELECTRICAL DRAWINGS SHALL BE PROVIDED AS RECORD DRAWINGS WHICH SHALL BE SEPARATE, CLEAN, SEPIA REPRODUCIBLES RESERVED FOR THE PURPOSE OF SHOWING A COMPLETE PICTURE OF THE WORK AS ACTUALLY INSTALLED. THESE DRAWINGS SHALL ALSO SERVE AS WORK PROGRESS REPORT SHEETS AND THE ELECTRICAL SUB-CONTRACTOR SHALL MAKE ANY NOTATIONS, NEAT AND LEGIBLE THEREON DAILY AS WORK PROCEEDS. THE DRAWINGS SHALL BE AVAILABLE FOR INSPECTION AT ALL TIMES AND SHALL BE KEPT AT THE JOB AT A LOCATION DESIGNATED BY THE OWNER'S REPRESENTATIVE. AT THE COMPLETION OF THE WORK, THESE RECORD DRAWINGS SHALL BE SIGNED BY THE ELECTRICAL SUB-CONTRACTOR, DATED AND RETURNED TO THE OWNER'S REPRESENTATIVE. FINAL PAYMENT OF CONTRACT WILL NOT BE MADE UNTIL RECEIPT AND REVIEW OF SAID DRAWINGS. PROVIDE TWO NEATLY BOUND (WITH TABBED SECTIONS) COPIES OF MAINTENANCE AND INSTRUCTION BOOKS, PARTS LIST PERTAINING TO ALL EQUIPMENT FURNISHED. SUBMIT TO THE OWNER'S REPRESENTATIVE FOR APPROVAL. FINAL PAYMENT WILL NOT BE MADE UNTIL DRAWINGS FOR RECORD, MAINTENANCE AND INSTRUCTION MANUALS ARE DELIVERED TO THE OWNER'S REPRESENTATIVE.

4. PERMITS AND REGULATIONS

THE LATEST EDITION OF THE NATIONAL ELECTRIC CODE SHALL BE THE MINIMUM REQUIREMENT FOR ALL WORK. ALL ELECTRICAL MATERIALS USED IN THIS WORK AND ALL WORKMANSHIP AND TESTS PERFORMED THEREIN, UNLESS SPECIFICALLY SPECIFIED SHALL CONFORM TO THE LATEST RULES AND REGULATIONS AND SPECIFICATIONS OF THE NATIONAL BOARD OF FIRE UNDERWRITERS, LOCAL AND STATE CODES AND AUTHORITIES HAVING JURISDICTION AND UTILITY COMPANY. EXAMINE THE DRAWINGS AND SPECIFICATIONS FOR COMPLIANCE WITH PREVAILING CODES, REGULATIONS AND ORDINANCES AND BASE BID AND WORK ACCORDINGLY. ANY MINOR DISCREPANCY BETWEEN THESE DRAWINGS/SPECIFICATIONS AND CODES, LAWS, ORDINANCES, RULES AND REGULATIONS SHALL BE CORRECTED BY THIS CONTRACTOR AS REQUIRED WITHOUT ANY ADDITIONAL REIMBURSEMENT. MAJOR DISCREPANCIES SHALL IMMEDIATELY BE BROUGHT TO THE ATTENTION OF THE ENGINEER (IN WRITING), PRIOR TO INSTALLATION, ALONG WITH THE CONTRACTOR'S PROPOSED COST FOR CORRECTION. THIS CONTRACTOR SHALL OBTAIN AND PAY FOR ALL PERMITS OR CERTIFICATES OF INSPECTION AND APPROVAL REQUIRED FOR THIS BRANCH OF THE WORK. OWNER SHALL BE FURNISHED WITH CERTIFICATES OF FINAL INSPECTION AND APPROVAL PRIOR TO FINAL ACCEPTANCE OF THIS BRANCH OF THE WORK.

5. DRAWINGS AND SPECIFICATIONS

THE SPECIFICATIONS AND ACCOMPANYING DRAWINGS ARE INTENDED TO DESCRIBE THE SCOPE OF ALL ELECTRIC/MECHANICAL WORK. THE DRAWINGS ARE AN OUTLINE TO INDICATE THE APPROXIMATE LOCATION AND ARRANGEMENT OF RACEWAYS, WIRING AND EQUIPMENT. THE DRAWINGS SHALL BE FOLLOWED AS CLOSELY AS POSSIBLE IN EXECUTING OF THE WORK. SHOULD THERE BE A CONFLICT BETWEEN DRAWINGS AND SPECIFICATIONS, THIS CONTRACTOR SHALL REFER THE MATTER TO THE OWNER'S REPRESENTATIVE FOR A DECISION AS TO METHOD OR MATERIAL. ELECTRICAL CONTRACTOR SHALL REFER TO DRAWINGS OF ALL OTHER TRADES FOR DETAILS, DIMENSIONS AND LOCATIONS OF OTHER WORK AND ROUTE HIS WORK SO AS NOT TO CONFLICT WITH ANY OTHER BRANCH. THIS CONTRACTOR SHALL BE RESPONSIBLE FOR CHECKING QUANTITIES OF EQUIPMENT MENTIONED IN THE SPECIFICATIONS WITH THOSE SHOWN ON THE DRAWINGS. IF DISCREPANCIES ARE NOTED, PROVIDE THE GREATER OF THE QUANTITIES OR THE BETTER OF THE QUALITIES AS APPLICABLE.

6. MATERIALS AND EQUIPMENT

ALL MATERIALS AND EQUIPMENT SHALL BE NEW. ALL MATERIALS, APPARATUS AND EQUIPMENT SHALL BEAR THE UNDERWRITER'S LABORATORIES INC., LABEL WHERE REGULARLY SUPPLIED. CERTAIN MANUFACTURERS OF MATERIAL AND EQUIPMENT ARE SPECIFIED AND PLANS ARE DETAILED ACCORDING TO THIS MATERIAL. THIS CONTRACTOR SHALL BASE HIS BID ON FURNISHING AND INSTALLING THIS MAKE OF MATERIAL AND EQUIPMENT. WHERE MORE THAN ONE MAKE OF MATERIAL OR EQUIPMENT IS SPECIFIED, THE CONTRACTOR SHALL STATE IN HIS BID WHICH MAKE HE PROPOSES TO FURNISH.

7. ELECTRICAL IDENTIFICATION

PROVIDE MANUFACTURER'S STANDARD SELF-ADHESIVE VINYL TAPE NOT LESS THAN 3 MILS THICK BY 1-1/2" WIDE. WHERE APPLICABLE, INSTALL ON ALL CONCEALED RACEWAYS AT CONNECTION TO ALL JUNCTION BOXES, PULL BOXES, EQUIPMENT, WALL/FLOOR/, ETC. UNLESS OTHERWISE INDICATED OR REQUIRED BY GOVERNING REGULATIONS, PROVIDE ORANGE TAPE WITH BLACK LETTERS.

PROVIDE CIRCUIT IDENTIFICATION BANDS FOR ALL CABLES AND CONDUCTORS. PROVIDE MANUFACTURER'S STANDARD COLOR CODING FOR CABLE/CONDUCTOR JACKET AND/OR INSULATION FOR ALL CABLES AND CONDUCTORS OF ALL SYSTEMS. MATCH IDENTIFICATION WITH MARKING SYSTEM USED IN EXISTING SYSTEMS (WHERE APPLICABLE), SHOP DRAWINGS, CONTRACT DOCUMENTS, AND SIMILAR PREVIOUSLY ESTABLISHED IDENTIFICATION FOR PROJECT'S ELECTRICAL WORK. PROVIDE ON ALL CONDUCTORS OF ALL SYSTEMS.

INSTALL ENGRAVED PLASTIC-LAMINATE SIGN ON MAJOR UNITS OF ELECTRICAL EQUIPMENT, INCLUDING CENTRAL OR MASTER UNIT OF EACH ELECTRICAL SYSTEM INCLUDING COMMUNICATION/CONTROL/SIGNAL SYSTEMS, UNLESS UNIT IS SPECIFIED WITH ITS OWN SELF-EXPLANATORY IDENTIFICATION OR SIGNAL SYSTEM. EXCEPT AS OTHERWISE INDICATED, PROVIDE SINGLE LINE OF TEXT, 1/2" HIGH LETTERING, ON 1-1/2" HIGH SIGN (2" HIGH WHERE 2 LINES ARE REQUIRED), WHITE LETTERING IN BLACK FIELD. UNLESS DETERMINED OTHERWISE IN FIELD, PROVIDE TEXT MATCHING TERMINOLOGY AND NUMBERING OF THE CONTRACT DOCUMENTS AND SHOP DRAWINGS. SECURE TO SUBSTRATE WITH FASTENERS, EXCEPT USE ADHESIVE WHERE FASTENERS SHOULD NOT OR CANNOT PENETRATE SUBSTRATE. AS A MINIMUM PROVIDE SIGNS FOR EACH UNIT OF THE FOLLOWING CATEGORIES OF ELECTRICAL WORK WHERE SUCH WORK EXISTS ON THE PROJECT ALL STARTERS AND DISCONNECTS; ALL REMOTE FIXTURE OR EQUIPMENT SWITCHING DEVICES (VIA ENGRAVED WALLPLATES); ALL SYSTEM DEVICES, PORTS, TAPS, J.B.'S, P.B.S, ETC.; PANELBOARDS, ELECTRICAL CABINETS ; ANY OTHER EQUIPMENT DESIGNATED BY OWNER OR ENGINEER IN FIELD.

ALL EQUIPMENT & SYSTEM IDENTIFICATION NOMENCLATURE SHOWN ON DRAWINGS OR LISTED HEREIN IS SHOWN FOR GENERAL DESIGN AND INSTALLATION REFERENCE ONLY. THE ACTUAL NAMEPLATE, ETC. NOMENCLATURE FOR THIS PROJECT SHALL BE VERIFIED BY ELECTRICAL CONTRACTOR IN FIELD PRIOR TO FABRICATION AND WHERE APPLICABLE, SHALL BE AN EXTENSION OF EXISTING NOMENCLATURE USED ON THE SITE AS DETERMINED IN FIELD BY ELECTRICAL CONTRACTOR.

IN ADDITION TO THE ABOVE, ALL LABELING FOR ALL ELECTRICAL WIRING WORK (FOR ALL SYSTEMS) SHALL BE 3M DCI NO. 054007-11954 "SWD" WRITE-ON TAPE DISPENSER KIT WITH FACTORY PROVIDED SPECIAL FAST DRYING MARKER INCLUDED WITH KIT. ALL MARKINGS SHALL BE CLEAR AND LEGIBLE.

AS DETERMINED IN FIELD, PROVIDE COLOR CODING FOR JUNCTION BOXES, PULL BOXES AND ASSOCIATED PLATES TO MATCH EXISTING BUILDING STANDARDS. THE FOLLOWING INSULATION COLOR CODE SHALL BE USED FOR SYSTEM AND VOLTAGE IDENTIFICATION FOR FEEDER AND BRANCH CIRCUIT WIRING.

277/480V SYSTEM - BROWN, ORANGE, YELLOW & GRAY (NEUTRAL)
120/208V SYSTEM - BLACK, RED, BLUE & GRAY (NEUTRAL)
EQUIPMENT GROUNDING - GREEN
SYSTEMS - TO MATCH EXISTING - VERIFY IN FIELD.

8. GROUNDING

ALL METALLIC CONDUIT, SURFACE WIREWAYS, SUPPORTS, CABINET AND EQUIPMENT SHALL BE GROUNDED IN ACCORDANCE WITH THE LATEST ISSUE OF THE NATIONAL ELECTRICAL CODE AND AS SHOWN ON PLANS. THE GROUND TERMINALS OF RECEPTACLES SHALL BE CONNECTED TO THE EQUIPMENT GROUND BUS OF THE SOURCE BRANCH CIRCUIT PANELBOARD. ALL GROUNDING CONDUCTORS SHALL BE PROTECTED FROM MECHANICAL INJURY. ALL CONNECTIONS TO EQUIPMENT OR CONDUIT SHALL BE MADE WITH AN APPROVED CONDUCTOR AND SAME SHALL BE BOLTED OR CLAMPED TO EQUIPMENT AND CONDUIT. ALL CONTACT SURFACES SHALL BE THOROUGHLY CLEANED AND BRIGHT BEFORE CONNECTIONS TO INSURE A GOOD METAL CONTACT.

ALL NEW FEEDERS AND BRANCH CIRCUITING INSTALLED UNDER THIS CONTRACT SHALL BE PROVIDED WITH EQUIPMENT GROUNDING CONDUCTORS SIZED AND INSTALLED IN ACCORDANCE WITH LATEST ISSUE OF THE NATIONAL ELECTRICAL CODE ARTICLE 250 AND AS SHOWN ON PLANS.

9. CONDUIT AND FITTINGS

ALL WIRING FOR DIFFERENT POWER VOLTAGES SHALL BE INSTALLED IN RACEWAY SYSTEMS SEPARATE FROM EACH OTHER (I.E. 24V SEPARATE FROM 120/208V). ONLY VOICE AND DATA CABLES MAY SHARE RACEWAYS.

ALL WIRING SHALL BE RUN IN CONDUIT. THIN WALL EMT CONDUIT SHALL BE USED, SIZES 3/4" (MINIMUM) THROUGH 2-1/2". ALL CONDUITS LARGER THAN 2-1/2" SHALL BE HEAVYWALL. CONDUITS INSTALLED UNDERGROUND OR IN CONCRETE SLABS SHALL BE PVC JACKETED FLEXIBLE STEEL CONDUIT. SEALTITE SHALL BE USED IN WET AREAS AND ON ALL MOTORIZED EQUIPMENT. FLEXIBLE CONDUIT MAY ONLY BE USED FOR FINAL CONNECTIONS. NO BX, ROMEX, ARMORED CABLE, ETC. SHALL BE ALLOWED. ALL VISIBLE CONDUIT SHALL BE RIGID. ALL FITTINGS FOR SAME SHALL BE SET SCREW TYPE STEEL, WITH INSULATED THROATS. ALL WIRING OF ALL SYSTEMS SHALL BE INSTALLED IN CONDUIT UNLESS SPECIFICALLY INDICATED OTHERWISE HEREIN OR ON DRAWINGS.

EXPOSED CONDUIT SHALL BE SECURELY SUPPORTED IN PLACE PER CODE BUT ON A MAXIMUM OF 10 FOOT INTERVALS, WITHIN THREE FEET OF EACH BEND, AT EVERY OUTLET OR JUNCTION BOX AND AT THE END OF EACH STRAIGHT RUN TERMINATING AT A BOX OR CABINET. CONDUIT SHALL NOT BE SUPPORTED FROM DUCTWORK OR PIPE WORK. CONDUITS SHALL BE RUN PARALLEL TO AND AT RIGHT ANGLES TO THE BUILDING LINES. GENERALLY, CONDUIT SHALL BE RUN IN CONTACT WITH STRUCTURAL PARTS OF THE BUILDING SO AS TO AVOID SUSPENDED LENGTHS OF CONDUIT. CONDUIT SHALL BE INSTALLED AS TO BE ACCESSIBLE FOR REPLACEMENT AND MAINTENANCE AND GENERALLY, CONDUIT SHALL BE INSTALLED TO PERMIT DRAINAGE.

CONDUIT RUNS EXCEEDING 100 FEET IN LENGTH OR HAVING IN EXCESS OF THREE 90 DEGREE TURNS SHALL BE PROVIDED WITH PULL BOXES. CONDUIT FILL SHALL NOT EXCEED 30 PERCENT. ALL CONDUIT SYSTEMS (INCLUDING J.B.'S, P.B.'S, ETC.) SHALL BE PERMANENTLY IDENTIFIED. NEW BRANCH CIRCUIT HOME-RUN CONDUITS SHALL BE NO LARGER THAN 1-1/4" DIAMETER. CONDUIT FILL SHALL NOT EXCEED NEC REQUIREMENTS.

CONDUIT SHALL BE CLEANED INSIDE BEFORE ANY WIRES ARE PULLED. CONDUIT ENDS SHALL BE CAPPED AND PLUGGED WITH STANDARD ACCESSORIES AS SOON AS CONDUIT HAS BEEN PERMANENTLY INSTALLED. CONDUIT INSTALLED WITHOUT CONDUCTORS SHALL BE PROVIDED WITH SWEEP BENDS AND BALING WIRE FOR PULLING.

ALL JOINTS SHALL BE MADE TIGHT WITH WATERTIGHT COUPLINGS MATCHING CONDUIT AND ALL CORNERS SHALL BE MAKE WITH LONG RADIUS. THE ENDS OF ALL CONDUITS SHALL BE CUT SQUARE AND REAMED AND ALL JOINTS BROUGHT TO A SHOULDER. CONDUIT SHALL BE CONTINUOUS BETWEEN OUTLETS TO MAKE A COMPLETE INSTALLATION AND TO EFFECT A CONTINUOUS GROUND. SUITABLE SUPPORTS AND FASTENING SHALL BE PROVIDED FOR CONDUIT.

CONDUIT SHALL BE SUPPORTED BY APPROVED STRAPS, FASTENERS AND HANGERS. HANGERS SHALL BE SUSPENDED FROM RODS. PERFORATED STRAPS WILL NOT BE ACCEPTABLE. FASTENERS SHALL BE LEAD EXPANSION SHIELDS IN BLOCK OR CONCRETE, TOGGLE BOLTS IN HOLLOW WALLS, MACHINE SCREWS ON METAL SURFACES AND WOOD SCREWS ON WOOD CONSTRUCTION. ALL CONDUIT SHALL BE SUPPORTED INDEPENDENTLY FROM ALL OTHER BUILDING SYSTEMS AND SHALL BE SUPPORTED DIRECTLY FROM STRUCTURAL COMPONENTS.

PROVIDE SLEEVES FOR ALL FIRE WALL AND SMOKE PARTITION PENETRATIONS (SEALED ACCORDINGLY). ALL RACEWAYS SHALL BE ENTIRELY FREE OF PLASTER, MORTAR, WATER AND OTHER FOREIGN MATTER. RACEWAYS INSTALLED UNDER THIS CONTRACT WITHOUT CONDUCTORS SHALL HAVE BALING WIRE LEFT IN RACEWAYS FROM OUTLET TO OUTLET FOR FUTURE PULLING OF CONDUCTORS. RACEWAYS OPEN ENDS SHALL BE PLUGGED OR CAPPED IN AN APPROVED MANNER.

WHERE "FISHING" THROUGH EXISTING HOLLOW PARTITIONS IS MANDATORY, USE MINIMUM 3/4" "GREENFIELD" (STEEL) FOR LOW VOLTAGE CABLING AND METAL-CLAD/ARMORED CABLE (LISTED FOR USE IN HEALTH CARE FACILITIES) FOR POWER. OTHERWISE TYPE MC/AC CABLE MAY ONLY BE USED FOR 6' FIXTURE WHIPS, UNLESS CASE-BY-CASE PERMISSION IS GRANTED BY ENGINEER AND OWNER.

10. METHOD OF WIRING - POWER

A GROUNDED CONDUCTOR (NEUTRAL) SHALL BE INSTALLED WITHIN EACH JBOX INTENDED FOR THE INSTALLATION OF A LIGHTING CONTROL DEVICE (TOGGLE SWITCH, DIMMER, OCCUPANCY SENSOR, PHOTOCELL, ETC). CURRENT OR FUTURE DEVICES MAY REQUIRE LINE-TO-NEUTRAL VOLTAGE TO OPERATE THE ELECTRONICS OF THE DEVICE IN STANDBY MODE. ELECTRONIC CONTROL DEVICES SHALL NOT INTRODUCE CURRENT ON THE EQUIPMENT GROUNDING CONDUCTOR DURING NORMAL OPERATION.

IT IS PREFERRED A SEPARATE NEUTRAL BE USED WHEN POSSIBLE. PER THE NEC, IF A NEUTRAL IS SHARED, ALL UNGROUNDED CONDUCTORS OF A MULTIWIRE BRANCH CIRCUIT MUST BE SIMULTANEOUSLY DISCONNECTED TO REDUCE THE RISK OF SHOCK TO PERSONNEL WORKING ON EQUIPMENT SUPPLIED BY A MULTIWIRE BRANCH CIRCUIT. FOR A SINGLE PHASE INSTALLATION, THE SIMULTANEOUS DISCONNECTION CAN BE ACHIEVED BY TWO SINGLE POLE CIRCUIT BREAKERS WITH AN IDENTIFIED HANDLE TIE OR BY A 2-POLE SWITCH OR CIRCUIT BREAKER. FOR A 3-PHASE INSTALLATION, A 3-POLE CIRCUIT BREAKER OR THREE SINGLE POLE CIRCUIT BREAKERS WITH AN IDENTIFIED HANDLE TIE PROVIDES THE REQUIRED SIMULTANEOUS DISCONNECTION OF THE UNGROUNDED CONDUCTORS. WHERE FUSES ARE USED FOR BRANCH CIRCUIT OVERCURRENT PROTECTION, A 2-POLE OR 3-POLE SWITCH IS REQUIRED.

NEATLY DRESS ALL WORK. INSTALL ALL WORK PARALLEL AND PERPENDICULAR TO SURFACES OR EXPOSED STRUCTURAL MEMBERS, AND FOLLOW SURFACE CONTOURS, WHERE POSSIBLE. KEEP CONDUCTOR SPLICES TO MINIMUM. INSTALL SPLICE AND TAP CONNECTORS WHICH POSSESS EQUIVALENT OR BETTER MECHANICAL STRENGTH AND INSULATION RATING THAN CONDUCTORS BEING SPLICED. USE SPLICE AND TAP CONNECTORS WHICH ARE COMPATIBLE WITH CONDUCTOR MATERIAL. ALL WIRES SHALL BE RUN CONTINUOUS FROM OUTLET TO OUTLET/FIXTURE TO FIXTURE. INSULATION VALUE OF JOINTS TO BE 100% IN EXCESS OF WIRE. PROVIDE ADEQUATE LENGTH OF CONDUCTORS WITHIN ELECTRICAL ENCLOSURES AND TRAIN THE CONDUCTORS TO TERMINAL POINTS WITH NO EXCESS. BUNDLE MULTIPLE CONDUCTORS, WITH CONDUCTORS LARGER THAN NO 10 AWG CABLED IN INDIVIDUAL CIRCUITS. MAKE TERMINATIONS SO THERE IS NO BARE CONDUCTOR AT THE TERMINAL.

BRANCH SUBFEEDER CIRCUITS SHALL BE INSTALLED AS SHOWN ON THE FLOOR PLANS. WHERE OUTLETS ARE INDICATED BY LETTERS ON PLANS, THEY SHALL BE CONTROLLED BY CORRESPONDING SWITCHES. NO WIRE SIZE SMALLER THAN NO. 12 SHALL BE USED FOR ANY BRANCH CIRCUIT UNLESS OTHERWISE NOTED ON PLANS FOR CONTROL CIRCUITS. LARGER SIZES SHALL BE USED WHERE REQUIRED AND/OR INDICATED ON THE PLANS. DISTANCES FROM PANEL TO FIRST OUTLET OF A 15 OR 20 AMPERE BRANCH CIRCUIT SHALL REQUIRE THE FOLLOWING MINIMUM WIRE SIZE TO THE FIRST OUTLET.

UP TO 100 FEET: #12
100 TO 200 FEET: #10
MORE THAN 200 FEET: # 8

ALL BRANCH CIRCUITS MORE THAN 200 FEET IN LENGTH SHALL BE MINIMUM NO. 10 TO THE LAST OUTLET. CONTROL CIRCUITS SHALL BE NO. 14 EXCEPT FOR RUNS EXCEEDING 300 FEET WHERE THEY SHALL BE NO. 12. OUTLETS SHALL BE LOCATED APPROXIMATELY AS SHOWN ON THE PLANS AND SHALL BE WIRED TO PROVIDE CONTROL OF OUTLETS INDICATED. ALL WIRES OF ANY ONE CIRCUIT SHALL BE RUN IN THE SAME CONDUIT.

ALL WIRES SHALL BE RUN CONTINUOUS FROM OUTLET TO OUTLET. INSULATION VALUE OF JOINTS TO BE 100% IN EXCESS OF WIRE. MECHANICAL WIRE SPLICERS SHALL BE SCOTCHLOCK INSULATED TYPE, T&B STAKON OR APPROVED EQUAL. THE CONDUCTORS TERMINATING AT EACH WIRED OUTLET SHALL BE LEFT NOT LESS THAN 8" LONG AT THEIR OUTLET FITTINGS TO FACILITATE INSTALLMENT OF DEVICES OF FIXTURES. FRICTION AND RUBBER TAPE CONFORM TO FEDERAL SPECIFICATIONS HH-T-11 AND HH-T-111. PLASTIC ELECTRICAL TAPE SHALL BE SCOTCH #33+ OR APPROVED EQUAL.

TYPE MC CABLE SHALL BE FORMED FROM CONTINUOUS LENGTH OF SPIRALLY WOUND, INTERLOCKED ZINC-COATED OR GALVANIZED (INSIDE & OUTSIDE) STRIP STEEL. ALL CONDUCTORS SHALL BE RATED FOR 90 DEG. C. MINIMUM. PROVIDE WITH FULL PARITY SIZED GREEN INSULATED EQUIPMENT GROUND CONDUCTOR. PROVIDE COMPATIBLE STEEL FITTINGS WITH INTEGRAL RED PLASTIC INSULATED THROAT BUSHINGS, COMPLIANT WITH NEC 350-5. CABLES SHALL BE 90 DEG. C. RATED WITH ALL COMPONENTS AND FITTINGS LISTED FOR GROUNDING AND COMPLIANT WITH THE FOLLOWING.

A) UL STD.4 AND UL STD. 83.
b) ANSI E119 AND E814.
c) NEC ARTICLES 250 AND 333.

TYPE MC CABLE MAY BE UTILIZED ONLY IF NEC APPROVED AND IF APPROVED BY LOCAL AUTHORITY HAVING JURISDICTION AND IF INCLUDED IN THE LIMITED APPLICATIONS DEFINED BELOW.

1) ALL NEW 15 OR 20 AMPERE BRANCH CIRCUIT WORK. THIS SHALL APPLY ONLY UNDER ALL OF THE FOLLOWING CIRCUMSTANCES AND CONDITIONS.

a) ONLY WHERE CONCEALED (ALL EXPOSED WIRING SHALL BE INSTALLED IN CONDUIT).

b) ROUTE ALL CABLES PERPENDICULAR AND PARALLEL TO THE BUILDING ARCHITECTURAL LINES/SURFACES/STRUCTURAL MEMBERS, KEEPING OFFSETS TO A MINIMUM AND FOLLOWING SURFACE CONTOURS WHERE POSSIBLE. MAINTAIN A UNIFORM ELEVATION FOR ALL CABLE RUNS WHEREVER POSSIBLE. ALL CABLES SHALL BE SUPPORTED/ANCHORED AT MAXIMUM 4 FOOT INTERVALS AND WITHIN 12" OF BOX OR OUTLET AND SHALL NOT SAG. INSTALL CABLES IN A MANNER THAT PREVENTS OVERHEATING. CABLES SHALL BE FASTENED DIRECTLY TO THE STRUCTURE USING FACTORY CLAMPS/CLIPS SPECIFICALLY DESIGNED FOR THE RESPECTIVE CABLE (CADDY OR EQUAL).

c) ONLY WHERE INSTALLED FOR NORMAL UTILITY CIRCUITS; ALL WIRING FOR EMERGENCY SYSTEM FEEDERS AND RECEPTACLE BRANCH CIRCUITS SHALL BE IN CONDUIT (EMT), NO EXCEPTIONS.

11. COMMUNICATION TECHNOLOGY SYSTEMS

GENERAL

VOICE AND DATA CABLES SHALL BE INSTALLED IN "J-HOOK" STYLE PATHWAY WHERE INDICATED ON DRAWINGS. ALL OTHER WIRING/CABLES OF VOICE/DATA SYSTEMS AND ALL OTHER SYSTEMS SHALL BE INSTALLED IN CONDUIT, 3/4" MINIMUM. VERIFY ROUTE FOR "J-HOOK" WORK ABOVE CEILING IN FIELD IN ADVANCE WITH OWNER.

PROVIDE OUTLET BOXES AND CONDUIT STUBS FOR SYSTEMS AS INDICATED ON DRAWINGS. CONDUIT STUBS SHALL BE TURNED OUT IN JOIST SPACE AND, WHERE LOCATED IN AREAS WITH DRYWALL CEILINGS, SHALL BE EXTENDED TO THE NEAREST AREA WITH NO CEILING OR WITH ACOUSTICAL TILE CEILING. PROVIDE CONDUIT, BRIDLE RINGS AND RACEWAYS AS REQUIRED. ALL CONDUITS SHALL BE PROVIDED WITH SWEEP "L" 90'S AND INSULATED THROAT FITTINGS (OR BUSHINGS).

TYPICAL OUTLETS SHALL CONSIST OF A FLUSH WALL MOUNTED 4" SQUARE X 2-1/8" DEEP BOX WITH A DOUBLE GANG PLASTER RING. MAXIMUM CONDUIT FILL FOR NEW WORK SHALL BE 40%, BASED ON MANUFACTURE'S PUBLISHED DATA OF CABLE OUTSIDE DIAMETER.

CABLE, TERMINATIONS, JACKS, LABELING, HARDWARE, SHALL BE PROVIDED BY A CERTIFIED COMMUNICATION TECHNOLOGY CONTRACTOR. CABLING SYSTEM SHALL BE PROVIDED AS REQUIRED FOR A TURNKEY, COMPLETE WORKING SYSTEMS.

DETERMINE EXACT LOCATIONS OF COMMUNICATION TECHNOLOGY EQUIPMENT, EQUIPMENT OUTLETS, ETC. IN FIELD. USE CAUTION NOT TO EXCEED THE ALLOWED BENDING RADIUS FOR RESPECTIVE CABLES AND NOT TO COMPROMISE THE INTEGRITY OF THE CABLES DURING INSTALLATION BY PULLING TIE-WRAPS TOO TIGHTLY, DAMAGING CABLES, ETC. RACEWAY/CABLING BENDING RADII SHALL BE MINIMUM AS DIRECTED BY CABLE MANUFACTURER. USE PULLING COMPOUND OR LUBRICANT, WHERE NECESSARY; COMPOUND MUST NOT DETERIORATE CONDUCTOR OR INSULATION. NEATLY DRESS ALL CABLE WORK. WORK SHALL BE INSTALLED IN A MANNER WHICH RESULTS IN MAINTAINING A MINIMUM DISTANCE OF 24 INCHES FROM FEEDER/BRANCH CIRCUIT RACEWAYS AND FROM ANY BALLASTED LIGHTING FIXTURE.

PROVIDE COLOR CODED JACKETS TO IDENTIFY RUNS OF DIFFERENT SYSTEMS. NEATLY ROUTE CABLES PARALLEL AND PERPENDICULAR TO BUILDING ARCHITECTURAL LINES. GROUP CABLES BY SYSTEM TYPE WHEREVER POSSIBLE. VERIFY EXACT LOCATIONS OF TELEPHONE SWITCH, DATA SERVER(S), HEAD-END EQUIPMENT, EQUIPMENT OUTLETS, ETC. IN FIELD.

REVIEW ALL TERMINATION AND LABELING REQUIREMENTS WITH OWNER IN ADVANCE. ALL CABLE SHALL BE PROVIDED WITH PERMANENT ADHESIVE LABELING IDENTIFICATION BY THIS CONTRACTOR. PROVIDE TRANSPARENT ADHESIVE COVERINGS OVER EACH LABEL, WRAPPED AROUND THE LABELS AT LEAST TWO TIMES. THE LONG AXIS OF THE LABELS SHALL INSTALLED BE PARALLEL TO THE LONG AXIS OF THE RESPECTIVE CABLE ASSEMBLIES. LABELS SHALL BE APPROXIMATELY 1-1/2" LONG BY 3/8" HIGH.

INSTALL POWER CABLES IN A MANNER WHICH PREVENTS OVER-HEATING. OTHERWISE, WHEREVER POSSIBLE, BUNDLE CABLES OF THE SAME SYSTEM TOGETHER. ALSO PROVIDE COLOR CODED JACKETS, OR OTHER APPROVED LABELLING/IDENTIFICATION METHOD, TO IDENTIFY RUNS OF DIFFERENT SYSTEMS.

ALL CABLES WHICH ARE NOT ROUTED IN CONDUIT SHALL BE NEATLY BUNDLED, SECURED AT FOUR FOOT INTERVALS AND IDENTIFIED AT TEN FOOT INTERVALS. WHEREVER POSSIBLE, BUNDLE CABLES OF THE SAME SYSTEM TOGETHER. PROVIDE ADDITIONAL WALL OUTLET BOXES AND ADDITIONAL WHIPS AS/IF REQUIRED AT SYSTEMS FURNITURE TO ACHIEVE SAME.

"J-HOOK" PATHWAYS

CABLE DISTRIBUTION BRIDLE RINGS SHALL BE EQUAL TO CADDY #4BRT64 OR MONO-SYSTEMS INC. "THE HOOK" (MINIMUM 4" DIAMETER OR 4" SQUARE USABLE INTERNAL AREA) CONSTRUCTED OF ALUMINUM OR CORROSION RESISTANT STEEL WITH ROLLED EDGES OR EQUIVALENT TO PREVENT DAMAGE TO CABLE JACKETS AND INSULATION. PROVIDE SPLITS OR OPENINGS SO THAT CABLES CAN BE LAID IN THE RINGS RATHER THAN THREADED THROUGH. PROVIDE MAXIMUM 30% FILL (IN CROSS SECTION), BASED ON OUTSIDE DIAMETER OF CABLES. ACCORDINGLY, PROVIDE MULTIPLE SETS OF RINGS ALONG ANY ROUTES AS/IF REQUIRED.

PROVIDE RINGS AT FOUR FOOT INTERVALS AND AT ALL OFFSETS. ROUTE RINGS THROUGH CORRIDORS AND SIMILAR OPEN AREAS WHEREVER POSSIBLE TO MINIMIZE WALL PENETRATIONS. SECURELY ANCHOR (MECHANICAL - NOT ADHESIVE) ALL RINGS DIRECTLY TO STRUCTURAL COMPONENTS OF THE BUILDING. RINGS SHALL NOT BE ANCHORED TO DUCTWORK, CONDUIT, PIPING, FIXTURES, EQUIPMENT, CEILING SUPPORTS, ETC. ALL RINGS SHALL BE FULLY AND READILY ACCESSIBLE AFTER INSTALLATION. NEATLY ROUTE BRIDLE RING PATHS PARALLEL AND PERPENDICULAR TO BUILDING ARCHITECTURAL LINES AND AT A CONSISTENT ELEVATION WHEREVER POSSIBLE.

ROUTE ALL BRIDLE RING PATHS AND CABLES PERPENDICULAR AND PARALLEL TO THE BUILDING ARCHITECTURAL LINES, KEEPING OFFSETS TO A MINIMUM. INSTALL BRIDLE RINGS IN A UNIFORM PLANE/ELEVATION WHEREVER POSSIBLE, KEEPING VERTICAL OFFSETS TO AN ABSOLUTE MINIMUM. PRIOR TO INSTALLATION, SUBMIT SCALED COORDINATION DRAWINGS SHOWING ALL PROPOSED ROUTING AND RING LOCATIONS FOR REVIEW BY OWNER. KEEP OFFSETS TO AN ABSOLUTE MINIMUM. BRIDLE RING PATHS SHALL BE ROUTED SO THAT A MINIMUM OF 24" EXISTS BETWEEN ANY CABLES AND ANY EMI SOURCE SUCH AS BALLASTS, MOTORS, POWER WIRING, ETC.

12. OUTLET, JUNCTION AND SWITCHBOXES

GANG TYPE OUTLET BOXES SHALL NOT BE USED. THE OUTLET BOX LOCATIONS INDICATED ON DRAWINGS SHALL BE CONSIDERED APPROXIMATE, AND THEREFORE, IT SHALL BE INCUMBENT UPON THIS CONTRACTOR TO STUDY THE GENERAL CONSTRUCTION WITH RELATION TO SPACES AND EQUIPMENT SURROUNDING EACH OUTLET. ALL OUTLET, SWITCH AND JUNCTION BOXES SHALL BE MADE OF CODE GALVANIZED STEEL COMPLETE WITH RINGS AND SCREW COVER PLATES AND LOCATED WHERE SHOWN AND NOTED ON DRAWINGS. WHERE CONDUIT IS CONCEALED, BOXES SHALL NOT BE LESS THAN 4" SQUARE X 1-1/2" DEEP. ALL BOXES SHALL BE EQUIPPED WITH PROPER COVERS TO BRING FLUSH WITH FINISHED WALL SURFACE.

WHERE OUTLET BOXES OCCUR IN BLOCK, CINDER, OR CONCRETE BLOCK, FACING TILE OR OTHER MATERIAL WHERE SUCH MATERIALS FORM THE FINISHED WALL SURFACE, THE OPENING FOR THE BOX SHALL BE CUT NEATLY AND OF THE SIZE THAT THE COVER PLATE WILL COVER ALL PARTS OF THE OPENING. CONDUIT SHALL BE USED ON EXPOSED RACEWAYS. IN GENERAL, JUNCTION BOXES SHALL BE FURNISHED AND REQUIRED BY THE NATIONAL ELECTRIC CODE, OF THE PROPER SIZES, AND SHALL BE CONSTRUCTED OF #12 GAUGE STEEL WITH REMOVABLE FRONT FASTENED ON WITH COUNTER SUNK HEAD SCREWS OR OTHER APPROVED MEANS. FOR SPECIAL APPLICATION, JUNCTION BOXES SHALL BE NOTED, DETAILED AND/OR SIZED ON THE DRAWINGS OR IN THE FIELD AS REQUIRED.

WHERE DRYWALL CEILINGS ARE USED, THE ELECTRICAL CONTRACTOR SHALL NOT INSTALL JUNCTION BOXES ABOVE THE CEILING IN INACCESSIBLE LOCATIONS. FIELD COORDINATE WITH THE CONSTRUCTION MANAGER PRIOR TO ROUGH-IN TO AVOID ANY CONFLICTS. JUNCTION BOXES ABOVE LAY-IN CEILINGS ARE ACCEPTABLE.

13. HEIGHT OF BOXES

PRIOR TO ROUGH-IN, VERIFY ALL BOX/DEVICE MOUNTING HEIGHTS AND LOCATIONS IN FIELD WITH OWNER'S REPRESENTATIVE RELATIVE TO EQUIPMENT BEING SERVED AND RELATIVE TO EXISTING CONDITIONS WHERE APPLICABLE. IN GENERAL, WHERE NOT LOCATED AT COUNTER AREAS, THE HEIGHT OF BOXES FROM FINISHED FLOOR TO CENTER OF BOXES SHALL BE AS FOLLOWS, UNLESS OTHERWISE NOTED ON PLANS:

SWITCHES	4'0"	RECEPTACLES	1'3"
TELEPHONE OUTLETS (WALL PHONE)	4'0"	TELEPHONE OUTLETS (DESK PHONE)	1'3"
FIRE ALARM MANUAL PULL STATIONS	4'0"	DATA CABLE OUTLETS	1'3"
FIRE ALARM A/V ALARMS	6'8"		
DEVICES AT SPECIAL HEIGHTS	AS DIRECTED IN FIELD.		

14. WIRE AND CABLE

FURNISH AND INSTALL ALL NECESSARY CABLE OF THE SIZE AND TYPE INDICATED ON THE DRAWINGS OR SPECIFIED HEREINAFTER. ALL WIRE SHALL BE COPPER. ALL WIRING SHALL BE NEW. NO WIRE SMALLER THAN #12 AWG SHALL BE INSTALLED UNLESS SPECIFICALLY DESIGNATED. USE OF #14 COLOR CODED WIRE WILL BE ALLOWED FOR CONTROL CIRCUITS ONLY. ALL WIRING SHALL BE IN CONDUIT UNLESS SPECIFICALLY INDICATED OTHERWISE HEREIN. ALL CONDUCTORS SHALL BE COPPER. PROVIDE STRANDED CONDUCTORS FOR ALL SIZES UNLESS INDICATED OTHERWISE.

PROVIDE THHN/THWN INSULATION FOR ALL CONDUCTORS SIZE 500 MCM (KCMIL) AND LARGER, AND NO. 8 AWG AND SMALLER. FOR ALL OTHER SIZES PROVIDE THW OR THHN/THWN INSULATION AS APPROPRIATE FOR THE LOCATIONS WHERE INSTALLED. PROVIDE COLOR CODED INSULATION/JACKET FOR PHASE IDENTIFICATION. ALL WIRES SHALL BE RATED AT 600 VOLTS.

PROVIDE TYPE XHHW-2 INSULATION FOR ALL WIRING SUBJECT TO MOISTURE, FOR ALL WIRING BELOW GRADE AND FOR ALL WIRING FED FROM ISOLATED POWER SYSTEMS.

KEEP CONDUCTOR SPLICES TO MINIMUM. PULL CONDUCTORS SIMULTANEOUSLY WHERE MORE THAN ONE IS BEING INSTALLED IN SAME RACEWAY. USE UL LISTED PULLING COMPOUND OR LUBRICANT, WHERE NECESSARY. INSTALL SPLICE AND TAP CONNECTORS WHICH POSSESS EQUIVALENT OR BETTER MECHANICAL STRENGTH AND INSULATION RATING THAN CONDUCTORS BEING SPLICED. USE SPLICE AND TAP CONNECTORS WHICH ARE COMPATIBLE WITH CONDUCTOR MATERIAL. INCREASE WIRE SIZES PER NEC TO OFFSET VOLTAGE DROP AS/IF REQUIRED.

15. WIRING DEVICES

DEVICE COLORS:

DEVICES SHALL BE WHITE UNLESS OTHERWISE SPECIFIED IN CONTRACT DOCUMENTS..

SPECIFICATION GRADE RECEPTACLES:

DUPLEX 120V RECEPTACLES SHALL BE EQUAL TO LEVITON #5362 SERIES (NEMA 5-20R).

CONTROLLED DUPLEX 120V RECEPTACLES SHALL BE EQUAL TO LEVITON #5362-S2 SERIES (NEMA 5-20R)

GROUND FAULT CIRCUIT INTERRUPTER DUPLEX 120V RECEPTACLES SHALL BE EQUAL TO LEVITON #8899 SERIES (NEMA 5-20R).

DUPLEX ISOLATED GROUND 120V RECEPTACLES SHALL BE EQUAL TO LEVITON #5362-IG. SINGLE ISOLATED GROUND 120V RECEPTACLES SHALL BE EQUAL TO LEVITON #5361-IG (NEMA 5-20R).

SPECIAL PURPOSE RECEPTACLES SHALL BE OF THE SIZE, TYPE AND MANUFACTURER AS INDICATED ON THE PLANS OR AS DETERMINED IN FIELD.

SWITCHES:

SINGLE POLE 120/277 SWITCHES SHALL BE EQUAL TO LEVITON #1221-2 SERIES. PILOT LIGHT SWITCHES SHALL BE EQUAL TO 1221-PL

DOUBLE-POLE 120/277 SWITCHES SHALL BE EQUAL TO LEVITON #1222-2 SERIES; PILOT LIGHT SWITCHES SHALL BE EQUAL TO 1222-PL

3-WAY 120/277 SWITCHES SHALL BE EQUAL TO LEVITON #1223-2 SERIES; PILOT LIGHT SWITCHES SHALL BE EQUAL TO 1223-PL

OCCUPANCY SENSOR DEVICES SHALL BE AS SPECIFIED IN CONTRACT DOCUMENTS.

WALL PLATES:

PROVIDE WALLPLATES WITH ENGRAVED LEGENDS WHERE INDICATED ON DRAWINGS AND/OR WHERE REQUIRED PER ELECTRICAL IDENTIFICATION SECTION. ALL DEVICE WALLPLATES SHALL BE STANDARD SIZE; "MIDWAY", "OVERSIZED" ("JUMBO") OR "EXTRA DEEP" WALLPLATES SHALL NOT BE ACCEPTABLE. CONSTRUCT WITH METAL SCREWS FOR SECURING PLATES TO DEVICES; SCREW HEADS COLORED TO MATCH FINISH OF PLATES. WALLPLATES COLOR TO MATCH DEVICE, WITH BEVELED EDGES, EQUAL TO LEVITON COMMERCIAL SPECIFICATION GRADE NYLON UNLESS OTHERWISE SPECIFIED IN CONTRACT DOCUMENTS.

16. SUPPORTS, INSERTS, CUTTING AND PATCHING

THIS CONTRACTOR SHALL DO ALL CUTTING AND PATCHING REQUIRED FOR THE ADMISSION OF HIS WORK. ANY DAMAGE DONE BY THIS CONTRACTOR TO THE BUILDING DURING THE PROGRESS OF HIS WORK SHALL BE MADE GOOD AT HIS OWN EXPENSE. ALL PATCHING SHALL BE DONE BY A SKILLED CRAFTSMAN IN THAT RESPECTIVE TRADE. IT SHALL BE THE RESPONSIBILITY OF THIS CONTRACTOR TO SUPERVISE THE INSTALLATION OF, AND PAY FOR ALL ADDITIONAL MEMBERS, WOOD OR METAL AND LABOR WHICH MAY BE REQUIRED TO SUPPORT ANY TYPE OF PERMANENT OR TEMPORARY ELECTRICAL APPARATUS EMPLOYED IN THE EXECUTION OF THIS CONTRACTOR'S WORK.

SEAL ALL NEW FLOOR, CEILING, WALL, SLAB, ETC. PENETRATIONS TO MATCH OR EXCEED EXISTING/NEW ASSEMBLY FIRE RATINGS. PROVIDE SLEEVE SEALS FOR ALL SLEEVES; PROVIDE SLEEVES FOR ALL PENETRATIONS. VERIFY REQUIREMENTS IN FIELD. ALL PENETRATIONS OF FIRE-RATED OR SMOKE-RATED WALLS, FLOORS, CEILINGS, ETC. SHALL BE SEALED IMMEDIATELY AFTER RACEWAYS ARE INSTALLED. ALL NEW ELECTRICALLY RELATED WORK SHALL BE SUPPORTED DIRECTLY FROM BUILDING STRUCTURAL MEMBERS. NEW ELECTRICALLY RELATED WORK SHALL NOT BE SUPPORTED FROM DUCTWORK, DUCTWORK HANGERS, CEILING SUPPORTS, EXISTING CONDUIT SUPPORTS, ETC. ALL CONDUITS (AND CABLE ASSEMBLIES, WHERE APPLICABLE) SHALL BE ROUTED PARALLEL TO BUILDING STRUCTURAL MEMBERS. ANY AND ALL NONCOMPLIANT WORK INSTALLED BY THE ELECTRICAL CONTRACTOR SHALL BE REMOVED AND REINSTALLED TO THE SATISFACTION OF THE OWNER'S REPRESENTATIVE AND THE ENGINEER, AT THE EXPENSE OF THE ELECTRICAL CONTRACTOR.

17. LIGHTING FIXTURES

ALL SURFACE MOUNTED BALLASTED FIXTURES SHALL BE MOUNTED WITH AIR SPACES BETWEEN FIXTURE AND SURFACE PER LATEST EDITION OF NFPA/NEC. ALL RECESSED FIXTURES SHALL BE EQUIPPED WITH NECESSARY PLASTER FRAMES AND SURFACE TRIM. ALL RECESSED FLUORESCENT FIXTURES SHALL BE EQUIPPED AND SUITABLY CONSTRUCTED TO OPERATE WITH "P" RATED BALLASTS. ALL RECESS MOUNTED INCANDESCENT AND H.I.D. FIXTURES SHALL HAVE UL APPROVED THERMAL PROTECTION PER LATEST EDITION OF NFPA/NEC. ALL JUNCTION BOXES AND SERVICEABLE COMPONENTS (BALLASTS, THERMAL PROTECTION DEVICES, FUSES, ETC.) FOR RECESSED FIXTURES SHALL BE READILY ACCESSIBLE FOR SERVICE OR REPLACEMENT FROM BELOW THE CEILING, WITHOUT REMOVING ANY CEILING COMPONENTS (OTHER THAN TILES).

WHERE PLASTER FRAMES ARE INFERRED FOR LIGHTING FIXTURES (EITHER BY NARRATIVE OR BY CATALOG NUMBER OR BY APPLICATION) THE ACTUAL FUNCTION SHALL BE TAKEN TO MEAN FOR MOUNTING WITHIN GYPSUM BOARD OR SIMILAR TYPE CEILING SYSTEM (I.E. NOT WITHIN WET PLASTER CEILING SYSTEM).

ALL LIGHTING FIXTURES UTILIZED FOR EMERGENCY EGRESS LIGHTING SHALL BE CONNECTED AHEAD OF SWITCHING. ALL BALLASTS OF THE SAME TYPE SHALL BE OF THE SAME MANUFACTURER AND CATALOG NUMBER. ALL LAMPS OF THE SAME TYPE SHALL BE OF THE SAME MANUFACTURER AND CATALOG NUMBER.

PROVIDE LOW ENERGY SOLID STATE RAPID START ELECTRONIC FLUORESCENT LAMP BALLASTS (LESS THAN OR EQUAL TO 20% THD) SPECIFICALLY DESIGNED FOR OPERATING LAMP TYPES INDICATED. FLUORESCENT BALLASTS SHALL BE MOTOROLA OR ADVANCE EQUAL.

ALL FIXTURES SHOWN ON DRAWINGS WITH MULTI-LEVEL SWITCHING SHALL BE PROVIDED WITH MULTIPLE BALLASTS TO ACCOMMODATE SAME. ALL OTHER FIXTURES MAY CONTAIN EITHER SINGLE BALLASTS OR MULTIPLE BALLASTS AS REQUIRED TO FULFILL REQUIRED FUNCTION AND AS REQUIRED TO COMPLY WITH CONSTRUCTION SCHEDULE.

INCANDESCENT LAMPS SHALL BE SYLVANIA OR PHILIPS, LONG LIFE TYPE (3000 HOURS). ALL INCANDESCENT LAMPS SHALL BE INSIDE FROSTED UNLESS SPECIFICALLY DIRECTED OTHERWISE. PROVIDE SOCKET ADAPTERS/EXTENDERS IF REQUIRED FOR ACCOMMODATING THE SPECIFIED LAMP.

FLUORESCENT LAMP COLOR TEMPERATURE SHALL BE 3500K (VERIFY).

COMPACT FLUORESCENT TWIN TUBE/DUAL TWIN TUBE LAMPS SHALL BE OSRAM OR PHILIPS, 82 CRI, MINIMUM 10,000 HOURS RATED. LONG FLUORESCENT TWIN TUBE LAMPS SHALL BE OSRAM OR PHILIPS, 82 CRI, 3150 INITIAL LUMENS, MINIMUM 20,000 HOURS RATED.

F32T8 FLUORESCENT LAMPS SHALL BE RAPID START, ENERGY SAVING TYPE, MINIMUM 75 CRI, MINIMUM 2850 INITIAL LUMENS AND MINIMUM 20,000 HOURS RATED. LAMPS SHALL BE SYLVANIA, OSRAM OR PHILIPS, EQUAL TO SYLVANIA #FO32/RS.

ALL SURFACE AND RECESSED CEILING FIXTURES INSTALLED ON GRID OR TILE CEILINGS SHALL BE INSTALLED TO AGREE WITH MODULE OF CEILING EITHER DISPLACING A TILE, OR UNIT ON CENTER OF TILE, OR CENTERED ON GRID LINES.

PROVIDE FIXTURES AND/OR FIXTURE OUTLET BOXES WITH HANGERS TO PROPERLY SUPPORT FIXTURE WEIGHT. ALL LIGHTING FIXTURES INSTALLED IN OR ON SUSPENDED CEILING SYSTEMS SHALL BE ANCHORED DIRECTLY TO THE BUILDING STRUCTURAL SYSTEM ABOVE (ANCHORED PER NEC). SUCH ANCHORING SHALL BE INDEPENDENT OF THE CEILING SUPPORT SYSTEM. ALL FIXTURES SHALL BE INSTALLED PLUMB AND LEVEL. SUPPORT SURFACE MOUNTED FIXTURES GREATER THAN 2 FEET IN LENGTH AT A POINT IN ADDITION TO THE OUTLET BOX FIXTURE STUD.

REPLACE DEFECTIVE LAMPS FOR A PERIOD OF ONE YEAR FOLLOWING THE TIME OF SUBSTANTIAL COMPLETION. WHERE USED FOR TEMPORARY LIGHTING PRIOR TO TIME OF SUBSTANTIAL COMPLETION, REPLACE ALL INCANDESCENT LIGHTING FIXTURE LAMPS, AS WELL AS ANY LAMPS WHICH ARE DEFECTIVE, DAMAGED OR BURNED OUT.

FOR ALL EXISTING FIXTURES WHICH ARE SCHEDULED FOR REUSE, REMOVE FROM EXISTING CEILINGS DURING DEMOLITION; PROTECT DURING CONSTRUCTION; CLEAN, SERVICE (IF REQUIRED), RE-LAMP (WITH LAMPS TO MATCH BUILDING STANDARD OR PER THIS SECTION AS NOTED) AND REINSTALL AT LOCATIONS INDICATED.

FOR ALL EXISTING FIXTURES WHICH ARE SCHEDULED TO BE REMOVED AND TURNED OVER TO OWNER, THE FIXTURES SHALL BE DISCONNECTED, CAREFULLY REMOVED AND TURNED OVER TO OWNER. TRANSFER SUCH FIXTURES TO STORAGE AREA AS DIRECTED IN FIELD.

18. MECHANICAL EQUIPMENT

PROVIDE ALL CONDUIT AND OUTLET BOXES AS REQUIRED FOR ALL CONTROL WIRING AND THERMOSTATS. FURNISH AND INSTALL POWER WIRING AND MAKE LINE CONNECTIONS TO ALL HEATING, VENTILATING AND AIR CONDITIONING EQUIPMENT. ELECTRICAL CONTRACTOR SHALL EXAMINE THE APPROVED DRAWINGS OF ALL BRANCHES AND SHALL WIRE AND CONNECT ALL MOTORS, DISCONNECTS, CONTROL DEVICES AND OTHER ITEMS REQUIRING ELECTRICITY FOR OPERATION. THIS CONTRACTOR SHALL MAKE THE NECESSARY ELECTRICAL CONNECTIONS BETWEEN THE SPECIFIED EQUIPMENT AND THE JUNCTION BOX NEAR EQUIPMENT WITH FLEXIBLE METALLIC CONDUIT AND MATCHED CONNECTORS. NO FLEXIBLE CONDUIT SHALL BE EXPOSED IN FINISHED ROOMS. EACH MOTOR SHALL HAVE DISCONNECT SWITCH OR MANUAL STARTER INSTALLED BY THIS CONTRACTOR AHEAD OF MOTOR OR MOTOR MAGNETIC STARTER. THE ELECTRICAL CONTRACTOR SHALL PROVIDE CONTROL AND INTERLOCK WIRING AS SPECIFICALLY INDICATED ON THE DRAWINGS. ALL OTHER CONTROL WIRING REQUIRED FOR OPERATION OF THE SYSTEMS SHALL BE PROVIDED BY THE HEATING CONTRACTOR.

19. ELECTRICAL DISTRIBUTION EQUIPMENT

DISCONNECTS, STARTERS & FUSES:

SUBJECT TO COMPLIANCE WITH REQUIREMENTS, PROVIDE EQUIPMENT OF ONE OF THE FOLLOWING (FOR EACH TYPE AND RATING):

SQUARE D CO.

DISCONNECT SWITCHES SHALL BE EQUAL TO SQUARE D TYPE HD. ALL SAFETY SWITCHES/DISCONNECTS SHALL BE HEAVY DUTY, SAFETY TYPE, QUICK MAKE AND QUICK BREAK AND EXTERNALLY OPERATED. UNLESS NOTED OTHERWISE ON DRAWINGS OR DIRECTED OTHERWISE IN FIELD, ALL DISCONNECT SWITCHES SHALL BE FUSED. UNLESS NOTED OTHERWISE ON DRAWINGS OR DIRECTED OTHERWISE IN FIELD, BRACE ALL DISCONNECT SWITCHES FOR 200,000 A.I.C. PROVIDE HEAVY-DUTY SWITCHES, WITH FUSES OF CLASSES AND CURRENT RATINGS INDICATED AND UL LISTED FOR USE AS SERVICE EQUIPMENT UNDER UL STANDARD 98 OR 869. SEE SECTION "FUSES" FOR SPECIFICATIONS. WHERE CURRENT LIMITING FUSES ARE INDICATED, PROVIDE SWITCHES WITH NON-INTERCHANGEABLE FEATURE SUITABLE ONLY FOR CURRENT LIMITING TYPE FUSES. INSTALL DISCONNECT SWITCHES WITHIN SIGHT OF CONTROLLER POSITION UNLESS OTHERWISE INDICATED.

EXCEPT AS OTHERWISE INDICATED, PROVIDE MOTOR STARTERS AND ANCILLARY COMPONENTS; OF TYPES, SIZES, RATINGS AND ELECTRICAL CHARACTERISTICS INDICATED, WHICH COMPLY WITH MANUFACTURER'S STANDARD MATERIALS, DESIGN AND CONSTRUCTION IN ACCORDANCE WITH PUBLISHED PRODUCT INFORMATION, AND AS REQUIRED FOR COMPLETE INSTALLATIONS. ALL STARTERS SHALL BE EQUIPPED WITH PILOT LIGHTS. ALL STARTERS SHALL BE SIZED ACCORDING TO LOAD BEING SERVED OR AS NOTED ON DRAWINGS, WHICHEVER REQUIREMENT IS LARGER. MANUAL AND MAGNETIC STARTERS THERMAL OVERLOAD ELEMENTS SHALL BE RATED BETWEEN 115% AND 125% FULL LOAD CURRENT OR AS CALLED FOR UNDER NEC. INSTALL AND CONNECT CAPACITORS FURNISHED BY HVAC CONTRACTORS AHEAD OF OVERLOADS WHERE APPLICABLE.

PROVIDE SINGLE-PHASE AC FRACTIONAL HP MANUAL MOTOR STARTERS, OF SIZES AND RATINGS REQUIRED. EQUIP WITH MANUALLY OPERATED QUICK-MAKE, QUICK-BREAK TOGGLE MECHANISMS; AND WITH ONE-PIECE MELTING ALLOY TYPE THERMAL UNITS. EQUIP WITH THERMAL OVERLOAD RELAY WITH FIELD ADJUSTMENT CAPABILITY OF PLUS OR MINUS 10% VARIATION OF NOMINAL OVERLOAD HEATER RATING, FOR PROTECTION OF FRACTIONAL HP MOTORS AS SHOWN ON DRAWINGS. STARTER SHALL BECOME INOPERATIVE WHEN THERMAL UNIT IS REMOVED. PROVIDE STARTERS WITH DOUBLE BREAK SILVER ALLOY CONTACTS, VISIBLE FROM BOTH SIDES OF STARTER; GREEN PILOT LIGHTS, AND SWITCH CAPABLE OF BEING PADLOCKED-OFF. MANUAL STARTERS SHALL BE EQUAL TO THE FOLLOWING.

MANUAL STARTER IN FINISHED AREAS:

SQUARE D #2510 FLUSH MOUNTED, 2-POLE TOGGLE SWITCH TYPE WITH NEON PILOT AND NEMA 1 TYPE B ENCLOSURE FOR FLUSH WALL INSTALLATION.

MANUAL STARTER FOR EXPOSED CONDUIT INSTALLATION:

SQUARE D #8536 SURFACE MOUNTED, 2-POLE TOGGLE SWITCH TYPE WITH NEON PILOT AND NEMA 1 TYPE FG-2P ENCLOSURE FOR SURFACE WALL INSTALLATION.

FUSES:

SUBJECT TO COMPLIANCE WITH REQUIREMENTS, PROVIDE FUSES OF ONE OF THE FOLLOWING. ALL FUSES SHALL BE OF THE SAME MANUFACTURER: BUSSMAN, LITTELFUSE.

EXCEPT AS OTHERWISE INDICATED, PROVIDE FUSES OF TYPES, SIZES, RATINGS, AND AVERAGE TIME-CURRENT AND PEAK LET-THROUGH CURRENT CHARACTERISTICS INDICATED, WHICH COMPLY WITH MANUFACTURER'S STANDARD DESIGN, MATERIALS, AND CONSTRUCTED IN ACCORDANCE WITH PUBLISHED PRODUCT INFORMATION, AND WITH INDUSTRY STANDARDS AND CONFIGURATIONS. FUSES 1 AMPERE THROUGH 600 AMPERES SHALL BE REJECTION TYPE. FUSES 601 AMPERES THROUGH 6000 AMPERES SHALL BE HI-CAP, BOLT TYPE.

PROVIDE FACTORY FUSE IDENTIFICATION LABELS, INSTALLED ON THE INSIDE OF THE DOOR OF EACH SWITCH INDICATING TYPE AND SIZE OF FUSES INSTALLED. FOR TYPES AND RATINGS REQUIRED, FURNISH ADDITIONAL FUSES, AMOUNTING TO 10 PERCENT OF FUSES SUPPLIED, BUT NOT LESS THAN ONE SET OF 3 OF EACH KIND.

EACH FUSE SHALL BE CLEARLY FACTORY MARKED WITH CLASSIFICATION, CHARACTERISTICS, AMPERE RATINGS, VOLTAGE RATINGS, ETC. FUSES SHALL NOT BE SHIPPED INSTALLED IN SWITCHES NOR SHALL THEY BE INSTALLED IN THE EQUIPMENT UNTIL THE EQUIPMENT UNTIL THE EQUIPMENT IS READY TO BE ENERGIZED. ALL FUSES SHALL BE OF THE SAME MANUFACTURER.

PRIOR TO INSTALLING FUSES FOR PROTECTION OF SPECIFIC EQUIPMENT, MOTORS, ETC., VERIFY RECOMMENDED FUSE SIZE/TYPE IN FIELD FROM RESPECTIVE EQUIPMENT MANUFACTURER. IF A CONFLICT IN FUSE SIZE/TYPE RESULTS BETWEEN MANUFACTURER'S RECOMMENDATIONS AND ABOVE SPECIFICATIONS, CONTACT ENGINEER. PROVIDE ALL REQUIRED FUSES UNDER BASE BID. INSTALL FUSES IN FUSED SWITCHES.

CONTACTORS & TIMECLOCKS:

LIGHTING CONTACTORS SHALL BE EQUAL TO SQUARE D "TYPE L" SERIES FOR NON-MOTOR LOADS (I.E. FOR TUNGSTEN & BALLAST LIGHTING AND RESISTANCE HEATING LOADS), ELECTRICALLY OPERATED, ELECTRICALLY HELD, IN NEMA 1 ENCLOSURE, WITH 120V COIL, 2 THROUGH 12-POLE VERSIONS AND CHARACTERISTICS AS INDICATED ON DRAWINGS OR AS REQUIRED. DRY CONTACTS SHALL BE RATED AT 30A, 208V OR 600V AS REQUIRED. VERIFY ALL COIL VOLTAGE RATINGS IN FIELD.

BASIC MULTI-PURPOSE TIME CLOCK SHALL BE EQUAL TO INTERMATIC #T103 24HR MECHANICAL DPST CONTROL OF LOADS UP TO 40A WITH 1 TO 12 ON/OFF OPERATIONS EACH DAY. FOR ENERGY CODE COMPLIANCE OR PER LANDLORD CRITERIA, USE TORK DTS400B TIME CLOCK THAT SHALL BE PROGRAMMABLE 365 DAY, 24 HOUR WITH OVERRIDE CONTROLS. UNIT SHALL BE 4 CHANNEL. PROVIDE ALL REQUIRED EXTERNAL CONTACTORS, RELAYS, ETC. TO RENDER THE CONTROL SYSTEMS FULLY OPERATIONAL. VERIFY ZONE CONTROL REQUIREMENTS IN FIELD PRIOR TO ROUGH-IN. PROVIDE BATTERY BACKUP EXTENDED POWER CARRYOVER. CUSTOM PROGRAMMING SHALL BE CONFIGURED AS SPECIFIED BELOW.

OPERATING HOURS SHALL BE SET AS FOLLOWS:
1. VERIFY WITH LANDLORD AND OWNER FOR EXACT SETTINGS

PANELBOARDS:

SUBJECT TO COMPLIANCE WITH REQUIREMENTS, PROVIDE PANELBOARD PRODUCTS OF THE FOLLOWING (FOR EACH TYPE AND RATING OF PANELBOARD AND ENCLOSURE): SQUARE D COMPANY

PANELS SHALL BE DEAD FRONT, SAFETY TYPE, FURNISHED WITH BRANCH CIRCUIT PROTECTING DEVICES, EQUIPMENT GROUNDING BOX, MAIN BUS AND CABLE LUGS FACTORY ASSEMBLED, WITH ALL COMPONENTS IN PLACE, READY FOR INSTALLATION. CABINET SIZES ARE BASED UPON A 20" WIDE BY 6" DEEP PANEL UNLESS OTHERWISE NOTED. PANELBOARDS SHALL BE EQUIPPED WITH FLUSH TYPE LOCK AND CATCH. ALL LOCKS SHALL BE KEYED ALIKE, AND TWO KEYS ARE TO BE SUPPLIED WITH EACH LOCK.

PANELBOARDS SHALL BEAR UL LABELS FOR THEIR SPECIFIC APPLICATIONS. PANELBOARDS SHALL BE SUITABLE FOR SERVICE VOLTAGE WITH NUMBER OF BRANCH CIRCUITS OF CAPACITY SCHEDULED. UNLESS OTHERWISE INDICATED, PANELBOARDS AND SECTIONS THEREOF, IF ANY, SHALL HAVE MAIN LUGS ONLY OF CAPACITY EQUAL TO, OR GREATER THAN, THE RATING OR SETTING OF THE OVER THE CURRENT PROTECTIVE DEVICE NEXT BACK ON THE LINE. ALL CIRCUIT BREAKER PANELBOARD BUS ASSEMBLIES SHALL BE OF THE DISTRIBUTED (SEQUENCE) BUSSING TYPE THROUGHOUT, SO THAT ANY 2 ADJACENT SINGLE POLE BREAKERS AND/OR SPACES SHALL BE REPLACEABLE BY A 2 POLE INTERNAL COMMON TRIP BREAKER, AND ANY 3 ADJACENT SINGLE POLE BREAKERS AND/OR SPACES SHALL BE REPLACEABLE BY A 3 POLE INTERNAL COMMON TRIP BREAKER, 15 AMP THROUGH 70 AMP INCLUSIVE, WITHOUT DISTURBING ANY OTHER BREAKER. ALL PANELBOARDS SHALL BE UL LISTED AND LABELED FOR USE AS SERVICE ENTRANCE EQUIPMENT WHERE BEING USED AS SUCH.

DISTRIBUTION PANELS SHALL BE SQUARE D I-LINE.

480Y/277 VOLT HIGH VOLTAGE PANELS SHALL BE SQUARE D NF.

208Y/120V LIGHTING AND APPLIANCE PANELBOARDS SHALL BE EQUAL TO SQUARE D NQOD WITH BOLT-ON BRANCH BREAKERS.

ALL BUSSING SHALL BE COPPER. CURRENT CARRYING CONTACT SURFACES SHALL BE SILVER OR TIN PLATED. MAIN BUSES AND CONNECTORS SHALL BE HARD DRAWN COPPER OF 98% CONDUCTIVITY, WITH CURRENT CARRYING CAPACITY TO MAINTAIN ESTABLISHED RISE TESTS AS DEFINED IN UL STANDARD UL 67.

ALL BRANCH CIRCUIT BREAKERS SHALL BE FULL AMBIENT COMPENSATED THERMAL MAGNETIC MOLDED CASE WITH QUICK-MAKE AND QUICK-BREAK ACTION AND POSITIVE HANDLE TRIP INDICATION, BOTH ON MANUAL AND ON AUTOMATIC OPERATION. BREAKERS SHALL BE OF THE OVER-THE-CENTER TOGGLE OPERATING TYPE WITH THE HANDLE GOING TO A POSITION BETWEEN "ON" AND "OFF" TO INDICATE AUTOMATIC TRIPPING.

ALL CIRCUIT BREAKERS SHALL BE FULL SIZE. "TANDEM" OR "SPLIT" BREAKERS SHALL NOT BE PERMITTED. ALL MULTI-POLE BREAKERS SHALL HAVE INTERNAL COMMON TRIP WITH ALL LOAD SIDE BOX LUGS OF ONE BREAKER IN THE SAME GUTTER. ALL CIRCUIT BREAKERS SHALL HAVE SEALED CASES TO PREVENT TAMPERING. ALL 15 AND 20 AMPERE BRANCH CIRCUIT BREAKERS SHALL BE UL LISTED AS SWD (SWITCHING DUTY). ALL 15-70 AMPERE BRANCH CIRCUIT BREAKERS SHALL BE HACR TYPE. ALL GFI CIRCUIT BREAKERS SHALL BE UL CLASS A WITH MAXIMUM THRESHOLD OF 5 MA. ALL BRANCH CIRCUIT BREAKERS SERVING ALL BALLASTED (FLUORESCENT/HID) LIGHTING LOADS SHALL BE HID RATED. PROVIDE 20 (+/-) NON-PADLOCK TYPE BREAKER LOCK-ON DEVICES AND INSTALL ON BRANCH BREAKERS AS DIRECTED IN FIELD (NIGHT LIGHTS, COMPUTERS, SECURITY, ETC.). PROVIDE DETAILED TYPEWRITTEN SCHEDULES FOR ALL PANELBOARDS. CIRCUIT BREAKERS SHALL BE FURNISHED AS SCHEDULED ON THE DRAWINGS OR AS OTHERWISE REQUIRED BASED ON FIELD DETERMINATIONS.

PROVIDE ALL ELECTRICAL DISTRIBUTION RELATED EQUIPMENT WITH APPROPRIATELY BRACED BUSSING AND PROPERLY RATED BREAKERS, FUSES, ETC. FOR THE AVAILABLE FAULT CURRENTS.

IN EXISTING BUILDINGS WHERE FAULT CURRENT VALUES ARE NOT INDICATED ON DRAWINGS, COORDINATE WITH EXISTING "UPSTREAM" DISTRIBUTION EQUIPMENT PROVIDE EQUIPMENT AIC RATINGS TO MEET OR EXCEED SAME.

FILL OUT PANELBOARD'S CIRCUIT DIRECTORY CARD UPON COMPLETION OF INSTALLATION WORK. DIRECTORIES SHALL BE NEATLY TYPEWRITTEN. ALL PANELBOARD DIRECTORIES SHALL INCLUDE THE ACTUAL ROOM NAMES/NUMBERS THAT ARE SELECTED FOR INTERIOR SIGNAGE/DESIGNATION.

TRANSFORMERS:

POWER DISTRIBUTION TRANSFORMERS SHALL BE SQUARE D DRY TYPE WITH COPPER WINDINGS.
PROVIDE 4" HIGH CONCRETE HOUSEKEEPING PAD (WITH CHAMFERED EDGES) FOR ALL FLOOR MOUNTED TRANSFORMERS. INSTALL UNITS ON VIBRATION MOUNTS; COMPLY WITH MANUFACTURER'S INDICATED INSTALLATION METHOD.

DRY-TYPE TRANSFORMERS SHALL BE OF THE ENCLOSED VENTILATED TYPE WITH KVA AND VOLTAGE RATING AS CALLED FOR ON THE DRAWINGS AND WITH 150° CLASS H INSULATION AND MINIMUM OF SIX STANDARD FULL CAPACITY TAPS. SOUND LEVEL SHALL BE LOW AND INSTALLATION SHALL INCLUDE KORFUND OR EQUAL VIBRATION DAMPENING MOUNTS AND FLEXIBLE STEEL CONDUIT FOR PRIMARY AND SECONDARY. LOCATE TRANSFORMER AS NOT TO CAUSE SERVICING OR CLEARANCE DIFFICULTIES OF VIOLATIONS WITH OTHER EQUIPMENT.

20. FIRE ALARM WORK (IF REQUIRED)

IT SHALL BE THE RESPONSIBILITY OF THE FIRE ALARM SYSTEMS CONTRACTOR TO DESIGN AND INSTALL A COMPLETE SYSTEM AS REQUIRED. THE FIRE ALARM SYSTEMS CONTRACTOR SHALL OBTAIN ALL REQUIRED APPROVALS AND PERMITS FROM THE STATE FIRE MARSHALL'S OFFICE AND LOCAL AUTHORITY HAVING JURISDICTION FOR APPROVAL.

FOR THE PURPOSE OF TRADE COORDINATION, THE FIRE ALARM SYSTEM CONTRACTOR SHALL PROVIDE TO THE ELECTRICAL CONTRACTOR A COMPLETE SET OF PLAN DRAWINGS.

FIRE ALARM SYSTEM DEVICES (SMOKE DETECTORS, PULL STATIONS, BELLS, STROBES, ETC.) SHALL BE OF THE SAME MANUFACTURER AS, AND COMPATIBLE WITH, THE EXISTING BUILDING FIRE ALARM SYSTEM. PROVIDE AUXILIARY CONTACTS IF REQUIRED FOR SPECIAL APPLICATIONS. ALL STROBE ALARMS SHALL BE ADA COMPLIANT, MINIMUM 75CD PER ADA.

ALL NEW WIRING SHALL BE INSTALLED IN STRICT ACCORDANCE WITH MANUFACTURER'S REQUIREMENTS AND IN CONDUIT (3/4" MINIMUM). FIRE ALARM SYSTEM WIRING SHALL BE INSTALLED IN A RACEWAY SYSTEM SEPARATE FROM SECURITY SUB-SYSTEM WIRING WHERE/IF APPLICABLE.

THE INSTALLATION SHALL INCLUDE A COMPLETE SYSTEM TEST OF THE EQUIPMENT BY THE LOCAL REPRESENTATIVE OF THE SYSTEM INSTALLED. THIS TEST SHALL BE PERFORMED IN THE PRESENCE OF REPRESENTATIVES OF THE OWNER, ENGINEER, AND LOCAL FIRE DEPARTMENT.

PROVIDE ALL REQUIRED MODIFICATIONS (CARDS, POWER SUPPLIES, HARDWARE, FIRMWARE, SOFTWARE, ETC.) TO THE EXISTING FIRE ALARM SYSTEM AS REQUIRED TO RENDER THE ENTIRE EXTENSION FULLY OPERABLE.

PROVIDE ALL REQUIRED 20A/120VAC POWER AS REQUIRED TO ENERGIZE ALL NEW FIRE ALARM RELATED COMPONENTS. THIS REQUIREMENT APPLIES WHETHER OR NOT SUCH POWER WORK IS SHOWN ON THE DRAWINGS. BRANCH CIRCUITS SERVING FIRE ALARM RELATED EQUIPMENT SHALL BE DEDICATED TO FIRE ALARM RELATED EQUIPMENT ONLY.

SMOKE DETECTOR LOCATIONS SHALL NOT EXCEED THE RATED COVERAGE OF THE DETECTOR AND, IN GENERAL, SHALL BE NO MORE THAN 15 FEET FROM A WALL OR 30 FEET APART. SMOKE DETECTORS SHALL NOT BE INSTALLED WITHIN 3 FEET FROM A SUPPLY AIR DIFFUSER. PROVIDE CONTACT BASES FOR ALL APPLICATIONS WHERE AUXILIARY CONTACTS ARE REQUIRED.

THE AUDIO/VISUAL AND VISUAL-ONLY ALARM INDICATING DEVICES SHALL BE RED ADA-COMPLIANT UNITS (WITH MINIMUM 75 CANDELA ADA-COMPLIANT STROBES) WALL MOUNTED AT 6'8" AS SHOWN ON PLANS. STROBE UNITS SHALL BE SYNCHRONIZED WHEREVER REQUIRED BY ANY AUTHORITY HAVING JURISDICTION, INCLUDING ADAAG. ADDITIONALLY, WHERE REQUIRED BY LOCAL AUTHORITY, THE STROBES MUST MEET ANSI S3.41 TEMPORAL CODE.

THE WATERFLOW SWITCHES, TAMPER SWITCHES AND PRESSURE SWITCHES SHALL BE PROVIDED BY THE SPRINKLER CONTRACTOR. THE ELECTRICAL CONTRACTOR SHALL WIRE AND PROVIDE THE RELATED MONITOR MODULES AS REQUIRED.

PROVIDE ISOLATION MODULES AS REQUIRED TO ISOLATE WIRE TO WIRE SHORTS ON A DATA LOOP TO LIMIT THE NUMBER OF OTHER MODULES OR DETECTORS THAT ARE INCAPACITATED BY THE SHORT CIRCUIT FAULT AND/OR GROUNDS. ISOLATION MODULES SHALL BE PART OF THE SMOKE DETECTOR BASE. THE ISOLATION MODULES SHALL PERMIT THE ENTIRE SYSTEM TO OPERATE INDEPENDENTLY OF THE AREA DISCONNECTED BY THE ISOLATION MODULE DUE TO WIRING FAULTS.

PROVIDE MONITOR MODULES AS REQUIRED TO INTERFACE "NON-INTELLIGENT" DEVICES INTO THE SYSTEM AS SHOWN ON THE DRAWINGS (I.E. SPRINKLER FLOW SWITCHES, TAMPER SWITCHES, ETC.).

PROVIDE CONTROL MODULES FOR ALL AUXILIARY DEVICES INCLUDING ALL SUPERVISED CONTROL FUNCTIONS SUCH AS AIR HANDLER SHUTDOWNS.

EXTERIOR/ROOF MOUNTED DUCT SMOKE DETECTORS SHALL BE IN A NEMA4X ENCLOSURE.

21. DUCT SMOKE DETECTOR

PROVIDE ALL REQUIRED 20A/120VAC POWER AS REQUIRED TO ENERGIZE ALL FIRE ALARM RELATED COMPONENTS. THIS REQUIREMENT APPLIES WHETHER OR NOT SUCH POWER WORK IS SHOWN ON THE DRAWINGS. BRANCH CIRCUITS SERVING FIRE ALARM RELATED EQUIPMENT SHALL BE DEDICATED TO FIRE ALARM RELATED EQUIPMENT ONLY. REFER TO MECHANICAL DRAWINGS FOR REQUIREMENTS.

REGISTRATION SEAL

ARCVISION
INCORPORATED
ARCHITECTURE • ENGINEERING • STORE PLANNING
SAINT LOUIS / DALLAS / LAS VEGAS / ORLANDO
1950 CRAIG ROAD, SUITE 300 ST. LOUIS, MO 63146
PH. (314) 415-2400 FAX (314) 415-2300 www.arcv.com
TEXAS ENGINEERING FIRM #12793

BOOT BARN
1424 TEXAS AVE. CROSSING
COLLEGE STATION TX, 77840
STORE # 161R

REV	DATE	DESCRIPTION	NAME

PROJECT NO: 210627
DRAWN BY: CBS
CHECKED BY: CW
ISSUE DATE: 02/04/22

ELECTRICAL SPECIFICATIONS

E40