Phoenix PDR

March 24th 2017

ASU Arizona State University

Program Overview

- Student Flight Research Opportunity Supported by the NASA USIP Program and the Space Grant Consortium
  - Focus: to develop a 3U CubeSat to study Urban Heat Islands with thermal remote sensing
  - NASA's Role: Provides $200,000 of funding, coordinates launch through the CSLI, aids with high level technical guidance
- Fully undergraduate student-led team
  - Interdisciplinary - 62 students spanning engineering, film, journalism, space exploration and science
- Program award date: April 8, 2016
  - Given an 18 month development time as of September 2016
  - Launch readiness: March 8, 2018
- SRR Held in July 2016, MDR held in November 2016

Introduction

- Goals of this review (PDR):
  - To collect feedback on the current system design, updated since holding the MDR
  - Verify the preliminary design of the 3U CubeSat Chassis
  - Verify an on-track schedule and collect feedback on next steps
  - Justify a purchase of all flight hardware immediately following PDR
- Scope of review
  - Major updates to the system design since MDR
  - Plans for continued testing and requirement verification

Overview

- **Mission Overview** - 1:00 - 1:30pm
  - Introduction & changes since MDR
  - Science objective
  - Concept of operations
  - On-orbit operations & satellite modes
- **Satellite Overview** - 1:30 - 3:05pm
  - System overview
  - Design of subsystems to support the mission objective
  - Discussion of challenges and next steps
- **Budget & Timeline -** 3:05 - 3:15pm
  - Summary of project budget & path to CDR
- **Questions** - 3:15-4:00pm

Overview - Satellite Design

- Subsystem Breakdown
  a. **Systems -** (1:30pm)
     i. System hardware and cabling layouts

  b. Flatsat
     i. Systems verification & flatsat testing

  c. **Payload**
     i. Overview of Tau 2 to support mission operations
     ii. Filter design and calibration
     iii. Thoughts on post-processing and image correction

  d. ADCS
     i. ADCS overview
     ii. Pointing accuracy & orientation control

Overview - Satellite Design

e. **Flight Software**
   i. Flight software design

f. **Ground Software -** (2:00 pm)
   i. Ground software design

g. **Mission Operations**
   i. Operations scheduling and organization
   ii. Ground station operations

h. **Communications**
   i. Subsystem design
   ii. UHF antenna design

i. **EPS** - 2:30pm
   i. Power subsystem design
   ii. Power budget

Overview - Satellite Design

j. **Structures**
   i. Chassis design
   ii. Structural analysis

k. **Thermal** - 3:00pm
   i. Thermal subsystem design
   ii. Thermal analysis of system based on satellite design

List of Acronyms

Acronym	Interpretation
ADCS	Attitude Determination and Control System
ATS	Absolute Time Sequence
BSP	Board Support Package
CCSDS	Consultative Committee for Space Data Systems
cFE	Core Flight Executive
cFS	Core Flight System
ConOps	Concept of Operations
CSLI	CubeSat Launch Initiative
DITL	Day in the Life (Testing)
EPS	Electrical Power Subsystem
GIS	Geographic Information System

Acronym	Interpretation
GS	Ground Station
GSFC	Goddard Space Flight Center
GSS	Ground System Software
ITOS	Integrated Test and Operations System
LCZ	Local Climate Zone
LEO	Low Earth Orbit
LNA	Low Noise Amplifier
MOps	Mission Operations
NASA IV&V	NASA Independent Validation & Verification
OAE	Orbital Average Energy
OBC	Onboard Computer
OSAL	Operating System Abstraction Layer
PSP	Platform Support Package

Acronyms Continued

Acronym	Interpretation
RTOS	Real Time Operating System
RTS	Relative Time Sequence
RX	Receiver
TX	Transmitter
USIP	Undergraduate Student Instrument Project

Mission Overview

Presented By: *Sarah Rogers*

Progress Since MDR

- Current Timeline
  - First iteration of chassis fully designed, will start prototyping immediately after PDR
  - Purchased software development kit, can begin app integration
  - Will begin testing of camera engineering model, with and without filter
  - Planning purchases of flight hardware
- FlatSat Progression
  - Mainly software development
  - Expected power testing beginning after PDR
  - ADCS software - initial simulations with engineering model
- Licensing:
  - Orbit still unknown - 7th in the CSLI launch queue
    - Orbit and L/V should be confirmed by May
  - Starting NOAA remote sensing application (to be complete with launch info)
  - FCC license filed

Changes Since MDR

- Removed deployable lens cap
  - S-Band patch antenna now placed on side to avoid use of “lens cap” design
- Custom 3U Chassis
  - Allows for optimization of volume
  - Current design would require major modifications to off-the-shelf chassis
- Custom UHF monopole antenna designed and modeled
- More focused power, orbit analyses
  - More accurate orbit analyses run in STK to estimate mission operations, primarily imaging
  - Clearer image of expected data return and power consumption
- External GPS unit added
  - Required removal of top 1U solar panel to allocate for GPS antenna
- Added more cities to the list of targets
  - Now 18 cities total, as opposed to 7
  - Cities increased to provide wider spatial distribution over the US
  - Greater access to imaging UHIs at maximum radiance times (noon & 8pm)

Science Objective

Presented By: *Eleanor Dhuyvetter and Gianna-Maria Parisi*

Team members: *Wendy Nessl, Eleanor Dhuyvetter, Gianna-Maria Parisi, Kezman Saboi, Trey Greenwood, Jacob Mason*

Science Background

- Urban Heat Islands (UHI) is a phenomena where cities tend to have warmer air temperatures than the surrounding rural landscapes.
- Surface Urban Heat Island (SUHI) is the phenomena where cities tend to have warmer surface temperature than the surrounding rural surface temperatures.

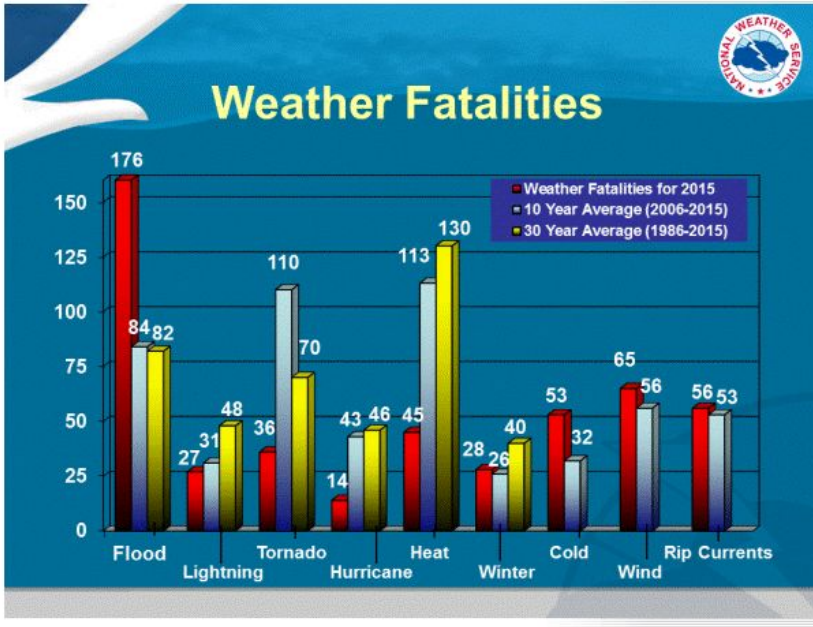

Why SUHI and UHIs are relevant :

- ‘Today, 54 per cent of the world’s population lives in urban areas. Projections show that urbanization combined with the overall growth of the world’s population could add another 2.5 billion people to urban populations by 2050.’ -United Nations
- Heat related deaths

Methodology

- Surface Urban Heat Islands can be studied through Local Climate Zones (LCZs)
  - landscape classification system which groups city structure and materials to characterize and area
  - Hypothesized that LCZ contiguity contributes to the magnitude of the SUHI effect
  - Will study various cities over the US to explore how different spatial layouts of LCZs effect the SUHI

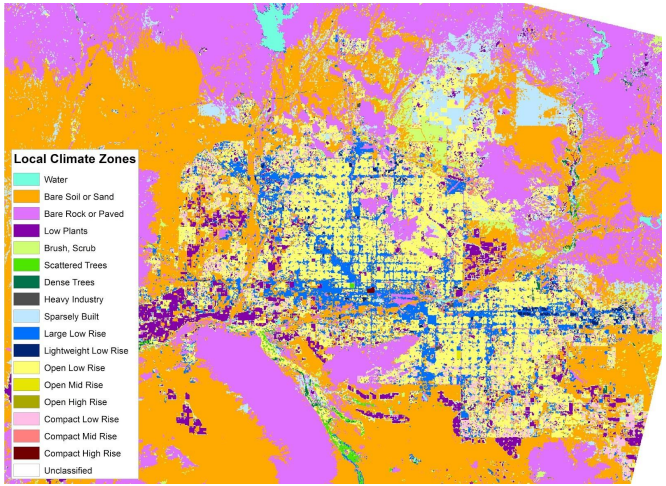

Phoenix, modeled in LCZs
Credit: Dr. Ariane Middel

- Process:
  - We will be categorizing each city using Local Climate Zones
  - We will use the landscape metric FRAGSTAT to obtain contiguity values that measure how connected certain LCZ's are to each other throughout each city
  - ArcMap, a GIS software, will be used to compare these 2 pieces of data with the Infrared images we receive from the satellite to look for spatial patterns that exist across cities
  - The area of the city that we will be studying is defined by the cameras ground footprint

Local Climate Zones

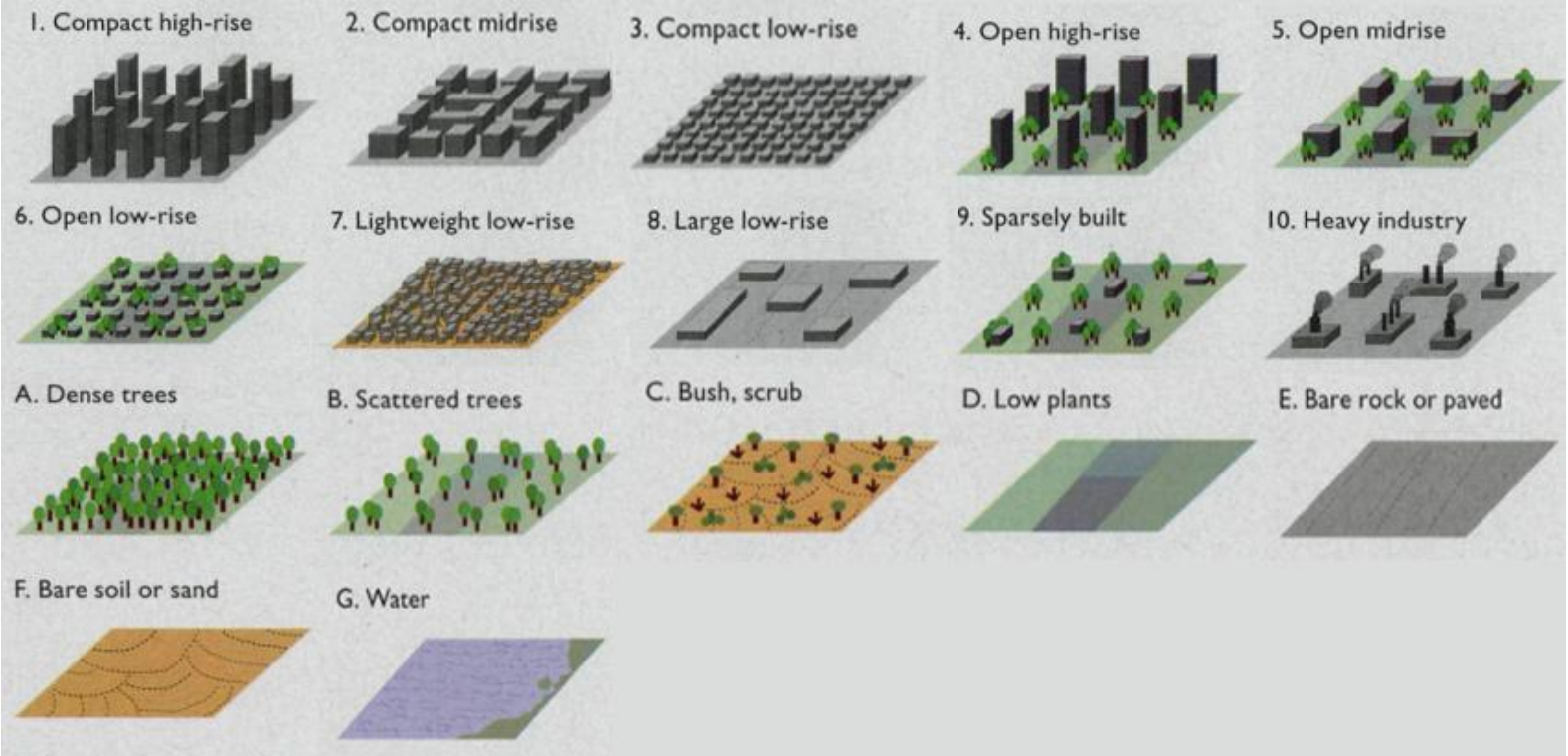

I.D. Stewart and T. R. Oke, 2012

Contiguity

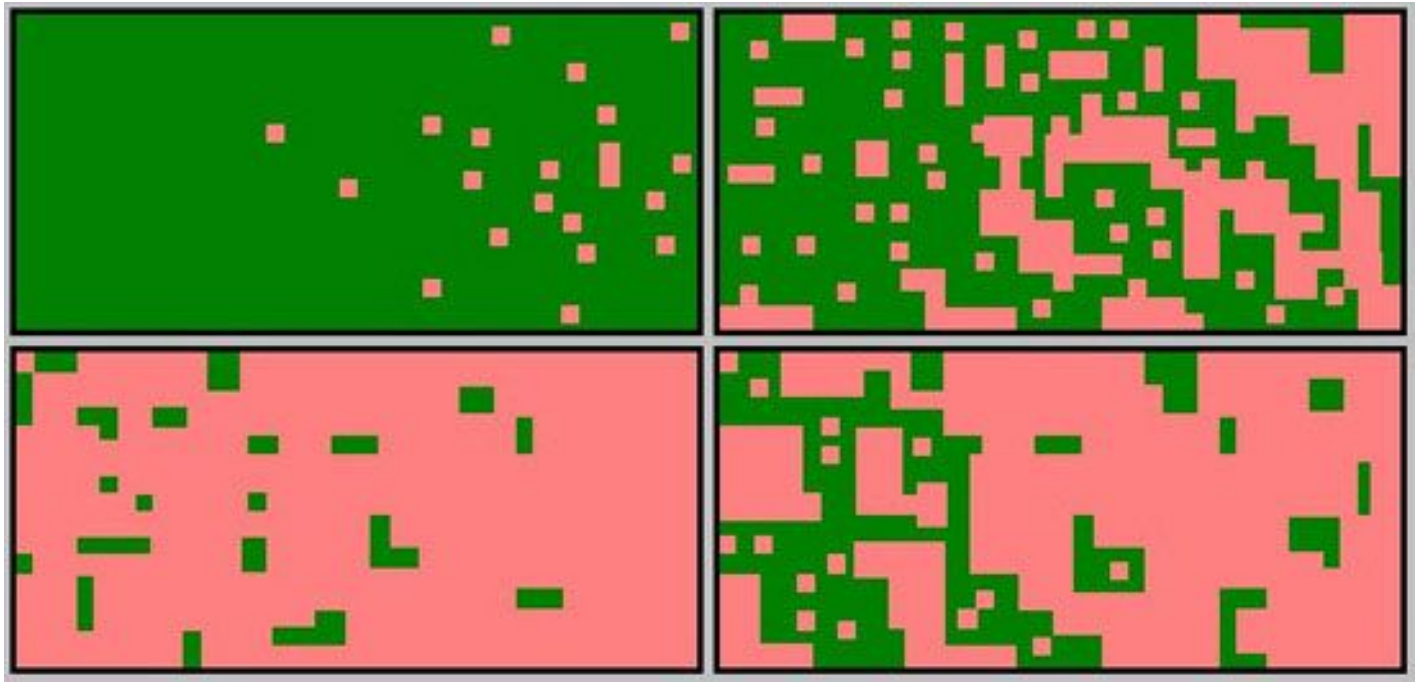

Phoenix LCZ classification

- Dr. Ariane Middel has allowed us use her Phoenix LCZ classification
- Currently the team is working on classifying Minneapolis, Los Angeles, Houston, Atlanta, and Baltimore

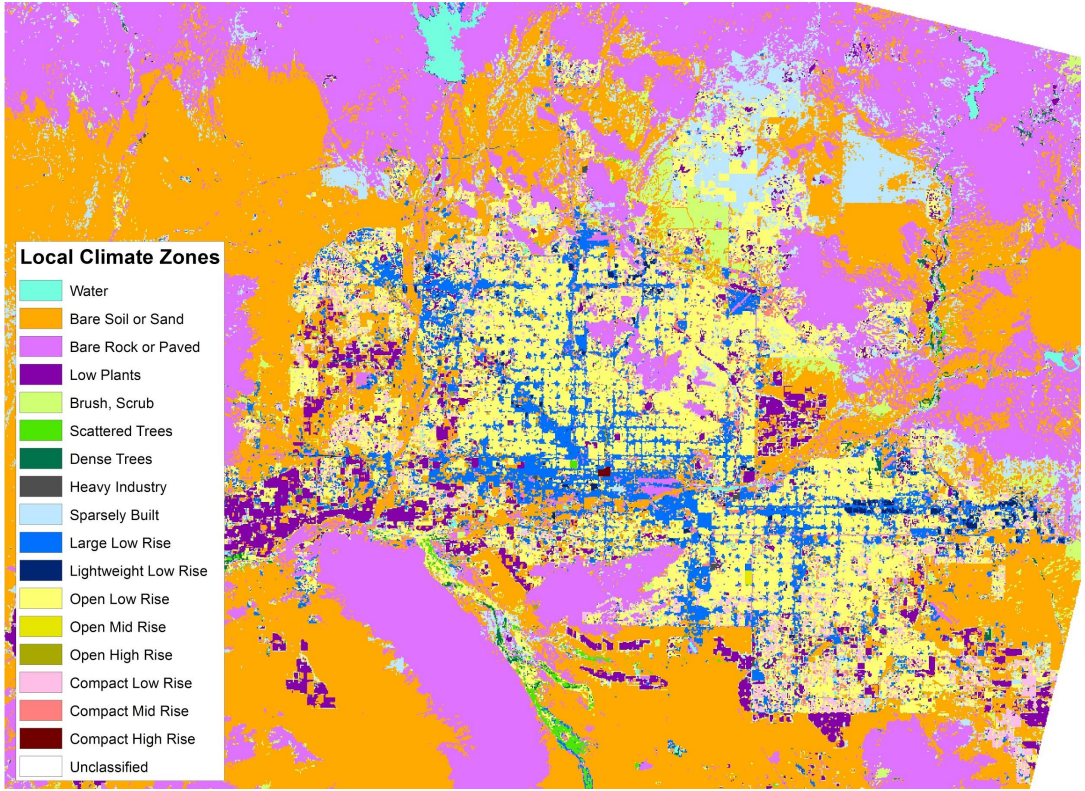

Ground Footprint: Chicago

- The coordinate will be at the center of this ground footprint estimation rectangle.

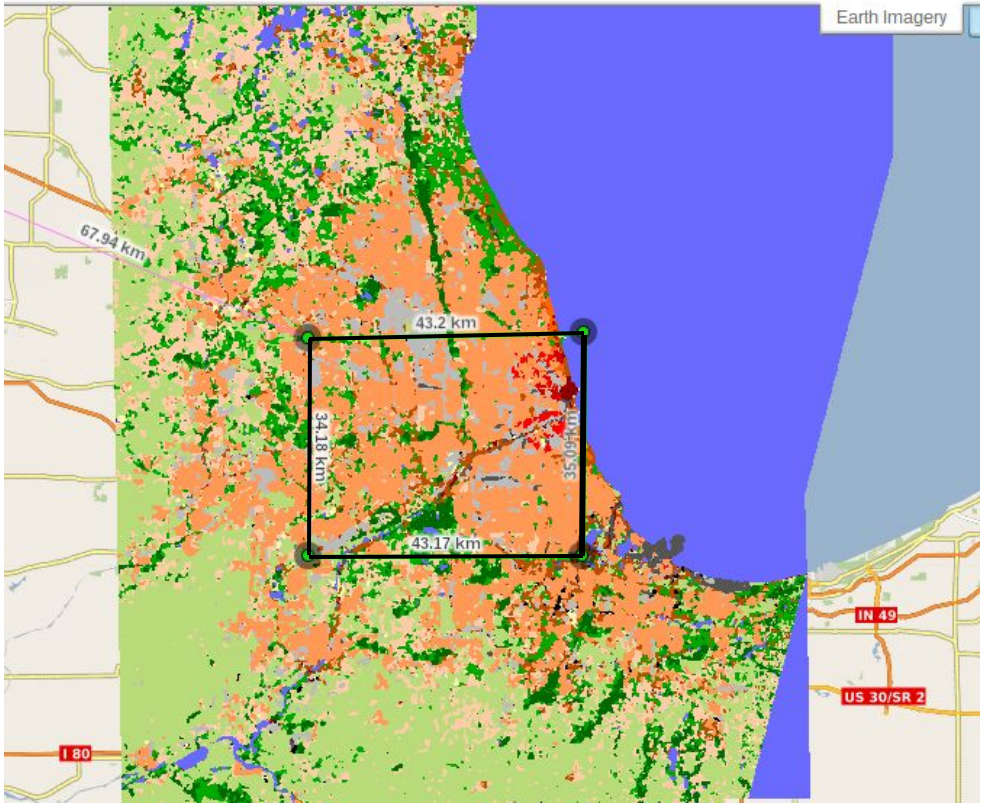

http://www.wudapt.org/cities/in-the-americas/

Science Traceability Matrix

Science Goal:	Science Objectives:	Measurement Requirements	
		Physical Parameters	**Observables**
To study how city composition, using Local Climate Zones, affects the surface urban heat island signature across various cities in the U.S.	1) Categorize LCZs for each city. 2) Classify city contiguity according to LCZ layout. 3) Analyze the SUHI as a function of the spatial layout of the LCZs.	City Composition	Local Climate Zones
		City Contiguity	Landscape Metrics
		Surface Temperature	Infrared Imagery

Science Traceability Matrix

Instrument Requirements		Projected Performance	Mission Requirements (Top Level)
Temperature Resolution	100 mKelvin	50 mKelvin	The camera should be pointed on nadir or within a +/- 25 degree of error.
Spatial Resolution	110 meters/pixel	68 meters/pixel *(best case)* 110 meters/pixel *(worst case)*	Science team will provide geographic coordinates of where images shall be taken within each city.
Wavelength Range	10.5μm -12.5μm	10.5μm - 12.5μm	The instrument should account for atmospheric disturbances that might skew the Infrared imagery.
Temporal Coverage	**1)** 2 times of day; at solar noon and 2 hours after sunset **2)** Summer season (Starting in May)	**1)** Imaging at all times of day **2)** Summer season (within the time of May - August, 2018)	**1)** 2 times of day; at solar noon and 2 hours after sunset **2)** Summer season (Starting in May 2018)

Phoenix Mission Objective	
PHX - 1.01	*Phoenix* shall demonstrate the capability of the payload to deliver a temperature gradient of the Earth's surface from LEO
PHX - 1.02	*Phoenix* should study how city composition using Local Climate Zones affects the surface urban heat island signature in various U.S. cities

Phoenix Mission Success Criteria

ID	Criteria	Rationale	Satellite Resource
PHX - 2.01	Phoenix, AZ should be compared to Los Angeles, CA with infrared imagery and coordinates given by the science team	Shall measure the various surface temperatures of cities, in the form of infrared imagery. LA and Phoenix were chosen because both cities will be in summer time conditions for the longest duration of the mission lifetime.	ISS orbit allows *Phoenix* to pass over both cities each day
PHX - 2.02	Phoenix Satellite should capture PHX-2.02 in the summer season.	Summer season defined as May 1st through August 1st. The SUHI signature is strongest during the summer months.	**TBD** - 7th in the launch queue, but launch time stressed to CSLI

Science Requirements

ID	Requirement	Rationale	Satellite Resources
PHX - 3.01	All temperature profiles should be thermal images that shall have a spatial resolution of at least 110 meters per pixel.	To capture a Local Climate Zone which are no smaller than 110 meters[2].	Fitting the camera with a 100mm lens allows for a best case spatial resolution of 68m/pixel and 110 m/pixel in the worst case , which provides an equal or higher resolution than the requirements specify
PHX - 3.02	Thermal camera should have a temperature resolution of [100] mK	Research shows that the difference in temperatures between different classes of LCZ's is to the 100 mK. The UHI magnitude using LCZ's is determined by differences in temperature between classes of LCZ's.	Thermal resolution of the the FLIR Tau 2 is < 50mK
PHX - 3.03	The Cubesat shall be pointed on nadir with up to +/- 25° when taking an image.	The temperature of the side of the building will be different than the top of the building and be inconsistent with data. In addition, the tall buildings will block surrounding buildings and areas.	Images will be captured in a window of +/-25° while target tracking
PHX - 3.04	Images shall collect infrared radiation in the wavelength range of 10.5μm- 12.5μm	This is the wavelength range is the "atmospheric window", which is the best for avoiding water vapor and other molecules in the atmosphere. Correcting for the interference is too complex with an algorithm.	The camera will include a filter which restricts the wavelength to 10.5μm -12.5μm

Science Requirements			
ID	Requirement	Rationale	Satellite Resources
PHX - 3.05	All thermal images should include the precise date and time the data was taken within a +/- 10 minute accuracy.	Accurate orbital data is needed to create air temperature maps to overlay the infrared images with, as well as an accurate time and date to pull out recorded air temperatures and match up the right times.	Schedules will be uploaded periodically to refresh the onboard clock and prevent it from drifting
PHX - 3.06	All thermal images should have longitude and latitude with each picture +/-1 degree.	This gives the science team a more accurate knowledge of where the image location is.	GPS has been added to increase the accuracy of determining the satellite's location.
PHX - 3.07	Thermal images should be taken at local solar noon and 2-3 hours after local sunset.	To capture maximum SUHI intensity, images will be taken at two specified times per day: when radiative surface heating and radiative surface cooling are at their peaks.	Imaging will occur over each pass of the city

Orbit & Concept of Operations

Presented By: *Jaime Sanchez de la Vega*

Satellite Orbit

- Projected Orbit
  - ISS Deployment into Low Earth Orbit (LEO)
  - Altitude: **400km,**
  - Inclination: **51.6°**
- **Offers smaller data return than lower inclination**
  - Officially requested in order to meet PHX-2.03
  - Mission success can be met with only having a few images of each city core to compare within ~2 weeks of image capture
- Orbit duration: **90 minutes**
- Time over the US: **5 minutes (average)**
- Average city pass duration: **30-40 seconds**
- Orbit patterns repeat roughly every 3 days

City Analysis

- Target Cities
  - **Core Science Targets:** *Phoenix, Los Angeles, Chicago, Baltimore, Minneapolis, Atlanta, Houston*
  - **Supporting cities:** *Boston, Jacksonville, Denver, San Francisco, Albuquerque, Memphis, New Orleans, Oklahoma City, Charlotte, Las Vegas, and Salt Lake City*

- All cities chosen for being diverse in human activity, ability to be imaged on a consistent basis, and having a mean clear day range of > 85 days per year
- Imaging to occur during each pass over a targeted city, science analysis will focus mainly on maximum radiance times
  - Projected: **4000 images total over mission life**
- Spatial variations over the US- more important than collecting multiple images of the city per pass

Spacecraft Modes

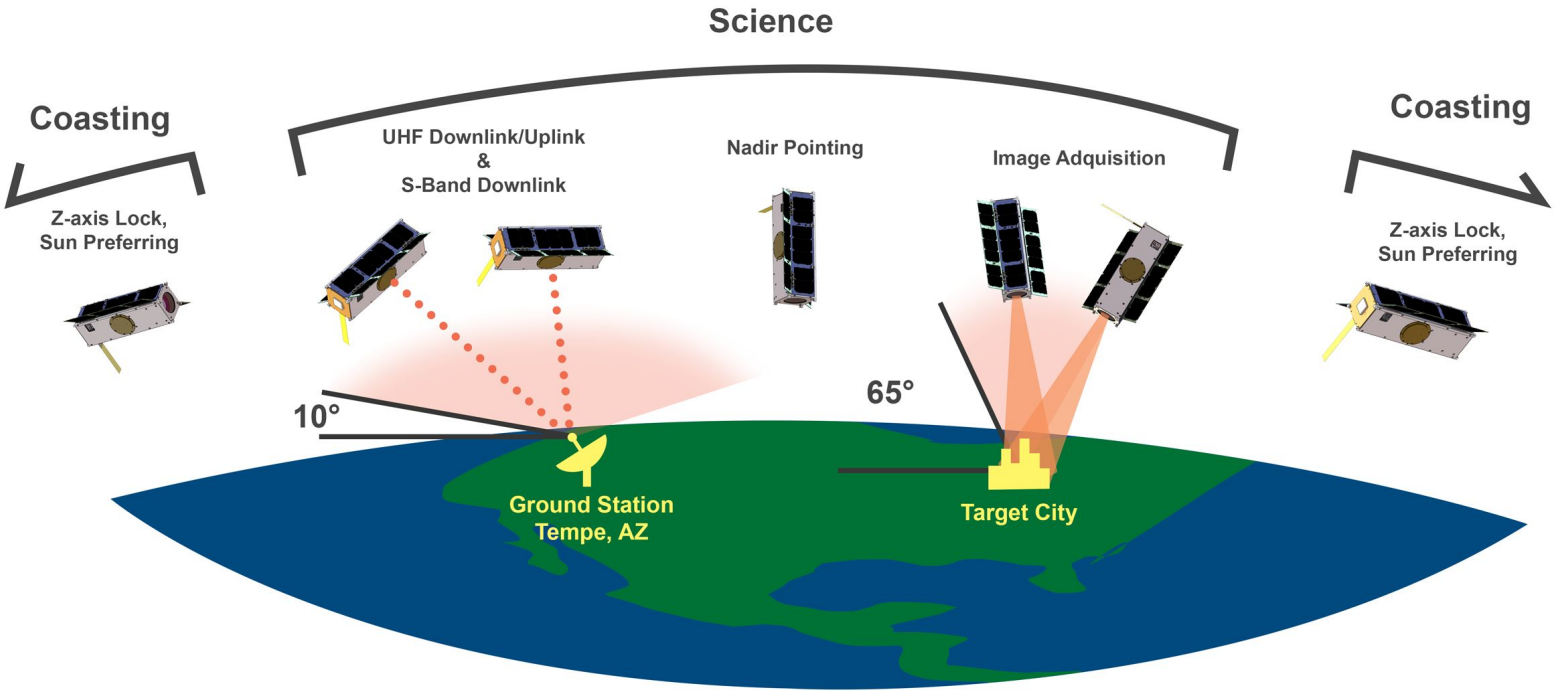

Concept of Operations

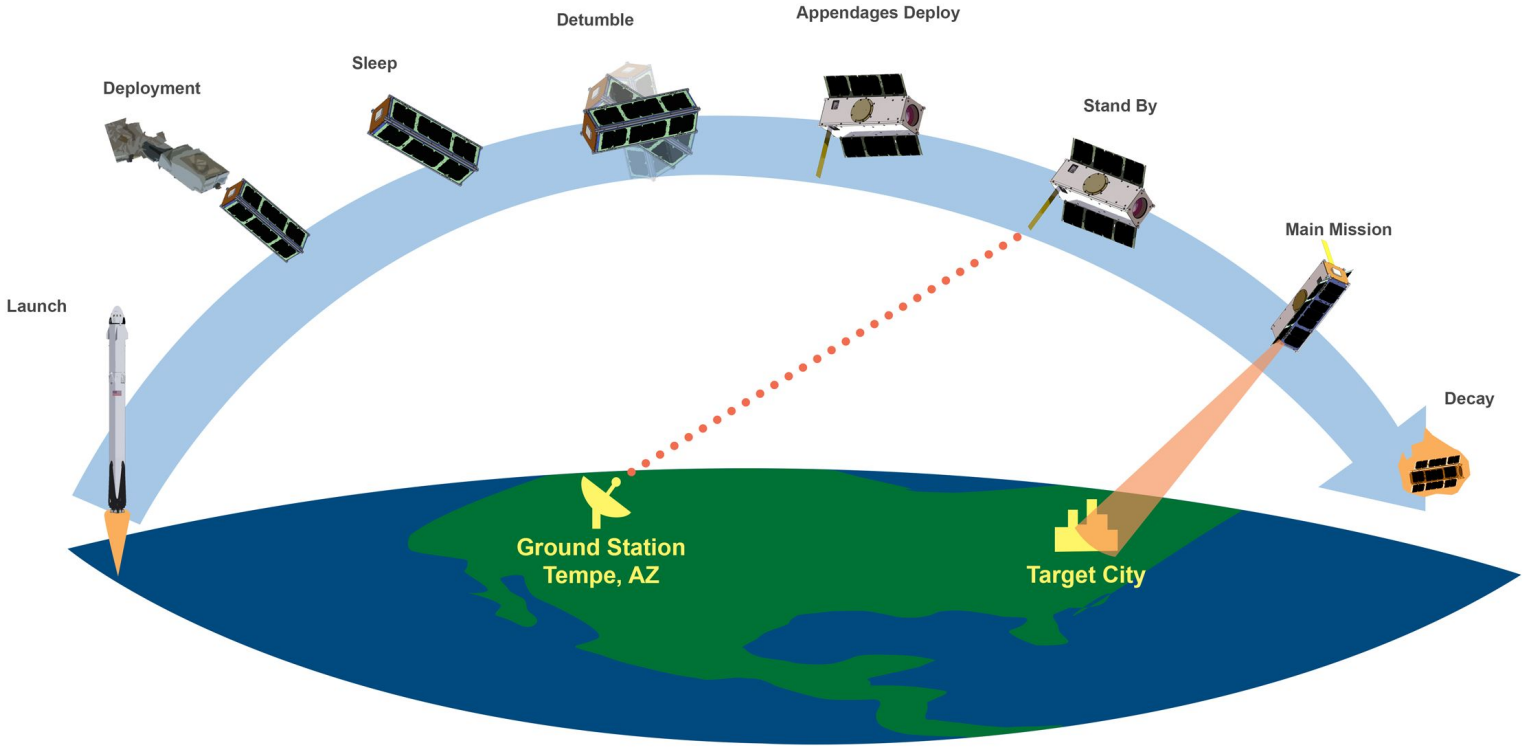

Satellite Mode Transitions

- **Deployment** - Initialization of system
- **Idle** - Coasting and battery charging
- **Science** - Image Acquisition, Downlink & Uplink
- **Survival** - Low energy mode with status beacon

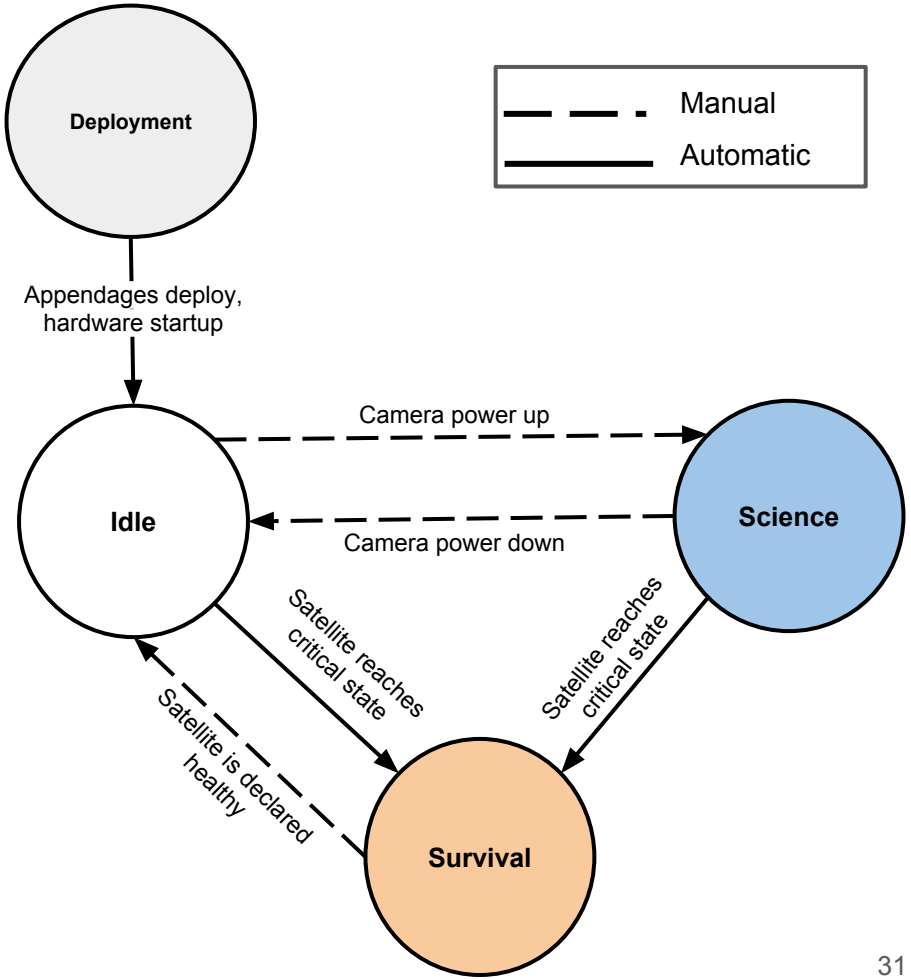

Satellite Overview

Systems

Presented By: *Jaime Sanchez de la Vega*

Team members: *William Merino, Haytham Mouti, Andy Tran, Jaime Sanchez de la Vega, Sarah Rogers*

Satellite Layout

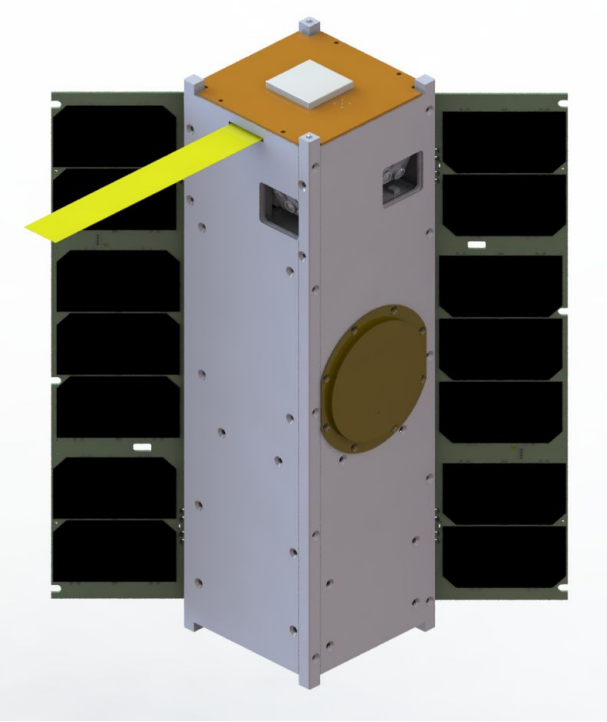

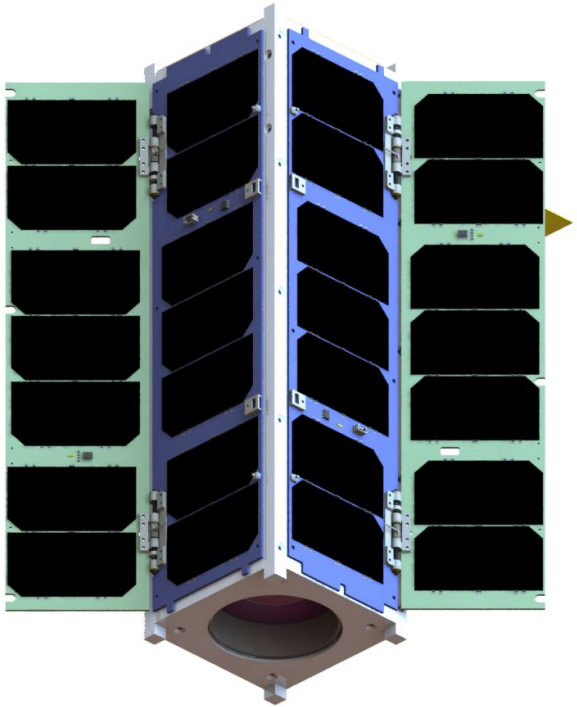

Internal Hardware Layout

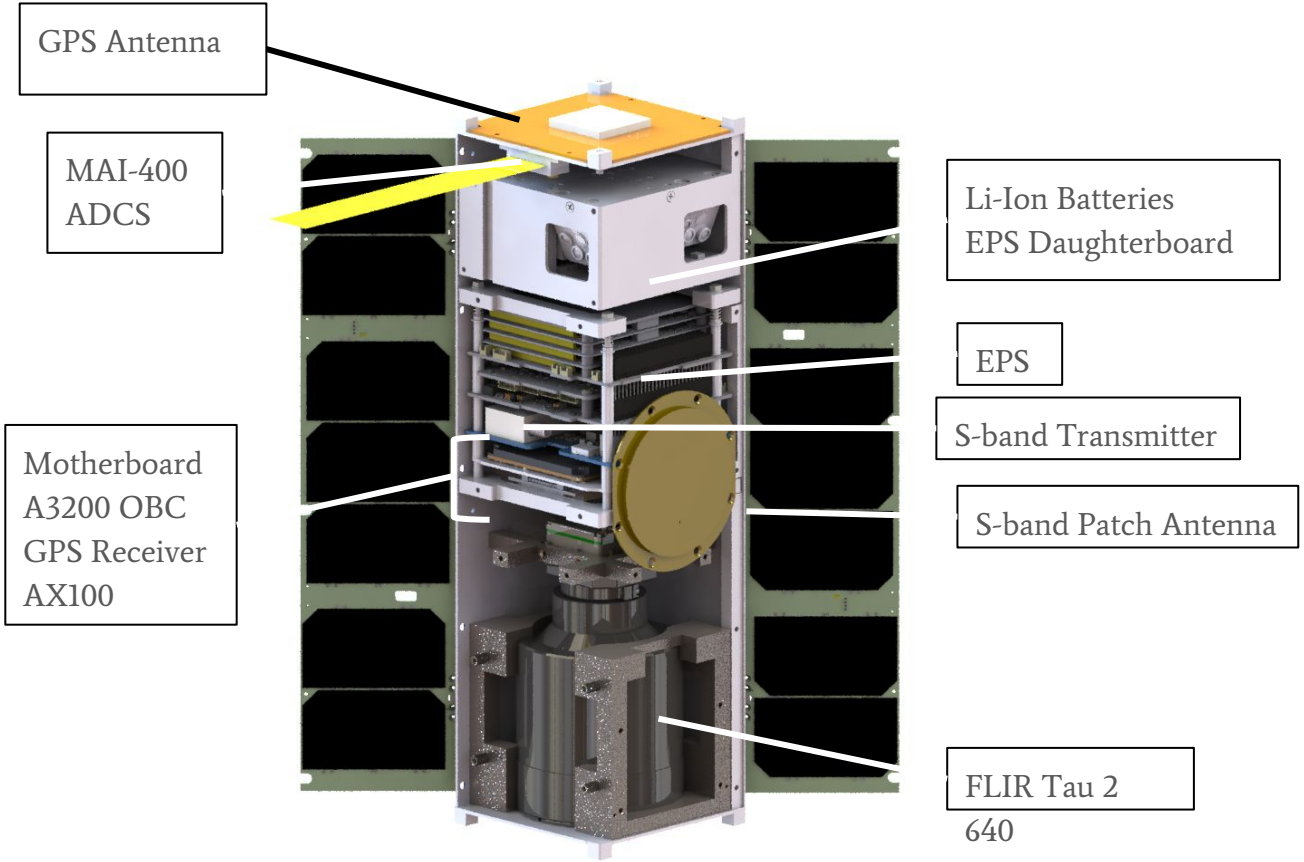

Mass and Volume Budget

Component	Model	Nominal Mass (kg)	Volume (cm^3)	Critical Dimension - Z Axis (cm)
ADCS	MAI 400	0.694	525.96	5.22
UHF transceiver	NanoCom AX100	0.0245	9.27	0.72
UHF Antenna	Custom	TBR	5.25	0.99
S-Band Transmitter	STX-01-00017	0.075	50.75	1.70
S-Band Antenna	F'SATI S-Band Antenna (SANT)	0.05	19.2	0.41
GPS Reciever	NovAtel OEM615	0.024	26.5	1.10
GPS Antenna	NanoAvionics piPatch-L1	0.05	19.5	N/A
Electric Power System	Clyde Space XUA 3U EPS	0.148	50.5	1.70
Batteries	Clyde Space 40 Whr Battery	0.335	178.82	2.74

Mass and Volume Budget (Cont.)

Component	Model	Nominal Mass (kg)	Volume (cm^3)	Critical Dimension - Z Axis (cm)
3U Deployable Solar Array	Clyde Space	0.25	110.137	N/A
3U Deployable Solar Array	Clyde Space	0.25	110.37	N/A
A3200 OBC	Gomspace NanoMind A3200	0.014	6.9	0.65
Nanodock	Gomspace NanoDock DMC-3	0.051	18.44	1.85
SD Card Board	Custom	TBR	-	TBR
Payload	Tau 2 640	0.48	297.5	4.45
Chassis	Custom	1.40	288.81	N/A
Insulation/Radiators	TBR	0.08*	-	TBR

*Indicates estimated value

Mass and Volume Budget (Cont.)

Component	Model	Nominal Mass (kg)	Volume (cm^3)	Critical Dimension - Z Axis(cm)
4 x Sun Sensors	TBR	TBR	TBR	-
2 x Temperature Sensors	TBR	TBR	TBR	-
Cabling	TBR	TBR	TBR	-

Mass (<4kg)	3.94 kg
Mass w/ Margin (10%)	4.33 kg
Critical Volume (<3000 cm^3)	1164.64 cm^3 (38.8%)
Critical Volume w/ Margin (10%)	1281.09 cm^3 (42.7%)

Cabling and Harnessing

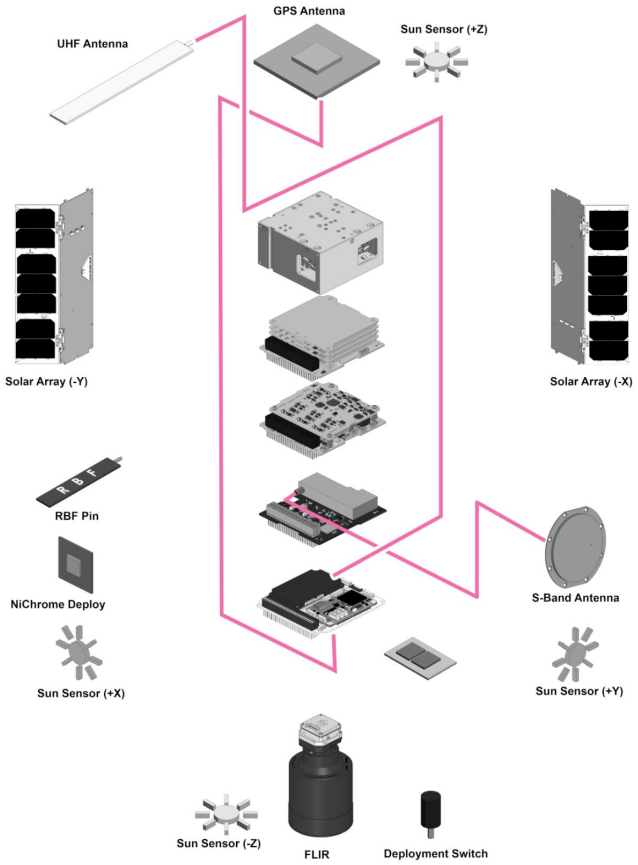

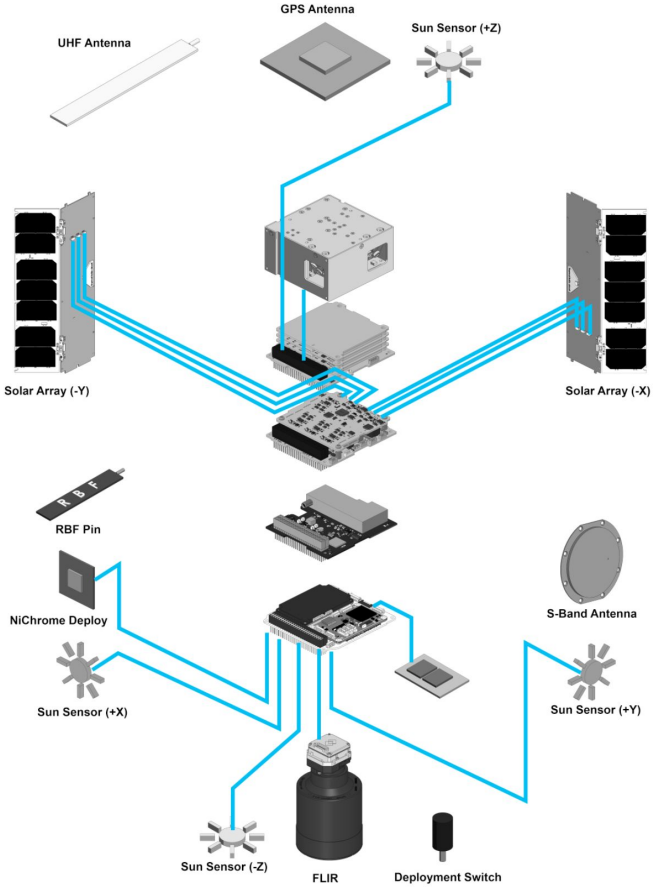

Cabling

- Coaxial
- Standard
- Inhibit
- PC104

Cabling and Harnessing

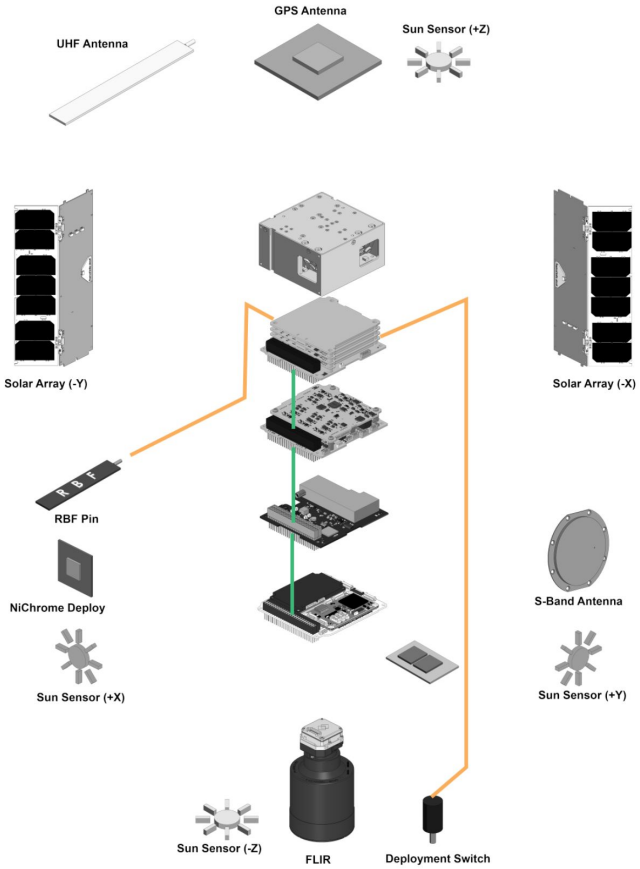

Cabling

- Coaxial
- Standard
- Inhibit
- PC104

Systems Next steps: *determine proper cable routing and cable lengths*

Currently have 3D printed models for all flight hardware

Will practice cable routing with chassis engineering model

System Risks

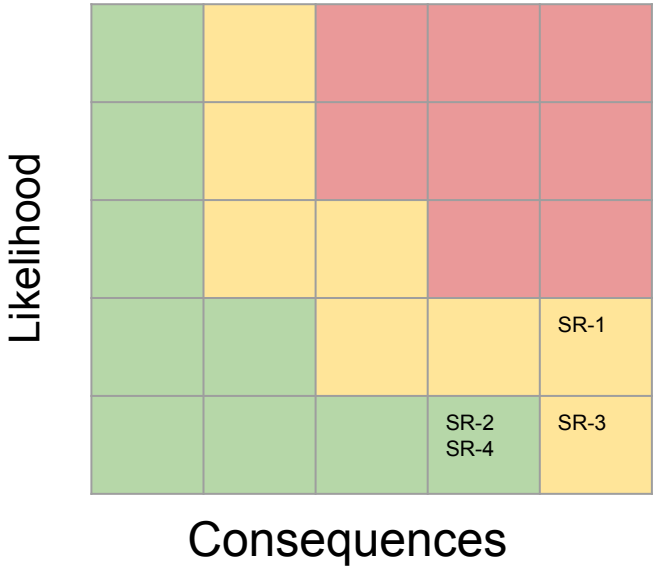

ID	Trend	Risk	Mitigation Strategy	Approach
SR-1	⇨	Not surviving launch environment	Extensive testing to launch vehicle specifications	W
SR-2	⇨	Not surviving low earth orbit	Use space rated hardware and testing hardware specifications	M
SR-3	⇨	Not deploying from PPOD	Strict compliance with design and materials specification	M
SR-4	⇨	Non deployment of solar panels	Stowed placement which doesn't obstruct adcs sensors	M

Trend	Approach
⇧ Improving	A - Accept
⇩ Worsening	M - Mitigate
⇨ Unchanged	R - Research
▭ New	W - Watch

FlatSat & Systems Verification

Presented By: *Sarah Rogers*

Goals of the FlatSat

1. Test and verify all hardware interfaces
2. Verify all spacecraft modes and mode transitions
3. Test and verify software commands and procedures
4. Structure Mission Operations commands and procedures
5. Validate power transmission for operating modes
6. Will validate engineering and science mission requirements
7. Test for support during the instance of a worst case scenario

All operations will be validated on the FlatSat before transition to Flight Hardware

Systems engineering validation process will be utilized to declare transition readiness

Testing shall be structured to mirror the processes performed on flight hardware

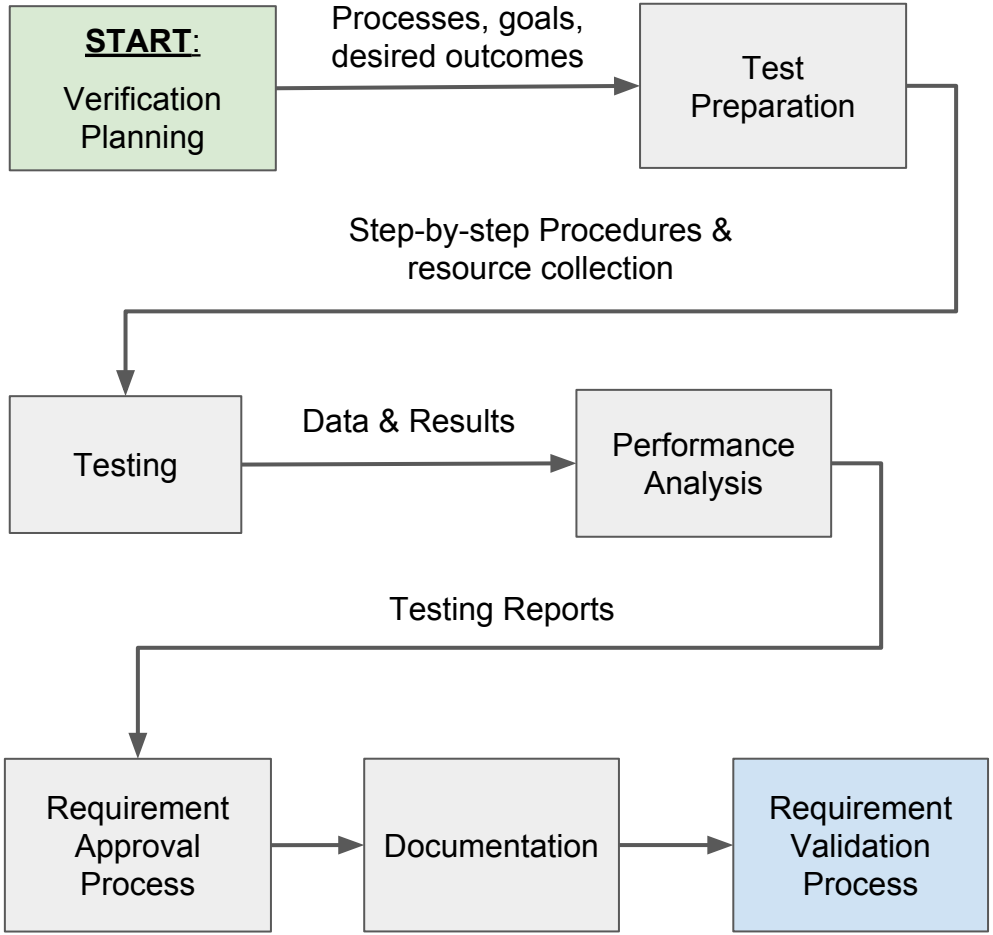

Verification Plan

- **Status:** More thorough test preparation has begun
  - All testing procedures are verified by systems engineering as capable of demonstrating requirement compliance
- Declaring Level of Performance
  - Procedures will prepare verification for individual subsystem operations and satellite mode operations
  - Requirements will be “verified” through flatsat testing
  - “validated” on the flight model
- **Analysis -** determines requirement compliancy
  - Requirements are declared validated by the system approval process

Requirements Approval Process

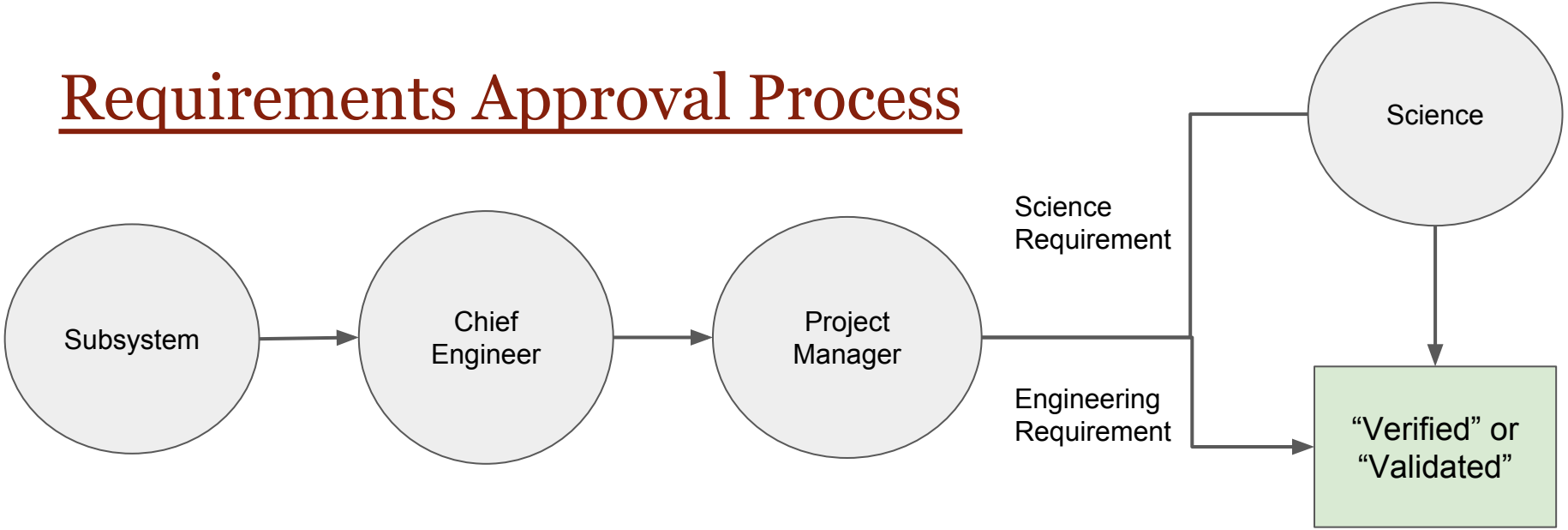

- Thorough testing procedures are developed by individual subsystems and monitored by Systems Engineers
- Requirements must all be passed through the above process before being declared “verified” (or “validated”)
- Project Manager & Chief Engineer notified as soon as a requirement is planned to be validated
- Verification updated in requirements matrix with date and time stamp, and initials of approver
- Process will be affected for both requirement verification as well as validation

Definition

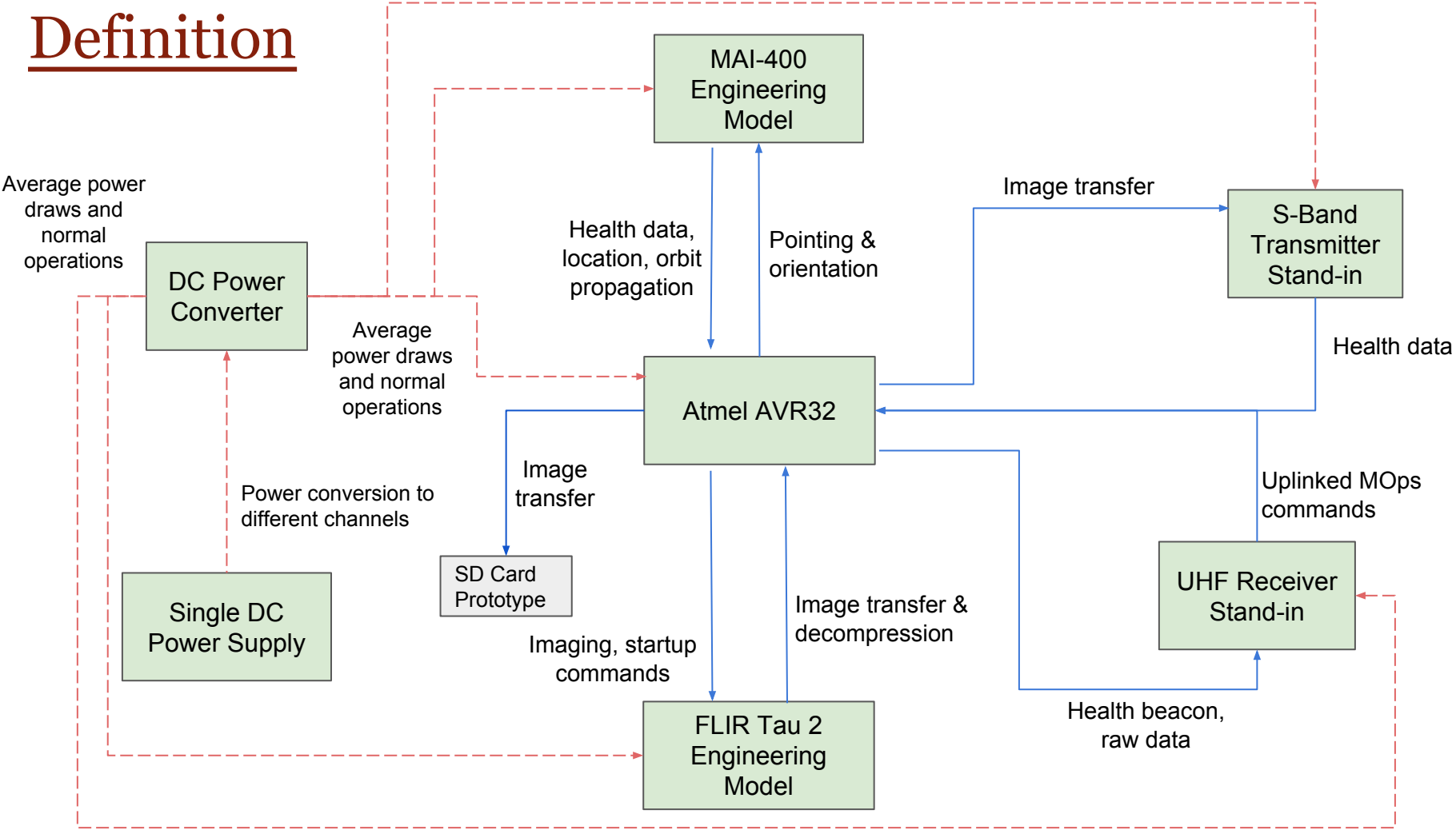
MAI-400 Engineering Model
Average power draws and normal operations
DC Power Converter
Health data, location, orbit propagation
Pointing & orientation
Image transfer
S-Band Transmitter Stand-in
Health data
Average power draws and normal operations
Atmel AVR32
Image transfer
Power conversion to different channels
Uplinked MOps commands
SD Card Prototype
Single DC Power Supply
Image transfer & decompression
UHF Receiver Stand-in
Imaging, startup commands
Health beacon, raw data
FLIR Tau 2 Engineering Model

FlatSat Testing Process

Continuous process of individual flatsat hardware performance verification. Followed by gradual process of hardware integration and testing to validate mission requirements and verify operating procedures

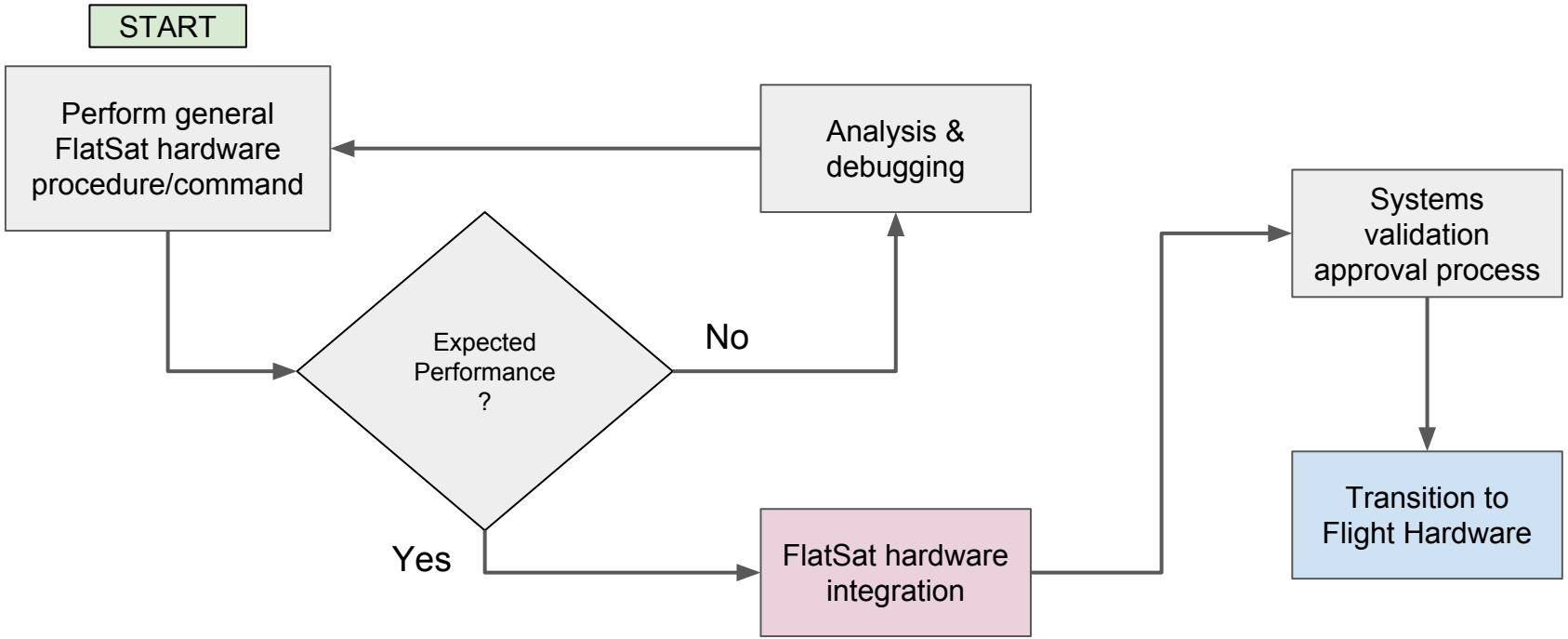

Development Timeline

- April:
  - software application development
  - Collect accurate power draws of hardware,
  - MAI engineering model testing & mission operations outlines
    - Structure pointing and orientation MOps scripts
- May 2017
  - Power simulations to demonstrate operating modes
  - Simultaneous testing of all hardware interfaces
  - Mission Operations - simple script development and testing

Payload

Presented By: *Allan Garry*

Team members: *Allan Garry, Jesus Acosta, Ruy Garciaacosta*

Payload Requirements

ID	Requirement	Rationale	Parent Requirement	Verification
PL-1	The spatial resolution of the thermal images shall be at least 110 m/pixel/	Science objectives require LCZs of 110 meters^2 to be measured	PHX-3.01	Analysis
PL-2	Thermal camera shall have a temperature resolution of [100] mK.	Science objective requires accurate thermal resolution to analyze LCZ temperature differences	PHX-3.02	Inspection
PL-3	Collected infrared data shall correspond to filtered wavelengths of 10.5-12.5 um.	Science objective requires filtering out unwanted atmospheric interferences in the IR spectrum	PHX-3.06	Demonstration
PL-4	Raw data from the images shall correspond to thermal flux.	To be used in acquisition of surface temperature data	PHX-3.01	Test
PL-5	The radiance-temperature algorithm shall be accurate within TBD%	To accurately interpret the ground surface temperature	PHX-3.01	Analysis

Color Legend:

Compliant	Compliant by CDR	Compliant by TRR	Compliant by FRR

Tau 2 Overview

- Capabilities of the Tau 2
  - The camera will support gathering accurate absolute temperature information
    - Advanced radiometry package can automatically stabilize the incoming data and output temperature values per pixel, but a custom algorithm will be required regardless
    - Has a best resolution of 68m/pixel at 400km
    - Has a resolution of 640 by 512 pixels, a field of view of 6.2° by 5°, and an operating temperature of -40°C to 80°C
- Losses expected to be experienced
  - Energy loss due to a filter restricting majority of detector's spectral band (15%)
  - May see minor image smear where emissivities are merged
    - To be determined through further testing, but should be avoided through ADCS

Filter Design

- The camera has a spectral band of 7.5μm to 13.5μm, and so may experience excessive noise from atmospheric or thermal interference
- Filter design - FLIR filtered to 10.5μm-12.5μm
  - 25.4mm in diameter, transmittance of 85%, placed just before the detector lens
  - Currently communicating with FLIR and filter vendor to understand how purchasing and integration of the filter should be done
  - Filter effects on measurement readings:
    - FLIR's temperature-determining algorithm will no longer be accurate
    - Raw Digital Number (DN) output might not be linear with radiance
    - Will develop algorithm to account for error
    - Without filter interferences are too complex to remove mathematically

Response over captured wavelength

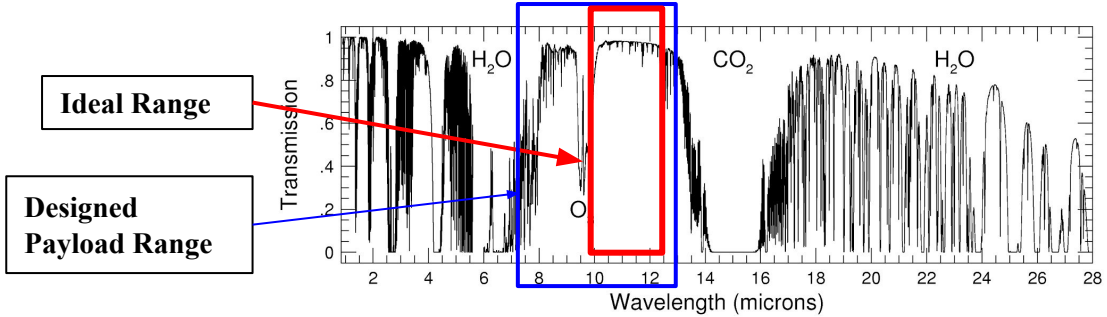

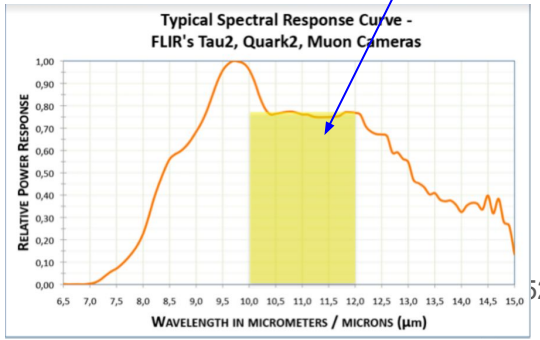

Lab Testing

- Have access to two black body testing facilities where data is recorded manually
- Procedure for in-lab testing:
  - Two black bodies for two-point calibration
  - Record voltage and blackbody temperature
  - Find voltage-radiance relationship
  - Convert digital output to radiance values
  - Using Planck's function and radiance to obtain brightness temperature
  - Convert brightness temperature to surface temperature
- Radiance to temperature algorithm will not be adequate without detector temperature and internal camera parameters

Filter Calibration

- Repeat lab testing procedure with filter present
- Compare temperature obtained from detector without filter and with a filter
- Calculate error between both algorithms
- Test algorithm for different materials and temperatures
- Create radiance to temperature lookup tables
- Take images from plane to test filter functionality, camera and temperature algorithm
  - Will allow science to practice post image processing
  - Give sense of our capabilities
- Concern: Internal lens diameter is greater than filter diameter

Ground Support

- Images possibly to be taken of space for in-orbit calibration (used as blackbody element)
  - Need for recalibration to be examined through testing
- Buoy system
  - Camera will need to be re-calibrated periodically while in orbit
  - Sensors measure surface temperature from bulk water temperature ~1m deep
    - Would note how accurate the interpreted temperatures in images were
    - Looking into using data from existing networks to compare temperature accuracy
- Ground sensor network
  - Sensor network of radiometers placed in imaging area of Phoenix to measure upwards long wave radiation
    - Used to determine errors in actual vs interpreted temperatures from satellite
    - Aid to potentially come from a future SESE senior design project
    - Other networks: *Minneapolis (over 200 sensors)*

Payload Risk

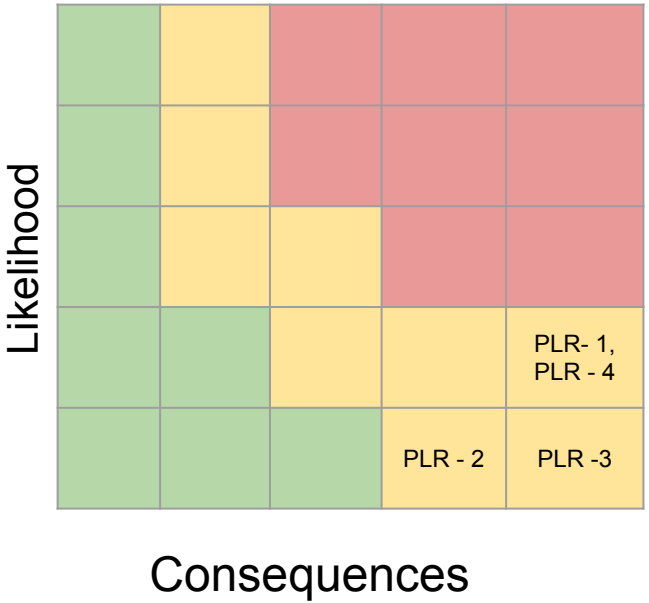

ID	Trend	Risk	Mitigation Strategy	Approach
PLR-1		Filter Damage	Thermal/Structural Control	R
PLR-2		Lens Heating	Thermal Control	M
PLR-3		Lens Shattering	Vibration Damping	M
PLR-4		Filter Reflections	(inquiring with FLIR)	W

Trend	Approach
Improving	A - Accept
Worsening	M - Mitigate
Unchanged	R - Research
New	W - Watch

Path to CDR

- Finish calibration testing and create radiance-temperature algorithm
- Validate radiance-temperature algorithm
- Purchase filter and integrate into engineering model of the camera
- Perform calibration testing with filter and see error introduced by filter
    - Modify radiance-temperature algorithm to account for error

ADCS

Presented by: *Justin Wofford*

Team members: *Ryan Fagan, Ryian Hunter and Justin Wofford*

Key Attitude Determination and Control System Requirements

ID	Requirement	Rationale	Parent Requirement	Verification
ADC-1	The ADCS shall control the spacecraft attitude to an accuracy sufficient to capture science data	Science objectives require accurate pointing capabilities		Demonstration
ADC-2	The ADCS shall accommodate the operation of all modes and required orientations	To maintain satellite health and perform vital operations		Demonstration
ADC-3	The ADCS shall perform all orbit/ pointing calculations and operations	Allows these vital operations to be performed locally on the spacecraft		Demonstration
ADC-4	The ADCS and satellite properties shall be well characterized before flight	To test various maneuvers before they are uploaded to the spacecraft		Test
ADC-5	The ADCS shall be capable of both autonomous operation and manual control	System needs autonomously execute commands, but allow for manual control if there is an anomaly		Demonstration

Color Legend:

Compliant	Compliant by CDR	Compliant by TRR	Compliant by FRR

MAI 400 from Maryland Aerospace

Plug and Play ACDS Unit

Knowledge

- 2 IR Earth horizon sensors
- 6 sun sensors (external on satellite)
- 1 Gyro
- 1 Magnetometer

Actuators

- 3 Reaction wheels
- 3 Magnetorquers

Control Modes

- Lat-Long
- Nadir (with or w/out offset)
- Velocity Vector
- Quaternion
- Sun-Tracking (Secondary)

ADCS Block Diagram: Attitude Determination

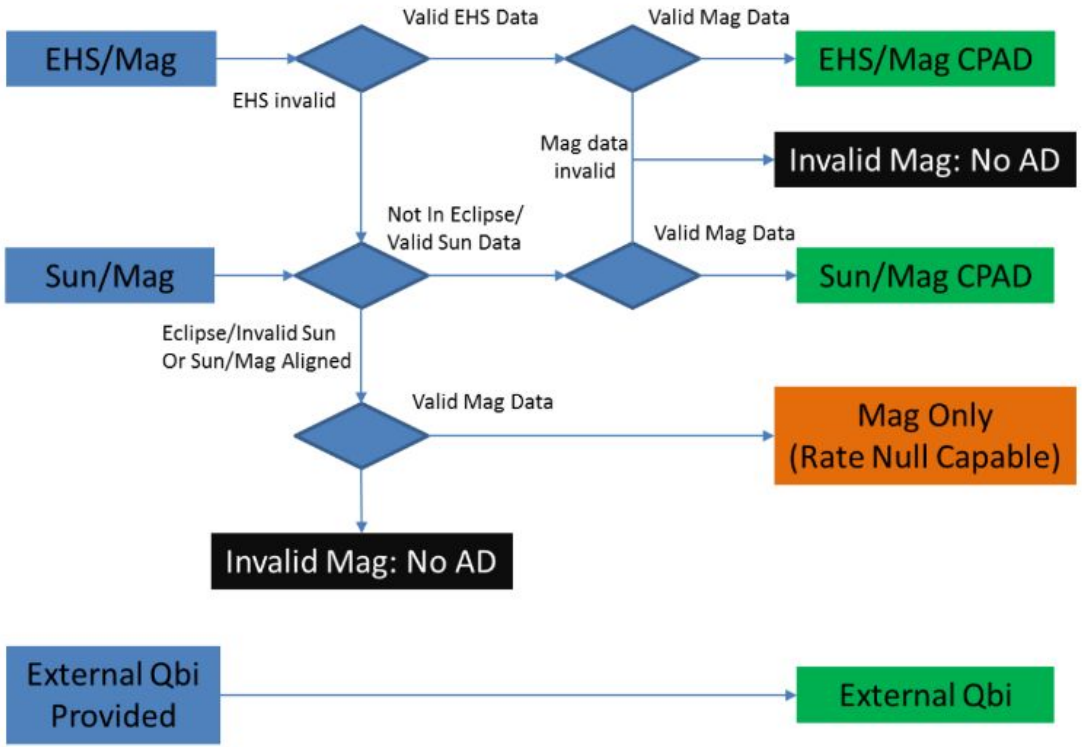

Figure 15. Attitude Determination Operational Flow

ADCS Block Diagram: Attitude Control

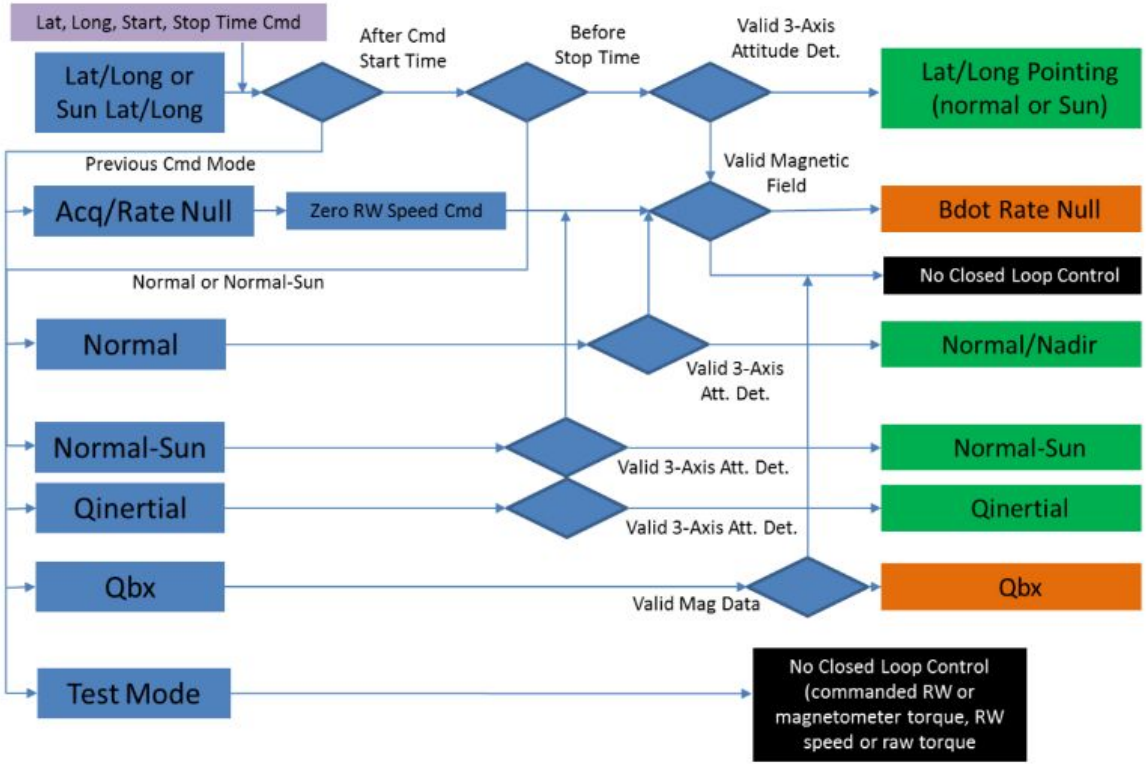

Figure 14. Attitude Control Operational Mode Logic Flow

ADSC Interconnect Diagram

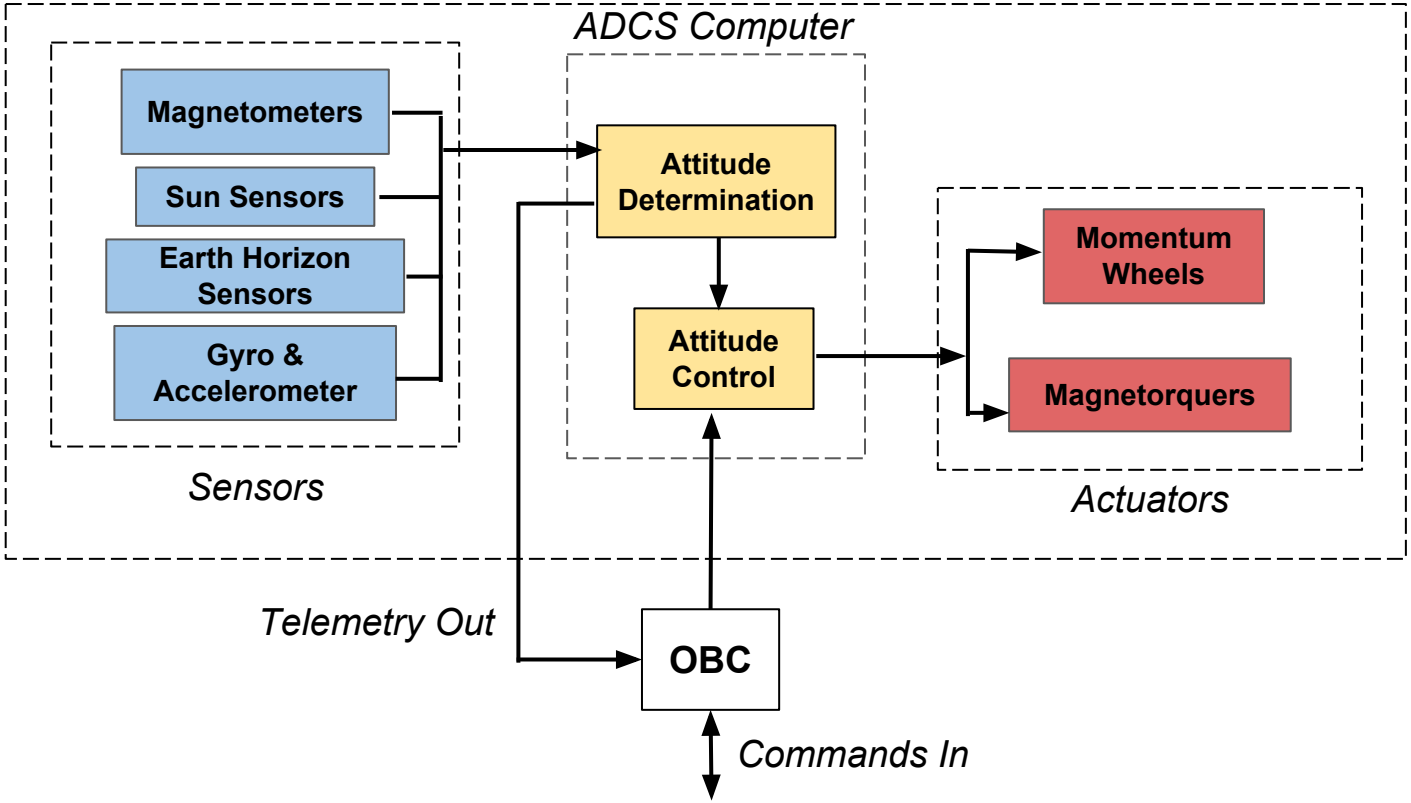

Other Considerations

- Accuracy Reducing Factors
  - Wide FOV Sensor Obstructions (Included CAD Model)
  - Earth Albedo on Sun Sensors leads to a few degrees error in sun location
- Tip Off Momentum
  - Exact tip-off rate is unknown, however, ADCS will null rotation rates automatic upon deployment using magnetorquers.
- Momentum budget
  - Exact budget will be determined by flight orientation and imaging operations.
  - Modeling will concentrate on gravitational and aerodynamic torques.
- Pointing Speed vs. Motor Wear
  - Higher torque = faster switching = lifetime reduction

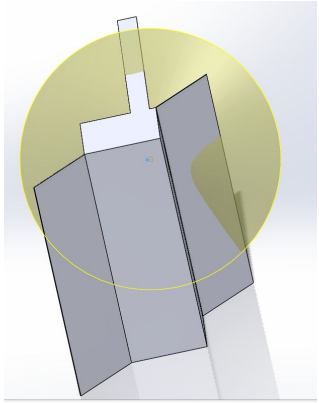

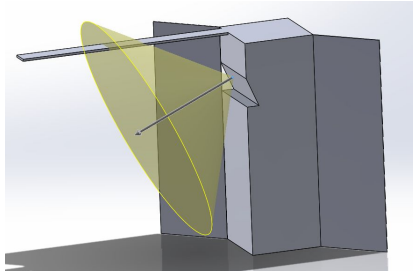

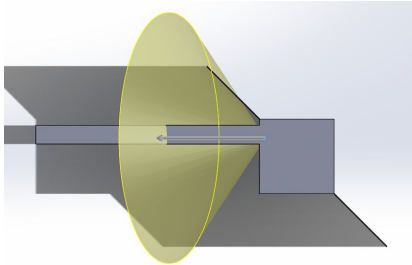

Tracking Capabilities

- Pointing Operations
  - An onboard time based schedule is used to carry out maneuvers. Time updates can be obtained from the onboard GPS for increased accuracy.
  - An attitude fix is obtained by using the sun relative position as determined by the sun sensors and earth's magnetic field as measured by the magnetometer.
  - Nadir angle is determined using the Earth's horizon (high accuracy), sun position and magnetic field
  - GPS coordinates or pointing mode is also provided
  - Capable of switching to new city <1 minute, allowing for back to back imaging of cities
- Momentum Management
  - System has a built in desaturation procedure utilizing magnetorquers.
  - During flight mode, the ADCS can be programed to offload momentum automatically past a predefined maximum speed.

Pointing Accuracy Profile Over Flight Path

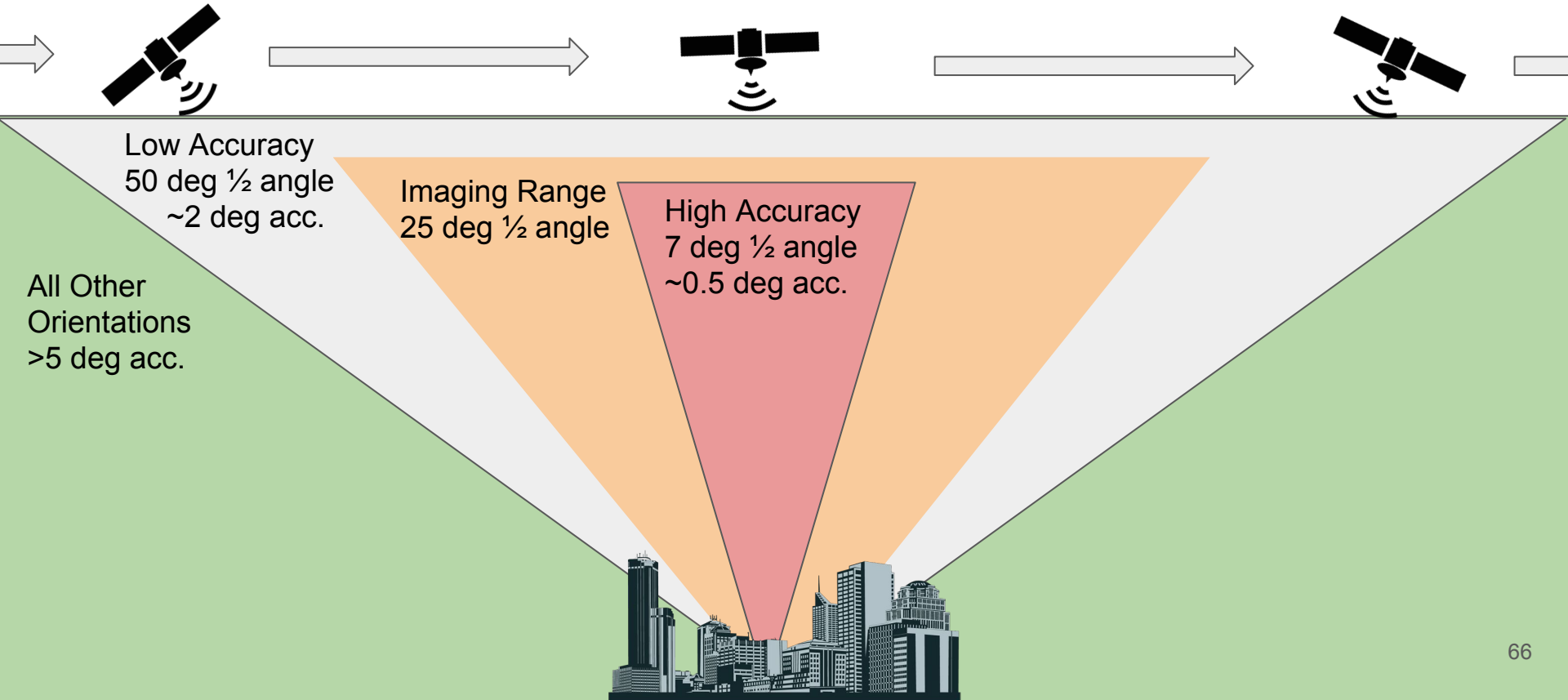

ADCS Risks

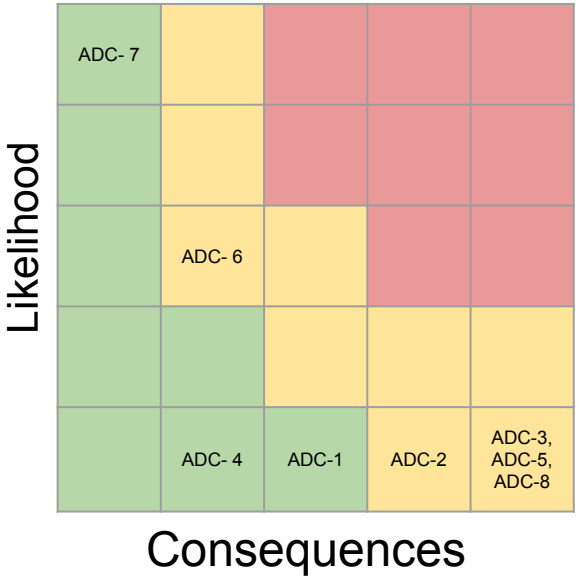

Trend	Approach
Improving	A - Accept
Worsening	M - Mitigate
Unchanged	R - Research
New	W - Watch

ID	Trend	Risk	Effect on Satellite	Mitigation Strategy
ADR-1	→	X or Y Reaction Wheel Failure	Complicates city switching and reduces pointing accuracy	M - Setting conservative max torque usage on reaction wheels
ADR-2	→	Z Reaction Wheel Failure	Complication in sun tracking procedures	M - Setting conservative max torque usage on reaction wheels
ADR-3	→	Double Reaction Wheel Failure	Loss of fine pointing capabilities	M - Pre-Flight testing
ADR-4	→	Single Magnetorquer Failure	Complication in initial spacecraft detumble and momentum offloading	W - Pre-Flight testing
ADR-5	→	Triple Magnetorquer Failure	Loss of momentum offloading capability, leading to loss of satellite	W - Pre-Flight testing
ADR-6	→	Software Bug	Varies by bug	R - Extensive testing, capability to perform software adjustments/ updates in flight
ADR-7	→	Sun In Earth Horizon Sensor	Inability to use IR sensors for Attitude Determination for duration of solar intrusion	A - Sun/Mag Attitude Determination takes over automatically
ADR-8	→	Magnetometer Failure	Severely Limits Tracking Capability	W- Pre-Flight testing

Path to CDR and Next Steps

- Purchase of Flight Unit PRE-CDR: Cost= $42,000
- Verify Gain Optimization with EM unit software
- Verify Momentum Budget with Orbital Simulation data
- EM Model Integration and Flat sat testing
- Command Dictionary and documentation
- Provide more accurate and dynamic power usage numbers
- Develop Wide FOV on-orbit calibration procedure
- Address sun sensor location in conjunction with diagonal solar panel configuration
- Determine placing of magnetometer in satellite body

PDR Part 2

April 3, 2017

Purpose & Scope

- Purpose
  - Describe the current design of the Phoenix Satellite
  - Propose purchasing plans for engineering models and flight hardware
- Scope
  - Descriptions of the communications, software, mission operations, EPS, structures, and thermal subsystems
  - Timeline through CDR and program budget
- Goals
  - Verify the design as accurate to supporting the science goal
  - Assess & approve the rationale behind the proposed budget and schedule breakdown

Overview

Presented By: Jaime Sanchez de la Vega

Changes & Clarification

- Mission objective changed:
  - Phoenix is capability driven mission with a science goal
  - All science requirements changed to ‘shoulds’ - *reflected in slides 21-25*
- Program background
  - Held in contract with NASA through a cooperation agreement (grant is tied to this)
  - Our obligation to NASA: (goals of the USIP program)
    1. Develop a program that meets the NASA strategic goals
    2. Grow undergraduate education from developing a suborbital payload
    3. Design, develop, and verify a spacecraft capable of being launch ready in 18 months from September 8, 2016 (Initiation Conference Date)
  - NASA - our stakeholder as well as support for technical guidance, but the program is developed and run by the student team

Changes to Mission Objective

Phoenix Mission Objective	
PHX - 1.01	*Phoenix* shall demonstrate the capability of the payload to capture a temperature gradient of the Earth's surface from LEO
PHX - 1.02	*Phoenix* should study how city composition using Local Climate Zones affects the surface urban heat island signature in various U.S. cities

Changes & Clarifications

- Focus of either absolute or relative temperature still to be decided
  - Will be determined by the degree of error in the process
    - Obtaining relative temperature might be more inaccurate
  - Researching other ways to determine absolute temperatures (reliance on ground truth with satellite images) for absolute measurements)
  - Will continue research through the semester, formal decision on mission focus defined in mid-May
- Have considered purchases of flight spares and engineering models
  - Budget at the end has been updated to display the current proposal

Risk Clarification

Class	Severity	Technical Performance	Schedule	Cost
5	Catastrophic	the cubesat has reached such a critical state that it is not recoverable. failure to continue the science mission	launch window to be missed	cost overrun of > 8%
4	Critical	CubeSat components suffer from a complete loss in functionality but they can be potentially recovered in a given amount of time	schedule slippage causing launch date to be missed	cost overrun of of 2% - 8%
3	Moderate	CubeSat components suffer from a partial loss in functionality but they can be potentially recovered	internal schedule slip that does not impact launch date	cost overrun of 1% - 2%
2	Negligible	A condition could cause the need for minor harm to the system, but this would not affect the satellite health and operations can proceed as normal.	internal schedule slip that does not impact internal development milestones	cost overrun of 0.5% - 1%

Risk Probability Rating		
Scale	Probability	Expansion
5	80-100%	Certain or near certain to occur
4	60-80%	Highly Likely to occur
3	40-60%	likely to occur
2	20-40%	unlikely to occur
1	0-20%	not likely or impossible

Communications

Presented By: *Kregg Castillo*

Team members: *Kregg Castillo, Kristen Murphy, Timothy Soto, Timothy Joyce, Nicholas Altman, Mecah Levy, Jeremy Jakubowski*

Communications Requirements

ID	Requirement	Rationale	Parent Requirement	Verification
PHX-COM-1	Communication systems shall have uplink capability	To notify the satellite of a change to mission schedule and/or configuration parameters.		Test
PHX-COM-2	The telecom system shall be capable of supporting a data volume of TBD	A TBD data volume must be met so that the science team can make detailed assessments of how LCZs are impacting the UHI Effect. Requirement assumes mission lifetime of TBD months		Demonstration
PHX-COM-3	antennas shall not block the FOV of the ADCS	the earth limb sensors of the ADCS cannot be obstructed in order to aid satellite location tracking	ADC-6	Inspection
PHX-COM-4	System transmission power shall remain within limits of EPS	EPS provides a limited amount of power. Transmission data rates and transmission bandwidths must transmit power within these limits.		Test
PHX-COM-5	The communications subsystem shall be compliant with restrictions set by the FCC	Specified by the FCC		Demonstration

Color Legend:

Compliant	Compliant by CDR	Compliant by TRR	Compliant by FRR

Communications Requirements

ID	Requirement	Rationale	Parent Requirement	Verification
PHX-COM-6	The Phoenix cubesat shall implement its own unique satellite ID in the telemetry downstream.	FCC specifications		test
PHX-COM-7	The telecom system shall be able to power down its transmitter by software command.	The transmitter may need to be shut down in some scenarios order to comply with FCC and ITU regulations, or to maintain satellite health		test
PHX-COM-8	The telecom system shall not re-enable its transmitter after a shutdown command until it receives a positive command from the Phoenix MOC.	to support satellite health in the event of a system failure		test
PHX-COM-9	The EIRP shall not exceed TBD	Shall not exceed the restrictions of the FCC while remaining within the limits of the link budget		demonstration
PHX-COM-10	The communications subsystem shall be capable of interfacing with the ASU ground station	transmissions must be capable of interfacing with the ASU ground station		demonstration

Color Legend:

Compliant	Compliant by CDR	Compliant by TRR	Compliant by FRR

Payload data downlink rates

Image Size: (640 x 512 pixels)(16 bits/pixel) = 5242880 bits/image
Compressed Image Size: (80%)(Image Size) = .8*5242880 = 4194304 bits

Parameter	UHF Downlink	Theoretical UHF	S-Band Downlink
Data Rate	4800 bps	19200 bps	1000000 bps
Seconds/ Compressed Image	873.8	218.45	4.194
Images/ 1 min pass	.069	.275	14.3
Images/ 2 min pass	.137	.549	28.6
Images/ 5 min pass	.343	1.373	71.5
Images/ 8 min pass	.549	2.197	114.4

UHF System Hardware

GomSpace AX100

- 430-440MHz programmable frequency
- 3.3V supply, 800mA transmit current
- 29-31dBm output power
- 500-19200 bps user data rate
- I^2C, UART connections

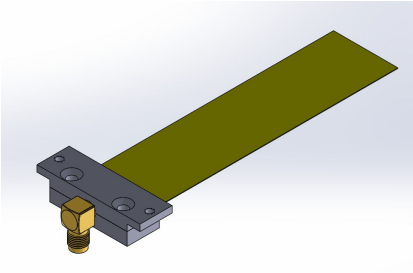

In-house Monopole Antenna

- Omnidirectional pattern
- Customized to frequency
- Estimated >0 dBi gain

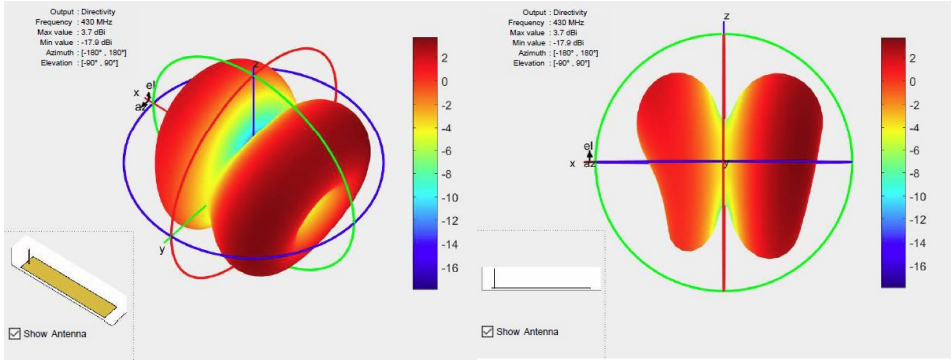

Nichrome Deployment

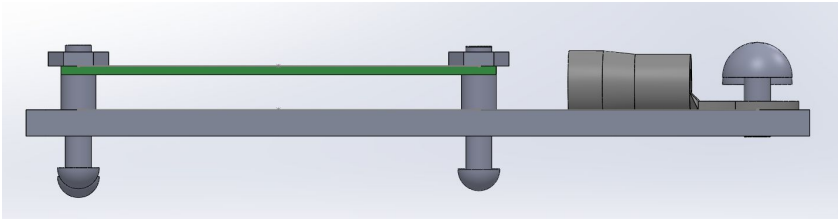

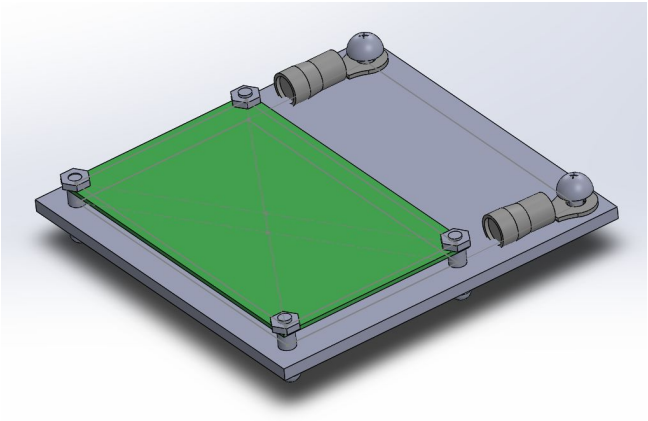

- Nichrome deployment system is composed of an aluminum base, circuit board that supplies a constant current and 30 AWG Nichrome wire secured by two button screws.
- Draws power from main stack: requires 0.9 W.
- Current supplied: 1.6 +/- 0.05 A.
- Dimensions: 4.5x4.5x0.7 cm
- Base screws into interior of chassis inside of the camera mount from 4 points, secured by nuts.
- The tension for the system is supplied by the tape measure laying flush against the chassis. A fishing line will hold the antenna to the chassis and be routed down to the nichrome.

S-Band System Hardware

CPUT STX Transmitter (ClydeSpace)

- 2400-2450MHz programmable frequency
- 7.2v supply, 800mA transmit current
- 24-30dBm programmable output power
- 1Mbps user data rate
- I^2C, SPI connections

CPUT Patch Antenna (ClydeSpace)

- 60° beam angle
- 4.1mm profile
- Maximum 8 dBi gain

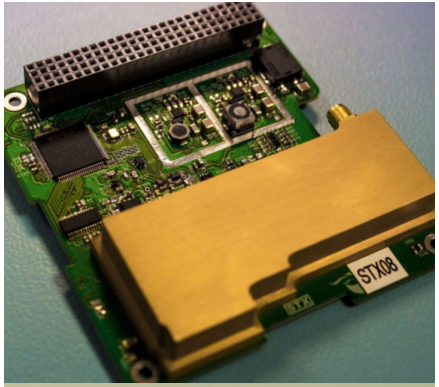

GPS System Hardware

Novatel OEM615

- L1,L2 GPS tracking
- 3.3v, 300mA current
- UART connection

SkyFox piPATCH-L1

- L1 Frequency - 1575MHz
- 98x98x14.5mm

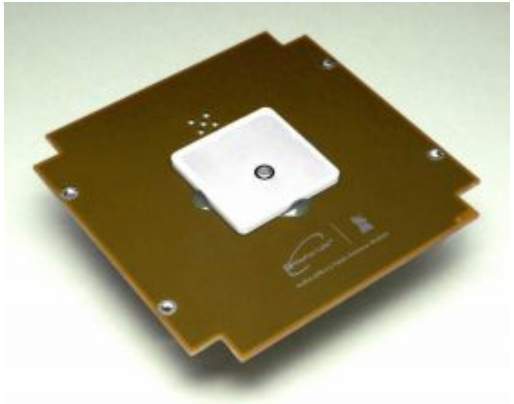

Communications System Block Diagram

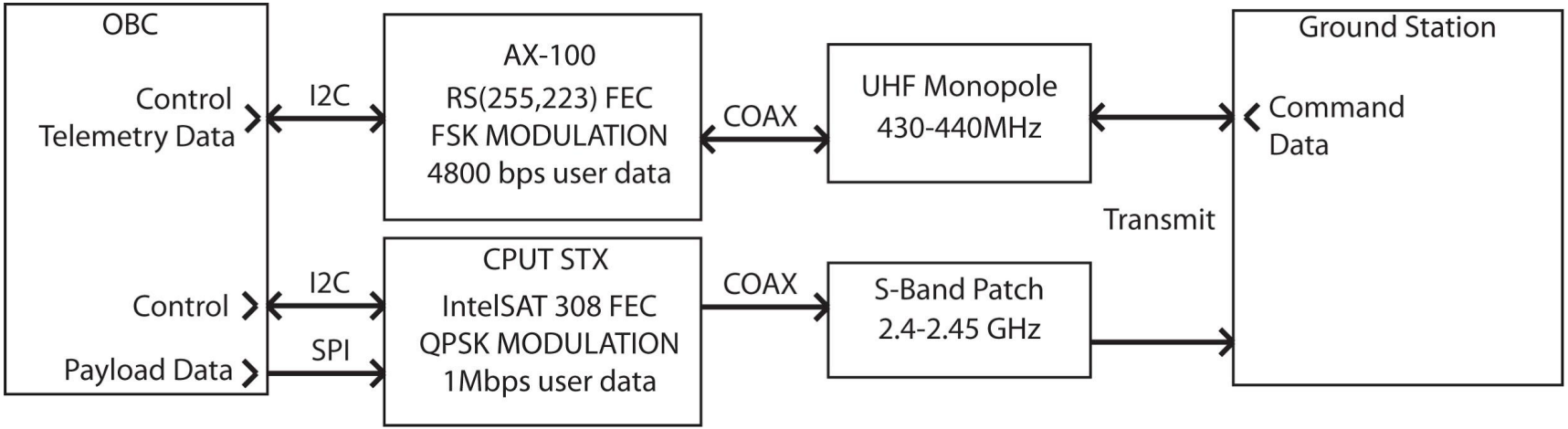

Communications Controls Block Diagram

UHF Control

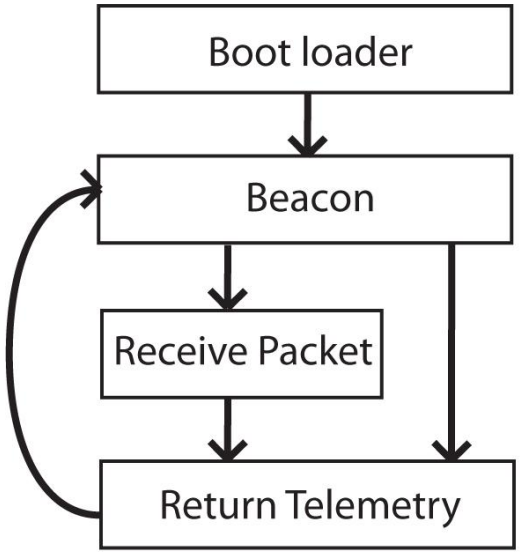

S-Band Control

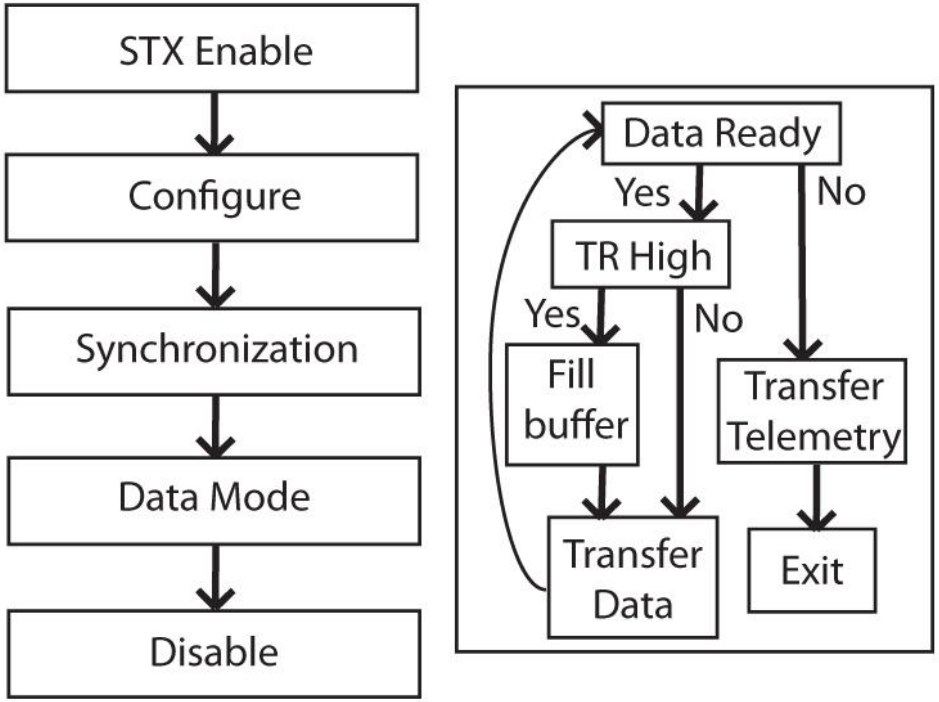

Link Budget

UHF uplink frequency: 430 MHz
UHF downlink frequency: 430 MHz
S-Band downlink frequency: 2.4GHz

UHF uplink data rate: 9600 bps
UHF downlink data rate: 9600 bps
S-Band downlink data rate: 2Mbps

		EIRP (dBW)	EB/N0 (dB)	BER
Downlink (Ground Station)	UHF	2.15	15.78	5.23E(-8)
	S-Band	8.7	23.68	1.00E(-30)
Uplink (Space Craft)	UHF	30	45.67	1.00E(-30)

Comms Risks

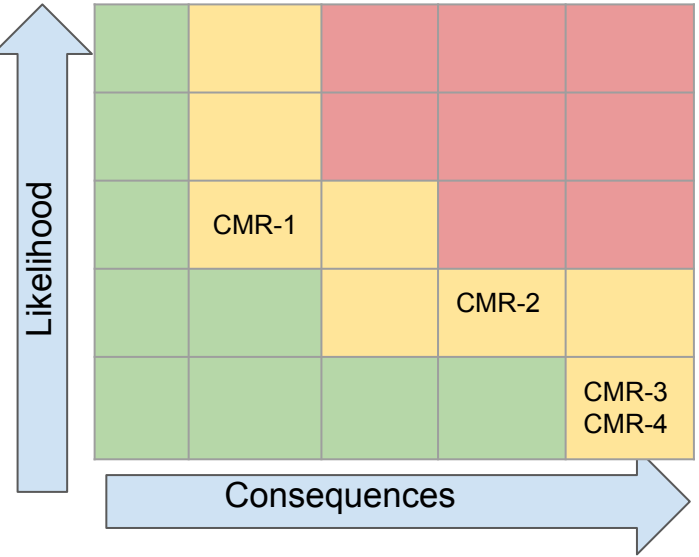

ID	Trend	Risk	Mitigation Strategy	Approach
CMR-1	▭	Transmit interference to GPS antenna	Optimal placement of transmitting antennas	A
CMR-2	↑	Antenna deployment failure	Increased testing of nichrome release circuit	M
CMR-3	↑	Data loss during operations	Partner with other ground stations, forward error correction, on board storage	M
CMR-4	→	Power interconnect failures	Power tied directly to communications systems	M

Trend	Approach
↑ Improving	A - Accept
↓ Worsening	M - Mitigate
→ Unchanged	R - Research
▭ New	W - Watch

Challenges and Next Steps

- Decoding and demodulation methods
- Ground station licensing
- Communications placement

- UHF antenna fabrication
- Communications control simulation
- Ground station hardware and software
- Ground station qualification testing through in-lab simulations
    - Can talk to current cubesats in LEO

Command & Data Handling

Presented By: *Nicholas Downey* and *Brad Cooley*

Command & Data Handling Requirements

ID	Requirement	Rationale	Parent Requirement	Verification
CDH-1	The C&DH system shall have sufficient non-volatile memory capacity to store the entire mission-lifetime's worth of image data	Allows for retransmission of images.	PHX-2.01	Demonstration
CDH-2	The C&DH system shall have sufficient system resources to run the flight software	The C&DH system runs the flight software	PHX-2.01	Demonstration
CDH-3	The C&DH system shall have sufficient number of interfaces to hardware components in the satellite	Necessary for commanding and data handling	PHX-2.01	Demonstration

Color Legend:

Compliant	Compliant by CDR	Compliant by TRR	Compliant by FRR

Onboard Computer (OBC)

- GomSpace NanoMind A3200
- Pros:
  - Space-saving mounting motherboard serves as main interface board
  - Same assembly featured on STF-1 from NASA IV&V and WVU
- Cons:
  - Limited built-in flash
- Details:
  - 512 KB built-in flash
  - 128 MB NOR flash
  - 32 kB FRAM for persistent configuration
  - 32 MB SDRAM
  - AVR32 architecture processor

The NanoMind A3200 integrates in a Cubesat using the NanoDock auxiliary board that can also host other miniaturised GomSpace avionics modules, e.g. the NanoCom AX100 Transceiver.

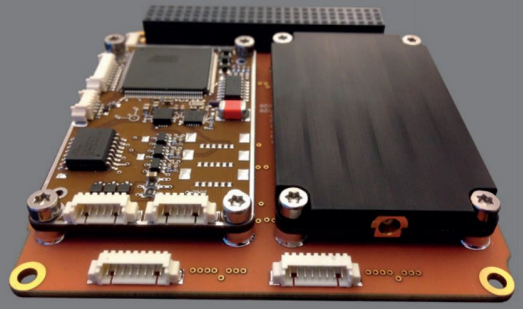

Data Interfaces

Can add additional I^2C, CAN, and SPI at will.

1 UART unavailable for debugging.

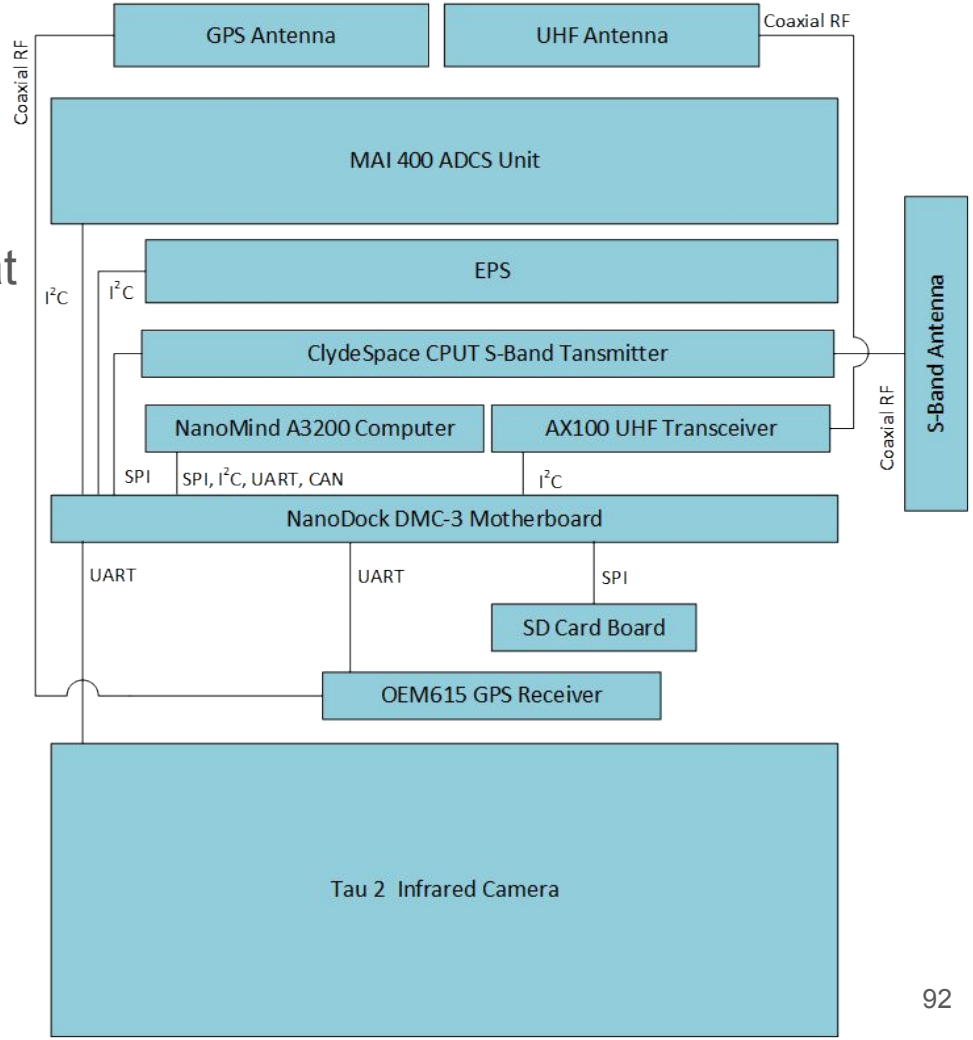

Memory Budget

Volatile: 256kB FRAM + 32MB of SDRAM

- Global variables, stack, heap.
- Largest file being stored in RAM at any time will be a single image. (656kB)

Nonvolatile: 128MB flash + 16GB SD Card

Flash:

- 3 cFS Images: < 60MB
  - Die 1: Base Image, 1 upgradeable image
  - Die 2: 1 upgradeable image.

SD Card:

- Science Data: 1.78GB (2700 images over mission life at 656kB per image)
- Telemetry data: 9.5055GB of telemetry data collected over mission life.
- 11.29GB of total data stored on SD Card.

Bootloader

Bootloader stored in microcontroller flash

cFS images stored on NOR Flash dies

1 static baseline image, 2 upgradeable on orbit

Auto-increment next image on boot

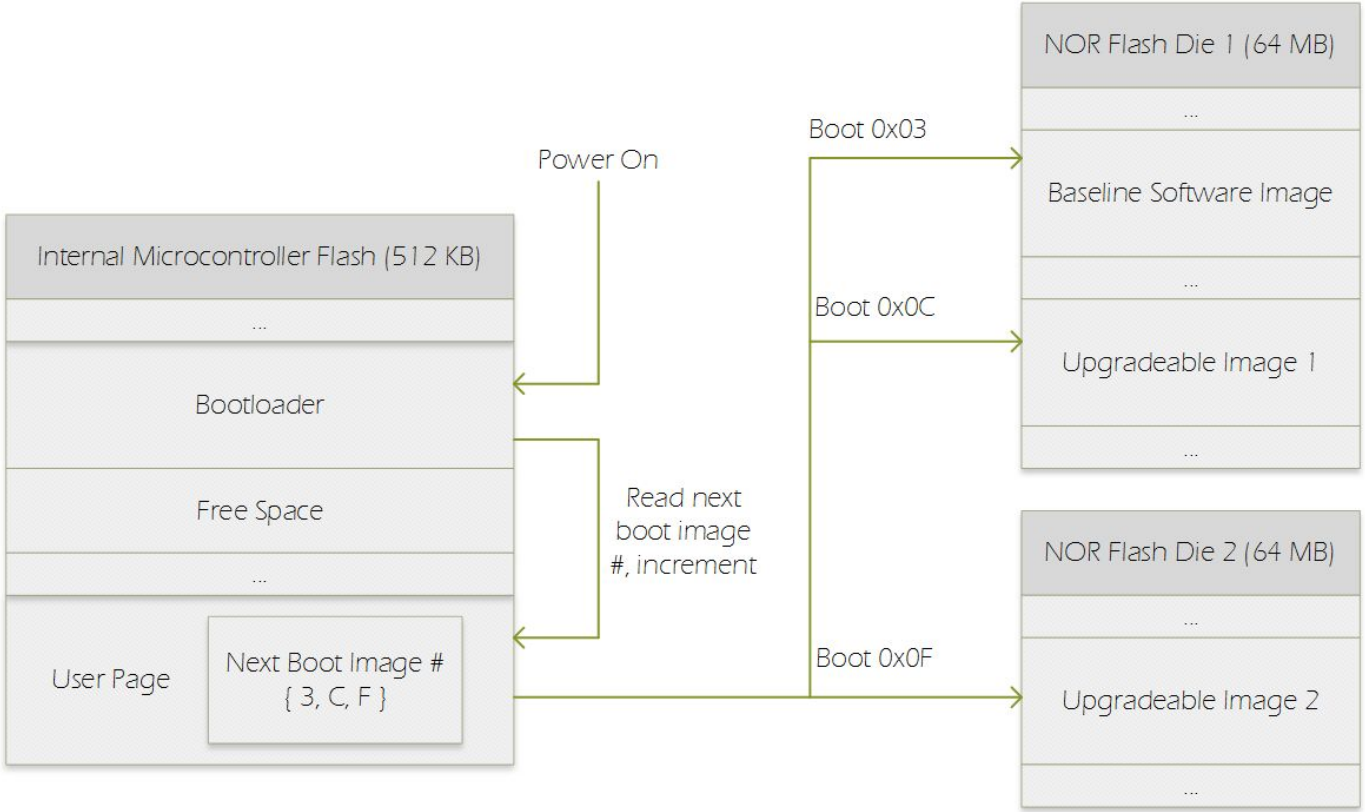

Flight Software

Presented By: *Nicholas Downey and Brad Cooley*

Team Members: *Nicholas Downey, Brad Cooley, Stephen Flores, Aaron Musengo, Craig Knoblauch, Amit Tallapragada*

Flight Software Requirements

ID	Requirement	Rationale	Parent Requirement	Verification
FSW-1	FSW shall read Housekeeping telemetry from other subsystems according to the needs of those systems.	Allows monitoring and study of satellite health and/or unexpected behavior.		Test
FSW-2	FSW shall be able to communicate with ASU Ground Station	ASU ground station is the space link provider		Test
FSW-3	FSW shall issue commands according to schedules uplinked by the Phoenix team.	A schedule allows more predictable execution of mission objectives and study of unexpected behavior	MO-4	Test
FSW-4	FSW shall reference Mission Elapsed Time to UTC.	Science objectives require knowledge of time.	PHX-3.06	Test

Color Legend:

Compliant	Compliant by CDR	Compliant by TRR	Compliant by FRR

Flight Software Requirements

ID	Requirement	Rationale	Parent Requirement	Verification
FSW-5	FSW shall collect and maintain position data at moment of image capture	Provide image with sufficient metadata to identify and classify image	PHX-3.07	Test
FSW-6	FSW shall be able to receive commands from a Ground Support Software user via the ASU Ground Station link	Retrieval of science data and other MOps duties	PHX-3.08	Test
FSW-7	FSW shall wait 30 minutes after initial powerup to deploy any deployables.	Conform to CalPoly CubeSat requirements. Requirement 2.4.2	CSS-OPR-13.02	Test
FSW-8	FSW shall wait 30 minutes after initial powerup to begin any RF transmission.	Conform to CalPoly CubeSat requirements. Requirement 2.4.3	CSS-OPR-13.03	Test

Color Legend:

Compliant	Compliant by CDR	Compliant by TRR	Compliant by FRR

Flight Software Overview

- Design Overview
  - Flight software: Open source core Flight System from NASA Goddard Space Flight Center
    - Six mission specific hardware interfacing applications
    - Platform Support Package and Boot Loader adapted from NASA IV&V and West Virginia University's STF-1 cubesat
- Green: Provided by Phoenix
- Grey: cFS open source release
- Orange: Third-party
- Blue: Provdide by STF-1 (NASA IV&V)

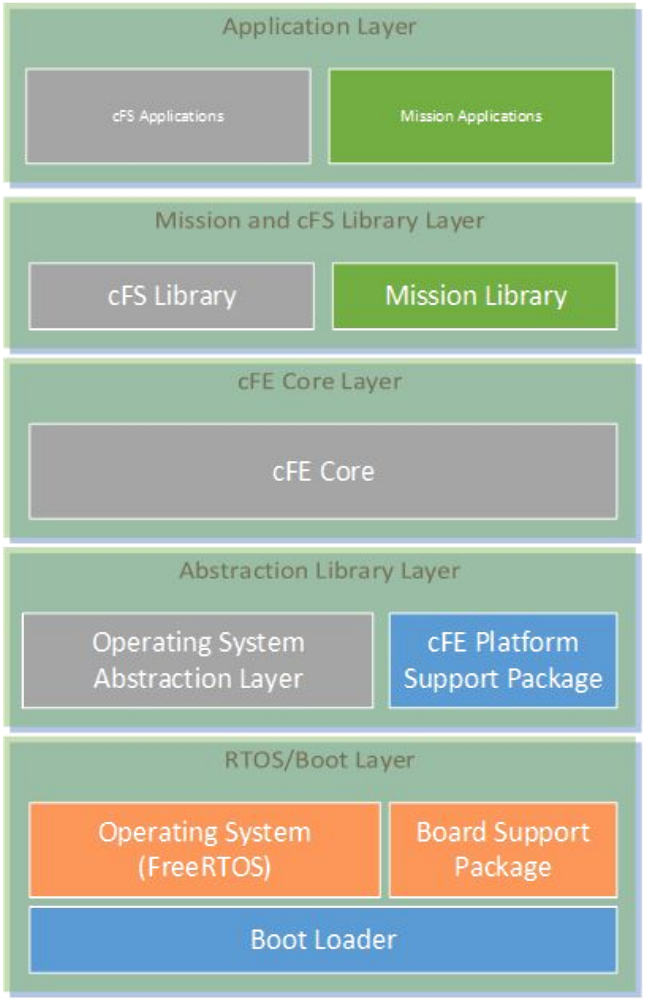

Software Message Bus and System Architecture

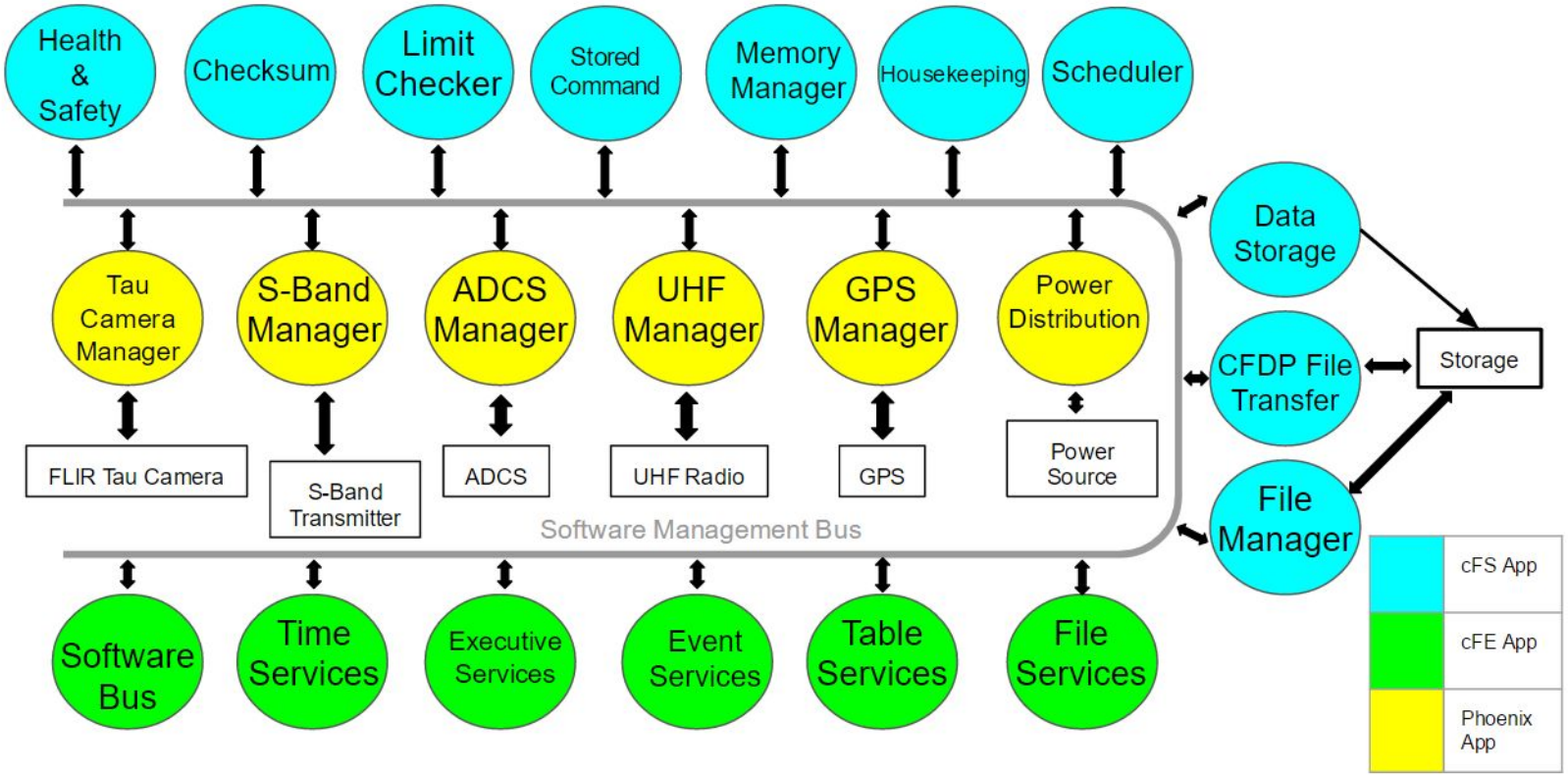

Software Development and Testing

- Gitlab repository
  - Version control
  - Issues and time tracking
  - Continuous integration
- cFS Unit Testing assert framework
- Python systems tester
  - Hardware-in-the-loop test scripting framework
  - CCSDS command line packet builder
  - Verify events using event log parsing

FlatSat Development

- Integration of STF-1 software
  - Platform Support Package middleware between FreeRTOS and cFS
- cFS build for flight-analogous hardware
- FlatSat C&DH Hardware:
  - **AVR32907:AT32UC3C-EK (Evaluation kit for AT32UC3C0512C)**
  - AT32UC3C0512C microcontroller
  - Program Memory Size : 512 kb
  - I/O Pins : 123
  - Max Speed : 66 MHz
  - Interface: (Networking) CAN, LIN (Board Control) USB, JTAG (Debugging) JTAG, NEXUS
  - Testing : GUI and Capacitive touch control

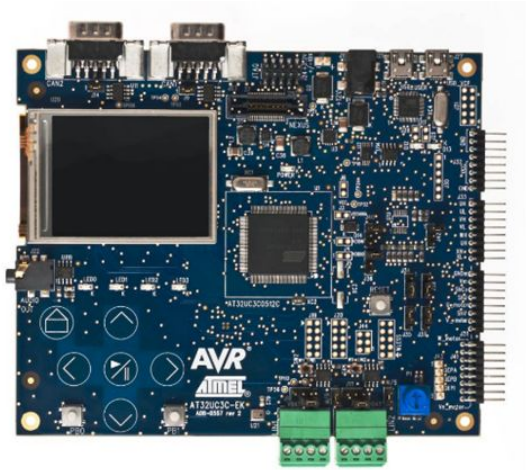

Fault Protection

Protection:

- Bootloader switches between cFS image banks autonomously
- Watchdog timeout triggers reset

Handling:

- Use safe mode as lifeboat if telemetry thresholds are exceeded
- Error-type or stale-type app telemetry will reset individual applications
- CRC from cFS CS application checks data integrity

Image Delivery

Process for delivering images: "Instrument to Investigator"

Retrieving buffer via command
- Algorithm being verified

FLIR "Decompression"
- Algorithm being verified

Does not include handling of:
- Temperature
- Pointing
- GPS (time and location)

Will need data to be encrypted
- NOAA license
- CCSDS 350.9-G-1

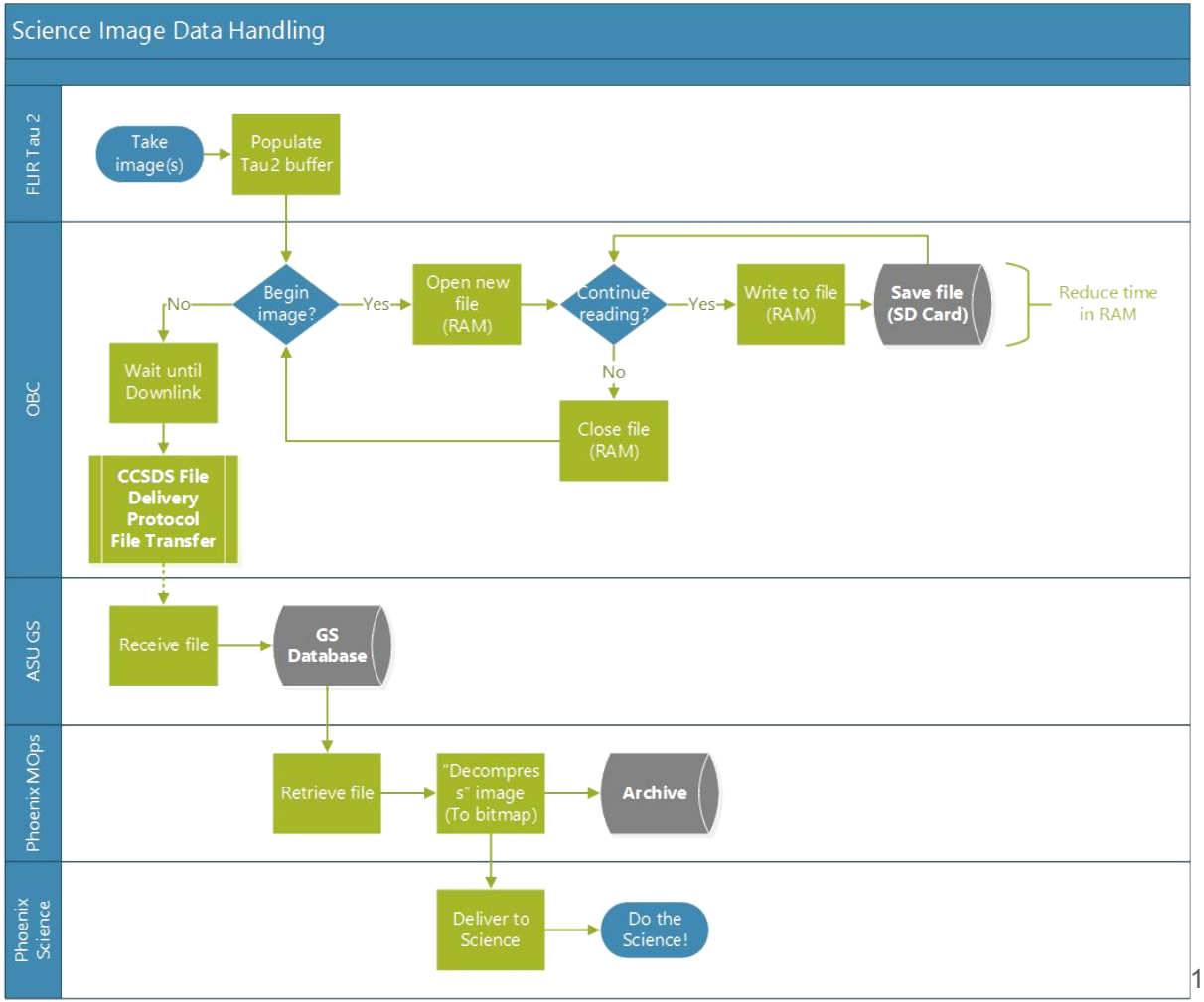

cFS Application Framework

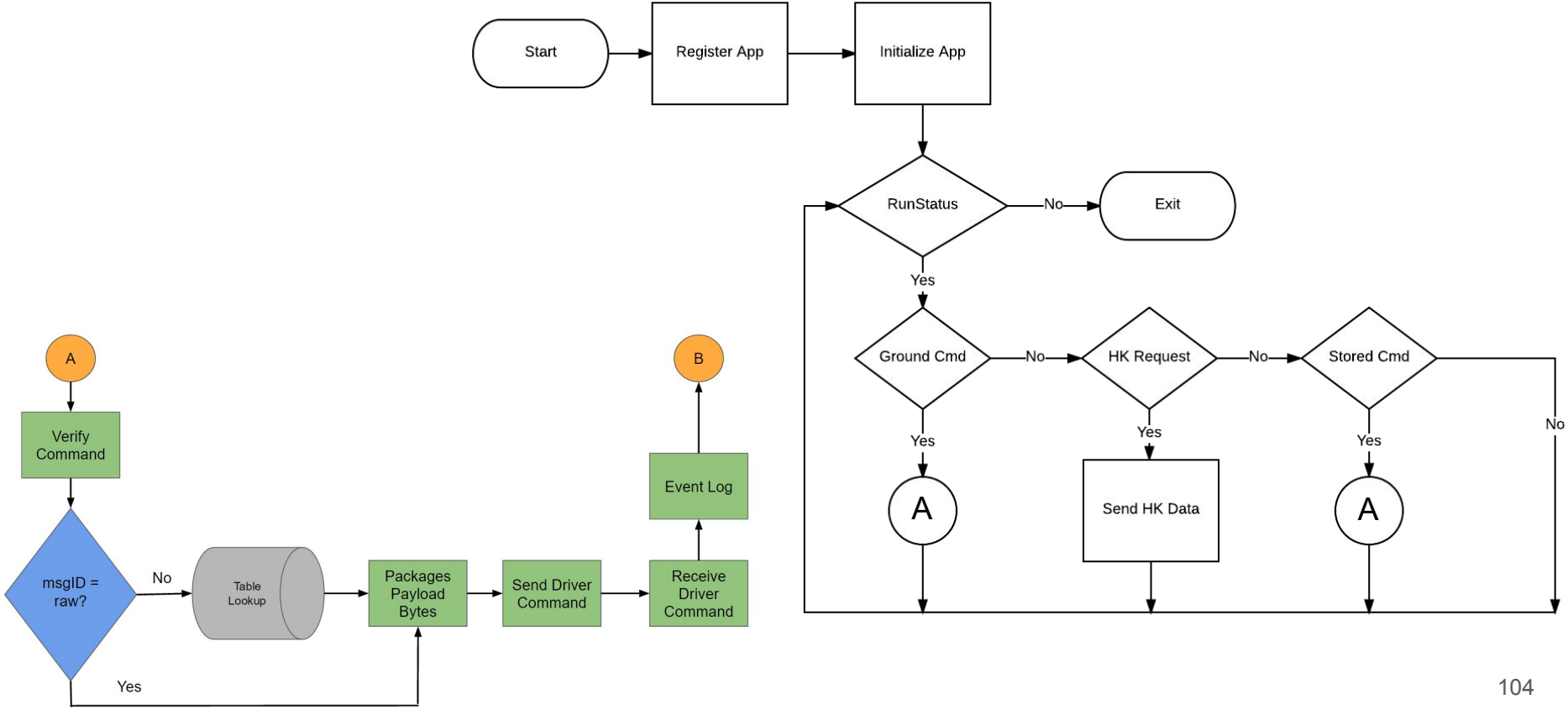

C&DH & Flight Software - Top Level Risks

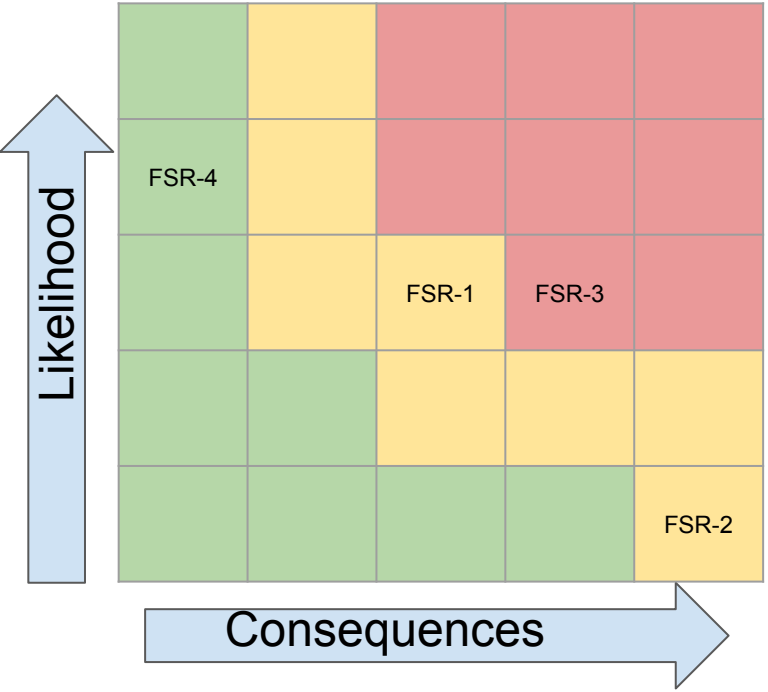

ID	Trend	Risk	Mitigation Strategy	Approach
FSR-1	↑	Radiation Effects	Hardened Electronics System restores/resets	M/A
FSR-2	→	Total Ionizing Dose	Hardened Electronics	A
FSR-3	↑	Software Defects	Agile Development Strategy	M
FSR-4	→	Documentation Defects	Documentation Reviews	A

Trend	Approach
↑ Improving	A - Accept
↓ Worsening	M - Mitigate
→ Unchanged	R - Research
New	W - Watch

Ground Software

Presented By: *Nicholas Downey* and *Brad Cooley*

Ground Software Requirements

ID	Requirement	Rationale	Parent Requirement	Verification
GSW-1	GSS shall provide user interface for mission ops interaction with the satellite	Users must interface with the system	MO-4	Demonstration
GSW-2	GSS shall maintain a library of commands that the satellite recognizes	User communicates with satellite by sending recognized commands.	MO-4	Test
GSW-4	GSS shall be able to display science data in image format to mission ops team	Enables MOps to inspect satellite for malfunction or unexpected behavior	MO-3	Test
GSW-5	GSS shall process and prepare data for delivery to science.	Science needs data in particular format	PHX-3.09	Test

Color Legend:

Compliant	Compliant by CDR	Compliant by TRR	Compliant by FRR

Mission Operations and Ground Station Software

- Mission Operations Specialist interfaces with ground station via Web App
  - Schedules communication event and specifies file to be transferred
  - Built by ASU Computer Science capstone team
- Mission-specific ground support software
  - Enables mission planning and execution
  - Supports delivery of science data
  - Built by Phoenix Software team.
  - Refactoring trade study
    - ITOS*
    - JMARS*
    - COSMOS
    - ASIST

MOps Use-case Diagram

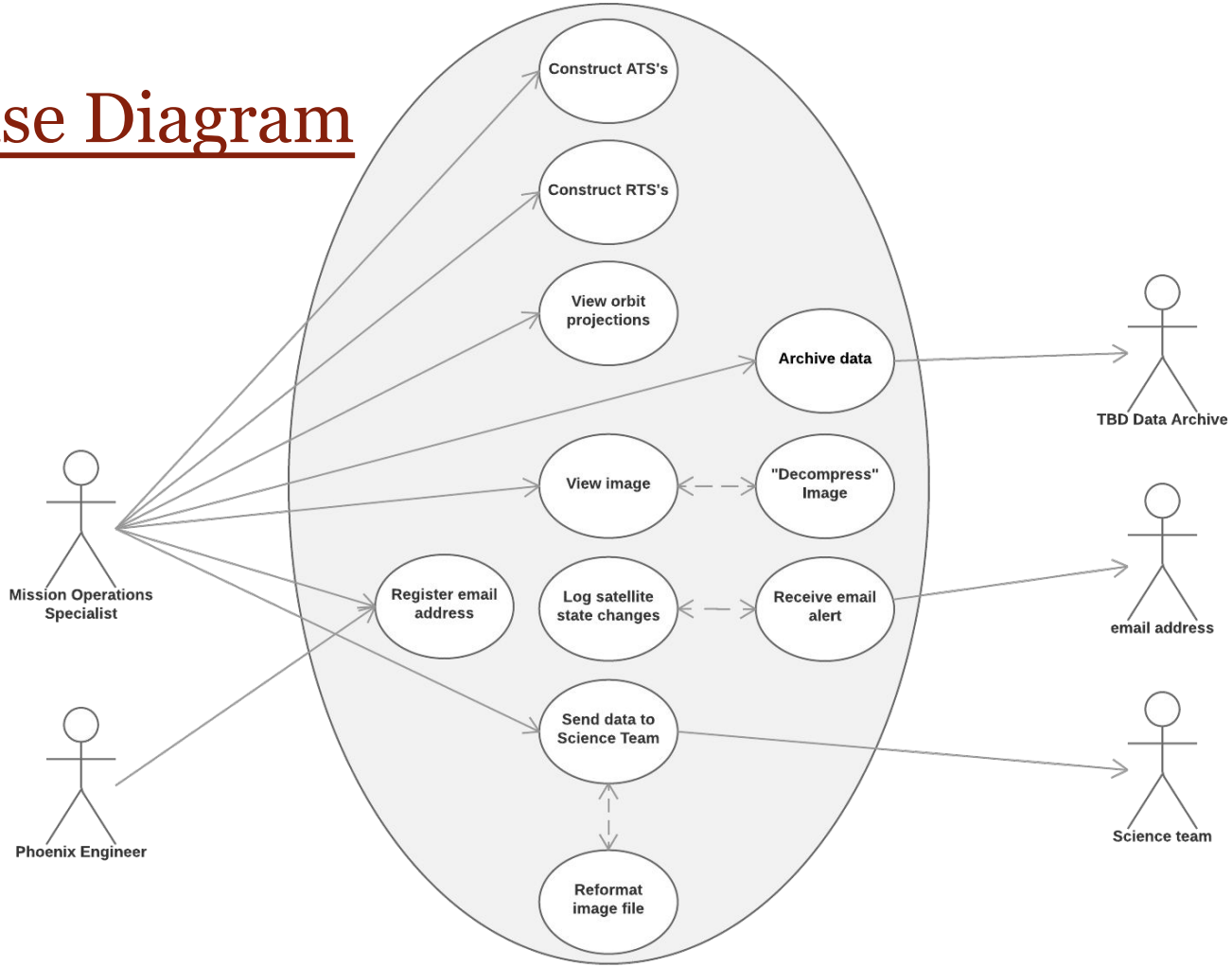

Ground Software - Top Level Risks

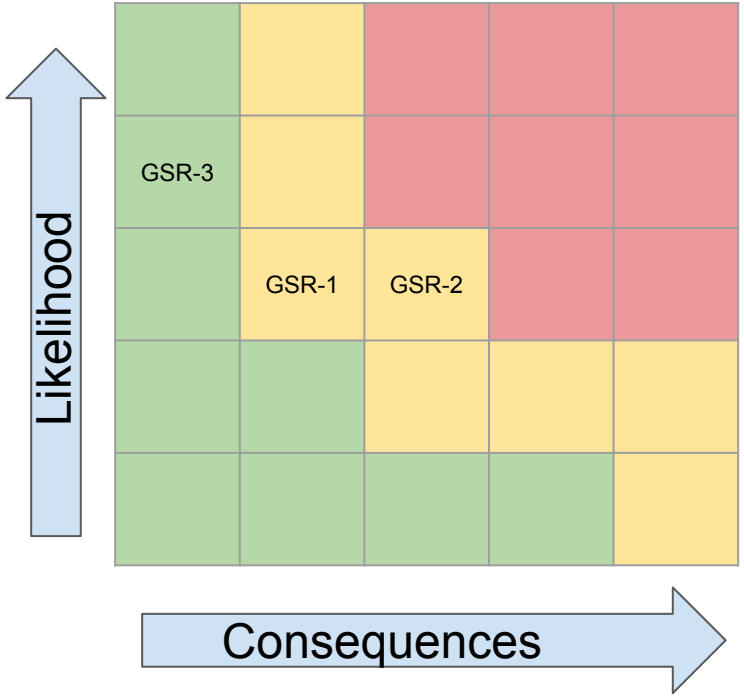

ID	Trend	Risk	Mitigation Strategy	Approach
GSR-1	→	Bugs in schedule builder	QA Testing	A
GSR-2	→	Bugs in command library	Hardened Electronics	A
GSR-3	→	Documentation Defects	Documentation Reviews	A

Trend	Approach
↑ Improving	A - Accept
↓ Worsening	M - Mitigate
→ Unchanged	R - Research
New	W - Watch

Challenges and Next Steps

- Integrating many systems, frameworks, tools, etc.
- Bringing new engineers up to speed
  - Ramping up development efforts with increased developer-hours available
- Next steps
  - Integrate and verify software adapted from STF-1 (cFS build for flight-analogous hardware)
  - Continue on application level development
  - Grounds System
    - Acquire ITOS through GSFC
    - Meet with JMars to explore scheduling layer tools

Mission Operations

Presented By: *Sarah Rogers*

Mission Operations Requirements

ID	Requirement	Rationale	Parent Requirement	Verification
MO-1	The Phoenix MOps shall develop the Mission Operations software while abiding by the ASU Ground Station ICD.	This software will be used to retrieve, display, and/or process data to/from the ASU Ground Station. ICD will specify information exchange between the ground station and MOPS		Demonstration
MO-2	The Phoenix MOps shall have the memory capacity to store all satellite's mission data.	Based on maximum data generated over the course of satellite & mission		Demonstration
MO-3	The Phoenix MOps shall monitor spacecraft and instrument health.	Spacecraft health is important for completing the mission.		Demonstration

Color Legend:

Compliant	Compliant by CDR	Compliant by TRR	Compliant by FRR

Mission Operations Requirements

ID	Requirement	Rationale	Parent Requirement	Verification
MO-4	The Phoenix MOps shall generate, verify, and send command sequences for the spacecraft.	MOps will need to control the spacecraft through command sequences.		Demonstration
MO-5	The Phoenix MOps shall prepare dataproducts for the science team that will consist of the images along with any additional telemetry needed to study the image.	Creation of data products will allow the science team to complete the main science goals.	PHX - 2.04 PHX - 3.06	Demonstration
MO-6	The Phoenix MOps shall prepare downlinked images for public distribution.	Data shall be made publicly available to promote an education of the UHI phenomenon, STEM fields, and mitigation strategies		Demonstration

Color Legend:

Compliant	Compliant by CDR	Compliant by TRR	Compliant by FRR

Mission Operations Requirements

ID	Requirement	Rationale	Parent Requirement	Verification
MO-7	Phoenix MOps will prepare backup procedures in case of unexpected operations.	When the satellite does not operate as expected, there will be a known procedure to return the spacecraft to known operations and continue with mission objectives.		Demonstration
MO-8	Mission Operators will be trained to operate the Ground Station by the use of the Phoenix Mission Operations Center at ASU	It is critical to have the mission operators cleared to work in the base of operations.		Demonstration
MO-9	The Phoenix Mission Operations Center shall model spacecraft resource utilization during the flight.	Resource modeling will facilitate sequence planning and system health monitoring.		Demonstration
MO-10	The Phoenix Operations Center shall verify command sequence validity.	Valid command sequences are important for proper spacecraft functioning.		Demonstration

Color Legend:

Compliant	Compliant by CDR	Compliant by TRR	Compliant by FRR

MOps Overview

- 3-5 primary mission operators
  - Operator duties will be separate from the *Phoenix* engineering team
  - Will interface with the satellite through ground operations
  - Develops the uplink command sequences and monitors satellite health
  - Responsible for coordinating dataproducts with the science team
- **Operations Location:** Organizing office space to perform all mission operations and data analysis
  - Easily accessible area to allow for collaboration between engineering and science teams
  - ASU Mission Operations Center in ISTB4 to serve as backup
  - Program budget will allocated necessary funds for mission operations facilities and support

Operator Vs Automatic Scheduling

Normal operations are manual in order to mitigate the potential for software errors on board the satellite

Mission Operator Scheduling:

- Camera startup and power down
- Target tracking & orientation operations
- Image command
- Downlink Operations
- Verification of healthy satellite state in the event of system upset

Automatic Scheduling:

- Transition to survival mode in the case of a system failure
- Health data gathering
- Health beacon through UHF

Orbit Scheduling

- Scheduling Progress
  - Time based
  - Downlink capabilities exceed current imaging
    - 1 Downlink/week
  - **Uplinks:** 1/week
    - Will be coordinated with science team as weather conditions are examined
      - ideal images are taken in calm weather conditions

Operations Scheduling Structure		
ID-01	12:30:00	Power up camera
ID-02	12:40:00	Point NADIR
ID-03	12:45:00	Track target 33.4484° N, 112.0740° W
ID-04	12:45:10	Take image
ID-05	12:45:20	Point NADIR
ID-06	12:55:00	Track target 38.9072° N, 77.0369° W

Data Details

- Ability to downlink about 114 images in 1 pass
- Data Products
  - About 61 images/week
  - 4,000 images over desired mission lifetime
- Images to be sorted based capture times
  - Will indicate which are taken at the desired UHI peak times
  - Initial image verification conducted by mission operators to assist science team

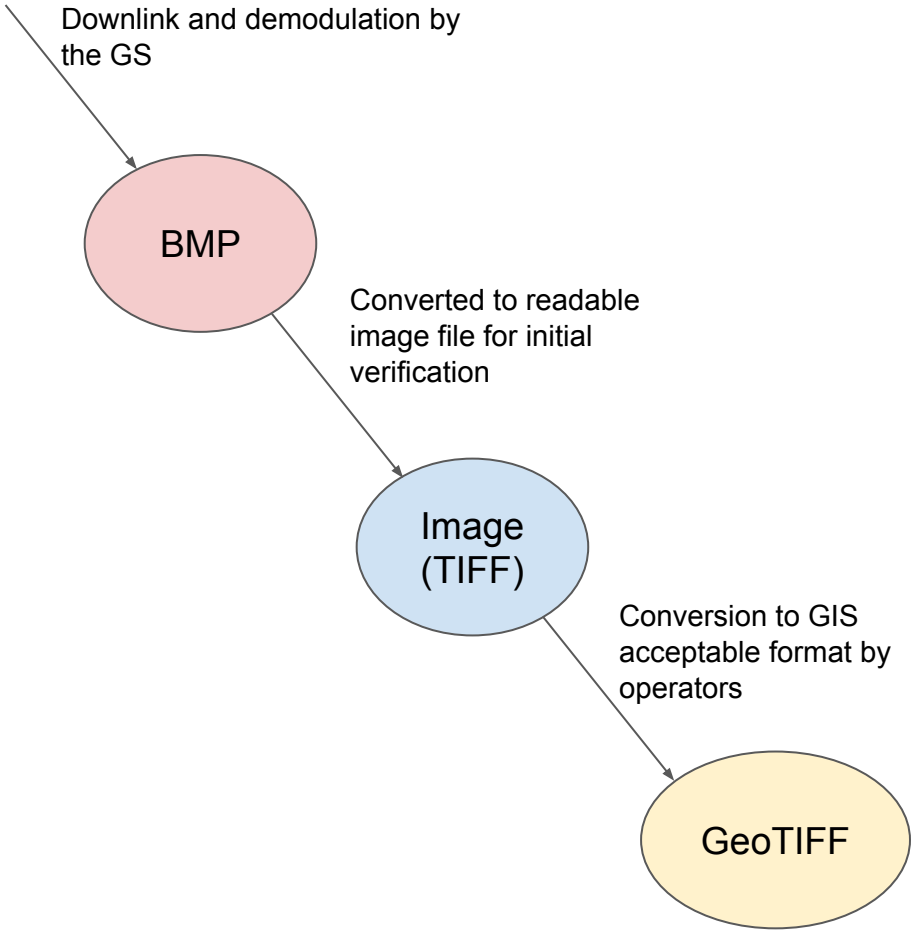

ASU Ground Station

- ASU ground station to be used for mission operations
  - Facilitates communications over 430-440 MHz for UHF operations
  - In development for past 2 years - expected finish: **Fall 2017**
- S-band Communications
  - Communications in the Space-allocated 2.2-2.3GHz range only accessible by the US government
  - Installing filter to allow for downlinks in the 2.4GHz range
- Embry Riddle to serve as a backup for UHF operations
  - no other universities confirmed for assistance in s-band capabilities at this time
  - Looking into partnership with Georgia Tech for secondary ground support

Station Interfaces

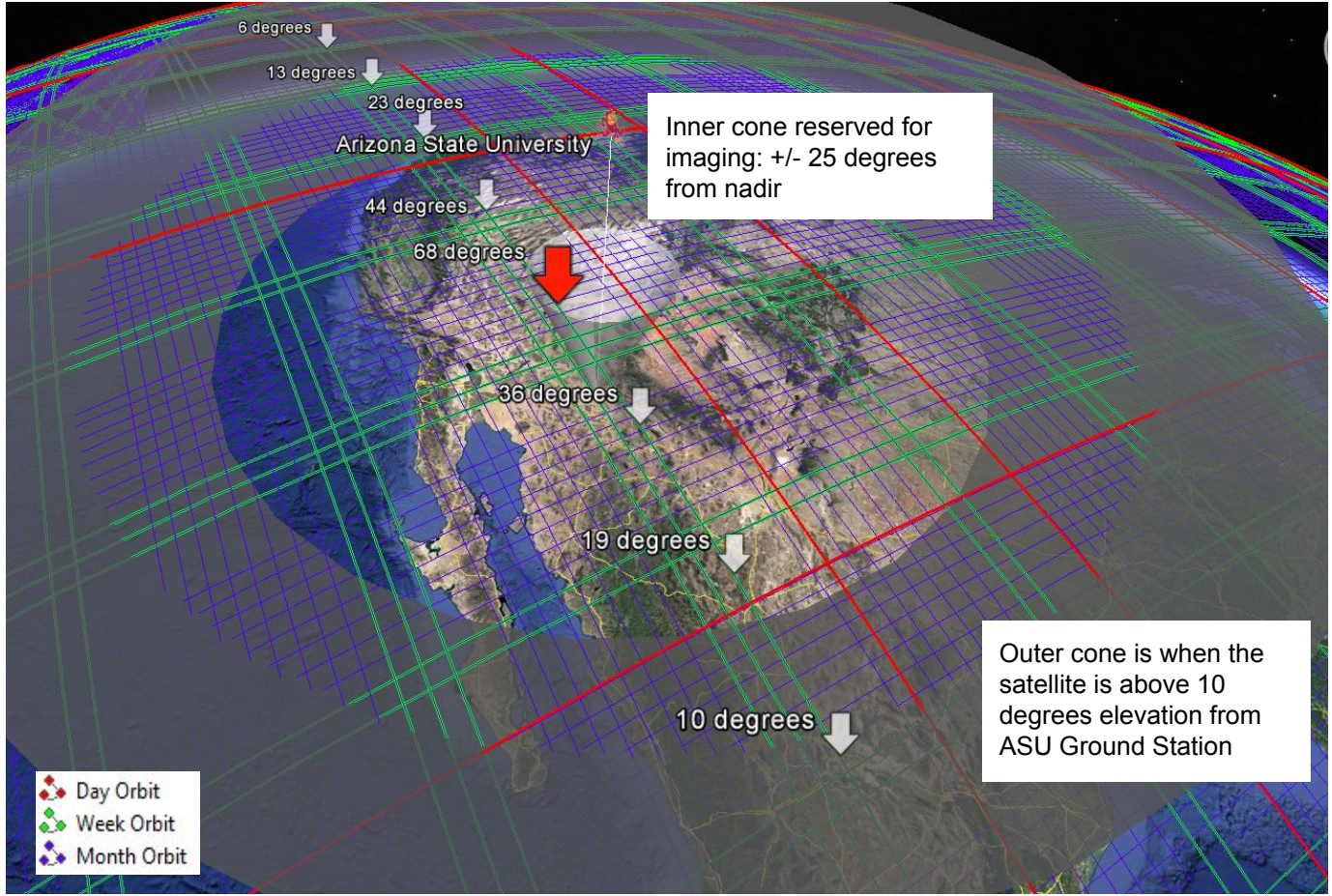

Challenges and Next Steps

- Develop templates for the command sequences alongside flatsat testing
  - Visually based like THEMIS's MOPs software:
    - JMars basis with add ons developed by MOps team
    - JMARS - includes Earth application, promising architecture
      - Could be used for schedule making and science target flexibility
    - Trade studies to be conducted to confirm use
  - Goal: understand the way the satellite behaves during testing, to properly structure operation commands and interpret satellite health data
- Recruitment
  - Past difficulty in finding students interested in mission operations work
  - Recruitment will be amplified in order to prepare new team members and optimize the summer timeframe

Mission Operations - Top Level Risks

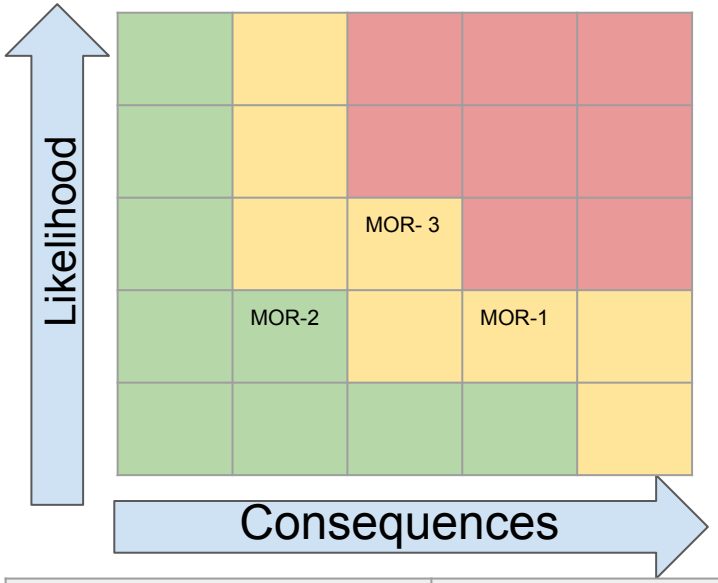

ID	Trend	Risk	Mitigation Strategy	Approach
MOR-1	↑	ASU Ground Station is not yet operational	Seek out backup Ground Stations	M
MOR-2	▭	Human error in command sent to spacecraft	Checklists, script checks, keep detailed records for backtracking of issues	M
MOR - 3	→	No backup ground station	Other universities being contacted to serve as backup facilities if needed	M

Trend	Approach
↑ Improving	A - Accept
↓ Worsening	M - Mitigate
→ Unchanged	R - Research
▭ New	W - Watch

Electrical Power Subsystem (EPS)

Presented By: *Raymond Barakat*

Team Members: *Raymond Barakat, Aditya Khuller, Jason Ruchal, Jordan Brown, Alex Willoughby, Chad Davis, Jordan Schmidt*

EPS Requirements				
ID	**Requirement**	**Rationale**	**Parent Requirement**	**Verification**
PHX-EPS -1	EPS shall power all components with required power for each component.	Maintain system health and functionality.	PHX-3.01	Test
PHX-EPS -2	Solar panels shall provide power to battery and EPS shall charge battery and maintain battery health.	Allows future battery usage for backup power draw in case solar panels cannot be used for a period of time.	PHX-3.01	Test
PHX-EPS -3	The CubeSat shall include a Remove Before Flight (RBF) pin.	Required by the CubeSat standard.	CSS-ECE-12.03	Inspection
PHX-EPS -4	EPS shall initialize power to all subsystems 30 minutes after RBF pin removal.	To prevent RF or electrical interferences between the cubesat and others deploying into orbit	CSS-ECE-12.01	Test

Color Legend:

Compliant	Compliant by CDR	Compliant by TRR	Compliant by FRR

EPS Requirements				
ID	**Requirement**	**Rationale**	**Parent Requirement**	**Verification**
PHX-EPS -5	EPS shall be capable of interfacing with the OBC	The EPS must be commanded to power all hardware by the OBC, and will distribute power through direct electrical faces	FSW-24	Test
PHX-EPS -6	EPS (through-OBC) shall be capable of powering down all components	The EPS must be able to power down hardware to conserve battery life and maintain system health	FSW-24	Test
PHX-EPS -7	The battery level shall remain above 60%.	A 60% battery level is left to allow for a maintenance of system health	PHX-3.01	Analysis

Color Legend:

Compliant	Compliant by CDR	Compliant by TRR	Compliant by FRR

EPS Components

- **Solar panel layout**
  - 2 - double sided 3U deployable panels (135° hinge)
  - ClydeSpace panels chosen
  - Has heritage with MAI-400 CubeSat configuration (Spire CubeSats)
- **Battery selection**
  - 40 Whr Li-ion battery selected
  - ClydeSpace system
- **Power board selection**
  - XUA EPS ClydeSpace board selected

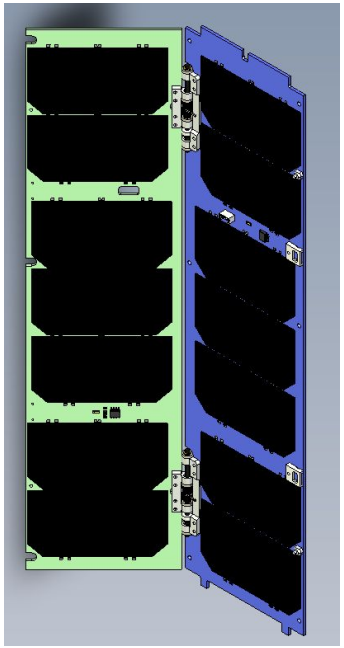

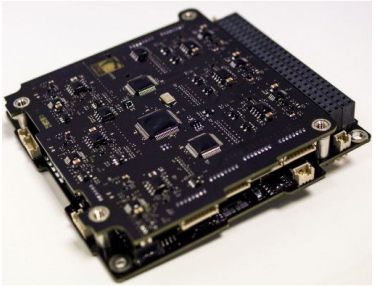

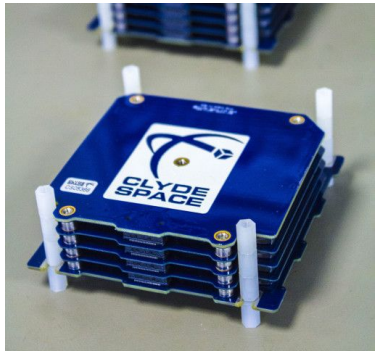

Solar Panel Layout

- Spectrolab Ultra Triple Junction Solar Cells
  - Monolithic $GaInP_2$, GaAs, Ge solar cells
  - 28.3% efficiency
  - V_{load} 1 cell = 2.310V, I_{load} = 436mA
  - Approx V_{load} of face: 16.170V
- Panels configured for:
  - 7 cells each panel face, 3 faces total
  - 135° deployment (hotwire burn mechanism)
  - Sun sensors on ‘blue’ faces

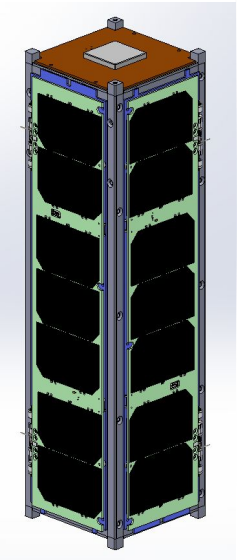

Stowed
(non-deployed)

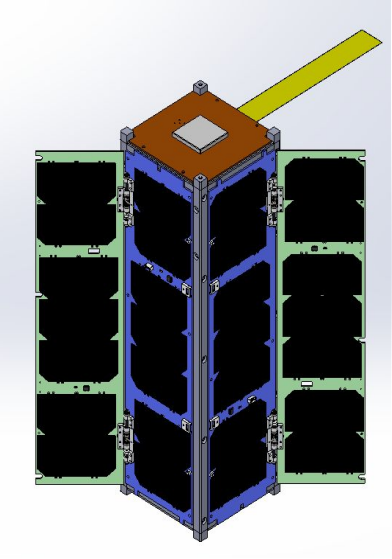

Sun-facing
during coasting

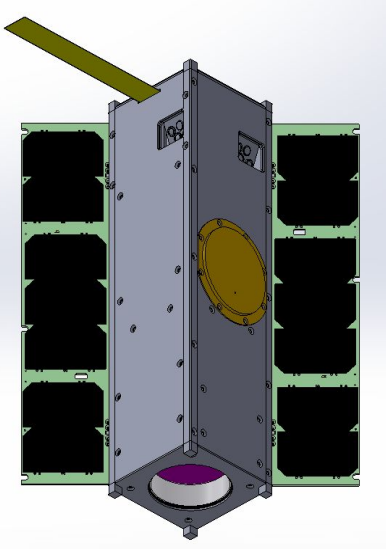

Earth-facing
during coasting

Battery

- 40Wh Standalone Battery from ClydeSpace
  - Inhibits integrated
  - Lithium-ion based chemistry
- Autonomous integrated heater system
  - Automatically starts heaters at <1°C
- Voltage range: 6.2V to 8.26V
- Max charge/discharge current: 8A
- Charging/discharging handled by XUA EPS board

Power Board

- XUA EPS ClydeSpace
  - Designed for 3U+ systems
  - Includes daughterboard with buck converters (which interface each of the panels)
- Voltage buses
  - 3.3V, 5V, 12V regulated power buses
  - Protected, unregulated power bus
- Includes
  - Maximum power point tracking
  - Battery charge regulators
  - Over-current (4.5A for 3.3V/5V, 1.5A for 12V, 4.7A for battery voltage, over/under-voltage protection
  - Watchdog timer

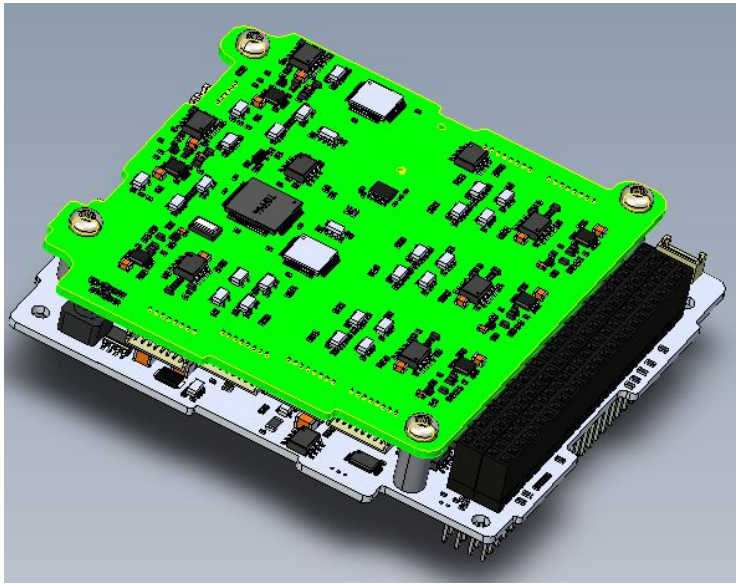

XUA EPS with daughterboard highlighted

EPS Power Diagram

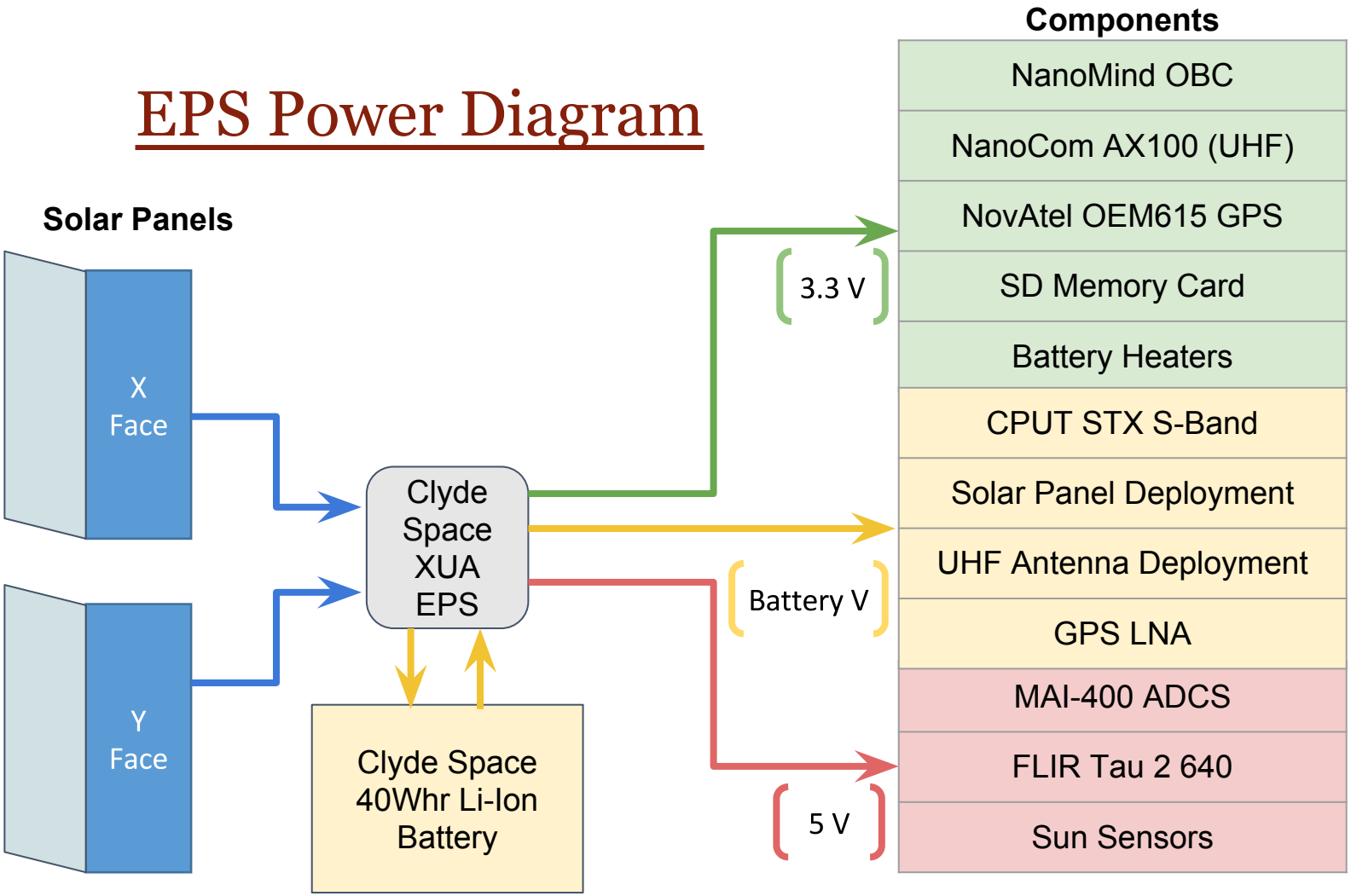

Telemetry From EPS

- EPS
  - Telemetry provided over I^2C protocol (address 0x2B)
  - Has switchable voltage rails that can be controlled over I^2C by on-board computer
- Each solar panel has:
  - Temperature telemetry
  - Sun detector telemetry
  - Information can be accessed from EPS telemetry
- Battery
  - Current sensing telemetry
  - Voltage level telemetry
  - Temperature telemetry
  - Can control heater over I^2C
  - I^2C address 0x2A

Power Profiles During Operation

Profile	Power (W)
Detumble	4.651
Deployment*	24.18
Coasting	2.691
Science Imaging	9.214
Science Downlink	19.671
Science Nadir	5.736
Science Warmup	4.986
Safe	1.97

*only occurs once

Typical Orbit with Science Access		
Operating Mode	**Time (minutes)**	**OAE (Whr/orbit)**
Coasting	70	3.14
Science (Warm up)	15	1.25
Science (Imaging)	2	0.31
Science (Downlink)	2	0.66
Science (Nadir)	1	0.10
Safe	0	0
TOTAL		**5.44**

Detumble and Deployment (Worst Case)

Component	Voltage (V)	Detumble Current (mA)	Detumble Power (W)	Deployment Current (mA)	Deployment Power (W)
Nanomind OBC	3.3	150	0.495	150	0.495
NanoCom AX100 UHF Transceiver	3.3	120	0.396	120	0.396
NovAtel OEM615 GPS	3.3	150	0.495	150	0.495
SD Memory Card	3.3	50	0.165	50	0.165
Battery Heaters	3.3	0	0	0	0
CPUT STX S-Band Transmitter	7.2	0	0	0	0
Solar Panel Deployment*	7.2	0	0	1600	11.52
UHF Antenna Deployment*	7.2	0	0	1600	11.52
GPS LNA	7.2	0	0	0	0
MAI-400 ADCS	5	618	3.5	226	1.13
FLIR Tau 2 640 Camera	5	0	0	0	0
Sun Sensors	5	2	0.01	2	0.01
TOTAL			**4.651**		**24.18**

	Time (min)	Power (W)	Energy (Whr)
Detumble	150	4.651	11.63
Deployment	1	24.18	0.403
TOTAL			**12.03**

Coasting and Safe

Component	Voltage (V)	Coasting Current (mA)	Coasting Power (W)	Safe Current (mA)	Safe Power (W)
Nanomind OBC	3.3	150	0.495	100	0.330
NanoCom AX100 UHF Transceiver	3.3	120	0.396	100	0.330
NovAtel OEM615 GPS	3.3	150	0.495	0	0
SD Memory Card	3.3	50	0.165	50	0.165
Battery Heaters	3.3	0	0	0	0
CPUT STX S-Band Transmitter	7.2	0	0	0	0
GPS LNA	7.2	0	0	0	0
MAI-400 ADCS	5	226	1.13	226	1.13
FLIR Tau 2 640 Camera	5	0	0	0	0
Sun Sensors	5	2	0.01	2	2
TOTAL			**2.691**		**1.965**

Science

Component	Voltage (V)	Science Imaging Current (mA)	Science Imaging Power (W)	Science Downlink Current (mA)	Science Downlink Power (W)	Science Nadir Current (mA)	Science Nadir Power (W)	Science Warmup Current (mA)	Science Warmup Power (W)
Nanomind OBC	3.3	200	0.660	200	0.660	200	0.330	150	0.495
NanoCom AX100 UHF Transceiver	3.3	120	0.396	800	2.640	120	0.330	120	0.396
NovAtel OEM615 GPS	3.3	303	1	303	1	303	0	303	1
SD Memory Card	3.3	151	0.498	50	0.165	50	0.165	50	0.165
Battery Heaters	3.3	0	0	0	0	0	0	0	0
CPUT STX S-Band Transmitter	7.2	0	0	1430	10.296	0	0	0	0
GPS LNA	7.2	75	0.540	75	0.540	75	0	75	0.540
MAI-400 ADCS	5	622	3.11	622	3.11	343	1.13	226	1.13
FLIR Tau 2 640 Camera	5	600	3	250	1.25	250	0	250	1.25
Sun Sensors	5	2	0.01	250	0.01	2	0.01	2	0.01
TOTAL			**9.2142**		**19.671**		**1.965**		**4.99**

Power Consumption Analysis

Orbit Cases (deployed and non-deployed cases)

- Noon time imaging
- Noon time imaging with S-Band downlink
- Sunset imaging with S-Band downlink

Detumble and Deployment Case

- Assuming 20Whr of battery capacity left
- About 12Whr of energy is consumed for a worst case detumble from a 16°/sec tumbling angular rotation.
- Will then charge battery to full over 2-3 orbits while coasting and waiting until command upload

Power Analysis - Noontime Imaging, 2 Cities (Deployed)

- Imaging near noon of Los Angeles and Las Vegas

Energy Margin % = (Energy Generated - Energy Consumed) / Energy Generated

Energy Margin % = 65.6% margin

	Avg Power (W)	Energy (Whr)
Generated	9.55	14.34
Consumed	3.28	4.93
Margin	**6.27**	**9.41**

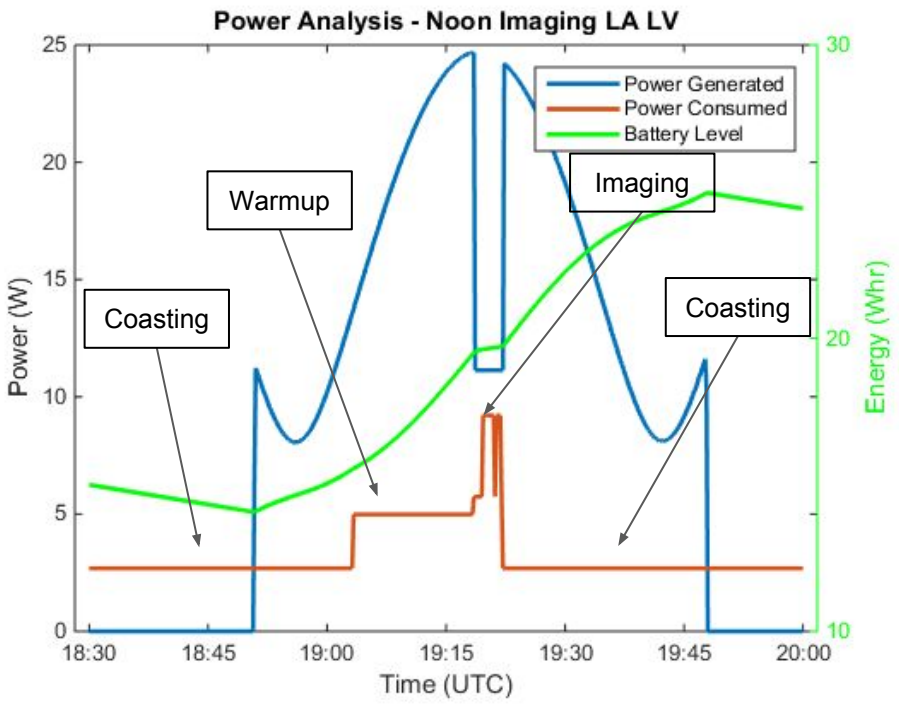

Power Analysis - Noontime Imaging, 2 Cities (Stowed)

- Imaging near noon of Los Angeles and Las Vegas

Energy Margin % = (Energy Generated - Energy Consumed) / Energy Generated

Energy Margin % = 17.03% margin

	Avg Power (W)	Energy (Whr)
Generated	3.95	5.94
Consumed	3.28	4.93
Margin	**0.67**	**1.01**

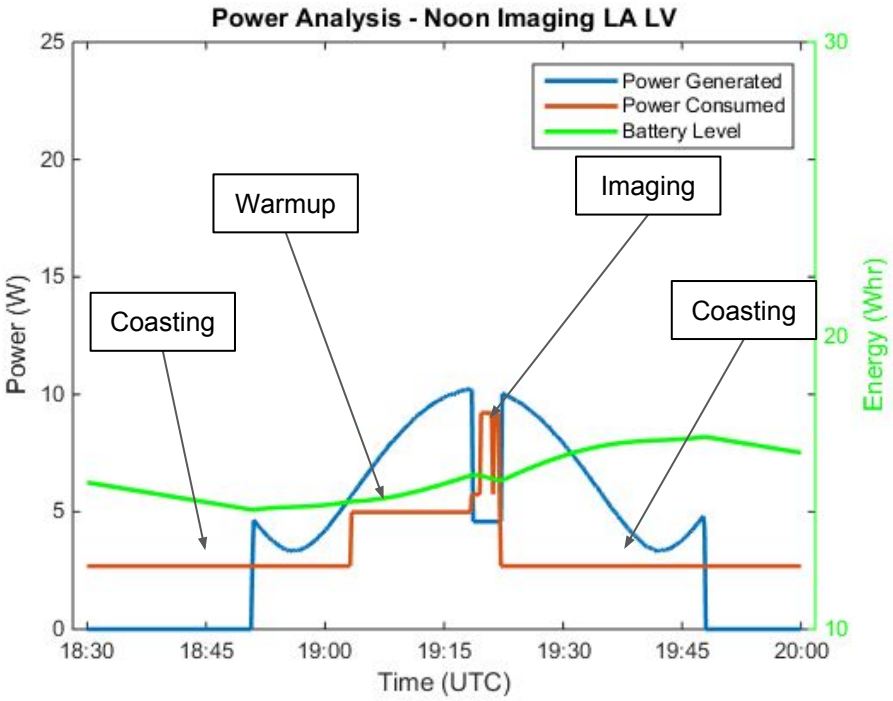

Power Analysis - Noontime Downlink and Imaging (Deployed)

- Downlink near noon to Phoenix and imaging of Minneapolis, Chicago, and Charlotte

Energy Margin % = (Energy Generated - Energy Consumed) / Energy Generated

Energy Margin % = 62.05% margin

	Avg Power (W)	Energy (Whr)
Generated	10.203	15.3328
Consumed	3.8775	5.8196
Margin	**6.33**	**9.51**

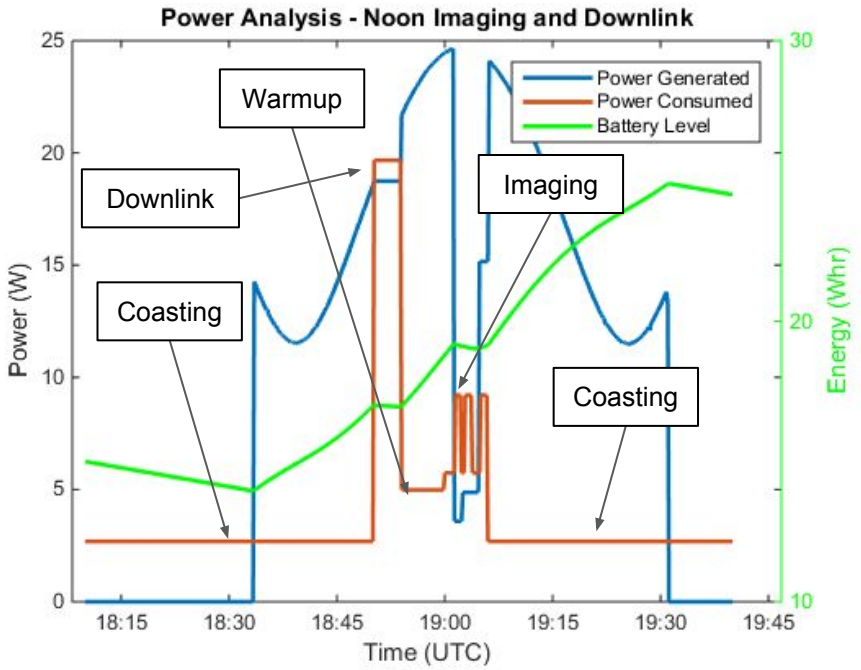

Power Analysis - Noontime Downlink and Imaging (Stowed)

- Downlink near noon to Phoenix and imaging of Minneapolis, Chicago, and Charlotte

Energy Margin % = (Energy Generated - Energy Consumed) / Energy Generated

Energy Margin % = 12.1771% margin

	Avg Power (W)	Energy (Whr)
Generated	4.4095	6.6265
Consumed	3.8775	5.8196
Margin	**0.532**	**0.807**

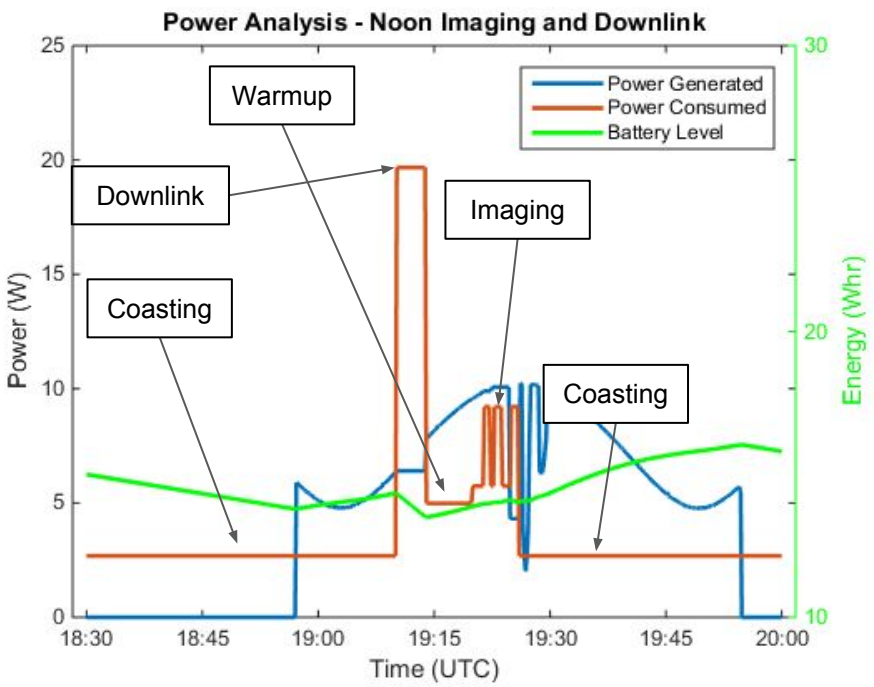

Power Analysis - Sunset Downlink and Imaging (Deployed)

- Downlink near sunset to Phoenix and imaging of Oklahoma City and New Orleans

Energy Margin % = (Energy Generated - Energy Consumed) / Energy Generated

Energy Margin % = 53.3953% margin

	Avg Power (W)	Energy (Whr)
Generated	9.7311	14.5661
Consumed	4.5223	6.7885
Margin	**5.2088**	**7.7776**

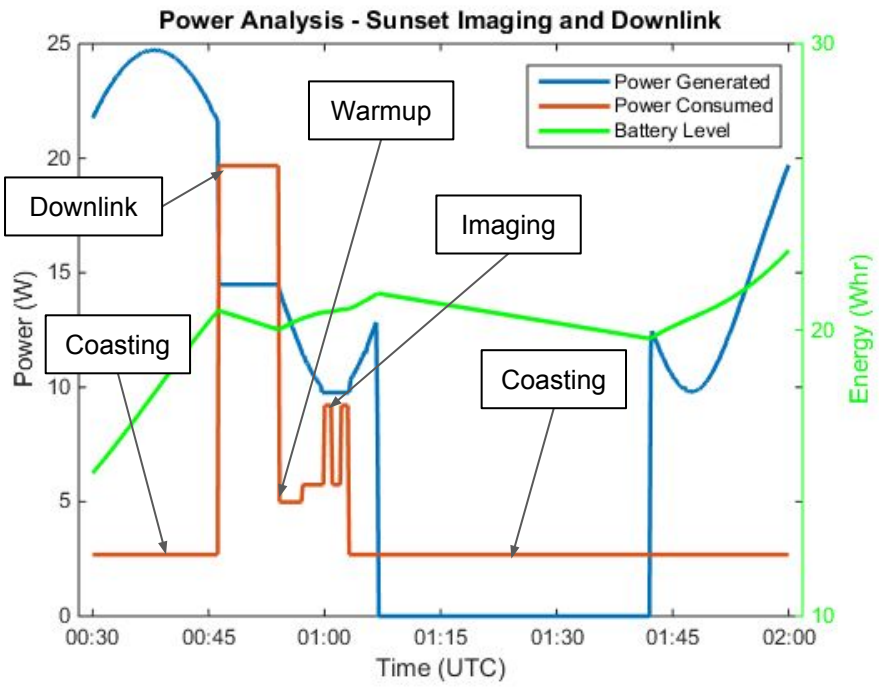

Power Analysis - Sunset Downlink and Imaging (Stowed)

- Downlink near sunset to Phoenix and imaging of Oklahoma City and New Orleans

Energy Margin % = (Energy Generated - Energy Consumed) / Energy Generated

Energy Margin % = -12.4279% margin

	Avg Power (W)	Energy (Whr)
Generated	4.0338	6.0381
Consumed	4.5223	6.7885
Margin	**-0.4885**	**-0.7504**

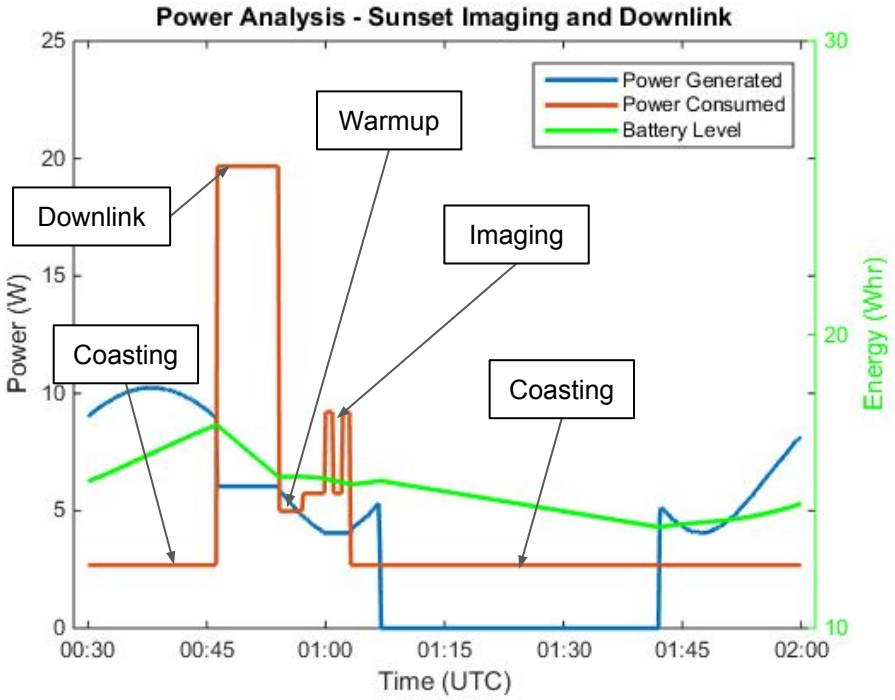

Power Analysis - 30 days comparison Deployed and Stowed

Both deployed and stowed are power positive.

- Deployed reaches maximum battery level in a few orbits
- Stowed reaches maximum battery level in about 9 days

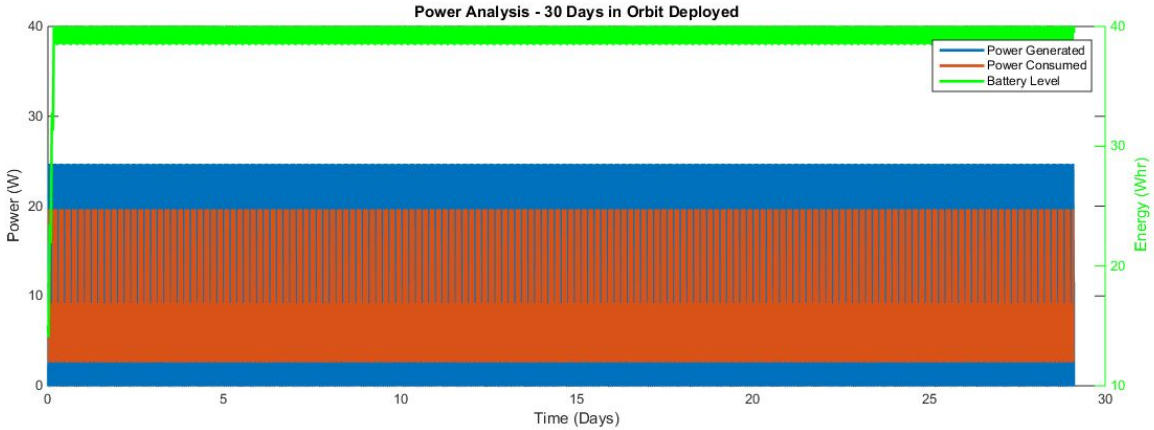

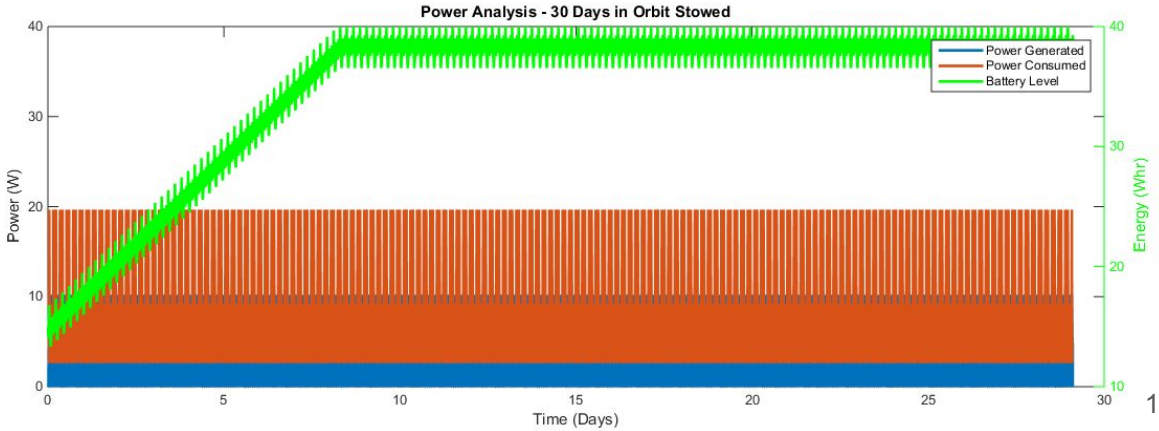

EPS - Top Level Risks

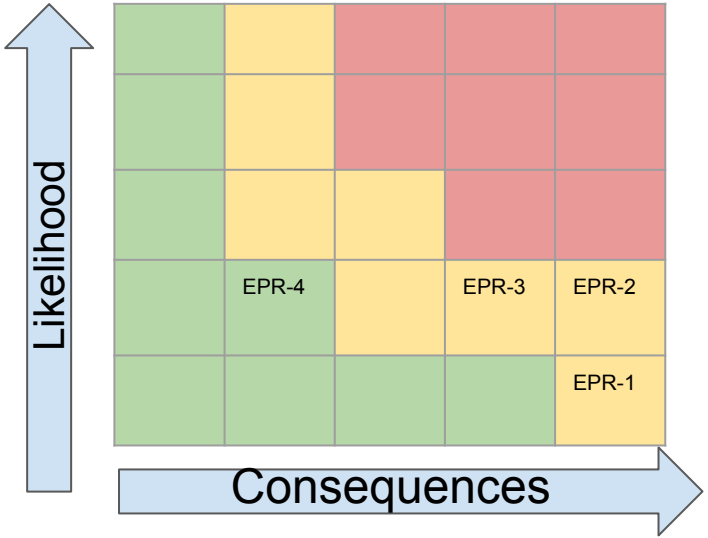

ID	Trend	Risk	Mitigation Strategy	Approach
EPR-1	↑	Power supply too small	Deployable Design	M
EPR-2	↑	Battery Malfunction	Stress Testing	M
EPR-3	→	Deployable design doesn't deploy	Non-Deployable design scheme	W
EPR-4	→	Voltage Anomaly	Pre-launch testing	W

Trend	Approach
↑ Improving	A - Accept
↓ Worsening	M - Mitigate
→ Unchanged	R - Research
New	W - Watch

Challenges and Next Steps

- Empirical data collection for power consumption from all flat-sat components
  - Flat-sat power board assembled and tested for ground testing
  - Automation software for power cycling testing
- Procurement of all flight components
- Flight solar panel testing in sun-simulator
- Refinement of STK/MATLAB calculations

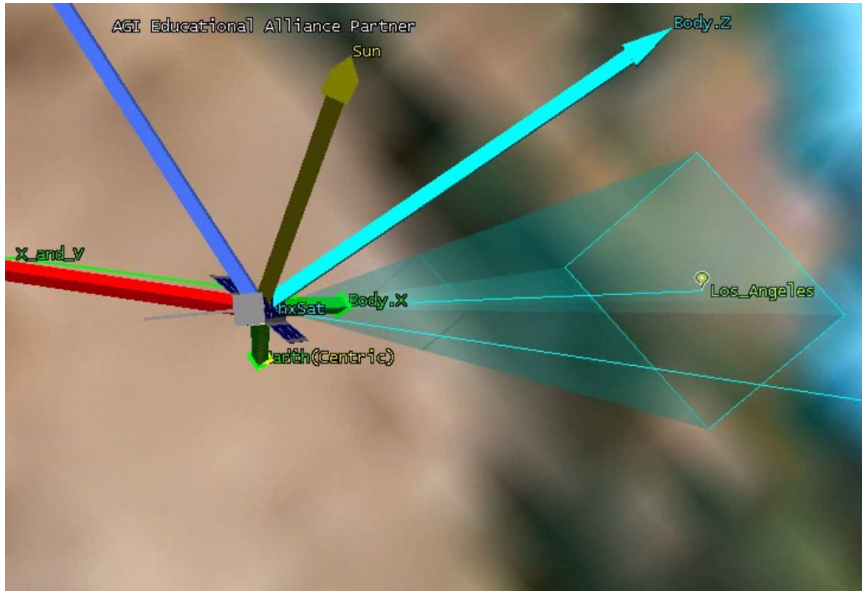

Structures

Presented By: *Brody Willard and Brady Parker*

Team Members: *Brody Willard, Brady Parker*

Overview

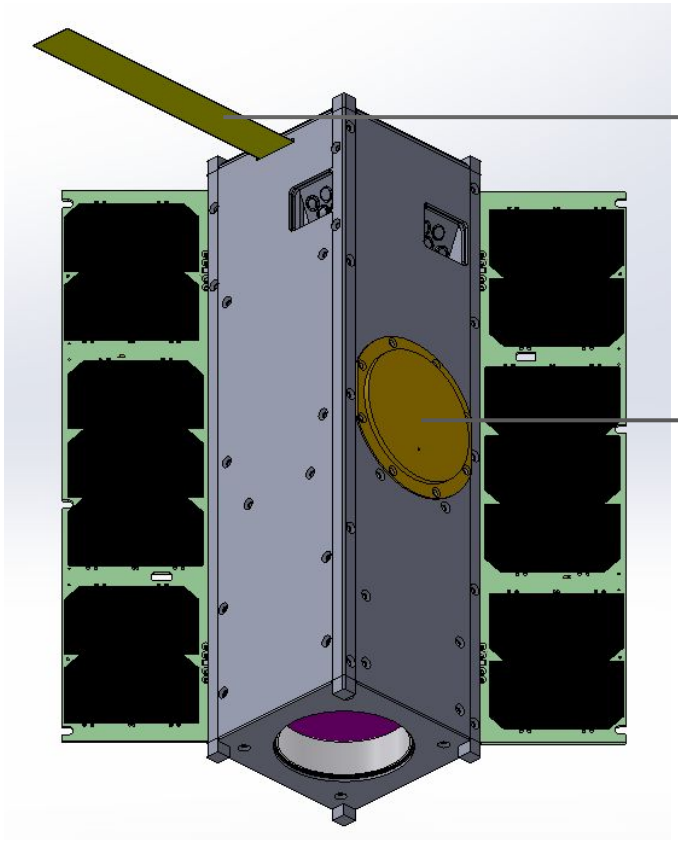
UHF
Antenna
S-Band
Antenna

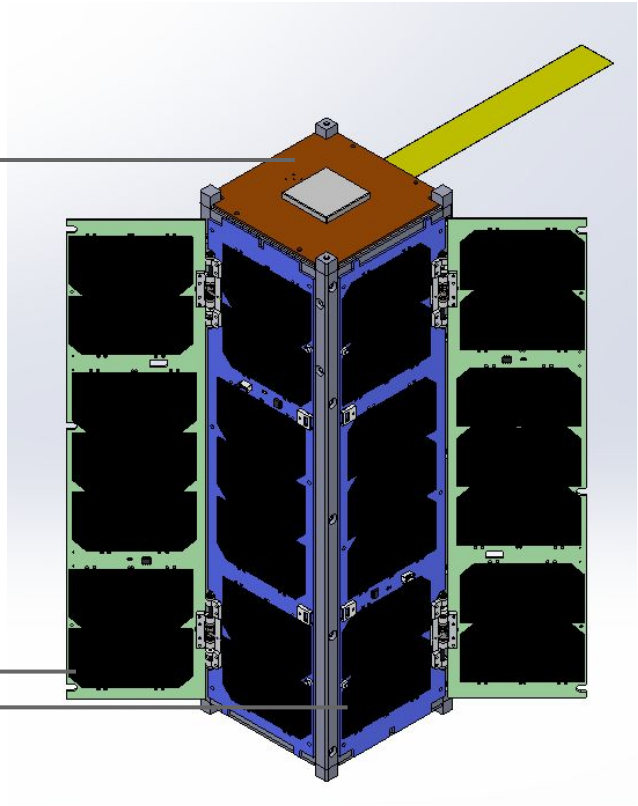
GPS
Antenna
Deployable
Solar Panels

Internal Layout

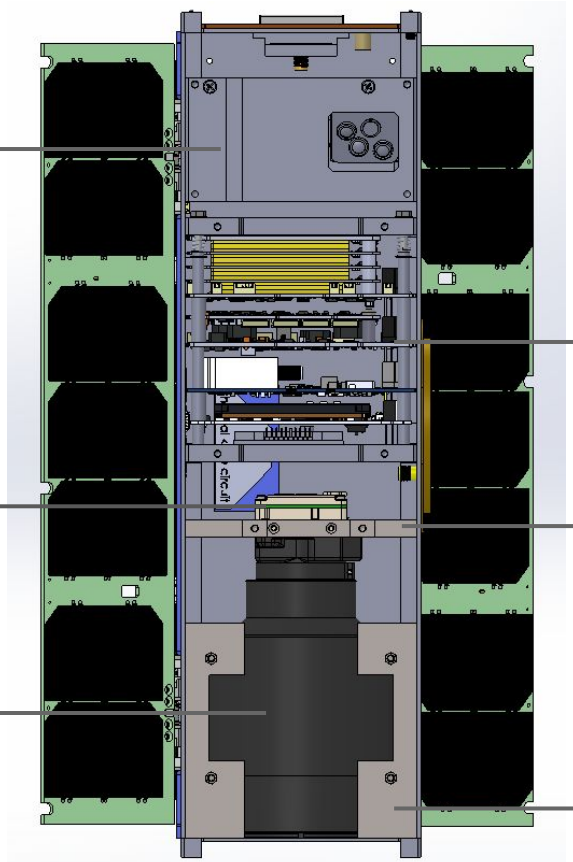

Structure Requirements

ID	Requirement	Rationale	Parent Requirement	Verification
PHX-CMR-11.04	The CubeSat shall be 100.0+0.1 mm wide (X and Y dimensions per Figure 5).	Allows for proper integration into P-POD and Nanoracks Deployer	Conform to CubeSat Standard 2.2.4	inspection
PHX-CMR-11.05	A single CubeSat shall be 340.5+ 0.3 mm tall (Z dimension per Figure 5).	Allows for proper integration into P-POD and Nanoracks Deployer	Conform to CubeSat Standard 2.2.5.1	inspection
PHX-CMR-11.06	All components shall not exceed 6.5 mm normal to the surface of the 100.0 mm cube (the green and yellow shaded sides in Figure 5).	Allows for proper integration into P-POD and Nanoracks Deployer	Conform to CubeSat Standard 2.2.6	inspection
PHX-CMR-11.07	Exterior CubeSat components shall not contact the interior surface of the P-POD, other than the designated CubeSat rails.	Allows for proper integration into P-POD and Nanoracks Deployer	Conform to CubeSat Standard 2.2.7	inspection
PHX-CMR-11.08	Deployables shall be constrained by the CubeSat. The P-POD rails and walls shall not to be used to constrain deployables.	Allows for proper integration into P-POD and Nanoracks Deployer	Conform to CubeSat Standard 2.2.8	inspection

Color Legend:

Compliant	Compliant by CDR	Compliant by TRR	Compliant by FRR

Structure Requirements

ID	Requirement	Rationale	Parent Requirement	Verification
PHX-CMR-11.09	Rails shall have a minimum width of 8.5mm.	Allows for proper integration into P-POD and Nanoracks Deployer	Conform to CubeSat Standard 2.2.9	inspection
PHX-CMR-11.10	The rails shall not have a surface roughness greater than 1.6 µm.	Allows for proper integration into P-POD and Nanoracks Deployer	Conform to CubeSat Standard 2.2.10	inspection
PHX-CMR-11.11	The edges of the rails shall be rounded to a radius of at least 1 mm	Allows for proper integration into P-POD and Nanoracks Deployer	Conform to CubeSat Standard 2.2.11	inspection
PHX-CMR-11.12	The ends of the rails on the +Z face shall have a minimum surface area of 6.5 mm x 6.5 mm contact area for neighboring CubeSat rails (as per Figure 5).	Allows for proper integration into P-POD and Nanoracks Deployer	Conform to CubeSat Standard 2.2.12	inspection
PHX-CMR-11.13	At least 75% of the rail shall be in contact with the P-POD rails. 25% of the rails may be recessed and no part of the rails shall exceed the specification.	Allows for proper integration into P-POD and Nanoracks Deployer	Conform to CubeSat Standard 2.2.13	inspection

Color Legend:

Compliant	Compliant by CDR	Compliant by TRR	Compliant by FRR

Structure Requirements

ID	Requirement	Rationale	Parent Requirement	Verification
PHX-CMR-11.16	Each triple CubeSat shall not exceed 4.0 kg mass.	Maximum allowed mass under CubeSat Design Specification	Conform to CubeSat Standard 2.2.16	inspection
PHX-CMR-11.17	The CubeSat center of gravity shall be located within a sphere of 2 cm from its geometric center.	Allows for proper deployment from PPOD or NanoRacks Deployer	Conform to CubeSat Standard 2.2.17	analysis
PHX-CMR-11.19	Aluminum 7075 or 6061 shall be used for both the main CubeSat structure and the rails.	Provides structural integrity without outgassing at a low weight and low cost	Conform to CubeSat Standard 2.2.19	inspection
PHX-CMR-11.20	The CubeSat rails and standoff, which contact the P-POD rails and adjacent CubeSat standoffs, shall be hard anodized aluminum to prevent any cold welding within the P-POD.	Prevents cold-welding of CubeSat structure with deployer	Conform to CubeSat Standard 2.2.20	inspection
PHX-CMR-11.21	The CubeSat shall use separation springs (Figure 4) with characteristics defined in Table 1 on the designated rail standoff.	Allows for proper deployment from PPOD or NanoRacks Deployer	Conform to CubeSat Standard 2.2.21	inspection

Color Legend:

Compliant	Compliant by CDR	Compliant by TRR	Compliant by FRR

Top Level Risks

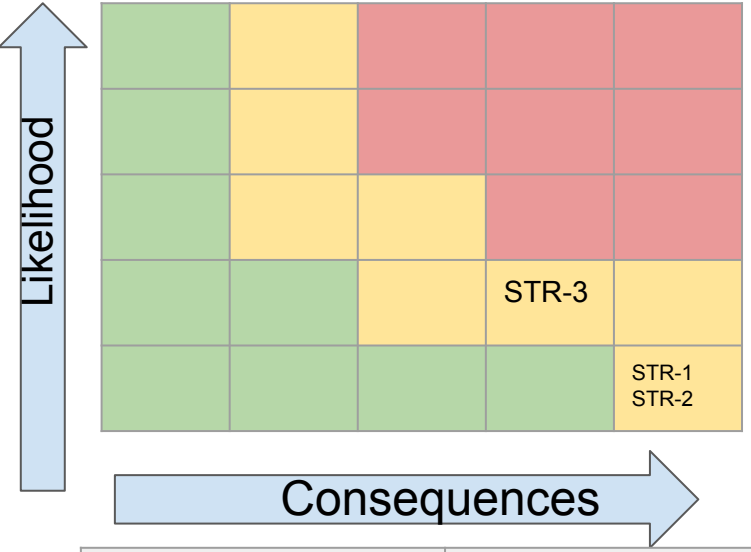

ID	Trend	Risk	Mitigation Strategy	Approach
STR-1	→	Chassis does not survive launch	Extensive testing to launch vehicle specifications	M
STR-2	→	Cubestat does not deloy form chassis	Strict compliance with design and materials specification	M
STR-3	▭	Heat transfers through structure into payload	Use of materials with low thermal conductivity for camera mounting	M

Trend	Approach
↑ Improving	A - Accept
↓ Worsening	M - Mitigate
→ Unchanged	R - Research
▭ New	W - Watch

Stowed View

- Deployables are constrained to meet cubesat requirements
- Solar panels are kept shut using thermal knife circuit
- UHF antenna is held down using nichrome wire

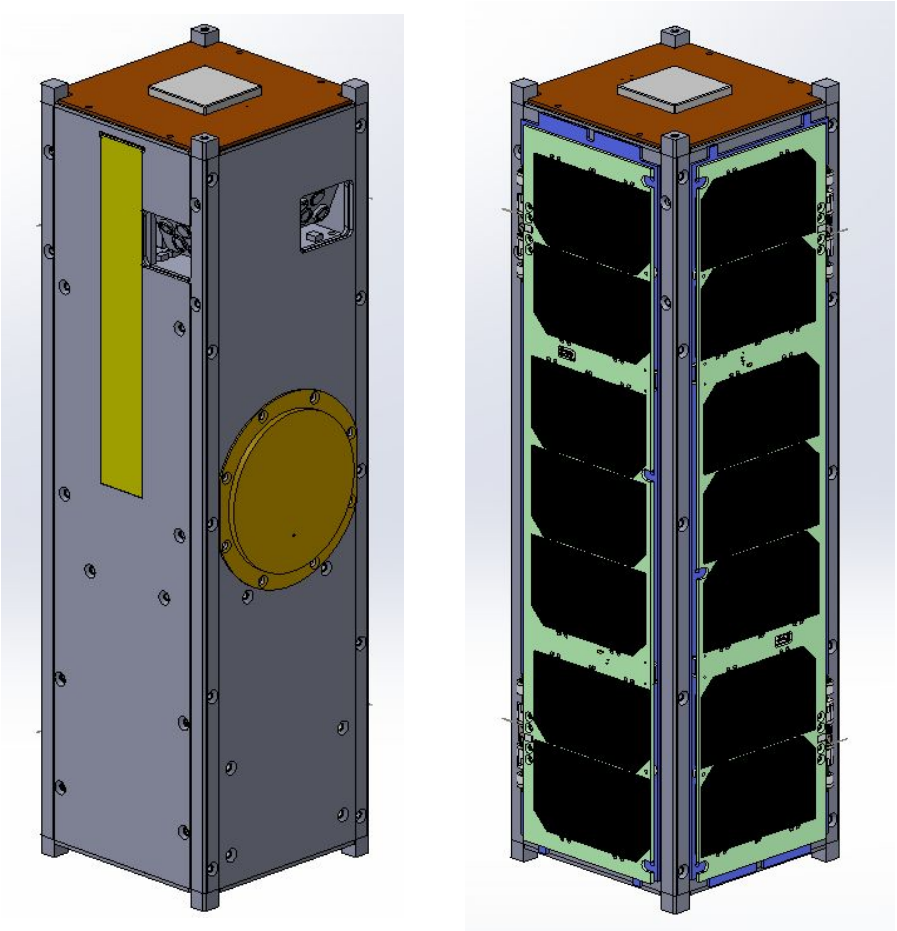

Deployed View

- Solar panels deploy at a 135 degree angle on both sides
  - Released using thermal knife
- Nichrome circuit releases UHF antenna
  - Antenna springs back into an upright position

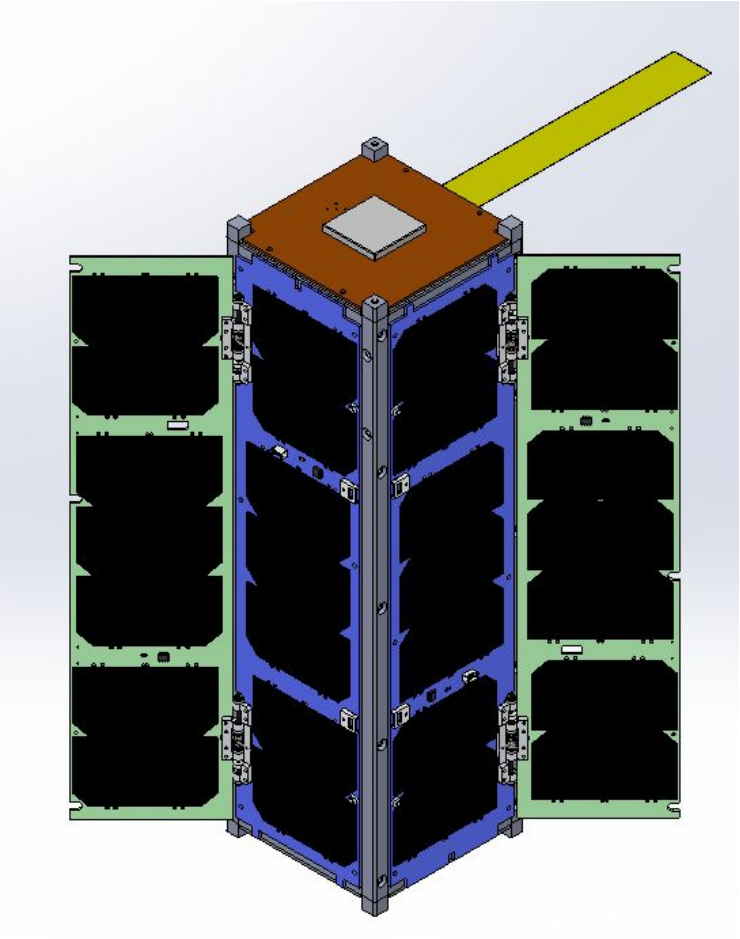

Chassis

- Made up of 6 panels
  - 7075 aluminum
- Use internal brackets and component mounting points to support structure of chassis
- Rail structure along 4 corners of the chassis
- X panels are seated in notch along the Y panel rails
- M3 flat head screws used to bolt together the chassis

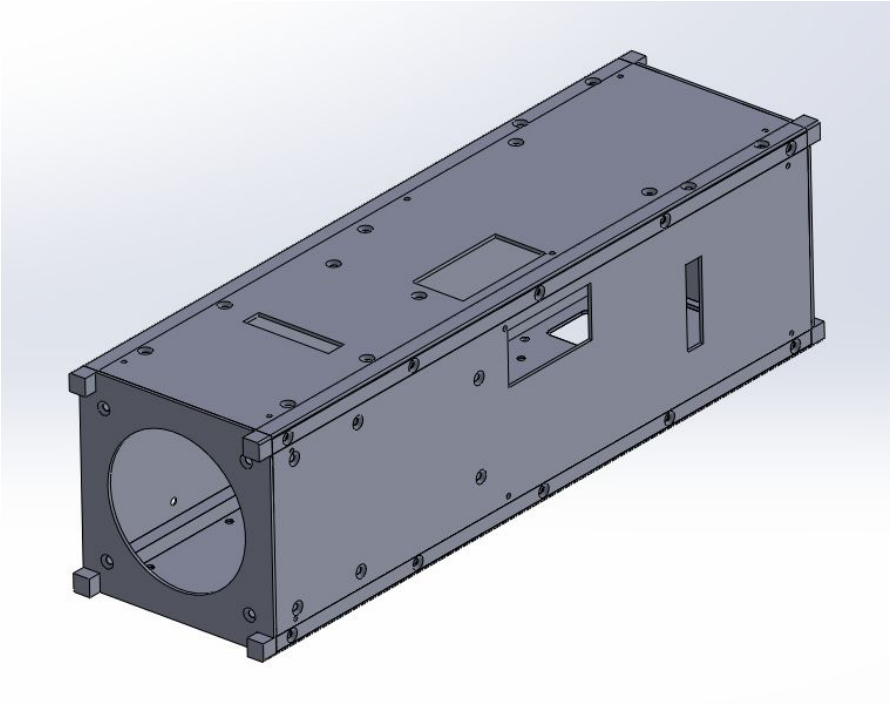

+X Panel

- 26x32mm window at the top for earth horizon sensor
- Series of 3.5mm through holes for S Band antenna
- 10x20mm window for S Band SMA connector
- Set of holes to mount camera brackets to panels
  - Using M3 screws
- Series of mounting points along rails to attach to Y and -Z panels
  - Using M3 screws as well

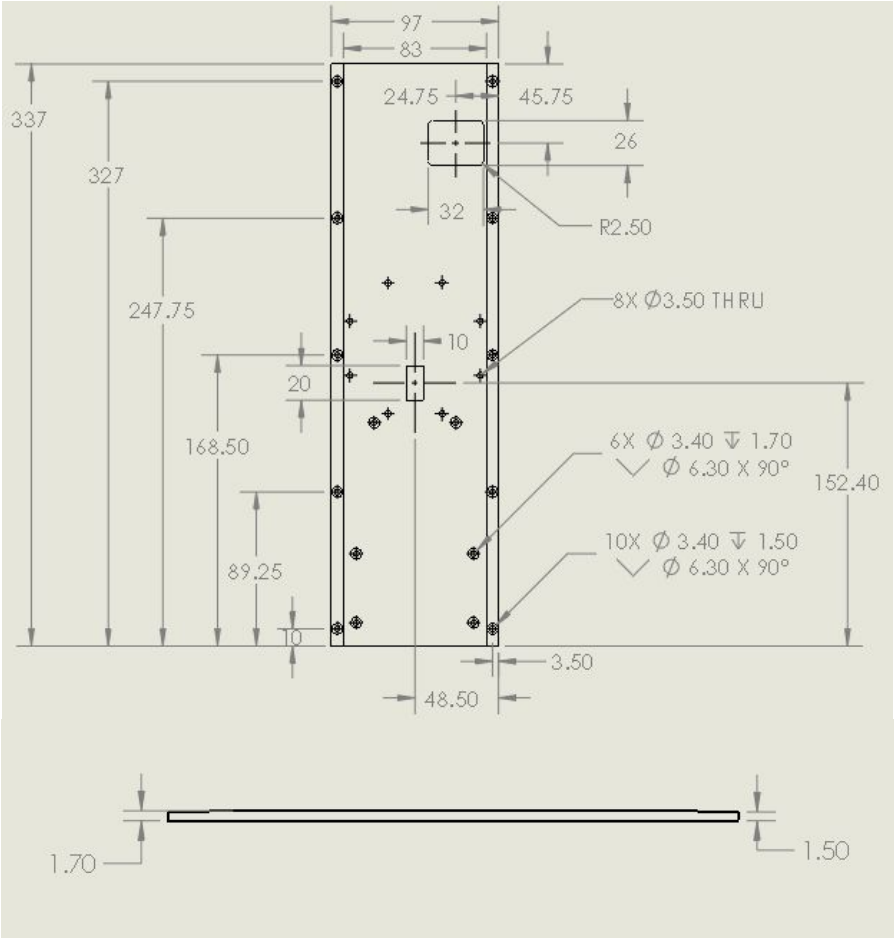

-X Panel

- 40x10mm window near top for solar panels plugs
- 26 x 52.5mm window for thermal knife
- Series of 2.40mm through holes for mounting solar panels
- Set of holes to mount camera brackets to panels
  - Using M3 screws
- Series of mounting points along rails to attach to Y and -Z panels
  - Using M3 screws as well

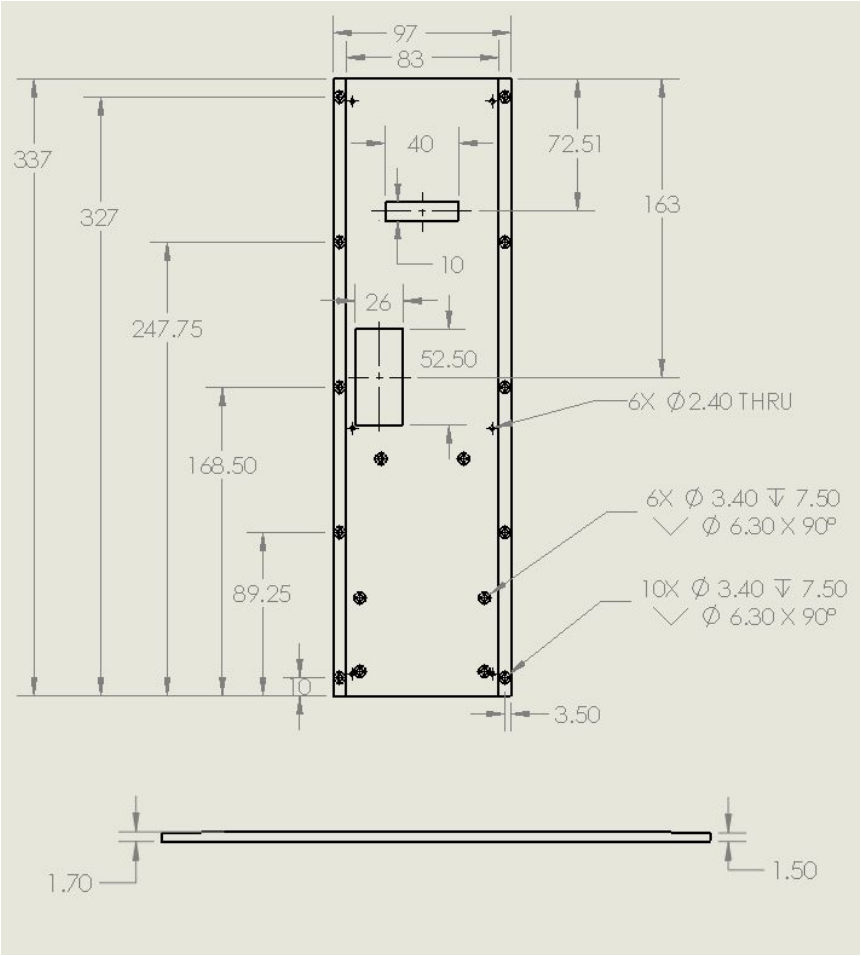

+Y Panel

- 31x26mm window for earth horizon sensor
- 27.5x 2.5mm window near top for uhf antenna
- 4 M3 holes for mounting electronics stack to panel
- 6 M3 holes near bottom of panel for mounting camera brackets
- 4 M3 holes near top for connecting panel to MAI400

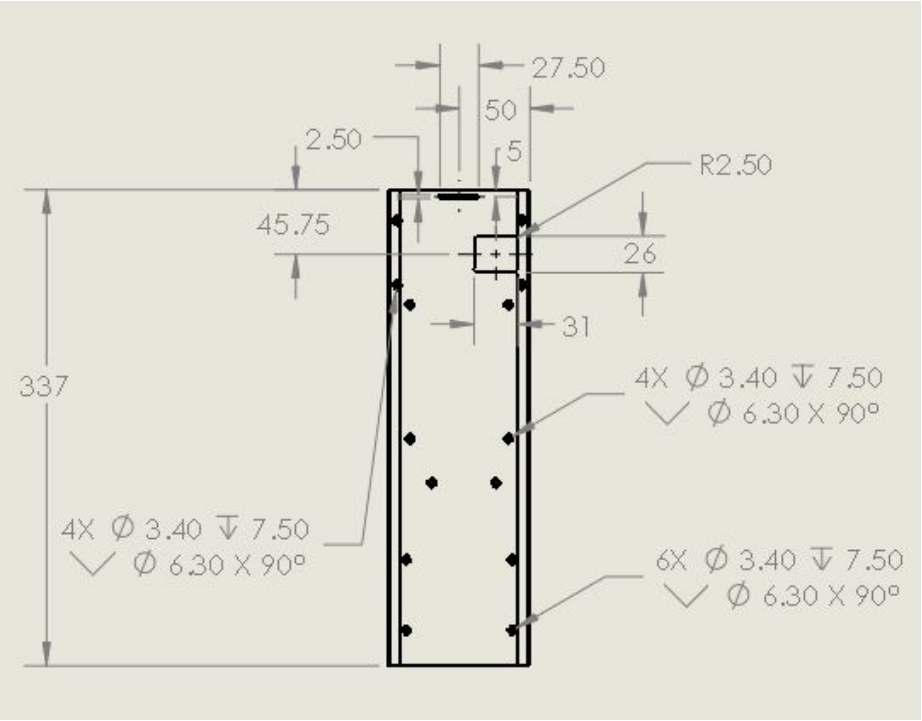

+Y Panel

- On the internal side of panel there is a set of rails for mounting and support
  - Run along majority of panel
  - Cut outs for satellite hardware
  - Series of M3 holes long sides of both rails
- X panels sit in grove along rails of the panel

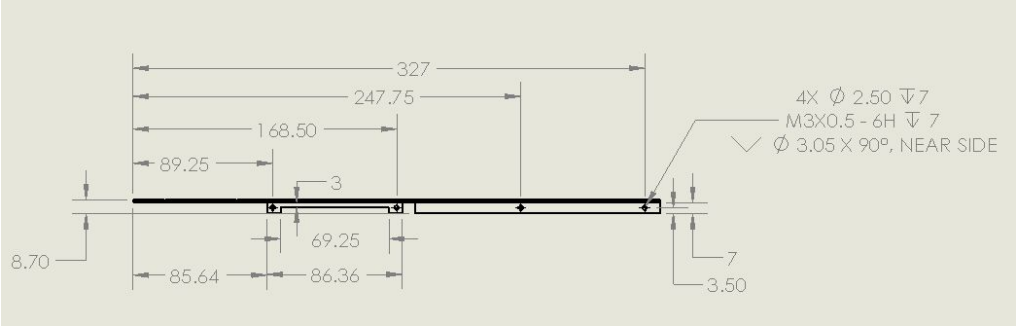

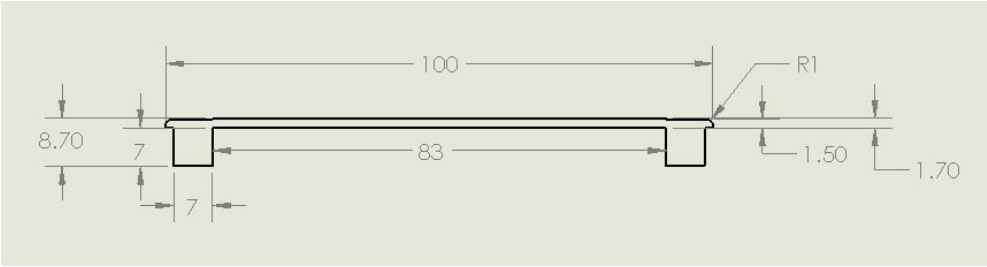

-Y Panel

- 45x10mm window near bottom for solar panel plugs
- 26x52.50mm window for thermal knife
- Series of 2.40mm through holes for mounting solar panels
- Series of holes to mount camera brackets to panels
- 4 holes for mounting MAI 400 to panel
- 3 holes for mounting Electronics stack

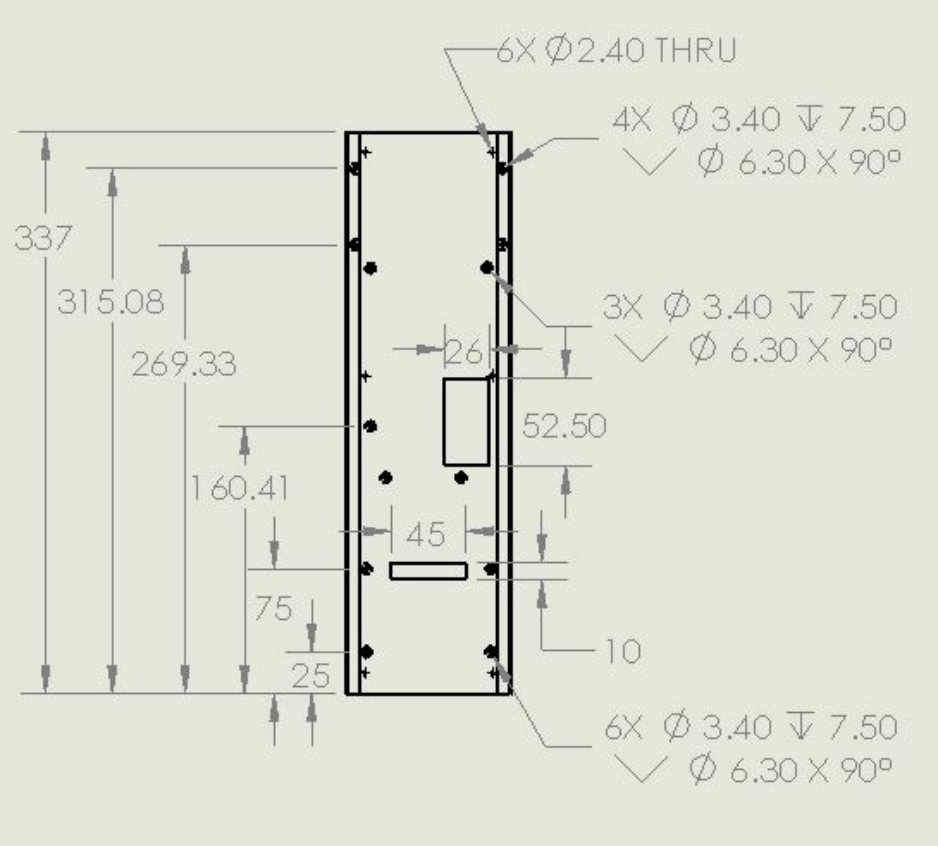

-Y Panel

- On the internal side of panel there is a set of rails for mounting and support
  - Run along majority of panel
  - Cut outs for satellite hardware
  - Series of M3 holes long sides of both rails
- X panels sit in grove along rails of the panel

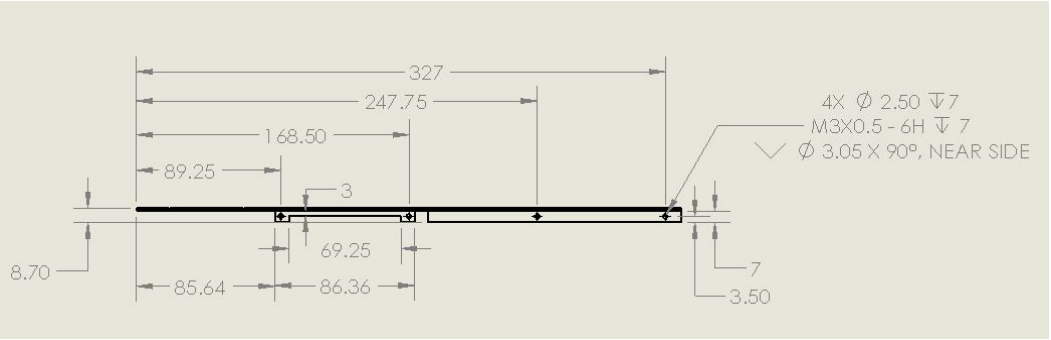

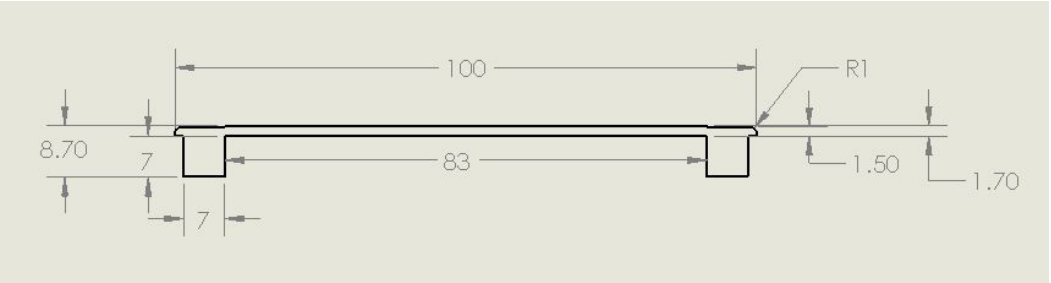

+Z Panel

- 72.5mm hole through the middle of the panel
  - Viewing port for lens
- 4 flat head screws for connecting to lens bracket
- 4 8.5x8.5mm standoffs in the corners of the panel

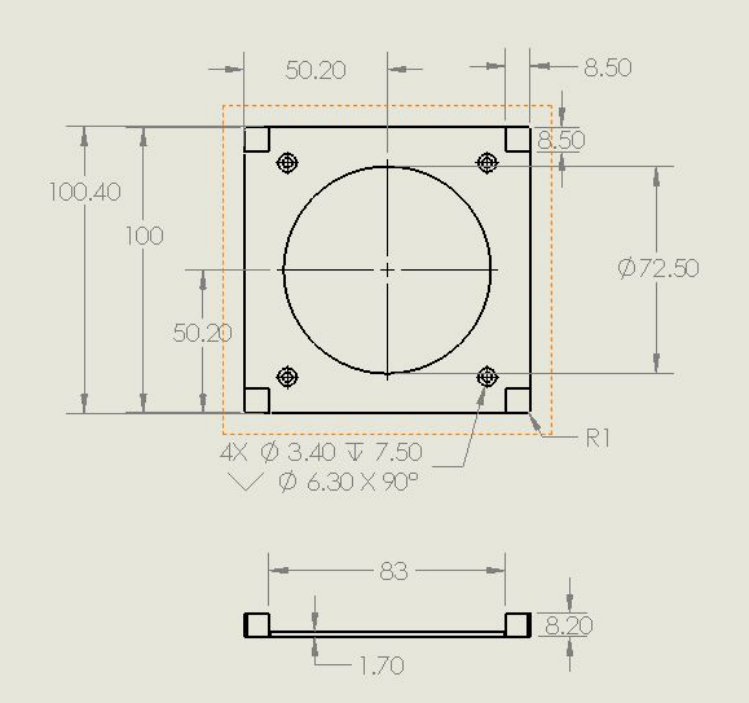

-Z Panel

- 41.70 x 7.50mm window for GPS antenna
  - 4 2.7mm through holes for mounting
- Set of M3 flat head mounting points for UHF antenna
- Set of holes for separation springs in corners
  - 8-36 thread
- 4 posts on the internal side of the panel for connecting to X panels
  - M3 thread

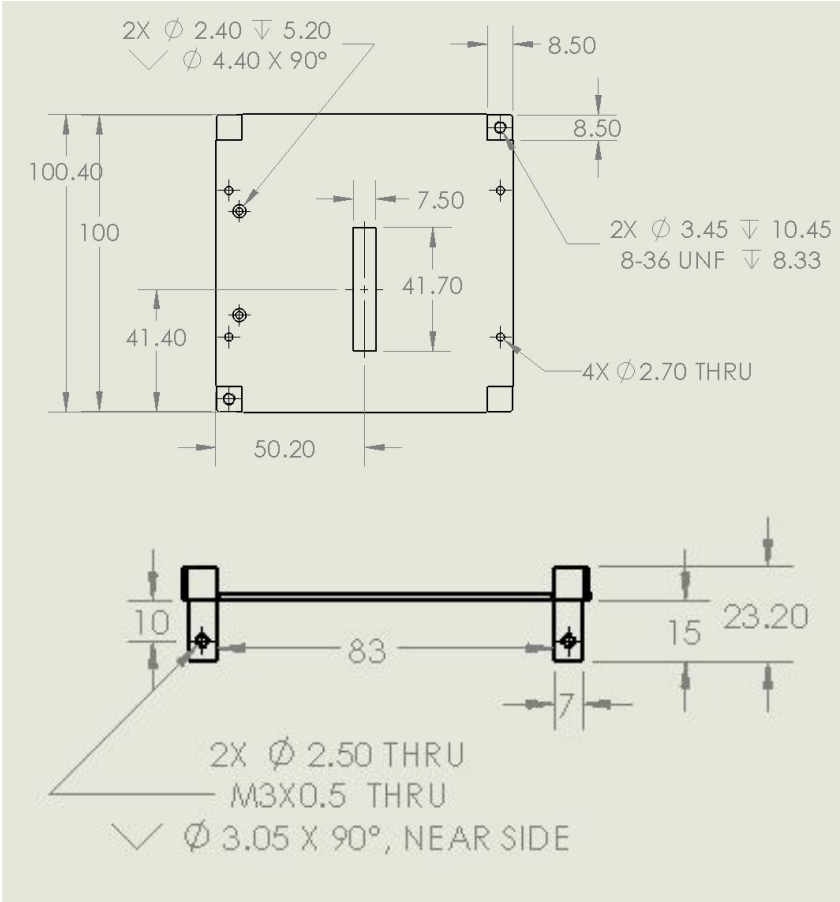

Mounting & Supports

- Custom mounting was designed for the electronics stack, UHF antenna, and camera
- To help the stability of the cubesat, deep thought was placed into how the mounts could be used to improve the integrity of the cubesat structure
- In order to reduce machining cost simplicity and duplication was considered during the mounting design process
- Due to the use of a microbolometer thermal control was give an intense amount of thought during the process of mounting design
- Component integration was considered during the development of each of these mounts

Electronics Stack

- Constructed using: 4 threaded rods, 4 springs, 2 sets of brackets, and spacers
- Brackets are produced as sets to reduce machining cost
- Use of 4 rods instead of standoffs on each level reduces number of failure points
  - Standoffs: 24 points of failure
  - Rods: 8 points of failure
- Spacers and springs allow the boards to expand without the possibility of fracturing against a tightened standoff
  - Prevents board damage
- Brackets mount to interior walls of chassis
  - Adds support to chassis

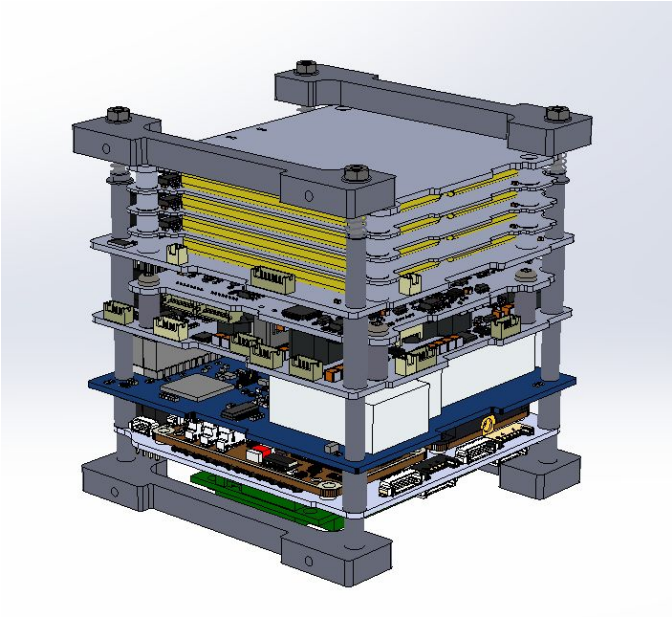

UHF Antenna Assembly

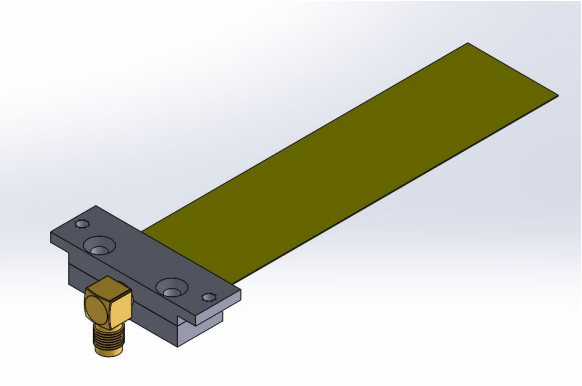

- Comprised of 5 parts: SMA connector, tape measure, two machined halves, and Dow Corning 93-500 RTV
- SMA connector and tape measure antenna are placed inside of machined pocket
- Pocket is filled with 93-500 RTV to insulate components from metal housing
- Housing is mounted to interior of chassis
- Allows for easy integration of UHF antenna into cubesat assembly

Camera Mount

- Made up of: 1 camera core bracket, 2 lens brackets, 8 stainless steel stand offs, and the base panel of the chassis
- Brackets are made of titanium
  - Prevents transfer of heat into camera
- Brackets are connected to interior walls of the chassis
  - Adds support to chassis
  - Camera core mounted directly
  - Lens bracket is connected using stainless steel standoffs, Inhibiting thermal absorption
- Lens Bracket has pockets in its side for additional hardware
- Brackets are identical to reduce cost of machining and simplify integration

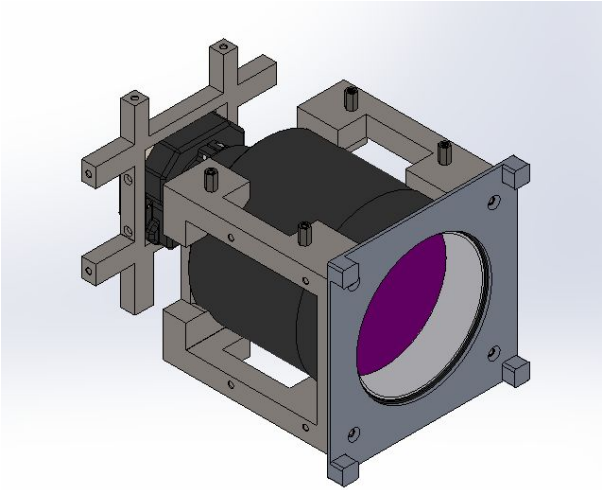

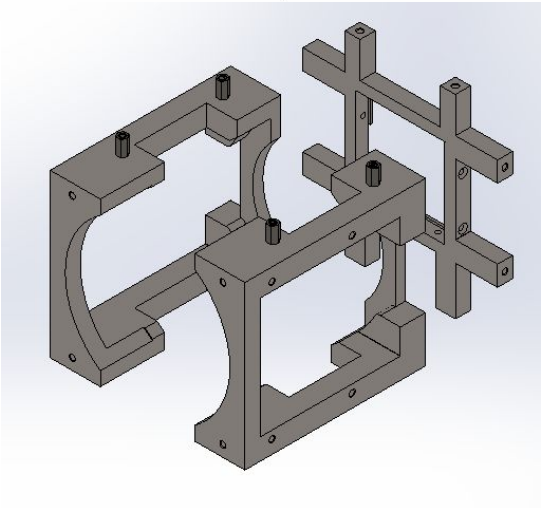

Mass Budget

Part	Mass/part (Kg)	Qty	Total (Kg)
+X Panel	0.148	1	0.148
-X Panel	0.144	1	0.144
+Y Panel	0.207	1	0.207
-Y Panel	0.203	1	0.203
+Z Panel	0.033	1	0.033
- Z Panel	0.059	1	0.059
Core Bracket	0.088	1	0.088
Lens Bracket	0.214	2	0.428
Electronics Stack Hardware	0.093	1	0.093
Chassis Hardware	TBD	~	TBD
Total	~	~	1.403

Structural Analysis

- Objectives
  - Determine if structure stiffness is adequate, possible modes for buckling and maximum displacements and equivalent stresses.
  - Determine all significant resonant frequencies below 70 Hz (GEVS) and identify any significant displacements as a result of resonance.
- Analysis
  - Environmental Conditions*
    - Max axial and lateral accelerations 8 g and 3 g respectively (compressive net-center-of-gravity accelerations)
    - Max predicted sinusoidal frequencies 5 Hz to 100 Hz
      - Associated accelerations 0.5 g-0.9 g

*Environmental conditions taken from The Falcon 9 Launch Vehicle Payload User's Guide. rev 2, Oct 2015

Structural Analysis Results

- Design factor of 2.6 (GEVS)
- The maximum equivalent stress for all load orientations is 0.069 MPa
  - Yield strength of 7075 T6 aluminum 500 MPa
- No excitation modes found below 70 Hz (first mode 500 Hz)

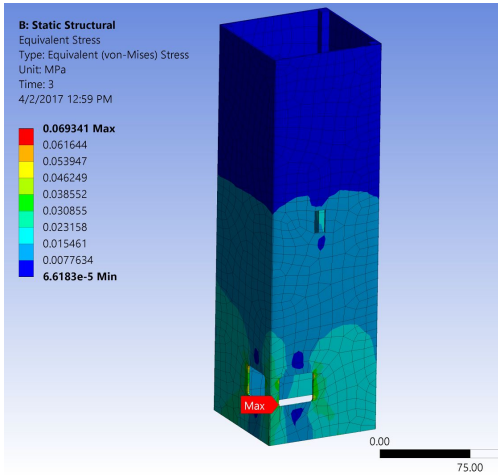

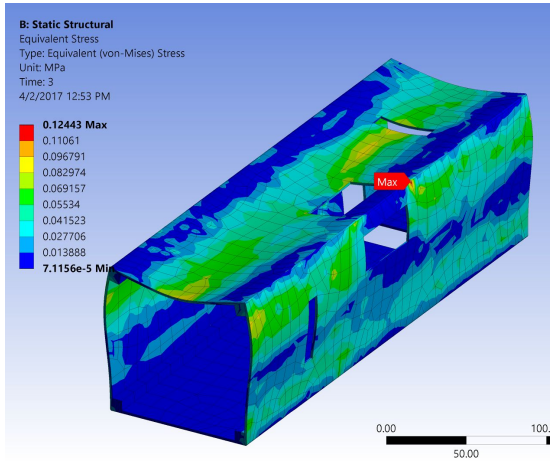

Chassis Engineering Model

- Goals
  - Refine mechanical interfaces
  - Verify ease of flight assembly & integration
- First iteration to be 3D printed
  - Will be used to to verify design and hardware layout
- Second iteration will be machined
  - Allows for more stringent testing of structure

Challenges and Next Steps

- Thermal Analysis of camera mounting brackets
  - Switch back to aluminum to save mass if titanium is not needed
- Incorporate cabling and plugs into chassis
  - Verify cable routing and plug clearance
- Incorporate RBF hardware, deployment switches,nichrome circuit, sun sensors
- Add access ports to chassis design
- Planned construction of chassis engineering model immediately following PDR
  - 3D printed parts of all hardware, can incorporate fasteners
  - Will practice assembly of chassis and hardware with cabling
    - Assembly process outlined to practice exact flight assembly operations
- Goal: structure is completely finished by CDR

Thermal Subsystem

Presented By: *Johnathan Gamaunt and Ryan Czerwinski*

Team members: *Ryan Czerwinski, Hiram Iniguez, Johnathan Gamaunt, Mireya Ochoa, Esther Rodriguez*

Thermal Subsystem Overview

- FLIR Tau 2 Camera - uncooled microbolometer
  - Requires management of consistent thermal environment within immediate area of camera
    - 20°C +/- 15° C
  - Significant lens heating during imaging will distort image resolution (fuzziness from noise)
    - +/-10° C a stricter tolerance may be implemented after a thermal chamber is obtained and additional testing is done
- Definitions:
  - Hot Case: assumes hottest location in our orbit
    - When Beta angle is 0°
  - Cold Case: assumes coldest location in our orbit
    - When the satellite is in the shadow of the Earth
  - Beta angle: angle between orbital plane of spacecraft and sun vector 0° to 73°
    - Determines percentage of time spent in direct sunlight 62% to 100%

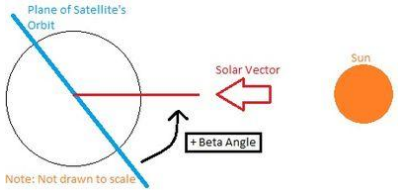

Thermal Subsystem Overview Cont...

- Thermal models
  - Single node thermal analysis of the orbit to identify hot and cold points in orbit.
    - Satellite orientation relative to Sun and the Earth
  - Multi node analysis of hot point in orbit.

Thermal Subsystem Requirements

ID	Requirement	Rationale	Parent Requirement	Verification
PHX-TCS-1	The thermal system shall take up less than TBD volume within the CubeSat	Allows space for payload and other subsystems	SYS-1	Inspection
PHX-TCS-2	Temperature sensors shall relay temperature information to C&DH	Telemetry for system health diagnosis	SYS-6	Demonstrate
PHX-TCS-3	The thermal subsystem shall not exceed an allocated mass of 0.08 kg	Satellite weight stays low	SYS-1	Inspection
PHX-TCS-4	The thermal subsystem shall have a power usage of no more than TBD watts orbital average	Maintain system health	EPS-1	Analysis

Color Legend:

Compliant	Compliant by CDR	Compliant by TRR	Compliant by FRR

Thermal Subsystem Requirements

ID	Requirement	Rationale	Parent Requirement	Verification
PHX-TCS-5	The thermal system shall maintain the camera survival temperatures between -55^{0}C and 95^{0}C while the camera is not operating.	Maintain system health	SYS-5	Analysis
PHX-TCS-6	The thermal system shall maintain the camera operating temperatures between -40°C and 80°C while the camera is operating.	Maintain system health	SYS-5	Analysis
PHX-TCS-7	The ADCS shall be maintained at its survival temperatures, provided in the “Temperature Requirements” table, while it is not operating.	Maintain system health	SYS-5	Analysis
PHX-TCS-8	The ADCS shall be maintained at its operating temperatures, provided in the “Temperature Requirements” table, while it is operating.	Maintain system health	SYS-5	Analysis

Color Legend:

Compliant	Compliant by CDR	Compliant by TRR	Compliant by FRR

Thermal Subsystem Requirements

ID	Requirement	Rationale	Parent Requirement	Verification
PHX-TCS-9	The EPS shall be maintained at its survival temperatures, provided in the “Temperature Requirements” table, while it is not operating.	Maintain system health	SYS-5	Analysis
PHX-TCS-10	The EPS shall be maintained at its operating temperatures, provided in the “Temperature Requirements” table, while it is operating.	Maintain system health	SYS-5	Analysis
PHX-TCS-11	The battery for EPS shall be maintained at its survival temperatures, provided in the “Temperature Requirements” table, while it is not operating.	Maintain system health	SYS-5	Analysis
PHX-TCS-12	The battery for EPS shall be maintained at its operating temperatures, provided in the “Temperature Requirements” table, while it is operating.	Maintain system health	SYS-5	Analysis

Color Legend:

Compliant	Compliant by CDR	Compliant by TRR	Compliant by FRR

Thermal Subsystem Requirements

ID	Requirement	Rationale	Parent Requirement	Verification
PHX-TCS-13	Thermal subsystem shall be turned off during ground operations, launch, and ascent of satellite.	Prevent electrical and RF interference with the launch vehicle.	PHX-ECE-12.01	Demonstration
PHX-TCS-14	The CubeSat shall be designed to withstand overall temperature range of -40°C to +65°C	Standard CubeSat Requirement		Analysis

Color Legend:

Compliant	Compliant by CDR	Compliant by TRR	Compliant by FRR

Temperature Requirements Table

- Li-ion Batteries
  - The batteries include heaters which are set to turn on when the battery's temperature reaches 0° C.
- Camera
  - Uncooled thermal imaging camera.
  - Observe camera lens temp. as to not wash out images
    - 25°C +/- 10°
  - Camera needs 15 minutes to reach an equilibrium temperature for imaging.

	Operating Temperatures (°C)		Survival Temperatures (°C)	
Hardware	min	max	min	max
Tau 2 FLIR Camera	-40	80	-55	95
communications				
s-band transmitter	-25	61	-40	85
AX-100 UHF Receiver	-30	85	-30	85
Software				
Nanomind A3200	-30	85	-30	85
NanoDock Motherboard	-40	85	-40	85
GPS	-40	85	-55	95
ADCS				
MAI 400	-40	80	-40	80
EPS				
EPS Board	-40	85	-50	100
Li-ion Batteries	-10	50	-10	50
solar panels	-40	80	-40	80
Solar Array End Panel Inteface Control	-40	100	-40	100

Thermal Environment

ISS Orbit

- Inclination: 51.6°
- Altitude:~400 km
- Orbit time: ~ 90 min
- Beta angle: ~ ±75°
- % of time spent in sunlight per orbit: 62% - 100%

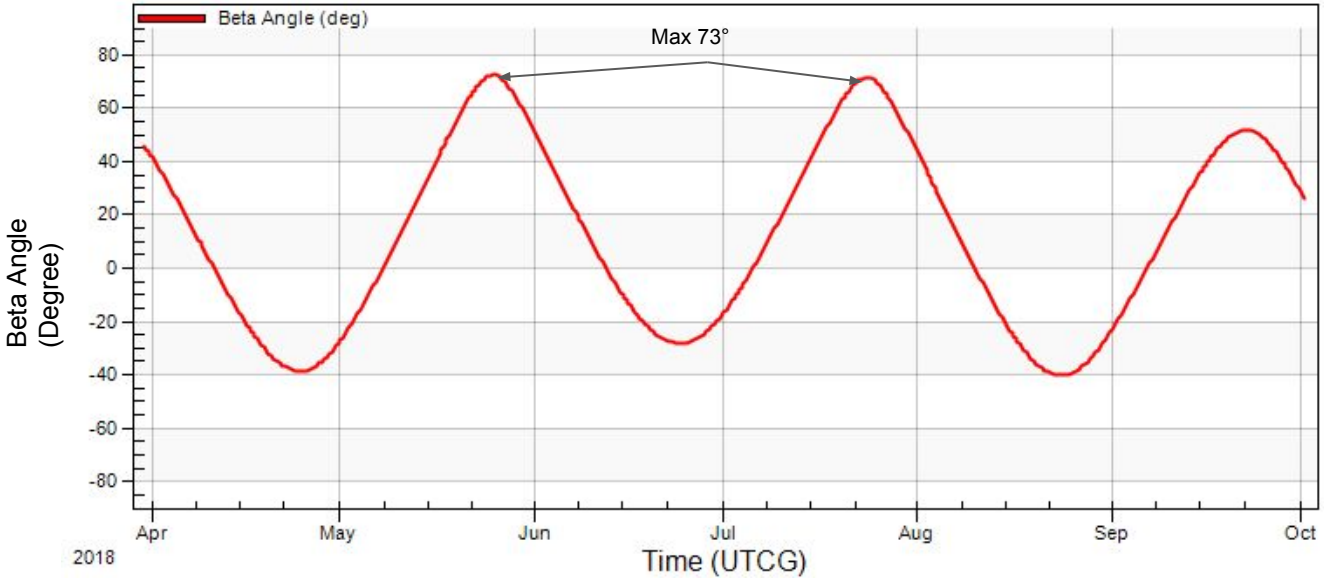

Thermal Design

- Passive Thermal Control Design
  - Providing the cold case analysis bodes well, a passive thermal control design will be implemented using:
    - MLI
    - Radiators*
    - Paints
    - Temperature sensors
      - 2 placed around the camera lens.
  - Because the S-band transmitter will not be running at the same time we are taking images we may not need thermal shielding for the S-Band.

Single Node Analysis

1 full orbit when beta angle ~0°

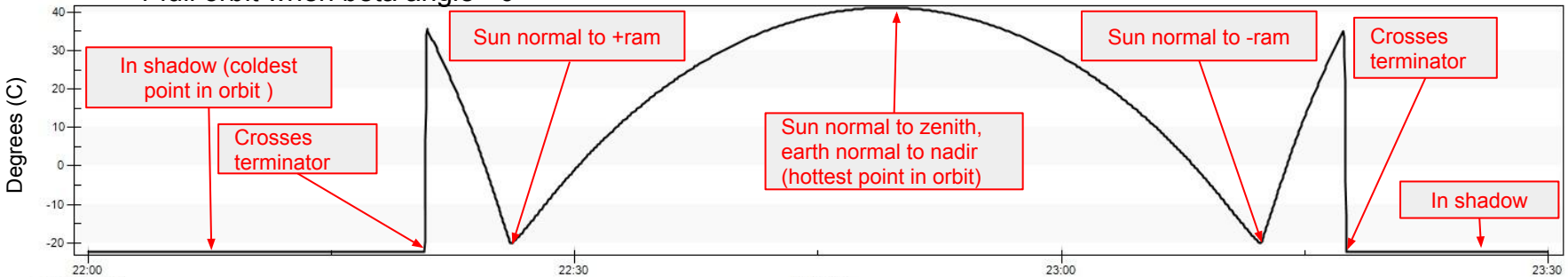

1 Full Orbit when beta angle ~73°

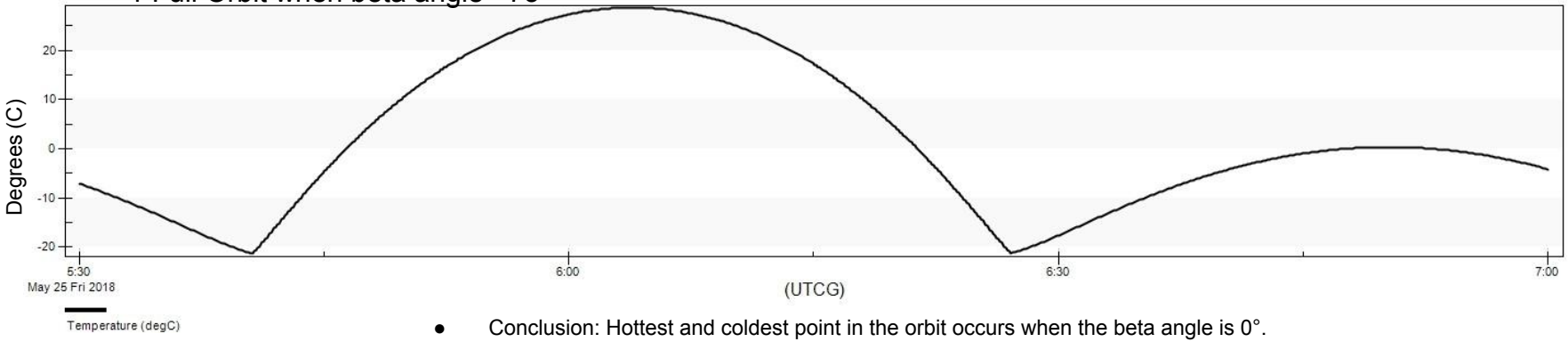

- Conclusion: Hottest and coldest point in the orbit occurs when the beta angle is 0°.
  - Hot: Sun is normal to zenith, albedo and Earth IR are normal to nadir.
  - Cold: Earth IR is normal to nadir, no solar flux or albedo.

Hot Case “Coasting” Mode

- Steady-state thermal analysis for the hottest point of any orbit.
- Solar flux is normal to zenith, albedo and Earth IR are normal to nadir.
- All components are on and dissipating heat at the average rate for one orbit.

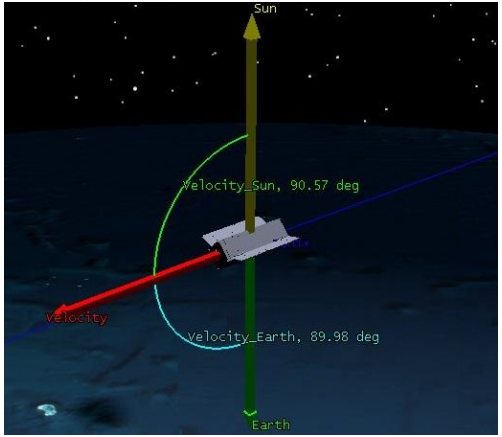

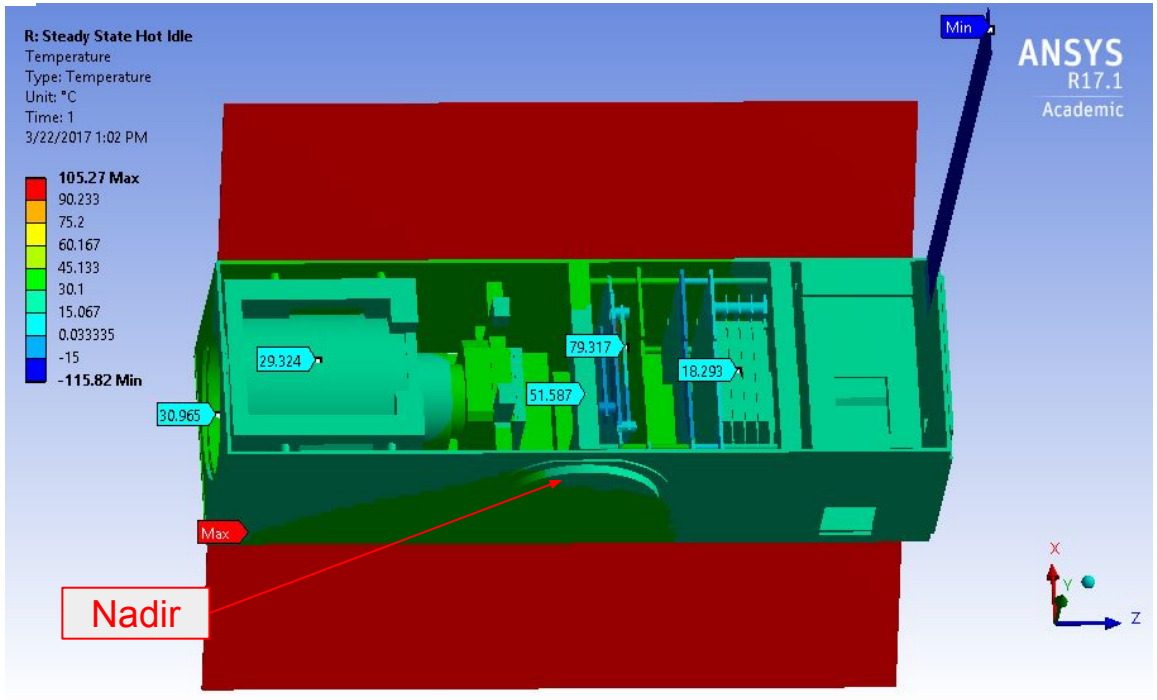

Thermal - Top Level Risks

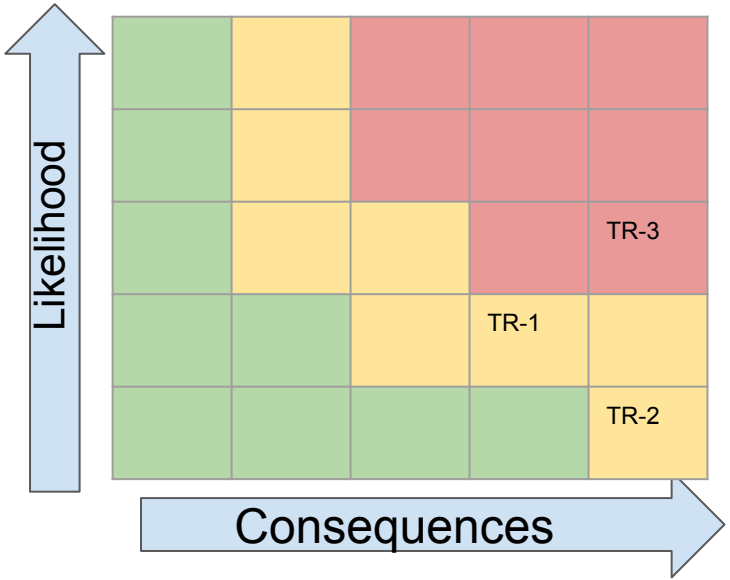

ID	Trend	Risk	Mitigation Strategy	Approach
TR-1	→	Temperature sensors of components stop working	Health Checks	W,R
TR-2	→	Components reach or exceed survival temperatures	Thermal Insulation/radiators	M, R
TR-3	→	Camera Sensor not reaching thermal equilibrium for imaging	Analysis, relocation or Isolation of heat-generating components	M, R

Trend	Approach
↑ Improving	A - Accept
↓ Worsening	M - Mitigate
→ Unchanged	R - Research
▭ New	W - Watch

Challenges and Next Steps

- Next Steps
  - Placement of MLI, radiators, and paints where needed.
  - Multinode analysis of worst case cold.
  - Build a more complex model in ANSYS.
  - Run finer mesh analysis for final structure and layout.
  - Run transient analysis for average orbit.
- Challenges
  - Getting access to Thermal Desktop or NX software.

Phoenix Budget & Timeline

Presented By: *Sarah Rogers*

Goals of CDR

- Verify thermal subsystem design
- Verify chassis design, prepare for flight chassis manufacturing
- Demonstrate successful nichrome deployment
- Demonstrate successful qualification performance for flight hardware
    - Conduct initial testing on flight EPS, camera, ADCS, and UHF receiver
    - Flight tests would not be entirely complete, but would demonstrate hardware performance
- Demonstrate general performance of the FLIR flight model
    - Calibrated with filter incorporated
- Demonstrate software performance for MAI and FLIR operations
- Demonstrate plans for Thermal bakeout of the flight chassis in late July

All testing will verify subsystem requirements to meet mission success criteria, based on requirement compliance goals

Phoenix Timeline Overview

- **Verification Review:** May 26, 2017
- **CDR**: June 30, 2017
- **Flight Testing & Assembly:** July - September 2017
- **TRR**: September 22, 2017
- **Environmental Testing**
  - **Vibrations**: October 2017 (location **TBD**)
  - **TVAC:** *Performed at ASU*
    - Chassis bakeout: August 2017
    - System level testing November 2017
  - **DITL**: December - January 2017
- **FRR**: February 9, 2018
- **Launch Readiness:** March 8, 2018

Path to CDR

Task Name	Duration	Start
Phoenix	**621 days?**	**Tue 1/10/17**
Phase B: Preliminary Design	**55 days**	**Mon 1/16/17**
Phase C: Critical Design	**64 days**	**Mon 3/27/17**
Critical Flatsat Development	**59 days**	**Mon 3/27/17**
Imaging License	42 days?	Mon 3/27/17
Atmosphere & Absolute Temperature Research	31 days?	Tue 4/4/17
Verification Review	0 days	Fri 5/26/17
FLIR blackbody testing	18 days?	Thu 3/30/17
Algorithm Research	11 days?	Mon 4/10/17
Filter Testing	26 days?	Mon 5/8/17
algorithm development	26 days?	Mon 5/8/17
SD Card prototyping	21 days?	Mon 3/27/17
Flight Software Development	**53 days**	**Mon 4/3/17**
Software concentration (FLIR, ADCS)	37 days?	Mon 3/27/17
Software Testing (ADCS, FLIR)	21 days?	Mon 5/15/17
Ground Software Design	52 days?	Mon 3/27/17

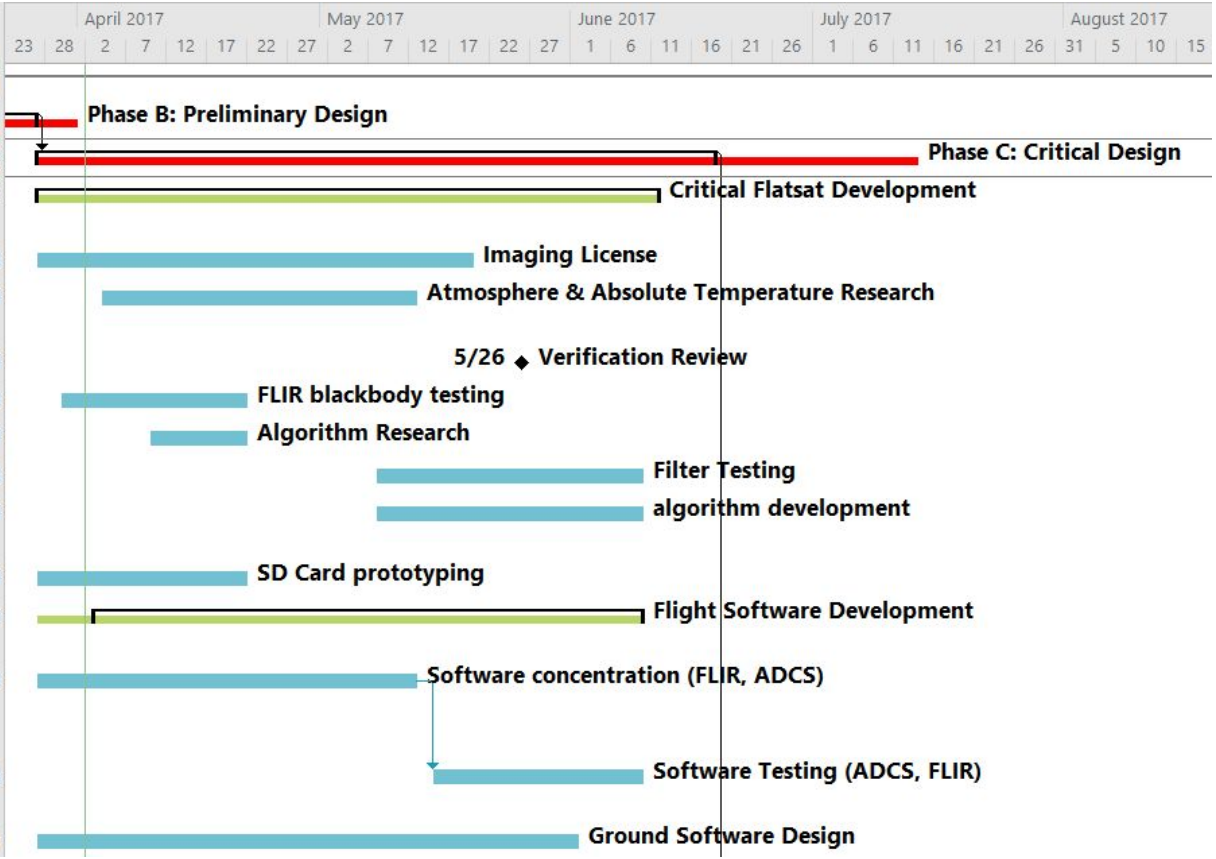

Path to CDR

Task Name	Duration	Start
chassis EM development	**58 days?**	**Mon 3/27/17**
3D Chassis Engineering Model	6 days?	Mon 3/27/17
Assembly - Mechanical Connections	6 days?	Thu 4/6/17
Cabling Layout	11 days?	Mon 3/27/17
Harnessing and Routing Practice	39 days?	Wed 4/12/17
Final CAD & Layout	7 days?	Thu 6/1/17
Machining - Chassis EM	14 days?	Wed 5/10/17
Purchase flight cables & connectors	0 days	Tue 5/30/17
EPS development	**26 days?**	**Mon 3/27/17**
EPS EM Performance testing	5 days?	Mon 3/27/17
general hardware testing	21 days?	Mon 4/3/17
Solar panel simulations	13 days?	Tue 4/4/17
comms testing & analysis	**59 days?**	**Mon 3/27/17**
UHF antenna construction	10 days?	Mon 3/27/17

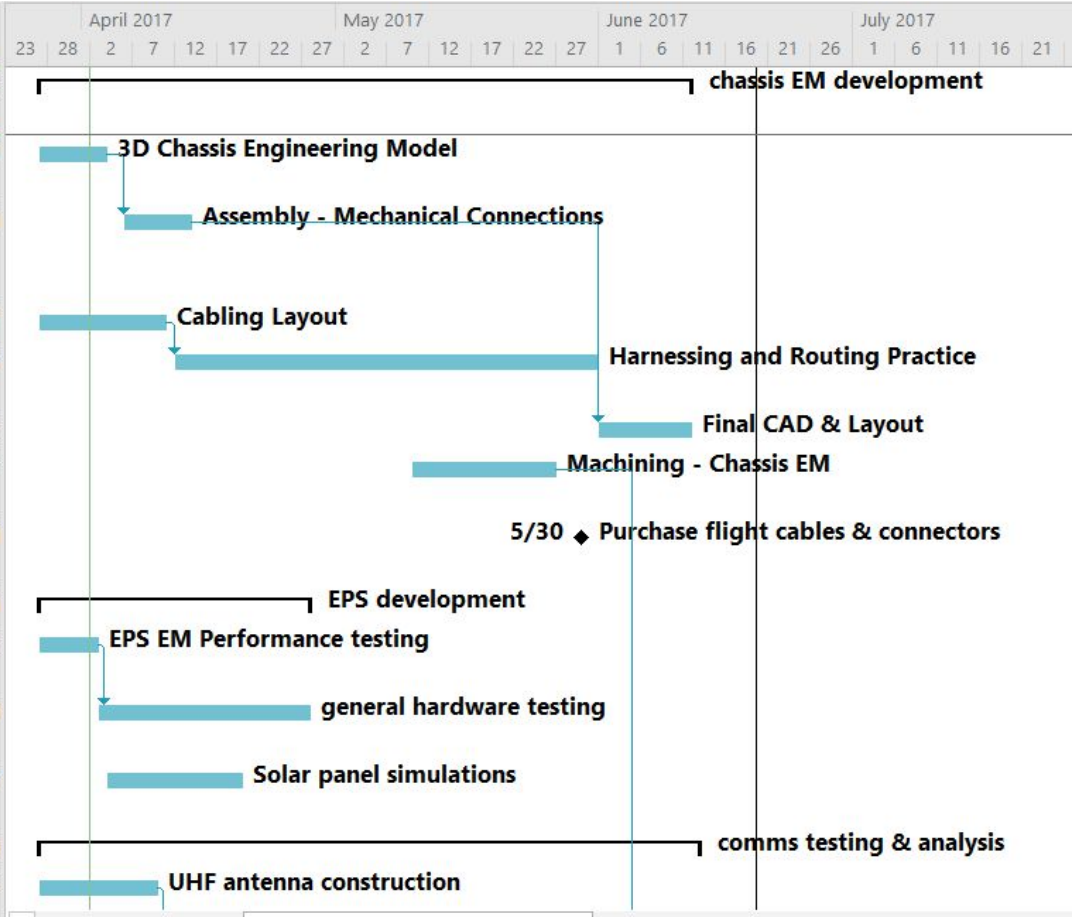

Path to CDR

Task Name	Duration	Start
comms testing & analysis	**59 days?**	**Mon 3/27/17**
UHF antenna construction	10 days?	Mon 3/27/17
RF UHF Antenna Lab Testing	5 days?	Mon 4/10/17
In lab ground station testing	5 days?	Mon 4/17/17
Ground Station Compatibility Testing (UHF)	3 days?	Mon 5/15/17
s-band qualified on Ground Station	0 days	Wed 5/31/17
RF Lab testing in satellite environment	4 days?	Mon 6/5/17
UHF design validated	0 days	Tue 6/13/17
MOps development	58 days?	Mon 3/27/17
MAI Software Testing	21 days?	Mon 3/27/17
orbit propagation	15 days?	Tue 4/4/17
MOps imaging command organization	16 days?	Tue 4/11/17
Thermal simulations	**51 days?**	**Mon 3/27/17**
updated hot and cold case simulations	13 days?	Mon 3/27/17
flight mode simulations	5 days?	Mon 4/10/17

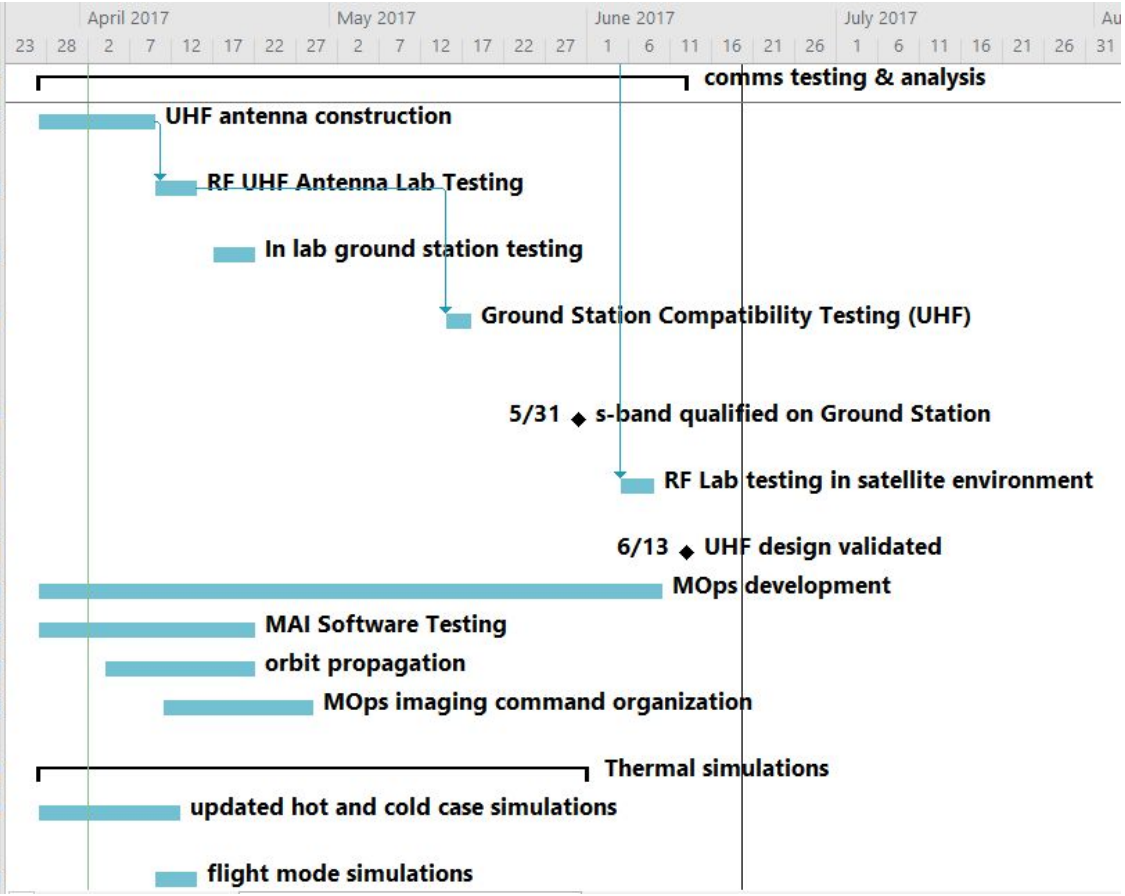

Path to CDR

Task Name	Duration	Start
flight mode simulations	5 days?	Mon 4/10/17
MLI & Radiator Design & Layout	19 days?	Mon 5/8/17
Nichrome circuit assembly	15 days?	Mon 3/27/17
Nichrome Testing & adjustments	32 days?	Mon 4/17/17
FlatSat Testing	**28 days?**	**Mon 5/8/17**
General Hardware Interface testing	28 days?	Mon 5/8/17
Power Consumption - Mode Operations	26 days?	Mon 5/8/17
Science mode - interface testing	16 days?	Tue 5/23/17
Downlink simulation testing	12 days?	Fri 5/26/17
Flight Hardware Qualification Tests	14 days?	Thu 5/25/17
CDR	0 days	Fri 6/30/17
Environmental Test Development	39 days?	Mon 5/22/17
Phase D: Integration and Test	**207 days?**	**Mon 6/19/17**

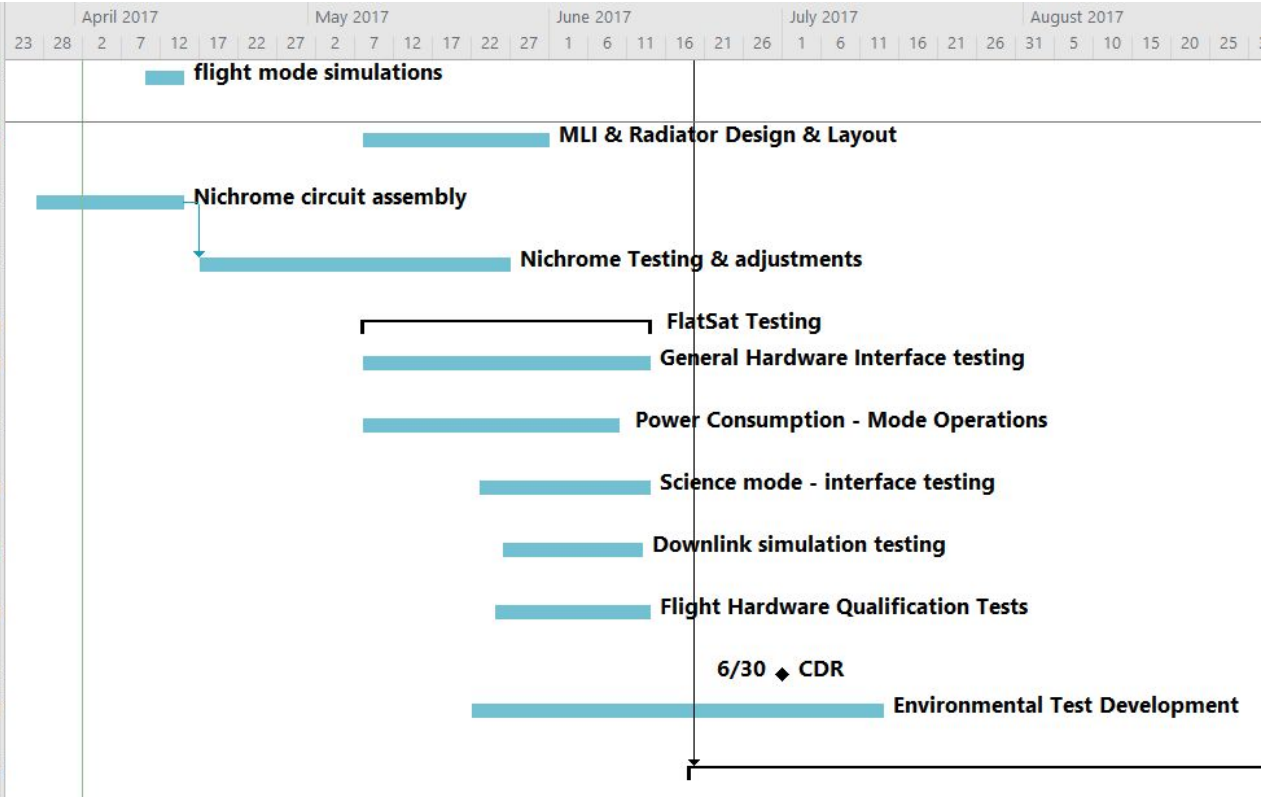

Schedule Risks

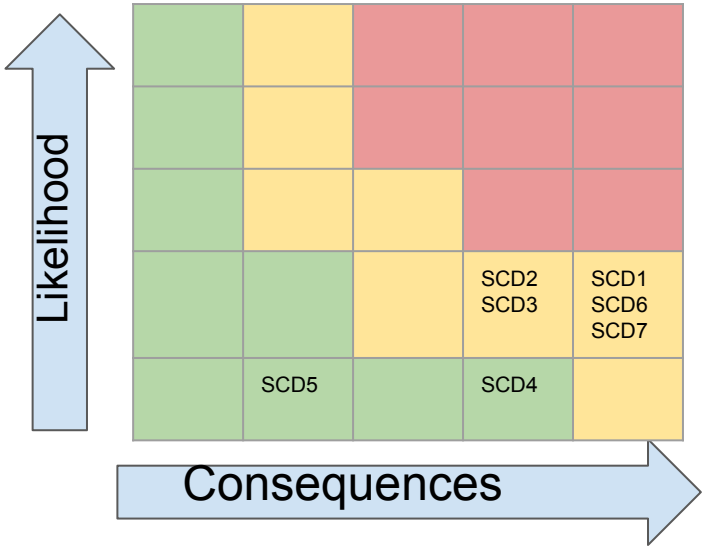

Trend	Approach
Improving	A - Accept
Worsening	M - Mitigate
Unchanged	R - Research
New	W - Watch

ID	Trend	Risk	Mitigation Strategy	Approach
SCD1	→	Hardware does not interface as expected	Starting integration early with FlatSat development	W
SCD2	▭	Purchased flight hardware breaks during integration	Careful procedure development and documentation, filtering through systems engineering	M
SCD3	▭	Environmental testing causes component failure	Thermal and structural analysis, carefully documented procedures, guidance from experts	M
SCD4	↑	Ground Station incomplete by launch readiness date	Assemble software team to build ground station software, collaborate with other universities	M
SCD5	→	Limited facility availability	Work closely with facility managers to maintain schedule	W
SCD6	→	ADCS unit breaks	Careful handling of ADCS unit, verification of structural integrity, placeholder used for vibrations testing	M
SCD7	→	S-Band transmitter breaks	Careful handling of S-Band unit during integration, verify structural integrity of chassis	M

Risks - Cost

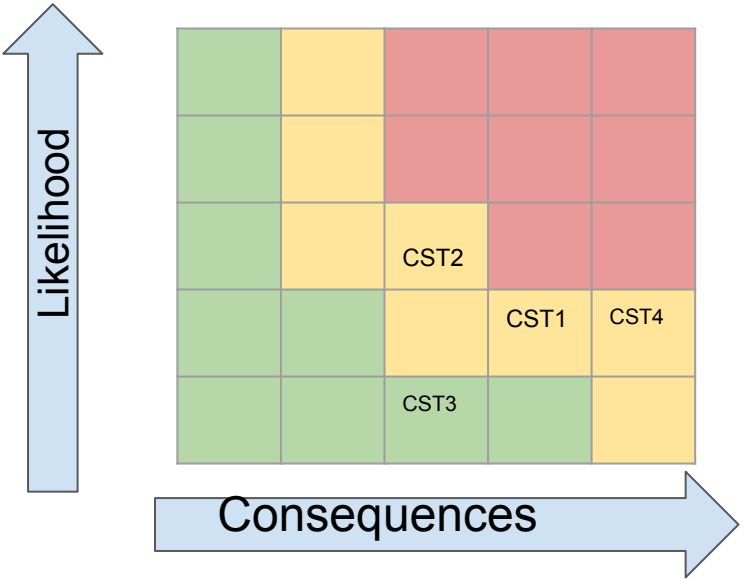

ID	Trend	Risk	Mitigation Strategy	Approach
CST1	→	Purchased hardware does not meet interface requirements	Aid from industry, budget margin left of $10,000	M
CST2	▭	Purchased flight hardware breaks	Engineering models will be identical to the flight models, and could potentially be used	M
CST3	→	Actual costs are greater than projected costs	Acquired component quotes, seek guidance from experts	M
CST4	▭	ADCS unit breaks	Careful handling of ADCS unit during integration, placeholder used during vibrations testing	M

Trend	Approach
↑ Improving	A - Accept
↓ Worsening	M - Mitigate
→ Unchanged	R - Research
▭ New	W - Watch

Budget & Purchasing Proposal

Budget

Allocated Costs	
Allocated flight cost	$137,550.00
Allocated flatsat Cost	$43,000.00
Allocated Other Costs	$7,500.00
Margin	$10,000.00
Projected Program Cost	$198,050.00

Actual Costs	
Actual flight cost	$132,958.85
Actual flatsat Cost	$46,825.80
Other - Actual	$0.00
Margin	$10,000.00
Actual Program Cost	$179,784.65

USIP Grant Allocation	$198,128.00
Budget Spent	$30,446.55
Remaining*	$157,681.45

Costs of launch are covered by NASA and the USIP Program

- Margin ensured to be left to allocate for flight spares of hardware, unforeseen budget costs
- Bulk purchases mitigate indirect costs from the university
- In contact with companies for results of manufacturing and qualification testing
- Enough margin to purchase a second ADCS model (most expensive flight hardware)

Budget Summary

WBS	WBS Element	Allocated Amount	Actual amount	Margin
1	**Flight Hardware**	**$137,550.00**	**$132,958.85**	**$4,591.15**
	ADCS	$42,750.00	$42,000.00	$750.00
	Payload	$11,100.00	$11,060.10	$39.90
	Thermal	$1,000.00	$500.00	$500.00
	Communications	$22,700.00	$22,193.75	$506.25
	Software	$15,000.00	$14,450.00	$550.00
	Mission Operations	$1,000.00	$0.00	$1,000.00
	Structures	$2,500.00	$2,000.00	$500.00
	EPS	$41,500.00	$40,755.00	$745.00
2	**Flatsat**	**$43,000.00**	**$43,575.80**	**-$575.80**
3	**Testing**	**$6,000.00**	**$0.00**	**$6,000.00**
4	**Materials and Supplies**	**$500.00**	**$0.00**	**$500.00**
5	**travel**	**$1,000.00**		

- Testing allocation includes budget for 3 rounds of TVAC testing and vibrations testing
  - Official testing amount currently unknown
- EPS costs expected to decrease widely due to decrease in solar panels
  - Money gained back from panel reduction will be included in the budget margin
- FlatSat hardware could ideally be used as a replacement for flight hardware if hardware breaks

Flight Purchasing

- **CDR:** June 30
- Flight model lead time ~ **8 weeks for almost every item**
  - Ordering by April 7th places delivery around week of May 29 (earliest)
  - Allows for 3 weeks of qualification and interface testing before CDR
- Flight models shall be purchased immediately following PDR
  - The summer season should be utilized as much as possible for testing and assembly
  - Most issues will be found in the AIT process
  - Allows environmental testing to begin in October
  - Must be prepared to meet launch readiness date
- Plan has been discussed and approved by team

Purchasing Schedule

Purchase coordination immediately following PDR:

Engineering Models

- A3200 OBC,
- Motherboard
  - primary hardware interface
- EPS board
- AX-100 UHF receiver
- S-Band Transmitter

Flight Hardware

- A3200 OBC
- Motherboard
- EPS board
- AX-100 UHF receiver
- MAI-400 ADCS

Withholding until after CDR

- Solar panels
- Thermal subsystem
- Flight Chassis

FLIR Camera to be used in flight: *purchased between Verification Review and CDR*

PHOENIX
ARIZONA STATE UNIVERSITY

Backup Slides

Science

Rational Evidence - Temperature Resolution

- Temperature deviations correspond to different LCZs, which will be used to analyze the Urban Heat Island effect. Instead of using Urban - Rural (being represented by only 2 temperatures), we now have many classes with their temperature variances across a city.

- Air temperature and surface temperature are related, so we should see similar results for UHI / SUHI studies.

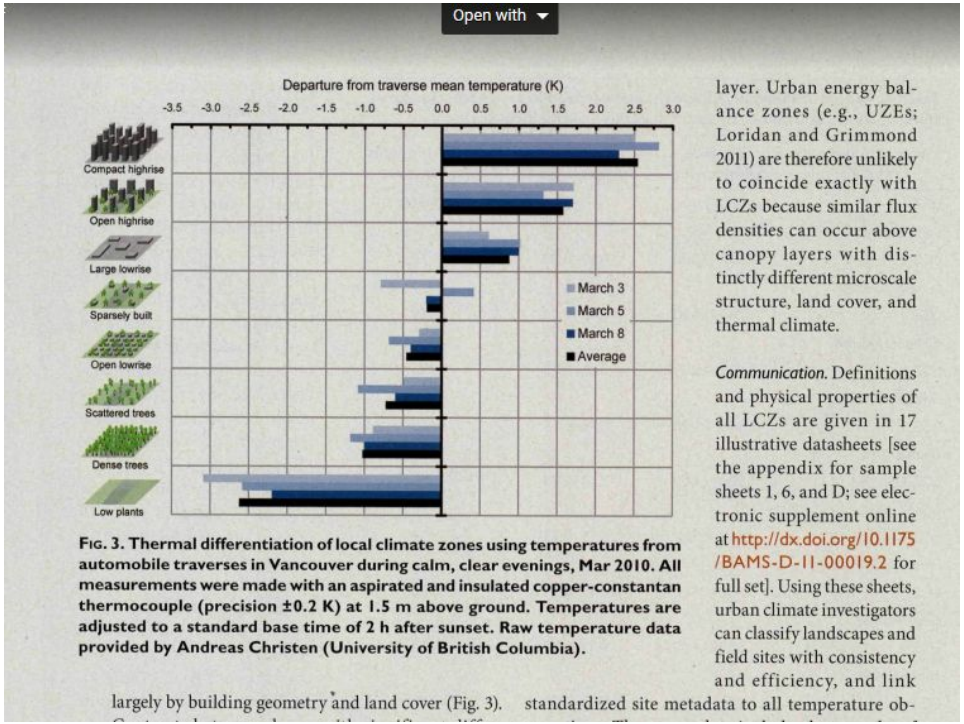

Fig. 3. Thermal differentiation of local climate zones using temperatures from automobile traverses in Vancouver during calm, clear evenings, Mar 2010. All measurements were made with an aspirated and insulated copper-constantan thermocouple (precision ±0.2 K) at 1.5 m above ground. Temperatures are adjusted to a standard base time of 2 h after sunset. Raw temperature data provided by Andreas Christen (University of British Columbia).

largely by building geometry and land cover (Fig. 3).

layer. Urban energy balance zones (e.g., UZEs; Loridan and Grimmond 2011) are therefore unlikely to coincide exactly with LCZs because similar flux densities can occur above canopy layers with distinctly different microscale structure, land cover, and thermal climate.

Communication. Definitions and physical properties of all LCZs are given in 17 illustrative datasheets [see the appendix for sample sheets 1, 6, and D; see electronic supplement online at http://dx.doi.org/10.1175/BAMS-D-11-00019.2 for full set]. Using these sheets, urban climate investigators can classify landscapes and field sites with consistency and efficiency, and link standardized site metadata to all temperature ob-

Source: Stewart and Oke, 2012

Rational Evidence - Off Nadir

- These are temperature differences from the mean on nadir temperature.
- The 4 different graphs portray all latitudes.
- The max LCZ aspect ratio in Local Climate Zones (H/W) is 2
- Our study area is in the 30° to 45° latitude range -

In the city cores with the highest aspect ratio we will see a max of >1 error from off nadir 25 degrees.

the mean and standard deviation of the difference between $T_B(\theta)$ and $T_B(0°) = T_{B,nad}$; however, whether mean and standard deviation are appropriate measures for these distributions is questionable.

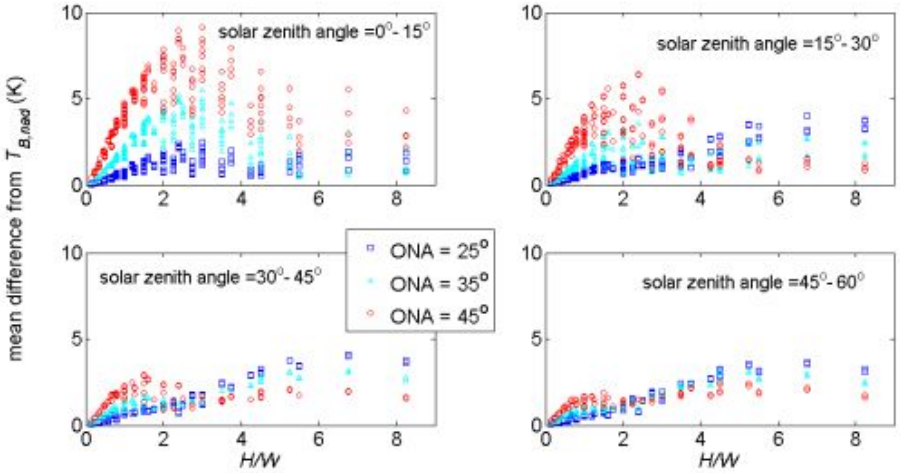

Figure 10. Mean temperature difference from nadir view as a function of *H/W* for three off-nadir angles (ONA), over four solar zenith angle ranges. Model output is for 1200 LST and 1800 LST for all latitudes.

6. Anisotropy of Common Neighbourhoods: Local Climate Zones

Previous simulations of anisotropy of urban zones clearly distinguish between tall commercial

Source : http://www.mdpi.com/2072-4292/8/2/108/pdf

Science mission goals

4.01	The science team should get imagery of seven pre-selected cities	*see city analysis slide*
4.02	Each city should get 4 quality pictures throughout the mission lifetime	This is to study what happens when the incoming solar radiation changes. For times of day and times of year for each city see rational 4.05.
4.05	Engineers should predict and inform science team date and times before every pass over Phoenix, AZ	This is to coordinate possible air temperature transects at the time the thermal image is taken.

Science Temporal Notes

Diurnal: Interested in times with larger heating/cooling rates of the surfaces.

1) Heating -> around noon - most intense incoming radiation.

2) Cooling -> around 2-3 hours after sunset - can measure stored ground heat coming back up to surface.

Annual: Intensity of incoming solar radiation changes throughout year. We would like to start the mission in the summer season to insure that we are getting the strongest annual signal possible of SUHI.

Payload

Trade Study

Tamarisk 640: Similar image size with a resolution of 640 by 480 and power draw with an input voltage of 5-5.5V. Has a spectral band of 8 to 14μm. With a maximum resolution of only 105 meters per pixel due to a larger field of view, it does not have enough detail for the purposes of this mission.

EyeR 640 17u: Same image size as the Tamarisk, with a wider spectral band of 7.5-14μm. Requires an input voltage of 8-28V, a drastically higher range than the other cameras.

TWV 640: Same image size as the Tamarisk, with a lower power draw of 2-5.5V. Is not from a US vendor, so could not be used.

Software

Software Telemetry Estimation

Module	Telemetry Types	Telemetry Frequency	Telemetry Size	
MAI-400	Standard	1hz	161 bytes	
	Raw IMU	On command	21 bytes	
	IR Earth Horizon Senson	On command	56 bytes	
AX100	Standard	1 hz	40 bytes	
EPS 01-02453	Standard	1 hz	44 bytes	
S-Band	Standard	1 hz	16 bytes	
GPS	Standard	1 hz	16 bytes	
Nanomind	Temperature	1 hz	24 bytes	
cFS Applications	Standard	per command at 150 day	100 bytes	
Total		**1hz**	**140 bytes**	**4.42 GB per year**
		4hz	**161 bytes**	**5.08 GB per year**
		Per command	**100 bytes**	**.0055 GB per year**
				9.5055 GB per year

EPS

Vendor Analysis

	ClydeSpace	GomSpace	SolAero	Blue Canyon	Space Quest	EnduroSat
Battery (40Whr)						
Subtotal	-----	$10.5k	x	-----	x	x
Power Board						
Subtotal	-----	$5.5k	x	-----	x	x
Solar Panels						
2 3U(body)	-----	$5.5k	$1k/W	$20k	$600/W	$6.6k
2 3U(deployed)	-----	~$22k	-----	$24k	-----	$27k
Subtotal	$30k	~$27.5k	-----	$44k	-----	$33.6k
Notes	~Battery(40Whr)		~Panels only	~Battery(25Whr)	~Panels only	~Panels only
	and Board			and Board		
	Bundle- $13.2k			Bundle- $20k		
	~academic					
	discount					
Total	**$43.2k**	**$43.5k**		**$64k**		
Most recent numbers for the current 12U model, consisting of 2 3U deployables and 2 3U body mounted panels						

Maximum Component Power Consumption

Component	Voltage (V)	Current Draw (mA)	Power (W)
Nanomind OBC	3.3	265	0.87
NanoCom AX100 UHF Transceiver	3.3	1200	3.96
NovAtel OEM615 GPS	3.3	303	1
SD Memory Card	3.3	151	0.5
Battery Heaters	3.3	240	0.8
CPUT STX S-Band Transmitter	7.2	1430	10.3
Solar Panel Deployment*	7.2	1600	11.5
UHF Antenna Deployment*	7.2	1600	11.5
GPS LNA	7.2	75	0.54
MAI-400 ADCS	5	1600	8
FLIR Tau 2 640 Camera	5	600	3
Sun Sensors	5	2	0.01

Max Current	Current (A)	Power (W)
At 3.3V	2.159	7.1247
At 5V	2.202	11.01
At Vbat	4.63	37.04

*on for <1 minute once
**without deployment power

Battery Level Graphs

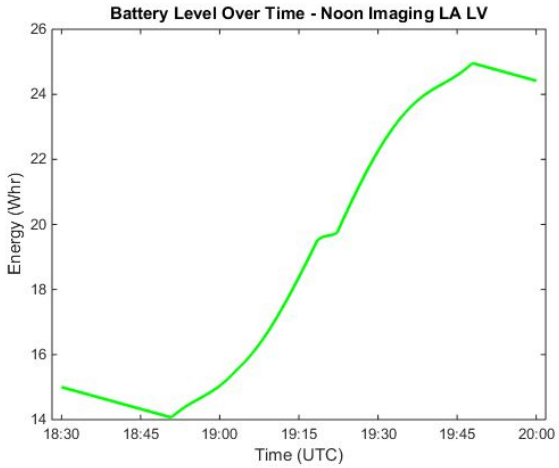

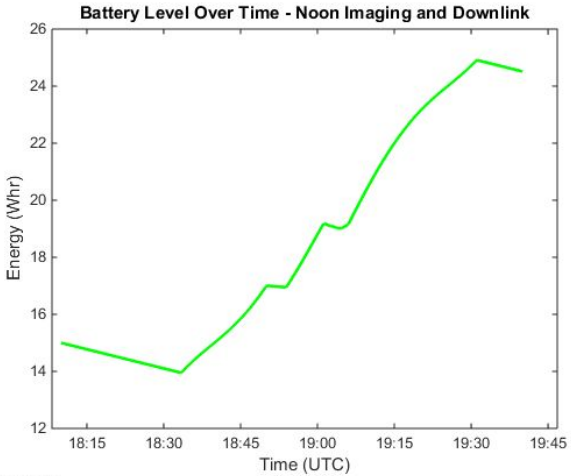

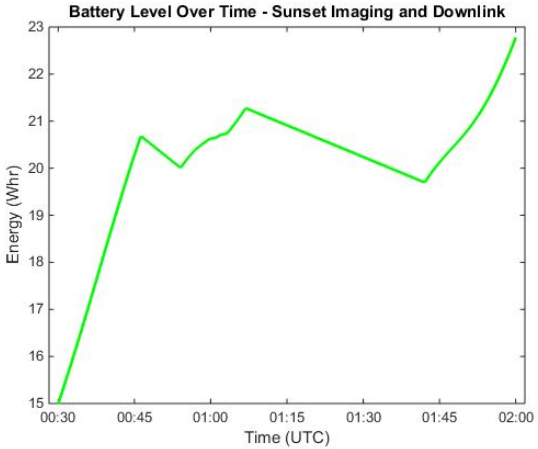

Budget & Timeline

Budget Allocations - Pie Chart

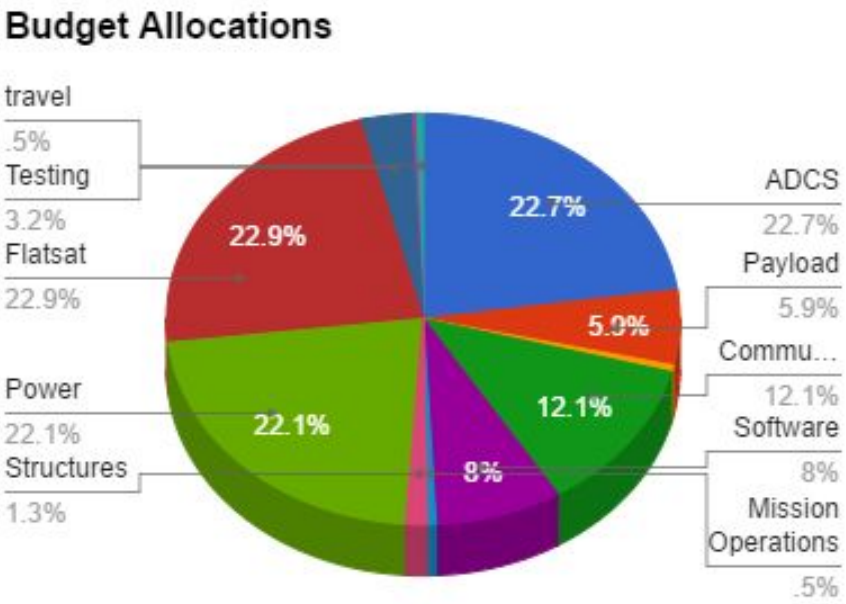

Flight Hardware Costs	
Item	Amount
FLIR Tau 2 640 with advanced radiometry package	$10,721
10.5μm-12.5μm Filter	$1,000
MAI-400 ADCS	$42,000
Software	$13,700
Thermal Subsystem	$500 (projected)
Communications	$20,000
NovAtel GPS Unit & GPS Antenna	$2,750
Solar Arrays	$27,550
EPS and 40 Whr Battery	$13,200
Flight Chassis	$2,000 (projected)
MOps & Ground Support	$700 (projected)

FlatSat Costs	
Item	Amount
Used FLIR IR Camera	$5,814.50
UC3C-EK	$327.50
Atmel-ICE	$145.80
MAI-400 Flat-sat test bed full simulation software	$8,415.00
EM filter	$1,000.00
EM for S-Band Radio Transmitter	$4,450
EM for AX-100	$7,250
chassis development/structure testing	$1,000.00
EPS EM	$7,923
OBC EM	$7,250
motherboard EM	$3,250.00

	purchased
	Projected cost

Integration and Testing

Task Name	Duration	Start	Finish
Phase C: Critical Design	**64 days**	**Mon 3/27/17**	**Sun 6/18/17**
Phase D: Integration and Test	**207 days?**	**Mon 6/19/17**	**Fri 3/30/18**
Correction Algorithm Development	71 days?	Mon 6/26/17	Sat 9/30/17
MOps script development	80 days?	Mon 6/19/17	Thu 10/5/17
filter testing with FLIR EM	54 days?	Tue 6/20/17	Thu 8/31/17
GIS Image Processing Training	11 days?	Mon 6/19/17	Mon 7/3/17
Practice with image processing	21 days?	Fri 6/23/17	Fri 7/21/17
Flight SD Card Development	18 days?	Mon 6/26/17	Wed 7/19/17
s-band qualification testing	11 days?	Fri 6/30/17	Fri 7/14/17
hardware Interface tests	**36 days?**	**Mon 6/19/17**	**Fri 8/4/17**
FLIR FM Quality Testing	10 days	Mon 6/19/17	Fri 6/30/17
RF Transmission Tests	10 days?	Mon 6/26/17	Fri 7/7/17
hardware compatibility testing	36 days?	Mon 6/19/17	Fri 8/4/17
solar panel deployment and power testing	10 days?	Mon 6/26/17	Fri 7/7/17
Final chassis development	**28 days?**	**Wed 6/21/17**	**Fri 7/28/17**
Electronics Stack Manufacturing	5 days?	Wed 6/21/17	Tue 6/27/17
Electronics Stack	2 days?	Fri 6/30/17	Mon 7/3/17

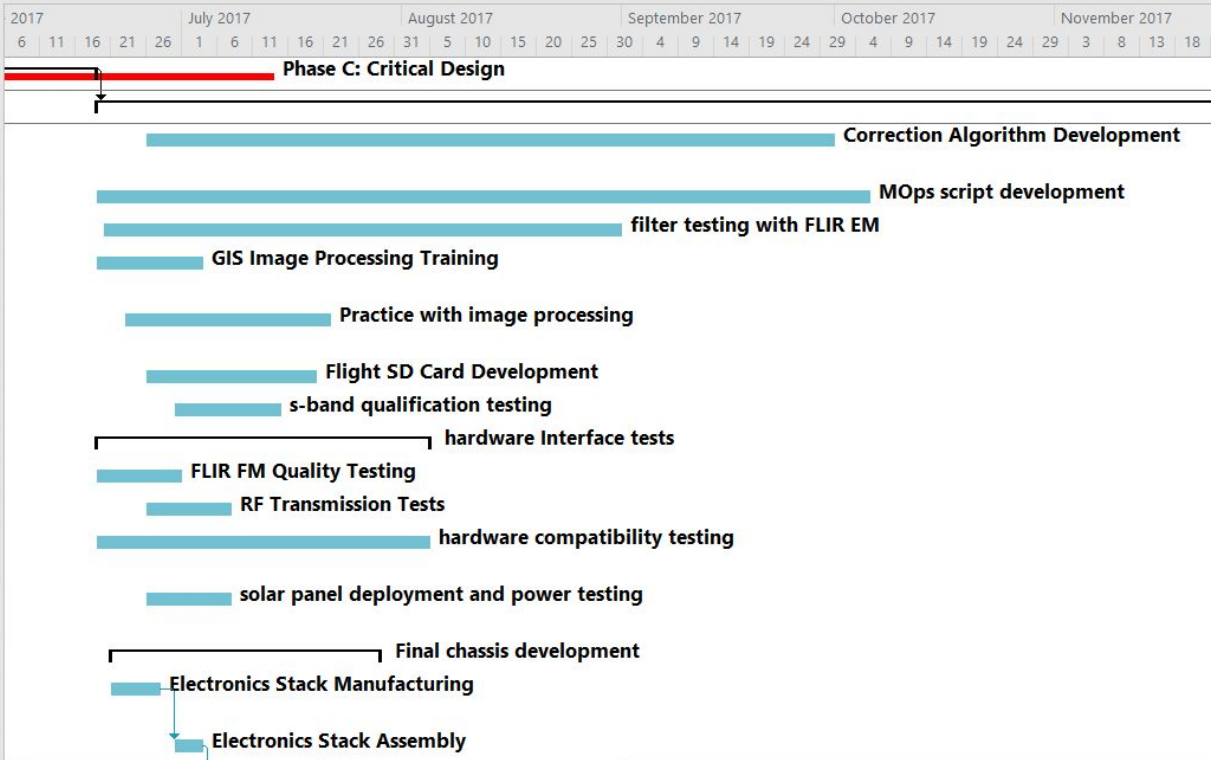

Integration and Testing

Task Name	Duration	Start	Finish
Electronics Stack Assembly	2 days?	Fri 6/30/17	Mon 7/3/17
Electrical Harnessing	3 days?	Tue 7/4/17	Thu 7/6/17
Machining	18 days?	Wed 6/21/17	Fri 7/14/17
preliminary mechanical assembly	5 days	Mon 7/17/17	Fri 7/21/17
Thermal Bakeout - chassis & cabling	5 days?	Mon 7/24/17	Fri 7/28/17
I&T - Flight Hardware	**45 days?**	**Mon 7/31/17**	**Fri 9/29/17**
External Hardware Integration	5 days?	Mon 7/31/17	Sat 8/5/17
MLI integration	2 days?	Thu 8/10/17	Sun 8/13/17
Electronics Stack Integration	3 days?	Mon 8/14/17	Wed 8/16/17
MAI I&T	10 days?	Thu 8/17/17	Wed 8/30/17
Camera I&T	14 days?	Thu 8/17/17	Tue 9/5/17
post assembly hardware compatibility tests	30 days?	Mon 8/21/17	Fri 9/29/17
MOps commands testing - image and transmission	9 days?	Mon 8/21/17	Thu 8/31/17
Test Readiness Review	0 days	Fri 9/8/17	Fri 9/8/17
post-assembly nichrome testing	6 days?	Tue 9/12/17	Tue 9/19/17

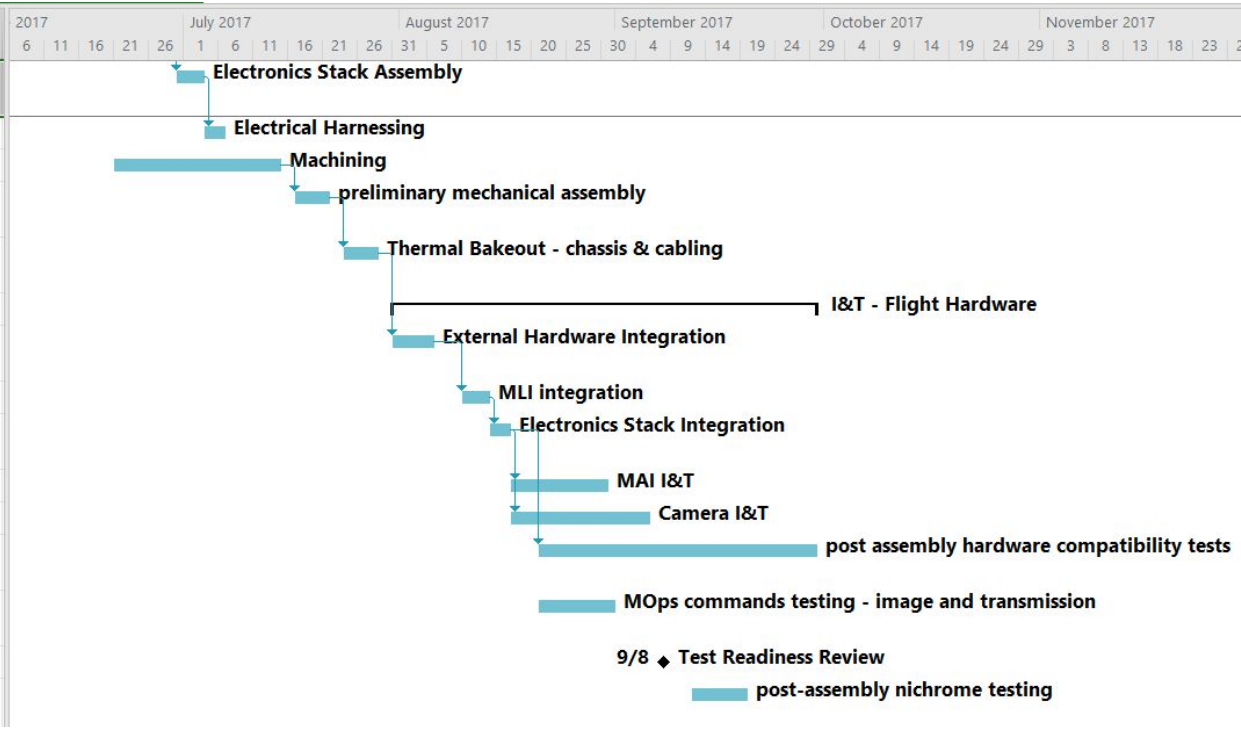

Integration and Testing
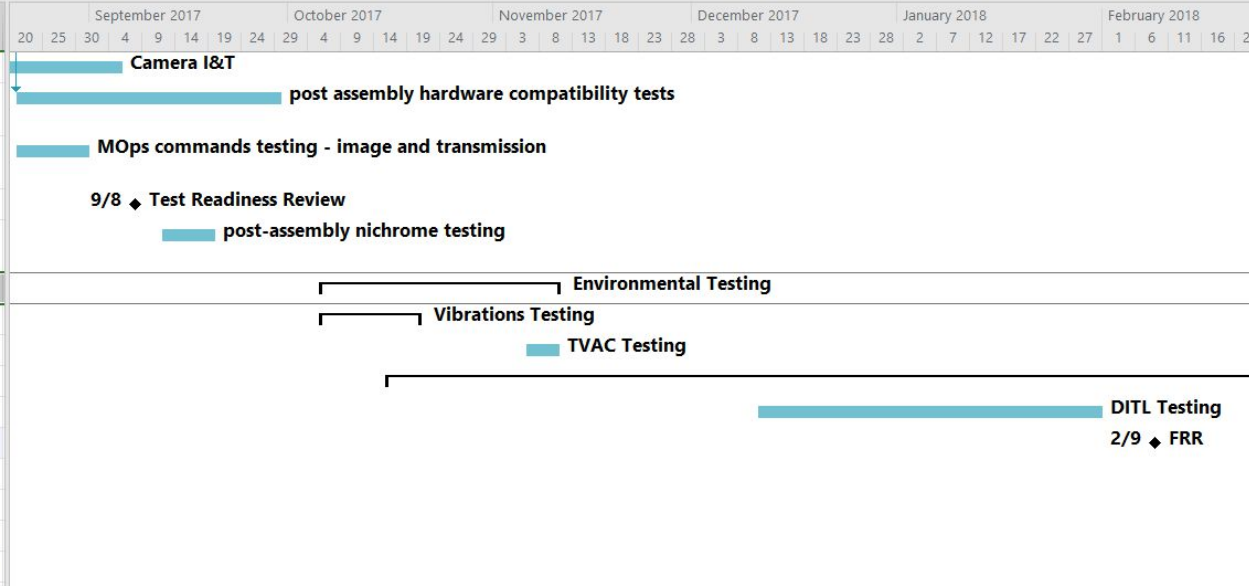
Task Name	Duration	Start	Finish
Camera I&T	14 days?	Thu 8/17/17	Tue 9/5/17
post assembly hardware compatibility tests	30 days?	Mon 8/21/17	Fri 9/29/17
MOps commands testing - image and transmission	9 days?	Mon 8/21/17	Thu 8/31/17
Test Readiness Review	0 days	Fri 9/8/17	Fri 9/8/17
post-assembly nichrome testing	6 days?	Tue 9/12/17	Tue 9/19/17
Environmental Testing	**26 days?**	**Fri 10/6/17**	**Fri 11/10/17**
Vibrations Testing	**11 days?**	**Fri 10/6/17**	**Fri 10/20/17**
TVAC Testing	5 days	Mon 11/6/17	Fri 11/10/17
MOps Training	**121 days?**	**Mon 10/16/1**	**Fri 3/30/18**
DITL Testing	38 days	Mon 12/11/17	Wed 1/31/18
FRR	0 days	Fri 2/9/18	Fri 2/9/18
Launch Readiness	0 days	Thu 3/8/18	Thu 3/8/18
Phase E: Launch Preparations	**27 days**	**Fri 3/9/18**	**Fri 4/13/18**
Phase F: Mission Operations	**1 day?**	**Thu 5/10/18**	**Thu 5/10/18**
Phase G: Mission Closeout	**3 days?**	**Fri 5/10/19**	**Tue 5/14/19**