Plot Date: 8/23/2021 3:39 PM
User: BRYANT BEHNKE

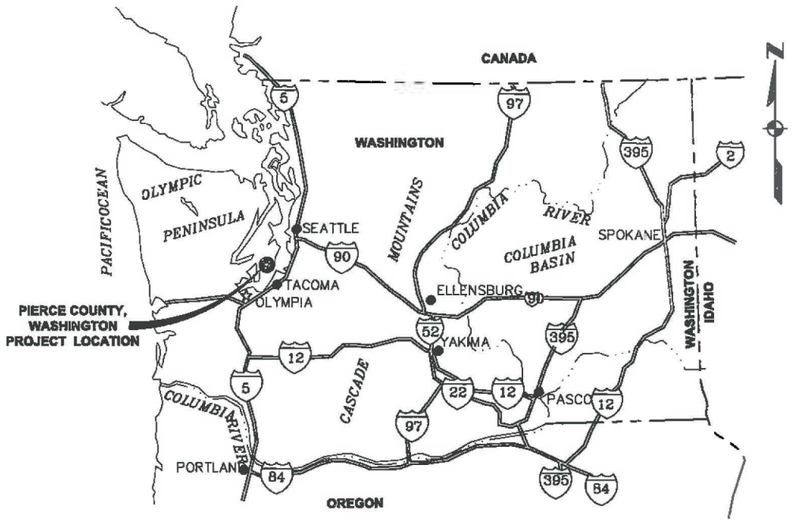

GENERAL LOCATION MAP
SCALE: NTS

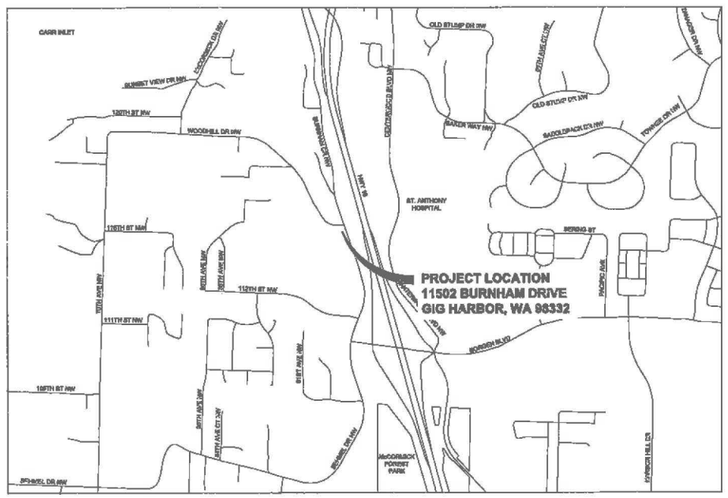

VICINITY MAP
SCALE: NTS

CITY OF GIG HARBOR, PUBLIC WORKS DEPARTMENT

GIG HARBOR, WASHINGTON

REPLACEMENT OF SANITARY SEWER LIFT STATION #12A

PROJECT NO. CSSP-2005

GIG HARBOR
"THE MARITIME CITY"

MAYOR
KIT KUHN

COUNCIL MEMBERS

JENI WOOCK	ROBYN DENSON
BOB HIMES	LE RODENGERG
JIM FRANICH	SPENCER ABERSOLD
TRACIE MARKLEY	

PUBLIC WORKS DIRECTOR
JEFF LANGHELM, P.E.

CITY ENGINEER
TRENT WARD, P.E.

WASTEWATER TREATMENT SUPERVISOR
DARRELL WINANS

Kennedy Jenks

DRAWING INDEX

GENERAL
G-01 COVER, GENERAL LOCATION AND VICINITY MAPS, DRAWING INDEX
G-02 GENERAL ABBREVIATIONS, NOTES, SYMBOLS AND LEGENDS
G-03 GENERAL PIPING NOTES, SYMBOLS, SCHEDULE AND BASIS OF DESIGN
G-04 EXISTING CONDITIONS AND SURVEY CONTROL
EROSION CONTROL
EC-01 TESC PLAN AND NOTES
EC-02 TESC DETAILS
DEMOLITION
D-01 SITE DEMOLITION PLAN
D-02 LIFT STATION DEMOLITION PLAN
CIVIL
C-01 SITE PLAN AND GRADING
C-02 YARD PIPING PLAN
C-03 SEWER BYPASS PLAN
C-04 CIVIL DETAILS
ARCHITECTURAL
A-01 CODE SUMMARY, NOTES AND SCHEDULES
A-02 EQUIPMENT BUILDING FLOOR PLAN
A-03 EXTERIOR ELEVATIONS
A-04 EQUIPMENT BUILDING SECTIONS AND DETAILS
A-05 ARCHITECTURAL DETAILS
STRUCTURAL
S-01 GENERAL NOTES AND ABBREVIATIONS
S-02 SPECIAL INSPECTION NOTES
S-03 EQUIPMENT BUILDING FOUNDATION PLAN
S-04 EQUIPMENT BUILDING ROOF FRAMING PLAN
S-05 EQUIPMENT BUILDING SECTIONS
S-06 STRUCTURAL STANDARD DETAILS I
S-07 STRUCTURAL STANDARD DETAILS II
S-08 STRUCTURAL STANDARD DETAILS III
MECHANICAL
M-01 LIFT STATION AND EQUIPMENT BUILDING PLAN
M-02 EQUIPMENT BUILDING SECTIONS
M-03 LIFT STATION GROUTING PLAN AND SECTIONS
M-04 LIFT STATION AND EQUIPMENT BUILDING DETAILS
M-05 HVAC AND PLUMBING LEGENDS, NOTES, ABBREVIATIONS AND EQUIPMENT SCHEDULES
M-06 LIFT STATION HVAC AND PLUMBING SCHEMATIC
M-07 HVAC PLAN
M-08 LIFT STATION PLUMBING PLAN
ELECTRICAL
E-01 ELECTRICAL NOTES, SYMBOLS AND ABBREVIATIONS
E-02 480 VAC ONE-LINE AND SERVICE LOAD SCHEDULE
E-03 CONDUIT BLOCK DIAGRAM
E-04 ELECTRICAL NOTES, SYMBOLS & ABBREVIATIONS
E-05 EQUIPMENT PLAN VIEW
E-06 ELECTRICAL ROOM PLAN VIEW
E-07 BUILDING LIGHTING PLAN VIEW
E-08 ELECTRICAL DETAILS
E-09 ELECTRICAL DETAILS
INSTRUMENTATION
I-01 GENERAL NOTES AND SYMBOL LEGEND
I-02 COMMUNICATIONS BLOCK DIAGRAM
I-03 PIPING AND INSTRUMENTATION DIAGRAM
I-04 PIPING AND INSTRUMENTATION DIAGRAM
I-05 PIPING AND INSTRUMENTATION DIAGRAM
INSTRUMENTATION CONTROLS
EIC-01 LSCP-1201 PANEL ELEVATION
EIC-02 TYPICAL WIRING DIAGRAMS AND SYMBOL LEGEND
EIC-03 TYPICAL WIRING DIAGRAMS
EIC-04 TYPICAL WIRING DIAGRAMS
EIC-05 TYPICAL WIRING DIAGRAMS
EIC-06 TYPICAL WIRING DIAGRAMS
EIC-07 TYPICAL WIRING DIAGRAMS
EIC-08 TYPICAL WIRING DIAGRAMS
EIC-09 TYPICAL WIRING DIAGRAMS
EIC-10 TYPICAL WIRING DIAGRAMS
EIC-11 TYPICAL WIRING DIAGRAMS
EIC-12 TYPICAL WIRING DIAGRAMS
EIC-13 TYPICAL WIRING DIAGRAMS

GIG HARBOR
"THE MARITIME CITY"
ISSUED FOR CONSTRUCTION FOR THE CITY OF GIG HARBOR
BY: _____ for DATE: 8/25/21
TRENT WARD, P.E., CITY ENGINEER

ISSUED FOR CONSTRUCTION

ANY PRINTS NOT BEARING THIS STAMP MAY HAVE BEEN PRINTED PRIOR TO ADVERTISING AND CANNOT BE CONSIDERED AS BID DOCUMENTS. USERS OF THIS DOCUMENT IN EDITABLE ELECTRONIC FORMATS ARE CAUTIONED AGAINST USE WITHOUT FIRST DETERMINING WHETHER CHANGES MAY HAVE BEEN MADE SUBSEQUENT TO ITS PREPARATION.

NO	REVISION	DATE	BY

SCALES
0 1"
0 25mm
IF THIS BAR IS NOT DIMENSION SHOWN, ADJUST SCALES ACCORDINGLY.

CAMERON ROSS STATE OF WASHINGTON 17702 PROFESSIONAL ENGINEER

DESIGNED	CR
DRAWN	KRC/BB
CHECKED	JF

CITY OF GIG HARBOR, PUBLIC WORKS DEPARTMENT
GIG HARBOR, WASHINGTON
REPLACEMENT OF SANITARY SEWER LIFT STATION #12A
Kennedy Jenks

COVER, GENERAL LOCATION AND VICINITY MAPS, DRAWING INDEX

SCALE	
JOB NO	2097006*00
DATE	AUGUST 2021
SHEET	1 OF 80
	G-01

Plot Date: 8/4/2021 3:05 PM

User: BRYANT BEHNKE

ABBREVIATIONS

&	AND
±	APPROXIMATELY
@	AT
℄	CENTERLINE
°	DEGREE
Ø	DIAMETER
'	FOOT, FEET
"	INCH(ES)
#	NUMBER
%	PERCENT
<	LESS THAN
<=	LESS THAN OR EQUAL TO
>	GREATER THAN
~,≈	APPROXIMATELY
ACP	ASPHALT CONCRETE PAVEMENT
APPROX	APPROXIMATE(LY)
BLDG	BUILDING
BM	BENCHMARK
BOT	BOTTOM
CB	CATCH BASIN
CO	CLEANOUT
COMM	COMMUNICATION(S)
CONC	CONCRETE
CONN	CONNECT, CONNECTION
CONST	CONSTRUCTION
CONT	CONTINUE, CONTINUED, CONTINUATION
COPA	CITY OF PORT ANGELES
CL	CENTERLINE
CLF	CHAIN LINK FENCE
CLR	CLEAR
CMP	CORRUGATED METAL PIPE
CP	CONTROL POINT
CPP	CORRUGATED PLASTIC PIPE
CSBC	CRUSHED SURFACE BASE COURSE
CSTC	CRUSHED SURFACE TOP COURSE
DEFL	DEFLECTION
DEMO	DEMOLITION, DEMOLISH
DIA	DIAMETER
DIP	DUCTILE IRON PIPE
(E)	EXISTING
E	EAST, EASTING
ECC	ECCENTRIC
EG	EXISTING GRADE
EL	ELEVATION
ELL	ELBOW
EOP	EDGE OF PAVEMENT
EW	EACH WAY
(F)	FUTURE
FG	FINISH GRADE
FL	FLOW LINE, FLANGE
FM	FORCEMAIN
FRP	FIBERGLASS REINFORCED PLASTIC
FT	FEET
GA	GAUGE
GAL	GALLON
GPM	GALLON PER MINUTE
HP	HORSEPOWER
H, HORIZ	HORIZONTAL, HEIGHT
HDPE	HIGH DENSITY POLYETHYLENE
HWL	HIGH WATER LEVEL
ID	INSIDE DIAMETER
IE	INVERT ELEVATION
IN	INCHE
IT	INFILTRATION TEST PIT
IP	IRON PIPE
JB	JUNCTION BOX
KIP	(UNIT) 1000 LBS-FORCE
L	LENGTH,ONG, LEG
LBS	POUNDS
LF	LINEAR FEET, LINEAR FOOT
LS	LIFT STATION
LWL	LOW WATER LEVEL
MAX	MAXIMUM
MH	MANHOLE
MJ	MECHANICAL JOINT
MIN	MINIMUM
MISC	MISCELLANEAQUS
N	NORTH, NORTHING
NAD	NORTH AMERICAN DATUM
NAVD	NORTH AMERICAN VERTICAL DATUM
NE	NORTH EAST
NPT	NATIONAL PIPE THREAD
NTS	NOT TO SCALE
NW	NORTHWEST
OC	ON CENTER
OD	OUTER DIAMETER
OFCI	OWNER FURNISHED CONTRACTOR INSTALLED
OH	OVERHEAD
OHP	OVERHEAD POWER
PEGP	POLYETHYLENE GAS PIPE
PERF	PERFORATED
PL	PLATE
PIP	PROTECT IN PLACE
PP	POWER POLE
PSI	POUNDS PER SQUARE INCH
PVC	POLYVINYL CHLORIDE PIPE
PVMT	PAVEMENT
PW	POTABLE WATER
PWR	POWER
RC	REINFORCED CONCRETE
RCP	REINFORCED CONCRETE PIPE
RED	REDUCER
REINF	REINFORCED
ROW	RIGHT OF WAY
S	SOUTH, SLOPE
SCH	SCHEDULE
SDFM	STORM DRAIN FORCE MAIN
SD, STM	STORM DRAIN
SDR	STANDARD DIMENSION RATIO
SE	SOUTHEAST
SF	SQUARE FEET
SQ	SQUARE
SS	SANITARY SEWER
SST	STAINLESS STEEL
STA	STATION
STD	STANDARD
STL	STEEL
STRUCT	STRUCTURE
SW	SOUTHWEST, STORMWATER
T&B	TOP AND BOTTOM
TDH	TOTAL DYNAMIC HEAD
TELE, TEL	TELEPHONE, TELECOMMUNICATIONS
TESC	TEMPORARY EROSION AND SEDIMENT CONTROL
TOS	TOP OF SLAB
TYP	TYPICAL
UG	UNDERGROUND
UP	UNDERGROUND POWER
V, VERT	VERTICAL
VFD	VARIABLE FREQUENCY DRIVE
VV	VALVE VAULT
W	WEST, WIDE/WIDTH
W/	WITH
WA	WASHINGTON
WSDOT	WASHINGTON DEPARTMENT OF TRANSPORTATION
WQ	WATER QUALITY
WTR	WATER

NOTES

GENERAL

1. THIS PROJECT IS WITHIN CITY OF GIG HARBOR RIGHT OF WAY. CONTRACTOR SHALL CONFORM TO CITY OF HARBOR ENCROACHMENT PERMIT AND REQUIREMENTS.
2. THE CONTRACTOR SHALL TAKE ALL PRECAUTIONARY MEASURES NECESSARY TO PROTECT EXISTING IMPROVEMENTS WHICH ARE TO REMAIN IN PLACE FROM DAMAGE. ALL IMPROVEMENTS DAMAGED BY THE CONTRACTOR'S OPERATIONS SHALL BE EXPEDITIOUSLY REPAIRED OR RECONSTRUCTED AT THE CONTRACTOR'S EXPENSE WITHOUT ADDITIONAL COMPENSATION.
3. ALL BUILDING COORDINATES ARE TO OUTSIDE CORNER OF COLUMN OR BUILDING.
4. THE CONTRACTOR SHALL DISPOSE OF ALL NON-ORGANIC WASTES SUCH AS OLD GUNITE, PIPING, ROCK RUBBLE ETC. AT AN APPROVED LANDFILL OR, OTHER SUITABLE DISPOSAL SITES AT THE CONTRACTOR'S EXPENSE.
5. CONTRACTOR SHALL RESTORE ALL SURVEY MONUMENTS THAT ARE DAMAGED OR DESTROYED DURING CONSTRUCTION.

CIVIL/GENERAL SYMBOLS:

PROPOSED OUTLINE (HEAVY)
EXISTING OUTLINE (LIGHT)
PROPOSED HIDDEN OR UG (HEAVY)
FUTURE (MEDIUM)
EXISTING HIDDEN OR UG (LIGHT)
CUTTING PLANE (SECTION)
BREAK LINE (SHORT)
BREAK LINE (LONG)
FIRE PROTECTION WATER (EXISTING) — FM
SANITARY SEWER (EXISTING) — SS
STORM DRAIN (EXISTING) — SD
WATER LINE (EXISTING) — W
TELEPHONE LINE (EXISTING) — T
ELECTRICAL LINE (EXISTING) — E
CABLE TV (EXISTING) — CTV
CROSSING UTILITIES (EXISTING)
FENCE (EXISTING)
PROPERTY LINE/RIGHT-OF-WAY
CONTRACTORS WORK AREA LIMITS — WA
CENTERLINE
WATER SURFACE
FLOW LINE
GRADED SLOPE — TOP / TOE
DITCH OR SWALE
CONTOUR MAJOR (NEW) — 110
CONTOUR MINOR (NEW)
CONTOUR (EXIST)

CIVIL/GENERAL SYMBOLS

PROPOSED MANHOLE (NEW)
MANHOLE (EXISTING)
BOLLARD (EXISTING)
BENCH MARK — BM
MONITORING WELL
WATER METER — WM
FIRE DEPT. CONNECTION
FIRE HYDRANT
UTILITY BOX (AS LABELED)
POWER POLE
(E) POWER POLE
GUY ANCHOR
CATCH BASIN — CB
SURVEY PANEL
MONUMENT OR SURVEY POINT
SECTION CORNER
STRUCTURE OR PIPE (NEW)
STRUCTURE OR PIPE (EXISTING)
DEMOLITION
CONCRETE IN SECTION
GRAVELED AREA IN PLAN OR SECTION
CRUSHED ROCK IN PLAN OR SECTION
PEA GRAVEL IN SECTION
STRUCTURAL FILL OR COMPACTED NATIVE SOIL
SAND IN PLAN OR SECTION
ASPHALT CONCRETE (IN PLAN)
ASPHALT CONCRETE (IN SECTION)
CONCRETE (IN PLAN)

CROSS-REFERENCING SYMBOLS

FOUND ON DRAWING WHERE DETAIL, SECTION, OR ELEVATION IS CALLED OUT

DETAIL NUMBER — 1 / C-15 — SHEET ON WHICH DETAIL IS DRAWN

SECTION LETTER — A / A-13 — SHEET ON WHICH SECTION IS DRAWN

LETTERS USED WHEN MORE THAN ONE ELEVATION IS DRAWN WITHIN A SINGLE ROOM
ELEVATION NUMBER — A / D / 2 / A-8 / B / OR / 2 / A-9 / C — SHEET ON WHICH ELEVATION IS DRAWN

STANDARD DETAIL NUMBER — C-5605

FOUND ON DRAWING WHERE DETAIL, SECTION, OR ELEVATION IS DRAWN

DETAIL NUMBER — 1 / C-4 — DETAIL TITLE / SCALE — SHEET ON WHICH DETAIL IS CALLED OUT

SECTION LETTER — A / A-5 — SECTION TITLE / SCALE — SHEET ON WHICH SECTION IS CUT

ELEVATION NUMBER — 2 / A-3 — INTERIOR ELEVATION A / SCALE — SHEET ON WHICH ELEVATION IS CALLED OUT

STANDARD DETAIL NUMBER — C-5605 — STANDARD DETAIL TITLE / SUB-TITLE — SCALE: ##" = 1'-0" REV 00

NOTE
STANDARD DETAILS ARE LOCATED WITHIN THEIR RESPECTIVE DISCIPLINE, IMMEDIATELY FOLLOWING THE GENERAL ABBREVIATIONS, NOTES, AND LEGEND SHEETS.

CALLOUTS AND SHORTHAND SYMBOLS

(A)	SHEET KEYNOTE
℄	CENTERLINE
ℙ	PLATE
Ø	DIAMETER
±	APPROXIMATELY
∠	ANGLE
	WATER/FLUID SURFACE
(1)	BUILDING GRID LABEL OR ACCESSORY NUMBER
##-##	DOOR
XXX	ROOM
##	WALL
##-##	WINDOW

BASIS OF DESIGN

	UNITS	DESIGN
LIFT STATION:		
DESIGN FLOW RATE	GPM	1100
TDH @ DESIGN FLOW RATE	FT	135
EFFICIENCY @ DESIGN FLOW RATE	%	76.1
STATIC HEAD @ LWL	FT	91
PUMPS:		
NUMBER		2
TYPE		SCREW CENTRIFUGAL WITH PRE-ROTATION BASINS
DESIGN CAPACITY	GPM @ FT TDH	1,100 @ 135
MOTOR SIZE	HP	60
BACKUP PUMP:		
TYPE		SCREWSUCKER
FLOW RATE	GPM	1,100
TDH @ FLOW RATE	FT	135
FUEL		DIESEL

ISSUED FOR CONSTRUCTION

ANY PRINTS NOT BEARING THIS STAMP MAY HAVE BEEN PRINTED PRIOR TO ADVERTISING AND CANNOT BE CONSIDERED AS BID DOCUMENTS. USERS OF THIS DOCUMENT IN EDITABLE ELECTRONIC FORMATS ARE CAUTIONED AGAINST USE WITHOUT FIRST DETERMINING WHETHER CHANGES MAY HAVE BEEN MADE SUBSEQUENT TO ITS PREPARATION.

NO	REVISION	DATE	BY

SCALES
0 — 1"
0 — 25mm
IF THIS BAR IS NOT DIMENSION SHOWN, ADJUST SCALES ACCORDINGLY.

CAMERON ROSS — STATE OF WASHINGTON — PROFESSIONAL ENGINEER

DESIGNED CR
DRAWN BB
CHECKED JF

CITY OF GIG HARBOR, PUBLIC WORKS DEPARTMENT
GIG HARBOR, WASHINGTON
REPLACEMENT OF SANITARY SEWER LIFT STATION #12A

Kennedy Jenks

ABBREVIATIONS, NOTES, SYMBOLS AND LEGENDS

SCALE
JOB NO 2097006*00
DATE AUGUST 2021
SHEET 2 OF 60
G-02

Plot Date: 8/4/2021 3:06 PM

User: BRYANT BEHNKE

GENERAL PIPING NOTES

1. INFORMATION PROVIDED ON THIS SHEET ARE MINIMUM REQUIREMENTS. REFER TO THE SPECIFICATIONS FOR ADDITIONAL REQUIREMENTS.
2. LAY PIPE TO UNIFORM GRADE BETWEEN INDICATED ELEVATION POINTS. MINIMUM COVER SHALL BE 3'-0" UNLESS OTHERWISE SHOWN.
3. SIZE OF FITTINGS SHOWN ON DRAWINGS SHALL CORRESPOND TO ADJACENT STRAIGHT RUN OF PIPE, UNLESS OTHERWISE INDICATED. TYPE OF JOINT AND FITTING MATERIAL SHALL BE THE SAME AS SHOWN FOR ADJACENT STRAIGHT RUN OF PIPE.
4. NUMBER OF PIPE HANGERS AND PIPE SUPPORTS SHOWN IS ONLY APPROXIMATE. FINAL SUPPORT REQUIREMENTS SHALL BE DETERMINED IN THE FIELD AND APPROVED BY THE ENGINEER PRIOR TO INSTALLATION. MAXIMUM SPACING SHALL BE SPECIFIED.
5. APPROPRIATE STANDARD WALL PIPE PENETRATION DETAIL SHALL BE USED WHEREVER PIPING PASSES FROM A STRUCTURE TO BACKFILL.
6. ALL PRESSURE PIPING SHALL BE PROVIDED WITH RESTRAINED JOINTS. FLEXIBLE CONNECTORS OR FLANGED COUPLING ADAPTERS SHALL BE PROVIDED WITH THRUST TIES, BLOCKS, OR ANCHORS. THRUST PROTECTION SHALL BE ADEQUATE FOR TEST PRESSURES SPECIFIED IN THE PIPE SCHEDULE.
7. SYMBOLS, LEGENDS, AND PIPE IDENTIFICATIONS SHOWN SHALL BE FOLLOWED THROUGHOUT THE DRAWINGS. ALL OF THE ITEMS SHOWN ARE NOT NECESSARILY USED IN THE PROJECT.
8. NUMBER AND LOCATION OF UNIONS SHOWN ON DRAWINGS ARE ONLY APPROXIMATE. PROVIDE ALL UNIONS NECESSARY TO FACILITATE CONVENIENT REMOVAL OF VALVES AND MECHANICAL EQUIPMENT.
9. THE CONTRACTOR IS RESPONSIBLE FOR THE COORDINATING AND PERFORMING THE CONNECTION OF THE PIPING AND ASSOCIATED APPURTENANCES INSTALLED UNDER THIS CONTRACT TO THE EXISTING PIPING AND FACILITIES, AND TO THE WORK OF OTHER CONTRACTORS.
10. PRIOR TO SUBMITTING PIPING DRAWINGS FOR ANY NEW PIPE THAT IS TO CONNECT TO AN EXISTING PIPE OR STRUCTURE, THE CONTRACTOR SHALL EXPOSE THE EXISTING PIPE OR STRUCTURE TO VERIFY ITS EXACT LOCATION, SIZE, MATERIALS, AND INVERT ELEVATIONS.
11. ALL EXPOSED PIPING IS TO BE PAINTED AND LABELED UNLESS NOTED OTHERWISE. LABELING SHALL INCLUDE FLOW DIRECTION ARROW AND PIPE USE. PAINT COLOR TO BE COORDINATED WITH OWNER.
12. ALL PIPING UNDER STRUCTURES, EXCEPT PLUMBING PIPING, TO BE CONCRETE ENCASED UNLESS NOTED OTHERWISE.
13. PIPE SUPPORTS FOR PIPES <6" DIAMETER ARE NOT SHOWN FOR CLARITY AND SHALL BE PROVIDED AND INSTALLED BY THE CONTRACTOR IN ACCORDANCE WITH SECTION 40 20 20.
14. INSTALL FLANGED COUPLING ADAPTERS OR RESTRAINED DISMANTLING JOINTS AT ALL METERS.
15. FASTENERS IN WET WELL, OVERFLOW STORAGE, AND BYPASS AND METER VAULT SHALL BE TYPE 316 STAINLESS STEEL.

PIPE SYMBOLS

DESCRIPTION	SINGLE LINE	DOUBLE LINE
EXISTING PIPE		
NEW PIPE		
PIPE TO BE REMOVED		
FLANGED, WELD NECK		
FLANGED, SLIP ON		
SCREWED OR SOCKET WELD		
BELL & SPIGOT		
MECHANICAL JOINT		
ELBOW - STRAIGHT		
ELBOW - REDUCING		
ELBOW - DOWN		
ELBOW - UP		
CROSS		
REDUCER		
TEE		
TEE - DOWN		
TEE - UP		
UNION		
FLEXIBLE RUBBER CONNECTOR		
FLEXIBLE HOSE CONNECTOR		
FLANGED COUPLING ADAPTER		
FLEXIBLE COUPLING		
DISASSEMBLING JOINT	DJ	DJ
UTILITY STATION	TYPE X	
FLOOR DRAIN		
CLEAN OUT		

PIPE SUPPORT DESIGNATION

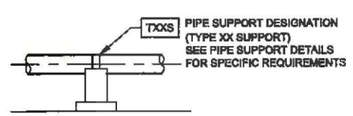

VALVE DESIGNATION

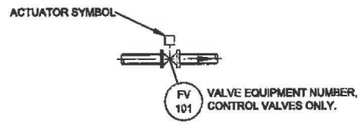

VALVE SYMBOLS

DESCRIPTION	SINGLE LINE	DOUBLE LINE
GATE VALVE		
GLOBE VALVE		
PLUG VALVE		
SWING CHECK VALVE		
BUTTERFLY (FLANGED)		
BUTTERFLY (WAFER)		
BALL VALVE		
DIAPHRAGM VALVE		
CAPILLARY CONTROL VALVE		
CONTROL VALVE (ELEVATION)		
CONTROL VALVE (PLAN)		
PRESSURE RELIEF VALVE (ELEVATION)		
PRESSURE RELIEF VALVE (PLAN)		
HOSE BIBB	HB	

PIPING DESIGNATION

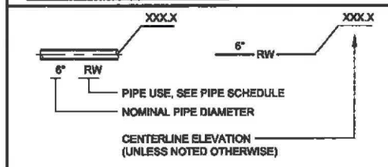

FLOWMETER SYMBOLS

DESCRIPTION	SINGLE LINE
MAGMETER	M

PIPE AND FITTING SCHEDULE

ID	DESCRIPTION	SIZE	SERVICE	MATERIAL	FLOW	PIPE TYPE	LINNING	VALVE SYSTEM	TEST PRESSURE (PSI)	TEST MEDIUM	ALLOWABLE LEAKAGE	TEST DURATION (HRS)	FIELD JOINTS
D	DRAIN	ALL	B/E	PVC	G	PVC-6	-	-	4.3	W	NONE	1	SW
EXH	EXHAUST	ALL	E	SS	P	SSP	-	-	150	A	NONE	1	FLG, W
FM	FORCE MAIN	ALL	B/C	DI	P	DIPB	EP	B	50	W	EQUATION A	4	B&S
FM	FORCE MAIN	ALL	E	DI	P	DIPF	EP	B	50	W	NONE	4	FLG
NPW	NON-POTABLE WATER	<4	E	CU	P	CUP	-	E	150	W	NONE	4	SLD
OC	ODOR CONTROL	<6	B/E	PVC	V	PVC-6	-	-	4.3	A	NONE	1	B&S/SW
OC	ODOR CONTROL	>6	B	DI	P	DIPB	-	-	4.3	A	NONE	1	B&S
OC	ODOR CONTROL	>6	C/E	DI	P	DIPF	-	-	4.3	A	NONE	1	FLG
PW	POTABLE WATER	ALL	E	CU	P	CUP	-	E	150	W	NONE	4	SLD
PW, TP	POTABLE WATER	ALL	B	HDPE	P	HDPE	-	B	150	W	NONE	4	W
RL	REFRIGERANT LIQUID	ALL	B/E	CU	P	CURT	-	N	-	W	NONE	4	C, SLD
RS	RAW SEWAGE	ALL	B/C	DI	P	DIPB	EP	B	50	W	EQUATION A	4	B&S
RS	RAW SEWAGE	ALL	E	DI	P	DIPF	EP	B	50	W	NONE	4	FLG
TW	TEPID WATER	<4	E	CU	P	CUP	-	E	150	W	NONE	4	C
VTR, V	VENT TO ROOF	ALL	E	PVC	V	PVC-6	-	-	4.3	A	NONE	1	SW

NOTES:
1. TEST PRESSURE REFERS ONLY TO TESTING REQUIREMENTS. SEE SPECIFICATION 40 27 00 FOR RATED PRESSURE REQUIREMENTS.

PIPE SCHEDULE LEGEND:

SIZE
NOMINAL PIPE DIAMETER (Ø) IN INCHES

SERVICE
- B BURIED
- C CONCRETE ENCASED
- E EXPOSED

MATERIAL
(FOR REFERENCE ONLY, SEE SPECIFICATION 40 27 00 FOR DETAILED PIPE & FITTING MATERIALS)
- CU COPPER
- DI DUCTILE IRON
- PVC POLYVINYL CHLORIDE
- SS STAINLESS STEEL
- HDPE HIGH DENSITY POLYETHYLENE

FLOW
- P PRESSURE
- G GRAVITY
- V VENT

LINING
- EP EPOXY
- CM CEMENT MORTAR

PIPE TYPE AND VALVE SYSTEM
SEE SPECIFICATION SECTION 40 27 20 UNLESS OTHERWISE NOTED

TEST MEDIUM
- A AIR
- W WATER

ALLOWABLE LEAKAGE
SEE SPECIFICATION SECTION 40 27 00

FIELD JOINTS
- B&S BELL AND SPIGOT (INCLUDES MECHANICAL JOINT)
- C COMPRESSION
- FLR FLARE
- FLG FLANGE
- SLD SOLDER
- SW SOLVENT WELD
- TH THREAD
- W WELD

ISSUED FOR CONSTRUCTION

ANY PRINTS NOT BEARING THIS STAMP MAY HAVE BEEN PRINTED PRIOR TO ADVERTISING AND CANNOT BE CONSIDERED AS BID DOCUMENTS. USERS OF THIS DOCUMENT IN EDITABLE ELECTRONIC FORMATS ARE CAUTIONED AGAINST USE WITHOUT FIRST DETERMINING WHETHER CHANGES MAY HAVE BEEN MADE SUBSEQUENT TO ITS PREPARATION.

NO	REVISION	DATE	BY

SCALES
0 1"
0 25mm
IF THIS BAR IS NOT DIMENSION SHOWN, ADJUST SCALES ACCORDINGLY.

CAMERON ROSS — STATE OF WASHINGTON — 20885 — REGISTERED PROFESSIONAL ENGINEER

DESIGNED	CR
DRAWN	BB
CHECKED	JF

CITY OF GIG HARBOR, PUBLIC WORKS DEPARTMENT
GIG HARBOR, WASHINGTON
REPLACEMENT OF SANITARY SEWER LIFT STATION #12A

Kennedy Jenks

PIPING NOTES, SYMBOLS, SCHEDULE AND BASIS OF DESIGN

SCALE	
JOB NO	2097006*00
DATE	AUGUST 2021
SHEET	3 OF 80
	G-03

Plot Date: 8/4/2021 3:05 PM

User: BRYANT BEHNKE

SSMH 12-13
RIM 102.12
IE 87.4 E-S-W @ CTR CHANNEL 12" PVC

SSMH 12-12
RIM 102.06
IE 88.4 N @ CTR CHANNEL 8" PVC
IE 88.4 W @ CTR CHANNEL 12" PVC

SSMH 12-11
RIM 104.07
IE 95.2 N-S @ CTR CHANNEL 8" PVC
IE 95.2 W @ CTR CHANNEL 10" PVC

SSMH 12-14
RIM 99.75
IE 87.6 N-SE @ CTR CHANNEL 12" PVC

BURNHAM DRIVE NW

WOODHILL DRIVE

(E) WET WELL RISER
RIM 102.6

(E) ELECTRICAL
VAULT RIM 102.5

OVERHEAD
POWER
LINES

(E) BUILDING
FF 102.17

(E) WET WELL RISER
RIM 102.7

(E) DRY WELL RISER
RIM 102.7

CHAIN LINK FENCE

ORDINARY HIGH WATER MARK

MCCORMICK CREEK

ORDINARY HIGH WATER MARK

MCCORMICK CREEK

SCALE: 1"=10'

CONTROL POINT LIST				
PT #	DESCRIPTION	NORTHING	EASTING	ELEVATION
1	SPIKE	747235.80	1115598.09	102.06'
2	MAG	747300.52	1115560.96	103.26'
100	HT	747275.37	1115527.23	102.67'
101	HT	747253.35	1115489.24	84.51'
102	HT	747161.43	1115483.59	89.82'
104	HT	747139.78	1115604.88	101.30'
1292	MAG-FL	747190.07	1115673.86	101.24'
1293	MAG-FL	747173.96	1115676.80	100.59'

UTILITIES

1. LOCATIONS OF UNDERGROUND UTILITIES SHOWN ON THE DRAWINGS WERE OBTAINED FROM AVAILABLE RECORDS AND ARE SHOWN IN THEIR APPROXIMATE LOCATION. THERE IS NO GUARANTEE THAT ALL EXISTING PIPELINES AND OBSTRUCTIONS ARE SHOWN OR THAT LOCATIONS INDICATED ARE ACCURATE. PRIOR TO THE START OF CONSTRUCTION, THE CONTRACTOR SHALL POTHOLE TO DETERMINE ACTUAL LOCATION AND ELEVATION OF ALL EXISTING UTILITIES IN AND AROUND THE AREAS OF NEW CONSTRUCTION.
2. THE CONTRACTOR SHALL TAKE ALL PRECAUTIONARY MEASURES NECESSARY TO PROTECT ALL REMAINING EXISTING UTILITIES WHETHER SHOWN OR NOT SHOWN.
3. PRIOR TO ANY CONNECTION TO AN EXISTING UTILITY, THE CONTRACTOR SHALL COORDINATE WITH THE UTILITY OWNER.
4. PRIOR TO ANY EXCAVATION IN THE VICINITY OF ANY EXISTING UNDERGROUND FACILITIES, INCLUDING ALL WATER, SEWER, STORM DRAIN, GAS, PETROLEUM PRODUCTS, OR OTHER PIPELINES; ALL BURIED ELECTRIC POWER, COMMUNICATIONS, OR TELEVISION CABLES; ALL TRAFFIC SIGNAL AND STREET LIGHTING FACILITIES; AND ALL ROADWAY, STATE HIGHWAY, AND RAILROAD RIGHTS-OF-WAY, THE CONTRACTOR SHALL NOTIFY THE RESPECTIVE AUTHORITIES REPRESENTING THE OWNERS OR AGENCIES RESPONSIBLE FOR SUCH FACILITIES NOT LESS THAN 3 DAYS NOR MORE THAN 7 DAYS PRIOR TO EXCAVATION SO THAT A REPRESENTATIVE OF SAID OWNERS OR AGENCIES CAN BE PRESENT DURING SUCH WORK IF THEY SO DESIRE. IN THE CASE OF THE UNDERGROUND UTILITY SERVICE ALERT CENTER, THIS NOTICE WILL GIVE THEM TIME TO MARK THE LOCATION OF THE UTILITIES. THE CONTRACTOR SHALL ALSO NOTIFY THE REGIONAL OR LOCAL UNDERGROUND SERVICE ALERT COMPANY AT LEAST 3 DAYS, BUT NO MORE THAN 7 DAYS, PRIOR TO SUCH EXCAVATION.

TOPOGRAPHIC SURVEY NOTES

1. TOPOGRAPHIC SURVEY PERFORMED BY KPG, DATED SEPTEMBER 2020.
2. THE CONTRACTOR SHALL PROVIDE ALL CONSTRUCTION SURVEYING AND VERIFY THE LOCATION OF EXISTING UTILITIES AND OTHER PERTINENT FEATURES.

HORIZONTAL DATUM

THE SURVEY IS BASED UPON NORTH AMERICAN DATUM OF 1983, 2011 ADJUSTMENT (NAD 83/11) AND WAS ESTABLISHED BY RTK GPS OBSERVATION UTILIZING THE WASHINGTON STATE REFERENCE NETWORK (WSRN) WITH CHECKS TO WASHINGTON STATE DEPARTMENT OF TRANSPORTATION (WSDOT) CONTROL POINT (PC-1)

VERTICAL DATUM

THE SURVEY IS BASED UPON NORTH AMERICAN VERTICAL DATUM OF 1988 (NAVD 88) AND WAS ESTABLISHED BY RTK GPS OBSERVATION UTILIZING THE WASHINGTON STATE REFERENCE NETWORK (WSRN) WITH CHECKS TO WASHINGTON STATE DEPARTMENT OF TRANSPORTATION (WSDOT) CONTROL POINT (PC-1)

EXISTING IMPERVIOUS SURFACES
BUILDING: 293 SF
ELECTRICAL EQUIPMENT VAULT: 15.5 SF
WET WELL LIDS: 65 SF
DRY WELL LID: 16.5 SF
INFLUENT MANHOLE LID: 20.5 SF
TOTAL: 410.5 SF

PROPOSED IMPERVIOUS SURFACES
BUILDING: 793 SF
ELECTRICAL EQUIPMENT VAULT: 15.5 SF
WET WELL LIDS: 144 SF
DRY WELL LID: 78 SF
INFLUENT MANHOLE LID: 20.5 SF
TOTAL: 1051 SF

ISSUED FOR CONSTRUCTION

ANY PRINTS NOT BEARING THIS STAMP MAY HAVE BEEN PRINTED PRIOR TO ADVERTISING AND CANNOT BE CONSIDERED AS BID DOCUMENTS. USERS OF THIS DOCUMENT IN EDITABLE ELECTRONIC FORMATS ARE CAUTIONED AGAINST USE WITHOUT FIRST DETERMINING WHETHER CHANGES MAY HAVE BEEN MADE SUBSEQUENT TO ITS PREPARATION.

NO	REVISION	DATE	BY

SCALES
0 1"
0 25mm
IF THIS BAR IS NOT DIMENSION SHOWN, ADJUST SCALES ACCORDINGLY.

CAMERON ROSS — STATE OF WASHINGTON — PROFESSIONAL ENGINEER

DESIGNED CR
DRAWN KRC/BB
CHECKED JF

CITY OF GIG HARBOR, PUBLIC WORKS DEPARTMENT
GIG HARBOR, WASHINGTON
REPLACEMENT OF SANITARY SEWER
LIFT STATION #12A

Kennedy Jenks

EXISTING CONDITIONS
AND SURVEY CONTROL

SCALE
JOB NO 2097006*00
DATE AUGUST 2021
SHEET 4 OF 60
G-04

Plot Date: 8/4/2021 3:06 PM

User: BRYANT BEHNKE

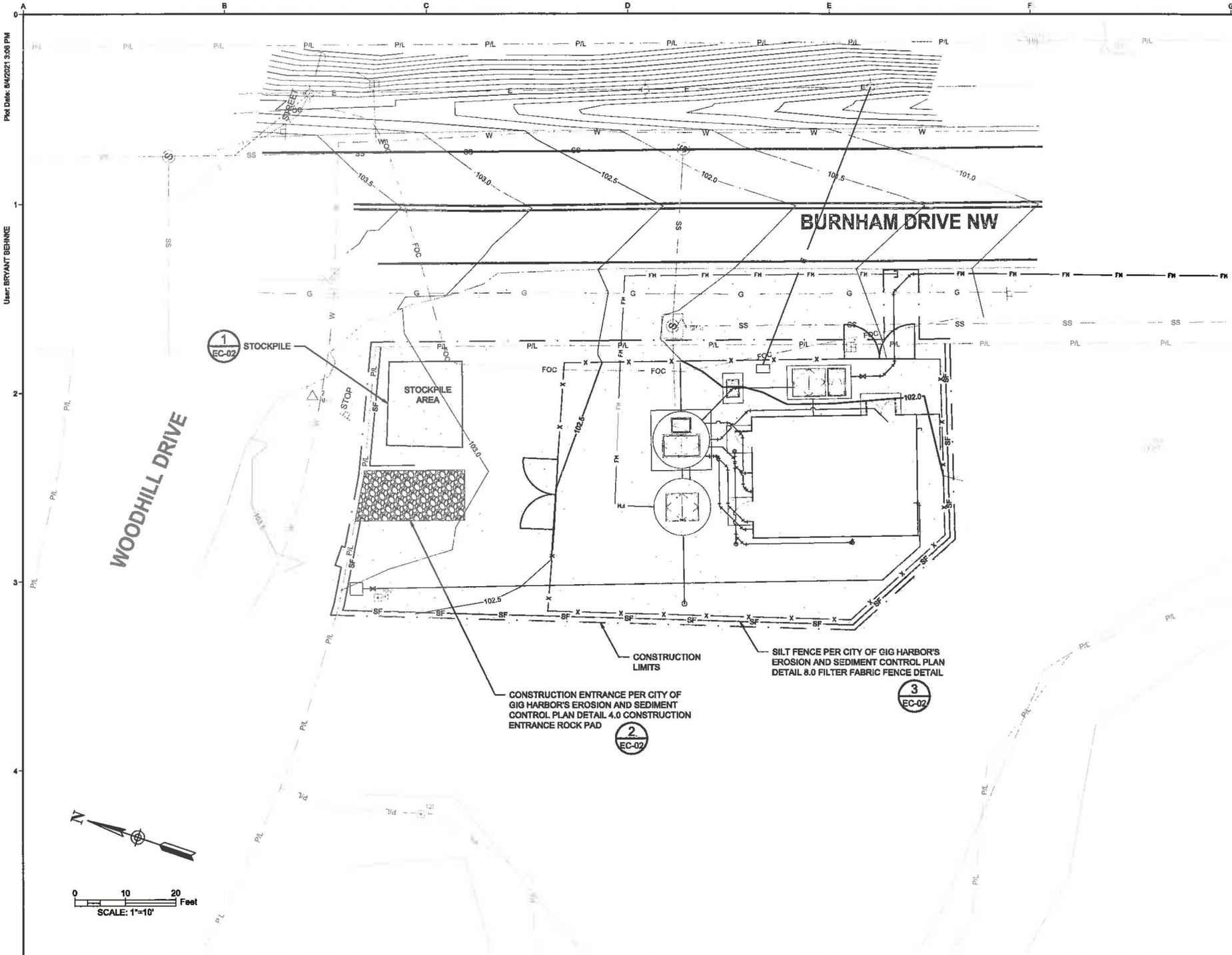

EROSION CONTROL

1. THE CONTRACTOR SHALL SUBMIT AN EROSION CONTROL PLAN FOR WORK DURING THE CONSTRUCTION, SIGNED AND STAMPED BY A REGISTERED CIVIL ENGINEER PRIOR TO THE START OF CONSTRUCTION.
   a. ALL SLOPES SHALL BE PROTECTED FROM EROSION DURING ROUGH GRADING OPERATIONS AND THEREAFTER, UNTIL INSTALLATION OF FINAL GROUNDCOVER (SEE LANDSCAPE PLANS FOR FINAL GROUNDCOVER).
   b. ALL SLOPE PROTECTION SWALES SHALL BE CONSTRUCTED AT THE SAME TIME AS BANKS ARE GRADED.
   c. THE CONTRACTOR IS RESPONSIBLE FOR IMPLEMENTATION AND MAINTENANCE OF EROSION CONTROL MEASURES CONTAINED WITHIN THE CONTRACT SPECIFICATIONS OR AS REQUIRED BY THE CITY, DISTRICT, OR OTHER REGULATORY AUTHORITY. THE CONTRACTOR SHALL ALSO PROVIDE ANY ADDITIONAL EROSION CONTROL MEASURES (E.G. HYDROSEEDING, MULCHING OF STRAW, SAND BAGGING, DIVERSION DITCHES, ETC.) DICTATED BY FIELD CONDITIONS TO PREVENT EROSION OR THE INTRODUCTION OF DIRT, MUD, OR DEBRIS INTO EXISTING PUBLIC STREETS, WATERWAYS, OR ONTO ADJACENT PROPERTIES DURING ANY PHASE OF CONSTRUCTION OPERATIONS.

TESC GENERAL NOTES

THE NOTES AND DETAILS PROVIDED ON THIS SHEET ILLUSTRATE SOME OF THE MOST COMMON TEMPORARY EROSION AND SEDIMENTATION CONTROL (TESC) BEST MANAGEMENT PRACTICES (BMPS). ALTHOUGH SOME MEASURES SHOWN HERE MAY NOT BE SPECIFIED IN THE TESC PLAN FOR THIS PROJECT, THE DETAILS ARE PROVIDED FOR FUTURE REFERENCE SHOULD SITE CONDITIONS REQUIRE ADDITIONAL MEASURES BEYOND THOSE SPECIFIED. APPROPRIATE RESPONSES TO UNANTICIPATED SITE CONDITIONS MAY INCLUDE, BUT ARE NOT LIMITED TO, THE FOLLOWING ADDITIONAL BMPS:

- STRAW MULCH
- JUTE OR SYNTHETIC MATTING, EITHER GENERIC OR PROPRIETARY
- TEMPORARY DITCHES, SWALES, DIKES, OR BASINS
- ANCHORED PLASTIC SHEETING
- BRUSH OR GRAVEL FILTER BERMS
- SLOPE ROUGHENING/TRACKING OR TERRACING
- ROCK CHECK DAMS
- SODDING
- TIRE WASH STATIONS
- DUST CONTROL

SUCH MEASURES SHALL BE SELECTED BY THE CONTRACTOR IN CONSULTATION WITH THE CITY INSPECTOR AND THE PROJECT WATER QUALITY ENGINEER AND SHALL BE INSTALLED PER MANUFACTURER'S SPECIFICATIONS, ENGINEER'S DESIGN OR STANDARD CONSTRUCTION INDUSTRY PRACTICE AS THE SITUATION DICTATES.

1. ALTERNATIVE SEDIMENT AND EROSION CONTROL PRACTICES THAT PROVIDE EQUAL OR BETTER PROTECTION, PARTICULARLY THOSE THAT USE NATURAL AND/OR SUSTAINABLE MATERIALS, MAY BE SUBSTITUTED AFTER FAVORABLE REVIEW BY THE OWNER AND THE ENGINEER.
2. THE IMPLEMENTATION OF THESE TESC PLANS AND THE CONSTRUCTION, MAINTENANCE, REPLACEMENT, AND UPGRADING OF THESE TESC FACILITIES IS THE RESPONSIBILITY OF THE CONTRACTOR UNTIL ALL CONSTRUCTION IS APPROVED AND VEGETATION/LANDSCAPING ESTABLISHED.
3. THE BOUNDARIES OF THE CLEARING LIMITS SHOWN ON THIS PLAN SHALL BE CLEARLY FLAGGED IN THE FIELD PRIOR TO CONSTRUCTION. DURING THE CONSTRUCTION PERIOD, NO DISTURBANCE BEYOND THE FLAGGED CLEARING LIMITS SHALL BE PERMITTED. THE FLAGGING SHALL BE MAINTAINED BY THE CONTRACTOR FOR THE DURATION OF CONSTRUCTION.
4. THE TESC FACILITIES SHALL BE CONSTRUCTED IN CONJUNCTION WITH ALL CLEARING AND GRADING ACTIVITIES AND IN SUCH A MANNER AS TO INSURE THAT SEDIMENT AND SEDIMENT LADEN WATER DO NOT ENTER THE DRAINAGE SYSTEM, ROADWAYS, OR VIOLATE APPLICABLE WATER STANDARDS.
5. THE TESC FACILITIES SHOWN ON THESE DRAWINGS ARE THE MINIMUM REQUIREMENTS FOR ANTICIPATED SITE CONDITIONS. DURING THE CONSTRUCTION PERIOD, THE FACILITIES SHALL BE UPGRADED AS NEEDED FOR UNEXPECTED STORM EVENTS AND TO ENSURE THAT SEDIMENT AND SEDIMENT-LADEN WATER DO NOT LEAVE THE SITE.
6. THE TESC FACILITIES SHALL BE INSPECTED DAILY BY THE CONTRACTOR AND MAINTAINED AS NECESSARY TO ENSURE THEIR CONTINUED FUNCTIONING.
7. THE TESC FACILITIES ON INACTIVE SITES SHALL BE INSPECTED AND MAINTAINED A MINIMUM OF ONCE A MONTH OR WITHIN THE 48 HOURS FOLLOWING A STORM EVENT.
8. STABILIZED CONSTRUCTION ENTRANCES SHALL BE INSTALLED AT THE BEGINNING OF CONSTRUCTION AND MAINTAINED FOR THE DURATION OF THE PROJECT. ADDITIONAL MEASURES MAY BE REQUIRED TO INSURE THAT ALL PAVED AREAS ARE KEPT CLEAN FOR THE DURATION OF THE PROJECT,
9. CONTRACTOR SHALL MAINTAIN ON-SITE AT ALL TIMES SUFFICIENT QUANTITIES OF EROSION CONTROL MATERIALS TO COVER ALL EXPOSED SOIL IN THE EVENT OF UNANTICIPATED WEATHER CONDITIONS. CONTRACTOR MAY CONSIDER PHASED GRADING ON LARGE SITES TO MINIMIZE BARE SOIL EXPOSURE.
10. NONCOMPLIANCE WITH THE EROSION CONTROL REQUIREMENTS, WATER QUALITY REQUIREMENTS, AND/OR CLEARING LIMITS MAY RESULT IN REVOCATION OF PROJECT PERMITS OR PLAN APPROVAL, FINES, AND BOND FORECLOSURES.
11. WHERE STRAW MULCH FOR TEMPORARY EROSION CONTROL IS REQUIRED, IT SHALL BE APPLIED AT A MINIMUM THICKNESS OF TWO INCHES AND CRIMPED IN.
12. ALL TEMPORARY EROSION AND SEDIMENTATION CONTROL MEASURES SHALL BE REMOVED WITHIN 30 DAYS AFTER FINAL SITE STABILIZATION IS ACHIEVED OR AFTER THE TEMPORARY BMPS ARE NO LONGER NEEDED. TRAPPED SEDIMENT SHALL BE REMOVED OR STABILIZED ON SITE. DISTURBED SOIL AREAS RESULTING FROM REMOVAL SHALL BE PERMANENTLY STABILIZED.
13. CONTRACTORS SHALL USE INDUSTRY BEST MANAGEMENT PRACTICES TO PREVENT PETROLEUM PRODUCTS, FERTILIZERS, CONCRETE BYPRODUCTS, AND OTHER POLLUTANTS FROM ENTERING OFF-SITE DRAINAGE COURSES. SLASH PILES AND OTHER SOLID WASTE SHALL BE DISPOSED OF IN ACCORDANCE WITH ALL APPLICABLE LOCAL REGULATIONS.
14. MATERIAL STORAGE AND CONTAINMENT SHALL BE MANAGED IN ACCORDANCE WITH BMP C153 STANDARDS.

STORMWATER POLLUTION PREVENTION PLAN

1. CONTRACTOR SHALL ADHERE TO MINIMUM REQUIREMENTS #2 AND #4 PER THE 2016 CITY OF GIG HARBOR STORMWATER MANAGEMENT AND SITE DEVELOPMENT MANUAL, VOLUME I. MINIMUM REQUIREMENTS ARE AS FOLLOWS:
   - MINIMUM REQUIREMENT #2: CONSTRUCTION STORMWATER POLLUTION PREVENTION. ALL NEW DEVELOPMENT AND REDEVELOPMENT PROJECTS ARE RESPONSIBLE FOR PREVENTING EROSION AND DISCHARGE OF SEDIMENT AND OTHER POLLUTANTS INTO RECEIVING WATERS AND SHALL COMPLY WITH CONSTRUCTION SWPPP ELEMENTS #1 THROUGH #13 AS DETAILED IN THE CITY OF GIG HARBOR STORMWATER MANAGEMENT AND SITE DEVELOPMENT MANUAL VOLUME II, SECTION 2.3.3.
   - MINIMUM REQUIREMENT #4: PRESERVATION OF NATURAL DRAINAGE SYSTEMS AND OUTFALLS. ALL NEW DEVELOPMENT AND REDEVELOPMENT PROJECTS ARE RESPONSIBLE FOR MAINTAINING NATURAL DRAINAGE PATTERNS, AND DISCHARGES FROM THE PROJECT SITE SHALL OCCUR AT THE NATURAL LOCATION, TO THE MAXIMUM EXTENT PRACTICABLE. THE MANNER BY WHICH RUNOFF IS DISCHARGED FROM THE PROJECT SITE MUST NOT CAUSE A SIGNIFICANT ADVERSE IMPACT TO DOWNSTREAM RECEIVING WATERS AND DOWNGRADIENT PROPERTIES.

ISSUED FOR CONSTRUCTION

ANY PRINTS NOT BEARING THIS STAMP MAY HAVE BEEN PRINTED PRIOR TO ADVERTISING AND CANNOT BE CONSIDERED AS BID DOCUMENTS. USERS OF THIS DOCUMENT IN EDITABLE ELECTRONIC FORMATS ARE CAUTIONED AGAINST USE WITHOUT FIRST DETERMINING WHETHER CHANGES MAY HAVE BEEN MADE SUBSEQUENT TO ITS PREPARATION.

NO	REVISION	DATE	BY

SCALES
0 1"
0 25mm
IF THIS BAR IS NOT DIMENSION SHOWN, ADJUST SCALES ACCORDINGLY.

CAMERON ROSS STATE OF WASHINGTON 55625 REGISTERED PROFESSIONAL ENGINEER

DESIGNED CR
DRAWN KRC/BB
CHECKED ML

CITY OF GIG HARBOR, PUBLIC WORKS DEPARTMENT
GIG HARBOR, WASHINGTON
REPLACEMENT OF SANITARY SEWER LIFT STATION #12A

Kennedy Jenks

TESC PLAN AND NOTES

SCALE
JOB NO 2097006*00
DATE AUGUST 2021
SHEET 5 OF 60
EC-01

Plot Date: 8/4/2021 3:06 PM
User: BRYANT BEHNKE

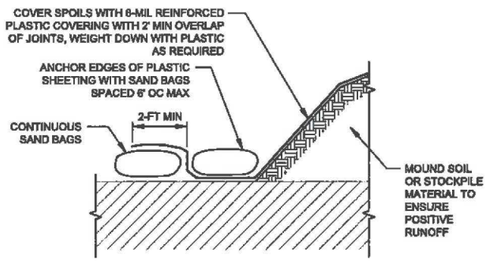

NOTES:
1. RIPS AND TEARS IN THE PLASTIC SHEETING SHALL BE REPAIRED IN A TIMELY MANNER PER THE SPECIFICATIONS.
2. MATERIAL SHALL BE STOCKPILED AT NO MORE THAN 1 TO 1 SLOPE
3. THE TOE OF THE STOCKPILE SHALL BE NO CLOSER THAN 2-FT FROM THE EDGE OF EXCAVATION.
4. STOCKPILE HEIGHT SHALL NOT EXCEED 10-FT.

1 / - STOCKPILE DETAIL
NTS

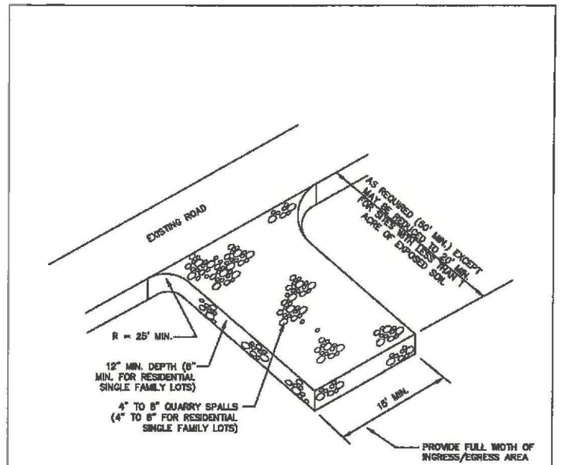

ENGINEERING DIVISION
CONSTRUCTION ENTRANCE ROCK PAD
SECTION # DETAIL # / S.H.
4.0
APPROVED BY CITY ENGINEER _____ DATE 1/1/2014

2 / - CONSTRUCTION ENTRANCE ROCK PAD DETAIL
NTS

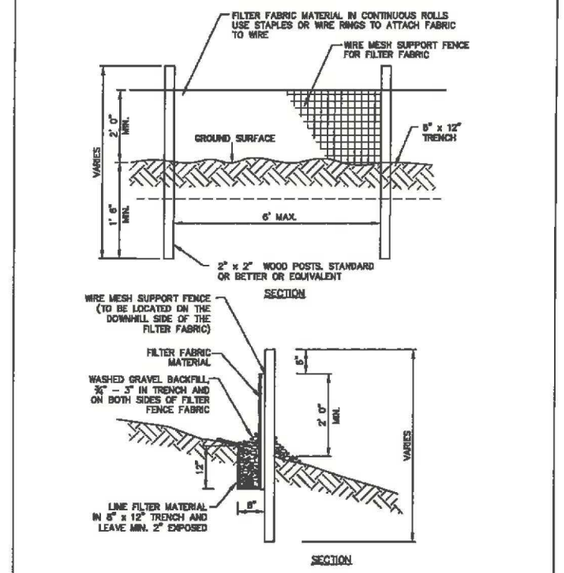

ENGINEERING DIVISION
FILTER FABRIC FENCE
SECTION # DETAIL # / S.H.
8.0
APPROVED BY CITY ENGINEER _____ DATE 1/1/2014

3 / - FILTER FABRIC FENCE DETAIL
NTS

ISSUED FOR CONSTRUCTION

ANY PRINTS NOT BEARING THIS STAMP MAY HAVE BEEN PRINTED PRIOR TO ADVERTISING AND CANNOT BE CONSIDERED AS BID DOCUMENTS. USERS OF THIS DOCUMENT IN EDITABLE ELECTRONIC FORMATS ARE CAUTIONED AGAINST USE WITHOUT FIRST DETERMINING WHETHER CHANGES MAY HAVE BEEN MADE SUBSEQUENT TO ITS PREPARATION.

NO	REVISION	DATE	BY

SCALES
0 1"
0 25mm
IF THIS BAR IS NOT DIMENSION SHOWN, ADJUST SCALES ACCORDINGLY.

CAMERON ROSS STATE OF WASHINGTON 53625 REGISTERED PROFESSIONAL ENGINEER

DESIGNED CR
DRAWN KRC/BB
CHECKED ML

CITY OF GIG HARBOR, PUBLIC WORKS DEPARTMENT
GIG HARBOR, WASHINGTON
REPLACEMENT OF SANITARY SEWER LIFT STATION #12A
Kennedy Jenks

TESC DETAILS

SCALE
JOB NO 2097006*00
DATE AUGUST 2021
SHEET 6 OF 60
EC-02

Plot Date: 8/4/2021 3:06 PM

User: BRYANT BEHNKE

BURNHAM DRIVE NW

WOODHILL DRIVE

DEMO OVERHEAD POWER LINES, SEE NOTE 14

SAW CUT ASPHALT FOR NEW POWER LINES. COORDINATE WITH PENINSULA LIGHT FOR LOCATION.

SAW CUT ASPHALT, DEMOLISH EXISTING FORCE MAIN AT TIE IN LOCATION

PROTECT FIBER OPTIC LINE IN PLACE

EXISTING WET WELL

DEMOLISH EXISTING RISERS PADS, AND HATCHES, SEE NOTE 1 AND SHEET D-02

DEMOLISH EXISTING ELECTRICAL VAULT

PRESERVE AND PROTECT EXISTING FENCE. SEE NOTE 5.

ABANDON EXISTING FORCE MAIN IN PLACE TO LOCATION SHOWN ON SHEET C-01, SEE NOTE 4

DEMOLISH EXISTING BUILDING AND FOUNDATION SEE SHEET D-02

EXISTING DRY WELL

DEMOLISH AS REQUIRED TO FACILITATE INSTALLATION OF NEW PIPING AND CONDUIT

N

0 10 20 Feet

SCALE: 1"=10'

NOTES

1. REFER TO SPECIFICATION SECTION 02 40 00 FOR DEMOLITION AND SALVAGE REQUIREMENTS.
2. EXISTING UTILITY LOCATIONS AND ELEVATIONS SHOWN ARE APPROXIMATE AND SHALL BE CONFIRMED BY THE CONTRACTOR PRIOR TO CONSTRUCTION.
3. REMOVE AND DISPOSE OF LIFT STATION 12 INTERNAL PIPING AND EQUIPMENT, BOLLARDS, ABOVE GRADE APPURTENANCES AND BUILDING AS INDICATED HEREON. DEMOLISH EXISTING WETWELL AND DRYWELL RISERS TO AN ELEVATION 12.5 FEET BELOW GROUND SURFACE.
4. ABANDON IN PLACE REMAINING PIPE AND APPURTENANCES, UNLESS OTHERWISE SPECIFIED.
5. REMOVE AND PRESERVE EXISTING FENCE AS NEEDED TO PERFORM WORK. REPLACE EXISTING FENCE PRIOR TO COMPLETION OF WORK.
6. PROVIDE TEMPORARY BARRIERS TO CONTROL DUST AND NOISE AND TO EXCLUDE UNAUTHORIZED PERSONS.
7. PERFORM WORK IN A MANNER TO CAUSE LEAST DISTURBANCE TO CITY OPERATIONS, TRAFFIC, NEIGHBORING BUSINESSES AND RESIDENTS AND LEAST DAMAGE TO REMAINING WORK. DEMOLITION SHALL BE PERFORMED USING MEANS AND METHODS THAT DO NOT DAMAGE EXISTING FACILITIES.
8. EMPLOY ALL AVAILABLE TECHNIQUES FOR CONSTRUCTION NOISE ABATEMENT. USE REMOTE, WELL-MUFFLERED AIR COMPRESSORS AND NEWEST NOISE SUPPRESSED PNEUMATIC AND ELECTRIC TOOLS. CONTRACTOR SHALL COMPLY WITH SPECIFIED WORK HOUR LIMITS.
9. ADEQUATE MEANS OF SAFE, CLEAR EGRESS FOR OWNER'S AND ENGINEER'S PERSONNEL SHALL BE MAINTAINED.
10. DEMOLITION SHALL BE COORDINATED WITH THE OWNER. REQUIRED SHUTDOWNS SHALL BE MADE BY DESIGNATED FACILITY PERSONNEL AND PROPER ADVANCE NOTICE SHALL BE GIVEN. CONTRACTOR SHALL FOLLOW THE SEQUENCE FOR DEMOLITION AS SPECIFIED.
11. THE DEMOLITION OPERATIONS SHALL NOT RESTRICT ACCESS TO EXISTING STRUCTURES REMAINING IN SERVICE, AND THE CONTRACTOR SHALL MAINTAIN ACCESS AREAS CLEAN OF DEMOLITION DEBRIS AT ALL TIMES.
12. CONTRACTOR SHALL PROVIDE TEMPORARY SEWER BYPASS SYSTEM PER SPECIFICATION SECTION 01 51 10 PRIOR TO BEGINNING DEMOLITION WORK.
13. THE CONTRACTOR SHALL PROPERLY DISPOSE OF ALL DEBRIS FROM DEMOLITION AT CONTRACTORS EXPENSE.
14. CONTRACTOR SHALL COORDINATE WITH PENINSULA LIGHT COMPANY TO REMOVE EXISTING OVERHEAD POWER LINES.

ISSUED FOR CONSTRUCTION

ANY PRINTS NOT BEARING THIS STAMP MAY HAVE BEEN PRINTED PRIOR TO ADVERTISING AND CANNOT BE CONSIDERED AS BID DOCUMENTS. USERS OF THIS DOCUMENT IN EDITABLE ELECTRONIC FORMATS ARE CAUTIONED AGAINST USE WITHOUT FIRST DETERMINING WHETHER CHANGES MAY HAVE BEEN MADE SUBSEQUENT TO ITS PREPARATION.

NO	REVISION	DATE	BY

SCALES
0 1"
0 25mm
IF THIS BAR IS NOT DIMENSION SHOWN, ADJUST SCALES ACCORDINGLY.

CAMERON ROSS STATE OF WASHINGTON 55615 PROFESSIONAL ENGINEER

DESIGNED	CR
DRAWN	KRC/BB
CHECKED	ML

CITY OF GIG HARBOR, PUBLIC WORKS DEPARTMENT
GIG HARBOR, WASHINGTON
REPLACEMENT OF SANITARY SEWER
LIFT STATION #12A

Kennedy Jenks

SITE DEMOLITION PLAN

SCALE	
JOB NO	2097006*00
DATE	AUGUST 2021
SHEET	7 OF 60
	D-01

Plot Date: 8/5/2021 9:50 AM
User: BRYANT BEHNKE

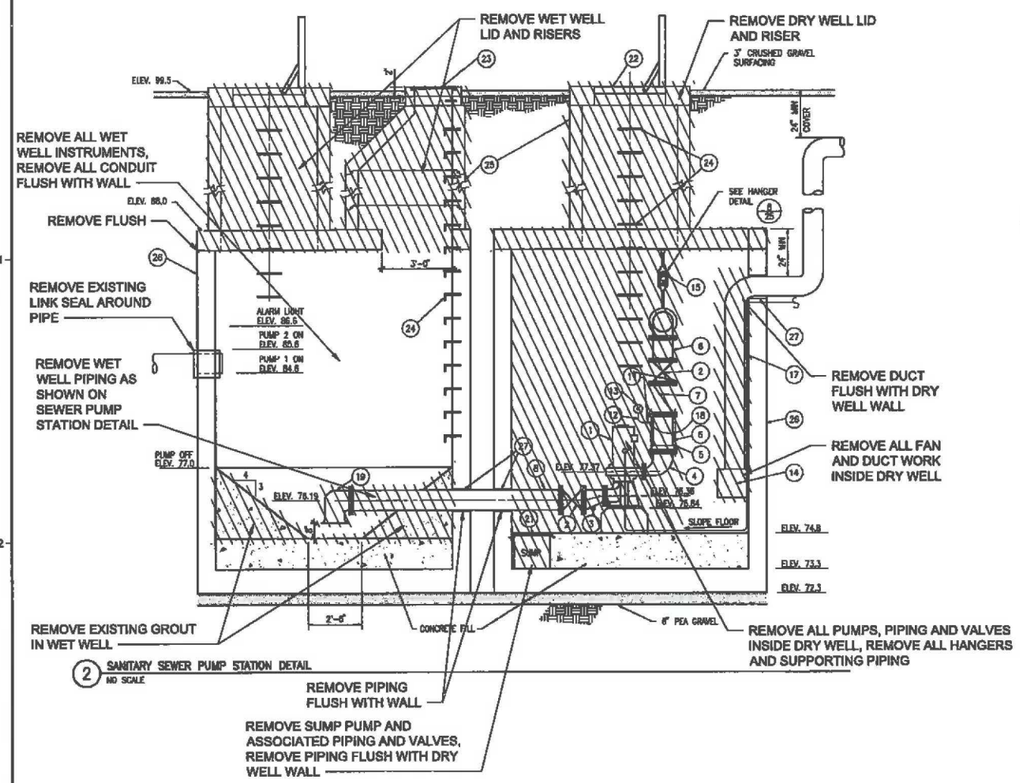

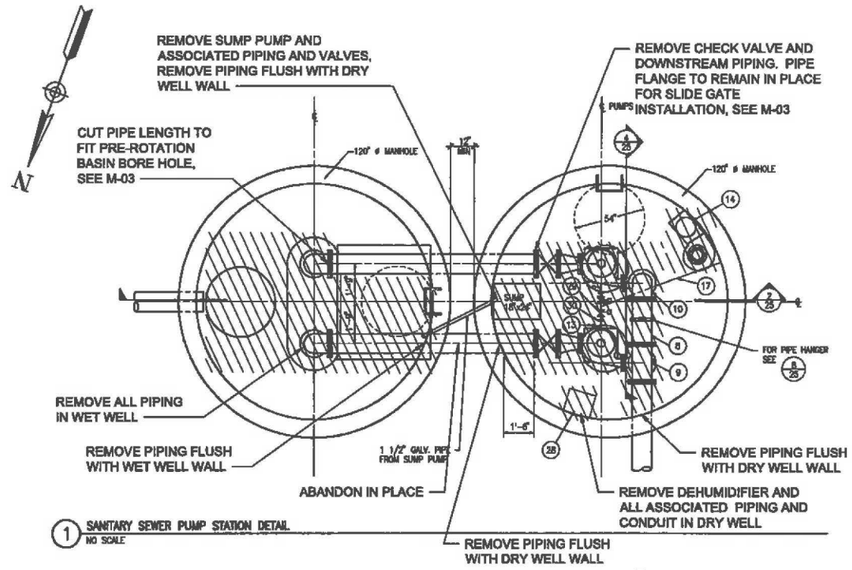

DEMOLITION

1. THE CONTRACTOR SHALL PROPERLY DISPOSE OF ALL DEBRIS FROM DEMOLITION AT CONTRACTORS EXPENSE.
2. REFER TO SPECIFICATION SECTION 02 40 00 FOR DEMOLITION REQUIREMENTS.
3. CONTRACTOR SHALL SALVAGE ITEMS LISTED IN SPECIFICATION SECTION 02 40 00 AND RETURN TO CITY OF GIG HARBOR WASTE WATER TREATMENT PLANT.
4. CONTRACTOR TO CONFIRM ELEVATIONS PRIOR TO DEMOLITION.

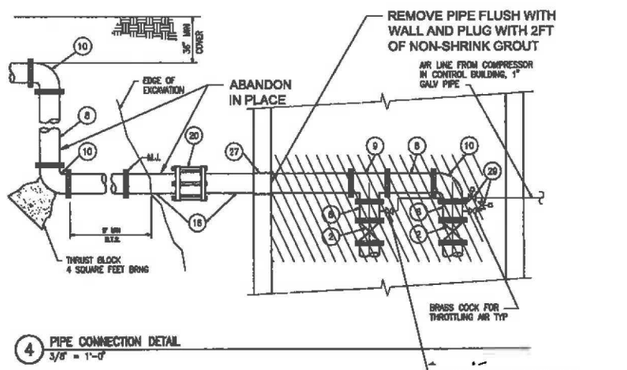

4 PIPE CONNECTION DETAIL
3/8" = 1'-0"

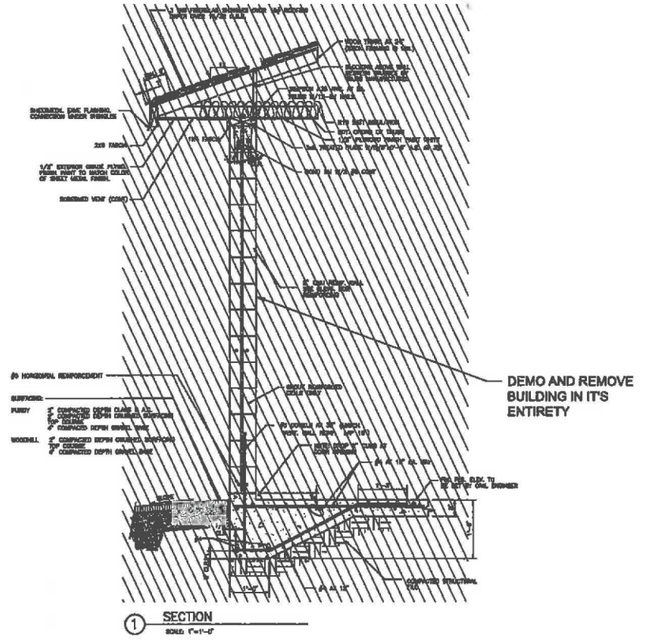

1 SECTION
SCALE: 1"=1'-0"

ISSUED FOR CONSTRUCTION

ANY PRINTS NOT BEARING THIS STAMP MAY HAVE BEEN PRINTED PRIOR TO ADVERTISING AND CANNOT BE CONSIDERED AS BID DOCUMENTS. USERS OF THIS DOCUMENT IN EDITABLE ELECTRONIC FORMATS ARE CAUTIONED AGAINST USE WITHOUT FIRST DETERMINING WHETHER CHANGES MAY HAVE BEEN MADE SUBSEQUENT TO ITS PREPARATION.

NO	REVISION	DATE	BY

SCALES
0 1"
0 25mm
IF THIS BAR IS NOT DIMENSION SHOWN, ADJUST SCALES ACCORDINGLY.

CAMERON ROSS STATE OF WASHINGTON 22825 REGISTERED PROFESSIONAL ENGINEER

DESIGNED	CR
DRAWN	KRC/BB
CHECKED	ML

CITY OF GIG HARBOR, PUBLIC WORKS DEPARTMENT
GIG HARBOR, WASHINGTON
REPLACEMENT OF SANITARY SEWER
LIFT STATION #12A

Kennedy Jenks

LIFT STATION DEMOLITION PLAN

SCALE	
JOB NO	2097006*00
DATE	AUGUST 2021
SHEET	8 OF 60
	D-02

Plot Date: 8/4/2021 3:05 PM

User: BRYANT BEHNKE

BURNHAM DRIVE NW

UNDERGROUND ELECTRICAL POWER LINES, CONNECT TO EXISTING POWER POLE, SEE SHEET G-04

ELECTRICAL SERVICE HANDHOLE, SEE NOTE 6

EXISTING 14' DOUBLE GATE

SEAL OFF VAULT

5'X12' ID METER VAULT

HVAC UNIT PAD

WOODEN SCREENING FENCE, SEE NOTE 8

EXISTING CHAIN LINK FENCE

EXISTING 14' DOUBLE GATE

10' DIAMETER WET WELL TOP SLAB, SEE SHEET M-2

10' DIAMETER OVERFLOW STORAGE TOP SLAB, SEE SHEET M-2

EQUIPMENT BUILDING FFE = 102.50

5'-0" MIN, TYP

GRAVEL SEE NOTE 7

FRESH AIR INTAKE

N

0 5 10 Feet

SCALE: 1"=5'

NOTES

1. EXISTING UTILITY LOCATIONS AND ELEVATIONS SHOWN ARE APPROXIMATE AND SHALL BE CONFIRMED BY THE CONTRACTOR PRIOR TO CONSTRUCTION.
2. VAULTS SHALL BE H-20 RATED.
3. CONTRACTOR SHALL BALANCE CUT/FILL QUANTITIES USING THE SURFACE CONTOURS SHOWN AND MATCH EXISTING DRAINAGE PATTERN.
4. CONTRACTOR SHALL MAINTAIN POSITIVE DRAINAGE AWAY FROM BUILDINGS AND STRUCTURES.
5. SEE G4 FOR SURVEY INFORMATION.
6. CONTRACTOR TO COORDINATE WITH PENINSULA LIGHT COMPANY FOR INSTALLATION OF ELECTRICAL SERVICE HANDHOLE, UNDERGROUND ELECTRICAL POWER LINES AND LOCATION OF ELECTRICAL SERVICE HANDHOLE.
7. CONTRACTOR SHALL RESTORE SITE IN ACCORDANCE WITH WSDOT STANDARD SPECIFICATIONS FOR ROAD, BRIDGE AND MUNICIPAL CONSTRUCTION SECTION 1-07.16.
8. WOODEN SCREENING FENCE IN ACCORDANCE WITH SPECIFICATION 32 31 13.

ISSUED FOR CONSTRUCTION

ANY PRINTS NOT BEARING THIS STAMP MAY HAVE BEEN PRINTED PRIOR TO ADVERTISING AND CANNOT BE CONSIDERED AS BID DOCUMENTS. USERS OF THIS DOCUMENT IN EDITABLE ELECTRONIC FORMATS ARE CAUTIONED AGAINST USE WITHOUT FIRST DETERMINING WHETHER CHANGES MAY HAVE BEEN MADE SUBSEQUENT TO ITS PREPARATION.

NO	REVISION	DATE	BY

SCALES
0 1"
0 25mm
IF THIS BAR IS NOT DIMENSION SHOWN, ADJUST SCALES ACCORDINGLY.

CAMERON ROSS STATE OF WASHINGTON 25615 PROFESSIONAL ENGINEER

DESIGNED	CR
DRAWN	KRC/BB
CHECKED	ML

CITY OF GIG HARBOR, PUBLIC WORKS DEPARTMENT
GIG HARBOR, WASHINGTON
REPLACEMENT OF SANITARY SEWER LIFT STATION #12A

Kennedy Jenks

SITE PLAN AND GRADING

SCALE	
JOB NO	2097006*00
DATE	AUGUST 2021
SHEET	9 OF 60
	C-01

Plot Date: 8/4/2021 3:05 PM

User: BRYANT BEHNKE

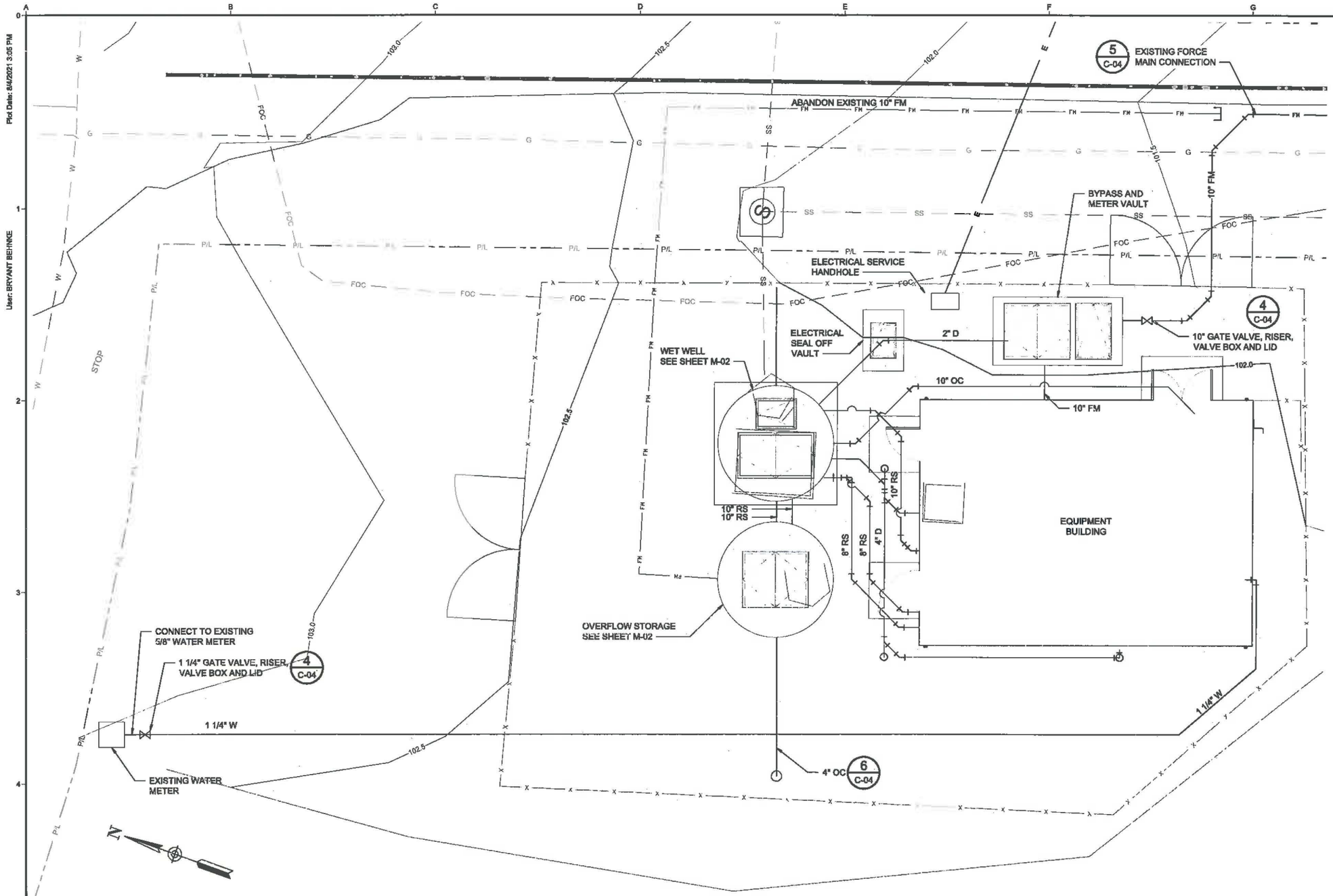

NOTES

1. THE CONTRACTOR SHALL COMPLY WITH THE STATE DEPARTMENT OF HEALTH SERVICES CRITERIA FOR THE SEPARATION OF WATER MAINS AND SANITARY SEWERS.
2. THE CONTRACTOR SHALL PROVIDE A MINIMUM OF 36 INCHES OF COVER ON ALL PIPELINES UNLESS OTHERWISE SHOWN OR DIRECTED. VERTICAL SEPARATION BETWEEN THE NEW PIPELINE AND EXISTING UTILITIES SHALL BE A MINIMUM OF 12 INCHES.
3. STRAIGHT SLOPES SHALL BE MAINTAINED BETWEEN INVERT ELEVATIONS SHOWN OR SPECIFIED.
4. THE CONTRACTOR IS RESPONSIBLE FOR ASSURING THAT ALL PIPELINES, VALVES, AND FITTINGS AREA ADEQUATELY RESTRAINED AGAINST JOINT SEPARATION. PROVIDE RESTRAINED JOINTS AND THRUST BLOCKS, DETAIL 1 SHEET C-04, FOR ALL HORIZONTAL BENDS, WYES, AND BLIND FLANGES. PROVIDE RESTRAINED JOINTS ONLY FOR ALL VERTICAL BENDS.
5. CONTRACTOR IS RESPONSIBLE FOR RESTORING ALL ITEMS DISTURBED DURING CONSTRUCTION BACK TO THEIR ORIGINAL OR BETTER CONDITION.
6. THE CONTRACTOR SHALL ADJUST ALL VALVE BOXES, PULL BOXES, AND MANHOLES TO FINISHED GRADE UNLESS OTHERWISE SHOWN OR SPECIFIED. MANHOLES IN OPEN FIELDS SHALL BE SET ONE FOOT ABOVE GRADE. APPROXIMATE RIM ELEVATIONS ARE SHOWN ON DRAWINGS.
7. ALL PIPE TRENCHING AND BACKFILL SHALL BE IN ACCORDANCE WITH CITY OF GIG HARBOR 2018 PUBLIC WORK STANDARD DETAILS 2-14 FOR PERPENDICULAR TRENCH RESTORATION FOR PAVED AREAS AND 2-16 FOR TRENCH RESTORATION FOR UNPAVED AREAS. SEE DETAILS 2 AND 3 ON C-4. THE PIPING SHOWN ON THESE PLANS SHALL BE RESTRAINED JOINT DESIGN AT ALL SLEEVE TYPE COUPLINGS.
8. THE CONTRACTOR SHALL PROVIDE TWO JOINTS CAPABLE OF DEFLECTION WITHIN FIVE (5) FEET OF STRUCTURE PENETRATION. ALL PIPING SHALL BE RESTRAINED JOINT DESIGN UNLESS INDICATED OTHERWISE. RESTRAINED JOINTS SHALL BE PROVIDED WHETHER SHOWN ON DRAWINGS OR NOT. PIPES, COUPLINGS AND RESTRAINED JOINTS SHALL BE APPROVED BY THE ENGINEER. ALL RESTRAINED JOINTS SHALL BE IN ACCORDANCE WITH THE PIPE MANUFACTURERS' RECOMMENDATIONS.
9. CONTRACTOR IS RESPONSIBLE FOR PROVIDING AS-BUILT PIPELINE PLANS AND PROFILES AFTER COMPLETION OF THE PROJECT. THE ENGINEER WILL PROVIDE EXISTING DESIGN DRAWING FILES IN AUTOCAD FOR CONTRACTOR TO GENERATE AS-BUILT PIPELINE PLANS AND PROFILES.

ISSUED FOR CONSTRUCTION

ANY PRINTS NOT BEARING THIS STAMP MAY HAVE BEEN PRINTED PRIOR TO ADVERTISING AND CANNOT BE CONSIDERED AS BID DOCUMENTS. USERS OF THIS DOCUMENT IN EDITABLE ELECTRONIC FORMATS ARE CAUTIONED AGAINST USE WITHOUT FIRST DETERMINING WHETHER CHANGES MAY HAVE BEEN MADE SUBSEQUENT TO ITS PREPARATION.

NO	REVISION	DATE	BY

SCALES
0 1"
0 25mm
IF THIS BAR IS NOT DIMENSION SHOWN, ADJUST SCALES ACCORDINGLY.

CAMERON ROSS STATE OF WASHINGTON 21605 REGISTERED PROFESSIONAL ENGINEER 12/16/2021

DESIGNED	CR
DRAWN	KRC/BB
CHECKED	ML

CITY OF GIG HARBOR, PUBLIC WORKS DEPARTMENT
GIG HARBOR, WASHINGTON
REPLACEMENT OF SANITARY SEWER
LIFT STATION #12A

Kennedy Jenks

YARD PIPING PLAN

SCALE	
JOB NO	2097006*00
DATE	AUGUST 2021
SHEET	10 OF 60
	C-02

Plot Date: 8/4/2021 3:05 PM
User: BRYANT BEHNKE

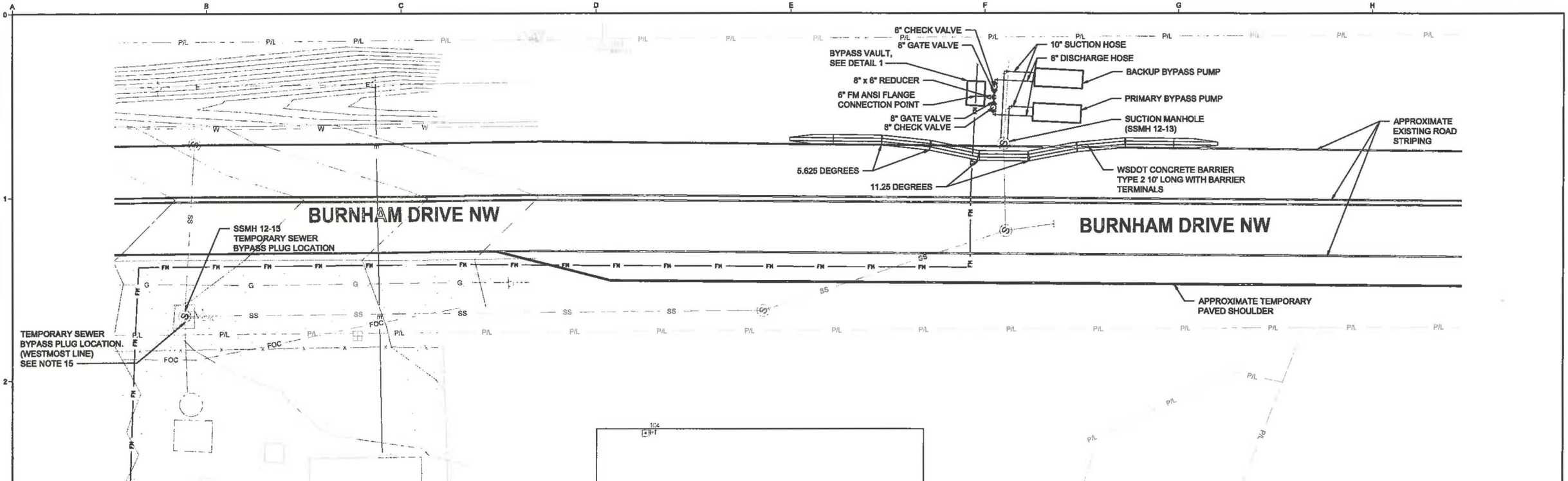

1 BYPASS VAULT PHOTO DETAIL
NTS

TYPE		Principal Arterial	Minor Arterial	Collector	Commercial Polaris Roads and Alleys	Local and Private	Local Alleys	Shared Use Paths and Trails [4]
AASHTO Flexible Pavement Design Standards	Initial ADT	30,000	30,000	15,000	10,000	2,000	300	1
	MADTT	8	8	5	5	5	5	100
	%ADT, Dist	1	1	1	1	0	0	0
	GROWTH RATE (compound)	2.5	2.5	2.5	2.5	2.5	2.5	2.5
	Assumed CBR	4.5	4.5	4.5	4.5	4.5	4.5	4.5
	Assumed Mr	6,690	6,690	6,690	6,690	6,690	6,690	6,690
	Lanes in Design Direction	2	1	1	1	1	1	1
	Percent Trucks, Design Direction	50	50	50	50	100	100	100
	Percent Trucks, Design Lane	80	100	100	100	100	100	100
	DESIGN ESAL	5,878,017	4,898,346	2,445,675	1,564,540	894,831	49,365	4,087
	Reliability, %R	9999	9095	9095	8095	8095	8095	8095
	Deviation, Zo	0.45	0.45	0.45	0.45	0.45	0.45	0.45
	Initial Serviceability, Pi	4.20	4.20	4.20	4.20	4.20	4.20	4.20
	Terminal Serviceability	3	2.7	2.5	2.4	2.5	2.3	2.2
	Δ PSI	1.20	1.50	1.70	1.80	1.70	1.90	2.00
	Design SN	5.8	4.81	4.18	3.58	3.41	2.63	1.8
Standard Asphalt Pavement Section	HMA	8	8	6	5	4	2	2
	CSTC	3	2	2	2	2	2	2
	CSBC	14	14	9	8	10	6	2
Minimum Asphalt Pavement Section with Approved Design	HMA	6	6	4	4	3	2	2
	CSTC	2	2	2	2	2	2	2
	CSBC	8	6	6	6	5	4	
Minimum Concrete Pavement Section with Approved Design	Concrete streets are allowed with approved supporting design.							
	PCC	10	10	8	8	8	8	4
	CSBC	2	2	2	2	2	2	2

NOTES:
1. STANDARD ASPHALT PAVEMENT SECTION SHALL BE USED WHEN NO CUSTOM DESIGN IS PROVIDED.
2. MINIMUM PAVEMENT SECTIONS ARE THE MINIMUM ACCEPTABLE PAVEMENT SECTIONS FOR CUSTOM DESIGNS.
3. PAVEMENT SECTIONS FOR OTHER FACILITIES, SUCH AS LOW-IMPACT DESIGNS AND PARKING LOTS, SHALL BE SUBSTANTIATED BY GEOTECHNICAL ANALYSIS AND DESIGN DOCUMENTATION.
4. FOR POROUS ASPHALT OR PERVIOUS CONCRETE, REFER TO VOLUME III OF THE 2016 CITY OF GIG HARBOR STORM WATER AND SITE DEVELOPMENT MANUAL.

CITY OF GIG HARBOR ENGINEERING DIVISION
PAVEMENT DESIGN STANDARDS
DETAIL NO. 2-13
APPROVED FOR PUBLICATION
CITY ENGINEER _____ DATE JULY, 2013

2 PAVEMENT DESIGN STANDARDS
NTS

NOTES

1. CONTRACTOR SHALL DEVELOP A TRAFFIC CONTROL PLAN IN ACCORDANCE WITH SPECIFICATION SECTION 01 55 26 TO SUPPORT BYPASS PUMPING ACTIVITIES AND SUBMIT FOR REVIEW IN ACCORDANCE WITH SECTION 01 33 00.
2. CONTRACTOR SHALL DEVELOP TRAFFIC CONTROL PLAN IN ACCORDANCE WITH WSDOT DRAWING TC-12, LANE SHIFT - THREE LANE ROADWAY.
3. CONTRACTOR SHALL PROVIDE AND MAINTAIN ALL TRAFFIC CONTROL DEVICES.
4. TEMPORARY PAVED SHOULDER SHALL BE IN CONFORMANCE WITH THE MOST CURRENT WSDOT STANDARD SPECIFICATIONS FOR ROAD, BRIDGE, AND MUNICIPAL CONSTRUCTION AND CITY OF GIG HARBOR 2016 PUBLIC WORKS STANDARD DETAIL 2-13.
5. TEMPORARY TRAFFIC CONTROL (TTC) AREA LANE WIDTHS SHALL BE MINIMUM 10 FEET THROUGHOUT THE TTC AREA.
6. MINIMUM TAPER LENGTH (L) SHALL BE 205 FEET.
7. LONGITUDINAL BUFFER SPACE SHALL BE 250 FEET +/-.
8. CONTRACTOR SHALL GRIND AND REMOVE ALL EXISTING PAVEMENT MARKINGS ALONG THE ENTIRE LENGTH OF THE PAVED TTC LANE SHIFT AREA IN ACCORDANCE WITH THE MANUAL ON UNIFORM TRAFFIC CONTROL DEVICES (MUTCD) FOR STREETS AND HIGHWAYS, PART 6. REPLACE WITH TEMPORARY PAVEMENT MARKINGS PER MUTCD REQUIREMENTS. PAVEMENT MARKING SHALL BE PLACED PRIOR TO THE ROADWAY BEING OPENED TO ROAD USERS.
9. CONTRACTOR SHALL GRIND AND REMOVE ALL TEMPORARY PAVEMENT MARKINGS AND REPLACE EXISTING PAVEMENT MARKINGS AT COMPLETION OF WORK.
10. SIGN SPACING (X) SHALL BE 350 FEET +/-.
11. SIGNAGE SHALL INCLUDE SIGN W3-5A SPACED 350 FEET +/- AFTER SIGN W20-1, SO THAT SIGN W20-1 IS THE FIRST ADVANCE WARNING SIGN ENCOUNTERED BY ROAD USERS. THIS SIGNAGE SHALL APPLY TO THE NORTH AND SOUTH APPROACH TO THE TEMPORARY TRAFFIC CONTROL AREA PER MUTCD REQUIREMENTS.
12. SIGNAGE SHALL INCLUDE SIGN W13-1P IN COMBINATION WITH WARNING SIGN W1-4(L) ON THE SOUTH APPROACH TO THE TEMPORARY TRAFFIC CONTROL AREA. PER MUTCD REQUIREMENTS.
13. SIGNAGE SHALL INCLUDE SIGN W13-P IN COBINATION WITH WARNING SIGN W4-2R ON THE NORTH APPROACH TO THE TEMPORARY TRAFFIC CONTROL AREA PER MUTCD REQUIREMENTS.
14. BYPASS PUMPING LOCATION AND ORIENTATION IS SHOWN DIAGRAMMATICALLY. CONTRACTOR SHALL DETERMINE FINAL CONFIGURATION. CONTRACTOR SHALL RESTORE BYPASS PUMPING SITE AND TEMPORARY PAVED SHOULDER AT COMPLETION OF WORK.
15. BYPASS PUMPING SYSTEM SHALL BE EQUIPPED WITH AUTOMATED TELEMETRY MONITORING SYSTEM TO CALL OUT TO A LIST OF CONTRACTOR PHONE CONTACTS, AND CITY ON CALL PERSON, IN THE EVENT THERE IS A HIGH LEVEL, PUMP FAILURE, OR OTHER SITE CONDITION THAT COULD RESULT IN POSSIBLE SPILL OR OVERFLOW OF RAW SEWAGE.
16. INSTALL FLOW THROUGH PLUG DURING INSTALLATION OF SPECIALTY LINING IN MANHOLE.

ISSUED FOR CONSTRUCTION

ANY PRINTS NOT BEARING THIS STAMP MAY HAVE BEEN PRINTED PRIOR TO ADVERTISING AND CANNOT BE CONSIDERED AS BID DOCUMENTS. USERS OF THIS DOCUMENT IN EDITABLE ELECTRONIC FORMATS ARE CAUTIONED AGAINST USE WITHOUT FIRST DETERMINING WHETHER CHANGES MAY HAVE BEEN MADE SUBSEQUENT TO ITS PREPARATION.

NO	REVISION	DATE	BY

SCALES
0 1"
0 25mm
IF THIS BAR IS NOT DIMENSION SHOWN, ADJUST SCALES ACCORDINGLY.

CAMERON ROSS STATE OF WASHINGTON 24402 REGISTERED PROFESSIONAL ENGINEER

DESIGNED CR
DRAWN KRC/BB
CHECKED ML

CITY OF GIG HARBOR, PUBLIC WORKS DEPARTMENT
GIG HARBOR, WASHINGTON
REPLACEMENT OF SANITARY SEWER LIFT STATION #12A
Kennedy Jenks

SEWER BYPASS PLAN

SCALE
JOB NO 2097006*00
DATE AUGUST 2021
SHEET 11 OF 60
C-03

Plot Date: 8/4/2021 3:06 PM
User: BRYANT BEHNKE

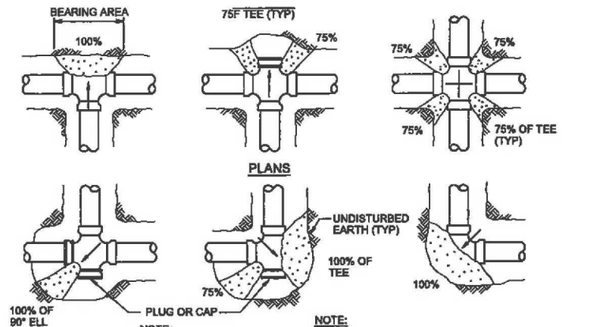

NOTE:
IN FIGURE ABOVE (100%) AT THRUST BLOCK INDICATES THE PERCENT OF TOTAL THRUST TO BE APPLIED FOR BEARING AREA

THRUST PER PSI OF WATER PRESSURE AT VARIOUS FITTINGS				
PIPE SIZE	DEAD END OR TEE	90° ELBOW	45° ELBOW	22 1/2° ELBOW
4	19	27	15	7
6	39	55	30	15
8	87	94	51	26
10	109	154	84	43
12	155	218	119	61
14	210	296	161	82
16	275	383	209	106
18	351	494	269	137
20	434	611	333	169
24	623	876	478	244

EXAMPLE:

8-INCH 90° ELBOW, PRESSURE=200 PSF
FROM TABLE: THRUST = 94 X 200 = 18,800 lb
ASSUME BEARING STRENGTH OF SOIL = 2000 PSF

$\frac{18,800}{2000}$ =9.4 SQ FT= BEARING AREA REQUIRED FOR THRUST BLOCK

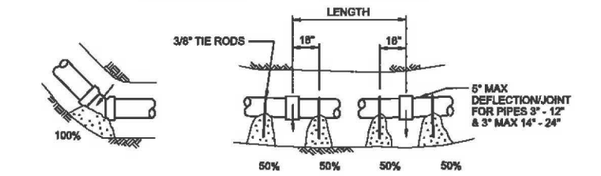

SIDE THRUST PER 100 PSI PRESSURE PER DEGREE OF DEFLECTION			
PIPE SIZE	SIDE THRUST-lb	PIPE SIZE	SIDE THRUST-lb
4	35	14	377
6	72	16	486
8	122	18	665
10	197	20	790
12	278	24	1150

MULTIPLY THRUST BY DEGREE OF DEFLECTION TO OBTAIN TOTAL THRUST

NOTES:

1. IN USING THE ABOVE TABLES, USE THE MAXIMUM INTERNAL PRESSURE ANTICIPATED (i.e. HYDROSTATIC TEST PRESSURE) POSSIBLE SURGE PRESSURE DUE TO PUMP SHUT-OFF, ETC.
2. SEE SOILS REPORT FOR BEARING STRENGTH OF SOIL IN THE ABSENCE OF A SOILS REPORT AN AVERAGE SOIL (SPADABLE MEDIUM CLAY) CAN BE ASSUMED TO HAVE A BEARING STRENGTH OF 2000 PSF
3. USE LIGHTWEIGHT CONCRETE FOR HILL THRUST BLOCK.
4. CONCRETE FOR THRUST BLOCKS TO BE 2000 PSI.

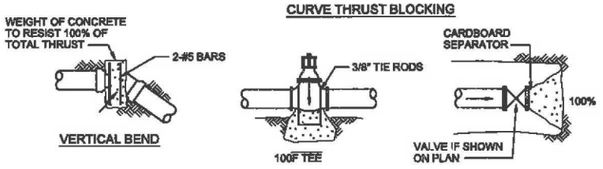

1 CONCRETE THRUST BLOCKS
NTS

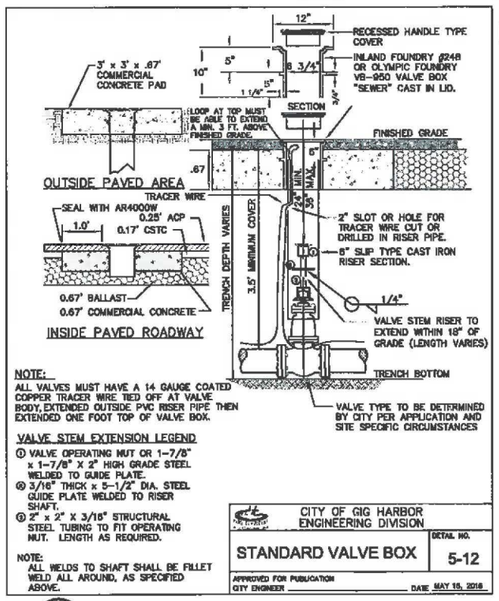

NOTE:
ALL VALVES MUST HAVE A 14 GAUGE COATED COPPER TRACER WIRE TIED OFF AT VALVE BODY EXTENDED OUTSIDE PVC RISER PIPE THEN EXTENDED ONE FOOT TOP OF VALVE BOX.

VALVE STEM EXTENSION LEGEND
① VALVE OPERATING NUT OR 1-7/8" x 1-7/8" X 2" HIGH GRADE STEEL WELDED TO GUIDE PLATE.
② 3/16" THICK x 5-1/2" DIA. STEEL GUIDE PLATE WELDED TO RISER SHAFT.
③ 2" x 2" X 3/16" STRUCTURAL STEEL TUBING TO FIT OPERATING NUT. LENGTH AS REQUIRED.

NOTE:
ALL WELDS TO SHAFT SHALL BE FILLET WELD ALL AROUND, AS SPECIFIED ABOVE.

CITY OF GIG HARBOR ENGINEERING DIVISION	
STANDARD VALVE BOX	DETAIL NO. 5-12
APPROVED FOR PUBLICATION CITY ENGINEER	DATE MAY 16, 2018

4 STANDARD VALVE BOX
NTS

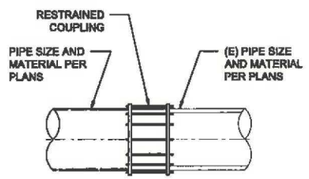

NOTE:
1. WHEN CONNECTING TO EXISTING UTILITIES, CONTRACTOR SHALL FIELD VERIFY EXISTING UTILITY SIZE, MATERIAL, AND ELEVATION IN ACCORDANCE WITH SPECIFICATION SECTION 40 27 00.
2. RESTRAINED COUPLING SHALL BE PER SPECIFICATION SECTION 40 27 00.

5 CONNECTION TO (E) PIPE
NTS

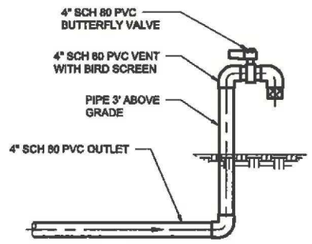

6 FRESH AIR INTAKE
NTS

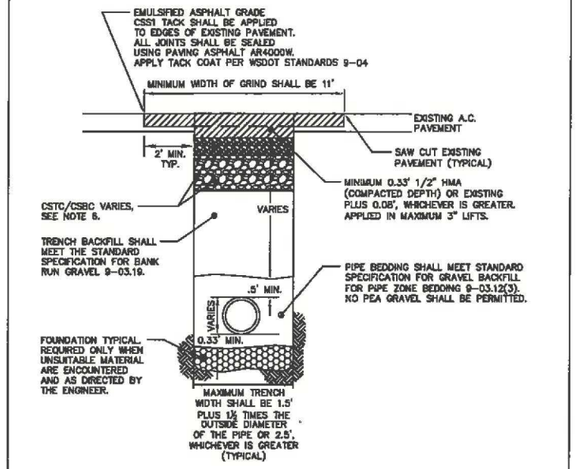

NOTES:
1. ALL MATERIALS EXCEPT HMA AND BEDDING MATERIAL SHALL BE COMPACTED IN 8-INCH MAXIMUM LIFTS TO 95% DENSITY AS DETERMINED BY ASTM D1557.
2. ALL MATERIALS, WORKMANSHIP, AND INSTALLATION SHALL BE IN CONFORMANCE WITH THE MOST CURRENT WSDOT STANDARD SPECIFICATIONS FOR ROAD, BRIDGE, AND MUNICIPAL CONSTRUCTION AS AMENDED BY CITY OF GIG HARBOR STANDARDS.
3. KEEP TRENCH BOTTOM COMPACTED WITH UNIFORM GRADE. NO TEMPORARY SUPPORTS, I.E. BLOCKS, WILL BE ALLOWED TO SUPPORT PIPE. TRENCH BOTTOM SHALL BE TO GRADE PRIOR TO PIPE INSTALLATION.
4. SAW CUT PAVEMENT TO MAX. TRENCH WIDTH. BACKFILL AND PAVE TO TOP OF EXISTING PAVEMENT FOR TRENCH WIDTH. ALLOW 24 HOURS MINIMUM FOR TRENCH PATCH TO CURE. GRIND AND PAVE FINAL PATCH AS SHOWN.
5. CDF BACKFILL WILL BE REQUIRED AROUND DUCT BANKS THAT ARE STACKED VERTICALLY.
6. CSTC/CSBC DEPTHS VARIES PER ROAD CLASSIFICATION AS SHOWN ON DETAIL 2-13 – PAVEMENT DESIGN STANDARDS.

CITY OF GIG HARBOR ENGINEERING DIVISION	
PERPENDICULAR TRENCH RESTORATION FOR PAVED AREAS	DETAIL NO. 2-14
APPROVED FOR PUBLICATION CITY ENGINEER	DATE JULY, 2018

2 TRENCH RESTORATION FOR PAVED AREAS
NTS

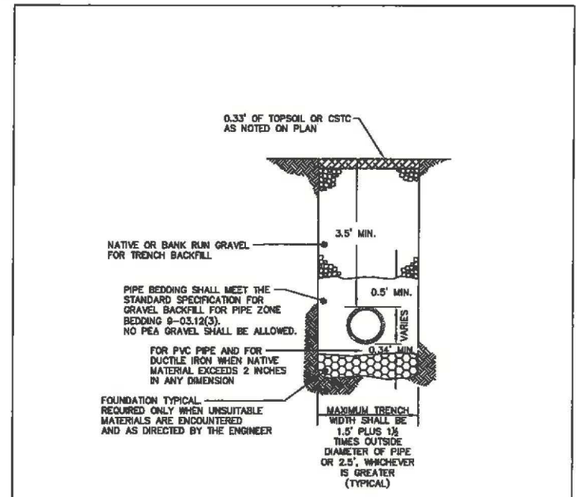

NOTES:
1. BEDDING SHALL CONFORM TO SECTION 9-03.12(3) OF STANDARD SPECIFICATIONS.
2. COMPACTION: BEDDING SHALL BE COMPACTED TO 95% MIN. AS DETERMINED BY ASTM D1557. BACKFILL SHALL BE COMPACTED TO 85% MIN. IN UNPAVED AREA, AND 95% MIN. IN PAVED OR SHOULDER AREAS AS DETERMINED BY ASTM D1557.
3. ALL MATERIALS, WORKMANSHIP, AND INSTALLATION SHALL BE IN CONFORMANCE WITH THE MOST CURRENT WSDOT STANDARD SPECIFICATIONS FOR ROAD, BRIDGE, AND MUNICIPAL CONSTRUCTION AS AMENDED BYCITY OF GIG HARBOR STANDARDS.
4. KEEP TRENCH BOTTOM COMPACTED WITH UNIFORM GRADE. A BELL JOINT SHALL BE REQUIRED AT EACH JOINT FOR PROPER SUPPORT. NO TEMPORARY SUPPORTS, I.E. BLOCKS, WILL BE ALLOWED TO SUPPORT PIPE. TRENCH BOTTOM SHALL BE TO GRADE PRIOR TO PIPE INSTALLATION.

CITY OF GIG HARBOR ENGINEERING DIVISION	
TRENCH RESTORATION FOR UNPAVED AREAS	DETAIL NO. 2-16
APPROVED FOR PUBLICATION CITY ENGINEER	DATE MAY 16, 2018

3 TRENCH RESTORATION FOR UNPAVED AREAS
NTS

ISSUED FOR CONSTRUCTION

ANY PRINTS NOT BEARING THIS STAMP MAY HAVE BEEN PRINTED PRIOR TO ADVERTISING AND CANNOT BE CONSIDERED AS BID DOCUMENTS. USERS OF THIS DOCUMENT IN EDITABLE ELECTRONIC FORMATS ARE CAUTIONED AGAINST USE WITHOUT FIRST DETERMINING WHETHER CHANGES MAY HAVE BEEN MADE SUBSEQUENT TO ITS PREPARATION.

NO	REVISION	DATE	BY

SCALES
0 1"
0 25mm
IF THIS BAR IS NOT DIMENSION SHOWN, ADJUST SCALES ACCORDINGLY.

CAMERON ROSS — STATE OF WASHINGTON — 55883 — REGISTERED PROFESSIONAL ENGINEER

DESIGNED	CR
DRAWN	BB
CHECKED	MIL

CITY OF GIG HARBOR, PUBLIC WORKS DEPARTMENT
GIG HARBOR, WASHINGTON
REPLACEMENT OF SANITARY SEWER LIFT STATION #12A

Kennedy Jenks

CIVIL DETAILS

SCALE	
JOB NO	2097006*00
DATE	AUGUST 2021
SHEET	12 OF 60
	C-04

Plot Date: 8/4/2021 3:22 PM
User: BRYANT BEHNKE

BUILDING	CODE SUMMARY	
LS-12 BUILDING	CONSTRUCTION TYPE	TYPE II-B, PER IBC 602.2, SINGLE STORY INSULATED CMU BUILDING, SLAB-ON-GRADE FLOOR WITH METAL ROOFING.
	BUILDING ELEMENT FIRE RESISTANCE	0-HOUR RATING AS PER IBC TABLE 601 FOR TYPE II B CONSTRUCTION
	EXTERIOR WALL FIRE RESISTANCE (BASED ON SEPARATION DISTANCE)	0-HOUR RATING AS PER IBC TABLE 602 FOR TYPE II B CONSTRUCTION;
	ALLOWABLE AREA	15,500 SF PER IBC TABLE 506.2
	ACTUAL AREA	784 SF
	ALLOWABLE HEIGHT	65'-0" FEET / 2-STORY PER IBC TABLES 504.3 AND 504.4
	ACTUAL HEIGHT / STORY	15'-0"± FEET / 1-STORY
	OCCUPANCY CLASSIFICATIONS	F-1 MODERATE HAZARD FACTORY INDUSTRIAL PER IBC 306.2
	OCCUPANCY SEPARATIONS	1-HOUR CONTROL AREA SEPARATION REQUIRED PER IBC TABLE 414.2.2
	OCCUPANT LOAD MECHANICAL ROOM (608 S.F.) ELECTRICAL ROOM (176 S.F.)	9 PER IBC TABLE 1004.1.2 7 OCCUPANTS (1 EXIT REQ. / 1 ACTUAL PER IBC SECTION 1006.2.1) 2 OCCUPANTS (1 EXIT REQ. / 1 ACTUAL PER IBC SECTION 1006.2.1)
	MAXIMUM PATH OF EGRESS TRAVEL	75 FEET PER IBC TABLE 1006.2.1
	HVAC	CONDITIONED
	VENTILATION	REQUIRED PER IBC SECTION 1203.1: 6 AIR CHANGES PER HOUR AND MONITOR VENT SYSTEM
	ENERGY CODE INSULATION - ROOF INSULATION - ABOVE GRADE WALLS INSULATION - SLAB-ON-GRADE FLOORS INSULATION - OPAQUE DOORS (SWINGING) INSULATION - VERTICAL ENESTRATION	 R-38 ci (0.031 U-VALUE) R-9.5 ci (0.1052 U-VALUE) R-10 FOR 24 INCHES BELOW 0.370 U-VALUE 0.360 U-VALUE; 0.360 SHGC
	ACCESSIBILITY	NOT REQUIRED PER IBC SECTION 1103.2.9
	FUEL STORAGE	95 GALLONS CLASS II COMBUSTIBLE LIQUID; DOES NOT EXCEED 120 GALLONS MAXIMUM ALLOWED PER TABLE 307.1 (1)
	SPRINKLER SYSTEM	NOT REQUIRED PER IBC SECTION 903.2
	SMOKE DETECTION	NOT REQUIRED PER IBC SECTION 907.2.5
	SMOKE AND HEAT VENTS	NOT REQUIRED PER IBC SECTION 910.2
	FIRE ALARM	REQUIRED PER GIG HARBOR MUNICIPAL CODE 15.16.170
	FIRE PROTECTION REQUIREMENTS (IFC)	HYDRANT PROTECTION WITHIN 250' OF STRUCTURE PER TABLE C102.1
	FIRE FLOW (IFC)	1,500 GPM FOR 2 HOURS PER TABLE B105.1.(2)

CODE SUMMARY

APPLICABLE CODES:

- GIG HARBOR MUNICIPAL CODE
  TITLE 15 - BUILDINGS AND CONSTRUCTION
- STATE BUILDING CODE ADOPTION AND AMENDMENT OF THE 2018 EDITION OF THE INTERNATIONAL BUILDING CODE, CHAPTER 51-50 WAC, ADOPTED.
- STATE BUILDING CODE ADOPTION AND AMENDMENT OF THE 2018 EDITION OF THE INTERNATIONAL FIRE CODE, CHAPTER 51-54A, ADOPTED.
- STATE BUILDING CODE ADOPTION AND AMENDMENT OF THE 2018 EDITION OF THE UNIFORM PLUMBING CODE, CHAPTER 51-56 WAC, ADOPTED.
- STATE BUILDING CODE ADOPTION AND AMENDMENT OF THE 2018 EDITION OF THE INTERNATIONAL MECHANICAL CODE, CHAPTER 51-52 WAC, ADOPTED.
- INTERNATIONAL ENERGY CONSERVATION CODE, 2018 EDITION, CHAPTER 51-11C WAC, PUBLISHED BY THE INTERNATIONAL CODE COUNCIL, TOGETHER WITH THE 2018 STATE-WIDE AMENDMENTS, ADOPTED.
- 2017 NEC
- 2020 WASHINGTON STATE OSHA REGULATIONS

JURISDICTION:
CITY OF GIG HARBOR
3510 GRANDVIEW STREET
GIG HARBOR, WA 98335

GENERAL NOTES

1. EXITS: REQUIRED EXIT DOORS SHALL BE 36 INCHES WIDE BY 84-INCHES HIGH AT A MINIMUM.
2. INSULATION: PROVIDED IN CONDITIONED AREAS.
3. EXIT ILLUMINATION IS REQUIRED AT ONE-FOOT CANDLE
4. PORTABLE FIRE EXTINGUISHERS SHALL BE INSTALLED AND MAINTAINED IN ACCORDANCE WITH INTERNATIONAL FIRE CODE CHAPTER 9.

BUILDING AIR BARRIER BOUNDARY CALCULATIONS

ROOF AREA: 860 SF
WALL ENVELOPE AREA: 1,130 SF
FLOOR AREA: 784 SF
TOTAL BOUNDARY: 2,794 SF

WASHINGTON STATE ENERGY CODE
COMMERCIAL 2018 EDITION
CHAPTER 51-11C WAC

1. BUILDING ENCLOSURE AIR LEAKAGE TESTING SHALL BE PERFORMED PER ASTM C779. SUBMIT BUILDING ENCLOSURE AIR LEAKAGE TEST REPORT FOR REVIEW. BUILDING AIR BARRIER BOUNDARY IS 2,794 SF FOR ALL 6 BOUNDARIES.

(A) SUBMIT BUILDING ENCLOSURE AIR LEAKAGE TEST REPORTS TO JURISDICTION AND OWNER;
(B) IF INITIAL TEST RESULT EXCEEDS 0.25 CFM/FT2 (1.5 L/S*M2), INDICATE THAT INSPECTION AND ALL PRACTICAL CORRECTIVE ACTIONS BE COMPLETED AND DOCUMENTED IN THE AIR LEAKAGE TEST REPORT;
(C) IF INITIAL TEST RESULT EXCEEDS 0.40 CFM/FT2 (2.0 L/S*M2), INDICATE THAT CORRECTIVE ACTIONS SHALL ALSO INCLUDE RE-TESTING;
(D) INDICATE THAT CORRECTIVE MEASURES AND RETESTING MUST BE REPEATED UNTIL THE TEST RESULT IS 0.40 CFM/FT2 (2.0 L/S*M2) OR LESS;
(E) INCLUDE AIR BARRIER TEST REPORT IN PROJECT CLOSE OUT DOCUMENTATION PROVIDED TO BUILDING OWNER.

LEGEND

- (01) DOOR IDENTIFICATION TAG, SEE DOOR SCHEDULE
- [100] ROOM IDENTIFICATION TAG, SEE INTERIOR FINISH SCHEDULE
- (FE) FIRE EXTINGUISHER, WALL MOUNTED
- ⟨D⟩ WINDOW / LOUVER IDENTIFICATION TAG, SEE WINDOW / LOUVER ELEVATIONS

FINISH SCHEDULE

ROOM NO.	ROOM NAME	FLOOR MATERIAL	FLOOR FINISH	BASE MATERIAL	BASE FINISH	WALL NORTH MATERIAL	WALL NORTH FINISH	WALL WEST MATERIAL	WALL WEST FINISH	WALL SOUTH MATERIAL	WALL SOUTH FINISH	WALL EAST MATERIAL	WALL EAST FINISH	CEILING MATERIAL	CEILING HEIGHT	CEILING FINISH	REMARKS
100	ELECTRICAL ROOM	CONC	FS	CMU	PS	CMU	PS	CMU	PS	CMU	PS	CMU	PS	SUSP	9'-6"	---	
101	MECHANICAL ROOM	CONC	FS	CMU	PS	CMU	PS	CMU	PS	CMU	PS	CMU	PS	MTL	12'±	EXP	

DOOR SCHEDULE

ROOM NO.	ROOM NAME	DOOR NO.	DOOR WIDTH X HEIGHT	DOOR TYPE	DOOR MATERIAL	DOOR THERMAL VALUE	FRAME MATERIAL	FRAME HEAD	FRAME JAMB	FRAME SILL	ASSEMBLY HDWRE GROUP	ASSEMBLY FIRE RATING	REMARKS
100	ELECTRICAL ROOM	(01)	3'-0" x 7'-0"	⟨A⟩	HM	U-0.370	HM	A0804	A0807	A0810	1	---	INSULATED
100	ELECTRICAL ROOM	(02)	3'-0" x 7'-0"	⟨H⟩	HM	U-0.370	HM	A0804	A0807	A0810	2	1-HOUR	INSULATED
101	MECHANICAL ROOM	(03)	PR 6'-8" x 7'-0"	⟨B⟩	HM	U-0.370	HM	A0804 SIMILAR	A0807 SIMILAR	A0810 SIMILAR	3	---	INSULATED
101	MECHANICAL ROOM	(04)	PR 5'-0" x 8'-0"	⟨C⟩	HM	U-0.370	HM	A0804	A0807	A0810	1	---	INSULATED

FINISH SCHEDULE ABBREVIATIONS

ALUM = ALUMINUM STOREFRONT/PLEXIGLASS
BRK = BRICK
ci = CONTINUOUS INSULATION
CMU = CONCRETE MASONRY UNIT
CONC = CONCRETE
EXP = EXPOSED STRUCTURAL FRAMING
EPXY = EPOXY COATING, (SEE SECTION 09 96 00)
FS = FLOOR SEALER/HARDENER
HM = HOLLOW METAL
INSUL = INSULATION
MANUF = MANUFACTURER
MAT = MATERIAL
MTL = METAL
O.H. = OVERHANG
PS = PAINT SYSTEM
SUSP = SUSPENDED ACOUSTICAL CEILING
STL = STEEL
VAR = VARIES

NOTE:
PREFINISHED = FACTORY PAINTED ITEMS, STAINLESS STEEL, CHROME, BRASS, BRONZE, PLASTIC LAMINATE, ANODIZED ALUMINUM & NAME PLATES, WINDOW FRAMES. GALVANIZED & PRIMED COATINGS ARE NOT "PREFINISHED."

FINISH SCHEDULE NOTES

1. PAINT ALL EXTERIOR HOLLOW METAL DOORS AND FRAMES, PER FINISH PAINT SCHEDULE IN SPECIFICATION SECTION 09 90 00.
2. FOR EXTERIOR PAINTING, SEE FINISH PAINT SCHEDULE IN SPECIFICATION SECTION 09 90 00.
3. PAINT SYSTEM "A" AT ITEMS NOT COVERED ABOVE, INCLUDING:
   3.1. NON-STRUCTURAL METAL FABRICATIONS NOT FACTORY FINISHED
   3.2. SHEET METAL FLASHINGS THAT ARE NOT FACTORY FINISHED
   3.3. ROOF ACCESSORIES THAT ARE NOT FACTORY FINISHED
4. FLOOR SEALER, SEE SPECIFICATION 09 62 00.

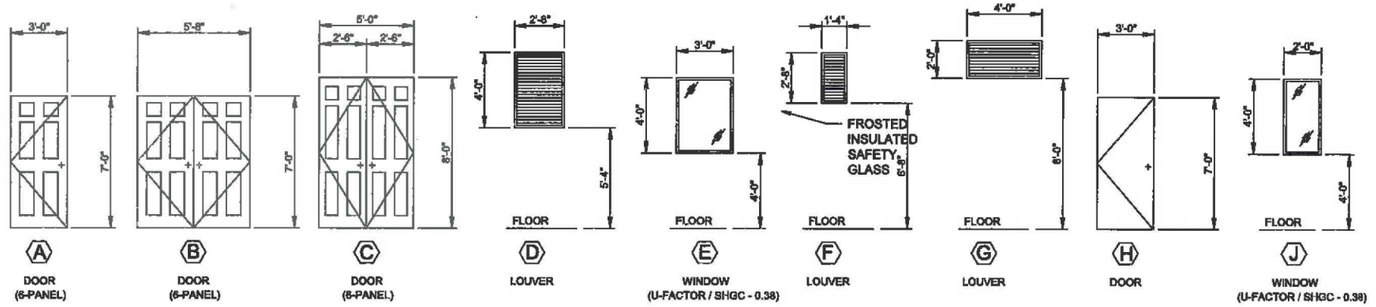

⟨A⟩ DOOR (6-PANEL) ⟨B⟩ DOOR (6-PANEL) ⟨C⟩ DOOR (6-PANEL) ⟨D⟩ LOUVER ⟨E⟩ WINDOW (U-FACTOR / SHGC - 0.38) ⟨F⟩ LOUVER ⟨G⟩ LOUVER ⟨H⟩ DOOR ⟨J⟩ WINDOW (U-FACTOR / SHGC - 0.38)

DOOR / LOUVER / WINDOW ELEVATIONS

ISSUED FOR CONSTRUCTION

ANY PRINTS NOT BEARING THIS STAMP MAY HAVE BEEN PRINTED PRIOR TO ADVERTISING AND CANNOT BE CONSIDERED AS BID DOCUMENTS. USERS OF THIS DOCUMENT IN EDITABLE ELECTRONIC FORMATS ARE CAUTIONED AGAINST USE WITHOUT FIRST DETERMINING WHETHER CHANGES MAY HAVE BEEN MADE SUBSEQUENT TO ITS PREPARATION.

NO	REVISION	DATE	BY

SCALES
0 1"
0 25mm
IF THIS BAR IS NOT DIMENSION SHOWN, ADJUST SCALES ACCORDINGLY.

4455 REGISTERED ARCHITECT
Date & Time: Aug 24, 2021 13:18:23 PDT
MARK PRESTON
STATE OF WASHINGTON

DESIGNED	MP
DRAWN	MP
CHECKED	PDS

CITY OF GIG HARBOR, PUBLIC WORKS DEPARTMENT
GIG HARBOR, WASHINGTON
REPLACEMENT OF SANITARY SEWER LIFT STATION #12A

Kennedy Jenks

CODE SUMMARY, NOTES AND SCHEDULES

SCALE	
JOB NO	2097006*00
DATE	AUGUST 2021
SHEET	13 OF 60
	A-01

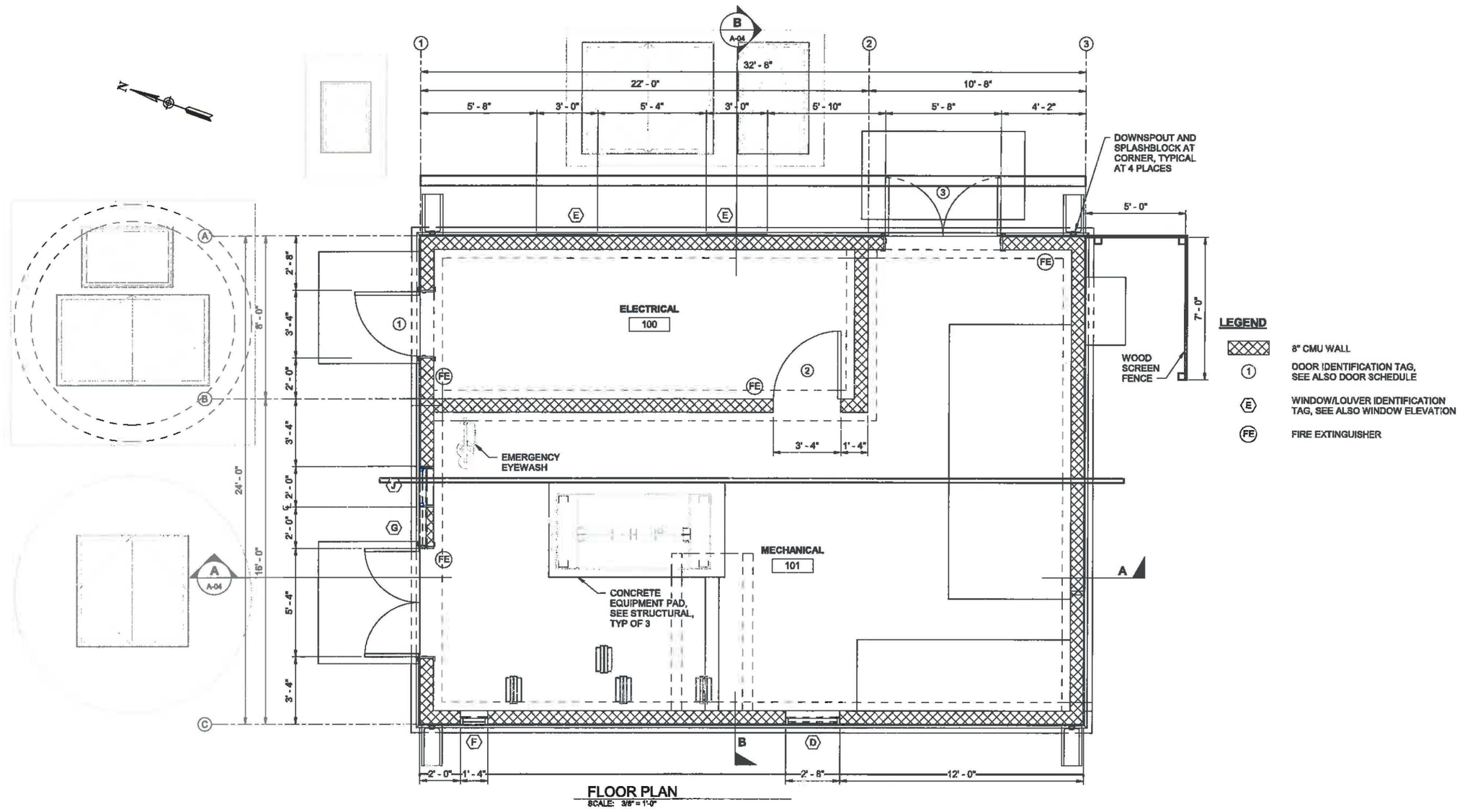

FLOOR PLAN
SCALE: 3/8" = 1'-0"

LEGEND

- 8" CMU WALL
- (1) DOOR IDENTIFICATION TAG, SEE ALSO DOOR SCHEDULE
- (E) WINDOW/LOUVER IDENTIFICATION TAG, SEE ALSO WINDOW ELEVATION
- (FE) FIRE EXTINGUISHER

PLOT DATE: 8/4/2021 2:55:21 PM
PATH AND FILENAME: B:\d01430592097006.00-STRC.rvt
CAD User: MP

ISSUED FOR CONSTRUCTION

ANY PRINTS NOT BEARING THIS STAMP MAY HAVE BEEN PRINTED PRIOR TO ADVERTISING AND CANNOT BE CONSIDERED AS BID DOCUMENTS. USERS OF THIS DOCUMENT IN EDITABLE ELECTRONIC FORMATS ARE CAUTIONED AGAINST USE WITHOUT FIRST DETERMINING WHETHER CHANGES MAY HAVE BEEN MADE SUBSEQUENT TO ITS PREPARATION.

NO	REVISION	DATE	BY

SCALES
0 1"
0 25mm
IF THIS BAR IS NOT DIMENSIONS SHOWN, ADJUST SCALES ACCORDINGLY.

4455 REGISTERED ARCHITECT
Date & Time: Aug 04, 2021 13:19:54 PDT
MARK PRESTON
STATE OF WASHINGTON

DESIGNED	MP
DRAWN	MEJ
CHECKED	PDS

CITY OF GIG HARBOR, PUBLIC WORKS DEPARTMENT
GIG HARBOR, WASHINGTON
REPLACEMENT OF SANITARY SEWER LIFT STATION #12A

Kennedy Jenks

EQUIPMENT BUILDING FLOOR PLAN

SCALE	3/8" = 1'-0"
JOB NO	2081006*00
DATE	AUGUST 2021
SHEET 14 OF 60	A-02

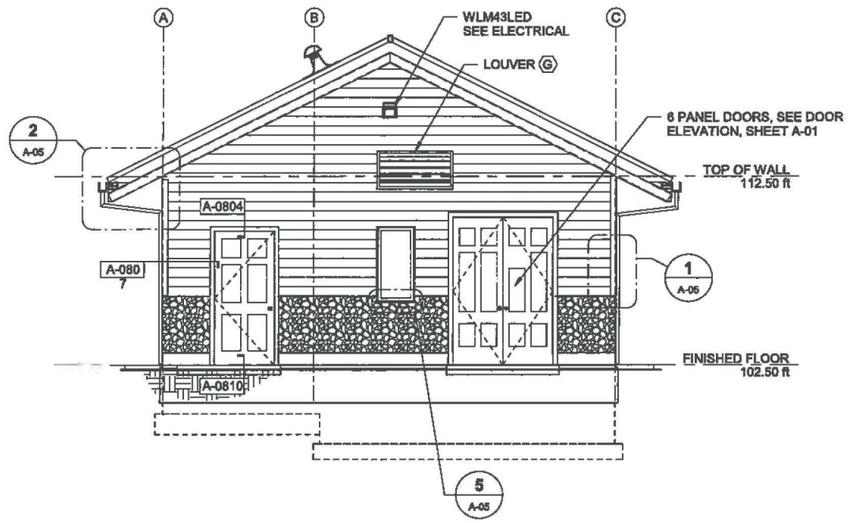

NORTH ELEVATION

SCALE: 1/4" = 1'-0"

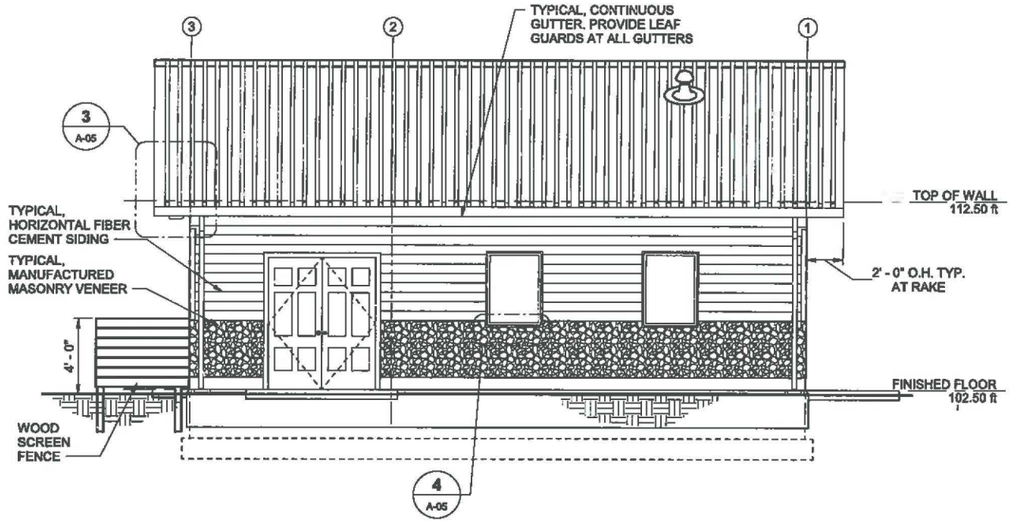

EAST ELEVATION

SCALE: 1/4" = 1'-0"

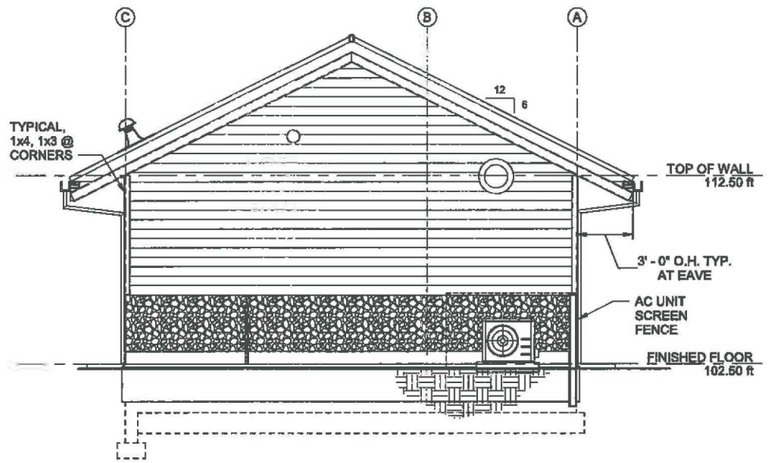

SOUTH ELEVATION

SCALE: 1/4" = 1'-0"

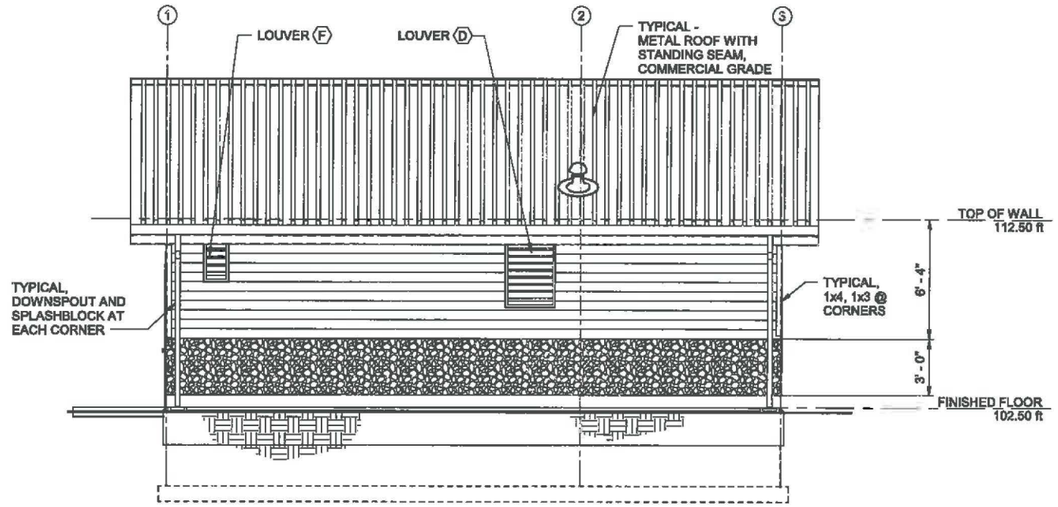

WEST ELEVATION

SCALE: 1/4" = 1'-0"

ISSUED FOR CONSTRUCTION

ANY PRINTS NOT BEARING THIS STAMP MAY HAVE BEEN PRINTED PRIOR TO ADVERTISING AND CANNOT BE CONSIDERED AS BID DOCUMENTS. USERS OF THIS DOCUMENT IN EDITABLE ELECTRONIC FORMATS ARE CAUTIONED AGAINST USE WITHOUT FIRST DETERMINING WHETHER CHANGES MAY HAVE BEEN MADE SUBSEQUENT TO ITS PREPARATION.

NO	REVISION	DATE	BY

SCALES
0 1"
0 25mm
IF THIS BAR IS NOT DIMENSIONS SHOWN, ADJUST SCALES ACCORDINGLY.

4455 REGISTERED ARCHITECT
Date & Time: Aug 24, 2021 13:10:48 PDT
MARK PRESTON
STATE OF WASHINGTON

DESIGNED MP
DRAWN MEJ
CHECKED PDS

CITY OF GIG HARBOR, PUBLIC WORKS DEPARTMENT
GIG HARBOR, WASHINGTON
REPLACEMENT OF SANITARY SEWER LIFT STATION #12A

Kennedy Jenks

EQUIPMENT BUILDING EXTERIOR ELEVATIONS

SCALE 1/4" = 1'-0"
JOB NO 2091006*00
DATE AUGUST 2021
SHEET 15 OF 60
A-03

PLOT DATE: 8/4/2021 2:55:28 PM
PATH AND FILENAME: B:\a0143059\2097006.00-STRC.rvt
CAD User: MP

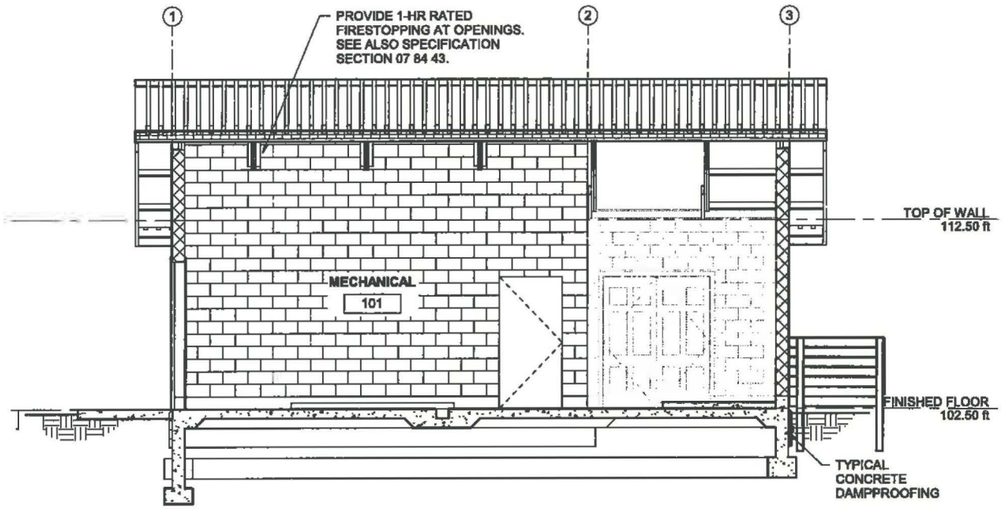

A A-02 **SECTION**
SCALE: 1/4" = 1'-0"

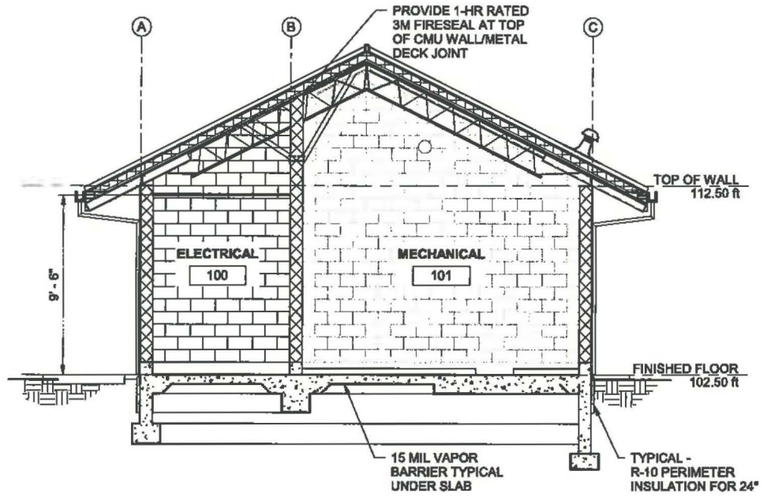

B A-02 **SECTION**
SCALE: 1/4" = 1'-0"

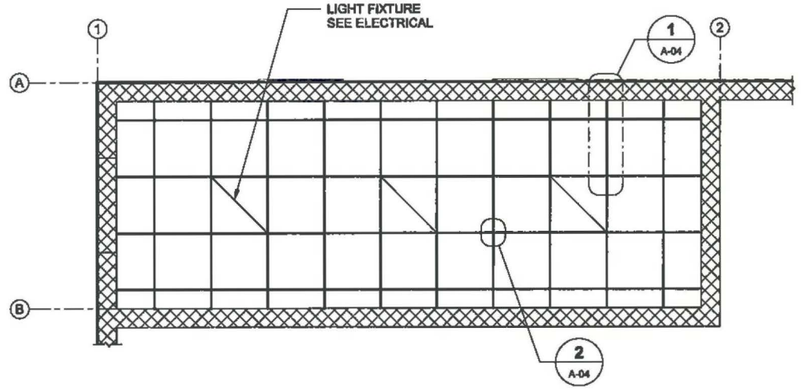

LEGEND

2'x2' CEILING GRID WITH ACOUSTICAL CEILING TILES

2'x2' RECESSED FLUORESCENT FIXTURE

PARTIAL REFLECTED CEILING PLAN
SCALE: 3/8" = 1'-0"

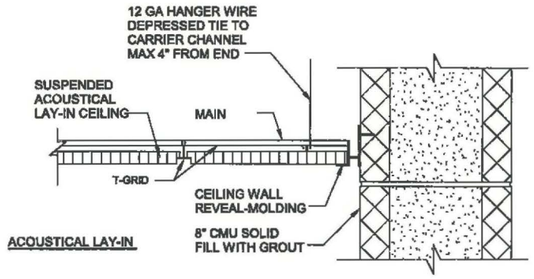

1 A-04 **TYPICAL CEILING DETAIL**
SCALE: 3" = 1'-0"

NOTES:
1) HORIZ RESTRAINT POINTS SHALL BE PLACED 12'-0" O.C. IN BOTH DIRECTIONS W/1ST POINT WITHIN 4'-0" FROM EA. WALL.
2) PROVIDE COMPRESSION STRUT. WIDTH OF PERIMETER SUPPORTING CLOSURE ANGLE SHALL BE NOT LESS THAN 2'-0". ONE END OF CEIL. GRID SHALL BE ATTACHED TO THE CLOSURE ANGLE, THE OTHER END SHALL HAVE BE 3/4" CLR. FROM WALL & SHALL REST UPON & BE FREE TO SLIDE ON CLOSURE ANGLE.
3) REFERENCE ICC-ES, ESR-1222.

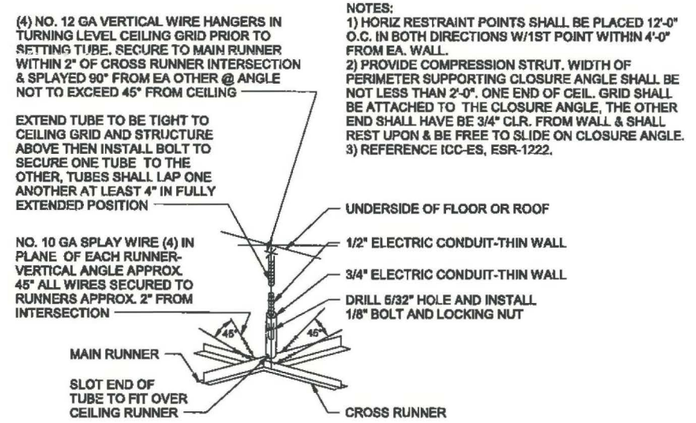

2 A-04 **TYPICAL CEILING UPLIFT RESTRAINT**
SCALE: 1" = 1'-0"

PLOT DATE: 8/4/2021 2:55:31 PM
CAD User: MP
PATH AND FILENAME: B:\091430\5\2097006.00-STRC.rvt

ISSUED FOR CONSTRUCTION

ANY PRINTS NOT BEARING THIS STAMP MAY HAVE BEEN PRINTED PRIOR TO ADVERTISING AND CANNOT BE CONSIDERED AS BID DOCUMENTS. USERS OF THIS DOCUMENT IN EDITABLE ELECTRONIC FORMATS ARE CAUTIONED AGAINST USE WITHOUT FIRST DETERMINING WHETHER CHANGES MAY HAVE BEEN MADE SUBSEQUENT TO ITS PREPARATION.

NO	REVISION	DATE	BY

SCALES
0 1" 0 25mm
IF THIS BAR IS NOT DIMENSIONS SHOWN, ADJUST SCALES ACCORDINGLY.

4455 REGISTERED ARCHITECT
Date & Time: Aug 24, 2021 13:10:08 PDT
MARK PRESTON
STATE OF WASHINGTON

DESIGNED MP
DRAWN MEJ
CHECKED PDS

CITY OF GIG HARBOR, PUBLIC WORKS DEPARTMENT
GIG HARBOR, WASHINGTON
REPLACEMENT OF SANITARY SEWER LIFT STATION #12A

Kennedy Jenks

EQUIPMENT BUILDING SECTIONS AND DETAILS

SCALE AS NOTED
JOB NO 2091006*00
DATE AUGUST 2021
SHEET 16 OF 80
A-04

Plot Date: 8/4/2021 3:22 PM
User: BRYANT BEHNKE

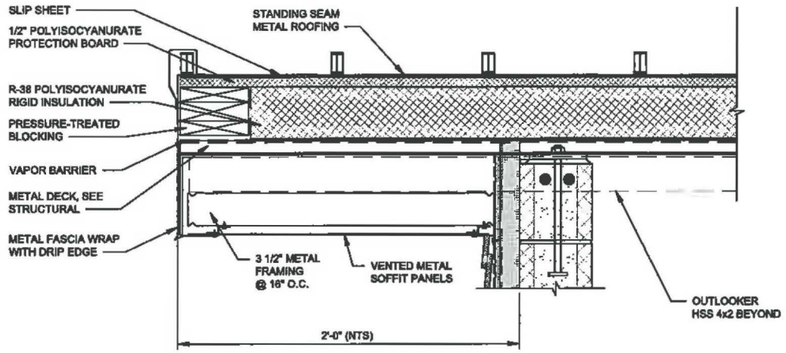

RAKE DETAIL 3 A-03

0 1
1 1/2"=1'-0"

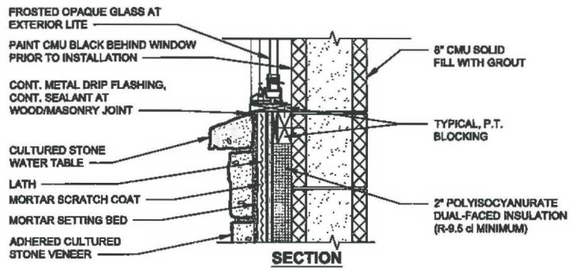

SECTION

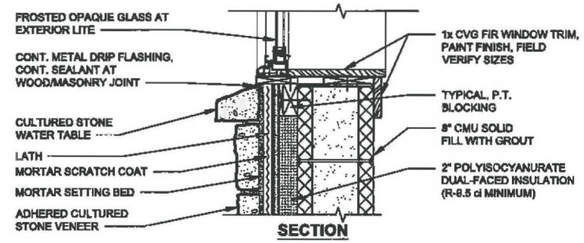

SECTION

FALSE WINDOW SILL 4 A-03

0 1
1 1/2"=1'-0"

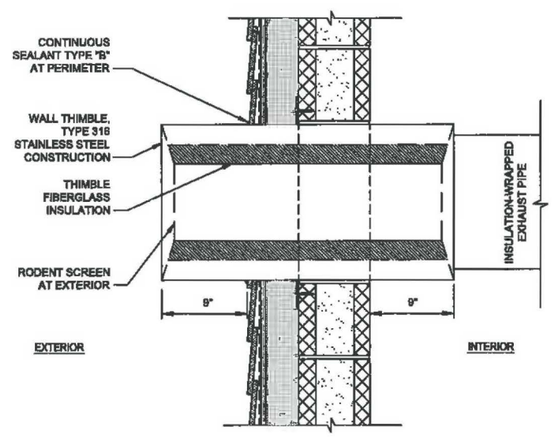

WALL THIMBLE DETAIL 6 A-03

0 1
1 1/2"=1'-0"

WINDOW SILL 5 A-03

0 1
1 1/2"=1'-0"

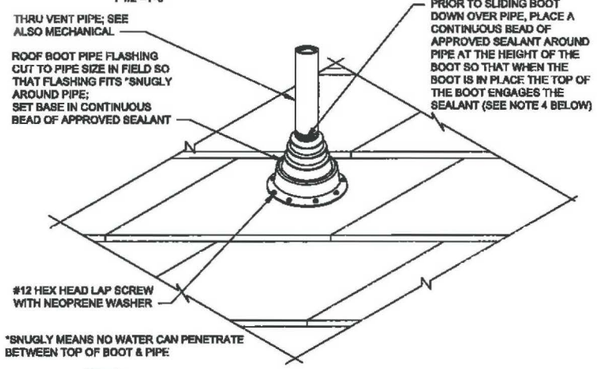

*SNUGLY MEANS NO WATER CAN PENETRATE BETWEEN TOP OF BOOT & PIPE

NOTES:
1. THE ROOF PIPE FLASHING MUST BE FASTENED TO THE PANEL ONLY AND NOT INTO THE ROOF SUBSTRATE TO ALLOW THE PANEL TO MOVE THERMALLY.
2. ADEQUATE CLEARANCE MUST BE LEFT BETWEEN THE PIPE AND THE PANEL TO ALLOW FOR THERMAL MOVEMENT WITHOUT INTERFERENCE.
3. APPLY A SEALED, SMOOTH COLLAR ON PIPE, IF NECESSARY, AT BOOT INTERFACE TO ENSURE PROPER SEAL.

ROOF JACK DETAIL 7 A-03

0 1
1 1/2"=1'-0"

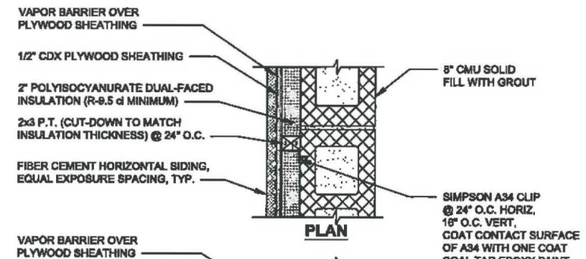

PLAN

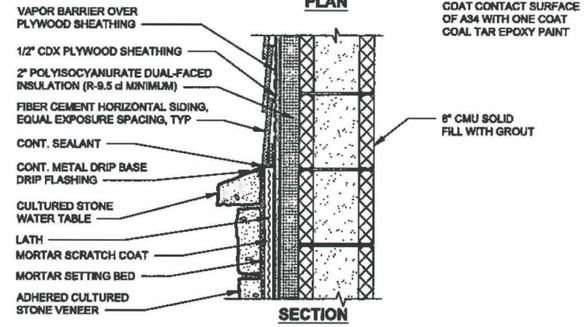

SECTION

SIDING 1 A-03

0 1
1 1/2"=1'-0"

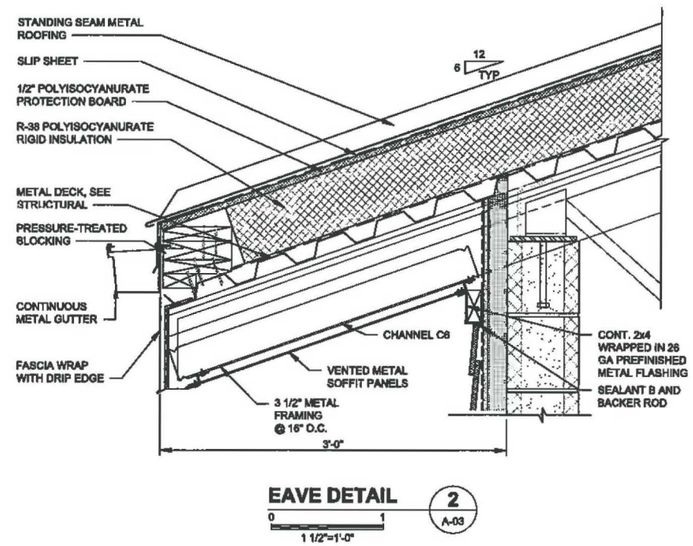

EAVE DETAIL 2 A-03

0 1
1 1/2"=1'-0"

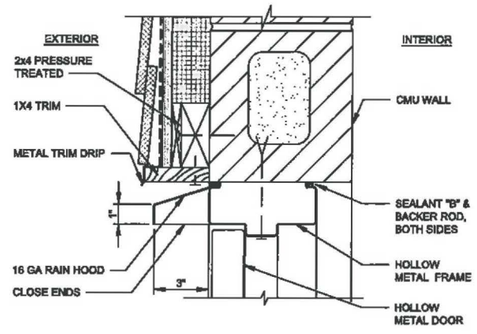

H.M. DOOR HEAD - CMU A-0804

DOOR (2) SIMILAR
(NO EXTERIOR TREATMENT)

SCALE: 3" = 1'-0"
REV 00

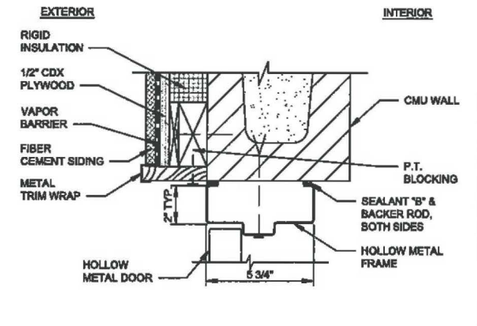

H.M. DOOR JAMB - CMU A-0807

DOOR (2) SIMILAR
(NO EXTERIOR TREATMENT)

SCALE: 3" = 1'-0"
REV 00

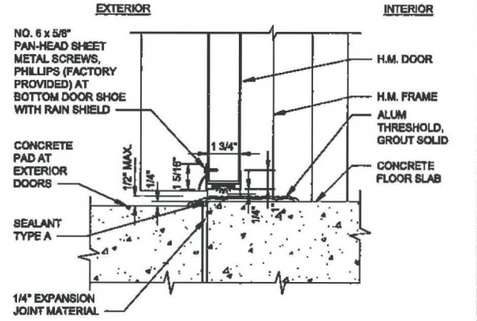

H.M. DOOR SILL - CMU A-0810

SCALE: 3" = 1'-0"
REV 00

ISSUED FOR CONSTRUCTION

ANY PRINTS NOT BEARING THIS STAMP MAY HAVE BEEN PRINTED PRIOR TO ADVERTISING AND CANNOT BE CONSIDERED AS BID DOCUMENTS. USERS OF THIS DOCUMENT IN EDITABLE ELECTRONIC FORMATS ARE CAUTIONED AGAINST USE WITHOUT FIRST DETERMINING WHETHER CHANGES MAY HAVE BEEN MADE SUBSEQUENT TO ITS PREPARATION.

NO	REVISION	DATE	BY

SCALES
0 1" 0 25mm
IF THIS BAR IS NOT DIMENSION SHOWN, ADJUST SCALES ACCORDINGLY.

4455 REGISTERED ARCHITECT
Date & Time: Aug 24, 2021 13:20:18 PDT
MARK PRESTON
STATE OF WASHINGTON

DESIGNED	MP
DRAWN	MP
CHECKED	PDS

CITY OF GIG HARBOR, PUBLIC WORKS DEPARTMENT
GIG HARBOR, WASHINGTON
REPLACEMENT OF SANITARY SEWER LIFT STATION #12A
Kennedy Jenks

ARCHITECTURAL DETAILS

SCALE	
JOB NO	2097006*00
DATE	AUGUST 2021
SHEET	17 OF 60
	A-05

Plot Date: 8/17/2021 7:43 PM

User: JAKE SALTER

STRUCTURAL DESIGN CRITERIA

1. DESIGNED IN ACCORDANCE WITH THE 2018 INTERNATIONAL BUILDING CODE (IBC) INCLUDING LATEST REVISIONS, THE 2019 WASHINGTON ADMINISTRATIVE CODE, EXCEPT WHERE OTHER APPLICABLE CODES OR THE FOLLOWING NOTES ARE MORE RESTRICTIVE.

2. LIVE LOADS:

ROOF, BUILDINGS (REDUCIBLE)	20 PSF, 2,000 LBS POINT
EXIT-WAYS, STAIRS, LANDINGS	100 PSF, 300 LBS/ TREAD
FIXED LADDERS	300 LBS POINT
HANDRAILS, GUARDRAILS AND GRAB BARS	50 PLF AT TOP RAIL, 200 LBS POINT
FLOOR, HEAVY STORAGE (ELECTRICAL / MECHANICAL ROOMS)	250 PSF, 3,000 LBS POINT
FLOOR, LIGHT STORAGE	125 PSF, 2000 LBS POINT
GRATING, CHECKERED PLATE, HATCHES	MATCH FLOOR LIVE LOAD
CONCRETE VAULTS AND COVERS	AASHTO HS-20

3. WIND CRITERIA:

BASIC WIND SPEED, V_{ULT}	110 MPH
EXPOSURE	C
RISK CATEGORY	III
INTERNAL PRESSURE COEFFICIENT	+0.18
COMPONENTS & CLADDING	PER ASCE 7-16

4. SNOW CRITERIA: 25 PSF

5. SEISMIC CRITERIA:

RISK CATEGORY	III
SEISMIC IMPORTANCE FACTOR, I_E	1.5
SEISMIC IMPORTANCE FACTOR, I_S	1.5
MAPPED RESPONSE PARAMETER (SHORT), S_S	1.537g
MAPPED RESPONSE PARAMETER (1-SEC), S_1	0.537g
SITE CLASS	D
DESIGN RESPONSE PARAMETER (SHORT), S_{DS}	1.021g
DESIGN RESPONSE PARAMETER (1-SEC), S_{D1}	0.532g
SEISMIC DESIGN CATEGORY	D
LONG PERIOD TRANSITION PERIOD, T_L	16 SECONDS
ANALYSIS PROCEDURE	EQUIVALENT LATERAL FORCE
BUILDING:	
SEISMIC-FORCE RESISTING SYSTEM	BEARING WALL SYSTEM, SPECIAL REINFORCED MASONRY SHEAR WALLS
RESPONSE MODIFICATION COEFFICIENT, R	5
OVERSTRENGTH FACTOR, Ω_0	2.5
DEFLECTION AMPLIFICATION FACTOR, C_d	3.5
SEISMIC RESPONSE COEFFICIENT, C_S	0.398
DESIGN BASE SHEAR (STRENGTH LEVEL)	V = 24.6 KIPS

DEFERRED SUBMITTALS

IN ACCORDANCE WITH THE 2018 IBC, SECTION 107.3.4.1 SUBMITTAL DOCUMENTS FOR DEFERRED SUBMITTAL ITEMS SHALL BE SUBMITTED TO THE ENGINEER OF RECORD WHO SHALL REVIEW THEM AND FORWARD THEM TO THE AUTHORITY HAVING JURISDICTION WITH A NOTATION INDICATING THAT THE DEFERRED SUBMITTAL DOCUMENTS HAVE BEEN REVIEWED AND THAT THEY HAVE BEEN FOUND TO BE IN GENERAL CONFORMANCE WITH THE DESIGN. THE DEFERRED SUBMITTAL ITEMS SHALL NOT BE INSTALLED UNTIL THE DESIGN AND SUBMITTAL DOCUMENTS HAVE BEEN APPROVED BY THE BUILDING OFFICIAL OR AUTHORITY HAVING JURISDICTION.

PRIOR TO ORDERING OR FABRICATION OF ANY MATERIALS, AND PRIOR TO THE INSTALLATION OF THE INDICATED STRUCTURAL ELEMENTS, EQUIPMENT DISTRIBUTIONS SYSTEM, OR COMPONENT AND IT'S ANCHORAGE. THE CONTRACTOR SHALL SUBMIT THE REQUIRED CALCULATIONS, SUPPORTING INFORMATION, AND DRAWINGS FOR REVIEW AND ACCEPTANCE BY THE ENGINEER. ALL DEFERRED SUBMITTALS AND CALCULATIONS SHALL BE IN ACCORDANCE WITH THE 2018 CALIFORNIA BUILDING CODE, INCLUDING THE DESIGN CRITERIA AND SPECIFICATIONS WITHIN THESE CONSTRUCTION DOCUMENTS. ALL DEFERRED SUBMITTAL CALCULATIONS AND DRAWINGS SHALL BE SEALED AND SIGNED BY A REGISTERED PROFESSIONAL CIVIL ENGINEER OR STRUCTURAL ENGINEER LICENSED IN THE STATE OF CALIFORNIA. THE FOLLOWING IS A LIST OF DEFERRED SUBMITTALS THAT ARE EXPECTED TO CONTAIN STRUCTURAL CALCULATIONS OR SAFETY RELATED SYSTEM INFORMATION FOR REVIEW TO MEET THE PROJECT REQUIREMENTS:

DEFERRED SUBMITTAL ITEMS
CONCRETE MIX DESIGN (S)
ANCHORAGE FOR ELECTRICAL AND MECHANICAL EQUIPMENT, ENCLOSURES, TANKS / VESSELS
PRE-ENGINEERED METAL TRUSS FRAMING AND BLOCKING/BRACING
PIPE SUPPORTS AND ANCHORAGE (AS IDENTIFIED ON THE CONTRACT DOCUMENTS)

GOVERNING CODES	
CONCRETE	ACI 318-14
GENERAL	IBC 2018
STEEL	AISC 360-16
MASONRY	TMS 402 / 602-16
WELDING	AWS D1.1-16

GENERAL

1. THE DESIGN AND CONSTRUCTION SHALL CONFORM TO THE 2018 INTERNATIONAL BUILDING CODE (IBC), AND THE REFERENCED BUILDING CODE STANDARDS.
2. THESE NOTES AS WELL AS THE TYPICAL DETAILS APPLY TO ALL PARTS OF THE PROJECT, UNLESS NOTED OTHERWISE.
3. SHOP DRAWINGS FOR THIS CONTRACT SHALL BE COORDINATED WITH FAVORABLY REVIEWED EQUIPMENT MANUFACTURER'S DRAWINGS.
4. DIMENSIONS NOTED WITH AN ASTERISK, "*", ARE TO BE COORDINATED WITH FAVORABLY REVIEWED SUBMITTAL BY THE EQUIPMENT MANUFACTURER.

PERMITS AND INSPECTIONS

1. THE CONTRACTOR IS RESPONSIBLE FOR OBTAINING ALL PERMITS AND COORDINATING ALL INSPECTIONS REQUIRED BY THE SPECIAL INSPECTOR AND AS DESCRIBED IN THE CONTRACT DOCUMENTS.
2. THE CONTRACTOR SHALL NOTIFY THE SPECIAL INSPECTOR AT LEAST (5) FIVE WORKING DAYS PRIOR TO EACH SPECIAL INSPECTIONS AND TESTING REQUIRED. THE CONTRACTOR SHALL PROVIDE ACCESS TO THE WORK REQUIRED FOR SPECIAL INSPECTIONS AND TESTING.
3. THE CONTRACTOR SHALL DESIGN, DETAIL, FABRICATE, INSTALL AND MAINTAIN SHORING, SHEETING, BRACING AND SLOPING AS NECESSARY TO MAINTAIN SAFE EXCAVATIONS. THE CONTRACTOR SHALL BE RESPONSIBLE FOR ENSURING FULL COMPLIANCE WITH 29 CFR PART 1926 OSHA SUBPART P EXCAVATIONS AND TRENCHES REQUIREMENTS. ALL EARTHWORK SHALL BE PERFORMED IN STRICT ACCORDANCE WITH APPLICABLE LAW, INCLUDING LOCAL ORDINANCES, AND APPLICABLE OSHA REQUIREMENTS.

SOIL AND FOUNDATIONS

1. GEOTECHNICAL INVESTIGATIONS FOR DESIGN PURPOSES FOR THIS PROJECT WERE MADE FOR GIG HARBOR SANITARY SEWER LIFT STATION NO. 12 BY LANDAU ASSOCIATES, 955 MAIN LANE SW, SUITE B, TUMWATER, WA 98501. IN A REPORT DATED OCTOBER 8, 2020. THE GEOTECHNICAL REPORT IS PART OF THE CONSTRUCTION DOCUMENTS.
2. ALLOWABLE BEARING CAPACITY OF SOILS ARE REPORTED FOR DEAD AND LIVE LOADS ONLY. ALLOWABLE BEARING VALUES MAY BE INCREASED BY ONE-THIRD WHEN TRANSIENT LOADS SUCH AS WIND OR SEISMIC LOADS ARE INCLUDED. THE FOUNDATIONS DESIGN PARAMETERS ARE AS FOLLOWS:

MAT FOUNDATIONS, CONTINUOUS FOOTINGS	
ALLOWABLE BEARING PRESSURE	2,500 PSF
COEFFICIENT OF FRICTION	0.35
ALLOWABLE PASSIVE PRESSURE PRESSURE	270 PSF/FT
MINIMUM DEPTH BELOW GRADE	24 INCHES
MINIMUM WIDTH OF FOOTING	18 INCHES
MODULUS OF SUBGRADE REACTION	175 KIPS /FT^3

3. SOILS SHALL BE EXCAVATED TO THE ELEVATIONS INDICATED IN ACCORDANCE WITH THE CONTRACT DOCUMENTS. THE SUBGRADE SHALL BE PREPARED IN ACCORDANCE WITH THE CONTRACT DOCUMENTS, AND REVIEWED BY THE GEOTECHNICAL ENGINEER. EXCAVATED MATERIAL SHALL BE REPLACED WITH STRUCTURAL FILL IN ACCORDANCE WITH THE CONTRACT DOCUMENTS. FOUNDATIONS SHALL BE CONSTRUCTED AGAINST UNDISTURBED NATIVE COMPETENT MATERIAL OR COMPACTED STRUCTURAL FILL.

CONDUIT COORDINATION

1. ELECTRICAL CONDUIT AND PIPES ENCASED IN CONCRETE FOUNDATIONS OR STRUCTURAL MEMBERS SHALL NOT BE SUPPORTED DIRECTLY ON REINFORCING STEEL.
2. REINFORCEMENT SHALL NOT BE CUT, BENT, OR RELOCATED.
3. CONDUIT SHALL MAINTAIN A MINIMUM OF 2-INCHES CLEAR TO REINFORCEMENT.
4. CONDUIT RUNNING PARALLEL TO REINFORCEMENT:
   - 4.1. THE OUTSIDE DIAMETER OF THE CONDUIT SHALL NOT EXCEED ONE-THIRD OF THE MEMBER THICKNESS.
   - 4.2. CONDUIT SHALL NOT BE SPACED CLOSER THAN 3 OUTSIDE DIAMETERS ON CENTER.
   - 4.3. CONDUIT SHALL BE LOCATED WITHIN THE MIDDLE THIRD OF THE FOUNDATION OR STRUCTURAL MEMBER, ONLY.
5. CONDUIT RUNNING PERPENDICULAR TO REINFORCEMENT: COORDINATE PLACEMENT TO AVOID OR MINIMIZE IMPACT TO REINFORCEMENT PLACEMENT.
6. CONDUITS THAT DAYLIGHT TO THE EDGE OF FOUNDATIONS OR STRUCTURAL MEMBERS SHALL BE REINFORCED ON FOUR SIDES WITH (2) #5 TRIM BARS, SPACED 2-INCHES APART, IN-PLANE WITH TYPICAL REINFORCEMENT, LAP WITH TYPICAL REINFORCEMENT, UNLESS SHOWN ON THE DRAWINGS.

REINFORCING STEEL (FOR CONCRETE)

1. REINFORCING STEEL (DEFORMED BARS) SHALL BE ASTM A615, GRADE 60.
2. WELDED WIRE FABRIC SHALL CONFORM TO ASTM A185.
3. ARRANGEMENT AND DETAILING OF REINFORCING STEEL, INCLUDING BAR SUPPORTS AND SPACERS, SHALL BE IN ACCORDANCE WITH THE LATEST ACI 315 DETAILING MANUAL.
4. REINFORCING SHALL LAP IN ACCORDANCE WITH THE CONCRETE REINFORCEMENT SPLICE TABLE, UNLESS OTHERWISE SHOWN. DOWELS SHALL HAVE THE SAME SIZE AND SPACING AS THAT OF THE REINFORCING STEEL, UNLESS OTHERWISE NOTED.
5. HOOK REINFORCING BARS SHALL NOT BE INTERRUPTED BY OPENINGS.
6. NO WELDING OF REINFORCING BARS SHALL BE PERMITTED, UNLESS APPROVAL IN WRITING IS OBTAINED FROM THE ENGINEER OF RECORD PRIOR TO CONSTRUCTION.
7. DIMENSIONS TO REINFORCING ARE TO BAR CENTERLINES, UNLESS NOTED OTHERWISE. BAR COVER IS CLEAR DISTANCE BETWEEN THE BAR AND THE CONCRETE SURFACE. UNLESS NOTED OR SHOWN OTHERWISE BAR COVER FOR REINFORCING STEEL SHALL BE AS FOLLOWS:

FOOTINGS AND BASE SLABS (FOR CONCRETE):	
FORMED SURFACES AND BOTTOMS ON CONCRETE WORK MAT	2-INCH
TOP SURFACES EXPOSED TO EARTH, WATER, OR WEATHER	2-INCH
BOTTOMS AND SIDES IN CONTACT WITH EARTH	3-INCH
WALLS:	
LESS THAN 12-INCHES THICK	1-1/2-INCH
12 INCHES OR OVER IN THICKNESS	2-INCH

CONCRETE

1. THE CONCRETE MIX DESIGNS SHALL BE A DEFERRED SUBMITTAL, SEALED AND SIGNED BY A PROFESSIONAL CIVIL OR STRUCTURAL ENGINEER IN WASHINGTON AND SUBMITTED FOR REVIEW. CONCRETE MIX DESIGNS SHALL BE IN ACCORDANCE WITH ACI 318-14 AND ACI 301-16. THE MINIMUM 28-DAY COMPRESSIVE STRENGTH (PSI) AS NOTED IN THE TABLE BELOW:

CONCRETE COMPRESSIVE STRENGTH TABLE		
TYPE ID	(f'c) AT 28 DAYS	LOCATION
A	4,000 PSI	FOUNDATIONS, SLABS-ON-GRADE
B	3,000 PSI	SIDEWALKS, RAMPS, MISCELLANEOUS STRUCTURES
G	2,500 PSI	PIPE ENCASEMENT

2. CONCRETE CONSTRUCTION SHALL CONFORM TO ACI 301-16, ACI 318-14, ACI 347-14, AND ACI 350-06, INCLUDING BAR BENDS AND HOOKS, UNLESS DETAILED OTHERWISE.
3. SUBMIT CONCRETE POUR SEQUENCE DRAWINGS SHOWING THE LOCATION OF CONSTRUCTION JOINTS, WATERSTOPS AND OTHER TYPES OF JOINTS OTHER THAN SPECIFIED OR SHOWN ON THE DRAWINGS FOR FAVORABLE REVIEW BY THE ENGINEER BEFORE START OF WORK ON FORMS, REINFORCING STEEL OR PLACING CONCRETE. ANY ADDITIONAL VERTICAL OR HORIZONTAL CONSTRUCTION JOINTS SHALL HAVE A STANDARD KEYWAY AND SHALL BE FAVORABLY REVIEWED BY THE ENGINEER. REFER TO CONTRACT DOCUMENTS AND TYPICAL DETAILS FOR ADDITIONAL INFORMATION. CONSTRUCTION JOINTS SHALL BE ROUGHENED TO 1/4-INCH AMPLITUDE.
4. OPENINGS, PIPE SLEEVES, CONDUITS, INSERTS AND OTHER EMBEDDED ITEMS SHALL BE IN PLACE BEFORE CONCRETE IS PLACED. IT IS THE CONTRACTOR'S RESPONSIBILITY TO COORDINATE ARCHITECTURAL, CIVIL, MECHANICAL, ELECTRICAL, LANDSCAPING, HVAC, PLUMBING, INSTRUMENTATION AND OTHER PLANS FOR ITEMS REQUIRING SLEEVES AND EMBEDMENTS IN CONCRETE WHICH ARE NOT INDICATED OR SHOWN ON STRUCTURAL DRAWINGS. NO PIPES OR SLEEVES SHALL PASS THROUGH STRUCTURAL MEMBERS (UNLESS SHOWN ON STRUCTURAL DRAWINGS). COORDINATE WITH EQUIPMENT MANUFACTURERS DRAWINGS FOR ANCHORING DEVICES.
5. UNLESS OTHERWISE NOTED, ALL EXPOSED EDGES AND CORNERS SHALL BE CHAMFERED 3/4-INCH. INTERIOR FLOOR SLABS AND EXTERIOR SIDEWALKS SHALL HAVE TOOLED 3/8-INCH RADIUS CONSTRUCTION JOINT.
6. PROVIDE TROWEL FINISH AT HORIZONTAL SURFACES IN ACCORDANCE WITH ACI 301.
7. FOUNDATIONS SHALL BE PER THE CONTRACT DOCUMENTS. IF NOT SHOWN, EACH FACE CONCRETE SHALL BE REINFORCED WITH # 5 BARS AT 12-INCHES EACH WAY, UNLESS OTHERWISE NOTED.
8. CONCRETE ENCASE ALL PIPES AND CONDUITS UNDER CONCRETE SLABS, FOUNDATIONS, AND STRUCTURES.
9. CONCRETE SHALL BE PLACED AND CURED BETWEEN 50 AND 90 DEGREES F. CONCRETE SHALL NOT BE PLACED WHEN THE AMBIENT TEMPERATURE EXCEEDS 90 DEGREES F.

REINFORCED CONCRETE MASONRY UNITS (CMU)

1. REINFORCED CONCRETE MASONRY CONSTRUCTION SHALL BE IN ACCORDANCE WITH TMS 602-16 AND THE 2018 IBC. REINFORCED CONCRETE MASONRY UNITS SHALL BE HOLLOW, LOAD BEARING, FULLY GROUTED, AND CONFORMING TO THE FOLLOWING:

UNIT (BLOCK) CONFORMANCE	ASTM C90
UNIT TYPE	MEDIUM WEIGHT
UNIT PLACEMENT	RUNNING BOND
UNIT COMPRESSIVE STRENGTH	
COMBINED MASONRY ASSEMBLAGE	2,000 PSI
NET AREA COMPRESSIVE STRENGTH AT 28 DAYS	f'm = 2,000 PSI
REINFORCING STEEL (DEFORMED BARS)	ASTM, A615, GRADE 60

2. MORTAR SHALL BE IN ACCORDANCE WITH ASTM C270, TYPE M OR S. JOINTS SHALL BE 3/8" AND TOOLED CONCAVE. PROPORTION MORTAR TO CONFORM TO THE REQUIREMENTS OF ASTM C270. SAND FOR MORTAR SHALL CONFORM TO ASTM C144.
3. GROUT SHALL BE IN ACCORDANCE WITH ASTM C476, WITH A MINIMUM COMPRESSIVE STRENGTH OF 2,000 PSI. PROPORTION COARSE GROUT IN ACCORDANCE WITH ASTM C476. COMPRESSIVE STRENGTH SHALL BE TESTED IN ACCORDANCE WITH ASTM C1019. INCREASE CEMENT CONTENT OF THE GROUT, AS NECESSARY, TO ACHIEVE THE COMBINED MASONRY ASSEMBLY NET AREA COMPRESSIVE STRENGTH (f'm) AND ADEQUATE WORKABILITY. GROUT SHALL HAVE A SLUMP BETWEEN 8 AND 10-INCHES AT THE TIME OF PLACEMENT. ALL GROUT SHALL BE CONSOLIDATED BY MECHANICAL VIBRATION UNLESS SELF CONSOLIDATING GROUT HAS BEEN SPECIFICALLY APPROVED BY THE ENGINEER OF RECORD. AGGREGATE FOR GROUT SHALL CONFORM TO ASTM C404, EXCEPT WHEN OTHER GRADINGS ARE SPECIFICALLY APPROVED BY THE ENGINEER.
4. ANY MORTAR UNUSED WITHIN 2 HOURS OR GROUT THAT IS UNUSED WITHIN 1-1/2 HOURS AFTER INITIAL MIXING SHALL BE REMOVED FROM THE WORK. WATER USED FOR MORTAR AND GROUT SHALL BE CLEAN AND FREE FROM DELETERIOUS AMOUNTS OF ACIDS, SALTS, ALKALI, AND ORGANIC MATERIALS.
5. CMU SHALL CONTAIN AND INTEGRAL WATER-REPELLANT ADMIXTURE IN ACCORDANCE WITH ASTM E-514, GRADE E. REFERENCE THE SPECIFICATIONS FOR ADDITIONAL INFORMATION.

STRUCTURAL STEEL SPECIFICATION TABLE			
STEEL TYPE	SHAPE SERIES	ASTM DESIGNATION	MINIMUM YIELD STRENGTH
HIGH-STRENGTH LOW-ALLOY	Wx AND WTx	ASTM A992	Fy = 50 KSI
	PLATES CONNECTING TO Wx AND WTx SHAPES	ASTM A572	Fy = 50 KSI
CARBON STEEL	ANGLES, CHANNELS, PLATES, OTHER SHAPES	ASTM A36	Fy = 36 KSI
	STRUCTURAL PIPES	ASTM A53, GRADE B (TYPE E OR S)	Fy = 35 KSI
	ROUND HSS	ASTM A500, GRADE C	Fy = 46 KSI
	RECTANGULAR HSS	ASTM A500, GRADE C	Fy = 50 KSI

STRUCTURAL OBSERVATIONS:

STRUCTURAL OBSERVATION IS THE VISUAL OBSERVATION OF THE STRUCTURAL SYSTEM, STRUCTURAL ELEMENTS, AND THEIR CONNECTIONS FOR GENERAL CONFORMANCE TO THE CONTRACT DOCUMENTS AT SIGNIFICANT CONSTRUCTION STAGES AND AT THE COMPLETION OF THE STRUCTURAL SYSTEMS. STRUCTURAL OBSERVATION DOES NOT INCLUDE OR WAIVE THE RESPONSIBILITY FOR INSPECTIONS REQUIRED BY CHAPTER 17 OF THE 2018 INTERNATIONAL BUILDING CODE OR THE CONTRACT DOCUMENTS. ALL STRUCTURAL OBSERVATIONS SHALL BE IN ACCORDANCE WITH CHAPTER 1704.6 OF THE 2018 INTERNATIONAL BUILDING CODE. THE OWNER SHALL RETAIN A REGISTERED DESIGN PROFESSIONAL (LICENSED IN WASHINGTON) OR THE ENGINEER OF RECORD TO PERFORM ALL THE STRUCTURAL OBSERVATIONS REQUIRED.

THE CONTRACTOR OR CONSTRUCTION MANAGER SHALL NOTIFY THE ENGINEER OF RECORD AND PERSONS PERFORMING THE STRUCTURAL OBSERVATION AT LEAST (5) FIVE WORKING DAYS (FOR EACH OBSERVATION) PRIOR TO THE WORK THAT IS REQUIRED TO BE OBSERVED IS COVERED. DEFICIENCIES FOUND DURING THE STRUCTURAL OBSERVATIONS SHALL BE CORRECTED BY THE CONTRACTOR. AT A MINIMUM, STRUCTURAL OBSERVATIONS SHALL BE IN ACCORDANCE WITH THE FOLLOWING TABLE:

STRUCTURAL OBSERVATION TABLE	
CONSTRUCTION SEQUENCE	OBSERVATION ITEMS
SUBGRADE AND SOIL PREPARATION	STRUCTURAL FILL AND SUBGRADE
	VERIFY THE MATERIALS BELOW THE FOUNDATION HAVE BEEN INSTALLED IN CONFORMANCE WITH THE CONTRACT DOCUMENTS
FOUNDATION	REINFORCEMENT FOR BAR SIZES, SPACING, CLEARANCES, DEPTH OF REINFORCEMENT TO TOP OF FORMS, FORMWORK. OBSERVE PRIOR TO CONCRETE PLACEMENT
	PLACEMENT OF WALL DOWELS, LAPS, ANCHOR BOLTS, STEEL EMBEDS, HOLD DOWNS
CONCRETE CONSTRUCTION	REINFORCEMENT FOR SIZES, SPACING, CLEARANCE, OBSERVE PRIOR TO CONCRETE PLACEMENT
	PLACEMENT OF WALL DOWELS, LAPS, ANCHOR BOLTS, HOLD DOWNS, STEEL EMBEDS
MASONRY CONSTRUCTION	PRIOR TO THE FIRST GROUT LIFT, BUT AFTER THE PLACEMENT OF THE REINFORCEMENT: REVIEW AREAS OF PARTICULAR CONCERN, HIGHLY CONGESTED REINFORCEMENT, SHEAR WALLS, LAPS, ADDITIONAL REINF, LINTELS, COLUMNS, CHORD REINFORCEMENT
	OBSERVE THE PLACEMENT OF ANCHOR BOLTS, STEEL EMBEDDED PLATES, LEDGERS ANGLES
STRUCTURAL STEEL AND METAL DECK	STEEL TANK OBSERVATIONS IN ACCORDANCE WITH AWWA D100
	OBSERVE WORK IN PROGRESS FOR STRUCTURAL SHAPES AND SIZES, COLUMN AND FRAMING LOCATIONS, BOLTS, AND WELDING.
	INSTALLATION OF METAL DECK AFTER PLACEMENT AND WELDING IS COMPLETE. CONFIRM WITH THE SPECIAL INSPECTOR ALL WELDING HAS BEEN COMPLETED IN ACCORDANCE WITH THE CONTRACT DOCUMENTS WITH AN APPROVED WELDER

STRUCTURAL ABBREVIATIONS

&	AND	KIP	1,000 POUNDS
@	AT	KSI	KIPS PER SQUARE INCH
#	NUMBER		
Ø	DIAMETER	L, ∠	ANGLE
ℓ_d	DEVELOPMENT LENGTH	LB(S)	POUNDS
AASHTO	AMERICAN ASSOCIATION OF STATE HIGHWAY TRANSPORTATION OFFICIAL	LB/SF	POUND(S) PER SQUARE FOOT
		LL	LIVE LOAD
		LLH	LONG LEG HORIZONTAL
AB	AGGREGATE BASE, ANCHOR BOLT	LLV	LONG LEG VERTICAL
ACI	AMERICAN CONCRETE INSTITUTE	LLBB	LONG LEG BACK-TO-BACK
		LONGIT	LONGITUDINAL
ADDIT	ADDITIONAL	LT	LIGHT
ADJ	ADJACENT	LW	LIGHT WEIGHT
AISC	AMERICAN INSTITUTE OF STEEL CONSTRUCTION	MATL	MATERIAL
AISI	AMERICAN IRON AND STEEL INSTITUTE	MAX	MAXIMUM
		MB	MACHINE BOLT
AITC	AMERICAN INSTITUTE OF TIMBER CONSTRUCTION	MC	MOISTURE CONTENT
		MC	MISCELLANEOUS CHANNEL
ALUM	ALUMINUM	MECH	MECHANICAL
ALT	ALTERNATE	MFR	MANUFACTURER
ANSI	AMERICAN NATIONAL STANDARDS INSTITUTE	MIN	MINIMUM
		MISC	MISCELLANEOUS
APA	AMERICAN PLYWOOD ASSOCIATION	MSE	MECHANICALLY STABILIZED EARTH
API	AMERICAN PETROLEUM INSTITUTE	N/A	NOT APPLICABLE
APROX	APPROXIMATE	(N)	NEW
ARCH	ARCHITECTURAL	NDT	NON-DESTRUCTIVE TEST(ING)
ASCE	AMERICAN SOCIETY OF CIVIL ENGINEERS	NFPA	NATIONAL FIRE PROTECTION ASSOCIATION
ASTM	AMERICAN SOCIETY FOR TESTING AND MATERIALS	NIC	NOT IN CONTACT
		NO.	NUMBER
ASME	AMERICAN SOCIETY OF MECHANICAL ENGINEERS	NOM	NOMINAL
		NS	NEAR SIDE
AWS	AMERICAN WELDING SOCIETY	NSG	NON-SHRINK GROUT
AWWA	AMERICAN WATER WORKS ASSOCIATION	NTS	NOT TO SCALE
		OC	ON CENTERS
B/	BOTTOM OF	OD	OUTSIDE DIAMETER
BB(S)	BEARING BAR(S)	OH	OPPOSITE HAND, OVERHEAD
BLKG	BLOCKING	OPNG(S)	OPENING(S)
BLDG	BUILDING	OPP	OPPOSITE
BM	BEAM	OSHA	OCCUPATIONAL SAFETY AND HEALTH ASSOCIATION
BN	BOUNDARY NAILING		
BOF	BOTTOM OF FOOTING		
BOT	BOTTOM	PAF	POWDER/POWER ACTUATED FASTENER
BP	BASE PLATE	PER	PERIODIC
		PEMB	PRE-ENGINEERED METAL BUILDING
C	CHANNEL		
CALC'S	CALCULATIONS	PL	PLATE
CC,C/C	CENTER-TO-CENTER	PLF	POUND PER LINEAL FOOT
CBC	CALIFORNIA BUILDING CODE	PP	PARTIAL PENETRATION
CIP	CAST IN PLACE	PSF	POUND PER SQUARE FOOT
CJ	CONSTRUCTION JOINT	PSI	POUND PER SQUARE INCH
CJP	COMPLETE JOINT PENETRATION	PT(S)	POINT(S)
℄	CENTERLINE	PT	PRESSURE TREATED
CLSM	CONTROLLED LOW STRENGTH MATERIAL	R, RAD	RADIUS
CLR	CLEAR	RECT	RECTANGLE, RECTANGULAR
CNJ	CONTROL JOINT	REINF	REINFORCING, -MENT
COL	COLUMN	REQ'D	REQUIRED
CONC	CONCRETE		
CONN	CONNECTION	SCH	SCHEDULE
CONST	CONSTRUCTION	SF	SQUARE FOOT
CONT	CONTINUOUS	SHT	SHEET
		SIM	SIMILAR
DBL	DOUBLE	SJI	STEEL JOIST INSTITUTE
DIA	DIAMETER	SLBB	SHORT LEGS BACK-TO-BACK
DIAG	DIAGONAL	SLH	SHORT LEG HORIZONTAL
DIM	DIMENSION	SLV	SHORT LEG VERTICAL
DL	DEAD LOAD	SMS	SHEET METAL SCREW
DN	DOWN	SPEC(S)	SPECIFICATION(S)
DWG(S)	DRAWINGS	SQ.	SQUARE
		SS	STAINLESS STEEL
(E)	EXISTING	SSD	SATURATED SURFACE DRY
EA	EACH	STAG	STAGGER
EF	EACH FACE	STD	STANDARD
EL	ELEVATION	STIFF	STIFFENER
ELEC	ELECTRICAL	STL	STEEL
EMBED	EMBEDMENT	STRUC	STRUCTURE
EN	EDGE NAILING	SUSP	SUSPENDED
EQ	EQUAL	SYM	SYMMETRICAL
EQUIP	EQUIPMENT		
ES	EACH SIDE	T/	TOP OF
EW	EACH WAY	TBD	TO BE DETERMINED
EXP	EXPANSION	T&B	TOP AND BOTTOM
EXT	EXTERIOR	TS	STRUCTURAL TUBING
		TYP	TYPICAL
(F)	FUTURE		
FD	FLOOR DRAIN	UON	UNLESS OTHERWISE NOTED
FF	FINISH FLOOR	UT	ULTRASONIC TESTING
FIN	FINISH		
FLR	FLOOR	VERT	VERTICAL
FN	FIELD NAILING	VIF	VERIFY IN FIELD
FNDN	FOUNDATION		
FS	FAR SIDE	W/	WITH
FT	FOOT/FEET	W/O	WITHOUT
FTG	FOOTING	W, Wx	WIDE FLANGE
		WCLIB	WEST COAST LUMBER INSPECTION BUREAU
GA	GAGE/GAUGE		
GALV	GALVANIZED	WP	WORK POINT
GLB	GLULAM BEAM	WSTP	WATERSTOP
		WT, WTx	WEIGHT, STRUCTURAL TEE
HDG	HOT DIP GALVANIZE(D)		WALL THICKNESS
HORIZ	HORIZONTAL	WWF	WELDED WIRE FABRIC
HSS	HOLLOW STRUCTURAL SECTION		
HT	HEIGHT		
HWL	HIGH WATER LEVEL		
IBC	INTERNATIONAL BUILDING CODE		
ICC	INTERNATIONAL CODE COUNCIL		
IN	INCH		
INT	INTERIOR		
JT	JOINT		

ISSUED FOR CONSTRUCTION

ANY PRINTS NOT BEARING THIS STAMP MAY HAVE BEEN PRINTED PRIOR TO ADVERTISING AND CANNOT BE CONSIDERED AS BID DOCUMENTS. USERS OF THIS DOCUMENT IN EDITABLE ELECTRONIC FORMATS ARE CAUTIONED AGAINST USE WITHOUT FIRST DETERMINING WHETHER CHANGES MAY HAVE BEEN MADE SUBSEQUENT TO ITS PREPARATION.

NO	REVISION	DATE	BY

SCALES
0 1"
0 25mm
IF THIS BAR IS NOT DIMENSION SHOWN, ADJUST SCALES ACCORDINGLY.

JAKE DARIN SALTER, STATE OF WASHINGTON, 52076, REGISTERED PROFESSIONAL ENGINEER

DESIGNED ESK
DRAWN ESK
CHECKED PDS

CITY OF GIG HARBOR, PUBLIC WORKS DEPARTMENT
GIG HARBOR, WASHINGTON
REPLACEMENT OF SANITARY SEWER LIFT STATION #12A
Kennedy Jenks

STRUCTURAL GENERAL NOTES AND ABBREVIATIONS

SCALE
JOB NO 2097006*00
DATE AUGUST 2021
SHEET 18 OF 59
S-01

Plot Date: 8/9/2021 3:27 PM
User: BRYANT BEHNKE

SPECIAL INSPECTION AND TESTING - GENERAL NOTES

1. THE OWNER OR THE OWNER'S AUTHORIZED AGENT, INDEPENDENT OF THE CONTRACTOR, SHALL EMPLOY ONE OR MORE APPROVED AGENCIES TO PROVIDE SPECIAL INSPECTIONS AND TESTING IN ACCORDANCE WITH CHAPTER 17 OF THE 2018 INTERNATIONAL BUILDING CODE (IBC) AND THE CONTRACT DOCUMENTS DURING CONSTRUCTION ON THE TYPES OF WORK SPECIFIED. STRUCTURAL SPECIAL INSPECTIONS AND TESTING SHALL GOVERN THE QUALITY, WORKMANSHIP AND REQUIREMENTS FOR MATERIALS COVERED. MATERIALS OF CONSTRUCTION AND TESTING SHALL CONFORM TO THE APPLICABLE STANDARDS LISTED IN THE REFERENCED BUILDING CODE AND CONTRACT DOCUMENTS.

2. APPROVED AGENCY: AN ESTABLISHED AND RECOGNIZED AGENCY, INDEPENDENT OF THE CONTRACTOR, THAT IS REGULARLY ENGAGED IN CONDUCTING TESTS OR FURNISHING INSPECTION SERVICES, WHERE SUCH AGENCY HAS BEEN APPROVED BY THE AUTHORITY HAVING JURISDICTION. THE REGISTERED DESIGN PROFESSIONAL IN RESPONSIBLE CHARGE AND ENGINEERS OF RECORD INVOLVED IN THE DESIGN OF THE PROJECT ARE PERMITTED TO ACT AS THE APPROVED AGENCY AS DIRECTED BY THE AUTHORITY HAVING JURISDICTION.

3. ACCESS FOR SPECIAL INSPECTION: THE CONSTRUCTION OR WORK FOR WHICH SPECIAL INSPECTION OR TESTING IS REQUIRED SHALL REMAIN ACCESSIBLE AND EXPOSED FOR SPECIAL INSPECTION OR TESTING PURPOSES UNTIL COMPLETION OF THE REQUIRED SPECIAL INSPECTIONS OR TESTS.

4. REPORT REQUIREMENT: APPROVED AGENCIES SHALL KEEP RECORDS OF SPECIAL INSPECTIONS AND TESTS. THE APPROVED AGENCY SHALL SUBMIT REPORTS OF SPECIAL INSPECTIONS AND TESTS TO THE AUTHORITY HAVING JURISDICTION AND TO THE REGISTERED DESIGN PROFESSIONAL IN RESPONSIBLE CHARGE. REPORTS SHALL INDICATE THAT WORK INSPECTED OR TESTED WAS OR WAS NOT COMPLETED IN CONFORMANCE TO APPROVED CONSTRUCTION DOCUMENTS. DISCREPANCIES SHALL BE BROUGHT TO THE IMMEDIATE ATTENTION OF THE CONTRACTOR FOR CORRECTION. IF THEY ARE NOT CORRECTED, THE DISCREPANCIES SHALL BE BROUGHT TO THE ATTENTION OF THE AUTHORITY HAVING JURISDICTION AND TO THE REGISTERED DESIGN PROFESSIONAL IN RESPONSIBLE CHARGE PRIOR TO THE COMPLETION OF THAT PHASE OF THE WORK. A FINAL REPORT DOCUMENTING REQUIRED SPECIAL INSPECTIONS AND TESTS AND CORRECTION OF ANY DISCREPANCIES NOTED IN THE INSPECTIONS OR TESTS SHALL BE SUBMITTED AT A POINT IN TIME AGREED UPON PRIOR TO THE START OF WORK BY THE OWNER OR THE OWNER'S AUTHORIZED AGENT TO THE AUTHORITY HAVING JURISDICTION.

5. SPECIAL INSPECTIONS OF FABRICATED ITEMS: WHERE FABRICATION OF STRUCTURAL, LOAD-BEARING, LATERAL LOAD-RESISTING MEMBERS, OR ASSEMBLIES IS BEING CONDUCTED ON THE PREMISES OF A FABRICATOR'S SHOP, SPECIAL INSPECTIONS OF THE FABRICATED ITEMS SHALL BE PERFORMED DURING FABRICATION.

6. CONTINUOUS (CONT) SPECIAL INSPECTION: WHERE THE FREQUENCY OF SPECIAL INSPECTIONS IS IDENTIFIED TO BE CONTINUOUS, THE SPECIAL INSPECTOR IS EXPECTED TO BE PRESENT IN THE AREA WHERE THE WORK IS BEING PERFORMED AND PROVIDE FULL-TIME INSPECTIONS OF THE WORK REQUIRING SPECIAL INSPECTION.

7. PERIODIC SPECIAL INSPECTION: WHERE THE FREQUENCY OF SPECIAL INSPECTION IS IDENTIFIED TO BE PERIODIC, THE SPECIAL INSPECTOR IS EXPECTED TO BE PRESENT IN THE AREA WHERE THE WORK HAS BEEN OR IS BEING PERFORMED AND AT THE COMPLETION OF THE WORK (PRIOR TO THE NEXT CONSTRUCTION TASK).

STATEMENT OF SPECIAL INSPECTIONS

1. THE REGISTERED DESIGN PROFESSIONAL IN RESPONSIBLE CHARGE SHALL PREPARE A STATEMENT OF SPECIAL INSPECTIONS IF REQUIRED BY THE AUTHORITY HAVING JURISDICTION, OTHERWISE THE SPECIAL INSPECTION AND TESTING TABLES WITH THE CONTRACT DOCUMENTS WILL ACT AS A STATEMENT OF SPECIAL INSPECTIONS.

2. SEISMIC REQUIREMENTS IN THE STATEMENT OF SPECIAL INSPECTIONS (2018 IBC, PART 1704.3.2): WHERE SPECIAL INSPECTIONS OR TESTS FOR SEISMIC RESISTANCE ARE REQUIRED, THE STATEMENT OF SPECIAL INSPECTIONS SHALL IDENTIFY THE DESIGNATED SEISMIC SYSTEMS AND SEISMIC FORCE-RESISTING SYSTEMS THAT ARE SUBJECT TO THE SPECIAL INSPECTIONS OR TESTS.

   PORTIONS OF THE WORK QUALIFIED TO BE CATEGORIZED AS PART OF THE SEISMIC-FORCE RESISTING SYSTEM AND SEISMIC RESISTING COMPONENTS REQUIRE SPECIAL INSPECTION OR TESTING INCLUDE, BUT IS NOT LIMITED TO, THE FOLLOWING: DIAPHRAGMS (METAL DECKING), FRAMING SUBJECT TO AXIAL LOADS, FRAMING CONNECTIONS, WALLS ELEMENTS, WALL CONNECTIONS, LINTELS, CHORD ELEMENTS, AND FOUNDATION SYSTEMS.

3. WIND REQUIREMENTS IN THE STATEMENT OF SPECIAL INSPECTIONS (2018 IBC, 1704.3.3): WHERE SPECIAL INSPECTION FOR WIND RESISTANCE ARE REQUIRED, THE STATEMENT OF SPECIAL INSPECTIONS SHALL IDENTIFY THE MAIN WIND-FORCE-RESISTING SYSTEMS AND WIND-RESISTING COMPONENTS THAT ARE SUBJECT TO SPECIAL INSPECTIONS.

   PORTIONS OF THE WORK QUALIFIED TO BE CATEGORIZED AS PART OF THE WIND-FORCE RESISTING SYSTEM AND WIND RESISTING COMPONENTS REQUIRE SPECIAL INSPECTION OR TESTING INCLUDE, BUT IS NOT LIMITED TO, THE FOLLOWING: DIAPHRAGMS (METAL DECKING), FRAMING SUBJECT TO AXIAL LOADS, FRAMING CONNECTIONS, WALLS ELEMENTS, WALL CONNECTIONS, LINTELS, CHORD ELEMENTS, AND FOUNDATION SYSTEMS.

CONTRACTOR RESPONSIBILITY

1. THE CONTRACTOR RESPONSIBLE FOR THE CONSTRUCTION OF A MAIN WIND -FORCE RESISTING SYSTEM OR A MAIN SEISMIC-FORCE-RESISTING SYSTEM, DESIGNATED SEISMIC SYSTEM, OR A WIND-FORCE-RESISTING COMPONENT, OR SEISMIC-FORCE RESISTING COMPONENT LISTED IN THE STATEMENT OF SPECIAL INSPECTIONS OR CONTRACT DOCUMENTS SHALL SUBMIT A WRITTEN STATEMENT OF RESPONSIBILITY TO THE OWNER OR AUTHORITY HAVING JURISDICTION OR OWNER'S AUTHORIZED AGENT, AND ENGINEER OF RECORD PRIOR TO COMMENCEMENT OF THE WORK ON THE SYSTEM OR COMPONENT. THE CONTRACTOR'S STATEMENT OF RESPONSIBILITY SHALL CONTAIN ACKNOWLEDGEMENT OF AWARENESS OF THE SPECIAL INSPECTIONS CONTAINED IN THE STATEMENT OF SPECIAL INSPECTIONS (REFERENCE 1704.4 OF THE 2018 INTERNATIONAL BUILDING CODE).

2. THE CONTRACTOR SHALL CORRECT DISCREPANCIES IDENTIFIED IN THE SPECIAL INSPECTIONS AND TESTS WHERE WORK WAS NOT COMPLETED IN CONFORMANCE TO APPROVED CONSTRUCTION DOCUMENTS.

SPECIAL INSPECTION AND TESTING - TABLES

SOILS

SPECIAL INSPECTIONS AND TESTS OF EXISTING SITE SOIL CONDITIONS, FILL PLACEMENT AND LOAD-BEARING REQUIREMENTS SHALL BE PERFORMED IN ACCORDANCE WITH THE FOLLOWING.

REQUIRED SPECIAL INSPECTIONS AND TESTS

SPECIAL INSPECTION REQUIRED	TYPE	CONT	PERIODIC
YES	1. VERIFY MATERIALS BELOW SHALLOW FOUNDATIONS ARE ADEQUATE TO ACHIEVE THE DESIGN BEARING CAPACITY.	--	X
YES	2. VERIFY EXCAVATIONS ARE EXTENDED TO PROPER DEPTH AND HAVE REACHED PROPER MATERIAL.	--	X
YES	3. PERFORM CLASSIFICATION AND TESTING OF COMPACTED FILL MATERIALS.	--	X
YES	4. VERIFY USE OF PROPER MATERIALS, DENSITIES AND LIFT THICKNESSES DURING PLACEMENT AND COMPACTION OF COMPACTED FILL.	X	--
YES	5. PRIOR TO PLACEMENT OF COMPACTED FILL, OBSERVE SUBGRADE AND VERIFY THAT SITE HAS BEEN PREPARED PROPERLY.	--	X

NOTES:

DURING FILL PLACEMENT, THE SPECIAL INSPECTOR SHALL VERIFY THAT PROPER MATERIALS AND PROCEDURES ARE USED IN ACCORDANCE WITH THE PROJECT SPECIFICATIONS, SECTION 31 00 00.

CONCRETE CONSTRUCTION

REQUIRED SPECIAL INSPECTIONS AND TESTS

SPECIAL INSPECTION REQUIRED	TYPE	CONT	PERIODIC	REFERENCED STANDARD (a)	CBC REF
YES	1. INSPECT REINFORCEMENT, INCLUDING SIZE AND GRADE, VERIFY PLACEMENT.	--	X	ACI 318 Ch. 20, 25.2, 25.3, 26.6.1 - 26.6.3	1908.4
	2. REINFORCING BAR WELDING (c):				
YES	a. VERIFY WELDABILITY OF REINFORCING BARS OTHER THAN ASTM A706.	--	X	AWS D1.4, ACI 318 26.6.4	--
YES	b. INSPECT SINGLE-PASS FILLET WELDS, MAXIMUM 5/16".	--	X		
YES	c. INSPECT ALL OTHER WELDS.	X	--		
YES	3. INSPECT ANCHORS CAST IN CONCRETE.	--	X	ACI 318 17.8.2	--
	4. INSPECT ANCHORS POST-INSTALLED IN HARDENED CONCRETE MEMBERS.(b)				
YES	a. ADHESIVE ANCHORS INSTALLED IN HORIZONTALLY OR UPWARDLY INCLINED ORIENTATIONS TO RESIST SUSTAINED TENSION LOADS.(b)	X	--	ACI 318 17.8.2.4	--
YES	b. MECHANICAL ANCHORS AND ADHESIVE ANCHORS NOT DEFINED IN 4.a.(b)	--	X	ACI 318 17.8.2	
YES	5. VERIFY USE OF REQUIRED DESIGN MIX.(d)	--	X	ACI 318 Ch. 19, 26.4.3, 26.4.4	1904.1 1904.2 1908.2 1908.3
YES	6. PRIOR TO CONCRETE PLACEMENT, FABRICATE SPECIMENS FOR STRENGTH TESTS, PERFORM SLUMP AND AIR CONTENT TESTS AND DETERMINE THE TEMPERATURE OF THE CONCRETE.(d) a.) COMPRESSIVE STRENGTH TESTS SHALL BE PERFORMED ON EACH 100 CUBIC YARDS OR FRACTION THEREOF, OF OF EACH CONCRETE MIX PLACED IN ANY ONE DAY, IN ACCORDANCE WITH ASTM C39. b. SLUMP TESTS SHALL BE PERFORMED ON EACH 50 CUBIC YARDS IN ACCORDANCE WITH ASTM C143. c. AIR CONTENT TESTED PER ASTM C231 OR ASTM C173, MADE WITH SAMPLES FROM FIRST THREE BATCHES AND UNTIL THREE BATCHES MEET AIR CONTENTS SPECIFIED. d. CONCRETE TEMPERATURE SHALL BE TESTED IN ACCORDANCE WITH ASTM C1064.	X	--	ASTM C172, ASTM C1064, ASTM C143, ASTM C31, ASTM C39, ACI 318 26.4, 26.12	1908.10
YES	7. INSPECT CONCRETE AND SHOTCRETE PLACEMENT FOR PROPER APPLICATION TECHNIQUES.	X	--	ACI 318 26.5	1908.6, 1908.7, 1908.8
YES	8. VERIFY MAINTENANCE OF SPECIFIED CURING TEMPERATURE AND TECHNIQUES.	--	X	ACI 318 26.5.3 - 26.5.5	1908.9
YES	10. INSPECT ERECTION OF PRECAST CONCRETE MEMBERS.	--	X	ACI 318 26.8	--
YES	11. VERIFY IN-SITU CONCRETE STRENGTH, PRIOR TO REMOVAL OF SHORES AND FORMS FROM BEAMS AND STRUCTURAL SLABS.	--	X	ACI 318 26.11.2	--
YES	12. INSPECT FORMWORK FOR SHAPE, LOCATION AND DIMENSIONS OF THE CONCRETE MEMBER BEING FORMED,	--	X	ACI 318 26.11.1.2(b)	--

NOTES:

(a) WHERE APPLICABLE, SEE SECTION 1705.12 OF THE 2018 CBC, SPECIAL INSPECTIONS FOR SEISMIC RESISTANCE.
(b) SPECIFIC REQUIREMENTS FOR SPECIAL INSPECTION SHALL BE INCLUDED IN THE RESEARCH REPORT FOR THE ANCHOR ISSUED BY AN APPROVED SOURCE IN ACCORDANCE WITH 17.8.2 IN ACI 318, OR OTHER QUALIFICATION PROCEDURES. WHERE SPECIFIC REQUIREMENTS ARE NOT PROVIDED, SPECIAL INSPECTION REQUIREMENTS SHALL BE SPECIFIED BY THE REGISTERED DESIGN PROFESSIONAL AND SHALL BE APPROVED BY THE BUILDING OFFICIAL PRIOR TO THE COMMENCEMENT OF THE WORK.
(c) WELDING OF REINFORCING BARS: SPECIAL INSPECTIONS OF WELDING AND QUALIFICATIONS OF SPECIAL INSPECTORS FOR REINFORCING BARS SHALL BE IN ACCORDANCE WITH THE REQUIREMENTS OF AWS D1.4 FOR SPECIAL INSPECTION AND OF AWS D1.4 FOR SPECIAL INSPECTOR QUALIFICATION.
(d) MATERIAL TESTS: IN THE ABSENCE OF SUFFICIENT DATA OR DOCUMENTATION PROVIDING EVIDENCE OF CONFORMANCE TO QUALITY STANDARDS FOR MATERIALS IN CHAPTERS 19 AND 20 OF ACI 318, THE AUTHORITY HAVING JURISDICTION SHALL REQUIRE TESTING OF MATERIALS IN ACCORDANCE WITH THE APPROPRIATE STANDARDS AND CRITERIA FOR THE MATERIAL IN CHAPTERS 19 AND 20 OF ACI 318.

MASONRY CONSTRUCTION

LEVEL 3 - VERIFICATION REQUIREMENTS FOR MASONRY CONSTRUCTION

SPECIAL INSPECTION REQUIRED	MINIMUM VERIFICATION	REQUIRED FOR QUALITY ASSURANCE LEVEL 1	LEVEL 2	LEVEL 3	REFERENCE CRITERIA TMS 602
YES	PRIOR TO CONSTRUCTION, VERIFICATION OF COMPLIANCE OF SUBMITTALS	R	R	R	ART. 1.5
YES	PRIOR TO CONSTRUCTION, VERIFICATION OF f'm, EXCEPT WHERE SPECIFICALLY EXEMPTED BY CODE	NR	R	R	ART. 1.4 B
YES	DURING CONSTRUCTION, VERIFICATION OF SLUMP FLOW AND VISUAL STABILITY INDEX (VSI) WHEN SELF-CONSOLIDATING GROUT IS DELIVERED TO THE PROJECT SITE (PRIOR APPROVAL REQUIRED FOR SELF-CONSOLIDATING GROUT)	NR	R	R	ART. 1.5 & 1.6.3
YES	DURING CONSTRUCTION, VERIFICATION OF f'm FOR EVERY 5,000 SQ FT	NR	NR	R	ART. 1.4 B
YES	DURING CONSTUCTION, VERIFICATION OF PROPORTIONS OF MATERILS AS DELIVERED TO THE PROJECT SITE FOR PREMIXED OR PREBLENDED MORTAR, AND GROUT OTHER THAN SELF-CONSOLIDATING GROUT.	NR	NR	R	ART. 1.4 B

R = REQUIRED, NR = NOT REQUIRED

MASONRY CONSTRUCTION

LEVEL 3 - REQUIRED SPECIAL INSPECTIONS

SPECIAL INSPECTION REQUIRED	INSPECTION TASK	FREQUENCY LEVEL 1	LEVEL 2	LEVEL 3	REFERENCE CRITERIA TMS 402	TMS 602
	1. AS MASONRY CONSTRUCTION BEGINS, VERIFY THAT THE FOLLOWING ARE IN COMLIANCE:					
YES	a. PROPORTIONS OF SITE-PREPARED MORTAR	NR	P	P		ART. 2.1, 2.6 A & 2.6 C
YES	b. GRADE AND SIZE OF PRESTRESSING TENDONS AND ANCHORAGES	NR	P	P		ART. 2.4 B & 2.4 H
YES	c. GRADE, TYPE AND SIZE OF REINFORCEMENTS, CONNECTORS, ANCHOR BOLTS, AND PRESTRESSING TENDONS AND ANCHORAGES	NR	P	P		ART. 3.4 & 3.6 A
N/A	d. PRESTRESSING TECHNIQUE	NR	P	P		ART. 3.6 B
N/A	e. PROPETIES OF THIN-BED MORTAR FOR AAC MASONRY	NR	C(b) /P(c)	C		ART. 2.1 C.1
YES	f. SAMPLE PANEL CONSTRUCTION	NR	P	C		ART. 1.6 D
	2. PRIOR TO GROUTING, VERIFY THAT THE FOLLOWING ARE IN COMPLIANCE:					
YES	a. GROUT SPACE	NR	P	C		ART. 3.2 D & 3.2 F
N/A	b. PLACEMENT OF PRESTRESSING DENDONS AND ANCHORAGES	NR	P	P	SEC 10.8 & 10.9	ART 2.4 & 3.6
YES	c. PLACEMENT OF REINFORCEMENT, CONNECTORS, AND ANCHOR BOLTS	NR	P	C	SEC 6.1, 6.3.1, 6.3.6 & 6.3.7	ART 3.2 E & 3.4
N/A	d. PROPORTIONS OF SITE-PREPARED GROUT AND PRESTRESSING GROUT FOR BONDED TENDONS	NR	P	P		ART 2.6 B & 2.4 G.1.b
	3. VERIFY COMPLIANCE OF THE FOLLOWING DURING CONSTRUCTION					
YES	a. MATERIALS AD PRECEDURES WITH THE APPROVED SUBMITTALS	NR	P	P		ART 1.5
YES	b. PLACEMENT OF MASONRY UNITS AND MORTAR JOINT CONSTRUCTION	NR	P	P		ART 3.3 B
YES	c. SIZE AND LOCATION OF STRUCTURAL MEMBERS	NR	P	P		ART 3.3 F
YES	d. TYPE, SIZE, AND LOCATION OF ANCORS, INCLUDING OTHER DETAILS OF ANCHORAGE OF MASONRY TO STRUCTURAL MEMBERS, FRAMES, OR OTHER CONSTRUCTION	NR	P	C	SEC 1.2.1(e), 6.2.1, & 6.3.1	
YES	e. WELDING OF REINFORCEMENT (IF REQUIRED)	NR	C	C	SEC 6.1.6.1.2	
YES	f. PREPARATION, CONSTRUCTION, AND PROTECTION OF MASONRY DURING COLD WEATHER (TEMPERATURE BELOW 40 DEGREE F) OR HOT WEATHER (TEMPORATURE 80 DEGREE F)	NR	P	P		ART 1.8 C & 1.8 D
N/A	g. APPLICATION AND MEASUREMENT OF PRESTRESSING FORCE	NR	C	C		ART 3.6 B
N/A	h. PLACEMENT OF GROUT AND PRESTRESSING GROUT FOR BONDED TENDONS IN IN COMPLIANCE	NR	C	C		ART 3.5 & 3.6 C
N/A	i. PLACEMENT OF AAC MASONRY UNITS AND CONSTRUCTION OF THIN-BED MORTAR JOINTS	NR	C(b) /P(c)	C		ART 3.3 B.9 & 3.3 F.1.b
YES	4. OBSERVE PREPARATION OF GROUT SPECIMENS, MORTAR SPECIMENS, AND/OR PRISMS	NR	P	C		ART 1.4 B.2.a.3, 1.4B.2.b.3, 1.4B.2.c.3, 1.4 B.3, & 1.4 B.4

NR = NOT REQUIRED, N/A = NOT APPLICABLE, P = PERIODIC, C = CONTINUOUS

(b) REQUIRED FOR THE FIRST 5,000 SQ FT OF AAC MASONRY

(c) REQUIRED AFTER THE FIRST 5,000 SQ FT OF AAC MASONRY

POST-INSTALLED ANCHORS IN MASONRY SHALL BE SPECIAL INSPECTED IN ACCORDANCE WITH THE APPLICABLE, CURRENT, AND RELATIVE ICC-ES / IAPMO-UES REPORT FOR THAT SPECIFIC POST-INSTALLED ANCHOR SYSTEM.

COLD-FORMED STEEL METAL DECK CONSTRUCTION

REQUIRED SPECIAL INSPECTIONS

SPECIAL INSPECTION REQUIRED	VERIFICATION AND INSPECTION TASK	TYPE OF INSPECTION: QUALITY CONTROL TASK	QUALITY ASSURANCE TASK	REFERENCED STANDARD
	1. INSPECTION OR EXECUTION TASKS PRIOR TO DECK PLACEMENT:			SDI-ANSI-QA-QC-2017 TABLE 1.1
YES	a. VERIFY COMPLIANCE OF MATERIALS (DECK AND ALL DECK ACCESSORIES) WITH CONSTRUCTION DOCUMENTS, INCLUDING PROFILES, MATERIAL PROPERTIES, AND BASE MATERIAL THICKNESS	P	P	
YES	b. DOCUMENT ACCEPTANCE OR REJECTION OF DECK AND DECK ACCESSORIES	P	P	
	2. INSPECTION OR EXECUTION TASKS AFTER DECK PLACEMENT:			SDI-ANSI-QA-QC-2017 TABLE 1.2
YES	a. VERIFY COMPLIANCE OF DECK AND ALL DECK ACCESSORIES INSTALLATION WITH CONSTRUCTION DOCUMENTS	P	P	
YES	b. VERIFY DECK MATERIALS ARE REPRESENTED BY MILL CERTIFICATIONS THAT COMPLY WITH THE CONSTRUCTION DOCUMENTS	--	P	
YES	c. DOCUMENT ACCEPTANCE OR REJECTION OF INSTALLATION OF DECK AND DECK ACCESSORIES	P	P	
	3. INSPECTION OR EXECUTION TASKS PRIOR TO WELDING:			SDI-ANSI-QA-QC-2017 TABLE 1.3
YES	a. WELDING PROCEDURE SPECIFICATIONS (WPS) AVAILABLE	O	O	
YES	b. MANUFACTURER CERTIFICATIONS FOR WELDING CONSUMABLES AVAILABLE	O	O	
YES	c. MATERIAL IDENTIFICATION (TYPE/GRADE)	O	O	
YES	d. CHECK WELDING EQUIPMENT	O	O	
	4. INSPECTION EXECUTION TASKS DURING WELDING:			SDI-ANSI-QA-QC-2017 TABLE 1.4
YES	a. USE OF QUALIFIED WELDERS	O	O	
YES	b. CONTROL AND HANDLING OF WELDING CONSUMABLES	O	O	
YES	c. ENVIRONMENT CONDITIONS (WIND SPEED, MOISTURE, TEMPERATURE)	O	O	
YES	d. WPS FOLLOWED	O	O	
	5. INSPECTION OR EXECUTION TASKS AFTER WELDING:			SDI-ANSI-QA-QC-2017 TABLE 1.5
YES	a. VERIFY SIZE AND LOCATIONS OF WELDS, INCLUDING SUPPORT, SIDELAP, AND PERIMETER WELDS	P	P	
YES	b. WELDS MEET VISUAL ACCEPTANCE CRITERIA	P	P	
YES	c. VERIFY REPAIR ACTIVITIES	P	P	
YES	d. DOCUMENT ACCEPTANCE OR REJECTION OF WELDS	P	P	
	6. INSPECTION OR EXECUTION TASKS PRIOR TO MECHANICAL FASTENING:			SDI-ANSI-QA-QC-2017 TABLE 1.6
YES	a. MANUFACTURER INSTALLATION INSTRUCTIONS AVAILABLE FOR MECHANICAL FASTENERS	O	O	
YES	b. PROPER TOOLS AVAILABLE FOR FASTENER INSTALLATION	O	O	
YES	c. PROPER STORAGE FOR MECHANICAL FASTENERS	O	O	
	7. INSPECTION OR EXECUTION TASKS DURING MECHANICAL FASTENING:			SDI-ANSI-QA-QC-2017 TABLE 1.7
YES	a. FASTENERS ARE POSITIONED AS REQUIRED	O	O	
YES	b. FASTENERS ARE INSTALLED IN ACCORDANCE WITH MANUFACTURER'S INSTRUCTIONS	O	O	
	8. INSPECTION OR EXECUTION TASKS AFTER MECHANICAL FASTENING:			SDI-ANSI-QA-QC-2017 TABLE 1.8
YES	a. CHECK SPACING, TYPE, AND INSTALLATION OF SUPPORT FASTENERS	P	P	
YES	b. CHECK SPACING, TYPE, AND INSTALLATION OF SIDELAP FASTENERS	P	P	
YES	c. CHECK SPACING, TYPE, AND INSTALLATION OF PERIMETER FASTENERS	P	P	
YES	d. VERIFY REPAIR ACTIVITIES	P	P	
YES	e. DOCUMENT ACCEPTANCE OR REJECTION OF MECHANICAL FASTENERS	P	P	

O -- ITEMS NEED TO BE OBSERVED ON AN INTERMITTENT BASIS. OPERATIONS NEED NOT BE DELAYED PENDING THESE INSPECTIONS. FREQUENCY OF OBSERVATIONS SHALL BE ADEQUATE TO CONFORM THAT WORK WAS PERFORMED IN ACCORDANCE WITH THE APPLICABLE DOCUMENTS.
P -- ITEMS NEED TO BE PERFORMED PRIOR TO FINAL ACCEPTANCE FOR EACH ITEM OR ELEMENT.

WITHIN THE LISTED TASKS, "DOCUMENT" SHALL MEAN THE INSPECTOR SHALL PREPARE REPORTS OR OTHER APPROPRIATE WRITTEN DOCUMENTATION INDICATING THAT WORK HAS OR HAS NOT BEEN APPROVED IN ACCORDANCE WITH THE CONSTRUCTION DOCUMENTS.

THE CONTRACTOR AND SPECIAL INSPECTOR SHALL HAVE A CURRENT ICC-ES / IAPMO-UES REPORT ON-SITE, THAT IS SPECIFIC TO THE COLD-FORMED STEEL METAL DECK IDENTIFIED WITHIN THE CONTRACT DOCUMENTS AND FAVORABLY REVIEWED SHOP DRAWINGS.

ISSUED FOR CONSTRUCTION

ANY PRINTS NOT BEARING THIS STAMP MAY HAVE BEEN PRINTED PRIOR TO ADVERTISING AND CANNOT BE CONSIDERED AS BID DOCUMENTS. USERS OF THIS DOCUMENT IN EDITABLE ELECTRONIC FORMATS ARE CAUTIONED AGAINST USE WITHOUT FIRST DETERMINING WHETHER CHANGES MAY HAVE BEEN MADE SUBSEQUENT TO ITS PREPARATION.

NO	REVISION	DATE	BY

SCALES
0 1"
0 25mm
IF THIS BAR IS NOT DIMENSION SHOWN, ADJUST SCALES ACCORDINGLY.

JAKE DARIN SALTER — STATE OF WASHINGTON — 53076 — REGISTERED PROFESSIONAL ENGINEER

DESIGNED	ESK
DRAWN	ESK
CHECKED	PDS

CITY OF GIG HARBOR, PUBLIC WORKS DEPARTMENT
GIG HARBOR, WASHINGTON
REPLACEMENT OF SANITARY SEWER LIFT STATION #12A
Kennedy Jenks

STRUCTURAL SPECIAL INSPECTION NOTES

SCALE	
JOB NO	2097006*00
DATE	AUGUST 2021
SHEET	10 OF 60
	S-02

NOTES:

1. DIMENSIONS NOTED WITH AN ASTERISK, " * ", ARE TO BE COORDINATED WITH FAVORABLY REVIEWED SUBMITTAL BY THE EQUIPMENT MANUFACTURER.
2. FLOOR SLAB TO BE AT ELEV 102.50 AT PERIMETER, RIDGES AND FLAT POINTS. SLOPE TO EL. 102.38' AT DRAINS.
3. FLOOR SLAB TO RECEIVE A TROWEL FINISH. EXTERIOR LANDINGS TO RECEIVE A LIGHT BROOM FINISH. ALL OTHER FLATWORK TO RECEIVE FLOAT FINISH.

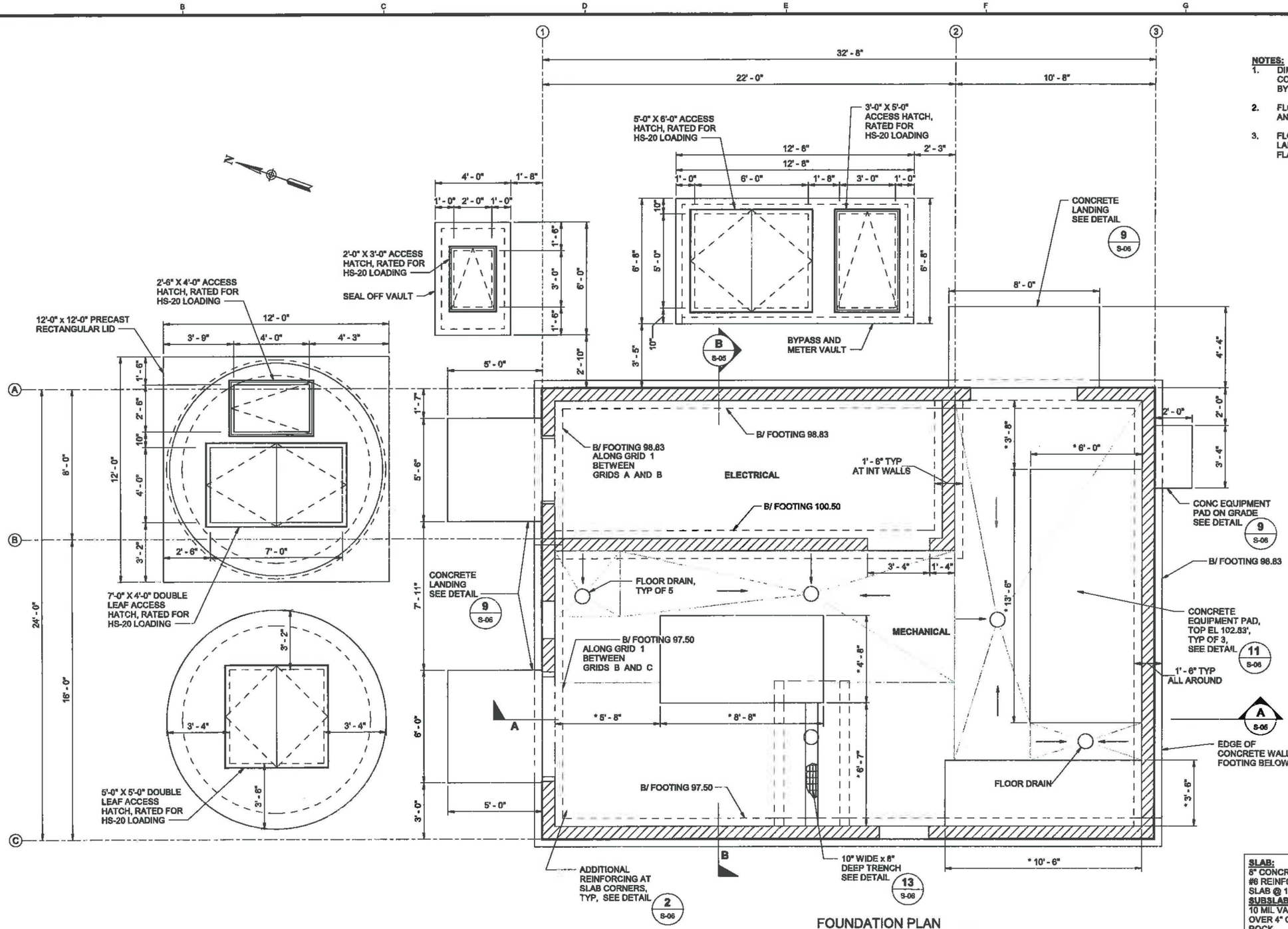

FOUNDATION PLAN

SCALE: 3/8" = 1'-0"

SLAB:
8" CONCRETE SLAB ON GRADE W/ #6 REINFORCING BARS AT CENTER SLAB @ 12" OC EW

SUBSLAB:
10 MIL VAPOR BARRIER OVER 2" SAND OVER 4" OF COMPACTED CRUSHED ROCK

ISSUED FOR CONSTRUCTION

ANY PRINTS NOT BEARING THIS STAMP MAY HAVE BEEN PRINTED PRIOR TO ADVERTISING AND CANNOT BE CONSIDERED AS BID DOCUMENTS. USERS OF THIS DOCUMENT IN EDITABLE ELECTRONIC FORMATS ARE CAUTIONED AGAINST USE WITHOUT FIRST DETERMINING WHETHER CHANGES MAY HAVE BEEN MADE SUBSEQUENT TO ITS PREPARATION.

NO	REVISION	DATE	BY

SCALES
0 1"
0 25mm
IF THIS BAR IS NOT DIMENSIONS SHOWN, ADJUST SCALES ACCORDINGLY.

JAKE DARIN SALTER — 53075 — REGISTERED PROFESSIONAL ENGINEER

DESIGNED	ESK
DRAWN	MEJ
CHECKED	PDS

CITY OF GIG HARBOR, PUBLIC WORKS DEPARTMENT
GIG HARBOR, WASHINGTON
REPLACEMENT OF SANITARY SEWER LIFT STATION #12A

Kennedy Jenks

EQUIPMENT BUILDING FOUNDATION PLAN

SCALE	3/8" = 1'-0"
JOB NO	2091006*00
DATE	AUGUST 2021
SHEET 20 OF 57	S-03

PLOT DATE: 8/18/2021 10:54:23 AM CAD User: ESK
PATH AND FILENAME: B:\d0143059\2097006.00-STRC.rvt

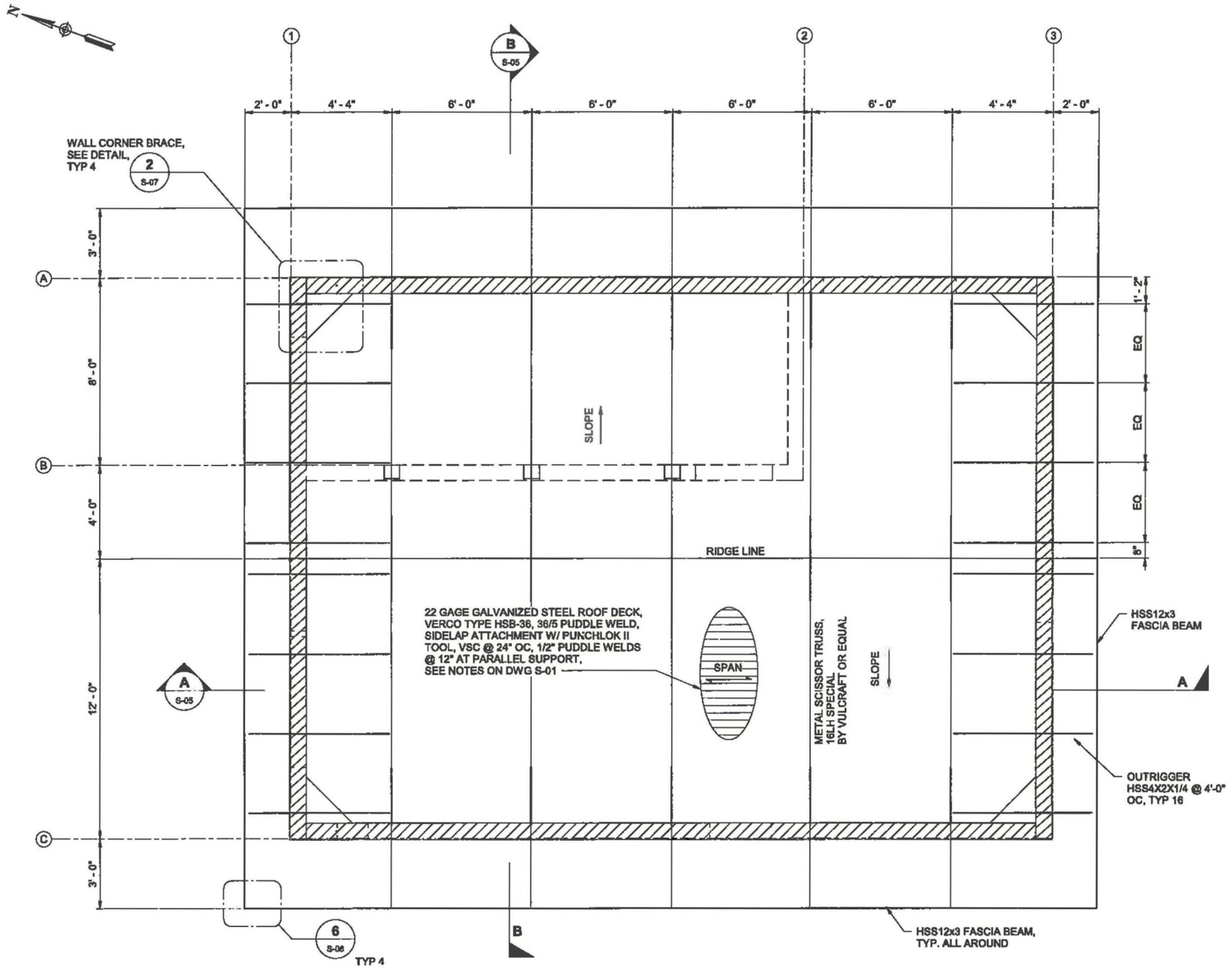

ROOF FRAMING PLAN

SCALE: 3/8" = 1'-0"

PLOT DATE: 8/18/2021 10:54:28 AM CAD User: ESK
PATH AND FILENAME: B:\2014\2069\2097006.00-STRC.rvt

ISSUED FOR CONSTRUCTION

ANY PRINTS NOT BEARING THIS STAMP MAY HAVE BEEN PRINTED PRIOR TO ADVERTISING AND CANNOT BE CONSIDERED AS BID DOCUMENTS. USERS OF THIS DOCUMENT IN EDITABLE ELECTRONIC FORMATS ARE CAUTIONED AGAINST USE WITHOUT FIRST DETERMINING WHETHER CHANGES MAY HAVE BEEN MADE SUBSEQUENT TO ITS PREPARATION.

NO	REVISION	DATE	BY

SCALES
0 1"
0 25mm
IF THIS BAR IS NOT DIMENSIONS SHOWN, ADJUST SCALES ACCORDINGLY.

JAKE DARIN SALTER — STATE OF WASHINGTON — 35075 — REGISTERED ENGINEER

DESIGNED	ESK
DRAWN	MEJ
CHECKED	PDS

CITY OF GIG HARBOR, PUBLIC WORKS DEPARTMENT
GIG HARBOR, WASHINGTON
REPLACEMENT OF SANITARY SEWER LIFT STATION #12A

Kennedy Jenks

EQUIPMENT BUILDING
ROOF FRAMING PLAN

SCALE	3/8" = 1'-0"
JOB NO	2091006*00
DATE	AUGUST 2021
SHEET	21 OF 57
	S-04

NOTES:
1. OVEREXCAVATE MIN 1'-0" BELOW FOOTING, SCARCIFY AND RECOMPACT TOP 8" OF NATIVE TO 95%. PLACE FILL TO FOOTING SUBGRADE ELEVATION IN MAX 8" LIFTS, COMPACTED TO 95%

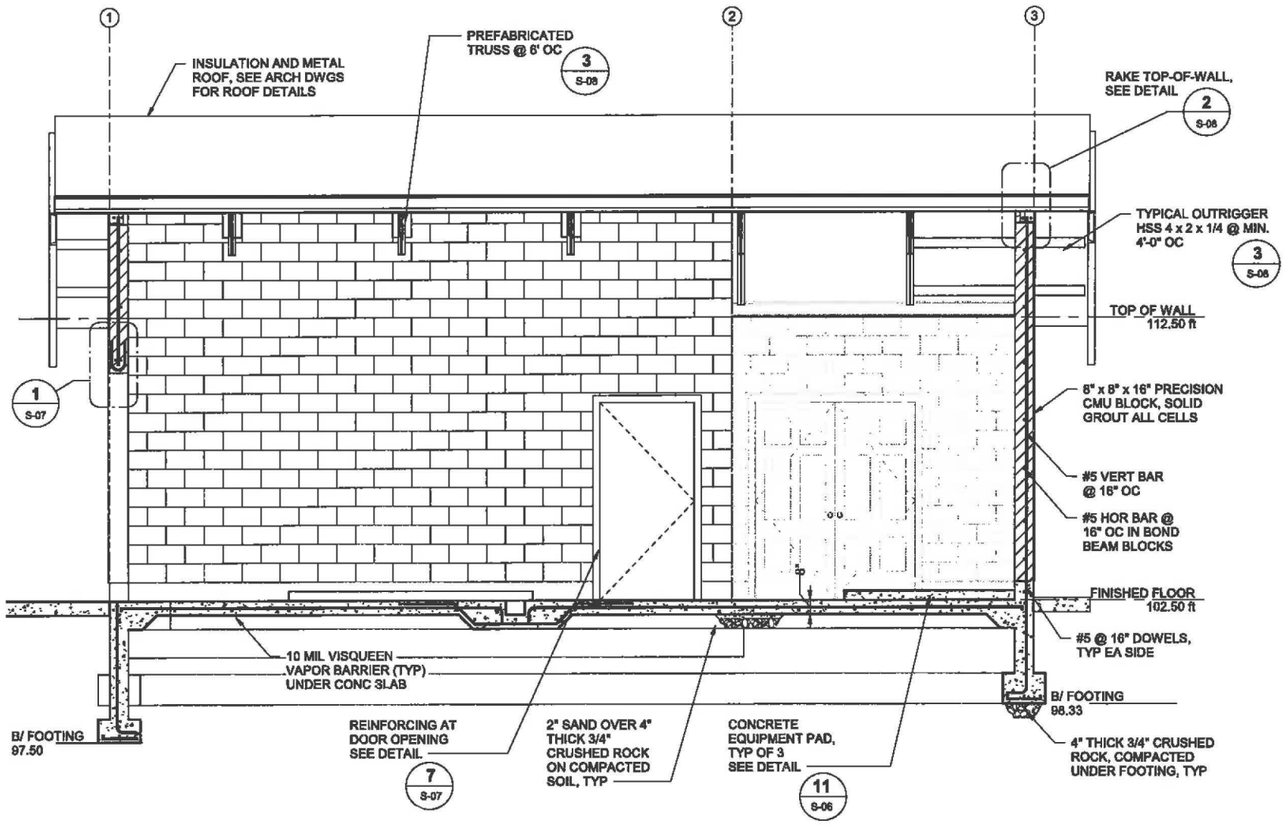

A S-03 **SECTION**
SCALE: 3/8" = 1'-0"

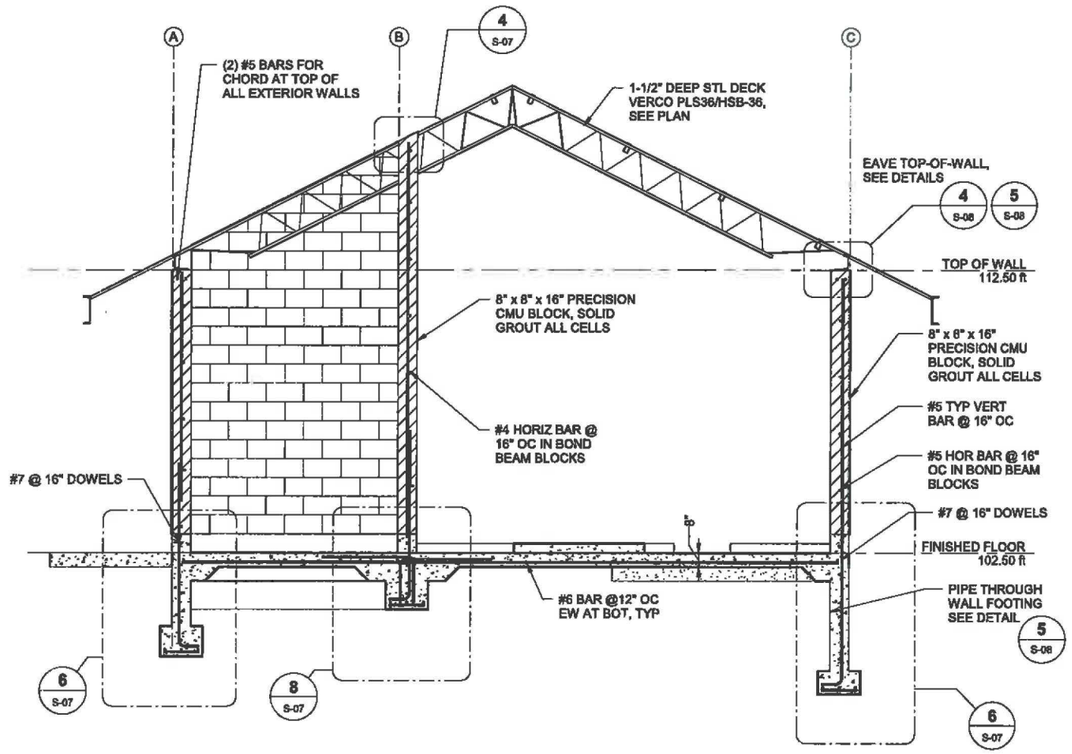

B S-03 **SECTION**
SCALE: 3/8" = 1'-0"

PLOT DATE: 8/18/2021 10:54:40 AM CAD User: ESK
PATH AND FILENAME: B:\c0143059\02097006.00-STRC.rvt

ISSUED FOR CONSTRUCTION

ANY PRINTS NOT BEARING THIS STAMP MAY HAVE BEEN PRINTED PRIOR TO ADVERTISING AND CANNOT BE CONSIDERED AS BID DOCUMENTS. USERS OF THIS DOCUMENT IN EDITABLE ELECTRONIC FORMATS ARE CAUTIONED AGAINST USE WITHOUT FIRST DETERMINING WHETHER CHANGES MAY HAVE BEEN MADE SUBSEQUENT TO ITS PREPARATION.

NO	REVISION	DATE	BY

SCALES
0 1"
0 25mm
IF THIS BAR IS NOT DIMENSIONS SHOWN, ADJUST SCALES ACCORDINGLY.

JAKE DARIN SALTER — STATE OF WASHINGTON — 53076 — REGISTERED PROFESSIONAL ENGINEER

DESIGNED	ESK
DRAWN	MEJ
CHECKED	PDS

CITY OF GIG HARBOR, PUBLIC WORKS DEPARTMENT
GIG HARBOR, WASHINGTON
REPLACEMENT OF SANITARY SEWER
LIFT STATION #12A

Kennedy Jenks

EQUIPMENT BUILDING SECTIONS

SCALE	3/8" = 1'-0"
JOB NO	2091006*00
DATE	AUGUST 2021
SHEET	22 OF 57
	S-05

Plot Date: 8/17/2021 7:11 PM

User: JAKE SALTER

TENSION DEVELOPEMENT AND LAP SPLICE LENGTH FOR REINFORCING BARS IN WALLS & SLABS (INCHES) [1,2,3]

BAR SIZE		2,500 PSI ≤ f'c < 4,000 PSI				f'c ≥ 4,000 PSI			
SOFT METRIC	INCH POUND	TOP [4]		OTHER		TOP [4]		OTHER	
		L_d	LAP	L_d	LAP	L_d	LAP	L_d	LAP
#10	#3	24	31	18	24	19	25	15	19
#13	#4	32	41	24	32	25	33	19	25
#16	#5	39	51	30	39	31	41	24	31
#19	#6	47	61	36	47	37	49	29	37
#22	#7	69	89	53	69	54	71	42	54
#25	#8	78	102	60	78	62	81	48	62
#29	#9	88	115	68	88	70	91	54	70
#32	#10	100	129	77	100	79	102	61	79
#36	#11	110	143	85	110	87	114	67	87

NOTES:
1. DEVELOPMENT AND LAP SPLICE LENGTHS ARE DEPENDENT ON THE FOLLOWING CRITERIA AND ARE IN CONFORMANCE WITH ACI 318-05. NOTIFY THE DESIGN ENGINEER IF THERE ARE ANY DIFFERENCES THAN THE FOLLOWING CRITERIA FOR APPLICABLE CHANGES IN LAP SPLICE LENGTH.
2. LAP SPLICE LENGTHS ARE IN INCHES FOR GRADE 60 REINFORCING IN NORMAL-WEIGHT CONCRETE .
3. CENTER-TO-CENTER SPACING OF REINFORCING SHALL BE GREATER THAN TWICE THE BAR DIAMETER AND CLEAR COVER NOT LESS THAN THE BAR DIAMETER.
4. TOP BARS ARE HORIZONTAL BARS WITH MORE THAN 12 IN. OF CONCRETE CAST BELOW BARS.

CONCRETE REINFORCEMENT SPLICE TABLE
NO SCALE — 1 / -

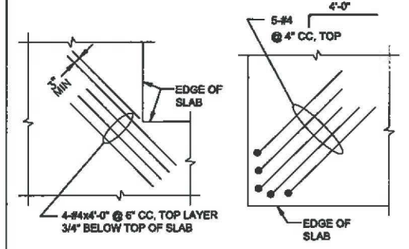

TYPICAL ADDITIONAL REINFORCING FOR SLAB CORNERS
NO SCALE — 2 / S-03

NOT USED
NO SCALE — 3 / -

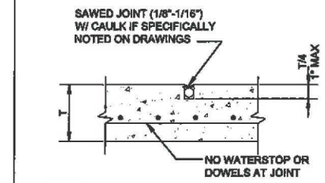

NOTES:
1. IF SINGLE LAYER REINFORCEMENT, EVERY OTHER BAR IS DISCONTINUOUS AT JOINT.
2. IF 2 LAYER REINFORCEMENT, TOP LAYER IS COMPLETELY DISCONTINUOUS AT JOINT.
3. JOINT FORMED WITH TOOL OR INSERT STRIP MAY BE SUBSTITUTED FOR SAWED TYPE ONLY WITH PRIOR ACCEPTANCE BY THE ENGINEER.
4. SAWED JOINT MUST BE CONSTRUCTED WITHIN 12 HOURS OF CONCRETE PLACEMENT.
5. THIS DETAIL DOES NOT APPLY TO SUSPENDED SLABS UNLESS SPECIFICALLY NOTED.

TYPICAL CONTROL JOINTS
NO SCALE — 4 / -

NOT USED
NO SCALE — 5 / -

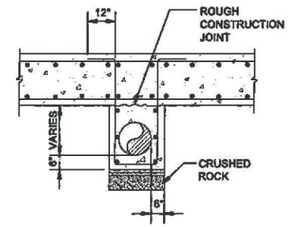

NOTES:
1. ALL ENCASEMENT REINFORCEMENT SHOWN SHALL BE #4 @ 12".

PIPE AND CONDUIT ENCASEMENT BELOW SLAB
NO SCALE — 6 / -

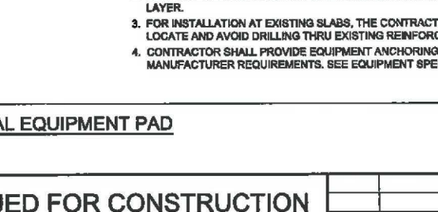

SUPPORT MATERIAL SCHEDULE		
GRATING	FRAME ANGLE	ANCHOR STRAPS
GALV STEEL	GALV STEEL	STEEL
STAINLESS	STAINLESS	STEEL
ALUMINUM	STAINLESS	STEEL
FIBERGLASS	STAINLESS	STEEL

GRATING SUPPORT - EMBEDDED ANGLE
NO SCALE — 7 / S-03

PIPE PENETRATION AT FOUNDATION
NO SCALE — 8 / S-05

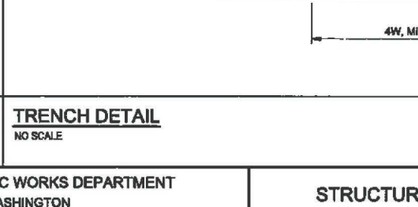

CONCRETE PAD
NO SCALE — 9 / S-03

SLAB CONSTRUCTION JOINT
NO SCALE — 10 / -

NOTES:
1. PLACE ALL EQUIPMENT ON CONCRETE BASES.
2. SEPARATE ALL STEEL SURFACES BEARING ON CONC BY A GROUT LAYER.
3. FOR INSTALLATION AT EXISTING SLABS, THE CONTRACTOR SHALL LOCATE AND AVOID DRILLING THRU EXISTING REINFORCING STEEL.
4. CONTRACTOR SHALL PROVIDE EQUIPMENT ANCHORING PER MANUFACTURER REQUIREMENTS. SEE EQUIPMENT SPECIFICATIONS.

TYPICAL EQUIPMENT PAD
NO SCALE — 11 / S-03

ADDITIONAL REINFORCEMENT AROUND OPENINGS
NO SCALE — 12 / -

TRENCH DETAIL
NO SCALE — 13 / -

ISSUED FOR CONSTRUCTION

ANY PRINTS NOT BEARING THIS STAMP MAY HAVE BEEN PRINTED PRIOR TO ADVERTISING AND CANNOT BE CONSIDERED AS BID DOCUMENTS. USERS OF THIS DOCUMENT IN EDITABLE ELECTRONIC FORMATS ARE CAUTIONED AGAINST USE WITHOUT FIRST DETERMINING WHETHER CHANGES MAY HAVE BEEN MADE SUBSEQUENT TO ITS PREPARATION.

NO	REVISION	DATE	BY

SCALES
0 1"
0 25mm
IF THIS BAR IS NOT DIMENSION SHOWN, ADJUST SCALES ACCORDINGLY.

JAKE DARIN SALTER — STATE OF WASHINGTON — 53076 — REGISTERED PROFESSIONAL ENGINEER

DESIGNED	ESK
DRAWN	ESK
CHECKED	PDS

CITY OF GIG HARBOR, PUBLIC WORKS DEPARTMENT
GIG HARBOR, WASHINGTON
REPLACEMENT OF SANITARY SEWER LIFT STATION #12A
Kennedy Jenks

STRUCTURAL STANDARD DETAILS I

SCALE	
JOB NO	2097006*00
DATE	AUGUST 2021
SHEET	23 OF 59
	S-06

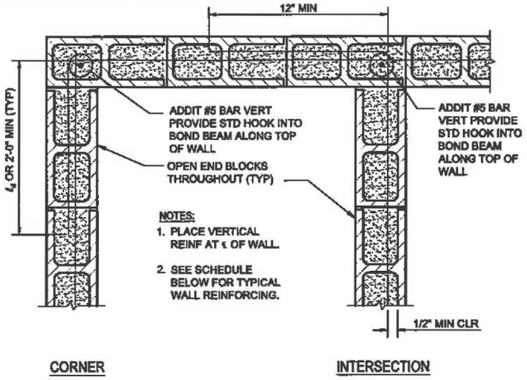

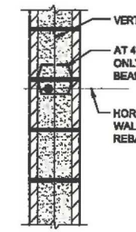

BOND BEAM BLOCK
(AT ALL HORIZ REBAR)

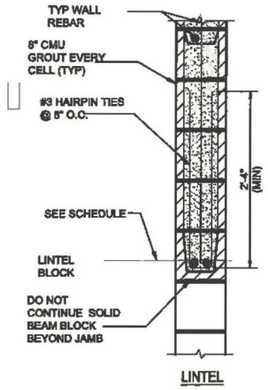

LINTEL

LINTEL BEAM REINFORCING SCHEDULE		
	OPENING WIDTH	
	< 4'-0"	>= 4'-0"
LINTEL REINF	2 - #5 BARS	2 - #6 BARS

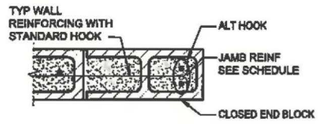

WALL END OR JAMB

TYPICAL REINFORCEMENT AT CONCRETE MASONRY UNIT WALLS

NTS

1 / -

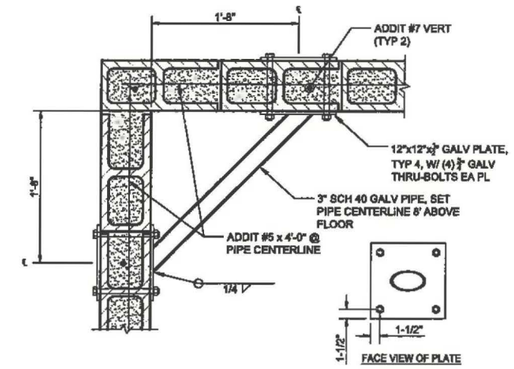

WALL CORNER BRACE

NTS

2 / -

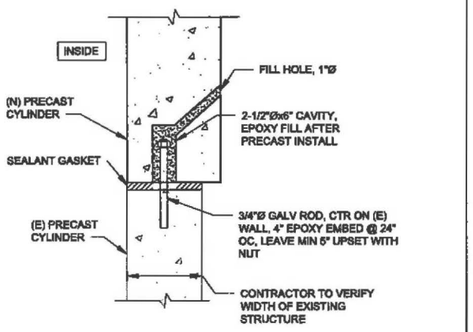

DETAIL A

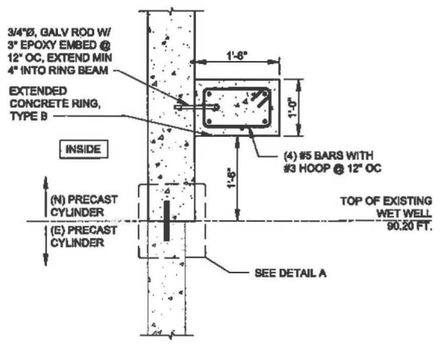

NOTES:
1. SEE MECH SHEET M-03

MANHOLE EXTENSION ATTACHMENT

NTS

10 / M-03

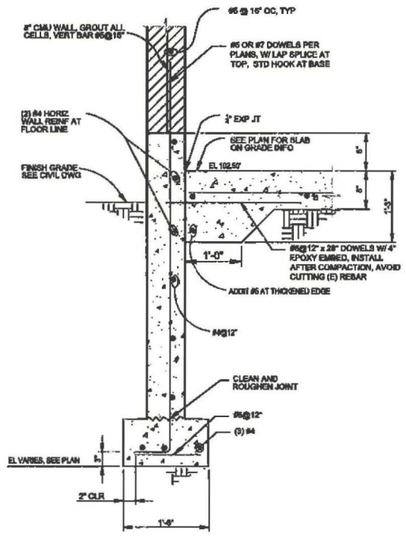

EXTERIOR FOOTING

NTS

6 / -

MASONRY REINFORCING DEVELOPMENT TABLE			
BAR SIZE	STRAIGHT (ℓ_d) REINF CENTERED IN WALL	STRAIGHT (ℓ_d) REINF NOT CENTERED	STD HOOK (ℓ_{dh})
#3	1'-0"	1'-2"	0'-5"
#4	1'-3"	2'-2"	0'-7"
#5	2'-0"	3'-3"	0'-9"
#6	3'-0"	4'-5"	0'-10"
#7	5'-0"	5'-3"	1'-0"
#8	6'-0"	6'-0"	1'-1"

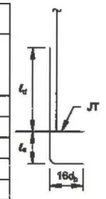

NOTES:
1. MIN DEVELOPMENT LENGTH AND LAP SPLICE FOR 8" (NOMINAL) CMU WALLS, $f'_m \geq 1500$ PSI, 60 KSI REINF, TYP REINF SPACED > 2 IN CC AND A MIN 2 IN CLEAR TO CMU OUTER FACE.
2. FOR EPOXY COATED BARS INCREASE THE DEVELOPMENT LENGTHS BY 50%.
3. d_b = BAR DIAMETER, f'_m = CMU STRENGTH

MASONRY REINFORCEMENT DEVELOPMENT TABLE

NTS

3 / -

NOTES:
1. SEEE PLANS FOR WALL REINF
2. EXTENDED JAMB BARS ℓ_d OR 2'-0" MIN EXCEPT WHERE OPENING EXCEEDS 4'-0" IN WIDTH EXTEND FROM THE FLOOR TO ROOF

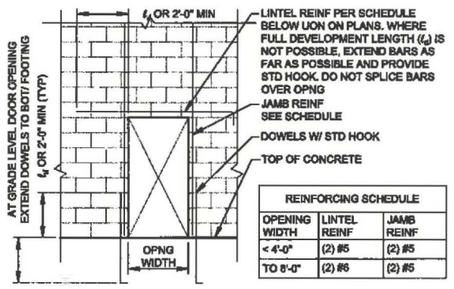

REINFORCING SCHEDULE		
OPENING WIDTH	LINTEL REINF	JAMB REINF
< 4'-0"	(2) #5	(2) #5
TO 8'-0"	(2) #6	(2) #5

CMU ELEVATION AT OPENINGS

NTS

7 / -

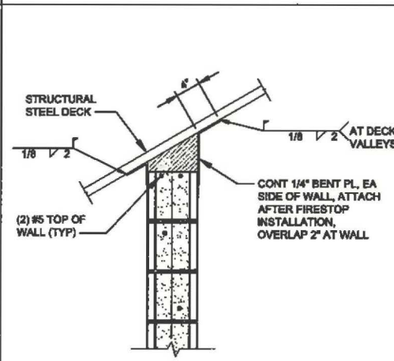

NON-BEARING WALL TOP DETAIL

NTS

4 / -

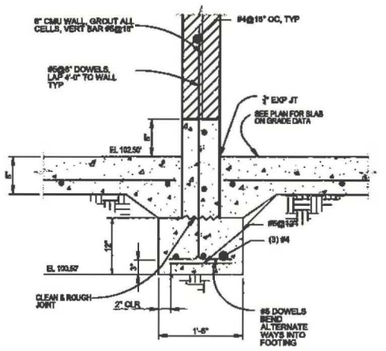

NOT USED

NTS

5 / -

INTERIOR WALL FOOTING

NTS

8 / -

NOT USED

NTS

9 / -

ISSUED FOR CONSTRUCTION

ANY PRINTS NOT BEARING THIS STAMP MAY HAVE BEEN PRINTED PRIOR TO ADVERTISING AND CANNOT BE CONSIDERED AS BID DOCUMENTS. USERS OF THIS DOCUMENT IN EDITABLE ELECTRONIC FORMATS ARE CAUTIONED AGAINST USE WITHOUT FIRST DETERMINING WHETHER CHANGES MAY HAVE BEEN MADE SUBSEQUENT TO ITS PREPARATION.

NO	REVISION	DATE	BY

SCALES
0 1"
0 25mm
IF THIS BAR IS NOT DIMENSION SHOWN, ADJUST SCALES ACCORDINGLY.

JAKE DARIN SALTER — STATE OF WASHINGTON — 53075 — REGISTERED PROFESSIONAL ENGINEER

DESIGNED	ESK
DRAWN	ESK
CHECKED	PDS

CITY OF GIG HARBOR, PUBLIC WORKS DEPARTMENT
GIG HARBOR, WASHINGTON
REPLACEMENT OF SANITARY SEWER
LIFT STATION #12A

Kennedy Jenks

STRUCTURAL STANDARD DETAILS II

SCALE	
JOB NO	2097006*00
DATE	AUGUST 2021
SHEET	24 OF 60
	S-07

Plot Date: 8/24/2021 9:39 AM

User: BRYANT BEHNKE

TRUSS LOADING NOTES:

1. LOAD CASES
   - 1.1. D= DEAD LOAD MAX, NOT INCLUDING TRUSS SELF WT.
   - 1.2. D = MINIMUM DEAD LOAD, USE 80% THIS VALUE FOR 0.9D LOAD COMBOS.
   - 1.3. Lr = ROOF LIVE LOAD, UNREDUCED; CHECK INDEPENDENT ("UNBALANCED" HALF) PATTERNS
   - 1.4. S= SNOW LOAD AT ROOF
   - 1.5. M = UNIFORM OR POINT MECHANICAL LOADING AT BTM CHORD.
   - 1.6. E = EARTHQUAKE (SEISMIC) LOADING, VERT & HORIZ
   - 1.7. W = WIND LOADING (INWARD AND OUTWARD LOADS SHOWN ARE SYMMETICAL, SEPARATE LOAD CASES)
2. M POINT LOADING IS SIMULTANEOUS w/ UNIFORM LOADS.
3. TRUSS MEMBERS ARE SYMMETRICAL.
4. WIND & SEISMIC LOADING IS NOT SIMULTANEOUS.
5. LOAD COMBINATIONS MORE STRINGENT OF ASCE 7-16, IBC 2018.
6. SEISMIC, OVERSTRENGTH SEISMIC (WHERE SHOWN), AND WIND LOADS SHOWN ARE AT STRENGTH LEVEL (UNREDUCED).
7. WIND UPLIFT LOADS SHOWN ARE GROSS LOADS, I.E. DO NOT INCLUDE COUNTERACTING DEAD LOAD, SEE NOTE 1.2.
8. ASSUMED TRUSS SELF WT=10 plf OR LESS.
9. END BEARING: PER PLANS

TRUSS GENERAL NOTES:

1. LOADS ARE UNFACTORED (LF=1.0).
2. TRUSS MEMBER BLOCKING, BRACING, AND BRIDGING - TEMPORARY AND PERMANET - PER LATEST IBC CODE AND REFERENCE DOCUMENTS, ANSI SPECIFICATIONS, AND OSHA STDS, BUT NOT TO EXCEED 10 FT.

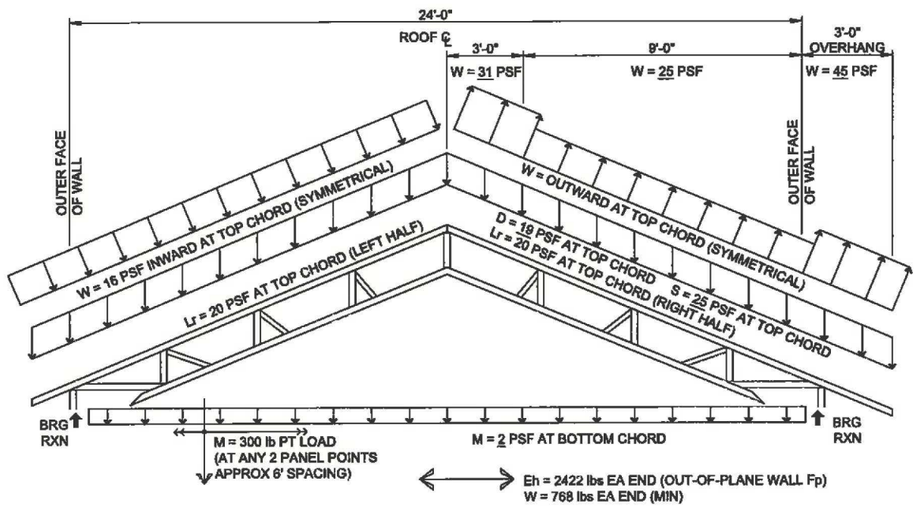

TYPICAL JOIST LOAD DIAGRAM

NTS — 1

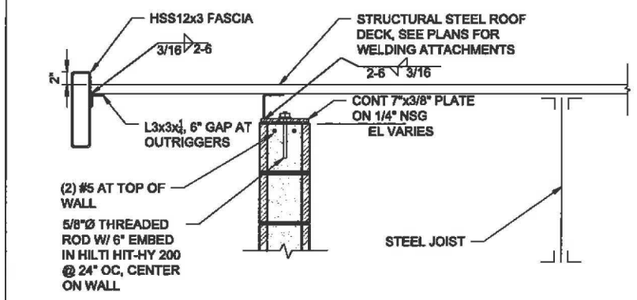

TYPICAL RAKE TOP-OF-WALL

NTS — 2

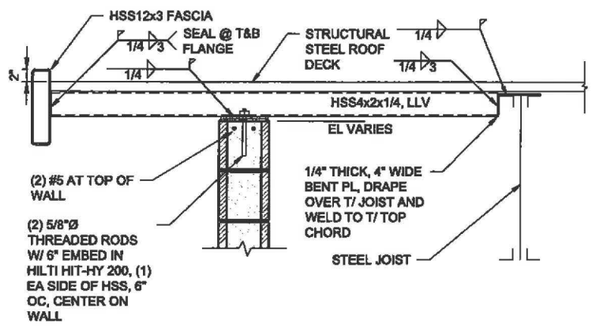

TYPICAL OUTRIGGER

NTS — 3

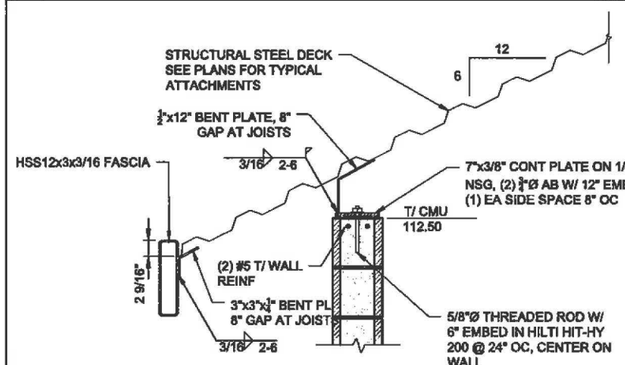

TYPICAL EAVE TOP-OF-WALL

NTS — 4

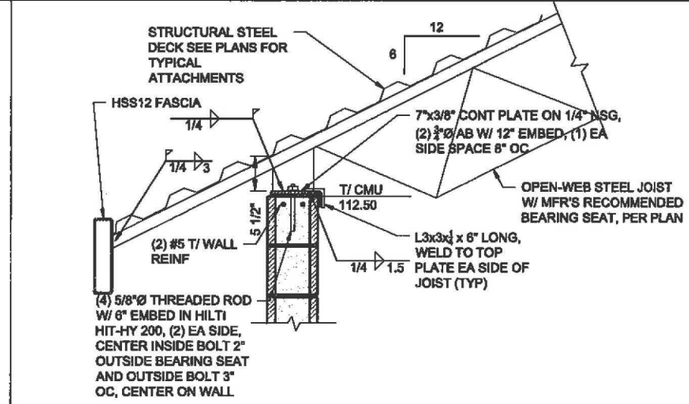

TYPICAL JOIST CONNECTION

NTS — 5

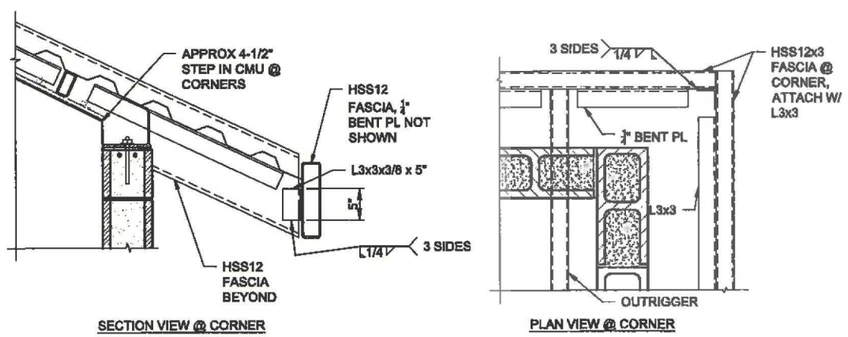

TYPICAL FASCIA CORNER CONNECTION

NTS — 6

NOT USED

NTS — 7

NOT USED

NTS — 8

ISSUED FOR CONSTRUCTION

ANY PRINTS NOT BEARING THIS STAMP MAY HAVE BEEN PRINTED PRIOR TO ADVERTISING AND CANNOT BE CONSIDERED AS BID DOCUMENTS. USERS OF THIS DOCUMENT IN EDITABLE ELECTRONIC FORMATS ARE CAUTIONED AGAINST USE WITHOUT FIRST DETERMINING WHETHER CHANGES MAY HAVE BEEN MADE SUBSEQUENT TO ITS PREPARATION.

NO	REVISION	DATE	BY

SCALES
0 1"
0 25mm
IF THIS BAR IS NOT DIMENSION SHOWN, ADJUST SCALES ACCORDINGLY.

JAKE DARIN SALTER — STATE OF WASHINGTON — 53075 — REGISTERED PROFESSIONAL ENGINEER

DESIGNED	JDS
DRAWN	JDS
CHECKED	PDS

CITY OF GIG HARBOR, PUBLIC WORKS DEPARTMENT
GIG HARBOR, WASHINGTON
REPLACEMENT OF SANITARY SEWER LIFT STATION #12A

Kennedy Jenks

STRUCTURAL STANDARD DETAILS III

SCALE	
JOB NO	2097006*00
DATE	AUGUST 2021
SHEET	25 OF 60
	S-08

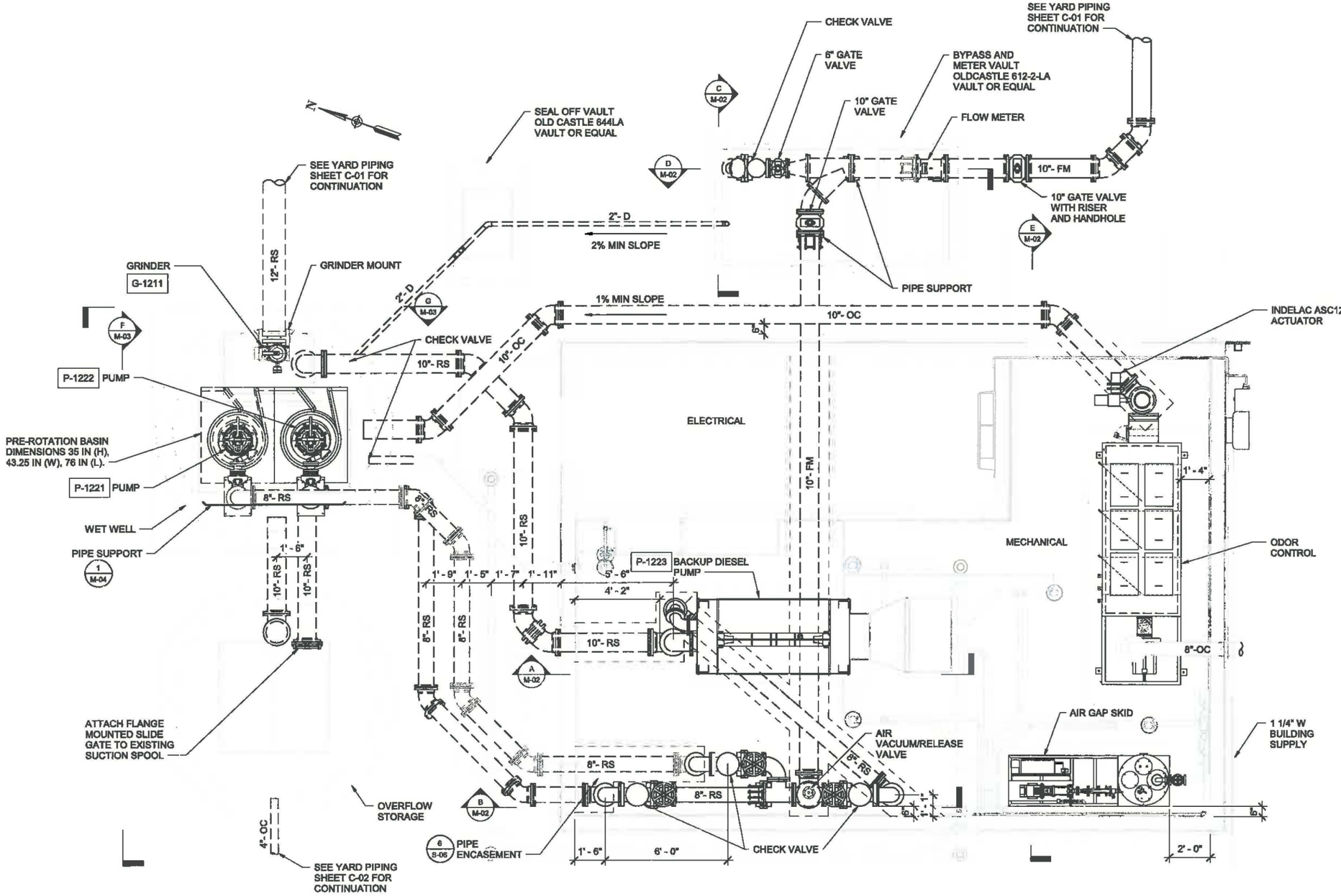

ISSUED FOR CONSTRUCTION

ANY PRINTS NOT BEARING THIS STAMP MAY HAVE BEEN PRINTED PRIOR TO ADVERTISING AND CANNOT BE CONSIDERED AS BID DOCUMENTS. USERS OF THIS DOCUMENT IN EDITABLE ELECTRONIC FORMATS ARE CAUTIONED AGAINST USE WITHOUT FIRST DETERMINING WHETHER CHANGES MAY HAVE BEEN MADE SUBSEQUENT TO ITS PREPARATION.

NO	REVISION	DATE	BY

SCALES
0 1"
0 25mm
IF THIS BAR IS NOT DIMENSIONS SHOWN, ADJUST SCALES ACCORDINGLY.

CAMERON ROSS STATE OF WASHINGTON 19543 REGISTERED PROFESSIONAL ENGINEER

DESIGNED	CR
DRAWN	KRC
CHECKED	ML

CITY OF GIG HARBOR, PUBLIC WORKS DEPARTMENT
GIG HARBOR, WASHINGTON
REPLACEMENT OF SANITARY SEWER LIFT STATION #12

Kennedy Jenks

EQUIPMENT BUILDING PLAN

SCALE	3/8" = 1'-0"
JOB NO	2097006*00
DATE	AUGUST 2021
SHEET 26 OF 60	M-01

PLOT DATE: 8/4/2021 2:13:18 PM CAD User: CR
PATH AND FILENAME: B:\d0143095\2097006.00-MECH.rvt

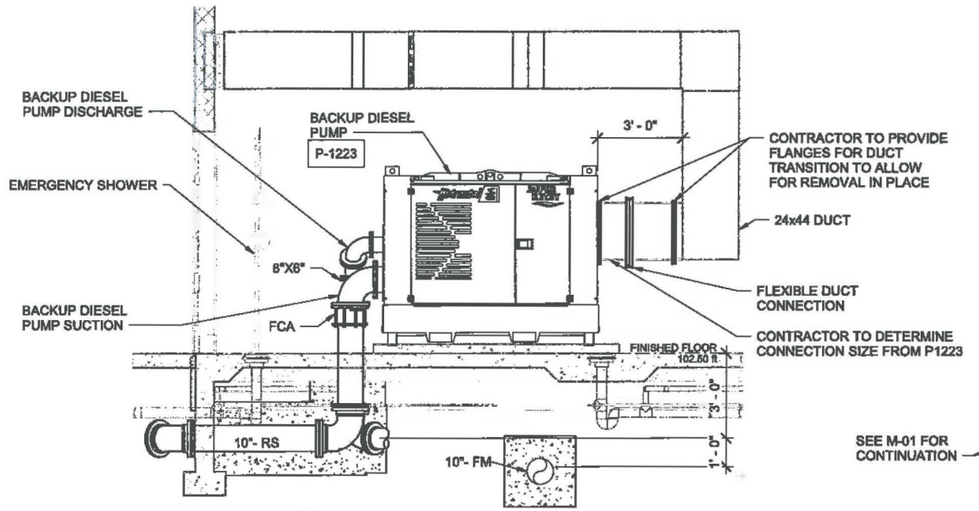

A M-01 **SECTION**
SCALE: 3/8" = 1'-0"

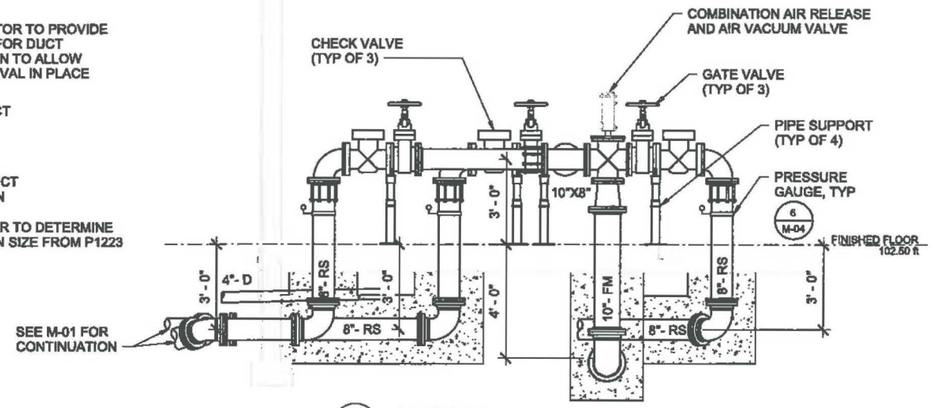

B M-01 **SECTION**
SCALE: 3/8" = 1'-0"

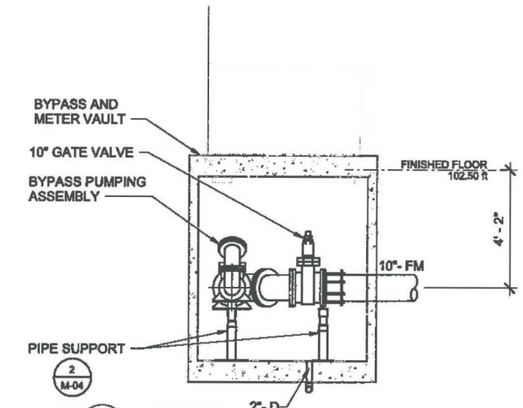

C M-01 **SECTION**
SCALE: 3/8" = 1'-0"

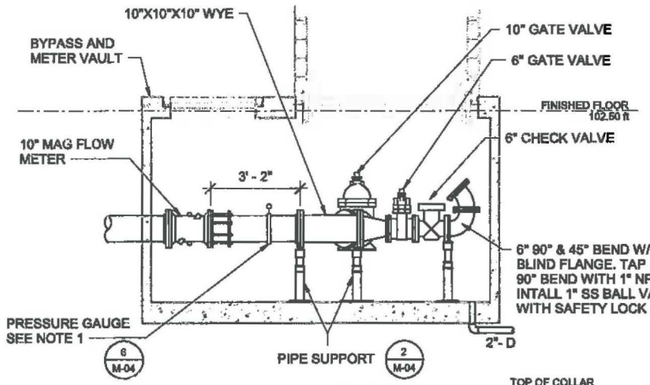

D M-01 **SECTION**
SCALE: 3/8" = 1'-0"

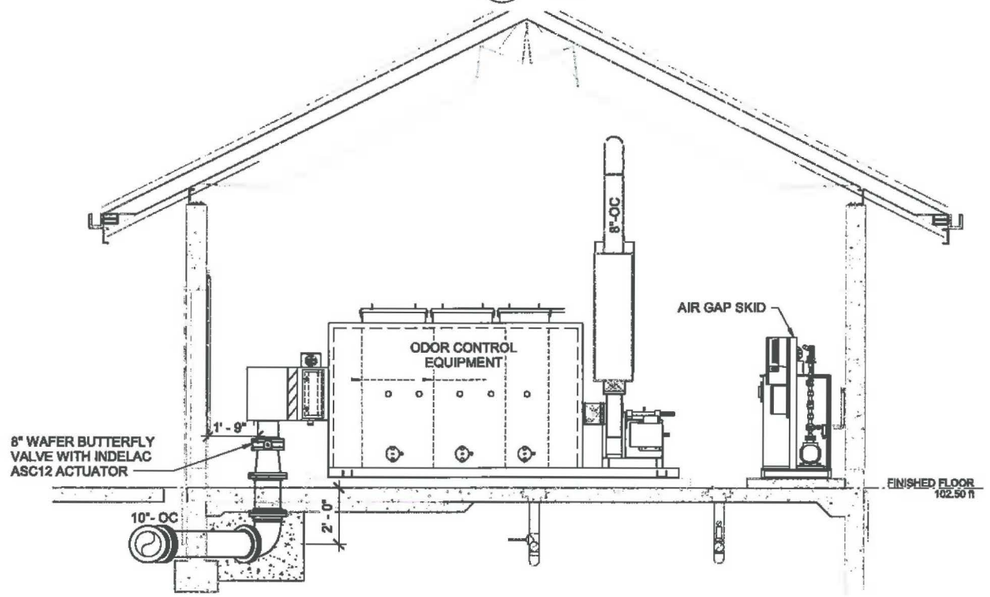

E M-01 **SECTION**
SCALE: 3/8" = 1'-0"

NOTE:
1. INSTALL GAUGE ON SPRINGLINE OF PIPE (SHOWN ON CROWN FOR ILLUSTRATION).

PLOT DATE: 8/4/2021 2:13:29 PM CAD User: CR
PATH AND FILENAME: B:\d01430\5\2097006.00-MECH.rvt

ISSUED FOR CONSTRUCTION

ANY PRINTS NOT BEARING THIS STAMP MAY HAVE BEEN PRINTED PRIOR TO ADVERTISING AND CANNOT BE CONSIDERED AS BID DOCUMENTS. USERS OF THIS DOCUMENT IN EDITABLE ELECTRONIC FORMATS ARE CAUTIONED AGAINST USE WITHOUT FIRST DETERMINING WHETHER CHANGES MAY HAVE BEEN MADE SUBSEQUENT TO ITS PREPARATION.

NO	REVISION	DATE	BY

SCALES
0 —— 1"
0 —— 25mm
IF THIS BAR IS NOT DIMENSIONS SHOWN, ADJUST SCALES ACCORDINGLY.

CAMERON ROSS STATE OF WASHINGTON 55825 REGISTERED PROFESSIONAL ENGINEER

DESIGNED	CR
DRAWN	KRC
CHECKED	ML

CITY OF GIG HARBOR, PUBLIC WORKS DEPARTMENT
GIG HARBOR, WASHINGTON
REPLACEMENT OF SANITARY SEWER LIFT STATION #12

Kennedy Jenks

EQUIPMENT BUILDING SECTIONS

SCALE	3/8" = 1'-0"
JOB NO	2097006*00
DATE	AUGUST 2021
SHEET	27 OF 60
	M-02

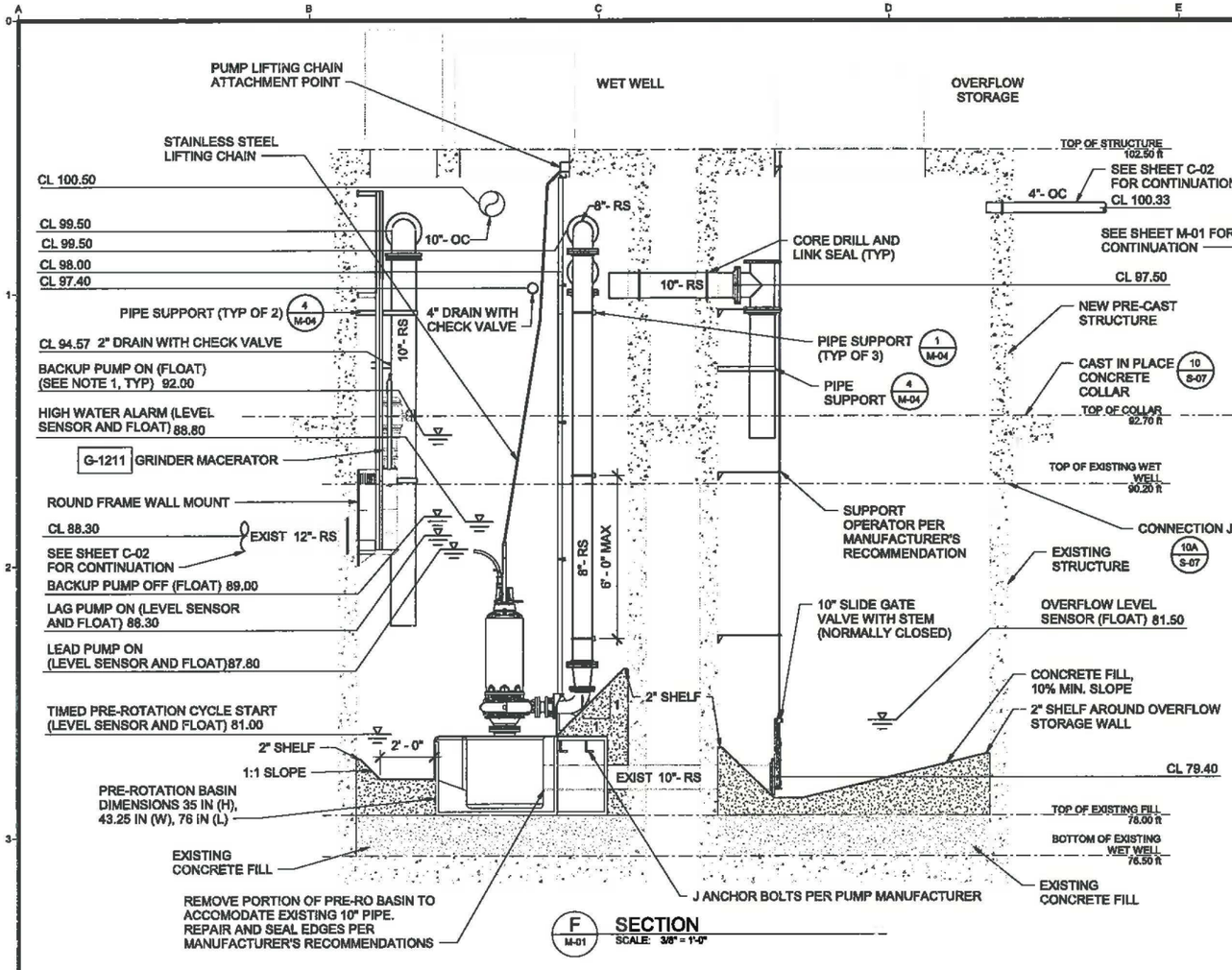

NOTES:

1. SET POINTS ARE APPROXIMATE, FINAL SET POINTS TO BE DETERMINED FROM FIELD OPERATION DURING STARTUP TESTING.
2. ALL PRE-CAST STRUCTURE PENETRATIONS SHALL USE "LINK SEAL" FITTINGS. SEE DETAIL 3 ON SHEET M-04.
3. CONTRACTOR TO CONFIRM ELEVATIONS AND DIMENSIONS.
4. CONTRACTOR SHALL PREPARE TOP OF EXISTING CONCRETE STRUCTURE TO ATTACH NEW PRE-CAST STRUCTURE PER DETAIL 10A ON SHEET S-07.
5. CONTRACTOR TO FIELD VERFY LOCATION OF EXISTING PIPE FLANGE. MOUNT SLIDE GATE TO EXISTING PIPE. ADD SPACERS BETWEEN PIPE FLANGE AND SLIDE GATE FLANGE AS NEEDED TO ALIGN VALVE STEM WITH OVERFLOW STORAGE HATCH FOR ACCESS.
6. CONTRACTOR TO VERIFY PLACEMENT OF HANGERS FOR FLOAT TREE AND ULTRASONIC LEVEL SENSOR WITH WWTP SUPERVISOR. SEE ELECTRICAL SHEET E-08.
7. EACH PUMP TO BE EQUIPPED WITH LIFTING CHAIN, 316SS, CAPACITY 150% OF PUMP WEIGHT WITH MOUNTING HOOK. CHAIN TO BE RATED CAPACITY.

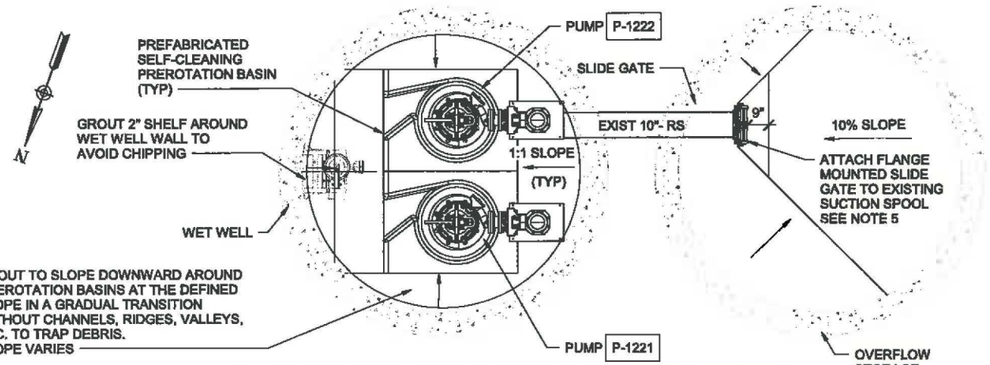

LIFT STATION GROUTING PLAN AT ELEVATION AT 82.00 FT

SCALE: 3/8" = 1'-0"

ISSUED FOR CONSTRUCTION

ANY PRINTS NOT BEARING THIS STAMP MAY HAVE BEEN PRINTED PRIOR TO ADVERTISING AND CANNOT BE CONSIDERED AS BID DOCUMENTS. USERS OF THIS DOCUMENT IN EDITABLE ELECTRONIC FORMATS ARE CAUTIONED AGAINST USE WITHOUT FIRST DETERMINING WHETHER CHANGES MAY HAVE BEEN MADE SUBSEQUENT TO ITS PREPARATION.

NO	REVISION	DATE	BY

SCALES
0 1"
0 25mm
IF THIS BAR IS NOT DIMENSIONS SHOWN, ADJUST SCALES ACCORDINGLY.

CAMERON ROSS, STATE OF WASHINGTON, 55825, REGISTERED PROFESSIONAL ENGINEER

DESIGNED	CR
DRAWN	KRC
CHECKED	ML

CITY OF GIG HARBOR, PUBLIC WORKS DEPARTMENT
GIG HARBOR, WASHINGTON
REPLACEMENT OF SANITARY SEWER LIFT STATION #12

Kennedy Jenks

LIFT STATION SECTIONS AND GROUTING

SCALE	3/8" = 1'-0"
JOB NO	2097006*00
DATE	AUGUST 2021
SHEET 28 OF 60	M-03

PLOT DATE: 8/5/2021 8:19:42 AM
CAD User: CR
PATH AND FILENAME: B:\d0143056\2097006.00-MECH.rvt

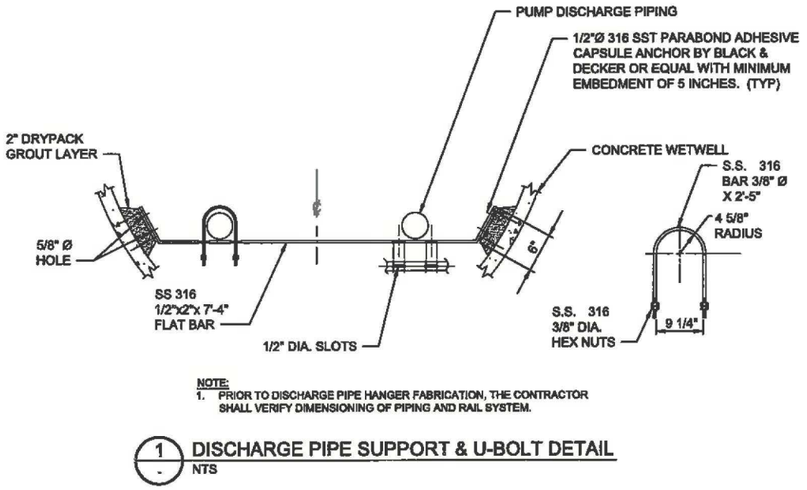

NOTE:
1. PRIOR TO DISCHARGE PIPE HANGER FABRICATION, THE CONTRACTOR SHALL VERIFY DIMENSIONING OF PIPING AND RAIL SYSTEM.

1 - DISCHARGE PIPE SUPPORT & U-BOLT DETAIL
NTS

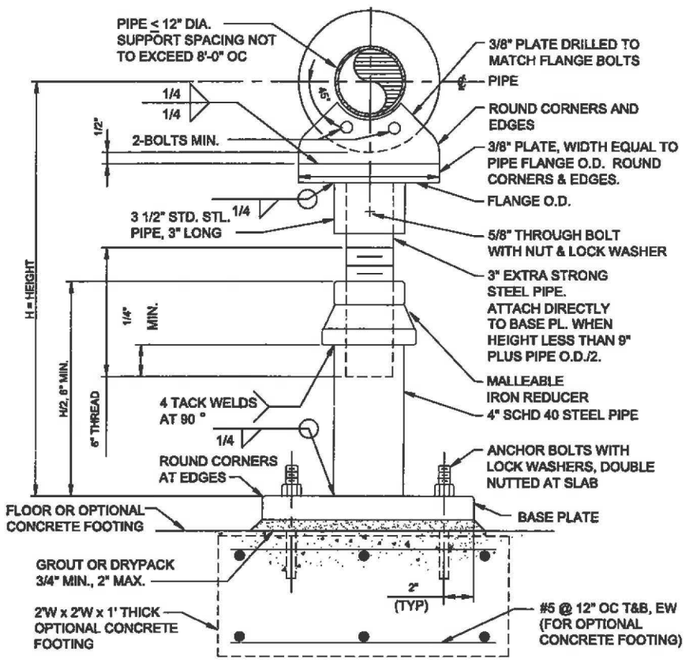

LOCATION	H (MAX.)	BASE PLATE & ANCHORAGE	
		BASE PLATE	ANCHOR BOLTS
FLOOR	3'-6"	1/2" X 12" X 12"	4-3/4" DIA. THREADED RODS (ASTM A193, GRADE B7) WITH 9" EMBEDMENT WITH HILTI RE-500V3 EPOXY OR APPROVED EQUAL.

NOTES:
1. AS AN ALTERNATIVE, IF ADJUSTMENT IS NOT NECESSARY, DELETE PIPE AND REDUCER AND WELD 3" STEEL PIPE DIRECTLY TO BOTTOM PIPE STRAP.
2. DO NOT CUT OR WELD AFTER GALVANIZING.
3. PIPE SUPPORT MAY BE ORIENTATED IN ANY DIRECTION.
4. THE MINIMUM EDGE DISTANCE FOR THE ANCHOR BOLTS SHALL NOT BE LESS THAN 8 INCHES. THIS DETAIL IS A TYPICAL DETAIL TO BE USED AS SHOWN ON THE MECHANICAL DRAWINGS OR FOUNDATIONS SHOWN PER STRUCTURAL.

2 - PIPE SUPPORT (T6S) DETAIL
NTS

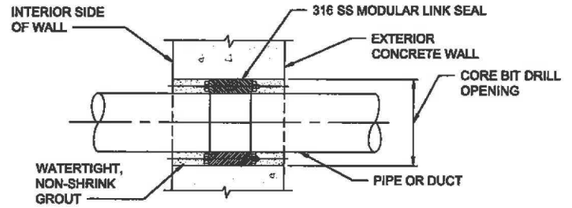

NOTES:
1. OPENING DIMENSION AND MECHANICAL SEAL INSTALLATION SHALL BE PER MFR'S RECOMMENDATION.
2. TIGHTEN SEALS FROM INTERIOR SIDE OF WALL.
3. SEAL OPENINGS WITH WATERTIGHT, NON-SHRINK GROUT. SEAL INTERIOR AND EXTERIOR WALLS FLUSH WITH SURFACE.

3 - CORE DRILL DETAIL
NTS

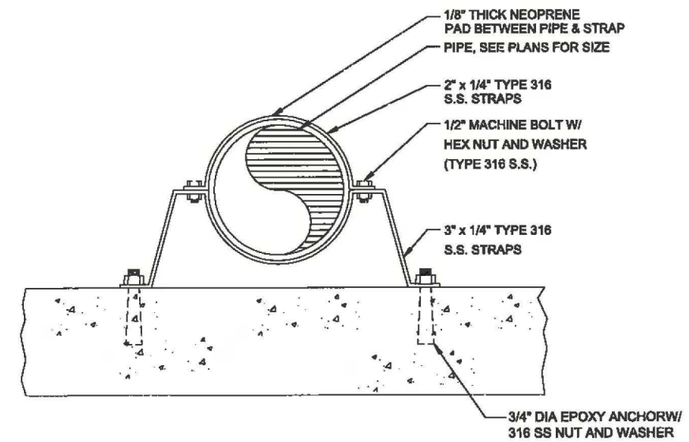

4 - PIPE SUPPORT (T9S) DETAIL
NTS

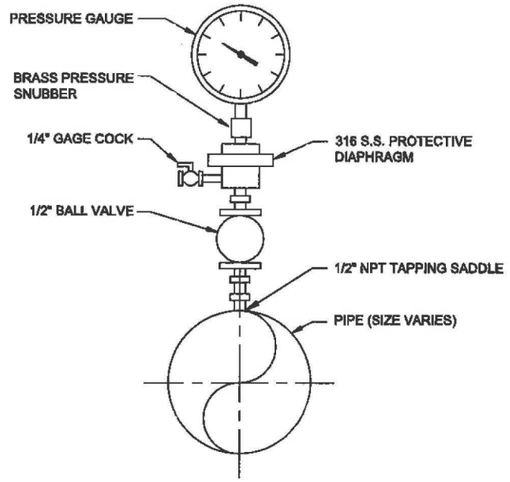

6 - PRESSURE GAUGE DETAIL
NTS

ISSUED FOR CONSTRUCTION

ANY PRINTS NOT BEARING THIS STAMP MAY HAVE BEEN PRINTED PRIOR TO ADVERTISING AND CANNOT BE CONSIDERED AS BID DOCUMENTS. USERS OF THIS DOCUMENT IN EDITABLE ELECTRONIC FORMATS ARE CAUTIONED AGAINST USE WITHOUT FIRST DETERMINING WHETHER CHANGES MAY HAVE BEEN MADE SUBSEQUENT TO ITS PREPARATION.

NO	REVISION	DATE	BY

SCALES
0 1"
0 25mm
IF THIS BAR IS NOT DIMENSION SHOWN, ADJUST SCALES ACCORDINGLY.

CAMERON ROSS — STATE OF WASHINGTON — 55889 — REGISTERED PROFESSIONAL ENGINEER

DESIGNED CR
DRAWN BMB
CHECKED ML

CITY OF GIG HARBOR, PUBLIC WORKS DEPARTMENT
GIG HARBOR, WASHINGTON
REPLACEMENT OF SANITARY SEWER LIFT STATION #12A
Kennedy Jenks

MECHANICAL
LIFT STATION AND BUILDING DETAILS

SCALE
JOB NO 2097006*00
DATE AUGUST 2021
SHEET 29 OF 60
M-04

Plot Date: 8/4/2021 3:07 PM
User: BRYANT BEHNKE

Plot Date: 8/4/2021 3:07 PM

User: BRYANT BEHNKE

HVAC LEGEND

24x12 / 24x12	DUCT - FIRST FIGURE IS SIDE SHOWN
	DIRECTION OF FLOW
	SUPPLY DUCT - ELBOW UP OR DOWN
	RETURN DUCT - ELBOW UP OR DOWN
VD / VD	MANUAL VOLUME DAMPER
BD / BD	BACK DRAFT DAMPER
FD / FD	FIRE DAMPER (PROVIDE ACCESS DOOR FOR INSPECTION AND LINK REPLACEMENT.)
CD / CD	CONTROL DAMPER
FC / FC	FLEXIBLE DUCT CONNECTION
12x12 CSD 200 / 12x12 CSD 200	CEILING SUPPLY DIFFUSER INDICATING NECK SIZE, THROW, & AIR QUANTITY
12x12 CER 200 / 12x12 CER 200	CEILING EXHAUST OR RETURN REGISTER INDICATING NECK SIZE, THROW, & AIR QUANTITY
12x12 WSD 200 / 12x12 WSD 200	WALL SUPPLY DIFFUSER INDICATING NECK SIZE, THROW, & AIR QUANTITY
12x12 WER 200 / 12x12 WER 200	WELL EXHAUST OR RETURN REGISTER INDICATING NECK SIZE, THROW, & AIR QUANTITY
	TURNING DUCT
	SUPPLY DUCT IN SECTION
	EXHAUST OR RETURN DUCT IN SECTION
T	THERMOSTAT
	FAN
12x12 / 12x12	DUCT WITH ACOUSTICAL LINING DIMENSIONS ARE NET FREE AREA
D R	INCLINED RISE (R) OR DROP (D), ARROW IN DIRECTION OF AIR FLOW
SD	STANDARD BRANCH WITH SPLITTER DAMPER
SD	STANDARD BRANCH WITH SPLITTER DAMPER AND TURNING VANES
ED / ED	GRILLE AND REGISTER CONNECTION WITH EXTRACTION DAMPER
AD / AD / AD	DUCT ACCESS DOOR

HVAC/PLUMBING ABBREVIATIONS

AC	AIR CONDITIONING
AFF	ABOVE FINISHED FLOOR
AH	AIR HANDLING UNIT
BD	BELT DRIVE
BDD	BACKDRAFT DAMPER
BFF	BELOW FINISHED FLOOR
BFP	BACKFLOW PREVENTER
BR	BOILER
BTU	BRITISH THERMAL UNIT
CC	COOLING COIL
CENT	CENTRIFUGAL
CER	CEILING EXHAUST RETURN
CFM	CUBIC FEET PER MINUTE
CH	CHILLER
CHWS	CHILLED WATER SUPPLY
CHWR	CHILLED WATER RETURN
CO	CLEANOUT
CL	CENTERLINE
CSR	CEILING SUPPLY DIFFUSER
CV	COEFFICIENT, VALVE FLOW
DB	DRY BULB
DH	LOSS IN FEET
EA	EXHAUST AIR
EER	ENERGY EFFICIENCY RATIO
EF	EXHAUST FAN
ESP	EXTERNAL STATIC PRESSURE
EWT	ENTERING WATER TEMPERATURE
EXP	EXPLOSION PROOF
F	FAN
FC	FAN COIL
FLA	FULL LOAD AMPS
GPM	GALLONS PER MINUTE
H	HEATING
HC	HEATING COIL
HOA	HAND/OFF/AUTO
HP	HORSEPOWER
HSPF	HEATING SEASONAL PROFICIENCY FACTOR
HTG	HEATING
HVAC	HEATING VENTILATING AIR CONDITIONING
HWR	HEATING WATER RETURN
HWS	HEATING WATER SUPPLY
IN.	INCHES
KW	KILOWATT
LBS	POUNDS
LWT	LEAVING WATER TEMPERATURE
MBH	BTU PER HOUR (THOUSANDS)
MFGR	MANUFACTURER
MOCP	MAXIMUM OVERCURRENT PROTECTION
NC	NORMALLY CLOSED
NO	NORMALLY OPEN
OSA	OUTSIDE AIR
P	PUMP
PD	PRESSURE DROP
PROP	PROPELLER
PRV	PRESSURE REGULATING VALVE
PSI	POUNDS PER SQUARE INCH
RA	RETURN AIR
RF	RETURN FAN
RPM	REVOLUTIONS PER MINUTE
SA	SUPPLY AIR
SEER	SEASONAL ENERGY EFFICIENCY RATIO
SP	STATIC PRESSURE/SET POINT
SQ. FT.	SQUARE FEET
V	VENTILATING
VD	VOLUME DAMPER
VFD	VARIABLE FREQUENCY DRIVE
WB	WET BULB
WC	WATER COLUMN
WER	WALL EXHAUST OR RETURN
WG	WATER GAUGE
WSD	WALL SUPPLY DIFFUSER
WSEC	WASHINGTON STATE ENERGY CODE
WSMC	WASHINGTON STATE MECHANICAL CODE

GENERAL NOTES

1. ELECTRICAL CONTRACTOR SHALL PROVIDE CONDUIT AND WIRE NECESSARY TO PROVIDE POWER TO THE UNITS. THE HVAC CONTRACTOR SHALL PROVIDE AND INSTALL ALL NECESSARY CONDUIT, WIRING, CONTROLS AND APPURTENANCES FOR A COMPLETE AND OPERABLE HVAC SYSTEM.
2. ALL AIR DISTRIBUTION SYSTEM DUCTS SHALL BE INSTALLED, SEALED, AND INSULATED IN ACCORDANCE WITH THE WSEC AND WSMC. PROVIDE DUCTS WITH SOUND ATTENUATED LINING WHERE INDICATED ON THE DRAWINGS. SEE THE SPECIFICATIONS FOR MORE INFORMATION. ALL DUCT DIMENSIONS ARE NET INSIDE DUCT.
3. ALL SPACE CONDITIONING EQUIPMENT SHALL MEET THE REQUIREMENTS OF THE WSEC.

DIFFUSER SCHEDULE

TAG NO.	TYPE	NOTES
DER-1	DUCT MOUNTED EXHAUST REGISTER 14X14	
DSD-1	DUCT MOUNTED SUPPLY DIFFUSER 12X12	

LOUVER SCHEDULE

TAG NO.	LOCATION	AREA SERVED	TYPE	DIMENSIONS W (IN)	DIMENSIONS H (IN)	AIRFLOW (CFM)	PRESSURE DROP (IN WC)	FRAME (IN)
L1276	LIFT STATION 12A BUILDING	MECHANICAL ROOM	INTAKE	16	32	900	0.06	4" EXTRUDED ALUMINUM
L1223S	LIFT STATION 12A BUILDING	MECHANICAL ROOM	INTAKE	32	48	3400	0.07	4" EXTRUDED ALUMINUM
L1223E	LIFT STATION 12A BUILDING	MECHANICAL ROOM	EXHAUST	48	24	3400	0.06	4" EXTRUDED ALUMINUM

CONTROL DAMPER SCHEDULE

TAG NO.	LOCATION	AREA SERVED	TYPE	DIMENSIONS W (IN)	DIMENSIONS H (IN)	AIRFLOW (CFM)	FRAME (IN)	NOTES
D1223S	LIFT STATION 12A BUILDING	MECHANICAL ROOM	INTAKE	32	48	3400	4" EXTRUDED ALUMINUM	1
D1223E	LIFT STATION 12A BUILDING	MECHANICAL ROOM	EXHAUST	48	24	3400	4" EXTRUDED ALUMINUM	1

NOTES:

1) DAMPER IS NORMALLY CLOSED, AND SHALL FAIL IN THE OPEN POSITION.

WATER HEATER SCHEDULE

TAG NO.	LOCATION	TYPE	AREA SERVED	TEMPERATURE RISE (°F) / FLOW (GPM)	POWER INPUT KW	VOLTS/ PHASE	NOTES
WH1274	MECHANICAL ROOM	ELECTRIC TANKLESS	EMERGENCY SHOWER	26 / 20	77	480/3	

UNIT HEATER SCHEDULE

TAG NO.	LOCATION	AREA SERVED	TYPE	CFM	MIN. KW	VOLTS/ PHASE	WEIGHT (LBS)	NOTES
H1276	LIFT STATION 12A BUILDING	MECHANICAL ROOM	DUCT HEATER	900	12	480/3	45	1

NOTES:

1) PROVIDE UNIT WITH NEMA-1 REMOTE CONTROL PANEL WITH HINGED PANEL AND DOOR-INTERLOCK DISCONNECT SWITCH, AND INCLUDING FAN INTERLOCK RELAY, UL AND NEC COMPLIANT CIRCUIT FUSING, TRANSFORMER WITH PRIMARY FUSING.

FAN SCHEDULE

TAG NO.	LOCATION	AREA SERVED	TYPE	DRIVE	FAN & MOTOR CHARACTERISTICS RPM	CFM	ESP (IN. WG)	HP	VOLTS/ PHASE	NOTES
F1276	LIFT STATION 12A BUILDING	MECHANICAL ROOM	INLINE CENTRIFUGAL	DIRECT	1725	900	0.6	1/4	120/1	1-6
F1277	LIFT STATION 12A BUILDING	MECHANICAL ROOM	CENTRIFUGAL, WALL MOUNTED	DIRECT	1550	900	0.1	1/8	120/1	1-4

NOTES:

1. ESP INCLUDES LOSSES THROUGH DUCTING AND ACCESSORIES (E.G. WALL HOUSING, LOUVER, ETC.)
2. FAN AND ACCESSORIES SHALL BE PROVIDED WITH CORROSION-RESISTANT COATING. SEE SECTION 15800 FOR ADDITIONAL REQUIREMENTS.
3. PROVIDE FAN WITH VARI-GREEN EC MOTOR OR EQUIVALENT.
4. PROVIDE WITH FACTORY MOUNTED DISCONNECT SWITCH.
5. PROVIDE WITH FACTORY ASSEMBLED INLET FILTER BOX.
6. PROVIDE SPRING HANGING ISOLATORS SIZED BY EQUIPMENT MANUFACTURER.

DUCTLESS SPLIT SYSTEM HEAT PUMP SCHEDULE

TAG NO.	LOCATION	AREA SERVED	SENSIBLE COOLING CAPACITY (MBH)	TOTAL COOLING CAPACITY (MBH)	SENSIBLE HEATING CAPACITY (MBH)	OUTDOOR AIR TEMP COOLING DB (F)	OUTDOOR AIR TEMP COOLING WB (F)	OUTDOOR AIR TEMP HEATING DB (F)	INDOOR AIR TEMP COOLING ENTERING DB (F)	INDOOR AIR TEMP COOLING ENTERING WB (F)	INDOOR AIR TEMP HEATING ENTERING DB (F)	VOLTS/ PHASE	MOCP	NOTES
HP1275 / AHU1275	OUTSIDE/ELECTRICAL ROOM	ELECTRICAL ROOM	18.0	24.0	27.0	91	69	24	80	58	60	240/1	30	1

NOTES:

1) INDOOR UNIT POWERED FROM OUTDOOR UNIT. PROVIDE WIRED CONTROLLER.

ISSUED FOR CONSTRUCTION

ANY PRINTS NOT BEARING THIS STAMP MAY HAVE BEEN PRINTED PRIOR TO ADVERTISING AND CANNOT BE CONSIDERED AS BID DOCUMENTS. USERS OF THIS DOCUMENT IN EDITABLE ELECTRONIC FORMATS ARE CAUTIONED AGAINST USE WITHOUT FIRST DETERMINING WHETHER CHANGES MAY HAVE BEEN MADE SUBSEQUENT TO ITS PREPARATION.

NO	REVISION	DATE	BY

SCALES

0 1"

0 25mm

IF THIS BAR IS NOT DIMENSION SHOWN, ADJUST SCALES ACCORDINGLY.

RYAN P. RAY STATE OF WASHINGTON 46405 REGISTERED PROFESSIONAL ENGINEER

DESIGNED SM

DRAWN SM

CHECKED RR

CITY OF GIG HARBOR, PUBLIC WORKS DEPARTMENT
GIG HARBOR, WASHINGTON
REPLACEMENT OF SANITARY SEWER
LIFT STATION #12A

Kennedy Jenks

HVAC AND PLUMBING LEGENDS, NOTES, ABBREVIATIONS AND EQUIPMENT SCHEDULES

SCALE

JOB NO 2097006*00

DATE AUGUST 2021

SHEET 30 OF 60

M-05

Plot Date: 8/4/2021 3:07 PM

User: BRYANT BEHNKE

NOTES:

1. INSTALL DUAL LIGHT, RED/GREEN ALARMS AT BUILDING ENTRANCES. INSTALL DUAL LIGHT, RED/GREEN WITH AUDIBLE ALARM AT MECHANICAL ROOM EXITS.
2. BFP-1 REDUCED PRESSURE ASSEMBLY TYPE. SEE SPECIFICATIONS SECTION 22 00 00 FOR SPECIFIC REQUIREMENTS.
3. VENTILATION SYSTEM IN MECHANICAL ROOM OPERATES CONTINUOUSLY TO KEEP SPACE ELECTRICALLY UNCLASSIFIED. SEE CONTROL STRATEGY IN SECTION 23 00 00 FOR ADDITIONAL INFORMATION.

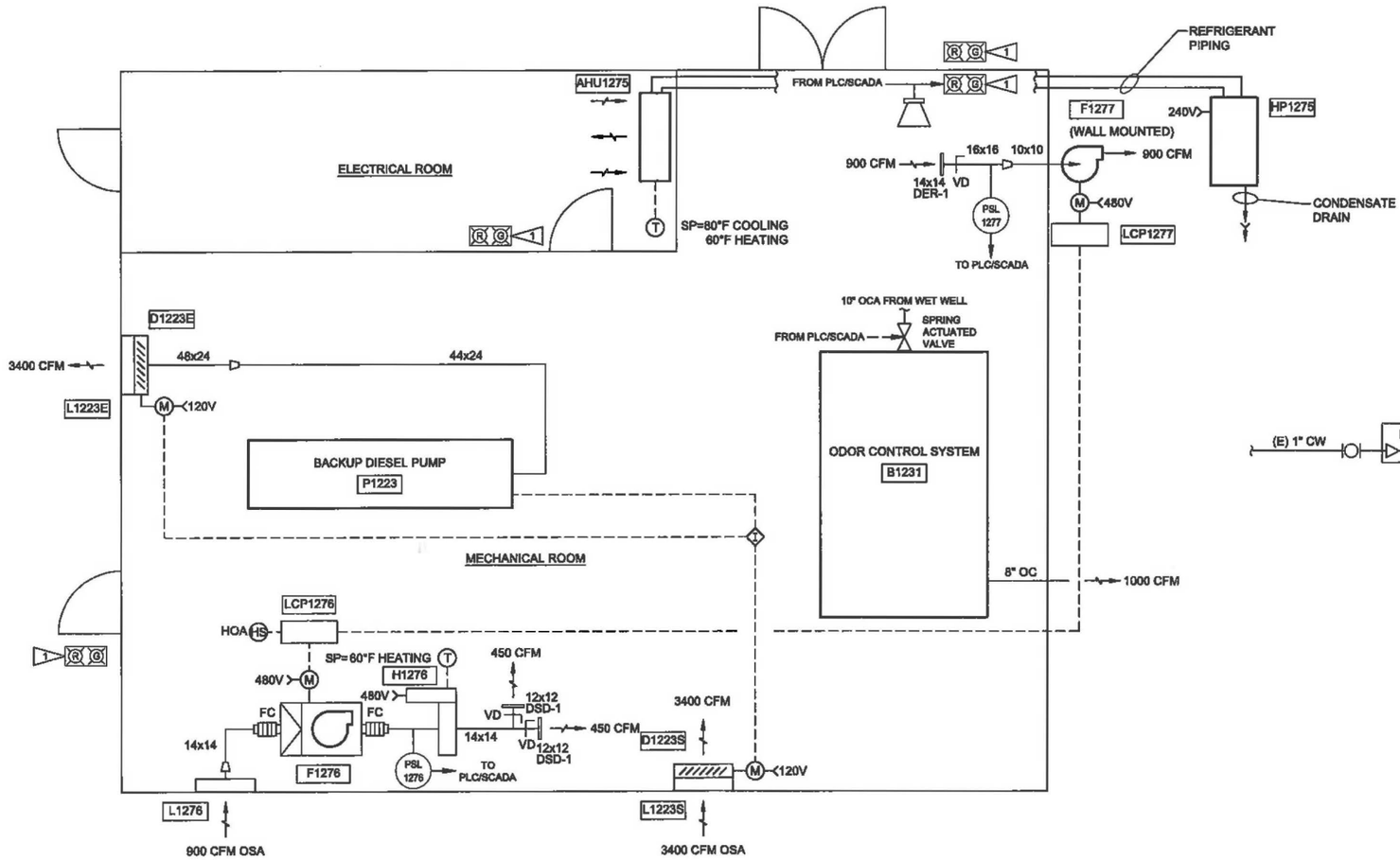

HVAC SCHEMATIC

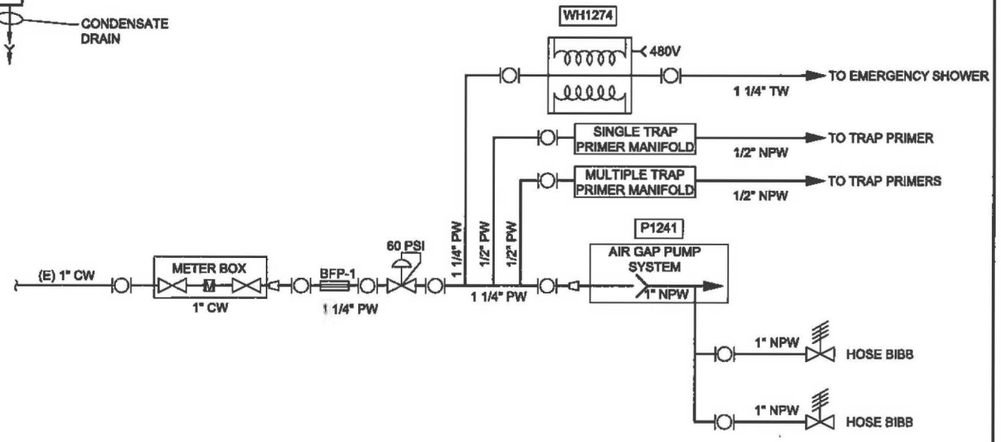

WATER SCHEMATIC

ISSUED FOR CONSTRUCTION

ANY PRINTS NOT BEARING THIS STAMP MAY HAVE BEEN PRINTED PRIOR TO ADVERTISING AND CANNOT BE CONSIDERED AS BID DOCUMENTS. USERS OF THIS DOCUMENT IN EDITABLE ELECTRONIC FORMATS ARE CAUTIONED AGAINST USE WITHOUT FIRST DETERMINING WHETHER CHANGES MAY HAVE BEEN MADE SUBSEQUENT TO ITS PREPARATION.

NO	REVISION	DATE	BY

SCALES
0 1"
0 25mm
IF THIS BAR IS NOT DIMENSION SHOWN, ADJUST SCALES ACCORDINGLY.

RYAN P. RAY — STATE OF WASHINGTON — 42409 — PROFESSIONAL ENGINEER

DESIGNED	SM
DRAWN	SM
CHECKED	RR

CITY OF GIG HARBOR, PUBLIC WORKS DEPARTMENT
GIG HARBOR, WASHINGTON
REPLACEMENT OF SANITARY SEWER
LIFT STATION #12A

Kennedy Jenks

LIFT STATION HVAC AND PLUMBING SCHEMATICS

SCALE	
JOB NO	2097006*00
DATE	AUGUST 2021
SHEET	31 OF 60
	M-06

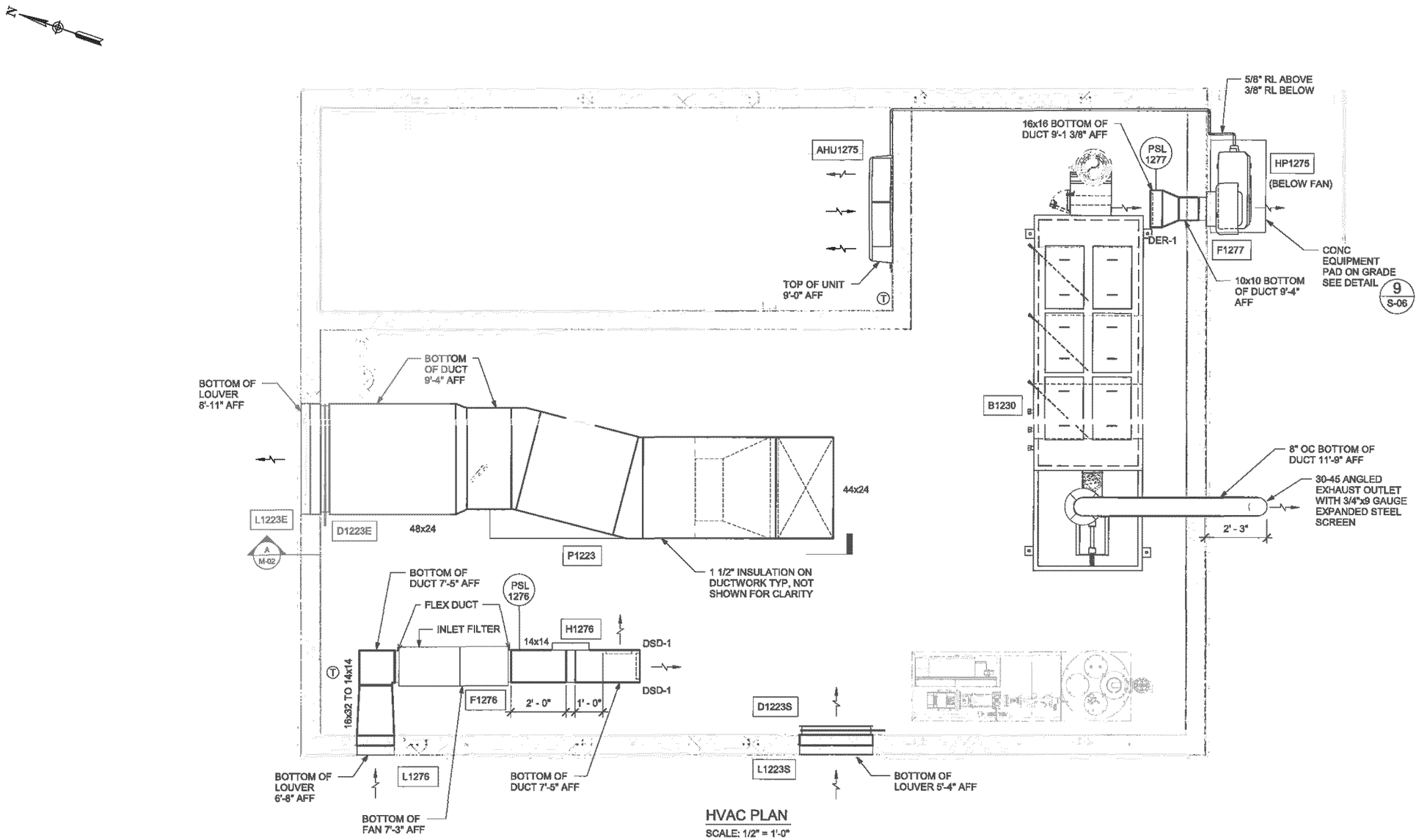

HVAC PLAN

SCALE: 1/2" = 1'-0"

ISSUED FOR CONSTRUCTION

ANY PRINTS NOT BEARING THIS STAMP MAY HAVE BEEN PRINTED PRIOR TO ADVERTISING AND CANNOT BE CONSIDERED AS BID DOCUMENTS. USERS OF THIS DOCUMENT IN EDITABLE ELECTRONIC FORMATS ARE CAUTIONED AGAINST USE WITHOUT FIRST DETERMINING WHETHER CHANGES MAY HAVE BEEN MADE SUBSEQUENT TO ITS PREPARATION.

NO	REVISION	DATE	BY

SCALES
0 1"
0 25mm
IF THIS BAR IS NOT DIMENSIONS SHOWN, ADJUST SCALES ACCORDINGLY.

RYAN P. RAY — STATE OF WASHINGTON — 19403 — REGISTERED PROFESSIONAL ENGINEER

DESIGNED	SM
DRAWN	SM
CHECKED	RR

CITY OF GIG HARBOR, PUBLIC WORKS DEPARTMENT
GIG HARBOR, WASHINGTON
REHABILITATION OF SANITARY SEWER
LIFT STATION #12A

Kennedy Jenks

LIFT STATION HVAC PLAN

SCALE	1/2" = 1'-0"
JOB NO	2097006*00
DATE	AUGUST 2021
SHEET	32 OF 80
	M-07

PLOT DATE: 8/4/2021 2:39:21 PM
PATH AND FILENAME: B:\d01430582\2097006.00-MECH-HVAC.rvt
CAD User: SM

NOTES:

1. PIPING SYSTEMS SHOWN IN THESE DRAWINGS ARE SCHEMATIC IN NATURE. THE CONTRACTOR IS RESPONSIBLE TO COORDINATE WITH ALL INVOLVED DISCIPLINES THE FINAL LOCATION OF EQUIPMENT AND PIPING.
2. PROVIDE TRAPS WITH VENT AND PRIMER CONNECTION AT ALL FLOOR DRAINS UNLESS OTHERWISE INDICATED. VENT FIXTURES IN ACCORDANCE WITH THE PLUMBING CODE.
3. VENT RISERS ARE SHOWN IN APPROXIMATE SIZE AND LOCATIONS TO ALLOW THE CONTRACTOR TO CONNECT VENT PIPING TO A VENT RISER. VENT RISERS TO BE SIZED AND LOCATED IN ACCORDANCE WITH THE PLUMBING CODE.

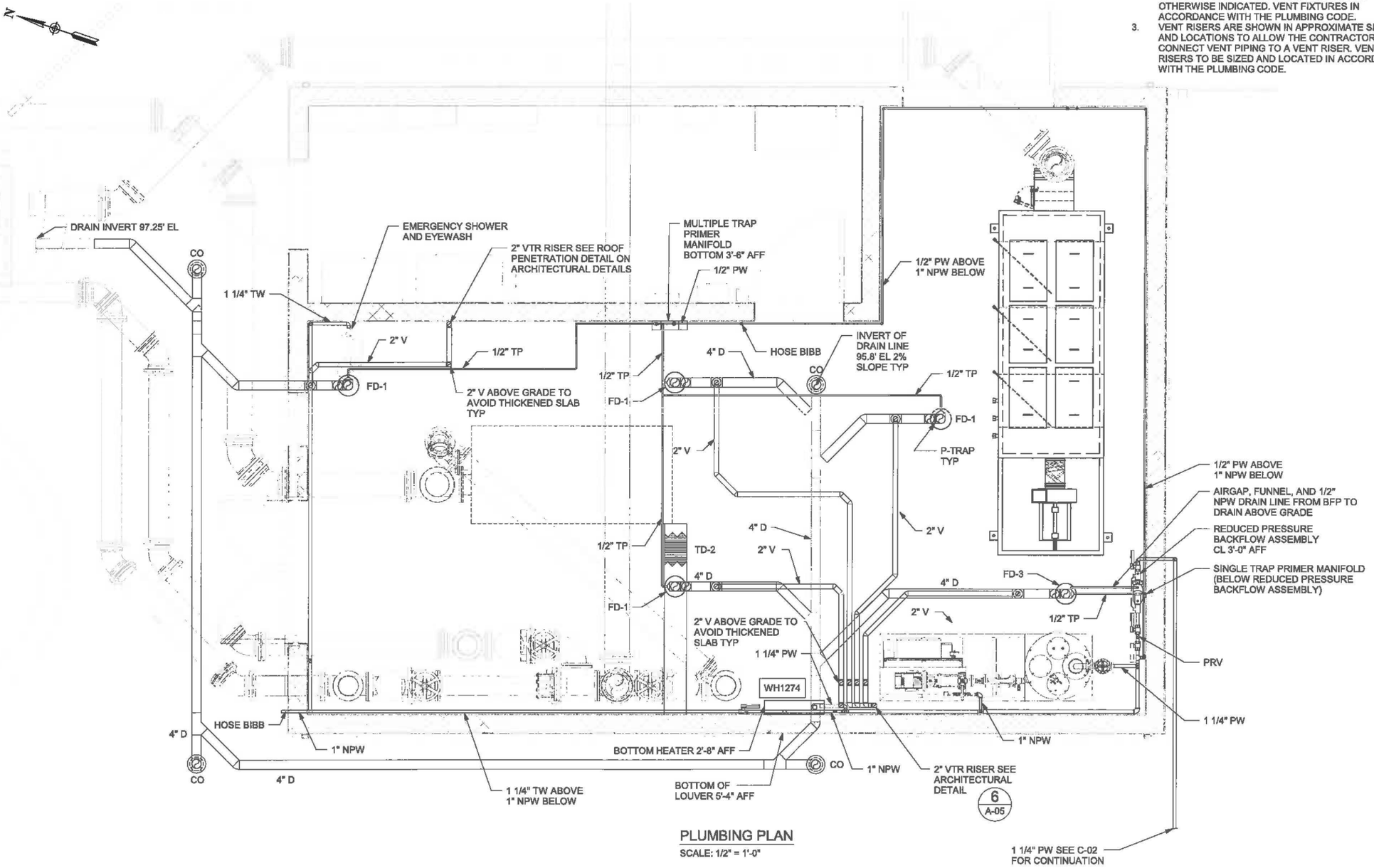

PLUMBING PLAN
SCALE: 1/2" = 1'-0"

PLOT DATE: 8/4/2021 2:40:13 PM CAD User: SPM
PATH AND FILENAME: B:\c014305\02097006.00-MECH-HVAC.rvt

ISSUED FOR CONSTRUCTION

ANY PRINTS NOT BEARING THIS STAMP MAY HAVE BEEN PRINTED PRIOR TO ADVERTISING AND CANNOT BE CONSIDERED AS BID DOCUMENTS. USERS OF THIS DOCUMENT IN EDITABLE ELECTRONIC FORMATS ARE CAUTIONED AGAINST USE WITHOUT FIRST DETERMINING WHETHER CHANGES MAY HAVE BEEN MADE SUBSEQUENT TO ITS PREPARATION.

NO	REVISION	DATE	BY

SCALES
0 — 1"
0 — 25mm
IF THIS BAR IS NOT DIMENSIONS SHOWN, ADJUST SCALES ACCORDINGLY.

RYAN P. RAY — STATE OF WASHINGTON — 22420 — REGISTERED PROFESSIONAL ENGINEER

DESIGNED	SPM
DRAWN	SPM
CHECKED	RPR

CITY OF GIG HARBOR, PUBLIC WORKS DEPARTMENT
GIG HARBOR, WASHINGTON
REHABILITATION OF SANITARY SEWER LIFT STATION #12A

Kennedy Jenks

LIFT STATION PLUMBING PLAN

SCALE	1/2" = 1'-0"
JOB NO	2097006*00
DATE	AUGUST 2021
SHEET	33 OF 60
	M-08

GENERAL NOTES

1. CONTRACTOR SHALL BE RESPONSIBLE FOR THE COST OF ALL PERMITS AND SCHEDULING INSPECTIONS WITH LABOR AND INDUSTRIES ELECTRICAL DIVISION.
2. CONDUITS IN BUILDING PARALLEL TO SLAB SHALL BE INSTALLED IN SLAB WITH AN EXCEPTION FOR LIGHTING AND FIRE ALARM SENSOR CONDUITS. BUILDING LIGHTING AND FIRE ALARM SENSOR CONDUITS PARALLEL TO SLAB MAY BE INSTALLED IN SLAB OR SECURED TO UNISTRUT WITHIN 18" OF UNDERSIDE OF ROOF. OUTDOOR CONDUITS SHALL BE INSTALLED A MINIMUM OF 24" UNDERGROUND WITH DETECTABLE TRACKING TAPE.
3. SURFACE-MOUNT CONDUIT SHALL BE GALVANIZED RIGID STEEL. SURFACE-MOUNT CONDUIT SHALL BE INSTALLED AT 90 DEGREE ANGLES TO BUILDING FACETS AND PARALLEL TO OTHER CONDUITS. LIGHT SWITCHES AND OPERATOR INTERFACES SHALL BE INSTALLED 48" ABOVE FINISHED FLOOR (AFF).
4. EQUIPMENT DIMENSIONS AND CONFIGURATION SHOWN ARE APPROXIMATE. ACTUAL SIZE AND LAYOUT SHALL BE PER THE ENGINEER-APPROVED CONTRACTOR'S SHOP DRAWINGS.
5. CONTRACTOR IS RESPONSIBLE FOR ARRANGING AND PROVIDING TEMPORARY POWER AND LIGHTING FOR WORK AREAS.
6. CONTRACTOR SHALL ENSURE THAT DIFFERENT VOLTAGE CONDUCTORS (480 VAC, 120 VAC, 24 VDC, AND CAT6/FIBER) DO NOT OCCUPY THE SAME CONDUIT, PULLBOX, OR J-BOX. IF A VIOLATION IS FOUND CONTRACTOR SHALL NOTIFY THE ENGINEER AND COORDINATE TO ENSURE PROPER SEPARATION.
7. CONDUIT PENETRATIONS TO EQUIPMENT ENCLOSURES SHALL BE FROM THE BOTTOM OF THE ENCLOSURE. SIDE PENETRATIONS MAY BE ALLOWED WITH PERMISSION FROM THE ENGINEER. CONTRACTOR SHALL NOT PENETRATE FROM TOP OF ENCLOSURE WITHOUT SPECIFIC WRITTEN DIRECTION FROM THE ENGINEER.
8. ELECTRICAL ENCLOSURES SHALL MAINTAIN THEIR NEMA AND UL RATING FOLLOWING COMPLETION OF WORK.

ONE-LINE DIAGRAM LEGEND

	TRANSFORMER
	DISCONNECT SWITCH
GF	DISCONNECT SWITCH, GROUND FAULT PROTECTION
GF	FUSED DISCONNECT SWITCH, GROUND FAULT PROTECTION
	CIRCUIT BREAKER
400A/3P	FUSE, RATED AS SHOWN
GF	CIRCUIT BREAKER, GROUND FAULT PROTECTION
	SINGLE-SPEED MOTOR STARTER WITH THERMAL OVERLOAD
	CURRENT TRANSFORMER
M0645 2 HP	MOTOR
	FLEXIBLE CONDUIT
	GROUNDING ROD
	MANUAL TRANSFER SWITCH
G	GENERATOR

WIRING DIAGRAM SYMBOL LEGEND

	PANEL MOUNTED WIRING
	FIELD MOUNTED WIRING
	TWISTED SHIELDED PAIR (TSP)
	TERMINAL BLOCK IN CONTROL PANEL
	TERMINAL BLOCK IN PACKAGED DEVICE
	FIELD MOUNTED TERMINAL BLOCK
	FUSE OR FUSED TERMINAL BLOCK IN CONTROL PANEL
CR-001 NO 111 NC 112	CONTROL RELAY, WITH REFERENCES TO CONTACTS BY WIRE NUMBER
CR-001	CONTACTS, NORMALLY OPEN
110 CR-001	CONTACTS, NORMALLY CLOSED,
110 SW-###	DOOR SWITCH: CLOSES WHEN CABINET DOOR IS OPENED
HS-###	PUSHBUTTON HANDSWITCH, NORMALLY OPEN
HS-###	PUSHBUTTON HANDSWITCH, NORMALLY CLOSED
LT-###	CABINET INTERIOR LIGHT OR STROBE BEACON
YL-### R	INDICATING LED, PRESS-TO-TEST LETTER INDICATES COLOR: R=RED A=AMBER G=GREEN
TDR-001	TIME-DELAY RELAY CONTACTS; NORMALLY OPEN, INSTANTANEOUS CLOSE, DELAYED OPEN
TDR-###	TIME-DELAY RELAY CONTACTS; NORMALLY CLOSED, INSTANTANEOUS OPEN, DELAYED CLOSE
LS-###	FLOAT SWITCH
PS-###	FLOW SWITCH
	120VAC STANDARD PLUG RECEPTACLE
	GROUND
M	MOTOR STARTER CONTACTS WITH THERMAL OVERLOAD
HOA-### H O A	THREE POSITION SELECTOR SWITCH LABELED "HAND/OFF/AUTO"
HS-### E D XO	TWO POSITION SELECTOR SWITCH LABELED "DISABLE/ENABLE"
I:X.Y.Z	PLC I/O POINT: ANALOG INPUT
O:X.Y.Z	PLC I/O POINT: ANALOG OUTPUT
I:X.Y/Z	PLC I/O POINT: DIGITAL INPUT
O:X.Y/Z	PLC I/O POINT: DIGITAL OUTPUT
VM-### V	VOLTMETER
IM-### A	AMMETER
TSH-###	TEMPERATURE SWITCH
to 0149 from 0149	WIRE CONTINUATION SYMBOLS
H1 H2 X1 X2	AC VOLTAGE TRANSFORMER

ABBREVIATIONS:

AFF	ABOVE FINISHED FLOOR
ATS	AUTOMATIC TRANSFER SWITCH
CB	CIRCUIT BREAKER
F	FUSE
FCB	FEEDER CIRCUIT BREAKER
FVNR	FULL-VOLTAGE NON-REVERSING MOTOR STARTER
G	GROUND
HMI	HUMAN MACHINE INTERFACE
HPU	HYDRAULIC POWER UNIT
JB	JBOX/JUNCTION BOX
LED	LIGHT EMITTING DIODE
MTS	MANUAL TRANSFER SWITCH
PLC	PROGRAMMABLE LOGIC CONTROLLER
RCPT	RECEPTACLE
SCADA	SUPERVISORY CONTROL AND DATA ACQUISITION
STP	SHIELDED-TWISTED PAIR (4-20 MA CONDUCTORS)
TYP	TYPICAL
UPS	UNINTERRUPTIBLE POWER SUPPLY
VAC	VOLTS ALTERNATING CURRENT
VFD	VARIABLE FREQUENCY DRIVE
WM	WALL MOUNT
XFMR	TRANSFORMER

GENERAL SYMBOL LEGEND

1	DRAWING NOTE; SEE DRAWING NOTES ON SAME PAGE FOR MORE INFORMATION
403	CONDUIT IDENTIFICATION TAG; SEE SCHEDULE ON E01.02 FOR MORE INFORMATION

PLAN DIAGRAM LEGEND

J	JUNCTION BOX
ZS	INTRUSION SENSOR, LOCATED ON DOOR NEAREST TO SYMBOL
$	2-WAY LIGHT SWITCH
$	3-WAY LIGHT SWITCH
	DUPLEX POWER RECEPTACLE
	4-PLEX POWER RECEPTACLE
WP	4-PLEX POWER RECEPTACLE, WEATHER-PROOF
	EXTERNAL AREA LIGHT, MOUNTED ON WALL
	INTERNAL AREA LIGHT, HUNG FROM CEILING. NUMBER INDICATES CIRCUIT
	VENTILATION FAN
	DISCONNECT SWITCH
	FLEXIBLE CONDUIT
	CONDUIT TURNS UP 90°
	CONDUIT TURNS DOWN 90°
	CONDUIT CHANGING LEVELS
	GROUNDING ROD
	WALL MOUNTED EXIT LIGHT
	EMERGENCY LIGHT WITH BACKUP BATTERY
	LED TROFFER LIGHT, NUMBERS INDICATE LUMINAIRE SCHEDULE LABEL AND CIRCUIT NUMBER
	CONDUIT SEAL FITTINGS
S	SMOKE DETECTOR, INTEGRATED WITH BUILDING SAFETY SYSTEMS

EQUIPMENT LIST

Tag	Description
	Electrical Room
	Service Entrance
UCT1201	UTILITY CURRENT TRANSFORMER
MTS1201	MANUAL TRANSFER SWITCH (SERVICE-RATED)
PFR1201	PHASE FAILUR RELAY
PDP1201	POWER DISTRIBUTION PANEL (FUSED)
WHM1201	WATT HOUR METER
	Equipment
TX1201	TRANSFORMER, 15 KVa, 120/208 3-PHASE
LC1201	LOADCENTER (120/208 3-PHASE)
LSCP1201	LIFT STATION CONTROL PANEL
LCP1211	MUFFIN MONSTER LCP
VFD1221	PUMP 1221 VFD
VFD1222	PUMP 1222 VFD
LCP1230	ODOR CONTROL (UNISORB) CONTROL PANEL
HS1272-DR1	BUILDING INTRUSION KEYSWITCH
ZS1273-DR1	BUILDING INTRUSION DOOR SWITCH DOOR 1
AHU1275	AIR HANDLING UNIT (ELECTRICAL ROOM HEAT)
YL1276-DR2	HVAC ALARM PANEL IN ELECTRICAL ROOM
MAS1280	MISSION ALARM SYSTEM (INSIDE LSCP1201)
BS1281	SMOKE DETECTOR IN ELECTRICAL ROOM
	Mechanical Room
P1223	SCREWSUCKER DIESEL PUMP
D1223-S	SCREWSUCKER AIR SUPPLY DAMPER
D1223-E	SCREWSUCKER AIR EXHAUST DAMPER
B1231	ODOR CONTROL (UNISORB) BLOWER
AE1233	COMBUSTIBLE GAS SENSOR
P1241	WATER SUPPLY SYSTEM (AIR GAP)
WH1274	HOT WATER HEATER (77 kVA)
ZS1273-DR3	BUILDING INTRUSION DOOR SWITCH DOOR 3
ZS1273-DR4	BUILDING INTRUSION DOOR SWITCH DOOR 4
F1276	BUILDING AIR INTAKE FAN
MS1276	HVAC INTAKE FAN CONTROL PANEL
PSL1276	BUILDING AIR INTAKE PRESSURE SWITCH
H1276	BUILDING AIR INTAKE HEATER
TIS1276	BUILDING AIR INTAKE THERMOSTAT
YL1276-DR4	HVAC ALARM PANEL 2 NORTH MECH EXTERIOR
YL1276-DR3-A	HVAC ALARM PANEL 3 EAST MECH INTERIOR
YL1276-DR3-B	HVAC ALARM PANEL 4 EAST MECH EXTERIOR
YA1276	HVAC ALARM HORN EAST MECH INTERIOR
F1277	BUILDING AIR EXHAUST FAN
MS1277	HVAC EXHAUST FAN CONTROL PANEL
PSL1277	BUILDING AIR EXHAUST PRESSURE SWITCH
	Wetwell
G1211	GRINDER MACERATOR (MUFFIN MONSTER)
P1221	PUMP 1221
P1222	PUMP 1222
LS1251	LEVEL LOW SWITCH
LS1252	LEAD PUMP START SWITCH
LS1253	LAG PUMP START SWITCH
LS1254	LEVEL HIGH SWITCH
LS1256	P1223 STOP FLOAT SWITCH (DIESEL PUMP)
LS1257	P1223 START FLOAT SWITCH (DIESEL PUMP)
LE1261	ULTRASONIC LEVEL SENSOR
ZS1264	WETWELL INTRUSION
BS1282	SMOKE DETECTOR NORTH MECH ROOM
BS1283	SMOKE DETECTOR SOUTH MECH ROOM
	Bypass & Flowmeter Vault
FE1262	FLOWMETER
ZS1266	BYPASS & FLOWMETER VAULT INTRUSION
	Electrical Vault
ZS1263	ELECTRIC VAULT INTRUSION
	Overflow Vault
LS1255	OVERFLOW STORAGE LEVEL HIGH SWITCH
ZS1265	OVERFLOW VAULT INTRUSION
	Outside
HP1275	HEAT PUMP (ELECTRICAL ROOM HEAT)

ISSUED FOR CONSTRUCTION

ANY PRINTS NOT BEARING THIS STAMP MAY HAVE BEEN PRINTED PRIOR TO ADVERTISING AND CANNOT BE CONSIDERED AS BID DOCUMENTS. USERS OF THIS DOCUMENT IN EDITABLE ELECTRONIC FORMATS ARE CAUTIONED AGAINST USE WITHOUT FIRST DETERMINING WHETHER CHANGES MAY HAVE BEEN MADE SUBSEQUENT TO ITS PREPARATION.

NO	REVISION	DATE	BY

SCALES: 0 1" / 0 25mm — IF THIS BAR IS NOT DIMENSION SHOWN, ADJUST SCALES ACCORDINGLY.

JON P. MATHISON — STATE OF WASHINGTON — 18408 — REGISTERED PROFESSIONAL ENGINEER

DESIGNED	JPM
DRAWN	ASB
CHECKED	JPM

CITY OF GIG HARBOR, PUBLIC WORKS DEPARTMENT
GIG HARBOR, WASHINGTON
REPLACEMENT OF SANITARY SEWER LIFT STATION #12A

Kennedy Jenks

Advanced Industrial Automation
917 NW 44th St
Seattle, WA 98107
phone: 206-789-1373
www.advancedia.com info@advancedia.com

ELECTRICAL NOTES, SYMBOLS, & ABBREVIATIONS

SCALE	
JOB NO	2097006*00
DATE	AUGUST 2021
SHEET	34 OF 60
	E-01

8/4/2021 4:17:44 PM

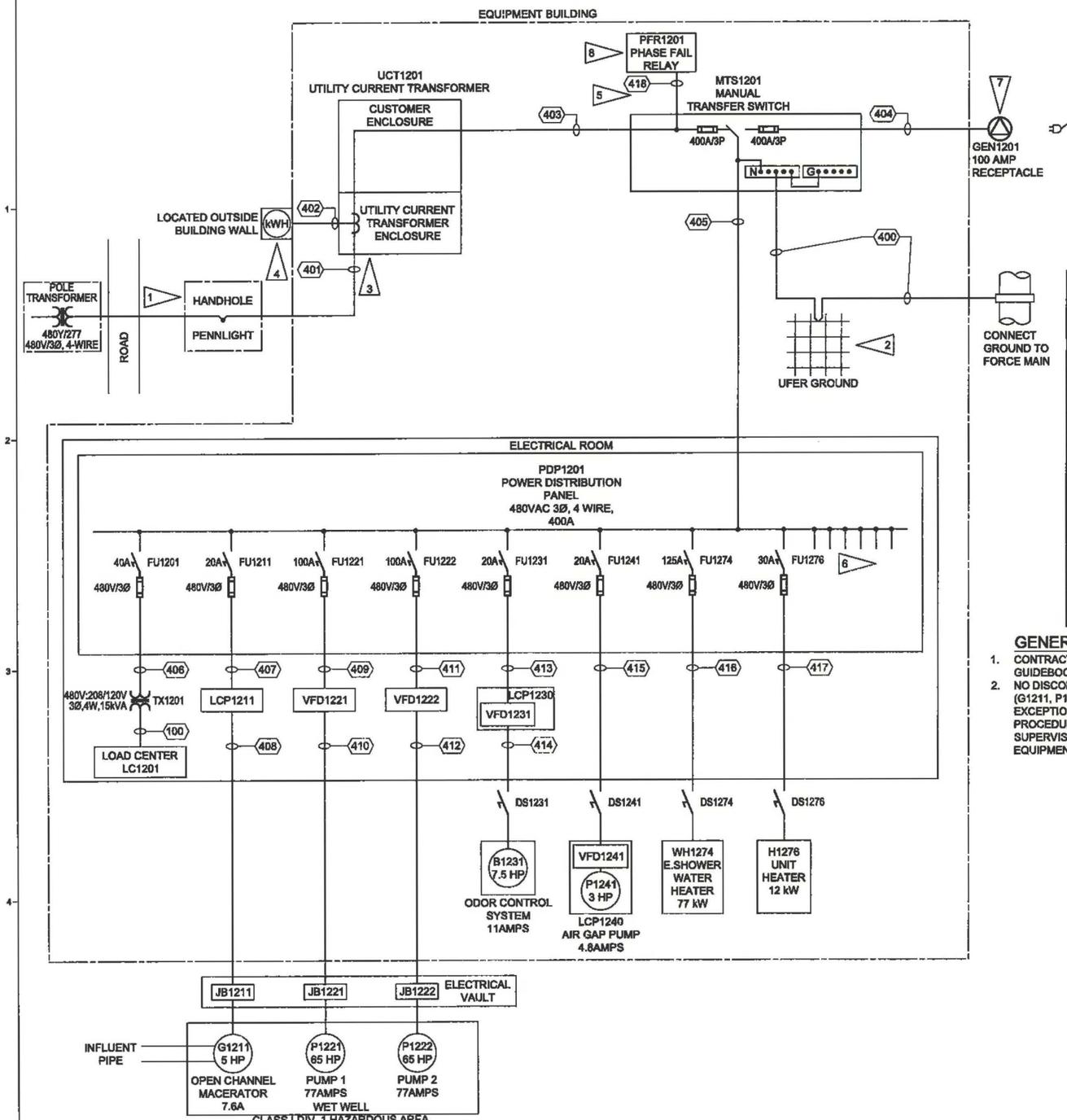

SERVICE LOAD SCHEDULE

	LOCATION	EQUIPMENT TAG	DESCRIPTION	Phase	Volts	Horsepower	Full Load Amps	Connected Load (kVA)	Connected Load (kW)	Demand Factor Utility	Demand Factor Generator	Load Utility (kVA)	Load Generator (kVA)
1	LS12 Elec Rm	TX1201	Transformer, 15 KVA, 208/120, 3-phase	3	480	–	18.0	15.0	12.0	1	1	15.0	15.0
2	LS12 Wetwell	G1211	Open Channel Grinder Macerator	3	480	5	7.6	6.3	3.7	1	1	6.3	6.3
3	LS12 Wetwell	P1221	Pump 1221	3	480	65.3	78.6	65.3	48.7	1.25	1.25	81.7	81.7
4	LS12 Wetwell	P1222	Pump 1222	3	480	65.3	78.6	65.3	48.7	1	1	65.3	65.3
5	LS12 Mech Rm	B1231	Blower (Odor scrubber)	3	480	7.5	11.0	9.1	5.6	1	1	9.1	9.1
6	LS12 Mech Rm	P1241	Water (Air gap) pump	3	480	3	4.8	4.0	2.2	1	1	4.0	4.0
7	LS12 Mech Rm	WH1274	Water Heater - tankless	3	480	–	92.6	77.0	77.0	1	1	77.0	77.0
8	LS12 Mech Rm	H1276	Mechanical Room Heater	3	480	–	14.4	12.0	12.0	1.25	1.25	15.0	15.0
	Equipment Load					**146 HP**	**308 A**	**254 kVA**	**210 kW**			**273 kVA**	**273 kVA**
			Load Calc Summary										
			Connected Load				Amps	kVA					
			Utility Service @ 480				305.7	254.1					
			Demand Load										
			Utility Service @ 480				329.0	273.5					
			Portable Generator @ 480				329.0	273.5					
			Minimum Service Design Rating				400.0						
			Main Breaker Size				400.0						

GENERAL NOTES

1. CONTRACTOR SHALL FOLLOW PENNINSULA LIGHT ELECTRICAL SERVICE GUIDEBOOK ON SERVICE ENTRANCE INSTALLATION.
2. NO DISCONNECTING MEANS IS PROVIDED FOR MOTORS IN WETWELL (G1211, P1221, P1222) IN ACCORDANCE WITH NEC 430.120(B)(2) EXCEPTION (3): IN INDUSTRIAL INSTALLATIONS, WITH WRITTEN SAFETY PROCEDURES WHERE CONDITIONS OF MAINTENANCE AND SUPERVISION ENSURE THAT ONLY QUALIFIED PERSONS SERVICE THE EQUIPMENT.

DIAGRAM NOTES

1. CONTRACTOR SHALL COORDINATE WITH PENINSULA LIGHT FOR 480 VAC 3-PHASE 4-WIRE ELECTRICAL POWER. CONTACT ENGINEERING COORDINATOR AT PENINSULA LIGHT, (253) 857-1566. FROM PRIOR COORDINATION THE FOLLOWING IS PROPOSED: FROM EXISTING 12kV PRIMARY SERVICE POLE AND POLE-MOUNTED TRANSFORMER PENINSULA LIGHT TO INSTALL RISER DOWN POLE, SCLID PIPE UNDER THE ROAD, AND TRAFFIC-RATED UTILITY HANDHOLE WITHIN THE LIFT STATION FENCE. PENINSULA LIGHT TO "OWN AND MAINTAIN" INSTALLATION FROM THE POWER VAULT TO THE TRANSFORMER AND PRIMARIES.
2. CONTRACTOR SHALL BOND GROUNDING ELECTRODE CONDUCTOR (GEC) TO THE BUILDING REBAR TO CREATE A CONCRETE-ENCASED ELECTRODE (UFER GROUND). CONTRACTOR SHALL PROVIDE A SUPPLEMENTAL GEC BONDING CONNECTION TO THE FORCE MAIN IN THE BYPASS AND METER VAULT.
3. CONTRACTOR SHALL COORDINATE WITH PENNINSULA LIGHT AND INSTALL UTILITY CT ENCLOSURE PER PENINSULA LIGHT STANDARDS.
4. CONTRACTOR SHALL INSTALL METER BASE ON OUTSIDE BUILDING WALL IN CONFORMANCE WITH PENINSULA LIGHT STANDARDS.
5. CONTRACTOR SHALL INSTALL SERVICE-RATED MANUAL TRANSFER SWITCH TO ENABLE OWNER TO POWER A PORTION OF THE LIFT STATION USING A SUITABLE PORTABLE GENERATOR. DURING A POWER-OUTAGE THE SCREWSUCKER WILL PUMP DOWN THE WETWELL.
6. CONTRACTOR SHALL ENSURE A MINIMUM OF (6) POLES MINIMUM SPARE IN PDP1201 FOR FUTURE USE.
7. CONTRACTOR SHALL ENSURE PORTABLE GENERATOR RECEPTACLE FITS OWNER'S PORTABLE GENERATOR. REFERENCE MTS SPECIFICATION FOR REQUIREMENTS.
8. CONTRACTOR SHALL PROVIDE PHASE FAILURE RELAY, PFR1201, IN ENCLOSURE WITH UTILITY STATUS LED. PHASE FAILURE RELAY SHALL BE MOTORSAVER MODEL 455 OR EQUAL. STATUS LED SHALL BE 24 VDC ALLEN BRADLEY PUSH-TO-TEST 800T. ENCLOSURE SHALL BE SIZED FOR SELECTED RELAY AND STATUS LED.

ISSUED FOR CONSTRUCTION

ANY PRINTS NOT BEARING THIS STAMP MAY HAVE BEEN PRINTED PRIOR TO ADVERTISING AND CANNOT BE CONSIDERED AS BID DOCUMENTS. USERS OF THIS DOCUMENT IN EDITABLE ELECTRONIC FORMATS ARE CAUTIONED AGAINST USE WITHOUT FIRST DETERMINING WHETHER CHANGES MAY HAVE BEEN MADE SUBSEQUENT TO ITS PREPARATION.

NO	REVISION	DATE	BY

SCALES
0 1"
0 25mm
IF THIS BAR IS NOT DIMENSION SHOWN, ADJUST SCALES ACCORDINGLY.

JON P. MATHISON
STATE OF WASHINGTON
REGISTERED
PROFESSIONAL ENGINEER

DESIGNED JPM
DRAWN ASB
CHECKED JPM

CITY OF GIG HARBOR, PUBLIC WORKS DEPARTMENT
GIG HARBOR, WASHINGTON
REPLACEMENT OF SANITARY SEWER
LIFT STATION #12A

Kennedy Jenks
Advanced Industrial Automation
617 NW 44th St
Seattle, WA 98107
phone: 206-789-1373
www.advancedia.com info@advancedia.com

480 VAC ONE LINE AND SERVICE LOAD SCHEDULE

SCALE
JOB NO 2097006*00
DATE AUGUST 2021
SHEET 35 OF 60
E-02

8/4/2021 4:17:46 PM

UTILITY XFMR
480Y/277 3Ø, 4-WIRE

GEN1201 PORTABLE GENERATOR

PEN LIGHT UTILITY HANDHOLE

MTS1201 MANUAL TRANSFER SWITCH

PFR1201 PHASE FAIL RELAY

PDP1201 POWER DIST. PANEL

UCT1201 UTILITY CURRENT TRANSFORMER

WHM1201

UFER GROUND

BYPASS AND METER VAULT CONNECTED TO FORCE MAIN

TX1201 480V/120V 3Ø, 4-WIRE

LOAD CENTER LC1201

LCP1230 VFD1231 — B1231 7.5 HP — ODOR SCRUBBER BLOWER

FCV 1232

LCP1240 VFD1241 — P1241 5 HP — AIR GAP WATER PUMP SYSTEM

WH1274 E.SHOWER WATER HEATER

H1276 HEATER UNIT — TS 1276

SUPPLY VENTILATION FAN F1276 1/4 HP

DIFFERENTIAL PRESSURE PSL 1276 — MS 1276

LCP1211

VFD1221

VFD1222

AIT1232 COMBUSTIBLE GAS DETECTOR

FIT1262 FLOWMETER TRANSMITTER

LSCP1201 LIFT STATION CONTROL PANEL (PLC)

MISSION UNIT ANTENNA

DOOR 4: YL1276-DR4, JB, ZS1272-DR4

DOOR 1: JB, ZS1272-DR1, HS1272-DR1

DOOR 3: YA1276-DR3, JB, ZS1272-DR3, YL1276-DR3-B, YL1276-DR3-A

DOOR 2: JB, YL1276-DR2

HP1275 HEAT PUMP — AHU1275 AIR HANDLING

FACP1201 FIRE PANEL — BS1281 BS1282 BS1283

INTERIOR LIGHTS 1 (ELECTRICAL ROOM)

INTERIOR LIGHTS 2 (MECH. DIESEL AREA)

INTERIOR LIGHTS 3 (MECH. ODOR AREA)

RECEPTACLES CIRCUIT 1

RECEPTACLES CIRCUIT 2

EXTERIOR LIGHTS 1

MS 1277 — F1277 1/8 HP EXHAUST VENTILATION FAN — PSL 1277 DIFFERENTIAL PRESSURE

P1223 BACKUP DIESEL PUMP

D1223S DIESEL PUMP CONTROLLED SUPPLY DAMPER

D1223E DIESEL PUMP CONTROLLED EXHAUST DAMPER

BYPASS AND METER VAULT
- ZS-1266 BYPASS AND METER VAULT INTRUSION SENSOR
- FE1262 EFFLUENT FLOWMETER (SENSOR)

OVERFLOW STORAGE (CLASS I DIV. 1 HAZARDOUS AREA)
- LSH1255 OVERFLOW STORAGE LEVEL SWITCH HIGH
- ZS-1265 OVERFLOW VAULT INTRUSION SENSOR

SEAL OFF VAULT
- JB1263
- ZS-1263 SEAL OFF VAULT INTRUSION SENSOR

WETWELL (CLASS I DIV. 1 HAZARDOUS AREA)
- ZS-1264 WET WELL INTRUSION SENSOR
- LIT-1261 WETWELL LEVEL TRANSDUCER
- LSAH1254 WETWELL LEVEL SWITCH HIGH
- LSHH1253 LAG PUMP START LEVEL SWITCH
- LSH1252 LEAD PUMP START LEVEL SWITCH
- LSL1251 WETWELL LEVEL SWITCH LOW
- LSH1257 DIESEL PUMP START FLOAT
- LSL1256 DIESEL PUMP STOP FLOAT

JB1261

JB1250

JB1211

JB1221 / JB1221T/M

JB1222 / JB1222T/M

G1211 5 HP — OPEN CHANNEL MACERATOR

P1221 65 HP — PUMP 1221

P1222 65 HP — PUMP 1222

GENERAL NOTES

1. CONTRACTOR SHALL ENSURE NO SPARE (NON-TERMINATED) CONDUCTORS ARE PROVIDED INTO ANY CLASS1 DIV1 HAZARDOUS AREA. ALL CONDUCTORS INTO HAZARDOUS AREAS MUST BE TERMINATED TO INTRINSICALLY-SAFE DEVICES IN ACCORDANCE WITH NEC 504.

DIAGRAM NOTES

1. CONTRACTOR SHALL TERMINATE PUMP POWER CABLES IN JB1221 AND JB1222. CONTRACTOR SHALL TERMINATE THERMAL AND MOISTURE CABLES IN JB1221T/M AND JB1222T/M.
2. CONTRACTOR SHALL CONNECT MOTOR STARTER TO DUCT-MOUNTED DIFFERENTIAL PRESSURE SWITCH.
3. CONTRACTOR SHALL BOND GROUNDING ELECTRODE CONDUCTOR (GEC) TO THE BUILDING REBAR TO CREATE A CONCRETE-ENCASED ELECTRODE (UFFER GROUND). CONTRACTOR SHALL PROVIDE A SUPPLEMENTAL GEC BONDING CONNECTION TO THE FORCE MAIN IN THE BYPASS AND METER VAULT.
4. CONTRACTOR SHALL PROVIDE RACEWAY AND CONDUCTORS TO DOORS 1-4 FOR INTRUSION SWITCHES, INTRUSION KEYSWITCH, GO/NO-GO LIGHTS, AND HORN. DOORS SHOWN ON A-02.

ISSUED FOR CONSTRUCTION

ANY PRINTS NOT BEARING THIS STAMP MAY HAVE BEEN PRINTED PRIOR TO ADVERTISING AND CANNOT BE CONSIDERED AS BID DOCUMENTS. USERS OF THIS DOCUMENT IN EDITABLE ELECTRONIC FORMATS ARE CAUTIONED AGAINST USE WITHOUT FIRST DETERMINING WHETHER CHANGES MAY HAVE BEEN MADE SUBSEQUENT TO ITS PREPARATION.

NO	REVISION	DATE	BY

SCALES: 0 — 1" / 0 — 25mm. IF THIS BAR IS NOT DIMENSION SHOWN, ADJUST SCALES ACCORDINGLY.

JON P. MATHISON — STATE OF WASHINGTON — REGISTERED PROFESSIONAL ENGINEER

DESIGNED JPM
DRAWN ASP
CHECKED JPM

CITY OF GIG HARBOR, PUBLIC WORKS DEPARTMENT
GIG HARBOR, WASHINGTON
REPLACEMENT OF SANITARY SEWER LIFT STATION #12A

Kennedy Jenks

Advanced Industrial Automation
917 NW 44th St
Seattle, WA 98107
phone: 206-789-1573
www.advanceda.com info@advanceda.com

CONDUIT BLOCK DIAGRAM

SCALE
JOB NO 2097006*00
DATE AUGUST 2021
SHEET 36 OF 60
E-03

8/4/2021 4:17:47 PM

CONDUIT AND CONDUCTOR SCHEDULE

Run ID	Description	EndPoint 1	EndPoint 2
	480Y/277, 3Ø		
400	(1) 1/0G	MTS1201	UFER FORCE MAIN
401	(2) PARALLEL 2½"PVC EACH WITH (3) 3/0, (1) #1N	PENLIGHT HH	UCT1201
402	1½"GRC WITH PULL STRING	UCT1201	WHM1201
403	(2) PARALLEL 2½"GRC EACH WITH (3) 3/0, (1) #1N,(1)#4G	UCT1201	MTS1201
404	(2) PARALLEL 2½"GRC EACH WITH (3) 3/0, (1) #1N,(1)#4G	GEN1201	MTS1201
405	(2) PARALLEL 2½"GRC EACH WITH (3) 3/0, (1) #1N,(1)#4G	MTS1201	PDP1201
406	1"GRC, (3) #10, #10N,#6G	PDP1201	TX1201
407	1" GRC, (3) #10, #10G	PDP1201	LCP1211
408	1" GRC, (3) #10, #10G VIA JB1211	LCP1211	G1211
409	1½"GRC, (3) #3, #6G	PDP1201	VFD1221
410	1½"GRC, (3) #3, #6G VIA JB1221	VFD1221	P1221
411	1½"GRC, (3) #3, #6G	PDP1201	VFD1222
412	1½"GRC, (3) #3, #6G VIA JB1222	VFD1222	P1222
413	1" GRC, (3) #10, #10G	PDP1201	LCP1230
414	1" GRC, (3) #10, #10G	LCP1230	B1231
415	1" GRC, (3) #10, #10G	PDP1201	LCP1240
416	1" GRC, (3) #1, #6G	PDP1201	WH1274
417	1" GRC, (3) #10, #10G	PDP1201	H1276
418	1" GRC, (6) #10, #10G	MTS1201	PFR1201

CONDUIT AND CONDUCTOR SCHEDULE

Run ID	Description	EndPoint 1	EndPoint 2
	120 V, 1Ø		
100	1½"GRC, (3) #3, #3N, #6G	TX1201	LC1201
101	1" GRC, (2) #12, (1) #12G	LC1201	LSCP1201
102	1" GRC, (2) #10, (1) #10N, (1) #10G (208 VOLTS)	LC1201	HP1275
103	1" GRC, MANUFACTURER'S CABLE	HP1275	AHU1275
104	1" GRC, (2) #12, (1) #12G	LC1201	FACP1201
105	1" GRC, (6) #12, (1) #12G	LC1201	LIGHTS INT 1 ELEC
106	1" GRC, (6) #12, (1) #12G	LC1201	LIGHTS INT 2 MECH
107	1" GRC, (6) #12, (1) #12G	LC1201	LIGHTS INT 3 ODOR
108	1" GRC, (2) #12, (1) #12G	LC1201	RECP CIRC 1
109	1" GRC, (2) #12, (1) #12G	LC1201	RECP CIRC 2
110	1" GRC, (2) #12, (1) #12G	LC1201	LIGHTS EXTERIOR
111	1" GRC, (2) #12, (1) #12G	LC1201	MS1276
112	1" GRC, (2) #12, (1) #12G	MS1276	F1276
113	1" GRC, (6) #12, (1) #12G	LCP1230	FCV-1232
114	1" GRC, (6) #12, (1) #12G	LCP1230	B1231
115	1" GRC, (2) #12, (1) #12G, MANUFACTURER'S CABLE	H1276	TS1276
116	1" GRC, (2) #12, (1) #12G	LC1201	MS1277
117	1" GRC, (2) #12, (1) #12G	MS1277	F1277
118	NULL		
119	1" GRC, (2) #12, (1) #12G	LC1201	P1223
120	1" GRC, (2) #12, (1) #12G	P1223	D1223-S
121	1" GRC, (2) #12, (1) #12G	P1223	D1223-E
122	1" GRC, (4) #12 + (4) #12 SPARE	VFD1221	JB1221T/M
123	1" GRC, PUMP CABLE	JB1221T/M	P1221
124	1" GRC, (4) #12 + (4) #12 SPARE	VFD1222	JB1222T/M
125	1" GRC, PUMP CABLE	JB1222T/M	P1222

CONDUIT AND CONDUCTOR SCHEDULE

Run ID	Description	EndPoint 1	EndPoint 2
	24 VDC/4-20 mA		
001	1" GRC, (12) #14 + (4) #14 SPARE	LSCP1201	FACP1201
002	2"GRC, (4) #14, (2) TSP, (1) CAT6 + (4) #14 SPARE	LSCP1201	LCP1211
003	2"GRC, (12) #14, (2) TSP, (1) CAT6 + (4) #14 SPARE	LSCP1201	VFD1221
004	2"GRC, (12) #14, (2) TSP, (1) CAT6 + (4) #14 SPARE	LSCP1201	VFD1222
005	1½"GRC, (10) #14 + (4) #14 SPARE	LSCP1201	JB
006	1½"GRC, (14) #14 + (8) #14 SPARE	LSCP1201	JB
007	NULL		
008	NULL		
009	1" GRC, (10) #14, (1) #12G + (4) #14 SPARE	LSCP1201	JB1250
010	1" GRC, MANUFACTURER'S CABLE	JB1250	LS1255
011	1" GRC, MANUFACTURER'S CABLE	JB1250	LS1251-54
012	1" GRC, (4) #14, (1) #12G + (2) #14 SPARE	P1223	JB1250
013	1" GRC, MANUFACTURER'S CABLE	JB1250	LS1256-57
014	1" GRC, MANUFACTURER'S CABLE	LSCP1201	JB1261
015	1" GRC, MANUFACTURER'S CABLE	JB1261	LE1261
016	1" GRC, (6) #14 + (2) #14 SPARE	LSCP1201	JB1263
017	1" GRC, (2) #14	JB1263	ZS1265
018	1" GRC, (2) #14	JB1263	ZS1263
019	1" GRC, (2) #14	JB1263	ZS1264
020	1" GRC, (2) #14	LSCP1201	ZS1266
021	1" GRC, MANUFACTURER'S CABLE	FIT1262	FE1262
022	1" GRC, (2) #14, (1) #12G, (1) TSP	LSCP1201	AIT1233
023	1" GRC, (8) #14 + (2) #14 SPARE	LSCP1201	MS1276
024	1" GRC, (2) #14	MS1276	PSL1276
025	1" GRC, (8) #14 + (2) #14 SPARE	LSCP1201	MS1277
026	1" GRC, (2) #14	MS1277	PSL1277
027	1" GRC, (2) #14	JB	HS1272-DR1
028	1" GRC, (2) #14	JB	ZS1272-DR1
029	1" GRC, (3) #14	JB	YL1276-DR4
030	1" GRC, (2) #14	JB	ZS1272-DR4
031	1" GRC, (3) #14	JB	YL1276-DR2
032	1" GRC, (3) #14	JB	YL1276-DR3-A
033	1" GRC, (3) #14	JB	YL1276-DR3-B
034	1" GRC, (2) #14	JB	YA1276-DR3
035	1" GRC, (2) #14	JB	ZS1272-DR3
036	1" GRC, (3) #14	LSCP1201	PFR1201
037	1" GRC, (4) #14 + (4) #14 SPARE	FACP1201	BS1281
038	1½"GRC, (11) #14 + (6) #14 SPARE	LSCP1201	LCP1230
039	1" GRC, (3) #14 + (2) #14 SPARE	LCP1230	FCV1232
040	1" GRC, (4) #14, (1) CAT6	LSCP1201	LCP1240
041	1" GRC, (4) #14, (1) TSP	LSCP1201	FIT1262
042	1" GRC, (4) #14 + (2) #14 SPARE	LSCP1201	P1223
043	1" GRC, (3) #14	LSCP1201	D1223-S
044	1" GRC, (3) #14	LSCP1201	D1223-E
045	1" GRC, (4) #14 + (4) #14 SPARE	BS1281	BS1282
046	1" GRC, (4) #14 + (4) #14 SPARE	BS1282	BS1283
047	1" GRC,MANUFACTURER'S CABLE (COAX)	LSCP1201	ANTENNA

LOAD CENTER LC1201 SCHEDULE

MOUNTING: ENCLOSURE
NEMA RATING: NEMA 1
VOLTAGE: 208/120 VAC, 3PH, 4W
PRIMARY 20 AMP
SECONDARY 40 AMP
SOURCE: TX-1201
LOCATION: ELECTRICAL ROOM
AIC RATINGS: 22k AIC

CKT	BREAKER	WIRE SIZE	DESCRIPTION	AMPERES L1	AMPERES L2	AMPERES L3	CKT	BREAKER	WIRE SIZE	DESCRIPTION	AMPERES L1	AMPERES L2	AMPERES L3
1	30A/1P	#10	HP1275 HEAT PUMP	20	-	-	2	20A/1P	#12	FACP1201 FIRE ALARM CONTROL PANEL	2	-	-
3	30A/1P	#10	HP1275 HEAT PUMP	-	20	-	4	20A/1P	#12	LSCP1201 LIFTSTATION CONTROL PANEL	-	5	-
5	15A/1P	#12	INTERIOR LIGHTS CKT 1	-	-	2	6	15A/1P	#12	INTERIOR LIGHTS CKT 2	-	-	4
7	15A/1P	#12	INTERIOR LIGHTS CKT 3	3	-	-	8	15A/1P	#12	EXTERIOR LIGHTS CKT 1	2	-	-
9	20A/1P	#12	RECEPTACLE CKT 1 (7)	-	5	-	10	20A/1P	#12	RECEPTACLE CKT 2 (8)	-	5	-
11	15A/1P	#12	F1276 - SUPPLY AIR BLOWER D1276 - SUPPLY AIR DAMPER	-	-	6	12	15A/1P	#12	F1277 - EXHAUST AIR BLOWER B1277 - EXHAUST AIR DAMPER	-	-	3
13	15A/1P	#12	SPACE	-	-	-	14	15A/1P	#12	P1223 - SCREWSUCKER BATT CHRG, DAMPERS	5	-	-
15	15A/1P	#12	SPACE	-	-	-	16	-	-	SPACE	-	-	-
17	-	-	SPACE	-	-	-	18	-	-	SPACE	-	-	-
19	-	-	SPACE	-	-	-	20	-	-	SPACE	-	-	-
21	-	-	SPACE	-	-	-	22	-	-	SPACE	-	-	-
23	-	-	SPACE	-	-	-	24	-	-	SPACE	-	-	-
25	-	-	SPACE	-	-	-	26	-	-	SPACE	-	-	-
27	-	-	SPACE	-	-	-	28	-	-	SPACE	-	-	-
29	-	-	SPACE	-	-	-	30	-	-	SPACE	-	-	-
			TOTAL	23	25	8				TOTAL	9	10	7

NOTES:
1. TX101 TRANSFORMER, 15KVA, 480-208/120
2
3.

TOTAL AMPERES	
BUS A	32
BUS B	35
BUS C	15

MAXIMUM KVA
9.84

ISSUED FOR CONSTRUCTION

ANY PRINTS NOT BEARING THIS STAMP MAY HAVE BEEN PRINTED PRIOR TO ADVERTISING AND CANNOT BE CONSIDERED AS BID DOCUMENTS. USERS OF THIS DOCUMENT IN EDITABLE ELECTRONIC FORMATS ARE CAUTIONED AGAINST USE WITHOUT FIRST DETERMINING WHETHER CHANGES MAY HAVE BEEN MADE SUBSEQUENT TO ITS PREPARATION.

NO	REVISION	DATE	BY

SCALES
0 1"
0 25mm
IF THIS BAR IS NOT DIMENSION SHOWN, ADJUST SCALES ACCORDINGLY.

JON P. MATHISON, STATE OF WASHINGTON, 19991, REGISTERED PROFESSIONAL ENGINEER

DESIGNED JPM
DRAWN ASS
CHECKED JPM

CITY OF GIG HARBOR, PUBLIC WORKS DEPARTMENT
GIG HARBOR, WASHINGTON
REPLACEMENT OF SANITARY SEWER
LIFT STATION #12A

Kennedy Jenks

Advanced Industrial Automation
817 NW 44th St
Seattle, WA 98107
phone: 206-789-1373
www.advancedia.com info@advancedia.com

SCHEDULES

SCALE
JOB NO 2097006*00
DATE AUGUST 2021
SHEET 37 OF 60
E-04

8/4/2021 4:17:52 PM

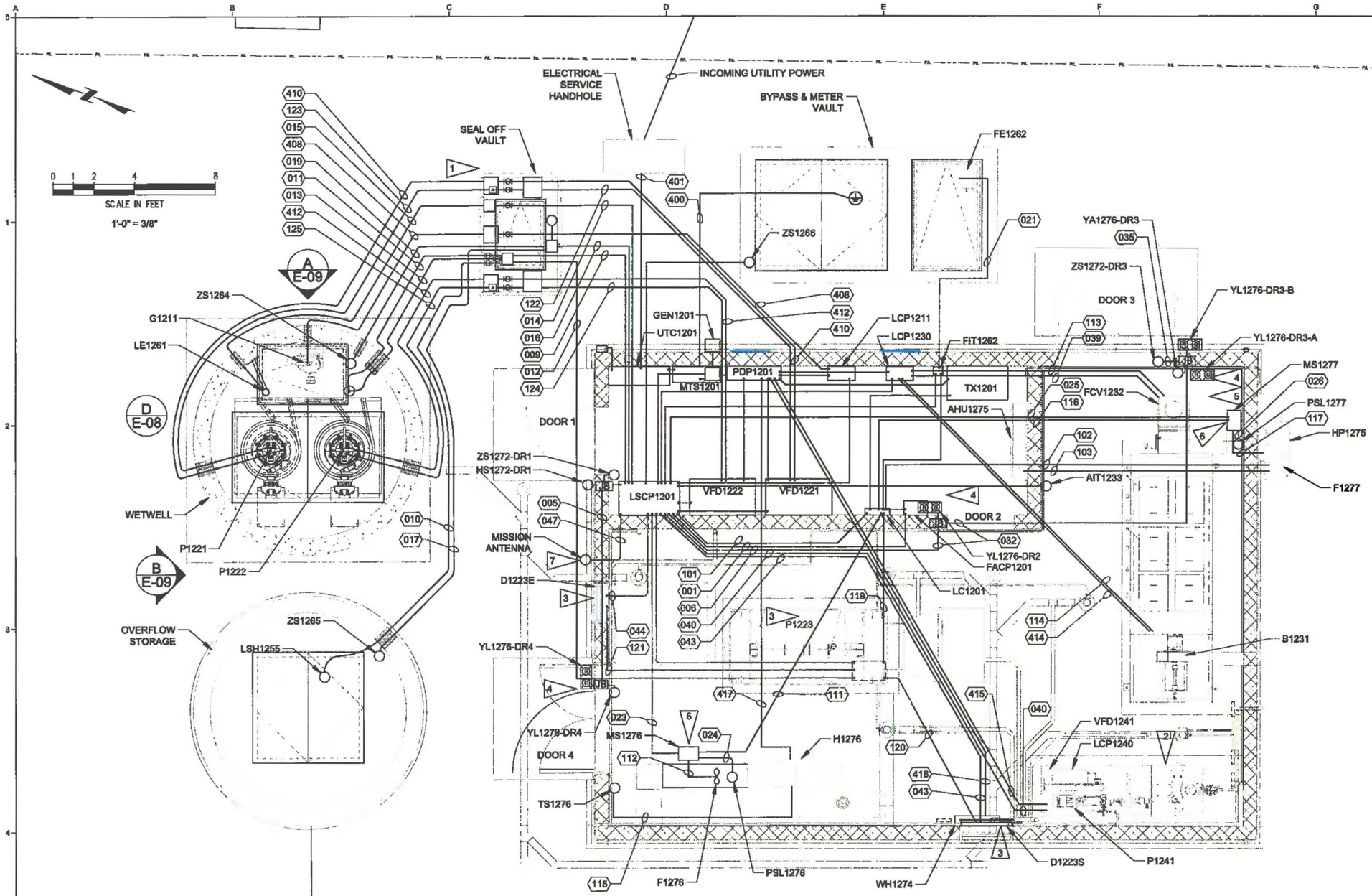

GENERAL NOTES

1. LINK SEAL FITTINGS SHALL BE USED FOR ALL CONDUIT PENETRATIONS THROUGH VAULTS AND WETWELL.
2. RACEWAY SHOWN ARE BELOW GRADE AND/OR IN-SLAB WITH STUB-UPS FOR ABOVE-GRADE EQUIPMENT. RACEWAY ROUTING SHOWN SHOULD BE CONSIDERED GENERAL GUIDANCE. CONTRACTOR IS RESPONSIBLE FOR FINAL PLACEMENT OF EQUIPMENT AND RACEWAY ROUTING TO THE EQUIPMENT.

DIAGRAM NOTES

1. CONTRACTOR SHALL INSTALL 4'-0" X 6'-0" SEAL-OFF (ELECTRICAL) VAULT FOR ELECTRICAL CONDUITS THAT ENTER THE WETWELL. REFERENCE SHEET S-03 FOR LOCATION AND M-01 FOR ACCEPTABLE VAULT AND DRAINAGE. REFERENCE E-08 FOR JBOX SCHEDULE AND PROPOSED LAYOUT.
2. CONTRACTOR SHALL TERMINATE AIR GAP WATER PUMP SYSTEM ELECTRICAL TO LCP1240. LCP1240 IS THE CONTROL PANEL FOR P1241 AND IS FED THROUGH VFD1241 LOCATED ADJACENT TO LCP1240.
3. CONTRACTOR SHALL COORDINATE THE SUPPLY AND EXHAUST DAMPERS D1223S AND D1223E CONTROL SIGNALS FROM P1223. CONTRACTOR SHALL ENSURE CONTROL CIRCUITRY (NON-STATUS) SUCH AS DAMPER CONTROL IS NOT RUN THROUGH LSCP1201 TO ENSURE THE D1223S AND D1223E ARE SOLELY CONTROLLED BY P1223. DURING POWER FAILURE DAMPERS WILL OPEN AND P1223 WILL RUN. DURING NON-POWER FAILURE EVENT (I.E. PLC FAILURE) P1223 SHALL BE CIRCUITED TO OPEN DAMPERS AS SHOWN ON EIC8.
4. CONTRACTOR SHALL PROVIDE AND INSTALL (4) 24 VDC HVAC ALARM BOXES DESIGNATED YL1276A, YL1276B, YL1276C, YL1276D. ALARM BOXES SHALL BE GRAY NEMA 4X WALL-MOUNT 2-PUSHBUTTON HOLES IN COVER, ALLIED MOULDED PRODUCTS MODEL AM2PB OR EQUAL. GREEN AND RED LEDS SHALL BE 33MM PUSH-TO-TEST ALLEN BRADLEY 800T SERIES OR EQUAL.
5. CONTRACTOR SHALL PROVIDE AND INSTALL (1) 24 VDC HVAC ALARM HORN DESIGNATED YA1276. ALARM HORN SHALL BE EDWARDS SIGNALING 868-AQ OR EQUAL.
6. CONTRACTOR SHALL PROVIDE AND INSTALL MS1276 AND MS1277 FUSIBLE COMBINATION DISCONNECT/STARTER WITH HOA AND RUNTIME METER AS SHOWN IN DRAWING EIC12 AND MOTOR STARTER SPECIFICATION.
7. CONTRACTOR SHALL COORDINATE CONDUIT PLACEMENT AND MOUNTING OF THE MISSION UNIT ANTENNA WITH MANUFACTURER.

ISSUED FOR CONSTRUCTION

ANY PRINTS NOT BEARING THIS STAMP MAY HAVE BEEN PRINTED PRIOR TO ADVERTISING AND CANNOT BE CONSIDERED AS BID DOCUMENTS. USERS OF THIS DOCUMENT IN EDITABLE ELECTRONIC FORMATS ARE CAUTIONED AGAINST USE WITHOUT FIRST DETERMINING WHETHER CHANGES MAY HAVE BEEN MADE SUBSEQUENT TO ITS PREPARATION.

NO	REVISION	DATE	BY

SCALES
0 1" 0 25mm
IF THIS BAR IS NOT DIMENSION SHOWN, ADJUST SCALES ACCORDINGLY.

JON P. MATHISON STATE OF WASHINGTON REGISTERED PROFESSIONAL ENGINEER

DESIGNED	MM
DRAWN	ASB
CHECKED	JPM

CITY OF GIG HARBOR, PUBLIC WORKS DEPARTMENT
GIG HARBOR, WASHINGTON
REPLACEMENT OF SANITARY SEWER LIFT STATION #12A

Kennedy Jenks

Advanced Industrial Automation
817 NW 44th St
Seattle, WA 98107
phone: 206-788-1373
www.advancedia.com info@advancedia.com

SITE PLAN VIEW

SCALE	
JOB NO	2087006*00
DATE	AUGUST 2021
SHEET	38 OF 60
	E-05

8/4/2021 4:17:54 PM

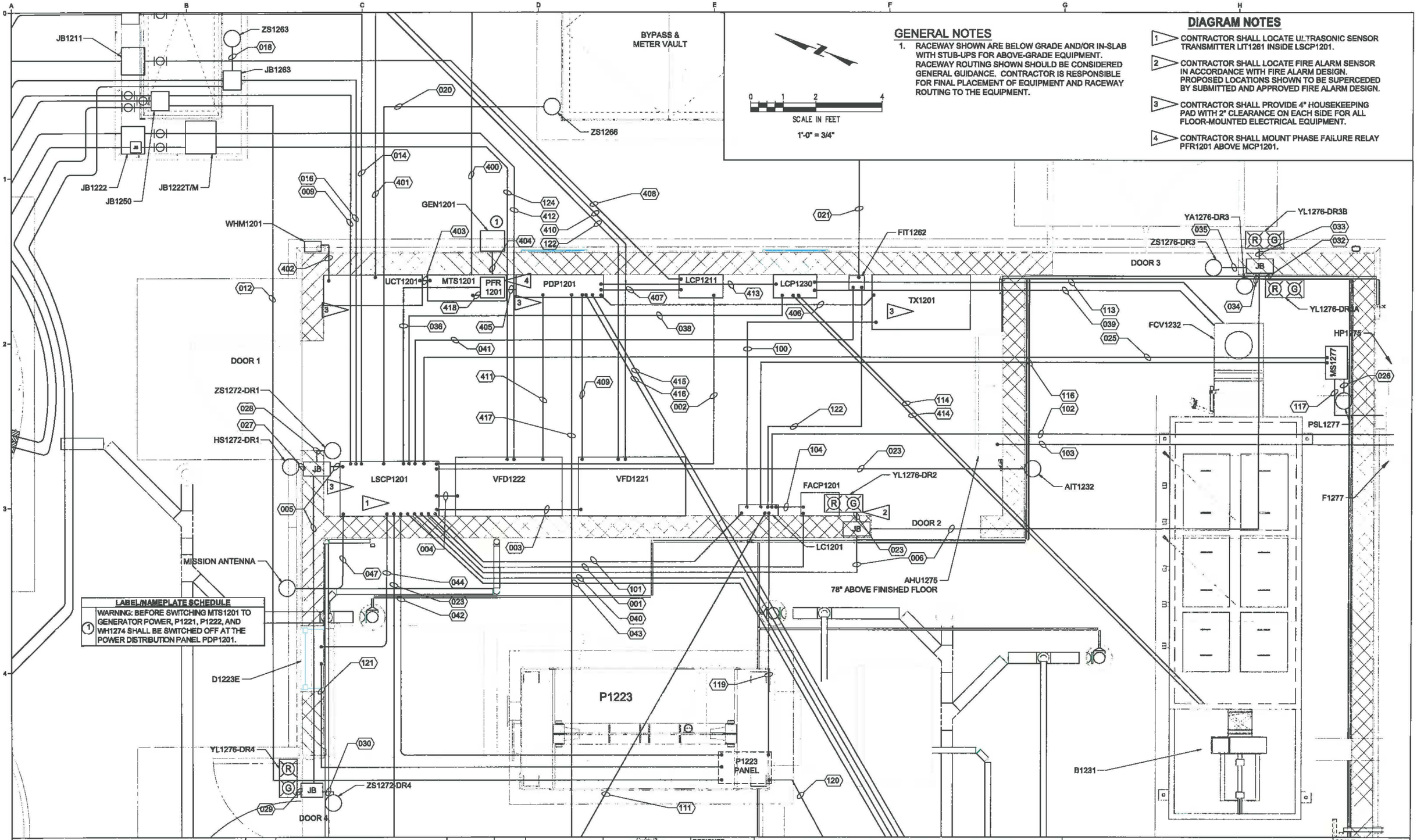

GENERAL NOTES

1. RACEWAY SHOWN ARE BELOW GRADE AND/OR IN-SLAB WITH STUB-UPS FOR ABOVE-GRADE EQUIPMENT. RACEWAY ROUTING SHOWN SHOULD BE CONSIDERED GENERAL GUIDANCE. CONTRACTOR IS RESPONSIBLE FOR FINAL PLACEMENT OF EQUIPMENT AND RACEWAY ROUTING TO THE EQUIPMENT.

SCALE IN FEET

1'-0" = 3/4"

DIAGRAM NOTES

1. CONTRACTOR SHALL LOCATE ULTRASONIC SENSOR TRANSMITTER LIT1261 INSIDE LSCP1201.
2. CONTRACTOR SHALL LOCATE FIRE ALARM SENSOR IN ACCORDANCE WITH FIRE ALARM DESIGN. PROPOSED LOCATIONS SHOWN TO BE SUPERCEDED BY SUBMITTED AND APPROVED FIRE ALARM DESIGN.
3. CONTRACTOR SHALL PROVIDE 4" HOUSEKEEPING PAD WITH 2" CLEARANCE ON EACH SIDE FOR ALL FLOOR-MOUNTED ELECTRICAL EQUIPMENT.
4. CONTRACTOR SHALL MOUNT PHASE FAILURE RELAY PFR1201 ABOVE MCP1201.

LABEL/NAMEPLATE SCHEDULE

1. WARNING: BEFORE SWITCHING MTS1201 TO GENERATOR POWER, P1221, P1222, AND WH1274 SHALL BE SWITCHED OFF AT THE POWER DISTRIBUTION PANEL PDP1201.

ISSUED FOR CONSTRUCTION

ANY PRINTS NOT BEARING THIS STAMP MAY HAVE BEEN PRINTED PRIOR TO ADVERTISING AND CANNOT BE CONSIDERED AS BID DOCUMENTS. USERS OF THIS DOCUMENT IN EDITABLE ELECTRONIC FORMATS ARE CAUTIONED AGAINST USE WITHOUT FIRST DETERMINING WHETHER CHANGES MAY HAVE BEEN MADE SUBSEQUENT TO ITS PREPARATION.

NO	REVISION	DATE	BY

SCALES

0 — 1"

0 — 25mm

IF THIS BAR IS NOT DIMENSION SHOWN, ADJUST SCALES ACCORDINGLY.

JON P. MATHISON, STATE OF WASHINGTON, REGISTERED PROFESSIONAL ENGINEER

DESIGNED JPM

DRAWN ASB

CHECKED JPM

CITY OF GIG HARBOR, PUBLIC WORKS DEPARTMENT

GIG HARBOR, WASHINGTON

REPLACEMENT OF SANITARY SEWER LIFT STATION #12A

Kennedy Jenks

Advanced Industrial Automation
517 NW 44th St
Seattle, WA 98107
phone: 206-789-1373
www.advancedia.com info@advancedia.com

ELECTRICAL ROOM PLAN VIEW

SCALE

JOB NO 2097006*00

DATE AUGUST 2021

SHEET 39 OF 60

E-06

8/4/2021 4:17:55 PM

LUMINAIRE SCHEDULE

Label	Type	Manufacturer	Model Number	Mounting	Area	Voltage	Watts	Lumens	Color	Notes
1	Linear Hanging Bay	C-Lite	C-HB-B-L2F-7L-50K-UL-WH	Hanging	Mechanical Room	120V	62W	7,800	5,000K	
2	Exit Light	NICOR Lighting	ECL21UNVWHG	Wall	All Doors	120V	3.3W	-	-	Emergency Lighting
3	External Flood Light	C-Lite	CF-L-A-LCF-18L-50K-2ADJ-DB	2" Adjustible Fitting	Exterior North	120V	150W	18,000	5,000K	
4	2x2 Troffer Panel LED	KOVA	K0000019488	2'x2' t-grid	Electrical Room	120V	40W	4,200	5,000K	

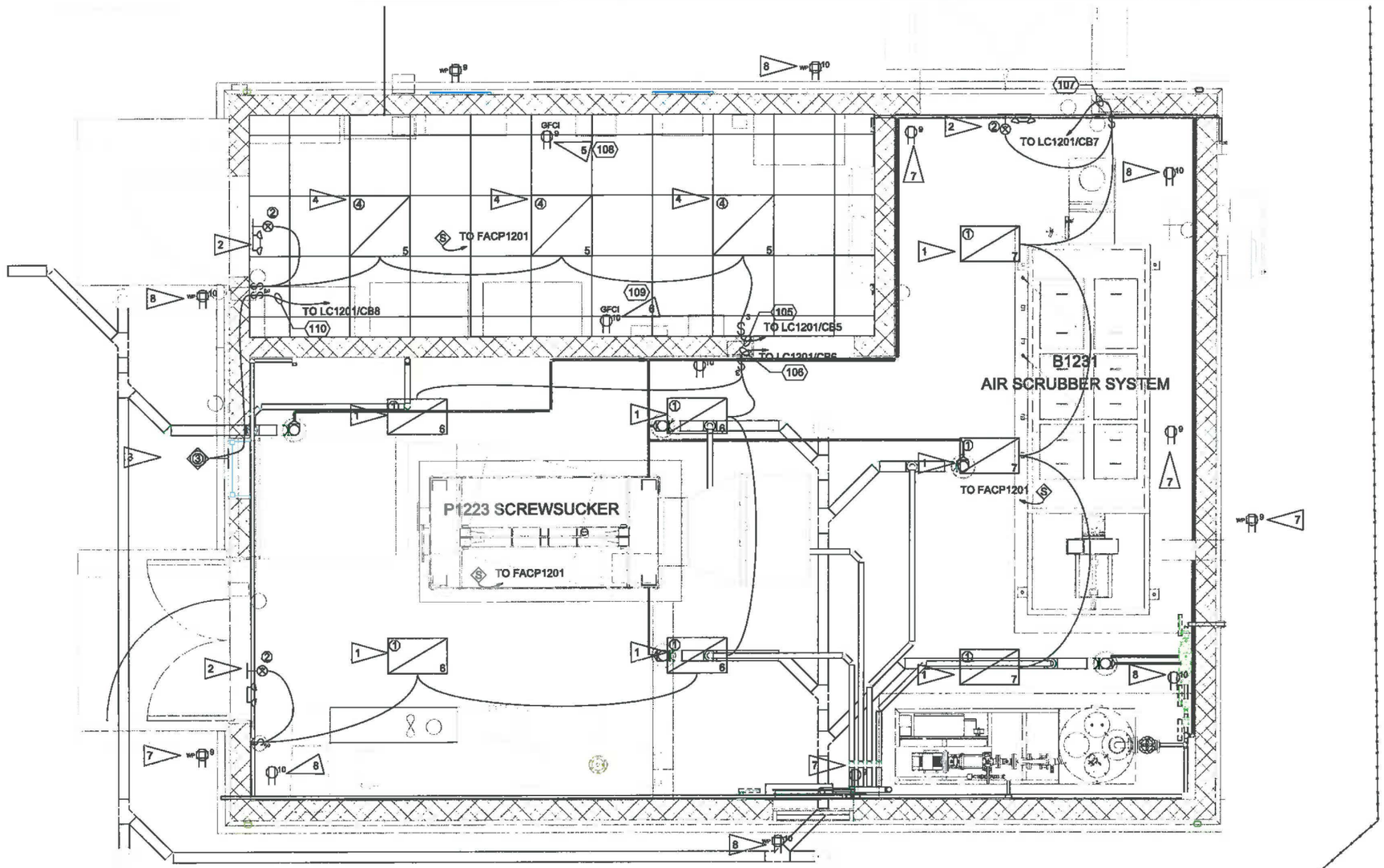

GENERAL NOTES

1. THE NUMBER NEXT TO A RECEPTACLE INDICATES THE LOAD CENTER CIRCUIT.
2. ALL RECEPTACLES SHALL BE PROTECTED BY A GFCI RECEPTACLE
3. LIGHTING AND RECEPTACLES TO BE CIRCUITED IN 3/4" INTERIOR SURFACE-MOUNTED GRC.

DIAGRAM NOTES

1. CONTRACTOR SHALL ENSURE MECHANICAL ROOM LIGHT FIXTURES ARE LOCATED OVER THE ACCESS PANELS OF THE SCREW SUCKER AND AIR SCRUBBER SYSTEM.
2. CONTRACTOR TO ENSURE EXIT SIGN WITH BATTERY BACKUP ILLUMINATION IS POSITIONED (AIMED) TO PROVIDE EGRESS LIGHTING.
3. EXTERNAL LIGHT SHALL BE A 150W, 18K LUMEN, LED FLOOD LIGHT ON 2" SQUARE ADJUSTABLE FITTER MOUNTED 18" BELOW ROOF, WITH TILT ADJUSTED TO ILLUMINATE WETWELL.
4. ALL ELECTRICAL ROOM LIGHTS SHALL BE 2'X2' TROFFER LEDS, 40W, 4K LUMEN, 5000K COLOR CEILING GRID PANELS
5. GFCI OUTLET SHALL BE WIRED TO LOAD CENTER LC1201 CIRCUIT 9, AND PROTECT ALL OTHER RECEPTACLES TO BE WIRED TO LOAD CENTER CIRCUIT 9.
6. GFCI OUTLET SHALL BE WIRED TO LOAD CENTER LC1201 CIRCUIT 10, AND PROTECT ALL OTHER RECEPTACLES TO BE WIRED TO LOAD CENTER CIRCUIT 10.
7. OUTLET RECEPTACLE SHALL BE WIRED TO LOAD CENTER LC1201 CIRCUIT 9, AND BE PROTECTED VIA GFCI IN ELECTRICAL ROOM.
8. OUTLET RECEPTACLE SHALL BE WIRED TO LOAD CENTER LC1201 CIRCUIT 10, AND BE PROTECTED VIA GFCI IN ELECTRICAL ROOM

0 1 2 4 6
SCALE IN FEET
1/2" = 1'-0"

ISSUED FOR CONSTRUCTION

ANY PRINTS NOT BEARING THIS STAMP MAY HAVE BEEN PRINTED PRIOR TO ADVERTISING AND CANNOT BE CONSIDERED AS BID DOCUMENTS. USERS OF THIS DOCUMENT IN EDITABLE ELECTRONIC FORMATS ARE CAUTIONED AGAINST USE WITHOUT FIRST DETERMINING WHETHER CHANGES MAY HAVE BEEN MADE SUBSEQUENT TO ITS PREPARATION.

NO	REVISION	DATE	BY

SCALES
0 1"
0 25mm
IF THIS BAR IS NOT DIMENSION SHOWN, ADJUST SCALES ACCORDINGLY.

JON P. MATHISEN — STATE OF WASHINGTON — PROFESSIONAL ENGINEER

DESIGNED	JPM
DRAWN	ASR
CHECKED	JPM

CITY OF GIG HARBOR, PUBLIC WORKS DEPARTMENT
GIG HARBOR, WASHINGTON
REPLACEMENT OF SANITARY SEWER
LIFT STATION #12A

Kennedy Jenks

Advanced Industrial Automation
617 NW 44th St
Seattle, WA 98107
phone: 206-789-1373
www.advancedia.com info@advancedia.com

BUILDING LIGHTING PLAN VIEW

SCALE	
JOB NO	2097006*00
DATE	AUGUST 2021
SHEET	40 OF 60
	E-07

8/4/2021 4:17:56 PM

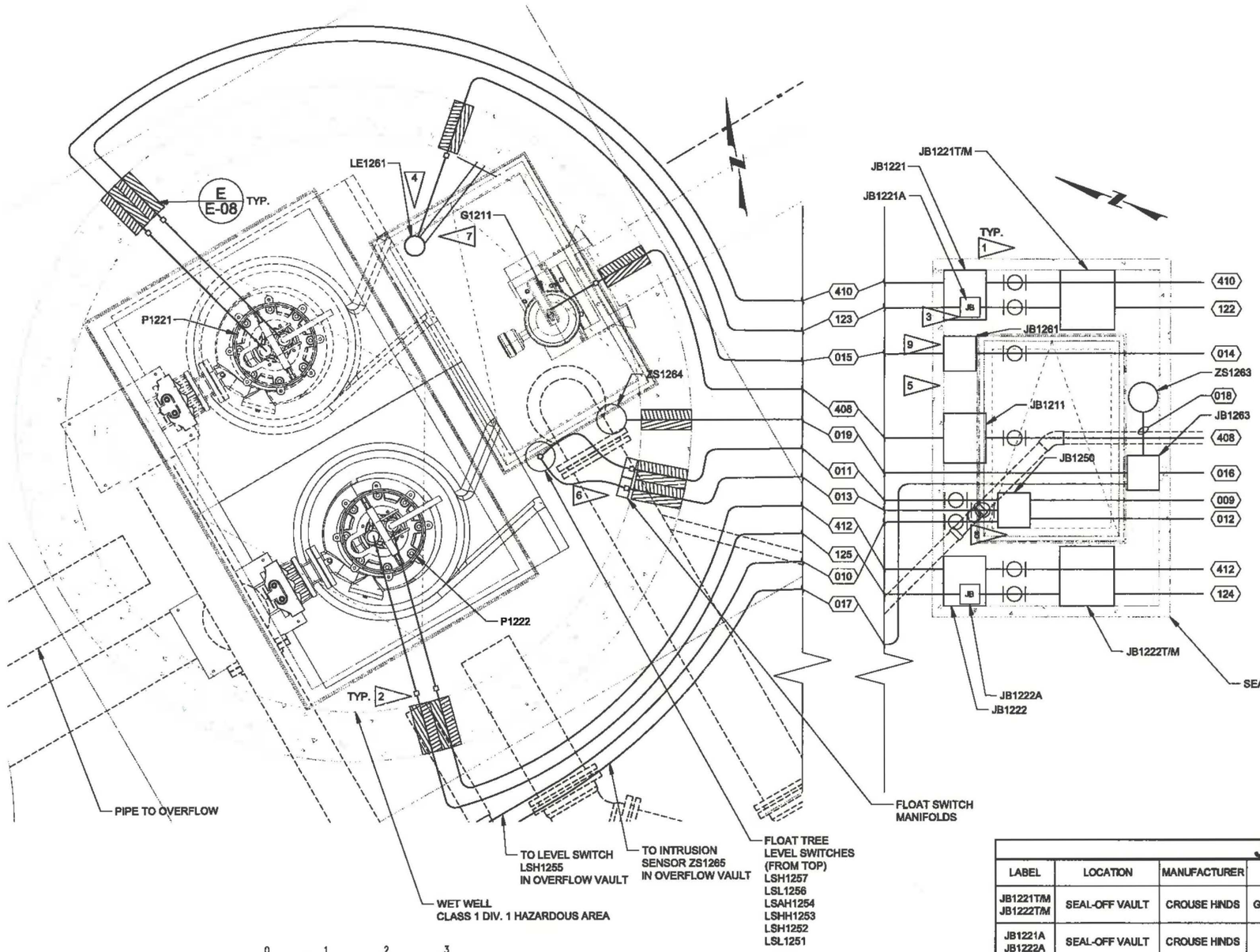

D
E-05
WET WELL & VAULT PENETRATION DETAILS

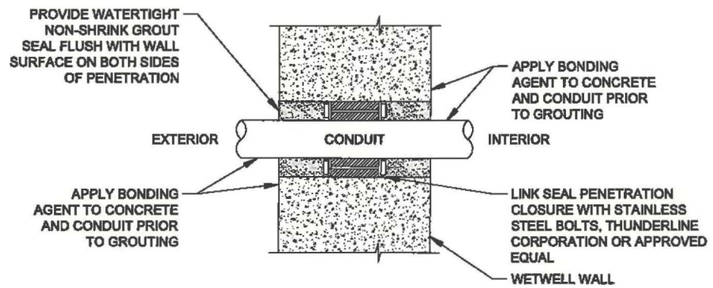

E
E-08
DETAIL - PENETRATION SEAL
NOT TO SCALE

GENERAL NOTES

1. A CONDUIT SEAL SHALL BE INSTALLED IN EACH CONDUIT LEAVING THE HAZARDOUS LOCATION AS REQUIRED IN NEC 501.15(A)(4). ELECTRICAL VAULT IS CLASS 1 DIVISION 1, CONDUIT SEAL SHALL BE WITHIN 10' OF BOUNDARY OF ELECTRIC VAULT.

DIAGRAM NOTES

1. CONTRACTOR SHALL INSTALL EATON EYS CONDUIT SEAL FITTING IN EACH CONDUIT LEAVING THE DIVISION 1 LOCATION WITHIN 10 FEET OF THE BOUNDARY OF THE HAZARDOUS AREA.
2. CONTRACTOR SHALL PROVIDE NYLON CONDUIT BUSHING ON CONDUIT ENTRY TO WETWELL. CONTRACTOR SHALL PACK CONDUIT INTERIOR AROUND CABLES WITH PERMAGUM REMOVABLE SEALANT.
3. CONTRACTOR SHALL MOUNT J-BOXES AS HIGH AS WALL SURFACE ALLOWS. CONTRACTOR SHALL USE STAINLESS STEEL CONCRETE INSERTS, LAG BOLTS AND WASHERS.
4. CONTRACTOR SHALL PROVIDE CABLE LOOP IN WETWELL OF SUFFICIENT LENGTH TO ALLOW LE1261 TO BE RAISED FROM THE WETWELL AND LAID AT GROUND LEVEL WITHOUT REMOVING CABLE FROM CONDUIT TO JUNCTION BOX IN THE ELECTRICAL VAULT.
5. CONTRACTOR SHALL MOUNT BOXES TO CONCRETE INSERTS AND LAG BOLTS WITH WASHERS. MOUNT BOXES AS HIGH AS WALL SURFACE ALLOWS.
6. CONTRACTOR SHALL INSTALL FLOATS ON CUSTOM FLOAT TREE PROVIDED BY OWNER. CONTRACTOR SHALL COORDINATE LOCATION OF FLOAT TREE INSTALLATION WITH OWNER TO ENSURE FLOATS ARE FREE OF OBSTRUCTIONS. CONTRACTOR SHALL INSTALL FLOAT TREE.
7. CONTRACTOR SHALL INSTALL ULTRASONIC LEVEL SENSOR ON CUSTOM MOUNT PROVIDED BY OWNER. CONTRACTOR SHALL COORDINATE LOCATION OF ULTRASONIC LEVEL SENSOR INSTALLATION WITH OWNER TO ENSURE ULTRASONIC LEVEL SENSOR PATHWAY IS FREE OF OBSTRUCTIONS. CONTRACTOR SHALL INSTALL ULTRASONIC LEVEL SENSOR MOUNT.
8. CONTRACTOR SHALL INSTALL TERMINAL BLOCKS IN JB1250 TO TERMINATE MANUFACTURER'S CABLE FROM FLOAT MANIFOLD AND CONNECT TO CONDUCTORS FROM LSCP1201.
9. CONTRACTOR SHALL PASS MANUFACTURER'S CABLE FROM LE1261 THROUGH JB1261 TO LIT1261 (INSIDE LSCP1201).

JUNCTION BOX SCHEDULE

LABEL	LOCATION	MANUFACTURER	MODEL	SIZE (HXWXD)	NEMA	MOUNTING PLATE	APPROVED EQUAL	OPTIONS	NOTES
JB1221T/M JB1222T/M	SEAL-OFF VAULT	CROUSE HINDS	GUB03, GUB0190, MP	11" X 12" X 9"	7	YES	YES	GLASS COVER	TEMP/MOISTURE RELAY STATUS VISIBLE
JB1221A JB1222A	SEAL-OFF VAULT	CROUSE HINDS	GU	5" X 5" X 3.5"	7	NO	YES		PUMP TO CONTRACTOR CABLE JUNCTION
JB1211 JB1221 JB1222	SEAL-OFF VAULT	CROUSE HINDS	GUB06	8.5" X 10" X 7"	7	NO	YES		PUMP TO CONTRACTOR CABLE JUNCTION
JB1261	SEAL-OFF VAULT	CROUSE HINDS	GU	5" X 5" X 3.5"	7	NO	YES		LE1261 TO LIT1261 (PASSTHROUGH)
JB1263	SEAL-OFF VAULT	CROUSE HINDS	GU	5" X 5" X 3.5"	7	NO	YES		INTRUSION ALARMS (PASSTHROUGH)
JB1250	SEAL-OFF VAULT	CROUSE HINDS	GUB01	6.5" X 7" X 5"	7	YES	YES		FLOAT TO CONTRACTOR CABLE JUNCTION

ISSUED FOR CONSTRUCTION

ANY PRINTS NOT BEARING THIS STAMP MAY HAVE BEEN PRINTED PRIOR TO ADVERTISING AND CANNOT BE CONSIDERED AS BID DOCUMENTS. USERS OF THIS DOCUMENT IN EDITABLE ELECTRONIC FORMATS ARE CAUTIONED AGAINST USE WITHOUT FIRST DETERMINING WHETHER CHANGES MAY HAVE BEEN MADE SUBSEQUENT TO ITS PREPARATION.

NO	REVISION	DATE	BY

SCALES
0 1"
0 25mm
IF THIS BAR IS NOT DIMENSION SHOWN, ADJUST SCALES ACCORDINGLY.

JOE A. MATHISON — STATE OF WASHINGTON — PROFESSIONAL ENGINEER

DESIGNED JPM
DRAWN ASC
CHECKED JPM

CITY OF GIG HARBOR, PUBLIC WORKS DEPARTMENT
GIG HARBOR, WASHINGTON
REPLACEMENT OF SANITARY SEWER
LIFT STATION #12A

Kennedy Jenks
Advanced Industrial Automation
817 NW 44th St
Seattle, WA 98107
phone: 206-789-1373
www.advancedia.com info@advancedia.com

WETWELL PLAN VIEW

SCALE
JOB NO 2097006*00
DATE AUGUST 2021
SHEET 41 OF 60
E-08

9/4/2021 4:17:58 PM

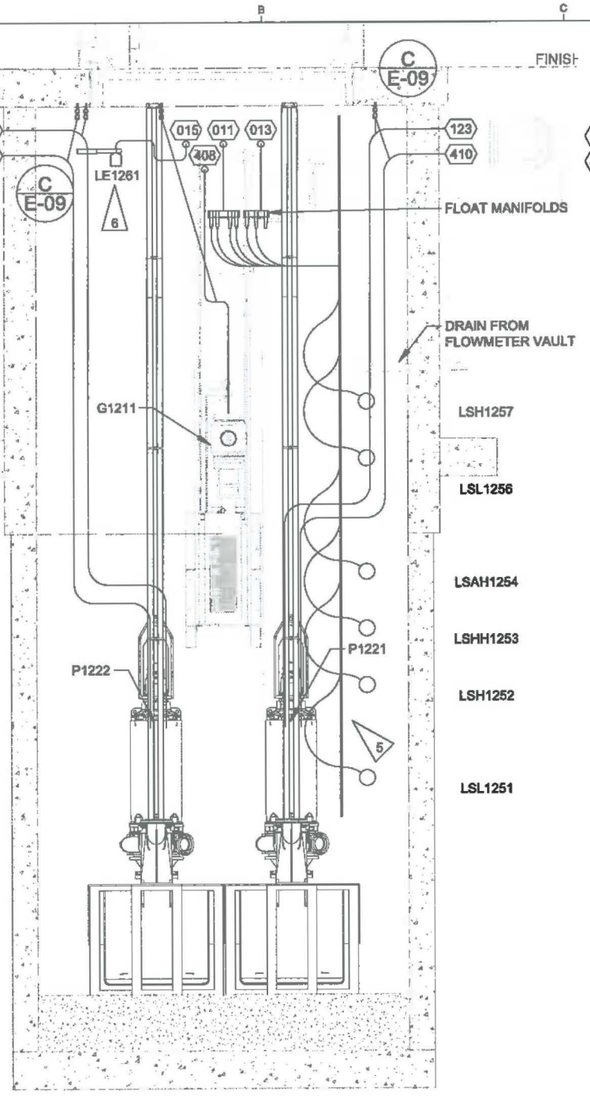

WET WELL ELEVATION

A E-05 WET WELL ELEVATION

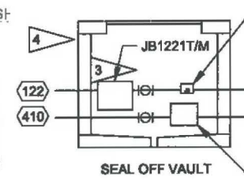

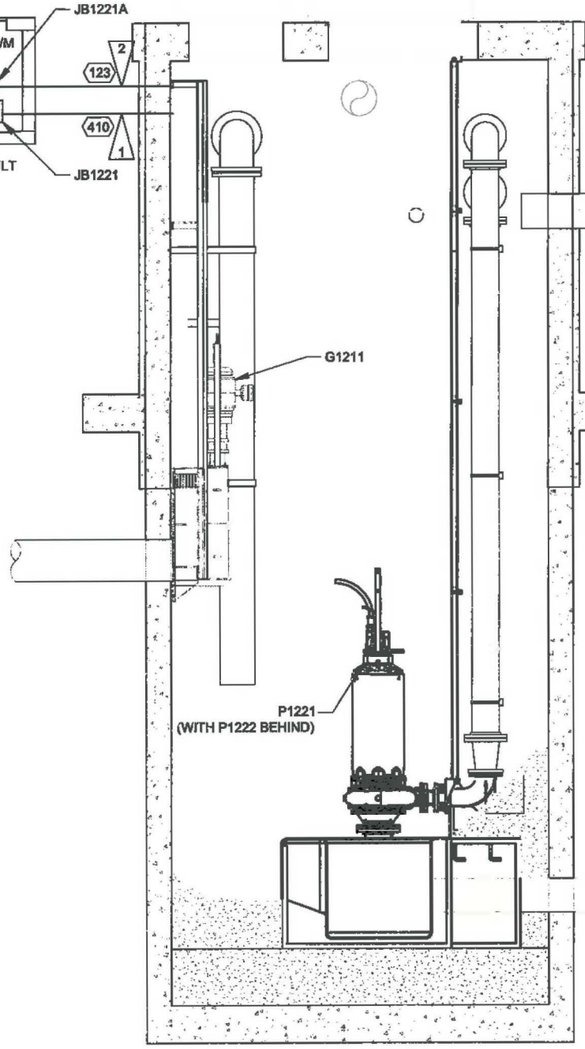

WET WELL ELEVATION

B E-05 WET WELL ELEVATION

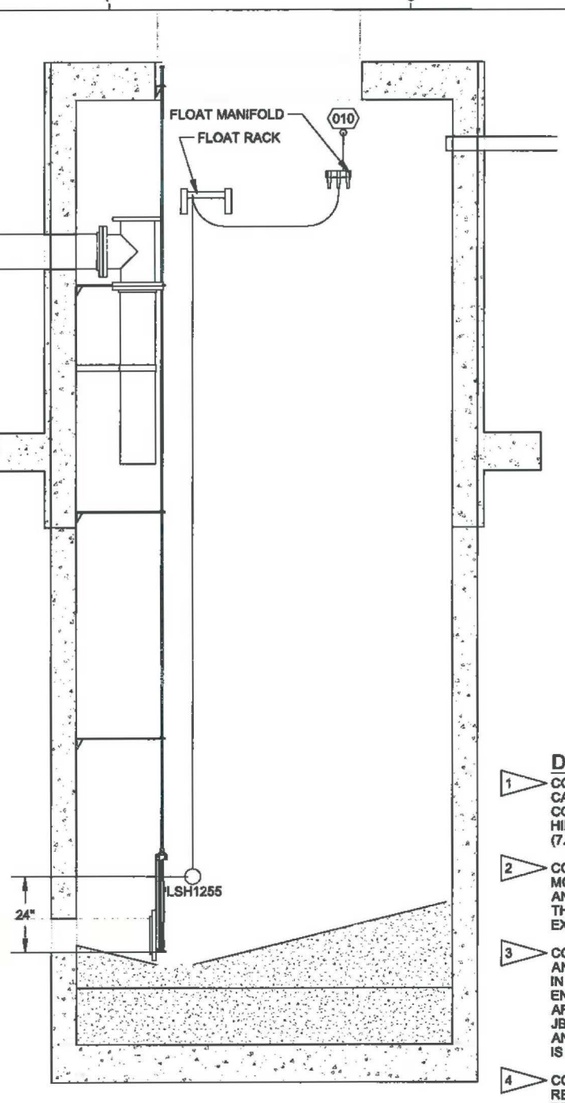

OVERFLOW STORAGE

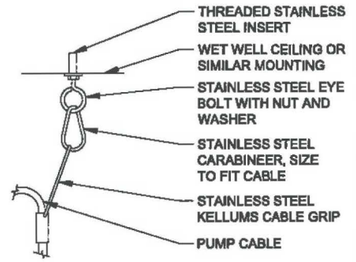

C E-09 DETAIL - FLOAT CABLE
NOT TO SCALE

0 1 2 4 6
SCALE IN FEET

GENERAL NOTES

1. A CONDUIT SEAL SHALL BE INSTALLED IN EACH CONDUIT LEAVING THE DIVISION 1 LOCATION AS REQUIRED IN NEC 501.15(A)(4).
2. FLOAT SWITCHES SHALL BE INSTALLED AT THE ELEVATION DETAILED IN SPECIFICATION P40 96 20, INSTRUMENT LIST.

DIAGRAM NOTES

1. CONTRACTOR SHALL TERMINATE 1 3/16" HIDROSTAL PURWIL EMC CABLE FROM P1221 TO JB1221 AND FROM P1222 TO JB1222. CONTRACTOR SHALL ENSURE THE BENDING RADIUS OF THE HIDROSTAL CABLE DOES NOT EXCEED 6X THE OUTER DIAMETER (7.125").
2. CONTRACTOR SHALL TERMINATE 7/16" HIDROSTAL THERMAL AND MOISTURE SIGNAL CONTROL CABLE FROM P1221 TO JB1221T/M AND FROM P1222 TO JB1222T/M. CONTRACTOR SHALL ENSURE THE BENDING RADIUS OF THE HIDROSTAL CABLE DOES NOT EXCEED 5X THE OUTER DIAMETER (2.1875").
3. CONTRACTOR SHALL REFERENCE EIC07 DRAWING FOR JB1221T/M AND JB1222T/M CIRCUITRY. THESE JBOXES SHALL BE ASSEMBLED IN UL 508 SHOP DUE TO COMPLEXITY. CONTRACTOR SHALL ENSURE THE MOISTURE AND TEMPERATURE STATUS INDICATORS ARE VISIBLE THROUGH THE GLASS OF THE JB1221T/M AND JB2122T/M. THERMAL RELAY IS CIRCUITED TO STOP THE PUMP AND PROVIDE STATUS ON OVERTEMPERATURE, MOISTURE RELAY IS FOR STATUS ONLY.
4. CONTRACTOR SHALL INSTALL ELECTRICAL (SEAL-OFF) VAULT. REFERENCE M-01 FOR ELECTRICAL VAULT DIMMENSIONS, DRAINAGE, AND INSTALLATION.
5. CONTRACTOR SHALL INSTALL FLOATS ON CUSTOM FLOAT TREE PROVIDED BY OWNER. CONTRACTOR SHALL COORDINATE LOCATION OF FLOAT TREE INSTALLATION WITH OWNER TO ENSURE FLOATS ARE FREE OF OBSTRUCTIONS. CONTRACTOR SHALL INSTALL FLOAT TREE.
6. CONTRACTOR SHALL INSTALL ULTRASONIC LEVEL SENSOR ON CUSTOM MOUNT PROVIDED BY OWNER. CONTRACTOR SHALL COORDINATE LOCATION OF ULTRASONIC LEVEL SENSOR INSTALLATION WITH OWNER TO ENSURE ULTRASONIC LEVEL SENSOR PATHWAY IS FREE OF OBSTRUCTIONS. CONTRACTOR SHALL INSTALL ULTRASONIC LEVEL SENSOR MOUNT.

ISSUED FOR CONSTRUCTION

ANY PRINTS NOT BEARING THIS STAMP MAY HAVE BEEN PRINTED PRIOR TO ADVERTISING AND CANNOT BE CONSIDERED AS BID DOCUMENTS. USERS OF THIS DOCUMENT IN EDITABLE ELECTRONIC FORMATS ARE CAUTIONED AGAINST USE WITHOUT FIRST DETERMINING WHETHER CHANGES MAY HAVE BEEN MADE SUBSEQUENT TO ITS PREPARATION.

NO	REVISION	DATE	BY

SCALES
0 1"
0 25mm
IF THIS BAR IS NOT DIMENSION SHOWN, ADJUST SCALES ACCORDINGLY.

JON P. MATHISON — STATE OF WASHINGTON — 19681 — REGISTERED PROFESSIONAL ENGINEER

DESIGNED	JPM
DRAWN	ASC
CHECKED	JPM

CITY OF GIG HARBOR, PUBLIC WORKS DEPARTMENT
GIG HARBOR, WASHINGTON
REPLACEMENT OF SANITARY SEWER LIFT STATION #12A

Kennedy Jenks
Advanced Industrial Automation
917 NW 44th St
Seattle, WA 98107
phone: 206-789-4373
www.advancedia.com info@advancedia.com

WETWELL ELEVATION VIEW

SCALE	
JOB NO	2067006*00
DATE	AUGUST 2021
SHEET	42 OF 60
	E-09

8/4/2021 4:18:00 PM

P&ID SYMBOLS LEGEND

SYMBOL ON P&ID	SYMBOL DESCRIPTION	SYMBOL ON P&ID	SYMBOL DESCRIPTION
	FIELD MOUNTED DEVICE *		
	PANEL MOUNTED DEVICE *		
	MCP MOUNTED DEVICE *		SIGNAL INTERLOCK
	PLC INPUT OR OUTPUT *		BUTTERFLY VALVE
	SOFTWARE FUNCTION *		CHECK VALVE OR BACKFLOW PREVENTION VALVE
	RJ45 RECEPTACLE		BALL VALVE
	FIBER OPTIC CABLE RECEPTACLE		GATE VALVE, NORMALLY OPEN
	PUMP		GATE VALVE, NORMALLY CLOSED
			CONCENTRIC REDUCER
		M	FLOWMETER, MAGNETIC
	PANEL MOUNTED HMI		LEVEL SENSOR, ULTRASONIC
	EXHAUST/VENTILATION FAN		
PI	PRESSURE GAUGE		YAGI DIRECTIONAL ANTENNA
	COMBO AIR/VACUUM VALVE		CELLULAR ANTENNA
1	DIAGRAM NOTE; SEE DIAGRAM NOTES ON SAME PAGE FOR MORE INFORMATION		DIRECTIONAL ARROW FOR FLOW OR SIGNAL
	DESKTOP OR LAPTOP HMI PC		MAIN PROCESS FLOW
			SECONDARY PROCESS FLOW
	ANALOG SIGNAL(S) (4-20 mA)		AIR PROCESS FLOW
	DISCRETE SIGNAL(S) (24 VDC)		SOFTWARE SIGNAL
	CAT 6/ETHERNET/PHONE		SPECIAL CONNECTION SUPPLIED BY MANUFACTURER AND/OR MOTOR CONTROL CABLE
	PARALLEL/SERIAL CABLE		WATERLINE
	FIBER OPTIC CABLE		MOTOR RELATIONSHIP REFERENCE

TABLE 1: ISA IDENTIFICATION LETTERS

FIRST LETTER		SUCCEEDING LETTERS			
	MEASURED OR INITIATING VARIABLE	MODIFIER	READOUT OR PASSIVE FUNCTION	OUTPUT FUNCTION	MODIFIER
A	ANALYSIS		ALARM/STATE		
B	BURNER,COMBUSTION		USER'S CHOICE	USER'S CHOICE	USER'S CHOICE
C	USER'S CHOICE			CONTROL	CLOSE
D	DENSITY OR SPECIFIC GRAVITY	DIFFERENTIAL			
E	VOLTAGE		SENSOR (PRIMARY ELEMENT)		
F	FLOW	RATIO FRACTION			
G	USER'S CHOICE		GLASS, VIEWING DEVICE		
H	HAND				HIGH
I	CURRENT (ELECTRICAL)		INDICATE		
J	POWER	SCAN			
K	TIME, TIME SCHEDULE	TIME RATE OF CHANGE		CONTROL STATION	
L	LEVEL		LIGHT		LOW
M	MOISTURE	MOMENTARY			MIDDLE INTERMED.
N	USER'S CHOICE		USER'S CHOICE	USER'S CHOICE	USER'S CHOICE
O	TORQUE		ORIFICE, RESTRICTION		OPEN
P	PRESSURE, VACUUM		POINT (TEST) CONNECTION		
Q	QUANTITY	INTEGRATE, TOTALIZE			
R	RADIATION		RECORD		
S	SPEED, FREQUENCY	SAFETY		SWITCH	
T	TEMPERATURE			TRANSMIT	
U	MULTIVARIABLE		MULTIFUNCTION		
V	VIBRATION, MECHANICAL ANALYSIS			VALVE DAMPER	
W	WEIGHT, FORCE		WELL		
X	UNCLASSIFIED	X AXIS	UNCLASSIFIED		
Y	EVENT,STATE OR PRESENCE	Y AXIS	RELAY OR COMPUTE		
Z	POSITION, DIMENSION	Z AXIS	DRIVER, ACTUATOR OR UNCLASSIFIED FINAL CONTROL ELEMENT		

ABBREVIATIONS:

BL	BLOWER
CKV	CHECK VALVE
CMN	COMMON
FFM	FORCED FLOAT MODE
ELV	ELEVATION
GFCI	GROUND FAULT CIRCUIT INTERRUPT
GR	GRINDER
HP	HORSEPOWER
HMI	HUMAN MACHINE INTERFACE
HOA	HAND/OFF/AUTO
ISA	INSTRUMENTATION, SYSTEMS, AND AUTOMATION SOCIETY
LCP	LOCAL CONTROL PANEL
LSCP	LIFT STATION CONTROL PANEL
LSTP	LIFT STATION TELEMETRY PANEL
M	MOTOR
MS	MOTOR STARTER
NIC	NOT IN CONTRACT
NTS	NOT TO SCALE
OIT	OPERATOR INTERFACE TERMINAL
O/O	ON/OFF
OCA	OPEN/CLOSE/AUTOMATIC
OCR	OPEN/CLOSE/REMOTE
OCU	ODOR CONTROL UNIT
P	PUMP
PCP	PLANT CONTROL PANEL
PI	PRESSURE INDICATOR
PS	POWER SUPPLY
RTM	RUNTIME METER (ELAPSED TIME)
S/S	START/STOP
UPS	UNINTERRUPTIBLE POWER SUPPLY
VAC	VOLTS ALTERNATING CURRENT
VDC	VOLTS DIRECT CURRENT
VFD	VARIABLE FREQUENCY DRIVE
WM	WALL MOUNT

* DEVICE DESIGNATION LEGEND:

ISA FUNCTION IDENTIFICATION (ISA-5.1-1984 (R 1992) TABLE 1)
\# LOOP NUMBER
A ID EMBELISHMENT OR CLARIFIER (i.e. HOA)
B NUMBER OF DEVICES (DEFAULT 1)
C SPECIAL DESIGNATION
D FUNCTION BLOCK (i.e. SUM)
A, C, AND D DEFAULT NONE, REFER TO DESCRIPTION OF OPERATIONS FOR DESCRIPTION.

PIPING SYSTEMS LEGEND:

DR	DRAINS
FM	FORCE MAINS
INF	INFLUENT TO BASINS
PW	POTABLE WATER
UW	UTILITY WATER

ISSUED FOR CONSTRUCTION

ANY PRINTS NOT BEARING THIS STAMP MAY HAVE BEEN PRINTED PRIOR TO ADVERTISING AND CANNOT BE CONSIDERED AS BID DOCUMENTS. USERS OF THIS DOCUMENT IN EDITABLE ELECTRONIC FORMATS ARE CAUTIONED AGAINST USE WITHOUT FIRST DETERMINING WHETHER CHANGES MAY HAVE BEEN MADE SUBSEQUENT TO ITS PREPARATION.

NO	REVISION	DATE	BY

SCALES
0 1"
0 25mm
IF THIS BAR IS NOT DIMENSION SHOWN, ADJUST SCALES ACCORDINGLY.

JON P. MATHISON — STATE OF WASHINGTON — 21611 — REGISTERED PROFESSIONAL ENGINEER

DESIGNED JPM
DRAWN ASC
CHECKED JPM

CITY OF GIG HARBOR, PUBLIC WORKS DEPARTMENT
GIG HARBOR, WASHINGTON
REPLACEMENT OF SANITARY SEWER LIFT STATION #12A

Kennedy Jenks
Advanced Industrial Automation
817 NW 44th St
Seattle, WA 98107
phone: 206-789-1373
www.advancedia.com info@advancedia.com

GENERAL NOTES AND SYMBOL LEGEND

SCALE
JOB NO 2097006*00
DATE AUGUST 2021
SHEET 43 OF 60
I-01

8/4/2021 5:29:08 PM

DIAGRAM NOTES

1. PANEL BUILDER SHALL INSTALL MISSION ALARM SYSTEM INSIDE LSCP1201.
2. CONTRACTOR SHALL MOUNT CELLULAR ANTENNA OUTSIDE LSCP1201 ON EXTERIOR OF BUILDING.
3. CONTRACTOR SHALL PROVIDE ETHERNET CABLING AND CONNECTORS WITH ANY REQUIRED PRODUCT OPTIONS OR MODULES TO VFD1221 AND VFD1222 TO ALLOW FOR ETHERNET/IP COMMUNICATIONS WITH PLC-1201 FOR ADDITIONAL STATUS CAPABILITY.

BLOCK DIAGRAM CABLE TYPE LEGEND

- CAT 6/ETHERNET
- CAT 3/PHONE SYSTEM
- LPT 1
- FIBER OPTIC CABLE
- I/O (VDC)

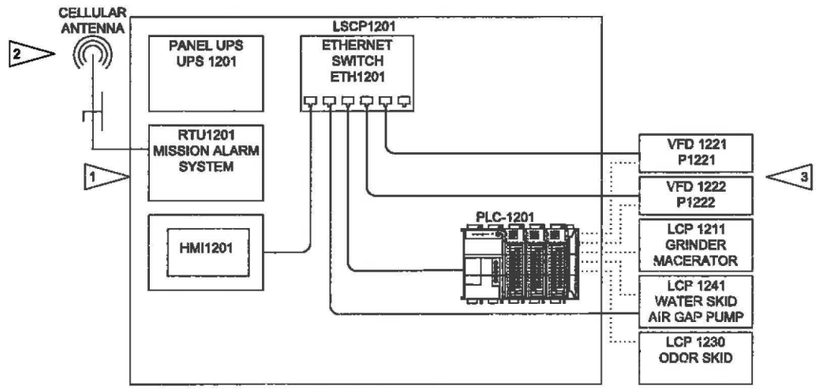

LIFT STATION NO. 12

ISSUED FOR CONSTRUCTION

ANY PRINTS NOT BEARING THIS STAMP MAY HAVE BEEN PRINTED PRIOR TO ADVERTISING AND CANNOT BE CONSIDERED AS BID DOCUMENTS. USERS OF THIS DOCUMENT IN EDITABLE ELECTRONIC FORMATS ARE CAUTIONED AGAINST USE WITHOUT FIRST DETERMINING WHETHER CHANGES MAY HAVE BEEN MADE SUBSEQUENT TO ITS PREPARATION.

NO	REVISION	DATE	BY

SCALES
0 — 1"
0 — 25mm
IF THIS BAR IS NOT DIMENSION SHOWN, ADJUST SCALES ACCORDINGLY.

JON P. MATHISON, STATE OF WASHINGTON, REGISTERED PROFESSIONAL ENGINEER

DESIGNED JPM
DRAWN ASB
CHECKED JPM

CITY OF GIG HARBOR, PUBLIC WORKS DEPARTMENT
GIG HARBOR, WASHINGTON
REPLACEMENT OF SANITARY SEWER
LIFT STATION #12A

Kennedy Jenks

Advanced Industrial Automation
817 NW 44th St
Seattle, WA 98107
phone: 206-789-1373
www.advancedia.com info@advancedia.com

COMMUNICATIONS BLOCK DIAGRAM

SCALE
JOB NO 2097006*00
DATE AUGUST 2021
SHEET 44 OF 60
I-02

3/4/2021 5:29:09 PM

GENERAL NOTES

1. WETWELL IS CLASS 1 DIVISION 1 HAZARDOUS AREA. ALL EQUIPMENT IN WETWELL SHALL CONFORM TO THE REQUIREMENTS OF NEC ARTICLE 501.

DIAGRAM NOTES

1. CONTRACTOR SHALL PROVIDE FLOAT OVERRIDE CONTROL OF THE PUMPS IN CASE OF PLC OR LEVEL TRANSDUCER FAILURE.
2. CONTRACTOR SHALL ENSURE THE INSTALLATION MEETS THE REQUIREMENTS OF NEC ARTICLE 504 FOR A CLASS 1 DIVISION 1 HAZARDOUS LOCATION. EQUIPMENT SHALL BE EXPLOSION PROOF, INSTRUMENTATION SHALL BE INTRINSICALLY SAFE.
3. CONTRACTOR SHALL REFERENCE MECHANICAL DRAWING FOR FLOAT SWITCH ELEVATIONS.
4. UNUSED CONNECTIONS SHALL BE PLUGGED FOR PROTECTION.

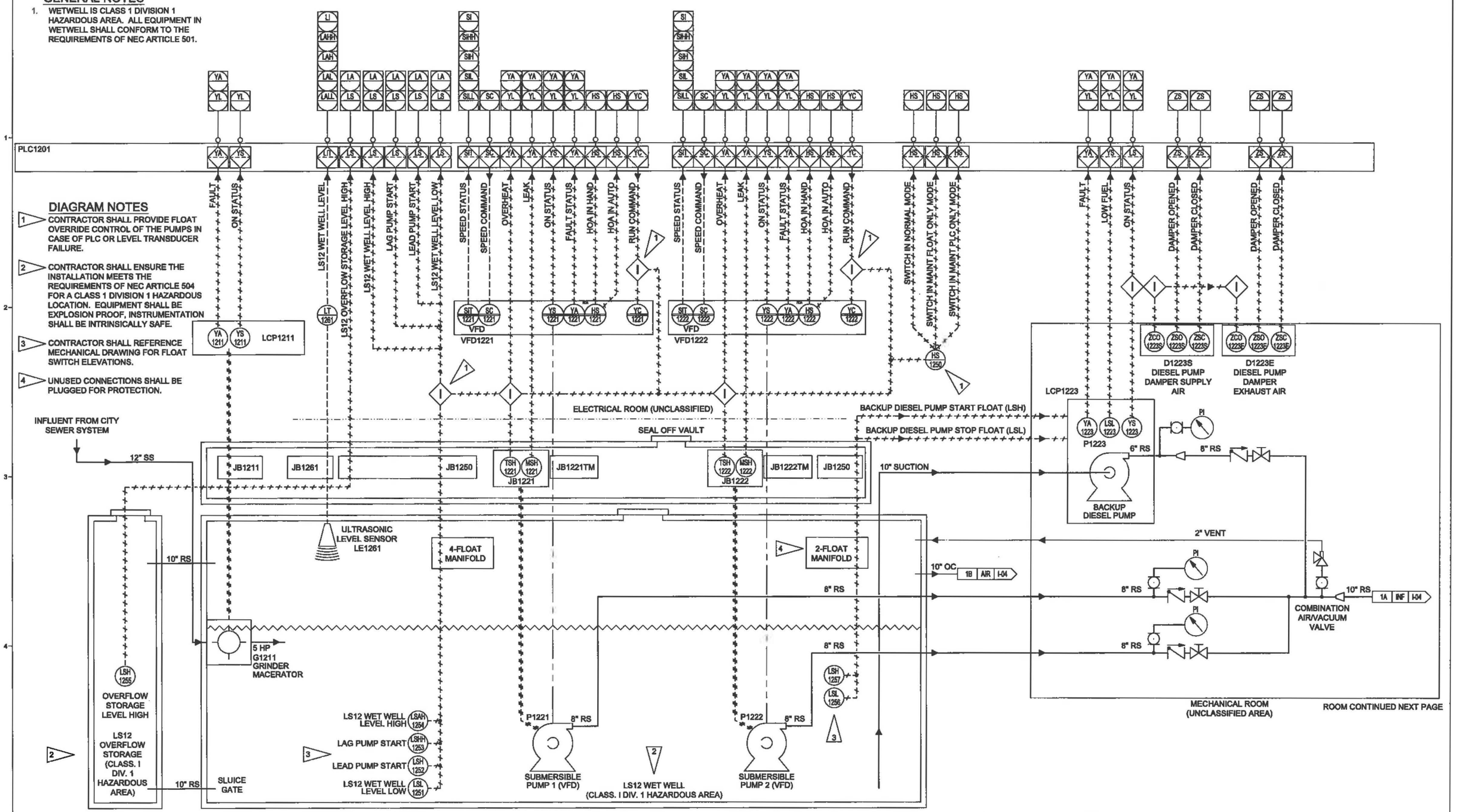

ISSUED FOR CONSTRUCTION

ANY PRINTS NOT BEARING THIS STAMP MAY HAVE BEEN PRINTED PRIOR TO ADVERTISING AND CANNOT BE CONSIDERED AS BID DOCUMENTS. USERS OF THIS DOCUMENT IN EDITABLE ELECTRONIC FORMATS ARE CAUTIONED AGAINST USE WITHOUT FIRST DETERMINING WHETHER CHANGES MAY HAVE BEEN MADE SUBSEQUENT TO ITS PREPARATION.

NO	REVISION	DATE	BY

SCALES
0 — 1"
0 — 25mm
IF THIS BAR IS NOT DIMENSION SHOWN, ADJUST SCALES ACCORDINGLY.

DESIGNED JPM
DRAWN ASB
CHECKED JPM

CITY OF GIG HARBOR, PUBLIC WORKS DEPARTMENT
GIG HARBOR, WASHINGTON
REPLACEMENT OF SANITARY SEWER LIFT STATION #12A

Kennedy Jenks
Advanced Industrial Automation
617 NW 44th St
Seattle, WA 98107
phone: 206-789-1373
www.advancedia.com info@advancedia.com

PIPING AND INSTRUMENTATION DIAGRAM

SCALE
JOB NO 2097006*00
DATE AUGUST 2021
SHEET 45 OF 60
I-03

8/4/2021 5:29:10 PM

PLC1201

HOA IN HAND
HOA IN AUTO
SUPPLY FAN RUN COMMAND
SUPPLY FAN ON STATUS
SUPPLY AIR FLOW PRESENT 4

MS1276
F1276 SUPPLY AIR FAN
THERMOSTAT
PSL 1276 SUPPLY AIR FLOW SWITCH
SUPPLY VENTILATION AIR DUCT
H1276 DUCT HEATER

FAULT
ON STATUS
AIR GAP PUMP P1241 SYSTEM CONTROL PANEL LCP1241
1

COMBUSTIBLE GAS LEVEL
COMBUSTIBLE GAS LEL LIMIT ALARM
AIT 1233 / YA 1233 COMBUSTIBLE GAS DETECTOR

HOA IN HAND
HOA IN AUTO
EXHAUST FAN RUN COMMAND
EXHAUST FAN ON STATUS
MS1277
F1277 EXHAUST AIR FAN
(FAN LOCATED ON BUILDING EXTERIOR)
PSL 1277 EXHAUST AIR FLOW SWITCH
EXHAUST VENTILATION AIR DUCT

EXHAUST AIR FLOW PRESENT 4
VALVE FULLY OPENED
VALVE CLOSED
ZSO 1232 / ZSC 1232 / ZCO 1232 / ZCC 1232
ODOR CONTROL SYSTEM FILTER & BLOWER UNIT
1B AIR I-03 10" OC
FCV-1232 8" AIR INLET VALVE ACTUATOR
1A 3NF I-03 10"
B1231
EXHAUST TO OUTSIDE

RUN COMMAND
FAULT
ON STATUS
HOA IN REMOTE
VALVE CLOSE CALL STATUS
LCP1230 ODOR CONTROL SYSTEM PANEL

HVAC AIR CHANGES NOMINAL (GREEN)
HVAC AIR CHANGES ALARM (RED)
HVAC AIR CHANGES ALARM (HORN)
YS 1276 / YAL 1276 / YAH 1276 3

LIFT STATION FLOW (GPM)
LIFT STATION FLOW TOTALIZER
2 FIT 1262 / FQS 1262 FLOWMETER FIT-1262 REMOTE TRANSMITTER / DISPLAY UNIT (LOCATED IN ELECTRICAL ROOM)

10" FE1262 2
10" M LIFT STATION FLOWMETER
10" 10" FM TO GIG HARBOR WASTE WATER TREATMENT PLANT
6" BLIND FLANGE (ANSI)
6" 6"
BYPASS AND METER VAULT (CLASS. I DIV. 2 HAZARDOUS AREA)

MECHANICAL ROOM, CONTINUED
(UNCLASSIFIED AREA WITH ADEQUATE AIR EXCHANGES)

DIAGRAM NOTES

1. CONTRACTOR SHALL INSTALL AIR GAP SYSTEM TO ENSURE SEPARATION OF UTILITY WATER FROM WASTE WATER AND TO BOOST THE WATER PRESSURE.
2. CONTRACTOR SHALL INSTALL FLOWMETER WITH A MINIMUM OF 50" OF STRAIGHT PIPE BEFORE IT AND 30" OF STRAIGHT PIPE AFTER. CONTRACTOR SHALL MOUNT THE TRANSMITTER (WITH OPERATOR INTERFACE) IN THE ELECTRICAL ROOM.
3. MULTIPLE LOCATIONS OF GREEN/RED INDICATOR LIGHTS NOT SHOWN. ELECTRICAL ROOM INTERIOR, NORTH MECHANICAL ROOM EXTERIOR, EAST MECHANICAL ROOM EXTERIOR, EAST MECHANICAL ROOM INTERIOR. REFER TO ELECTRICAL DRAWINGS AND DRAWING M-06 FOR LOCATIONS. CONTRACTOR SHALL TERMINATE CONNECTIONS TO LOCAL CONTROL PANEL LCP-1201.
4. LOW AIRFLOW FAULT INTERLOCK SHALL BE PLC PROGRAMMED TO SHUT OFF ODOR CONTROL SYSTEM.

ISSUED FOR CONSTRUCTION

ANY PRINTS NOT BEARING THIS STAMP MAY HAVE BEEN PRINTED PRIOR TO ADVERTISING AND CANNOT BE CONSIDERED AS BID DOCUMENTS. USERS OF THIS DOCUMENT IN EDITABLE ELECTRONIC FORMATS ARE CAUTIONED AGAINST USE WITHOUT FIRST DETERMINING WHETHER CHANGES MAY HAVE BEEN MADE SUBSEQUENT TO ITS PREPARATION.

NO	REVISION	DATE	BY

SCALES
0 1"
0 25mm
IF THIS BAR IS NOT DIMENSION SHOWN, ADJUST SCALES ACCORDINGLY.

DESIGNED JPM
DRAWN ASS
CHECKED JPM

CITY OF GIG HARBOR, PUBLIC WORKS DEPARTMENT
GIG HARBOR, WASHINGTON
REPLACEMENT OF SANITARY SEWER LIFT STATION #12A

Kennedy Jenks
Advanced Industrial Automation
817 NW 44th St
Seattle, WA 98107
phone: 206-789-1373
www.advancedia.com info@advancedia.com

PIPING AND INSTRUMENTATION DIAGRAM

SCALE
JOB NO 2097006*00
DATE AUGUST 2021
SHEET 46 OF 60
I-04

3/4/2021 5:29:12 PM

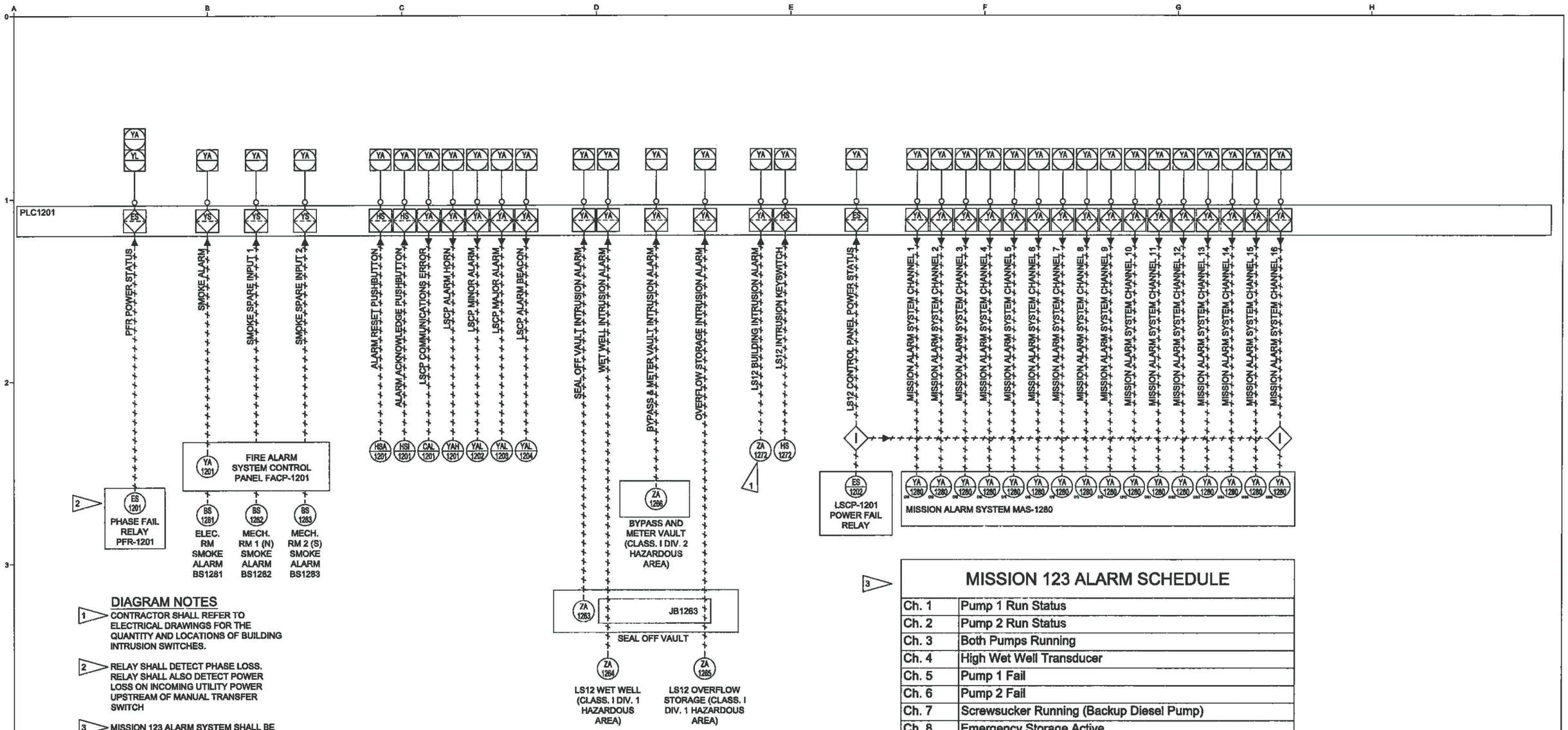

DIAGRAM NOTES

1. CONTRACTOR SHALL REFER TO ELECTRICAL DRAWINGS FOR THE QUANTITY AND LOCATIONS OF BUILDING INTRUSION SWITCHES.
2. RELAY SHALL DETECT PHASE LOSS. RELAY SHALL ALSO DETECT POWER LOSS ON INCOMING UTILITY POWER UPSTREAM OF MANUAL TRANSFER SWITCH
3. MISSION 123 ALARM SYSTEM SHALL BE INITIALLY PROGRAMMED PER OWNER'S MISSION ALARM SCHEDULE AS SHOWN.

MISSION 123 ALARM SCHEDULE

Ch. 1	Pump 1 Run Status
Ch. 2	Pump 2 Run Status
Ch. 3	Both Pumps Running
Ch. 4	High Wet Well Transducer
Ch. 5	Pump 1 Fail
Ch. 6	Pump 2 Fail
Ch. 7	Screwsucker Running (Backup Diesel Pump)
Ch. 8	Emergency Storage Active
Ch. 9	Odor Control Fail
Ch. 10	Intrusion
Ch. 11	Fire Alarm
Ch. 12	High High Wet Well Float
Ch. 13	Backup Float Mode Active
Ch. 14	Combustible Gas Detected
Ch. 15	Spare
Ch. 16	LS12 Control Panel Power Status

ISSUED FOR CONSTRUCTION

ANY PRINTS NOT BEARING THIS STAMP MAY HAVE BEEN PRINTED PRIOR TO ADVERTISING AND CANNOT BE CONSIDERED AS BID DOCUMENTS. USERS OF THIS DOCUMENT IN EDITABLE ELECTRONIC FORMATS ARE CAUTIONED AGAINST USE WITHOUT FIRST DETERMINING WHETHER CHANGES MAY HAVE BEEN MADE SUBSEQUENT TO ITS PREPARATION.

NO	REVISION	DATE	BY

SCALES
0 1"
0 25mm
IF THIS BAR IS NOT DIMENSION SHOWN, ADJUST SCALES ACCORDINGLY.

JON P. MATTISON — STATE OF WASHINGTON — REGISTERED PROFESSIONAL ENGINEER

DESIGNED	JPM
DRAWN	ASB
CHECKED	JPM

CITY OF GIG HARBOR, PUBLIC WORKS DEPARTMENT
GIG HARBOR, WASHINGTON
REPLACEMENT OF SANITARY SEWER LIFT STATION #12A

Kennedy Jenks

Advanced Industrial Automation
617 NW 44th St
Seattle, WA 98107
phone: 206-782-1373
www.advancedia.com info@advancedia.com

PIPING AND INSTRUMENTATION DIAGRAM

SCALE	
JOB NO	2097006*00
DATE	AUGUST 2021
SHEET	47 OF 60
	I-05

8/4/2021 5:29:13 PM

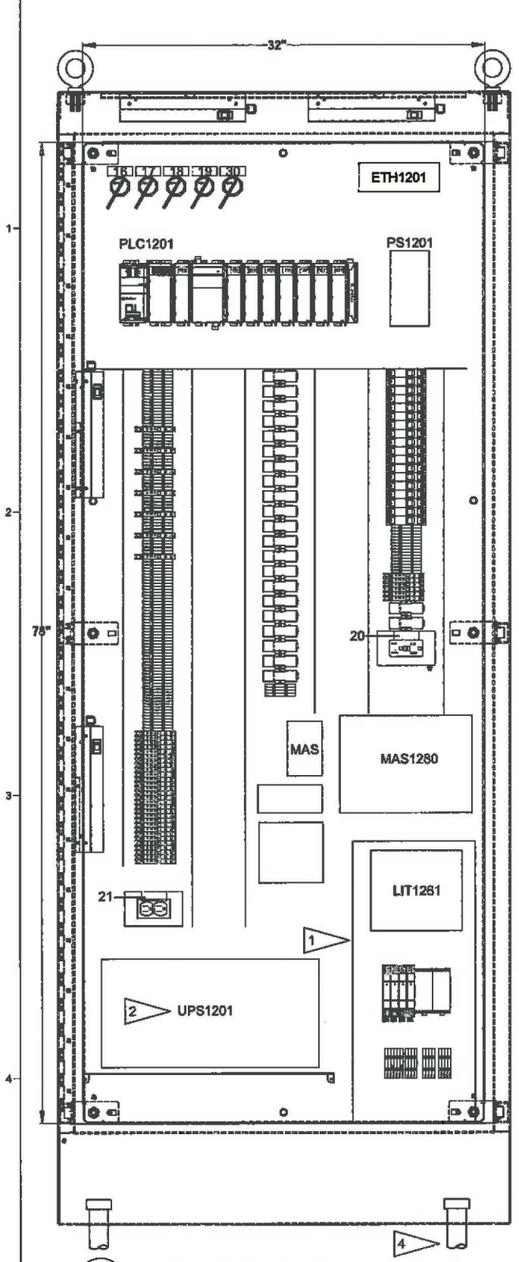

B EIC 1 LSCP1201 INTERIOR ELEVATION

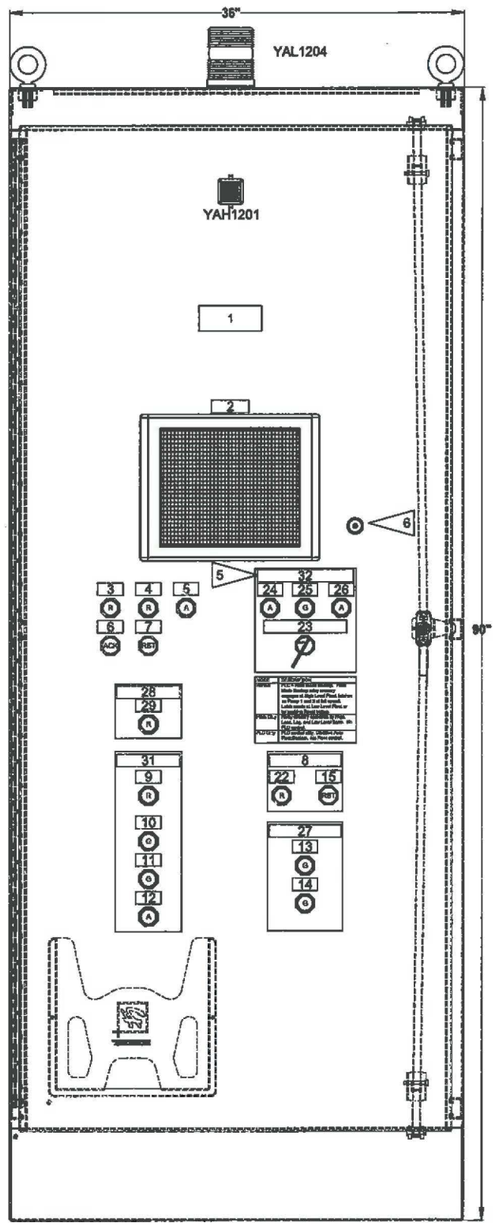

C EIC 1 LSCP1201 EXTERIOR ELEVATION

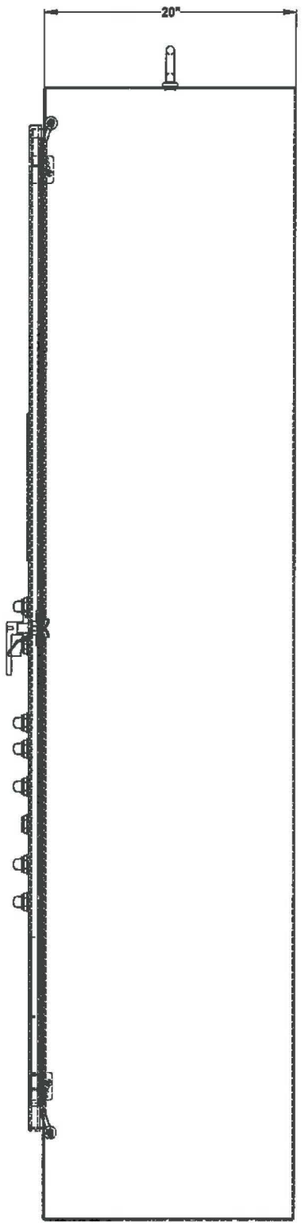

D EIC 1 LSCP1201 SIDE ELEVATION

ELEVATION SYMBOL LEGEND

RST	PUSHBUTTON ENGRAVED WITH THE WORD "RESET"
ACK	PUSHBUTTON ENGRAVED WITH THE WORD "ACKNOWLEDGE"
A	PUSH TO TEST INDICATING LED LETTERS INDICATE COLOR G=GREEN R=RED A=AMBER
WH	(2) OR (3) POSITION SELECTOR SWITCH

DIAGRAM NOTES

1. INTRINSICALLY SAFE CIRCUITS SHALL BE SEPARATED BY A MINIMUM OF 50 mm FROM NONINTRINSICALLY SAFE CIRCUITS. THE PANEL SHALL EMPLOY A PHYSICAL BARRIER TO SEPARATE THE INTRINSICALLY SAFE CIRCUITRY FROM THE NONINTRINSICALLY SAFE CIRCUITRY. AREA IN PANEL SHALL BE MARKED AND LABELED. BARRIER SHALL KEEP UPS WIRES AWAY FROM AREA.
2. UPS SHALL BE MOUNTED ON A REMOVABLE FRAMEWORK TO ALLOW ACCESS TO CONDUITS AND WIRING PENETRATING FLOOR BELOW THE EQUIPMENT.
3. PROVIDE ENGRAVED LABEL NEAR HAND SWITCH AS SHOWN. ALL TEXT SHALL BE 1/4" HIGH.
4. CONDUITS FROM LEVEL FLOATS AND OTHER INTRINSICALLY SAFE SIGNALS.
5. ENGRAVED LABELS FOR GROUP NAMES SHALL EXTEND TO WIDTH OF GROUPING DIVIDERS
6. INSTALL MISSION ALARM SYSTEM KEY READER ON FACE OF PANEL (LEAVE KEY READER UNLABELED)

3

MODE	DESCRIPTION
Normal	PLC + Float Mode Backup. Float Mode Backup relay circuitry engages at High Level Float, latches on Pump 1 and 2 at full speed. Latch resets at Low Level Float or by pushing Reset button.
Float Only	Relay circuitry operation by High, Lead, Lag, and Low Level floats. No PLC control.
PLC Only	PLC control only. Disables Auto Float Backup. No Float control.

A EIC 1 CONTROL PANEL DETAIL

ENGRAVED LABEL SCHEDULE

NO.	TEXT SIZE	TEXT DESCRIPTION	DEVICE TAG
1	0'-0 1/2"	LIFT STATION 12 LOCAL CONTROL PANEL LSCP-1201	LSCP1201
2	0'-0 1/4"	HMI-1201	HMI1200
3	0'-0 1/4"	MAJOR ALARM	YAL1203
4	0'-0 1/4"	MINOR ALARM	YAL1202
5	0'-0 1/4"	COMMUNICATIONS ERROR	CAL1201
6	0'-0 1/4"	ALARM ACKNOWLEDGE	HSI1201
7	0'-0 1/4"	ALARM RESET	HSA1201
8	0'-0 1/4"	FLOAT MODE BACKUP	N/A
9	0'-0 1/4"	HIGH FLOAT ALARM	YAL1254
10	0'-0 1/4"	LAG FLOAT	YL1253
11	0'-0 1/4"	LEAD FLOAT	YL1252
12	0'-0 1/4"	LOW FLOAT	YL1251
13	0'-0 1/4"	LAG PUMP CALL	YL1222-FOR
14	0'-0 1/4"	LEAD PUMP CALL	YL1221-FOR
15	0'-0 1/4"	FLOAT MODE BACKUP RESET	PB1250-AFR
16	0'-0 1/4"	PANEL ALARM BEACON DISABLE/ENABLE	HS1204
17	0'-0 1/4"	PANEL ALARM HORN DISABLE/ENABLE	HS1201
18	0'-0 1/4"	PUMP 1 FLOAT MODE BACKUP DISABLE/ENABLE	HS1221
19	0'-0 1/4"	PUMP 2 FLOAT MODE BACKUP DISABLE/ENABLE	HS1222
20	0'-0 1/4"	LAPTOP UTILITY OUTLET (5A MAX)	N/A
21	0'-0 1/4"	FOR UPS POWER	N/A
22	0'-0 1/4"	FLOAT MODE BACKUP ACTIVE	YAL1250-AFA
23	0'-0 1/4"	FLOAT ONLY - NORMAL - PLC ONLY	HS1250
24	0'-0 1/4"	FLOAT ONLY (MAINTENANCE)	YL1250-FFE
25	0'-0 1/4"	NORMAL	YL1250-AFE
26	0'-0 1/4"	PLC ONLY (MAINTENANCE)	YL1250-POE
27	0'-0 1/4"	FLOAT ONLY MODE	N/A
28	0'-0 1/4"	OVERFLOW STORAGE	N/A
29	0'-0 1/4"	HIGH FLOAT	YL1255
30	0'-0 1/4"	CH 1 PANEL POWER ALARM DISABLE/ENABLE	HS1280-1
31	0'-0 1/4"	WETWELL	N/A
32	0'-0 1/4"	OPERATION MODE SELECTOR	N/A

ISSUED FOR CONSTRUCTION

ANY PRINTS NOT BEARING THIS STAMP MAY HAVE BEEN PRINTED PRIOR TO ADVERTISING AND CANNOT BE CONSIDERED AS BID DOCUMENTS. USERS OF THIS DOCUMENT IN EDITABLE ELECTRONIC FORMATS ARE CAUTIONED AGAINST USE WITHOUT FIRST DETERMINING WHETHER CHANGES MAY HAVE BEEN MADE SUBSEQUENT TO ITS PREPARATION.

NO	REVISION	DATE	BY

SCALES
0 1"
0 25mm
IF THIS BAR IS NOT DIMENSION SHOWN, ADJUST SCALES ACCORDINGLY.

JON C. MATHISON STATE OF WASHINGTON 21600 REGISTERED PROFESSIONAL ENGINEER

DESIGNED	JPM
DRAWN	ASB
CHECKED	JFM

CITY OF GIG HARBOR, PUBLIC WORKS DEPARTMENT
GIG HARBOR, WASHINGTON
REPLACEMENT OF SANITARY SEWER
LIFT STATION #12A

Kennedy Jenks

Advanced Industrial Automation
617 NW 44th St
Seattle, WA 98107
phone: 206-789-1373
www.advancedia.com info@advancedia.com

LSCP-1201
PANEL ELEVATION

SCALE	
JOB NO	2097006*00
DATE	AUGUST 2021
SHEET	48 OF 60
	EIC-01

8/4/2021 4:50:14 PM

TYPICAL X1
ANALOG INPUT
24VDC FROM PS1201

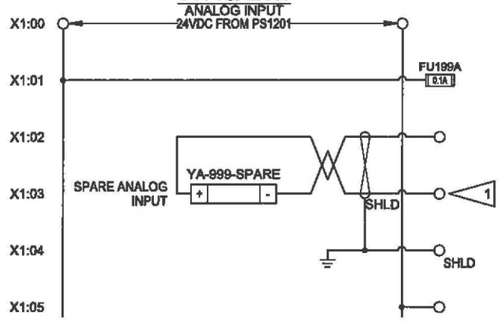

TYPICAL X2
ANALOG OUTPUT
24VDC FROM PS1201

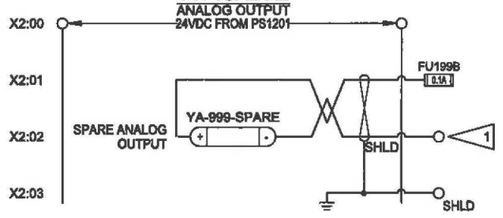

TYPICAL X3
DISCRETE INPUT
24VDC FROM PS1201

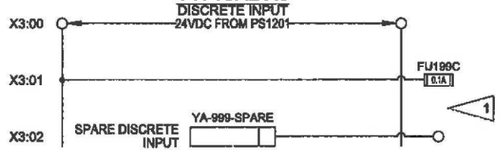

TYPICAL X4
DISCRETE OUTPUT
24VDC FROM PS1201

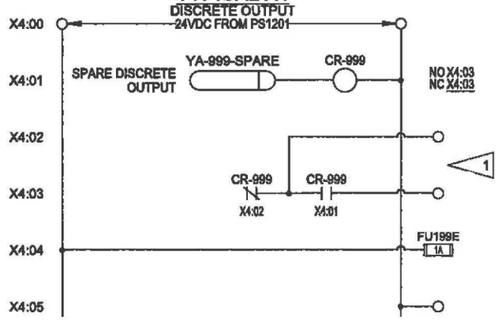

TYPICAL X5
2
DC FROM POWER SUPPLY
24VDC FROM PS1201

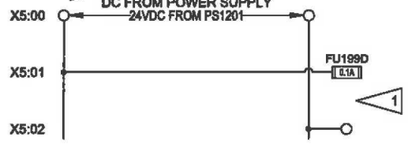

TYPICAL X6
2
AC FROM UPS
120VAC FROM UPS1201

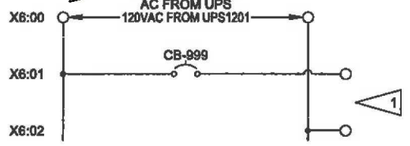

TYPICAL X7
2
AC FROM PANEL
120VAC FROM PANEL

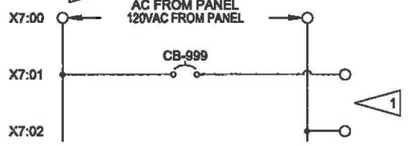

TYPICAL E1
PANEL POWER
120VAC FROM PANEL

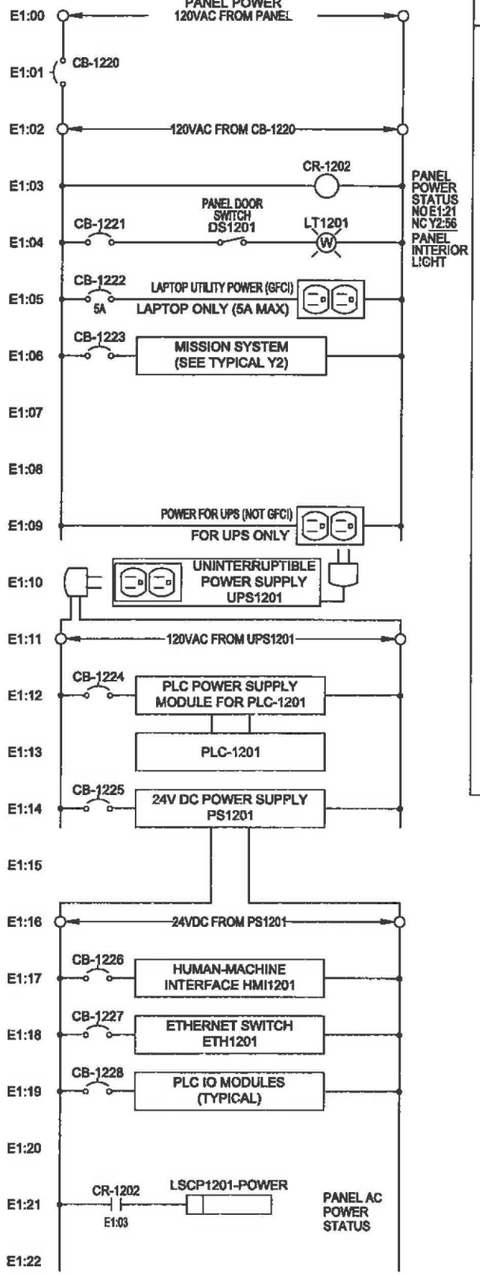

WIRING DIAGRAM SYMBOL LEGEND

	PANEL MOUNTED WIRING
	FIELD MOUNTED WIRING
	TWISTED SHIELDED PAIR (TSP)
	TERMINAL BLOCK IN CONTROL PANEL
	TERMINAL BLOCK IN PACKAGED DEVICE
	FIELD MOUNTED TERMINAL BLOCK
	FUSE OR FUSED TERMINAL BLOCK IN CONTROL PANEL
CR-001 NO 111 NC 112	CONTROL RELAY, WITH REFERENCES TO CONTACTS BY WIRE NUMBER
CR-001	CONTACTS, NORMALLY OPEN
110 CR-001	CONTACTS, NORMALLY CLOSED,
110 SW-###	DOOR SWITCH: CLOSES WHEN CABINET DOOR IS OPENED
HS-###	PUSHBUTTON HANDSWITCH, NORMALLY OPEN
HS-###	PUSHBUTTON HANDSWITCH, NORMALLY CLOSED
LT-###	INTERIOR CABINET LIGHTING OR ALARM BEACON
YL-### R	INDICATING LED, PRESS-TO-TEST LETTER INDICATES COLOR: R=RED A=AMBER G=GREEN
TDR-001	TIME-DELAY RELAY CONTACTS; NORMALLY OPEN, INSTANTANEOUS CLOSE, DELAYED OPEN
TDR-###	TIME-DELAY RELAY CONTACTS; NORMALLY CLOSED, INSTANTANEOUS OPEN, DELAYED CLOSE
LS-###	FLOAT SWITCH
FS-###	FLOW SWITCH
	120VAC STANDARD PLUG RECEPTACLE
1	DRAWING NOTE; SEE DRAWING NOTES ON SAME PAGE FOR MORE INFORMATION
	GROUND
M	MOTOR STARTER CONTACTS WITH THERMAL OVERLOAD
HOA-### H O A	THREE POSITION SELECTOR SWITCH LABELED "HAND/OFF/AUTO"
HS-### E D	TWO POSITION SELECTOR SWITCH LABELED "DISABLE/ENABLE"
I:X.Y.Z	PLC I/O POINT: ANALOG INPUT
- O:X.Y.Z +	PLC I/O POINT: ANALOG OUTPUT
I:X.Y/Z	PLC I/O POINT: DIGITAL INPUT
O:X.Y/Z	PLC I/O POINT: DIGITAL OUTPUT
VM-### V	VOLTMETER
A II-###	AMMETER
TSH-###	TEMPERATURE SWITCH
to 0149 from 0149	WIRE CONTINUATION SYMBOLS
H1 H2 X1 X2 XF1221	AC VOLTAGE TRANSFORMER

DIAGRAM NOTES

1. TERMINAL BLOCKS AND FUSED TERMINAL BLOCKS TO BE ARRANGED AND LOCALIZED BY EACH SPARE I/O; CO-LOCATE TERMINAL BLOCKS AND FUSED TERMINAL BLOCKS OF A PARTICULAR SPARE.
2. FOR USE IN ACCORDANCE WITH CONTROL PANEL SPECIFICATIONS REGARDING SPARES.

ISSUED FOR CONSTRUCTION

ANY PRINTS NOT BEARING THIS STAMP MAY HAVE BEEN PRINTED PRIOR TO ADVERTISING AND CANNOT BE CONSIDERED AS BID DOCUMENTS. USERS OF THIS DOCUMENT IN EDITABLE ELECTRONIC FORMATS ARE CAUTIONED AGAINST USE WITHOUT FIRST DETERMINING WHETHER CHANGES MAY HAVE BEEN MADE SUBSEQUENT TO ITS PREPARATION.

NO	REVISION	DATE	BY

SCALES: 0 — 1" ; 0 — 25mm
IF THIS BAR IS NOT DIMENSION SHOWN, ADJUST SCALES ACCORDINGLY.

JOY P. MATHISON — STATE OF WASHINGTON — 22346 — REGISTERED PROFESSIONAL ENGINEER

DESIGNED JPM
DRAWN ASR
CHECKED JPM

CITY OF GIG HARBOR, PUBLIC WORKS DEPARTMENT
GIG HARBOR, WASHINGTON
REPLACEMENT OF SANITARY SEWER LIFT STATION #12A

Kennedy Jenks
Advanced Industrial Automation, 617 NW 44th St, Seattle, WA 98107, phone: 206-789-1373, www.advinceedis.com, info@advinceedis.com

TYPICAL WIRING DIAGRAMS AND SYMBOL LEGEND

SCALE
JOB NO 2097006*00
DATE AUGUST 2021
SHEET 49 OF 60
EIC-02

8/4/2021 4:50:15 PM

TYPICAL Y1

PANEL I/O
24VDC FROM PS1201

Y1:00				
Y1:01	"ALARM RESET" HSA1201	LSCP1201-RESET	ALARM RESET	
Y1:02	"ALARM ACKNOWLEDGE" HSI1201	LSCP1201-ACK	ALARM ACKNOWLEDGE	
Y1:03	MINOR ALARM	LSCP1201-MINOR	YAL1202	"MINOR ALARM"
Y1:04	MAJOR ALARM	LSCP1201-MAJOR	YAL1203	"MAJOR ALARM"
Y1:05	COMMUNICATION ERROR	LSCP1201-COMM	CAL1201	"COMMUNICATIONS ERROR"
Y1:06	ALARM HORN	LSCP1201-HORN	CR101-AH	NO Y1:07 NC
Y1:07	CR101-AH Y1:06	HS1201 E D XO "HORN DISABLE/ENABLE"	YAH1201	PANEL MOUNTED HORN
Y1:08	ALARM BEACON	LSCP1201-BEACON	CR104	NO Y1:09 NC
Y1:09	CR104 Y1:08	HS1204 E D XO "BEACON DISABLE/ENABLE"	YAL1204	PANEL MOUNTED BEACON

TYPICAL A1

COMBUSTIBLE GAS DETECTOR
24VDC FROM PS1201

COMBUSTIBLE GAS DETECTOR AIT-1233 (MECHANICAL ROOM)

A1:00			
A1:01			
A1:02	FU1233 0.1A	1 (PWR+)	POWER +
A1:03		4 (4-20 mA)	SIGNAL ◁ 1
A1:04	AE1233-GAS_LEL + - COMBUSTIBLE GAS LEVEL	2 (PWR-)	POWER - SHLD
A1:05		3 (PWR-)	POWER - NOT USED
A1:06		1 (NO)	FLT RELAY
A1:07		2 (C)	FLT RELAY
A1:08		3 (NC)	FLT RELAY
A1:09		4 (NO)	A2 RELAY
A1:10		5 (C)	A2 RELAY
A1:11		6 (NC)	A2 RELAY
A1:12	FU-1233B 0.1A	7 (NO)	A1 RELAY
A1:13	AE1233-GAS_LEL_ALARM COMBUSTIBLE GAS LEL LIMIT ALARM	8 (C)	A1 RELAY ◁ 2
A1:14		9 (NC)	A1 RELAY

GAS SENSOR (MECHANICAL ROOM)

TYPICAL L1

LEVEL TRANSMITTER (ULTRASONIC)
INTRINSICALLY SAFE
24VDC FROM PS1201

L1:00					
L1:01		SHLD	30 +	39 PWR	
L1:02	WET WELL LEVEL LE1261-LEVEL + -		29 - OUTPUT	40 SENSOR SIG	
L1:03				41 0 V	
L1:04	CB129		4 + 24C DC POWER		
L1:05			5 -		
L1:06					

ULTRASONIC LEVEL TRANSMITTER LIT-1261 (IN LSCP) ◁ 3

J-BOX: RED, WHITE, GREEN, BLACK, SHLD

INFLUENT WETWELL (CLASS 1 DIV 1 HAZARDOUS ZONE) ◁ 4

LEVEL SENSOR LE1261

DIAGRAM NOTES

1. THIS DEVICE 4-20MA SIGNAL SHALL BE WIRE FOR CURRENT SOURCE OPERATION.
2. RELAYS ARE SHOWN IN DEFAULT STATE (NORMALLY ENERGIZED), WITH POWER ON.
3. THE CONTRACTOR IS RESPONSIBLE FOR CREATING AN INTRINSICALLY SAFE SYSTEM FOR DEVICES IN THE WETWELL. THE SYSTEM SHALL MEET THE REQUIREMENTS OF NEC ARTICLE 504 FOR A CLASS 1 DIVISION 1 HAZARDOUS LOCATION.
4. THE CONTRACTOR SHALL PROVIDE INTRINSICALLY SAFE DEVICES AS REQUIRED.

ISSUED FOR CONSTRUCTION

ANY PRINTS NOT BEARING THIS STAMP MAY HAVE BEEN PRINTED PRIOR TO ADVERTISING AND CANNOT BE CONSIDERED AS BID DOCUMENTS. USERS OF THIS DOCUMENT IN EDITABLE ELECTRONIC FORMATS ARE CAUTIONED AGAINST USE WITHOUT FIRST DETERMINING WHETHER CHANGES MAY HAVE BEEN MADE SUBSEQUENT TO ITS PREPARATION.

NO	REVISION	DATE	BY

SCALES
0 — 1"
0 — 25mm
IF THIS BAR IS NOT DIMENSION SHOWN, ADJUST SCALES ACCORDINGLY.

JON P. MATHISON — STATE OF WASHINGTON — 16000 — REGISTERED PROFESSIONAL ENGINEER

DESIGNED	JPM
DRAWN	ASB
CHECKED	JPM

CITY OF GIG HARBOR, PUBLIC WORKS DEPARTMENT
GIG HARBOR, WASHINGTON
REPLACEMENT OF SANITARY SEWER
LIFT STATION #12A

Kennedy Jenks

Advanced Industrial Automation
817 NW 44th St
Seattle, WA 98107
phone: 206-789-1373
www.advancedia.com info@advancedia.com

TYPICAL WIRING DIAGRAMS

SCALE	
JOB NO	2097006*00
DATE	AUGUST 2021
SHEET	50 OF 60
	EIC-03

8/4/2021 4:50:15 PM

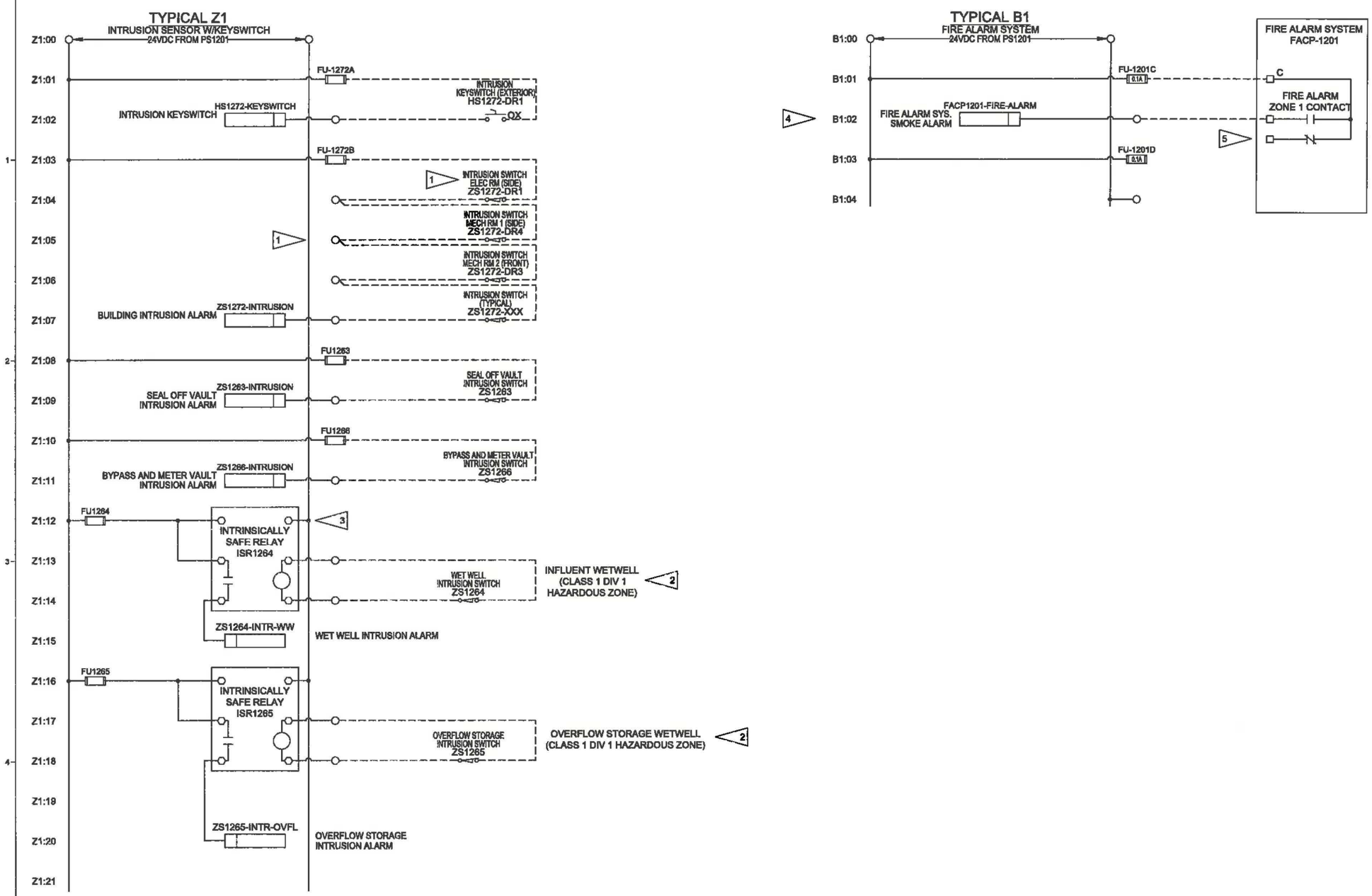

DIAGRAM NOTES

1. PROVIDE SUFFICIENT TERMINAL BLOCKS IN PANEL FOR TERMINATIONS OF INTRUSION SWITCHES CONNECTED IN SERIES. TYPICAL SHOWN. SEE ELECTRICAL DRAWINGS FOR NUMBER AND MOUNTING LOCATION DETAILS.
2. THE CONTRACTOR IS RESPONSIBLE FOR CREATING AN INTRINSICALLY SAFE SYSTEM FOR DEVICES IN THE WETWELL. THE SYSTEM SHALL MEET THE REQUIREMENTS OF NEC ARTICLE 504 FOR A CLASS 1 DIVISION 1 HAZARDOUS LOCATION.
3. SECOND CHANNEL OF ALL ISR'S SHALL BE RESERVED AND SHOWN AS BACKUP SPARE.
4. FIRE SIGNAL SHALL GO THROUGH MISSION TO ALLOW OWNER TO RESPOND AND DIRECT RESPONSE AS NECESSARY.
5. COORDINATE AVAILABLE CONNECTIONS WITH SELECTED EQUIPMENT.

ISSUED FOR CONSTRUCTION

ANY PRINTS NOT BEARING THIS STAMP MAY HAVE BEEN PRINTED PRIOR TO ADVERTISING AND CANNOT BE CONSIDERED AS BID DOCUMENTS. USERS OF THIS DOCUMENT IN EDITABLE ELECTRONIC FORMATS ARE CAUTIONED AGAINST USE WITHOUT FIRST DETERMINING WHETHER CHANGES MAY HAVE BEEN MADE SUBSEQUENT TO ITS PREPARATION.

NO	REVISION	DATE	BY

SCALES
0 — 1"
0 — 25mm
IF THIS BAR IS NOT DIMENSION SHOWN, ADJUST SCALES ACCORDINGLY.

JON P. MATHISON, STATE OF WASHINGTON, REGISTERED PROFESSIONAL ENGINEER

DESIGNED JPM
DRAWN ASE
CHECKED JPM

CITY OF GIG HARBOR, PUBLIC WORKS DEPARTMENT
GIG HARBOR, WASHINGTON
REPLACEMENT OF SANITARY SEWER
LIFT STATION #12A

Kennedy Jenks

Advanced Industrial Automation
617 NW 44th St
Seattle, WA 98107
phone: 206-789-1373
www.advancedia.com info@advancedia.com

TYPICAL WIRING DIAGRAMS

SCALE
JOB NO 2097006*00
DATE AUGUST 2021
SHEET 51 OF 60
EIC-04

8/4/2021 4:50:15 PM

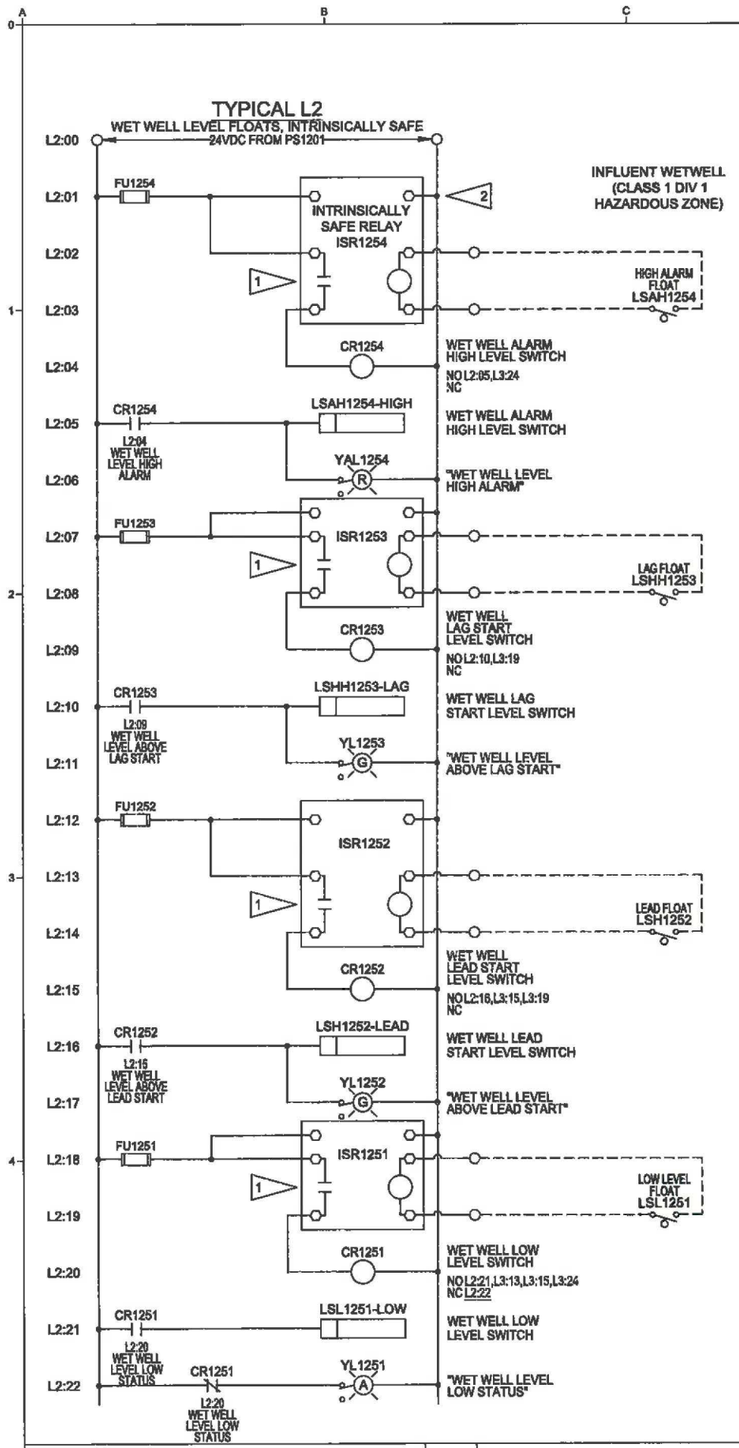

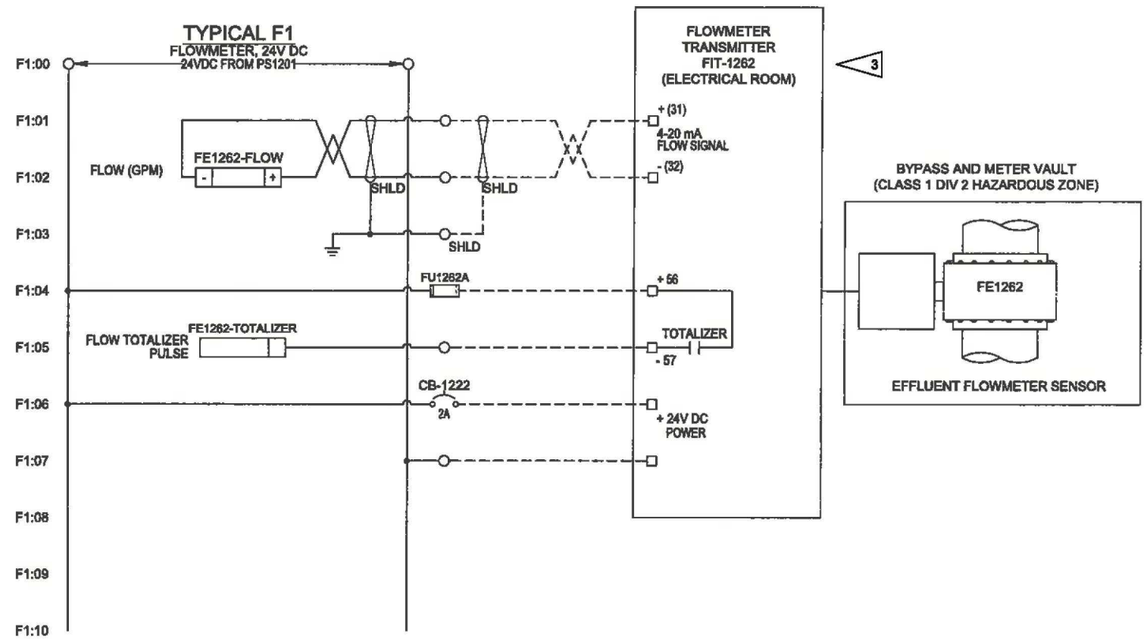

DIAGRAM NOTES

1. THE CONTRACTOR IS RESPONSIBLE FOR CREATING AN INTRINSICALLY SAFE SYSTEM FOR DEVICES IN THE WET WELL. THE SYSTEM SHALL MEET THE REQUIREMENTS OF NEC ARTICLE 504 FOR A CLASS 1 DIVISION 1 HAZARDOUS LOCATION.
2. SECOND CHANNEL OF ALL ISR'S SHALL BE RESERVED AND SHOWN AS BACKUP SPARE.
3. SEE ELECTRICAL DRAWINGS FOR REMOTE FLOWMETER TRANSMITTER LOCATION.

ISSUED FOR CONSTRUCTION

ANY PRINTS NOT BEARING THIS STAMP MAY HAVE BEEN PRINTED PRIOR TO ADVERTISING AND CANNOT BE CONSIDERED AS BID DOCUMENTS. USERS OF THIS DOCUMENT IN EDITABLE ELECTRONIC FORMATS ARE CAUTIONED AGAINST USE WITHOUT FIRST DETERMINING WHETHER CHANGES MAY HAVE BEEN MADE SUBSEQUENT TO ITS PREPARATION.

NO	REVISION	DATE	BY

SCALES
0 1"
0 25mm
IF THIS BAR IS NOT DIMENSION SHOWN, ADJUST SCALES ACCORDINGLY.

JON P. MATTISON — STATE OF WASHINGTON — 16452 — REGISTERED PROFESSIONAL ENGINEER

DESIGNED	KM
DRAWN	ASE
CHECKED	KM

CITY OF GIG HARBOR, PUBLIC WORKS DEPARTMENT
GIG HARBOR, WASHINGTON
REPLACEMENT OF SANITARY SEWER
LIFT STATION #12A

Kennedy Jenks

Advanced Industrial Automation
617 NW 44th St
Seattle, WA 98107
phone: 206-789-1373
www.advancedia.com info@advancedia.com

TYPICAL WIRING DIAGRAMS

SCALE	
JOB NO	2097006*00
DATE	AUGUST 2021
SHEET	52 OF 60
	EIC-05

8/4/2021 4:50:16 PM

TYPICAL L3
FLOAT MODE TYPE SELECTION
AND PUMP RUN INTERLOCK RELAY LOGIC

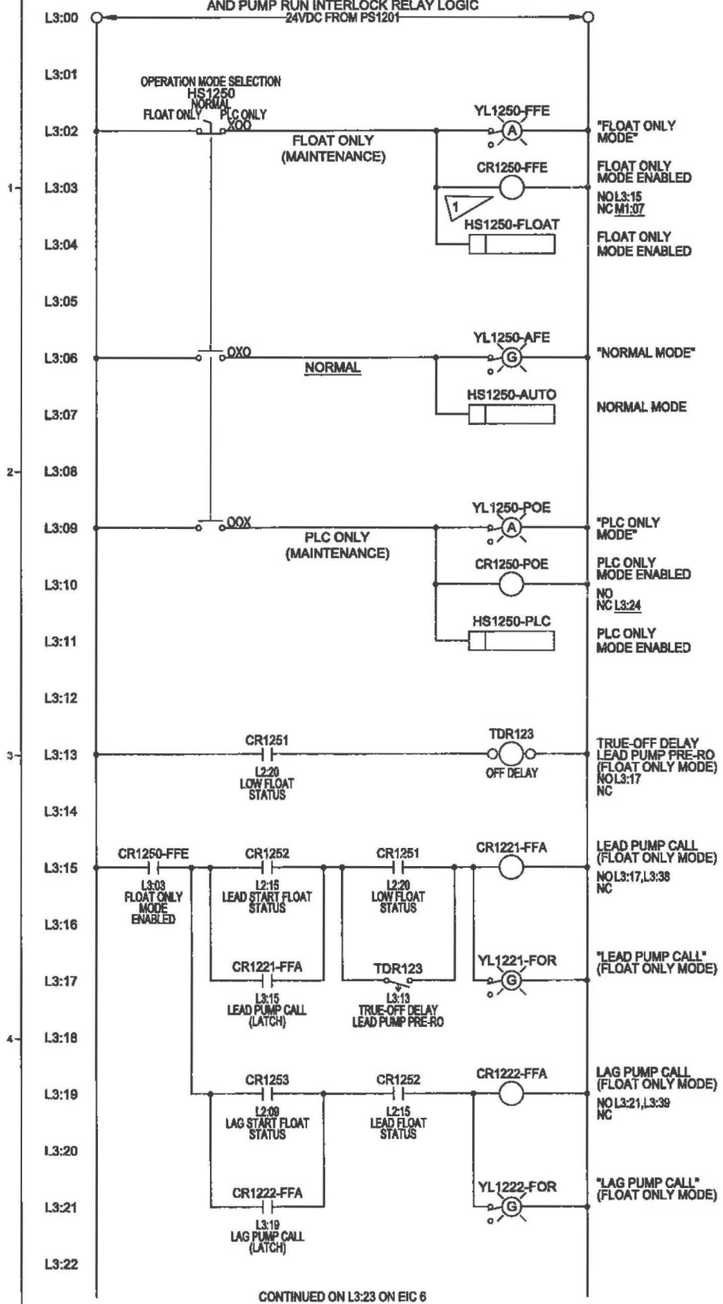

TYPICAL L3
FLOAT MODE TYPE SELECTION AND PUMP RUN INTERLOCK
RELAY LOGIC (CONTINUED FROM L3:22 ON EIC 6)

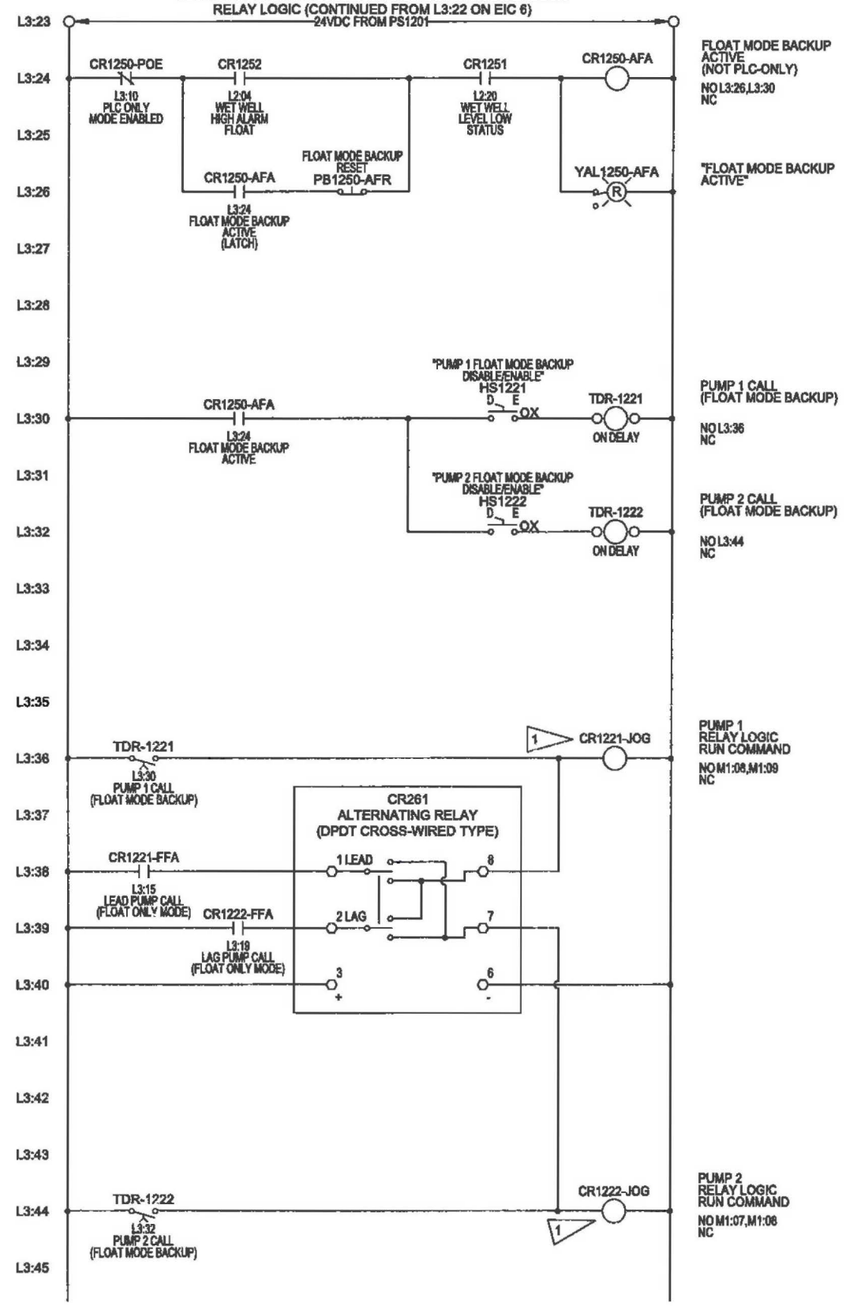

DIAGRAM NOTES

1. THESE COMPONENTS INTERLOCK WITH THE PUMP CONTROL TYPICALS, M1. CR1250-FFE INTERLOCKS WITH BOTH INSTANCES. CR1221-JOG AND CR1222-JOG EACH INTERLOCK WITH A DIFFERENT VERSION OF M1.

ISSUED FOR CONSTRUCTION

ANY PRINTS NOT BEARING THIS STAMP MAY HAVE BEEN PRINTED PRIOR TO ADVERTISING AND CANNOT BE CONSIDERED AS BID DOCUMENTS. USERS OF THIS DOCUMENT IN EDITABLE ELECTRONIC FORMATS ARE CAUTIONED AGAINST USE WITHOUT FIRST DETERMINING WHETHER CHANGES MAY HAVE BEEN MADE SUBSEQUENT TO ITS PREPARATION.

NO	REVISION	DATE	BY

SCALES
0 1"
0 25mm
IF THIS BAR IS NOT DIMENSION SHOWN, ADJUST SCALES ACCORDINGLY.

JON P. MATTISON — STATE OF WASHINGTON — 21009 — REGISTERED PROFESSIONAL ENGINEER

DESIGNED	JPM
DRAWN	ASF
CHECKED	JPM

CITY OF GIG HARBOR, PUBLIC WORKS DEPARTMENT
GIG HARBOR, WASHINGTON
REPLACEMENT OF SANITARY SEWER
LIFT STATION #12A

Kennedy Jenks

Advanced Industrial Automation
617 NW 44th St
Seattle, WA 98107
phone: 206-789-1373
www.advancedia.com info@advancedia.com

TYPICAL WIRING DIAGRAMS

SCALE	
JOB NO	2097006*00
DATE	AUGUST 2021
SHEET	53 OF 60
	EIC-06

5/4/2021 4:50:17 PM

TYPICAL M1

VFD CONTROLLER AT MCP, HOA AT MCP, W/PUMP MONITOR RELAY AND FLOAT MODE & REMOTE CONTROL INTERLOCKS

24VDC FROM PS1201

PUMP 1 RUN COMMAND — P1221-RUN_CMD — CR1221 — PUMP 1 RUN NO M1:07 NC

PUMP 1 HOA IN HAND — P1221-HAND

PUMP 1 HOA IN AUTO — P1221-AUTO

PUMP 1 RUNNING — P1221-ON

PUMP 1 FAULT — P1221-FAULT

PUMP 1 OVERHEAT — P1221-OVERHEAT

PUMP 1 LEAK — P1221-LEAK

VFD SPEED COMMAND — P1221-SPEED_CMD

VFD SPEED STATUS — P1221-SPEED

CR1250-FFE — L3:03 FLOAT ONLY MODE ENABLED — CR1221 — M1:01 PUMP 1 RUN — CR1221-JOG

L3:36 PUMP 1 RELAY LOGIC RUN — CR1221-JOG — L3:36 PUMP 1 RELAY LOGIC RUN

FU1221-RUN 0.3A — FU1221-SRP 0.3A — FU1221 0.1A

SHLD

PUMP #1 MOTOR CONTROL PANEL MCP1221 (VFD1221)

480VAC, 3 PH

480VAC — H1 H2 — XF1221 — 120VAC — X1 X2

FU1221-A — FU1221-B — FU1221-C — FU1221-TMSR

to M1:03 AC-TMSR — to M1:04 N

HOA1221 — H O A — XOO — OOX

CR1221-HAND — HAND MODE — NO M1:12 NC

12 CR1221-DC-IR1 — CR1221-RUN — RUN COMMAND — NO M1:08 NC

RUN COMMAND — CR1221-DC-IR1 — 12

SPD REF PRESET — CR1221-DC-IR2 — 12

12 CR1221-DC-IR2 — CR1221-SPC — SPEED REF 1 PRESET (RELAY LOGIC) — NO M1:11 NC

CR1221-ON — YL1221-ON (G) — MOTOR RUNNING

M1:15 MOTOR RUNNING — CR1221-FLT — YAL1221-FLT (R) — MOTOR FAULT

M1:17 MOTOR FAULT — CR1221-TSH — YAL1221-TSH (R) — MOTOR OVERHEAT

M1:11 PUMP MOTOR OVERHEAT — CR1221-MSH — YAL1221-MSH (R) — MOTOR LEAK

M1:13 PUMP MOTOR LEAK

CR1221-ON — M1:15 MOTOR RUNNING — CR1221-FLT — M1:17 MOTOR FAULT

CR1221-TSH — M1:11 PUMP MOTOR OVERHEAT — CR1221-MSH — M1:13 PUMP MOTOR LEAK

CR1221-ON — MOTOR RUNNING — NO M1:09,M1:13 NC

CR1221-FLT — MOTOR FAULT — NO M1:10,M1:14 NC

VFD1221 (IQPUMP1000)

10 OIT1221

11 ETH PORT

SN (-24V ANALOG COMMON)

CR1221-RUN — M1:05 RUN COMMAND — CR1221-TSH — M1:11 PUMP MOTOR OVERHEAT — S1 (FWD RUN)

S3 (EXTERNAL FAULT)

S4 (FAULT RESET)

CR1221-SPC — S5 SPEED REF 1 (RELAY LOGIC)

CR1221-HAND — M1:04 HAND MODE — M1:08 SPEED PRESET COMMAND — S6 HAND MODE 1 (HOA IN HAND)

M1

M2 VFD RUNNING — DO 1

MC

MA VFD FAULT — FAULT

A2 (SPEED INPUT)

AC (ANALOG INPUT COMMON)

E (G) SHIELD

AM (ANALOG OUTPUT 2)

AC (ANALOG COMMON)

SHLD

AC-TMSR from M1:03 — N from M1:03

CR1221-TSH — PUMP MOTOR OVERHEAT — NO M1:11,M1:15 NC M1:08

CR1221-MSH — PUMP MOTOR LEAK — NO M1:12,M1:16 NC

5 INFLUENT WETWELL (CLASS 1 DIV 1 HAZARDOUS ZONE)

CONDUCTIVITY PROBE — MSH1221

JB1221

60 HP P1221

THERMISTORS (PTC IN SERIES) 6 — TSH1221A

1 2 JB-1221T/M (TYPICAL)

3 4 THERMAL PROTECTION RELAY TSR-1221 (TYPICAL) — A1 95 97 T1 T2 — A2 96 98 Y1 Y2

MOISTURE MONITOR RELAY MSR-1221 (TYPICAL) — 1(L) 5 3 G L H — 2(N) 6 4 RL RH

DIAGRAM NOTES

1. PROVISION OF LCP SHALL BE BY THE PANEL SUPPLIER. REFER TO ELECTRICAL DRAWING SHEET E09 FOR ADDITIONAL DETAILS AND MOUNTING DETAILS. LOOP DIAGRAMS SHALL BE PROVIDED BY PANEL SUPPLIER.
2. COORDINATION OF MOTOR SAFETY SIGNALS IS REQUIRED WITH THE LCP SUPPLIER, PUMP SUPPLIER, AND MOTOR CONTROL PANEL SUPPLIER. DO NOT CONSTRUCT MOTOR CONTROL PANEL OR LCP WITHOUT COORDINATING PUMP MONITOR RELAYS WITH PUMP MANUFACTURER. CHECK VOLTAGE AND CIRCUITRY REQUIREMENTS OF SELECTED COMPONENTS.
3. PROVISION OF PUMP MONITOR RELAYS SHALL BE BY PUMP SUPPLIER.
4. RELAYS ARE SHOWN IN DEFAULT STATE (NORMALLY ENERGIZED), WITH POWER ON. STATE SHOWN MAY CHANGE IF RELAY NOT ENERGIZED.
5. THE CONTRACTOR IS RESPONSIBLE FOR CREATING AN INTRINSICALLY SAFE SYSTEM FOR DEVICES IN THE WETWELL.
6. THERMISTORS SHALL BE WIRED PER PUMP MANUFACTURERS RECOMMENDATIONS.
7. THIS INTERLOCK SHALL PREVENT THE PLC FROM CALLING THE PUMP TO RUN WHEN OPERATION MODE SELECTOR (ON LSCP) IS IN FLOAT ONLY MODE.
8. THIS INTERLOCK SHALL ACTIVATE THE PUMP AT A FIXED SPEED (VFD SPEED REF 1) AS CALLED FOR BY RELAY LOGIC FROM FLOAT INPUTS.
9. DRAWINGS SHALL NOTE THAT SHIELD WIRING IN FIELD SHALL BE CONNECTED AT ONLY ONE END.
10. PROVIDE REMOTE OPERATOR KEYPAD. MOUNT REMOTE KEYPAD ON PANEL DOOR TO ALLOW OPERATOR ACCESS WHEN PANEL DOOR IS CLOSED.
11. PROVIDE ETHERNET I/O PROTOCOL COMMUNICATIONS MODULE.
12. CONTRACTOR SHALL USE INTERPOSING 24VDC RELAY.

ISSUED FOR CONSTRUCTION

ANY PRINTS NOT BEARING THIS STAMP MAY HAVE BEEN PRINTED PRIOR TO ADVERTISING AND CANNOT BE CONSIDERED AS BID DOCUMENTS. USERS OF THIS DOCUMENT IN EDITABLE ELECTRONIC FORMATS ARE CAUTIONED AGAINST USE WITHOUT FIRST DETERMINING WHETHER CHANGES MAY HAVE BEEN MADE SUBSEQUENT TO ITS PREPARATION.

NO	REVISION	DATE	BY

SCALES: 0 — 1" ; 0 — 25mm

IF THIS BAR IS NOT DIMENSION SHOWN, ADJUST SCALES ACCORDINGLY.

JON P. MATTISON — STATE OF WASHINGTON — PROFESSIONAL ENGINEER

DESIGNED	JPM
DRAWN	ASB
CHECKED	JPM

CITY OF GIG HARBOR, PUBLIC WORKS DEPARTMENT
GIG HARBOR, WASHINGTON
REPLACEMENT OF SANITARY SEWER LIFT STATION #12A

Kennedy Jenks

Advanced Industrial Automation
817 NW 44th St
Seattle, WA 98107
phone: 206-789-1373
www.advancedia.com info@advancedia.com

TYPICAL WIRING DIAGRAMS

SCALE	
JOB NO	2097006*00
DATE	AUGUST 2021
SHEET	54 OF 60
	EIC-07

8/4/2021 4:50:18 PM

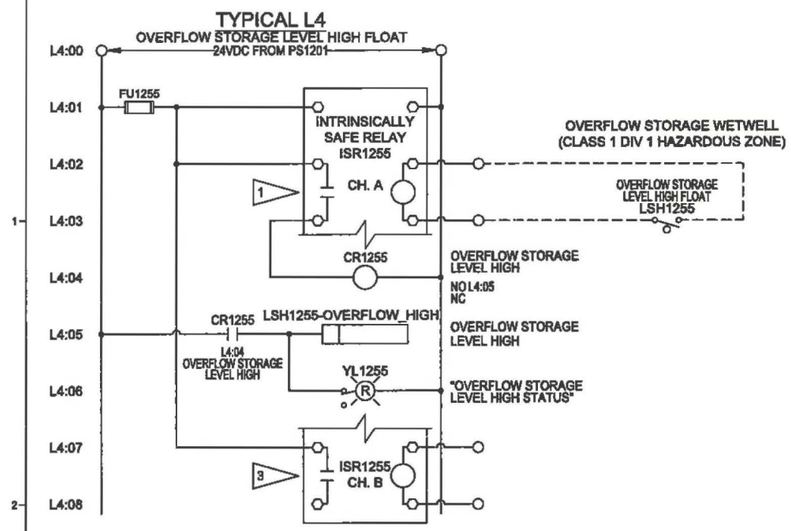

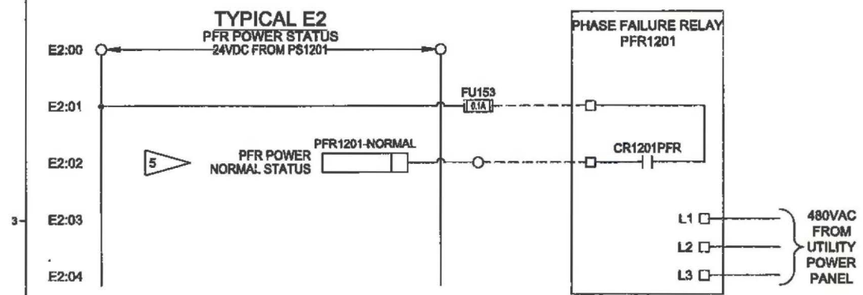

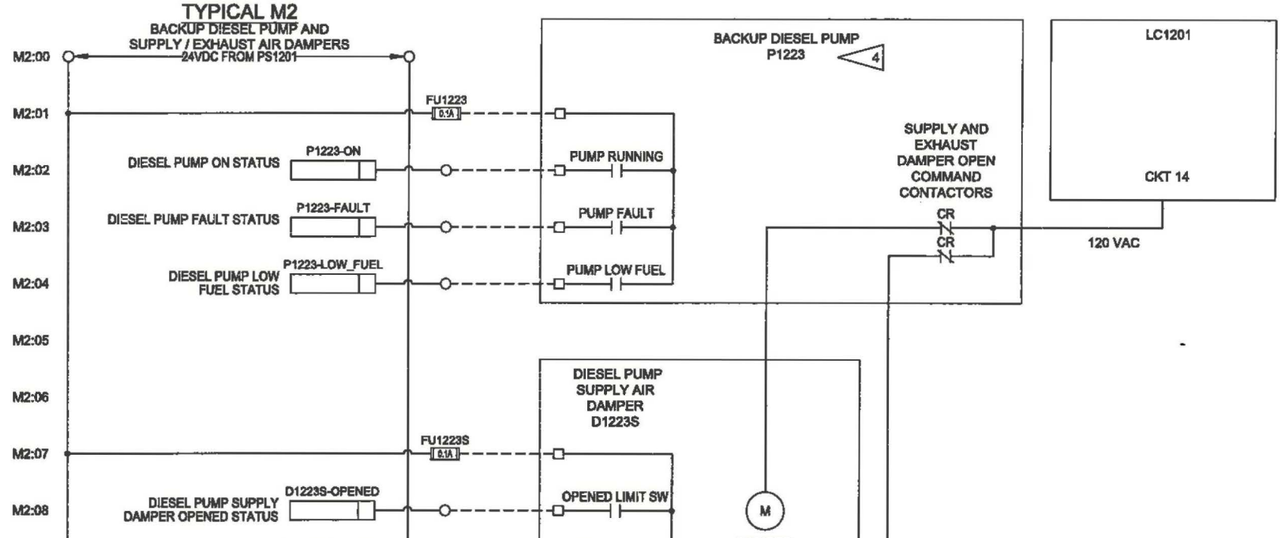

DIAGRAM NOTES

1. THE CONTRACTOR IS RESPONSIBLE FOR CREATING AN INTRINSICALLY SAFE SYSTEM FOR DEVICES IN THE WETWELL. THE SYSTEM SHALL MEET THE REQUIREMENTS OF NEC ARTICLE 504 FOR A CLASS 1 DIVISION 1 HAZARDOUS LOCATION.
2. THE AIR GAP PUMP SYSTEM IS ALSO KNOWN AS THE WATER PRESSURE BOOSTER SYSTEM.
3. SECOND CHANNEL OF ALL ISR'S SHALL BE RESERVED AND SHOWN AS BACKUP SPARE.
4. PACKAGED CONTROLS FURNISHED BY EQUIPMENT MANUFACTURERS.
5. RELAY TO INDICATE UTILITY POWER IS PRESENT, UPSTREAM OF PORTABLE GENERATOR INPUT.

ISSUED FOR CONSTRUCTION

ANY PRINTS NOT BEARING THIS STAMP MAY HAVE BEEN PRINTED PRIOR TO ADVERTISING AND CANNOT BE CONSIDERED AS BID DOCUMENTS. USERS OF THIS DOCUMENT IN EDITABLE ELECTRONIC FORMATS ARE CAUTIONED AGAINST USE WITHOUT FIRST DETERMINING WHETHER CHANGES MAY HAVE BEEN MADE SUBSEQUENT TO ITS PREPARATION.

NO	REVISION	DATE	BY

SCALES
0 1"
0 25mm
IF THIS BAR IS NOT DIMENSION SHOWN, ADJUST SCALES ACCORDINGLY.

JOHN P. MATHISON — STATE OF WASHINGTON — REGISTERED PROFESSIONAL ENGINEER

DESIGNED	JPM
DRAWN	ASL
CHECKED	JPM

CITY OF GIG HARBOR, PUBLIC WORKS DEPARTMENT
GIG HARBOR, WASHINGTON
REPLACEMENT OF SANITARY SEWER LIFT STATION #12A

Kennedy Jenks

Advanced Industrial Automation
617 NW 44th St
Seattle, WA 98107
phone: 206-786-1373
www.advancedia.com info@advancedia.com

TYPICAL WIRING DIAGRAMS

SCALE	
JOB NO	2097006*00
DATE	AUGUST 2021
SHEET	55 OF 60
	EIC-08

8/4/2021 4:50:19 PM

TYPICAL Y2
MISSION 123 ALARM SYSTEM
24VDC FROM PS1201

Y2:00
Y2:01 — MAS1280-CH1 CR1280-1 — MISSION ALARM SYSTEM CHANNEL 1 — NO Y2:03 NC — 1 — MISSION 123 ALARM SYSTEM MAS1280
Y2:02 — PUMP 1 RUN STATUS — 1 CHANNEL 1
Y2:03 — CR1280-1 Y2:01 — 1 CHANNEL 1 COMMON
Y2:04
Y2:05
Y2:06
Y2:07 — MAS1280-CH2 CR1280-2 — MISSION ALARM SYSTEM CHANNEL 2 — NO Y2:09 NC
Y2:08 — PUMP 2 RUN STATUS — 2 CHANNEL 2
Y2:09 — CR1280-2 Y2:07 — 2 CHANNEL 2 COMMON
Y2:10 — MAS1280-CH3 CR1280-3 — MISSION ALARM SYSTEM CHANNEL 3 — NO Y2:12 NC
Y2:11 — BOTH PUMPS RUNNING — 3 CHANNEL 3
Y2:12 — CR1280-3 Y2:10 — 3 CHANNEL 3 COMMON
Y2:13 — MAS1280-CH4 CR1280-4 — MISSION ALARM SYSTEM CHANNEL 4 — NO Y2:15 NC
Y2:14 — HIGH WET WELL TRANSDUCER — 4 CHANNEL 4
Y2:15 — CR1280-4 Y2:13 — 4 CHANNEL 4 COMMON
Y2:16 — MAS1280-CH5 CR1280-5 — MISSION ALARM SYSTEM CHANNEL 5 — NO Y2:18 NC
Y2:17 — PUMP 1 FAIL — 5 CHANNEL 5
Y2:18 — CR1280-5 Y2:16 — 5 CHANNEL 5 COMMON
Y2:19 — MAS1280-CH6 CR1280-6 — MISSION ALARM SYSTEM CHANNEL 6 — NO Y2:21 NC
Y2:20 — PUMP 2 FAIL — 6 CHANNEL 6
Y2:21 — CR1280-6 Y2:19 — 6 CHANNEL 6 COMMON
Y2:22

CONTINUED ON Y2:23

TYPICAL Y2
MISSION 123 ALARM SYSTEM
CONTINUED FROM Y2:22 ON EIC 9
24VDC FROM PS1201

Y2:23
Y2:24 — MAS1280-CH7 CR1280-7 — MISSION ALARM SYSTEM CHANNEL 7 — NO Y2:26 NC — MISSION 123 ALARM SYSTEM MAS1280
Y2:25 — SCREW-SUCKER RUNNING — 7 CHANNEL 7
Y2:26 — CR1280-7 Y2:24 — 7 CHANNEL 7 COMMON
Y2:27 — MAS1280-CH8 CR1280-8 — MISSION ALARM SYSTEM CHANNEL 8 — NO Y2:29 NC
Y2:28 — EMERGENCY STORAGE ACTIVE — 8 CHANNEL 8
Y2:29 — CR1280-8 Y2:27 — 8 CHANNEL 8 COMMON
Y2:30 — MAS1280-CH9 CR1280-9 — MISSION ALARM SYSTEM CHANNEL 9 — NO Y2:32 NC — EXPANSION
Y2:31 — ODOR CONTROL FAIL — 9 CHANNEL 9
Y2:32 — CR1280-9 Y2:30 — 9 CHANNEL 9 COMMON
Y2:33 — MAS1280-CH10 CR1280-10 — MISSION ALARM SYSTEM CHANNEL 10 — NO Y2:35 NC
Y2:34 — INTRUSION — 10 CHANNEL 10
Y2:35 — CR1280-10 Y2:33 — 10 CHANNEL 10 COMMON
Y2:36 — MAS1280-CH11 CR1280-11 — MISSION ALARM SYSTEM CHANNEL 11 — NO Y2:38 NC
Y2:37 — FIRE ALARM — 11 CHANNEL 11
Y2:38 — CR1280-11 Y2:36 — 11 CHANNEL 11 COMMON
Y2:39 — MAS1280-CH12 CR1280-12 — MISSION ALARM SYSTEM CHANNEL 12 — NO Y2:41 NC
Y2:40 — HIGH HIGH WET WELL FLOAT — 12 CHANNEL 12
Y2:41 — CR1280-12 Y2:39 — 12 CHANNEL 12 COMMON
Y2:42 — MAS1280-CH13 CR1280-13 — MISSION ALARM SYSTEM CHANNEL 13 — NO Y2:44 NC
Y2:43 — BACKUP FLOAT MODE ACTIVE — 13 CHANNEL 13
Y2:44 — CR1280-13 Y2:42 — 13 CHANNEL 13 COMMON
Y2:45

CONTINUED ON Y2:46

TYPICAL Y2
MISSION 123 ALARM SYSTEM
CONTINUED FROM Y2:45 ON EIC 9
24VDC FROM PS1201

Y2:46
Y2:47 — MAS1280-CH14 CR1280-14 — MISSION ALARM SYSTEM CHANNEL 14 — NO Y2:49 NC — MISSION 123 ALARM SYSTEM MAS1280
Y2:48 — COMBUSTIBLE GAS DETECTED — 14 CHANNEL 14
Y2:49 — CR1280-14 Y2:47 — 14 CHANNEL 14 COMMON
Y2:50 — MAS1280-CH15 CR1280-15 — MISSION ALARM SYSTEM CHANNEL 15 — NO Y2:52 NC
Y2:51 — SPARE — 15 CHANNEL 15
Y2:52 — CR1280-15 Y2:50 — 15 CHANNEL 15 COMMON
Y2:53 — MAS1280-CH16 CR1280-16 — MISSION ALARM SYSTEM CHANNEL 16 — NO Y2:55 NC
Y2:54 — 16 CHANNEL 16 PANEL POWER STATUS
Y2:55 — PANEL POWER STATUS/ SPARE — CR1280-16 Y2:53 — 16 CHANNEL 16 COMMON
Y2:56 — CR-1220 E1:33 PANEL POWER STATUS — HS1280-1 E D XO "CH 16 PANEL POWER ALARM ENABLE/DISABLE"
Y2:57
Y2:58 — 120VAC FROM CB-1220
Y2:59 — CB1223 — H1 120VAC H2 — XF1280
Y2:60 — X1 12.6VAC X2 — RADIO/ ANTENNA CONNECTION — ANTENNA CABLE
Y2:61 — 12.6 VAC FROM XF1280
Y2:62 — CB1280 — + 12.6 VAC POWER
Y2:63 — - 12.6 VAC POWER
MISSION 123 ALARM SYSTEM BACKUP BATTERY
Y2:64 — + 12 VDC BATTERY — + 12 VDC BATTERY
Y2:65 — - 12 VDC BATTERY — - 12 VDC BATTERY
Y2:66
Y2:67 — 2 — 4-WIRE RIBBON W/CONNECTOR — 3 — 4-PIN KEY READER CON-NECTOR
Y2:68
KEY READER (LSCP FRONT PANEL DOOR EXTERIOR)

CELLULAR ANTENNA LOCATED ON BUILDING EXTERIOR

DIAGRAM NOTES

1. THE MISSION ALARM SYSTEM SHALL BE MOUNTED INSIDE LSCP1201.
2. PROVIDE SECONDARY KEY READER MODEL CP421-MYDRO MOUNTED ON LSCP FRONT DOOR.
3. PROVIDE CUSTOM 4-WIRE CABLE EXTENSION. KEY READER CABLE SHALL BE EXTENDED FROM THE LSCP FRONT PANEL DOOR TO THE 4-PIN CONNECTOR ON THE MISSION MAIN BOARD.

ISSUED FOR CONSTRUCTION

ANY PRINTS NOT BEARING THIS STAMP MAY HAVE BEEN PRINTED PRIOR TO ADVERTISING AND CANNOT BE CONSIDERED AS BID DOCUMENTS. USERS OF THIS DOCUMENT IN EDITABLE ELECTRONIC FORMATS ARE CAUTIONED AGAINST USE WITHOUT FIRST DETERMINING WHETHER CHANGES MAY HAVE BEEN MADE SUBSEQUENT TO ITS PREPARATION.

NO	REVISION	DATE	BY

SCALES: 0 — 1" ; 0 — 25mm
IF THIS BAR IS NOT DIMENSION SHOWN, ADJUST SCALES ACCORDINGLY.

JON P. MATHISON — STATE OF WASHINGTON — REGISTERED PROFESSIONAL ENGINEER

DESIGNED	JPM
DRAWN	AJP
CHECKED	JPM

CITY OF GIG HARBOR, PUBLIC WORKS DEPARTMENT
GIG HARBOR, WASHINGTON
REPLACEMENT OF SANITARY SEWER LIFT STATION #12A

Kennedy Jenks
Advanced Industrial Automation, 617 NW 44th St, Seattle, WA 98107, phone: 206-789-1373, www.advancedia.com, info@advancedia.com

TYPICAL WIRING DIAGRAMS

SCALE	
JOB NO	2097006*00
DATE	AUGUST 2021
SHEET	56 OF 60
	EIC-09

8/4/2021 4:50:19 PM

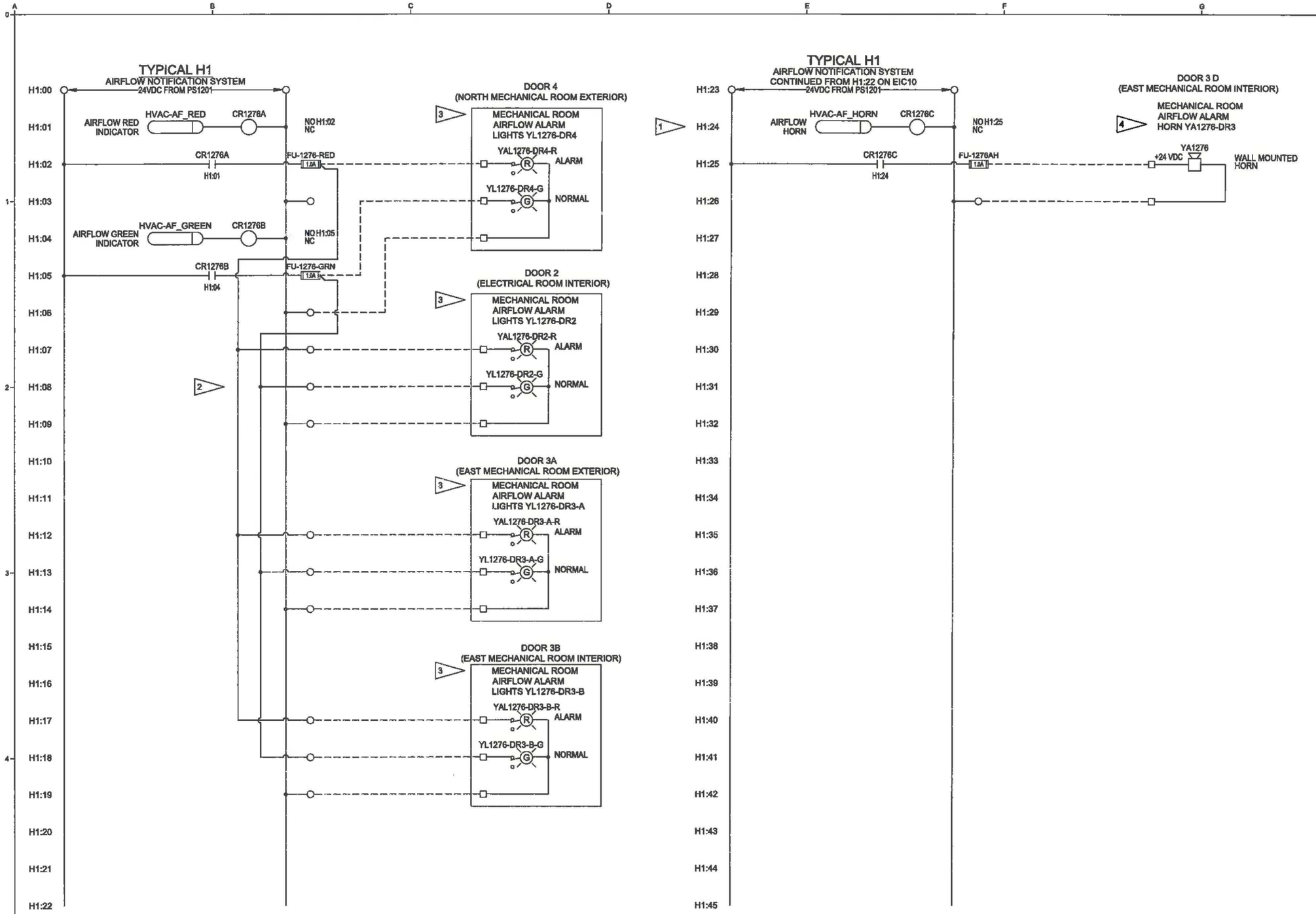

DIAGRAM NOTES

1. HORN OUTPUT SHALL BE TEMPORARILY DISABLED BY THE PLC DURING A COMPLETE UTILITY POWER FAILURE TO AVOID NUISANCE ALARMS.
2. CONTROL PANEL SHALL HAVE TERMINAL BLOCKS FOR TERMINATION OF AIRFLOW INDICATOR LIGHTS TO CONTROL PANEL.
3. PROVIDE WITH ENGRAVED PHENOLIC LEGEND LABELS "MECHANICAL ROOM AIRFLOW ALARM", "ALARM", AND "NORMAL". REFER TO ELECTRICAL DRAWINGS FOR LOCATION DETAILS.
4. PROVIDE WITH ENGRAVED PHENOLIC LEGEND LABEL "AIRFLOW ALARM HORN".

ISSUED FOR CONSTRUCTION

ANY PRINTS NOT BEARING THIS STAMP MAY HAVE BEEN PRINTED PRIOR TO ADVERTISING AND CANNOT BE CONSIDERED AS BID DOCUMENTS. USERS OF THIS DOCUMENT IN EDITABLE ELECTRONIC FORMATS ARE CAUTIONED AGAINST USE WITHOUT FIRST DETERMINING WHETHER CHANGES MAY HAVE BEEN MADE SUBSEQUENT TO ITS PREPARATION.

NO	REVISION	DATE	BY

SCALES
0 — 1"
0 — 25mm
IF THIS BAR IS NOT DIMENSION SHOWN, ADJUST SCALES ACCORDINGLY.

JON P. MATHISON, STATE OF WASHINGTON, REGISTERED PROFESSIONAL ENGINEER

DESIGNED
DRAWN
CHECKED

CITY OF GIG HARBOR, PUBLIC WORKS DEPARTMENT
GIG HARBOR, WASHINGTON
REPLACEMENT OF SANITARY SEWER LIFT STATION #12A

Kennedy Jenks

Advanced Industrial Automation
617 NW 44th St
Seattle, WA 98107
phone: 206-789-1373
www.advancedic.com info@advancedic.com

TYPICAL WIRING DIAGRAMS

SCALE
JOB NO 2097006*00
DATE AUGUST 2021
SHEET 57 OF 60
EIC-10

8/4/2021 4:50:20 PM

LSCP-1201

TYPICAL A2

ODOR CONTROL SYSTEM AND INLET VALVE

24VDC FROM PS1201

FU1230 0.1A

SYSTEM ON STATUS — LCP1230-ON — SYSTEM RUNNING

SYSTEM FAULT STATUS — LCP1230-FAULT — GENERAL ALARM

SYSTEM RUN COMMAND — LCP1230-RUN_CMD — CR1101 — NOM1:06 NC

REMOTE SYSTEM RUN COMMAND INPUT

CR1101 — M1:01 — FU1230 0.3A

HOA IN REMOTE — LCP1230-HOA-REMOTE — REMOTE MODE STATUS

VALVE CLOSE CALL STATUS — LCP1230-CLOSE-CALL — VALVE CLOSE CALL STATUS

FU1232 0.1A

VALVE CLOSED STATUS — FCV1232-CLOSED — CLOSED LIMIT SW

VALVE FULLY OPENED STATUS — FCV1232-FULLY-OPENED — OPENED LIMIT SW1

OPENED LIMIT SW2 (AC)

CR1230-IR — 10

CR1230-IR — 10

HOA1221 (H O A) — XOO — OOX — OOX

CB

CR5 — TO MS CIRCUIT

PACKAGED ODOR CONTROL SYSTEM LCP-1230 — 1

7 — 120 VAC (FROM TRANS FORMER)

CPF

CFF

N

8 — CB

4 — CLUTCH POWER (HOT)

N

2 — CR5 — OPEN POWER

3 2 — CR5 — CLOSE POWER

CR5

9

B1231

M&G FILTER SWITCH

FINAL FILTER SWITCH

5 — B1231 BLOWER RUN PERMISSIVE INPUT

INLET ACTUATOR VALVE FCV-1232

9

6 — 3 CLOSE

2 OPEN

1 N

4 — 11 CLUTCH (120 VAC HOT)

(DC)

DIAGRAM NOTES

1. PACKAGED CONTROLS FURNISHED BY EQUIPMENT MANUFACTURER.
2. VALVE OPEN POWER AND VALVE CLOSED POWER TO BE CONTROLLED BY ODOR CONTROL UNIT.
3. INLET VALVE TO BE CLOSED UNLESS CALLED TO OPEN BY ODOR CONTROL UNIT.
4. LOSS OF POWER TO CLUTCH CAUSES INLET ACTUATOR TO BE SPRING DRIVEN TO FAIL POSITION (CLOSE VALVE).
5. BLOWER DOES NOT RUN UNTIL VALVE IS FULLY OPENED.
6. POWER FOR OPEN AND CLOSE INPUTS ALSO PROVIDES POWER FOR INTERNAL HEATER TO REDUCE CONDENSATION.
7. 480 / 120 TRANSFORMER SIZED TO PROVIDE POWER TO FCV1232. FCV1232 TO BE POWERED FROM LCP1230 SO THAT THESE SYSTEMS ARE ON THE SAME CIRCUIT.
8. CIRCUIT BREAKER SHALL BE SIZED FOR INLET ACTUATOR.
9. CONTRACTOR SHALL COORDINATE ODOR CONTROL SYSTEM LCP-1230 CONTROL CIRCUITRY WITH SELECTED INLET ACTUATOR FCV-1232.
10. CONTRACTOR SHALL USE INTERPOSING 24VDC RELAY.

ISSUED FOR CONSTRUCTION

ANY PRINTS NOT BEARING THIS STAMP MAY HAVE BEEN PRINTED PRIOR TO ADVERTISING AND CANNOT BE CONSIDERED AS BID DOCUMENTS. USERS OF THIS DOCUMENT IN EDITABLE ELECTRONIC FORMATS ARE CAUTIONED AGAINST USE WITHOUT FIRST DETERMINING WHETHER CHANGES MAY HAVE BEEN MADE SUBSEQUENT TO ITS PREPARATION.

NO	REVISION	DATE	BY

SCALES
0 — 1"
0 — 25mm
IF THIS BAR IS NOT DIMENSION SHOWN, ADJUST SCALES ACCORDINGLY.

JON P. MATTISON — STATE OF WASHINGTON — REGISTERED PROFESSIONAL ENGINEER

DESIGNED	JPM
DRAWN	ASB
CHECKED	JPM

CITY OF GIG HARBOR, PUBLIC WORKS DEPARTMENT
GIG HARBOR, WASHINGTON
REPLACEMENT OF SANITARY SEWER LIFT STATION #12A

Kennedy Jenks

Advanced Industrial Automation
817 NW 44th St
Seattle, WA 98107
phone: 206-789-1373

TYPICAL WIRING DIAGRAMS

SCALE	
JOB NO	2097006*00
DATE	AUGUST 2021
SHEET	58 OF 60
	EIC-11

8/4/2021 4:50:21 PM

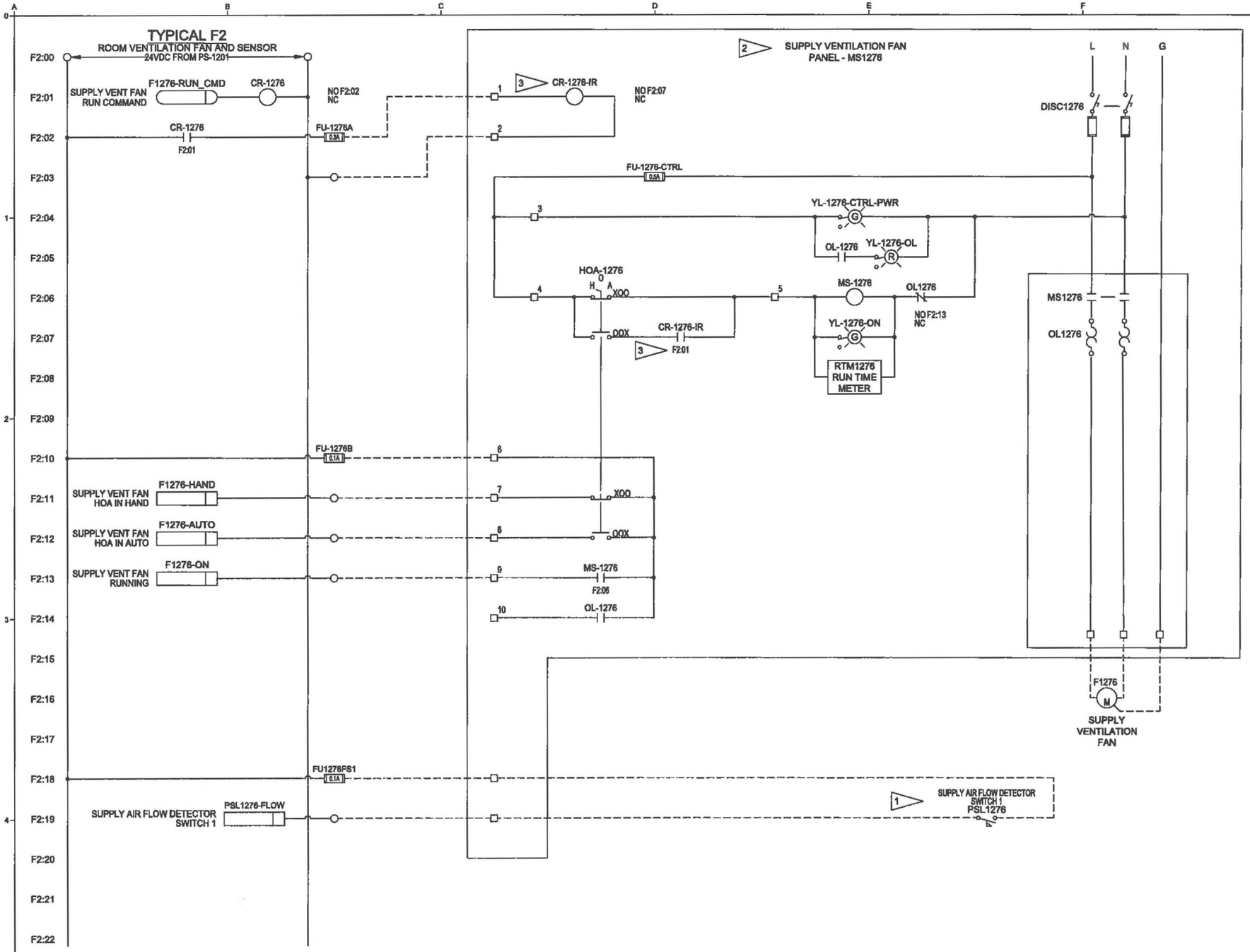

DIAGRAM NOTES

1. FLOW SWITCH LOCATED IN AIR DUCT
2. PROVIDE ENGRAVED LABEL "SUPPLY VENTILATION FAN PANEL MS1276 - HOA MUST BE IN AUTO POSITION FOR SUPPLY FAN AIRFLOW INTERLOCK TO FUNCTION." FOR THE EXHAUST FAN PANEL, PROVIDE ENGRAVED LABEL "EXHAUST VENTILATION FAN PANEL MS1277 - HOA MUST BE IN AUTO POSITION FOR EXHAUST FAN AIRFLOW INTERLOCK TO FUNCTION"
3. CONTRACTOR SHALL USE INTERPOSING 24VDC RELAY

ISSUED FOR CONSTRUCTION

ANY PRINTS NOT BEARING THIS STAMP MAY HAVE BEEN PRINTED PRIOR TO ADVERTISING AND CANNOT BE CONSIDERED AS BID DOCUMENTS. USERS OF THIS DOCUMENT IN EDITABLE ELECTRONIC FORMATS ARE CAUTIONED AGAINST USE WITHOUT FIRST DETERMINING WHETHER CHANGES MAY HAVE BEEN MADE SUBSEQUENT TO ITS PREPARATION.

NO	REVISION	DATE	BY

SCALES
0 — 1"
0 — 25mm
IF THIS BAR IS NOT DIMENSION SHOWN, ADJUST SCALES ACCORDINGLY.

JON P. MATHISON, STATE OF WASHINGTON, REGISTERED PROFESSIONAL ENGINEER

DESIGNED
DRAWN
CHECKED

CITY OF GIG HARBOR, PUBLIC WORKS DEPARTMENT
GIG HARBOR, WASHINGTON
REPLACEMENT OF SANITARY SEWER
LIFT STATION #12A

Kennedy Jenks

Advanced Industrial Automation
617 NW 44th St
Seattle, WA 98107
phone: 206-789-1373
www.advancedic.com info@advancedic.com

TYPICAL WIRING DIAGRAMS

SCALE
JOB NO 2097006*00
DATE AUGUST 2021
SHEET 59 OF 60
EIC-12

1/4/2021 4:50:22 PM

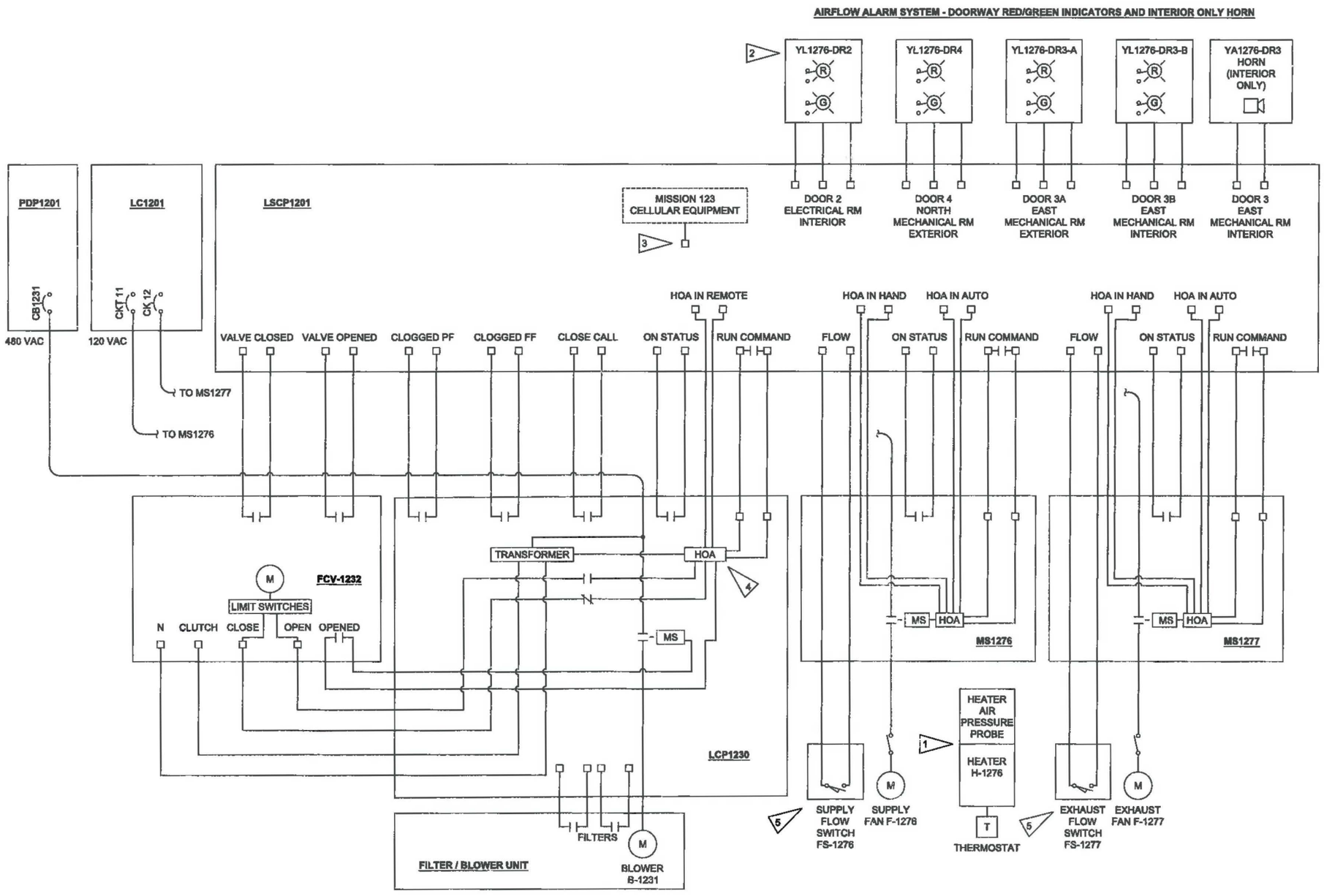

DIAGRAM NOTES

1. CONTRACTOR SHALL ENSURE HEATER AIRFLOW PRESSURE PROBE IS INSTALLED PROPERLY. ADDITIONAL UL 1096 REQUIRES THAT A FAN INTERLOCK METHOD BE PROVIDED AS AN INTEGRAL PART OF THE HEATER. PITOT TUBE SHALL BE PROVIDED.
2. LOCAL ALARM LIGHTS AT MECHANICAL ROOM DOORWAYS AND HORN SHALL INDICATE INSUFFICIENT AIRFLOW CONDITIONS DURING A FAILURE OF THE SUPPLY OR EXHAUST FAN OPERATION. THE ALARM IS ACKNOWLEDGED BY THE ACKNOWLEDGE PUSHBUTTON ON THE LIFT STATION CONTROL PANEL DOOR. A DESCRIPTION OF THE ALARM CONDITION SHALL BE AVAILABLE ON THE PANEL DOOR MOUNTED HMI.
3. LIFT STATION 12 BUILDING VENTILATION FAILURE ALARM SHALL COMMUNICATE TO WWTP VIA MISSION 123 CELLULAR-BASED ALARM SYSTEM.
4. PROVIDE ENGRAVED LABEL, "WHEN THE ODOR SCRUBBER IS NOT TURNED OFF, THE HOA SELECTOR SWITCH MUST BE PLACED IN "REMOTE" (OR "AUTO") POSITION TO ALLOW CLOSING OF THE INLET ACTUATOR VALVE DURING FAILURE OF THE SUPPLY OR EXHAUST FAN OPERATION."
5. CONTRACTOR SHALL ENSURE AIRFLOW SWITCH IS INSTALLED PROPERLY IN DUCT.

LIFT STATION 12A VENTILATION & ODOR SCRUBBER POWER / SIGNAL DIAGRAM

ISSUED FOR CONSTRUCTION

ANY PRINTS NOT BEARING THIS STAMP MAY HAVE BEEN PRINTED PRIOR TO ADVERTISING AND CANNOT BE CONSIDERED AS BID DOCUMENTS. USERS OF THIS DOCUMENT IN EDITABLE ELECTRONIC FORMATS ARE CAUTIONED AGAINST USE WITHOUT FIRST DETERMINING WHETHER CHANGES MAY HAVE BEEN MADE SUBSEQUENT TO ITS PREPARATION.

NO	REVISION	DATE	BY

SCALES
0 — 1"
0 — 25mm
IF THIS BAR IS NOT DIMENSION SHOWN, ADJUST SCALES ACCORDINGLY.

JON P. MATHISON, STATE OF WASHINGTON, REGISTERED PROFESSIONAL ENGINEER

DESIGNED JPM
DRAWN ASB
CHECKED JPM

CITY OF GIG HARBOR, PUBLIC WORKS DEPARTMENT
GIG HARBOR, WASHINGTON
REPLACEMENT OF SANITARY SEWER
LIFT STATION #12A

Kennedy Jenks
Advanced Industrial Automation
617 NW 44th St
Seattle, WA 98107
phone: 206-789-1373
www.advancedic.com info@advancedic.com

TYPICAL WIRING DIAGRAMS

SCALE
JOB NO 2097006*00
DATE AUGUST 2021
SHEET 60 OF 60
EIC-13

8/4/2021 4:50:23 PM