OptiGun GA03 Replacement Parts Order Form

Springer Industrial
3164 N Colorado St
Chandler, AZ 85225
Phone: 480-898-3144
Fax: 480-898-3192
orders@springerind.com

Gema Official Distributor

Ship To Location:

Company: _____

Address: _____

_____

_____

Contact: _____

Email: _____

Phone: _____

PO #: _____

QTY	PART NUMBER

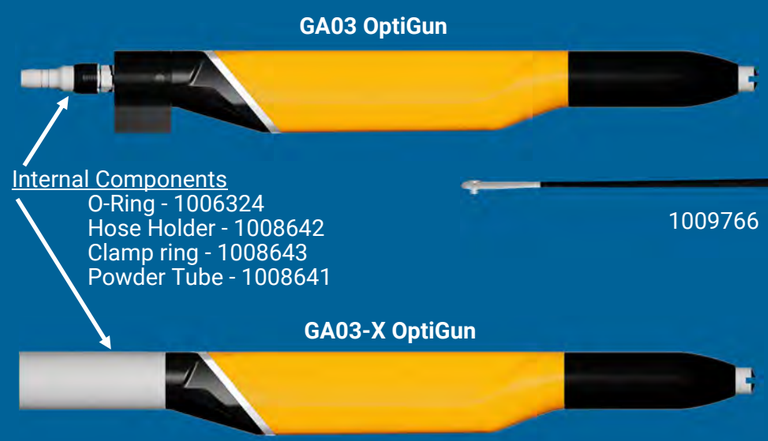

Internal Components
O-Ring - 1006324
Hose Holder - 1008642
Clamp ring - 1008643
Powder Tube - 1008641

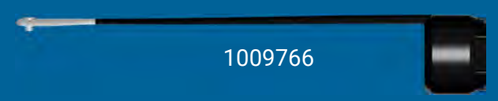

Nozzle Kit (Complete)
NF20 - 1010160
NF21 - 1007932
NF24 - 1008142
NF27 - 1010754
NS04 - 1008150

Not Shown
1015832 Filter Element
1000532 O-Ring

Powder Hose
(Not Shown)
11/16mm - 135533

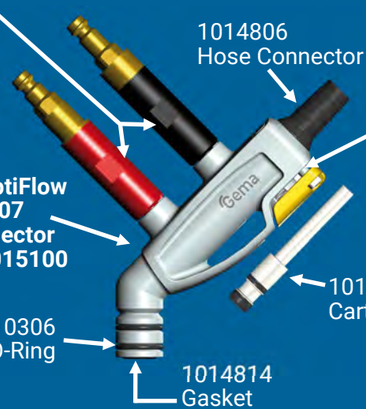

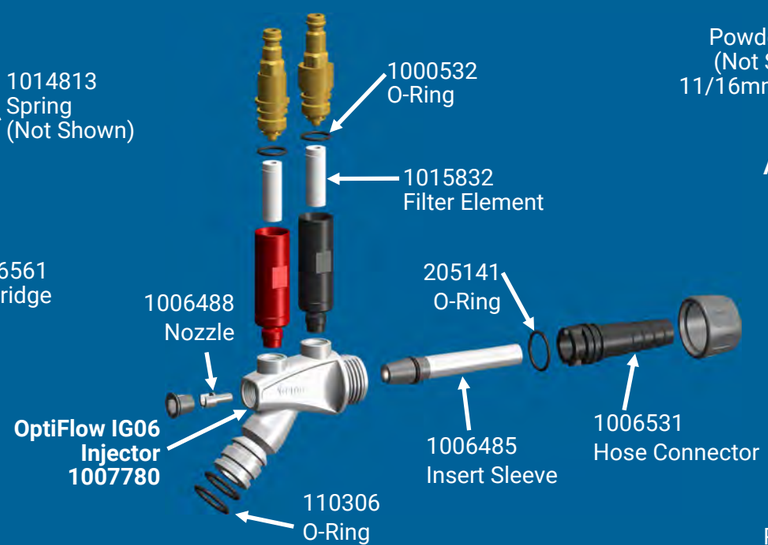

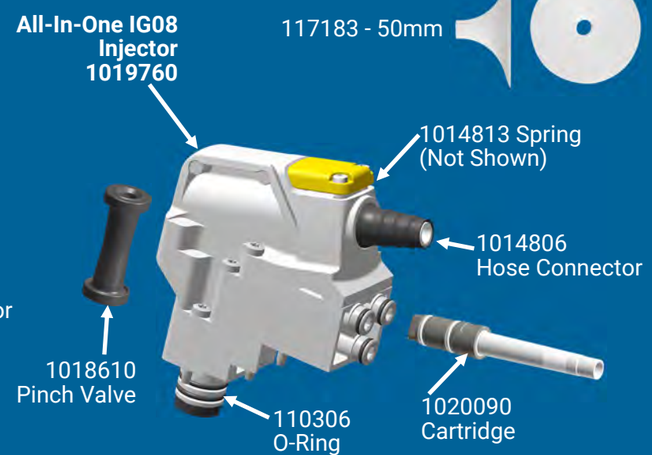

Gema Official Distributor

© 2023 Gema
Gema and OptiFlex are registered trademarks of Gema.

Form Revision: D-120622

OptiGun GA03 Replacement Parts Order Form

Part No	Description	Sell Price
107208	DEFLECTOR,GUN,32MM	$10.35
107209	DEFLECTOR,GUN,24MM	$8.75
107210	DEFLECTOR,GUN,16MM	$8.75
110306	O-RING,16.000ID,2.000W,MET,BUN	$1.80
117183	DEFLECTOR,GUN,50MM	$37.60
117184	DEFLECTOR,GUN,70MM	$89.80
135533	HOSE,POWDER,POE,11/16MM,60MLG	$6.15
205141	O-RING,16MM X 1.5MM	$1.65
1000532	O-RING,11MMODX9.5MMID,1.5,BUNA	$3.00
1006324	O-RING,12MMOD X 1.0MM,FPM75	$1.45
1006485	INSERT,SLEEVE,TEFLON,IG06	$15.50
1006488	NOZZLE,INJECTOR,OPTIFLOW,IG06	$49.85
1006531	HOSE CONN FTG,OPTIFLOW,IG06	$37.60
1007229	SLEEVE,THREADED,NF20/21,GM03	$76.55
1007683	ELECTRODE HOLDER,FS,GM03	$67.30
1007780	PUMP ASSY,GUN,OPTIFLOW,IG06	$558.00
1007932	NOZZLE ASSY,FSD,SMALL,NF21	$133.00
1007935	NOZZLE,FSD,SMALL,NF21	$67.60
1008142	NOZZLE ASSY,FSD,24MMOD,NF24	$135.00
1008145	NOZZLE,FSD,OVAL SLOT,NF22	$69.25

Part No	Description	Sell Price
1008147	NOZZLE,FSD,24MMOD,NF24	$69.20
1008150	NOZZLE ASSY,RJ,NS04	$106.00
1008151	NOZZLE,ROUND JET,NS04	$39.80
1008152	ELECTRODE HOLDER,RJ,GM03	$68.65
1008326	SLEEVE,THREADED,NF24,GM03	$76.55
1008641	TUBE,POWDER,GA03	$97.05
1008642	CONNECTOR,HOSE,GA03	$55.90
1008643	CONNECTOR,SLIDE,TUBE,GA03	$20.65
1009766	SUPERCORONA KIT,GA03,291MM LG	$480.00
1010090	NOZZLE,FSD,15MM,STANDARD,NF20	$47.75
1010160	NOZZLE ASSY,FSD,STANDARD,NF20	$114.00
1010752	NOZZLE,FSD,15MM,STANDARD,NF27	$59.45
1010754	NOZZLE ASSY,FSD,STANDARD,NF27	$127.00
1014806	HOSE CONN FTG,OPTIFLOW,IG07	$37.15
1014813	SPRING,SLIDE GATE RELEASE,IG07	$6.25
1014814	GASKET,AXIAL,IG07	$24.75
1015100	PUMP ASSY,GUN,OPTIFLOW,IG07	$588.00
1015832	FILTER,ELEMENT,IG07	$20.30
1016561	INSERT,CARTRIDGE,IG07	$15.75
1018610	SLEEVE,PINCH VALVE,IG08,CG22	$65.25
1020090	INSERT,CARTRIDGE,IG08,COMPLETE	$20.55

Gema Official Distributor

Ship To Location:

Company: _____

Address: _____

_____

_____

Contact: _____

Email: _____

Phone: _____

PO #: _____

QTY	PART NUMBER

Gema Official Distributor

© 2023 Gema
Gema reserves the right to make pricing changes without prior notice. ***All prices valid from 9.6.22***
Gema and OptiFlex are registered trademarks of Gema.

Form Revision: D-120622