PIONEER WYC-20 Series Heat Pump Inverter Parts Diagram

System Model: WYC0012AMFI20RD
System Code: 22022010000328
Power Supply: 110~120 V, 1 Ph, 60Hz.
Indoor Unit Model: WC012AMFI20HLD
Indoor Code: 22022011001262

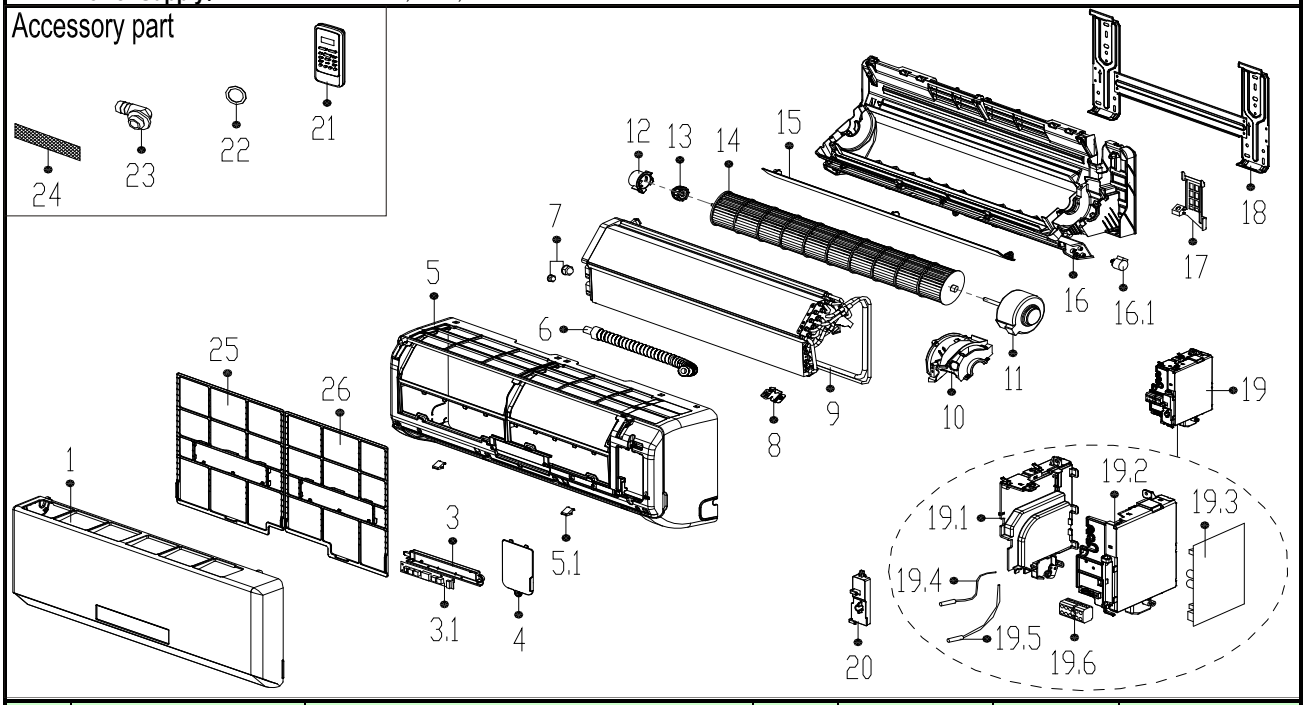

No.		Part Name	Quantity	BOM Code	BIN No.	Remark
1		Panel assembly	1.0	12122000001607	37	
3		Structure Subassembly of Display Box	1.0	17222000002800	21	
3.1		VLED Display Module	1.0	17122000006884	15	
4		E-Parts Cover Plate	1.0	12122000006694	3	
5		frame assembly	1.0	12122000001749	50	
5.1		Screw Cap	2.0	12122000006272	0	
6		Drain Hose	1.0	12100501000021	4	
7		Brass Nut	1.0	15500406000012	6	
7		Brass Nut	1.0	15500406000016	3	
8		Temperature Sensing Element Fixing clip	1.0	12100303000008	0	
9		Evaporator assembly Gas valve assembly	1.0	15822000000241	266	
10		Motor Bearing Cover	1.0	12122000005431	4	
11		Brushless DC Motor	1.0	11002015000031	223	
12		Bearing sleeve	1.0	12122000000350	1	
13		Bearing pedestal	1.0	12622000000006	1	
14		Cross-flow Window Rotor.	1.0	12100102000022	38	
15		Wind Guide Assembly	1.0	12122000005123	8	
16		Chassis Assembly	1.0	12122000004342	87	
16.1		stepper motor	1.0	11002010000143	11	
17		Pipe Pressing Board	1.0	12122000000455	1	
18		Installation Plate	1.0	12222000000012	10	
19		E-Parts Box assembly of Split Indoor Unit	1.0	17222000005033	172	
19.1		Electrical Control Box	1.0	12122000004586	6	
19.2		Electrical Control Box	1.0	12122000004565	9	
19.3		Indoor Main Control Board Subassembly (Sticker)	1.0	17122000011528	123	
19.4		Room Temperature Sensor	1.0	11201007000221	3	
19.5		Temperature Sensor	1.0	11201007000322	4	
19.6		Wire holder	1.0	17400401000006	7	
20		Electrical Control Box Cover	1.0	12122000004994	1	
21		Remote controller	1.0	17317000000324	20	
22		Seal	1.0	12600701000039	0	
23		Extend Water Pipe	1.0	12100509000061	1	
24		Filter net of cold catalyst	1.0	12100204000685	1	
25		Air filter	1.0	12100204000633	5	
26		Right side of the filter	1.0	12100204000634	5	
53		Kit of Screw Accessories	1.0	12011600000015	1	

PIONEER WYC-20 Series Heat Pump Inverter Parts Diagram

System Model: WYC0012AMFI20RD **Outoor Unit Model:** YN012AMFI20RPD
System Code: 22022010000328 **Outdoor Code:** 22022016002097
Power Supply: 110~120 V, 1 Ph, 60Hz.

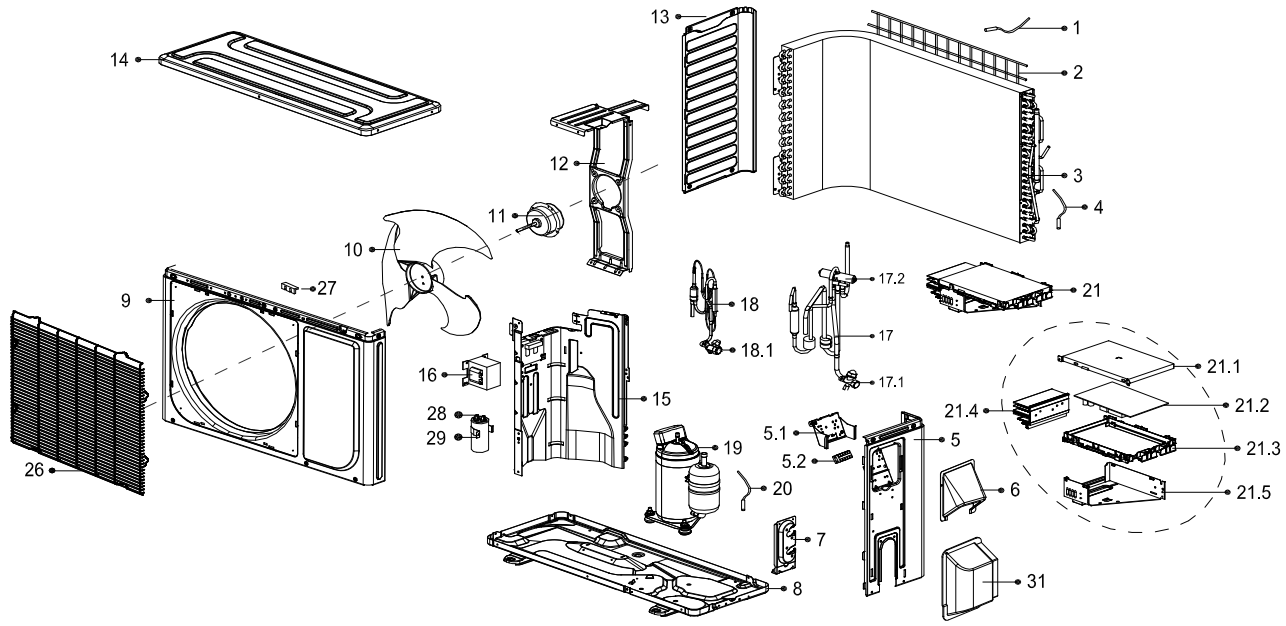

No.		Part Name	Quantity	BOM Code	BIN No.	Remark
1		Room Temperature Sensor	1.0	11201007000039	4	
2		Rear Net Shield	1.0	12222000001982	14	
3		Condenser Assembly	1.0	15822000002181	553	
4		Temperature Sensor	1.0	11201007000136	5	
5		Parts fn Right Side Plate	1.0	12222000001418	58	
5.1		Installation board for E-parts	1.0	12222000004003	2	
5.2		Wire holder	1.0	17400401000035	23	
6		Big Handle.	1.0	12222000002532	6	
7		Installing plate for valves	1.0	12222000002552	5	
8		Chassis Assembly	1.0	12222000000557	77	
9		Front Panel	1.0	12222000001787	66	
10		Axial fan	1.0	12100105000034	25	
11		Brushless DC Motor	1.0	11002015000071	317	
12		Fan Motor Holder Subassembly	1.0	12222000002021	15	
13		Left Side Floor	1.0	12222000001227	13	
14		Top cover assembly	1.0	12222000002422	54	
15		Separation plate	1.0	12222000002219	24	
16		Reactor	1.0	17400306000019	55	
17		Gas Valve Assembly	1.0	15422000001873	228	
17.1		Low Pressure Valve	1.0	15500204000046	32	
17.2		4-way Valve	1.0	15500216000031	85	
18		Liquid valve Assembly	1.0	15422000001378	40	
18.1		High-Voltage valve	1.0	15500208000025	17	
19		Inverter Controlled Rotary Compressor	1.0	11103020000005	802	
20		Discharge temperature sensor assembly	1.0	11201007000157	7	
21		E-Parts Box assembly	1.0	17222000001755	471	
21.1		Electrical Control Box Cover	1.0	12222000001457	6	
21.2		Sticker Subassembly of Outdoor Main Control Board	1.0	17122000000348	430	
21.3		Holder for Electrical Control Box	1.0	12122000006883	4	
21.4		Radiator	1.0	11203803000276	28	
21.5		Electric Installing Box Subassembly	1.0	12222000001289	8	
22		Brass Nut	1.0	15500406000016	3	
22		Brass Nut	1.0	15500406000012	6	
26		Air Outlet Guard	1.0	12222000001860	27	
27		Clamp of front net	8.0	12122000006844	0	
28		Compressor Capacitor(Round)	1.0	17400103000052	25	
29		Capacitor Clamp	1.0	12200203000019	0	
31		Water receiver	1.0	12122000007155	6	