SOUTHWEST RESEARCH INSTITUTE
Post Office Drawer 28510 6220 Culebra Road
San Antonio, Texas 78284

SECOND 10-YEAR INTERVAL LONG-TERM INSERVICE EXAMINATION AND TESTING PLAN FOR CLASS 1, 2, AND 3 SYSTEMS AND COMPONENTS FOR DONALD C. COOK NUCLEAR PLANT, UNIT 2

VOLUME III
PUMP AND VALVE PLANS
SwRI Project 17-8759

Prepared by

American Electric Power Service Corporation
1 Riverside Plaza
Columbus, Ohio 43216

December 1985

DONALD C. COOK NUCLEAR PLANT - UNITS NO. 1 AND 2

ASME B & PV CODE SECTION XI

Pump Inservice Test Program

A. The pump test program shall be conducted in accordance with Section XI, Subsection IWP of the 1983 Edition of the ASME Boiler and Pressure Vessel Code through Summer 1983 Addenda, except for specific code relief, requested in accordance with 10 CFR 50.55a(g)(5)(iii). Exemptions or ammendments are identified in Code Relief Requests I, II, and III

B. This pump test program is for the 2nd ten year inspection/test interval commencing July 1, 1986 for both Unit 1 and Unit 2.

C. The pump test program was developed employing the classification guidelines contained in Regulatory Guide 1.26, Revision 2 for Quality Groups B and C, and the definition of the reactor coolant system boundary contained in 10 CFR 50.2 (v) for Group A. (Quality Groups A, B, and C are the same as ASME Class 1, 2, and 3, respectively). Using these guidelines and IWP-1100, the pump list attached as Table A was developed. Table A identifies the following:

i. The pump number and service it performs along with the drawing identification number on which it is found.

ii. The applicable test parameters:

1. Speed

2. Inlet Pressure

3. Differential Pressure
   Determined as the difference between measured discharge and suction pressures

4. Flow Rate

5. Vibration Amplitude

6. Bearing Temperature

iii. The test frequency required.

DONALD C. COOK NUCLEAR PLANT - UNITS NO. 1 AND 2
PUMP INSERVICE TEST PROGRAM
TABLE A
PROGRAM SUMMARY

PUMP SERVICE DWG. NO.	PUMP NUMBER	TEST PARAMETERS: SPEED N	INLET PRESSURE P_i	DIFFERENTIAL PRESSURE P	FLOW RATE Q	VIBRATION AMPLITUDE V	BEARING[c] TEMPERATURE T_b	TEST FREQUENCY
AUXILIARY[a]	PP-3W	NO	YES	YES	YES	YES	YES	QUARTERLY
FEEDWATER	PP-3E	NO	YES	YES	YES	YES	YES	QUARTERLY
(5106A)	PP-4	YES	YES	YES	YES	YES	YES	QUARTERLY
ESSENTIAL[b]	PP-7W	NO	YES	YES	YES	YES	YES	QUARTERLY
SERVICE	PP-7E	NO	YES	YES	YES	YES	YES	QUARTERLY
WATER (5113)								
CENTRIFUGAL	PP-50W	NO	YES	YES	YES	YES	YES	QUARTERLY
CHARGING	PP-50E	NO	YES	YES	YES	YES	YES	QUARTERLY
(5129)								
BORIC ACID[b]	PP-46-1	NO	YES	YES	YES	YES	YES	QUARTERLY
TRANSFER	PP-46-2	NO	YES	YES	YES	YES	YES	QUARTERLY
(5131)	PP-46-3	NO	YES	YES	YES	YES	YES	QUARTERLY
	PP-46-4	NO	YES	YES	YES	YES	YES	QUARTERLY
COMPONENT	PP-10W	NO	YES	YES	YES	YES	YES	QUARTERLY
COOLING	PP-10E	NO	YES	YES	YES	YES	YES	QUARTERLY
WATER (5135A)								
SAFETY[a]	PP-26N	NO	YES	YES	YES	YES	YES	QUARTERLY
INJECTION	PP-26S	NO	YES	YES	YES	YES	YES	QUARTERLY
(5142)								
RESIDUAL[a]	PP-35W	NO	YES	YES	YES	YES	YES	QUARTERLY
HEAT REMOVAL	PP-35E	NO	YES	YES	YES	YES	YES	QUARTERLY
(5143)								
CONTAINMENT[a]	PP-9W	NO	YES	YES	YES	YES	YES	QUARTERLY
SPRAY (5144)	PP-9E	NO	YES	YES	YES	YES	YES	QUARTERLY
DIESEL FUEL OIL	QT-106 AB1	NO	YES	YES	YES (2)	YES	NO (1)	QUARTERLY
TRANSFER	QT-106 AB2	NO	YES	YES	YES (2)	YES	NO (1)	QUARTERLY
(5151A & 5151C)	QT-106 CD1	NO	YES	YES	YES (2)	YES	NO (1)	QUARTERLY
	QT-106 CD2	NO	YES	YES	YES (2)	YES	NO (1)	QUARTERLY
SPENT FUEL PIT	PP-31N	NO	YES	YES	NO (3)	YES	YES	QUARTERLY
COOLING (5136)	PP-31S	NO	YES	YES	NO (3)	YES	YES	QUARTERLY

a. These pumps are tested on test, bypass or minimum flow loops - per Section XI Subarticle IWP-1400.

b. Inlet pressure measurement is in head of liquid, ft.

c. Bearing temperatures will be measured annually, per Section XI IWP-3300 except as noted.

DONALD C. COOK NUCLEAR PLANT - UNITS NO. 1 AND 2
PUMP INSERVICE TEST PROGRAM

TABLE A
(CONTINUED)

PROGRAM SUMMARY

(1) Refer to Code Relief Request I
(2) Refer to Code Relief Request II
(3) Refer to Code Relief Request III

DONALD C. COOK NUCLEAR PLANT - UNITS NO. 1 AND 2

PUMP INSERVICE TEST PROGRAM

CODE RELIEF REQUEST I

Bearing Temperature Measurement

We believe that the intent of Paragraph IWP-4310 is to exempt those pump bearings in the main flow path from temperature measurement requirements. However, if code relief is required, we request that the Diesel Fuel Oil Transfer Pumps be exempt from bearing temperature requirements as stated Section XI Subarticle IWP-3300.

The inboard and outboard sleeve bearings on these 2 HP gear pumps are lubricated and cooled by the pumped fluid. Temperature readings are therefore inconclusive since bearing measurement points are not responsive to the changes in bearing temperature.

Bearing problems on gear pumps can be more readily identified by degradation of pump capacity. Flow rate deterioration indicates the existence of excessive clearances due to bearing wear and problems.

In addition, the code required pump running time for yearly bearing temperature measurement can not be met due to the limited capacity of the diesel generator fuel oil day tank.

DONALD C. COOK NUCLEAR PLANT - UNITS NO. 1 AND 2

PUMP INSERVICE TEST PROGRAM

CODE RELIEF REQUEST II

Duration of Tests

Request that the duration of pump operation for testing, per Section XI Subarticle IWP-3500, be amended for the Diesel Fuel Oil Transfer Pumps.

These pumps supply the diesel generator fuel oil day tank. A conservative level is maintained in the tank to meet the minimum capacity per Technical Specification requirements. Due to the limited capacity of this tank, the pump operating test range is restricted. It is requested to record test parameters immediately after pump operation has stabilized.

DONALD C. COOK NUCLEAR PLANT - UNITS NO. 1 AND 2

PUMP INSERIVCE TEST PROGRAM

CODE RELIEF REQUEST III

Flow Measurement

Request that the Spent Fuel Pit Cooling Pumps be exempt from flow measurement requirements as stated in Section XI Subarticle IWP-3100 and Table IWP-3100-1.

The original design of the spent fuel pit cooling pumps, rated at 2300gpm, did not incorporate flow measuring devices in the main header or the individual pump discharge lines. A flow measuring instrument is installed in a 3" filtered clean-up line. However, the filter is sized for a maximum flow of 150 gpm which is significantly below the minimum pump flow. This line, therefore, cannot be used as a test circuit for the pumps.

In lieu of measuring the flowrate during the Section XI pump tests, the spent fuel pit cooling pumps are operated in a designated system configuration which establishes a fixed system resistance. Measurement of the differential pressure, along with the other pump performance parameters required by the code, provides adequate information to ascertain the operational readiness of the pump. Furthermore, analysis results presented in our FSAR indicate that without any cooling water flow there is a significant period of time before the pool temperature rises to 180°F under the most adverse heat generation conditions. Therefore, we contend that although the pump test results will be slightly less conservative by not measuring pump flowrate, the overall system performance is not signficantly impacted.

ASME SECTION XI VALVE TEST PROGRAM

2ND TEN YEAR INSPECTION INTERVAL

FOR THE D. C. COOK NUCLEAR POWER STATION UNIT NO. 2

TABLE OF CONTENTS

1. INTRODUCTION - (FIGURE - 1)
2. LIST OF DRAWINGS - (FIGURE - 2)
3. NOMENCLATURE FOR TEST METHODS - (FIGURE - 3)
4. RELIEF REQUEST NOTES
5. ATTACHMENT-A
6. VALVE SUMMARY SHEETS
7. FLOW DIAGRAMS

ASME SECTION XI VALVE TEST PROGRAM

2ND TEN YEAR INSPECTION INTERVAL

FOR THE D. C. COOK NUCLEAR POWER STATION UNIT NO. 2

INTRODUCTION

1. Valve Testing Program

A. The valve test program shall be conducted in accordance with Subsection IWV of Section XI of the 1983 edition of the ASME Boiler and Pressure Vessel Code through Summer 1983 Addenda, except for specific relief requested which is identified in the Valve Summary Sheet.

B. The valve test program is applicable, for the second 10 year inspection interval which commences on July 1, 1986.

C. The valve test program was developed employing the classification guidelines contained in 10 CFR 50.2(v) for Quality Group A and Regulatory Guide 1.26, Revision 3 for Quality Groups B and C. (Quality Group A is the same as ASME Class 1, Group B is 2, and Group C is 3). NRC staff guidance was provided by memorandum dated January 16, 1978.

D. Figure 2 identifies the systems flow diagrams which were used to develop this valve test program.

Valve Summary Sheets contain the following:

* System Name: Name of the system (e.g., Main Steam)

* Flow Diagram: Unit Number - Flow diagram number - Revision Number (e.g., 2-5105-33)

* Valve Number: Unique valve number (e.g., 2-DCR-310)

* Revision Number: Any change of valve description, function or test requirement.

* Valve Type: Type of valve, one of the following:

  REL - Relief and Safety
  CK - Check
  BF - Butterfly
  GA - Gate
  GL - Globe
  DA - Diaphragm
  3W - Three-Way
  ND - Needle
  AG - Angle
  BL - Ball
  VB - Vacuum Breaker (Reverse Check Valve)

* Valve Size: Nominal valve size in inches

* Valve Actuator Type: Type of actuator, one of the following:

  SA - Self Actuated (e.g., CK or REL)
  MO - Motor Operated
  A - Air Operated
  M - Manual
  PO - Pneumatic
  SO - Solenoid Operated

* Flow Diagram Coordinates: Alpha/Numeric grid location of valve

* Valve position during normal plant operation or during performance of its safety function, one of the following:

  O - Open
  C - Closed
  O/C - Open/Closed or vice versa

* Code Class: ASME Code class of valve, either 1, 2, or 3

* Valve Status-A/P: Active or passive

* Category: Section XI, Category of valve, either A, B, C, or D, as defined in IWV-2200

NOTE: Combinations are possible (e.g., AC)

* Primary Test Req'd: Test required per Section XI

* Test Performed: Testing that will be performed

NOTE: Test nomenclature is explained in Figure 3

* Test Mode: One of the following:

P - Power Operation (Every 3 months when unit is at power)
C - Cold Shutdown (Testing will be performed at cold shutdown frequency) See Note "F"
R - Refueling (Testing will be performed at refueling outage frequency)

* Code Relief: Whether or not a code relief is being requested; will be one of the following:

NO - Valve is to be tested per code, no comments
NO, NOTE X _ Valve is to be tested per code, but there are comments
YES, NOTE Y - Code relief is requested. Alternate testing is proposed in lieu of that required by code, the note explains why the code relief is requested.

E. Where alternative testing is to be performed by disassembly or radiography, as indicated by valve summary sheet notes, it will be accomplished by selecting one representative valve from each group of valves during refueling outages. If the inspection results are unacceptable, then all the valves in that group will be inspected.

[illegible]

F. Conditions for Valve Testing During Cold Shutdowns

Cold shutdown testing of valves identified in the IST Program is acceptable when the following conditions are met:

1. Valve exercising need not be done more often than once every 3 months in case of frequent cold shutdowns.

2. The testing shall commence as soon as the cold shutdown condition is achieved, but not later than 48 hours after shutdown, and continue until complete or the plant is ready to return to power.

3. Completion of all valve testing is not a prerequisite to return to power. Any testing not completed during one cold shutdown should be performed during any subsequent cold shutdowns starting from the last test performed at the previous cold shutdown.

4. For planned cold shutdowns, where ample time is available and testing all the valves identified for the cold shutdown test frequency in the IST Program will be accomplished, exceptions to the 48 hours commencement of testing is allowed.

G. Code relief is requested for timing tolerance and trending per paragraphs IWV-3413(b) and IWV-3417(a) for fast acting valves (those with the maximum limiting stroke times of two seconds or less). The major influence in the stroke time testing of fast acting valves is the operator's response. Therefore, timing tolerances are influenced by operator action and trending is not indicative of valve performance. The fast acting valves have been identified as "ETF" and acceptance criteria has been defined in the program.

DONALD C. COOK NUCLEAR PLANT

2ND TEN YEAR INSPECTION INTERVAL OF

VALVE TEST PROGRAM FOR UNIT - 2

LIST OF DRAWINGS

Revision: 0

Figure 2

Date: 12-13-85

SYSTEM	FLOW DIAGRAM NO.	REVISION NO.
Main Steam	2-5105	33
Main Steam	2-5105B	39
Steam Generating System	2-5105D	0
Feedwater	2-5106	32
Feedwater (Auxiliary)	2-5106A	33
Essential Service Water	2-5113	32
Non-Essential Service Water	2-5114A	25
Station Drainage Containment	2-5124	19
Reactor Coolant	2-5128	18
Reactor Coolant	2-5128A	32
CVCS-Reactor Letdown & Charging	2-5129	28
	2-5129A	18
Component Cooling	2-5135	31
Component Cooling	2-5135A	25
Component Cooling	2-5135B	12
Nuclear Sampling	2-5141	23
Nuclear Sampling	2-5141A	27
Post Accident Sampling-Containment Hydrogen	2-5141D	7
Emergency Core Cooling (SIS)	2-5142	26

DONALD C. COOK NUCLEAR PLANT

2ND TEN YEAR INSPECTION INTERVAL OF

VALVE TEST PROGRAM FOR UNIT - 2

LIST OF DRAWINGS

Revision: 0

Figure 2

Date: 12-13-85

SYSTEM	FLOW DIAGRAM NO.	REVISION NO.
Emergency Core Cooling (RHR)	2-5143	29
Containment Spray	2-5144	27
Containment Penetration & Weld Channel Pressurization	2-5145	17
Ice Condenser Refrigeration	2-5146B	21
Containment Ventilation	2-5147A	32
Control Room Ventilation	2-5149	18
Emergency Diesel Generator	2-5151A	24
Emergency Diesel Generator	2-5151B	26
Emergency Diesel Generator	2-5151C	24
Emergency Diesel Generator	2-5151D	26
Make-Up Water & Primary Water System	12-5115A	37
Compressed Air System	12-5120B	21
Spent Fuel Pit Cooling & Clean-Up	12-5136	22
WDS Vents & Drains	12-5137A	20
Post Accident Liquid & Gas Sampling	12-5141C	7
Post Accident Liquid Sampling Inst. Panels	12-5141F	3

[illegible]

DONALD C. COOK NUCLEAR PLANT
NOMENCLATURE FOR TEST METHOD
USED IN COLUMNS FOR PRIMARY TEST REQUIRED AND
TEST PERFORMED UNDER ASME SECTION XI

Revision No. 0 | Figure 3

Date: 12-13-85 |

1) CATEGORY A-B VALVES

EF-1	Exercise valve (full stroke) for operability every 3 months.
EF-2	Exercise valve (full stroke) for operability at a cold shutdown or refueling outage frequency as indicated
EF-3	Exercise valve (part stroke) for operability during operation; Exercise (full stroke) at a cold shutdown or refueling outage frequency as indicated.
EF-4	Exercise valve (full stroke) for operability prior to return to service
EF-5	Valves with remote position indicator shall be observed (locally) at least once every 2 years to verify that valve operation is accurately indicated.
EF-6	This note was intentionally deleted.
EF-7	Exercise valve (with fail-safe actuators) to observe failure mode every 3 months
EF-8	Exercise valve (with fail-safe actuators) to observe failure mode at a cold shutdown frequency.
ET-XXX	Exercise valve -power operated (full stroke) and measure time. (E.G., ET-015 means maximum stroke time 15 seconds)
ETF-YYY	Exercise valve - power operated (full stroke) and measure time for fast acting valves. (E.G., ETF-002 means maximum stroke time is 2 seconds)

DONALD C. COOK NUCLEAR PLANT
NOMENCLATURE FOR TEST METHOD
USED IN COLUMNS FOR PRIMARY TEST REQUIRED AND
TEST PERFORMED UNDER ASME SECTION XI

Revision No. 0
Date: 12-13-85

2) CATEGORY C VALVES

CF-1	Exercise valve (full stroke) for operability every 3 months.
CF-2	Exercise valve (full stroke) for operability at a cold shutdown or refueling outage frequency as indicated.
CF-3	Exercise valve partial stroke during plant operation and full stroke for operability at a cold shutdown or refueling outage frequency as indicated.
CF-4	Exercise valve (full stroke) for operability prior to return to service
TF-1	Safety and relief valve tests (setpoint) to Section XI, Table IWV-3510-1.

3) CATEGORY A or AC VALVES

SLT-1	Seat leakage test valve at refueling outage frequency but not less than once every 2 years. Permissible leakage values for each category A or AC valve are listed in Attachment-"A".
SLT-2	Seat leakage test valve in accordance with 10CFR 50, Appendix J, in lieu of ASME Code Section XI except for paragraphs IWV-3426 and IWV-3427 which are applicable. Permissible leakage values for each category A or AC valve are listed in Attachment-"A".
SLT-2A	Seat leakage test valve in accordance with Testing Procedure No. 12THP-4030-STP-237 in lieu of ASME Code Section XI, except for paragraphs IWV-3426 and IWV-3427 which are applicable. Permissible leakage values for each catagory AC valve are listed in Attachment-"A".

[illegible]

DONALD C. COOK NUCLEAR PLANT

VALVE TEST PROGRAM

RELIEF REQUEST NOTES

Flow Diagram No: 2-5105D-0

Revision No: 0

Date: 12-13-85

NOTE 1: FW-118-1 thru -4: The function of these valves is to provide feedwater flow from the main feedwater pumps to the steam generators. These valves cannot be exercised during power operation because closing of these valves would require securing feed flow to the steam generator and partial stroking may cause instability of steam generator water level which could result in reactor trip. Further three loop operation is not allowed per D. C. Cook Nuclear Plant Technical Specification 3.4.1.1. These valves will be confirmed closed by disassembly on a sampling basis during refueling outages.

NOTE 2: MRV-210, -220, -230 and -240: These steam generator stop valves cannot be full stroke exercised during power operation because this would require securing steam from a steam generator which could result in a reactor trip. Three loop operation is not allowed for D. C. Cook per Technical Specification 3.4.1.1. Valves MRV-211, -221, -231, -241, -212, -222, -232, and -242 which activate MRV-210, -220, -230, and -240 are tested quarterly in accordance with IWV-3410. MRV-210, -220, -230 and -240 are part stroke tested quarterly by use of external hydraulics and full stroke tested during hot standby (Mode 3) at cold shutdown frequency.

[illegible]

DONALD C. COOK NUCLEAR PLANT

VALVE TEST PROGRAM

RELIEF REQUEST NOTES

Flow Diagram No: 2-5105D-0

Revision No: 0

Date: 12-13-85

NOTE 3: MS-108-2 and 108-3: These check valves are located in the steam supply lines to the Auxiliary Feedwater Pump Turbine. These valves operate during normal IST feedwater pump testing. The valves are stroked to the extent that they pass enough steam to cause the turbine driven auxiliary feed pump to pump approximately 700 GPM. Normal design flowrate for this pump is 900 GPM. We consider this sufficient to be defined as full stroke. The valves will be verified closed by radiography or disassembly on a sampling basis during refueling outages.

DONALD C. COOK NUCLEAR PLANT

VALVE TEST PROGRAM

RELIEF REQUEST NOTES

Flow Diagram No: 2-5106-32

Revision No: 0

Date: 12-13-85

NOTE 1: FMO-201, -202, -203, -204 & FRV-210, -220, -230, -240: The function of these valves is to provide feedwater flow from the feedwater pumps to the steam generators. These valves cannot be exercised during power operation because closing these valves would require securing feed flow to the steam generator and partial stroking may cause instability of steam generator water level which could result in reactor trip. Further, three loop operation is not allowed per D. C. Cook Nuclear Plant Technical Specification 3.4.1.1. These valves will be full stroke exercised during unit start-up or shutdown.

DONALD C. COOK NUCLEAR PLANT

VALVE TEST PROGRAM

RELIEF REQUEST NOTES

Flow Diagram No: 2-5106A-33

Revision No: 0

Date: 12-13-85

NOTE 1: FW-132-1, -2, -3, -4: These auxiliary feedwater (AFW) check valves function to supply AFW to the steam generators whenever the AFW System is caused to operate. These check valves cannot be full or partial stroke exercised during power operation without energizing the AFW System and delivering cold water to the steam generators. These valves are full stroke exercised during startups.

NOTE 2: FW-134 & FW-135: These valves are located on the suction and discharge lines of the Turbine Driven Auxiliary Feedpump. The flow rate through the Turbine Driven Auxiliary Feedpump during IST is approximately 700 gpm using the pump test line. The design flow rate is 900 gpm. We consider this sufficient to demonstrate full stroke operability. In addition, these valves are full stroke tested with flow rate of 900 GPM at a refueling outage frequency.

NOTE 3: FW-138-1, -2, -3, -4: These auxiliary feedwater (AFW) check valves function to supply AFW to the steam generators whenever the AFW System is caused to operate. These check valves cannot be full or partial stroke exercised during power operation without energizing the AFW System and delivering cold water to the steam generators. These valves are full stroke exercised when the plant is returned to power after cold shutdown.

NOTE 4: FW-149 and 150: The required full stroking of these check valves is satisfied when Turbine Driven Auxiliary Feedpump completes its required testing.

[illegible]

DONALD C. COOK NUCLEAR PLANT

VALVE TEST PROGRAM

RELIEF REQUEST NOTES

Flow Diagram No: 2-5113-32

Revision No: 0

Date: 12-13-85

NOTE 1: ESW-141, -142, -143, -144: These valves will be disassembled and inspected internally per procedure no. 12MHP-5021.032.00IL during every refueling outage.

NOTE 2: ESW-145, -240, -243: These valves are normally closed and are required to be open when the condensate storage tank is exhausted. Exercising the valves could cause lake water contamination of the steam generators. Lake water chemistry can potentially impact steam generator tube integrity. We believe that testing at a refueling outage frequency is sufficient to demonstrate operability of this long term valve. The valves will be full stroke tested during refueling outages. Since the valves are manual, stroke timing is not required.

NOTE 3: WRV-722, -724, -726, -728: These valves are located in the essential service water supply lines to the emergency diesel generators air after coolers. These three-way valves regulate water flow to maintain the temperature at which the after cooler air discharge thermostatic controller has been set. Water flow is regulated by passing a portion of the flow through the air coolers and bypassing the excess flow around the air after coolers. We are requesting code relief from the testing requirements since (1), these valves function only as regulating valves and not open/closed valves (2), these valves are demonstrated operable during diesel generator testing. Diesel generators are tested on a staggered basis, every 31 days per Technical Specification 4.8.1.1.2; and (3), these valves are demonstrated operable during diesel generator 24 hour runs performed each refueling outage. The valves will be "fail-safe" tested during refueling outages. The valves cannot be stroke timed because they are thermostatic valves whose position is controlled by process fluid temperature. There is no external control available.

DONALD C. COOK NUCLEAR PLANT

VALVE TEST PROGRAM

RELIEF REQUEST NOTES

Flow Diagram No: 2-5114A-25

Revision No: 0

Date: 12-13-85

NOTE 1: See "Attachment-A" for permissible seat leakage values.

DONALD C. COOK NUCLEAR PLANT

VALVE TEST PROGRAM

RELIEF REQUEST NOTES

Flow Diagram No: 2-5124-19

Revision No: 0

Date: 12-13-85

NOTE 1: See "Attachment-A" for permissible seat leakage values.

NOTE-2: NS-357: This check valve is located on the return line of the post accident sampling system inside the containment. Since the line is open-ended inside the containment and the check valve is not equipped with the position indication, the valve will be full stroke exercised in the open position by performing a flow test quarterly and will be confirmed closed during refueling outages.

DONALD C. COOK NUCLEAR PLANT

VALVE TEST PROGRAM

RELIEF REQUEST NOTES

Flow Diagram No: 2-5128-18

Revision No: 0

Date: 12-13-85

NOTE 1: NSO-021, -022, -023, & -024: These one-inch solenoid operated isolation valves are located in the reactor head vent. These valves cannot be tested during power operation, hot standby, hot shutdown, or cold shutdown without creating a loss of coolant and release of radioactivity in containment and due to ALARA consideration and personnel protection. Technical Specification Section 3.4.12.1 requires these valves be closed in Modes 1 through 4. These valves will be tested per Technical Specification Item 4.4.12.1.

NOTE 2: Exercising the solenoid operated valves for verification of valve position (valve stem movement) will be performed during each refueling outage by performing a flow test through each valve because the valve stem is completely enclosed and cannot be observed.

[illegible]

[illegible]

[illegible]

[illegible]

[illegible]

DONALD C. COOK NUCLEAR PLANT

VALVE TEST PROGRAM

RELIEF REQUEST NOTES

Flow Diagram No: 2-5128A-32

Revision No: 0

Date: 12-13-85

NOTE 1: CS-442-1 thru 4: These containment isolation check valves are on the seal water supply line to the RC pumps. These valves cannot be part or full stroke exercised to the closed position during power operation because cooling flow is required to the RCP seals. During cold shutdown, seal water must be maintained to prevent backflow through the seals with possible damage from dirt. The valves will be full stroke exercised at refueling outage frequency.

NOTE 2: See Attachment-"A" for permissible seat leakage values.

NOTE 3: NRV-151, -152, -153: These pressurizer power operated relief valves are normally closed during power operation (passive valves). The system is considered out of service (as defined per IWV-3416) during power operation. The valves will be full stroke exercised prior to placing them into service for RCS cold overpressurization protection.

DONALD C. COOK NUCLEAR PLANT

VALVE TEST PROGRAM

RELIEF REQUEST NOTES

Flow Diagram No: 2-5128A-32

Revision No: 0

Date: 12-13-85

NOTE 4: NSO-061, -062, -063, -064: These one-inch solenoid operated isolation valves are located in the pressurizer vent. These valves cannot be tested during power operation, hot standby, hot shutdown, or cold shutdown without creating a loss of coolant and release of radioactivity into the containment and due to ALARA considerations. Technical Specification 3.4.12.2 requires these valves be closed in Modes 1 through 4. These valves will be tested per Technical Specification 4.4.12.2. Exercising these solenoid operated valves for verification of the valve position will be performed during each refueling outage by performing a flow test through each valve because the valve stem is completely enclosed and cannot be observed.

NOTE 5: SI-189: This check valve is located in the safety valves discharge (Emergency Core Cooling SVs, RHR, SVs, centrifugal charging pump SVs, etc.) collection header leading to the pressurizer relief tank. Isolating this valve for testing would result in dead heading all safety valves in the above systems. This would result in loss of overpressurization protection and could put the plant in an unsafe condition. Test will be run at a refueling frequency when there is not potential for overpressurization.

DONALD C. COOK NUCLEAR PLANT

VALVE TEST PROGRAM

RELIEF REQUEST NOTES

Flow Diagram No: 2-5129-28

Revision No: 0

Date: 12-13-85

NOTE 1: CS-292: This valve is in emergency boration path. This valve is not normally operated at power because of resultant large reactivity insertion. The valve will be full stroke exercised open at a cold shutdown frequency. The valve will be confirmed closed either by radiography or internal inspection during refueling outages.

NOTE 2: CS-299E, -299W: These check valves located on the discharge lines of the 'E' and 'W' charging pumps function as pressure isolation valves to protect the low pressure charging pump suction lines. These valves cannot be full-stroke exercised during: (1) power operation because the charging pumps cannot achieve maximum flow rate with the reactor at full pressure, and (2) cold shutdown because the flow required could cause a low temperature overpressure condition. The valves will be part-stroke exercised quarterly and full stroke exercised during refueling outages.

NOTE 3: See Attachment-"A" for permissible seat leakage values.

NOTE 4: CS-321: This containment isolation check valve's function is to supply borated water from the volume control tank to the regenerative heat exchanger through the charging pumps for chemical shim control and reactor coolant system makeup. Isolation of this system would result in loss of control of pressurizer level which could result in reactor trip. This valve is tested in the open direction quarterly and confirmed closed during refueling outages in deference to ALARA consideration.

NOTE 5: CS-328L1, -329L1, -328L4, -329L4: These check valve's function is to provide the interface point between the RCS and the CVCS. Since the discharge piping of the CVCS is designed to a pressure rating higher than the RCS, these valves do not perform a pressure isolation function. The higher pressure (RCS) to low pressure (CVCS Suction) isolation is accomplished by other valves which are tested to category "A" requirement. The valves will be full stroke exercised to open position quarterly.

NOTE 6: QCR-300, -301: These air operated containment isolation valves are located on the letdown return line. Exercising these valves during power operation would result in letdown isolation which could result in loss of pressurizer level control which could result in a plant shutdown. The valves will be full stroke exercised and fail safe tested at a cold shutdown frequency and seat leakage tested during refueling outages.

NOTE 7: QMO-200, -201: These motor operated gate valves function to supply borated water from the volume control tank to the charging pumps for RCS chemical shim control and reactor coolant system makeup. Isolation of this system would result in loss of control of pressurizer level which could result in reactor trip. The valves will be tested at a cold shutdown frequency.

NOTE 8: QRV-200: This control valve is normally open to permit charging flow. This valve cannot be full stroke tested during power operation because it would interrupt charging flow shich could lose the pressurizer level. The valve will be part stroke exercised during power operation and will be full stroke exercised at cold shutdown frequency. The valve cannot be "fail safe" tested nor stroke timed since no control switches are installed to perform those tests.

NOTE 9: QRV-251: This control valve is normally open to permit charging flow when the centrifugal charging pumps are running. The valve cannot be full stroke tested during power operation because it would interrupt both charging and seal water flow which could lose the pressurizer level and damage the reactor coolant pump seals. The valve will be part stroke exercised during power operation and full stroke exercised at cold shutdown frequency. This valve cannot be "fail safe" tested nor stroke timed since no control switches are installed to perform those tests.

NOTE 10: SI-185: This normally closed valve functions to transfer the suction source of the charging pumps to the refueling water storage tanks. This valve cannot be full stroke exercised during: (1) power operation without introducing a high concentration of boric acid in the RCS, and (2) cold shutdown because the only full flow path available is into the reactor coolant system and the system does not have sufficient volume to accommodate that flow without a possible low temperature overpressure condition. The valve will be full stroke exercised during refueling outages.

DONALD C. COOK NUCLEAR PLANT

VALVE TEST PROGRAM

RELIEF REQUEST NOTES

Flow Diagram No: 2-5129A-18

Revision No: 0

Date: 12-13-85

NOTE 1: QCM-250, -350: These motor-operated reactor coolant pump seal water return isolation valves cannot be exercised during power operation because it would interrupt reactor coolant pump seal water flow and could cause damage to the seals. Therefore, the valves are full stroke exercised at cold shutdown frequency.

NOTE 2: See "Attachment-A" for permissible seat leakage values.

NOTE 3: QMO-451, -452: These motor-operated gate valves function as volume control tank isolation valves. Exercising these valves during power operation could result in a loss of pressurizer level control which could cause a reactor trip. These valves are full stroke exercised at cold shutdown frequency.

DONALD C. COOK NUCLEAR PLANT

VALVE TEST PROGRAM

RELIEF REQUEST NOTES

Flow Diagram No: 2-5135-31

Revision No: 0

Date: 12-13-85

NOTE 1: CCM-451, -452, -453, -454, -458 and -459: These valves cannot be tested during power operation without securing cooling water to the RC pump. Isolation of these valves could cause failure of the RCP. Valves to be tested at cold shutdown frequency.

NOTE 2: See "Attachment-A" for permissible seat leakage values.

NOTE 3: CCR-455, -456, and -457: These valves cannot be tested during power operation without securing cooling water to reactor the support coolers. These valves must remain open to prevent overheating of the concrete around the reactor supports during the normal operation. Valves to be tested at a cold shutdown frequency.

NOTE 4: CCW-135: This check valve cannot be tested during power operation without securing cooling water to the reactor support coolers. The valve must remain open to prevent overheating of the concrete around the reactor supports during the normal operation. The valve will be verified closed by seat leakage testing during refueling outages.

NOTE 5: CRV-470: This air-operated valve is located in the Component Cooling Water (CCW) return from the letdown heat exchanger and controls the temperature of the letdown flow leaving the heat exchanger. The position of this valve is set by QTC-302. The valve cannot be "fail safe" tested nor stroke timed since no control switches are installed to perform those tests. The valve will be full stroke exercised quarterly.

DONALD C. COOK NUCLEAR PLANT

VALVE TEST PROGRAM

RELIEF REQUEST NOTES

Flow Diagram No: 2-5135A-25

Revision No: 0

Date: 12-13-85

NOTE 1: CMO-411, -412, -413, -414, -415 & -416: These valves remain open during initial safety injection, but may be closed during recirculation phase or passive failure. Therefore, the valve time will be recorded from open to close position.

DONALD C. COOK NUCLEAR PLANT

VALVE TEST PROGRAM

RELIEF REQUEST NOTES

Flow Diagram No: 2-5135B-12

Revision No: 0

Date: 12-13-85

NOTE 1: See "Attachment-A" for permissible seat leakage values.

NOTE 2: CCW-243-25, CCW-243-72, CCW-244-25 and CCW-244-72: These check valves are located in the penetration cooling supply headers of the CCW System inside the containment. The valves are open during normal operation to provide cooling water to the main steam penetrations. The valves are confirmed closed by seat leakage testing in accordance with Appendix "J" during refueling outage.

DONALD C. COOK NUCLEAR PLANT

VALVE TEST PROGRAM

RELIEF REQUEST NOTES

Flow Diagram No: 2-5141-23

Revision No: 0

Date: 12-13-85

NOTE 1: See "Attachment-A" for permissible seat leakage values.

DONALD C. COOK NUCLEAR PLANT

VALVE TEST PROGRAM

RELIEF REQUEST NOTES

Flow Diagram No: 2-5141D-7

Revision No: 0

Date: 12-13-85

NOTE 1: See "Attachment-A" for permissible seat leakage values.

NOTE 2: NS-283: This containment isolation check valve is located in the sample return line of the Post-Accident Containment Hydrogen Monitoring System. Since the line is open-ended inside the containment and the check valve is not equipped with the position indication, the valve will be full stroke exercised in the open position by performing a flow test quarterly and will be confirmed closed during seat leakage testing per Appendix "J" program at refueling frequency.

DONALD C. COOK NUCLEAR PLANT

VALVE TEST PROGRAM

RELIEF REQUEST NOTES

Flow Diagram No: 2-5142-26

Revision No: 0

Date: 12-13-85

NOTE 1: ICM-250 and ICM-251: These normally closed valves cannot be operated during normal plant operation without introducing Boron into a non-heat traced line. Boron could crystalize and plug the line. Valves will be tested at cold shutdown frequency.

NOTE 2: See "Attachment-A" for permissible seat leakage values.

NOTE 3: IMO-261: This valve cannot be tested when SI pumps are required to be operable. Testing would result in isolation of both pumps. This valve will be tested at cold shutdown frequency.

NOTE 4: IMO-262 and -263: These motor operated valves are located in series in the re-circulation line of the Safety Injection pumps. Exercising any of these valves will make the SI pumps inoperable. These valves will be full-stroke exercised at cold shutdown frequency.

NOTE 5: SI-110N, SI-110S and SI-101: Safety Injection (SI) pump discharge valves, SI-110N and -110S, cannot be exercised during power operation because SI pumps cannot overcome reactor pressure. Therefore, no flow path exists and, because minimum flow lines branch off upstream of these valves, they cannot be part-stroke tested during pump testing. The common (SI pumps) suction check valve, SI-101 is part-stroke exercised at power operation during pump testing. These valves cannot be exercised during cold shutdowns because SI pumps are required to inoperable by Technical Specification 3.5.3 to protect against low temperature overpressurization of the Reactor Coolant System. These valves will be full-stroke exercised at refueling frequency in conjunction with the full flow test.

[illegible]

NOTE 6: SI-142 L1, L2, L3, and L4: These check valves are located in the supply lines from the Boron Injection Tank to the reactor coolant cold legs (loop 1 through 4). These valves cannot be tested during power operation because this would require injecting highly concentrated boric acid solution from the Boron Injection Tank into the Reactor Coolant System resulting in probable plant shutdown.

These valves cannot be partially-stroke exercised using the BIT bypass line because this could result in bypassing the BIT, thereby not achieving design flow through the BIT if an accident occurred.

These valves cannot be full-stroked exercised during cold shutdown because this would require injecting the BIT into the RCS which could significantly delay startup from cold shutdown condition (the BIT would have to be brought to the proper Boron concentration and the RCS would have to be diluted sufficiently to allow startup). These valves will be full stroke exercised during refueling outages.

[illegible]

DONALD C. COOK NUCLEAR PLANT

VALVE TEST PROGRAM

RELIEF REQUEST NOTES

Flow Diagram No: 2-5143-29

Flow Diagram No
Revision No: 0

Date: 12-13-85

NOTE 1: See "Attachment-A" for permissible seat leakage values.

NOTE 2: IMO-128 and ICM-129: These valves function as the normal return from the RCS to the RHR for heatup, cooldown, Mode 5 and Mode 6 operation. These valves are normally closed and cannot be operated during normal plant operation because they are interlocked to remain closed at RCS pressure above 450 psig. The system is considered out of service (as defined per IWV-3416) during power operation. The valves will be full stroke exercised prior to placing them into service.

NOTE 3: IMO-310, -320, -314, -324: These valves remain open during injection phase of a safety injection, but will be closed during re-circulation phase. Therefore, stroke timing will be from open to close position.

NOTE 4: IMO-315, -316, -325, -326: Valves IMO-315 and -325 are normally closed valves, located in the RHR and SI Supply Header to RCS hot legs. Valves IMO-316 and -326 are normally open valves located in the RHR and SI Supply Header to RCS cold legs. These valves should not be exercised during power operation because failure in a non-conservative position would result in less than minimum number of injection flow path as required by the FSAR. The valves will be full stroke tested at cold shutdown frequency.

NOTE 5: SI-166 L1, L2, L3, L4: These check valves function to prevent backflow from the RCS into the accumulators during normal operation. These valves function to supply flow from the accumulators to the RCS during an accident condition. These valves cannot be exercised during power operation because the accumulators do not have sufficient head to overcome RCS pressure.

These valves cannot be exercised during cold shutdown because this would result in a possible low temperature overpressurization of the RCS. Full stroke testing during refueling outages is not possible because of the resulting water surge into the reactor and the potential for high airborne radiation contamination. These valves will be partially-stroke exercised during refueling outages and disassembled for internal inspection on a sampling basis.

NOTE 6: SI-161, L1, L2, L3, L4: These check valves are located in the supply lines from the Residual Heat Removal and Safety Injection Pumps to the RCS cold legs (loop 1 through 4). These valves cannot be exercised during power operation because the RHR pumps and SI pumps do not develop sufficient head to overcome RCS pressure. These valves will be part stroke exercised at a cold shutdown frequency and will be full stroke exercised at the refueling frequency.

SI-170 L1, L2, L3, and L4: These valves will be part-stroke exercised during refueling outages. The valves will also be disassembled on a sampling basis during refueling outages to verify the full stroke exercising.

[illegible]

NOTE 7: RH-108E and RH-108W: These valves cannot be full stroke exercised quarterly because no full flow path exists. The valves will be full stroke exercised at cold shutdown frequency (during RHR operation).

NOTE 8: RH-133, -134: These check valves function to circulate water from the RHR pumps to the RCS cold legs when the RHR system is aligned for heat removal operation. These valves cannot be exercised during power operation because the RHR pumps do not develop sufficient head to overcome RCS pressure. These valves will be exercised during start up pursuant to Technical Specification 3.4.6.2.

NOTE 9: SI-148: This valve cannot be full stroke exercised during power operation or cold shutdown because design flow may not be attainable without flowing to the core. Additionally, a large flow rate through the RHR return line to the RWST may increase the probability of air being swept into the Safety Injection suction header. The valve will be part stroke exercised during power operation and full stroke exercised during the full flow test at the refueling frequency.

NOTE 10: SI-151 E, W: These check valves are located in the RHR supply lines to either the hot or cold legs. These valves cannot be exercised during power operation because the RHR pumps do not develop sufficient head to overcome RCS pressure. These valves will be exercised at a cold shutdown frequency.

[illegible]

[illegible]

[illegible]

[illegible]

[illegible]

[illegible]

[illegible]

[illegible]

[illegible]

[illegible]

[illegible]

NOTE 11: SI-152 N, S: These check valves function to provide Safety Injection pump discharge to either the hot or cold legs. These valves cannot be exercised during power operation because the SI pumps do not develop sufficient pressure to overcome RCS pressure. These valves cannot be exercised during cold shutdown because the safety injection pumps are required to be inoperable by Technical Specification Section 3.5.3, to protect against low temperature overpressurization of the RCS. Also, during cold shutdown, there may not be sufficient volume in the RCS to accommodate the amount of water needed to full stroke. These valves will be full stroke exercised at refueling frequency in conjunction with full flow test.

NOTE 12: SI-158 L1, L2, L3, L4: Check valves SI-158 are located in the supply lines from the Residual Heat Removal and Safety Injection Pumps to the RCS hot legs (loop 1 through 4). These valves cannot be exercised during power operation because the RHR and SI pumps do not develop sufficient head to overcome RCS pressure. These valves will be part stroke exercised at a cold shutdown frequency and will be full stroke exercised at the refueling frequency.

[illegible]

DONALD C. COOK NUCLEAR PLANT

VALVE TEST PROGRAM

RELIEF REQUEST NOTES

Flow Diagram No: 2-5144-27

Revision No: 0

Date: 12-13-85

NOTE 1: CTS-138E & W, CTS-103E & W: These check valves function to supply water from the RWST to the Containment Spray Pumps suction (CTS-138E & W) and to supply water from the Containment Spray Pumps (CTS-103E & W) to the ring header in containment. These valves are partial stroked during Containment Spray Pump Testing. Valves will be disassembled during refueling on a sample basis.

NOTE 2: CTS-131E & W, CTS-127E & W, RH-141, RH-142: These check valves function to supply spray water to the containment ring headers. In the closed position, they provide a containment isolation function. These valves cannot be exercised during power operation, cold shutdown, or refueling because flow through these valves would result in spraying the containment. This could cause problems with wet lagging, corrosion of components inside containment, etc. The only practical method of verifying operability of these check valves is by disassembly. These valves will be disassembled on a sample basis during refueling outages.

NOTE 3: CTS-127E & W, CTS-131E & W, RH-141, RH-142: These valves are to be seat leakage tested in accordance with the special testing procedure because of the configuration at D. C. Cook Plant. The permissible seat leakage values of these valves are listed in Attachment-"A".

DONALD C. COOK NUCLEAR PLANT

VALVE TEST PROGRAM

RELIEF REQUEST NOTES

Flow Diagram No: 2-5145-17

Revision No: 0

Date: 12-13-85

NOTE 1: See "Attachment-A" for permissible seat leakage values.

DONALD C. COOK NUCLEAR PLANT

VALVE TEST PROGRAM

RELIEF REQUEST NOTES

Flow Diagram No: 2-5146B-21

Revision No: 0

Date: 12-13-85

NOTE 1: R-156 and R-157: These valves are full stroke exercised in the open direction quarterly and verified closed by seat leakage testing per Appendix "J" during refueling outages. These check valves are not equipped with position indicators.

NOTE 2: See "Attachment-A" for permissible seat leakage values.

DONALD C. COOK NUCLEAR PLANT

VALVE TEST PROGRAM

RELIEF REQUEST NOTES

Flow Diagram No: 2-5147A-32

Revision No: 0

Date: 12-13-85

NOTE 1: See "Attachment-A" for permissible leakage values.

[illegible]

[illegible]

[illegible]

[illegible]

[illegible]

[illegible]

[illegible]

DONALD C. COOK NUCLEAR PLANT

VALVE TEST PROGRAM

RELIEF REQUEST NOTES

Flow Diagram No: 2-5149-18

Revision No: 0

Date: 12-13-85

NOTE 1: VRV-325, -315: These valves are located at the outlet of the control room air conditioner water pump. These three-way valves function to modulate water flow through the air handler package based on cooling requirements. These valves are demonstrated operable during normal control room air conditioning operation. The valves cannot be stroked timed because they are not equipped with position indicator and stroke times are not repeatable.

DONALD C. COOK NUCLEAR PLANT

VALVE TEST PROGRAM

RELIEF REQUEST NOTES

Flow Diagram No: 2-5151A-24

Revision No: 0

Date: 12-13-85

NOTE 1: The required full stroking of the check valves is satisfied when the diesel generator successfully completes its required testing per Technical Specification 4.8.1.1.2.

NOTE 2: QT-114-2AB: This valve is located at the discharge of the engine driven lube oil pump (diesel-generator). This three-way thermostatic valve functions to maintain the correct lube oil temperature by maintaining the correct proportion of oil flowing through the lube oil cooler and bypassing the lube oil cooler to maintain a preset lube oil temperature. We are requesting exemption from testing requirements since (1) this valve functions only as a regulating valve and not opened/closed; (2) this valve is demonstrated operable during diesel generator testing. Diesel generators are tested every 31 days on a staggered basis per Technical Specification 4.8.1.1.2. The valves will be verified operable by observing proper temperatures during diesel testing.

[illegible]

DONALD C. COOK NUCLEAR PLANT

VALVE TEST PROGRAM

RELIEF REQUEST NOTES

Flow Diagram No: 2-5151B-26

Revision No: 0

Date: 12-13-85

NOTE 1: The required full stroking of the check valves is satisfied when the diesel generator successfully completes its required testing per Technical Specification 4.8.1.1.2.

NOTE 2: QT-132-2AB: This valve is located at the discharge of the emergency diesel engine jacket water pump. This three-way thermostatic valve functions to maintain the correct proportion of water flowing through the diesel engine water cooler and bypassing the diesel engine jacket water cooler to maintain a preset jacket water temperature. We are requesting exemption from the testing requirements since (1) this valve functions only as regulating valve and not open/closed valve; (2) this valve is demonstrated operable during diesel generator testing. Diesel generators are tested on a staggered basis, every 31 days per Technical Specification 4.8.1.1.2. The valve will be verified operable by observing proper temperatures during diesel testing.

NOTE 3: XRV-220, -221 and -222: The operability of these valves will be based on obtaining Technical Specification acceptance Diesel Generator Start times (less than or equal to 10 seconds) because these valves are not equipped with position indication devices to measure the stroke times.

[illegible]

DONALD C. COOK NUCLEAR PLANT

VALVE TEST PROGRAM

RELIEF REQUEST NOTES

Flow Diagram No: 2-5151C-24

Revision No: 0

Date: 12-13-85

NOTE 1: The required full stroking of the check valves is satisfied when the diesel generator successfully completes its required testing per Technical Specification 4.8.1.1.2.

NOTE 2: QT-114-2CD: This valve is located at the discharge of the engine driven lube oil pump (diesel-generator). This three-way thermostatic valve functions to maintain the correct lube oil temperature by maintaining the correct proportion of oil flowing through the lube oil cooler and bypassing the lube oil cooler to maintain a preset lube oil temperature. We are requesting exemption from testing requirements since (1) this valve functions only as a regulating valve and not opened/closed valve; (2) this valve is demonstrated operable during diesel generator testing. Diesel generators are tested every 31 days on a staggered basis per Technical Specification 4.8.1.1.2. The valves will be verified operable by observing proper temperatures during diesel testing.

DONALD C. COOK NUCLEAR PLANT

VALVE TEST PROGRAM

RELIEF REQUEST NOTES

Flow Diagram No: 2-5151D-26

Revision No: 0

Date: 12-13-85

NOTE 1: The required full stroking of the check valves is satisfied when the diesel generator successfully completes its required testing per Technical Specification 4.8.1.1.2.

NOTE 2: QT-132-2CD: This valve is located at the discharge of the emergency diesel engine jacket water pump. This three-way thermostatic valve functions to maintain the correct proportion of water flowing through the diesel engine water cooler and bypassing the diesel engine jacket water cooler to maintain a preset jacket water temperature. We are requesting exemption from the testing requirements since (1) this valve functions only as a regulating valve and not open/closed valve; (2) this valve is demonstrated operable during diesel generator testing. Diesel generators are tested on a staggered basis, every 31 days per Technical Specification 4.8.1.1.2. The valve will be verified operable by observing proper temperatures during diesel testing.

NOTE 3: XRV-225, -226 and -227: The operability of these valves will be based on obtaining Technical Specification acceptance Diesel Generator start times (less than or equal to 10 seconds) because these valves are not equipped with position indication devices to measure the stroke times.

DONALD C. COOK NUCLEAR PLANT

VALVE TEST PROGRAM

RELIEF REQUEST NOTES

Flow Diagram No: 12-5115A-37 - Unit-2

Revision No: 0

Date: 12-13-85

NOTE 1: See "Attachment-A" for permissible seat leakage values.

DONALD C. COOK NUCLEAR PLANT

VALVE TEST PROGRAM

RELIEF REQUEST NOTES

Flow Diagram No: 12-5120B-21 - Unit-2

Revision No: 0

Date: 12-13-85

NOTE 1: Check valve PA-342 and gate valve PCR-40 are located in the maintenance air supply line into each containment. This line is isolated during power operation by removing a spool piece and inserting blind flanges. Therefore, the system is considered out of service during power operation (as defined per IWV-3416). The valves will be tested prior to placing them into service.

NOTE 2: See "Attachment-A" for permissible seat leakage values.

NOTE 3: XCR-101, -102, -103, -104: These air operated globe valves function to supply control air to containment. These valves cannot be full stroke tested without causing a loss of containment control air. Testing will be performed at cold shutdown frequency.

DONALD C. COOK NUCLEAR PLANT

VALVE TEST PROGRAM

RELIEF REQUEST NOTES

Flow Diagram No: 12-5136-22

Revision No: 0

Date: 12-13-85

NOTE 1: See "Attachment-A" for permissible seat leakage values.

DONALD C. COOK NUCLEAR PLANT

VALVE TEST PROGRAM

RELIEF REQUEST NOTES

Flow Diagram No: 12-5137A-20

Revision No: 0

Date: 12-13-85

NOTE 1: See "Attachment-A" for permissible seat leakage values.

NOTE 2: N-160: This containment isolation check valve is located in the Nitrogen Supply line to Reactor Coolant Drain Tank. This valve cannot be part or full stroke exercised due to lack of sufficient differential pressure to back seat the valve during power operation. This valve will be tested during seat leakage testing per Appendix "J" during refueling outages.

DONALD C. COOK NUCLEAR PLANT

VALVE TEST PROGRAM

RELIEF REQUEST NOTES

Flow Diagram No: 12-5141C-7

Revision No: 0

Date: 12-13-85

NOTE 1: See "Attachment-A" for permissible seat leakage values.

DONALD C. COOK NUCLEAR PLANT

VALVE TEST PROGRAM

RELIEF REQUEST NOTES

Flow Diagram No: 12-5141F-3

Revision No: 0

Date: 12-13-85

NOTE 1: ECR-31, -32, -33, -35 and -36: These valves are in the sample inlet and outlet lines of the lower containment radiation monitors (ERS-1300, ERS-1400). Both of these radiation monitors are required to be operable (Technical Specification Table 3.3-6) during power operation (Modes 1 through 4) and refueling (Mode 6). These valves will be tested at cold shutdown (Mode 5) frequency.

NOTE 2: See "Attachment-A" for permissible leakage values.

NOTE 3: SM-1: This Containment Isolation Check Valve for the Containment Radiation Monitors' sample return cannot be full or part stroke exercised during power operation because these monitors are required to be operable in Modes 1, 2, 3, 4 and 6. The valve will be tested during cold shutdown (Mode 5) at refueling frequency.

DONALD C. COOK NUCLEAR PLANT

ASME SECTION XI VALVE TEST PROGRAM FOR UNIT #2

ATTACHMENT-A

Revision No: 0

Date: 12-13-85

1. CONTAINMENT ISOLATION VALVES (Catagory A or AC)

Testing Method: (SLT-2) Seat leakage test the valve in accordance with 10CFR50, Appendix J, in lieu of ASME Code Section XI except for paragraphs IWV-3426 and IWV-3427.

Valve No	Flow Diagram	Size	Type	Permissible Leakage Values (SCCM)
WCR-920,-922	5114A	3	DA	900
WCR-921,-923	5114A	3	DA	900
WCR-932,-934	5114A	3	DA	900
WCR-933,-935	5114A	3	DA	900
WCR-941,-945	5114A	3	DA	900
WCR-944,-948	5114A	3	DA	900
WCR-951,-955	5114A	3	DA	900
WCR-954,-958	5114A	3	DA	900
WCR-924,-926	5114A	3	DA	900
WCR-925,-927	5114A	3	DA	900
WCR-928,-930	5114A	3	DA	900

DONALD C. COOK NUCLEAR PLANT

ASME SECTION XI VALVE TEST PROGRAM FOR UNIT #2

ATTACHMENT-A

Revision No: 0

Date: 12-13-85

Valve No.	Flow Diagram	Size	Type	Permissible Leakage Values (SCCM)
WCR-929,-931	5114A	3	DA	900
WCR-942,-946	5114A	3	DA	900
WCR-952,-956	5114A	3	DA	900
WCR-943,-947	5114A	3	DA	900
WCR-953,-957	5114A	3	DA	900
WCR-960,-962	5114A	2	DA	750
WCR-961,-963	5114A	2	DA	750
WCR-964,-966	5114A	2	DA	750
WCR-965,-967	5114A	2	DA	750
ECR-10,-20	5141B	0.50	GL	750
ECR-11,-21	5141B	0.50	GL	750
ECR-12,-22	5141B	0.50	GL	750
ECR-13,-23	5141B	0.50	GL	750
ECR-14,-24	5141B	0.50	GL	750
ECR-15,-25	5141B	0.50	GL	750

DONALD C. COOK NUCLEAR PLANT

ASME SECTION XI VALVE TEST PROGRAM FOR UNIT #2

ATTACHMENT-A

Revision No: 0

Date: 12-13-85

Valve No.	Flow Diagram	Size	Type	Permissible Leakage Values (SCCM)
ECR-16,-26	5141B	0.50	GL	750
ECR-17,-27	5141B	0.50	GL	750
ECR-18,-28	5141B	0.50	GL	750
ECR-19,-29	5141B	0.50	GL	750
CS-442-1	5128A	2	CK	750
CS-442-2	5128A	2	CK	750
CS-442-3	5128A	2	CK	750
CS-442-4	5128A	2	CK	750
SI-189	5128A	4	CK	1200
SM-1	5141F	1	CK	750
N-102	5143	1	CK	750
N-159	5128A	0.75	CK	750
PW-275	5128A	3	CK	900
CS-321	5129	3	CK	1800
VCR-10,-11	5146B	4	DA	1200

DONALD C. COOK NUCLEAR PLANT

ASME SECTION XI VALVE TEST PROGRAM FOR UNIT #2

ATTACHMENT-A

Revision No: 0

Date: 12-13-85

Valve No.	Flow Diagram	Size	Type	Permissible Leakage Values (SCCM)
VCR-20,-21	5146B	4	DA	1200
DCR-203,-207	5137A	1	DA,GL	750
N-160, DCR-201	5137A	1	CK,DA	1125
DCR-610,-611	5137A	2.50	DA	750
DCR-620,-621	5137A	1	DA	750
DCR-205,-206	5137A	4	DA	1200
DCR-600,-601	5124	3	DA	900
QCR-300,-301	5129	2	GL	750
QCM-250,-350	5129A	4	GA	1200
QCR-919,-920	5115A	2	DA	750
SF-152,-154	5136	2.50	DA,GL	750
SF-159,-160	5137A	3	DA	900

DONALD C. COOK NUCLEAR PLANT

ASME SECTION XI VALVE TEST PROGRAM FOR UNIT #2

ATTACHMENT-A

Revision No: 0

Date: 12-13-85

Valve No.	Flow Diagram	Size	Type	Permissible Leakage Values (SCCM)
NCR-105,-106	5141	0.50	GL	750
NCR-107,-108	5141	0.50	GL	750
NCR-109,-110	5141	0.50	GL	750
RCR-100,-101	5128A	0.375	GL	750
DCR-202,-204	5137A	0.75	DA	750
ICR-5,-6	5141	0.50	GL	750
ECR-33,-35	5141F	0.75,2	GL,DA	750
ICM-260	5142	4	GA(DD)	600
ICM-265	5142	4	GA(DD)	600
ECR-31,-32	5141F	1	GL	750
XCR-100,-101	5120B	1	GL	750
XCR-102,-103	5120B	1	GL	750
GCR-301	5128A	0.75	DA	375
GCR-314	5143	1	GL	375

[illegible]	[illegible]	[illegible]	[illegible]	[illegible]
[illegible]	[illegible]	[illegible]	[illegible]	[illegible]
[illegible]	[illegible]	[illegible]	[illegible]	[illegible]
[illegible]	[illegible]	[illegible]	[illegible]	[illegible]
[illegible]	[illegible]	[illegible]	[illegible]	[illegible]
[illegible]	[illegible]	[illegible]	[illegible]	[illegible]
[illegible]	[illegible]	[illegible]	[illegible]	[illegible]
[illegible]	[illegible]	[illegible]	[illegible]	[illegible]
[illegible]	[illegible]	[illegible]	[illegible]	[illegible]
[illegible]	[illegible]	[illegible]	[illegible]	[illegible]
[illegible]	[illegible]	[illegible]	[illegible]	[illegible]
[illegible]	[illegible]	[illegible]	[illegible]	[illegible]
[illegible]	[illegible]	[illegible]	[illegible]	[illegible]
[illegible]	[illegible]	[illegible]	[illegible]	[illegible]
[illegible]	[illegible]	[illegible]	[illegible]	[illegible]
[illegible]	[illegible]	[illegible]	[illegible]	[illegible]
[illegible]	[illegible]	[illegible]	[illegible]	[illegible]

DONALD C. COOK NUCLEAR PLANT

ASME SECTION XI VALVE TEST PROGRAM FOR UNIT #2

ATTACHMENT-A

Revision No: 0

Date: 12-13-85

Valve No.	Flow Diagram	Size	Type	Permissible Leakage Values (SCCM)
SI-171,-172,-194	5143	0.75	GL	1125
NCR-252	5128A	3	GL	450
CCR-460,-462	5135	3	GL	900
CCR-457,CCW-135	5135	2,2.50	GL,CK	1125
CCR-455,-456	5135	2	GL	750
SM-4,-6	5147A	0.50	GL	750
ICM-251	5142	4	GA(DD)	600
ICM-250	5142	4	GA(DD)	600
CA-181S	5145	0.50	CK	750
CA-181N	5145	0.50	CK	750
SM-8,-10	5147A	0.50	ND	750
CCW-243-25	5135B	1	CK	750
CCW-244-25	5135B	1	CK	750

DONALD C. COOK NUCLEAR PLANT

ASME SECTION XI VALVE TEST PROGRAM FOR UNIT #2

ATTACHMENT-A

Revision No: 0

Date: 12-13-85

Valve No.	Flow Diagram	Size	Type	Permissible Leakage Values (SCCM)
CCW-243-72	5135B	1	CK	750
CCW-244-72	5135B	1	CK	750
CCM-430	5135B	1.50	GL	375
CCM-431	5135B	1.50	GL	375
CCR-440	513B	1.50	GL	375
CCR-441	5135B	1.50	GL	375
CCM-432	5135B	1.50	GL	375
CCM-433	5135B	1.50	GL	375
R-156	5146B	0.375	CK	750
R-157	5146B	0.375	CK	750
NS-357	5124	0.50	CK	750
ECR-496,-497	5141C	0.50	GL	750
ECR-416	5141C	0.50	GL	375
ECR-417	5141C	0.50	GL	375
ECR-535	5141C	0.50	GL	375

DONALD C. COOK NUCLEAR PLANT

ASME SECTION XI VALVE TEST PROGRAM FOR UNIT #2

ATTACHMENT-A

Revision No: 0

Date: 12-13-85

Valve No.	Flow Diagram	Size	Type	Permissible Leakage Values (SCCM)
ECR-536	5141C	0.50	GL	375
ECR-36	5141F	2	DA	375
PCR-40	5120B	2	GA	375
PA-342	5120B	2	CK	750
NS-283	5141D	0.50	CK	750
NPX-151	5128A	0.50	GL	375
WCR-900,-902	5114A	6	DA	1800
WCR-901,-903	5114A	6	DA	1800
WCR-912,-914	5114A	6	DA	1800
WCR-913,-915	5114A	6	DA	1800
WCR-904,-906	5114A	6	DA	1800
WCR-905,-907	5114A	6	DA	1800
WCR-908,-910	5114A	6	DA	1800
WCR-909,-911	5114A	6	DA	1800
VCR-101,-201	5147A	14	BF	4200
VCR-102,-202	5147A	14	BF	4200

DONALD C. COOK NUCLEAR PLANT

ASME SECTION XI VALVE TEST PROGRAM FOR UNIT #2

ATTACHMENT-A

Revision No: 0

Date: 12-13-85

Valve No.	Flow Diagram	Size	Type	Permissible Leakage Values (SCCM)
VCR-103,-203	5147A	24	BF	7200
VCR-104,-204	5147A	30	BF	9000
VCR-105,-205	5147A	30	BF	9000
VCR-106,-206	5147A	24	BF	7200
VCR-107,-207	5147A	14	BF	4200
ICM-305	5143	18	GA(DD)	2700
ICM-306	5143	18	GA(DD)	2700
CCM-452,-454,-458	5135	8,4,8	BF,GL,BF	3000
CCM-451,-453,-459	5135	8,4,8	BF,GL,BF	3000

DONALD C. COOK NUCLEAR PLANT

ASME SECTION XI VALVE TEST PROGRAM FOR UNIT #2

ATTACHMENT-A

Revision No: 0

Date: 12-13-85

2. CONTAINMENT SPRAY VALVES (Catagory A or AC)

Testing Method: (SLT-2A) Seat leakage test the valve in accordance with Testing Procedure No. 12THP-4030 STP 237 because of the configuration at D. C. Cook Plant in lieu of ASME Code Section XI, except for paragraphs IWV-3426 and IWV-3427.

Valve No.	Flow Diagram	Size	Type	Permissible Leakage Values (CCM)
CTS-131W	5144	8	CK	3.73
CTS-131E	5144	8	CK	3.00
CTS-127W	5144	6	CK	22.55
CTS-127E	5144	6	CK	21.21
RH-141	5144	8	CK	2.20
RH-142	5144	8	CK	4.00

DONALD C. COOK NUCLEAR PLANT

ASME SECTION XI VALVE TEST PROGRAM FOR UNIT #2

ATTACHMENT-A

Revision No: 0

Date: 12-13-85

3. PRESSURE ISOLATION VALVES (Catagory A or AC)

Testing Method: (SLT-1) Seat leakage test the valve per ASME Code Section XI.

Valve No.	Flow Diagram	Size	Type	Permissible Leakage Values (GPM)
CS-299E	5129	4	CK	2.0
CS-299W	5129	4	CK	2.0
SI-152-N	5143	4	CK	5.0
SI-152-S	5143	4	CK	5.0
ICM-129	5143	14	GA(DD)	10.0
SI-161-L1,-L4	5143	6	CK	10.0
SI-161-L2,-L3	5143	6	CK	10.0
SI-170-L1	5143	10	CK	5.0
SI-170-L2	5143	10	CK	1.0
SI-170-L3	5143	10	CK	1.0
SI-170-L4	5143	10	CK	5.0
SI-158-L1,-L4	5143	6	CK	10.0

DONALD C. COOK NUCLEAR PLANT

ASME SECTION XI VALVE TEST PROGRAM FOR UNIT #2

ATTACHMENT-A

Revision No: 0

Date: 12-13-85

Valve No.	Flow Diagram	Size	Type	Permissible Leakage Values (GPM)
SI-158-L2,-L3	5143	6	CK	10.0
SI-151-E	5143	8	CK	5.0
SI-151-W	5143	8	CK	5.0
SI-166-L1	5143	10	CK	5.0
SI-166-L2	5143	10	CK	5.0
SI-166-L3	5143	10	CK	5.0
SI-166-L4	5143	10	CK	5.0
RH-133,-134	5143	8	CK	2.0

DONALD C. COOK NUCLEAR PLANT
SECOND TEN YEAR INTERVAL
VALVE SUMMARY SHEET - UNIT 2
FLOW DIAGRAM: 2-5105-33

RUN DATE AND TIME: 18DEC85:09:14

SYSTEM NAME: MAIN STEAM

VALVE						VALVE POSITION		ASME SECTION XI						
NUMBER	REV	TYPE	SIZE	ACT TYPE	F.D. COORD	POWER OPER	SAFETY FUNCT	CD CL	A/P	CAT	PRIM TEST REQUIRED	TEST PERFORMED	TEST MODE	RELIEF REQUEST(S)
2-DCR-310	0	GL	2	A	K/6	O	C	2	A	B	EF-1	EF-1	P	NO
											EF-5	EF-5	-	NO
											EF-7	EF-7	P	NO
											ET-006	ET-006	P	NO
2-DCR-320	0	GL	2	A	K/5	O	C	2	A	B	EF-1	EF-1	P	NO
											EF-5	EF-5	-	NO
											EF-7	EF-7	P	NO
											ET-006	ET-006	P	NO
2-DCR-330	0	GL	2	A	K/5	O	C	2	A	B	EF-1	EF-1	P	NO
											EF-5	EF-5	-	NO
											EF-7	EF-7	P	NO
											ET-008	ET-008	P	NO
2-DCR-340	0	GL	2	A	K/6	O	C	2	A	B	EF-1	EF-1	P	NO
											EF-5	EF-5	-	NO
											EF-7	EF-7	P	NO
											ET-009	ET-009	P	NO

DONALD C. COOK NUCLEAR PLANT
SECOND TEN YEAR INTERVAL
VALVE SUMMARY SHEET - UNIT 2
FLOW DIAGRAM: 2-51058-39

RUN DATE AND TIME: 18DEC85:09:14

SYSTEM NAME: MAIN STEAM

VALVE						VALVE POSITION		ASME SECTION XI						
NUMBER	REV	TYPE	SIZE	ACT TYPE	F.D. COORD	POWER OPER	SAFETY FUNCT	CD CL	A/P	CAT	PRIM TEST REQUIRED	TEST PERFORMED	TEST MODE	RELIEF REQUEST(S)
2-QT-506	0	GL	4	MO	A/8	C	O	3	A	B	EF-1	EF-1	P	NO
											EF-5	EF-5	-	NO
											ET-023	ET-023	P	NO

DONALD C. COOK NUCLEAR PLANT
SECOND TEN YEAR INTERVAL
VALVE SUMMARY SHEET - UNIT 2
FLOW DIAGRAM: 2-5105D-0

RUN DATE AND TIME: 18DEC85:09:14

SYSTEM NAME: STEAM GENERATING SYSTEM

VALVE						VALVE POSITION		ASME SECTION XI						
NUMBER	REV	TYPE	SIZE	ACT TYPE	F.D. COORD	POWER OPER	SAFETY FUNCT	CD CL	A/P	CAT	PRIM TEST REQUIRED	TEST PERFORMED	TEST MODE	RELIEF REQUEST(S)
2-FW-118-1	0	CK	14	SA	B/9	O	C	2	A	C	CF-1	CF-2	R	YES, NOTE 1
2-FW-118-2	0	CK	14	SA	L/8	O	C	2	A	C	CF-1	CF-2	R	YES, NOTE 1
2-FW-118-3	0	CK	14	SA	J/3	O	C	2	A	C	CF-1	CF-2	R	YES, NOTE 1
2-FW-118-4	0	CK	14	SA	C/3	O	C	2	A	C	CF-1	CF-2	R	YES, NOTE 1
2-MCM-221	0	GL	4	MO	K/4	O	O/C	2	A	B	EF-1	EF-1	P	NO
											EF-5	EF-5	-	NO
											ET-049	ET-049	P	NO
2-MCM-231	0	GL	4	MO	K/4	O	O/C	2	A	B	EF-1	EF-1	P	NO
											EF-5	EF-5	-	NO
											ET-050	ET-050	P	NO
2-MRV-210	0	GA	28	PO	B/7	O	C	2	A	B	EF-1	EF-3	P	NO, NOTE 2
											EF-5	EF-5	-	NO
											EF-7	EF-8	C	NO, NOTE 2
											ET-005	ET-005	C	NO
2-MRV-211	0	AG	2	A	A/5	C	O	2	A	B	EF-1	EF-1	P	NO
											EF-5	EF-5	-	NO
											EF-7	EF-7	P	NO
											ET-003	ET-003	P	NO
2-MRV-212	0	AG	2	A	A/5	C	O	2	A	B	EF-1	EF-1	P	NO
											EF-5	EF-5	-	NO
											EF-7	EF-7	P	NO
											ET-004	ET-004	P	NO

DONALD C. COOK NUCLEAR PLANT
SECOND TEN YEAR INTERVAL
VALVE SUMMARY SHEET - UNIT 2
FLOW DIAGRAM: 2-5105D-0

RUN DATE AND TIME: 18DEC85:09:14

SYSTEM NAME: STEAM GENERATING SYSTEM

VALVE						VALVE POSITION		ASME SECTION XI						
NUMBER	REV	TYPE	SIZE	ACT TYPE	F.D. COORD	POWER OPER	SAFETY FUNCT	CD CL	A/P	CAT	PRIM TEST REQUIRED	TEST PERFORMED	TEST MODE	RELIEF REQUEST(S)
2-MRV-220	0	GA	28	PO	L/7	O	C	2	A	B	EF-1	EF-3	P	NO, NOTE 2
											EF-5	EF-5	-	NO
											EF-7	EF-8	C	NO, NOTE 2
											ET-005	ET-005	C	NO
2-MRV-221	0	AG	2	A	M/5	C	O	2	A	B	EF-1	EF-1	P	NO
											EF-5	EF-5	-	NO
											EF-7	EF-7	P	NO
											ET-003	ET-003	P	NO
2-MRV-222	0	AG	2	A	M/5	C	O	2	A	B	EF-1	EF-1	P	NO
											EF-5	EF-5	-	NO
											EF-7	EF-7	P	NO
											ET-003	ET-003	P	NO
2-MRV-230	0	GA	28	PO	M/3	O	C	2	A	B	EF-1	EF-3	P	NO, NOTE 2
											EF-5	EF-5	-	NO
											EF-7	EF-8	C	NO, NOTE 2
											ET-005	ET-005	C	NO
2-MRV-231	0	AG	2	A	M/1	C	O	2	A	B	EF-1	EF-1	P	NO
											EF-5	EF-5	-	NO
											EF-7	EF-7	P	NO
											ETF-002	ETF-002	P	NO
2-MRV-232	0	AG	2	A	M/1	C	O	2	A	B	EF-1	EF-1	P	NO
											EF-5	EF-5	-	NO
											EF-7	EF-7	P	NO
											ET-003	ET-003	P	NO

DONALD C. COOK NUCLEAR PLANT
SECOND TEN YEAR INTERVAL
VALVE SUMMARY SHEET - UNIT 2
FLOW DIAGRAM: 2-5105D-0

RUN DATE AND TIME: 18DEC85:09:14

SYSTEM NAME: STEAM GENERATING SYSTEM

VALVE						VALVE POSITION		ASME SECTION XI						
NUMBER	REV	TYPE	SIZE	ACT TYPE	F.D. COORD	POWER OPER	SAFETY FUNCT	CD CL	A/P	CAT	PRIM TEST REQUIRED	TEST PERFORMED	TEST MODE	RELIEF REQUEST(S)
2-MRV-240	0	GA	28	PO	B/3	O	C	2	A	B	EF-1	EF-3	P	NO, NOTE 2
											EF-5	EF-5	-	NO
											EF-7	EF-7	C	NO, NOTE 2
											ET-005	ET-005	C	NO
2-MRV-241	0	AG	2	A	A/1	C	O	2	A	B	EF-1	EF-1	P	NO
											EF-5	EF-5	-	NO
											EF-7	EF-7	P	NO
											ETF-002	ETF-002	P	NO
2-MRV-242	0	AG	2	A	A/1	C	O	2	A	B	EF-1	EF-1	P	NO
											EF-5	EF-5	-	NO
											EF-7	EF-7	P	NO
											ETF-002	ETF-002	P	NO
2-MS-108-2	0	CK	4	SA	K/4	C	O/C	3	A	C	CF-1	CF-1	P	NO, NOTE 3
2-MS-108-3	0	CK	4	SA	K/4	C	O/C	3	A	C	CF-1	CF-1	P	NO, NOTE 3
2-SV-1A-1	0	REL	6	SA	C/5	C	O	2	A	C	TF-1	TF-1	R	NO
2-SV-1A-2	0	REL	6	SA	K/5	C	O	2	A	C	TF-1	TF-1	R	NO
2-SV-1A-3	0	REL	6	SA	K/1	C	O	2	A	C	TF-1	TF-1	R	NO
2-SV-1A-4	0	REL	6	SA	C/1	C	O	2	A	C	TF-1	TF-1	R	NO

DONALD C. COOK NUCLEAR PLANT
SECOND TEN YEAR INTERVAL
VALVE SUMMARY SHEET - UNIT 2
FLOW DIAGRAM: 2-5105D-0

RUN DATE AND TIME: 18DEC85:09:14

SYSTEM NAME: STEAM GENERATING SYSTEM

VALVE						VALVE POSITION		ASME SECTION XI						
NUMBER	REV	TYPE	SIZE	ACT TYPE	F.D. COORD	POWER OPER	SAFETY FUNCT	CD CL	A/P	CAT	PRIM TEST REQUIRED	TEST PERFORMED	TEST MODE	RELIEF REQUEST(S)
2-SV-1B-1	0	REL	6	SA	B/5	C	O	2	A	C	TF-1	TF-1	R	NO
2-SV-1B-2	0	REL	6	SA	L/5	C	O	2	A	C	TF-1	TF-1	R	NO
2-SV-1B-3	0	REL	6	SA	L/1	C	O	2	A	C	TF-1	TF-1	R	NO
2-SV-1B-4	0	REL	6	SA	B/1	C	O	2	A	C	TF-1	TF-1	R	NO
2-SV-2A-1	0	REL	6	SA	B/5	C	O	2	A	C	TF-1	TF-1	R	NO
2-SV-2A-2	0	REL	6	SA	L/5	C	O	2	A	C	TF-1	TF-1	R	NO
2-SV-2A-3	0	REL	6	SA	L/1	C	O	2	A	C	TF-1	TF-1	R	NO
2-SV-2A-4	0	REL	6	SA	B/1	C	O	2	A	C	TF-1	TF-1	R	NO
2-SV-2B-1	0	REL	6	SA	B/5	C	O	2	A	C	TF-1	TF-1	R	NO
2-SV-2B-2	0	REL	6	SA	L/5	C	O	2	A	C	TF-1	TF-1	R	NO
2-SV-2B-3	0	REL	6	SA	L/1	C	O	2	A	C	TF-1	TF-1	R	NO
2-SV-2B-4	0	REL	6	SA	B/1	C	O	2	A	C	TF-1	TF-1	R	NO

DONALD C. COOK NUCLEAR PLANT
SECOND TEN YEAR INTERVAL
VALVE SUMMARY SHEET - UNIT 2
FLOW DIAGRAM: 2-5105D-0

RUN DATE AND TIME: 18DEC85:09:14

SYSTEM NAME: STEAM GENERATING SYSTEM

VALVE						VALVE POSITION		ASME SECTION XI						
NUMBER	REV	TYPE	SIZE	ACT TYPE	F.D. COORD	POWER OPER	SAFETY FUNCT	CD CL	A/P	CAT	PRIM TEST REQUIRED	TEST PERFORMED	TEST MODE	RELIEF REQUEST(S)
2-SV-3-1	0	REL	6	SA	B/5	C	O	2	A	C	TF-1	TF-1	R	NO
2-SV-3-2	0	REL	6	SA	M/5	C	O	2	A	C	TF-1	TF-1	R	NO
2-SV-3-3	0	REL	6	SA	M/1	C	O	2	A	C	TF-1	TF-1	R	NO
2-SV-3-4	0	REL	6	SA	B/1	C	O	2	A	C	TF-1	TF-1	R	NO

DONALD C. COOK NUCLEAR PLANT
SECOND TEN YEAR INTERVAL
VALVE SUMMARY SHEET - UNIT 2
FLOW DIAGRAM: 2-5106-32

RUN DATE AND TIME: 18DEC85:09:14

SYSTEM NAME: FEEDWATER

VALVE						VALVE POSITION		ASME SECTION XI						
NUMBER	REV	TYPE	SIZE	ACT TYPE	F.D. COORD	POWER OPER	SAFETY FUNCT	CD CL	A/P	CAT	PRIM TEST REQUIRED	TEST PERFORMED	TEST MODE	RELIEF REQUEST(S)
2-FMO-201	0	GA	14	MO	G/5	O	C	2	A	B	EF-1	EF-2	C	YES, NOTE 1
											EF-5	EF-5	-	NO
											ET-020	ET-020	C	NO
2-FMO-202	0	GA	14	MO	E/9	O	C	2	A	B	EF-1	EF-2	C	YES, NOTE 1
											EF-5	EF-5	-	NO
											ET-018	ET-018	C	NO
2-FMO-203	0	GA	14	MO	F/9	O	C	2	A	B	EF-1	EF-2	C	YES, NOTE 1
											EF-5	EF-5	-	NO
											ET-019	ET-019	C	NO
2-FMO-204	0	GA	14	MO	H/5	O	C	2	A	B	EF-1	EF-2	C	YES, NOTE 1
											EF-5	EF-5	-	NO
											ET-019	ET-019	C	NO
2-FRV-210	0	AG	14	A	G/5	O	C	2	A	B	EF-1	EF-2	C	YES, NOTE 1
											EF-5	EF-5	-	NO
											EF-7	EF-8	C	NO, NOTE 1
											ET-005	ET-005	C	NO
2-FRV-220	0	AG	14	A	E/9	O	C	2	A	B	EF-1	EF-2	C	YES, NOTE 1
											EF-5	EF-5	-	NO
											EF-7	EF-8	C	NO, NOTE 1
											ET-005	ET-005	C	NO
2-FRV-230	0	AG	14	A	F/9	O	C	2	A	B	EF-1	EF-2	C	YES, NOTE 1
											EF-5	EF-5	-	NO
											EF-7	EF-8	C	NO, NOTE 1
											ET-005	ET-005	C	NO

DONALD C. COOK NUCLEAR PLANT
SECOND TEN YEAR INTERVAL
VALVE SUMMARY SHEET - UNIT 2
FLOW DIAGRAM: 2-5106-32

RUN DATE AND TIME: 18DEC85:09:14

SYSTEM NAME: FEEDWATER

VALVE						VALVE POSITION		ASME SECTION XI						
NUMBER	REV	TYPE	SIZE	ACT TYPE	F.D. COORD	POWER OPER	SAFETY FUNCT	CD CL	A/P	CAT	PRIM TEST REQUIRED	TEST PERFORMED	TEST MODE	RELIEF REQUEST(S)
2-FRV-240	0	AG	14	A	H/5	O	C	2	A	B	EF-1	EF-2	C	YES, NOTE 1
											EF-5	EF-5	-	NO
											EF-7,	EF-8	C	NO, NOTE 1
											ET-005	ET-005	C	NO

DONALD C. COOK NUCLEAR PLANT
SECOND TEN YEAR INTERVAL
VALVE SUMMARY SHEET - UNIT 2
FLOW DIAGRAM: 2-5106A-33

RUN DATE AND TIME: 18DEC85:09:14

SYSTEM NAME: FEEDWATER

VALVE						VALVE POSITION		ASME SECTION XI						
NUMBER	REV	TYPE	SIZE	ACT TYPE	F.D. COORD	POWER OPER	SAFETY FUNCT	CD CL	A/P	CAT	PRIM TEST REQUIRED	TEST PERFORMED	TEST MODE	RELIEF REQUEST(S)
2-FMO-211	0	GL	4	MO	B/4	O	O	3	A	B	EF-1	EF-1	P	NO
											EF-5	EF-5	-	NO
											ET-025	ET-025	P	NO
2-FMO-212	0	GL	4	MO	B/4	O	O	3	A	B	EF-1	EF-1	P	NO
											EF-5	EF-5	-	NO
											ET-031	ET-031	P	NO
2-FMO-221	0	GL	4	MO	C/5	O	O	3	A	B	EF-1	EF-1	P	NO
											EF-5	EF-5	-	NO
											ET-021	ET-021	P	NO
2-FMO-222	0	GL	4	MO	C/5	O	O	3	A	B	EF-1	EF-1	P	NO
											EF-5	EF-5	-	NO
											ET-036	ET-036	P	NO
2-FMO-231	0	GL	4	MO	C/5	O	O	3	A	B	EF-1	EF-1	P	NO
											EF-5	EF-5	-	NO
											ET-026	ET-026	P	NO
2-FMO-232	0	GL	4	MO	C/5	O	O	3	A	B	EF-1	EF-1	P	NO
											EF-5	EF-5	-	NO
											ET-034	ET-034	P	NO
2-FMO-241	0	GL	4	MO	B/4	O	O	3	A	B	EF-1	EF-1	P	NO
											EF-5	EF-5	-	NO
											ET-024	ET-024	P	NO

DONALD C. COOK NUCLEAR PLANT
SECOND TEN YEAR INTERVAL
VALVE SUMMARY SHEET - UNIT 2
FLOW DIAGRAM: 2-5106A-33

RUN DATE AND TIME: 18DEC85:09:14

SYSTEM NAME: FEEDWATER

VALVE						VALVE POSITION		ASME SECTION XI						
NUMBER	REV	TYPE	SIZE	ACT TYPE	F.D. COORD	POWER OPER	SAFETY FUNCT	CD CL	A/P	CAT	PRIM TEST REQUIRED	TEST PERFORMED	TEST MODE	RELIEF REQUEST(S)
2-FMO-242	0	GL	4	MO	B/4	O	O	3	A	B	EF-1	EF-1	P	NO
											EF-5	EF-5	-	NO
											ET-030	ET-030	P	NO
2-FRV-245	0	GL	2	A	M/9	O	C	3	A	B	EF-1	EF-1	P	NO
											EF-5	EF-5	-	NO
											EF-7	EF-7	P	NO
											ET-025	ET-025	P	NO
2-FRV-247	0	GL	1	A	M/9	C	C/O	3	A	B	EF-1	EF-1	P	NO
											EF-5	EF-5	-	NO
											EF-7	EF-7	P	NO
											ET-008	ET-008	P	NO
2-FRV-255	0	GL	2	A	H/9	O/C	C	3	A	B	EF-1	EF-1	P	NO
											EF-5	EF-5	-	NO
											EF-7	EF-7	P	NO
											ET-021	ET-021	P	NO
2-FRV-256	0	GL	2	A	E/9	O/C	C	3	A	B	EF-1	EF-1	P	NO
											EF-5	EF-5	-	NO
											EF-7	EF-7	P	NO
											ET-019	ET-019	P	NO
2-FRV-257	0	GL	1	A	H/9	C	C/O	3	A	B	EF-1	EF-1	P	NO
											EF-5	EF-5	-	NO
											EF-7	EF-7	P	NO
											ET-005	ET-005	P	NO

DONALD C. COOK NUCLEAR PLANT
SECOND TEN YEAR INTERVAL
VALVE SUMMARY SHEET - UNIT 2
FLOW DIAGRAM: 2-5106A-33

RUN DATE AND TIME: 18DEC85:09:14

SYSTEM NAME: FEEDWATER

VALVE						VALVE POSITION		ASME SECTION XI						
NUMBER	REV	TYPE	SIZE	ACT TYPE	F.D. COORD	POWER OPER	SAFETY FUNCT	CD CL	A/P	CAT	PRIM TEST REQUIRED	TEST PERFORMED	TEST MODE	RELIEF REQUEST(S)
2-FRV-258	0	GL	1	A	E/9	C	C/O	3	A	B	EF-1	EF-1	P	NO
											EF-5	EF-5	-	NO
											EF-7	EF-7	P	NO
											ET-005	ET-005	P	NO
2-FW-124	0	CK	8	SA	F/7	C	O	3	A	C	CF-1	CF-1	P	NO
2-FW-128	0	CK	6	SA	H/7	C	O	3	A	C	CF-1	CF-1	P	NO
2-FW-132-1	0	CK	4	SA	C/4	C	O	2	A	C	CF-1	NOTE 1	C	YES, NOTE 1
2-FW-132-2	0	CK	4	SA	D/5	C	O	2	A	C	CF-1	NOTE 1	C	YES, NOTE 1
2-FW-132-3	0	CK	4	SA	D/5	C	O	2	A	C	CF-1	NOTE 1	C	YES, NOTE 1
2-FW-132-4	0	CK	4	SA	C/4	C	O	2	A	C	CF-1	NOTE 1	C	YES, NOTE 1
2-FW-134	0	CK	10	SA	B/9	C	O	3	A	C	CF-1	CF-1	P	NO, NOTE 2
2-FW-135	0	CK	8	SA	E/8	C	O	3	A	C	CF-1	CF-1	P	NO, NOTE 2
2-FW-138-1	0	CK	4	SA	C/4	C	O	2	A	C	CF-1	NOTE 3	C	YES, NOTE 3
2-FW-138-2	0	CK	4	SA	D/5	C	O	2	A	C	CF-1	NOTE 3	C	YES, NOTE 3

DONALD C. COOK NUCLEAR PLANT
SECOND TEN YEAR INTERVAL
VALVE SUMMARY SHEET - UNIT 2
FLOW DIAGRAM: 2-5106A-33

RUN DATE AND TIME: 18DEC85:09:14

SYSTEM NAME: FEEDWATER

VALVE						VALVE POSITION		ASME SECTION XI						
NUMBER	REV	TYPE	SIZE	ACT TYPE	F.D. COORD	POWER OPER	SAFETY FUNCT	CD CL	A/P	CAT	PRIM TEST REQUIRED	TEST PERFORMED	TEST MODE	RELIEF REQUEST(S)
2-FW-138-3	0	CK	4	SA	D/5	C	O	2	A	C	CF-1	NOTE 3	C	YES, NOTE 3
2-FW-138-4	0	CK	4	SA	C/4	C	O	2	A	C	CF-1	NOTE 3	C	YES, NOTE 3
2-FW-149	0	CK	0.75	SA	D/2	C	O	3	A	C	CF-1	CF-1	P	NO, NOTE 4
2-FW-150	0	CK	0.75	SA	D/3	C	O	3	A	C	CF-1	CF-1	P	NO, NOTE 4
2-FW-153	0	CK	1	SA	H/9	C	O/C	3	A	C	CF-1	CF-1	P	NO
2-FW-159	0	CK	6	SA	L/7	C	O	3	A	C	CF-1	CF-1	P	NO
2-FW-160	0	CK	1	SA	M/9	C	O/C	3	A	C	CF-1	CF-1	P	NO
2-FW-161	0	CK	8	SA	J/7	C	O	3	A	C	CF-1	CF-1	P	NO
2-SV-140-1	0	REL	0.75	SA	E/1	C	O	3	A	C	TF-1	TF-1	R	NO
2-SV-140-2	0	REL	0.75	SA	D/1	C	O	3	A	C	TF-1	TF-1	R	NO
2-SV-169-A	0	REL	0.75	SA	K/9	C	O	3	A	C	TF-1	TF-1	R	NO
2-SV-169-B	0	REL	0.75	SA	G/9	C	O	3	A	C	TF-1	TF-1	R	NO

DONALD C. COOK NUCLEAR PLANT
SECOND TEN YEAR INTERVAL
VALVE SUMMARY SHEET - UNIT 2

RUN DATE AND TIME: 18DEC85:09:14

SYSTEM NAME: ESSENTIAL SERVICE WATER

FLOW DIAGRAM: 2-5113-32

VALVE						VALVE POSITION		ASME SECTION XI						
NUMBER	REV	TYPE	SIZE	ACT TYPE	F.D. COORD	POWER OPER	SAFETY FUNCT	CD CL	A/P	CAT	PRIM TEST REQUIRED	TEST PERFORMED	TEST MODE	RELIEF REQUEST(S)
2-ESW-102-2E	0	CK	20	SA	H/8	C	O	3	A	C	CF-1	CF-1	P	NO
2-ESW-102-2W	0	CK	20	SA	H/8	C	O	3	A	C	CF-1	CF-1	P	NO
2-ESW-141	0	CK	6	SA	K/6	C	O	3	A	C	CF-1	CF-1	P	NO, NOTE 1
2-ESW-142	0	CK	6	SA	L/6	C	O	3	A	C	CF-1	CF-1	P	NO, NOTE 1
2-ESW-143	0	CK	6	SA	M/6	C	O	3	A	C	CF-1	CF-1	P	NO, NOTE 1
2-ESW-144	0	CK	6	SA	M/6	C	O	3	A	C	CF-1	CF-1	P	NO, NOTE 1
2-ESW-145	0	BF	4	M	J/6	C	O	3	A	B	EF-1	EF-2	R	YES, NOTE 2
2-ESW-168-N	0	BF	3	M	H/1	C	O	3	A	B	EF-1	EF-1	P	NO
2-ESW-168-S	0	BF	3	M	H/1	C	O	3	A	B	EF-1	EF-1	P	NO
2-ESW-169-N	0	BF	3	M	G/1	O	C	3	A	B	EF-1	EF-1	P	NO
2-ESW-169-S	0	BF	3	M	G/1	O	C	3	A	B	EF-1	EF-1	P	NO
2-ESW-170-N	0	BF	3	M	F/1	O	C	3	A	B	EF-1	EF-1	P	NO

DONALD C. COOK NUCLEAR PLANT
SECOND TEN YEAR INTERVAL
VALVE SUMMARY SHEET - UNIT 2
FLOW DIAGRAM: 2-5113-32

RUN DATE AND TIME: 18DEC85:09:14

SYSTEM NAME: ESSENTIAL SERVICE WATER

VALVE						VALVE POSITION		ASME SECTION XI						
NUMBER	REV	TYPE	SIZE	ACT TYPE	F.D. COORD	POWER OPER	SAFETY FUNCT	CD CL	A/P	CAT	PRIM TEST REQUIRED	TEST PERFORMED	TEST MODE	RELIEF REQUEST(S)
2-ESW-170-S	0	BF	3	M	F/1	O	C	3	A	B	EF-1	EF-1	P	NO
2-ESW-171-N	0	BF	3	M	F/1	C	O	3	A	B	EF-1	EF-1	P	NO
2-ESW-171-S	0	BF	3	M	F/1	C	O	3	A	B	EF-1	EF-1	P	NO
2-ESW-240	0	BF	6	M	M/5	C	O	3	A	B	EF-1	EF-2	R	YES, NOTE 2
2-ESW-243	0	BF	4	M	J/7	C	O	3	A	B	EF-1	EF-2	R	YES, NOTE 2
2-SV-14-2E	0	REL	1	SA	L/1	C	O	3	A	C	TF-1	TF-1	R	NO
2-SV-14-2W	0	REL	1	SA	M/1	C	O	3	A	C	TF-1	TF-1	R	NO
2-SV-15-2E	0	REL	0.75	SA	G/3	C	O	3	A	C	TF-1	TF-1	R	NO
2-SV-15-2W	0	REL	0.75	SA	J/4	C	O	3	A	C	TF-1	TF-1	R	NO
2-SV-16-AB	0	REL	1	SA	L/8	C	O	3	A	C	TF-1	TF-1	R	NO
2-SV-16-CD	0	REL	1	SA	L/8	C	O	3	A	C	TF-1	TF-1	R	NO
2-WMO-703-2E	0	BF	20	MO	H/8	C	O	3	A	B	EF-1	EF-1	P	NO
											EF-5	EF-5	-	NO
											ET-053	ET-053	P	NO

DONALD C. COOK NUCLEAR PLANT
SECOND TEN YEAR INTERVAL
VALVE SUMMARY SHEET - UNIT 2
FLOW DIAGRAM: 2-5113-32

RUN DATE AND TIME: 18DEC85:09:14

SYSTEM NAME: ESSENTIAL SERVICE WATER

VALVE						VALVE POSITION		ASME SECTION XI						
NUMBER	REV	TYPE	SIZE	ACT TYPE	F.D. COORD	POWER OPER	SAFETY FUNCT	CD CL	A/P	CAT	PRIM TEST REQUIRED	TEST PERFORMED	TEST MODE	RELIEF REQUEST(S)
2-WMO-704-2W	0	BF	20	MO	H/8	C	O	3	A	B	EF-1	EF-1	P	NO
											EF-5	EF-5	-	NO
											ET-054	ET-054	P	NO
2-WMO-706	0	BF	20	MO	G/8	O	O/C	3	A	B	EF-1	EF-1	P	NO
											EF-5	EF-5	-	NO
											ET-056	ET-056	P	NO
2-WMO-708	0	BF	20	MO	G/6	O	O/C	3	A	B	EF-1	EF-1	P	NO
											EF-5	EF-5	-	NO
											ET-055	ET-055	P	NO
2-WMO-714	0	BF	12	MO	M/5	C	O	3	A	B	EF-1	EF-1	P	NO
											EF-5	EF-5	-	NO
											ET-034	ET-034	P	NO
2-WMO-718	0	BF	12	MO	N/5	C	O	3	A	B	EF-1	EF-1	P	NO
											EF-5	EF-5	-	NO
											ET-036	ET-036	P	NO
2-WMO-722	0	BF	6	MO	M/6	C	O	3	A	B	EF-1	EF-1	P	NO
											EF-5	EF-5	-	NO
											ET-023	ET-023	P	NO
2-WMO-724	0	BF	6	MO	M/6	C	O	3	A	B	EF-1	EF-1	P	NO
											EF-5	EF-5	-	NO
											ET-020	ET-020	P	NO

DONALD C. COOK NUCLEAR PLANT
SECOND TEN YEAR INTERVAL
VALVE SUMMARY SHEET - UNIT 2
FLOW DIAGRAM: 2-5113-32

RUN DATE AND TIME: 18DEC85:09:14

SYSTEM NAME: ESSENTIAL SERVICE WATER

VALVE						VALVE POSITION		ASME SECTION XI						
NUMBER	REV	TYPE	SIZE	ACT TYPE	F.D. COORD	POWER OPER	SAFETY FUNCT	CD CL	A/P	CAT	PRIM TEST REQUIRED	TEST PERFORMED	TEST MODE	RELIEF REQUEST(S)
2-WMO-726	0	BF	6	MO	K/6	C	O	3	A	B	EF-1	EF-1	P	NO
											EF-5	EF-5	-	NO
											ET-023	ET-023	P	NO
2-WMO-728	0	BF	6	MO	L/6	C	O	3	A	B	EF-1	EF-1	P	NO
											EF-5	EF-5	-	NO
											ET-024	ET-024	P	NO
2-WMO-734	0	BF	16	MO	H/3	O/C	O	3	A	B	EF-1	EF-1	P	NO
											EF-5	EF-5	-	NO
											ET-054	ET-054	P	NO
2-WMO-738	0	BF	16	MO	K/3	O/C	O	3	A	B	EF-1	EF-1	P	NO
											EF-5	EF-5	-	NO
											ET-055	ET-055	P	NO
2-WMO-744	0	BF	4	MO	J/6	C	O	3	A	B	EF-1	EF-1	P	NO
											EF-5	EF-5	-	NO
											ET-036	ET-036	P	NO
2-WMO-753	0	BF	6	MO	M/5	C	O	3	A	B	EF-1	EF-1	P	NO
											EF-5	EF-5	-	NO
											ET-024	ET-024	P	NO
2-WMO-754	0	BF	4	MO	K/6	C	O	3	A	B	EF-1	EF-1	P	NO
											EF-5	EF-5	-	NO
											ET-026	ET-026	P	NO

DONALD C. COOK NUCLEAR PLANT
SECOND TEN YEAR INTERVAL
VALVE SUMMARY SHEET - UNIT 2
FLOW DIAGRAM: 2-5113-32

RUN DATE AND TIME: 18DEC85:09:14

SYSTEM NAME: ESSENTIAL SERVICE WATER

VALVE						VALVE POSITION		ASME SECTION XI						
NUMBER	REV	TYPE	SIZE	ACT TYPE	F.D. COORD	POWER OPER	SAFETY FUNCT	CD CL	A/P	CAT	PRIM TEST REQUIRED	TEST PERFORMED	TEST MODE	RELIEF REQUEST(S)
2-WRV-722-CD	0	3W	4	A	K/8	O	O	3	A	B	EF-1	NOTE 3	P	YES, NOTE 3
											EF-7	EF-8	R	YES, NOTE 3
											ET-NA	NOTE 3	-	YES, NOTE 3
2-WRV-724-CD	0	3W	4	A	M/8	O	O	3	A	B	EF-1	NOTE 3	P	YES, NOTE 3
											EF-7	EF-8	R	YES, NOTE 3
											ET-NA	NOTE 3	-	YES, NOTE 3
2-WRV-726-AB	0	3W	4	A	K/8	O	O	3	A	B	EF-1	NOTE 3	P	YES, NOTE 3
											EF-7	EF-8	R	YES, NOTE 3
											ET-NA	NOTE 3	-	YES, NOTE 3
2-WRV-728-AB	0	3W	4	A	M/8	O	O	3	A	B	EF-1	NOTE 3	P	YES, NOTE3
											EF-7	EF-8	R	YES, NOTE 3
											ET-NA	NOTE 1	-	YES, NOTE 3

DONALD C. COOK NUCLEAR PLANT
SECOND TEN YEAR INTERVAL
VALVE SUMMARY SHEET - UNIT 2
FLOW DIAGRAM: 2-5114A-25

RUN DATE AND TIME: 18DEC85:09:14

SYSTEM NAME: NON-ESSENTIAL SERVICE WATER

VALVE						VALVE POSITION		ASME SECTION XI						
NUMBER	REV	TYPE	SIZE	ACT TYPE	F.D. COORD	POWER OPER	SAFETY FUNCT	CD CL	A/P	CAT	PRIM TEST REQUIRED	TEST PERFORMED	TEST MODE	RELIEF REQUEST(S)
2-WCR-900-1	0	DA	6	A	J/9	O	C	2	A	A	EF-1	EF-1	P	NO
											EF-5	EF-5	-	NO
											EF-7	EF-7	P	NO
											ET-008	ET-008	P	NO
											SLT-1	SLT-2	R	YES, NOTE 1
2-WCR-901-1	0	DA	6	A	K/9	O	C	2	A	A	EF-1	EF-1	P	NO
											EF-5	EF-5	-	NO
											EF-7	EF-7	P	NO
											ET-008	ET-008	P	NO
											SLT-1	SLT-2	R	YES, NOTE 1
2-WCR-902-1	0	DA	6	A	J/4	O	C	2	A	A	EF-1	EF-1	P	NO
											EF-5	EF-5	-	NO
											EF-7	EF-7	P	NO
											ET-005	ET-005	P	NO
											SLT-1	SLT-2	R	YES, NOTE 1
2-WCR-903-1	0	DA	6	A	K/4	O	C	2	A	A	EF-1	EF-1	P	NO
											EF-5	EF-5	-	NO
											EF-7	EF-7	P	NO
											ET-006	ET-006	P	NO
											SLT-1	SLT-2	R	YES, NOTE 1
2-WCR-904-2	0	DA	6	A	J/9	O	C	2	A	A	EF-1	EF-1	P	NO
											EF-5	EF-5	-	NO
											EF-7	EF-7	P	NO
											ET-008	ET-008	P	NO
											SLT-1	SLT-2	R	YES, NOTE 1

DONALD C. COOK NUCLEAR PLANT
SECOND TEN YEAR INTERVAL
VALVE SUMMARY SHEET - UNIT 2
FLOW DIAGRAM: 2-5114A-25

RUN DATE AND TIME: 18DEC85:09:14

SYSTEM NAME: NON-ESSENTIAL SERVICE WATER

VALVE						VALVE POSITION		ASME SECTION XI						
NUMBER	REV	TYPE	SIZE	ACT TYPE	F.D. COORD	POWER OPER	SAFETY FUNCT	CD CL	A/P	CAT	PRIM TEST REQUIRED	TEST PERFORMED	TEST MODE	RELIEF REQUEST(S)
2-WCR-905-2	0	DA	6	A	K/9	O	C	2	A	A	EF-1	EF-1	P	NO
											EF-5	EF-5	-	NO
											EF-7	EF-7	P	NO
											ET-006	ET-006	P	NO
											SLT-1	SLT-2	R	YES, NOTE 1
2-WCR-906-2	0	DA	6	A	J/4	O	C	2	A	A	EF-1	EF-1	P	NO
											EF-5	EF-5	-	NO
											EF-7	EF-7	P	NO
											ET-006	ET-006	P	NO
											SLT-1	SLT-2	R	YES, NOTE 1
2-WCR-907	0	DA	6	A	K/4	O	C	2	A	A	EF-1	EF-1	P	NO
											EF-5	EF-5	-	NO
											EF-7	EF-7	P	NO
											ET-005	ET-005	P	NO
											SLT-1	SLT-2	R	YES, NOTE 1
2-WCR-908-3	0	DA	6	A	J/9	O	C	2	A	A	EF-1	EF-1	P	NO
											EF-5	EF-5	-	NO
											EF-7	EF-7	P	NO
											ET-008	ET-008	P	NO
											SLT-1	SLT-2	R	YES, NOTE 1
2-WCR-909-3	0	DA	6	A	K/9	O	C	2	A	A	EF-1	EF-1	P	NO
											EF-5	EF-5	-	NO
											EF-7	EF-7	P	NO
											ET-006	ET-006	P	NO
											SLT-1	SLT-2	R	YES, NOTE 1

DONALD C. COOK NUCLEAR PLANT
SECOND TEN YEAR INTERVAL
VALVE SUMMARY SHEET - UNIT 2
FLOW DIAGRAM: 2-5114A-25

RUN DATE AND TIME: 18DEC85:09:14

SYSTEM NAME: NON-ESSENTIAL SERVICE WATER

VALVE						VALVE POSITION		ASME SECTION XI						
NUMBER	REV	TYPE	SIZE	ACT TYPE	F.D. COORD	POWER OPER	SAFETY FUNCT	CD CL	A/P	CAT	PRIM TEST REQUIRED	TEST PERFORMED	TEST MODE	RELIEF REQUEST(S)
2-WCR-910-3	0	DA	6	A	J/4	O	C	2	A	A	EF-1	EF-1	P	NO
											EF-5	EF-5	-	NO
											EF-7	EF-7	P	NO
											ET-006	ET-006	P	NO
											SLT-1	SLT-2	R	YES, NOTE 1
2-WCR-911-3	0	DA	6	A	K/4	O	C	2	A	A	EF-1	EF-1	P	NO
											EF-5	EF-5	-	NO
											EF-7	EF-7	P	NO
											ET-005	ET-005	P	NO
											SLT-1	SLT-2	R	YES, NOTE 1
2-WCR-912-4	0	DA	6	A	J/9	O	C	2	A	A	EF-1	EF-1	P	NO
											EF-5	EF-5	-	NO
											EF-7	EF-7	P	NO
											ET-009	ET-009	P	NO
											SLT-1	SLT-2	R	YES, NOTE 1
2-WCR-913-4	0	DA	6	A	K/9	O	C	2	A	A	EF-1	EF-1	P	NO
											EF-5	EF-5	-	NO
											EF-7	EF-7	P	NO
											ET-008	ET-008	P	NO
											SLT-1	SLT-2	R	YES, NOTE 1
2-WCR-914-4	0	DA	6	A	J/4	O	C	2	A	A	EF-1	EF-1	P	NO
											EF-5	EF-5	-	NO
											EF-7	EF-7	P	NO
											ET-005	ET-005	P	NO
											SLT-1	SLT-2	R	YES, NOTE 1

DONALD C. COOK NUCLEAR PLANT
SECOND TEN YEAR INTERVAL
VALVE SUMMARY SHEET - UNIT 2
FLOW DIAGRAM: 2-5114A-25

RUN DATE AND TIME: 18DEC85:09:14

SYSTEM NAME: NON-ESSENTIAL SERVICE WATER

VALVE						VALVE POSITION		ASME SECTION XI						
NUMBER	REV	TYPE	SIZE	ACT TYPE	F.D. COORD	POWER OPER	SAFETY FUNCT	CD CL	A/P	CAT	PRIM TEST REQUIRED	TEST PERFORMED	TEST MODE	RELIEF REQUEST(S)
2-WCR-915-4	0	DA	6	A	K/4	O	C	2	A	A	EF-1	EF-1	P	NO
											EF-5	EF-5	-	NO
											EF-7	EF-7	P	NO
											ET-006	ET-006	P	NO
											SLT-1	SLT-2	R	YES, NOTE 1
2-WCR-920-1	0	DA	3	A	J/6	O	C	2	A	A	EF-1	EF-1	P	NO
											EF-5	EF-5	-	NO
											EF-7	EF-7	P	NO
											ET-005	ET-005	P	NO
											SLT-1	SLT-2	R	YES, NOTE 1
2-WCR-921-1	0	DA	3	A	K/6	O	C	2	A	A	EF-1	EF-1	P	NO
											EF-5	EF-5	-	NO
											EF-7	EF-7	P	NO
											ET-005	ET-005	P	NO
											SLT-1	SLT-2	R	YES, NOTE 1
2-WCR-922-1	0	DA	3	A	K/2	O	C	2	A	A	EF-1	EF-1	P	NO
											EF-5	EF-5	-	NO
											EF-7	EF-7	P	NO
											ET-005	ET-005	P	NO
											SLT-1	SLT-2	R	YES, NOTE 1
2-WCR-923-1	0	DA	3	A	J/2	O	C	2	A	A	EF-1	EF-1	P	NO
											EF-5	EF-5	-	NO
											EF-7	EF-7	P	NO
											ET-006	ET-006	P	NO
											SLT-1	SLT-2	R	YES, NOTE 1

DONALD C. COOK NUCLEAR PLANT
SECOND TEN YEAR INTERVAL
VALVE SUMMARY SHEET - UNIT 2
FLOW DIAGRAM: 2-5114A-25

RUN DATE AND TIME: 18DEC85:09:14

SYSTEM NAME: NON-ESSENTIAL SERVICE WATER

VALVE						VALVE POSITION		ASME SECTION XI						
NUMBER	REV	TYPE	SIZE	ACT TYPE	F.D. COORD	POWER OPER	SAFETY FUNCT	CD CL	A/P	CAT	PRIM TEST REQUIRED	TEST PERFORMED	TEST MODE	RELIEF REQUEST(S)
2-WCR-924-2	0	DA	3	A	J/6	O	C	2	A	A	EF-1	EF-1	P	NO
											EF-5	EF-5	-	NO
											EF-7	EF-7	P	NO
											ET-005	ET-005	P	NO
											SLT-1	SLT-2	R	YES, NOTE 1
2-WCR-925-2	0	DA	3	A	K/6	O	C	2	A	A	EF-1	EF-1	P	NO
											EF-5	EF-5	-	NO
											EF-7	EF-7	P	NO
											ET-005	ET-005	P	NO
											SLT-1	SLT-2	R	YES, NOTE 1
2-WCR-926-2	0	DA	3	A	K/2	O	C	2	A	A	EF-1	EF-1	P	NO
											EF-5	EF-5	-	NO
											EF-7	EF-7	P	NO
											ET-005	ET-005	P	NO
											SLT-1	SLT-2	R	YES, NOTE 1
2-WCR-927-2	0	DA	3	A	J/2	O	C	2	A	A	EF-1	EF-1	P	NO
											EF-5	EF-5	-	NO
											EF-7	EF-7	P	NO
											ET-005	ET-005	P	NO
											SLT-1	SLT-2	R	YES, NOTE 1
2-WCR-928-3	0	DA	3	A	J/6	O	C	2	A	A	EF-1	EF-1	P	NO
											EF-5	EF-5	-	NO
											EF-7	EF-7	P	NO
											ET-005	ET-005	P	NO
											SLT-1	SLT-2	R	YES, NOTE 1

DONALD C. COOK NUCLEAR PLANT
SECOND TEN YEAR INTERVAL
VALVE SUMMARY SHEET - UNIT 2
FLOW DIAGRAM: 2-5114A-25

RUN DATE AND TIME: 18DEC85:09:14

SYSTEM NAME: NON-ESSENTIAL SERVICE WATER

VALVE						VALVE POSITION		ASME SECTION XI						
NUMBER	REV	TYPE	SIZE	ACT TYPE	F.D. COORD	POWER OPER	SAFETY FUNCT	CD CL	A/P	CAT	PRIM TEST REQUIRED	TEST PERFORMED	TEST MODE	RELIEF REQUEST(S)
2-WCR-929-3	0	DA	3	A	K/6	O	C	2	A	A	EF-1	EF-1	P	NO
											EF-5	EF-5	-	NO
											EF-7	EF-7	P	NO
											ET-005	ET-005	P	NO
											SLT-1	SLT-2	R	YES, NOTE 1
2-WCR-930-3	0	DA	3	A	K/2	O	C	2	A	A	EF-1	EF-1	P	NO
											EF-5	EF-5	-	NO
											EF-7	EF-7	P	NO
											ET-004	ET-004	P	NO
											SLT-1	SLT-2	R	YES, NOTE 1
2-WCR-931-3	0	DA	3	A	J/2	O	C	2	A	A	EF-1	EF-1	P	NO
											EF-5	EF-5	-	NO
											EF-7	EF-7	P	NO
											ET-004	ET-004	P	NO
											SLT-1	SLT-2	R	YES, NOTE 1
2-WCR-932-4	0	DA	3	A	J/6	O	C	2	A	A	EF-1	EF-1	P	NO
											EF-5	EF-5	-	NO
											EF-7	EF-7	P	NO
											ET-004	ET-004	P	NO
											SLT-1	SLT-2	R	YES, NOTE 1
2-WCR-933	0	DA	3	A	K/6	O	C	2	A	A	EF-1	EF-1	P	NO
											EF-5	EF-5	-	NO
											EF-7	EF-7	P	NO
											ET-005	ET-005	P	NO
											SLT-1	SLT-2	R	YES, NOTE 1

DONALD C. COOK NUCLEAR PLANT
SECOND TEN YEAR INTERVAL
VALVE SUMMARY SHEET - UNIT 2
FLOW DIAGRAM: 2-5114A-25

RUN DATE AND TIME: 18DEC85:09:14

SYSTEM NAME: NON-ESSENTIAL SERVICE WATER

VALVE						VALVE POSITION		ASME SECTION XI						
NUMBER	REV	TYPE	SIZE	ACT TYPE	F.D. COORD	POWER OPER	SAFETY FUNCT	CD CL	A/P	CAT	PRIM TEST REQUIRED	TEST PERFORMED	TEST MODE	RELIEF REQUEST(S)
2-WCR-934	0	DA	3	A	K/2	O	C	2	A	A	EF-1	EF-1	P	NO
											EF-5	EF-5	-	NO
											EF-7	EF-7	P	NO
											ET-005	ET-005	P	NO
											SLT-1	SLT-2	R	YES, NOTE 1
2-WCR-935	0	DA	3	A	J/2	O	C	2	A	A	EF-1	EF-1	P	NO
											EF-5	EF-5	-	NO
											EF-7	EF-7	P	NO
											ET-005	ET-005	P	NO
											SLT-1	SLT-2	R	YES, NOTE 1
2-WCR-941-1	0	DA	3	A	J/6	O	C	2	A	A	EF-1	EF-1	P	NO
											EF-5	EF-5	-	NO
											EF-7	EF-7	P	NO
											ET-005	ET-005	P	NO
											SLT-1	SLT-2	R	YES, NOTE 1
2-WCR-942-2	0	DA	3	A	J/6	O	C	2	A	A	EF-1	EF-1	P	NO
											EF-5	EF-5	-	NO
											EF-7	EF-7	P	NO
											ET-004	ET-004	P	NO
											SLT-1	SLT-2	R	YES, NOTE 1
2-WCR-943-3	0	DA	3	A	J/6	O	C	2	A	A	EF-1	EF-1	P	NO
											EF-5	EF-5	-	NO
											EF-7	EF-7	P	NO
											ET-004	ET-004	P	NO
											SLT-1	SLT-2	R	YES, NOTE 1

DONALD C. COOK NUCLEAR PLANT
SECOND TEN YEAR INTERVAL
VALVE SUMMARY SHEET - UNIT 2
FLOW DIAGRAM: 2-5114A-25

RUN DATE AND TIME: 18DEC85:09:14

SYSTEM NAME: NON-ESSENTIAL SERVICE WATER

VALVE						VALVE POSITION		ASME SECTION XI						
NUMBER	REV	TYPE	SIZE	ACT TYPE	F.D. COORD	POWER OPER	SAFETY FUNCT	CD CL	A/P	CAT	PRIM TEST REQUIRED	TEST PERFORMED	TEST MODE	RELIEF REQUEST(S)
2-WCR-944-4	0	DA	3	A	J/6	O	C	2	A	A	EF-1	EF-1	P	NO
											EF-5	EF-5	-	NO
											EF-7	EF-7	P	NO
											ET-004	ET-004	P	NO
											SLT-1	SLT-2	R	YES, NOTE 1
2-WCR-945	0	DA	3	A	J/3	O	C	2	A	A	EF-1	EF-1	P	NO
											EF-5	EF-5	-	NO
											EF-7	EF-7	P	NO
											ET-005	ET-005	P	NO
											SLT-1	SLT-2	R	YES, NOTE 1
2-WCR-946-2	0	DA	3	A	J/3	O	C	2	A	A	EF-1	EF-1	P	NO
											EF-5	EF-5	-	NO
											EF-7	EF-7	P	NO
											ET-004	ET-004	P	NO
											SLT-1	SLT-2	R	YES, NOTE 1
2-WCR-947-3	0	DA	3	A	J/3	O	C	2	A	A	EF-1	EF-1	P	NO
											EF-5	EF-5	-	NO
											EF-7	EF-7	P	NO
											ET-005	ET-005	P	NO
											SLT-1	SLT-2	R	YES, NOTE 1
2-WCR-948-4	0	DA	3	A	J/3	O	C	2	A	A	EF-1	EF-1	P	NO
											EF-5	EF-5	-	NO
											EF-7	EF-7	P	NO
											ET-005	ET-005	P	NO
											SLT-1	SLT-2	R	YES, NOTE 1

DONALD C. COOK NUCLEAR PLANT
SECOND TEN YEAR INTERVAL
VALVE SUMMARY SHEET - UNIT 2
FLOW DIAGRAM: 2-5114A-25

RUN DATE AND TIME: 18DEC85:09:14

SYSTEM NAME: NON-ESSENTIAL SERVICE WATER

VALVE						VALVE POSITION		ASME SECTION XI						
NUMBER	REV	TYPE	SIZE	ACT TYPE	F.D. COORD	POWER OPER	SAFETY FUNCT	CD CL	A/P	CAT	PRIM TEST REQUIRED	TEST PERFORMED	TEST MODE	RELIEF REQUEST(S)
2-WCR-951	0	DA	3	A	K/6	O	C	2	A	A	EF-1	EF-1	P	NO
											EF-5	EF-5	-	NO
											EF-7	EF-7	P	NO
											ET-005	ET-005	P	NO
											SLT-1	SLT-2	R	YES, NOTE 1
2-WCR-952-2	0	DA	3	A	K/6	O	C	2	A	A	EF-1	EF-1	P	NO
											EF-5	EF-5	-	NO
											EF-7	EF-7	P	NO
											ET-004	ET-004	P	NO
											SLT-1	SLT-2	R	YES, NOTE 1
2-WCR-953-3	0	DA	3	A	K/6	O	C	2	A	A	EF-1	EF-1	P	NO
											EF-5	EF-5	-	NO
											EF-7	EF-7	P	NO
											ET-005	ET-005	P	NO
											SLT-1	SLT-2	R	YES, NOTE 1
2-WCR-954-4	0	DA	3	A	K/6	O	C	2	A	A	EF-1	EF-1	P	NO
											EF-5	EF-5	-	NO
											EF-7	EF-7	P	NO
											ET-005	ET-005	P	NO
											SLT-1	SLT-2	R	YES, NOTE 1
2-WCR-955	0	DA	3	A	J/3	O	C	2	A	A	EF-1	EF-1	P	NO
											EF-5	EF-5	-	NO
											EF-7	EF-7	P	NO
											ET-005	ET-005	P	NO
											SLT-1	SLT-2	R	YES, NOTE 1

DONALD C. COOK NUCLEAR PLANT
SECOND TEN YEAR INTERVAL
VALVE SUMMARY SHEET - UNIT 2
FLOW DIAGRAM: 2-5114A-25

RUN DATE AND TIME: 18DEC85:09:14

SYSTEM NAME: NON-ESSENTIAL SERVICE WATER

VALVE						VALVE POSITION		ASME SECTION XI						
NUMBER	REV	TYPE	SIZE	ACT TYPE	F.D. COORD	POWER OPER	SAFETY FUNCT	CD CL	A/P	CAT	PRIM TEST REQUIRED	TEST PERFORMED	TEST MODE	RELIEF REQUEST(S)
2-WCR-956-2	0	DA	3	A	J/3	O	C	2	A	A	EF-1	EF-1	P	NO
											EF-5	EF-5	-	NO
											EF-7	EF-7	P	NO
											ET-004	ET-004	P	NO
											SLT-1	SLT-2	R	YES, NOTE 1
2-WCR-957-3	0	DA	3	A	J/3	O	C	2	A	A	EF-1	EF-1	P	NO
											EF-5	EF-5	-	NO
											EF-7	EF-7	P	NO
											ET-003	ET-003	P	NO
											SLT-1	SLT-2	R	YES, NOTE 1
2-WCR-958-4	0	DA	3	A	J/3	O	C	2	A	A	EF-1	EF-1	P	NO
											EF-5	EF-5	-	NO
											EF-7	EF-7	P	NO
											ET-005	ET-005	P	NO
											SLT-1	SLT-2	R	YES, NOTE 1
2-WCR-960	0	DA	2	A	J/7	O	C	2	A	A	EF-1	EF-1	P	NO
											EF-5	EF-5	-	NO
											EF-7	EF-7	P	NO
											ET-005	ET-005	P	NO
											SLT-1	SLT-2	R	YES, NOTE 1
2-WCR-961	0	DA	2	A	J/7	O	C	2	A	A	EF-1	EF-1	P	NO
											EF-5	EF-5	-	NO
											EF-7	EF-7	P	NO
											ET-005	ET-005	P	NO
											SLT-1	SLT-2	R	YES, NOTE 1

DONALD C. COOK NUCLEAR PLANT
SECOND TEN YEAR INTERVAL
VALVE SUMMARY SHEET - UNIT 2

RUN DATE AND TIME: 18DEC85:09:14

SYSTEM NAME: NON-ESSENTIAL SERVICE WATER

FLOW DIAGRAM: 2-5114A-25

VALVE						VALVE POSITION		ASME SECTION XI						
NUMBER	REV	TYPE	SIZE	ACT TYPE	F.D. COORD	POWER OPER	SAFETY FUNCT	CD CL	A/P	CAT	PRIM TEST REQUIRED	TEST PERFORMED	TEST MODE	RELIEF REQUEST(S)
2-WCR-962	0	DA	2	A	J/3	O	C	2	A	A	EF-1	EF-1	P	NO
											EF-5	EF-5	-	NO
											EF-7	EF-7	P	NO
											ET-004	ET-004	P	NO
											SLT-1	SLT-2	R	YES, NOTE 1
2-WCR-963	0	DA	2	A	J/3	O	C	2	A	A	EF-1	EF-1	P	NO
											EF-5	EF-5	-	NO
											EF-7	EF-7	P	NO
											ET-004	ET-004	P	NO
											SLT-1	SLT-2	R	YES, NOTE 1
2-WCR-964-3	0	DA	2	A	J/7	O	C	2	A	A	EF-1	EF-1	P	NO
											EF-5	EF-5	-	NO
											EF-7	EF-7	P	NO
											ET-005	ET-005	P	NO
											SLT-1	SLT-2	R	YES, NOTE 1
2-WCR-965-3	0	DA	2	A	J/7	O	C	2	A	A	EF-1	EF-1	P	NO
											EF-5	EF-5	-	NO
											EF-7	EF-7	P	NO
											ET-005	ET-005	P	NO
											SLT-1	SLT-2	R	YES, NOTE 1
2-WCR-966-3	0	DA	2	A	J/3	O	C	2	A	A	EF-1	EF-1	P	NO
											EF-5	EF-5	-	NO
											EF-7	EF-7	P	NO
											ET-005	ET-005	P	NO
											SLT-1	SLT-2	R	YES, NOTE 1

DONALD C. COOK NUCLEAR PLANT
SECOND TEN YEAR INTERVAL
VALVE SUMMARY SHEET - UNIT 2
FLOW DIAGRAM: 2-5114A-25

RUN DATE AND TIME: 18DEC85:09:14

SYSTEM NAME: NON-ESSENTIAL SERVICE WATER

VALVE						VALVE POSITION		ASME SECTION XI						
NUMBER	REV	TYPE	SIZE	ACT TYPE	F.D. COORD	POWER OPER	SAFETY FUNCT	CD CL	A/P	CAT	PRIM TEST REQUIRED	TEST PERFORMED	TEST MODE	RELIEF REQUEST(S)
2-WCR-967-3	0	DA	2	A	J/3	O	C	2	A	A	EF-1	EF-1	P	NO
											EF-5	EF-5	-	NO
											EF-7	EF-7	P	NO
											ET-005	ET-005	P	NO
											SLT-1	SLT-2	R	YES, NOTE 1

DONALD C. COOK NUCLEAR PLANT
SECOND TEN YEAR INTERVAL
VALVE SUMMARY SHEET - UNIT 2
FLOW DIAGRAM: 2-5124-19

RUN DATE AND TIME: 18DEC85:09:14

SYSTEM NAME: STATION DRAINAGE - CONTAINMENT

VALVE						VALVE POSITION		ASME SECTION XI						
NUMBER	REV	TYPE	SIZE	ACT TYPE	F.D. COORD	POWER OPER	SAFETY FUNCT	CD CL	A/P	CAT	PRIM TEST REQUIRED	TEST PERFORMED	TEST MODE	RELIEF REQUEST(S)
2-DCR-600	0	DA	3	A	N/6	O	C	2	A	A	EF-1	EF-1	P	NO
											EF-5	EF-5	-	NO
											EF-7	EF-7	P	NO
											ET-004	ET-004	P	NO
											SLT-1	SLT-2	R	YES, NOTE 1
2-DCR-601	0	DA	3	A	N/6	O	C	2	A	A	EF-1	EF-1	P	NO
											EF-5	EF-5	-	NO
											EF-7	EF-7	P	NO
											ET-004	ET-004	P	NO
											SLT-1	SLT-2	R	YES, NOTE 1
2-NS-357	0	CK	0.5	SA	K/9	C	O/C	2	A	AC	CF-1	CF-1	P	NO, NOTE 2
											SLT-1	SLT-2	R	YES, NOTE 1

DONALD C. COOK NUCLEAR PLANT
SECOND TEN YEAR INTERVAL
VALVE SUMMARY SHEET - UNIT 2
FLOW DIAGRAM: 2-5128-18

RUN DATE AND TIME: 18DEC85:09:14

SYSTEM NAME: REACTOR COOLANT

VALVE						VALVE POSITION		ASME SECTION XI						
NUMBER	REV	TYPE	SIZE	ACT TYPE	F.D. COORD	POWER OPER	SAFETY FUNCT	CD CL	A/P	CAT	PRIM TEST REQUIRED	TEST PERFORMED	TEST MODE	RELIEF REQUEST(S)
2-NSO-021	0	GL	1	SO	J/6	C	O/C	2	A	B	EF-1	EF-2	R	YES, NOTE 1
											EF-5	EF-5	-	NO, NOTE 2
											EF-7	EF-8	R	YES, NOTE 1
											ETF-002	ETF-002	R	NO
2-NSO-022	0	GL	1	SO	J/6	C	O/C	2	A	B	EF-1	EF-2	R	YES, NOTE 1
											EF-5	EF-5	-	NO, NOTE 2
											EF-7	EF-8	R	YES, NOTE 1
											ETF-002	ETF-002	R	NO
2-NSO-023	0	GL	1	SO	J/6	C	O/C	2	A	B	EF-1	EF-2	R	YES, NOTE 1
											EF-5	EF-5	-	NO, NOTE 2
											EF-7	EF-8	R	YES, NOTE 1
											ETF-002	ETF-002	R	NO
2-NSO-024	0	GL	1	SO	J/6	C	O/C	2	A	B	EF-1	EF-2	R	YES, NOTE 1
											EF-5	EF-5	-	NO, NOTE 2
											EF-7	EF-8	R	YES, NOTE 1
											ETF-002	ETF-002	R	NO

DONALD C. COOK NUCLEAR PLANT
SECOND TEN YEAR INTERVAL
VALVE SUMMARY SHEET - UNIT 2
FLOW DIAGRAM: 2-5123A-32

RUN DATE AND TIME: 18DEC85:09:14

SYSTEM NAME: REACTOR COOLANT

VALVE						VALVE POSITION		ASME SECTION XI						
NUMBER	REV	TYPE	SIZE	ACT TYPE	F.D. COORD	POWER OPER	SAFETY FUNCT	CD CL	A/P	CAT	PRIM TEST REQUIRED	TEST PERFORMED	TEST MODE	RELIEF REQUEST(S)
2-CS-442-1	0	CK	2	SA	B/4	O	C	2	A	AC	CF-1	CF-2	R	YES, NOTE 1
											SLT-1	SLT-2	R	YES, NOTE 2
2-CS-442-2	0	CK	2	SA	B/4	O	C	2	A	AC	CF-1	CF-2	R	YES, NOTE 1
											SLT-1	SLT-2	R	YES, NOTE 2
2-CS-442-3	0	CK	2	SA	B/4	O	C	2	A	AC	CF-1	CF-2	R	YES, NOTE 1
											SLT-1	SLT-2	R	YES, NOTE 2
2-CS-442-4	0	CK	2	SA	B/4	O	C	2	A	AC	CF-1	CF-2	R	YES, NOTE 1
											SLT-1	SLT-2	R	YES, NOTE 2
2-GCR-301	0	DA	0.75	A	B/8	O	C	2	A	A	EF-1	EF-1	P	NO
											EF-5	EF-5	-	NO
											EF-7	EF-7	P	NO
											ETF-002	ETF-002	P	NO
											SLT-1	SLT-2	R	YES, NOTE 2
2-N-159	0	CK	0.75	SA	C/8	C	C	2	P	AC	SLT-1	SLT-2	R	YES, NOTE 2
2-NCR-252	0	GL	3	A	B/9	C	C	2	P	A	EF-1	EF-1	P	NO
											EF-5	EF-5	-	NO
											EF-7	EF-7	P	NO
											ET-004	ET-004	P	NO
											SLT-1	SLT-2	R	YES, NOTE 2
2-NMO-151	0	GA	3	MO	K/7	O	C	1	A	B	EF-1	EF-1	P	NO
											EF-5	EF-5	-	NO
											ET-015	ET-015	P	NO

DONALD C. COOK NUCLEAR PLANT
SECOND TEN YEAR INTERVAL
VALVE SUMMARY SHEET - UNIT 2
FLOW DIAGRAM: 2-5128A-32

RUN DATE AND TIME: 18DEC85:09:14

SYSTEM NAME: REACTOR COOLANT

VALVE						VALVE POSITION		ASME SECTION XI						
NUMBER	REV	TYPE	SIZE	ACT TYPE	F.D. COORD	POWER OPER	SAFETY FUNCT	CD CL	A/P	CAT	PRIM TEST REQUIRED	TEST PERFORMED	TEST MODE	RELIEF REQUEST(S)
2-NMO-152	0	GA	3	MO	K/7	O	C	1	A	B	EF-1	EF-1	P	NO
											EF-5	EF-5	-	NO
											ET-014	ET-014	P	NO
2-NMO-153	0	GA	3	MO	K/6	O	C	1	A	B	EF-1	EF-1	P	NO
											EF-5	EF-5	-	NO
											ET-014	ET-014	P	NO
2-NPX-151	0	GL	0.5	M	N/8	C	C	2	P	A	SLT-1	SLT-2	R	YES, NOTE 2
2-NRV-151	0	GL	3	A	K/7	C	C/O	1	A	B	EF-1	EF-4	-	NO, NOTE 3
											EF-5	EF-5	-	NO
											EF-7	EF-8	-	NO, NOTE 3
											ET-008	ET-008	-	NO
2-NRV-152	0	GL	3	A	K/7	C	C/O	1	A	B	EF-1	EF-4	-	NO, NOTE 3
											EF-5	EF-5	-	NO
											EF-7	EF-8	-	NO, NOTE 3
											ET-008	ET-008	-	NO
2-NRV-153	0	GL	3	A	K/6	C	C/O	1	A	B	EF-1	EF-4	-	NO, NOTE 3
											EF-5	EF-5	-	NO
											EF-7	EF-8	-	NO, NOTE 3
											ET-008	ET-008	-	NO
2-NSO-061	0	GL	1	SO	M/6	C	O/C	2	A	B	EF-1	EF-2	R	YES, NOTE 4
											EF-5	EF-5	-	NO, NOTE 4
											EF-7	EF-8	R	YES, NOTE 4
											ETF-002	ETF-002	R	NO

DONALD C. COOK NUCLEAR PLANT
SECOND TEN YEAR INTERVAL
VALVE SUMMARY SHEET - UNIT 2
FLOW DIAGRAM: 2-5128A-32

RUN DATE AND TIME: 18DEC85:09:14

SYSTEM NAME: REACTOR COOLANT

VALVE						VALVE POSITION		ASME SECTION XI						
NUMBER	REV	TYPE	SIZE	ACT TYPE	F.D. COORD	POWER OPER	SAFETY FUNCT	CD CL	A/P	CAT	PRIM TEST REQUIRED	TEST PERFORMED	TEST MODE	RELIEF REQUEST(S)
2-NSO-062	0	GL	1	SO	M/6	C	O/C	2	A	B	EF-1	EF-2	R	YES, NOTE 4
											EF-5	EF-5	-	NO, NOTE 4
											EF-7	EF-8	R	YES, NOTE 4
											ETF-002	ETF-002	R	NO
2-NSO-063	0	GL	1	SO	M/6	C	O/C	2	A	B	EF-1	EF-2	R	YES, NOTE 4
											EF-5	EF-5	-	NO, NOTE 4
											EF-7	EF-8	R	YES, NOTE 4
											ETF-002	ETF-002	R	NO
2-NSO-064	0	GL	1	SO	M/6	C	O/C	2	A	B	EF-1	EF-2	R	YES, NOTE 4
											EF-5	EF-5	-	NO, NOTE 4
											EF-7	EF-8	R	YES, NOTE 4
											ETF-002	ETF-002	R	NO
2-PN-275	0	CK	3	SA	B/9	C	C	2	P	AC	SLT-1	SLT-2	R	YES, NOTE 2
2-RCR-100	0	GL	0.375	A	B/7	O	C	2	A	A	EF-1	EF-1	P	NO
											EF-5	EF-5	-	NO
											EF-7	EF-7	P	NO
											ETF-002	ETF-002	P	NO
											SLT-1	SLT-2	R	YES, NOTE 2
2-RCR-101	0	GL	0.375	A	B/7	O	C	2	A	A	EF-1	EF-1	P	NO
											EF-5	EF-5	-	NO
											EF-7	EF-7	P	NO
											ETF-002	ETF-002	P	NO
											SLT-1	SLT-2	R	YES, NOTE 2

DONALD C. COOK NUCLEAR PLANT
SECOND TEN YEAR INTERVAL
VALVE SUMMARY SHEET - UNIT 2
FLOW DIAGRAM: 2-5128A-32

RUN DATE AND TIME: 18DEC85:09:14

SYSTEM NAME: REACTOR COOLANT

VALVE						VALVE POSITION		ASME SECTION XI						
NUMBER	REV	TYPE	SIZE	ACT TYPE	F.D. COORD	POWER OPER	SAFETY FUNCT	CD CL	A/P	CAT	PRIM TEST REQUIRED	TEST PERFORMED	TEST MODE	RELIEF REQUEST(S)
2-SI-189	0	CK	4	SA	D/7	C	O/C	2	A	AC	CF-1	CF-2	R	YES, NOTE 5
											SLT-1	SLT-2	R	YES, NOTE 2
2-SV-45A	0	REL	6	SA	K/6	C	O	1	A	C	TF-1	TF-1	R	NO
2-SV-45B	0	REL	6	SA	J/6	C	O	1	A	C	TF-1	TF-1	R	NO
2-SV-45C	0	REL	6	SA	H/6	C	O	1	A	C	TF-1	TF-1	R	NO
2-SV-50	0	REL	2	SA	G/3	C	O	3	A	C	TF-1	TF-1	R	NO

DONALD C. COOK NUCLEAR PLANT
SECOND TEN YEAR INTERVAL
VALVE SUMMARY SHEET - UNIT 2
FLOW DIAGRAM: 2-5129-28

RUN DATE AND TIME: 18DEC85:09:14

SYSTEM NAME: CVCS - LETDOWN & CHARGING

VALVE						VALVE POSITION		ASME SECTION XI						
NUMBER	REV	TYPE	SIZE	ACT TYPE	F.D. COORD	POWER OPER	SAFETY FUNCT	CD CL	A/P	CAT	PRIM TEST REQUIRED	TEST PERFORMED	TEST MODE	RELIEF REQUEST(S)
2-CS-292	0	CK	2	SA	H/6	C	O/C	2	A	C	CF-1	CF-2	C	YES, NOTE 1
2-CS-297-E	0	CK	2	SA	H/7	O/C	O	2	A	C	CF-1	CF-1	P	NO
2-CS-297-W	0	CK	2	SA	F/7	O/C	O	2	A	C	CF-1	CF-1	P	NO
2-CS-299-E	0	CK	4	SA	H/7	O	O/C	2	A	AC	CF-1	CF-3	P	YES, NOTE 2
											SLT-1	SLT-1	R	NO, NOTE 3
2-CS-299-W	0	CK	4	SA	F/7	O	O/C	2	A	AC	CF-1	CF-3	P	YES, NOTE 2
											SLT-1	SLT-1	R	NO, NOTE 3
2-CS-321	0	CK	3	SA	E/3	O	C/O	2	A	AC	CF-1	CF-2	-	YES, NOTE 4
											SLT-1	SLT-2	R	YES, NOTE 3
2-CS-328-L1	0	CK	3	SA	B/2	O/C	O	1	A	C	CF-1	CF-1	P	NO, NOTE 5
2-CS-328-L4	0	CK	3	SA	B/3	C/O	O	1	A	C	CF-1	CF-1	P	NO, NOTE 5
2-CS-329-L1	0	CK	3	SA	B/2	O/C	O	1	A	C	CF-1	CF-1	P	NO, NOTE 5
2-CS-329-L4	0	CK	3	SA	B/3	C/O	O	1	A	C	CF-1	CF-1	P	NO, NOTE 5
2-IMO-360	0	GA	4	MO	J/6	C	O	2	A	B	EF-1	EF-1	P	NO
											EF-5	EF-5	-	NO
											ET-009	ET-009	P	NO

DONALD C. COOK NUCLEAR PLANT
SECOND TEN YEAR INTERVAL
VALVE SUMMARY SHEET - UNIT 2

RUN DATE AND TIME: 18DEC85:09:14

SYSTEM NAME: CVCS - LETDOWN & CHARGING

FLOW DIAGRAM: 2-5129-28

VALVE						VALVE POSITION		ASME SECTION XI						
NUMBER	REV	TYPE	SIZE	ACT TYPE	F.D. COORD	POWER OPER	SAFETY FUNCT	CD CL	A/P	CAT	PRIM TEST REQUIRED	TEST PERFORMED	TEST MODE	RELIEF REQUEST(S)
2-IMO-910	0	GA	8	MO	L/5	C	O	2	A	B	EF-1	EF-1	P	NO
											EF-5	EF-5	-	NO
											ET-012	ET-012	P	NO
2-IMO-911	0	GA	8	MO	L/6	C	O	2	A	B	EF-1	EF-1	P	NO
											EF-5	EF-5	-	NO
											ET-012	ET-012	P	NO
2-QCR-300	0	GL	2	A	E/1	O	C	2	A	A	EF-1	EF-2	C	YES, NOTE 6
											EF-5	EF-5	-	NO
											EF-7	EF-8	C	NO, NOTE 6
											ET-003	ET-003	C	NO
											SLT-1	SLT-2	R	YES, NOTE 3
2-QCR-301	0	GL	2	A	E/1	O	C	2	A	A	EF-1	EF-2	C	YES, NOTE 6
											EF-5	EF-5	-	NO
											EF-7	EF-8	C	NO, NOTE 6
											ET-005	ET-005	C	NO
											SLT-1	SLT-2	R	YES, NOTE 3
2-QMO-200	0	GA	3	MO	J/3	O	O/C	2	A	B	EF-1	EF-2	C	YES, NOTE 7
											EF-5	EF-5	-	NO
											ET-012	ET-012	C	NO
2-QMO-201	0	GA	3	MO	J/3	O	O/C	2	A	B	EF-1	EF-2	C	YES, NOTE 7
											EF-5	EF-5	-	NO
											ET-012	ET-012	C	NO
2-QMO-225	0	GA	2	MO	J/7	O	O/C	2	A	B	EF-1	EF-1	P	NO
											EF-5	EF-5	-	NO
											ET-012	ET-012	P	NO

DONALD C. COOK NUCLEAR PLANT
SECOND TEN YEAR INTERVAL
VALVE SUMMARY SHEET - UNIT 2
FLOW DIAGRAM: 2-5129-28

RUN DATE AND TIME: 18DEC85:09:14

SYSTEM NAME: CVCS - LETDOWN & CHARGING

VALVE						VALVE POSITION		ASME SECTION XI						
NUMBER	REV	TYPE	SIZE	ACT TYPE	F.D. COORD	POWER OPER	SAFETY FUNCT	CD CL	A/P	CAT	PRIM TEST REQUIRED	TEST PERFORMED	TEST MODE	RELIEF REQUEST(S)
2-QMO-226	0	GA	2	MO	G/7	O	O/C	2	A	B	EF-1	EF-1	P	NO
											EF-5	EF-5	-	NO
											ET-011	ET-011	P	NO
2-QRV-200	0	GL	3	A	H/3	O	O	2	A	B	EF-1	EF-3	P	NO, NOTE 8
											EF-5	EF-5	-	NO
											EF-7	NOTE 8	-	YES, NOTE 8
											ET-NA	NOTE 8	-	YES, NOTE 8
2-QRV-251	0	GL	3	A	H/5	O	O	2	A	B	EF-1	EF-3	P	NO, NOTE 9
											EF-5	EF-5	-	NO
											EF-7	NOTE 9	-	YES, NOTE 9
											ET-NA	NOTE 9	-	YES, NOTE 9
2-QRV-61	0	GL	3	A	C/2	C	O	2	A	B	EF-1	EF-1	P	NO
											EF-5	EF-5	-	NO
											EF-7	EF-7	P	NO
											ET-008	ET-008	P	NO
2-QRV-62	0	GL	3	A	C/2	O/C	O	2	A	B	EF-1	EF-1	P	NO
											EF-5	EF-5	-	NO
											EF-7	EF-7	P	NO
											ET-009	ET-009	P	NO
2-SI-185	0	CK	8	SA	K/5	C	O	2	A	C	CF-1	CF-2	R	YES, NOTE 10
2-SV-51	0	REL	2	SA	E/2	C	O	2	A	C	TF-1	TF-1	R	NO

DONALD C. COOK NUCLEAR PLANT
SECOND TEN YEAR INTERVAL
VALVE SUMMARY SHEET - UNIT 2
FLOW DIAGRAM: 2-5129-28

RUN DATE AND TIME: 18DEC85:09:14

SYSTEM NAME: CVCS - LETDOWN & CHARGING

VALVE						VALVE POSITION		ASME SECTION XI						
NUMBER	REV	TYPE	SIZE	ACT TYPE	F.D. COORD	POWER OPER	SAFETY FUNCT	CD CL	A/P	CAT	PRIM TEST REQUIRED	TEST PERFORMED	TEST MODE	RELIEF REQUEST(S)
2-SV-52	0	REL	2	SA	K/1	C	O	2	A	C	TF-1	TF-1	R	NO
2-SV-55	0	REL	0.75	SA	K/7	C	O	2	A	C	TF-1	TF-1	R	NO
2-SV-56	0	REL	0.75	SA	L/6	C	O	2	A	C	TF-1	TF-1	R	NO

DONALD C. COOK NUCLEAR PLANT
SECOND TEN YEAR INTERVAL
VALVE SUMMARY SHEET - UNIT 2

RUN DATE AND TIME: 18DEC85:09:14

SYSTEM NAME: CVCS - LETDOWN & CHARGING

FLOW DIAGRAM: 2-5129A-18

VALVE						VALVE POSITION		ASME SECTION XI						
NUMBER	REV	TYPE	SIZE	ACT TYPE	F.D. COORD	POWER OPER	SAFETY FUNCT	CD CL	A/P	CAT	PRIM TEST REQUIRED	TEST PERFORMED	TEST MODE	RELIEF REQUEST(S)
2-QCM-250	0	GA	4	MO	C/8	O	C	2	A	A	EF-1	EF-2	C	YES, NOTE 1
											EF-5	EF-5	-	NO
											ET-015	ET-015	C	NO
											SLT-1	SLT-2	R	YES, NOTE 2
2-QCM-350	0	GA	4	MO	D/8	O	C	2	A	A	EF-1	EF-2	C	YES, NOTE 1
											EF-5	EF-5	-	NO
											ET-009	ET-009	C	NO
											SLT-1	SLT-2	R	YES, NOTE 2
2-QMO-451	0	GA	4	MO	J/5	O	C	2	A	B	EF-1	EF-2	C	YES, NOTE 3
											EF-5	EF-5	-	NO
											ET-009	ET-009	C	NO
2-QMO-452	0	GA	4	MO	J/5	O	C	2	A	B	EF-1	EF-2	C	YES, NOTE 3
											EF-5	EF-5	-	NO
											ET-006	ET-006	C	NO
2-QRV-400	0	GL	2	A	K/4	C	O	2	A	B	EF-1	EF-1	P	NO
											EF-5	EF-5	-	NO
											EF-7	EF-7	P	NO
											ET-005	ET-005	P	NO
2-SV-53	0	REL	3	SA	H/2	C	O	2	A	C	TF-1	TF-1	R	NO
2-SV-54	0	REL	2	SA	E/4	C	O	2	A	C	TF-1	TF-1	R	NO

DONALD C. COOK NUCLEAR PLANT
SECOND TEN YEAR INTERVAL
VALVE SUMMARY SHEET - UNIT 2
FLOW DIAGRAM: 2-5135-31

RUN DATE AND TIME: 18DEC85:09:14

SYSTEM NAME: COMPONENT COOLING

VALVE						VALVE POSITION		ASME SECTION XI						
NUMBER	REV	TYPE	SIZE	ACT TYPE	F.D. COORD	POWER OPER	SAFETY FUNCT	CD CL	A/P	CAT	PRIM TEST REQUIRED	TEST PERFORMED	TEST MODE	RELIEF REQUEST(S)
2-CCM-451	0	BF	8	MO	E/4	O	C	2	A	A	EF-1	EF-2	C	YES, NOTE 1
											EF-5	EF-5	-	NO
											ET-026	ET-026	C	NO
											SLT-1	SLT-2	R	YES, NOTE 2
2-CCM-452	0	BF	8	MO	E/5	O	C	2	A	A	EF-1	EF-2	C	YES, NOTE 1
											EF-5	EF-5	-	NO
											ET-023	ET-023	C	NO
											SLT-1	SLT-2	R	YES, NOTE 2
2-CCM-453	0	GL	4	MO	E/4	O	C	2	A	A	EF-1	EF-2	C	YES, NOTE 1
											EF-5	EF-5	-	NO
											ET-030	ET-030	C	NO
											SLT-1	SLT-2	R	YES, NOTE 2
2-CCM-454	0	GL	4	MO	E/5	O	C	2	A	A	EF-1	EF-2	C	YES, NOTE 1
											EF-5	EF-5	-	NO
											ET-030	ET-030	C	NO
											SLT-1	SLT-2	R	YES, NOTE 2
2-CCM-458	0	BF	8	MO	A/2	O	C	2	A	A	EF-1	EF-2	C	YES, NOTE 1
											EF-5	EF-5	-	NO
											ET-023	ET-023	C	NO
											SLT-1	SLT-2	R	YES, NOTE 2
2-CCM-459	0	BF	8	MO	B/2	O	C	2	A	A	EF-1	EF-2	C	YES, NOTE 1
											EF-5	EF-5	-	NO
											ET-024	ET-024	C	NO
											SLT-1	SLT-2	R	YES, NOTE 2

DONALD C. COOK NUCLEAR PLANT
SECOND TEN YEAR INTERVAL
VALVE SUMMARY SHEET - UNIT 2
FLOW DIAGRAM: 2-5135-31

RUN DATE AND TIME: 18DEC85:09:14

SYSTEM NAME: COMPONENT COOLING

VALVE						VALVE POSITION		ASME SECTION XI						
NUMBER	REV	TYPE	SIZE	ACT TYPE	F.D. COORD	POWER OPER	SAFETY FUNCT	CD CL	A/P	CAT	PRIM TEST REQUIRED	TEST PERFORMED	TEST MODE	RELIEF REQUEST(S)
2-CCR-455	0	GL	2	A	B/3	O	C	2	A	A	EF-1	EF-2	C	YES, NOTE 3
											EF-5	EF-5	-	NO
											EF-7	EF-8	C	NO, NOTE 3
											ET-005	ET-005	C	NO
											SLT-1	SLT-2	R	YES, NOTE 2
2-CCR-456	0	GL	2	A	D/4	O	C	2	A	A	EF-1	EF-2	C	YES, NOTE 3
											EF-5	EF-5	-	NO
											EF-7	EF-8	C	NO, NOTE 3
											ET-005	ET-005	C	NO
											SLT-1	SLT-2	R	YES, NOTE 2
2-CCR-457	0	GL	2	A	D/4	O	C	2	A	A	EF-1	EF-2	C	YES, NOTE 3
											EF-5	EF-5	-	NO
											EF-7	EF-8	C	NO, NOTE 3
											ETF-005	ETF-005	C	NO
											SLT-1	SLT-2	R	YES, NOTE 2
2-CCR-460	0	GL	3	A	C/4	O	C	2	A	A	EF-1	EF-1	P	NO
											EF-5	EF-5	-	NO
											EF-7	EF-7	P	NO
											ET-010	ET-010	P	NO
											SLT-1	SLT-2	R	YES, NOTE 2
2-CCR-462	0	GL	3	A	A/4	O	C	2	A	A	EF-1	EF-1	P	NO
											EF-5	EF-5	-	NO
											EF-7	EF-7	P	NO
											ET-009	ET-009	P	NO
											SLT-1	SLT-2	R	YES, NOTE 2

DONALD C. COOK NUCLEAR PLANT
SECOND TEN YEAR INTERVAL
VALVE SUMMARY SHEET - UNIT 2
FLOW DIAGRAM: 2-5135-31

RUN DATE AND TIME: 18DEC85:09:14

SYSTEM NAME: COMPONENT COOLING

VALVE						VALVE POSITION		ASME SECTION XI						
NUMBER	REV	TYPE	SIZE	ACT TYPE	F.D. COORD	POWER OPER	SAFETY FUNCT	CD CL	A/P	CAT	PRIM TEST REQUIRED	TEST PERFORMED	TEST MODE	RELIEF REQUEST(S)
2-CCW-135	0	CK	2.5	SA	B/3	O	C	2	A	AC	CF-1	CF-2	R	YES, NOTE 4
											SLT-1	SLT-2	R	YES, NOTE 2
2-CRV-445	0	BL	6	A	L/5	O	O/C	3	A	B	EF-1	EF-1	P	NO
											EF-5	EF-5	-	NO
											EF-7	EF-7	P	NO
											ET-034	ET-034	P	NO
2-CRV-470	0	GL	6	A	G/1	O	C	3	A	B	EF-1	EF-1	P	NO
											EF-7	NOTE 5	-	YES, NOTE 5
											ET-NA	NOTE 5	-	YES, NOTE 5
2-CRV-485	0	BF	10	A	B/7	O	C	3	A	B	EF-1	EF-1	P	NO
											EF-5	EF-5	-	NO
											EF-7	EF-7	P	NO
											ET-018	ET-018	P	NO
2-SV-122	0	REL	1	SA	D/3	C	O	3	A	C	TF-1	TF-1	R	NO
2-SV-62	0	REL	1	SA	D/3	C	O	3	A	C	TF-1	TF-1	R	NO
2-SV-63	0	REL	1	SA	E/3	C	O	3	A	C	TF-1	TF-1	R	NO
2-SV-64	0	REL	1	SA	C/3	C	O	3	A	C	TF-1	TF-1	R	NO
2-SV-65	0	REL	1	SA	H/1	C	O	3	A	C	TF-1	TF-1	R	NO

DONALD C. COOK NUCLEAR PLANT
SECOND TEN YEAR INTERVAL
VALVE SUMMARY SHEET - UNIT 2
FLOW DIAGRAM: 2-5135-31

RUN DATE AND TIME: 18DEC85:09:14

SYSTEM NAME: COMPONENT COOLING

VALVE						VALVE POSITION		ASME SECTION XI						
NUMBER	REV	TYPE	SIZE	ACT TYPE	F.D. COORD	POWER OPER	SAFETY FUNCT	CD CL	A/P	CAT	PRIM TEST REQUIRED	TEST PERFORMED	TEST MODE	RELIEF REQUEST(S)
2-SV-68	0	REL	1	SA	J/2	C	O	3	A	C	TF-1	TF-1	R	NO
2-SV-71	0	REL	1	SA	L/3	C	O	3	A	C	TF-1	TF-1	R	NO

DONALD C. COOK NUCLEAR PLANT
SECOND TEN YEAR INTERVAL
VALVE SUMMARY SHEET - UNIT 2

RUN DATE AND TIME: 18DEC85:09:14

SYSTEM NAME: COMPONENT COOLING

FLOW DIAGRAM: 2-5135A-25

VALVE						VALVE POSITION		ASME SECTION XI						
NUMBER	REV	TYPE	SIZE	ACT TYPE	F.D. COORD	POWER OPER	SAFETY FUNCT	CD CL	A/P	CAT	PRIM TEST REQUIRED	TEST PERFORMED	TEST MODE	RELIEF REQUEST(S)
2-CCW-176-E	0	CK	16	SA	L/4	C/O	O	3	A	C	CF-1	CF-1	P	NO
2-CCW-176-W	0	CK	16	SA	K/4	C/O	O	3	A	C	CF-1	CF-1	P	NO
2-CMO-410	0	BF	16	MO	H/4	C/O	O	3	A	B	EF-1	EF-1	P	NO
											EF-5	EF-5	-	NO
											ET-055	ET-055	P	NO
2-CMO-411	0	BF	18	MO	M/5	O	O/C	3	A	B	EF-1	EF-1	P	NO
											EF-5	EF-5	-	NO
											ET-053	ET-053	P	NO, NOTE 1
2-CMO-412	0	BF	16	MO	L/3	O	O/C	3	A	B	EF-1	EF-1	P	NO
											EF-5	EF-5	-	NO
											ET-054	ET-054	P	NO, NOTE 1
2-CMO-413	0	BF	18	MO	L/5	O	O/C	3	A	B	EF-1	EF-1	P	NO
											EF-5	EF-5	-	NO
											ET-053	ET-053	P	NO, NOTE 1
2-CMO-414	0	BF	16	MO	K/3	O	O/C	3	A	B	EF-1	EF-1	P	NO
											EF-5	EF-5	-	NO
											ET-054	ET-054	P	NO, NOTE 1
2-CMO-415	0	BF	16	MO	H/5	O	O/C	3	A	B	EF-1	EF-1	P	NO
											EF-5	EF-5	-	NO
											ET-054	ET-054	P	NO, NOTE 1

DONALD C. COOK NUCLEAR PLANT
SECOND TEN YEAR INTERVAL
VALVE SUMMARY SHEET - UNIT 2
FLOW DIAGRAM: 2-5135A-25

RUN DATE AND TIME: 18DEC85:09:14

SYSTEM NAME: COMPONENT COOLING

VALVE						VALVE POSITION		ASME SECTION XI						
NUMBER	REV	TYPE	SIZE	ACT TYPE	F.D. COORD	POWER OPER	SAFETY FUNCT	CD CL	A/P	CAT	PRIM TEST REQUIRED	TEST PERFORMED	TEST MODE	RELIEF REQUEST(S)
2-CMO-416	0	BF	16	MO	G/5	O	O/C	3	A	B	EF-1	EF-1	P	NO
											EF-5	EF-5	-	NO
											ET-103	ET-103	P	NO, NOTE 1
2-CMO-419	0	BF	14	MO	E/5	C	O	3	A	B	EF-1	EF-1	P	NO
											EF-5	EF-5	-	NO
											ET-053	ET-053	P	NO
2-CMO-420	0	BF	16	MO	H/4	C/O	O	3	A	B	EF-1	EF-1	P	NO
											EF-5	EF-5	-	NO
											ET-066	ET-066	P	NO
2-CMO-429	0	BF	14	MO	E/5	C	O	3	A	B	EF-1	EF-1	P	NO
											EF-5	EF-5	-	NO
											ET-054	ET-054	P	NO
2-CRV-412	0	GL	4	A	K/1	O	C	3	A	B	EF-1	EF-1	P	NO
											EF-5	EF-5	-	NO
											EF-7	EF-7	P	NO
											ET-019	ET-019	P	NO
2-SV-60	0	REL	3	SA	L/1	C	O	3	A	C	TF-1	TF-1	R	NO
2-SV-72	0	REL	1	SA	E/5	C	O	3	A	C	TF-1	TF-1	R	NO

DONALD C. COOK NUCLEAR PLANT
SECOND TEN YEAR INTERVAL
VALVE SUMMARY SHEET - UNIT 2

RUN DATE AND TIME: 18DEC85:09:14

SYSTEM NAME: COMPONENT COOLING

FLOW DIAGRAM: 2-5135B-12

VALVE						VALVE POSITION		ASME SECTION XI						
NUMBER	REV	TYPE	SIZE	ACT TYPE	F.D. COORD	POWER OPER	SAFETY FUNCT	CD CL	A/P	CAT	PRIM TEST REQUIRED	TEST PERFORMED	TEST MODE	RELIEF REQUEST(S)
2-CCM-430	0	GL	1.5	MO	D/6	C	O/C	2	A	A	EF-1	EF-1	P	NO
											EF-5	EF-5	-	NO
											ET-018	ET-018	P	NO
											SLT-1	SLT-2	R	YES, NOTE 1
2-CCM-431	0	GL	1.5	MO	D/6	C	O/C	2	A	A	EF-1	EF-1	P	NO
											EF-5	EF-5	-	NO
											ET-015	ET-015	P	NO
											SLT-1	SLT-2	R	YES, NOTE 1
2-CCM-432	0	GL	1.5	MO	D/6	C	O/C	2	A	A	EF-1	EF-1	P	NO
											EF-5	EF-5	-	NO
											ET-018	ET-018	P	NO
											SLT-1	SLT-2	R	YES, NOTE 1
2-CCM-433	0	GL	1.5	MO	D/6	C	O/C	2	A	A	EF-1	EF-1	P	NO
											EF-5	EF-5	-	NO
											ET-019	ET-019	P	NO
											SLT-1	SLT-2	R	YES, NOTE 1
2-CCR-440	0	GL	1.5	A	D/6	O	C	2	A	A	EF-1	EF-1	P	NO
											EF-5	EF-5	-	NO
											EF-7	EF-7	P	NO
											ET-008	ET-008	P	NO
											SLT-1	SLT-2	R	YES, NOTE 1
2-CCR-441	0	GL	1.5	A	D/6	O	C	2	A	A	EF-1	EF-1	P	NO
											EF-5	EF-5	-	NO
											EF-7	EF-7	P	NO
											ET-005	ET-005	P	NO
											SLT-1	SLT-2	R	YES, NOTE 1

DONALD C. COOK NUCLEAR PLANT
SECOND TEN YEAR INTERVAL
VALVE SUMMARY SHEET - UNIT 2
FLOW DIAGRAM: 2-5135B-12

RUN DATE AND TIME: 18DEC85:09:14

SYSTEM NAME: COMPONENT COOLING

VALVE						VALVE POSITION		ASME SECTION XI						
NUMBER	REV	TYPE	SIZE	ACT TYPE	F.D. COORD	POWER OPER	SAFETY FUNCT	CD CL	A/P	CAT	PRIM TEST REQUIRED	TEST PERFORMED	TEST MODE	RELIEF REQUEST(S)
2-CCW-243-25	0	CK	1	SA	C/5	O	C	2	A	AC	CF-1	CF-2	R	NO, NOTE 2
											SLT-1	SLT-2	R	YES, NOTE 1
2-CCW-243-72	0	CK	1	SA	C/5	O	C	2	A	AC	CF-1	CF-2	R	NO, NOTE 2
											SLT-1	SLT-2	R	YES, NOTE 1
2-CCW-244-25	0	CK	1	SA	C/6	O	C	2	A	AC	CF-1	CF-2	R	NO, NOTE 2
											SLT-1	SLT-2	R	YES, NOTE 1
2-CCW-244-72	0	CK	1	SA	C/6	O	C	2	A	AC	CF-1	CF-2	R	NO, NOTE 2
											SLT-1	SLT-2	R	YES, NOTE 1
2-SV-122-25B	0	REL	1.5	SA	B/6	C	O	3	A	C	TF-1	TF-1	R	NO
2-SV-122-72B	0	REL	1.5	SA	B/6	C	O	3	A	C	TF-1	TF-1	R	NO

DONALD C. COOK NUCLEAR PLANT
SECOND TEN YEAR INTERVAL
VALVE SUMMARY SHEET - UNIT 2
FLOW DIAGRAM: 2-5141-23

RUN DATE AND TIME: 18DEC85:09:14

SYSTEM NAME: NUCLEAR SAMPLING

VALVE						VALVE POSITION		ASME SECTION XI						
NUMBER	REV	TYPE	SIZE	ACT TYPE	F.D. COORD	POWER OPER	SAFETY FUNCT	CD CL	A/P	CAT	PRIM TEST REQUIRED	TEST PERFORMED	TEST MODE	RELIEF REQUEST(S)
2-ICR-5	0	GL	0.5	A	C/5	O	C	2	A	A	EF-1	EF-1	P	NO
											EF-5	EF-5	-	NO
											EF-7	EF-7	P	NO
											ETF-002	ETF-002	P	NO
											SLT-1	SLT-2	R	YES, NOTE 1
2-ICR-6	0	GL	0.5	A	D/5	O	C	2	A	A	EF-1	EF-1	P	NO
											EF-5	EF-5	-	NO
											EF-7	EF-7	P	NO
											ETF-002	ETF-002	P	NO
											SLT-1	SLT-2	R	YES, NOTE 1
2-NCR-105	0	GL	0.5	A	C/7	O	C	2	A	A	EF-1	EF-1	P	NO
											EF-5	EF-5	-	NO
											EF-7	EF-7	P	NO
											ETF-002	ETF-002	P	NO
											SLT-1	SLT-2	R	YES, NOTE 1
2-NCR-106	0	GL	0.5	A	C/7	O	C	2	A	A	EF-1	EF-1	P	NO
											EF-5	EF-5	-	NO
											EF-7	EF-7	P	NO
											ETF-002	ETF-002	P	NO
											SLT-1	SLT-2	R	YES, NOTE 1
2-NCR-107	0	GL	0.5	A	D/6	O	C	2	A	A	EF-1	EF-1	P	NO
											EF-5	EF-5	-	NO
											EF-7	EF-7	P	NO
											ETF-002	ETF-002	P	NO
											SLT-1	SLT-2	R	YES, NOTE 1

DONALD C. COOK NUCLEAR PLANT
SECOND TEN YEAR INTERVAL
VALVE SUMMARY SHEET - UNIT 2
FLOW DIAGRAM: 2-5141-23

RUN DATE AND TIME: 18DEC85:09:14

SYSTEM NAME: NUCLEAR SAMPLING

VALVE						VALVE POSITION		ASME SECTION XI						
NUMBER	REV	TYPE	SIZE	ACT TYPE	F.D. COORD	POWER OPER	SAFETY FUNCT	CD CL	A/P	CAT	PRIM TEST REQUIRED	TEST PERFORMED	TEST MODE	RELIEF REQUEST(S)
2-NCR-108	0	GL	0.5	A	D/6	O	C	2	A	A	EF-1	EF-1	P	NO
											EF-5	EF-5	-	NO
											EF-7	EF-7	P	NO
											ETF-002	ETF-002	P	NO
											SLT-1	SLT-2	R	YES, NOTE 1
2-NCR-109	0	GL	0.5	A	D/5	O	C	2	A	A	EF-1	EF-1	P	NO
											EF-5	EF-5	-	NO
											EF-7	EF-7	P	NO
											ETF-002	ETF-002	P	NO
											SLT-1	SLT-2	R	YES, NOTE 1
2-NCR-110	0	GL	0.5	A	D/6	O	C	2	A	A	EF-1	EF-1	P	NO
											EF-5	EF-5	-	NO
											EF-7	EF-7	P	NO
											ETF-002	ETF-002	P	NO
											SLT-1	SLT-2	R	YES, NOTE 1

DONALD C. COOK NUCLEAR PLANT
SECOND TEN YEAR INTERVAL
VALVE SUMMARY SHEET - UNIT 2
FLOW DIAGRAM: 2-5141A-27

RUN DATE AND TIME: 18DEC85:09:14

SYSTEM NAME: NUCLEAR SAMPLING

VALVE						VALVE POSITION		ASME SECTION XI						
NUMBER	REV	TYPE	SIZE	ACT TYPE	F.D. COORD	POWER OPER	SAFETY FUNCT	CD CL	A/P	CAT	PRIM TEST REQUIRED	TEST PERFORMED	TEST MODE	RELIEF REQUEST(S)
2-DCR-301	0	GL	0.5	A	B/2	O	C	2	A	B	EF-1	EF-1	P	NO
											EF-5	EF-5	-	NO
											EF-7	EF-7	P	NO
											ET-003	ET-003	P	NO
2-DCR-302	0	GL	0.5	A	B/3	O	C	2	A	B	EF-1	EF-1	P	NO
											EF-5	EF-5	-	NO
											EF-7	EF-7	P	NO
											ETF-002	ETF-002	P	NO
2-DCR-303	0	GL	0.5	A	B/3	O	C	2	A	B	EF-1	EF-1	P	NO
											EF-5	EF-5	-	NO
											EF-7	EF-7	P	NO
											ETF-002	ETF-002	P	NO
2-DCR-304	0	GL	0.5	A	B/3	O	C	2	A	B	EF-1	EF-1	P	NO
											EF-5	EF-5	-	NO
											EF-7	EF-7	P	NO
											ETF-002	ETF-002	P	NO
2-MCR-251	0	GL	0.5	A	B/2	O	C	2	A	B	EF-1	EF-1	P	NO
											EF-5	EF-5	-	NO
											EF-7	EF-7	P	NO
											ETF-002	ETF-002	P	NO
2-MCR-252	0	GL	0.5	A	B/2	O	C	2	A	B	EF-1	EF-1	P	NO
											EF-5	EF-5	-	NO
											EF-7	EF-7	P	NO
											ETF-002	ETF-002	P	NO

DONALD C. COOK NUCLEAR PLANT
SECOND TEN YEAR INTERVAL
VALVE SUMMARY SHEET - UNIT 2
FLOW DIAGRAM: 2-5141A-27

RUN DATE AND TIME: 18DEC85:09:14

SYSTEM NAME: NUCLEAR SAMPLING

VALVE						VALVE POSITION		ASME SECTION XI						
NUMBER	REV	TYPE	SIZE	ACT TYPE	F.D. COORD	POWER OPER	SAFETY FUNCT	CD CL	A/P	CAT	PRIM TEST REQUIRED	TEST PERFORMED	TEST MODE	RELIEF REQUEST(S)
2-MCR-253	0	GL	0.5	A	B/1	O	C	2	A	B	EF-1	EF-1	P	NO
											EF-5	EF-5	-	NO
											EF-7	EF-7	P	NO
											ETF-002	ETF-002	P	NO
2-MCR-254	0	GL	0.5	A	B/1	O	C	2	A	B	EF-1	EF-1	P	NO
											EF-5	EF-5	-	NO
											EF-7	EF-7	P	NO
											ETF-002	ETF-002	P	NO

DONALD C. COOK NUCLEAR PLANT
SECOND TEN YEAR INTERVAL
VALVE SUMMARY SHEET - UNIT 2
FLOW DIAGRAM: 2-5141D-7

RUN DATE AND TIME: 18DEC85:09:14

SYSTEM NAME: PAS CONTAINMENT HYDROGEN

VALVE						VALVE POSITION					ASME SECTION XI			
NUMBER	REV	TYPE	SIZE	ACT TYPE	F.D. COORD	POWER OPER	SAFETY FUNCT	CD CL	A/P	CAT	PRIM TEST REQUIRED	TEST PERFORMED	TEST MODE	RELIEF REQUEST(S)
2-ECR-10	0	GL	0.5	A	C/8	C	O/C	2	A	A	EF-1	EF-1	P	NO
											EF-5	EF-5	-	NO
											EF-7	EF-7	P	NO
											ETF-002	ETF-002	P	NO
											SLT-1	SLT-2	R	YES, NOTE 1
2-ECR-11	0	GL	0.5	A	A/2	C	O/C	2	A	A	EF-1	EF-1	P	NO
											EF-5	EF-5	-	NO
											EF-7	EF-7	P	NO
											ETF-002	ETF-002	P	NO
											SLT-1	SLT-2	R	YES, NOTE 1
2-ECR-12	0	GL	0.5	A	A/2	C	O/C	2	A	A	EF-1	EF-1	P	NO
											EF-5	EF-5	-	NO
											EF-7	EF-7	P	NO
											ETF-002	ETF-002	P	NO
											SLT-1	SLT-2	R	YES, NOTE 1
2-ECR-13	0	GL	0.5	A	A/1	C	O/C	2	A	A	EF-1	EF-1	P	NO
											EF-5	EF-5	-	NO
											EF-7	EF-7	P	NO
											ETF-002	ETF-002	P	NO
											SLT-1	SLT-2	R	YES, NOTE 1
2-ECR-14	0	GL	0.5	A	A/3	C	O/C	2	A	A	EF-1	EF-1	P	NO
											EF-5	EF-5	-	NO
											EF-7	EF-7	P	NO
											ETF-002	ETF-002	P	NO
											SLT-1	SLT-2	R	YES, NOTE 1

DONALD C. COOK NUCLEAR PLANT
SECOND TEN YEAR INTERVAL
VALVE SUMMARY SHEET - UNIT 2
FLOW DIAGRAM: 2-5141D-7

RUN DATE AND TIME: 18DEC85:09:14

SYSTEM NAME: PAS CONTAINMENT HYDROGEN

VALVE						VALVE POSITION		ASME SECTION XI						
NUMBER	REV	TYPE	SIZE	ACT TYPE	F.D. COORD	POWER OPER	SAFETY FUNCT	CD CL	A/P	CAT	PRIM TEST REQUIRED	TEST PERFORMED	TEST MODE	RELIEF REQUEST(S)
2-ECR-15	0	GL	0.5	A	A/1	C	O/C	2	A	A	EF-1	EF-1	P	NO
											EF-5	EF-5	-	NO
											EF-7	EF-7	P	NO
											ETF-002	ETF-002	P	NO
											SLT-1	SLT-2	R	YES, NOTE 1
2-ECR-16	0	GL	0.5	A	A/3	C	O/C	2	A	A	EF-1	EF-1	P	NO
											EF-5	EF-5	-	NO
											EF-7	EF-7	P	NO
											ETF-002	ETF-002	P	NO
											SLT-1	SLT-2	R	YES, NOTE 1
2-ECR-17	0	GL	0.5	A	A/3	C	O/C	2	A	A	EF-1	EF-1	P	NO
											EF-5	EF-5	-	NO
											EF-7	EF-7	P	NO
											ETF-002	ETF-002	P	NO
											SLT-1	SLT-2	R	YES, NOTE 1
2-ECR-18	0	GL	0.5	A	A/4	C	O/C	2	A	A	EF-1	EF-1	P	NO
											EF-5	EF-5	-	NO
											EF-7	EF-7	P	NO
											ETF-002	ETF-002	P	NO
											SLT-1	SLT-2	R	YES, NOTE 1
2-ECR-19	0	GL	0.5	A	A/4	C	O/C	2	A	A	EF-1	EF-1	P	NO
											EF-5	EF-5	-	NO
											EF-7	EF-7	P	NO
											ETF-002	ETF-002	P	NO
											SLT-1	SLT-2	R	YES, NOTE 1

DONALD C. COOK NUCLEAR PLANT
SECOND TEN YEAR INTERVAL
VALVE SUMMARY SHEET - UNIT 2
FLOW DIAGRAM: 2-5141D-7

RUN DATE AND TIME: 18DEC85:09:14

SYSTEM NAME: PAS CONTAINMENT HYDROGEN

VALVE						VALVE POSITION		ASME SECTION XI						
NUMBER	REV	TYPE	SIZE	ACT TYPE	F.D. COORD	POWER OPER	SAFETY FUNCT	CD CL	A/P	CAT	PRIM TEST REQUIRED	TEST PERFORMED	TEST MODE	RELIEF REQUEST(S)
2-ECR-20	0	GL	0.5	A	C/8	C	O/C	2	A	A	EF-1	EF-1	P	NO
											EF-5	EF-5	-	NO
											EF-7	EF-7	P	NO
											ETF-002	ETF-002	P	NO
											SLT-1	SLT-2	R	YES, NOTE 1
2-ECR-21	0	GL	0.5	A	B/2	C	O/C	2	A	A	EF-1	EF-1	P	NO
											EF-5	EF-5	-	NO
											EF-7	EF-7	P	NO
											ETF-002	ETF-002	P	NO
											SLT-1	SLT-2	R	YES, NOTE 1
2-ECR-22	0	GL	0.5	A	B/2	C	O/C	2	A	A	EF-1	EF-1	P	NO
											EF-5	EF-5	-	NO
											EF-7	EF-7	P	NO
											ETF-002	ETF-002	P	NO
											SLT-1	SLT-2	R	YES, NOTE 1
2-ECR-23	0	GL	0.5	A	B/1	C	O/C	2	A	A	EF-1	EF-1	P	NO
											EF-5	EF-5	-	NO
											EF-7	EF-7	P	NO
											ETF-002	ETF-002	P	NO
											SLT-1	SLT-2	R	YES, NOTE 1
2-ECR-24	0	GL	0.5	A	B/3	C	O/C	2	A	A	EF-1	EF-1	P	NO
											EF-5	EF-5	-	NO
											EF-7	EF-7	P	NO
											ETF-002	ETF-002	P	NO
											SLT-1	SLT-2	R	YES, NOTE 1

DONALD C. COOK NUCLEAR PLANT
SECOND TEN YEAR INTERVAL
VALVE SUMMARY SHEET - UNIT 2
FLOW DIAGRAM: 2-5141D-7

RUN DATE AND TIME: 18DEC85:09:14

SYSTEM NAME: PAS CONTAINMENT HYDROGEN

VALVE						VALVE POSITION		ASME SECTION XI						
NUMBER	REV	TYPE	SIZE	ACT TYPE	F.D. COORD	POWER OPER	SAFETY FUNCT	CD CL	A/P	CAT	PRIM TEST REQUIRED	TEST PERFORMED	TEST MODE	RELIEF REQUEST(S)
2-ECR-25	0	GL	0.5	A	B/1	C	O/C	2	A	A	EF-1	EF-1	P	NO
											EF-5	EF-5	-	NO
											EF-7	EF-7	P	NO
											ETF-002	ETF-002	P	NO
											SLT-1	SLT-2	R	YES, NOTE 1
2-ECR-26	0	GL	0.5	A	B/3	C	O/C	2	A	A	EF-1	EF-1	P	NO
											EF-5	EF-5	-	NO
											EF-7	EF-7	P	NO
											ETF-002	ETF-002	P	NO
											SLT-1	SLT-2	R	YES, NOTE 1
2-ECR-27	0	GL	0.5	A	B/3	C	O/C	2	A	A	EF-1	EF-1	P	NO
											EF-5	EF-5	-	NO
											EF-7	EF-7	P	NO
											ETF-002	ETF-002	P	NO
											SLT-1	SLT-2	R	YES, NOTE 1
2-ECR-28	0	GL	0.5	A	B/4	C	O/C	2	A	A	EF-1	EF-1	P	NO
											EF-5	EF-5	-	NO
											EF-7	EF-7	P	NO
											ETF-002	ETF-002	P	NO
											SLT-1	SLT-2	R	YES, NOTE 1
2-ECR-29	0	GL	0.5	A	B/4	C	O/C	2	A	A	EF-1	EF-1	P	NO
											EF-5	EF-5	-	NO
											EF-7	EF-7	P	NO
											ETF-002	ETF-002	P	NO
											SLT-1	SLT-2	R	YES, NOTE 1

DONALD C. COOK NUCLEAR PLANT
SECOND TEN YEAR INTERVAL
VALVE SUMMARY SHEET - UNIT 2
FLOW DIAGRAM: 2-5141D-7

RUN DATE AND TIME: 18DEC85:09:14

SYSTEM NAME: PAS CONTAINMENT HYDROGEN

VALVE						VALVE POSITION		ASME SECTION XI						
NUMBER	REV	TYPE	SIZE	ACT TYPE	F.D. COORD	POWER OPER	SAFETY FUNCT	CD CL	A/P	CAT	PRIM TEST REQUIRED	TEST PERFORMED	TEST MODE	RELIEF REQUEST(S)
2-NS-283	0	CK	0.5	SA	C/8	C	O/C	2	A	AC	CF-1	CF-1	P	NO, NOTE 2
											SLT-1	SLT-2	R	YES, NOTE 1

DONALD C. COOK NUCLEAR PLANT
SECOND TEN YEAR INTERVAL
VALVE SUMMARY SHEET - UNIT 2
FLOW DIAGRAM: 2-5142-26

RUN DATE AND TIME: 18DEC85:09:14

SYSTEM NAME: EMERGENCY CORE COOLING - SIS

VALVE						VALVE POSITION		ASME SECTION XI						
NUMBER	REV	TYPE	SIZE	ACT TYPE	F.D. COORD	POWER OPER	SAFETY FUNCT	CD CL	A/P	CAT	PRIM TEST REQUIRED	TEST PERFORMED	TEST MODE	RELIEF REQUEST(S)
2-ICM-250	0	GA	4	MO	H/2	C	O/C	2	A	A	EF-1	EF-2	C	YES, NOTE 1
											EF-5	EF-5	-	NO
											ET-012	ET-012	C	NO
											SLT-1	SLT-2	R	YES, NOTE 2
2-ICM-251	0	GA	4	MO	H/3	C	O/C	2	A	A	EF-1	EF-2	C	YES, NOTE 1
											EF-5	EF-5	-	NO
											ET-012	ET-012	C	NO
											SLT-1	SLT-2	R	YES, NOTE 2
2-ICM-260	0	GA	4	MO	C/9	O	O/C	2	A	A	EF-1	EF-1	P	NO
											EF-5	EF-5	-	NO
											ET-012	ET-012	P	NO
											SLT-1	SLT-2	R	YES, NOTE 2
2-ICM-265	0	GA	4	MO	C/8	O	O/C	2	A	A	EF-1	EF-1	P	NO
											EF-5	EF-5	-	NO
											ET-012	ET-012	P	NO
											SLT-1	SLT-2	R	YES, NOTE 2
2-IMO-255	0	GA	4	MO	J/7	C	O	2	A	B	EF-1	EF-1	P	NO
											EF-5	EF-5	-	NO
											ET-015	ET-015	P	NO
2-IMO-256	0	GA	4	MO	J/6	C	O	2	A	B	EF-1	EF-1	P	NO
											EF-5	EF-5	-	NO
											ET-012	ET-012	P	NO
2-IMO-261	0	GA	8	MO	M/8	O	O/C	2	A	B	EF-1	EF-2	C	YES, NOTE 3
											EF-5	EF-5	-	NO
											ET-015	ET-015	C	NO

DONALD C. COOK NUCLEAR PLANT
SECOND TEN YEAR INTERVAL
VALVE SUMMARY SHEET - UNIT 2

RUN DATE AND TIME: 18DEC85:09:14

SYSTEM NAME: EMERGENCY CORE COOLING - SIS

FLOW DIAGRAM: 2-5142-26

VALVE						VALVE POSITION		ASME SECTION XI						
NUMBER	REV	TYPE	SIZE	ACT TYPE	F.D. COORD	POWER OPER	SAFETY FUNCT	CD CL	A/P	CAT	PRIM TEST REQUIRED	TEST PERFORMED	TEST MODE	RELIEF REQUEST(S)
2-IMO-262	0	GL	2	MO	L/8	O	O/C	2	A	B	EF-1	EF-2	C	YES, NOTE 4
											EF-5	EF-5	-	NO
											ET-012	ET-012	C	NO
2-IMO-263	0	GL	2	MO	L/8	O	O/C	2	A	B	EF-1	EF-2	C	YES, NOTE 4
											EF-5	EF-5	-	NO
											ET-012	ET-012	C	NO
2-IMO-270	0	GA	4	MO	E/9	O	O/C	2	A	B	EF-1	EF-1	P	NO
											EF-5	EF-5	-	NO
											ET-024	ET-024	P	NO
2-IMO-275	0	GA	4	MO	E/8	O	O/C	2	A	B	EF-1	EF-1	P	NO
											EF-5	EF-5	-	NO
											ET-020	ET-020	P	NO
2-IMO-361	0	GA	4	MO	G/9	C	C/O	2	A	B	EF-1	EF-1	P	NO
											EF-5	EF-5	-	NO
											ET-009	ET-009	P	NO
2-IMO-362	0	GA	4	MO	G/9	C	C/O	2	A	B	EF-1	EF-1	P	NO
											EF-5	EF-5	-	NO
											ET-009	ET-009	P	NO
2-IRV-251	0	GL	1	A	H/5	O	C	2	A	B	EF-1	EF-1	P	NO
											EF-5	EF-5	-	NO
											EF-7	EF-7	P	NO
											ET-004	ET-004	P	NO

DONALD C. COOK NUCLEAR PLANT
SECOND TEN YEAR INTERVAL
VALVE SUMMARY SHEET - UNIT 2
FLOW DIAGRAM: 2-5142-26

RUN DATE AND TIME: 18DEC85:09:14

SYSTEM NAME: EMERGENCY CORE COOLING - SIS

VALVE						VALVE POSITION		ASME SECTION XI						
NUMBER	REV	TYPE	SIZE	ACT TYPE	F.D. COORD	POWER OPER	SAFETY FUNCT	CD CL	A/P	CAT	PRIM TEST REQUIRED	TEST PERFORMED	TEST MODE	RELIEF REQUEST(S)
2-IRV-252	0	GL	1	A	J/5	O	C	3	A	B	EF-1	EF-1	P	NO
											EF-5	EF-5	-	NO
											EF-7	EF-7	P	NO
											ET-005	ET-005	P	NO
2-IRV-255	0	GL	1	A	H/6	O	C	2	A	B	EF-1	EF-1	P	NO
											EF-5	EF-5	-	NO
											EF-7	EF-7	P	NO
											ET-004	ET-004	P	NO
2-SI-101	0	CK	8	SA	M/8	C	O	2	A	C	CF-1	CF-3	R	YES, NOTE 5
2-SI-104-N	0	CK	0.75	SA	E/9	C	O	2	A	C	CF-1	CF-1	P	NO
2-SI-104-S	0	CK	0.75	SA	J/9	C	O	2	A	C	CF-1	CF-1	P	NO
2-SI-110-N	0	CK	4	SA	E/9	C	O	2	A	C	CF-1	CF-2	R	YES, NOTE 5
2-SI-110-S	0	CK	4	SA	H/9	C	O	2	A	C	CF-1	CF-2	R	YES, NOTE 5
2-SI-126	0	CK	1	SA	H/6	O	C	2	A	C	CF-1	CF-1	P	NO
2-SI-142-L1	0	CK	1.5	SA	C/1	C	O	1	A	C	CF-1	CF-2	R	YES, NOTE 6
2-SI-142-L2	0	CK	1.5	SA	C/2	C	O	1	A	C	CF-1	CF-2	R	YES, NOTE 6

DONALD C. COOK NUCLEAR PLANT
SECOND TEN YEAR INTERVAL
VALVE SUMMARY SHEET - UNIT 2
FLOW DIAGRAM: 2-5142-26

RUN DATE AND TIME: 18DEC85:09:14

SYSTEM NAME: EMERGENCY CORE COOLING - SIS

VALVE						VALVE POSITION		ASME SECTION XI						
NUMBER	REV	TYPE	SIZE	ACT TYPE	F.D. COORD	POWER OPER	SAFETY FUNCT	CD CL	A/P	CAT	PRIM TEST REQUIRED	TEST PERFORMED	TEST MODE	RELIEF REQUEST(S)
2-SI-142-L3	0	CK	1.5	SA	C/2	C	O	1	A	C	CF-1	CF-2	R	YES, NOTE 6
2-SI-142-L4	0	CK	1.5	SA	C/1	C	O	1	A	C	CF-1	CF-2	R	YES, NOTE 6
2-SV-96	0	REL	0.75	SA	J/8	C	O	2	A	C	TF-1	TF-1	R	NO
2-SV-97	0	REL	0.75	SA	J/4	C	O	2	A	C	TF-1	TF-1	R	NO
2-SV-98-N	0	REL	0.75	SA	C/9	C	O	2	A	C	TF-1	TF-1	R	NO
2-SV-98-S	0	REL	0.75	SA	E/8	C	O	2	A	C	TF-1	TF-1	R	NO

DONALD C. COOK NUCLEAR PLANT
SECOND TEN YEAR INTERVAL
VALVE SUMMARY SHEET - UNIT 2

RUN DATE AND TIME: 18DEC85:09:14

SYSTEM NAME: EMERGENCY CORE COOLING - RHR

FLOW DIAGRAM: 2-5143-29

VALVE						VALVE POSITION		ASME SECTION XI						
NUMBER	REV	TYPE	SIZE	ACT TYPE	F.D. COORD	POWER OPER	SAFETY FUNCT	CD CL	A/P	CAT	PRIM TEST REQUIRED	TEST PERFORMED	TEST MODE	RELIEF REQUEST(S)
2-GCR-314	0	GL	1	A	G/2	O	C	2	A	A	EF-1	EF-1	P	NO
											EF-5	EF-5	-	NO
											EF-7	EF-7	P	NO
											ET-003	ET-003	P	NO
											SLT-1	SLT-2	R	YES, NOTE 1
2-ICM-129	0	GA	14	MO	E/8	C	C	1	P	A	EF-1	EF-4	-	NO, NOTE 2
											EF-5	EF-5	-	NO
											ET-121	ET-121	-	NO
											SLT-1	SLT-1	R	NO, NOTE 1
2-ICM-305	0	GA	18	MO	D/9	C	O	2	A	A	EF-1	EF-1	P	NO
											EF-5	EF-5	-	NO
											ET-049	ET-049	P	NO
											SLT-1	SLT-2	R	YES, NOTE 1
2-ICM-306	0	GA	18	MO	D/9	C	O	2	A	A	EF-1	EF-1	P	NO
											EF-5	EF-5	-	NO
											ET-049	ET-049	P	NO
											SLT-1	SLT-2	R	YES, NOTE 1
2-IMO-128	0	GA	14	MO	B/8	C	C	1	P	B	EF-1	EF-4	-	NO, NOTE 2
											EF-5	EF-5	-	NO
											ET-134	ET-134	-	NO
2-IMO-310	0	GA	14	MO	H/9	O	O/C	2	A	B	EF-1	EF-1	P	NO
											EF-5	EF-5	-	NO
											ET-148	ET-148	P	NO, NOTE 3

DONALD C. COOK NUCLEAR PLANT
SECOND TEN YEAR INTERVAL
VALVE SUMMARY SHEET - UNIT 2
FLOW DIAGRAM: 2-5143-29

RUN DATE AND TIME: 18DEC85:09:14

SYSTEM NAME: EMERGENCY CORE COOLING - RHR

VALVE						VALVE POSITION		ASME SECTION XI						
NUMBER	REV	TYPE	SIZE	ACT TYPE	F.D. COORD	POWER OPER	SAFETY FUNCT	CD CL	A/P	CAT	PRIM TEST REQUIRED	TEST PERFORMED	TEST MODE	RELIEF REQUEST(S)
2-IMO-312	0	GL	2	MO	J/5	O	O/C	2	A	B	EF-1	EF-1	P	NO
											EF-5	EF-5	-	NO
											ET-012	ET-012	P	NO
2-IMO-314	0	GA	8	MO	K/6	O	O/C	2	A	B	EF-1	EF-1	P	NO
											EF-5	EF-5	-	NO
											ET-034	ET-034	P	NO, NOTE 3
2-IMO-315	0	GA	8	MO	C/7	C	C/O	1	A	B	EF-1	EF-2	C	YES, NOTE 4
											EF-5	EF-5	-	NO
											ET-033	ET-033	C	NO
2-IMO-316	0	GA	8	MO	C/7	O	O/C	2	A	B	EF-1	EF-2	C	YES, NOTE 4
											EF-5	EF-5	-	NO
											ET-033	ET-033	C	NO
2-IMO-320	0	GA	14	MO	L/9	O	O/C	2	A	B	EF-1	EF-1	P	NO
											EF-5	EF-5	-	NO
											ET-128	ET-128	P	NO, NOTE 3
2-IMO-322	0	GL	2	MO	M/5	O	O/C	2	A	B	EF-1	EF-1	P	NO
											EF-5	EF-5	-	NO
											ET-011	ET-011	P	NO
2-IMO-324	0	GA	8	MO	M/6	O	O/C	2	A	B	EF-1	EF-1	P	NO
											EF-5	EF-5	-	NO
											ET-035	ET-035	P	NO, NOTE 3

DONALD C. COOK NUCLEAR PLANT
SECOND TEN YEAR INTERVAL
VALVE SUMMARY SHEET - UNIT 2
FLOW DIAGRAM: 2-5143-29

RUN DATE AND TIME: 18DEC85:09:14

SYSTEM NAME: EMERGENCY CORE COOLING - RHR

VALVE						VALVE POSITION		ASME SECTION XI						
NUMBER	REV	TYPE	SIZE	ACT TYPE	F.D. COORD	POWER OPER	SAFETY FUNCT	CD CL	A/P	CAT	PRIM TEST REQUIRED	TEST PERFORMED	TEST MODE	RELIEF REQUEST(S)
2-IMO-325	0	GA	8	MO	C/7	C	C/O	1	A	B	EF-1	EF-2	C	YES, NOTE 4
											EF-5	EF-5	-	NO
											ET-028	ET-028	C	NO
2-IMO-326	0	GA	8	MO	C/7	O	O/C	2	A	B	EF-1	EF-2	C	YES, NOTE 4
											EF-5	EF-5	-	NO
											ET-028	ET-028	C	NO
2-IMO-330	0	GA	8	MO	G/4	C	O	2	A	B	EF-1	EF-1	P	NO
											EF-5	EF-5	-	NO
											ET-053	ET-053	P	NO
2-IMO-331	0	GA	8	MO	L/5	C	O	2	A	B	EF-1	EF-1	P	NO
											EF-5	EF-5	-	NO
											ET-051	ET-051	P	NO
2-IMO-340	0	GA	8	MO	H/5	C	O	2	A	B	EF-1	EF-1	P	NO
											EF-5	EF-5	-	NO
											ET-015	ET-015	P	NO
2-IMO-350	0	GA	8	MO	L/5	C	O	2	A	B	EF-1	EF-1	P	NO
											EF-5	EF-5	-	NO
											ET-015	ET-015	P	NO
2-N-102	0	CK	1	SA	F/5	C	C'	2	P	AC	SLT-1	SLT-2	R	YES, NOTE 1
2-RH-108E	0	CK	8	SA	K/9	C	O	2	A	C	CF-1	CF-3	C	NO, NOTE 7

DONALD C. COOK NUCLEAR PLANT
SECOND TEN YEAR INTERVAL
VALVE SUMMARY SHEET - UNIT 2

RUN DATE AND TIME: 18DEC85:09:14

SYSTEM NAME: EMERGENCY CORE COOLING - RHR

FLOW DIAGRAM: 2-5143-29

VALVE						VALVE POSITION		ASME SECTION XI						
NUMBER	REV	TYPE	SIZE	ACT TYPE	F.D. COORD	POWER OPER	SAFETY FUNCT	CD CL	A/P	CAT	PRIM TEST REQUIRED	TEST PERFORMED	TEST MODE	RELIEF REQUEST(S)
2-RH-108W	0	CK	8	SA	N/9	C	O	2	A	C	CF-1	CF-3	C	NO, NOTE 7
2-RH-133	0	CK	8	SA	C/5	C	C	1	P	AC	CF-1	CF-2	C	YES, NOTE 8
											SLT-1	SLT-1	R	NO, NOTE 1
2-RH-134	0	CK	8	SA	C/5	C	C	1	P	AC	CF-1	CF-2	C	YES, NOTE 8
											SLT-1	SLT-1	R	NO, NOTE 1
2-SI-148	0	CK	12	SA	G/7	C	O	2	A	C	CF-1	CF-3	C	YES, NOTE 9
2-SI-151-E	0	CK	8	SA	D/7	C	O	2	A	AC	CF-1	CF-2	C	YES, NOTE 10
											SLT-1	SLT-1	R	NO, NOTE 1
2-SI-151-W	0	CK	8	SA	D/7	C	O	2	A	AC	CF-1	CF-2	C	YES, NOTE 10
											SLT-1	SLT-1	R	NO, NOTE 1
2-SI-152-N	0	CK	4	SA	D/8	C	O	2	A	AC	CF-1	CF-2	R	YES, NOTE 11
											SLT-1	SLT-1	R	NO, NOTE 1
2-SI-152-S	0	CK	4	SA	D/7	C	O	2	A	AC	CF-1	CF-2	R	YES, NOTE 11
											SLT-1	SLT-1	R	NO, NOTE 1
2-SI-158-L1	0	CK	6	SA	B/8	C	O	1	A	AC	CF-1	CF-2	C	YES, NOTE 12
											SLT-1	SLT-1	R	NO, NOTE 1
2-SI-158-L2	0	CK	6	SA	B/7	C	O	1	A	AC	CF-1	CF-2	C	YES, NOTE 12
											SLT-1	SLT-1	R	NO, NOTE 1

DONALD C. COOK NUCLEAR PLANT
SECOND TEN YEAR INTERVAL
VALVE SUMMARY SHEET - UNIT 2
FLOW DIAGRAM: 2-5143-29

RUN DATE AND TIME: 18DEC85:09:14

SYSTEM NAME: EMERGENCY CORE COOLING - RHR

VALVE						VALVE POSITION		ASME SECTION XI						
NUMBER	REV	TYPE	SIZE	ACT TYPE	F.D. COORD	POWER OPER	SAFETY FUNCT	CD CL	A/P	CAT	PRIM TEST REQUIRED	TEST PERFORMED	TEST MODE	RELIEF REQUEST(S)
2-SI-158-L3	0	CK	6	SA	B/7	C	O	1	A	AC	CF-1 SLT-1	CF-2 SLT-1	C R	YES, NOTE 12 NO, NOTE 1
2-SI-158-L4	0	CK	6	SA	B/7	C	O	1	A	AC	CF-1 SLT-1	CF-2 SLT-1	C R	YES, NOTE 12 NO, NOTE 1
2-SI-161-L1	0	CK	6	SA	B/6	C	O	1	A	AC	CF-1 SLT-1	CF-2 SLT-1	C R	YES, NOTE 6 NO, NOTE 1
2-SI-161-L2	0	CK	6	SA	B/5	C	O	1	A	AC	CF-1 SLT-1	CF-2 SLT-1	C R	YES, NOTE 6 NO, NOTE 1
2-SI-161-L3	0	CK	6	SA	B/5	C	O	1	A	AC	CF-1 SLT-1	CF-2 SLT-1	C R	YES, NOTE 6 NO, NOTE 1
2-SI-161-L4	0	CK	6	SA	B/6	C	O	1	A	AC	CF-1 SLT-1	CF-2 SLT-1	C R	YES, NOTE 6 NO, NOTE 1
2-SI-166-L1	0	CK	10	SA	C/4	C	O	1	A	AC	CF-1 SLT-1	CF-2 SLT-1	R R	YES, NOTE 5 NO, NOTE 1
2-SI-166-L2	0	CK	10	SA	C/4	C	O	1	A	AC	CF-1 SLT-1	CF-2 SLT-1	R R	YES, NOTE 5 NO, NOTE 1
2-SI-166-L3	0	CK	10	SA	C/4	C	O	1	A	AC	CF-1 SLT-1	CF-2 SLT-1	R R	YES, NOTE 5 NO, NOTE 1

DONALD C. COOK NUCLEAR PLANT
SECOND TEN YEAR INTERVAL
VALVE SUMMARY SHEET - UNIT 2

RUN DATE AND TIME: 18DEC85:09:14

SYSTEM NAME: EMERGENCY CORE COOLING - RHR

FLOW DIAGRAM: 2-5143-29

VALVE						VALVE POSITION		ASME SECTION XI						
NUMBER	REV	TYPE	SIZE	ACT TYPE	F.D. COORD	POWER OPER	SAFETY FUNCT	CD CL	A/P	CAT	PRIM TEST REQUIRED	TEST PERFORMED	TEST MODE	RELIEF REQUEST(S)
2-SI-166-L4	0	CK	10	SA	C/4	C	O	1	A	AC	CF-1	CF-2	R	YES, NOTE 5
											SLT-1	SLT-1	R	NO, NOTE 1
2-SI-170-L1	0	CK	10	SA	A/4	C	O	1	A	AC	CF-1	CF-2	R	YES, NOTE 6
											SLT-1	SLT-1	R	NO, NOTE 1
2-SI-170-L2	0	CK	10	SA	A/5	C	O/C	1	A	AC	CF-1	CF-2	R	YES, NOTE 6
											SLT-1	SLT-1	R	NO, NOTE 1
2-SI-170-L3	0	CK	10	SA	A/5	C	O/C	1	A	AC	CF-1	CF-2	R	YES, NOTE 6
											SLT-1	SLT-1	R	NO, NOTE 1
2-SI-170-L4	0	CK	10	SA	A/4	C	O	1	A	AC	CF-1	CF-2	R	YES, NOTE 6
											SLT-1	SLT-1	R	NO, NOTE 1
2-SI-171	0	GL	0.75	M	H/6	C	C	2	P	A	SLT-1	SLT-2	R	YES, NOTE 1
2-SI-172	0	GL	0.75	M	H/6	C	C	2	P	A	SLT-1	SLT-2	R	YES, NOTE 1
2-SI-194	0	GL	0.75	M	G/6	C	C	2	P	A	SLT-1	SLT-2	R	YES, NOTE 1
2-SV-100-1	0	REL	1	SA	D/1	C	O	2	A	C	TF-1	TF-1	R	NO
2-SV-100-2	0	REL	1	SA	D/1	C	O	2	A	C	TF-1	TF-1	R	NO

DONALD C. COOK NUCLEAR PLANT
SECOND TEN YEAR INTERVAL
VALVE SUMMARY SHEET - UNIT 2
FLOW DIAGRAM: 2-5143-29

RUN DATE AND TIME: 18DEC85:09:14

SYSTEM NAME: EMERGENCY CORE COOLING - RHR

VALVE						VALVE POSITION		ASME SECTION XI						
NUMBER	REV	TYPE	SIZE	ACT TYPE	F.D. COORD	POWER OPER	SAFETY FUNCT	CD CL	A/P	CAT	PRIM TEST REQUIRED	TEST PERFORMED	TEST MODE	RELIEF REQUEST(S)
2-SV-100-3	0	REL	1	SA	D/1	C	O	2	A	C	TF-1	TF-1	R	NO
2-SV-100-4	0	REL	1	SA	D/1	C	O	2	A	C	TF-1	TF-1	R	NO
2-SV-102	0	REL	0.75	SA	E/5	C	O	2	A	C	TF-1	TF-1	R	NO
2-SV-103	0	REL	3	SA	F/8	C	O	2	A	C	TF-1	TF-1	R	NO
2-SV-104E	0	REL	2	SA	G/4	C	O	2	A	C	TF-1	TF-1	R	NO
2-SV-104W	0	REL	2	SA	K/4	C	O	2	A	C	TF-1	TF-1	R	NO
2-SV-105E	0	REL	2	SA	D/9	C	O	2	A	C	TF-1	TF-1	R	NO
2-SV-105W	0	REL	2	SA	D/9	C	O	2	A	C	TF-1	TF-1	R	NO

DONALD C. COOK NUCLEAR PLANT
SECOND TEN YEAR INTERVAL
VALVE SUMMARY SHEET - UNIT 2
FLOW DIAGRAM: 2-5144-27

RUN DATE AND TIME: 18DEC85:09:14

SYSTEM NAME: CONTAINMENT SPRAY

VALVE						VALVE POSITION		ASME SECTION XI						
NUMBER	REV	TYPE	SIZE	ACT TYPE	F.D. COORD	POWER OPER	SAFETY FUNCT	CD CL	A/P	CAT	PRIM TEST REQUIRED	TEST PERFORMED	TEST MODE	RELIEF REQUEST(S)
2-CTS-103-E	0	CK	10	SA	J/9	C	O	2	A	C	CF-1	CF-3	P	YES, NOTE 1
2-CTS-103-W	0	CK	10	SA	L/9	C	O	2	A	C	CF-1	CF-3	P	YES, NOTE 1
2-CTS-109	0	VB	1	SA	M/6	C	O	2	A	C	TF-1	TF-1	R	NO
2-CTS-110	0	VB	1	SA	M/6	C	O	2	A	C	TF-1	TF-1	R	NO
2-CTS-120-E	0	CK	2	SA	H/8	C	O	2	A	C	CF-1	CF-1	P	NO
2-CTS-120-W	0	CK	2	SA	K/8	C	O	2	A	C	CF-1	CF-1	P	NO
2-CTS-127-E	0	CK	6	SA	E/5	C	O	2	A	AC	CF-1	CF-2	R	YES, NOTE 2
											SLT-1	SLT-2A	R	YES, NOTE 3
2-CTS-127-W	0	CK	6	SA	E/4	C	O	2	A	AC	CF-1	CF-2	R	YES, NOTE 2
											SLT-1	SLT-2A	R	YES, NOTE 3
2-CTS-131-E	0	CK	8	SA	E/2	C	O	2	A	AC	CF-1	CF-2	R	YES, NOTE 2
											SLT-1	SLT-2A	R	YES, NOTE 3
2-CTS-131-W	0	CK	8	SA	E/2	C	O	2	A	AC	CF-1	CF-2	R	YES, NOTE 2
											SLT-1	SLT-2A	R	YES, NOTE 3
2-CTS-138-E	0	CK	12	SA	G/9	C	O/C	2	A	C	CF-1	CF-3	P	YES, NOTE 1

DONALD C. COOK NUCLEAR PLANT
SECOND TEN YEAR INTERVAL
VALVE SUMMARY SHEET - UNIT 2
FLOW DIAGRAM: 2-5144-27

RUN DATE AND TIME: 18DEC85:09:14

SYSTEM NAME: CONTAINMENT SPRAY

VALVE						VALVE POSITION		ASME SECTION XI						
NUMBER	REV	TYPE	SIZE	ACT TYPE	F.D. COORD	POWER OPER	SAFETY FUNCT	CD CL	A/P	CAT	PRIM TEST REQUIRED	TEST PERFORMED	TEST MODE	RELIEF REQUEST(S)
2-CTS-138-W	0	CK	12	SA	J/9	C	O/C	2	A	C	CF-1	CF-3	P	YES, NOTE 1
2-IMO-202	0	GA	2.5	MO	M/7	C	O	2	A	B	EF-1	EF-1	P	NO
											EF-5	EF-5	-	NO
											ET-018	ET-018	P	NO
2-IMO-204	0	GA	2.5	MO	M/7	C	O	2	A	B	EF-1	EF-1	P	NO
											EF-5	EF-5	-	NO
											ET-018	ET-018	P	NO
2-IMO-210	0	GA	10	MO	J/8	C	O	2	A	B	EF-1	EF-1	P	NO
											EF-5	EF-5	-	NO
											ET-066	ET-066	P	NO
2-IMO-211	0	GA	10	MO	J/8	C	O	2	A	B	EF-1	EF-1	P	NO
											EF-5	EF-5	-	NO
											ET-065	ET-065	P	NO
2-IMO-212	0	GA	2	MO	H/8	O	O/C	2	A	B	EF-1	EF-1	P	NO
											EF-5	EF-5	-	NO
											ET-033	ET-033	P	NO
2-IMO-215	0	GA	12	MO	G/9	O	O/C	2	A	B	EF-1	EF-1	P	NO
											EF-5	EF-5	-	NO
											ET-074	ET-074	P	NO
2-IMO-220	0	GA	10	MO	L/8	C	O	2	A	B	EF-1	EF-1	P	NO
											EF-5	EF-5	-	NO
											ET-065	ET-065	P	NO

DONALD C. COOK NUCLEAR PLANT
SECOND TEN YEAR INTERVAL
VALVE SUMMARY SHEET - UNIT 2
FLOW DIAGRAM: 2-5144-27

RUN DATE AND TIME: 18DEC85:09:14

SYSTEM NAME: CONTAINMENT SPRAY

VALVE						VALVE POSITION		ASME SECTION XI						
NUMBER	REV	TYPE	SIZE	ACT TYPE	F.D. COORD	POWER OPER	SAFETY FUNCT	CD CL	A/P	CAT	PRIM TEST REQUIRED	TEST PERFORMED	TEST MODE	RELIEF REQUEST(S)
2-IMO-221	0	GA	10	MO	L/8	C	O	2	A	B	EF-1	EF-1	P	NO
											EF-5	EF-5	-	NO
											ET-066	ET-066	P	NO
2-IMO-222	0	GA	2	MO	L/9	O	O/C	2	A	B	EF-1	EF-1	P	NO
											EF-5	EF-5	-	NO
											ET-030	ET-030	P	NO
2-IMO-225	0	GA	12	MO	J/9	O	O/C	2	A	B	EF-1	EF-1	P	NO
											EF-5	EF-5	-	NO
											ET-074	ET-074	P	NO
2-RH-141	0	CK	8	SA	E/3	C	O	2	A	AC	CF-1	CF-2	R	YES, NOTE 2
											SLT-1	SLT-2A	R	YES, NOTE 3
2-RH-142	0	CK	8	SA	E/3	C	O	2	A	AC	CF-1	CF-2	R	YES, NOTE 2
											SLT-1	SLT-2A	R	YES, NOTE 3
2-SV-107	0	REL	1	SA	N/5	C	O	2	A	C	TF-1	TF-1	R	NO

DONALD C. COOK NUCLEAR PLANT
SECOND TEN YEAR INTERVAL
VALVE SUMMARY SHEET - UNIT 2
FLOW DIAGRAM: 2-5145-17

RUN DATE AND TIME: 18DEC85:09:14

SYSTEM NAME: CPN/WELD CHANNEL PRESSURIZATION

VALVE						VALVE POSITION		ASME SECTION XI						
NUMBER	REV	TYPE	SIZE	ACT TYPE	F.D. COORD	POWER OPER	SAFETY FUNCT	CD CL	A/P	CAT	PRIM TEST REQUIRED	TEST PERFORMED	TEST MODE	RELIEF REQUEST(S)
2-CA-181-N	0	CK	0.5	SA	F/2	C	C	2	P	AC	SLT-1	SLT-2	R	YES, NOTE 1
2-CA-181-S	0	CK	0.5	SA	F/3	C	C	2	P	AC	SLT-1	SLT-2	R	YES, NOTE 1

DONALD C. COOK NUCLEAR PLANT
SECOND TEN YEAR INTERVAL
VALVE SUMMARY SHEET - UNIT 2

RUN DATE AND TIME: 18DEC85:09:14

SYSTEM NAME: ICE CONDENSER REFRIGERATION

FLOW DIAGRAM: 2-5146B-21

VALVE						VALVE POSITION		ASME SECTION XI						
NUMBER	REV	TYPE	SIZE	ACT TYPE	F.D. COORD	POWER OPER	SAFETY FUNCT	CD CL	A/P	CAT	PRIM TEST REQUIRED	TEST PERFORMED	TEST MODE	RELIEF REQUEST(S)
2-R-156	0	CK	0.375	SA	L/4	C	O/C	2	A	AC	CF-1	CF-1	P	NO, NOTE 1
											SLT-1	SLT-2	R	YES, NOTE 2
2-R-157	0	CK	0.375	SA	L/6	C	O/C	2	A	AC	CF-1	CF-1	P	NO, NOTE 1
											SLT-1	SLT-2	R	YES, NOTE 2
2-VCR-10	0	DA	4	A	M/5	O	C	2	A	A	EF-1	EF-1	P	NO
											EF-5	EF-5	-	NO
											EF-7	EF-7	P	NO
											ET-005	ET-005	P	NO
											SLT-1	SLT-2	R	YES, NOTE 2
2-VCR-11	0	DA	4	A	L/5	O	C	2	A	A	EF-1	EF-1	P	NO
											EF-5	EF-5	-	NO
											EF-7	EF-7	P	NO
											ET-005	ET-005	P	NO
											SLT-1	SLT-2	R	YES, NOTE 2
2-VCR-20	0	DA	4	A	M/7	O	C	2	A	A	EF-1	EF-1	P	NO
											EF-5	EF-5	-	NO
											EF-7	EF-7	P	NO
											ET-005	ET-005	P	NO
											SLT-1	SLT-2	R	YES, NOTE 2
2-VCR-21	0	DA	4	A	L/7	O	C	2	A	A	EF-1	EF-1	P	NO
											EF-5	EF-5	-	NO
											EF-7	EF-7	P	NO
											ET-006	ET-006	P	NO
											SLT-1	SLT-2	R	YES, NOTE 2

DONALD C. COOK NUCLEAR PLANT
SECOND TEN YEAR INTERVAL
VALVE SUMMARY SHEET - UNIT 2
FLOW DIAGRAM: 2-5147A-32

RUN DATE AND TIME: 18DEC85:09:14

SYSTEM NAME: CONTAINMENT VENTILATION

VALVE						VALVE POSITION		ASME SECTION XI						
NUMBER	REV	TYPE	SIZE	ACT TYPE	F.D. COORD	POWER OPER	SAFETY FUNCT	CD CL	A/P	CAT	PRIM TEST REQUIRED	TEST PERFORMED	TEST MODE	RELIEF REQUEST(S)
2-SM-10	0	GA	0.5	M	A/4	C	C	2	P	A	SLT-1	SLT-2	R	YES, NOTE 1
2-SM-4	0	GA	0.5	M	A/2	C	C	2	P	A	SLT-1	SLT-2	R	YES, NOTE 1
2-SM-6	0	GA	0.5	M	A/2	C	C	2	P	A	SLT-1	SLT-2	R	YES, NOTE 1
2-SM-8	0	GA	0.5	M	A/4	C	C	2	P	A	SLT-1	SLT-2	R	YES, NOTE 1
2-VCR-101	0	BF	14	A	J/8	C	C	2	P	A	EF-1	EF-1	P	NO
											EF-5	EF-5	-	NO
											EF-7	EF-7	P	NO
											ET-005	ET-005	P	NO
											SLT-1	SLT-2	R	YES, NOTE 1
2-VCR-102	0	BF	14	A	J/9	C	C	2	P	A	EF-1	EF-1	P	NO
											EF-5	EF-5	-	NO
											EF-7	EF-7	P	NO
											ET-005	ET-005	P	NO
											SLT-1	SLT-2	R	YES, NOTE 1
2-VCR-103	0	BF	24	A	J/5	C	C	2	P	A	EF-1	EF-1	P	NO
											EF-5	EF-5	-	NO
											EF-7	EF-7	P	NO
											ET-005	ET-005	P	NO
											SLT-1	SLT-2	R	YES, NOTE 1
2-VCR-104	0	BF	30	A	J/6	C	C	2	P	A	EF-1	EF-1	P	NO
											EF-5	EF-5	-	NO
											EF-7	EF-7	P	NO
											ET-004	ET-004	P	NO
											SLT-1	SLT-2	R	YES, NOTE 1

DONALD C. COOK NUCLEAR PLANT
SECOND TEN YEAR INTERVAL
VALVE SUMMARY SHEET - UNIT 2
FLOW DIAGRAM: 2-5147A-32

RUN DATE AND TIME: 18DEC85:09:14

SYSTEM NAME: CONTAINMENT VENTILATION

VALVE						VALVE POSITION		ASME SECTION XI						
NUMBER	REV	TYPE	SIZE	ACT TYPE	F.D. COORD	POWER OPER	SAFETY FUNCT	CD CL	A/P	CAT	PRIM TEST REQUIRED	TEST PERFORMED	TEST MODE	RELIEF REQUEST(S)
2-VCR-105	0	BF	30	A	J/3	C	C	2	P	A	EF-1	EF-1	P	NO
											EF-5	EF-5	-	NO
											EF-7	EF-7	P	NO
											ET-005	ET-005	P	NO
											SLT-1	SLT-2	R	YES, NOTE 1
2-VCR-106	0	BF	24	A	J/3	C	C	2	P	A	EF-1	EF-1	P	NO
											EF-5	EF-5	-	NO
											EF-7	EF-7	P	NO
											ET-005	ET-005	P	NO
											SLT-1	SLT-2	R	YES, NOTE 1
2-VCR-107	0	BF	14	A	J/4	O/C	C	2	A	A	EF-1	EF-1	P	NO
											EF-5	EF-5	-	NO
											EF-7	EF-7	P	NO
											ET-005	ET-005	P	NO
											SLT-1	SLT-2	R	YES, NOTE 1
2-VCR-201	0	BF	14	A	J/8	C	C	2	P	A	EF-1	EF-1	P	NO
											EF-5	EF-5	-	NO
											EF-7	EF-7	P	NO
											ET-005	ET-005	P	NO
											SLT-1	SLT-2	R	YES, NOTE 1
2-VCR-202	0	BF	14	A	J/9	C	C	2	P	A	EF-1	EF-1	P	NO
											EF-5	EF-5	-	NO
											EF-7	EF-7	P	NO
											ET-005	ET-005	P	NO
											SLT-1	SLT-2	R	YES, NOTE 1

DONALD C. COOK NUCLEAR PLANT
SECOND TEN YEAR INTERVAL
VALVE SUMMARY SHEET - UNIT 2
FLOW DIAGRAM: 2-5147A-32

RUN DATE AND TIME: 18DEC85:09:14

SYSTEM NAME: CONTAINMENT VENTILATION

VALVE						VALVE POSITION		ASME SECTION XI						
NUMBER	REV	TYPE	SIZE	ACT TYPE	F.D. COORD	POWER OPER	SAFETY FUNCT	CD CL	A/P	CAT	PRIM TEST REQUIRED	TEST PERFORMED	TEST MODE	RELIEF REQUEST(S)
2-VCR-203	0	BF	24	A	J/5	C	C	2	P	A	EF-1	EF-1	P	NO
											EF-5	EF-5	-	NO
											EF-7	EF-7	P	NO
											ET-005	ET-005	P	NO
											SLT-1	SLT-2	R	YES, NOTE 1
2-VCR-204	0	BF	30	A	J/6	C	C	2	P	A	EF-1	EF-1	P	NO
											EF-5	EF-5	-	NO
											EF-7	EF-7	P	NO
											ET-005	ET-005	P	NO
											SLT-1	SLT-2	R	YES, NOTE 1
2-VCR-205	0	BF	30	A	J/3	C	C	2	P	A	EF-1	EF-1	P	NO
											EF-5	EF-5	-	NO
											EF-7	EF-7	P	NO
											ET-005	ET-005	P	NO
											SLT-1	SLT-2	R	YES, NOTE 1
2-VCR-206	0	BF	24	A	J/3	C	C	2	P	A	EF-1	EF-1	P	NO
											EF-5	EF-5	-	NO
											EF-7	EF-7	P	NO
											ET-005	ET-005	P	NO
											SLT-1	SLT-2	R	YES, NOTE 1
2-VCR-207	0	BF	14	A	J/4	O/C	C	2	A	A	EF-1	EF-1	P	NO
											EF-5	EF-5	-	NO
											EF-7	EF-7	P	NO
											ET-005	ET-005	P	NO
											SLT-1	SLT-2	R	YES, NOTE 1

DONALD C. COOK NUCLEAR PLANT
SECOND TEN YEAR INTERVAL
VALVE SUMMARY SHEET - UNIT 2
FLOW DIAGRAM: 2-5149-18

RUN DATE AND TIME: 18DEC85:09:14

SYSTEM NAME: CONTROL ROOM VENTILATION

VALVE						VALVE POSITION		ASME SECTION XI						
NUMBER	REV	TYPE	SIZE	ACT TYPE	F.D. COORD	POWER OPER	SAFETY FUNCT	CD CL	A/P	CAT	PRIM TEST REQUIRED	TEST PERFORMED	TEST MODE	RELIEF REQUEST(S)
2-DW-163-N	0	GA	2.5	M	F/2	O	O/C	3	A	B	EF-1	EF-1	P	NO
2-DW-163-S	0	GA	2.5	M	G/2	O	O/C	3	A	B	EF-1	EF-1	P	NO
2-DW-166-N	0	GA	2.5	M	E/5	O	O/C	3	A	B	EF-1	EF-1	P	NO
2-DW-166-S	0	GA	2.5	M	J/5	O	O/C	3	A	B	EF-1	EF-1	P	NO
2-VRV-315	0	3W	2.5	A	F/5	O	O	3	A	B	EF-1	EF-1	P	NO, NOTE 1
											EF-7	EF-7	P	NO, NOTE 1
											ET-NA	NOTE 1	-	YES, NOTE 1
2-VRV-325	0	3W	2.5	A	G/5	O	O	3	A	B	EF-1	EF-1	P	NO, NOTE 1
											EF-7	EF-7	P	NO, NOTE 1
											ET-NA	NOTE 1	-	YES, NOTE 1

DONALD C. COOK NUCLEAR PLANT
SECOND TEN YEAR INTERVAL
VALVE SUMMARY SHEET - UNIT 2
FLOW DIAGRAM: 2-5151A-24

RUN DATE AND TIME: 18DEC85:09:14

SYSTEM NAME: EMERGENCY DIESEL GENERATOR

VALVE						VALVE POSITION		ASME SECTION XI						
NUMBER	REV	TYPE	SIZE	ACT TYPE	F.D. COORD	POWER OPER	SAFETY FUNCT	CD CL	A/P	CAT	PRIM TEST REQUIRED	TEST PERFORMED	TEST MODE	RELIEF REQUEST(S)
2-DF-108A	0	CK	1.5	SA	L/3	C	O	3	A	C	CF-1	CF-1	P	NO, NOTE 1
2-DF-109A	0	CK	1.5	SA	K/3	C	O	3	A	C	CF-1	CF-1	P	NO, NOTE 1
2-DF-114A	0	CK	1.5	SA	J/3	C	O	3	A	C	CF-1	CF-1	P	NO, NOTE 1
2-DF-115A	0	CK	1.5	SA	H/3	C	O	3	A	C	CF-1	CF-1	P	NO, NOTE 1
2-DL-114A	0	CK	1.5	SA	B/9	O	C	3	A	C	CF-1	CF-1	P	NO, NOTE 1
2-DL-116A	0	CK	1.5	SA	B/9	C	O	3	A	C	CF-1	CF-1	P	NO, NOTE 1
2-DL-132A	0	CK	1	SA	F/9	O	C	3	A	C	CF-1	CF-1	P	NO, NOTE 1
2-DL-158A	0	CK	6	SA	G/6	C	O	3	A	C	CF-1	CF-1	P	NO, NOTE 1
2-QT-114-2AB	0	3W	6	SA	H/5	O	O	3	A	B	EF-1	NOTE 2	P	NO, NOTE 2

DONALD C. COOK NUCLEAR PLANT
SECOND TEN YEAR INTERVAL
VALVE SUMMARY SHEET - UNIT 2

RUN DATE AND TIME: 18DEC85:09:14

SYSTEM NAME: EMERGENCY DIESEL GENERATOR

FLOW DIAGRAM: 2-5151B-26

VALVE						VALVE POSITION		ASME SECTION XI						
NUMBER	REV	TYPE	SIZE	ACT TYPE	F.D. COORD	POWER OPER	SAFETY FUNCT	CD CL	A/P	CAT	PRIM TEST REQUIRED	TEST PERFORMED	TEST MODE	RELIEF REQUEST(S)
2-DG-102A	0	CK	1.5	SA	H/4	O	O/C	3	A	C	CF-1	CF-1	P	NO, NOTE 1
2-DG-104A	0	CK	1.5	SA	G/4	O	O/C	3	A	C	CF-1	CF-1	P	NO, NOTE 1
2-DG-128A	0	CK	1	SA	C/4	C	O	3	A	C	CF-1	CF-1	P	NO, NOTE 1
2-DG-130A	0	CK	1	SA	C/4	C	O	3	A	C	CF-1	CF-1	P	NO, NOTE 1
2-DG-132A	0	CK	3	SA	B/4	C	O	3	A	C	CF-1	CF-1	P	NO, NOTE 1
2-DG-134A	0	CK	3	SA	B/4	C	O	3	A	C	CF-1	CF-1	P	NO, NOTE 1
2-DG-140A	0	CK	0.5	SA	F/1	C	O/C	3	A	C	CF-1	CF-1	P	NO
2-DG-142A	0	CK	0.5	SA	F/1	C	O/C	3	A	C	CF-1	CF-1	P	NO
2-DG-146A	0	CK	2	SA	A/8	O	C	3	A	C	CF-1	CF-1	P	NO, NOTE 1
2-DG-152A	0	CK	4	SA	D/8	C	O	3	A	C	CF-1	CF-1	P	NO, NOTE 1
2-DG-154A	0	CK	4	SA	C/8	C	O	3	A	C	CF-1	CF-1	P	NO, NOTE 1
2-QT-132-2AB	0	3W	6	SA	E/8	O	O	3	A	B	EF-1	NOTE 2	P	NO, NOTE 2

DONALD C. COOK NUCLEAR PLANT
SECOND TEN YEAR INTERVAL
VALVE SUMMARY SHEET - UNIT 2
FLOW DIAGRAM: 2-5151B-26

RUN DATE AND TIME: 18DEC85:09:14

SYSTEM NAME: EMERGENCY DIESEL GENERATOR

VALVE						VALVE POSITION		ASME SECTION XI						
NUMBER	REV	TYPE	SIZE	ACT TYPE	F.D. COORD	POWER OPER	SAFETY FUNCT	CD CL	A/P	CAT	PRIM TEST REQUIRED	TEST PERFORMED	TEST MODE	RELIEF REQUEST(S)
2-SV-120-AB	0	REL	0.25	SA	G/2	C	O	3	A	C	TF-1	TF-1	R	NO
2-SV-139-AB	0	REL	1	SA	B/2	C	O	3	A	C	TF-1	TF-1	R	NO
2-SV-61-AB	0	REL	1	SA	A/8	C	O	3	A	C	TF-1	TF-1	R	NO
2-SV-78-AB1	0	REL	1	SA	E/3	C	O	3	A	C	TF-1	TF-1	R	NO
2-SV-78-AB2	0	REL	1	SA	D/3	C	O	3	A	C	TF-1	TF-1	R	NO
2-SV-79-AB1	0	REL	0.5	SA	E/1	C	O	3	A	C	TF-1	TF-1	R	NO
2-SV-79-AB2	0	REL	0.5	SA	E/1	C	O	3	A	C	TF-1	TF-1	R	NO
2-XRV-220	0	GA	1	A	B/3	C	O	3	A	B	EF-1	EF-1	P	NO
											EF-7	EF-7	P	NO
											ET-010	NOTE 3	P	YES, NOTE 3
2-XRV-221	0	GL	3	A	B/4	C	O	3	A	B	EF-1	EF-1	P	NO
											ET-010	NOTE 3	P	YES, NOTE 3
2-XRV-222	0	GL	3	A	B/4	C	O	3	A	B	EF-1	EF-1	P	NO
											ET-010	NOTE 3	P	YES, NOTE 3

DONALD C. COOK NUCLEAR PLANT
SECOND TEN YEAR INTERVAL
VALVE SUMMARY SHEET - UNIT 2

RUN DATE AND TIME: 18DEC85:09:14

SYSTEM NAME: EMERGENCY DIESEL GENERATOR

FLOW DIAGRAM: 2-5151C-24

VALVE						VALVE POSITION		ASME SECTION XI						
NUMBER	REV	TYPE	SIZE	ACT TYPE	F.D. COORD	POWER OPER	SAFETY FUNCT	CD CL	A/P	CAT	PRIM TEST REQUIRED	TEST PERFORMED	TEST MODE	RELIEF REQUEST(S)
2-DL-114C	0	CK	1.5	SA	B/9	O	C	3	A	C	CF-1	CF-1	P	NO, NOTE 1
2-DL-116C	0	CK	1.5	SA	B/9	C	O	3	A	C	CF-1	CF-1	P	NO, NOTE 1
2-DL-132C	0	CK	1	SA	F/9	O	C	3	A	C	CF-1	CF-1	P	NO, NOTE 1
2-DL-158C	0	CK	6	SA	G/5	C	O	3	A	C	CF-1	CF-1	P	NO, NOTE 1
2-QT-114-2CD	0	3W	6	SA	H/5	O	O	3	A	B	EF-1	NOTE 2	P	NO, NOTE 2

DONALD C. COOK NUCLEAR PLANT
SECOND TEN YEAR INTERVAL
VALVE SUMMARY SHEET - UNIT 2
FLOW DIAGRAM: 2-51510-26

RUN DATE AND TIME: 18DEC85:09:14

SYSTEM NAME: EMERGENCY DIESEL GENERATOR CD

VALVE						VALVE POSITION		ASME SECTION XI						
NUMBER	REV	TYPE	SIZE	ACT TYPE	F.D. COORD	POWER OPER	SAFETY FUNCT	CD CL	A/P	CAT	PRIM TEST REQUIRED	TEST PERFORMED	TEST MODE	RELIEF REQUEST(S)
2-DG-128C	0	CK	1	SA	C/3	C	O	3	A	C	CF-1	CF-1	P	NO, NOTE 1
2-DG-130C	0	CK	1	SA	C/3	C	O	3	A	C	CF-1	CF-1	P	NO, NOTE 1
2-DG-132C	0	CK	3	SA	B/4	C	O	3	A	C	CF-1	CF-1	P	NO, NOTE 1
2-DG-134C	0	CK	3	SA	B/4	C	O	3	A	C	CF-1	CF-1	P	NO, NOTE 1
2-DG-140C	0	CK	0.5	SA	F/1	C	O/C	3	A	C	CF-1	CF-1	P	NO
2-DG-142C	0	CK	0.5	SA	F/1	C	O/C	3	A	C	CF-1	CF-1	P	NO
2-DG-146C	0	CK	2	SA	A/9	O	C	3	A	C	CF-1	CF-1	P	NO, NOTE 1
2-DG-152C	0	CK	4	SA	D/9	C	O	3	A	C	CF-1	CF-1	P	NO, NOTE 1
2-DG-154C	0	CK	4	SA	C/9	C	O	3	A	C	CF-1	CF-1	P	NO, NOTE 1
2-QT-132-2CD	0	3W	6	SA	E/8	O	O	3	A	B	EF-1	NOTE 1	P	NO, NOTE 2
2-SV-120-CD	0	REL	0.25	SA	H/2	C	O	3	A	C	TF-1	TF-1	R	NO
2-SV-139-CD	0	REL	1	SA	B/2	C	O	3	A	C	TF-1	TF-1	R	NO

DONALD C. COOK NUCLEAR PLANT
SECOND TEN YEAR INTERVAL
VALVE SUMMARY SHEET - UNIT 2

RUN DATE AND TIME: 18DEC85:09:14

SYSTEM NAME: EMERGENCY DIESEL GENERATOR CD

FLOW DIAGRAM: 2-5151D-26

VALVE						VALVE POSITION		ASME SECTION XI						
NUMBER	REV	TYPE	SIZE	ACT TYPE	F.D. COORD	POWER OPER	SAFETY FUNCT	CD CL	A/P	CAT	PRIM TEST REQUIRED	TEST PERFORMED	TEST MODE	RELIEF REQUEST(S)
2-SV-61-CD	0	REL	1	SA	A/8	C	O	3	A	C	TF-1	TF-1	R	NO
2-SV-78-CD1	0	REL	1	SA	E/3	C	O	3	A	C	TF-1	TF-1	R	NO
2-SV-78-CD2	0	REL	1	SA	D/3	C	O	3	A	C	TF-1	TF-1	R	NO
2-SV-79-CD1	0	REL	0.5	SA	E/1	C	O	3	A	C	TF-1	TF-1	R	NO
2-SV-79-CD2	0	REL	0.5	SA	E/1	C	O	3	A	C	TF-1	TF-1	R	NO
2-XRV-225	0	GA	1	A	B/3	C	O	3	A	B	EF-1	EF-1	P	NO
											EF-7	EF-7	P	NO
											ET-010	NOTE 3	P	YES, NOTE 3
2-XRV-226	0	GL	3	A	B/4	C	O	3	A	B	EF-1	EF-1	P	YES, NOTE 3
											ET-010	NOTE 3	P	YES, NOTE 3
2-XRV-227	0	GL	3	A	B/4	C	O	3	A	B	EF-1	EF-1	P	YES, NOTE 3
											ET-010	NOTE 3	P	YES, NOTE 3

DONALD C. COOK NUCLEAR PLANT
SECOND TEN YEAR INTERVAL
VALVE SUMMARY SHEET - UNIT 2
FLOW DIAGRAM: 12-5115A-37

RUN DATE AND TIME: 18DEC85:09:14

SYSTEM NAME: MAKE UP & PRIMARY WATER UNIT 2

VALVE						VALVE POSITION		ASME SECTION XI						
NUMBER	REV	TYPE	SIZE	ACT TYPE	F.D. COORD	POWER OPER	SAFETY FUNCT	CD CL	A/P	CAT	PRIM TEST REQUIRED	TEST PERFORMED	TEST MODE	RELIEF REQUEST(S)
2-QCR-919	0	DA	2	A	D/7	O/C	C	2	A	A	EF-1	EF-1	P	NO
											EF-5	EF-5	-	NO
											EF-7	EF-7	P	NO
											ET-004	ET-004	P	NO
											SLT-1	SLT-2	R	YES, NOTE 1
2-QCR-920	0	DA	2	A	D/7	O/C	C	2	A	A	EF-1	EF-2	P	NO
											EF-5	EF-5	-	NO
											EF-7	EF-7	P	NO
											ET-004	ET-004	P	NO
											SLT-1	SLT-2	R	YES, NOTE 1

DONALD C. COOK NUCLEAR PLANT
SECOND TEN YEAR INTERVAL
VALVE SUMMARY SHEET - UNIT 2

RUN DATE AND TIME: 18DEC85:09:14

SYSTEM NAME: COMPRESSED AIR SYSTEM UNIT 2

FLOW DIAGRAM: 12-5120B-21

VALVE						VALVE POSITION		ASME SECTION XI						
NUMBER	REV	TYPE	SIZE	ACT TYPE	F.D. COORD	POWER OPER	SAFETY FUNCT	CD CL	A/P	CAT	PRIM TEST REQUIRED	TEST PERFORMED	TEST MODE	RELIEF REQUEST(S)
2-PA-342	0	CK	2	SA	K/7	C	C	2	P	AC	CF-1	CF-4	-	NO, NOTE 1
											SLT-1	SLT-2	R	YES, NOTE 2
2-PCR-40	0	GA	2	A	H/7	C	C	2	P	A	EF-1	EF-4	-	NO, NOTE 1
											EF-5	EF-5	-	NO
											EF-7	EF-8	-	NO, NOTE 1
											ET-003	ET-003	-	NO
											SLT-1	SLT-2	R	YES, NOTE 2
2-XCR-100	0	GL	1	A	L/3	O	C	2	A	A	EF-1	EF-2	C	YES, NOTE 3
											EF-5	EF-5	-	NO
											EF-7	EF-8	C	NO, NOTE 3
											ET-004	ET-004	C	NO
											SLT-1	SLT-2	R	YES, NOTE 2
2-XCR-101	0	GL	1	A	L/3	O	C	2	A	A	EF-1	EF-2	C	YES, NOTE 3
											EF-5	EF-5	-	NO
											EF-7	EF-8	C	NO, NOTE 3
											ET-005	ET-005	C	NO
											SLT-1	SLT-2	R	YES, NOTE 2
2-XCR-102	0	GL	1	A	L/2	O	C	2	A	A	EF-1	EF-2	C	YES, NOTE 3
											EF-5	EF-5	-	NO
											EF-7	EF-8	C	NO, NOTE 3
											ET-004	ET-004	C	NO
											SLT-1	SLT-2	R	YES, NOTE 2
2-XCR-103	0	GL	1	A	L/2	O	C	2	A	A	EF-1	EF-2	C	YES, NOTE 3
											EF-5	EF-5	-	NO
											EF-7	EF-8	C	NO, NOTE 3
											ET-004	ET-004	C	NO
											SLT-1	SLT-2	R	YES, NOTE 2

DONALD C. COOK NUCLEAR PLANT
SECOND TEN YEAR INTERVAL
VALVE SUMMARY SHEET - UNIT 2

RUN DATE AND TIME: 18DEC85:09:14

SYSTEM NAME: SPENT FUEL PIT COOLING & CLEANUP U2
FLOW DIAGRAM: 12-5136-22

VALVE						VALVE POSITION					ASME SECTION XI			
NUMBER	REV	TYPE	SIZE	ACT TYPE	F.D. COORD	POWER OPER	SAFETY FUNCT	CD CL	A/P	CAT	PRIM TEST REQUIRED	TEST PERFORMED	TEST MODE	RELIEF REQUEST(S)
2-SF-152	0	DA	2.5	M	K/9	C	C	2	P	A	SLT-1	SLT-2	R	YES, NOTE 1
2-SF-154	0	GL	2.5	M	K/9	C	C	2	P	A	SLT-1	SLT-2	R	YES, NOTE 1

DONALD C. COOK NUCLEAR PLANT
SECOND TEN YEAR INTERVAL
VALVE SUMMARY SHEET - UNIT 2

RUN DATE AND TIME: 18DEC85:09:14

SYSTEM NAME: WDS VENTS & DRAINS

FLOW DIAGRAM: 12-5137A-20

VALVE						VALVE POSITION		ASME SECTION XI						
NUMBER	REV	TYPE	SIZE	ACT TYPE	F.D. COORD	POWER OPER	SAFETY FUNCT	CD CL	A/P	CAT	PRIM TEST REQUIRED	TEST PERFORMED	TEST MODE	RELIEF REQUEST(S)
2-DCR-201	0	DA	1	A	E/4	C	C	2	P	A	EF-1	EF-1	P	NO
											EF-5	EF-5	-	NO
											EF-7	EF-7	P	NO
											ETF-002	ETF-002	P	NO
											SLT-1	SLT-2	R	YES, NOTE 1
2-DCR-202	0	DA	0.75	A	E/5	O	C	2	A	A	EF-1	EF-1	P	NO
											EF-5	EF-5	-	NO
											EF-7	EF-7	P	NO
											ETF-002	ETF-002	P	NO
											SLT-1	SLT-2	R	YES, NOTE 1
2-DCR-203	0	DA	1	A	F/4	C	C	2	P	A	EF-1	EF-1	P	NO
											EF-5	EF-5	-	NO
											EF-7	EF-7	P	NO
											ETF-002	ETF-002	P	NO
											SLT-1	SLT-2	R	YES, NOTE 1
2-DCR-204	0	DA	0.75	A	F/5	O	C	2	A	A	EF-1	EF-1	P	NO
											EF-5	EF-5	-	NO
											EF-7	EF-7	P	NO
											ET-003	ET-003	P	NO
											SLT-1	SLT-2	R	YES, NOTE 1
2-DCR-205	0	GL	4	A	E/7	O/C	C	2	A	A	EF-1	EF-1	P	NO
											EF-5	EF-5	-	NO
											EF-7	EF-7	P	NO
											ET-005	ET-005	P	NO
											SLT-1	SLT-2	R	YES, NOTE 1

DONALD C. COOK NUCLEAR PLANT
SECOND TEN YEAR INTERVAL
VALVE SUMMARY SHEET - UNIT 2
FLOW DIAGRAM: 12-5137A-20

RUN DATE AND TIME: 18DEC85:09:14

SYSTEM NAME: HDS VENTS & DRAINS

VALVE						VALVE POSITION		ASME SECTION XI						
NUMBER	REV	TYPE	SIZE	ACT TYPE	F.D. COORD	POWER OPER	SAFETY FUNCT	CD CL	A/P	CAT	PRIM TEST REQUIRED	TEST PERFORMED	TEST MODE	RELIEF REQUEST(S)
2-DCR-206	0	GL	4	A	E/8	O/C	C	2	A	A	EF-1	EF-1	P	NO
											EF-5	EF-5	-	NO
											EF-7	EF-7	P	NO
											ET-005	ET-005	P	NO
											SLT-1	SLT-2	R	YES, NOTE 1
2-DCR-207	0	DA	1	A	F/4	O	C	2	A	A	EF-1	EF-1	P	NO
											EF-5	EF-5	-	NO
											EF-7	EF-7	P	NO
											ETF-002	ETF-002	P	NO
											SLT-1	SLT-2	R	YES, NOTE 1
2-DCR-610	0	DA	2.5	A	M/9	O	C	2	A	A	EF-1	EF-1	P	NO
											EF-5	EF-5	-	NO
											EF-7	EF-7	P	NO
											ET-003	ET-003	P	NO
											SLT-1	SLT-2	R	YES, NOTE 1
2-DCR-611	0	DA	2.5	A	N/9	O	C	2	A	A	EF-1	EF-1	P	NO
											EF-5	EF-5	-	NO
											EF-7	EF-7	P	NO
											ET-004	ET-004	P	NO
											SLT-1	SLT-2	R	YES, NOTE 1
2-DCR-620	0	DA	1	A	M/9	O	C	2	A	A	EF-1	EF-1	P	NO
											EF-5	EF-5	-	NO
											EF-7	EF-7	P	NO
											ET-004	ET-004	P	NO
											SLT-1	SLT-2	R	YES, NOTE 1

DONALD C. COOK NUCLEAR PLANT
SECOND TEN YEAR INTERVAL
VALVE SUMMARY SHEET - UNIT 2
FLOW DIAGRAM: 12-5137A-20

RUN DATE AND TIME: 18DEC85:09:14

SYSTEM NAME: WDS VENTS & DRAINS

VALVE						VALVE POSITION		ASME SECTION XI						
NUMBER	REV	TYPE	SIZE	ACT TYPE	F.D. COORD	POWER OPER	SAFETY FUNCT	CD CL	A/P	CAT	PRIM TEST REQUIRED	TEST PERFORMED	TEST MODE	RELIEF REQUEST(S)
2-DCR-621	0	DA	1	A	N/9	O	C	2	A	A	EF-1	EF-1	P	NO
											EF-5	EF-5	-	NO
											EF-7	EF-7	P	NO
											ET-005	ET-005	P	NO
											SLT-1	SLT-2	R	YES, NOTE 1
2-N-160	0	CK	1	SA	F/4	O	C	2	A	AC	CF-1	CF-2	R	YES, NOTE 2
											SLT-1	SLT-2	R	YES, NOTE 1
2-SF-159	0	DA	3	M	E/5	C	C	2	P	A	SLT-1	SLT-2	R	YES, NOTE 1
2-SF-160	0	DA	3	M	F/5	C	C	2	P	A	SLT-1	SLT-2	R	YES, NOTE 1

DONALD C. COOK NUCLEAR PLANT
SECOND TEN YEAR INTERVAL
VALVE SUMMARY SHEET - UNIT 2
FLOW DIAGRAM: 12-5141C-7

RUN DATE AND TIME: 18DEC85:09:14

SYSTEM NAME: PAS LIQUID & GAS - UNIT-2

VALVE						VALVE POSITION		ASME SECTION XI						
NUMBER	REV	TYPE	SIZE	ACT TYPE	F.D. COORD	POWER OPER	SAFETY FUNCT	CD CL	A/P	CAT	PRIM TEST REQUIRED	TEST PERFORMED	TEST MODE	RELIEF REQUEST(S)
2-ECR-416	0	GL	0.5	A	M/6	C	C	2	P	A	EF-1	EF-1	P	NO
											EF-5	EF-5	-	NO
											EF-7	EF-7	P	NO
											ETF-002	ETF-002	P	NO
											SLT-1	SLT-2	R	YES, NOTE 1
2-ECR-417	0	GL	0.5	A	M/6	C	C	2	P	A	EF-1	EF-1	P	NO
											EF-5	EF-5	-	NO
											EF-7	EF-7	P	NO
											ETF-002	ETF-002	P	NO
											SLT-1	SLT-2	R	YES, NOTE 1
2-ECR-496	0	GL	0.5	A	M/8	C	C	2	P	A	EF-1	EF-1	P	NO
											EF-5	EF-5	-	NO
											EF-7	EF-7	P	NO
											ETF-002	ETF-002	P	NO
											SLT-1	SLT-2	R	YES, NOTE 1
2-ECR-497	0	GL	0.5	A	M/8	C	C	2	P	A	EF-1	EF-1	P	NO
											EF-5	EF-5	-	NO
											EF-7	EF-7	P	NO
											ETF-002	ETF-002	P	NO
											SLT-1	SLT-2	R	YES, NOTE 1
2-ECR-535	0	GL	0.5	A	M/2	C	C	2	P	A	EF-1	EF-1	P	NO
											EF-5	EF-5	-	NO
											EF-7	EF-7	P	NO
											ET-003	ET-003	P	NO
											SLT-1	SLT-2	R	YES, NOTE 1

DONALD C. COOK NUCLEAR PLANT
SECOND TEN YEAR INTERVAL
VALVE SUMMARY SHEET - UNIT 2

RUN DATE AND TIME: 18DEC85:09:14

SYSTEM NAME: PAS LIQUID & GAS - UNIT-2

FLOW DIAGRAM: 12-5141C-7

VALVE						VALVE POSITION		ASME SECTION XI						
NUMBER	REV	TYPE	SIZE	ACT TYPE	F.D. COORD	POWER OPER	SAFETY FUNCT	CD CL	A/P	CAT	PRIM TEST REQUIRED	TEST PERFORMED	TEST MODE	RELIEF REQUEST(S)
2-ECR-536	0	GL	0.5	A	L/2	C	C	2	P	A	EF-1	EF-1	P	NO
											EF-5	EF-5	-	NO
											EF-7	EF-7	P	NO
											ET-003	ET-003	P	NO
											SLT-1	SLT-2	R	YES, NOTE 1

DONALD C. COOK NUCLEAR PLANT
SECOND TEN YEAR INTERVAL
VALVE SUMMARY SHEET - UNIT 2

RUN DATE AND TIME: 18DEC85:09:14

SYSTEM NAME: PAL SAMPLING & INST. PANELS - U-2
FLOW DIAGRAM: 12-5141F-3

VALVE						VALVE POSITION		ASME SECTION XI						
NUMBER	REV	TYPE	SIZE	ACT TYPE	F.D. COORD	POWER OPER	SAFETY FUNCT	CD CL	A/P	CAT	PRIM TEST REQUIRED	TEST PERFORMED	TEST MODE	RELIEF REQUEST(S)
2-ECR-31	0	GL	1	A	B/3	O	C	2	A	A	EF-1	EF-2	C	YES, NOTE 1
											EF-5	EF-5	-	NO
											EF-7	EF-8	C	NO, NOTE 1
											ET-005	ET-005	C	NO
											SLT-1	SLT-2	R	YES, NOTE 2
2-ECR-32	0	GL	1	A	B/3	O	C	2	A	A	EF-1	EF-2	C	YES, NOTE 1
											EF-5	EF-5	-	NO
											EF-7	EF-8	C	NO, NOTE 1
											ET-005	ET-005	C	NO
											SLT-1	SLT-2	R	YES, NOTE 2
2-ECR-33	0	GL	0.75	A	B/2	O	C	2	A	A	EF-1	EF-2	C	YES, NOTE 1
											EF-5	EF-5	-	NO
											EF-7	EF-8	C	NO, NOTE 1
											ET-004	ET-004	C	NO
											SLT-1	SLT-2	R	YES, NOTE 2
2-ECR-35	0	GL	1	A	B/2	O	C	2	A	A	EF-1	EF-2	C	YES, NOTE 1
											EF-5	EF-5	-	NO
											EF-7	EF-8	C	NO, NOTE 1
											ET-004	ET-004	C	NO
											SLT-1	SLT-2	R	YES, NOTE 2
2-ECR-36	0	GL	1	A	B/3	O	C	2	A	A	EF-1	EF-2	C	YES, NOTE 1
											EF-5	EF-5	-	NO
											EF-7	EF-8	C	NO, NOTE 1
											ET-004	ET-004	C	NO
											SLT-1	SLT-2	R	YES, NOTE 2

DONALD C. COOK NUCLEAR PLANT
SECOND TEN YEAR INTERVAL
VALVE SUMMARY SHEET - UNIT 2

RUN DATE AND TIME: 18DEC85:09:14

SYSTEM NAME: PAL SAMPLING & INST. PANELS - U-2

FLOW DIAGRAM: 12-5141F-3

VALVE						VALVE POSITION		ASME SECTION XI						
NUMBER	REV	TYPE	SIZE	ACT TYPE	F.D. COORD	POWER OPER	SAFETY FUNCT	CD CL	A/P	CAT	PRIM TEST REQUIRED	TEST PERFORMED	TEST MODE	RELIEF REQUEST(S)
2-SM-1	0	CK	1	SA	A/3	O	C	2	A	AC	CF-1	CF-2	R	YES, NOTE 3
											SLT-1	SLT-2	R	YES, NOTE 2

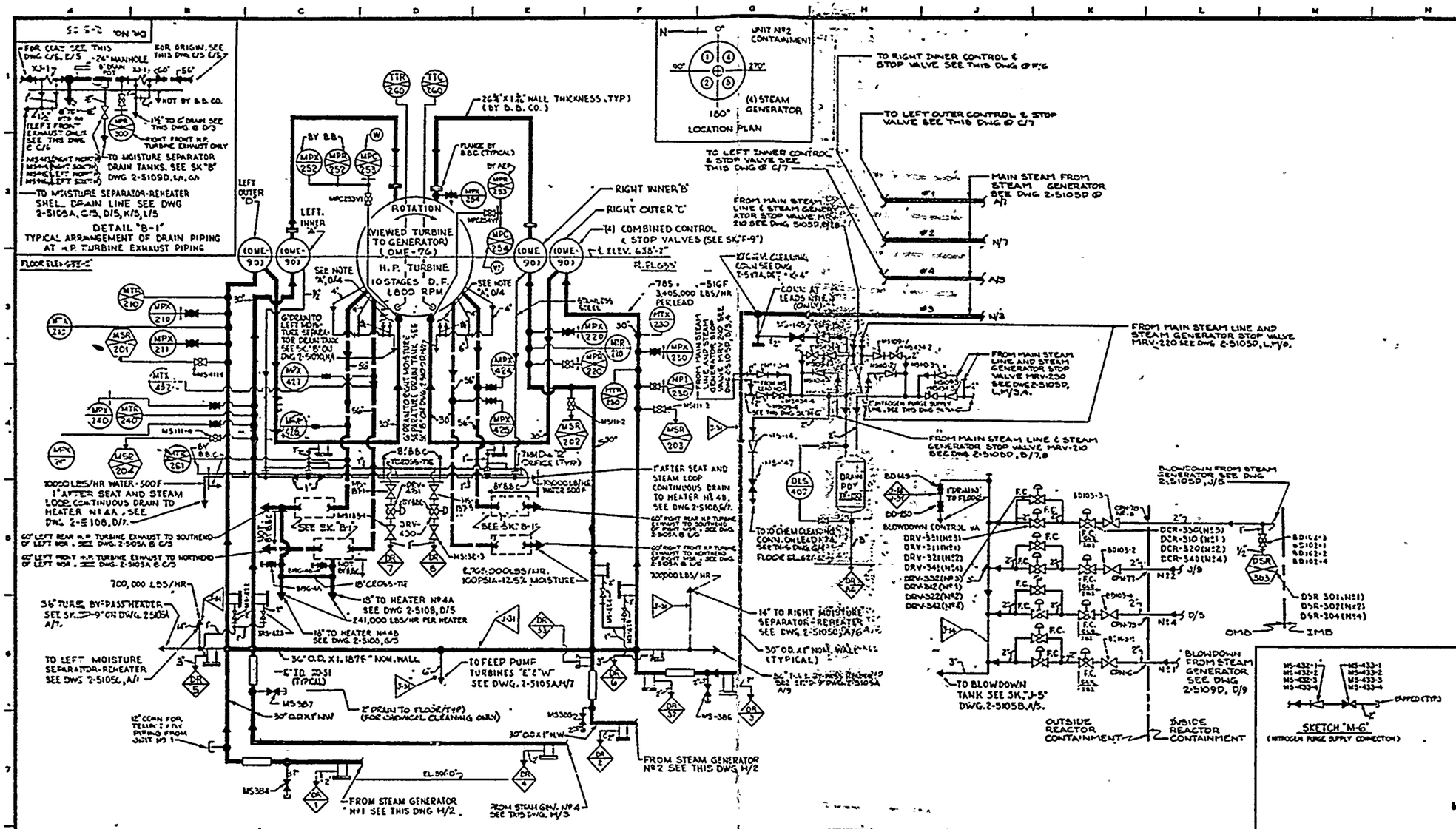

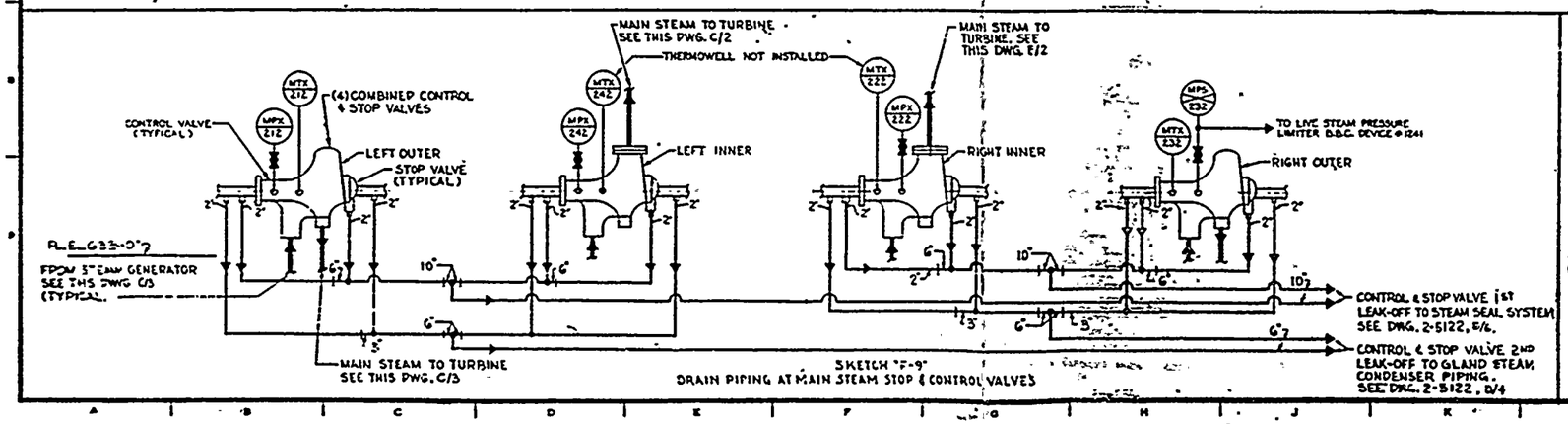

GENERAL NOTES

LEGEND

- MAIN STEAM
- H.P. TURBINE EXHAUST (BY BROWN BOVERI)
- AUX. PIPING

FOR VALVE, INSTRUMENT, SAMPLING, PIPE MATERIAL AND OTHER SYMBOLS NOT EXPLAINED ON THIS DWG., AND FOR MARK NUMBER CODES, SEE DWG. 5104

(W) BY WESTINGHOUSE

QUANTITIES FROM BROWN BOVERI HEAT BALANCE D 10240/0 DATED 12-17-68 FOR MAXIMUM EXPECTED REACTOR POWER (3391 MWt)

NOTE "A" C/3, E/3
1½" DRAIN TO H.P. TURBINE EXHAUST PIPING EXPANSION JOINT. SEE THIS DWG SK "B-1"

NOTE "B"
ALL EQUIPMENT S.C. EXCEPT AS NOTED.

NOTE "C"
FOR CODE CLASS E INSTRUMENT CONNECTIONS THE ISI BOUNDARY EXTENDS TO AND INCLUDES THE FIRST ROOT VALVE.

NOTE "D"
SEE DWG 2-5108 FOR CONTINUATION OF DRAINS @ SEE DWG. 2-5109C FOR TERMINATION OF DRAINS @ DRIP RECEIVER "A".

THE UNIT PREFIX DESIGNATION FOR EACH COMPONENT IDENTIFICATION NUMBER IS "2" UNLESS OTHERWISE NOTED.

HAND OPERATED VALVE IDENTIFICATION NUMBERS

1. ONLY "UNIQUE VALVE NUMBERS" APPEAR ON THIS DRAWING. SEE SEPARATE VALVE IDENTIFICATION LIST FOR EQUIVALENT DESIGN (MCR) NUMBERS.
2. "TAG" NUMBERS MODIFIED FOR DRAWING USE AS FOLLOWS: TAG Nº: 2-MSW-V109-W APPEARS AS: MSW109W
3. INSTRUMENT ROOT VALVE MARK Nº'S NOT SHOWN ON DRAWING (SEE VALVE IDENTIFICATION LIST) DERIVED BY ADDING TO INSTRUMENT NUMBER: FOR SINGLE IMPULSE: V; FOR DOUBLE IMPULSE: V; UPSTREAM V; DOWNSTREAM

DATE	NO.	APPROVED
10-2-85	33	

FOR REVISION DESCRIPTION SEE SEPARATE REVISION RECORD - FOR THIS DRAWING

INDIANA & MICHIGAN ELECTRIC CO.
DONALD C. COOK NUCLEAR PLANT
INDIANA MICHIGAN

FLOW DIAGRAM
MAIN STEAM
UNIT Nº 2
SHEET 1 OF 4

Dr. No. 2-5105-33

AMERICAN ELECTRIC POWER SERVICE CORP.
2 BROADWAY NEW YORK

TI APERTURE CARD

Also Available On Aperture Card

8601080550-01

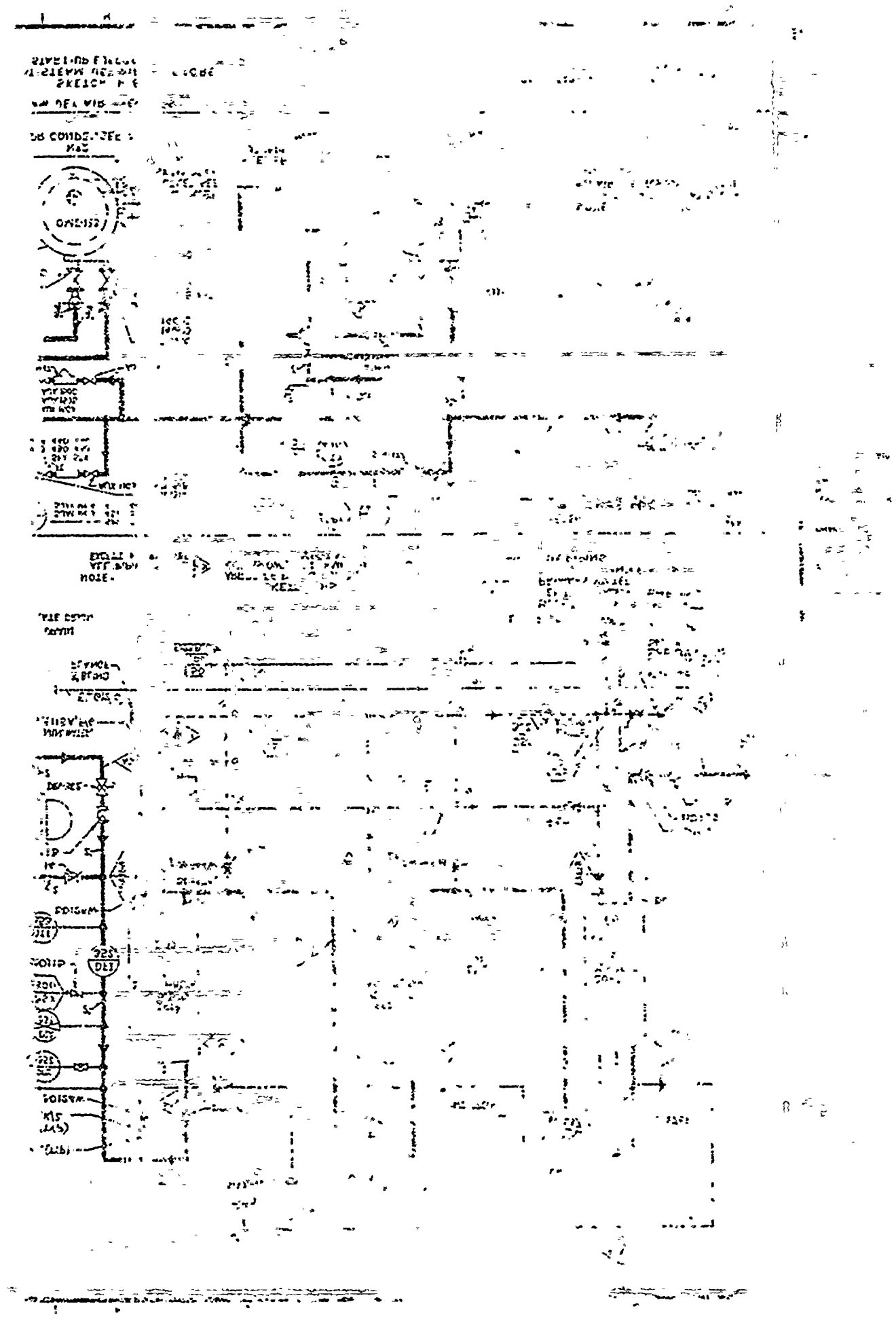

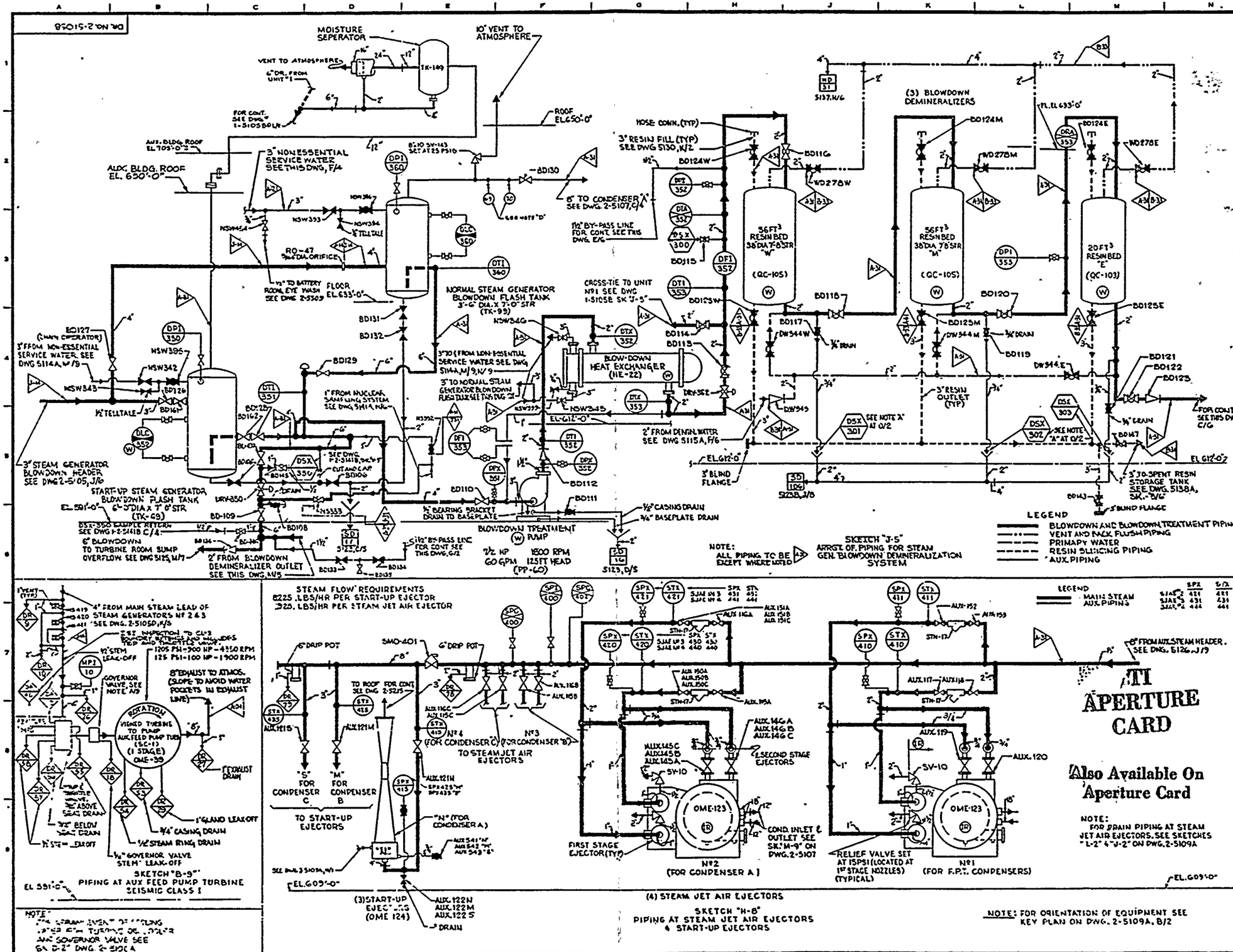

8601080550-02

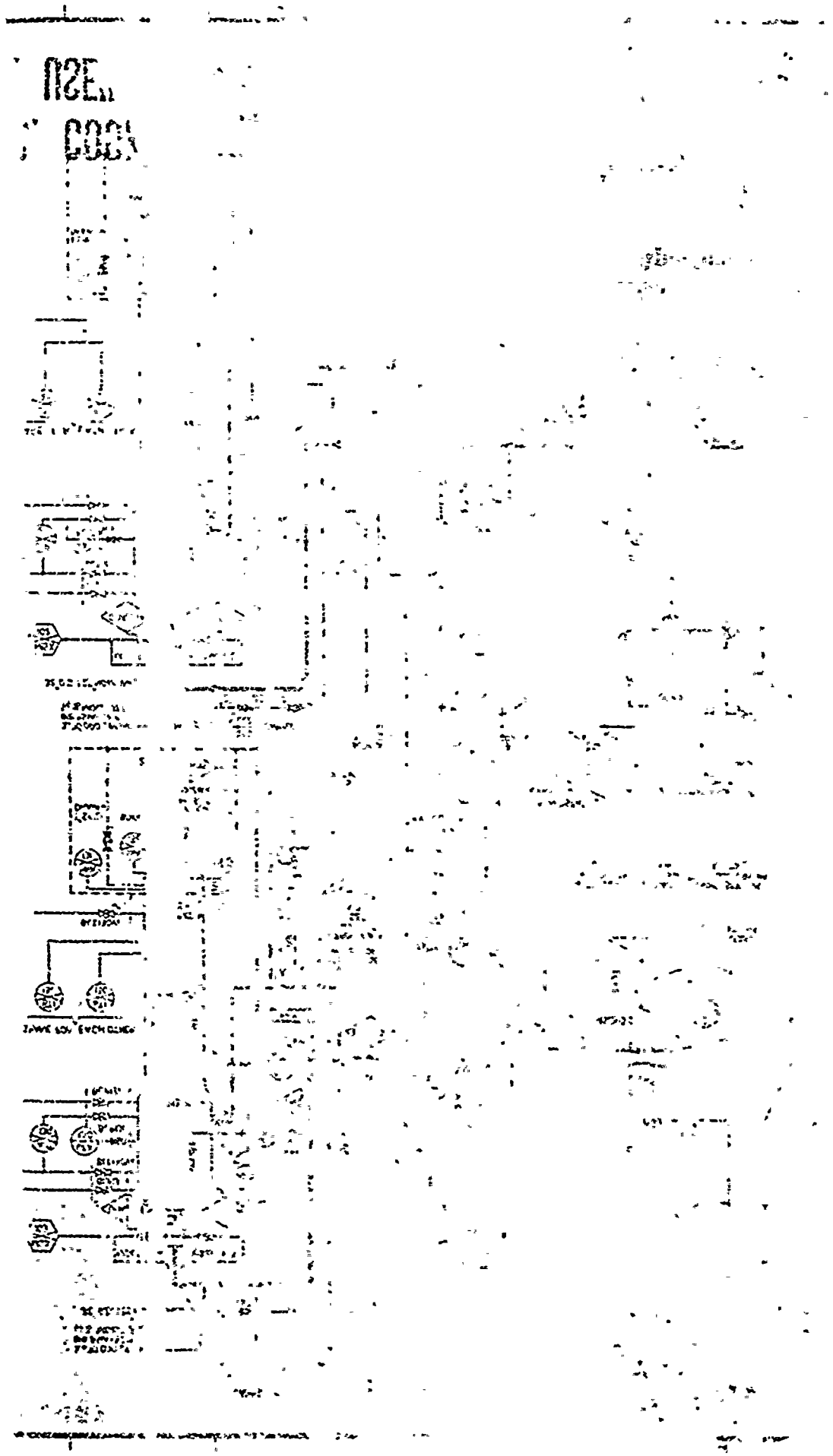

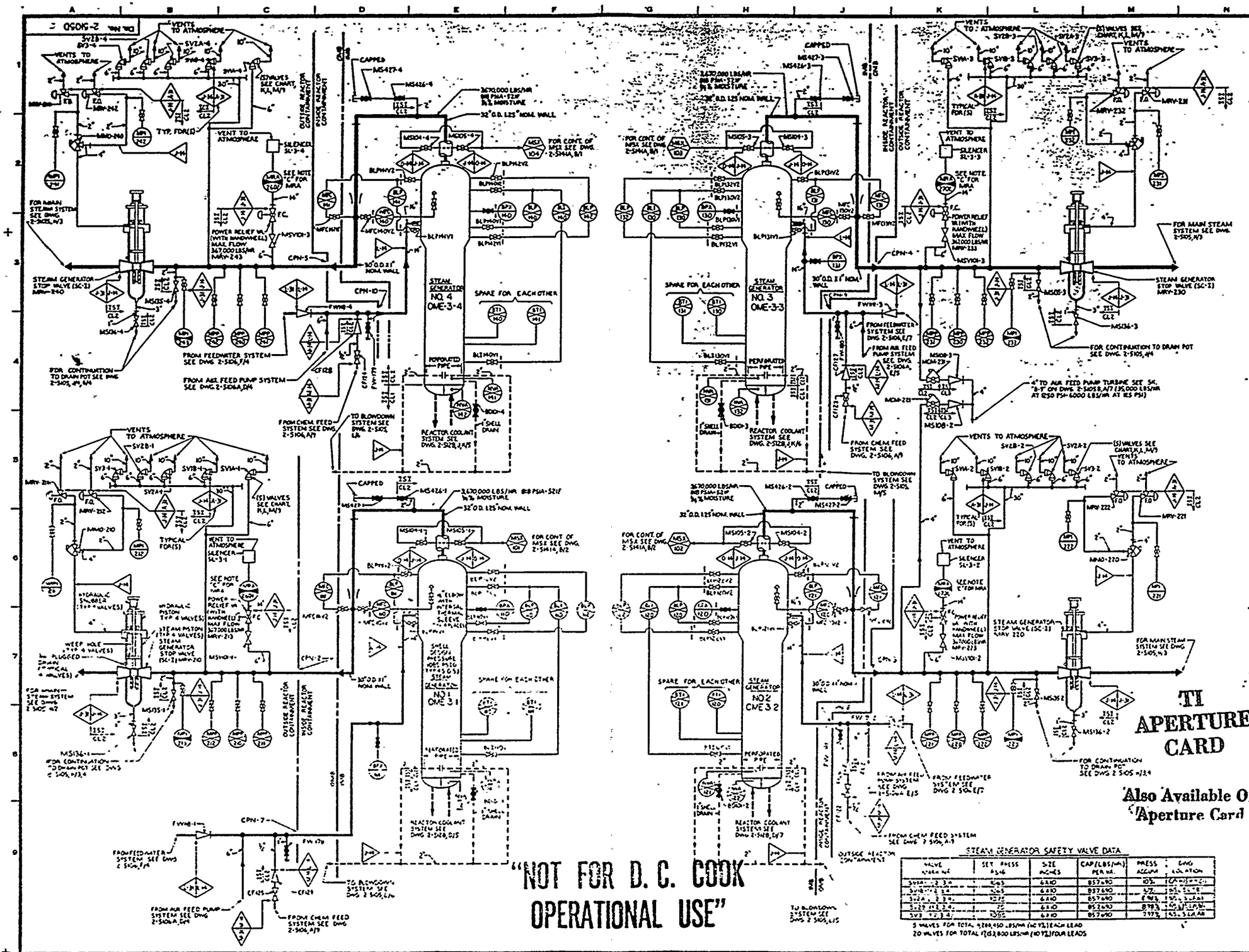

GENERAL NOTES

LEGEND

- MAIN STEAM
- FEEDWATER
- REACTOR COOLANT
- AUX. PIPING
- BLOWDOWN

FOR VALVE, INSTRUMENT, SAMPLING, PIPE MATERIAL AND OTHER SYMBOLS NOT EXPLAINED ON THIS DWG. AND FOR MAIN NUMBER CODES, SEE DWG. 5104.

NOTE "A"
ALL EQUIPMENT S.C. 2 EXCEPT AS NOTED.

NOTE "B"
FOR CODE CLASS 2 INSTRUMENT & SAMPLE CONNECTIONS THE B4 BOUNDARY EXTENDS TO AND INCLUDES THE FIRST ROOT VALVE.

NOTE "C"
DETECTOR IS IN PROXIMITY TO PIPE BUT NOT PHYSICALLY ATTACHED. FOR DETAIL SEE DWG. 2-5049, SK "B-8"

HAND OPERATED VALVE IDENTIFICATION NUMBERS

1. ONLY "UNIQUE VALVE NUMBERS" APPEAR ON THIS DRAWING. SEE SEPARATE VALVE IDENTIFICATION LIST FOR EQUIVALENT DESIGN (MOV) NUMBERS.
2. "IAC" NUMBERS MODIFIED FOR DRAWING USE AS FOLLOWS: IAC NO. 2-HSM VIOS-W APPEARS AS 2 HSMOSW
3. INSTRUMENT ROOT VALVE MARK NO'S NOT SHOWN ON DRAWING (SEE VALVE IDENTIFICATION LIST) DERIVED BY ADDING TO INSTRUMENT NUMBER FOR SINGLE IMPULSE: V1 FOR DOUBLE IMPULSE: V1 UPSTREAM V2 DOWNSTREAM

NOTES

THE UNIT PREFIX DESIGNATION FOR EACH COMPONENT IDENTIFICATION NO IS "2" UNLESS OTHERWISE NOTED.

DATE	NO	APPROVED
1-17-85	0	

FOR REVISION DESCRIPTION SEE SEPARATE REVISION RECORD FOR THIS DRAWING

INDIANA & MICHIGAN ELECTRIC CO.
DONALD C. COOK NUCLEAR PLANT
BRIDGMAN MICHIGAN

FLOW DIAGRAM
STEAM GENERATING SYSTEM
UNIT NO 2

DR NO 2-5050-0

AMERICAN ELECTRIC POWER SERVICE CORP.

STEAM GENERATOR SAFETY VALVE DATA

VALVE MARK NO	SET PRESS PSIG	SIZE INCHES	CAP (LBS/HR) PER VL	PRESS ACCUM	DWG LOCATION
SV1A-1, 2, 3, 4	1065	6X10	857690	10%	[illegible]
SV1B-1, 2, 3, 4	1065	6X10	857690	3%	[illegible]
SV2A-1, 2, 3, 4	1025	6X10	857690	6.9%	[illegible]
SV2B-1, 2, 3, 4	1025	6X10	857690	8.9%	[illegible]
SV3 1, 2, 3, 4	1005	6X10	857690	7.9%	[illegible]

5 VALVES FOR TOTAL 4,288,450 LBS/HR (60%) EACH LEAD
20 VALVES FOR TOTAL 17,153,800 LBS/HR (60%) FOUR LEADS

TI APERTURE CARD

Also Available On Aperture Card

"NOT FOR D. C. COOK OPERATIONAL USE"

8601080550 -03

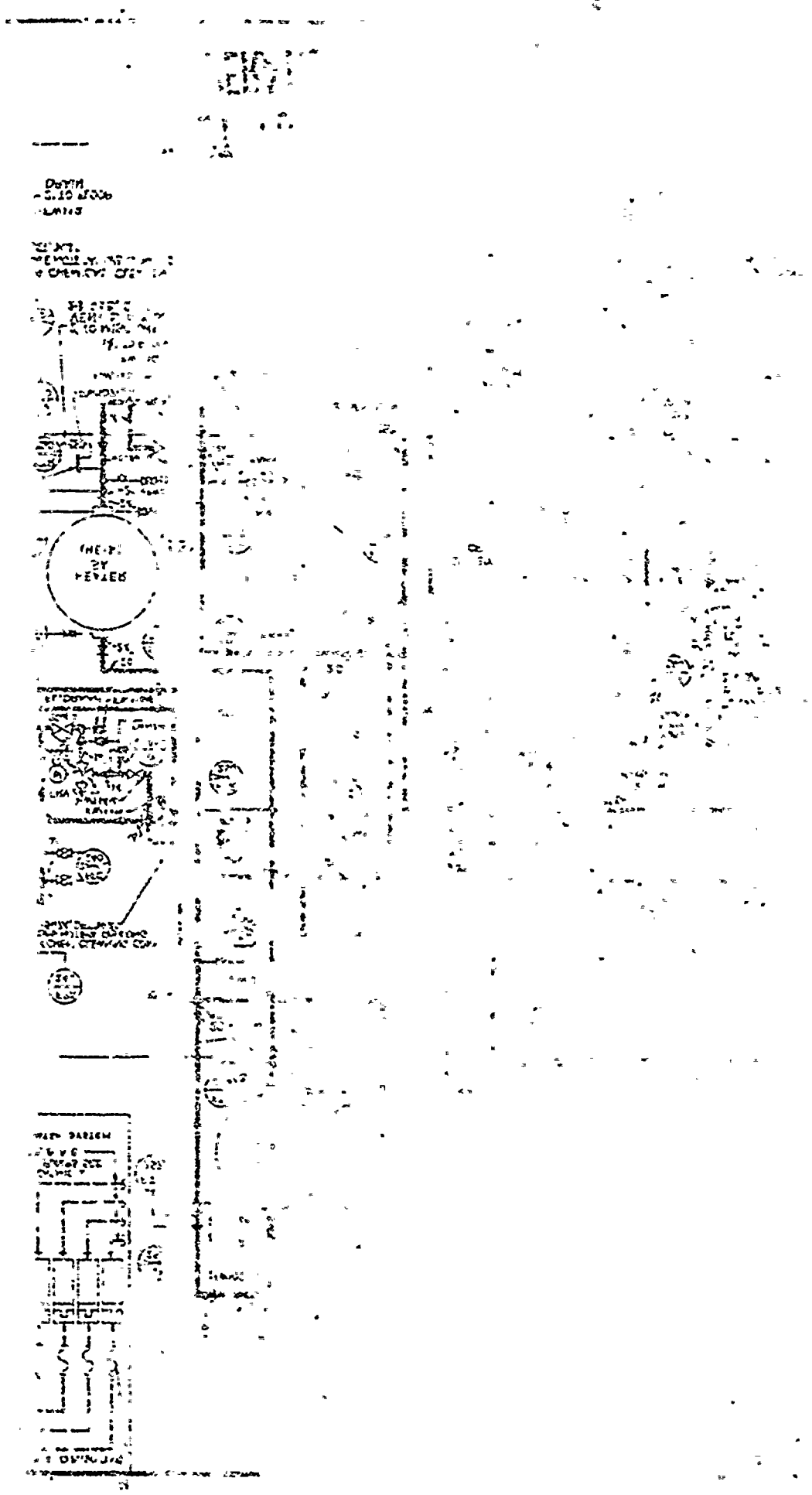

TI APERTURE CARD

Also Available On Aperture Card

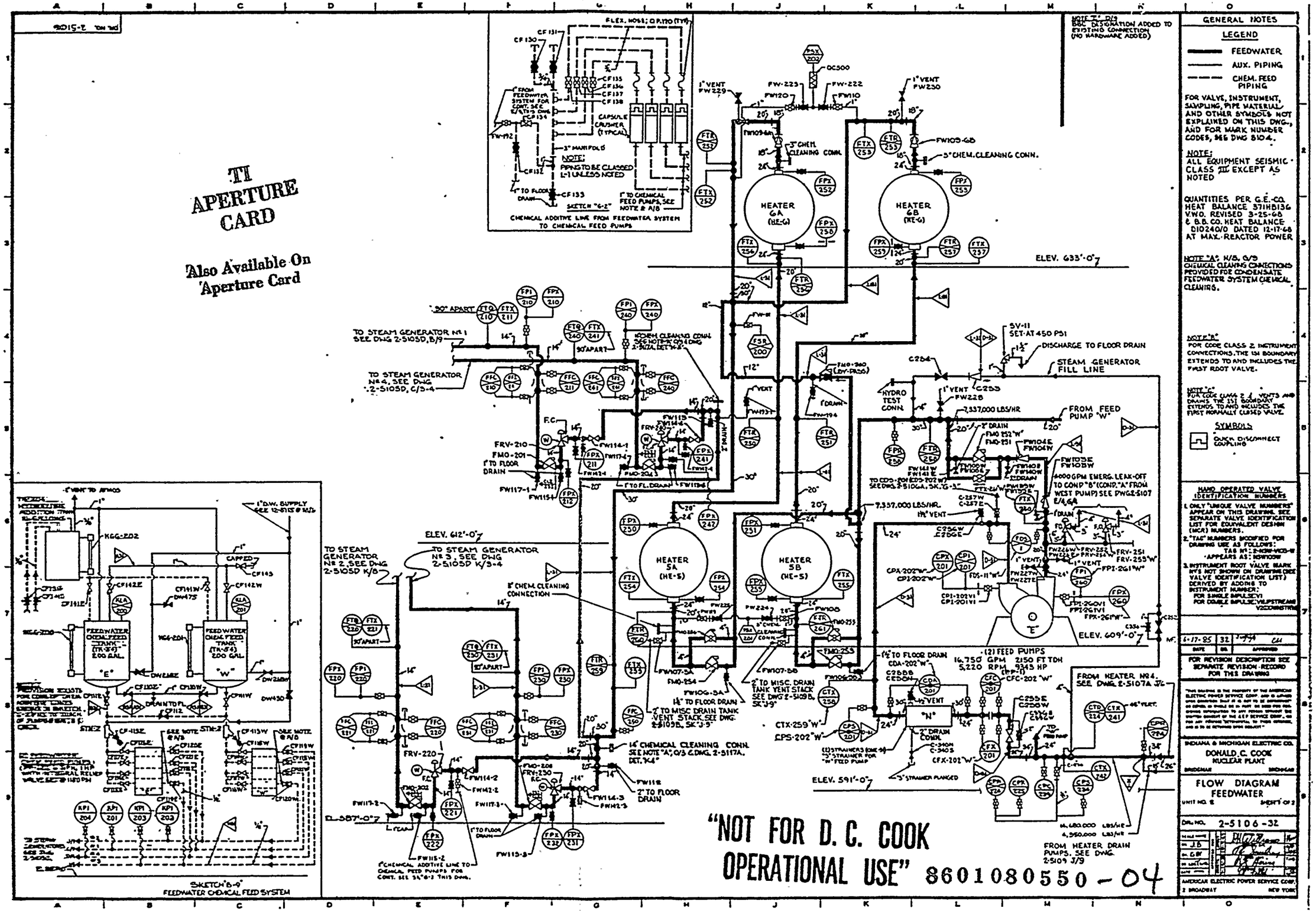

"NOT FOR D. C. COOK OPERATIONAL USE" 8601080550-04

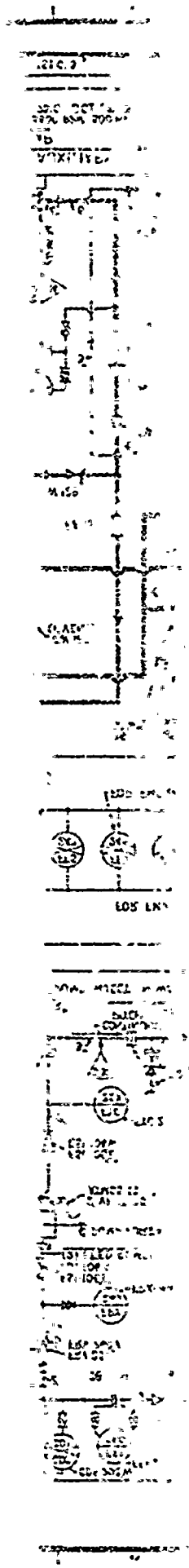

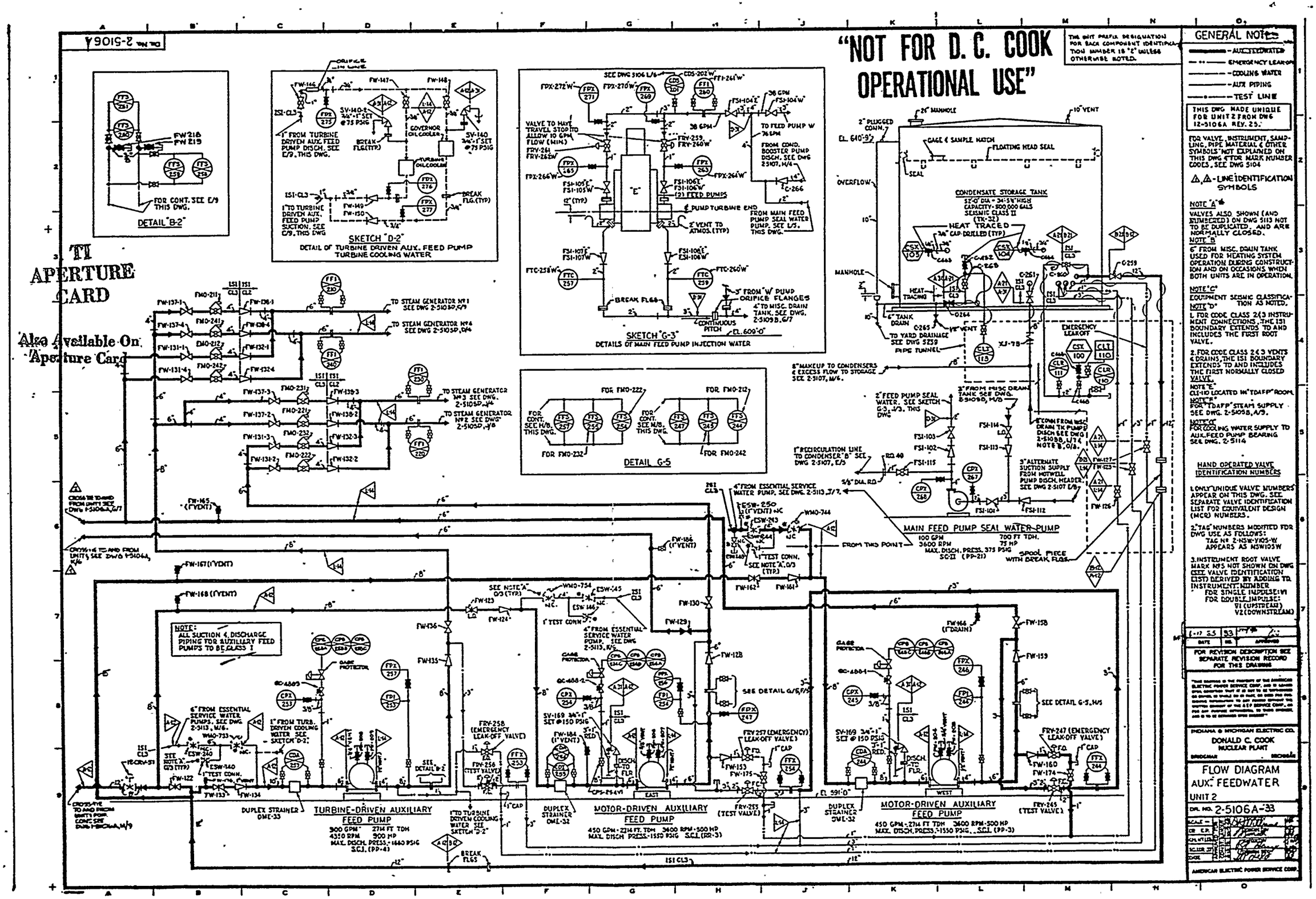

8601080550-05

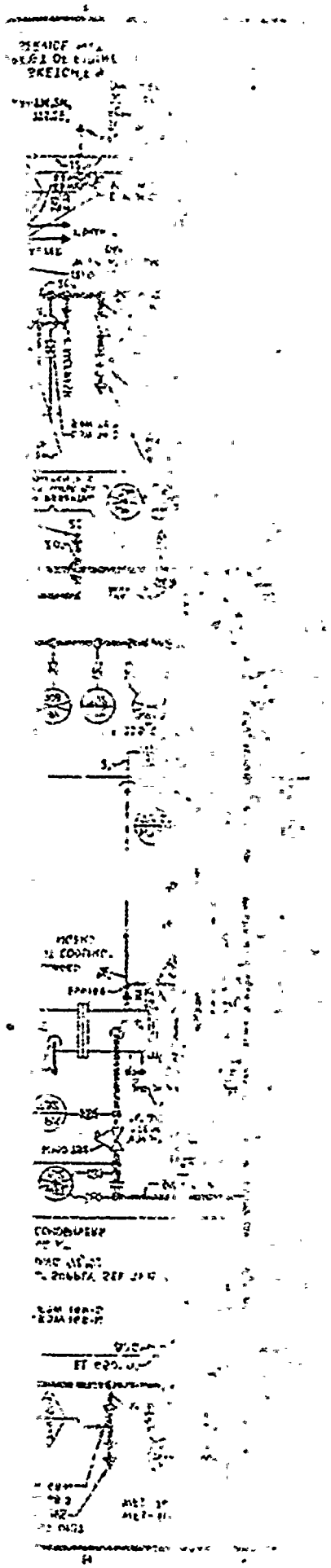

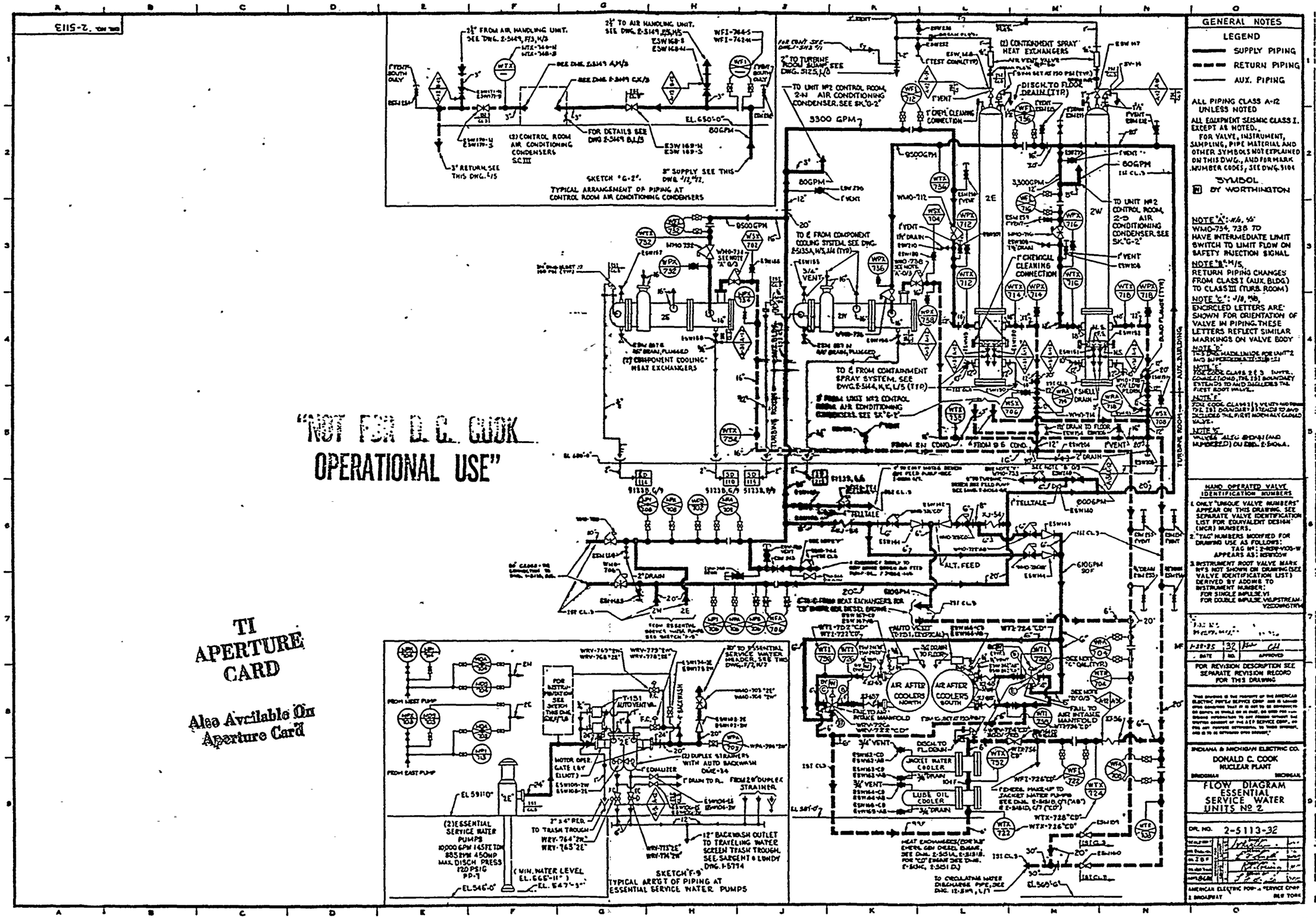

8601080550-06

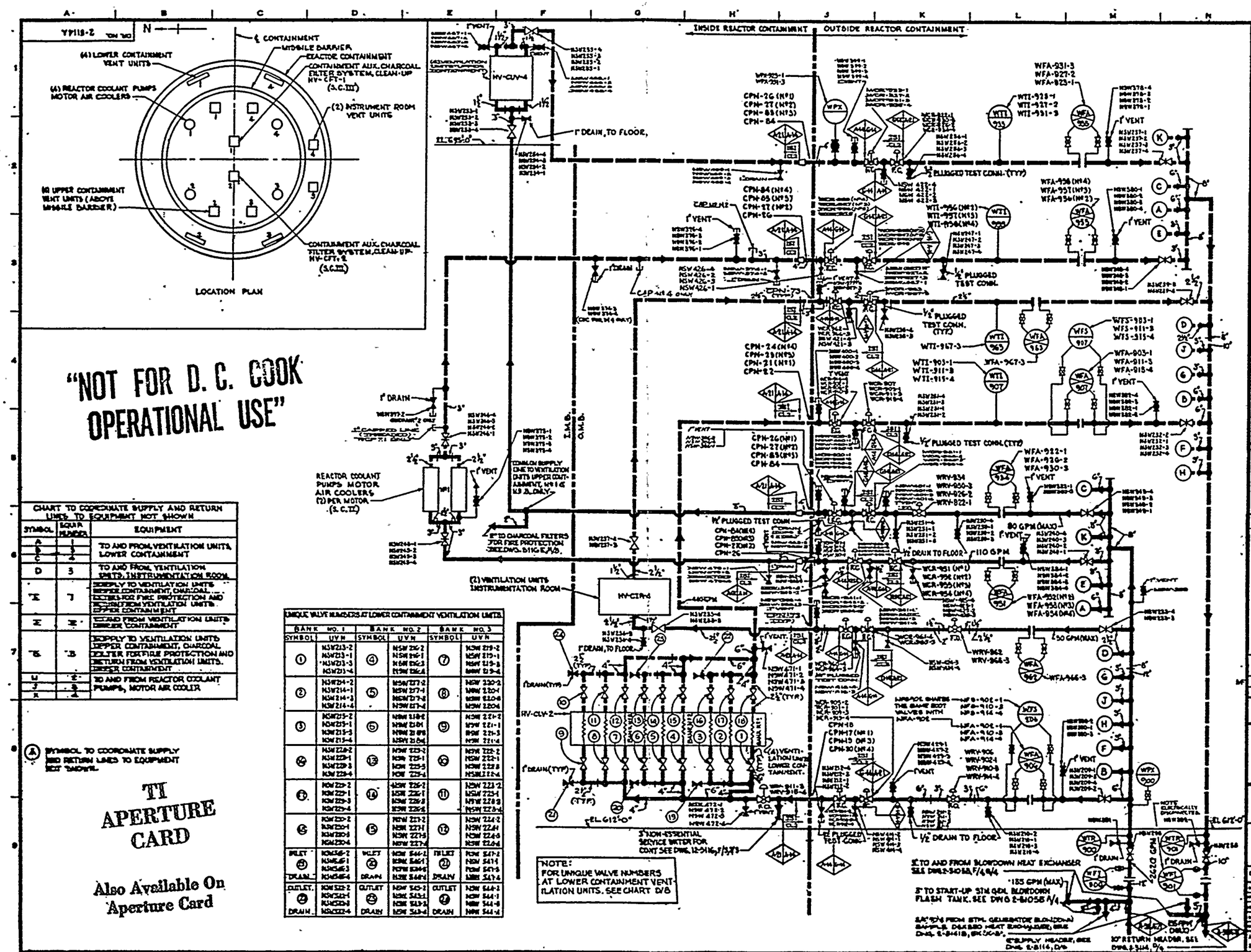

8601080550 -07

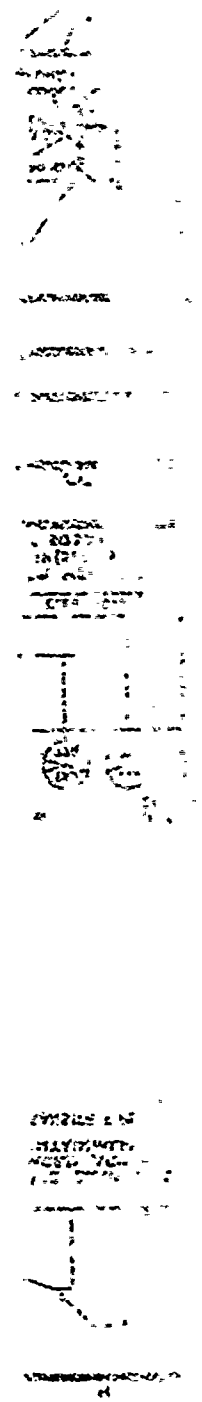

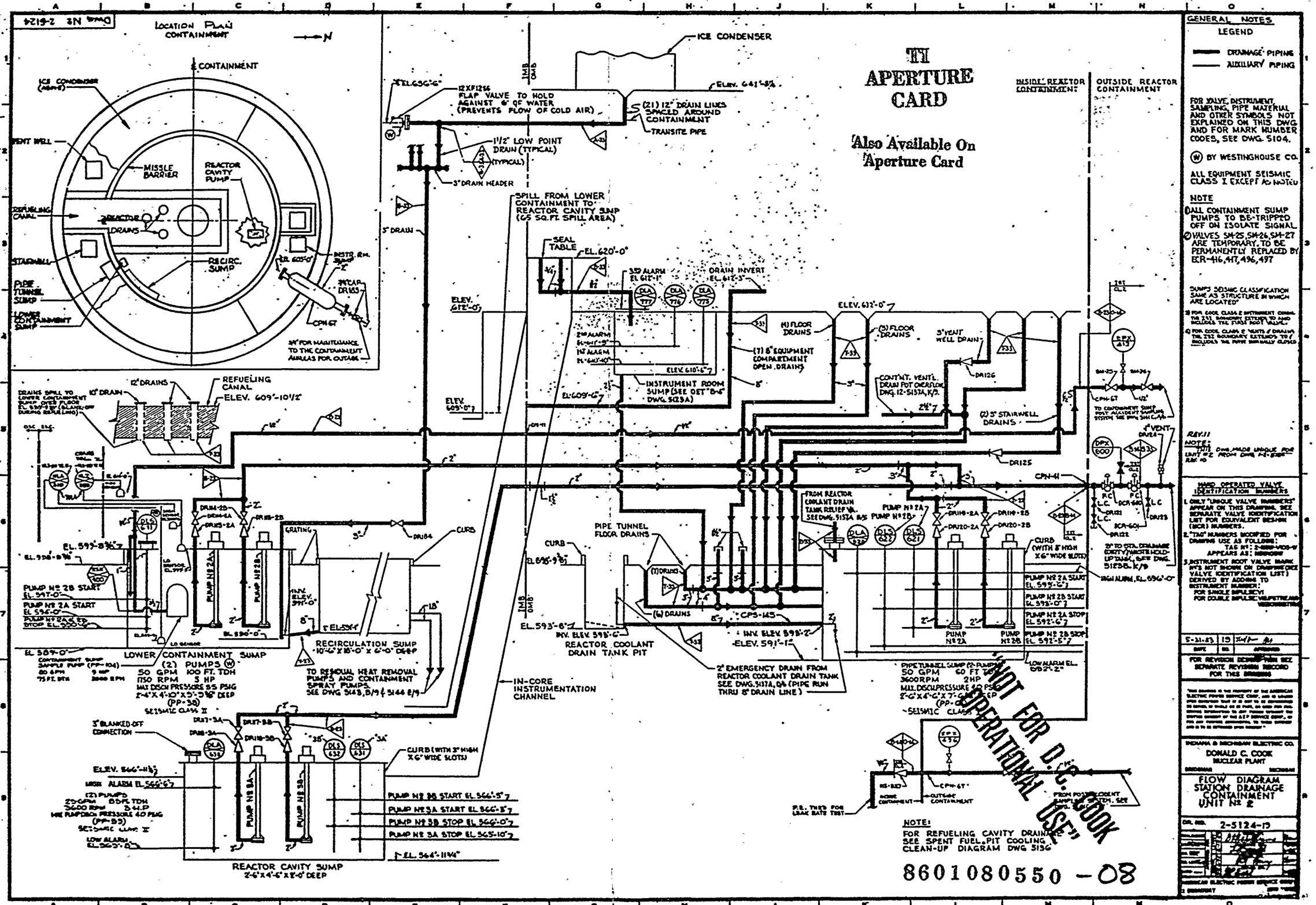
Dwg. No. 2-5124
LOCATION PLAN CONTAINMENT
N
℄ CONTAINMENT
ICS CONDENSER
VENT WELL
MISSLE BARRIER
REACTOR CAVITY PUMP
REFUELING CANAL
REACTOR
DRAINS
STAIRWELL
RECIRC. SUMP
PIPE TUNNEL SUMP
LOWER CONTAINMENT SUMP
INSTR. RM. SUMP
CPN 67
3/4" FOR MAINTENANCE TO THE CONTAINMENT AUXILIES FOR OUTAGE
ICE CONDENSER
EL. 650'-6"
12XF1266 FLAP VALVE TO HOLD AGAINST 6" OF WATER (PREVENTS FLOW OF COLD AIR)
(21) 12" DRAIN LINES SPACED AROUND CONTAINMENT
TRANSITE PIPE
ELEV. 641'-8 1/2"
1 1/2" LOW POINT DRAIN (TYPICAL)
(TYPICAL)
3" DRAIN HEADER
3" DRAIN
SPILL FROM LOWER CONTAINMENT TO REACTOR CAVITY SUMP (65 SQ. FT. SPILL AREA)
SEAL TABLE
EL. 620'-0"
3RD ALARM EL. 612'-1"
DRAIN INVERT EL. 612'-3"
ELEV. 612'-0"
ELEV. 609'-0"
2ND ALARM
1ST ALARM
ELEV. 610'-6"
INSTRUMENT ROOM SUMP (SEE DET "B-6" DWG. 5123A)
EL. 609'-6"
(4) FLOOR DRAINS
(3) FLOOR DRAINS
3" VENT WELL DRAIN
(7) 6" EQUIPMENT COMPARTMENT OPEN DRAINS
CONT'NT. VENT'L. DRAIN POT OVERFLOW DWG. 12-5157A, K/7.
(2) 5" STAIRWELL DRAINS
DR126
DR125
CPN-41
CPN-67
TO CONTAINMENT SUMP POST ACCIDENT SAMPLING SYSTEM SEE DWG. 5141 C-A
VENT DR124
DPX 600
DPX 413
DPX 436
12" DRAINS
10" DRAIN
REFUELING CANAL
ELEV. 609'-10 1/2"
DRAINS SPILL TO LOWER CONTAINMENT SUMP OVER FLOOR
DRAIN-2D
DRAIN-4A
DRAIN-2A
DRAIN-2B
GRATING
CURB
EL. 595'-8 3/4"
PUMP No 2B START EL. 597'-0"
PUMP No 2A START EL. 596'-0"
PUMP No 2A & 2B STOP EL. 590'-0"
LO SENSOR
EL. 589'-0"
CONTAINMENT SUMP SAMPLE PUMP (PP-104)
80 GPM 75 FT. DTH
9 HP 3600 RPM
LOWER CONTAINMENT SUMP
(2) PUMPS (W)
50 GPM 100 FT. TDH
1750 RPM 5 HP
MAX DISCH PRESSURE 55 PSIG
2'-4" X 4'-10" X 5'-9 1/2" DEEP
(PP-38)
SEISMIC CLASS II
INV. ELEV. 591'-0"
RECIRCULATION SUMP 10'-6" X 16'-0" X 6'-0" DEEP
TO RESIDUAL HEAT REMOVAL PUMPS AND CONTAINMENT SPRAY PUMPS. SEE DWG 5143, B/9 & 5144 E/9
EL. 554'-1"
18"
3" BLANKED-OFF CONNECTION
DRAIN-3A
DRAIN-3B
ELEV. 566'-11 1/2"
HIGH ALARM EL. 566'-6"7
(2) PUMPS
220 GPM 85 FT. TDH
3600 RPM 3.44 HP
MAX PUMP DISCH PRESSURE 40 PSIG
(PP-39)
SEISMIC CLASS II
LOW ALARM EL. 565'-0"
PUMP No 3A
PUMP No 3B
CURB (WITH 3" HIGH X 6" WIDE SLOTS)
PUMP No 3B START EL. 566'-5"7
PUMP No 3A START EL. 566'-8"7
PUMP No 3B STOP EL. 566'-0"7
PUMP No 3A STOP EL. 565'-10"7
EL. 564'-11 1/4"
REACTOR CAVITY SUMP 2'-6" X 4'-6" X 8'-0" DEEP
IMB DWG
CURB
EL. 595'-9 3/4"
PIPE TUNNEL FLOOR DRAINS
(1) DRAIN
(6) DRAINS
EL. 593'-6"7
INV. ELEV. 593'-6"
REACTOR COOLANT DRAIN TANK PIT
IN-CORE INSTRUMENTATION CHANNEL
FROM REACTOR COOLANT DRAIN TANK RELIEF VA. SEE DWG. 5157A B/5
PUMP No 2A
PUMP No 2B
CPS-145
INV. ELEV. 593'-2"
ELEV. 591'-1"
2" EMERGENCY DRAIN FROM REACTOR COOLANT DRAIN TANK SEE DWG. 5137A, Q/6 (PIPE RUN THRU 8" DRAIN LINE)
PUMP No 2A START EL. 593'-6"7
PUMP No 2B START EL. 593'-0"7
PUMP No 2A STOP EL. 592'-6"7
PUMP No 2B STOP EL. 592'-5"7
CURB (WITH 3" HIGH X 6" WIDE SLOTS)
PIPE TUNNEL SUMP (2 PUMPS)
50 GPM 60 FT TDH
3600 RPM 2 HP
MAX. DISCH PRESSURE 40 PSIG
2'-6" X 4'-6" X 7'-6" DEEP
(PP-40)
SEISMIC CLASS II
LOW ALARM EL. 592'-2"
25" TO STA. DRAINAGE (CONT'N/WASTE HOLD-UP TANK) SEE DWG. 5123B-B/9
HIGH ALARM EL. 596'-0"
P.E. TWD FOR LEAK RATE TEST
INSIDE CONTAINMENT
OUTSIDE CONTAINMENT
FROM POST ACCIDENT SAMPLING SYSTEM. SEE DWG. 5141
NOTE:
FOR REFUELING CAVITY DRAINAGE SEE SPENT FUEL PIT COOLING & CLEAN-UP DIAGRAM DWG 5136
TI APERTURE CARD
Also Available On Aperture Card
NOT FOR O.C. COOK OPERATIONAL USE
8601080550 -08
GENERAL NOTES
LEGEND
DRAINAGE PIPING
AUXILIARY PIPING
FOR VALVE, INSTRUMENT, SAMPLING, PIPE MATERIAL AND OTHER SYMBOLS NOT EXPLAINED ON THIS DWG. AND FOR MARK NUMBER CODES, SEE DWG. 5104.
(W) BY WESTINGHOUSE CO.
ALL EQUIPMENT SEISMIC CLASS I EXCEPT AS NOTED
NOTE
(1) ALL CONTAINMENT SUMP PUMPS TO BE TRIPPED OFF ON ISOLATE SIGNAL
(2) VALVES SM-25, SM-26, SM-27 ARE TEMPORARY, TO BE PERMANENTLY REPLACED BY ECR-416, 417, 496, 497
SUMPS SEISMIC CLASSIFICATION SAME AS STRUCTURE IN WHICH ARE LOCATED
(3) FOR COOL CLASS E INSTRUMENT CONN. THE 2ND BOUNDARY EXTENDS TO AND INCLUDES THE FLASH POT VALVE.
(4) FOR COOL CLASS E VENTS & DRAINS THE 2ND BOUNDARY EXTENDS TO / INCLUDES THE PIPE NORMALLY CLOSED
REV. 11
NOTE: THIS DWG. MADE UNIQUE FOR UNIT #2 FROM DWG. 2-5124 REV. 10
HAND OPERATED VALVE IDENTIFICATION NUMBERS
1. ONLY "UNIQUE VALVE NUMBERS" APPEAR ON THIS DRAWING. SEE SEPARATE VALVE IDENTIFICATION LIST FOR EQUIVALENT DESIGN (DCR) NUMBERS.
2. "TAG" NUMBERS MODIFIED FOR DRAWING USE AS FOLLOWS: TAG No: 2-MBP-VC0-V APPEARS AS: MBP0V
3. INSTRUMENT ROOT VALVE (MARK No'S NOT SHOWN ON DRAWING ONLY VALVE IDENTIFICATION LIST) DERIVED BY ADDING TO INSTRUMENT NUMBER: FOR SINGLE IMPULSE: V1 FOR DOUBLE IMPULSE: VALVE TO THE AND VALVE TO THE
5-31-83 | 19 | APPROVED
FOR REVISION DESCRIPTION SEE SEPARATE REVISION RECORD FOR THIS DRAWING
INDIANA & MICHIGAN ELECTRIC CO.
DONALD C. COOK NUCLEAR PLANT
INDIANA MICHIGAN
FLOW DIAGRAM STATION DRAINAGE CONTAINMENT UNIT No 2
DR. NO. 2-5124-19
AMERICAN ELECTRIC POWER SERVICE CORP.

2-5128

REACTOR VESSEL FLANGE SEAL LEAK-OFF TO REACTOR COOLANT DRAIN TANK. SEE DWG. 5137A, D/3

FROM ACCUMULATOR TANKS. SEE DWG. 5145, A/4

REACTOR COOLANT PUMP (SEE SK. "D-3" ON DWG. 5128 A)

LOOP 1 (PIPING BY W)

LOOP 2 (PIPING BY W)

LOOP 3 (PIPING BY W)

LOOP 4 (PIPING BY W)

ALTERNATE CHARGING LINE. SEE DWG. 5129, B/2

STEAM GENERATOR (EL. 612'-0") SEE W DWG'S AMGT-1341

STEAM GENERATOR (EL. 612'-0") SEE W DWG'S AMGT-1342

STEAM GENERATOR (EL. 612'-0") SEE W DWG'S AMGT-1343

STEAM GENERATOR (EL. 612'-0") SEE W DWG'S AMGT-1344

FROM EMERGENCY CORE COOLING SYSTEM BORON INJECTION TANK DISCHARGE. SEE DWG. 5142, B/1

FROM EMERGENCY CORE COOLING SYSTEM BORON INJECTION TANK DISCHARGE SEE DWG. 5142, B/2

SPRAY LINE TO PRESSURIZER SEE SK. "D-3" ON 5128A, C/8

NORMAL CHARGING LINE. SEE DWG. 5129, B/3

TO EXCESS LETDOWN LINE. SEE DWG. 5129A, D/1

FROM RESIDUAL HEAT REMOVAL & SAFETY INJECTION SYSTEMS. SEE DWG. 5145, A/8, A/7

TO RESIDUAL HEAT REMOVAL LOOP SEE DWG. 5145, A/8

FROM EMERGENCY CORE COOLING SYSTEM BORON INJECTION TANK DISCHARGE SEE DWG. 5142, B/2

FROM RESIDUAL HEAT REMOVAL SYSTEM AND ACCUMULATOR TANKS. SEE DWG. 5145, A/5

FROM RESIDUAL HEAT REMOVAL SYSTEM AND ACCUMULATOR TANKS. SEE DWG. 5145, A/5

TO REACTOR COOLANT DRAIN TANK. SEE DWG. 5137A, D/4

TO REACTOR COOLANT DRAIN TANK. SEE DWG. 5137A, B/3

TO REACTOR COOLANT DRAIN TANK SEE DWG. 5137A, A/5

TO LETDOWN LINE SEE DWG 5129, B/4

REACTOR VESSEL (EL. 612'-0") 2485 PSI - 650 F.

REACTOR COOLANT PUMP (SEE SK. "D-3" ON DWG. 5128 A)

88,500 GPM 577 TDH 1,200 RPM · 6,000 HP (TYPICAL)

PROVIDE 12" MIN. STRAIGHT (TYPICAL FOR (4) DRAINS)

TYGON HOSE CONNECTION FOR REFUELING WATER LEVEL MEASURE

NOTE: THIS DWG. MADE UNIQUE FOR UNIT #2 AND SUPERSEDES DWG 1-2-5128 REV. 8

NOTE 12 (CONT.) SIZE WILL BE FURNISHED (NOT BY W) IF REQUIRED.

NOTE 13 E/6, H/7 FOR TRANSMITTED SAMPLE SEE DWG. 5141 & 5141A.

NOTE 14, K/9 RTD INSTALLED IN WELL.

IMB - INDICATES LOCATED SUBJECT TO MISSILES FROM PRIMARY COOLANT SYSTEM.

RTD - RESISTANCE TEMP. DETECTOR

PIPING DESIGN TO FOLLOW CRITERIA INDICATED IN W AEW-1212 & AEW-516

NOTE 16. ALL COMPONENTS [illegible] AND SUPPORTS [illegible]

NOTE 17. FOR CORE CLASS 1 INSTRUMENT CONNECTIONS, THE PM BOUNDARY EXTENDS TO AND INCLUDES THE FIRST ROOT VALVE.

NOTE 18. FOR CORE CLASS 1 VENTS AND DRAINS, THE NI BOUNDARY EXTENDS TO AND INCLUDES THE SECOND NORMALLY CLOSED VALVE OR EXTENDS TO AND INCLUDES THE BLIND FLANGE AFTER A NORMALLY CLOSED VALVE.

GENERAL NOTES

LEGEND

- REACTOR COOLANT PIPING (W)
- AUX. PIPING
- INSTR. PIPING
- (W) BY WESTINGHOUSE

SEISMIC CLASS I

ALL VALVES AND INSTRUMENTATION BY (W)

FOR VALVE, INSTRUMENT, SAMPLING, PIPE MATERIAL, AND OTHER SYMBOLS NOT EXPLAINED ON THIS DWG., AND FOR MARK NUMBER CODES, SEE DWG 5104

BLANKED FLANGED CONN.

NOTE 1, G/8 LOCATE OUTSIDE SECONDARY SHIELD WALL. ONE VALVE FROM INNER O-RING, ONE VALVE FROM OUTER O-RING.

NOTE 2, M/3, M/9 SPRAY LINE SCOOP

NOTE 3, K/7, K/8, L/8 LOCATE RTD MAINT. ISOLATION VALVE APPROX. 9" FROM MANIFOLD.

NOTE 4, H/7, K/9 ALL BYPASS LOOP PIPING & THE RTD MANIFOLDS SHALL HAVE REMOVABLE INSULATION UP TO LOOP ROOT VALVES.

NOTE 5, H/7, K/7, L/9 LOCATE ROOT VALVE ABOVE ELEV. OF REACTOR VESSEL NOZZLES.

NOTE 9, M/8, K/8 LENGTH OF HOT LEG PIPE AND COLD LEG PIPE BASED ON (W) RECOMMENDATION TO MEET "TEMPERATURE TIME LAG" OF LESS THAN .10 SEC. FOR RTD MANIFOLD.

NOTE 11, K/7 PLATES ARE INSTALLED FOR INDEX OF FLOW LIMITING ORIFICES, IF REQUIRED. BLANK ORIFICE PLATES TO BE DRILLED TO (CONT'N N/1)

HAND OPERATED VALVE IDENTIFICATION NUMBERS

1. ONLY "UNIQUE VALVE NUMBERS" APPEAR ON THIS DRAWING. SEE SEPARATE VALVE IDENTIFICATION LIST FOR EQUIVALENT DESIGN (MCR) NUMBERS.
2. "TAG" NUMBERS MODIFIED FOR DRAWING USE AS FOLLOWS: TAG #: 1-NCDP-HCO-9 APPEARS AS: 1DP9COV
3. INSTRUMENT ROOT VALVE MARK #'S NOT SHOWN ON DRAWING (SEE VALVE IDENTIFICATION LIST) DERIVED BY ADDING TO INSTRUMENT NUMBER: FOR SINGLE IMPULSE: V1 FOR DOUBLE IMPULSE: V1 UPSTREAM, V2 DOWNSTREAM

IF FOR MICROFILM STATUS SEE REVISION RECORD FOR THIS DWG

DATE	BY	APPROVED
3-21-85	LB	[illegible]

FOR REVISION DESCRIPTION SEE SEPARATE REVISION RECORD FOR THIS DRAWING

INDIANA & MICHIGAN ELECTRIC CO.
DONALD C. COOK NUCLEAR PLANT
BRIDGMAN · MICHIGAN

FLOW DIAGRAM REACTOR COOLANT UNIT No. 2 SHEET 1 OF 2

DR. NO. 2-5128-18

AMERICAN ELECTRIC POWER SERVICE CORP. 2 BROADWAY NEW YORK

LOCATION PLAN — UNIT NO. 2 — PRESSURIZER — LOOP 1 — LOOP 4 — LOOP 2 — LOOP 3 — 0° — 90° — 180° — 270°

APERTURE CARD

Also Available On Aperture Card

2-5128 A

SKETCH 'D-3'
SCHEMATIC ARRANGEMENT OF REACTOR COOLANT PUMP SEAL WATER SYSTEM

SKETCH "L-4"
ARRGT FOR ONE REACTOR COOLANT LOOP IN CONTAINMENT Nº 2 (LOOP Nº 3 SHOWN)

SKETCH 'G-9'
SCHEMATIC ARRANGEMENT OF PIPING AT PRESSURIZER AND PRESSURIZER RELIEF TANK

NOTES CONTD

1. NVA-151 AND NVA-152 (ALSO OTHER LOOPS 161, 162, 171, 172, 181, 182) OHMS SENSORS MOUNTED ON S.G. SURFACE.
2. NVA-13 AND NVA-14 OHMS SENSORS MOUNTED ON LIFTING LUGS.
3. NVA-11 AND NVA-12 OHMS SENSORS MOUNTED ON CLAMPS BOLTED TO GUIDE RODS.

NOTES:

1. FOR CODE CLASS 1 VENTS AND DRAINS, THE ISI BOUNDARY EXTENDS TO AND INCLUDES THE SECOND NORMALLY CLOSED VALVE PER BETWEEN TO AND INCLUDES THE BLIND FLANGE AFTER A NORMALLY CLOSED VALVE.
3. FOR CODE CLASS 2 AND 3 VENTS AND DRAINS THE ISI BOUNDARY EXTENDS TO AND INCLUDES THE FIRST NORMALLY CLOSED VALVE

GENERAL NOTES

LEGEND

- REACTOR COOLANT PIPING BY (W)
- AUX. PIPING
- INSTR. PIPING
- (W) BY WESTINGHOUSE

ALL VALVES AND INSTRUMENTATION BY (W)

FOR VALVE, INSTRUMENT, SAMPLING, PIPE MATERIAL AND OTHER SYMBOLS NOT EXPLAINED ON THIS DWG., AND FOR MARK NUMBER CODES, SEE DWGS. 12-5103, 5104.

NOTE: PIPING DESIGN TO FOLLOW CRITERIA INDICATED IN (W) AEW-1212 & AEW-B1G

SEISMIC CLASS I EXCEPT AS INDICATED.

NOTE 1, C/7
OPENING IS A MIN. OF 7 FT. ABOVE THE CEILING TO THE REACTOR COOLANT PUMP.

NOTE 2, F/7, H/7
VALVE TO HAVE EXTENSION STEM TO BE OPERATED OUTSIDE OF PRESSURIZER ENCLOSURE AT EL. 612'-0".

NOTE 3, H/7
SLOPE SPRAY PIPE DOWNWARD TO PROVIDE WATER SEAL BETWEEN PRESSURIZER AND SPRAY VALVES.

NOTE 5, K/6, J/6, K/6
PLACE DETECTORS AT BOTTOM OF PIPE.

NOTE 6, K/6
SLOPE PIPE DOWNWARD TO PROVIDE WATER SEAL ON RELIEF VALVES.

NOTE 7, G/7, J/9
LOCATE APPROXIMATELY MIDWAY BETWEEN LOOP AND PRESSURIZER.

NOTE 8, A/7, J/7, J/9
FOR TRANSMITTED SAMPLE SEE DWG. 5141.

NOTE 9, E/7
VALVE BONNET AND INTERNALS ARE TO BE REMOVED AND BLIND HEAD INSTALLED EXCEPT WHEN TESTING VALVE 5189

HAND OPERATED VALVE IDENTIFICATION NUMBERS

1. ONLY "UNIQUE VALVE NUMBERS" APPEAR ON THIS DRAWING. SEE SEPARATE VALVE IDENTIFICATION LIST FOR EQUIVALENT DESIGN (MCR) NUMBERS.
2. "TAG" NUMBERS MODIFIED FOR DRAWING USE AS FOLLOWS: TAG Nº: 2-NSW-V205-18 APPEARS AS: NSW205W
3. INSTRUMENT ROOT VALVE MARK NUMBERS NOT SHOWN ON DRAWING (SEE VALVE IDENTIFICATION LIST) DERIVED BY ADDING TO INSTRUMENT NUMBER: FOR SINGLE IMPULSE: V1 FOR DOUBLE IMPULSE: V1(UPSTREAM) V2(DOWNSTREAM)

NOTE:
THE UNIT PREFIX DESIGNATION FOR EACH COMPONENT IDENTIFICATION NUMBER IS "2" UNLESS OTHERWISE NOTED.

NOTE:
THIS [illegible] IS UNIQUE FOR UNIT "2" AND [illegible] SEE DWG. "2" 5128A REV 17

DATE	NO	APPROVED
12-22-85	32	[illegible]

FOR REVISION DESCRIPTION SEE SEPARATE REVISION RECORD FOR THIS DRAWING

INDIANA & MICHIGAN ELECTRIC CO.
DONALD C. COOK NUCLEAR PLANT
BRIDGMAN MICHIGAN

FLOW DIAGRAM
REACTOR COOLANT
UNIT 2
SHEET 2 OF 2

DR NO. 2-5128 A-32

AMERICAN ELECTRIC POWER SERVICE CORP.
2 BROADWAY NEW YORK

8601080550-10

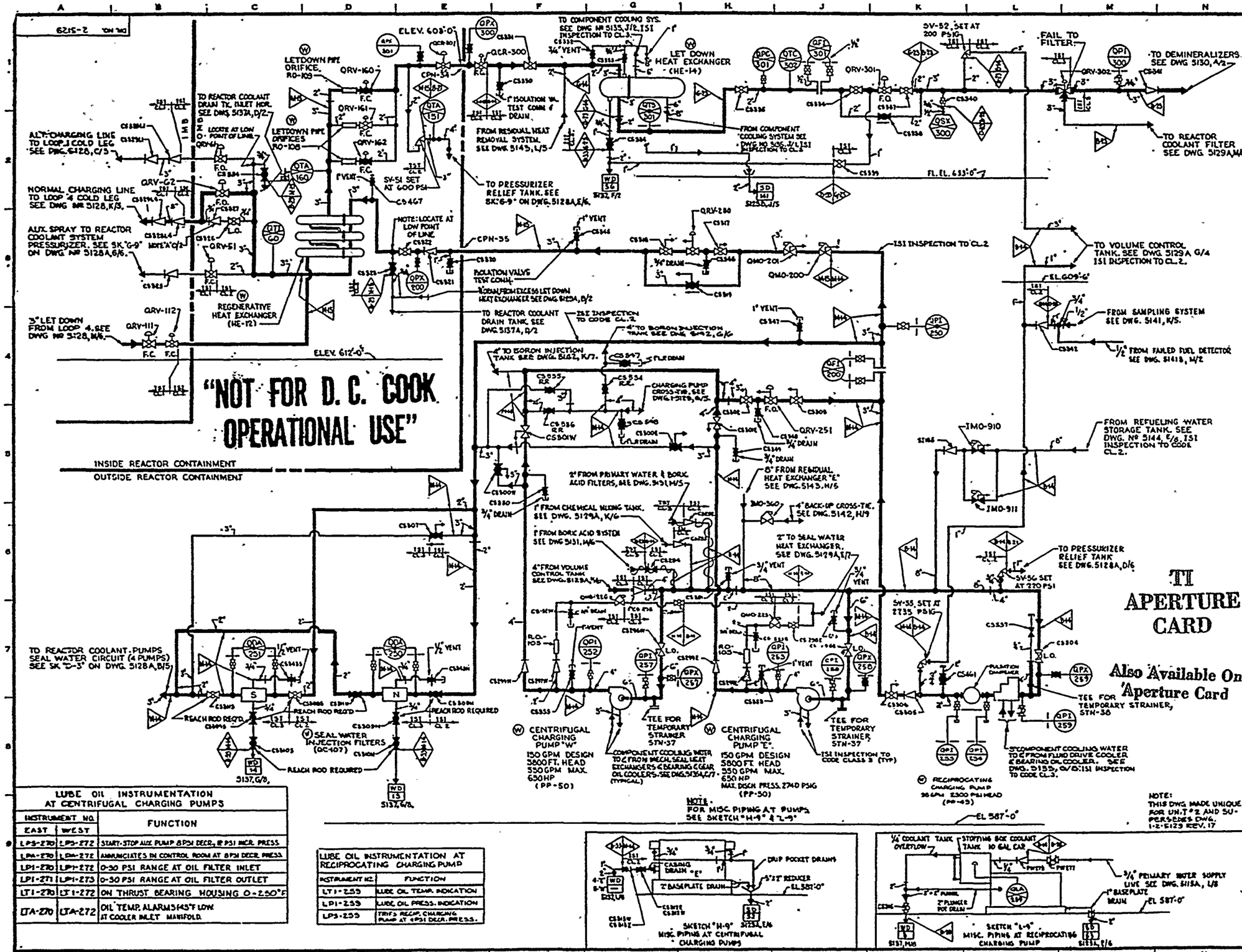

LUBE OIL INSTRUMENTATION AT CENTRIFUGAL CHARGING PUMPS		
INSTRUMENT NO. EAST	INSTRUMENT NO. WEST	FUNCTION
LPS-270	LPS-272	START-STOP AUX. PUMP 8 PSI DECR., 12 PSI INCR. PRESS.
LPA-270	LPA-272	ANNUNCIATES IN CONTROL ROOM AT 8 PSI DECR. PRESS.
LPI-270	LPI-272	0-50 PSI RANGE AT OIL FILTER INLET
LPI-271	LPI-273	0-50 PSI RANGE AT OIL FILTER OUTLET
LTI-270	LTI-272	ON THRUST BEARING HOUSING 0-250°F
LTA-270	LTA-272	OIL TEMP. ALARM 145°F LOW AT COOLER INLET MANIFOLD.

LUBE OIL INSTRUMENTATION AT RECIPROCATING CHARGING PUMP	
INSTRUMENT NO.	FUNCTION
LTI-255	LUBE OIL TEMP. INDICATION
LPI-255	LUBE OIL PRESS. INDICATION
LPS-255	TRIPS RECIP. CHARGING PUMP AT 4 PSI DECR. PRESS.

TI APERTURE CARD

Also Available On Aperture Card

8601080550-11

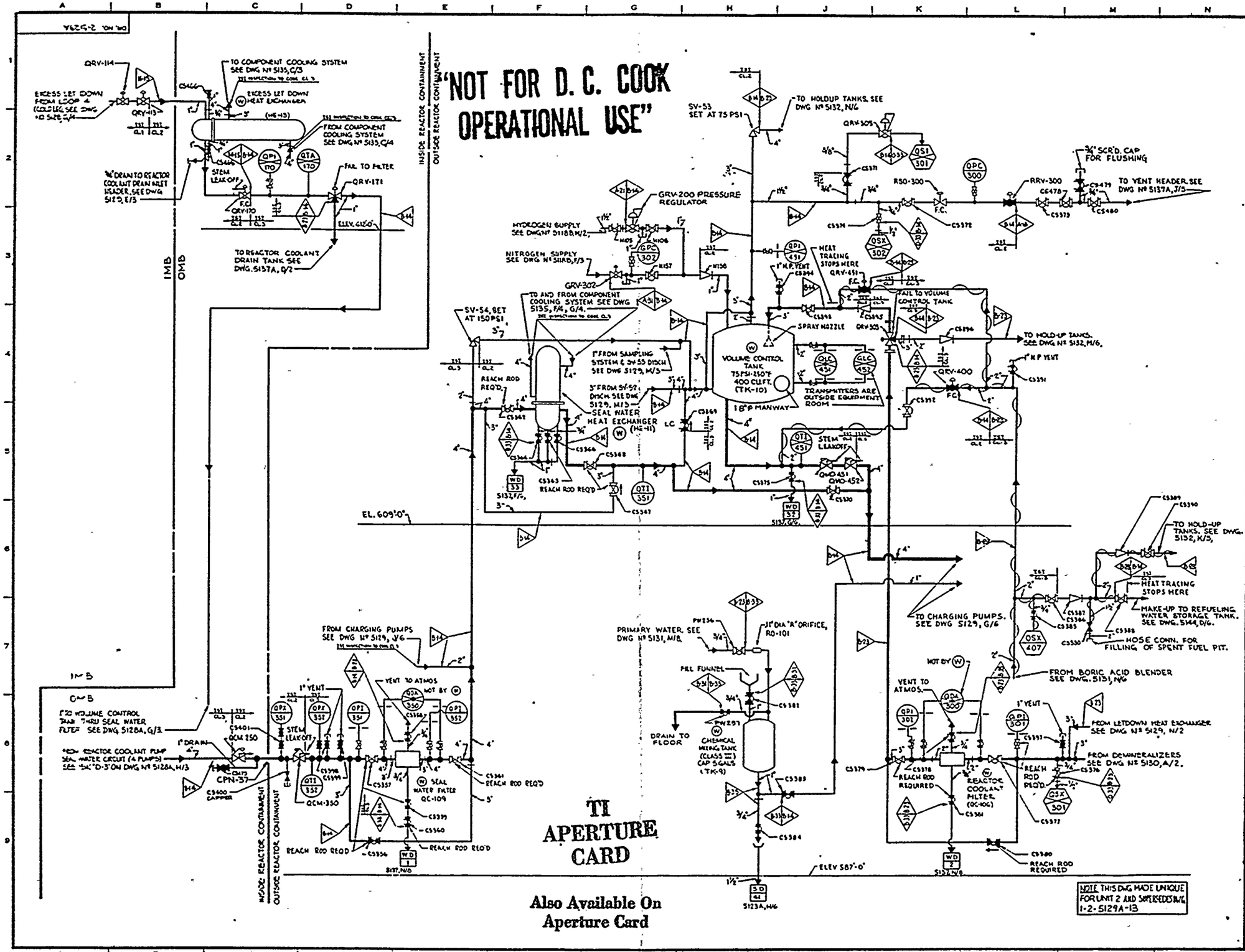

8601080550 -12

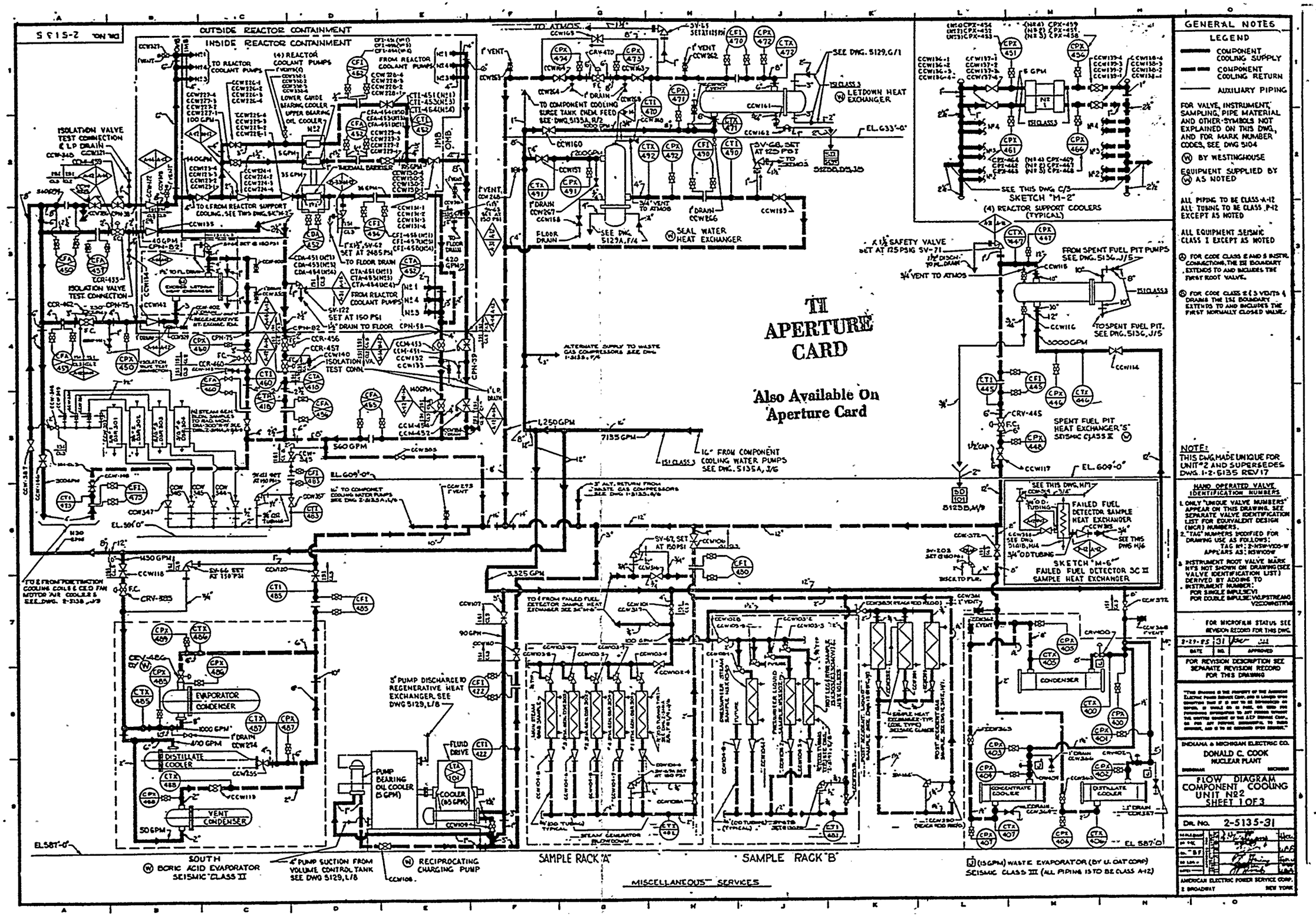

TI APERTURE CARD

Also Available On Aperture Card

8601080550 -13

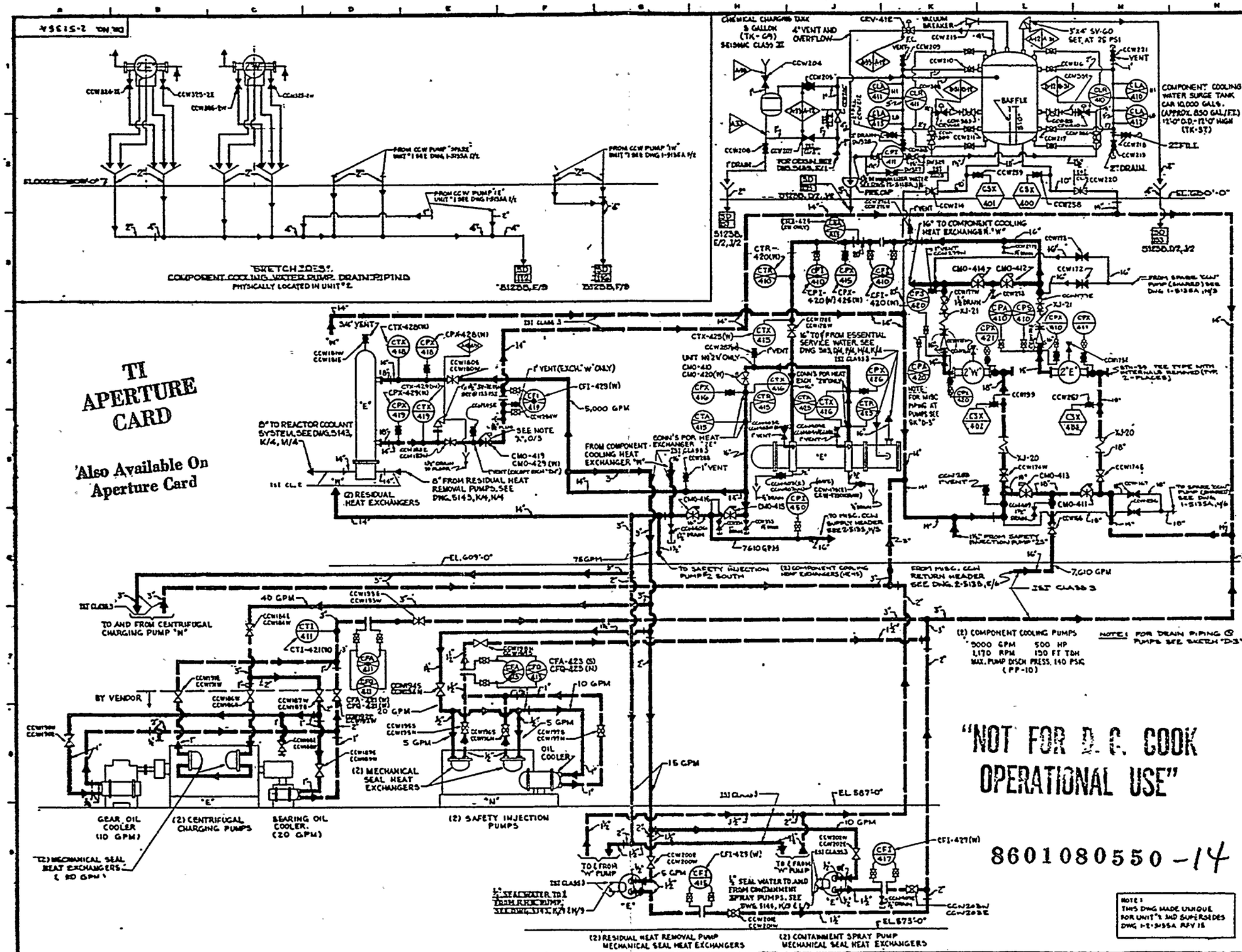
SKETCH "DE3"
COMPONENT COOLING WATER PUMP DRAIN PIPING
PHYSICALLY LOCATED IN UNIT #2
CHEMICAL CHARGING TANK
3 GALLON
(TK-69)
SEISMIC CLASS II
4" VENT AND OVERFLOW
VACUUM BREAKER
3"x4" SV-60 SET AT 25 PSI
COMPONENT COOLING WATER SURGE TANK
CAP 10,000 GALS.
(APPROX. 850 GAL/FT.)
12'-0" O.D.-12'-0" HIGH
(TK-37)
BAFFLE
16" TO COMPONENT COOLING HEAT EXCHANGER "W"
16" TO (FROM ESSENTIAL SERVICE WATER, SEE DWG 5143, K4, M4, K4
5,000 GPM
SEE NOTE
8" TO REACTOR COOLANT SYSTEM, SEE DWG. 5143, K/4, M/4
8" FROM RESIDUAL HEAT REMOVAL PUMPS, SEE DWG. 5143, K4, N4
(2) RESIDUAL HEAT EXCHANGERS
FROM COMPONENT COOLING HEAT EXCHANGER "W"
TO MISC. CCW SUPPLY HEADER SEE 2-5135, M/3
7610 GPM
TO SAFETY INJECTION PUMP 2 SOUTH
(2) COMPONENT COOLING HEAT EXCHANGERS
FROM MISC. CCW RETURN HEADER SEE DWG. 2-5135, E/6
7,610 GPM
TO AND FROM CENTRIFUGAL CHARGING PUMP "N"
40 GPM
BY VENDOR
20 GPM
10 GPM
5 GPM
5 GPM
OIL COOLER
(2) MECHANICAL SEAL HEAT EXCHANGERS
15 GPM
GEAR OIL COOLER (10 GPM)
(2) CENTRIFUGAL CHARGING PUMPS
BEARING OIL COOLER. (20 GPM)
(2) SAFETY INJECTION PUMPS
(2) MECHANICAL SEAL HEAT EXCHANGERS (80 GPM)
(2) COMPONENT COOLING PUMPS
5000 GPM 500 HP
1,170 RPM 150 FT TDH
MAX. PUMP DISCH PRESS. 140 PSIG
(PP-10)
NOTE: FOR DRAIN PIPING @ PUMPS SEE SKETCH "D-3"
(2) RESIDUAL HEAT REMOVAL PUMP MECHANICAL SEAL HEAT EXCHANGERS
(2) CONTAINMENT SPRAY PUMP MECHANICAL SEAL HEAT EXCHANGERS
TI APERTURE CARD
Also Available On Aperture Card
"NOT FOR D. C. COOK OPERATIONAL USE"
8601080550-14
NOTE: THIS DWG MADE UNIQUE FOR UNIT 2 AND SUPERSEDES DWG 1-2-5135A REV 18
GENERAL NOTES
LEGEND
COMPONENT COOLING SUPPLY
COMPONENT COOLING RETURN
AUXILIARY PIPING
FOR VALVE, INSTRUMENT SAMPLING, PIPE MATERIAL AND OTHER SYMBOLS NOT EXPLAINED ON THIS DWG., AND FOR MARK NUMBER CODES, SEE DWG. 5104
(W) BY WESTINGHOUSE
EQUIPMENT SUPPLIED BY (W) AS NOTED
ALL PIPING TO BE EXCEPT AS NOTED
ALL EQUIPMENT SEISMIC CLASS I EXCEPT AS NOTED
NOTE "A" - E/6
CMO-415 & 429 TO HAVE INTERMEDIATE LIMIT SWITCH TO LIMIT FLOW ON SAFETY INJECTION SIGNAL
THE UNIT PREFIX DESIGNATION FOR EACH COMPONENT IDENTIFICATION NUMBER IS "2" UNLESS OTHERWISE NOTED
HAND OPERATED VALVE IDENTIFICATION NUMBERS
1. ONLY "UNIQUE VALVE NUMBERS" APPEAR ON THIS DRAWING. SEE SEPARATE VALVE IDENTIFICATION LIST FOR EQUIVALENT DESIGN (MCR) NUMBERS.
2. "TAG" NUMBERS MODIFIED FOR DRAWING USE AS FOLLOWS:
TAG #1: 2-MOV-VCO-W
APPEARS AS: MOVCOW
3. INSTRUMENT ROOT VALVE MARK #'S NOT SHOWN ON DRAWING (SEE VALVE IDENTIFICATION LIST) DERIVED BY ADDING TO INSTRUMENT NUMBER:
FOR SINGLE IMPULSE: V
FOR DOUBLE IMPULSE: VHI/PSTREAM, VLO/DOWNSTREAM
FOR MICROFILM STATUS SEE NEWSFLW RECORD FOR THIS DWG
5-9-85 25
FOR REVISION DESCRIPTION SEE SEPARATE REVISION RECORD FOR THIS DRAWING
INDIANA & MICHIGAN ELECTRIC CO.
DONALD C. COOK NUCLEAR PLANT
FLOW DIAGRAM COMPONENT COOLING UNIT No 2 SHEET 2 OF 3
Dr. No. 2-5135A-25
AMERICAN ELECTRIC POWER SERVICE CORP.
2 BROADWAY NEW YORK

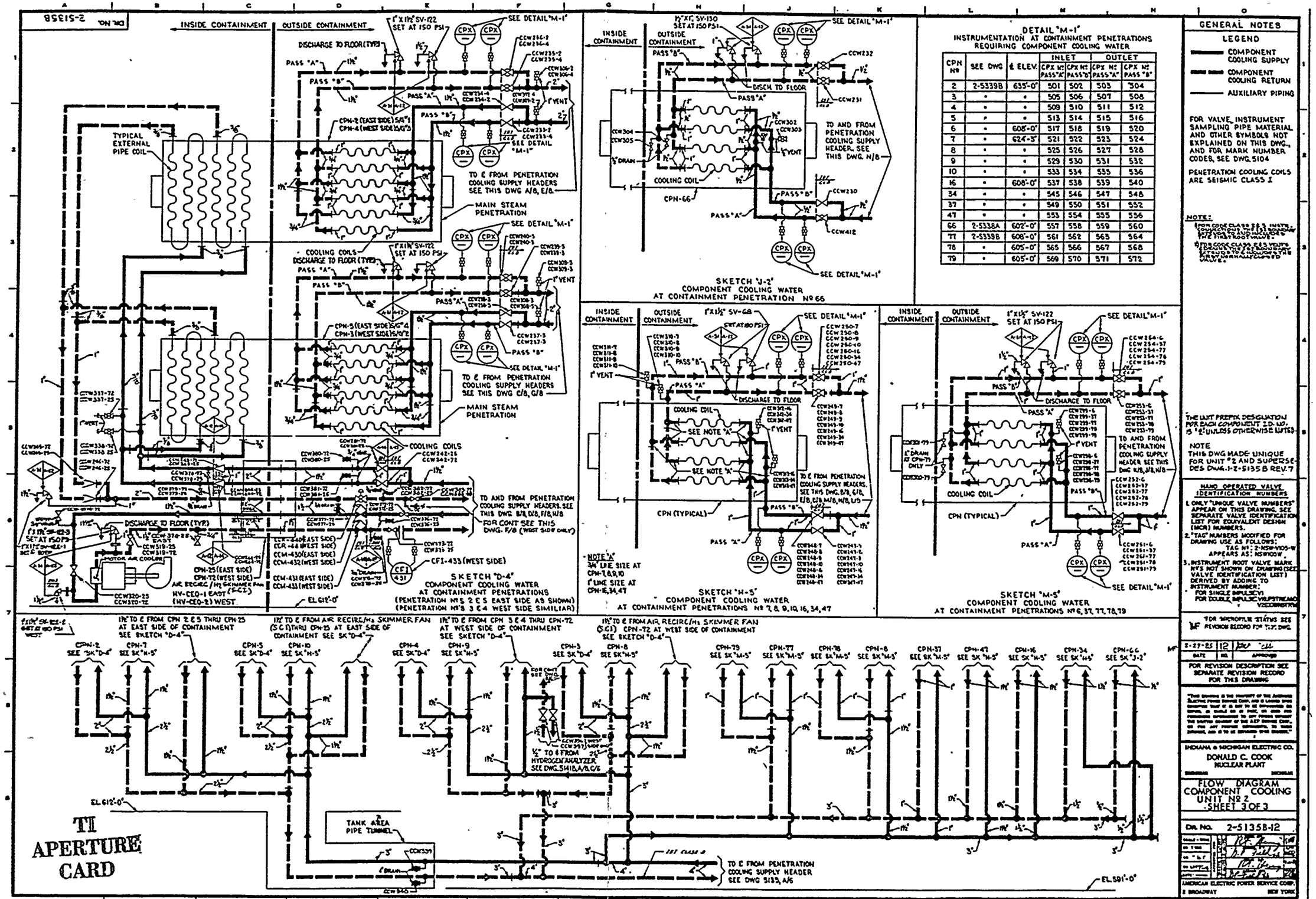

DETAIL "M-1"
INSTRUMENTATION AT CONTAINMENT PENETRATIONS REQUIRING COMPONENT COOLING WATER

CPN Nº	SEE DWG	℄ ELEV.	INLET CPX Nº PASS "A"	INLET CPX Nº PASS "B"	OUTLET CPX Nº PASS "A"	OUTLET CPX Nº PASS "B"
2	2-5339B	635'-0"	501	502	503	504
3	•	•	505	506	507	508
4	•	•	509	510	511	512
5	•	•	513	514	515	516
6	•	608'-0"	517	518	519	520
7	•	624'-5"	521	522	523	524
8	•	•	525	526	527	528
9	•	•	529	530	531	532
10	•	•	533	534	535	536
16	•	608'-0"	537	538	539	540
34	•	•	545	546	547	548
37	•	•	549	550	551	552
47	•	•	553	554	555	556
66	2-5338A	602'-0"	557	558	559	560
77	2-5339B	608'-0"	561	562	563	564
78	•	605'-0"	565	566	567	568
79	•	605'-0"	569	570	571	572

GENERAL NOTES

LEGEND
- COMPONENT COOLING SUPPLY
- COMPONENT COOLING RETURN
- AUXILIARY PIPING

FOR VALVE, INSTRUMENT SAMPLING PIPE MATERIAL AND OTHER SYMBOLS NOT EXPLAINED ON THIS DWG., AND FOR MARK NUMBER CODES, SEE DWG. 5104

PENETRATION COOLING COILS ARE SEISMIC CLASS I

NOTE:
1. FOR CODE CLASS 2 & 3 INSTR. CONNECTIONS, THE 1/2" NOMINAL PIPE VENTS TO AUXILIARIES & THE FIRST ROOT VALVE.
2. FOR CODE CLASS 2 & 3 VENTS (DRAINS) THE 1/2" NOMINAL PIPE EXTENDS TO A LOCKED CLOSED (LCC) OR LOCKED OPEN (LCO) VALVE.

THE UNIT PREFIX DESIGNATION FOR EACH COMPONENT I.D. NO. IS "2" UNLESS OTHERWISE LISTED

NOTE
THIS DWG MADE UNIQUE FOR UNIT #2 AND SUPERSEDES DWG. 1-2-5135 B REV. 7

HAND OPERATED VALVE IDENTIFICATION NUMBERS
1. ONLY "UNIQUE VALVE NUMBERS" APPEAR ON THIS DRAWING. SEE SEPARATE VALVE IDENTIFICATION LIST FOR EQUIVALENT DESIGN (MCR) NUMBERS.
2. "TAG" NUMBERS MODIFIED FOR DRAWING USE AS FOLLOWS:
   TAG Nº: 2-NSW-V105-W
   APPEARS AS: NSW105W
3. INSTRUMENT ROOT VALVE MARK Nº'S NOT SHOWN ON DRAWING (SEE VALVE IDENTIFICATION LIST) DERIVED BY ADDING TO INSTRUMENT NUMBER:
   FOR SINGLE IMPULSE: V1
   FOR DOUBLE IMPULSE: V1 UPSTREAM, V2 DOWNSTREAM

FOR MICROFILM STATUS SEE REVISION RECORD FOR THIS DWG.

DATE	NO.	APPROVED
2-27-85	12	

FOR REVISION DESCRIPTION SEE SEPARATE REVISION RECORD FOR THIS DRAWING

INDIANA & MICHIGAN ELECTRIC CO.
DONALD C. COOK NUCLEAR PLANT
BRIDGMAN MICHIGAN

FLOW DIAGRAM COMPONENT COOLING UNIT Nº 2 SHEET 3 OF 3

DWG. NO. 2-5135B-12

AMERICAN ELECTRIC POWER SERVICE CORP.
2 BROADWAY NEW YORK

Also Available On Aperture Card

8601080550 — 15

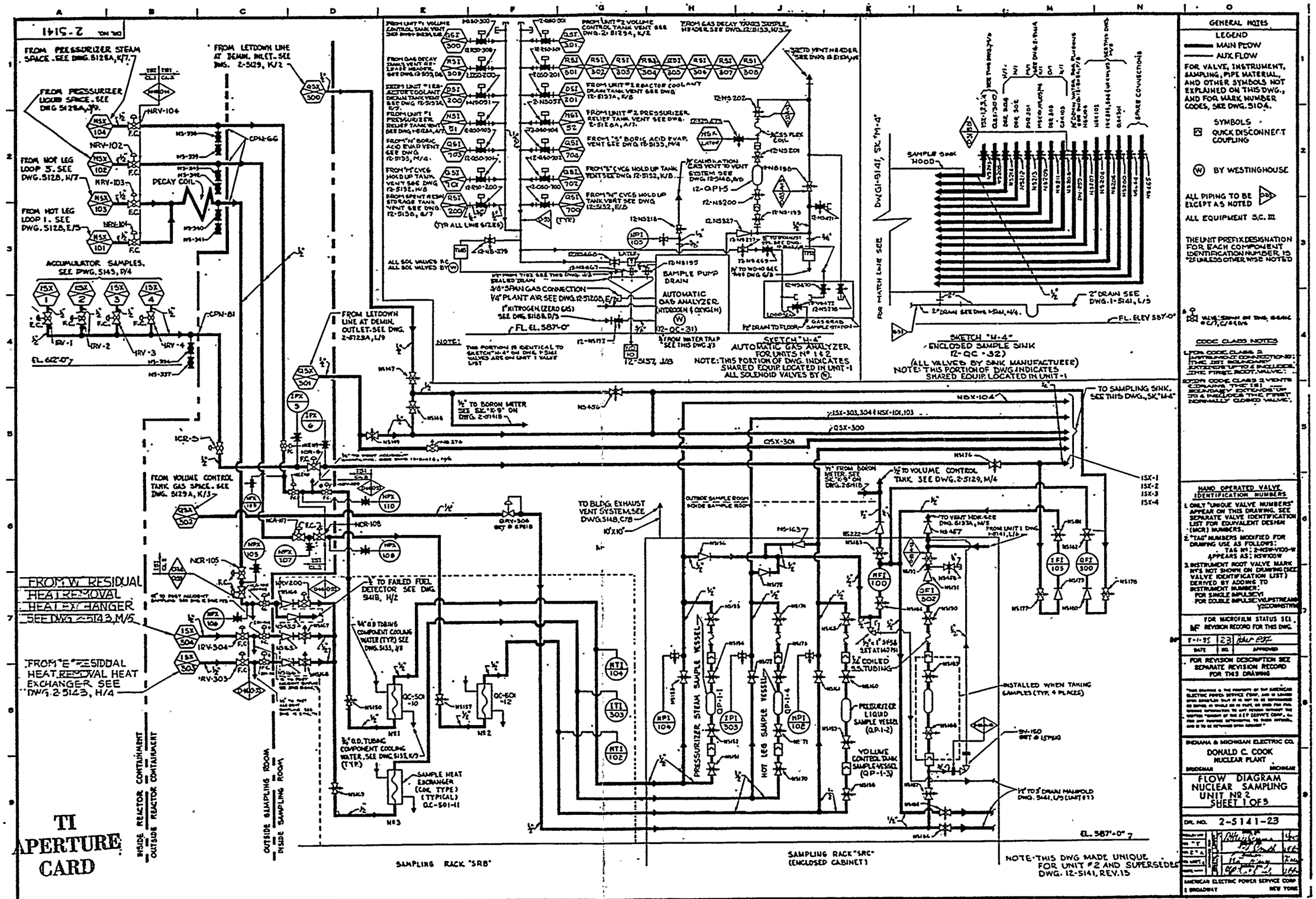

TI APERTURE CARD

Also Available On Aperture Card

8601080550 — 16

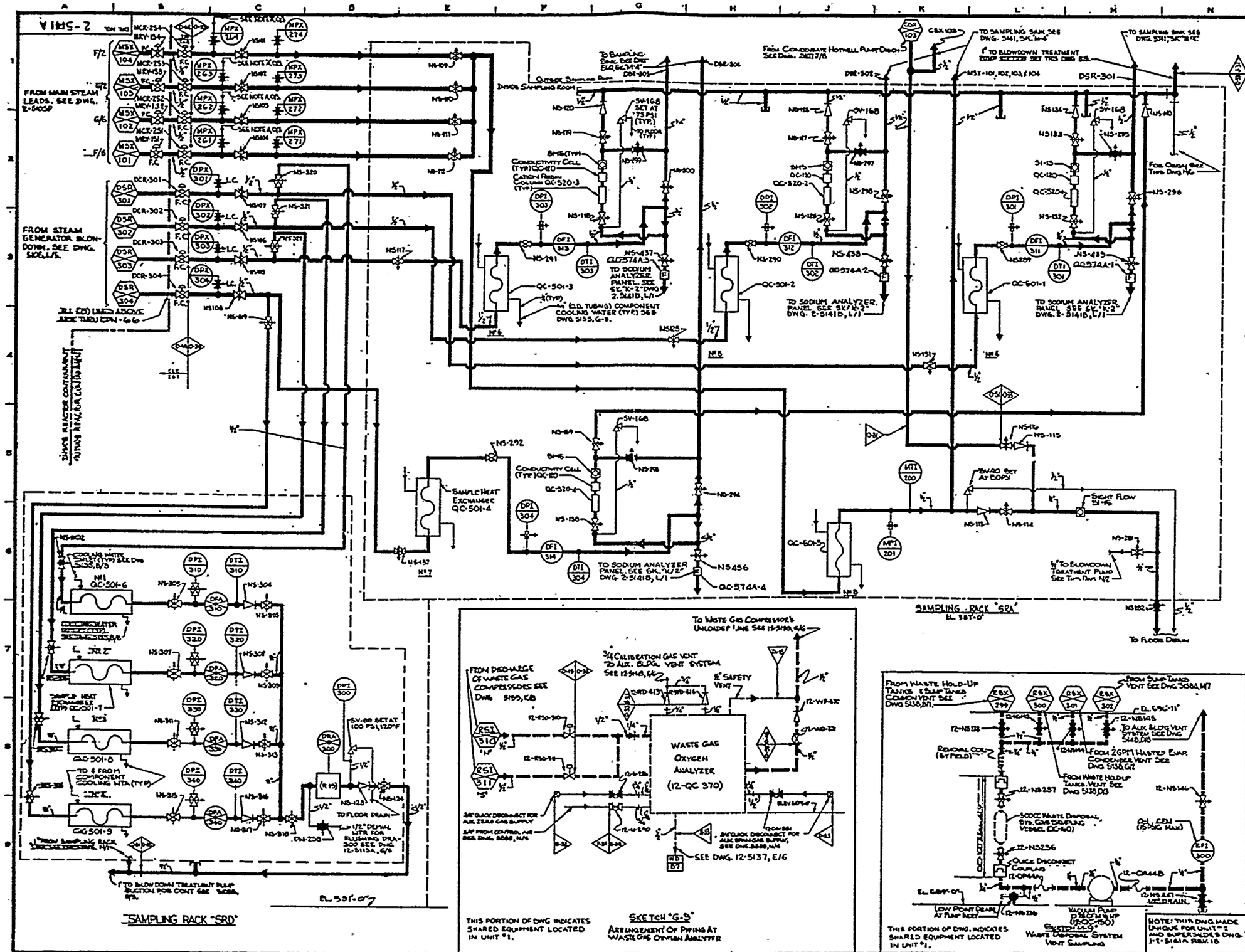

8601080550-17

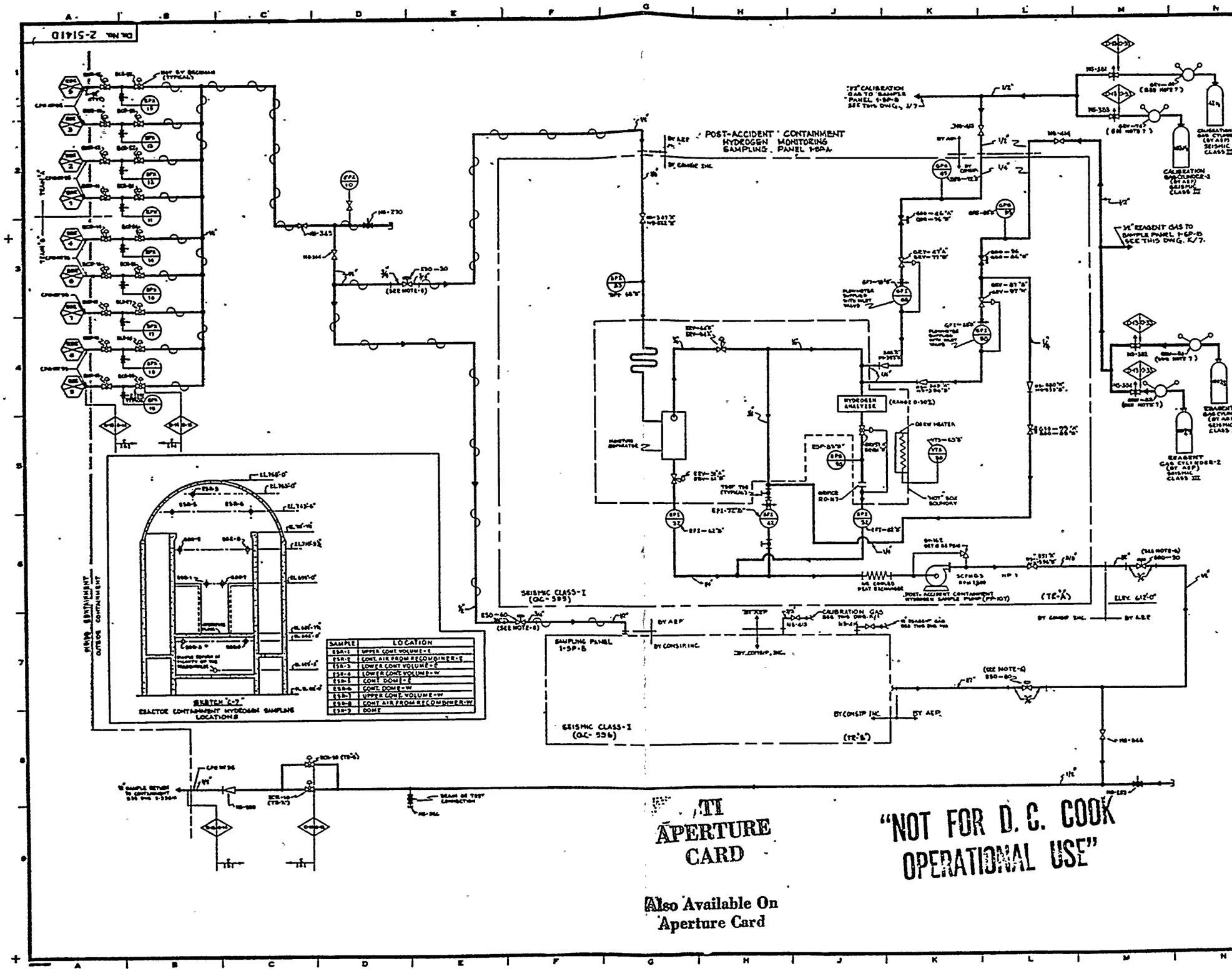

GENERAL NOTES

LEGEND

MAIN FLOW

ASSEMBLY

NOTES

1. LAYOUT OF NEW POST-ACCIDENT CONTAINMENT HYDROGEN MONITORING SYSTEMS AS PER M-050-0075 AND ETD-1 DL-5040.
2. ALL EQUIPMENT IN SEISMIC CLASS I EXCEPT AS NOTED.
4. CONTROL SWITCH LOCATED ON REPRESENTIVE CONSIP CONTROL PANEL.
7. REGULATING VALVE WITH UP AND DOWN SPRAMPTS, SAMPLE GAUGES AND SAFETY RELIEF.
8. ALL PIPING IS O-RS EXCEPT AS NOTED
10. EXTENDED LENGHT OF TUBING = "DRAWN SAMPLE TIME TO REACH TEMPERATURE INSIDE OF BOX.

THE UNIT PREFIX DESIGNATION FOR EACH COMPONENT IDENTIFICATION NUMBER 18"2" UNLESS OTHERWISE NOTED

HAND OPERATED VALVE IDENTIFICATION NUMBERS

1. ONLY "UNIQUE VALVE NUMBERS" APPEAR ON THIS DRAWING. SEE SEPARATE VALVE IDENTIFICATION LIST FOR EQUIVALENT DESIGN (MCA) NUMBERS.
2. "TAG" NUMBERS MODIFIED FOR DRAWING USE AS FOLLOWS:
   TAG NO: 1-HVM-100-18
   APPEARS AS: HVM008W
3. INSTRUMENT ROOT VALVE MARK NUMBERS NOT SHOWN ON DRAWING (SEE VALVE IDENTIFICATION LIST) DERIVED BY ADDING TO INSTRUMENT NUMBER:
   FOR SINGLE IMPULSE: V1
   FOR DOUBLE IMPULSE: V1 UPSTREAM, V2 DOWNSTREAM

M	7-11-85	7	
	DATE	RIA	APPROVED

FOR REVISION DESCRIPTION SEE SEPARATE REVISION RECORD FOR THIS DRAWING

INDIANA & MICHIGAN ELECTRIC CO.
DONALD C. COOK NUCLEAR PLANT
BRIDGMAN MICHIGAN

FLOW DIAGRAM
POST-ACCIDENT SAMPLING CONTAINMENT HYDROGEN
UNIT No 2

DR. NO. 2-5141D-7

AMERICAN ELECTRIC POWER SERVICE CORP.

8601080550 -18

"NOT FOR D.C. COOK OPERATIONAL USE"

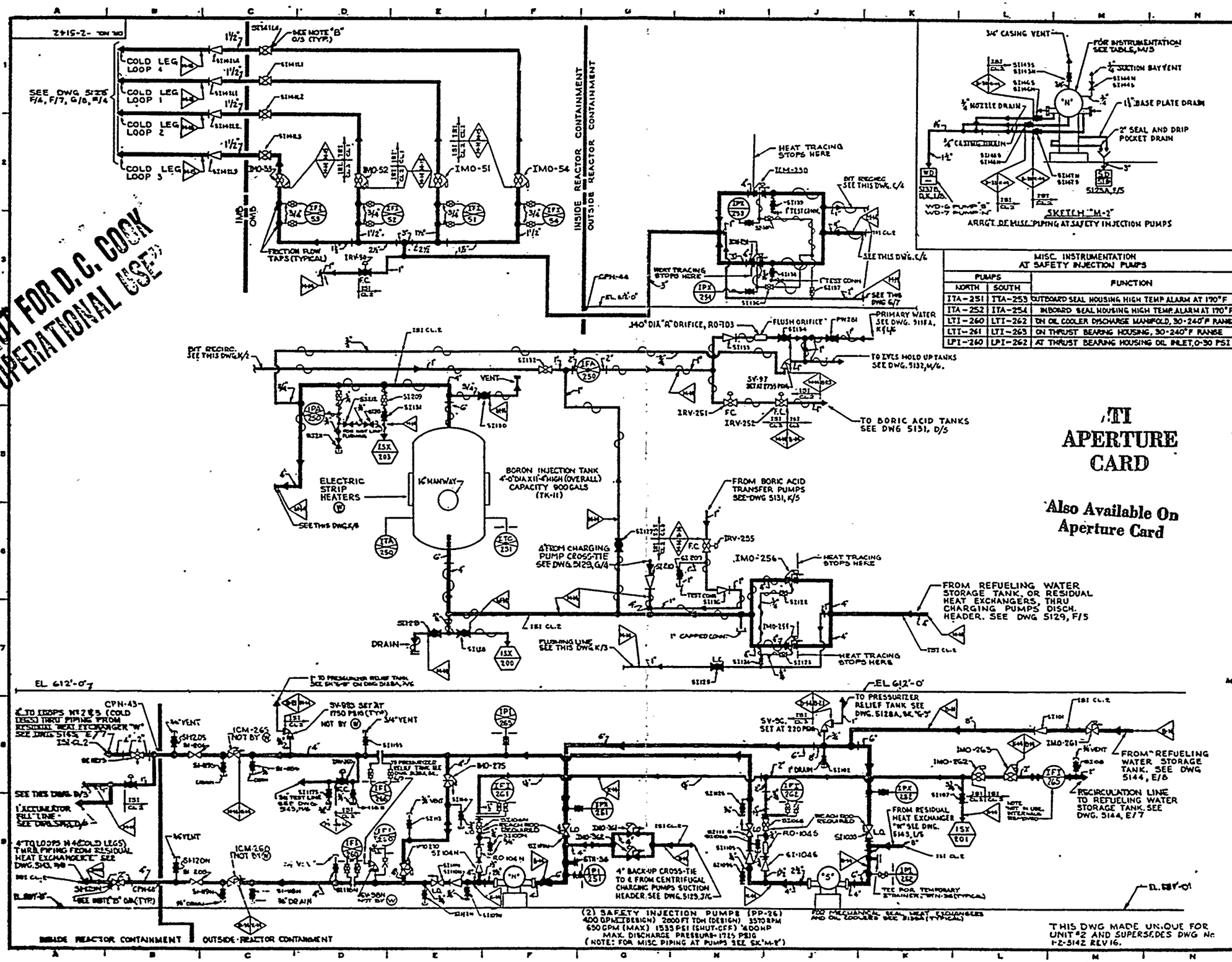

MISC. INSTRUMENTATION AT SAFETY INJECTION PUMPS

PUMPS NORTH	PUMPS SOUTH	FUNCTION
ITA-251	ITA-253	OUTBOARD SEAL HOUSING HIGH TEMP ALARM AT 170°F
ITA-252	ITA-254	INBOARD SEAL HOUSING HIGH TEMP ALARM AT 170°F
LTI-260	LTI-262	ON OIL COOLER DISCHARGE MANIFOLD, 30-240°F RANGE
LTI-261	LTI-263	ON THRUST BEARING HOUSING, 30-240°F RANGE
LPI-260	LPI-262	AT THRUST BEARING HOUSING OIL INLET, 0-30 PSI

8601080550-19

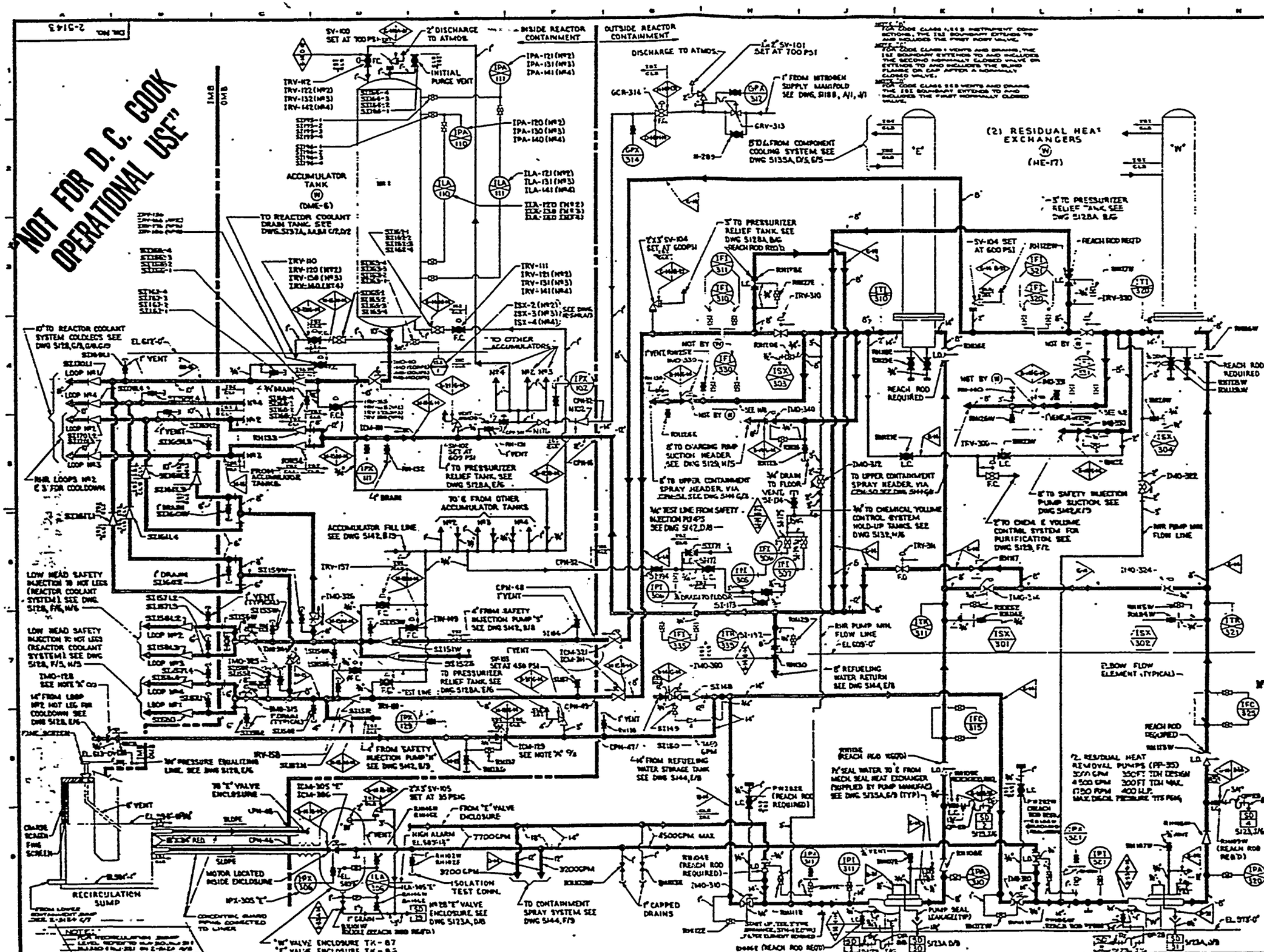

8601080550-20

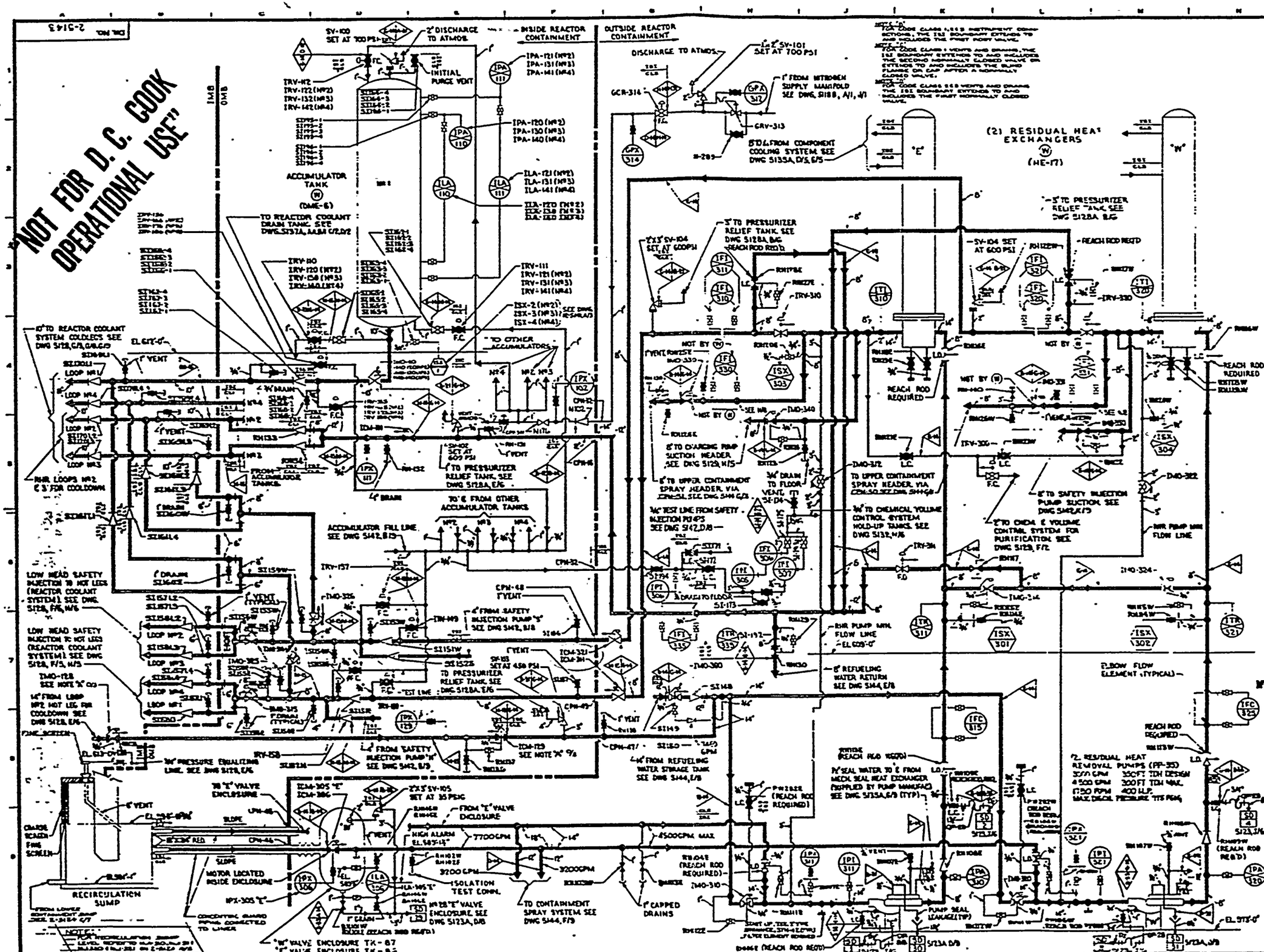

8601080550-20

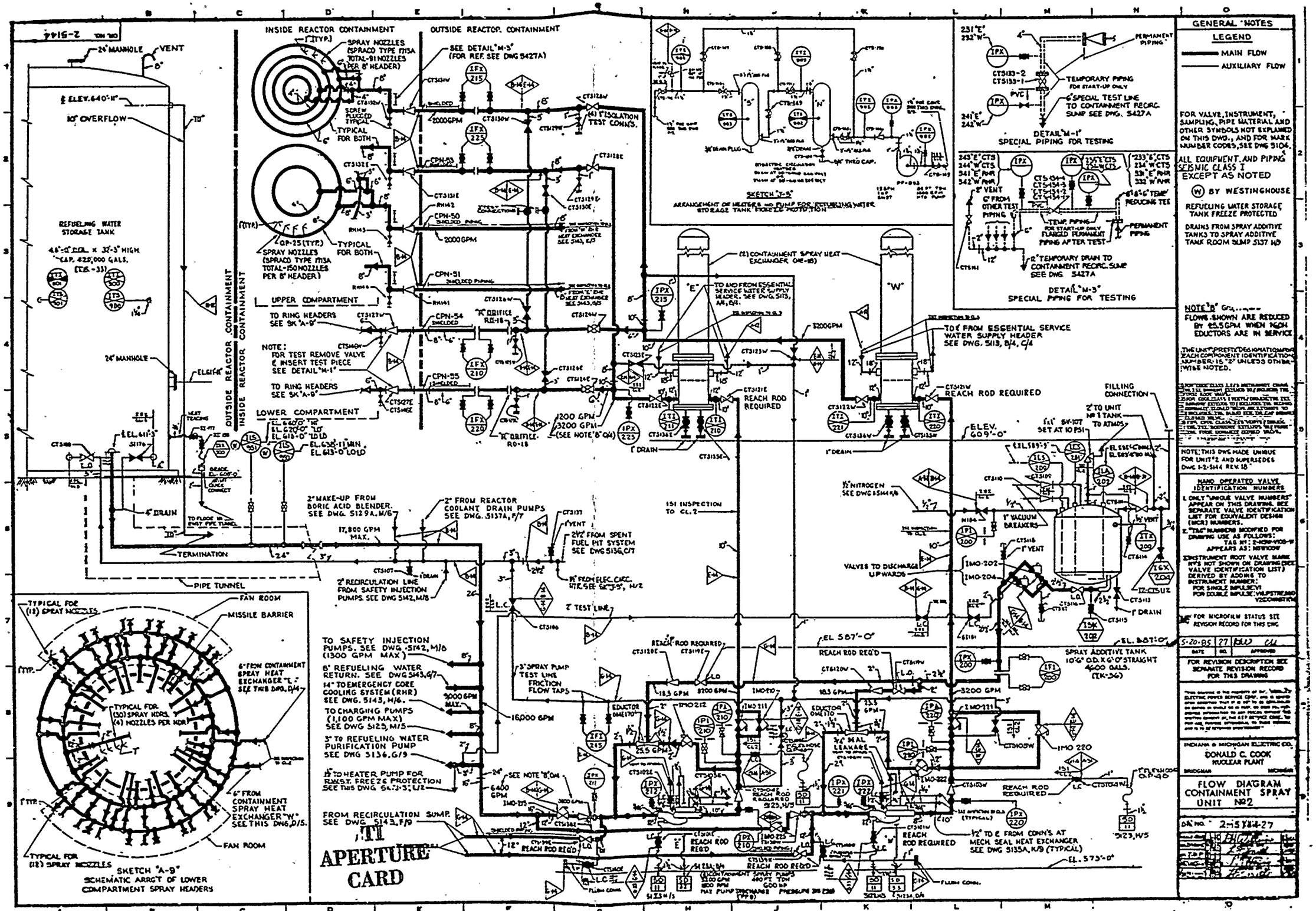

FOR U.C. COOK OPERATIONAL USE

Also Available On Aperture Card

8601080550-21

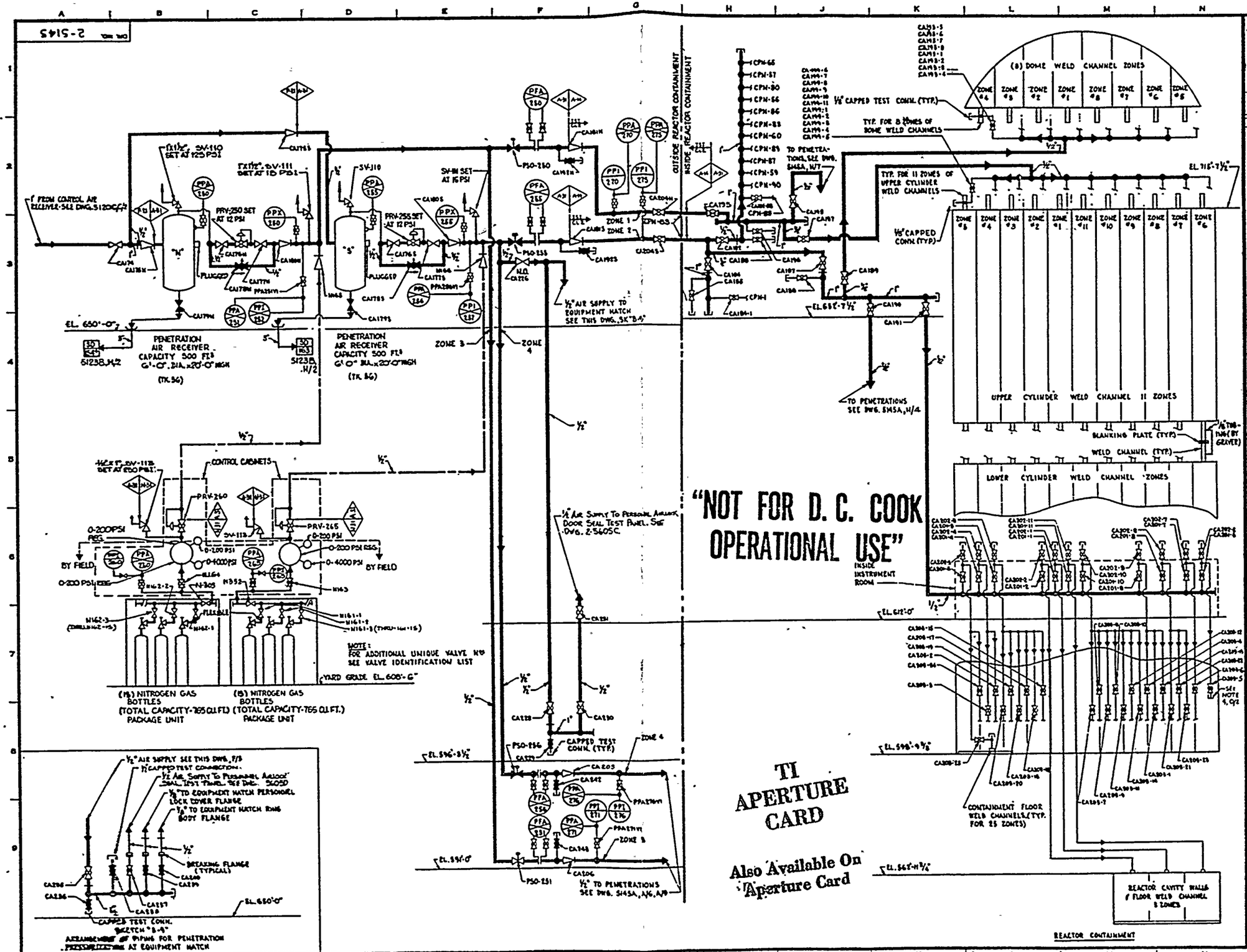

8601080550-22

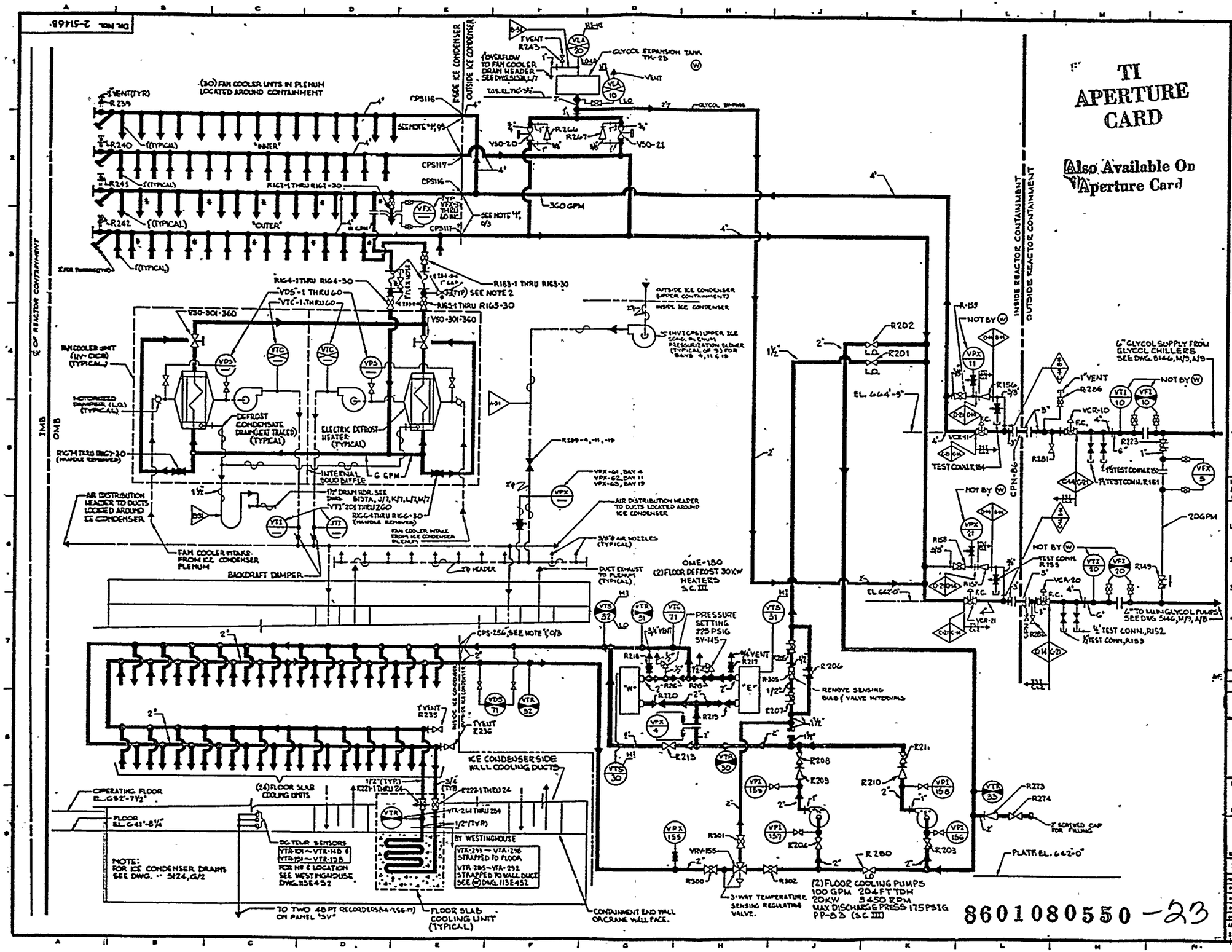

TI APERTURE CARD

Also Available On Aperture Card

GENERAL NOTES

LEGEND

- ETHYLENE GLYCOL
- AIR
- AUXILIARY PIPING

FOR VALVE, INSTRUMENT SAMPLING, PIPE MATERIAL AND OTHER SYMBOLS NOT EXPLAINED ON THIS DWG AND FOR MARK NUMBER CODES, SEE DWG B304.

ALL EQUIPMENT VALVES AND INSTRUMENTATION BY WESTINGHOUSE UNLESS OTHERWISE NOTED

ALL PIPING C-21 EXCEPT AS NOTED

ALL EQUIPMENT SEISMIC CLASS I EXCEPT AS NOTED

NOTE: "1" E/2, E/7 GLYCOL PIPING PENETRATES 125° END WALL ONLY.

NOTE: "2" B/3, C/3, D/3 GLYCOL CONNECTIONS FOR ICE BASKET WATER ADDITION EQUIPMENT SEE PNT. 5707, NUT 1-4, 2-4, 3/4, 3-3, 4-4

NOTE: "3" FOR CODE CLASS 1, 2 & 3 INSTRUMENT CONNECTIONS, THE 1ST BOUNDARY EXTENDS TO AND INCLUDES THE FIRST ROOT VALVE.

NOTE: "4" FOR CODE CLASS 1 VENTS AND DRAINS, THE 1ST BOUNDARY EXTENDS TO AND INCLUDES THE SECOND NORMALLY CLOSED VALVE OR EXTENDS TO AND INCLUDES THE BLIND FLANGE OR CAP AFTER A NORMALLY CLOSED VALVE.

NOTE: "5" FOR CODE CLASS 2 & 3 VENTS AND DRAINS THE 1ST BOUNDARY EXTENDS TO AND INCLUDES THE FIRST NORMALLY CLOSED VALVE.

NOTE: THIS DWG MADE UNIQUE FOR UNIT #2 AND SUPERSEDES DWG. 1-2-5146B, REV 12

NANO OPERATED VALVE IDENTIFICATION NUMBERS

1. ONLY "UNIQUE" VALVE NUMBERS APPEAR ON THIS DRAWING. SEE SEPARATE VALVE IDENTIFICATION LIST FOR EQUIVALENT DESIGN (NOR) NUMBERS.
2. "TAG" NUMBERS MODIFIED FOR DRAWING USE AS FOLLOWS:
   TAG Nº: 2-NSW-VOS-W
   APPEARS AS: NSW10W
3. INSTRUMENT ROOT VALVE MARK Nº'S NOT SHOWN ON DRAWING (SEE VALVE IDENTIFICATION LIST) DERIVED BY ADDING TO INSTRUMENT NUMBER:
   FOR SINGLE IMPULSE: V1
   FOR DOUBLE IMPULSE: V1 (UPSTREAM) V2 (DOWNSTREAM)

FOR MICROFILM STATUS SEE REVISION RECORD FOR THIS DWG.

DATE	NO.	APPROVED
8-30-85	21	

FOR REVISION DESCRIPTION SEE SEPARATE REVISION RECORD FOR THIS DRAWING

INDIANA & MICHIGAN ELECTRIC CO.
DONALD C. COOK NUCLEAR PLANT
BRIDGMAN MICHIGAN

FLOW DIAGRAM
ICE CONDENSER
REFRIGERATION

UNIT NO 2 SHEET 3 OF 3

DR. NO. 2-5146B-21

AMERICAN ELECTRIC POWER SERVICE CORP.
2 BROADWAY NEW YORK

8601080550 -23

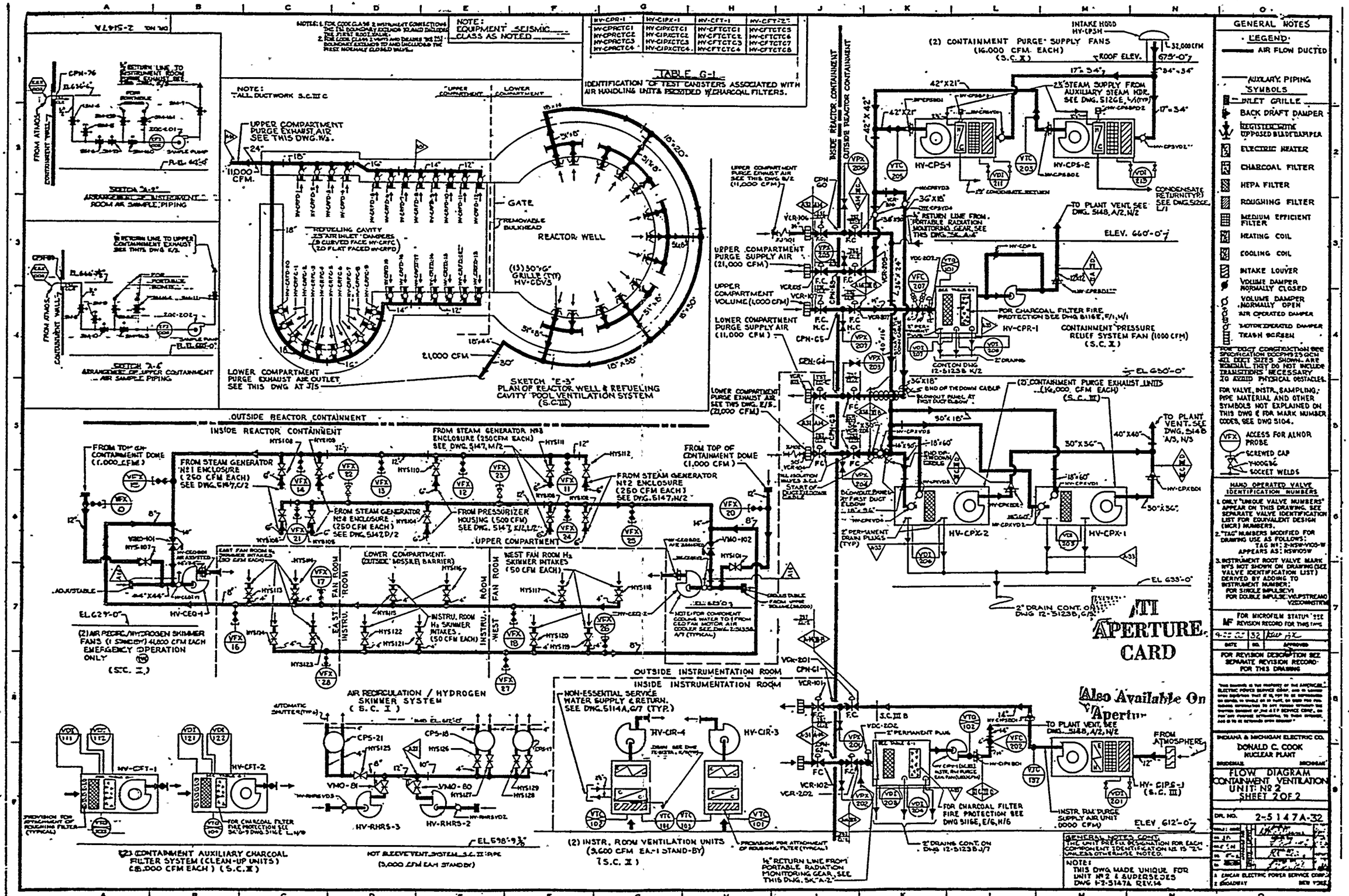

8601080550-24

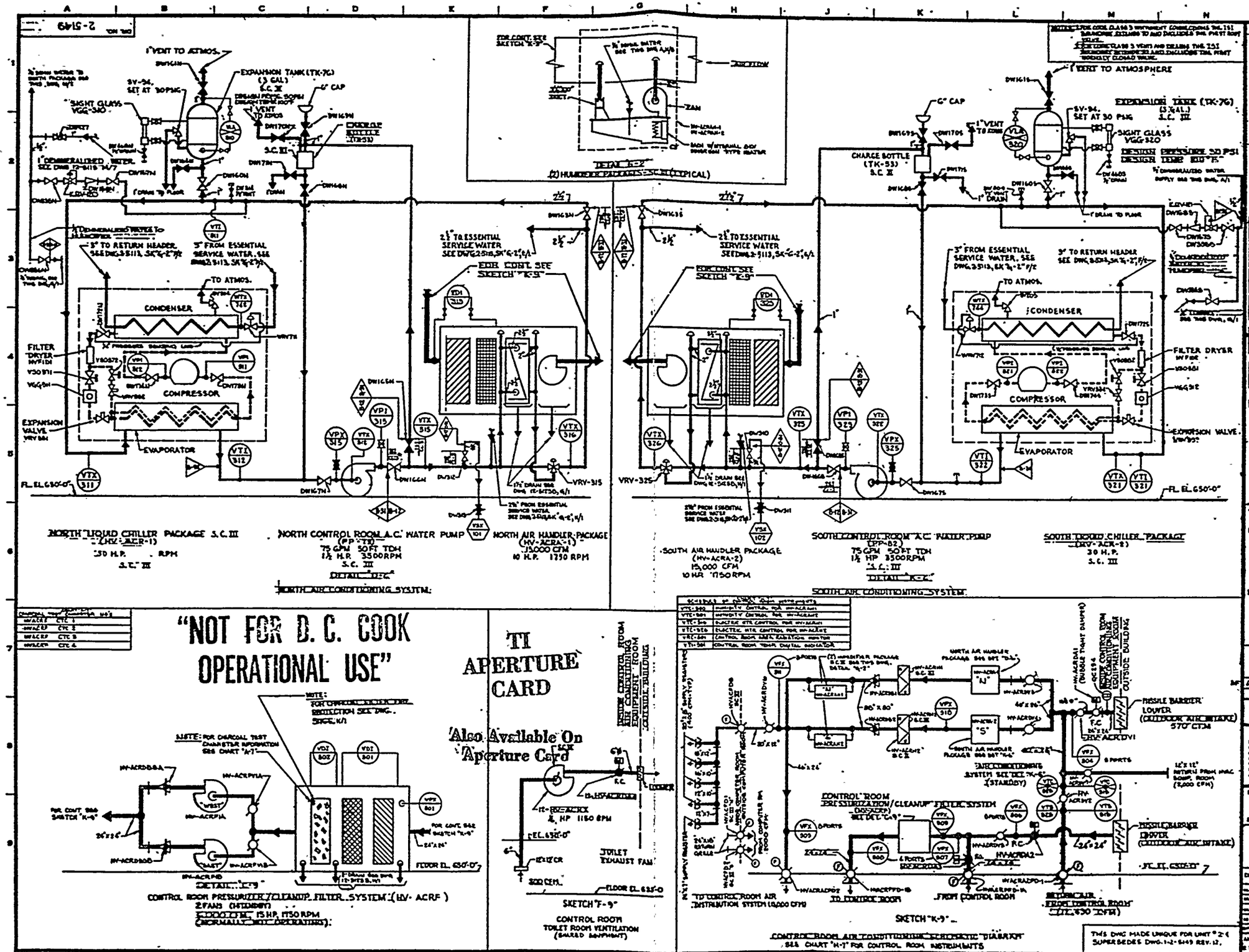

8601080550-25

TI
APERTURE
CARD

Also Available On
Aperture Card

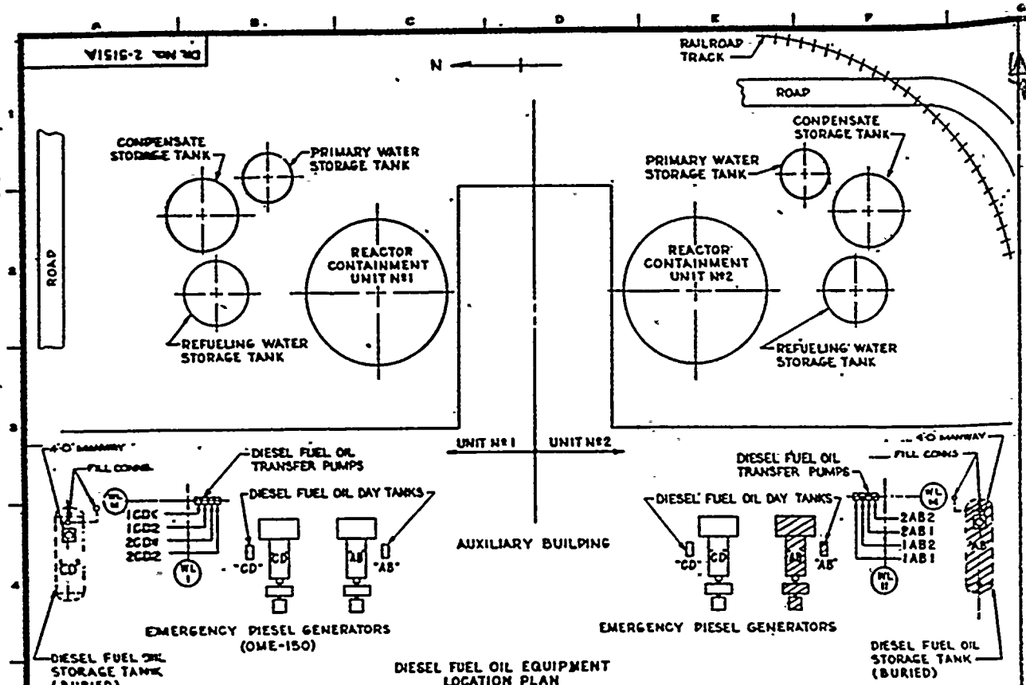

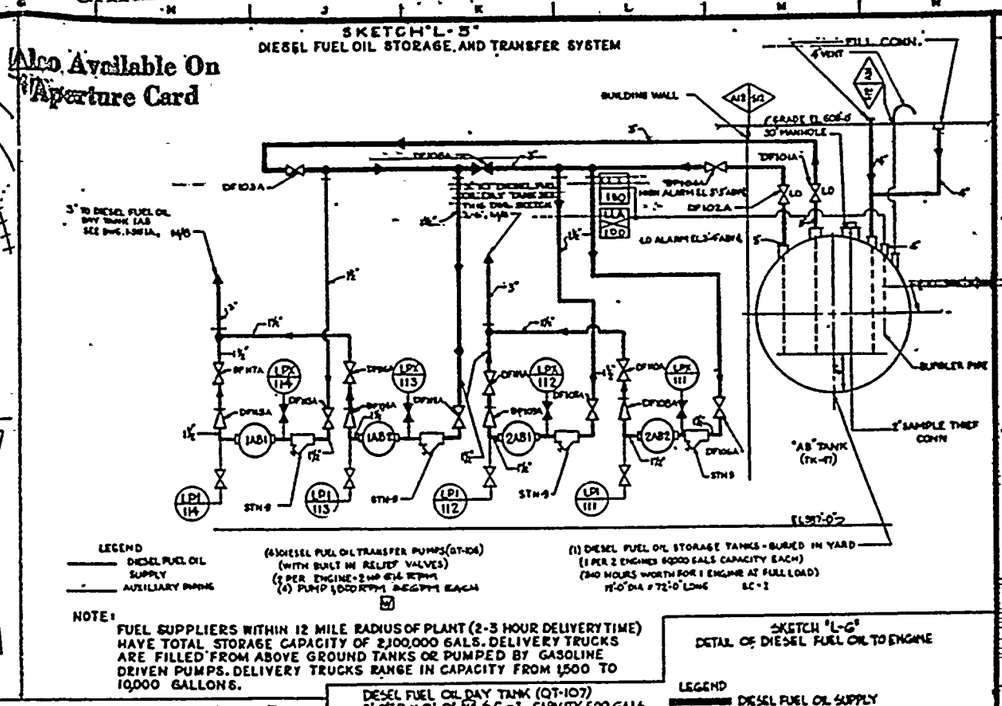

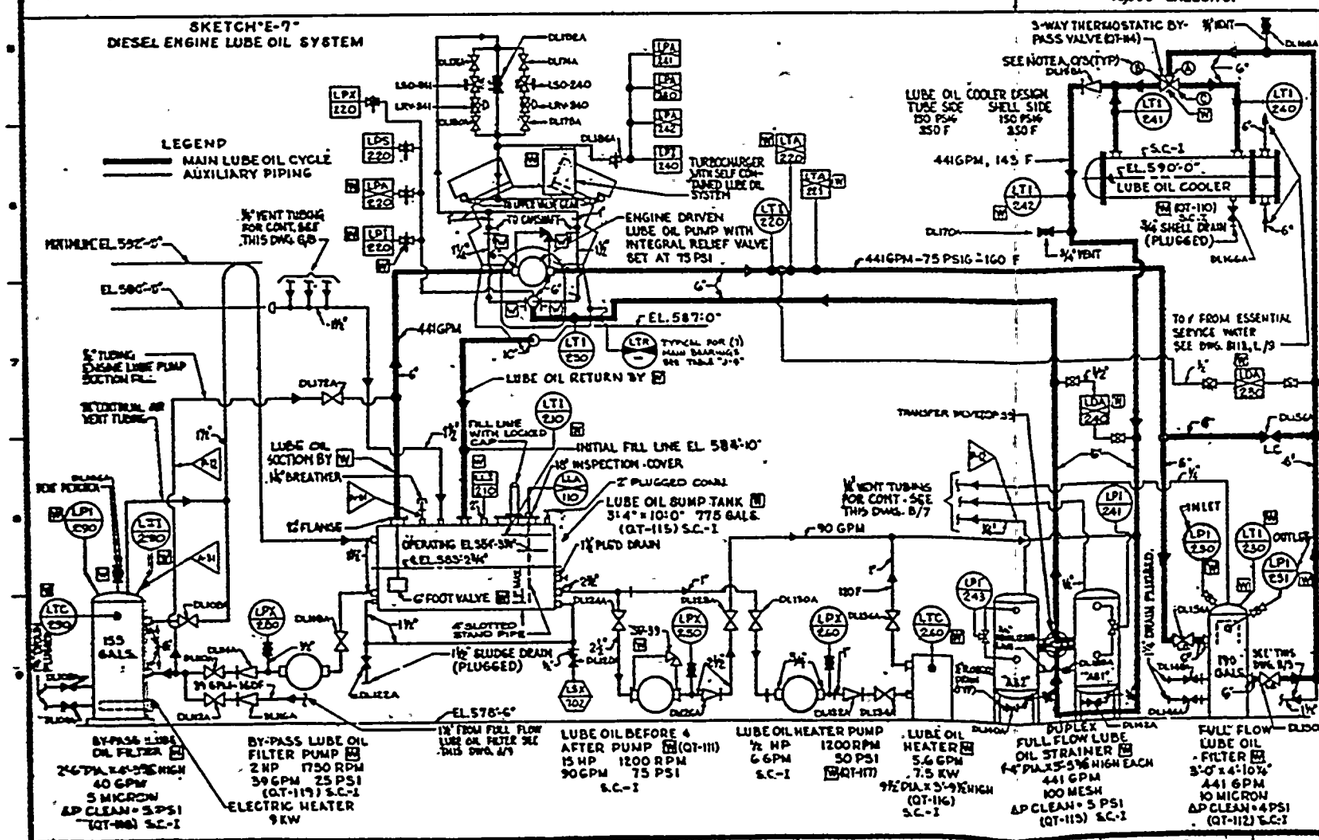

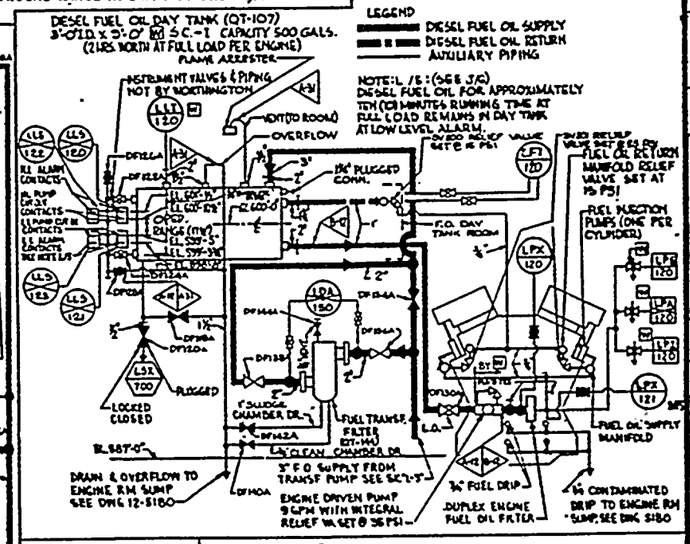

TABLE "1-6" MAIN BEARING TEMPERATURE INSTRUMENTS	
MAIN BRG. NO.	LTR
1	201
2	202
3	203
4	204
5	205
6	206
7	207

"NOT FOR D. C. COOK OPERATIONAL USE"

8601080550-26

GENERAL NOTES

LEGEND
AS NOTED

SYMBOLS
BY WORTHINGTON

PIPING AND VALVES FURNISHED BY ARE NOTED.

FOR VALVE, INSTRUMENT, SAMPLING, PIPE MATERIAL AND OTHER SYMBOLS NOT EXPLAINED ON THIS DWG., AND FOR MARK NUMBER CODES, SEE DWG. S104.

ALL DIESEL-GENERATORS INCLUDING THEIR AUXILIARIES, STORAGE TANKS AND PIPING ARE SEISMIC CLASS I EXCEPT AS NOTED.

NOTE A, WS
ENCIRCLED LETTERS ARE SHOWN FOR ORIENTATION OF VALVE IN PIPING. THESE LETTERS REFLECT SIMILAR MARKINGS ON VALVE BODY.

ALL PIPING TO BE CLASS OR FOR EMBEDDED, EXCEPT AS NOTED.

ALL PIPING AND EQUIPMENT TO BE ASME CODE CLASS 3 EXCEPT AS NOTED.

FOR ASME CODE CLASS 3 INSTRUMENT ISOLATION VALVES, THE ASME BOUNDARY EXTENDS TO AND INCLUDES THE FIRST ROOT VALVE.

FOR ASME CODE CLASS 3 VENTS AND DRAINS, THE ASME BOUNDARY EXTENDS TO AND INCLUDES THE FIRST NORMALLY CLOSED VALVE.

NOTE
THE UNIT PREFIX DESIGNATION FOR EACH COMPONENT IDENTIFICATION NUMBER IS "2" UNLESS OTHERWISE NOTED.

NOTE THIS DWG MADE UNIQUE FOR UNIT "2" & "AB" AND SUPERSEDES 2-5150 REV. 20.

HAND OPERATED VALVE IDENTIFICATION NUMBERS
1. ONLY "UNIQUE VALVE NUMBERS" APPEAR ON THIS DRAWING. SEE SEPARATE VALVE IDENTIFICATION LIST FOR EQUIVALENT DESIGN (MCR) NUMBERS.
2. "TAG" NUMBERS MODIFIED FOR DRAWING USE AS FOLLOWS:
TAG NO: 2-MOV-VC08-W
APPEARS AS: MOV1C08
3. INSTRUMENT ROOT VALVE MARK NO'S NOT SHOWN ON DRAWING (SEE VALVE IDENTIFICATION LIST) DERIVED BY ADDING TO INSTRUMENT NUMBER:
FOR SINGLE IMPULSE: V1
FOR DOUBLE IMPULSE: V1(UPSTREAM) V2(DOWNSTREAM)

FOR MICROFILM STATUS SEE REVISION RECORD FOR THIS DWG.

DATE	BY	APPROVED
7-17-85	24	

FOR REVISION DESCRIPTION SEE SEPARATE REVISION RECORD FOR THIS DRAWING

INDIANA & MICHIGAN ELECTRIC CO.
DONALD C. COOK NUCLEAR PLANT
BRIDGMAN MICHIGAN

FLOW DIAGRAM
EMERGENCY DIESEL GENERATOR "AB"
UNIT NO 2

DR. No. 2-5151A-24

AMERICAN ELECTRIC POWER SERVICE CORP.
2 BROADWAY NEW YORK

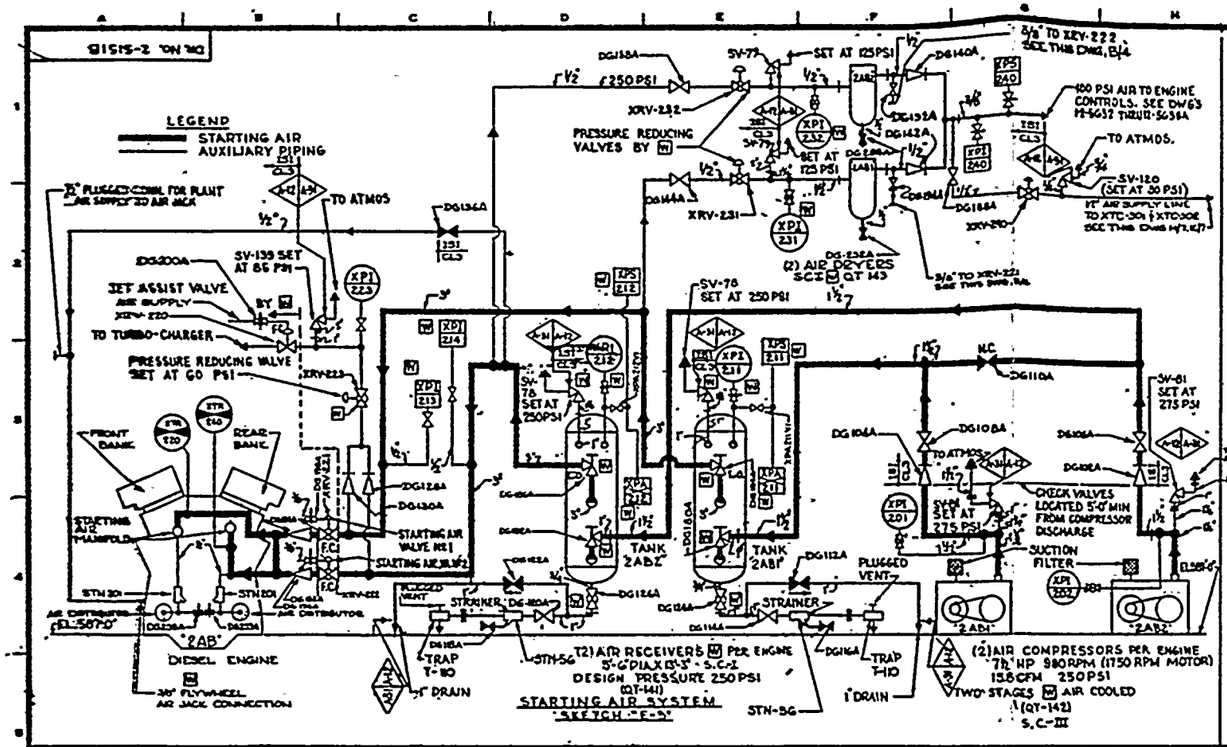

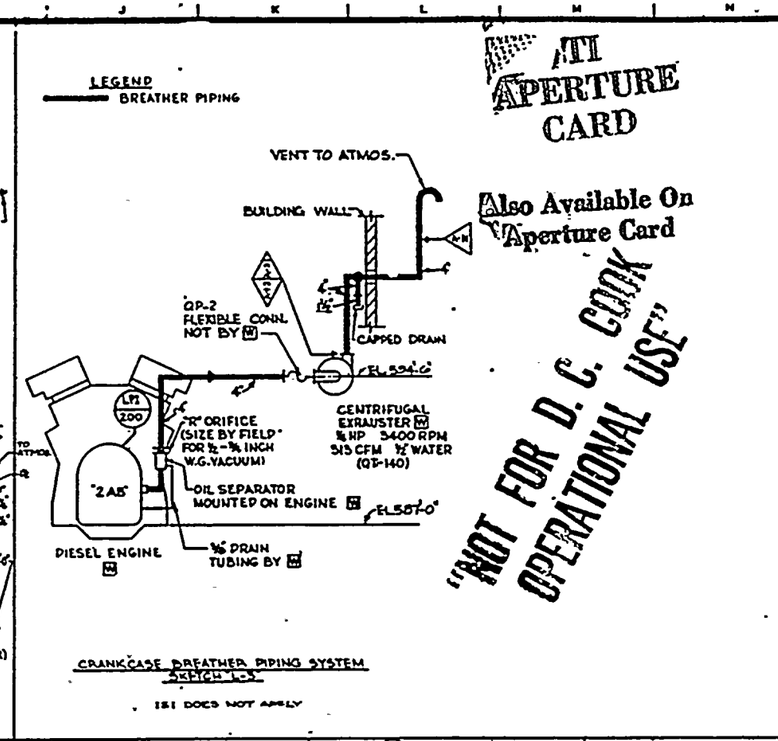

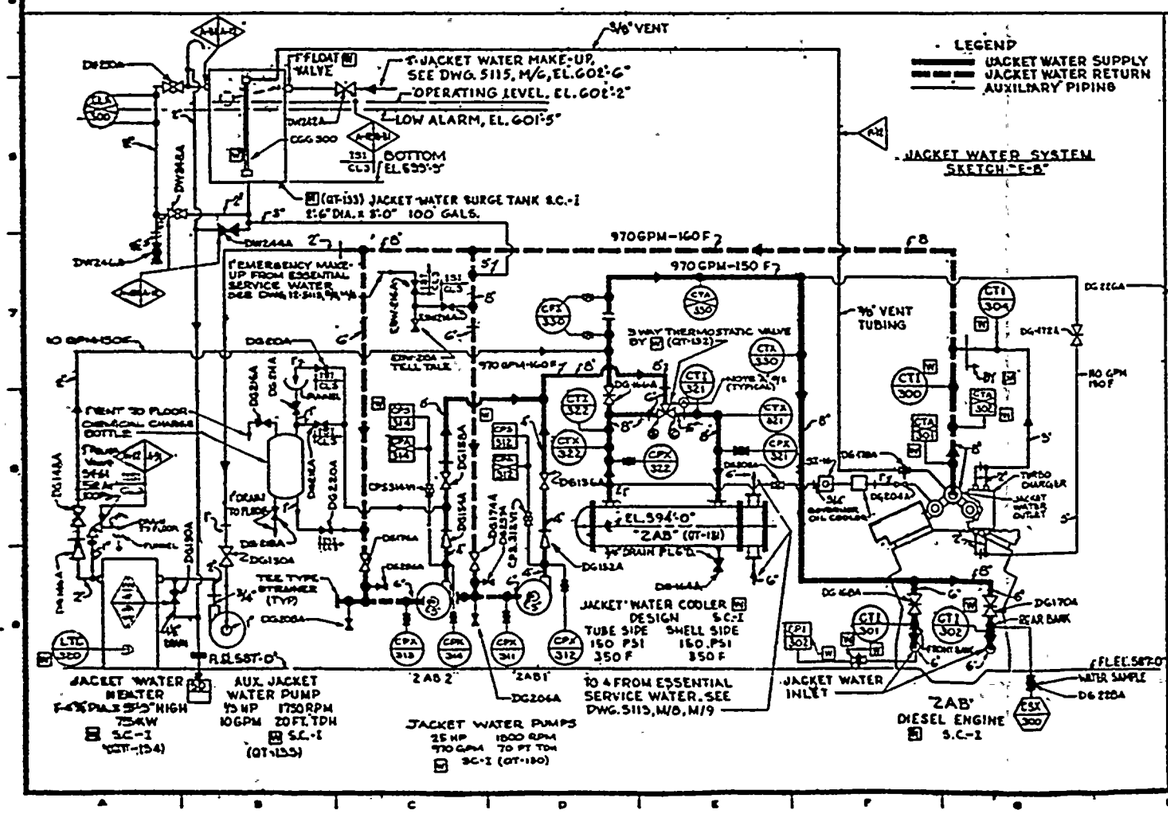

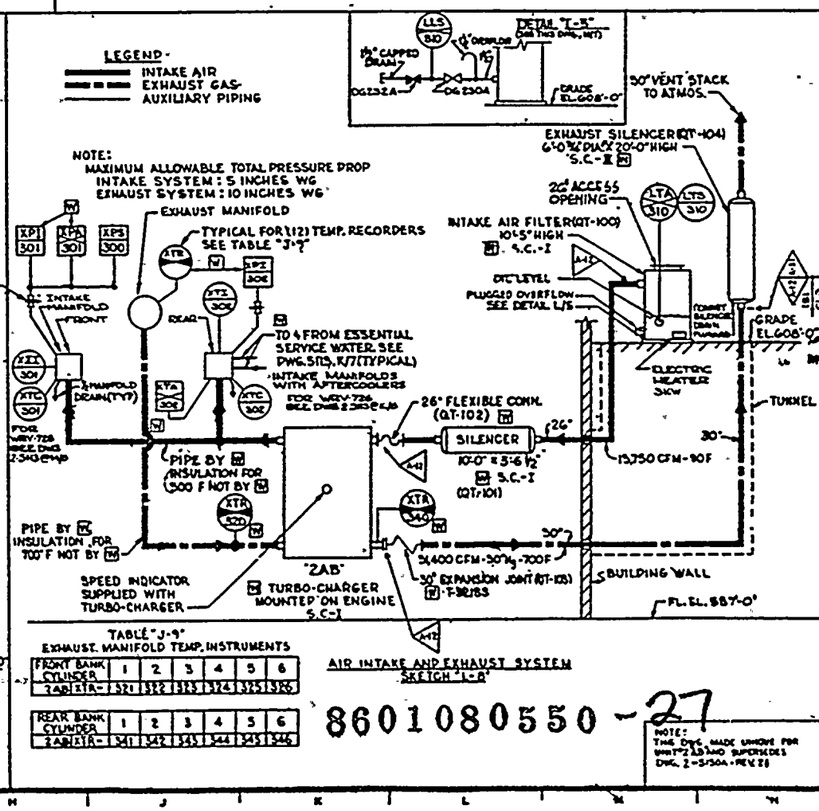

TABLE "J-9"
EXHAUST MANIFOLD TEMP. INSTRUMENTS

FRONT BANK CYLINDER	1	2	3	4	5	6
2AB XTA-	321	322	323	324	325	326

REAR BANK CYLINDER	1	2	3	4	5	6
2AB XTA-	341	342	343	344	345	346

GENERAL NOTES

LEGEND
AS NOTED

SYMBOLS
BY WORTHINGTON

PIPING AND VALVES FURNISHED BY ARE NOTED.

FOR VALVE, INSTRUMENT, SAMPLING, PIPE MATERIAL AND OTHER SYMBOLS NOT EXPLAINED ON THIS DWG., AND FOR MARK NUMBER CODES SEE DWG. 5104

THE UNIT PREFIX DESIGNATION FOR EACH COMPONENT IDENTIFICATION NUMBER IS "2" UNLESS OTHERWISE NOTED.

NOTE "A" E/B
ENCIRCLED LETTERS ARE SHOWN FOR ORIENTATION OF VALVE IN PIPING.
THESE LETTERS REFLECT SIMILAR MARKINGS ON VALVE BODY

ALL DIESEL-GENERATORS INCLUDING THEIR AUXILIARIES, STORAGE TANKS & PIPING ARE SEISMIC CLASS I EXCEPT AS NOTED.

ALL PIPING TO BE CLASS A-2 OR B-2 FOR EMBEDDED, EXCEPT AS NOTED.

CODE CLASS NOTES

ALL VESSELS & EQUIPMENT TO ASME SECT. VIII CODE CLASS B EXCEPT AS NOTED.
FOR CODE CLASS B INSTRUMENT CONTROL TYPE (B) EQUIPMENT EXTENDS TO A FLANGE OR CLOSED VALVE.
FOR CODE CLASS C INSTRUMENT CONTROL TYPE (B) EQUIPMENT EXTENDS TO A FLANGE OR CLOSED VALVE.

HAND OPERATED VALVE IDENTIFICATION NUMBERS

1. ONLY "UNIQUE VALVE NUMBERS" APPEAR ON THIS DRAWING. SEE SEPARATE VALVE IDENTIFICATION LIST FOR EQUIVALENT DESIGN (MCR) NUMBERS.
2. "TAG" NUMBERS MODIFIED FOR DRAWING USE AS FOLLOWS:
TAG NO: 2-NCW-V105-W
APPEARS AS: NCW105W
3. INSTRUMENT ROOT VALVE MARK NO'S NOT SHOWN ON DRAWING (NCR VALVE IDENTIFICATION LIST) DERIVED BY ADDING TO INSTRUMENT NUMBER:
FOR SINGLE IMPULSE: V1
FOR DOUBLE IMPULSE: V1 UPSTREAM, V2 DOWNSTREAM

FOR MICROFILM STATUS SEE REVISION RECORD FOR THIS DWG.

DATE	INIT.	APPROVED
5-16-85	26	[illegible]

FOR REVISION DESCRIPTION SEE SEPARATE REVISION RECORD FOR THIS DRAWING

INDIANA & MICHIGAN ELECTRIC CO.
DONALD C. COOK NUCLEAR PLANT

FLOW DIAGRAM EMERGENCY DIESEL GENERATOR "AB"

UNIT NO 2

DR. NO 2-5151B-26

DRAWN	JJ	[illegible]
CHECKED		[illegible]
PROJ. ENG.		[illegible]
DIV.		[illegible]

AMERICAN ELECTRIC POWER SERVICE CORP.
2 BROADWAY NEW YORK

8601080550 -27

NOTE: THIS DWG. MADE UNIQUE FOR UNIT #2 & AND SUPERSEDES DWG. 2-5150A - REV. 28

DWG NO. 2-5151C

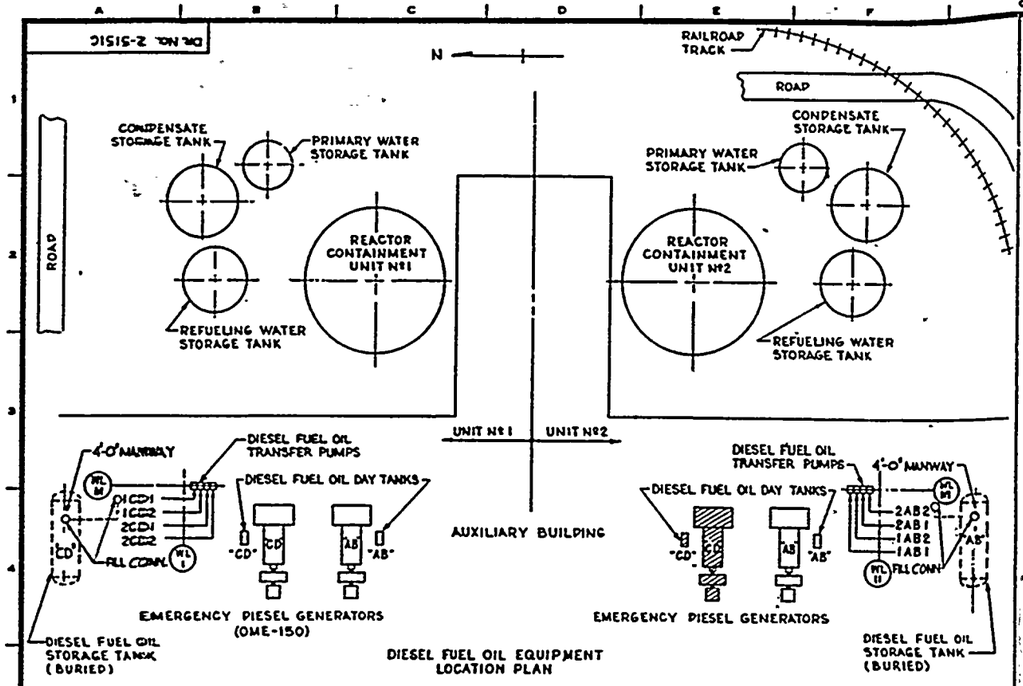

DESEL FUEL OIL STORAGE AND TRANSFER SYSTEM
(SEE SKETCH "L-3" DWG. 1-5151C)

TI APERTURE CARD

Also Available On Aperture Card

SKETCH "E-7"
DIESEL ENGINE LUBE OIL SYSTEM

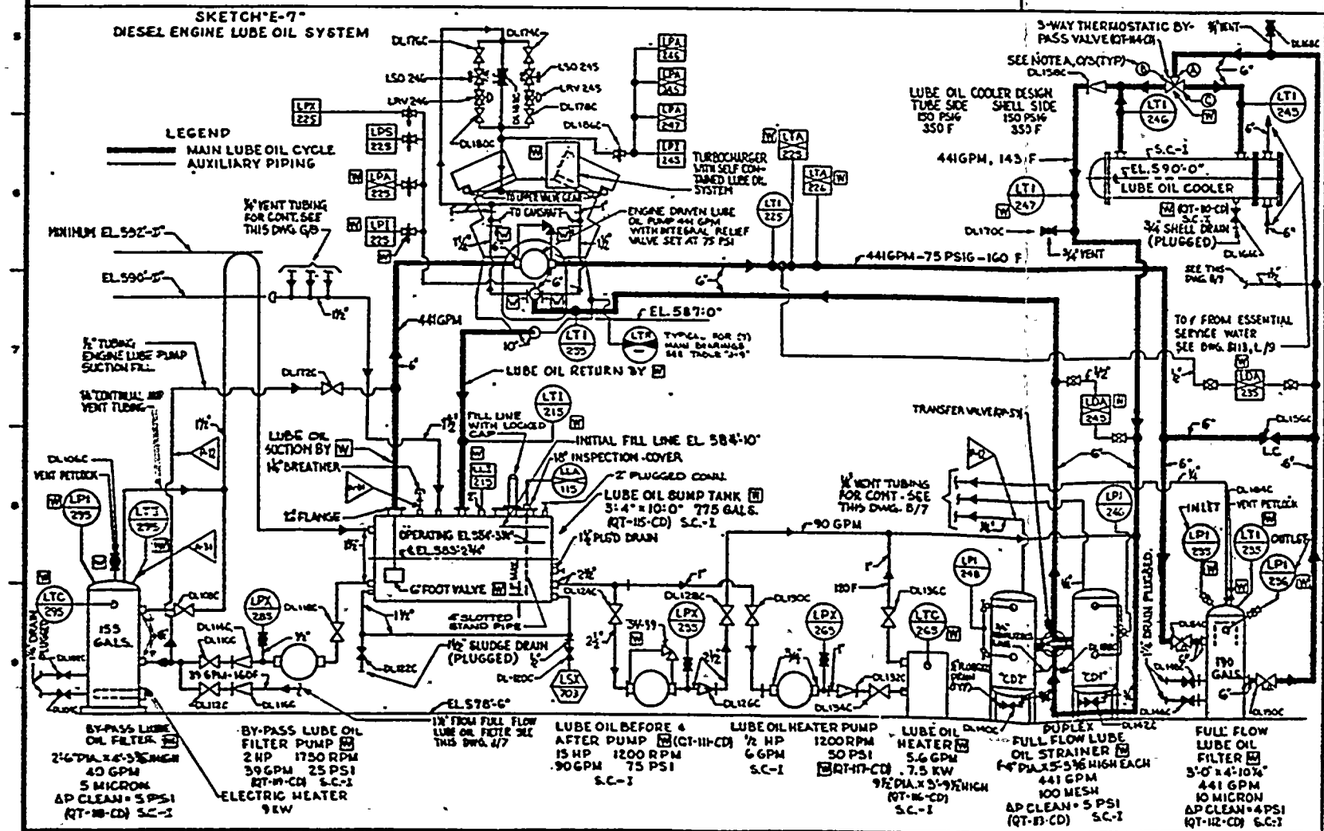

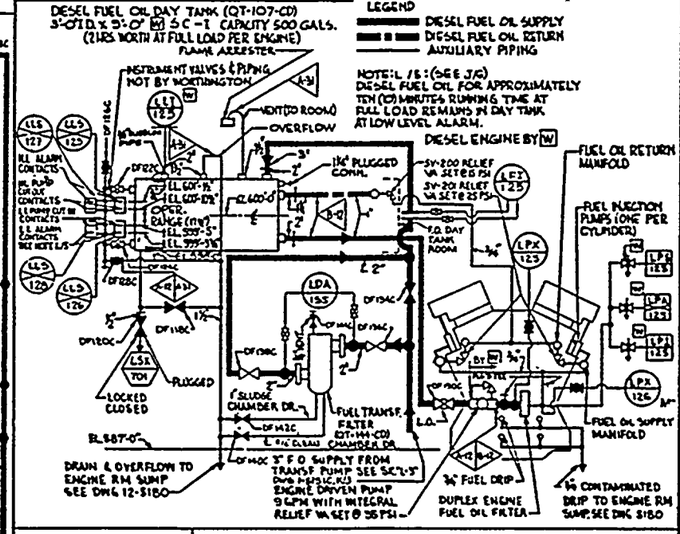

T.D.S. "J-9" MAIN BEARING TEMPERATURE INSTRUMENTS

MAIN BRG. NO.	LTR
1	211
2	212
3	213
4	214
5	215
6	216
7	217

8601080550-28

GENERAL NOTES

LEGEND
AS NOTED

SYMBOLS
W BY NORTHINGTON

PIPING AND VALVES FURNISHED BY W ARE NOTED.

FOR VALVE, INSTRUMENT, SAMPLING, PIPE MATERIAL, AND OTHER SYMBOLS NOT EXPLAINED ON THIS DWG., AND FOR MARK NUMBER CODES, SEE DWG. 5104.

ALL DIESEL-GENERATORS INCLUDING THEIR AUXILIARIES, STORAGE TANKS AND PIPING ARE SEISMIC CLASS I EXCEPT AS NOTED.

NOTE A. 4/5
ENCIRCLED LETTERS ARE SHOWN FOR ORIENTATION OF VALVE IN PIPING.
THESE LETTERS REFLECT SIMILAR MARKINGS ON VALVE BODY.

ALL PIPING TO BE CLASS A-12 OR B-12 FOR EMBEDDED, EXCEPT AS NOTED.

ALL PIPING AND EQUIPMENT TO BE ASME CODE CLASS 3 EXCEPT AS NOTED.

FOR ASME CODE CLASS 3 INSTRUMENT LINES, THE ASME BOUNDARY EXTENDS TO AND INCLUDES THE FIRST ROOT VALVE.

FOR ASME CODE CLASS 3 VENTS AND DRAINS THE ASME BOUNDARY EXTENDS TO AND INCLUDES THE FIRST NORMALLY CLOSED VALVE.

THE UNIT PREFIX DESIGNATION FOR EACH COMPONENT IDENTIFICATION NUMBER IS "2" UNLESS OTHERWISE NOTED.

NOTE: THIS DWG MADE UNIQUE FOR UNIT "D" AND SUPERSEDES 2-5130 REV. 20

HAND OPERATED VALVE IDENTIFICATION NUMBERS
1. ONLY "UNIQUE VALVE NUMBERS" APPEAR ON THIS DRAWING. SEE SEPARATE VALVE IDENTIFICATION LIST FOR EQUIVALENT DESIGN (MCR) NUMBERS.
2. "X" NUMBERS MODIFIED FOR DRAWING USE AS FOLLOWS:
TAG Nº: 2-RCW-V100-W
APPEARS AS: RCW100W
3. INSTRUMENT ROOT VALVE MARK Nº'S NOT SHOWN ON DRAWING (SEE VALVE IDENTIFICATION LIST) DERIVED BY ADDING TO INSTRUMENT NUMBER:
FOR SINGLE IMPULSE: V1
FOR DOUBLE IMPULSE: V1 UPSTREAM, V2 DOWNSTREAM

FOR MICROFILM STATUS SEE REVISION RECORD FOR THIS DWG.

REV.	DATE	NO.	APPROVED
	10-14-85	24	

FOR REVISION DESCRIPTION SEE SEPARATE REVISION RECORD FOR THIS DRAWING

INDIANA & MICHIGAN ELECTRIC CO.
DONALD C. COOK NUCLEAR PLANT
BRIDGMAN MICHIGAN

FLOW DIAGRAM
EMERGENCY DIESEL GENERATOR "CD"
UNIT Nº 2

DWG. NO. 2-5151C-24

SCALE NONE | DRAWN | DESIGN | ENGINEER | VALIDATION | DATE

AMERICAN ELECTRIC POWER SERVICE CORP.
2 BROADWAY NEW YORK

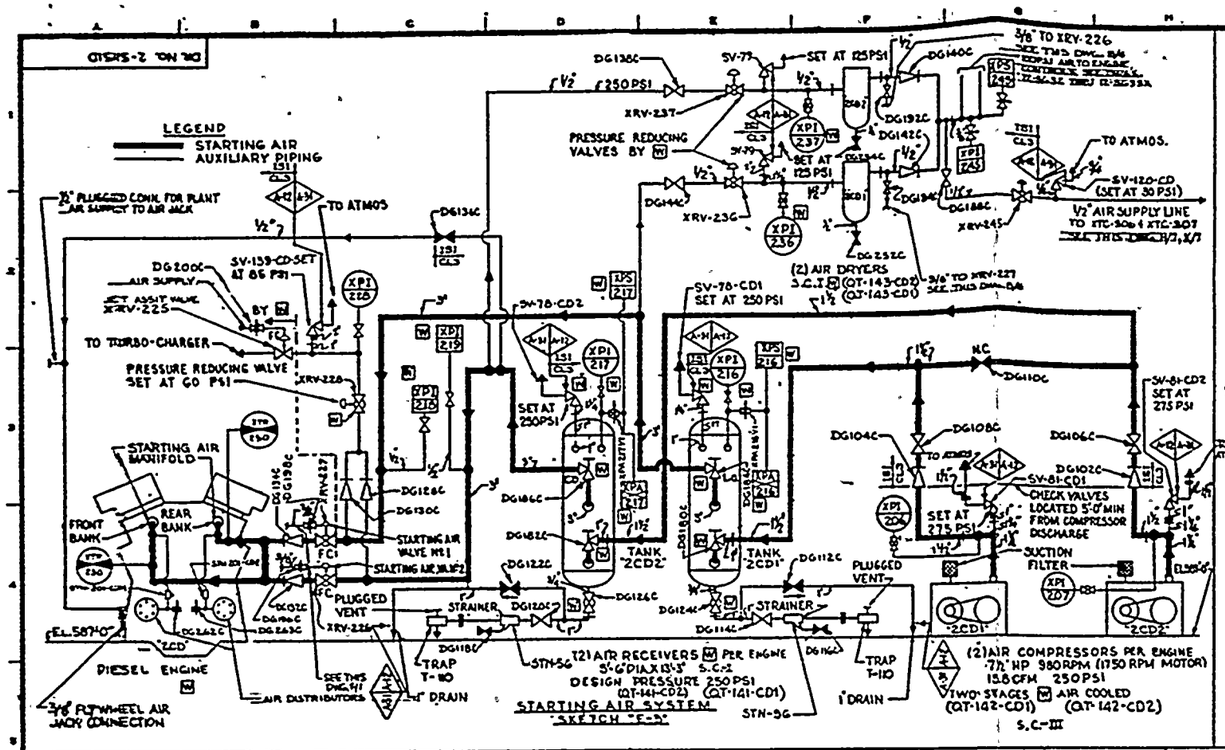

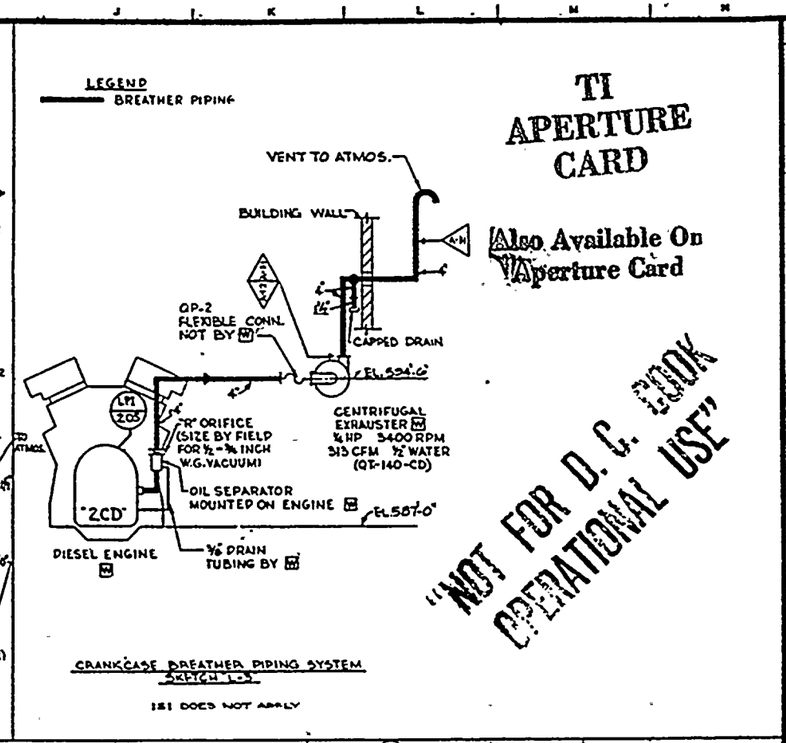

TI APERTURE CARD

Also Available On Aperture Card

"NOT FOR D.C. COOK OPERATIONAL USE"

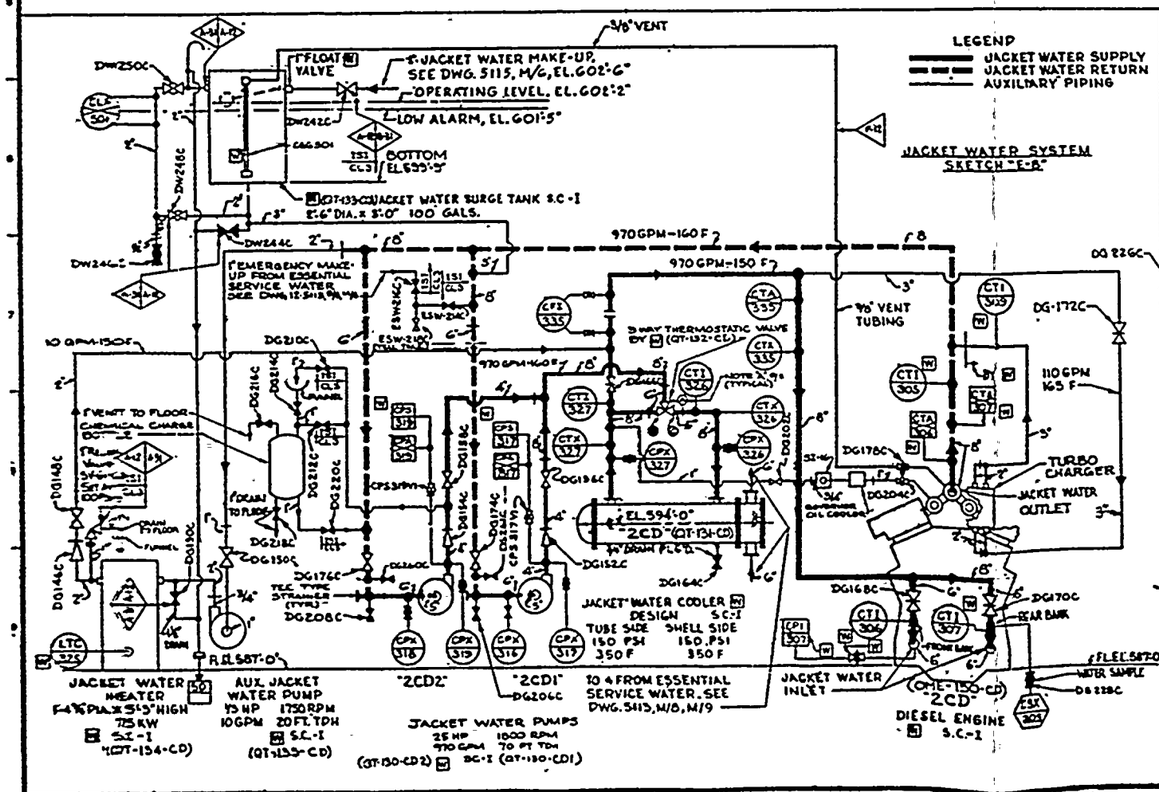

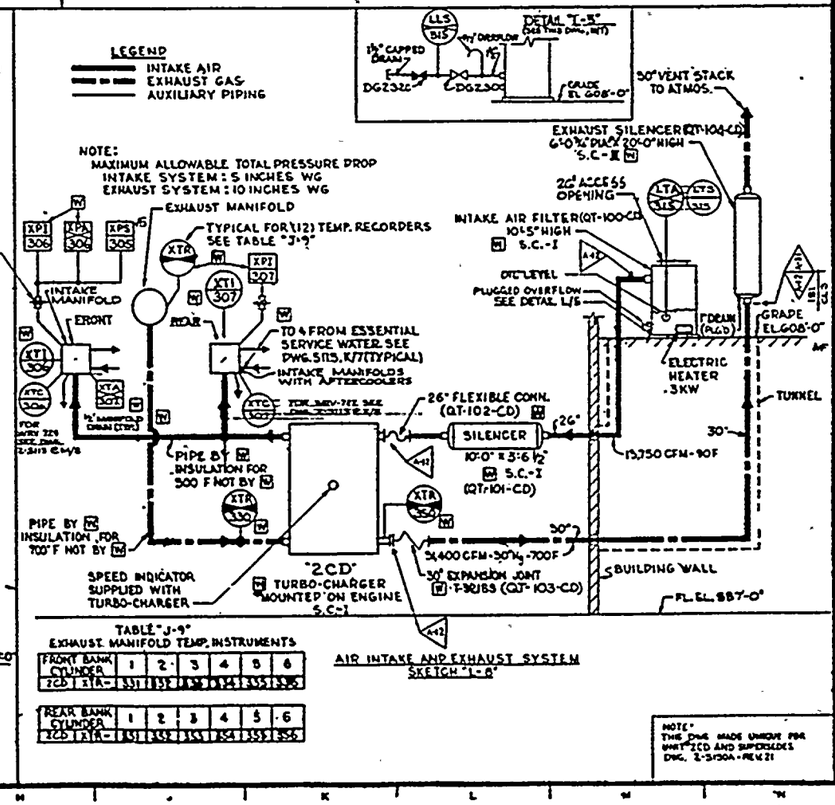

TABLE "J-9"
EXHAUST MANIFOLD TEMP. INSTRUMENTS

FRONT BANK CYLINDER	1	2	3	4	5	6
2CD	XTA-331	332	333	334	335	336

REAR BANK CYLINDER	1	2	3	4	5	6
2CD	XTA-351	352	353	354	355	356

NOTE: THE DWG. MADE UNIQUE FOR UNIT "2CD" AND SUPERSEDES DWG. 2-5150A-REV. 21

GENERAL NOTES:

LEGEND
AS NOTED

SYMBOLS
BY WORTHINGTON

PIPING AND VALVES FURNISHED BY ARE NOTED.

FOR VALVE, INSTRUMENT, SAMPLING, PIPE MATERIAL AND OTHER SYMBOLS NOT EXPLAINED ON THIS DWG., AND FOR MARK NUMBER CODES SEE DWG. 5104

NOTE "A" E/8
ENCIRCLED LETTERS ARE SHOWN FOR ORIENTATION OF VALVE IN PIPING.
THESE LETTERS REFLECT SIMILAR MARKINGS ON VALVE BODY

NOTE:
THE UNIT PREFIX DESIGNATION FOR EACH COMPONENT IDENTIFICATION NUMBER, 15" 2" UNLESS OTHERWISE NOTED.

ALL DIESEL-GENERATORS INCLUDING THEIR AUXILIARIES, STORAGE TANKS & PIPING ARE SEISMIC CLASS I EXCEPT AS NOTED.

ALL PIPING TO BE CLASS A-12 OP. E-8 FOR EMBEDDED EXCEPT AS NOTED.

CODE CLASS NOTES

HAND OPERATED VALVE IDENTIFICATION NUMBERS

1. ONLY "UNIQUE VALVE NUMBERS" APPEAR ON THIS DRAWING. SEE SEPARATE VALVE IDENTIFICATION LIST FOR EQUIVALENT DESIGN (MCR) NUMBERS.
2. "TAG" NUMBERS MODIFIED FOR DRAWING USE AS FOLLOWS:
   TAG No: 2-MSW-V109-W
   APPEARS AS: MSW109W
3. INSTRUMENT ROOT VALVE MARK NYS NOT SHOWN ON DRAWING (SEE VALVE IDENTIFICATION LIST) DERIVED BY ADDING TO INSTRUMENT NUMBER:
   FOR SINGLE IMPULSE: V1
   FOR DOUBLE IMPULSE: V1 UPSTREAM, V2 DOWNSTREAM

FOR MICROFILM STATUS SEE REVISION RECORD FOR THIS DWG.

DATE	NO.	APPROVED
5-11-85	26	

FOR REVISION DESCRIPTION SEE SEPARATE REVISION RECORD FOR THIS DRAWING

INDIANA & MICHIGAN ELECTRIC CO.
DONALD C. COOK NUCLEAR PLANT
BRIDGMAN MICHIGAN

FLOW DIAGRAM
EMERGENCY DIESEL GENERATOR "CD"

UNIT 1&2

DR. NO 2-5151D-26

AMERICAN ELECTRIC POWER SERVICE CORP.
2 BROADWAY NEW YORK

8601080550-29

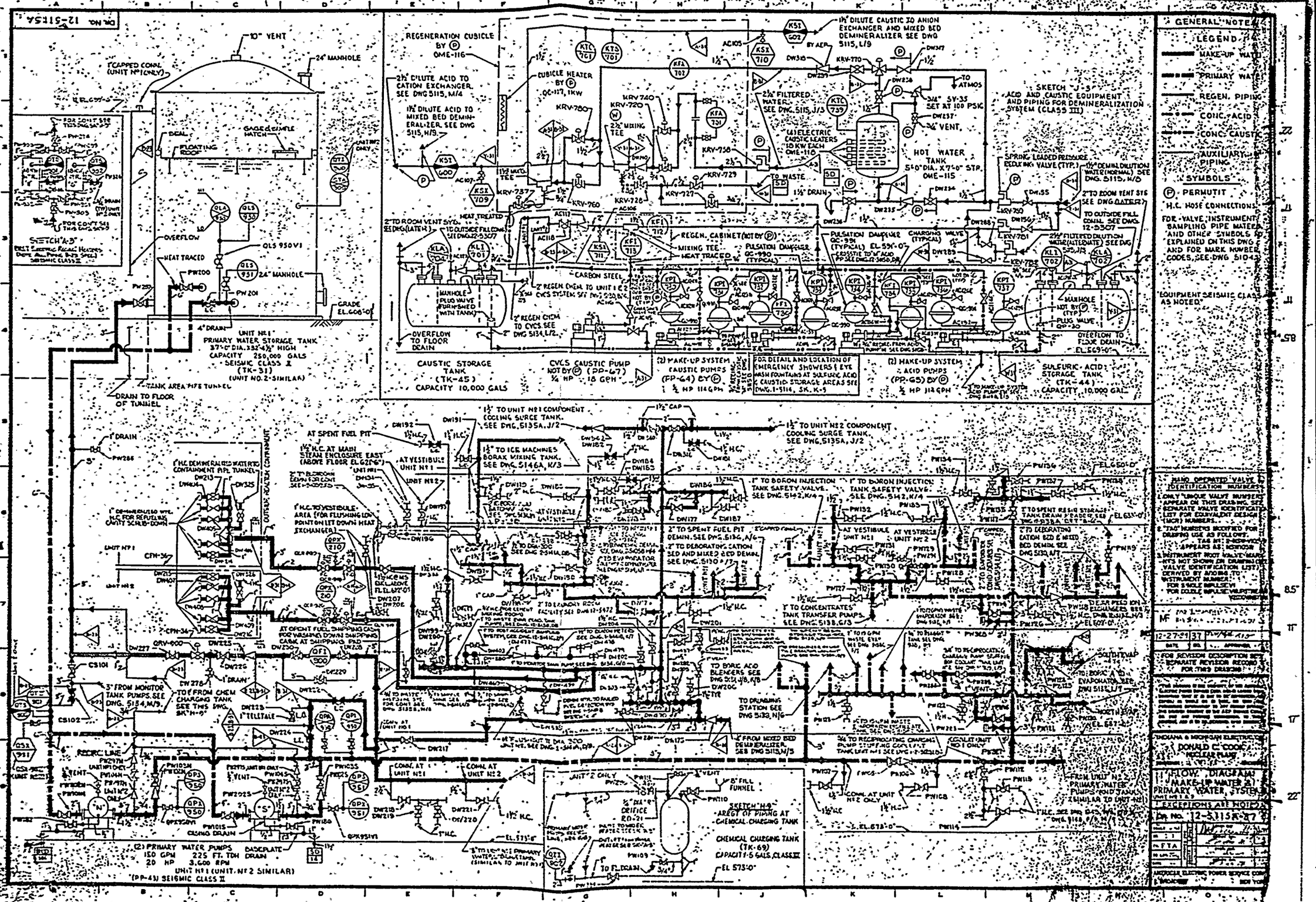

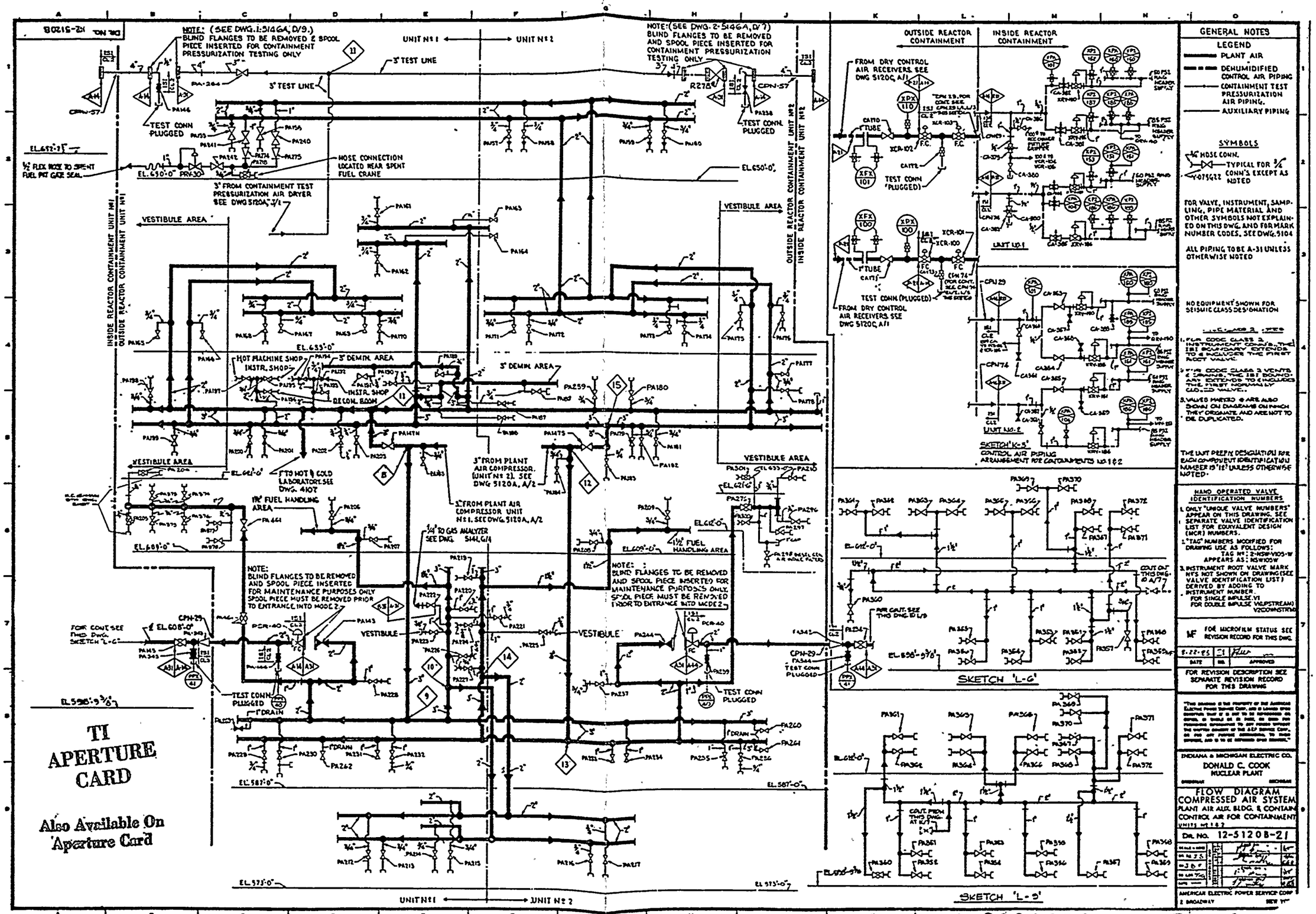

8601080550 -31

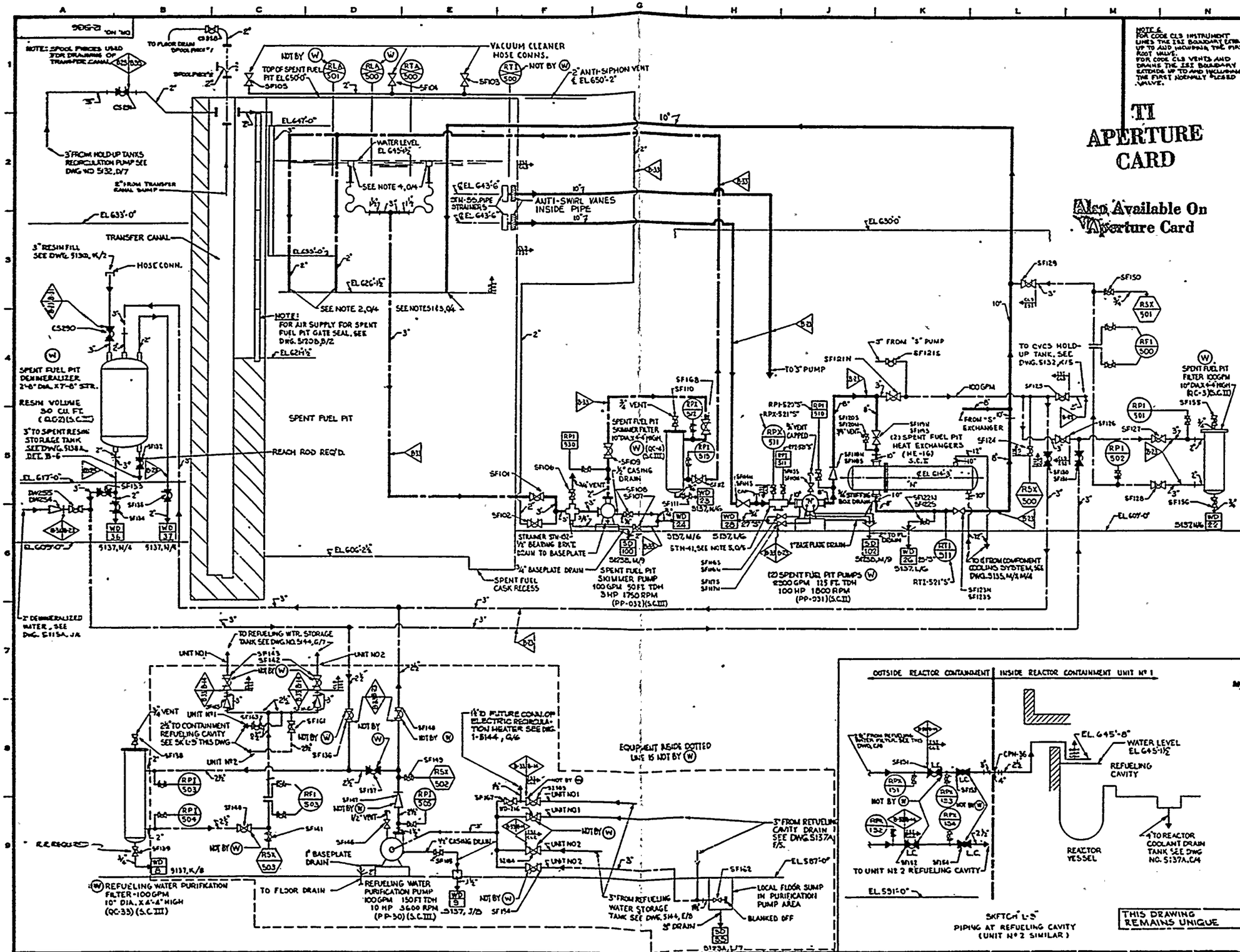

TI APERTURE CARD

Also Available On Aperture Card

GENERAL NOTES

LEGEND
- SPENT FUEL PIT COOLING WATER
- SKIMMER CLEAN-UP
- AUX. PIPING
- WATER PURIFICATION

FOR VALVE, INSTRUMENT, SAMPLING, PIPE MATERIAL AND OTHER SYMBOLS NOT EXPLAINED ON THIS DWG., AND FOR MARK NUMBER CODES SEE DWG. 5104

EQUIPMENT SEISMIC CLASS AS NOTED.

(W) BY WESTINGHOUSE

ALL VALVES & INSTRUMENTATION BY (W) EXCEPT AS NOTED

EQUIPMENT SUPPLIED BY (W) AS NOTED

NOTE 1 E/3 LOCATE 1/2" HOLE IN PIPE 4" BELOW WATER LINE

NOTE 2 D/3 LOCATE 1/4" HOLE IN PIPE 4" BELOW WATER LINE

NOTE 3 E/3 TERMINATE PIPE 6" ABOVE FUEL ASSEMBLIES

NOTE 4 F/2 SET ADJUSTABLE SUPPORT ON SKIMMERS TO LIMIT DOWN TRAVEL TO 6" BELOW NORMAL WATER LEVEL.

NOTE 5 H/6 "TEE-TYPE" STRAINER WITH TEMPORARY SCREEN FOR USE DURING PREOPERATIONAL FLUSHING. (LOCATE AS CLOSE TO PUMP AS POSSIBLE)

NOTE 6 FOR CODE CL3 INSTRUMENT LINES THE I&E BOUNDARY EXTENDS UP TO AND INCLUDING THE FIRST ROOT VALVE. FOR CODE CL3 VENTS AND DRAINS THE I&E BOUNDARY EXTENDS UP TO AND INCLUDING THE FIRST NORMALLY CLOSED VALVE.

NOTE 7 THE LAST PREFIX DESIGNATION FOR EACH COMPONENT IDENTIFICATION NUMBER IS "FS" (UNLESS OTHERWISE NOTED).

HAND OPERATED VALVE IDENTIFICATION NUMBERS

1. ONLY "UNIQUE VALVE NUMBERS" APPEAR ON THIS DRAWING. SEE SEPARATE VALVE IDENTIFICATION LIST FOR EQUIVALENT DESIGN (MCR) NUMBERS.
2. "TAG" NUMBERS MODIFIED FOR DRAWING USE AS FOLLOWS: TAG Nº: 2-NSW-V105-W APPEARS AS: NSW105W
3. INSTRUMENT ROOT VALVE MARK Nº'S NOT SHOWN ON DRAWING (SEE VALVE IDENTIFICATION LIST) DERIVED BY ADDING TO INSTRUMENT NUMBER: FOR SINGLE IMPULSE: V1 FOR DOUBLE IMPULSE: V1=UPSTREAM V2=DOWNSTREAM

DATE	NO.	APPROVED
9-5-85	22	

FOR REVISION DESCRIPTION SEE SEPARATE REVISION RECORD FOR THIS DRAWING

INDIANA & MICHIGAN ELECTRIC CO.
DONALD C. COOK NUCLEAR PLANT
BRIDGMAN MICHIGAN

FLOW DIAGRAM SPENT FUEL PIT COOLING & CLEAN-UP UNIT 1 & 2

EXCEPTIONS ARE NOTED

DR. NO. 12-5136-22

AMERICAN ELECTRIC POWER SERVICE CORP.
2 BROADWAY NEW YORK

8601080550 -32

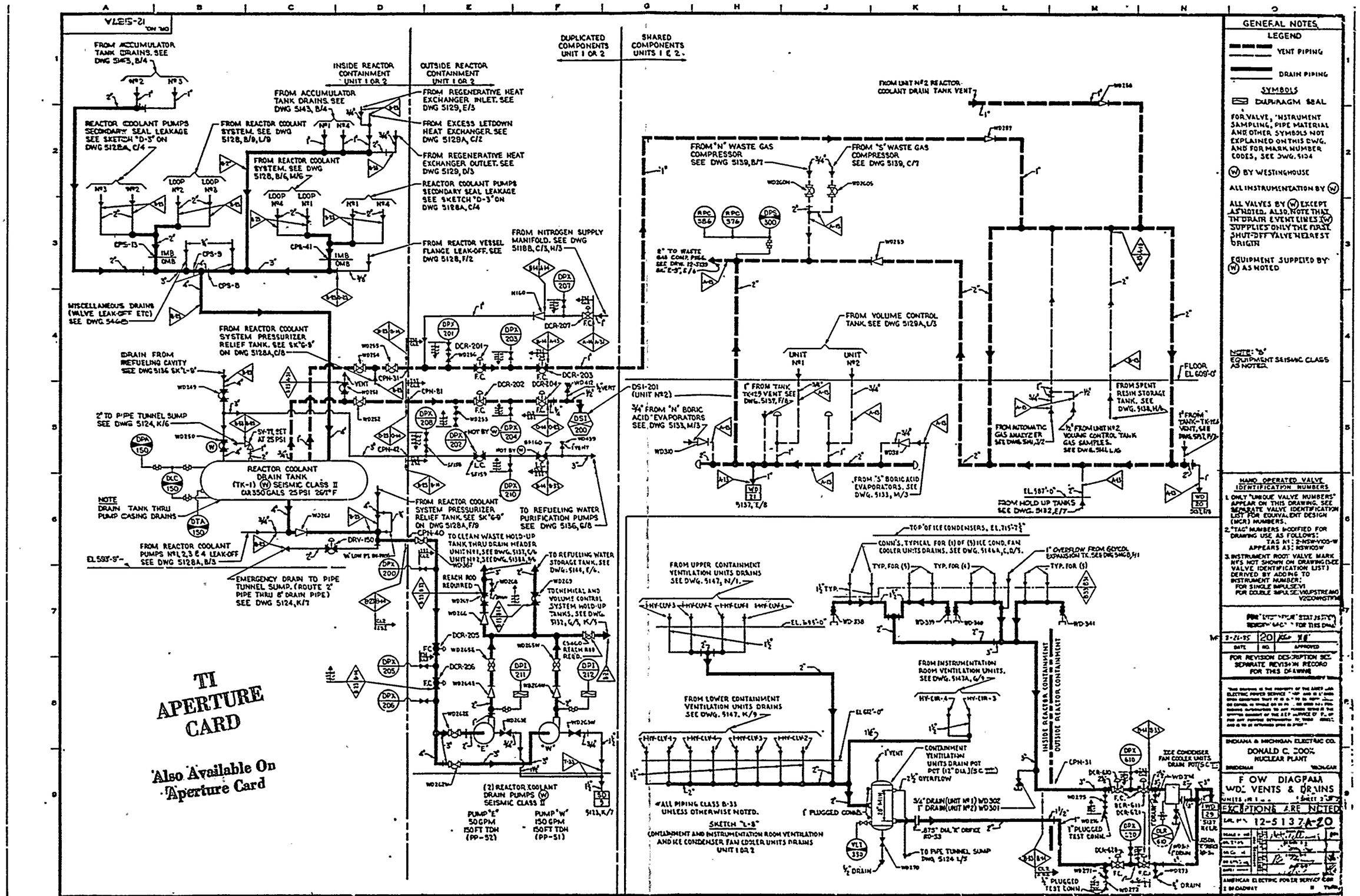

TI APERTURE CARD

Also Available On Aperture Card

8601080550 -33-

NOT FOR D. O. COOK OPERATIONAL USE

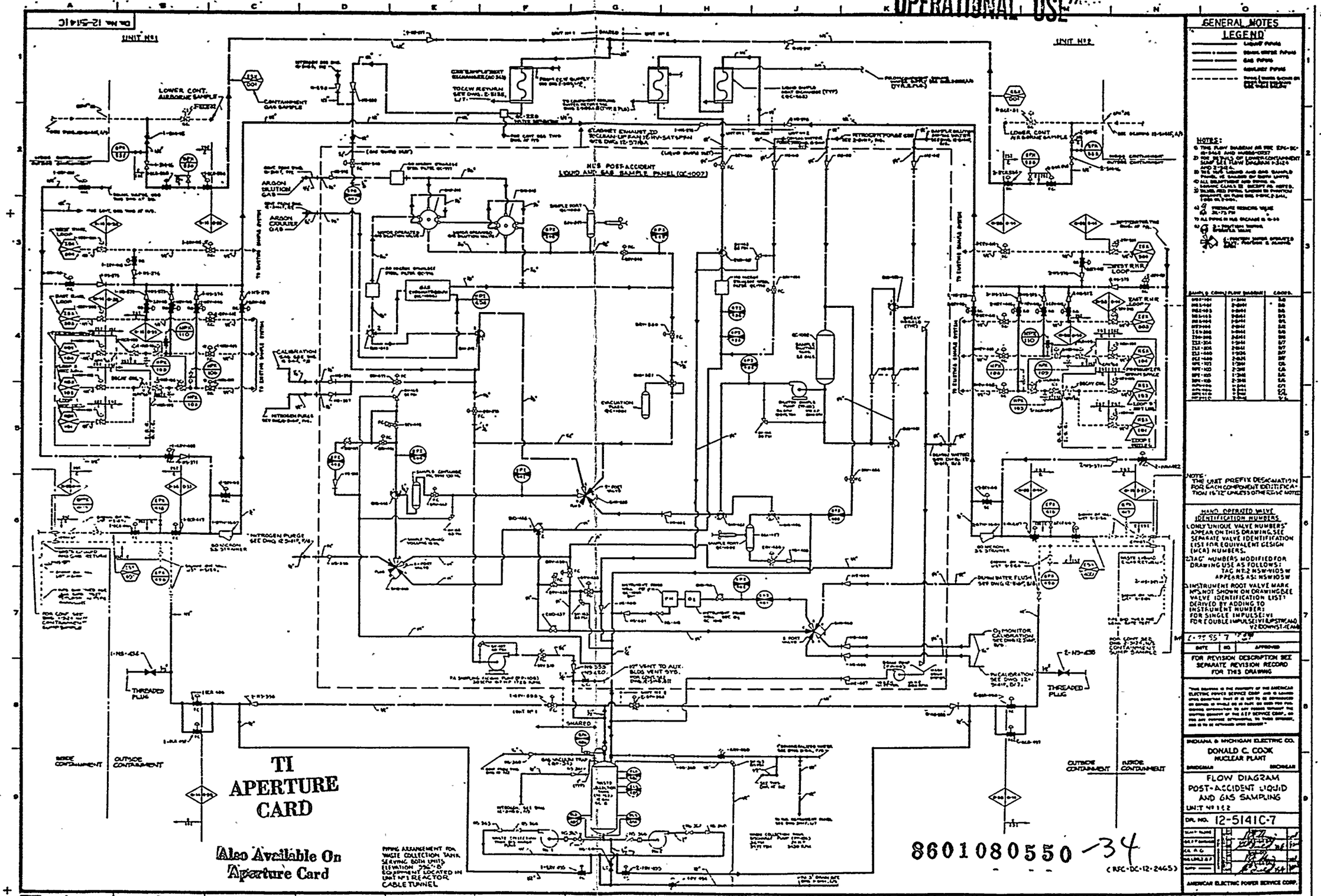

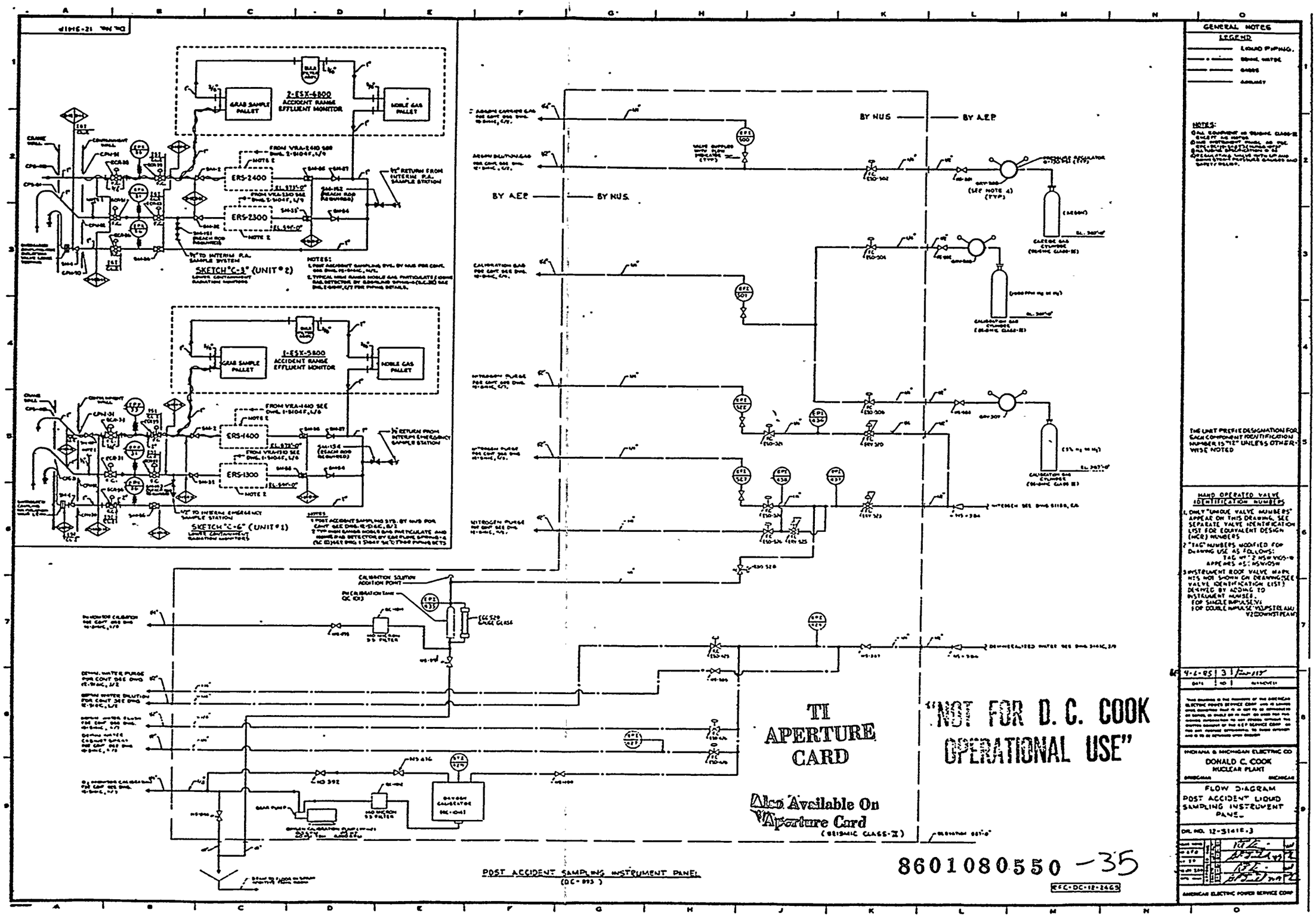

8601080550 -35