INSERVICE INSPECTION SUMMARY REPORT
FOR
REFUELING OUTAGE RF88A
June 24, 1987 to June 27, 1988

OWNER: Washington Public Power Supply System
3000 George Washington Way
Richland, Washington 99352

PLANT: WNP-2, located 11 miles north of Richland, Washington on the U. S. Department of Energy Hanford Reservation

COMMERCIAL SERVICE DATE: December 13, 1984

CAPACITY: 1145 MWe

REACTOR PRESSURE VESSEL: Manufacturer: CBIN Serial Number: T-45
State No.: 29936-84W Nat'l Bd. No.: 8

Prepared by: DDRamey — ISI Engineer — August 19, 1988 Date

Reviewed by: TF Hayes — Supervisor, Code Programs — 8/22/88 Date

RA Moen — Manager, Materials and Inspection — 8-23-88 Date

DW Bell — Manager, Engineering Systems Support — 8-23-88 Date

for RT Haneed — Manager, Generation Engineering — 8-28-88 Date

RLane McCullough — Manager, Plant Technical — 9/1/88 Date

JM Stead DR Koln — Manager, Plant Quality Assurance — 9/4/88 Date

Approved by: JV Parker — Plant Manager — 9/6/88 Date

Concurrence: David F. Vance — Authorized Nuclear Inspector (Inservice) — 9/7/88 Date

TABLE OF CONTENTS

EXAMINATION RESULTS

This report summarizes the results of inservice inspections (ISI) of ASME Code Class 1, 2 and 3 components and supports performed at Washington Public Power Supply System (Supply System) Nuclear Plant No. 2 (WNP-2) between June 24, 1987 and June 27, 1988. During this period, WNP-2 experienced one major scheduled outage, RF88A, for refueling (Spring 1988).

The ISI examinations are specified in ASME Section XI and required by 10CFR50.55a. Examinations of one reactor pressure vessel (RPV) feedwater nozzle inner radius, pipe break exclusion areas, and intergranular stress corrosion cracking (IGSCC) detection in Code Class 1 stainless steel welds were performed to meet augmented Nuclear Regulatory Commission (Commission) requirements.

The ISI examinations comply with ASME Section XI, 1980 Edition, Winter 1980 Addenda upgraded as follows:

IWA-2300(a)(1) upgraded to 1983W83

C-F upgraded to 1983W83

IWF-3400 upgraded to 1980W81

Documentation supporting this Summary Report is included in the ISI Program Plan or is located in the WNP-2 Operations Files. Table II lists by code category examinations completed during this period. Appendix B contains a summary of examination results by ISI drawing number. The ISI drawings referenced are located in the ISI Program Plan previously submitted to the Commission.

The examinations, tests, repairs/replacements were witnessed or verified by Authorized Nuclear Inspectors-Inservice (ANI-I) G.M. Foster, D. Hoggarth, C. Roberts and D. Vance. They are employed by Lumberman's Mutual Casualty Co., a subsidiary of Kemper Group, Long Grove, IL, 60049.

Components Examined

The following components were examined:

Component	Manufacturer	Serial No.	National Board No.
Reactor Pressure Vessel	CBIN Nuclear Co. 2700 Channel Ave. Memphis, TN	T-45	8
HPCS-V-4	Anchor/Darling Valve Co. 701 First Street Williamsport, PA	E5310-4-1	N/A
MS-V-28A	Rockwell Mfg. Co. 1900 S. Saunders Street Raleigh, NC.	JU-53	78
MS-V-28B	Rockwell Mfg. Co. 1900 S. Saunders Street Raleigh, NC.	JS-98	96
MS-V-28C	Rockwell Mfg. Co. 1900 S. Saunders Street Raleigh, NC.	JU-17	77
MS-V-28D	Rockwell Mfg. Co. 1900 S. Saunders Street Raleigh, NC.	JT-78	71
RHR-V-53B	Anchor/Darling Valve Co. 701 First Street Williamsport, PA	E6330-2-1	N/A

The following number of components were examined during RF88A:

	TYPE OF EXAMINATION PERFORMED			
	UT	PT/MT	VT	TESTING
CODE CLASS 1				
Piping Welds[1)]	17	20		
Welded Attachments		8		
RPV Nozzles inner radius	1			
RPV Welds	1			
Bolting	11	11	11	
Valves			6	
Component Supports[1)]			40	
CODE CLASS 2				
Piping Welds[1)]	3	3		
Component Supports[1)]			66	
CODE CLASS 3				
Welded Attachments			52	
Component Supports[1)]			117	
TESTING				
Snubbers				39

NOTES: [1)]Includes Preservice Examinations

RPV Examinations

The top head dollar plate weld, AH, was ultrasonically examined. The examination was performed manually by Lambert, MacGill, Thomas, Inc. (LMT) and Supply System personnel. No unacceptable indications were found.

The RPV weld examinations were performed to comply with ASME Section XI and the augmented requirements of Regulatory Guide 1.150 Revision 1, Appendix A. The examination meets the requirements of Regulatory Guide 1.150 Sections 1, 2, 3, 4 and 5. The recommendations and requirements of Sections 6 and 7 are implemented as described in the following sections.

- Section 6.0 "Recording and Sizing

  The Supply System complies to Section 6.0 as follows:

  Manual examination procedures and equipment used by LMT and Supply System personnel were qualified by performing a calibration on a calibration block of the same material and thickness as the area to be examined.

  The remaining requirements of Section 6.0 are incorporated in the examination procedure.

- Section 7.0 "Reporting of Results"

  The RPV examination reports are maintained at the site and are available for review. The reports contain a description of the equipment used. Full coverage of the examination volume per ASME Section XI was obtained.

Significant Indications

Significant indications found during the ISI examinations are summarized in Table I. All significant indications were evaluated and found acceptable or were repaired. Evaluations and/or re-examination data reports are attached to the original data report.

Augmented Examinations

The Supply System performed augmented examinations per the ISI Program Plan Section 5.3, "Mandatory Augmented Inservice Inspection". No unacceptable results were found during the examinations.

- High Energy Lines Penetrating Containment

  A dye penetrant or ultrasonic examination as specified in the ISI Program Plan was performed on 9 of 65 welds in high energy pipe break exclusion areas not within ASME Section XI examination boundary. No unacceptable results were found.

- RPV Feedwater Nozzle

  The nozzle inner radii, bore and safe end regions were examined on one RPV feedwater nozzle per the requirements of the ISI Program Plan Section 5.3.2, "Reactor Feedwater Nozzle". No unacceptable indications were found.

- Intergranular Stress Corrosion Cracking (IGSCC)

  All ASME Class 1 austenitic stainless steel welds examined this outage were examined for IGSCC by EPRI qualified examiners and procedures. No additional augmented examinations are required per NUREG 0313 Revision 1. No unacceptable indications were found.

- Core Spray Sparger and Supply Piping

  A visual examination of the core spray spargers per the requirements of IE Bulletin 80-13 "Cracking in Core Spray Sparger" was performed. No relevant indications were observed in the areas examined.

  The examination was performed using an underwater closed circuit TV (CCTV) system capable of resolving a 0.001 inch diameter wire. The examiners were certified to Level II VT-1 under the Supply System's QA program. The CCTV system was demonstrated to be capable of resolving a 0.001 inch diameter wire in-situ.

Limited Examinations

Full coverage of the examination volume or surface per ASME Section XI could not be performed on two welds. The following is a summary of the coverage achieved.

RRC-HB-1(W) Report number 1RRP-063

Dye penetrant examination limited to 3 sides of the lug to pipe weld due to pipe clamp interference. The remaining side will be examined at a future outage.

20RRC(6)-3LD Report number 1RRU-128

Ultrasonic scan limited to 0-4.5 and 11.5 to 12.0 inches from weld center line. Limitation was due to pipe clamp. The remaining 7 inches of the longitudinal weld will be examined at a future outage.

Three component supports scheduled for examination could not be examined.

SW-64, SW-950N, FPC-64 Report number 1HV-0074

These component supports are buried in fire barrier insulation. No evidence of movement was noticed.

Limited Examinations Re-examined

20RRC(6)-4LU Report number 1RRU-127 and 1RRP-064

Completed examination of areas found inaccessible at R2. This weld has now received full ASME Section XI coverage.

Snubber Testing

The Supply System tests ASME Code Class 1, 2 and 3 snubbers per WNP-2 Technical Specification 3/4.7.4 instead of the requirements contained in ASME Section XI. A request for relief (ISI-2-007) for this alternate testing program has been approved by the Commission per letter dated March 27, 1987, Elinor G. Adensam to G. C. Sorensen, "Safety Evaluation for 1st Ten-Year Interval Inspection Program and Requests for Relief from Certain Requirements".

An initial sample of 37 snubbers was selected from the WNP-2 general population of 796 safety-related snubbers. These snubbers were randomly selected by computer sub-routine which is part of the Snubber Test and Examination Program (STEP). The selected snubbers were then reviewed to determine if the sample was representative as required by Technical Specification 4.7.4.e. In addition to the above 37 snubbers, 2 snubbers installed at the location of failed snubbers from RF87A were also tested.

Testing of the small snubbers was mainly performed using portable testing devices, "Validators", supplied by the snubber manufacturer. The larger sizes were tested by a vendor, Paul Munroe.

Tech. Spec. 4.7.4.e.2) requires testing of snubbers in accordance with Figure 4.7-1. The 37 snubbers met the functional testing acceptance criteria and thus, no additional testing was required. Snubber RRC-1C-900N (S/N 617) in the initial test sample was replaced by another randomly selected snubber RRC-1C-14 (S/N 112). This replacement was necessitated due to the snubber being in the vicinity of a "hot spot" in the Drywell (approximately 700 MREM after shielding). This replacement was discussed with and concurred by NRC Resident Inspector. It was further agreed to test the initial snubber RRC-1C-900N (S/N 617) during the '89 Outage if the "hot spot" is removed.

Two (2) snubbers that required testing as a result of RF-87A test results were tested satisfactorily. The next snubber testing is required within 18 months.

Test results of snubber RRC-1C-14 (Bottom), S/N 112 by validator testing indicated high drag (more than 2%, but less than 5%). Also, the snubber was hard to stroke. This snubber was replaced. While waiting for it to be tested on the Paul Munroe Test Machine, it was decided to test other snubbers on this line and the identical line on RRC Loop B. All additional snubbers tested met the acceptance criteria. In addition to RRC-1C-14 (Bottom), RRC-1C-14 (Top) was replaced due to drag greater than 2%, but less than 5%. Following is a listing of additional snubbers that were tested.

	SNUBBER NO.	SIZE	SERIAL NO.
1.	RRC-1C-14 (Top)	PSA-1	646
2.	RRC-1C-10	PSA-1	22372
3.	RRC-1C-13	PSA-1	357
4.	RRC-1C-15	PSA-1	335

Table III summarizes the snubber testing results.

All testing data sheets have been reviewed and concurred with by the ANI-I.

REPAIRS/REPLACEMENTS

During the RF88A refueling outage, four (4) significant repair/replacement activities were performed: 1) Replacement of Reactor Water Clean Up (RWCU) pumps, 2) Replacement of Residual Heat Removal (RHR) valve RHR-V-53B, 3) Installation of new Reactor Core Isolation Cooling (RCIC) valve RCIC-V-204, and 4) Replacement of 42 safety-related snubbers with struts and deletion of 5 safety-related snubbers. A listing and summary of these and all other repairs/replacements performed between June 14, 1987 and June 9, 1988 are contained in Appendix C.

Reactor Water Clean Up (RWCU) Pumps

Replaced existing 50% capacity mechanical seal horizontal pumps RWCU-P-1A and RWCU-P-1B with new 100% capacity sealless vertical pumps. To accomodate the new design pumps, both the pump suction and discharge piping required re-routing. Four (4) valves (RWCU-5A, 5B, 13A and 13B) were replaced. Additional supports were installed for the re-routed suction and discharge lines. ASME Section III surface examination was performed on circumferential butt welds over 4 inch NPS. Examination results were acceptable. Hydrostatic testing was performed with acceptable results.

Residual Heat Removal (RHR) Valve

Replaced existing containment isolation globe valve RHR-V-53B with gate valve to eliminate erosion problem and change the function of the valve. The replacement valve will now perform only containment isolation. The throttling function once performed by this valve will be performed by RHR-V-3B and RHR-V-48B at the completion of the design change currently scheduled for 1990. In addition a new flow restricting orifice, RHR-RO-10B, was installed up stream of RHR-V-53B. This will allow the RHR system to operate satisfactorily throughout its various modes.

Performed ASME Section III dye penetrant and radiography examination on the final circumferential butt welds with acceptable results. Preservice Inspection dye penetrant and ultrasonic examinations were performed. Visual examinations of accessible RHR-V-53B internals and pressure boundary bolting were performed. All PSI examinations were acceptable. A hydrostatic test was performed to confirm pressure boundary integrity with acceptable results.

Reactor Core Isolation Cooling (RCIC) Valve

Installed new check valve RCIC-V-204 to prevent back/bypass flow through RCIC system piping to condensate supply piping. This check valve was installed in response to the corrective action in License Event Report, LER No. 88-02.

Performed radiography examination on the final circumferential butt welds. Examination results were acceptable. A hydrostatic test was performed to confirm pressure boundary integrity with acceptable results.

Snubber Optimization Program

As part of the Supply System effort to reduce the number of safety-related snubbers at WNP-2, 42 snubbers were replaced with rigid struts and 5 safety-related snubbers were deleted. The new replacement struts received PSI examination after installation. Results were acceptable.

Also, all snubbers removed for optimization under PMR 86-0525-0 and 86-0525-1 were tested and met the functional test acceptance criteria.

TABLE I

SIGNIFICANT INDICATIONS

Report No.	Identification No.	Description	Remarks
1RRU-128	20RRC(6)3LD	Long Seam Weld	100% and 125% DAC due to ID Geometry
1RRU-127	20RRC(6)-4LU	Long Seam Weld	110% DAC due to ID Geometry
1VT2-88	RFW-V-121	Cap Drain Line	Cap leaked. Repaired. Re-exam: no leakage - acceptable.
1VT2-88	CRD Housing BLT	CRD Flanges	2 flanges leaked. Approx. 3 drops/min. Evaluated as acceptable.

TABLE II
EXAMINATIONS COMPLETED DURING
OUTAGE RF88A

CODE CATEGORY	IDENTIFICATION NO.	DESCRIPTION	ISI DRAWING	METHOD	EXAM. DATE (Y/M/D)
AUGMT	26MS(1)D-19/3V-20	DRAIN CONN	MS-204	SUR	19880504
	2MS(20)D-1	SOL TO PIPE	MS-204	SUR	19880504
	2MS(20)D-2	PIPE TO EL	MS-204	SUR	19880504
	2MS(20)D-3	EL TO PIPE	MS-204	SUR	19880504
	2MS(20)D-4	PIPE TO TEE	MS-204	SUR	19880504
	6RWCU(2)-1	PIPE TO ELL	RWCU-303	VOL	19880507
	6RWCU(2)-2	ELL TO PIPE	RWCU-303	VOL	19880507
	6RWCU(2)-3	PIPE TO VLV	RWCU-303	VOL	19880507
	6RWCU(2)-4	VLV TO PIPE	RWCU-303	VOL	19880507
	COUNT =	9			
B-A	AH	TOP HD DOL PLT	RPV-102	VOL	19880513
	COUNT =	1			
B-D	N4-150-IR	FW NZ-IR @ 150	RPV-101	VOL	19880520
	N4-150-NB	FW NZ BORE @150	RPV-101	VOL	19880520
	COUNT =	2			
B-F	12RFW(1)AA-9	SE EXT-SE STUB	RFW-101	VOL	19880519
	12RFW(1)AA-9	SE EXT-SE STUB	RFW-101	SUR	19880517
	12RFW(1)AA-10	SE STUB-SE	RFW-101	VOL	19880519
	12RFW(1)AA-10	SE STUB-SE	RFW-101	SUR	19880517
	12RFW(1)AA-11	SE TO N4	RFW-101	VOL	19880519
	12RFW(1)AA-11	SE TO N4	RFW-101	SUR	19880517
	4RRC(4)A-11	SE TO VALVE	RRC-108	VOL	19880506
	4RRC(4)A-11	SE TO VALVE	RRC-108	SUR	19880505
	COUNT =	8			
B-G-1	RPV STUD 35-1-1A	RPV STUD	RPV-101	VOL	19880512
	RPV STUD 35-1-1A	RPV STUD	RPV-101	SUR	19880512

TABLE II
EXAMINATIONS COMPLETED DURING
OUTAGE RF88A

CODE CATEGORY	IDENTIFICATION NO.	DESCRIPTION	ISI DRAWING	METHOD	EXAM. DATE (Y/M/D)
B-G-1	RPV STUD 35-1-9A	RPV STUD	RPV-101	VOL	19880512
	RPV STUD 35-1-9A	RPV STUD	RPV-101	SUR	19880512
	RPV STUD 35-1-16A	RPV STUD	RPV-101	VOL	19880512
	RPV STUD 35-1-16A	RPV STUD	RPV-101	SUR	19880512
	RPV STUD 35-1-23A	RPV STUD	RPV-101	VOL	19880512
	RPV STUD 35-1-23A	RPV STUD	RPV-101	SUR	19880512
	RPV STUD 35-1-30A	RPV STUD	RPV-101	VOL	19880512
	RPV STUD 35-1-30A	RPV STUD	RPV-101	SUR	19880512
	RPV STUD 35-1-37A	RPV STUD	RPV-101	VOL	19880512
	RPV STUD 35-1-37A	RPV STUD	RPV-101	SUR	19880512
	RPV STUD 35-1-44A	RPV STUD	RPV-101	VOL	19880512
	RPV STUD 35-1-44A	RPV STUD	RPV-101	SUR	19880512
	RPV STUD 35-1-50A	RPV STUD	RPV-101	VOL	19880512
	RPV STUD 35-1-50A	RPV STUD	RPV-101	SUR	19880512
	RPV STUD 35-1-58A	RPV STUD	RPV-101	VOL	19880512
	RPV STUD 35-1-58A	RPV STUD	RPV-101	SUR	19880511
	RPV STUD 35-1-65A	RPV STUD	RPV-101	VOL	19880512
	RPV STUD 35-1-65A	RPV STUD	RPV-101	SUR	19880511
	RPV STUD 35-1-72A	RPV STUD	RPV-101	VOL	19880512
	RPV STUD 35-1-72A	RPV STUD	RPV-101	SUR	19880511
	RPV NUT 36-1-1A	RPV NUT	RPV-101	VOL	19880512
	RPV NUT 36-1-1A	RPV NUT	RPV-101	SUR	19880511
	RPV NUT 36-1-9A	RPV NUT	RPV-101	VOL	19880512
	RPV NUT 36-1-9A	RPV NUT	RPV-101	SUR	19880511
	RPV NUT 36-1-16A	RPV NUT	RPV-101	VOL	19880512
	RPV NUT 36-1-16A	RPV NUT	RPV-101	SUR	19880511
	RPV NUT 36-1-23A	RPV NUT	RPV-101	VOL	19880512
	RPV NUT 36-1-23A	RPV NUT	RPV-101	SUR	19880511
	RPV NUT 36-1-30A	RPV NUT	RPV-101	VOL	19880512
	RPV NUT 36-1-30A	RPV NUT	RPV-101	SUR	19880511
	RPV NUT 36-1-37A	RPV NUT	RPV-101	VOL	19880512
	RPV NUT 36-1-37A	RPV NUT	RPV-101	SUR	19880511
	RPV NUT 36-1-44A	RPV NUT	RPV-101	VOL	19880512
	RPV NUT 36-1-44A	RPV NUT	RPV-101	SUR	19880511

TABLE II
EXAMINATIONS COMPLETED DURING
OUTAGE RF88A

CODE CATEGORY	IDENTIFICATION NO.	DESCRIPTION	ISI DRAWING	METHOD	EXAM. DATE (Y/M/D)
B-G-1	RPV NUT 36-1-50A	RPV NUT	RPV-101	VOL	19880512
	RPV NUT 36-1-50A	RPV NUT	RPV-101	SUR	19880511
	RPV NUT 36-1-58A	RPV NUT	RPV-101	VOL	19880512
	RPV NUT 36-1-58A	RPV NUT	RPV-101	SUR	19880511
	RPV NUT 36-1-65A	RPV NUT	RPV-101	VOL	19880512
	RPV NUT 36-1-65A	RPV NUT	RPV-101	SUR	19880511
	RPV NUT 36-1-72A	RPV NUT	RPV-101	VOL	19880512
	RPV NUT 36-1-72A	RPV NUT	RPV-101	SUR	19880511
	RPV WASHERS	RPV WASHER-76EA	RPV-101	VT-1	19880512
	COUNT =	45			
B-G-2	CRD HOUSING BLT	CRD HOUSING BLT	RPV-102	VT-1	19880518
	RHR-V-42B-BLT	VALVE BOLTING	RHR-102	VT-1	19880511
	RHR-V-53B-BLT	VALVE FLANGE	RHR-106	VT-1	19880603
	8MSR-1A-2BD	FLANGE BOLTING	MS-101	VT-1	19880507
	MS-RV-1A-BLT	VALVE BOLTING	MS-101	VT-1	19880504
	8MSR-5C-2BD	FLANGE BOLTING	MS-103	VT-1	19880507.
	MS-RV-5C-BLT	VALVE BOLTING	MS-103	VT-1	19880504
	8MSR-4C-2BD	FLANGE BOLTING	MS-103	VT-1	19880507
	MS-RV-4C-BLT	VALVE BOLTING	MS-103	VT-1	19880504
	8MSR-4D-2BD	FLANGE BOLTING	MS-104	VT-1	19880507
	MS-RV-4D-BLT	VALVE BOLTING	MS-104	VT-1	19880504
	8MSR-3D-2BD	FLANGE BOLTING	MS-104	VT-1	19880507
	MS-RV-3D-BLT	VALVE BOLTING	MS-104	VT-1	19880504
	MS-V-22D-BLT	VALVE BOLTING	MS-104	VT-1	19880507
	MS-V-28D-BLT	VALVE BOLTING	MS-104	VT-1	19880503
	4RRC(8)2B-2BD	FLANGE BOLTING	RRC-102	VT-1	19880506
	4RRC(8)1B-2BD	FLANGE BOLTING	RRC-102	VT-1	19880505
	COUNT =	17			
B-J	4RCIC(13)-1	TEE TO PIPE	RCIC-101	VOL	19880506
	4RCIC(13)-2	PIPE TO EL	RCIC-101	VOL	19880506

TABLE II
EXAMINATIONS COMPLETED DURING
OUTAGE RF88A

CODE CATEGORY	IDENTIFICATION NO.	DESCRIPTION	ISI DRAWING	METHOD	EXAM. DATE (Y/M/D)
B-J	4RCIC(13)-3	EL TO PIPE	RCIC-101	VOL	19880506
	12HPCS(1)-16	VLV TO PIPE	HPCS-101	VOL	19880509
	12HPCS(1)-16	VLV TO PIPE	HPCS-101	SUR	19880509
	12HPCS(1)-16/4HPCS(11)-4	PIPE TO WOL	HPCS-101	SUR	19880509
	12HPCS(1)-17	PIPE TO VLV	HPCS-101	VOL	19880509
	12HPCS(1)-17	PIPE TO VLV	HPCS-101	SUR	19880509
	12HPCS(1)-18	VLV TO PIPE	HPCS-101	VOL	19880509
	12HPCS(1)-18	VLV TO PIPE	HPCS-101	SUR	19880509
	26MS(1)C-17	VALVE TO PENE	MS-103	VOL	19880510
	26MS(1)C-17	VALVE TO PENE	MS-103	SUR	19880510
	26MS(1)C-18	PENE TO VALVE	MS-103	VOL	19880505
	26MS(1)C-18	PENE TO VALVE	MS-103	SUR	19880505
	MS-V-28C/2MS(9)-4	DRAIN CONN	MS-103	SUR	19880505
	12RFW(1)AA-6	PIPE TO EL	RFW-101	VOL	19880507
	12RFW(1)AA-6	PIPE TO EL	RFW-101	SUR	19880507
	12RFW(1)AA-7	EL TO PIPE	RFW-101	VOL	19880507
	12RFW(1)AA-7	EL TO PIPE	RFW-101	SUR	19880507
	5RFW(11)B-1	SLEEVE-SLEEVE	RFW-102	SUR	19880505
	20RRC(6)-3LD	PIPE SEAM	RRC-105	VOL	19880507
	20RRC(6)-4LU	PIPE SEAM	RRC-105	VOL	19880506
	20RRC(6)-4LU	PIPE SEAM	RRC-105	SUR	19880506
	COUNT =	23			
B-K-1	RCIC-1C-6(W)	8 WELDED LUGS	RCIC-101	SUR	19880511
	HPCS-63(W)	8 WELDED LUGS	HPCS-101	SUR	19880512
	LPCS-57(W)	4 WELDED LUGS	LPCS-101	SUR	19880506
	RHR-524(W)	8 WELDED LUGS	RHR-103	SUR	19880512
	MS-HC-3(W)	4 WELDED LUGS	MS-103	SUR	19880511
	RFW-146(W)	6 WELDED LUGS	RFW-101	SUR	19880511
	RFW-156(W)	6 WELDED LUGS	RFW-101	SUR	19880512
	RRC-HB-1(W)	4 WELDED LUGS	RRC-102	SUR	19880505
	COUNT =	8			

TABLE II
EXAMINATIONS COMPLETED DURING
OUTAGE RF88A

CODE CATEGORY	IDENTIFICATION NO.	DESCRIPTION	ISI DRAWING	METHOD	EXAM. DATE (Y/M/D)
B-M-2	HPCS-V-4-BDY	VALVE BODY	HPCS-101	VT-3	19880507
	MS-V-28A-BDY	VALVE BODY	MS-101	VT-3	19880521
	MS-V-28B-BDY	VALVE BODY	MS-102	VT-3	19880521
	MS-V-28C-BDY	VALVE BODY	MS-103	VT-3	19880509
	MS-V-28D-BDY	VALVE BODY	MS-104	VT-3	19880509
	COUNT =	5			
B-P	RPV-PB-101(L)	LK PRES BNDRY	RPV-101	VT-2	19880621
	RPV-PB-102(L)	LK PRES BNDRY	RPV-102	VT-2	19880621
	RCIC-PB-101(L)	LK PRES BNDRY	RCIC-101	VT-2	19880621
	RCIC-PB-102(L)	LK PRES BNDRY	RCIC-102	VT-2	19880621
	HPCS-PB-101(L)	LK PRES BNDRY	HPCS-101	VT-2	19880621
	LPCS-PB-101(L)	LK PRES BNDRY	LPCS-101	VT-2	19880621
	RHR-PB-101(L)	LK PRES BNDRY	RHR-101	VT-2	19880621
	RHR-PB-102(L)	LK PRES BNDRY	RHR-102	VT-2	19880621
	RHR-PB-103(L)	LK PRES BNDRY	RHR-103	VT-2	19880621
	RHR-PB-104(L)	LK PRES BNDRY	RHR-104	VT-2	19880621
	RHR-PB-105(L)	LK PRES BNDRY	RHR-105	VT-2	19880621
	RHR-PB-106(L)	LK PRES BNDRY	RHR-106	VT-2	19880621
	MS-PB-101(L)	LK PRES BNDRY	MS-101	VT-2	19880621
	MS-PB-102(L)	LK PRES BNDRY	MS-102	VT-2	19880621
	MS-PB-103(L)	LK PRES BNDRY	MS-103	VT-2	19880621
	MS-PB-104(L)	LK PRES BNDRY	MS-104	VT-2	19880621
	MS-PB-105(L)	LK PRES BNDRY	MS-105	VT-2	19880621
	MS-PB-106(L)	LK PRES BNDRY	MS-106	VT-2	19880621
	RFW-PB-101(L)	LK PRES BNDRY	RFW-101	VT-2	19880621
	RFW-PB-102(L)	LK PRES BNDRY	RFW-102	VT-2	19880621
	RFW-PB-103(L)	LK PRES BNDRY	RFW-103	VT-2	19880621
	RRC-PB-101(L)	LK PRES BNDRY	RRC-101	VT-2	19880621
	RRC-PB-102(L)	LK PRES BNDRY	RRC-102	VT-2	19880621
	RRC-PB-103(L)	LK PRES BNDRY	RRC-103	VT-2	19880621
	RRC-PB-104(L)	LK PRES BNDRY	RRC-104	VT-2	19880621
	RRC-PB-105(L)	LK PRES BNDRY	RRC-105	VT-2	19880621

TABLE II
EXAMINATIONS COMPLETED DURING
OUTAGE RF88A

CODE CATEGORY	IDENTIFICATION NO.	DESCRIPTION	ISI DRAWING	METHOD	EXAM. DATE (Y/M/D)
B-P	RRC-PB-106(L)	LK PRES BNDRY	RRC-106	VT-2	19880621
	RRC-PB-107(L)	LK PRES BNDRY	RRC-107	VT-2	19880621
	RRC-PB-108(L)	LK PRES BNDRY	RRC-108	VT-2	19880621
	RRC-PB-109(L)	LK PRES BNDRY	RRC-109	VT-2	19880621
	RRC-PB-110(L)	LK PRES BNDRY	RRC-110	VT-2	19880621
	RRC-PB-111(L)	LK PRES BNDRY	RRC-111	VT-2	19880621
	RWCU-PB-101(L)	LK PRES BNDRY	RWCU-101	VT-2	19880621
	SLC-PB-101(L)	LK PRESS BNDRY	SLC-101	VT-2	19880621
	COUNT =	34			
C-H	RCIC-PB-201(L)	LK PRES BNDRY	RCIC-201	VT-2	19880117
	RCIC-PB-202(L)	LK PRES BNDRY	RCIC-202	VT-2	19880117
	RCIC-PB-203(L)	LK PRES BNDRY	RCIC-203	VT-2	19880117
	RCIC-PB-204(L)	LK PRES BNDRY	RCIC-204	VT-2	19880117
	RCIC-PB-205(L)	LK PRES BNDRY	RCIC-205	VT-2	19880117
	HPCS-PB-201(L)	LK PRES BNDRY	HPCS-201	VT-2	19880512
	HPCS-PB-202(L)	LK PRES BNDRY	HPCS-202	VT-2	19880512
	LPCS-PB-201(L)	LK PRES BNDRY	LPCS-201	VT-2	19880515
	LPCS-PB-202(L)	LK PRES BNDRY	LPCS-202	VT-2	19880515
	RHR-PB-201(L)	LK PRES BNDRY	RHR-201	VT-2	19880303
	RHR-PB-202(L)	LK PRES BNDRY	RHR-202	VT-2	19880303
	RHR-PB-203(L)	LK PRES BNDRY	RHR-203	VT-2	19880303
	RHR-PB-205(L)	LK PRES BNDRY	RHR-205	VT-2	19880303
	RHR-PB-206(L)	LK PRES BNDRY	RHR-206	VT-2	19880303
	RHR-PB-207(L)	LK PRES BNDRY	RHR-207	VT-2	19880227
	RHR-PB-209(L)	LK PRES BNDRY	RHR-209	VT-2	19880227
	RHR-PB-210(L)	LK PRES BNDRY	RHR-210	VT-2	19880311
	RHR-PB-211(L)	LK PRES BNDRY	RHR-211	VT-2	19880311
	RCC-PB-201(L)	LK PRES BNDRY	RCC-201	VT-2	19880607
	RCC-PB-202(L)	LK PRES BNDRY	RCC-202	VT-2	19880607
	CRD-PB-201(L)	LK PRES BNDRY	CRD-201	VT-2	19880430
	CRD-PB-202(L)	LK PRES BNDRY	CRD-202	VT-2	19880430
	COUNT =	22			

TABLE II
EXAMINATIONS COMPLETED DURING
OUTAGE RF88A

CODE CATEGORY	IDENTIFICATION NO.	DESCRIPTION	ISI DRAWING	METHOD	EXAM. DATE (Y/M/D)
D-A	MS-329(W)	WELDED ATTACH	MS-309	VT-3	19880509
	MSRV-5B-6(W)	WELDED ATTACH	MS-309	VT-3	19880504
	MSRV-5B-7(W)	WELDED ATTACH	MS-309	VT-3	19880504
	MS-330(W)	WELDED ATTACH	MS-309	VT-3	19880504
	COUNT =	4			
D-B	SW-174(W)	WELDED ATTACH	SW-301	VT-3	19880503
	SW-57(W)	WELDED ATTACH	SW-301	VT-3	19880503
	SW-437(W)	WELDED ATTACH	SW-301	VT-3	19880503
	SW-58(W)	WELDED ATTACH	SW-301	VT-3	19880503
	SW-318(W)	WELDED ATTACH	SW-301	VT-3	19880509
	SW-PB-301(L)	LK PRES BNDRY	SW-301	VT-2	19880303
	SW-231(W)	WELDED ATTACH	SW-302	VT-3	19880503
	SW-236(W)	WELDED ATTACH	SW-302	VT-3	19880503
	SW-PB-302(L)	LK PRES BNDRY	SW-302	VT-2	19880303
	SW-140(W)	WELDED ATTACH	SW-303	VT-3	19880509
	SW-139(W)	WELDED ATTACH	SW-303	VT-3	19880509
	SW-138(W)	WELDED ATTACH	SW-303	VT-3	19880503
	SW-207(W)	WELDED ATTACH	SW-303	VT-3	19880503
	SW-433(W)	WELDED ATTACH	SW-303	VT-3	19880519
	SW-PB-303(L)	LK PRES BNDRY	SW-303	VT-2	19880303
	SW-352(W)	WELDED ATTACH	SW-304	VT-3	19880503
	SW-348(W)	WELDED ATTACH	SW-304	VT-3	19880503
	SW-349(W)	WELDED ATTACH	SW-304	VT-3	19880503
	SW-350(W)	WELDED ATTACH	SW-304	VT-3	19880503
	SW-351(W)	WELDED ATTACH	SW-304	VT-3	19880503
	SW-PB-304(L)	LK PRES BNDRY	SW-304	VT-2	19880303
	SW-196(W)	WELDED ATTACH	SW-305	VT-3	19880503
	SW-118(W)	WELDED ATTACH	SW-305	VT-3	19880510
	SW-25(W)	WELDED ATTACH	SW-305	VT-3	19880510
	SW-24(W)	WELDED ATTACH	SW-305	VT-3	19880514
	SW-23(W)	WELDED ATTACH	SW-305	VT-3	19880514
	SW-PB-305(L)	LK PRES BNDRY	SW-305	VT-2	19880226

TABLE II
EXAMINATIONS COMPLETED DURING
OUTAGE RF88A

CODE CATEGORY	IDENTIFICATION NO.	DESCRIPTION	ISI DRAWING	METHOD	EXAM. DATE (Y/M/D)
D-B	SW-PB-306(L)	LK PRES BNDRY	SW-306	VT-2	19880226
	SW-91(W)	WELDED ATTACH	SW-307	VT-3	19880503
	SW-92(W)	WELDED ATTACH	SW-307	VT-3	19880503
	SW-6(W)	WELDED ATTACH	SW-307	VT-3	19880503
	SW-7(W)	WELDED ATTACH	SW-307	VT-3	19880503
	SW-930N(W)	WELDED ATTACH	SW-307	VT-3	19880504
	SW-931N(W)	WELDED ATTACH	SW-307	VT-3	19880504
	SW-932N(W)	WELDED ATTACH	SW-307	VT-3	19880504
	SW-933N(W)	WELDED ATTACH	SW-307	VT-3	19880504
	SW-934N(W)	WELDED ATTACH	SW-307	VT-3	19880504
	SW-PB-307(L)	LK PRES BNDRY	SW-307	VT-2	19880226
	SW-252(W)	WELDED ATTACH	SW-308	VT-3	19880503
	SW-253(W)	WELDED ATTACH	SW-308	VT-3	19880503
	SW-254(W)	WELDED ATTACH	SW-308	VT-3	19880503
	SW-257(W)	WELDED ATTACH	SW-308	VT-3	19880503
	SW-258(W)	WELDED ATTACH	SW-308	VT-3	19880503
	SW-PB-308(L)	LK PRES BNDRY	SW-308	VT-2	19880226
	SW-PB-309(L)	LK PRES BNDRY	SW-309	VT-2	19880509
	SW-273(W)	WELDED ATTACH	SW-310	VT-3	19880503
	SW-449(W)	WELDED ATTACH	SW-310	VT-3	19880503
	SW-PB-310(L)	LK PRES BNDRY	SW-310	VT-2	19880509
	SW-PB-311(L)	LK PRES BNDRY	SW-311	VT-2	19880509
	SW-949N(W)	WELDED ATTACH	SW-315	VT-3	19880503
	SW-985N(W)	WELDED ATTACH	SW-315	VT-3	19880514
	RCC-267(W)	WELDED ATTACH	RCC-301	VT-3	19880504
	RCC-477(W)	WELDED ATTACH	RCC-301	VT-3	19880504
	RCC-316(W)	WELDED ATTACH	RCC-302	VT-3	19880504
	RCC-487(W)	WELDED ATTACH	RCC-302	VT-3	19880507
	COUNT =	55			
D-C	FPC-62(W)	WELDED ATTACH	FPC-301	VT-3	19880507
	FPC-PB-301(L)	LK PRES BNDRY	FPC-301	VT-2	19880524
	FPC-PB-302(L)	LK PRES BNDRY	FPC-302	VT-2	19880524

TABLE II
EXAMINATIONS COMPLETED DURING
OUTAGE RF88A

CODE CATEGORY	IDENTIFICATION NO.	DESCRIPTION	ISI DRAWING	METHOD	EXAM. DATE (Y/M/D)
D-C	FPC-PB-303(L)	LK PRES BNDRY	FPC-303	VT-2	19880524
	FPC-PB-304(L)	LK PRES BNDRY	FPC-304	VT-2	19880524
	FPC-163(W)	WELDED ATTACH	FPC-305	VT-3	19880503
	FPC-PB-305(L)	LK PRES BNDRY	FPC-305	VT-2	19880524
	FPC-47(W)	WELDED ATTACH	FPC-307	VT-3	19880507
	COUNT =	8			
IWF	RCIC-1C-6	PSA-3 SN(2)	RCIC-101	VT3H	19880504
	RCIC-1C-4	PSA-1 SNUBBER	RCIC-101	VT3H	19880504
	RCIC-67	SPRING	RCIC-101	VT3H	19880509
	RCIC-54	SRING	RCIC-205	VT3H	19880222
	RCIC-973N	STRUT	RCIC-205	VT3H	19880222
	RCIC-14	BOX	RCIC-205	VT3H	19880222
	RCIC-15	BOX	RCIC-205	VT3H	19880425
	HPCS-904N	SPRING	HPCS-101	VT3H	19880503
	HPCS-66	SPRING	HPCS-101	VT3H	19880503
	HPCS-63	PSA-10 SN(2)	HPCS-101	VT3H	19880503
	HPCS-64	BOX HANGER	HPCS-101	VT3H	19880503
	HPCS-918N	PSA-10 SNUBBER	HPCS-101	VT3H	19880505
	LPCS-57	BOX	LPCS-101	VT3H	19880504
	LPCS-21	BOX	LPCS-202	VT3H	19880425
	RHR-524	SPRING	RHR-103	VT3H	19880503
	RHR-282	PSA-35 SNUBBER	RHR-103	VT3H	19880504
	RHR-287	PSA-35 SNUBBER	RHR-103	VT3H	19880504
	RRC-11	SPRING	RHR-104	VT3H	19880505
	RHR-SA-54	PSA-35 SNUBBER	RHR-104	VT3H	19880505
	RHR-SB-40	STRUT	RHR-106	VT3H	19880517
	RHR-273	PSA-3 SNUBBER	RHR-203	VT3H	19880224
	RHR-265	SPRING	RHR-203	VT3H	19880224
	RHR-369	PSA-3 SNUBBER	RHR-203	VT3H	19880224
	RHR-406	PSA-3 SNUBBER	RHR-203	VT3H	19880224
	RHR-77	SPRING	RHR-205	VT3H	19880429
	RHR-71	ANCHOR	RHR-205	VT3H	19880429

TABLE II
EXAMINATIONS COMPLETED DURING
OUTAGE RF88A

CODE CATEGORY	IDENTIFICATION NO.	DESCRIPTION	ISI DRAWING	METHOD	EXAM. DATE (Y/M/D)
IWF	RHR-76	SPRING	RHR-205	VT3H	19880425
	RHR-69	STRUT	RHR-205	VT3H	19880425
	RHR-70	STRUT	RHR-205	VT3H	19880425
	RHR-67	PSA-3 SNUBBER	RHR-205	VT3H	19880425
	RHR-68	STRUT	RHR-205	VT3H	19880425
	RHR-923N	SPRING	RHR-207	VT3H	19880222
	RHR-943N	PSA-3 SNUBBER	RHR-207	VT3H	19880428
	RHR-944N	PSA-3 SNUBBER	RHR-207	VT3H	19880481
	RHR-918N	BOX	RHR-207	VT3H	19880425
	RHR-926N	SPRING	RHR-207	VT3H	19880428
	RHR-929N	SPRING	RHR-207	VT3H	19880222
	RHR-919N	BOX	RHR-207	VT3H	19880222
	RHR-910N	STRUT	RHR-207	VT3H	19880224
	RHR-500	PSA-10 SNUBBER	RHR-207	VT3H	19880224
	RHR-498	SPRING	RHR-207	VT3H	19880507
	RHR-501	SPRING	RHR-207	VT3H	19880507
	RHR-503	PSA-35 SNUBBER	RHR-207	VT3H	19880507
	RHR-502	PSA-35 SNUBBER	RHR-207	VT3H	19880507
	RHR-185	SPRING	RHR-207	VT3H	19880507
	MS-SC-10	PSA-35 SNUBBER	MS-103	VT3H	19880505
	MS-SC-9	PSA-35 SNUBBER	MS-103	VT3H	19880505
	MS-SC-3	PSA-35 SNUBBER	MS-103	VT3H	19880505
	MS-HC-3	SPRING (2)	MS-103	VT3H	19880505
	MS-HD-1	SPRING	MS-104	VT3H	19880504
	MS-SD-10	PSA-35 SNUBBER	MS-104	VT3H	19880505
	MS-SD-3	PSA-35 SNUBBER	MS-104	VT3H	19880505
	MS-2619-11	PSA-1/4 SNUBBER	MS-106	VT3H	19880509
	MS-2619-12	PSA-1/4 SNUBBER	MS-106	VT3H	19880509
	MS-2619-14	PSA-1/2 SNUBBER	MS-106	VT3H	19880509
	MS-2619-311	PSA-1/2 SNUBBER	MS-106	VT3H	19880503
	MS-2619-313	PSA-1/2 SNUBBER	MS-106	VT3H	19880503
	MS-2619-314	PSA-1/4 SNUBBER	MS-106	VT3H	19880503
	MS-2619-315	SPRING	MS-106	VT3H	19880503
	MS-47	SPRING	MS-203	VT3H	19880224

TABLE II
EXAMINATIONS COMPLETED DURING
OUTAGE RF88A

CODE CATEGORY	IDENTIFICATION NO.	DESCRIPTION	ISI DRAWING	METHOD	EXAM. DATE (Y/M/D)
IWF	MS-44	SPRING	MS-203	VT3H	19880225
	MS-45	PSA-35 SNUBBER	MS-203	VT3H	19880225
	MS-1003N	PSA-10 SN(2)	MS-203	VT3H	19880225
	MS-42	SPRING (2)	MS-203	VT3H	19880301
	MS-1002N	PSA-10 SN(2)	MS-203	VT3H	19880225
	MS-40	STRUT	MS-203	VT3H	19880229
	MS-39	STRUT	MS-203	VT3H	19880229
	MS-74	SPRING	MS-204	VT3H	19880224
	MS-72	PSA-35 SNUBBER	MS-204	VT3H	19880225
	MS-71	SPRING	MS-204	VT3H	19880225
	MS-69	SPRING	MS-204	VT3H	19880229
	MS-908N	PSA-35 SN(2)	MS-204	VT3H	19880229
	MS-1007N	PSA-10 SN(2)	MS-204	VT3H	19880229
	MS-68	STRUT	MS-204	VT3H	19880229
	MS-66	SPRING (2)	MS-204	VT3H	19880301
	MS-1010N	PSA-10 SN(2)	MS-204	VT3H	19880229
	MS-65	STRUT	MS-204	VT3H	19880229
	RFW-146	PSA-10 SN(2)	RFW-101	VT3H	19880505
	RFW-156	SPRING	RFW-101	VT3H	19880504
	SW-174	BOX	SW-301	VT3H	19880223
	SW-57	RIGID	SW-301	VT3H	19880222
	SW-437	STRUT	SW-301	VT3H	19880222
	SW-913N	STRUT	SW-301	VT3H	19880222
	SW-58	BOX	SW-301	VT3H	19880222
	SW-318	STRUT	SW-301	VT3H	19880222
	SW-64	BOX	SW-301	VT3H	19880222
	SW-231	BOX	SW-302	VT3H	19880223
	SW-232	BOX	SW-302	VT3H	19880223
	SW-233	BOX	SW-302	VT3H	19880223
	SW-234	BOX	SW-302	VT3H	19880223
	SW-235	BOX	SW-302	VT3H	19880223
	SW-236	BOX	SW-302	VT3H	19880223
	SW-140	BOX	SW-303	VT3H	19880223
	SW-139	STRUT	SW-303	VT3H	19880223

TABLE II
EXAMINATIONS COMPLETED DURING
OUTAGE RF88A

CODE CATEGORY	IDENTIFICATION NO.	DESCRIPTION	ISI DRAWING	METHOD	EXAM. DATE (Y/M/D)
IWF	SW-138	BOX	SW-303	VT3H	19880222
	SW-207	STRUT	SW-303	VT3H	19880222
	SW-433	BOX	SW-303	VT3H	19880222
	SW-352	BOX	SW-304	VT3H	19880223
	SW-348	BOX	SW-304	VT3H	19880223
	SW-349	BOX	SW-304	VT3H	19880223
	SW-350	BOX	SW-304	VT3H	19880223
	SW-351	BOX	SW-304	VT3H	19880223
	SW-196	STRUT	SW-305	VT3H	19880425
	SW-26	BOX	SW-305	VT3H	19880224
	SW-118	SPRING	SW-305	VT3H	19880425
	SW-25	RIGID	SW-305	VT3H	19880425
	SW-24	RIGID	SW-305	VT3H	19880224
	SW-23	SPRING	SW-305	VT3H	19880224
	SW-91	STRUT	SW-307	VT3H	19880223
	SW-92	RIGID	SW-307	VT3H	19880223
	SW-6	BOX	SW-307	VT3H	19880223
	SW-7	BOX	SW-307	VT3H	19880223
	SW-930N	BOX	SW-307	VT3H	19880427
	SW-931N	BOX	SW-307	VT3H	19880427
	SW-932N	BOX	SW-307	VT3H	19880427
	SW-252	BOX	SW-308	VT3H	19880223
	SW-253	BOX	SW-308	VT3H	19880223
	SW-254	BOX	SW-308	VT3H	19880223
	SW-255	BOX	SW-308	VT3H	19880223
	SW-256	BOX	SW-308	VT3H	19880223
	SW-257	BOX	SW-308	VT3H	19880223
	SW-258	BOX	SW-308	VT3H	19880223
	SW-273	BOX	SW-310	VT3H	19880223
	SW-310	BOX	SW-310	VT3H	19880223
	SW-280	STRUT	SW-310	VT3H	19880221
	SW-449	RIGID	SW-310	VT3H	19880223
	SW-1022N	RIGID	SW-313	VT3H	19880425
	SW-948N	RIGID	SW-315	VT3H	19880425

TABLE II
EXAMINATIONS COMPLETED DURING
OUTAGE RF88A

CODE CATEGORY	IDENTIFICATION NO.	DESCRIPTION	ISI DRAWING	METHOD	EXAM. DATE (Y/M/D)
IWF	SW-949N	RIGID	SW-315	VT3H	19880425
	SW-950N	RIGID	SW-315	VT3H	19880425
	SW-985N	RIGID	SW-315	VT3H	19880224
	FPC-63	BOX	FPC-301	VT3H	19880224
	FPC-64	BOX	FPC-301	VT3H	19880222
	FPC-44	ANCHOR	FPC-301	VT3H	19880222
	FPC-42	STRUT	FPC-301	VT3H	19880222
	FPC-43	PSA-3 SNUBBER	FPC-301	VT3H	19880222
	FPC-201	RIGID	FPC-305	VT3H	19880425
	FPC-162	BOX	FPC-305	VT3H	19880425
	FPC-160	RIGID	FPC-305	VT3H	19880224
	FPC-161	BOX	FPC-305	VT3H	19880224
	FPC-913N	BOX	FPC-305	VT3H	19880425
	RCC-267	SPRING	RCC-301	VT3H	19880505
	RCC-913N	STRUT	RCC-301	VT3H	19880504
	RCC-439	STRUT	RCC-301	VT3H	19880504
	RCC-477	STRUT	RCC-301	VT3H	19880504
	RCC-315	SPRING	RCC-302	VT3H	19880505
	RCC-316	ANCHOR	RCC-302	VT3H	19880505
	RCC-325	SPRING	RCC-302	VT3H	19880505
	RCC-487	STRUT	RCC-302	VT3H	19880505
	MS-280	SPRING	MS-305	VT3H	19880504
	MSRV-1B-2	PSA-10 SNUBBER	MS-305	VT3H	19880504
	MSRV-1B-3	PSA-10 SNUBBER	MS-305	VT3H	19880504
	MSRV-1B-1	PSA-10 SNUBBER	MS-305	VT3H	19880504
	MS-281	SPRING	MS-305	VT3H	19880505
	MSRV-1B-5	PSA-10 SNUBBER	MS-305	VT3H	19880504
	MSRV-1B-4	PSA-10 SNUBBER	MS-305	VT3H	19880505
	MS-282	SPRING	MS-305	VT3H	19880505
	MS-334	SPRING	MS-305	VT3H	19880505
	MSRV-1B-6PS	RIGID	MS-305	VT3H	19880505
	MSRV-5B-2	PSA-35 SNUBBER	MS-309	VT3H	19880504
	MSRV-5B-1	PSA-3 SN(2)	MS-309	VT3H	19880504
	MS-328	SPRING	MS-309	VT3H	19880504

TABLE II
EXAMINATIONS COMPLETED DURING
OUTAGE RF88A

CODE CATEGORY	IDENTIFICATION NO.	DESCRIPTION	ISI DRAWING	METHOD	EXAM. DATE (Y/M/D)
IWF	MSRV-5B-3	PSA-10 SNUBBER	MS-309	VT3H	19880504
	MSRV-5B-5	PSA-10 SNUBBER	MS-309	VT3H	19880504
	MSRV-5B-4	PSA-10 SNUBBER	MS-309	VT3H	19880504
	MS-329	SPRING	MS-309	VT3H	19880504
	MSRV-5B-6	PSA-10 SNUBBER	MS-309	VT3H	19880504
	MSRV-5B-7	PSA-10 SNUBBER	MS-309	VT3H	19880504
	MSRV-5B-8	PSA-10 SNUBBER	MS-309	VT3H	19880504
	MS-330	SPRING	MS-309	VT3H	19880504
	MSRV-5B-9	PSA-10 SNUBBER	MS-309	VT3H	19880504
	MS-345	SPRING	MS-309	VT3H	19880504
	MSRV-5B-10PS	RIGID	MS-309	VT3H	19880504
	MS-304	SPRING	MS-313	VT3H	19880504
	MSRV-4C-2	PSA-10 SNUBBER	MS-313	VT3H	19880504
	MSRV-4C-3	PSA-10 SNUBBER	MS-313	VT3H	19880504
	MSRV-4C-1	PSA-10 SNUBBER	MS-313	VT3H	19880504
	MS-305	SPRING	MS-313	VT3H	19880504
	MSRV-4C-5	PSA-10 SNUBBER	MS-313	VT3H	19880504
	MSRV-4C-6	PSA-10 SNUBBER	MS-313	VT3H	19880504
	MSRV-4C-8	PSA-35 SNUBBER	MS-313	VT3H	19880504
	MSRV-4C-7	PSA-10 SNUBBER	MS-313	VT3H	19880504
	MS-306	SPRING	MS-313	VT3H	19880504
	MS-307	SPRING	MS-313	VT3H	19880505
	MS-339	SPRING	MS-313	VT3H	19880504
	MSRV-4C-9	PSA-3 SN(2)	MS-313	VT3H	19880505
	SLC-4453-13	RIGID	SLC-101	VT3H	19880224
	SLC-4453-14	RIGID	SLC-101	VT3H	19880224
	SLC-4453-21	RIGID	SLC-101	VT3H	19880224
	SLC-4453-22	RIGID	SLC-101	VT3H	19880224
	SLC-4453-23	RIGID	SLC-101	VT3H	19880224
	SLC-4475-113	PSA-1/2 SNUBBER	SLC-101	VT3H	19880517
	COUNT =	192			
N/A	JET PUMP SENSING LINES	JP SENSING LINE	RPV-101	VT-1	19880615

TABLE II
EXAMINATIONS COMPLETED DURING
OUTAGE RF88A

CODE CATEGORY	IDENTIFICATION NO.	DESCRIPTION	ISI DRAWING	METHOD	EXAM. DATE (Y/M/D)
N/A	INCORE DRY TUBES	INCORE DRY TUBE	RPV-101	VT-1	19880615
	CORE SPRAY SPARGERS	CORE SPRAY SPG	RPV-101	VT-1	19880615
	STEAM DRYER	STEAM DRYER	RPV-101	VT-1	19880615

COUNT = 4

TOTAL COUNT = 437

TABLE III
SNUBBER TEST SUMMARY

HANGER MARK NO. (& POSITION) DESCRIPTION & SERIAL NO.			TEST DATE YR/MO/DA	TEST RESULT ACC/REJ	REPLACEMENT SERIAL NO.	RETEST NEXT OUTAGE: Y/N
HPCS-47	SOUTH					
PSA-3 SN(2)		485	19880502	ACC		NO
HPCS-63	SOUTH					
PSA-10 SN(2)		1474	19880509	ACC		NO
MS-177	SOUTH					
PSA-3 SN(2)		299	19880503	ACC		NO
MS-179	EAST					
PSA-1 SN(2)		340	19880503	ACC		NO
MS-2619-42C						
PSA-1/2 SNUBBER		2572	19880504	ACC		NO
MS-4448-413						
PSA-1/4 SNUBBER		318	19880502	ACC		NO
MS-72						
PSA-35 SNUBBER		8691	19880511	ACC		NO
MS-999N						
PSA-10 SNUBBER		328	19880511	ACC		NO
MS-SA-9						
PSA-35 SNUBBER		4141	19880510	ACC		NO
MS-SC-5						
PSA-35 SNUBBER		4150	19880511	ACC		NO
MSRV-1B-5						
PSA-10 SNUBBER		295	19880510	ACC		NO

TABLE III
SNUBBER TEST SUMMARY

HANGER MARK NO. (& POSITION) DESCRIPTION & SERIAL NO.		TEST DATE YR/MO/DA	TEST RESULT ACC/REJ	REPLACEMENT SERIAL NO.	RETEST NEXT OUTAGE: Y/N
MSRV-1D-6					
PSA-10 SNUBBER	9962	19880509	ACC		NO
MSRV-2B-4					
PSA-10 SNUBBER	17367	19880509	ACC		NO
MSRV-2B-7					
PSA-10 SNUBBER	17365	19880509	ACC		NO
MSRV-2C-5					
PSA-10 SNUBBER	9921	19880509	ACC		NO
MSRV-3D-6					
PSA-10 SNUBBER	323	19880510	ACC		NO
MSRV-4A-6					
PSA-10 SNUBBER	11865	19880508	ACC		NO
MSRV-4B-10					
PSA-35 SNUBBER	6119	19880510	ACC		NO
MSRV-4B-2					
PSA-10 SNUBBER	9953	19880509	ACC		NO
MSRV-5B-4					
PSA-10 SNUBBER	13054	19880509	ACC		NO
RCIC-1C-3					
PSA-1 SNUBBER	346	19880505	ACC		NO
RCIC-938N					
PSA-3 SNUBBER	2378	19880504	ACC		NO

TABLE III
SNUBBER TEST SUMMARY

HANGER MARK NO. (& POSITION) DESCRIPTION & SERIAL NO.			TEST DATE YR/MO/DA	TEST RESULT ACC/REJ	REPLACEMENT SERIAL NO.	RETEST NEXT OUTAGE: Y/N
RCIC-943N						
PSA-10 SNUBBER		577	19880510	ACC		NO
RFW-166	BOTTOM					
PSA-10 SN(2)		120	19880509	ACC		NO
RHR-244						
PSA-35 SNUBBER		12713	19880511	ACC		NO
RHR-264	SOUTH					
PSA-3 SN(2)		4471	19880502	ACC		NO
RHR-311	WEST					
PSA-3 SN(2)		1065	19880502	ACC		NO
RHR-326	EAST					
PSA-1/4 SN(2)		392	19880502	ACC		NO
RHR-448						
PSA-1/2 SNUBBER		4019	19880502	ACC		NO
RHR-548	EAST					
PSA-3 SN(2)		630	19880502	ACC		NO
RHR-947N	TOP					
PSA-3 SN(2)		3905	19880502	ACC		NO
RHR-954N	WEST					
PSA-1 SN(2)		125	19880502	ACC		NO
RHR-SB-39	BOTTOM					
PSA-3 SN(2)		224	19880504	ACC		NO

TABLE III
SNUBBER TEST SUMMARY

HANGER MARK NO. (& POSITION) DESCRIPTION & SERIAL NO.		TEST DATE YR/MO/DA	TEST RESULT ACC/REJ	REPLACEMENT SERIAL NO.	RETEST NEXT OUTAGE: Y/N
RRC-1C-10					
PSA-1 SNUBBER	22372	19880505	ACC		NO
RRC-1C-13					
PSA-1 SNUBBER	357	19880505	ACC		NO
RRC-1C-14 TOP					
PSA-1 SN(2)	336	19880511	ACC		NO
RRC-1C-14 TOP					
PSA-1 SN(2)	646	19880509	ACC	336	NO
RRC-1C-14 BOTTOM					
PSA-1 SN(2)	340	19880511	ACC		NO
RRC-1C-14 BOTTOM					
PSA-1 SN(2)	112	19880505	ACC	340	NO
RRC-1C-15					
PSA-1 SNUBBER	335	19880505	ACC		NO
RRC-SA-3					
PSA-100 SNUBBER	614	19880510	ACC		NO
RWCU-1C-1					
PSA-3 SNUBBER	4445	19880504	ACC		NO
RWCU-927N					
PSA-35 SNUBBER	7038	19880511	ACC		NO
SW-915N SOUTH					
PSA-10 SN(2)	1488	19880509	ACC		NO

TABLE III
SNUBBER TEST SUMMARY

HANGER MARK NO. (& POSITION) DESCRIPTION & SERIAL NO.		TEST DATE YR/MO/DA	TEST RESULT ACC/REJ	REPLACEMENT SERIAL NO.	RETEST NEXT OUTAGE: Y/N
VR-8					
PSA-1 SNUBBER	383	19880502	ACC		NO

TOTAL COUNT = 45

APPENDIX A

NIS-1 Owner's Data Report For Inservice Inspection

FORM NIS-1 OWNERS' DATA REPORT FOR INSERVICE INSPECTIONS

As required by the Provisions of the ASME Code Rules

1. Owner Washington Public Power Supply System
3000 George Washington Way, P.O. Box 968, Richland, WA 99352
(Name and Address of Owner)

2. Plant WNP-2, Hanford Reservation, Benton County, Washington
(Name and Address of Plant)

3. Plant Unit WNP-2 4. Owner Certificate of Authorization (if required) N/A

5. Commercial Service Date 12/13/84 6. National Board Number for Unit N/A

7. Components Inspected

Component or Appurtenance	Manufacturer or Installer	Manufacturer or Installer Serial No.	State or Province No.	National Board No.
RPV	CBIN Nuclear Co.	T-45	29936-84W	8
HPCS-V-4	Anchor/Darling Valve Co.	E5310-4-1	N/A	N/A
MS-V-28A	Rockwell Manuf. Co.	JU-53	N/A	78
MS-V-28B	Rockwell Manuf. Co.	JS-98	N/A	96
MS-V-28C	Rockwell Manuf. Co.	JU-17	N/A	77
MS-V-28D	Rockwell Manuf. Co.	JT-78	N/A	71
RHR-V-53B	Anchor/Darling Valve Co.	E6330-2-1	N/A	N/A
Lg Bore Pipe	Bechtel	(1)	N/A	N/A
Notes: (1)	The piping examined is included on Page 3 through Page 16 of this NIS-1 form.			

Note: Supplemental sheets in form of lists, sketches, or drawings may be used provided (1) size is 8½ in. x 11 in., (2) information in items 1 through 6 on this data report is included on each sheet, and (3) each sheet is numbered and the number of sheets is recorded at the top of this form.

FORM NIS-1 (back)

8. Examination Dates 6/24/87 to 6/27/88 9. Inspection Interval from 12/13/84 to 12/13/94

10. Abstract of Examinations. Include a list of examinations and a statement concerning status of work required for current interval. Approximately 32% of the examinations required for this inspection interval are complete. See pages 3 through 16 for examinations *

11. Abstract of Conditions Noted.
No significant indications were found using dye penetrant, magnetic particle, **

12. Abstract of Corrective Measures Recommended and Taken
Two of the four leaks were repaired and retested with acceptable results. The other two leaks were on CRD flanges. The leaks were evaluated and found acceptable.

We certify that the statements made in this report are correct and the examinations and corrective measures taken conform to the rules of the ASME Code, Section XI.

Date Sept 6 19 88 Signed WPPSS Owner By J W Baker

Certificate of Authorization No. (if applicable) N/A Expiration Date N/A

CERTIFICATE OF INSERVICE INSPECTION

I, the undersigned, holding a valid commission issued by the National Board of Boiler and Pressure Vessel Inspectors and/or the State or Province of Washington and employed by Lumberman's Mut. Cas Co. of Long Grove, IL have inspected the components described in this Owners' Data Report during the period 6/24/87 to 6/27/88, and state that to the best of my knowledge and belief, the Owner has performed examinations and taken corrective measures described in this Owners' Data Report in accordance with the requirements of the ASME Code, Section XI.

By signing this certificate neither the Inspector nor his employer makes any warranty, expressed or implied, concerning the examinations and corrective measures described in this Owners' Data Report. Furthermore, neither the Inspector nor his employer shall be liable in any manner for any personal injury or property damage or a loss of any kind arising from or connected with this inspection.

Date SEPT. 7 19 88

David L. Vance Commissions 7447-W
Inspector's Signature National Board, State, Province and No.

10. * (cont.) completed at this refueling outage.

11. ** (cot.) and ultrasonic methods. Code Category B-p leakage test found four fitting leaks. No snubbers failed testing.

1. OWNER: WASHINGTON PUBLIC POWER SUPPLY SYSTEM, 3000 GEORGE WASHINGTON WAY, P.O. BOX 968, RICHLAND, WASHINGTON 99352 2. PLANT: WNP-2, HANFORD RESERVATION, BENTON COUNTY, WA.
3. PLANT UNIT: WNP-2 4. OWNER CERTIFICATE OF AUTHORIZATION: N/A
5. COMMERCIAL SERVICE DATE: 12/13/1984 6. NATIONAL BOARD NUMBER: N/A
10. ABSTRACT OF EXAMINATIONS. LIST OF EXAMINATIONS:

CODE CATEGORY	IDENTIFICATION NO.	DESCRIPTION	ITEM NO.	METHOD	DRAWING NO.
B-A	AH	TOP HD DOL PLT	B1.21	VOL	RPV-102
B-D	N4-150-IR	FW NZ-IR @ 150	B3.100	VOL	RPV-101
	N4-150-NB	FW NZ BORE @150	B3.100	VOL	RPV-101
B-F	12RFW(1)AA-9	SE EXT-SE STUB	B5.10	VOL	RFW-101
	12RFW(1)AA-9	SE EXT-SE STUB	B5.10	SUR	RFW-101
	12RFW(1)AA-10	SE STUB-SE	B5.10	VOL	RFW-101
	12RFW(1)AA-10	SE STUB-SE	B5.10	SUR	RFW-101
	12RFW(1)AA-11	SE TO N4	B5.10	VOL	RFW-101
	12RFW(1)AA-11	SE TO N4	B5.10	SUR	RFW-101
	4RRC(4)A-11	SE TO VALVE	B5.10	VOL	RRC-108
	4RRC(4)A-11	SE TO VALVE	B5.10	SUR	RRC-108
B-G-1	RPV STUD 35-1-1A	RPV STUD	B6.20	VOL	RPV-101
	RPV STUD 35-1-1A	RPV STUD	B6.30	SUR	RPV-101
	RPV STUD 35-1-9A	RPV STUD	B6.20	VOL	RPV-101
	RPV STUD 35-1-9A	RPV STUD	B6.30	SUR	RPV-101
	RPV STUD 35-1-16A	RPV STUD	B6.20	VOL	RPV-101
	RPV STUD 35-1-16A	RPV STUD	B6.30	SUR	RPV-101
	RPV STUD 35-1-23A	RPV STUD	B6.20	VOL	RPV-101
	RPV STUD 35-1-23A	RPV STUD	B6.30	SUR	RPV-101
	RPV STUD 35-1-30A	RPV STUD	B6.20	VOL	RPV-101
	RPV STUD 35-1-30A	RPV STUD	B6.30	SUR	RPV-101
	RPV STUD 35-1-37A	RPV STUD	B6.20	VOL	RPV-101
	RPV STUD 35-1-37A	RPV STUD	B6.30	SUR	RPV-101
	RPV STUD 35-1-44A	RPV STUD	B6.20	VOL	RPV-101
	RPV STUD 35-1-44A	RPV STUD	B6.30	SUR	RPV-101
	RPV STUD 35-1-50A	RPV STUD	B6.20	VOL	RPV-101
	RPV STUD 35-1-50A	RPV STUD	B6.30	SUR	RPV-101
	RPV STUD 35-1-58A	RPV STUD	B6.20	VOL	RPV-101
	RPV STUD 35-1-58A	RPV STUD	B6.30	SUR	RPV-101
	RPV STUD 35-1-65A	RPV STUD	B6.20	VOL	RPV-101

1. OWNER: WASHINGTON PUBLIC POWER SUPPLY SYSTEM, 3000 GEORGE WASHINGTON WAY, P.O. BOX 968, RICHLAND, WASHINGTON 99352 2. PLANT: WNP-2, HANFORD RESERVATION, BENTON COUNTY, WA.
3. PLANT UNIT: WNP-2 4. OWNER CERTIFICATE OF AUTHORIZATION: N/A
5. COMMERCIAL SERVICE DATE: 12/13/1984 6. NATIONAL BOARD NUMBER: N/A
10. ABSTRACT OF EXAMINATIONS. LIST OF EXAMINATIONS:

CODE CATEGORY	IDENTIFICATION NO.	DESCRIPTION	ITEM NO.	METHOD	DRAWING NO.
B-G-1	RPV STUD 35-1-65A	RPV STUD	B6.30	SUR	RPV-101
	RPV STUD 35-1-72A	RPV STUD	B6.20	VOL	RPV-101
	RPV STUD 35-1-72A	RPV STUD	B6.30	SUR	RPV-101
	RPV NUT 36-1-1A	RPV NUT	B6.10	VOL	RPV-101
	RPV NUT 36-1-1A	RPV NUT	B6.10	SUR	RPV-101
	RPV NUT 36-1-9A	RPV NUT	B6.10	VOL	RPV-101
	RPV NUT 36-1-9A	RPV NUT	B6.10	SUR	RPV-101
	RPV NUT 36-1-16A	RPV NUT	B6.10	VOL	RPV-101
	RPV NUT 36-1-16A	RPV NUT	B6.10	SUR	RPV-101
	RPV NUT 36-1-23A	RPV NUT	B6.10	VOL	RPV-101
	RPV NUT 36-1-23A	RPV NUT	B6.10	SUR	RPV-101
	RPV NUT 36-1-30A	RPV NUT	B6.10	VOL	RPV-101
	RPV NUT 36-1-30A	RPV NUT	B6.10	SUR	RPV-101
	RPV NUT 36-1-37A	RPV NUT	B6.10	VOL	RPV-101
	RPV NUT 36-1-37A	RPV NUT	B6.10	SUR	RPV-101
	RPV NUT 36-1-44A	RPV NUT	B6.10	VOL	RPV-101
	RPV NUT 36-1-44A	RPV NUT	B6.10	SUR	RPV-101
	RPV NUT 36-1-50A	RPV NUT	B6.10	VOL	RPV-101
	RPV NUT 36-1-50A	RPV NUT	B6.10	SUR	RPV-101
	RPV NUT 36-1-58A	RPV NUT	B6.10	VOL	RPV-101
	RPV NUT 36-1-58A	RPV NUT	B6.10	SUR	RPV-101
	RPV NUT 36-1-65A	RPV NUT	B6.10	VOL	RPV-101
	RPV NUT 36-1-65A	RPV NUT	B6.10	SUR	RPV-101
	RPV NUT 36-1-72A	RPV NUT	B6.10	VOL	RPV-101
	RPV NUT 36-1-72A	RPV NUT	B6.10	SUR	RPV-101
	RPV WASHERS	RPV WASHER-76EA	B6.50	VT-1	RPV-101
B-G-2	CRD HOUSING BLT	CRD HOUSING BLT	B7.80	VT-1	RPV-102
	RHR-V-42B-BLT	VALVE BOLTING	B7.70	VT-1	RHR-102
	RHR-V-53B-BLT	VALVE FLANGE	B7.70	VT-1	RHR-106
	8MSR-1A-2BD	FLANGE BOLTING	B7.50	VT-1	MS-101
	MS-RV-1A-BLT	VALVE BOLTING	B7.70	VT-1	MS-101
	8MSR-5C-2BD	FLANGE BOLTING	B7.50	VT-1	MS-103

1. OWNER: WASHINGTON PUBLIC POWER SUPPLY SYSTEM, 3000 GEORGE WASHINGTON WAY, P.O. BOX 968, RICHLAND, WASHINGTON 99352 2. PLANT: WNP-2, HANFORD RESERVATION, BENTON COUNTY, WA.
3. PLANT UNIT: WNP-2 4. OWNER CERTIFICATE OF AUTHORIZATION: N/A
5. COMMERCIAL SERVICE DATE: 12/13/1984 6. NATIONAL BOARD NUMBER: N/A
10. ABSTRACT OF EXAMINATIONS. LIST OF EXAMINATIONS:

CODE CATEGORY	IDENTIFICATION NO.	DESCRIPTION	ITEM NO.	METHOD	DRAWING NO.
B-G-2	MS-RV-5C-BLT	VALVE BOLTING	B7.70	VT-1	MS-103
	8MSR-4C-2BD	FLANGE BOLTING	B7.50	VT-1	MS-103
	MS-RV-4C-BLT	VALVE BOLTING	B7.70	VT-1	MS-103
	8MSR-4D-2BD	FLANGE BOLTING	B7.50	VT-1	MS-104
	MS-RV-4D-BLT	VALVE BOLTING	B7.70	VT-1	MS-104
	8MSR-3D-2BD	FLANGE BOLTING	B7.50	VT-1	MS-104
	MS-RV-3D-BLT	VALVE BOLTING	B7.70	VT-1	MS-104
	MS-V-22D-BLT	VALVE BOLTING	B7.70	VT-1	MS-104
	MS-V-28D-BLT	VALVE BOLTING	B7.70	VT-1	MS-104
	4RRC(8)2B-2BD	FLANGE BOLTING	B7.50	VT-1	RRC-102
	4RRC(8)1B-2BD	FLANGE BOLTING	B7.50	VT-1	RRC-102
B-J	4RCIC(13)-1	TEE TO PIPE	B9.11	VOL	RCIC-101
	4RCIC(13)-2	PIPE TO EL	B9.11	VOL	RCIC-101
	4RCIC(13)-3	EL TO PIPE	B9.11	VOL	RCIC-101
	12HPCS(1)-16	VLV TO PIPE	B9.11	VOL	HPCS-101
	12HPCS(1)-16	VLV TO PIPE	B9.11	SUR	HPCS-101
	12HPCS(1)-16/4HPCS(11)-4	PIPE TO WOL	B9.32	SUR	HPCS-101
	12HPCS(1)-17	PIPE TO VLV	B9.11	VOL	HPCS-101
	12HPCS(1)-17	PIPE TO VLV	B9.11	SUR	HPCS-101
	12HPCS(1)-18	VLV TO PIPE	B9.11	VOL	HPCS-101
	12HPCS(1)-18	VLV TO PIPE	B9.11	SUR	HPCS-101
	26MS(1)C-17	VALVE TO PENE	B9.11	VOL	MS-103
	26MS(1)C-17	VALVE TO PENE	B9.11	SUR	MS-103
	26MS(1)C-18	PENE TO VALVE	B9.11	VOL	MS-103
	26MS(1)C-18	PENE TO VALVE	B9.11	SUR	MS-103
	MS-V-28C/2MS(9)-4	DRAIN CONN	B9.11	SUR	MS-103
	12RFW(1)AA-6	PIPE TO EL	B9.11	VOL	RFW-101
	12RFW(1)AA-6	PIPE TO EL	B9.11	SUR	RFW-101
	12RFW(1)AA-7	EL TO PIPE	B9.11	VOL	RFW-101
	12RFW(1)AA-7	EL TO PIPE	B9.11	SUR	RFW-101
	5RFW(11)B-1	SLEEVE-SLEEVE	B9.11	SUR	RFW-102
	20RRC(6)-3LD	PIPE SEAM	B9.12	VOL	RRC-105

1. OWNER: WASHINGTON PUBLIC POWER SUPPLY SYSTEM, 3000 GEORGE WASHINGTON WAY, P.O. BOX 968, RICHLAND, WASHINGTON 99352 2. PLANT: WNP-2, HANFORD RESERVATION, BENTON COUNTY, WA.
3. PLANT UNIT: WNP-2 4. OWNER CERTIFICATE OF AUTHORIZATION: N/A
5. COMMERCIAL SERVICE DATE: 12/13/1984 6. NATIONAL BOARD NUMBER: N/A
10. ABSTRACT OF EXAMINATIONS. LIST OF EXAMINATIONS:

CODE CATEGORY	IDENTIFICATION NO.	DESCRIPTION	ITEM NO.	METHOD	DRAWING NO.
B-J	20RRC(6)-4LU	PIPE SEAM	B9.12	VOL	RRC-105
	20RRC(6)-4LU	PIPE SEAM	B9.12	SUR	RRC-105
B-K-1	RCIC-1C-6(W)	8 WELDED LUGS	B10.10	SUR	RCIC-101
	HPCS-63(W)	8 WELDED LUGS	B10.10	SUR	HPCS-101
	LPCS-57(W)	4 WELDED LUGS	B10.10	SUR	LPCS-101
	RHR-524(W)	8 WELDED LUGS	B10.10	SUR	RHR-103
	MS-HC-3(W)	4 WELDED LUGS	B10.10	SUR	MS-103
	RFW-146(W)	6 WELDED LUGS	B10.10	SUR	RFW-101
	RFW-156(W)	6 WELDED LUGS	B10.10	SUR	RFW-101
	RRC-HB-1(W)	4 WELDED LUGS	B10.10	SUR	RRC-102
B-M-2	HPCS-V-4-BDY	VALVE BODY	B12.40	VT-3	HPCS-101
	MS-V-28A-BDY	VALVE BODY.	B12.40	VT-3	MS-101
	MS-V-28B-BDY	VALVE BODY	B12.40	VT-3	MS-102
	MS-V-28C-BDY	VALVE BODY	B12.40	VT-3	MS-103
	MS-V-28D-BDY	VALVE BODY	B12.40	VT-3	MS-104
B-P	RPV-PB-101(L)	LK PRES BNDRY	B15.10	VT-2	RPV-101
	RPV-PB-102(L)	LK PRES BNDRY	B15.10	VT-2	RPV-102
	RCIC-PB-101(L)	LK PRES BNDRY	B15.50	VT-2	RCIC-101
	RCIC-PB-102(L)	LK PRES BNDRY	B15.50	VT-2	RCIC-102
	HPCS-PB-101(L)	LK PRES BNDRY	B15.50	VT-2	HPCS-101
	LPCS-PB-101(L)	LK PRES BNDRY	B15.50	VT-2	LPCS-101
	RHR-PB-101(L)	LK PRES BNDRY	B15.50	VT-2	RHR-101
	RHR-PB-102(L)	LK PRES BNDRY	B15.50	VT-2	RHR-102
	RHR-PB-103(L)	LK PRES BNDRY	B15.50	VT-2	RHR-103
	RHR-PB-104(L)	LK PRES BNDRY	B15.50	VT-2	RHR-104
	RHR-PB-105(L)	LK PRES BNDRY	B15.50	VT-2	RHR-105
	RHR-PB-106(L)	LK PRES BNDRY	B15.50	VT-2	RHR-106
	MS-PB-101(L)	LK PRES BNDRY	B15.50	VT-2	MS-101
	MS-PB-102(L)	LK PRES BNDRY	B15.50	VT-2	MS-102
	MS-PB-103(L)	LK PRES BNDRY	B15.50	VT-2	MS-103

1. OWNER: WASHINGTON PUBLIC POWER SUPPLY SYSTEM, 3000 GEORGE WASHINGTON WAY, P.O. BOX 968, RICHLAND, WASHINGTON 99352 2. PLANT: WNP-2, HANFORD RESERVATION, BENTON COUNTY, WA.
3. PLANT UNIT: WNP-2 4. OWNER CERTIFICATE OF AUTHORIZATION: N/A
5. COMMERCIAL SERVICE DATE: 12/13/1984 6. NATIONAL BOARD NUMBER: N/A
10. ABSTRACT OF EXAMINATIONS. LIST OF EXAMINATIONS:

CODE CATEGORY	IDENTIFICATION NO.	DESCRIPTION	ITEM NO.	METHOD	DRAWING NO.
B-P	MS-PB-104(L)	LK PRES BNDRY	B15.50	VT-2	MS-104
	MS-PB-105(L)	LK PRES BNDRY	B15.50	VT-2	MS-105
	MS-PB-106(L)	LK PRES BNDRY	B15.50	VT-2	MS-106
	RFW-PB-101(L)	LK PRES BNDRY	B15.50	VT-2	RFW-101
	RFW-PB-102(L)	LK PRES BNDRY	B15.50	VT-2	RFW-102
	RFW-PB-103(L)	LK PRES BNDRY	B15.50	VT-2	RFW-103
	RRC-PB-101(L)	LK PRES BNDRY	B15.50	VT-2	RRC-101
	RRC-PB-102(L)	LK PRES BNDRY	B15.50	VT-2	RRC-102
	RRC-PB-103(L)	LK PRES BNDRY	B15.50	VT-2	RRC-103
	RRC-PB-104(L)	LK PRES BNDRY	B15.50	VT-2	RRC-104
	RRC-PB-105(L)	LK PRES BNDRY	B15.50	VT-2	RRC-105
	RRC-PB-106(L)	LK PRES BNDRY	B15.50	VT-2	RRC-106
	RRC-PB-107(L)	LK PRES BNDRY	B15.50	VT-2	RRC-107
	RRC-PB-108(L)	LK PRES BNDRY	B15.50	VT-2	RRC-108
	RRC-PB-109(L)	LK PRES BNDRY	B15.50	VT-2	RRC-109
	RRC-PB-110(L)	LK PRES BNDRY	B15.50	VT-2	RRC-110
	RRC-PB-111(L)	LK PRES BNDRY	B15.50	VT-2	RRC-111
	RWCU-PB-101(L)	LK PRES BNDRY	B15.50	VT-2	RWCU-101
	SLC-PB-101(L)	LK PRESS BNDRY	B15.50	VT-2	SLC-101
C-H	RCIC-PB-201(L)	LK PRES BNDRY	C7.20	VT-2	RCIC-201
	RCIC-PB-202(L)	LK PRES BNDRY	C7.20	VT-2	RCIC-202
	RCIC-PB-203(L)	LK PRES BNDRY	C7.20	VT-2	RCIC-203
	RCIC-PB-204(L)	LK PRES BNDRY	C7.20	VT-2	RCIC-204
	RCIC-PB-205(L)	LK PRES BNDRY	C7.20	VT-2	RCIC-205
	HPCS-PB-201(L)	LK PRES BNDRY	C7.20	VT-2	HPCS-201
	HPCS-PB-202(L)	LK PRES BNDRY	C7.20	VT-2	HPCS-202
	LPCS-PB-201(L)	LK PRES BNDRY	C7.20	VT-2	LPCS-201
	LPCS-PB-202(L)	LK PRES BNDRY	C7.20	VT-2	LPCS-202
	RHR-PB-201(L)	LK PRES BNDRY	C7.20	VT-2	RHR-201
	RHR-PB-202(L)	LK PRES BNDRY	C7.20	VT-2	RHR-202
	RHR-PB-203(L)	LK PRES BNDRY	C7.20	VT-2	RHR-203
	RHR-PB-205(L)	LK PRES BNDRY	C7.20	VT-2	RHR-205

1. OWNER: WASHINGTON PUBLIC POWER SUPPLY SYSTEM, 3000 GEORGE WASHINGTON WAY, P.O. BOX 968, RICHLAND, WASHINGTON 99352 2. PLANT: WNP-2, HANFORD RESERVATION, BENTON COUNTY, WA.
3. PLANT UNIT: WNP-2 4. OWNER CERTIFICATE OF AUTHORIZATION: N/A
5. COMMERCIAL SERVICE DATE: 12/13/1984 6. NATIONAL BOARD NUMBER: N/A
10. ABSTRACT OF EXAMINATIONS. LIST OF EXAMINATIONS:

CODE CATEGORY	IDENTIFICATION NO.	DESCRIPTION	ITEM NO.	METHOD	DRAWING NO.
C-H	RHR-PB-206(L)	LK PRES BNDRY	C7.20	VT-2	RHR-206
	RHR-PB-207(L)	LK PRES BNDRY	C7.20	VT-2	RHR-207
	RHR-PB-209(L)	LK PRES BNDRY	C7.20	VT-2	RHR-209
	RHR-PB-210(L)	LK PRES BNDRY	C7.20	VT-2	RHR-210
	RHR-PB-211(L)	LK PRES BNDRY	C7.20	VT-2	RHR-211
	RCC-PB-201(L)	LK PRES BNDRY	C7.21	VT-2	RCC-201
	RCC-PB-202(L)	LK PRES BNDRY	C7.21	VT-2	RCC-202
	CRD-PB-201(L)	LK PRES BNDRY	C7.21	VT-2	CRD-201
	CRD-PB-202(L)	LK PRES BNDRY	C7.21	VT-2	CRD-202
D-A	MS-329(W)	WELDED ATTACH	D1.40	VT-3	MS-309
	MSRV-5B-6(W)	WELDED ATTACH	D1.30	VT-3	MS-309
	MSRV-5B-7(W)	WELDED ATTACH	D1.30	VT-3	MS-309
	MS-330(W)	WELDED ATTACH	D1.40	VT-3	MS-309
D-B	SW-174(W)	WELDED ATTACH	D2.20	VT-3	SW-301
	SW-57(W)	WELDED ATTACH	D2.20	VT-3	SW-301
	SW-437(W)	WELDED ATTACH	D2.20	VT-3	SW-301
	SW-58(W)	WELDED ATTACH	D2.20	VT-3	SW-301
	SW-318(W)	WELDED ATTACH	D2.20	VT-3	SW-301
	SW-PB-301(L)	LK PRES BNDRY	D2.10	VT-2	SW-301
	SW-231(W)	WELDED ATTACH	D2.20	VT-3	SW-302
	SW-236(W)	WELDED ATTACH	D2.20	VT-3	SW-302
	SW-PB-302(L)	LK PRES BNDRY	D2.10	VT-2	SW-302
	SW-140(W)	WELDED ATTACH	D2.20	VT-3	SW-303
	SW-139(W)	WELDED ATTACH	D2.20	VT-3	SW-303
	SW-138(W)	WELDED ATTACH	D2.20	VT-3	SW-303
	SW-207(W)	WELDED ATTACH	D2.20	VT-3	SW-303
	SW-433(W)	WELDED ATTACH	D2.20	VT-3	SW-303
	SW-PB-303(L)	LK PRES BNDRY	D2.10	VT-2	SW-303
	SW-352(W)	WELDED ATTACH	D2.20	VT-3	SW-304
	SW-348(W)	WELDED ATTACH	D2.20	VT-3	SW-304
	SW-349(W)	WELDED ATTACH	D2.20	VT-3	SW-304

1. OWNER: WASHINGTON PUBLIC POWER SUPPLY SYSTEM, 3000 GEORGE WASHINGTON WAY, P.O. BOX 968, RICHLAND, WASHINGTON 99352 2. PLANT: WNP-2, HANFORD RESERVATION, BENTON COUNTY, WA.
3. PLANT UNIT: WNP-2 4. OWNER CERTIFICATE OF AUTHORIZATION: N/A
5. COMMERCIAL SERVICE DATE: 12/13/1984 6. NATIONAL BOARD NUMBER: N/A
10. ABSTRACT OF EXAMINATIONS. LIST OF EXAMINATIONS:

CODE CATEGORY	IDENTIFICATION NO.	DESCRIPTION	ITEM NO.	METHOD	DRAWING NO.
D-B	SW-350(W)	WELDED ATTACH	D2.20	VT-3	SW-304
	SW-351(W)	WELDED ATTACH	D2.20	VT-3	SW-304
	SW-PB-304(L)	LK PRES BNDRY	D2.10	VT-2	SW-304
	SW-196(W)	WELDED ATTACH	D2.20	VT-3	SW-305
	SW-118(W)	WELDED ATTACH	D2.40	VT-3	SW-305
	SW-25(W)	WELDED ATTACH	D2.20	VT-3	SW-305
	SW-24(W)	WELDED ATTACH	D2.20	VT-3	SW-305
	SW-23(W)	WELDED ATTACH	D2.40	VT-3	SW-305
	SW-PB-305(L)	LK PRES BNDRY	D2.10	VT-2	SW-305
	SW-PB-306(L)	LK PRES BNDRY	D2.10	VT-2	SW-306
	SW-91(W)	WELDED ATTACH	D2.20	VT-3	SW-307
	SW-92(W)	WELDED ATTACH	D2.20	VT-3	SW-307
	SW-6(W)	WELDED ATTACH	D2.20	VT-3	SW-307
	SW-7(W)	WELDED ATTACH	D2.20	VT-3	SW-307
	SW-930N(W)	WELDED ATTACH	D2.20	VT-3	SW-307
	SW-931N(W)	WELDED ATTACH	D2.20	VT-3	SW-307
	SW-932N(W)	WELDED ATTACH	D2.20	VT-3	SW-307
	SW-933N(W)	WELDED ATTACH	D2.20	VT-3	SW-307
	SW-934N(W)	WELDED ATTACH	D2.30	VT-3	SW-307
	SW-PB-307(L)	LK PRES BNDRY	D2.10	VT-2	SW-307
	SW-252(W)	WELDED ATTACH	D2.20	VT-3	SW-308
	SW-253(W)	WELDED ATTACH	D2.20	VT-3	SW-308
	SW-254(W)	WELDED ATTACH	D2.20	VT-3	SW-308
	SW-257(W)	WELDED ATTACH	D2.20	VT-3	SW-308
	SW-258(W)	WELDED ATTACH	D2.20	VT-3	SW-308
	SW-PB-308(L)	LK PRES BNDRY	D2.10	VT-2	SW-308
	SW-PB-309(L)	LK PRES BNDRY	D2.10	VT-2	SW-309
	SW-273(W)	WELDED ATTACH	D2.20	VT-3	SW-310
	SW-449(W)	WELDED ATTACH	D2.20	VT-3	SW-310
	SW-PB-310(L)	LK PRES BNDRY	D2.10	VT-2	SW-310
	SW-PB-311(L)	LK PRES BNDRY	D2.10	VT-2	SW-311
	SW-949N(W)	WELDED ATTACH	D2.20	VT-3	SW-315
	SW-985N(W)	WELDED ATTACH	D2.20	VT-3	SW-315

1. OWNER: WASHINGTON PUBLIC POWER SUPPLY SYSTEM, 3000 GEORGE WASHINGTON WAY, P.O. BOX 968, RICHLAND, WASHINGTON 99352 2. PLANT: WNP-2, HANFORD RESERVATION, BENTON COUNTY, WA.
3. PLANT UNIT: WNP-2 4. OWNER CERTIFICATE OF AUTHORIZATION: N/A
5. COMMERCIAL SERVICE DATE: 12/13/1984 6. NATIONAL BOARD NUMBER: N/A
10. ABSTRACT OF EXAMINATIONS. LIST OF EXAMINATIONS:

CODE CATEGORY	IDENTIFICATION NO.	DESCRIPTION	ITEM NO.	METHOD	DRAWING NO.
D-B	RCC-267(W)	WELDED ATTACH	D2.20	VT-3	RCC-301
	RCC-477(W)	WELDED ATTACH	D2.20	VT-3	RCC-301
	RCC-316(W)	WELDED ATTACH	D2.20	VT-3	RCC-302
	RCC-487(W)	WELDED ATTACH	D2.20	VT-3	RCC-302
D-C	FPC-62(W)	WELDED ATTACH	D3.20	VT-3	FPC-301
	FPC-PB-301(L)	LK PRES BNDRY	D3.10	VT-2	FPC-301
	FPC-PB-302(L)	LK PRES BNDRY	D3.10	VT-2	FPC-302
	FPC-PB-303(L)	LK PRES BNDRY	D3.10	VT-2	FPC-303
	FPC-PB-304(L)	LK PRES BNDRY	D3.10	VT-2	FPC-304
	FPC-163(W)	WELDED ATTACH	D3.20	VT-3	FPC-305
	FPC-PB-305(L)	LK PRES BNDRY	D3.10	VT-2	FPC-305
	FPC-47(W)	WELDED ATTACH	D3.20	VT-3	FPC-307
IWF	RCIC-1C-6	PSA-3 SN(2)	F-X	VT3H	RCIC-101
	RCIC-1C-4	PSA-1 SNUBBER	F-X	VT3H	RCIC-101
	RCIC-67	SPRING	F-X	VT3H	RCIC-101
	RCIC-54	SRING	F-X	VT3H	RCIC-205
	RCIC-973N	STRUT	F-X	VT3H	RCIC-205
	RCIC-14	BOX	F-X	VT3H	RCIC-205
	RCIC-15	BOX	F-X	VT3H	RCIC-205
	HPCS-904N	SPRING	F-X	VT3H	HPCS-101
	HPCS-66	SPRING	F-X	VT3H	HPCS-101
	HPCS-63	PSA-10 SN(2)	F-X	VT3H	HPCS-101
	HPCS-64	BOX HANGER	F-X	VT3H	HPCS-101
	HPCS-918N	PSA-10 SNUBBER	F-X	VT3H	HPCS-101
	LPCS-57	BOX	F-X	VT3H	LPCS-101
	LPCS-21	BOX	F-X	VT3H	LPCS-202
	RHR-524	SPRING	F-X	VT3H	RHR-103
	RHR-282	PSA-35 SNUBBER	F-X	VT3H	RHR-103
	RHR-287	PSA-35 SNUBBER	F-X	VT3H	RHR-103
	RRC-11	SPRING	F-X	VT3H	RHR-104
	RHR-SA-54	PSA-35 SNUBBER	F-X	VT3H	RHR-104

1. OWNER: WASHINGTON PUBLIC POWER SUPPLY SYSTEM, 3000 GEORGE WASHINGTON WAY, P.O. BOX 968, RICHLAND, WASHINGTON 99352 2. PLANT: WNP-2, HANFORD RESERVATION, BENTON COUNTY, WA.
3. PLANT UNIT: WNP-2 4. OWNER CERTIFICATE OF AUTHORIZATION: N/A
5. COMMERCIAL SERVICE DATE: 12/13/1984 6. NATIONAL BOARD NUMBER: N/A
10. ABSTRACT OF EXAMINATIONS. LIST OF EXAMINATIONS:

CODE CATEGORY	IDENTIFICATION NO.	DESCRIPTION	ITEM NO.	METHOD	DRAWING NO.
IWF	RHR-SB-40	STRUT	F-X	VT3H	RHR-106
	RHR-273	PSA-3 SNUBBER	F-X	VT3H	RHR-203
	RHR-265	SPRING	F-X	VT3H	RHR-203
	RHR-369	PSA-3 SNUBBER	F-X	VT3H	RHR-203
	RHR-406	PSA-3 SNUBBER	F-X	VT3H	RHR-203
	RHR-77	SPRING	F-X	VT3H	RHR-205
	RHR-71	ANCHOR	F-X	VT3H	RHR-205
	RHR-76	SPRING	F-X	VT3H	RHR-205
	RHR-69	STRUT	F-X	VT3H	RHR-205
	RHR-70	STRUT	F-X	VT3H	RHR-205
	RHR-67	PSA-3 SNUBBER	F-X	VT3H	RHR-205
	RHR-68	STRUT	F-X	VT3H	RHR-205
	RHR-923N	SPRING	F-X	VT3H	RHR-207
	RHR-943N	PSA-3 SNUBBER	F-X	VT3H	RHR-207
	RHR-944N	PSA-3 SNUBBER	F-X	VT3H	RHR-207
	RHR-918N	BOX	F-X	VT3H	RHR-207
	RHR-926N	SPRING	F-X	VT3H	RHR-207
	RHR-929N	SPRING	F-X	VT3H	RHR-207
	RHR-919N	BOX	F-X	VT3H	RHR-207
	RHR-910N	STRUT	F-X	VT3H	RHR-207
	RHR-500	PSA-10 SNUBBER	F-X	VT3H	RHR-207
	RHR-498	SPRING	F-X	VT3H	RHR-207
	RHR-501	SPRING	F-X	VT3H	RHR-207
	RHR-503	PSA-35 SNUBBER	F-X	VT3H	RHR-207
	RHR-502	PSA-35 SNUBBER	F-X	VT3H	RHR-207
	RHR-185	SPRING	F-X	VT3H	RHR-207
	MS-SC-10	PSA-35 SNUBBER	F-X	VT3H	MS-103
	MS-SC-9	PSA-35 SNUBBER	F-X	VT3H	MS-103
	MS-SC-3	PSA-35 SNUBBER	F-X	VT3H	MS-103
	MS-HC-3	SPRING (2)	F-X	VT3H	MS-103
	MS-HD-1	SPRING	F-X	VT3H	MS-104
	MS-SD-10	PSA-35 SNUBBER	F-X	VT3H	MS-104
	MS-SD-3	PSA-35 SNUBBER	F-X	VT3H	MS-104

1. OWNER: WASHINGTON PUBLIC POWER SUPPLY SYSTEM, 3000 GEORGE WASHINGTON WAY, P.O: BOX 968, RICHLAND, WASHINGTON 99352 2. PLANT: WNP-2, HANFORD RESERVATION, BENTON COUNTY, WA.
3. PLANT UNIT: WNP-2 4. OWNER CERTIFICATE OF AUTHORIZATION: N/A
5. COMMERCIAL SERVICE DATE: 12/13/1984 6. NATIONAL BOARD NUMBER: N/A
10. ABSTRACT OF EXAMINATIONS. LIST OF EXAMINATIONS:

CODE CATEGORY	IDENTIFICATION NO.	DESCRIPTION	ITEM NO.	METHOD	DRAWING NO.
IWF	MS-2619-11	PSA-1/4 SNUBBER	F-X	VT3H	MS-106
	MS-2619-12	PSA-1/4 SNUBBER	F-X	VT3H	MS-106
	MS-2619-14	PSA-1/2 SNUBBER	F-X	VT3H	MS-106
	MS-2619-311	PSA-1/2 SNUBBER	F-X	VT3H	MS-106
	MS-2619-313	PSA-1/2 SNUBBER	F-X	VT3H	MS-106
	MS-2619-314	PSA-1/4 SNUBBER	F-X	VT3H	MS-106
	MS-2619-315	SPRING	F-X	VT3H	MS-106
	MS-47	SPRING	F-X	VT3H	MS-203
	MS-44	SPRING	F-X	VT3H	MS-203
	MS-45	PSA-35 SNUBBER	F-X	VT3H	MS-203
	MS-1003N	PSA-10 SN(2)	F-X	VT3H	MS-203
	MS-42	SPRING (2)	F-X	VT3H	MS-203
	MS-1002N	PSA-10 SN(2)	F-X	VT3H	MS-203
	MS-40	STRUT	F-X	VT3H	MS-203
	MS-39	STRUT	F-X	VT3H	MS-203
	MS-74	SPRING	F-X	VT3H	MS-204
	MS-72	PSA-35 SNUBBER	F-X	VT3H	MS-204
	MS-71	SPRING	F-X	VT3H	MS-204
	MS-69	SPRING	F-X	VT3H	MS-204
	MS-908N	PSA-35 SN(2)	F-X	VT3H	MS-204
	MS-1007N	PSA-10 SN(2)	F-X	VT3H	MS-204
	MS-68	STRUT	F-X	VT3H	MS-204
	MS-66	SPRING (2)	F-X	VT3H	MS-204
	MS-1010N	PSA-10 SN(2)	F-X	VT3H	MS-204
	MS-65	STRUT	F-X	VT3H	MS-204
	RFW-146	PSA-10 SN(2)	F-X	VT3H	RFW-101
	RFW-156	SPRING	F-X	VT3H	RFW-101
	SW-174	BOX	F-X	VT3H	SW-301
	SW-57	RIGID	F-X	VT3H	SW-301
	SW-437	STRUT	F-X	VT3H	SW-301
	SW-913N	STRUT	F-X	VT3H	SW-301
	SW-58	BOX	F-X	VT3H	SW-301
	SW-318	STRUT	F-X	VT3H	SW-301

1. OWNER: WASHINGTON PUBLIC POWER SUPPLY SYSTEM, 3000 GEORGE WASHINGTON WAY, P.O. BOX 968, RICHLAND, WASHINGTON 99352 2. PLANT: WNP-2, HANFORD RESERVATION, BENTON COUNTY, WA.
3. PLANT UNIT: WNP-2 4. OWNER CERTIFICATE OF AUTHORIZATION: N/A
5. COMMERCIAL SERVICE DATE: 12/13/1984 6. NATIONAL BOARD NUMBER: N/A
10. ABSTRACT OF EXAMINATIONS. LIST OF EXAMINATIONS:

CODE CATEGORY	IDENTIFICATION NO.	DESCRIPTION	ITEM NO.	METHOD	DRAWING NO.
IWF	SW-64	BOX	F-X	VT3H	SW-301
	SW-231	BOX	F-X	VT3H	SW-302
	SW-232	BOX	F-X	VT3H	SW-302
	SW-233	BOX	F-X	VT3H	SW-302
	SW-234	BOX	F-X	VT3H	SW-302
	SW-235	BOX	F-X	VT3H	SW-302
	SW-236	BOX	F-X	VT3H	SW-302
	SW-140	BOX	F-X	VT3H	SW-303
	SW-139	STRUT	F-X	VT3H	SW-303
	SW-138	BOX	F-X	VT3H	SW-303
	SW-207	STRUT	F-X	VT3H	SW-303
	SW-433	BOX	F-X	VT3H	SW-303
	SW-352	BOX	F-X	VT3H	SW-304
	SW-348	BOX	F-X	VT3H	SW-304
	SW-349	BOX	F-X	VT3H	SW-304
	SW-350	BOX	F-X	VT3H	SW-304
	SW-351	BOX	F-X	VT3H	SW-304
	SW-196	STRUT	F-X	VT3H	SW-305
	SW-26	BOX	F-X	VT3H	SW-305
	SW-118	SPRING	F-X	VT3H	SW-305
	SW-25	RIGID	F-X	VT3H	SW-305
	SW-24	RIGID	F-X	VT3H	SW-305
	SW-23	SPRING	F-X	VT3H	SW-305
	SW-91	STRUT	F-X	VT3H	SW-307
	SW-92	RIGID	F-X	VT3H	SW-307
	SW-6	BOX	F-X	VT3H	SW-307
	SW-7	BOX	F-X	VT3H	SW-307
	SW-930N	BOX	F-X	VT3H	SW-307
	SW-931N	BOX	F-X	VT3H	SW-307
	SW-932N	BOX	F-X	VT3H	SW-307
	SW-252	BOX	F-X	VT3H	SW-308
	SW-253	BOX	F-X	VT3H	SW-308
	SW-254	BOX	F-X	VT3H	SW-308

1. OWNER: WASHINGTON PUBLIC POWER SUPPLY SYSTEM, 3000 GEORGE WASHINGTON WAY, P.O. BOX 968, RICHLAND, WASHINGTON 99352 2. PLANT: WNP-2, HANFORD RESERVATION, BENTON COUNTY, WA.
3. PLANT UNIT: WNP-2 4. OWNER CERTIFICATE OF AUTHORIZATION: N/A
5. COMMERCIAL SERVICE DATE: 12/13/1984 6. NATIONAL BOARD NUMBER: N/A
10. ABSTRACT OF EXAMINATIONS. LIST OF EXAMINATIONS:

CODE CATEGORY	IDENTIFICATION NO.	DESCRIPTION	ITEM NO.	METHOD	DRAWING NO.
IWF	SW-255	BOX	F-X	VT3H	SW-308
	SW-256	BOX	F-X	VT3H	SW-308
	SW-257	BOX	F-X	VT3H	SW-308
	SW-258	BOX	F-X	VT3H	SW-308
	SW-273	BOX	F-X	VT3H	SW-310
	SW-310	BOX	F-X	VT3H	SW-310
	SW-280	STRUT	F-X	VT3H	SW-310
	SW-449	RIGID	F-X	VT3H	SW-310
	SW-1022N	RIGID	F-X	VT3H	SW-313
	SW-948N	RIGID	F-X	VT3H	SW-315
	SW-949N	RIGID	F-X	VT3H	SW-315
	SW-950N	RIGID	F-X	VT3H	SW-315
	SW-985N	RIGID	F-X	VT3H	SW-315
	FPC-63	BOX	F-X	VT3H	FPC-301
	FPC-64	BOX	F-X	VT3H	FPC-301
	FPC-44	ANCHOR	F-X	VT3H	FPC-301
	FPC-42	STRUT	F-X	VT3H	FPC-301
	FPC-43	PSA-3 SNUBBER	F-X	VT3H	FPC-301
	FPC-201	RIGID	F-X	VT3H	FPC-305
	FPC-162	BOX	F-X	VT3H	FPC-305
	FPC-160	RIGID	F-X	VT3H	FPC-305
	FPC-161	BOX	F-X	VT3H	FPC-305
	FPC-913N	BOX	F-X	VT3H	FPC-305
	RCC-267	SPRING	F-X	VT3H	RCC-301
	RCC-913N	STRUT	F-X	VT3H	RCC-301
	RCC-439	STRUT	F-X	VT3H	RCC-301
	RCC-477	STRUT	F-X	VT3H	RCC-301
	RCC-315	SPRING	F-X	VT3H	RCC-302
	RCC-316	ANCHOR	F-X	VT3H	RCC-302
	RCC-325	SPRING	F-X	VT3H	RCC-302
	RCC-487	STRUT	F-X	VT3H	RCC-302
	MS-280	SPRING	F-X	VT3H	MS-305
	MSRV-1B-2	PSA-10 SNUBBER	F-X	VT3H	MS-305

1. OWNER: WASHINGTON PUBLIC POWER SUPPLY SYSTEM, 3000 GEORGE WASHINGTON WAY, P.O. BOX 968, RICHLAND, WASHINGTON 99352 2. PLANT: WNP-2, HANFORD RESERVATION, BENTON COUNTY, WA.
3. PLANT UNIT: WNP-2 4. OWNER CERTIFICATE OF AUTHORIZATION: N/A
5. COMMERCIAL SERVICE DATE: 12/13/1984 6. NATIONAL BOARD NUMBER: N/A
10. ABSTRACT OF EXAMINATIONS. LIST OF EXAMINATIONS:

CODE CATEGORY	IDENTIFICATION NO.	DESCRIPTION	ITEM NO.	METHOD	DRAWING NO.
IWF	MSRV-1B-3	PSA-10 SNUBBER	F-X	VT3H	MS-305
	MSRV-1B-1	PSA-10 SNUBBER	F-X	VT3H	MS-305
	MS-281	SPRING	F-X	VT3H	MS-305
	MSRV-1B-5	PSA-10 SNUBBER	F-X	VT3H	MS-305
	MSRV-1B-4	PSA-10 SNUBBER	F-X	VT3H	MS-305
	MS-282	SPRING	F-X	VT3H	MS-305
	MS-334	SPRING	F-X	VT3H	MS-305
	MSRV-1B-6PS	RIGID	F-X	VT3H	MS-305
	MSRV-5B-2	PSA-35 SNUBBER	F-X	VT3H	MS-309
	MSRV-5B-1	PSA-3 SN(2)	F-X	VT3H	MS-309
	MS-328	SPRING	F-X	VT3H	MS-309
	MSRV-5B-3	PSA-10 SNUBBER	F-X	VT3H	MS-309
	MSRV-5B-5	PSA-10 SNUBBER	F-X	VT3H	MS-309
	MSRV-5B-4	PSA-10 SNUBBER	F-X	VT3H	MS-309
	MS-329	SPRING	F-X	VT3H	MS-309
	MSRV-5B-6	PSA-10 SNUBBER	F-X	VT3H	MS-309
	MSRV-5B-7	PSA-10 SNUBBER	F-X	VT3H	MS-309
	MSRV-5B-8	PSA-10 SNUBBER	F-X	VT3H	MS-309
	MS-330	SPRING	F-X	VT3H	MS-309
	MSRV-5B-9	PSA-10 SNUBBER	F-X	VT3H	MS-309
	MS-345	SPRING	F-X	VT3H	MS-309
	MSRV-5B-10PS	RIGID	F-X	VT3H	MS-309
	MS-304	SPRING	F-X	VT3H	MS-313
	MSRV-4C-2	PSA-10 SNUBBER	F-X	VT3H	MS-313
	MSRV-4C-3	PSA-10 SNUBBER	F-X	VT3H	MS-313
	MSRV-4C-1	PSA-10 SNUBBER	F-X	VT3H	MS-313
	MS-305	SPRING	F-X	VT3H	MS-313
	MSRV-4C-5	PSA-10 SNUBBER	F-X	VT3H	MS-313
	MSRV-4C-6	PSA-10 SNUBBER	F-X	VT3H	MS-313
	MSRV-4C-8	PSA-35 SNUBBER	F-X	VT3H	MS-313
	MSRV-4C-7	PSA-10 SNUBBER	F-X	VT3H	MS-313
	MS-306	SPRING	F-X	VT3H	MS-313
	MS-307	SPRING	F-X	VT3H	MS-313

1. OWNER: WASHINGTON PUBLIC POWER SUPPLY SYSTEM, 3000 GEORGE WASHINGTON WAY, P.O. BOX 968, RICHLAND, WASHINGTON 99352 2. PLANT: WNP-2, HANFORD RESERVATION, BENTON COUNTY, WA.
3. PLANT UNIT: WNP-2 4. OWNER CERTIFICATE OF AUTHORIZATION: N/A
5. COMMERCIAL SERVICE DATE: 12/13/1984 6. NATIONAL BOARD NUMBER: N/A
10. ABSTRACT OF EXAMINATIONS. LIST OF EXAMINATIONS:

CODE CATEGORY	IDENTIFICATION NO.	DESCRIPTION	ITEM NO.	METHOD	DRAWING NO.
IWF	MS-339	SPRING	F-X	VT3H	MS-313
	MSRV-4C-9	PSA-3 SN(2)	F-X	VT3H	MS-313
	SLC-4453-13	RIGID	F-X	VT3H	SLC-101
	SLC-4453-14	RIGID	F-X	VT3H	SLC-101
	SLC-4453-21	RIGID	F-X	VT3H	SLC-101
	SLC-4453-22	RIGID	F-X	VT3H	SLC-101
	SLC-4453-23	RIGID	F-X	VT3H	SLC-101
	SLC-4475-113	PSA-1/2 SNUBBER	F-X	VT3H	SLC-101

APPENDIX B

NDE Examination Summary

Note: Outage RF88A is identified as "R3" in this summary.

Note 1: This weld did not receive full coverage from both sides. It did receive full coverage from one side and meets code requirements.

WNP-0[illegible]
INTER[illegible] 01
PERIOD: 1
OUTAGE: R3
DRAWING NO. RPV-101

WASHINGTON PUBL[illegible] POWER SUPPLY SYSTEM
NON-DESTRUCTIVE E[illegible]NATION SUMMARY TABLE
SYSTEM OR COMPONENT RPV
DESCRIPTION: NOZZLES - SHELL

DATE 08/11/88

IDENT. NO.	EXAM. MTH.	EXAM. DATA SHEET NO.	EXAMINATION RESULTS NO INDIC.	INSIGNIF INDIC.	SIGNIFICANT GEOMETRY	SIGNIFICANT OTHER	REMARKS
N4-150-IR							
	VOL	1RPU-040	70,25				NO RECORDABLE INDICATIONS. LESS THAN 250mR TOTAL DOSE FOR FOUR EXAMINERS.
N4-150-NB							
	VOL	1RPU-040	25				NO RECORDABLE INDICATIONS. SEE 1RPU-040 FOR OTHER NOTES.

WNP-02
INTERVAL: C1
PERIOD: 1
OUTAGE: R3
DRAWING NO. RPV-101

WASHINGTON PUBLIC POWER SUPPLY SYSTEM
NON-DESTRUCTIVE EXAMINATION SUMMARY TABLE
SYSTEM OR COMPONENT RPV
DESCRIPTION: RPV STUDS, NUTS, ETC

DATE 08/11/88

IDENT.NO.	EXAM. MTH.	EXAM. DATA SHEET NO.	EXAMINATION RESULTS NO INDIC.	INSIGNIF INDIC.	SIGNIFICANT GEOMETRY	SIGNIFICANT OTHER	REMARKS
RPV STUD 35-1-1A							
	VOL	1RPU-035	0				NON RECORDABLE 15% DAC INDICATION ON SURFACE 1; 90-180 CW FROM THE STAMPED STUD NO. METAL PATH IS APPROX. 4 IN.
	SUR	1RPM-025	ACC				NO RECORDABLE INDICATIONS
RPV STUD 35-1-9A							
	VOL	1RPU-035	0				NO RECORDABLE INDICATIONS
	SUR	1RPM-025	ACC				NO RECORDABLE INDICATIONS
RPV STUD 35-1-16A							
	VOL	1RPU-035	0				NO RECORDABLE INDICATIONS
	SUR	1RPM-025	ACC				NO RECORDABLE INDICATIONS
RPV STUD 35-1-23A							
	VOL	1RPU-035	0				NO RECORDABLE INDICATIONS
	SUR	1RPM-025	ACC				NO RECORDABLE INDICATIONS
RPV STUD 35-1-30A							
	VOL	1RPU-035	0				NO RECORDABLE INDICATIONS
	SUR	1RPM-025	ACC				NO RECORDABLE INDICATIONS
RPV STUD 35-1-37A							
	VOL	1RPU-035	0				NO RECORDABLE INDICATIONS
	SUR	1RPM-025	ACC				NO RECORDABLE INDICATIONS
RPV STUD 35-1-44A							
	VOL	1RPU-035	0				NO RECORDABLE INDICATIONS

WN[illegible]
IN[illegible]AL: 01
PERIOD: 1
OUTAGE: P3
DRAWING NO. RPV-101

WASHINGTON PUBL[illegible] POWER SUPPLY SYSTEM
NON-DESTRUCTIVE E[illegible]NATION SUMMARY TABLE
SYSTEM OR COMPONENT RPV
DESCRIPTION: RPV STUDS, NUTS, ETC

DATE 08/11/88

IDENT.NO.	EXAM. MTH.	EXAM. DATA SHEET NO.	EXAMINATION RESULTS NO INDIC.	INSIGNIF INDIC.	SIGNIFICANT GEOMETRY	SIGNIFICANT OTHER	REMARKS
RPV STUD 35-1-50A	SUR	1RPM-025	ACC				NO RECORDABLE INDICATIONS
	VOL	1RPU-035	0				NO RECORDABLE INDICATIONS
RPV STUD 35-1-58A	SUR	1RPM-025	ACC				NO RECORDABLE INDICATIONS
	VOL	1RPU-035	0				NO RECORDABLE INDICATIONS
RPV STUD 35-1-65A	SUR	1RPM-024	ACC				NO RECORDABLE INDICATIONS
	VOL	1RPU-035	0				NO RECORDABLE INDICATIONS
RPV STUD 35-1-72A	SUR	1RPM-024	ACC				NO RECORDABLE INDICATIONS
	VOL	1RPU-035	0				NO RECORDABLE INDICATIONS
RPV NUT 36-1-1A	SUR	1RPM-024	ACC				NO RECORDABLE INDICATIONS
	VOL	1RPU-034	0,45,37				NO RECORDABLE INDICATIONS
RPV NUT 36-1-9A	SUR	1RPM-026	ACC				NO RECORDABLE INDICATIONS
	VOL	1RPU-034	0,45,37				NO RECORDABLE INDICATIONS
RPV NUT 36-1-16A	SUR	1RPM-026	ACC				NO RECORDABLE INDICATIONS
	VOL	1RPU-034	0,45,37				NO RECORDABLE INDICATIONS
	SUR	1RPM-026	ACC				NO RECORDABLE INDICATIONS

WNP-02
INTERVAL: 01
PERIOD: 1
OUTAGE: R3
DRAWING NO. RPV-101

WASHINGTON PUBLIC POWER SUPPLY SYSTEM
NON-DESTRUCTIVE EXAMINATION SUMMARY TABLE
SYSTEM OR COMPONENT RPV
DESCRIPTION: RPV STUDS, NUTS, ETC

DATE 08/11/88

IDENT. NO.	EXAM. MTH.	EXAM. DATA SHEET NO.	EXAMINATION RESULTS NO INDIC.	INSIGNIF INDIC.	SIGNIFICANT GEOMETRY	SIGNIFICANT OTHER	REMARKS
RPV NUT 36-1-23A							
	VOL	1RPU-034	0,45,37				NO RECORDABLE INDICATIONS
	SUR	1RPM-026	ACC				NO RECORDABLE INDICATIONS
RPV NUT 36-1-30A							
	VOL	1RPU-034	0,45,37				NO RECORDABLE INDICATIONS
	SUR	1RPM-026	ACC				NO RECORDABLE INDICATIONS
RPV NUT 36-1-37A							
	VOL	1RPU-034	0,45,37				NO RECORDABLE INDICATIONS
	SUR	1RPM-026	ACC				NO RECORDABLE INDICATIONS
RPV NUT 36-1-44A							
	VOL	1RPU-034	0,45,37				NO RECORDABLE INDICATIONS
	SUR	1RPM-026	ACC				NO RECORDABLE INDICATIONS
RPV NUT 36-1-50A							
	VOL	1RPU-034	0,45,37				NO RECORDABLE INDICATIONS
	SUR	1RPM-026	ACC				NO RECORDABLE INDICATIONS
RPV NUT 36-1-58A							
	VOL	1RPU-034	0,37,45				NO RECORDABLE INDICATIONS
	SUR	1RPM-026	ACC				NO RECORDABLE INDICATIONS
RPV NUT 36-1-65A							
	VOL	1RPU-034	0,45,37				NO RECORDABLE INDICATIONS
	SUR	1RPM-026	ACC				NO RECORDABLE INDICATIONS
RPV NUT 36-1-72A							
	VOL	1RPU-034	0,45,37				NO RECORDABLE INDICATIONS

WNP-2
INTERVAL: C1
PERIOD: 1
OUTAGE: R3
DRAWING NO. RPV-101

WASHINGTON PUBLIC POWER SUPPLY SYSTEM
NON-DESTRUCTIVE EXAMINATION SUMMARY TABLE
SYSTEM OR COMPONENT RPV
DESCRIPTION: RPV STUDS, NUTS, ETC

DATE 08/11/88

IDENT.NO.	EXAM. MTH.	EXAM. DATA SHEET NO.	EXAMINATION RESULTS NO INDIC.	INSIGNIF INDIC.	SIGNIFICANT GEOMETRY	SIGNIFICANT OTHER	REMARKS
RPV WASHERS	SUR	1RPM-026	ACC				NO RECORDABLE INDICATIONS
	VT-1	1RPV-026	ACC				THE FOLLOWING WASHERS WERE EXAMINED: 1A, 9A, 16A, 23A, 30A, 37A, 44A, 50A, 58A, 65A, 72A NO RECORDABLE INDICATIONS
RPV-PB-101(L)	VT-2	1VT2-88	ACC				NO RECORDABLE INDICATIONS

WN
IN AL: 01
PERIOD: 01
OUTAGE: R3
DRAWING NO. RPV-102

WASHINGTON PUBL OWER SUPPLY SYSTEM
NON-DESTRUCTIVE E NATION SUMMARY TABLE
SYSTEM OR COMPONENT RPV
DESCRIPTION: TOP & BOTTOM HEAD

DATE 08/11/88

IDENT.NO.	EXAM. MTH.	EXAM. DATA SHEET NO.	EXAMINATION RESULTS NO INDIC.	INSIGNIF INDIC.	SIGNIFICANT GEOMETRY	SIGNIFICANT OTHER	REMARKS
AH	VOL	1RPU-036	0				NO RECORDABLE INDICATIONS
		1RPU-037	60				NO RECORDABLE INDICATIONS
		1RPU-038		45			7 INDICATIONS BETWEEN 20 AND 30% DAC. ID GEOMETRY.
		1RPU-039	45				NO RECORDABLE INDICATIONS

WNP-02
INTERVAL: 01
PERIOD: 1
OUTAGE: R3
DRAWING NO. RPV-102

WASHINGTON PUBLIC POWER SUPPLY SYSTEM
NON-DESTRUCTIVE EXAMINATION SUMMARY TABLE
SYSTEM OR COMPONENT RPV
DESCRIPTION: TOP & BTM HD NOZZLES

DATE 08/11/88

IDENT. NO.	EXAM. MTH.	EXAM. DATA SHEET NO.	EXAMINATION RESULTS NO INDIC.	INSIGNIF INDIC.	SIGNIFICANT GEOMETRY	SIGNIFICANT OTHER	REMARKS
CRD HOUSING BLT							
	VT-1	SEE RMKS	ACC				COVERS REPORTS 1RPV-021, 1RPV-022, 1RPV-023, 1RPV-024 AND 1RPV-025. NO RECORDABLE INDICATIONS
RPV-PB-102(L)							
	VT-2	1VT2-88		ACC			TWO CRD FLANGE CONNECTION FOUND TO LEAK AT 03 DROPS PER MIN. EVALUATED BY TECHNICAL STAFF AND FOUND TO BE ACCEPTABLE.

WN
INTERVAL: 01
PERIOD: 1
OUTAGE: R3
DRAWING NO. RCIC-101

WASHINGTON PUBLIC POWER SUPPLY SYSTEM
NON-DESTRUCTIVE EXAMINATION SUMMARY TABLE
SYSTEM OR COMPONENT RCIC(13)-4
DESCRIPTION: RCIC STEAM SUPPLY

DATE 08/11/88

IDENT.NO.	EXAM. MTH.	EXAM. DATA SHEET NO.	EXAMINATION RESULTS NO INDIC.	INSIGNIF INDIC.	SIGNIFICANT GEOMETRY	SIGNIFICANT OTHER	REMARKS
4RCIC(13)-1	VOL	1RIU-023	44.5				NO RECORDABLE INDICATIONS
4RCIC(13)-2	VOL	1RIU-024	44.5				NO RECORDABLE INDICATIONS
4RCIC(13)-3	VOL	1RIU-025	44.5				NO RECORDABLE INDICATIONS
RCIC-1C-6(H)	SUR	1RIM-021		ACC			LUG #4 DOWNSTREAM END .25 IN LINEAR
RCIC-1C-6	VT3H	1HV-0074	ACC				NO RECORDABLE INDICATIONS
RCIC-1C-4	VT3H	1HV-0074	ACC				NO RECORDABLE INDICATIONS
RCIC-67	VT3H	1HV-0074	ACC				NO RECORDABLE INDICATIONS
RCIC-PB-101(L)	VT-2	1VT2-88	ACC				NO RECORDABLE INDICATIONS

WNP-02
INTERVAL: 01
PERIOD: 01
OUTAGE: R3
DRAWING NO. RCIC-102

WASHINGTON PUBLIC POWER SUPPLY SYSTEM
NON-DESTRUCTIVE EXAMINATION SUMMARY TABLE
SYSTEM OR COMPONENT RCIC(1)-4
DESCRIPTION: RPV HEAD SPRAY

DATE 08/11/88

IDENT..NO.	EXAM. MTH.	EXAM. DATA SHEET NO.	EXAMINATION RESULTS NO INDIC.	INSIGNIF INDIC.	SIGNIFICANT GEOMETRY	SIGNIFICANT OTHER	REMARKS
RCIC-PB-102(L)	VT-2	1VT2-88	ACC				NO RECORDABLE INDICATIONS

WN
INTERVAL: 01
PERIOD: P1
OUTAGE: R3
DRAWING NO. RCIC-201

WASHINGTON PUBLIC POWER SUPPLY SYSTEM
NON-DESTRUCTIVE EXAMINATION SUMMARY TABLE
SYSTEM OR COMPONENT RCIC(13)-4
DESCRIPTION: RCIC STEAM SUPPLY

DATE 08/11/88

IDENT. NO.	EXAM. MTH.	EXAM. DATA SHEET NO.	EXAMINATION RESULTS NO INDIC.	INSIGNIF INDIC.	SIGNIFICANT GEOMETRY	SIGNIFICANT OTHER	REMARKS
RCIC-PB-201(L)							
	VT-2	1RIV-003	ACC				NO RECORDABLE INDICATIONS

WNP-02
INTERVAL: 01
PERIOD: 01
OUTAGE: R3
DRAWING NO. RCIC-202

WASHINGTON PUBLIC POWER SUPPLY SYSTEM
NON-DESTRUCTIVE EXAMINATION SUMMARY TABLE
SYSTEM OR COMPONENT RCIC(12)-4
DESCRIPTION: COND MODE STM SUPPLY

DATE 08/11/88

IDENT.NO.	EXAM. MTH.	EXAM. DATA SHEET NO.	EXAMINATION RESULTS NO INDIC.	INSIGNIF INDIC.	SIGNIFICANT GEOMETRY	SIGNIFICANT OTHER	REMARKS
RCIC-PB-202(L)							
	VT-2	1RIV-003	ACC				NO RECORDABLE INDICATIONS

WNP[illegible]
IN[illegible]AL: 01
PER[illegible]D: 01
OUTAGE: R3
DRAWING NO. RCIC-203

WASHINGTON PUBL[illegible]OWER SUPPLY SYSTEM
NON-DESTRUCTIVE E[illegible]NATION SUMMARY TABLE
SYSTEM OR COMPO[illegible]NT RCIC(16)-1
DESCRIPTION: RCIC TURBINE EXHAUST

DATE 08/11/88

IDENT.NO.	EXAM. MTH.	EXAM. DATA SHEET NO.	EXAMINATION RESULTS NO INDIC.	INSIGNIF INDIC.	SIGNIFICANT GEOMETRY	SIGNIFICANT OTHER	REMARKS
RCIC-2							
	VT3H	1HV-6083	ACC				NO RECORDABLE INDICATIONS PSI OF REPLACEMENT STRUT. SNUBBER REPLACED BY STRUT XI 2-0418
RCIC-5							
	VT3H	1HV-0082	ACC				NO RECORDABLE INDICATIONS. PSI OF REPLACEMENT STRUT. SNUBBER REPLACED BY STRUT XI 2-0418
RCIC-PB-203(L)							
	VT-2	1RIV-003	ACC				NO RECORDABLE INDICATIONS

WNP-02
INTERVAL: 01
PERIOD: 1
OUTAGE: R3
DRAWING NO. RCIC-204

WASHINGTON PUBLIC POWER SUPPLY SYSTEM
NON-DESTRUCTIVE EXAMINATION SUMMARY TABLE
SYSTEM OR COMPONENT RCIC(10)-1
DESCRIPTION: PUMP SUCTION LINES

DATE 08/11/88

IDENT. NO.	EXAM. MTH.	EXAM. DATA SHEET NO.	EXAMINATION RESULTS NO INDIC.	INSIGNIF INDIC.	SIGNIFICANT GEOMEIRY	SIGNIFICANT OTHER	REMARKS
RCIC-967N							
	VT3H	1HV-0106	ACC				NO RECORDABLE INDICATIONS PSI OF REPLACEMENT STRUT. SNUBBER REPLACED WITH STRUT XI 2-0418-1
RCIC-PB-204(L)							
	VT-2	1RIV-003	ACC				NO RECORDABLE INDICATIONS

W[illegible]2
I[illegible]AL: 01
PER[illegible]OD: 1
OUTAGE: R3
DRAWING NO. RCIC-205

WASHINGTON PUB[illegible]OWER SUPPLY SYSTEM
NON-DESTRUCTIVE [illegible]NATION SUMMARY TABLE
SYSTEM OR COMPONENT RCIC(6)-4
DESCRIPTION: RCIC PUMP DISCHARGE

DATE 08/11/88

IDENT.NO.	EXAM. MTH.	EXAM. DATA SHEET NO.	EXAMINATION RESULTS NO INDIC.	INSIGNIF INDIC.	SIGNIFICANT GEOMETRY	SIGNIFICANT OTHER	REMARKS
RCIC-54	VT3H	1HV-0074	ACC				NO RECORDABLE INDICATIONS
RCIC-973N	VT3H	1HV-0074	ACC				NO RECORDABLE INDICATIONS
RCIC-14	VT3H	1HV-0074	ACC				NO RECORDABLE INDICATIONS
RCIC-15	VT3H	1HV-0074	ACC				
RCIC-PB-205(L)	VT-2	1RIV-003	ACC				NO RECORDABLE INDICATIONS

L[illegible]02
[illegible]VAL: 1
PERIOD: 1
OUTAGE: R3
DRAWING NO. HPCS-101

WASHINGTON PU[illegible] POWER SUPPLY SYSTEM
NON-DESTRUCTIVE [illegible]INATION SUMMARY TABLE
SYSTEM OR COMPONENT HPCS(1)-4
DESCRIPTION: HIGH PRES CORE SPRAY

DATE 08/11/88

IDENT..NO.	EXAM. MTH.	EXAM. DATA SHEET NO.	EXAMINATION RESULTS NO INDIC.	INSIGNIF INDIC.	SIGNIFICANT GEOMETRY	SIGNIFICANT OTHER	REMARKS
HPCS-V-4-BDY							
	VT-3	1HPV-001	ACC				NO RECORDABLE INDICATIONS
HPCS-904N							
	VT3H	1HV-0074	ACC				NO RECORDABLE INDICATIONS
HPCS-66							
	VT3H	1HV-0074	ACC				NO RECORDABLE INDICATIONS
HPCS-63(W)							
	SUR	1HPM-002	ACC				NO RECORDABLE INDICATIONS
HPCS-63							
	VT3H	1HV-0074	ACC				NO RECORDABLE INDICATIONS
HPCS-64							
	VT3H	1HV-0074	ACC				NO RECORDABLE INDICATIONS
12HPCS(1)-16							
	VOL	1HPU-008	45				NO RECORDABLE INDICATIONS
	SUR	1HPP-006	ACC				NO RECORDABLE INDICATIONS
12HPCS(1)-16/4HPCS(11)-4							
	SUR	1HPP-006	ACC				NO RECORDABLE INDICATIONS
HPCS-918N							
	VT3H	1HV-0074	ACC				NO RECORDABLE INDICATIONS
12HPCS(1)-17							
	VOL	1HPU-009	45				NO RECORDABLE INDICATIONS
	SUR	1HPP-006	ACC				NO RECORDABLE INDICATIONS
12HPCS(1)-18							
	VOL	1HPU-010	45				NO SCAN A DUE TO VALVE. NO RECORDABLE INDICATIONS.
	SUR	1HPP-006	ACC				NO RECORDABLE INDICATIONS

WNP-C2
INTERVAL: 01
PERIOD: 01
OUTAGE: R3
DRAWING NO. HPCS-101

WASHINGTON PUBLIC POWER SUPPLY SYSTEM
NON-DESTRUCTIVE EXAMINATION SUMMARY TABLE
SYSTEM OR COMPONENT HPCS(1)-4
DESCRIPTION: HIGH PRES CORE SPRAY

DATE 08/11/88

IDENT. NO.	EXAM. MTH.	EXAM. DATA SHEET NO.	EXAMINATION RESULTS NO INDIC.	INSIGNIF INDIC.	SIGNIFICANT GEOMETRY	SIGNIFICANT OTHER	REMARKS
HPCS-PB-101(L)	VT-2	1VT2-88	ACC				HPCS-V-22 CAP ON CONNECTION LEAKS 8 DROPS PER MIN. CAP TIGHTENED REEXAM NO LEAKS.

-02
INTERVAL: 1
PERIOD: P1
OUTAGE: R3
DRAWING NO. HPCS-201

WASHINGTON PUB[illegible]OWER SUPPLY SYSTEM
NON-DESTRUCTIVE EXAMINATION SUMMARY TABLE
SYSTEM OR COMPONENT HPCS(2)-1
DESCRIPTION: HPCS-P-1 SUCTION

DATE 08/11/88

IDENT.NO.	EXAM. MTH.	EXAM. DATA SHEET NO.	EXAMINATION RESULTS NO INDIC.	INSIGNIF INDIC.	SIGNIFICANT GEOMETRY	SIGNIFICANT OTHER	REMARKS
HPCS-PB-2C1(L)	VT-2	1HPV-002	ACC				NO RECORDABLE INDICATIONS

WNP-02
INTERVAL: 01
PERIOD: 01
OUTAGE: R3
DRAWING NO. HPCS-202

WASHINGTON PUBLIC POWER SUPPLY SYSTEM
NON-DESTRUCTIVE EXAMINATION SUMMARY TABLE
SYSTEM OR COMPONENT HPCS(1)-4
DESCRIPTION: HPCS-P-1 DISCHARGE

DATE 08/11/88

IDENT. NO.	EXAM. MTH.	EXAM. DATA SHEET NO.	EXAMINATION RESULTS NO INDIC.	INSIGNIF INDIC.	SIGNIFICANT GEOMETRY	SIGNIFICANT OTHER	REMARKS
HPCS-PB-202(L)							
	VT-2	1HPV-002	ACC				NO RECORDABLE INDICATIONS

WASHINGTON PUB[illegible] POWER SUPPLY SYSTEM
NON-DESTRUCTIVE EXAMINATION SUMMARY TABLE
SYSTEM OR COMPONENT LPCS(1)-4
DESCRIPTION: LOW PRES CORE SPRAY

[illegible]02
INTERVAL: [illegible]1
PERIOD: 1
OUTAGE: R3
DRAWING NO. LPCS-101

IDENT..NO.	EXAM. MTH.	EXAM. DATA SHEET NO.	EXAMINATION RESULTS NO INDIC.	INSIGNIF INDIC.	SIGNIFICANT GEOMETRY	SIGNIFICANT OTHER	REMARKS
LPCS-57(W)	SUR	1LPM-002	ACC				NO RECORDABLE INDICATIONS
LPCS-57	VT3H	1HV-0074	ACC				NO RECORDABLE INDICATIONS
LPCS-PB-101(L)	VT-2	1VT2-88	ACC				NO RECORDABLE INDICATIONS.

WNP-02
INTERVAL: 01
PERIOD: 01
OUTAGE: R3
DRAWING NO. LPCS-201

WASHINGTON PUBLIC POWER SUPPLY SYSTEM
NON-DESTRUCTIVE EXAMINATION SUMMARY TABLE
SYSTEM OR COMPONENT LPCS(2)-1
DESCRIPTION: LPCS-P-1 SUCTION

DATE 08/11/88

IDENT.NO.	EXAM. MTH.	EXAM. DATA SHEET NO.	EXAMINATION RESULTS NO INDIC.	INSIGNIF INDIC.	SIGNIFICANT GEOMETRY	SIGNIFICANT OTHER	REMARKS
LPCS-PB-201(L)	VT-2	1LPV-002	ACC				NO RECORDABLE INDICATIONS

-02
TERVAL: 01
PERIOD: 1
OUTAGE: R3
DRAWING NO. LPCS-202

WASHINGTON PU POWER SUPPLY SYSTEM
NON-DESTRUCTIVE MINATION SUMMARY TABLE
SYSTEM OR COMPONENT LPCS(1)-2
DESCRIPTION: LPCS-P-1 DISCHARGE

DATE 08/11/88

IDENT.NO.	EXAM. MTH.	EXAM. DATA SHEET NO.	EXAMINATION RESULTS NO INDIC.	INSIGNIF INDIC.	SIGNIFICANT GEOMETRY	SIGNIFICANT OTHER	REMARKS
LPCS-21							
	VT3H	1HV-0074	ACC				NO RECORDABLE INDICATIONS
LPCS-PB-202(L)							
	VT-2	1LPV-062	ACC				NO RECORDABLE INDICATIONS

WNP-02
INTERVAL: 01
PERIOD: 01
OUTAGE: R3
DRAWING NO. RHR-101

WASHINGTON PUBLIC POWER SUPPLY SYSTEM
NON-DESTRUCTIVE EXAMINATION SUMMARY TABLE
SYSTEM OR COMPONENT RHR(1)-4
DESCRIPTION: RHR/LPCI LOOP "A"

DATE 08/11/88

IDENT.NO.	EXAM. MTH.	EXAM. DATA SHEET NO.	EXAMINATION RESULTS NO INDIC.	INSIGNIF INDIC.	SIGNIFICANT GEOMETRY	SIGNIFICANT OTHER	REMARKS
RHR-PB-101(L)	VT-2	1VT2-88	ACC				NO RECORDABLE INDICATIONS

:2
INTERVAL: :1
PERIOD: 1
OUTAGE: R3
DRAWING NO. RHR-102

WASHINGTON PUB[illegible] POWER SUPPLY SYSTEM
NON-DESTRUCTIVE EXAMINATION SUMMARY TABLE
SYSTEM OR COMPONENT RHR(1)-4
DESCRIPTION: RHR/LPCI LOOP "B"

DATE 18/11/88

IDENT.NO.	EXAM. MTH.	EXAM. DATA SHEET NO.	EXAMINATION RESULTS NO INDIC.	INSIGNIF INDIC.	SIGNIFICANT GEOMETRY	SIGNIFICANT OTHER	REMARKS
RHR-V-42B-BLT							
	VT-1	1RHV-013	ACC				NO RECORDABLE INDICATIONS
RHR-PB-102(L)							
	VT-2	1VT2-88	ACC				NO RECORDABLE INDICATIONS

WNP-02
INTERVAL: 01
PERIOD: 1
OUTAGE: R3
DRAWING NO. RHR-103

WASHINGTON PUBLIC POWER SUPPLY SYSTEM
NON-DESTRUCTIVE EXAMINATION SUMMARY TABLE
SYSTEM OR COMPONENT RHR(1)-4
DESCRIPTION: RHR SHUTDN COOL SUCT

DATE 08/11/88

IDENT.NO.	EXAM. MTH.	EXAM. DATA SHEET NO.	EXAMINATION RESULTS NO INDIC.	INSIGNIF INDIC.	SIGNIFICANT GEOMETRY	SIGNIFICANT OTHER	REMARKS
RHR-524	VT3H	1HV-0074	ACC				NO RECORDABLE INDICATIONS
RHR-524(W)	SUR	1RHM-018	ACC				NO RECORDABLE INDICATIONS
RHR-282	VT3H	1HV-0074	ACC				NO RECORDABLE INDICATIONS
RHR-287	VT3H	1HV-0074	ACC				NO RECORDABLE INDICATIONS
RHR-PB-103(L)	VT-2	1VT2-88	ACC				NO RECORDABLE INDICATIONS

U2
INTERVAL: P1
PERIOD: 1
OUTAGE: R3
DRAWING NO. RHR-104

WASHINGTON PUB[illegible] POWER SUPPLY SYSTEM
NON-DESTRUCTIVE EXAMINATION SUMMARY TABLE
SYSTEM OR COMPONENT RHR(2)-4
DESCRIPTION: RHR SHUTDN COOL SUCT

DATE 08/11/88

IDENT..NO.	EXAM. MTH.	EXAM. DATA SHEET NO.	EXAMINATION RESULTS NO INDIC.	INSIGNIF INDIC.	SIGNIFICANT GEOMETRY	SIGNIFICANT OTHER	REMARKS
RRC-11							
	VT3H	1HV-0074	ACC				NO RECORDABLE INDICATIONS
RHR-SA-54							
	VT3H	1HV-0074	ACC				NO RECORDABLE INDICATIONS
RHR-PB-104(L)							
	VT-2	1VT2-88	ACC				NO RECORDABLE INDICATIONS

WNP-02
INTERVAL: 01
PERIOD: 01
OUTAGE: R3
DRAWING NO. RHR-105

WASHINGTON PUBLIC POWER SUPPLY SYSTEM
NON-DESTRUCTIVE EXAMINATION SUMMARY TABLE
SYSTEM OR COMPONENT RHR(1)-4S
DESCRIPTION: SHUTDN COOL RET LP-A

DATE 08/11/88

IDENT..NO.	EXAM. MTH.	EXAM. DATA SHEET NO.	EXAMINATION RESULTS NO INDIC.	INSIGNIF INDIC.	SIGNIFICANT GEOMETRY	SIGNIFICANT OTHER	REMARKS
RHR-PB-105(L)	VT-2	1VT2-88	ACC				NO RECORDABLE INDICATIONS

WASHINGTON PUBLIC POWER SUPPLY SYSTEM
NON-DESTRUCTIVE EXAMINATION SUMMARY TABLE
SYSTEM OR COMPONENT RHR(1)-4
DESCRIPTION: SHUTDN COOL RET LP-B

INTERVAL: 01
PERIOD: 1
OUTAGE: R3
DRAWING NO. RHR-106

IDENT.NO.	EXAM. MTH.	EXAM. DATA SHEET NO.	EXAMINATION RESULTS NO INDIC.	INSIGNIF INDIC.	SIGNIFICANT GEOMETRY	SIGNIFICANT OTHER	REMARKS
RHR-V-53B-BDY							
	VT-3	1RHV-014	ACC				PSI ON NEW REPLACEMENT VALVE. EXAM LIMITED TO AREA ACCESSIBLE BEFORE VALVE INSTALLED AND DISC IN CLOSED POSITION. REST OF PSI EXAM WILL BE REPRESENTED BY SEC III MT ON VALVE INTERNAL SURFACE(ACC)
RHR-V-53B-BLT							
	VT-1	1RHV-016	ACC				NO RECORDABLE INDICATIONS PSI EXAMINATION
12RHR(1)B-1							
	VOL	1RHU-056	45				NO RECORDABLE INDICATIONS
	SUR	1RHP-055	ACC				NO RECORDAABLE INDICATIONS. PSI OF NEW WELD
RHR-SB-40							
	VT3H	1HV-0091	ACC				NO RECORDABLE INDICATIONS PSI OF REPLACED STRUT. SNUBBER REPLACED WITH STRUT XI 2-0417-2
RHR-PB-106(L)							
	VT-2	1VT2-88	ACC				NO RECORDABLE INDICATIONS

WNP-02
INTERVAL: 01
PERIOD: 1
OUTAGE: R3
DRAWING NO. RHR-201

WASHINGTON PUBLIC POWER SUPPLY SYSTEM
NON-DESTRUCTIVE EXAMINATION SUMMARY TABLE
SYSTEM OR COMPONENT RHR(1)-2
DESCRIPTION: STM SPLY TO RHR HX1A

DATE 08/11/88

IDENT. NO.	EXAM. MTH.	EXAM. DATA SHEET NO.	EXAMINATION RESULTS NO INDIC.	INSIGNIF INDIC.	SIGNIFICANT GEOMETRY	SIGNIFICANT OTHER	REMARKS
RHR-603							
	VT3H	1HV-0088	ACC				NO RECORDABLE INDICATIONS. PSI OF REPLACEMENT STRUT. SNUBBER REPLACED BY STRUT XI 2-0417-2.
RHR-355							
	VT3H	1HV-0085	ACC				NO RECORDABLE INDICATIONS PSI OF REPLACEMENT STRUT. SNUBBER REPLACED BY STRUT XI 2-0416
RHR-PB-201(L)							
	VT-2	1RHV-010	ACC				NO RECORDABLE INDICATIONS

[illegible]2
INTERVAL: 01
PERIOD: 01
OUTAGE: R3
DRAWING NO. RHR-202

WASHINGTON PUBL[illegible]OWER SUPPLY SYSTEM
NON-DESTRUCTIVE EXAMINATION SUMMARY TABLE
SYSTEM OR COMPONENT 16RHR(5)-2
DESCRIPTION: DRYWELL SPRAY SUP"A"

PAGE 001
DATE 08/11/88

IDENT..NO.	EXAM. MTH.	EXAM. DATA SHEET NO.	EXAMINATION RESULTS NO INDIC.	INSIGNIF INDIC.	SIGNIFICANT GEOMETRY	SIGNIFICANT OTHER	REMARKS
RHR-PB-202(L)							
	VT-2	1RHV-010	ACC				NO RECORDABLE INDICATIONS

WNP-02
INTERVAL: 01
PERIOD: 1
OUTAGE: R3
DRAWING NO. RHR-203

WASHINGTON PUBLIC POWER SUPPLY SYSTEM
NON-DESTRUCTIVE EXAMINATION SUMMARY TABLE
SYSTEM OR COMPONENT 18RHR(4)-2
DESCRIPTION: RHR TEST LINE LOOP A

DATE 08/11/88

IDENT. NO.	EXAM. MTH.	EXAM. DATA SHEET NO.	EXAMINATION RESULTS NO INDIC.	INSIGNIF INDIC.	SIGNIFICANT GEOMETRY	SIGNIFICANT OTHER	REMARKS
RHR-273	VT3H	1HV-0074	ACC				NO RECORDABLE INDICATIONS
RHR-265	VT3H	1HV-0074	ACC				NO RECORDABLE INDICATIONS
RHR-369	VT3H	1HV-0074	ACC				NO RECORDABLE INDICATIONS
RHR-406	VT3H	1HV-0074	ACC				NO RECORDABLE INDICATIONS
RHR-PB-203(L)	VT-2	1RHV-010	ACC				NO RECORDABLE INDICATIONS

WASHINGTON PUBL[illegible] POWER SUPPLY SYSTEM
NON-DESTRUCTIVE EXAMINATION SUMMARY TABLE
SYSTEM OR COMPONENT 20RHR(2)-2
DESCRIPTION: RHR SHUTDN COOL SUCT

IDENT.NO.	EXAM. MTH.	EXAM. DATA SHEET NO.	EXAMINATION RESULTS NO INDIC.	INSIGNIF INDIC.	SIGNIFICANT GEOMETRY	SIGNIFICANT OTHER	REMARKS
RHR-77	VT3H	1HV-[illegible]074	ACC				NO RECORDABLE INDICATIONS
RHR-71	VT3H	1HV-0074	ACC				NO RECORDABLE INDICATIONS
RHR-76	VT3H	1HV-0074	ACC				NO RECORDABLE INDICATIONS
RHR-69	VT3H	1HV-0074	ACC				NO RECORDABLE INDICATIONS
RHR-70	VT3H	1HV-0074	ACC				NO RECORDABLE INDICATIONS
RHR-67	VT3H	1HV-0074	ACC				NO RECORDABLE INDICATIONS
RHR-68	VT3H	1HV-0075	ACC				NO RECORDABLE INDICATIONS
RHR-PB-205(L)	VT-2	1RHV-010	ACC				NO RECORDABLE INDICATIONS

WNP-02
INTERVAL: 01
PERIOD: 01
OUTAGE: R3
DRAWING NO. RHR-206

WASHINGTON PUBLIC POWER SUPPLY SYSTEM
NON-DESTRUCTIVE EXAMINATION SUMMARY TABLE
SYSTEM OR COMPONENT 20RHR(8)-2
DESCRIPTION: RHR-LPCS CROSSTIE

DATE 08/11/88

IDENT..NO.	EXAM. MTH.	EXAM. DATA SHEET NO.	EXAMINATION RESULTS NO INDIC.	INSIGNIF INDIC.	SIGNIFICANT GEOMETRY	SIGNIFICANT OTHER	REMARKS
RHR-PB-206(L)							
	VT-2	1RHV-010	ACC				NO RECORDABLE INDICATIONS

[illegible]02
INTERVAL: 01
PERIOD: 1
OUTAGE: R3
DRAWING NO. RHR-207

WASHINGTON PUBL[illegible]OWER SUPPLY SYSTEM
NON-DESTRUCTIVE EXAMINATION SUMMARY TABLE
SYSTEM OR COMPONENT RHR(1)2
DESCRIPTION: LOOP B SPLY-RHR HX1B

DATE 08/11/88

IDENT..NO.	EXAM. MTH.	EXAM. DATA SHEET NO.	EXAMINATION RESULTS NO INDIC.	INSIGNIF INDIC.	SIGNIFICANT GEOMETRY	SIGNIFICANT OTHER	REMARKS
RHR-923N	VT3H	1HV-0074	ACC				NO RECORDABLE INDICATIONS
RHR-943N	VT3H	1HV-0074	ACC				NO RECORDABLE INDICATIONS
RHR-944N	VT3H	1HV-0074	ACC				NO RECORDABLE INDICATIONS
RHR-918N	VT3H	1HV-0074	ACC				NO RECORDABLE INDICATIONS
RHR-926N	VT3H	1HV-0074	ACC				NO RECORDABLE INDICATIONS
RHR-929N	VT3H	1HV-0074	ACC				NO RECORDABLE INDICATIONS
RHR-919N	VT3H	1HV-0074	ACC				NO RECORDABLE INDICATIONS
RHR-556	VT3H	1HV-0089	ACC				NO RECORDABLE INDICATIONS. PSI OF REPLACEMENT STRUT. SNUBBER REPLACED BY STRUT XI 2-0418
RHR-557	VT3H	1HV-0107	ACC				NO RECORDABLE INDICATIONS. PSI OF REPLACEMENT STRUTS. SNUBBER REPLACED BY STRUTS XI 2-0418-1
RHR-565	VT3H	1HV-0108	ACC				NO RECORDABLE INDICATIONS. PSI OF REPLACEMENT STRUT. SNUBBER REPLACED BY STRUT XI 2-0418-1
RHR-564	VT3H	1HV-0087	ACC				NO RECORDABLE INDICATIONS. PSI OF REPLACEMENT STRUT. SNUBBER REPLACED BY STRUT XI 2-0418

WNP-02
INTERVAL: 01
PERIOD: 1
OUTAGE: R3
DRAWING NO. RHR-207

WASHINGTON PUBLIC POWER SUPPLY SYSTEM
NON-DESTRUCTIVE EXAMINATION SUMMARY TABLE
SYSTEM OR COMPONENT RHR(1)2
DESCRIPTION: LOOP B SPLY-RHR HX1B

DATE 08/11/88

IDENT. NO.	EXAM. MTH.	EXAM. DATA SHEET NO.	EXAMINATION RESULTS NO INDIC.	INSIGNIF INDIC.	SIGNIFICANT GEOMETRY	SIGNIFICANT OTHER	REMARKS
RHR-435							
	VT3H	1HV-0112	ACC				NO RECORDABLE INDICATIONS PSI OF REPLACEMENT STRUT. SNUBBER REPLACED BY STRUT XI 2-0418-1
RHR-459							
	VT3H	1HV-0110	ACC				NO RECORDABLE INDICATIONS. PSI OF RELACEMENT STRUT. SNUBBER REPLACED BY STRUT XI 2-0418-1
12RHR(1)B-1C							
	SUR	1RHP-051	ACC				NO RECORDABLE INDICATIONS. PSI OF NEW WELD
	VOL	1RHU-054	45				NO RECORDABLE INDICATIONS. PSI OF NEW WELD
12RHR(1)B-1D							
	SUR	1RHP-051	ACC				NO RECORDABLE INDICATIONS. PSI OF NEW WELD
	VOL	1RHU-055	45				NO RECORDABLE INDICATIONS. PSI OF NEW WELD
RHR-910N							
	VT3H	1HV-0074	ACC				NO RECORDABLE INDICATIONS
RHR-911N							
	VT3H	1HV-0076	ACC				NO RECORDABLE INDICATIONS. PSI OF REPLACEMENT STRUT. SNUBBER REPLACED BY STRUT XI 2-4018
12RHR(1)B-6A							
	SUR	1RHP-049	ACC				NO RECORDABLE INDICATIONS. PSI OF NEW WELD

2
INTERVAL: C1
PERIOD: 1
OUTAGE: R3
DRAWING NO. RHR-207

WASHINGTON PUBLIC POWER SUPPLY SYSTEM
NON-DESTRUCTIVE EXAMINATION SUMMARY TABLE
SYSTEM OR COMPONENT RHR(1)2
DESCRIPTION: LOOP B SPLY-RHR HX1B

DATE 08/11/88

IDENT.NO.	EXAM. MTH.	EXAM. DATA SHEET NO.	EXAMINATION RESULTS NO INDIC.	INSIGNIF INDIC.	SIGNIFICANT GEOMETRY	SIGNIFICANT OTHER	REMARKS
RHR-500	VOL	1RHU-057	45				NO RECORDABLE INDICATIONS. PSI OF NEW WELD
RHR-498	VT3H	1HV-0074	ACC				NO RECORDABLE INDICATIONS
RHR-501	VT3H	1HV-0074	ACC				NO RECORDABLE INDICATIONS
RHR-503	VT3H	1HV-0074	ACC				NO RECORDABLE INDICATIONS
RHR-502	VT3H	1HV-0074	ACC				NO RECORDABLE INDICATIONS
RHR-185	VT3H	1HV-0074	ACC				NO RECORDABLE INDICATIONS
RHR-PB-207(L)	VT3H	1HV-0074	ACC				NO RECORDABLE INDICATIONS
	VT-2	1RHV-009	ACC				NO RECORDABLE INDICATIONS

L[illegible]2
INTERVAL: 01
PERIOD: 01
OUTAGE: R3
DRAWING NO. RHR-209

WASHINGTON PUBLI[illegible]WER SUPPLY SYSTEM
NON-DESTRUCTIVE EXAMINATION SUMMARY TABLE
SYSTEM OR COMPONENT RHR(1)2
DESCRIPTION: LOOP B SPLY-RHR HX1B

DATE 08/11/88

IDENT.NO.	EXAM. MTH.	EXAM. DATA SHEET NO.	EXAMINATION RESULTS NO INDIC.	INSIGNIF INDIC.	SIGNIFICANT GEOMETRY	SIGNIFICANT OTHER	REMARKS
RHR-PB-209(L)							
	VT-2	1RHV-009	ACC				NO RECORDABLE INDICATIONS

WNP-02
INTERVAL: 01
PERIOD: 01
OUTAGE: R3
DRAWING NO. RHR-210

WASHINGTON PUBLIC POWER SUPPLY SYSTEM
NON-DESTRUCTIVE EXAMINATION SUMMARY TABLE
SYSTEM OR COMPONENT RHR(1)-2
DESCRIPTION: LOOP C/LPCI RETURN

DATE 08/11/88

IDENT..NO.	EXAM. MTH.	EXAM. DATA SHEET NO.	EXAMINATION RESULTS NO INDIC.	INSIGNIF INDIC.	SIGNIFICANT GEOMETRY	SIGNIFICANT OTHER	REMARKS
RHR-PB-210(L)							
	VT-2	1RHV-012	ACC				NO RECORDABLE INDICATIONS

W[illegible]2
INTERVAL: 01
PERIOD: 01
OUTAGE: R3
DRAWING NO. RHR-211

WASHINGTON PUBL[illegible]OWER SUPPLY SYSTEM
NON-DESTRUCTIVE EXAMINATION SUMMARY TABLE
SYSTEM OR COMPONENT RHR(3)-1
DESCRIPTION: RHR-P-2C SUCTION

DATE 08/11/88

IDENT.NO.	EXAM. MTH.	EXAM. DATA SHEET NO.	EXAMINATION RESULTS NO INDIC.	INSIGNIF INDIC.	SIGNIFICANT GEOMETRY	SIGNIFICANT OTHER	REMARKS
RHR-PB-211(L)	VT-2	1RHV-012	ACC				NO RECORDABLE INDICATIONS

WNP-02
INTERVAL: 01
PERIOD: 1
OUTAGE: R3
DRAWING NO. MS-101

WASHINGTON PUBLIC POWER SUPPLY SYSTEM
NON-DESTRUCTIVE EXAMINATION SUMMARY TABLE
SYSTEM OR COMPONENT MS(1)-4
DESCRIPTION: MAIN STEAM LINE A

DATE 08/11/88

IDENT..NO.	EXAM. MTH.	EXAM. DATA SHEET NO.	EXAMINATION RESULTS NO INDIC.	INSIGNIF INDIC.	SIGNIFICANT GEOMETRY	SIGNIFICANT OTHER	REMARKS
8MSR-1A-2BD							
	VT-1	1MSV-035	ACC				NO RECORDABLE INDICATIONS
MS-RV-1A-BLT							
	VT-1	1MSV-024	ACC				NO RECORDABLE INDICATIONS
MS-V-28A-BDY							
	VT-3	1MSV-039	ACC				EXAMINATION OF VALVE BODY WITH INTERNALS REMOVED.
MS-PB-101(L)							
	VT-2	1VT2-86	ACC				NO RECORDABLE INDICATIONS

[illegible]62
INTERVAL: G1
PERIOD: 1
OUTAGE: R3
DRAWING NO. MS-102

WASHINGTON PUBL[illegible]OWER SUPPLY SYSTEM
NON-DESTRUCTIVE EXAMINATION SUMMARY TABLE
SYSTEM OR COMPONENT MS(1)-4
DESCRIPTION: MAIN STEAM LINE B

DATE 08/11/88

IDENT. NO.	EXAM. MTH.	EXAM. DATA SHEET NO.	EXAMINATION RESULTS NO INDIC.	INSIGNIF INDIC.	SIGNIFICANT GEOMETRY	SIGNIFICANT OTHER	REMARKS
MS-V-28B-BDY							
	VT-3	1MSV-T40	ACC				EXAMINATION OF VALVE BODY WITH INTERNALS REMOVED
MS-PB-102(L)							
	VT-2	1VT2-88	ACC				NO RECORDABLE INDICATIONS

02
INTERVAL: 01
PERIOD: 1
OUTAGE: R3
DRAWING NO. MS-103

WASHINGTON PUBLIC POWER SUPPLY SYSTEM
NON-DESTRUCTIVE EXAMINATION SUMMARY TABLE
SYSTEM OR COMPONENT MS(1)-4
DESCRIPTION: MAIN STEAM LINE C

IDENT.NO.	EXAM. MTH.	EXAM. DATA SHEET NO.	EXAMINATION RESULTS NO INDIC.	INSIGNIF INDIC.	SIGNIFICANT GEOMETRY	SIGNIFICANT OTHER	REMARKS
8MSR-5C-2BD	VT-1	1MSV-034	ACC				NO RECORDABLE INDICATIONS
MS-RV-5C-BLT	VT-1	1MSV-023	ACC				NO RECORDABLE INDICATIONS
8MSR-4C-2BD	VT-1	1MSV-033	ACC				NO RECORDABLE INDICATIONS
MS-RV-4C-BLT	VT-1	1MSV-022	ACC				NO RECORDABLE INDICATIONS
MS-SC-10	VT3H	1HV-0074	ACC				NO RECORDABLE INDICATIONS
MS-SC-9	VT3H	1HV-0074	ACC				NO RECORDABLE INDICATIONS
MS-SC-3	VT3H	1HV-0074	ACC				NO RECORDABLE INDICATIONS
MS-HC-3(W)	SUR	1MSM-008	ACC				NO RECORDABLE INDICATIONS
MS-HC-3	VT3H	1HV-0074	ACC				NO RECORDABLE INDICATIONS
26MS(1)C-17	VOL	1MSU-048	ACC				NO RECORDABLE INDICATIONS
	SUR	1MSP-056		ACC			0-45 DEGREE 3/32 IN ROUNDED 90-135 DEGREE 3/32 IN ROUNDED 90-135 DEGREE 3/32 IN ROUNDED
26MS(1)C-18	VOL	1MSU-047		45			0-90 DEGREE 70% DAC 300-80 DEGREE LESS THAN 50% DAC
	SUR	1MSP-055	ACC				NO RECORDABLE INDICATIONS

WNP-02
INTERVAL: 01
PERIOD: 1
OUTAGE: R3
DRAWING NO. MS-103

WASHINGTON PUBLIC POWER SUPPLY SYSTEM
NON-DESTRUCTIVE EXAMINATION SUMMARY TABLE
SYSTEM OR COMPONENT MS(1)-4
DESCRIPTION: MAIN STEAM LINE C

DATE 08/11/88

IDENT. NO.	EXAM. MTH.	EXAM. DATA SHEET NO.	EXAMINATION RESULTS NO INDIC.	INSIGNIF INDIC.	SIGNIFICANT GEOMETRY	SIGNIFICANT OTHER	REMARKS
MS-V-28C/2MS(9)-4							
	SUR	1MSP-055	ACC				NO RECORDABLE INDICATIONS
MS-V-28C-BDY							
	VT-3	1MSV-037	ACC				MINOR SURFACE OXIDATION NOTED
MS-PB-103(L)							
	VT-2	1VT2-88	ACC				NO RECORDABLE INDICATIONS

WASHINGTON PUBLIC POWER SUPPLY SYSTEM
NON-DESTRUCTIVE EXAMINATION SUMMARY TABLE
SYSTEM OR COMPONENT MS(1)-4
DESCRIPTION: MAIN STEAM LINE D

IDENT.NO.	EXAM. MTH.	EXAM. DATA SHEET NO.	EXAMINATION RESULTS NO INDIC.	INSIGNIF INDIC.	SIGNIFICANT GEOMETRY	SIGNIFICANT OTHER	REMARKS
MS-HD-1	VT3H	1HV-0074	ACC				NO RECORDABLE INDICATIONS
8MSR-4D-2BD	VT-1	1MSV-032	ACC				NO RECORDABLE INDICATIONS
MS-RV-4D-BLT	VT-1	1MSV-021	ACC				NO RECORDABLE INDICATIONS
8MSR-3D-2BD	VT-1	1MSV-031	ACC				NO RECORDABLE INDICATIONS
MS-RV-3D-BLT	VT-1	1MSV-020	ACC				NO RECORDABLE INDICATIONS
MS-SD-10	VT3H	1HV-0074	ACC				NO RECORDABLE INDICATIONS
MS-SD-3	VT3H	1HV-0074	ACC				NO RECORDABLE INDICATIONS
MS-V-22D-BLT	VT-1	1MSV-030	ACC				NO RECORDABLE INDICATIONS
MS-V-28D-BLT	VT-1	1MSV-029	ACC				MINOR SURFACE RUST. NO APPRECIABLE METAL LOSS. MINOR GOUGES ON NUTS.
MS-V-28D-BDY	VT-3	1MSV-036	ACC				MINOR SURFACE OXIDATION NOTED
MS-PB-104(L)	VT-2	1VT2-88	ACC				NO RECORDABLE INDICATIONS

WNP-02
INTERVAL: 01
PERIOD: 01
OUTAGE: R3
DRAWING NO. MS-105

WASHINGTON PUBLIC POWER SUPPLY SYSTEM
NON-DESTRUCTIVE EXAMINATION SUMMARY TABLE
SYSTEM OR COMPONENT MS(9)-4
DESCRIPTION: MS VALVE DRAINS

DATE 08/11/88

IDENT.NO.	EXAM. MTH.	EXAM. DATA SHEET NO.	EXAMINATION RESULTS NO INDIC.	INSIGNIF INDIC.	SIGNIFICANT GEOMETRY	SIGNIFICANT OTHER	REMARKS
MS-PB-105(L)	VT-2	1VT2-88	ACC				NO RECORDABLE INDICATIONS

-02
INTERVAL: 11
PERIOD: 1
OUTAGE: R3
DRAWING NO. MS-106

WASHINGTON PUB POWER SUPPLY SYSTEM
NON-DESTRUCTIVE EXAMINATION SUMMARY TABLE
SYSTEM OR COMPONENT MS(12)-4
DESCRIPTION: MS RX VES HEAD VENT

DATE 08/11/88

IDENT..NO.	EXAM. MTH.	EXAM. DATA SHEET NO.	EXAMINATION RESULTS NO INDIC.	INSIGNIF INDIC.	SIGNIFICANT GEOMETRY	SIGNIFICANT OTHER	REMARKS
MS-2619-11	VT3H	1HV-0074	ACC				NO RECORDABLE INDICATIONS
MS-2619-12	VT3H	1HV-0074	ACC				NO RECORDABLE INDICATIONS
MS-2619-14	VT3H	1HV-0074	ACC				NO RECORDABLE INDICATIONS
MS-2619-310	VT3H	1HV-0097	ACC				NO RECORDABLE INDICATIONS. PSI OF REPLACEMENT STRUT. SNUBBER REPLACED BY STRUT XI 2-0418
MS-2619-311	VT3H	1HV-0074	ACC				NO RECORDABLE INDICATIONS
MS-2619-313	VT3H	1HV-0074	ACC				NO RECORDABLE INDICATIONS
MS-2619-314	VT3H	1HV-0074	ACC				NO RECORDABLE INDICATIONS
MS-2619-315	VT3H	1HV-0074	ACC				NO RECORDABLE INDICATIONS
MS-PB-106(L)	VT-2	1VT2-88	ACC				NO RECORDABLE INDICATIONS

WNP-52
INTERVAL: 01
PERIOD: 1
OUTAGE: R3
DRAWING NO. MS-201

WASHINGTON PUBLIC POWER SUPPLY SYSTEM
NON-DESTRUCTIVE EXAMINATION SUMMARY TABLE
SYSTEM OR COMPONENT MS(1)-4
DESCRIPTION: MAIN STEAM LINE A

DATE 08/11/88

IDENT. NO.	EXAM. MTH.	EXAM. DATA SHEET NO.	EXAMINATION RESULTS NO INDIC.	INSIGNIF INDIC.	SIGNIFICANT GEOMETRY	SIGNIFICANT OTHER	REMARKS
MS-118							
	VT3H	1HV-0103	ACC				NO RECORDABLE INDICATIONS. PSI OF REPLACEMENT STRUT. SNUBBERS REPLACED BY STRUTS. XI 2-0417-2
MS-140							
	VT3H	1HV-0101	ACC				NO RECORDABLE INDICATIONS. PSI OF REPLACEMENT STRUT. SNUBBER REPLACED BY STRUT I 2-0417-2

-02
INTERVAL: 01
PERIOD: 1
OUTAGE: R3
DRAWING NO. MS-202

WASHINGTON PUB POWER SUPPLY SYSTEM
NON-DESTRUCTIVE EXAMINATION SUMMARY TABLE
SYSTEM OR COMPONENT MS(1)-4
DESCRIPTION: MAIN STEAM LINE B

DATE 08/11/88

IDENT.NO.	EXAM. MTH.	EXAM. DATA SHEET NO.	EXAMINATION RESULTS NO INDIC.	INSIGNIF INDIC.	SIGNIFICANT GEOMETRY	SIGNIFICANT OTHER	REMARKS
MS-997N							
	VT3H	1HV-0162	ACC				NO RECORDABLE INDICATIONS. PSI OF REPLACEMENT STRUT. SNUBBER REPLACED BY STRUT XI 2-417-2
MS-179							
	VT3H	1HV-0098	ACC				NO RECORDABLE INDICATIONS. PSI OF REPLACEMENT STRUT. SNUBBER REPLACED BY STRUT XI 2-0418

WNP-02
INTERVAL: 01
PERIOD: 1
OUTAGE: R3
DRAWING NO. MS-203

WASHINGTON PUBLIC POWER SUPPLY SYSTEM
NON-DESTRUCTIVE EXAMINATION SUMMARY TABLE
SYSTEM OR COMPONENT MS(1)-4
DESCRIPTION: MAIN STEAM LINE C

DATE 08/11/88

IDENT.NO.	EXAM. MTH.	EXAM. DATA SHEET NO.	EXAMINATION RESULTS NO INDIC.	INSIGNIF INDIC.	SIGNIFICANT GEOMETRY	SIGNIFICANT OTHER	REMARKS
MS-47	VT3H	1HV-0074	ACC				NO RECORDABLE INDICATIONS
MS-44	VT3H	1HV-0074	ACC				NO RECORDABLE INDICATIONS
MS-45	VT3H	1HV-0074	ACC				NO RECORDABLE INDICATIONS
MS-1003N	VT3H	1HV-0074	ACC				NO RECORDABLE INDICATIONS
MS-42	VT3H	1HV-0074	ACC				NO RECORDABLE INDICATIONS
MS-1002N	VT3H	1HV-0074	ACC				NO RECORDABLE INDICATIONS
MS-40	VT3H	1HV-0074	ACC				NO RECORDABLE INDICATIONS
MS-39	VT3H	1HV-0074	ACC				NO RECORDABLE INDICATIONS
MS-31	VT3H	1HV-0074	ACC				NO RECORDABLE INDICATIONS
	VT3H	1HV-0100	ACC				NO RECORDABLE INDICATIONS. PSI OF REPLACEMENT STRUT. SNUBBER REPLACED BY STRUT XI 2-417-2

02
INTERVAL: 01
PERIOD: 1
OUTAGE: R3
DRAWING NO. MS-204

WASHINGTON PUB[illegible] POWER SUPPLY SYSTEM
NON-DESTRUCTIVE EXAMINATION SUMMARY TABLE
SYSTEM OR COMPONENT MS(1)-4
DESCRIPTION: MAIN STEAM LINE D

DATE 08/11/88

IDENT.NO.	EXAM. MTH.	EXAM. DATA SHEET NO.	EXAMINATION RESULTS NO INDIC.	INSIGNIF INDIC.	SIGNIFICANT GEOMETRY	SIGNIFICANT OTHER	REMARKS
MS-74	VT3H	1HV-0074	ACC				NO RECORDABLE INDICATIONS
26MS(1)D-19/3V-20	SUR	1MSP-054	ACC				NO RECORDABLE INDICATIONS
MS-72	VT3H	1HV-0074	ACC				NO RECORDABLE INDICATIONS
MS-71	VT3H	1HV-0074	ACC				NO RECORDABLE INDICATIONS
MS-69	VT3H	1HV-0074	ACC				NO RECORDABLE INDICATIONS
MS-908N	VT3H	1HV-0074	ACC				NO RECORDABLE INDICATIONS
MS-1007N	VT3H	1HV-0074	ACC				NO RECORDABLE INDICATIONS
MS-68	VT3H	1HV-0074	ACC				NO RECORDABLE INDICATIONS
MS-66	VT3H	1HV-0074	ACC				NO RECORDABLE INDICATIONS
MS-1010N	VT3H	1HV-0074	ACC				NO RECORDABLE INDICATIONS
MS-65	VT3H	1HV-0074	ACC				NO RECORDABLE INDICATIONS
MS-906N	VT3H	1HV-0074	ACC				NO RECORDABLE INDICATIONS
	VT3H	1HV-0099	ACC				NO RECORDABLE INDICATIONS. PSI OF REPLACEMENT STRUT. SNUBBER REPLACED BY STRUT XI 2-0418

WNP-02
INTERVAL: 01
PERIOD: 1
OUTAGE: R3
DRAWING NO. MS-204

WASHINGTON PUBLIC POWER SUPPLY SYSTEM
NON-DESTRUCTIVE EXAMINATION SUMMARY TABLE
SYSTEM OR COMPONENT 2MS(20)-4
DESCRIPTION: MS PRESS STAB. LINE

DATE 08/11/88

IDENT..NO.	EXAM. MTH.	EXAM. DATA SHEET NO.	EXAMINATION RESULTS NO INDIC.	INSIGNIF INDIC.	SIGNIFICANT GEOMETRY	SIGNIFICANT OTHER	REMARKS
2MS(20)D-1	SUR	1MSP-053	ACC				NO RECORDABLE INDICATIONS
2MS(20)D-2	SUR	1MSP-053	ACC				NO RECORDABLE INDICATIONS
2MS(20)D-3	SUR	1MSP-053	ACC				NO RECORDABLE INDICATIONS
2MS(20)D-4	SUR	1MSP-053	ACC				NO RECORDABLE INDICATIONS

-02
INTERVAL: 01
PERIOD: 1
OUTAGE: R3
DRAWING NO. RFW-101

WASHINGTON PUB POWER SUPPLY SYSTEM
NON-DESTRUCTIVE EXAMINATION SUMMARY TABLE
SYSTEM OR COMPONENT RFW(1)-4
DESCRIPTION: RX FEEDWATER LINE A

DATE 08/11/88

IDENT.NO.	EXAM. MTH.	EXAM. DATA SHEET NO.	EXAMINATION RESULTS NO INDIC.	INSIGNIF INDIC.	SIGNIFICANT GEOMETRY	SIGNIFICANT OTHER	REMARKS
RFW-146							
	VT3H	1HV-0074	ACC				NO RECORDABLE INDICATIONS
RFW-146(W)							
	SUR	1FWM-003	ACC				NO RECORDABLE INDICATIONS
RFW-156							
	VT3H	1HV-0074	ACC				NO RECORDABLE INDICATIONS
RFW-156(W)							
	SUR	1FWM-004	ACC				NO RECORDABLE INDICATIONS
12RFW(1)AA-6							
	VOL	1FWU-057		45			90-180 50% DAC 1.59 METAL PATH ID GEOMETRY
	SUR	1FWP-054	ACC				NO RECORDABLE INDICATIONS
12RFW(1)AA-7							
	VOL	1FWU-058	45				NO RECORDABLE INDICATIONS.
	SUR	1FWP-054	ACC				NO RECORDABLE INDICATIONS
12RFW(1)AA-9							
	VOL	1FWU-059	45				NO RECORDABLE INDICATIONS
	SUR	1FWP-055	ACC				NO RECORDABLE INDICATIONS
12RFW(1)AA-10							
	VOL	1FWU-060	45				NO RECORDABLE INDICATIONS
	SUR	1FWP-055	ACC				NO RECORDABLE INDICATIONS
12RFW(1)AA-11							
	VOL	1FWU-061	45				NO RECORDABLE INDICATIONS
	SUR	1FWP-055	ACC				NO RECORDABLE INDICATIONS

WNP-02
INTERVAL: 01
PERIOD: 01
OUTAGE: R3
DRAWING NO. RFW-101

WASHINGTON PUBLIC POWER SUPPLY SYSTEM
NON-DESTRUCTIVE EXAMINATION SUMMARY TABLE
SYSTEM OR COMPONENT RFW(1)-4
DESCRIPTION: RX FEEDWATER LINE A

DATE 08/11/88

IDENT..NO.	EXAM. MTH.	EXAM. DATA SHEET NO.	EXAMINATION RESULTS NO INDIC.	INSIGNIF INDIC.	SIGNIFICANT GEOMETRY	SIGNIFICANT OTHER	REMARKS
RFW-PB-101(L)	VT-2	1VT2-88	ACC				NO RECORDABLE INDICATIONS

02
INTERVAL: 01
PERIOD: 1
OUTAGE: R3
DRAWING NO. RFW-102

WASHINGTON PUB[illegible]OWER SUPPLY SYSTEM
NON-DESTRUCTIVE EXAMINATION SUMMARY TABLE
SYSTEM OR COMPONENT RFW(1)-4
DESCRIPTION: RX FEEDWATER LINE B

DATE 08/11/88

IDENT.NO.	EXAM. MTH.	EXAM. DATA SHEET NO.	EXAMINATION RESULTS NO INDIC.	INSIGNIF INDIC.	SIGNIFICANT GEOMETRY	SIGNIFICANT OTHER	REMARKS
5RFW(11)B-1							
	SUR	1FWP-053		ACC			0.125 ROUNDED INDICATION
RFW-PB-102(L)							
	VT-2	1VT2-88				REJ	RFW-V-121/122 CAP LEAKS 10 DROPS PER MIN.
		1VT2-88	ACC				REPAIRED LEAK AT RFW-V-121/122 CAP PER MWR AT0566. RE-EXAM ACCEPTABLE.

WNP-02
INTERVAL: 01
PERIOD: 01
OUTAGE: R3
DRAWING NO. RFW-103

WASHINGTON PUBLIC POWER SUPPLY SYSTEM
NON-DESTRUCTIVE EXAMINATION SUMMARY TABLE
SYSTEM OR COMPONENT RFW(11)-4
DESCRIPTION: REACTOR FEEDWATER

DATE 08/11/88

IDENT..NO.	EXAM. MTH.	EXAM. DATA SHEET NO.	EXAMINATION RESULTS NO INDIC.	INSIGNIF INDIC.	SIGNIFICANT GEOMETRY	SIGNIFICANT OTHER	REMARKS
RFW-PB-103(L)							
	VT-2	1VT2-88	ACC				NO RECORDABLE INDICATIONS

WASHINGTON PUBLIC POWER SUPPLY SYSTEM
NON-DESTRUCTIVE EXAMINATION SUMMARY TABLE
SYSTEM OR COMPONENT RRC(2)-4S
DESCRIPTION: REACTOR RECIR LOOP A

2
INTERVAL: 01
PERIOD: 01
OUTAGE: R3
DRAWING NO. RRC-101

IDENT..NO.	EXAM. MTH.	EXAM. DATA SHEET NO.	EXAMINATION RESULTS NO INDIC.	INSIGNIF INDIC.	SIGNIFICANT GEOMETRY	SIGNIFICANT OTHER	REMARKS
RRC-PB-101(L)	VT-2	1VT2-88	ACC				NO RECORDABLE INDICATIONS

WNP-02
INTERVAL: 01
PERIOD: 1
OUTAGE: R3
DRAWING NO. RRC-102

WASHINGTON PUBLIC POWER SUPPLY SYSTEM
NON-DESTRUCTIVE EXAMINATION SUMMARY TABLE
SYSTEM OR COMPONENT RRC(2)-4S
DESCRIPTION: REACTOR RECIR LOOP B

DATE 08/11/88

IDENT.NO.	EXAM. MTH.	EXAM. DATA SHEET NO.	EXAMINATION RESULTS NO INDIC.	INSIGNIF INDIC.	SIGNIFICANT GEOMETRY	SIGNIFICANT OTHER	REMARKS
RRC-HB-1(W)							
	SUR	1RRP-063	ACC				NO RECORDABLE INDICATIONS LIMITED EXAM ON SIDE OF LUG NOT EXAMINED
4RRC(8)2B-2BD							
	VT-1	1RRV-017	ACC				NO RECORDABLE INDICATIONS
4RRC(8)1B-2BD							
	VT-1	1RRV-016	ACC				NO RECORDABLE INDICATIONS
RRC-PB-102(L)							
	VT-2	1VT2-88	ACC				NO RECORDABLE INDICATIONS

-02
INTERVAL: C1
PERIOD: 01
OUTAGE: R3
DRAWING NO. RRC-103

WASHINGTON PUB[illegible] POWER SUPPLY SYSTEM
NON-DESTRUCTIVE EXAMINATION SUMMARY TABLE
SYSTEM OR COMPONENT RRC-P-1A
DESCRIPTION: RRC LOOP A PUMP

DATE 08/11/88

IDENT. NO.	EXAM. MTH.	EXAM. DATA SHEET NO.	EXAMINATION RESULTS NO INDIC.	INSIGNIF INDIC.	SIGNIFICANT GEOMETRY	SIGNIFICANT OTHER	REMARKS
RRC-PB-103(L)	VT-2	1VT2-88	ACC				EXAM AREA IS COVERED ON DRAWINGS RRC-101 AND RRC-102

WNP-2
INTERVAL: 01
PERIOD: 01
OUTAGE: R3
DRAWING NO. RRC-104

WASHINGTON PUBLIC POWER SUPPLY SYSTEM
NON-DESTRUCTIVE EXAMINATION SUMMARY TABLE
SYSTEM OR COMPONENT RRC(51)-4
DESCRIPTION: RPV DRAIN

DATE 08/11/88

IDENT. NO.	EXAM. MTH.	EXAM. DATA SHEET NO.	EXAMINATION RESULTS NO INDIC.	INSIGNIF INDIC.	SIGNIFICANT GEOMETRY	SIGNIFICANT OTHER	REMARKS
RRC-PB-104(L)	VT-2	1VT2-88	ACC				NO RECORDABLE INDICATIONS

WASHINGTON PUBL OWER SUPPLY SYSTEM .
NON-DESTRUCTIVE EXAMINATION SUMMARY TABLE
SYSTEM OR COMPONENT RRC(6)-4S
DESCRIPTION: RHR SHUTDN COOL SUCT

IDENT. NO.	EXAM. MTH.	EXAM. DATA SHEET NO.	EXAMINATION RESULTS NO INDIC.	INSIGNIF INDIC.	SIGNIFICANT GEOMETRY	SIGNIFICANT OTHER	REMARKS
20RRC(6)-3LD							
	VOL	1RRU-128			45		ID GEOMETRY 100 AND 125% DAC NO EXAM 4.5 TO 11.5 INCHES FROM WELD CL COVERED BY RRC-1
20RRC(6)-4LU							
	VOL	1RRU-127			45		ID GEOMETRY 75% AND 110% DAC
	SUR	1RRP-064	ACC				NO RECORDABLE INDICATIONS.
RRC-PB-105(L)							
	VT-2	1VT2-88	ACC				NO RECORDABLE INDICATIONS

WNP-02
INTERVAL: 01
PERIOD: 01
OUTAGE: R3
DRAWING NO. RRC-106

WASHINGTON PUBLIC POWER SUPPLY SYSTEM
NON-DESTRUCTIVE EXAMINATION SUMMARY TABLE
SYSTEM OR COMPONENT RRC(7)-4S
DESCRIPTION: SHUTDN COOL RETURN A

DATE 08/11/88

IDENT.NO.	EXAM. MTH.	EXAM. DATA SHEET NO.	EXAMINATION RESULTS NO INDIC.	INSIGNIF INDIC.	SIGNIFICANT GEOMETRY	SIGNIFICANT OTHER	REMARKS
RRC-PB-106(L)	VT-2	1VT2-88	ACC				NO RECORDABLE INDICATIONS

-02
INTERVAL: 01
PERIOD: 01
OUTAGE: R3
DRAWING NO. RRC-107

WASHINGTON PUB POWER SUPPLY SYSTEM
NON-DESTRUCTIVE EXAMINATION SUMMARY TABLE
SYSTEM OR COMPONENT RRC(7)-4S
DESCRIPTION: SHUTDN COOL RETURN B

DATE 08/11/88

IDENT. NO.	EXAM. MTH.	EXAM. DATA SHEET NO.	EXAMINATION RESULTS NO INDIC.	INSIGNIF INDIC.	SIGNIFICANT GEOMETRY	SIGNIFICANT OTHER	REMARKS
RRC-PB-107(L)							
	VT-2	1VT2-88	ACC				NO RECORDABLE INDICATIONS

WNP-02
INTERVAL: 01
PERIOD: 01
OUTAGE: R3
DRAWING NO. RRC-108

WASHINGTON PUBLIC POWER SUPPLY SYSTEM
NON-DESTRUCTIVE EXAMINATION SUMMARY TABLE
SYSTEM OR COMPONENT RRC(4)-4S
DESCRIPTION: RHCU INTERTIE RRC A

DATE 08/11/88

IDENT.NO.	EXAM. MTH.	EXAM. DATA SHEET NO.	EXAMINATION RESULTS NO INDIC.	INSIGNIF INDIC.	SIGNIFICANT GEOMETRY	SIGNIFICANT OTHER	REMARKS
4RRC(4)A-11							
	VOL	1RRU-126	45				NO RECORDABLE INDICATIONS
	SUR	1RRP-062	ACC				NO RECORDABLE INDICATIONS
RRC-PB-108(L)							
	VT-2	1VT2-88	ACC				NO RECORDABLE INDICATIONS

-02
INTERVAL: 01
PERIOD: 01
OUTAGE: R3
DRAWING NO. RRC-109

WASHINGTON PUBLIC POWER SUPPLY SYSTEM
NON-DESTRUCTIVE EXAMINATION SUMMARY TABLE
SYSTEM OR COMPONENT RRC(4)-4S
DESCRIPTION: RWCU INTERTIE RRC B

DATE 08/11/88

IDENT.NO.	EXAM. MTH.	EXAM. DATA SHEET NO.	EXAMINATION RESULTS NO INDIC.	INSIGNIF INDIC.	SIGNIFICANT GEOMETRY	SIGNIFICANT OTHER	REMARKS
RRC-PB-109(L)	VT-2	1VT2-88	ACC				NO RECORDABLE INDICATIONS

WNP-02
INTERVAL: 01
PERIOD: 01
OUTAGE: R3
DRAWING NO. RRC-110

WASHINGTON PUBLIC POWER SUPPLY SYSTEM
NON-DESTRUCTIVE EXAMINATION SUMMARY TABLE
SYSTEM OR COMPONENT RRC(6)-4S
DESCRIPTION: RRC LOOP A DRAIN

DATE 08/11/88

IDENT. NO.	EXAM. MTH.	EXAM. DATA SHEET NO.	EXAMINATION RESULTS NO INDIC.	INSIGNIF INDIC.	SIGNIFICANT GEOMETRY	SIGNIFICANT OTHER	REMARKS
RRC-PB-116(L)	VT-2	1VT2-88	ACC				NO RECORDABLE INDICATIONS

02
INTERVAL: 01
PERIOD: C1
OUTAGE: R3
DRAWING NO. RRC-111

WASHINGTON PUBL[illegible]OWER SUPPLY SYSTEM
NON-DESTRUCTIVE EXAMINATION SUMMARY TABLE
SYSTEM OR COMPONENT RRC(6)-4S
DESCRIPTION: RRC LOOP B DRAIN

DATE 08/11/88

IDENT..NO.	EXAM. MTH.	EXAM. DATA SHEET NO.	EXAMINATION RESULTS NO INDIC.	INSIGNIF INDIC.	SIGNIFICANT GEOMETRY	SIGNIFICANT OTHER	REMARKS
RRC-PB-111(L)	VT-2	1VT2-88	ACC				NO RECORDABLE INDICATIONS

WNP-02
INTERVAL: 01
PERIOD: 1
OUTAGE: R3
DRAWING NO. RWCU-101

WASHINGTON PUBLIC POWER SUPPLY SYSTEM
NON-DESTRUCTIVE EXAMINATION SUMMARY TABLE
SYSTEM OR COMPONENT RWCU(4)-4
DESCRIPTION: RPV DRAIN TO RWCU

DATE 08/11/88

IDENT.NO.	EXAM. MTH.	EXAM. DATA SHEET NO.	EXAMINATION RESULTS NO INDIC.	INSIGNIF INDIC.	SIGNIFICANT GEOMETRY	SIGNIFICANT OTHER	REMARKS
RWCU-1C-11							
	VT3H	1HV-0080	ACC				NO RECORDABLE INDICATIONS. PSI OF REPLACEMENT STRUT. SNUBBER REPLACED BY STRUT XI 2-0418
RWCU-PB-101(L)							
	VT-2	1VT2-88	ACC				NO RECORDABLE INDICATIONS

62
INTERVAL: 01
PERIOD: 1
OUTAGE: R3
DRAWING NO. RWCU-303

WASHINGTON PUB[illegible]OWER SUPPLY SYSTEM
NON-DESTRUCTIVE EXAMINATION SUMMARY TABLE
SYSTEM OR COMPONENT RWCU(2)-4
DESCRIPTION: RWCU HX RTN TO RFW

IDENT.NO.	EXAM. MTH.	EXAM. DATA SHEET NO.	EXAMINATION RESULTS NO INDIC.	INSIGNIF INDIC.	SIGNIFICANT GEOMETRY	SIGNIFICANT OTHER	REMARKS
6RWCU(2)-1	VOL	1RTU-009	44				NO RECORDABLE INDICATIONS
6RWCU(2)-2	VOL	1RTU-010	44				NO RECORDABLE INDICATIONS
6RWCU(2)-3	VOL	1RTU-011	44				NO RECORDABLE INDICATIONS
6RWCU(2)-4	VOL	1RTU-012	44				NO RECORDABLE INDICATIONS

WNP-02
INTERVAL: 01
PERIOD: 1
OUTAGE: R3
DRAWING NO. SW-301

WASHINGTON PUBLIC POWER SUPPLY SYSTEM
NON-DESTRUCTIVE EXAMINATION SUMMARY TABLE
SYSTEM OR COMPONENT SW(1)-2
DESCRIPTION: SW LOOP A SUPPLY

DATE 08/11/88

IDENT..NO.	EXAM. MTH.	EXAM. DATA SHEET NO.	EXAMINATION RESULTS NO INDIC.	INSIGNIF INDIC.	SIGNIFICANT GEOMETRY	SIGNIFICANT OTHER	REMARKS
SW-174							
	VT3H	1HV-0074	ACC				NO RECORDABLE INDICATIONS
SW-174(W)							
	VT-3	1SWV-016	ACC				MINOR CORROSION
SW-57							
	VT3H	1HV-0074	ACC				NO RECORDABLE INDICATIONS
SW-57(W)							
	VT-3	1SWV-017	ACC				NO RECORDABLE INDICATIONS
SW-437							
	VT3H	1HV-0074	ACC				NO RECORDABLE INDICATIONS
SW-437(W)							
	VT-3	1SWV-018	ACC				NO RECORDABLE INDICATIONS
SW-913N							
	VT3H	1HV-0074	ACC				NO RECORDABLE INDICATIONS
SW-58							
	VT3H	1HV-0074	ACC				NO RECORDABLE INDICATIONS
SW-58(W)							
	VT-3	1SWV-019	ACC				NO RECORDABLE INDICATIONS
SW-318							
	VT3H	1HV-0074	ACC				NO RECORDABLE INDICATIONS
SW-318(W)							
	VT-3	1SWV-050	ACC				NO RECORDABLE INDICATIONS
SW-64							
	VT3H	1HV-0074	ACC				HANGER IS BURIED IN FIRE BARRIER INSULATION. BOTTOM 2-3 INCHES WERE VISIBLE AND INSPECTED.
SW-PB-301(L)							
	VT-2	1SWV-012	ACC				NO RECORDABLE INDICATIONS

02
INTERVAL: 01
PERIOD: 1
OUTAGE: R3
DRAWING NO. SW-302

WASHINGTON PUBLIC POWER SUPPLY SYSTEM
NON-DESTRUCTIVE EXAMINATION SUMMARY TABLE
SYSTEM OR COMPONENT SW(17)-2
DESCRIPTION: SW LOOP A SUPPLY

IDENT. NO.	EXAM. MTH.	EXAM. DATA SHEET NO.	EXAMINATION RESULTS NO INDIC.	INSIGNIF INDIC.	SIGNIFICANT GEOMETRY	SIGNIFICANT OTHER	REMARKS
SW-231	VT3H	1HV-0074	ACC				NO RECORDABLE INDICATIONS
SW-231(W)	VT-3	1SWV-020	ACC				NO RECORDABLE INDICATIONS
SW-232	VT3H	1HV-0074	ACC				NO RECORDABLE INDICATIONS
SW-233	VT3H	1HV-0074	ACC				NO RECORDABLE INDICATIONS
SW-234	VT3H	1HV-0074	ACC				NO RECORDABLE INDICATIONS
SW-235	VT3H	1HV-0074	ACC				NO RECORDABLE INDICATIONS
SW-236	VT3H	1HV-0074	ACC				NO RECORDABLE INDICATIONS
SW-236(W)	VT-3	1SWV-021	ACC				NO RECORDABLE INDICATIONS
SW-PB-302(L)	VT-2	1SWV-012	ACC				NO RECORDABLE INDICATIONS

WNP-02
INTERVAL: 01
PERIOD: 1
OUTAGE: R3
DRAWING NO. SW-303

WASHINGTON PUBLIC POWER SUPPLY SYSTEM
NON-DESTRUCTIVE EXAMINATION SUMMARY TABLE
SYSTEM OR COMPONENT SW(23)-2
DESCRIPTION: RETURN RHR-HX-1A

DATE 08/11/88

IDENT. NO.	EXAM. MTH.	EXAM. DATA SHEET NO.	EXAMINATION RESULTS NO INDIC.	INSIGNIF INDIC.	SIGNIFICANT GEOMETRY	SIGNIFICANT OTHER	REMARKS
SW-140							
	VT3H	1HV-0074	ACC				NO RECORDABLE INDICATIONS
SW-140(W)							
	VT-3	1SWV-049	ACC				LIGHT RUST ON WELD
SW-139							
	VT3H	1HV-0074	ACC				NO RECORDABLE INDICATIONS
SW-139(W)							
	VT-3	1SWV-048	ACC				LIGHT RUST ON WELD
SW-138							
	VT3H	1HV-0074	ACC				NO RECORDABLE INDICATIONS
SW-138(W)							
	VT-3	1SWV-022		ACC			MEDIUM TO HEAVY RUST AND CORROSION ON WELD. NO APPRECIABLE DEPTH
SW-207							
	VT3H	1HV-0074	ACC				NO RECORDABLE INDICATIONS
SW-207(W)							
	VT-3	1SWV-023		ACC			MEDIUM TO HEAVY RUST AND CORROSION ON WELD, NO APPRECIABLE DEPTH.
SW-433							
	VT3H	1HV-0074	ACC				NO RECORDABLE INDICATIONS
SW-433(W)							
	VT-3	1SWV-057	ACC				MEDIUM TO HEAVY RUST ON PIPE, WELD AND PADS. NO APPRECIABLE METAL LOSS
		1SWV-056	ACC				MEDIUM TO HEAVY RUST ON PIPE, WELD AND PADS.
SW-PB-303(L)							
	VT-2	1SWV-012	ACC				NO RECORDABLE INDICATIONS

-02
INTERVAL: C1
PERIOD: 1
OUTAGE: R3
DRAWING NO. SW-304

WASHINGTON PUB POWER SUPPLY SYSTEM
NON-DESTRUCTIVE EXAMINATION SUMMARY TABLE
SYSTEM OR COMPONENT SW(37)-2
DESCRIPTION: RETURN DCW-HX-1A1&A2

DATE 08/11/88

IDENT.NO.	EXAM. MTH.	EXAM. DATA SHEET NO.	EXAMINATION RESULTS NO INDIC.	INSIGNIF INDIC.	SIGNIFICANT GEOMETRY	SIGNIFICANT OTHER	REMARKS
SW-352							
	VT3H	1HV-0074	ACC				
SW-352(W)							
	VT-3	1SWV-024	ACC				NO RECORDABLE INDICATIONS
SW-348							
	VT3H	1HV-0074	ACC				NO RECORDABLE INDICATIONS
SW-348(W)							
	VT-3	1SWV-025	ACC				NO RECORDABLE INDICATIONS
SW-349							
	VT3H	1HV-0074	ACC				NO RECORDABLE INDICATIONS
SW-349(W)							
	VT-3	1SWV-026	ACC				NO RECORDABLE INDICATIONS
SW-350							
	VT3H	1HV-0074	ACC				NO RECORDABLE INDICATIONS
SW-350(W)							
	VT-3	1SWV-027	ACC				NO RECORDABLE INDICATIONS
SW-351							
	VT3H	1HV-0074	ACC				NO RECORDABLE INDICATIONS
SW-351(W)							
	VT-3	1SWV-028	ACC				NO RECORDABLE INDICATIONS
SW-PB-304(L)							
	VT-2	1SWV-012	ACC				NO RECORDABLE INDICATIONS

WNP-(2
INTERVAL: 01
PERIOD: 1
OUTAGE: R3
DRAWING NO. SW-305

WASHINGTON PUBLIC POWER SUPPLY SYSTEM
NON-DESTRUCTIVE EXAMINATION SUMMARY TABLE
SYSTEM OR COMPONENT SW(2)-2
DESCRIPTION: SW LOOP B SUPPLY

DATE 08/11/88

IDENT.NO.	EXAM. MTH.	EXAM. DATA SHEET NO.	EXAMINATION RESULTS NO INDIC.	INSIGNIF INDIC.	SIGNIFICANT GEOMETRY	SIGNIFICANT OTHER	REMARKS
SW-196	VT3H	1HV-0074	ACC				NO RECORDABLE INDICATIONS.
SW-196(W)	VT-3	1SWV-029		ACC			HEAVY RUST AND CORROSION ON PIPE AND WELD. NO APPRECIABLE DEPTH.
SW-26	VT3H	1HV-0074	ACC				NO RECORDABLE INDICATIONS
SW-118	VT3H	1HV-0074	ACC				NO RECORDABLE INDICATIONS
SW-118(W)	VT-3	1SWV-052		ACC			MEDIUM RUST ON PIPE, LUGS AND WELD
SW-25	VT3H	1HV-0074	ACC				NO RECORDABLE INDICATIONS
SW-25(W)	VT-3	1SWV-051		ACC			MEDIUM RUST ON PIPE, PADS AND WELD
SW-24	VT3H	1HV-0074	ACC				NO RECORDABLE INDICATIONS
SW-24(W)	VT-3	1SWV-055	ACC				NO RECORDABLE INDICATIONS
SW-23	VT3H	1HV-0074	ACC				NO RECORDABLE INDICATIONS
SW-23(W)	VT-3	1SWV-054	ACC				NO RECORDABLE INDICATIONS
SW-P8-305(L)	VT-2	1SWV-011	ACC				NO RECORDABLE INDICATIONS

02
INTERVAL: 01
PERIOD: 01
OUTAGE: R3
DRAWING NO. SW-306

WASHINGTON PUBLIC POWER SUPPLY SYSTEM
NON-DESTRUCTIVE EXAMINATION SUMMARY TABLE
SYSTEM OR COMPONENT SW(18)-2
DESCRIPTION: SW LOOP B SUPPLY

IDENT..NO.	EXAM. MTH.	EXAM. DATA SHEET NO.	EXAMINATION RESULTS NO INDIC.	INSIGNIF INDIC.	SIGNIFICANT GEOMETRY	SIGNIFICANT OTHER	REMARKS
SW-PB-306(L)							
	VT-2	1SWV-011	ACC				NO RECORDABLE INDICATIONS

WASHINGTON PUBLIC POWER SUPPLY SYSTEM
NON-DESTRUCTIVE EXAMINATION SUMMARY TABLE
SYSTEM OR COMPONENT SW(24)-2
DESCRIPTION: SW LOOP B RETURN

IDENT.NO.	EXAM. MTH.	EXAM. DATA SHEET NO.	EXAMINATION RESULTS NO INDIC.	INSIGNIF INDIC.	SIGNIFICANT GEOMETRY	SIGNIFICANT OTHER	REMARKS
SW-914N	VT3H	1HV-0081	ACC				NO RECORDABLE INDICATIONS. PSI OF REPLACEMENT STRUT. SNUBBER REPLACED BY STRUT XI 2-0418
SW-91	VT3H	1HV-0074	ACC				NO RECORDABLE INDICATIONS
SW-91(W)	VT-3	1SWV-030		ACC			LIGHT CORROSION ON PIPE AND WELD
SW-92	VT3H	1HV-0074	ACC				NO RECORDABLE INDICATIONS
SW-92(W)	VT-3	1SWV-031		ACC			LIGHT CORROSION ON PIPE AND WELD
SW-6	VT3H	1HV-0074	ACC				NO RECORDABLE INDICATIONS
SW-6(W)	VT-3	1SWV-032		ACC			MEDIUM CORROSION, RUST AND SCALE ON WELD AND PIPE. NO APPRECIABLE MATERIAL LOSS
SW-7	VT3H	1HV-0074	ACC				NO RECORDABLE INDICATIONS
SW-7(W)	VT-3	1SWV-033		ACC			MEDIUM CORROSION ON WELD AND PIPE
SW-930N	VT3H	1HV-0074		ACC			BOLTING BURIED IN SAND, CORRODED. BOLTING UNDER WATER, CORRODED.
SW-930N(W)	VT-3	1SWV-042	ACC				NO RECORDABLE INDICATIONS
SW-931N	VT3H	1HV-0074		ACC			BOLTING BURIED IN SAND, CORRODED. BOLTING UNDER WATER, CORRODED.

WNP-02
INTERVAL: 01
PERIOD: 1
OUTAGE: R3
DRAWING NO. SW-307

WASHINGTON PUBLIC POWER SUPPLY SYSTEM
NON-DESTRUCTIVE EXAMINATION SUMMARY TABLE
SYSTEM OR COMPONENT SW(22)-2
DESCRIPTION: SW LOOP B RETURN

DATE 08/11/88

IDENT..NO.	EXAM. MTH.	EXAM. DATA SHEET NO.	EXAMINATION RESULTS NO INDIC.	INSIGNIF INDIC.	SIGNIFICANT GEOMETRY	SIGNIFICANT OTHER	REMARKS
SW-931N(W)	VT-3	1SWV-043	ACC				NO RECORDABLE INDICATIONS
SW-932N	VT3H	1HV-0074		ACC			BOLTING BURIED IN SAND. CORRODED. BOLTING UNDER WATER, CORRODED.
SW-932N(W)	VT-3	1SWV-044	ACC				NO RECORDABLE INDICATIONS
SW-933N(W)	VT-3	1SWV-045	ACC				NO RECORDABLE INDICATIONS
SW-934N(W)	VT-3	1SWV-046	ACC				NO RECORDABLE INDICATIONS
SW-PB-307(L)	VT-2	1SWV-011	ACC				NO RECORDABLE INDICATIONS

02
INTERVAL: 01
PERIOD: 1
OUTAGE: R3
DRAWING NO. SW-308

WASHINGTON PUBLIC POWER SUPPLY SYSTEM
NON-DESTRUCTIVE EXAMINATION SUMMARY TABLE
SYSTEM OR COMPONENT SW(38)-2
DESCRIPTION: SW LOOP B RETURN

DATE 08/11/88

IDENT.NO.	EXAM. MTH.	EXAM. DATA SHEET NO.	EXAMINATION RESULTS NO INDIC.	INSIGNIF INDIC.	SIGNIFICANT GEOMETRY	SIGNIFICANT OTHER	REMARKS
SW-252	VT3H	1HV-0074	ACC				NO RECORDABLE INDICATIONS
SW-252(W)	VT-3	1SWV-034	ACC				NO RECORDABLE INDICATIONS
SW-253	VT3H	1HV-0074	ACC				NO RECORDABLE INDICATIONS
SW-253(W)	VT-3	1SWV-035	ACC				NO RECORDABLE INDICATIONS
SW-254	VT3H	1HV-0074	ACC				NO RECORDABLE INDICATIONS
SW-254(W)	VT-3	1SWV-036	ACC				NO RECORDABLE INDICATIONS
SW-255	VT3H	1HV-0074	ACC				NO RECORDABLE INDICATIONS
SW-256	VT3H	1HV-0074	ACC				NO RECORDABLE INDICATIONS
SW-257	VT3H	1HV-0074	ACC				NO RECORDABLE INDICATIONS
SW-257(W)	VT-3	1SWV-037	ACC				NO RECORDABLE INDICATIONS
SW-258	VT3H	1HV-0074	ACC				NO RECORDABLE INDICATIONS
SW-258(W)	VT-3	1SWV-038	ACC				NO RECORDABLE INDICATIONS
SW-PB-308(L)	VT-2	1SWV-011	ACC				NO RECORDABLE INDICATIONS

WNP-02
INTERVAL: 01
PERIOD: 01
OUTAGE: R3
DRAWING NO. SW-309

WASHINGTON PUBLIC POWER SUPPLY SYSTEM
NON-DESTRUCTIVE EXAMINATION SUMMARY TABLE
SYSTEM OR COMPONENT SW(70)-1
DESCRIPTION: SW SUPPLY HPCS LOOP

DATE 08/11/88

IDENT..NO.	EXAM. MTH.	EXAM. DATA SHEET NO.	EXAMINATION RESULTS NO INDIC.	INSIGNIF INDIC.	SIGNIFICANT GEOMETRY	SIGNIFICANT OTHER	REMARKS
SW-PB-309(L)							
	VT-2	1SWV-047	ACC				NO RECORDABLE INDICATIONS

WN
INTERVAL: 01
PERIOD: 1
OUTAGE: R3
DRAWING NO. SW-310

WASHINGTON PUBL OWER SUPPLY SYSTEM
NON-DESTRUCTIVE EXAMINATION SUMMARY TABLE
SYSTEM OR COMPONENT SW(72)-1
DESCRIPTION: SW HPCS LOOP SUPPLY

DATE 08/11/88

IDENT..NO.	EXAM. MTH.	EXAM. DATA SHEET NO.	EXAMINATION RESULTS NO INDIC.	INSIGNIF INDIC.	SIGNIFICANT GEOMETRY	SIGNIFICANT OTHER	REMARKS
SW-273	VT3H	1HV-0074	ACC				NO RECORDABLE INDICATIONS
SW-273(W)	VT-3	1SWV-039	ACC				NO RECORDABLE INDICATIONS
SW-310	VT3H	1HV-0074	ACC				NO RECORDABLE INDICATIONS
SW-280	VT3H	1HV-0074	ACC				NO RECORDABLE INDICATIONS
SW-449	VT3H	1HV-0074	ACC				NO RECORDABLE INDICATIONS
SW-449(W)	VT-3	1SWV-040	ACC				NO RECORDABLE INDICATIONS
SW-PB-310(L)	VT-2	1SWV-047	ACC				NO RECORDABLE INDICATIONS

WNP-02
INTERVAL: 01
PERIOD: 01
OUTAGE: R3
DRAWING NO. SW-311

WASHINGTON PUBLIC POWER SUPPLY SYSTEM
NON-DESTRUCTIVE EXAMINATION SUMMARY TABLE
SYSTEM OR COMPONENT SW(73)-1
DESCRIPTION: SW HPCS LOOP RETURN

DATE 08/11/88

IDENT.NO.	EXAM. MTH.	EXAM. DATA SHEET NO.	EXAMINATION RESULTS NO INDIC.	INSIGNIF INDIC.	SIGNIFICANT GEOMETRY	SIGNIFICANT OTHER	REMARKS
SW-PB-311(L)							
	VT-2	1SWV-047	ACC				NO RECORDABLE INDICATIONS

WNP-2
INTERVAL: 01
PERIOD: 1
OUTAGE: R3
DRAWING NO. SW-313

WASHINGTON PUBLIC POWER SUPPLY SYSTEM
NON-DESTRUCTIVE EXAMINATION SUMMARY TABLE
SYSTEM OR COMPONENT SW(12)-2
DESCRIPTION: RETURN TO RHR-HX-1A

DATE 08/11/88

IDENT. NO.	EXAM. MTH.	EXAM. DATA SHEET NO.	EXAMINATION RESULTS NO INDIC.	INSIGNIF INDIC.	SIGNIFICANT GEOMETRY	SIGNIFICANT OTHER	REMARKS
SW-1022N	VT3H	1HV-0074	ACC				NO RECORDABLE INDICATIONS

WNP-02
INTERVAL: 01
PERIOD: 1
OUTAGE: R3
DRAWING NO. SW-315

WASHINGTON PUBLIC POWER SUPPLY SYSTEM
NON-DESTRUCTIVE EXAMINATION SUMMARY TABLE
SYSTEM OR COMPONENT SW(122)-2
DESCRIPTION: SUPPLY TO FPC-HX-1B

DATE 08/11/88

IDENT.NO.	EXAM. MTH.	EXAM. DATA SHEET NO.	EXAMINATION RESULTS NO INDIC.	INSIGNIF INDIC.	SIGNIFICANT GEOMETRY	SIGNIFICANT OTHER	REMARKS
SW-948N	VT3H	1HV-0074	ACC				NO RECORDABLE INDICATIONS
SW-949N	VT3H	1HV-0074	ACC				NO RECORDABLE INDICATIONS
SW-949N(W)	VT-3	1SWV-041	ACC				NO RECORDABLE INDICATIONS
SW-950N	VT3H	1HV-0074	ACC				LIMITED EXAMINATION. PART OF HANGER IS IN FIRE BARRIER.
SW-985N	VT3H	1HV-0074	ACC				NO RECORDABLE INDICATIONS
SW-985N(W)	VT-3	1SWV-053	ACC				NO RECORDABLE INDICATIONS

WNP-2
INTERVAL: 01
PERIOD: 1
OUTAGE: R3
DRAWING NO. FPC-301

WASHINGTON PUBLIC POWER SUPPLY SYSTEM
NON-DESTRUCTIVE EXAMINATION SUMMARY TABLE
SYSTEM OR COMPONENT FPC(1)-1
DESCRIPTION: FUEL POOL CIRC/TK-1B

DATE 08/11/88

IDENT.NO.	EXAM. MTH.	EXAM. DATA SHEET NO.	EXAMINATION RESULTS NO INDIC.	INSIGNIF INDIC.	SIGNIFICANT GEOMETRY	SIGNIFICANT OTHER	REMARKS
FPC-62(W)	VT-3	1FPV-003	ACC				NO RECORDABLE INDICATIONS
FPC-63	VT3H	1HV-0074	ACC				NO RECORDABLE INDICATIONS
FPC-64	VT3H	1HV-0074	ACC				NO RECORDABLE INDICATIONS. LIMITED EXAM. BOTTOM 2 INCHES WERE EXAMINED. REST OF HANGER BURIED IN FIRE BARRIER
FPC-44	VT3H	1HV-0074	ACC				NO RECORDABLE INDICATIONS
FPC-42	VT3H	1HV-0074	ACC				NO RECORDABLE INDICATIONS
FPC-43	VT3H	1HV-0074	ACC				NO RECORDABLE INDICATIONS
FPC-PB-301(L)	VT-2	1FPV-005	ACC				NO RECORDABLE INDICATIONS

WNP-02
INTERVAL: 01
PERIOD: 01
OUTAGE: R3
DRAWING NO. FPC-302

WASHINGTON PUBLIC POWER SUPPLY SYSTEM
NON-DESTRUCTIVE EXAMINATION SUMMARY TABLE
SYSTEM OR COMPONENT FPC(2)-1
DESCRIPTION: FPC-P-1A TO DH-1A&1B

DATE 08/11/88

IDENT.NO.	EXAM. MTH.	EXAM. DATA SHEET NO.	EXAMINATION RESULTS NO INDIC.	INSIGNIF INDIC.	SIGNIFICANT GEOMETRY	SIGNIFICANT OTHER	REMARKS
FPC-PB-302(L)							
	VT-2	1FPV-005	ACC				NO RECORDABLE INDICATIONS

W[illegible]2
INTERVAL: C1
PERIOD: 01
OUTAGE: R3
DRAWING NO. FPC-303

WASHINGTON PUB[illegible] POWER SUPPLY SYSTEM
NON-DESTRUCTIVE EXAMINATION SUMMARY TABLE
SYSTEM OR COMPONENT FPC(2)-1
DESCRIPTION: FPC-P-1B TO DM-1A&1B

DATE 08/11/88

IDENT.NO.	EXAM. MTH.	EXAM. DATA SHEET NO.	EXAMINATION RESULTS NO INDIC.	INSIGNIF INDIC.	SIGNIFICANT GEOMETRY	SIGNIFICANT OTHER	REMARKS
FPC-PB-303(L)	VT-2	1FPV-006	ACC				NO RECORDABLE INDICATIONS

WNP-02
INTERVAL: 01
PERIOD: 01
OUTAGE: R3
DRAWING NO. FPC-304

WASHINGTON PUBLIC POWER SUPPLY SYSTEM
NON-DESTRUCTIVE EXAMINATION SUMMARY TABLE
SYSTEM OR COMPONENT FPC(2)-1
DESCRIPTION: FPC-1A&1B DISCHARGE

DATE 08/11/88

IDENT..NO.	EXAM. MTH.	EXAM. DATA SHEET NO.	EXAMINATION RESULTS NO INDIC.	INSIGNIF INDIC.	SIGNIFICANT GEOMETRY	SIGNIFICANT OTHER	REMARKS
FPC-PB-304(L)	VT-2	1FPV-005	ACC				NO RECORDABLE INDICATIONS

WN[illegible]
INTERVAL: C1
PERIOD: 1
OUTAGE: R3
DRAWING NO. FPC-305

WASHINGTON PUBL[illegible]OWER SUPPLY SYSTEM
NON-DESTRUCTIVE EXAMINATION SUMMARY TABLE
SYSTEM OR COMPONENT FPC(3)-1
DESCRIPTION: FPC-DM-1A RETURN

DATE 08/11/88

IDENT.NO.	EXAM. MTH.	EXAM. DATA SHEET NO.	EXAMINATION RESULTS NO INDIC.	INSIGNIF INDIC.	SIGNIFICANT GEOMETRY	SIGNIFICANT OTHER	REMARKS
FPC-163(W)							
	VT-3	1FPV-001	ACC				NO RECORDABLE INDICATIONS
FPC-201							
	VT3H	1HV-0074	ACC				NO RECORDABLE INDICATIONS
FPC-162							
	VT3H	1HV-0074	ACC				NO RECORDABLE INDICATIONS
FPC-160							
	VT3H	1HV-0074	ACC				NO RECORDABLE INDICATIONS
FPC-161							
	VT3H	1HV-0074	ACC				NO RECORDABLE INDICATIONS
FPC-913N							
	VT3H	1HV-0074	ACC				NO RECORDABLE INDICATIONS
FPC-225							
	VT3H	1HV-0104	ACC				PSI OF REPLACEMENT STRUT. SNUBBER REPLACED BY STRUT XI 2-0418-1
FPC-PB-305(L)							
	VT-2	1FPV-005	ACC				NO RECORDABLE INDICATIONS

WNP-02
INTERVAL: 01
PERIOD: 1
OUTAGE: R3
DRAWING NO. FPC-307

WASHINGTON PUBLIC POWER SUPPLY SYSTEM
NON-DESTRUCTIVE EXAMINATION SUMMARY TABLE
SYSTEM OR COMPONENT FPC(8)-1
DESCRIPTION: FPC-P-3 DISCHARGE

DATE 08/11/88

IDENT.NO.	EXAM. MTH.	EXAM. DATA SHEET NO.	EXAMINATION RESULTS NO INDIC.	INSIGNIF INDIC.	SIGNIFICANT GEOMETRY	SIGNIFICANT OTHER	REMARKS
FPC-47(W)	VT-3	1FPV-002	ACC				NO RECORDABLE INDICATIONS

WI[illegible]E
INTERVAL: C1
PERIOD: 01
OUTAGE: R3
DRAWING NO. RCC-201

WASHINGTON PUB[illegible] POWER SUPPLY SYSTEM
NON-DESTRUCTIVE EXAMINATION SUMMARY TABLE
SYSTEM OR COMPONENT RCC(3)-1
DESCRIPTION: RCC SUPPLY

DATE 08/11/88

IDENT.NO.	EXAM. MTH.	EXAM. DATA SHEET NO.	EXAMINATION RESULTS NO INDIC.	INSIGNIF INDIC.	SIGNIFICANT GEOMETRY	SIGNIFICANT OTHER	REMARKS
RCC-PB-201(L)	VT-2	1RCV-007	ACC				NO RECORDABLE INDICATIONS

WNP-02
INTERVAL: 01
PERIOD: C1
OUTAGE: R3
DRAWING NO. RCC-202

WASHINGTON PUBLIC POWER SUPPLY SYSTEM
NON-DESTRUCTIVE EXAMINATION SUMMARY TABLE
SYSTEM OR COMPONENT RCC(36)-1
DESCRIPTION: RCC RETURN

DATE 08/11/88

IDENT..NO.	EXAM. MTH.	EXAM. DATA SHEET NO.	EXAMINATION RESULTS NO INDIC.	INSIGNIF INDIC.	SIGNIFICANT GEOMETRY	SIGNIFICANT OTHER	REMARKS
RCC-PB-202(L)							
	VT-2	1RCV-007	ACC				NO RECORDABLE INDICATIONS

WN[illegible]2
INTERVAL: G1
PERIOD: 1
OUTAGE: R3
DRAWING NO. RCC-301

WASHINGTON PUB[illegible] POWER SUPPLY SYSTEM
NON-DESTRUCTIVE EXAMINATION SUMMARY TABLE
SYSTEM OR COMPONENT RCC(3)-2
DESCRIPTION: RCC SUPPLY TO P-1A/B

DATE 08/11/88

IDENT..NO.	EXAM. MTH.	EXAM. DATA SHEET NO.	EXAMINATION RESULTS NO INDIC.	INSIGNIF INDIC.	SIGNIFICANT GEOMETRY	SIGNIFICANT OTHER	REMARKS
RCC-267							
	VT3H	1HV-0074	ACC				NO RECORDABLE INDICATIONS
RCC-267(W)							
	VT-3	1RCV-003		ACC			CORROSION ON WELDS AND PIPE NO APPRECIABLE DEPTH
RCC-913N							
	VT3H	1HV-0074	ACC				NO RECORDABLE INDICATIONS
RCC-439							
	VT3H	1HV-0074	ACC				NO RECORDABLE INDICATIONS
RCC-477							
	VT3H	1HV-0074	ACC				NO RECORDABLE INDICATIONS
RCC-477(W)							
	VT-3	1RCV-004		ACC			CORROSION ON PIPES AND WELDS NO APPRECIABLE DEPTH

WNP-02
INTERVAL: 01
PERIOD: 1
OUTAGE: R3
DRAWING NO. RCC-302

WASHINGTON PUBLIC POWER SUPPLY SYSTEM
NON-DESTRUCTIVE EXAMINATION SUMMARY TABLE
SYSTEM OR COMPONENT RCC(36)-1
DESCRIPTION: RCC RETURN HEADER

DATE 08/11/88

IDENT. NO.	EXAM. MTH.	EXAM. DATA SHEET NO.	EXAMINATION RESULTS NO INDIC.	INSIGNIF INDIC.	SIGNIFICANT GEOMETRY	SIGNIFICANT OTHER	REMARKS
RCC-315	VT3H	1HV-0074	ACC				NO RECORDABLE INDICATIONS
RCC-316	VT3H	1HV-0074	ACC				NO RECORDABLE INDICATIONS
RCC-316(W)	VT-3	1RCV-005	ACC				NO RECORDABLE INDICATIONS
RCC-325	VT3H	1HV-0074	ACC				NO RECORDABLE INDICATIONS
RCC-487	VT3H	1HV-0074	ACC				NO RECORDABLE INDICATIONS
RCC-487(W)	VT-3	1RCV-006	ACC				NO RECORDABLE INDICATIONS

W[illegible]2
INTERVAL: 01
PERIOD: 01
OUTAGE: R3
DRAWING NO. MS-301

WASHINGTON PUB[illegible] POWER SUPPLY SYSTEM
NON-DESTRUCTIVE EXAMINATION SUMMARY TABLE
SYSTEM OR COMPONENT MS(18)-2-1
DESCRIPTION: MS-RV-1A DISCHARGE

DATE 08/11/88

IDENT.NO.	EXAM. MTH.	EXAM. DATA SHEET NO.	EXAMINATION RESULTS NO INDIC.	INSIGNIF INDIC.	SIGNIFICANT GEOMETRY	SIGNIFICANT OTHER	REMARKS
MSRV-1A-4	VT3H	1HV-0096	ACC				NO RECORDABLE INDICATIONS PSI OF REPLACEMENT STRUT. SNUBBER REPLACED BY STRUT XI 2-418

WNP-02
INTERVAL: 01
PERIOD: 01
OUTAGE: R3
DRAWING NO. MS-303

WASHINGTON PUBLIC POWER SUPPLY SYSTEM
NON-DESTRUCTIVE EXAMINATION SUMMARY TABLE
SYSTEM OR COMPONENT MS(18)-2-3
DESCRIPTION: MS-RV-3A DISCHARGE

DATE 08/11/88

IDENT.NO.	EXAM. MTH.	EXAM. DATA SHEET NO.	EXAMINATION RESULTS NO INDIC.	INSIGNIF INDIC.	SIGNIFICANT GEOMETRY	SIGNIFICANT OTHER	REMARKS
MSRV-3A-4							
	VT3H	1HV-0093	ACC				NO RECORDABLE INDICATIONS PSI OF RPLACEMENT STRUT. SNUBBER REPLACED BY STRUT XI 2-417-2
MSRV-3A-6							
	VT3H	1HV-0095	ACC				NO RECORDABLE INDICATIONS PSI OF REPLACEMENT STRUT. SNUBBER REPLACED BY STRUT XI 2-0418

WNP-2
INTERVAL: 01
PERIOD: 1
OUTAGE: R3
DRAWING NO. MS-304

WASHINGTON PUBLIC POWER SUPPLY SYSTEM
NON-DESTRUCTIVE EXAMINATION SUMMARY TABLE
SYSTEM OR COMPONENT MS(1B)-2-4
DESCRIPTION: MS-RV-4A DISCHARGE

DATE 08/11/88

IDENT.NO.	EXAM. MTH.	EXAM. DATA SHEET NO.	EXAMINATION RESULTS NO INDIC.	INSIGNIF INDIC.	SIGNIFICANT GEOMETRY	SIGNIFICANT OTHER	REMARKS
MSRV-4A-6	VT3H	1HV-0078	ACC				NO RECORDABLE INDICATIONS. PSI OF REPLACEMENT STRUT. SNUBBER REPLACED BY STRUT XI 2-0417-2

WNP-02
INTERVAL: 01
PERIOD: 1
OUTAGE: R3
DRAWING NO. MS-305

WASHINGTON PUBLIC POWER SUPPLY SYSTEM
NON-DESTRUCTIVE EXAMINATION SUMMARY TABLE
SYSTEM OR COMPONENT MS(1B)2-10
DESCRIPTION: MS-RV-1B DISCHARGE

DATE 08/11/88

IDENT. NO.	EXAM. MTH.	EXAM. DATA SHEET NO.	EXAMINATION RESULTS NO INDIC.	INSIGNIF INDIC.	SIGNIFICANT GEOMETRY	SIGNIFICANT OTHER	REMARKS
MS-280							
	VT3H	1HV-0074	ACC				NO RECORDABLE INDICATIONS
MSRV-1B-2							
	VT3H	1HV-0074	ACC				NO RECORDABLE INDICATIONS
MSRV-1B-3							
	VT3H	1HV-0074	ACC				NO RECORDABLE INDICATIONS
MSRV-1B-1							
	VT3H	1HV-0074	ACC				NO RECORDABLE INDICATIONS
MS-281							
	VT3H	1HV-0074	ACC				NO RECORDABLE INDICATIONS
MSRV-1B-5							
	VT3H	1HV-0074	ACC				NO RECORDABLE INDICATIONS
MSRV-1B-4							
	VT3H	1HV-0074	ACC				NO RECORDABLE INDICATIONS
MS-282							
	VT3H	1HV-0074	ACC				NO RECORDABLE INDICATIONS
MS-334							
	VT3H	1HV-0074	ACC				NO RECORDABLE INDICATIONS
MSRV-1B-6PS							
	VT3H	1HV-0074	ACC				NO RECORDABLE INDICATIONS

W[illegible]2
INTERVAL: 01
PERIOD: 1
OUTAGE: R3
DRAWING NO. MS-309

WASHINGTON PU[illegible] POWER SUPPLY SYSTEM
NON-DESTRUCTIVE EXAMINATION SUMMARY TABLE
SYSTEM OR COMPONENT MS(18)2-14
DESCRIPTION: MS-RV-5B DISCHARGE

DATE 08/11/88

IDENT.NO.	EXAM. MTH.	EXAM. DATA SHEET NO.	EXAMINATION RESULTS NO INDIC.	INSIGNIF INDIC.	SIGNIFICANT GEOMETRY	SIGNIFICANT OTHER	REMARKS
MSRV-5B-2	VT3H	1HV-0074	ACC				NO RECORDABLE INDICATIONS
MSRV-5B-1	VT3H	1HV-0074	ACC				NO RECORDABLE INDICATIONS
MS-328	VT3H	1HV-0074	ACC				NO RECORDABLE INDICATIONS
MSRV-5B-3	VT3H	1HV-0074	ACC				NO RECORDABLE INDICATIONS
MSRV-5B-5	VT3H	1HV-0074	ACC				NO RECORDABLE INDICATIONS
MSRV-5B-4	VT3H	1HV-0074	ACC				NO RECORDABLE INDICATIONS
MS-329	VT3H	1HV-0074	ACC				NO RECORDABLE INDICATIONS
MS-329(W)	VT-3	1MSV-038	ACC				NO RECORDABLE INDICATIONS
MSRV-5B-6	VT3H	1HV-0074	ACC				NO RECORDABLE INDICATIONS
MSRV-5B-6(W)	VT-3	1MSV-025	ACC				NO RECORDABLE INDICATIONS
MSRV-5B-7	VT3H	1HV-0074	ACC				NO RECORDABLE INDICATIONS
MSRV-5B-7(W)	VT-3	1MSV-026	ACC				NO RECORDABLE INDICATIONS
MSRV-5B-8	VT3H	1HV-0074	ACC				NO RECORDABLE INDICATIONS
MS-330	VT3H	1HV-0074	ACC				NO RECORDABLE INDICATIONS
MS-330(W)	VT-3	1MSV-028	ACC				NO RECORDABLE INDICATIONS

WNP-C2
INTERVAL: 01
PERIOD: 1
OUTAGE: R3
DRAWING NO. MS-309

WASHINGTON PUBLIC POWER SUPPLY SYSTEM
NON-DESTRUCTIVE EXAMINATION SUMMARY TABLE
SYSTEM OR COMPONENT MS(18)2-14
DESCRIPTION: HS-RV-5B DISCHARGE

DATE 08/11/88

IDENT.NO.	EXAM. MTH.	EXAM. DATA SHEET NO.	EXAMINATION RESULTS NO INDIC.	INSIGNIF INDIC.	SIGNIFICANT GEOMETRY	SIGNIFICANT OTHER	REMARKS
MSRV-5B-9							
	VT3H	1HV-0074	ACC				NO RECORDABLE INDICATIONS
MS-345							
	VT3H	1HV-0074	ACC				NO RECORDABLE INDICATIONS
MSRV-5B-10PS							
	VT3H	1HV-0074	ACC				NO RECORDABLE INDICATIONS

WN[illegible]2
INTERVAL: J1
PERIOD: 1
OUTAGE: R3
DRAWING NO. MS-312

WASHINGTON PUBL[illegible] POWER SUPPLY SYSTEM
NON-DESTRUCTIVE EXAMINATION SUMMARY TABLE
SYSTEM OR COMPONENT MS(18)-2-7
DESCRIPTION: MS-RV-3C DISCHARGE

DATE 08/11/88

IDENT. NO.	EXAM. MTH.	EXAM. DATA SHEET NO.	EXAMINATION RESULTS NO INDIC.	INSIGNIF INDIC.	SIGNIFICANT GEOMETRY	SIGNIFICANT OTHER	REMARKS
MSRV-3C-10	VT3H	1HV-0094	ACC				NO RECORDABLE INDICATIONS. PSI OF REPLACEMENT STRUT. SNUBBER REPLACED BY STRUT XI 2-418

WNP-02
INTERVAL: 01
PERIOD: 1
OUTAGE: R3
DRAWING NO. MS-313

WASHINGTON PUBLIC POWER SUPPLY SYSTEM
NON-DESTRUCTIVE EXAMINATION SUMMARY TABLE
SYSTEM OR COMPONENT MS(18)-2-6
DESCRIPTION: MS-RV-4C DISCHARGE

DATE 08/11/88

IDENT.NO.	EXAM. MTH.	EXAM. DATA SHEET NO.	EXAMINATION RESULTS NO INDIC.	INSIGNIF INDIC.	SIGNIFICANT GEOMETRY	SIGNIFICANT OTHER	REMARKS
MS-304							
MSRV-4C-2	VT3H	1HV-0074	ACC				NO RECORDABLE INDICATIONS
MSRV-4C-3	VT3H	1HV-0074	ACC				NO RECORDABLE INDICATIONS
MSRV-4C-1	VT3H	1HV-0074	ACC				NO RECORDABLE INDICATIONS
MS-305	VT3H	1HV-0074	ACC				NO RECORDABLE INDICATIONS
MSRV-4C-5	VT3H	1HV-0074	ACC				NO RECORDABLE INDICATIONS
MSRV-4C-6	VT3H	1HV-0074	ACC				NO RECORDABLE INDICATIONS
MSRV-4C-8	VT3H	1HV-0074	ACC				NO RECORDABLE INDICATIONS
MSRV-4C-7	VT3H	1HV-0074	ACC				NO RECORDABLE INDICATIONS
MS-306	VT3H	1HV-0074	ACC				NO RECORDABLE INDICATIONS
MS-307	VT3H	1HV-0074	ACC				NO RECORDABLE INDICATIONS
MS-339	VT3H	1HV-0074	ACC				NO RECORDABLE INDICATIONS
MSRV-4C-2	VT3H	1HV-0074	ACC				NO RECORDABLE INDICATIONS
MSRV-4C-9	VT3H	1HV-0074	ACC				NO RECORDABLE INDICATIONS
	VT3H	1HV-0074	ACC				NO RECORDABLE INDICATIONS

WN[illegible]2
INTERVAL: 01
PERIOD: 1
OUTAGE: R3
DRAWING NO. MS-317

WASHINGTON PUB[illegible] POWER SUPPLY SYSTEM
NON-DESTRUCTIVE EXAMINATION SUMMARY TABLE
SYSTEM OR COMPONENT MS(18)2-16
DESCRIPTION: MS-RV-3D DISCHARGE

DATE 08/11/88

IDENT.NO.	EXAM. MTH.	EXAM. DATA SHEET NO.	EXAMINATION RESULTS NO INDIC.	INSIGNIF INDIC.	SIGNIFICANT GEOMETRY	SIGNIFICANT OTHER	REMARKS
MSRV-3D-7							
	VT3H	1HV-0077	ACC				NO RECORDABLE INDICATIONS. PSI OF REPLACEMENT STRUT. SNUBBER REPLACED WITH STRUT XI 2-0417-2

WNP-02
INTERVAL: 01
PERIOD: 1
OUTAGE: R3
DRAWING NO. MS-318

WASHINGTON PUBLIC POWER SUPPLY SYSTEM
NON-DESTRUCTIVE EXAMINATION SUMMARY TABLE
SYSTEM OR COMPONENT MS(18)2-15
DESCRIPTION: MS-RV-4D DISCHARGE

DATE 08/11/88

IDENT.NO.	EXAM. MTH.	EXAM. DATA SHEET NO.	EXAMINATION RESULTS NO INDIC.	INSIGNIF INDIC.	SIGNIFICANT GEOMETRY	SIGNIFICANT OTHER	REMARKS
MSRV-4D-5							
	VT3H	1HV-0092	ACC				NO RECORDABLE INDICATIONS. PSI OF REPLACEMENT STRUT. SNUBBER REPLACED BY STRUT XI 2-0417-2

W[illegible]2
INTERVAL: 01
PERIOD: 01
OUTAGE: R3
DRAWING NO. CRD-201

WASHINGTON PUB[illegible] POWER SUPPLY SYSTEM
NON-DESTRUCTIVE EXAMINATION SUMMARY TABLE
SYSTEM OR COMPONENT CRD(12)-3
DESCRIPTION: CRD SCRAM DISCHARGE

DATE 08/11/88

IDENT..NO.	EXAM. MTH.	EXAM. DATA SHEET NO.	EXAMINATION RESULTS NO INDIC.	INSIGNIF INDIC.	SIGNIFICANT GEOMETRY	SIGNIFICANT OTHER	REMARKS
CRD-PB-201(L)							
	VT-2	1CRV-001	ACC				NO RECORDABLE INDICATIONS

WNP-02
INTERVAL: 01
PERIOD: 01
OUTAGE: R3
DRAWING NO. CRD-202

WASHINGTON PUBLIC POWER SUPPLY SYSTEM
NON-DESTRUCTIVE EXAMINATION SUMMARY TABLE
SYSTEM OR COMPONENT CRD(12)-3
DESCRIPTION: CRD SCRAM DISCHARGE

DATE 08/11/88

IDENT.NO.	EXAM. MTH.	EXAM. DATA SHEET NO.	EXAMINATION RESULTS NO INDIC.	INSIGNIF INDIC.	SIGNIFICANT GEOMETRY	SIGNIFICANT OTHER	REMARKS
CRD-PB-202(L)	VT-2	1CRV-001	ACC				NO RECORDABLE INDICATIONS

WN
INTERVAL: 01
PERIOD: 01
OUTAGE: R3
DRAWING NO. SLC-101

WASHINGTON PUBL OWER SUPPLY SYSTEM
NON-DESTRUCTIVE EXAMINATION SUMMARY TABLE
SYSTEM OR COMPONENT SLC(2)-4S
DESCRIPTION: SLC PUMP DISCHARGE

DATE 08/11/88

IDENT.NO.	EXAM. MTH.	EXAM. DATA SHEET NO.	EXAMINATION RESULTS NO INDIC.	INSIGNIF INDIC.	SIGNIFICANT GEOMETRY	SIGNIFICANT OTHER	REMARKS
SLC-PB-101(L)							
SLC-4453-13	VT-2	1VT2-88	ACC				NO RECORDABLE INDICATIONS
SLC-4453-14	VT3H	1HV-0074	ACC				NO RECORDABLE INDICATIONS
SLC-4453-21	VT3H	1HV-0074	ACC				NO RECORDABLE INDICATIONS
SLC-4453-22	VT3H	1HV-0074	ACC				NO RECORDABLE INDICATIONS
SLC-4453-23	VT3H	1HV-0074	ACC				NO RECORDABLE INDICATIONS
SLC-4475-113	VT3H	1HV-0074	ACC				NO RECORDABLE INDICATIONS
	VT3H	1HV-3090	ACC				NO RECORDABLE INDICATIONS PSI OF REPLACEMENT STRUT. SNUBBER REPLACED WITH STRUT XI 0417-2

APPENDIX C

Repair/Replacement Listing
NIS-2 Owner's Report

This appendix summarizes all ASME Section XI repairs/replacements performed between June 24, 1987 and June 9, 1988. Also contained in this appendix are NIS-2 forms, not previously submitted, for work completed prior to June 24, 1987. For each repair/replacement the status of the NIS-2 Owner's Report is stated. For repairs and replacements undergoing review, a brief summary of the work performed is provided in place of the NIS-2 Owner's Report. After the review is complete NIS-2 Owner's Reports will be issued and will be included with the next ISI Summary Report.

ASME SECTION XI REPAIR/REPLACEMENT LISTING for WNP-2

PLAN, MWR, or PPM No.	COMPONENT IDENT. NUMBER and/or WORK DESCRIPTION	COMPONENT DESCRIPTION	NIS-2 REPORT IN SUMMARY REPORT
2-0230	RHR-PS-16A,16B,16C,19A,19B,19C: REROUTE INST. LINE	TUBING	RF88A SUMMARY REPORT
2-0264	H202 ANALYZER CMS-SR-14	TUBING	RF88A SUMMARY REPORT
2-0265	H202 ANALYZER CMS-SR-13	TUBING	RF88A SUMMARY REPORT
2-0266	H202 ANALYZER CMS-SR-13,14	TUBING	RF88A SUMMARY REPORT
2-0267	X72,X73: H202 MOD	PIPING	RF88A SUMMARY REPORT
2-0268	X42,X78: H202 MOD	PIPING	RF88A SUMMARY REPORT
2-0268R1	X78: H202 MOD	PIPING	RF88A SUMMARY REPORT
2-0269	X82,X84: H202 MOD	PIPING	RF88A SUMMARY REPORT
2-0270	H202 ANALYZER CMS-SR-13	TUBING	RF88A SUMMARY REPORT
2-0272	PSR-V-X77A3,4: BODY TO BONNET SEAL WELDS	VALVE(S)	RF88A SUMMARY REPORT
2-0273	HPCS-RV-14: LAP JOINT FLANGES	PIPING	RF88A SUMMARY REPORT
2-0274	RWCU-FT-15,41: REROUTE PIPING & TUBING	PIPING/TUBING	RF88A SUMMARY REPORT
2-0275	RHR-DPIS-9A,9B,9C (SPARE)	TUBING	RF88A SUMMARY REPORT
2-0276	MSLC-FT-3A,3C: REROUTE TUBING	TUBING	RF88A SUMMARY REPORT
2-0281	PI-EFC-X18a,b,c,d: ADD TEST CONNECTION	PIPING	RF88A SUMMARY REPORT
2-0284	RHR-2264-22: CR MOD	COMPONENT SUPPORT	RF88A SUMMARY REPORT
2-0287	B220-HGR-780-41: HGR REWORK	COMPONENT SUPPORT	RF88A SUMMARY REPORT
2-0292	RRC & RCC LINES: INSTALL FLANGES	PIPING	RF88A SUMMARY REPORT
2-0296	RCIC-33,34: HGR REWORK	COMPONENT SUPPORT	RF88A SUMMARY REPORT
2-0297	MAIN STEAM DRIP LEG SUPPORTS	COMPONENT SUPPORT	RF88A SUMMARY REPORT
2-0298	RCIC-129: HGR REWORK	COMPONENT SUPPORT	RF88A SUMMARY REPORT
2-0301R1	RRC-V-20: REPLACE	PIPING	RF88A SUMMARY REPORT
2-0303	MS HGRS	COMPONENT SUPPORT	RF88A SUMMARY REPORT
2-0304	RCIC-IC-4: HGR REWORK	COMPONENT SUPPORT	RF88A SUMMARY REPORT
2-0309	RCIC-5: HGR REWORK	COMPONENT SUPPORT	RF88A SUMMARY REPORT

ASME SECTION XI REPAIR/REPLACEMENT LISTING for WNP-2

PLAN, MWR, or PPM No.	COMPONENT IDENT. NUMBER and/or WORK DESCRIPTION	COMPONENT DESCRIPTION	NIS-2 REPORT IN SUMMARY REPORT
2-0310	RCC-150,151,161: HGR REWORK	COMPONENT SUPPORT	RF88A SUMMARY REPORT
2-0311	MS-147: HGR REWORK	COMPONENT SUPPORT	RF88A SUMMARY REPORT
2-0316	FDR-V-570: REROUTE/RELOCATE	PIPING	WORK DEFERRED
2-0317	X51 (ACCESS HATCH PEN.)	HATCH	RF88A SUMMARY REPORT.
2-0318	FPC-V-12A	VALVE(S)	RF88A SUMMARY REPORT
2-0319	MS-TK-3M,N,P,R,S,U,V: ADD TEST CONN.	TANK(S)	RF88A SUMMARY REPORT
2-0321	RCIC-RO-5,13	PIPING	WORK DEFERRED
2-0322	FDR-V-647,EDR-V-661: ADDITION	PIPING	RF88A SUMMARY REPORT
2-0324	MS-V-177B: REPLACE	PIPING	RF88A SUMMARY REPORT
2-0325R1	LPCS-RV-1B: TEST CONN.	RELIEF VALVE(S)	RF88A SUMMARY REPORT
2-0326R1	RHR-RV-1A: TEST CONN.	RELIEF VALVE(S)	RF88A SUMMARY REPORT
2-0327R1	HPCS-RV-1B: TEST CONN.	RELIEF VALVE(S)	RF88A SUMMARY REPORT
2-0328R1	RHR-RV-25A: TEST CONN.	RELIEF VALVE(S)	RF88A SUMMARY REPORT
2-0329	RHR-RV-25C: TEST CONN.	RELIEF VALVE(S)	SEE 2-0329R1
2-0329R1	RHR-RV-25C: TEST CONN.	RELIEF VALVE(S)	WORK COMPLETE NIS-2 NOT ISSUED
2-0330	D-220-58,0-IR-22: BLOCK CLAMPS	COMPONENT SUPPORT	RF88A SUMMARY REPORT
2-0332	RRC LOOPS A & B DRAIN LINES: REPLACE	PIPING	RF88A SUMMARY REPORT
2-0335	TIP PURGE LINE: MOD	CONTAINMENT	RF88A SUMMARY REPORT
2-0336	SW-RO : FAB. PLATES,SPACER RINGS,MOUNTING BRACK.	PIPING	RF88A SUMMARY REPORT
2-0337	SW-RO-10A,10B,11A,11B: INSTALL	PIPING	RF88A SUMMARY REPORT
2-0338	SW KEEP-FULL SYSTEM: INSTALL	PIPING	RF88A SUMMARY REPORT
2-0339	SW-V-2A,2B: INSTALL SPACER RINGS, MOUNTING BRACKET	PIPING	RF88A SUMMARY REPORT
2-0340	SW-RSM-1,2,3 (RAD. DETECTION CHAMBERS): FAB	CHAMBERS	RF88A SUMMARY REPORT
2-0341	SW-RSM-1,2,3 & SR-42,43: INSTALL PIPING & VALVES	PIPING/TUBING	RF88A SUMMARY REPORT
2-0341R1	SR-42,43	PIPING/TUBING	RF88A SUMMARY REPORT

ASME SECTION XI REPAIR/REPLACEMENT LISTING for WNP-2

PLAN, MWR, or PPN No.	COMPONENT IDENT. NUMBER and/or WORK DESCRIPTION	COMPONENT DESCRIPTION	NIS-2 REPORT IN SUMMARY REPORT
2-0342	8" SW PIPE: REPLACE	PIPING	RF88A SUMMARY REPORT
2-0343	LPCS-DPI-10 (SPARE)	PIPING/TUBING	RF88A SUMMARY REPORT
2-0344	HPCS-PI-2 (SPARE)	PIPING/TUBING	RF88A SUMMARY REPORT
2-0348	3/4" RRC LINE: INSTALL FLANGES	PIPING	RF88A SUMMARY REPORT
2-0349	4" RCC LINE: INSTALL FLANGES	PIPING	RF88A SUMMARY REPORT
2-0350	1.5" RCC LINE: INSTALL FLANGES	PIPING	RF88A SUMMARY REPORT
2-0353	4" RCC LINE: INSTALL FLANGES	PIPING	RF88A SUMMARY REPORT
2-0354	SLC SYSTEM: MOD	PIPING	NOT COMPLETE, REPORTED RF87A
2-0358	PI(1)-4S-X80b: REROUTE PIPING	PIPING	RF88A SUMMARY REPORT
2-0365	MS-V-37E,38E,37G,38G (MSRV VACUUM BREAKERS)	VALVE(S)	RF88A SUMMARY REPORT
2-0370	SLC SUPPORTS	COMPONENT SUPPORT	RF88A SUMMARY REPORT
2-0371	RHR-441 (HGR)	COMPONENT SUPPORT	RF88A SUMMARY REPORT
2-0373	MS-RV-4D: REPLACE DISC	RELIEF VALVE(S)	RF88A SUMMARY REPORT
2-0374	RHR-RV-1B	RELIEF VALVE(S)	WORK DEFERRED
2-0375	RHR-RV-88A,RHR(3)-2A	RELIEF VALVE(S) & PIPING	RF88A SUMMARY REPORT
2-0376	RHR-RV-88B,RHR(3)-2B	RELIEF VALVE(S) & PIPING	RF88A SUMMARY REPORT
2-0377	RHR-RV-88C,RHR(3)-1C	RELIEF VALVE(S) & PIPING	RF88A SUMMARY REPORT
2-0378	LPCS-RV-31,LPCS(2)-1	RELIEF VALVE(S) & PIPING	RF88A SUMMARY REPORT
2-0381	MSRV-2B-5,3C-4,4C-4 (SNUBBERS): REPL WITH STRUT	COMPONENT SUPPORT	RF88A SUMMARY REPORT
2-0386	D220-3.0-X74a: REPLACE U-BOLT	TUBING	RF88A SUMMARY REPORT
2-0389	SLC-4475-12,120: MOD RIGID STRUT	COMPONENT SUPPORT	RF88A SUMMARY REPORT
2-0393	RWCU-HX-1B: REPLACE DIAPHRAGM	HEAT EXCHANGER	WORK COMPLETE NIS-2 NOT ISSUED
2-0395	FPC-V-112A,112B DISC TRAVEL STOP	VALVE(S)	RF88A SUMMARY REPORT
2-0396	2" FPC(25)-1: BOLTING	PIPING	RF88A SUMMARY REPORT
2-0397	RRC-V-20: BODY TO BONNET SEAL WELD	VALVE(S)	WORK COMPLETE NIS-2 NOT ISSUED

ASME SECTION XI REPAIR/REPLACEMENT LISTING for WNP-2

PLAN, MWR, or PPM No.	COMPONENT IDENT. NUMBER and/or WORK DESCRIPTION	COMPONENT DESCRIPTION	NIS-2 REPORT IN SUMMARY REPORT
2-0398	6" LPCS(4)-2 BOLTING	PIPING	RF88A SUMMARY REPORT
2-0398R1	6" LPCS(4)-2 BOLTING	PIPING	RF88A SUMMARY REPORT
2-0399	FPC-V-122 DISC TRAVEL STOP	VALVE(S)	WORK DEFERRED
2-0400	RHR(1)-4A,4B,4C & RHR-V-709A,B,C	PIPING	WORK COMPLETE NIS-2 NOT ISSUED
2-0402	RHR-RV-5 TEST CONN.	RELIEF VALVE(S)	WORK COMPLETE NIS-2 NOT ISSUED
2-0403	VACUUM BREAKER VALVES	VALVE(S)	RF88A SUMMARY REPORT
2-0404	RWCU-V-39	VALVE(S)	RF88A SUMMARY REPORT
2-0405	TIP PROBE LINE	TUBING	RF88A SUMMARY REPORT
2-0408	RWCU-P-1B	PIPING	WORK COMPLETE NIS-2 NOT ISSUED
2-0409	RWCU-P-1B	COMPONENT SUPPORT	WORK COMPLETE NIS-2 NOT ISSUED
2-0410	RWCU-P-1A	PIPING	WORK COMPLETE NIS-2 NOT ISSUED
2-0411	RWCU-P-1A	COMPONENT SUPPORT	WORK COMPLETE NIS-2 NOT ISSUED
2-0413-1	CIA LOOP A: MOD (PREFAB)	PIPING	RF88A SUMMARY REPORT
2-0413-2	CIA LOOP A: MOD (INSTALL)	PIPING	RF88A SUMMARY REPORT
2-0414-1	CIA LOOP B: MOD (PREFAB)	PIPING	RF88A SUMMARY REPORT
2-0414-2	CIA LOOP B: MOD (INSTALL)	PIPING	RF88A SUMMARY REPORT
2-0415	RHR LOOP B RO: FAB. PLATES & MOD. FLANGES	PIPING	RF88A SUMMARY REPORT
2-0416	RHR-RO-10B & RHR-V-53B: INSTALL	PIPING	RF88A SUMMARY REPORT
2-0417-1	MACHINE UNDERSIZED PINS	COMPONENT SUPPORT	RF88A SUMMARY REPORT
2-0417-2	SNUBBERS: REPL WITH RIGID STRUTS (UNDERSIZED PINS)	COMPONENT SUPPORT	RF88A SUMMARY REPORT
2-0417-3	SLC-4475-113	COMPONENT SUPPORT	RF88A SUMMARY REPORT
2-0418	SNUBBERS: REPL WITH RIGID STRUTS (STANDARD PINS)	COMPONENT SUPPORT	RF88A SUMMARY REPORT
2-0418-1	SNUBBERS: REPLACE WITH RIGID STRUTS	COMPONENT SUPPORT	RF88A SUMMARY REPORT
2-0419	RHR-RV-25B	RELIEF VALVE(S)	WORK COMPLETE NIS-2 NOT ISSUED
2-0421- 1	FPC-V-140	VALVE(S)	NOT COMPLETE

ASME SECTION XI REPAIR/REPLACEMENT LISTING for WNP-2

PLAN. MWR. or PPN No.	COMPONENT IDENT. NUMBER and/or WORK DESCRIPTION	COMPONENT DESCRIPTION	NIS-2 REPORT IN SUMMARY REPORT
2-0421- 2	FPC-V-146A	VALVE(B)	WORK DEFERRED
2-0421- 3	FPC-V-146B	VALVE(B)	WORK DEFERRED
2-0421- 4	HPCS-V-16	VALVE(S)	RF88A SUMMARY REPORT
2-0421- 5	HPCS-V-2	VALVE(B)	RF88A SUMMARY REPORT
2-0421- 6	HPCS-V-24	VALVE(B)	RF88A SUMMARY REPORT
2-0421- 7	HPCS-V-28	VALVE(S)	WORK COMPLETE NIS-2 NOT ISSUED
2-0421- 8	LPCS-V-3	VALVE(B)	RF88A SUMMARY REPORT
2-0421- 9	RCIC-V-11	VALVE(B)	WORK COMPLETE NIS-2 NOT ISSUED
2-0421-10	RCIC-V-30	VALVE(B)	WORK COMPLETE NIS-2 NOT ISSUED
2-0421-11	RHR-V-31A	VALVE(S)	RF88A SUMMARY REPORT
2-0421-12	RHR-V-31B	VALVE(S)	RF88A SUMMARY REPORT
2-0421-13	RHR-V-31C	VALVE(S)	RF88A SUMMARY REPORT
2-0421-14	RHR-V-46A	VALVE(S)	RF88A SUMMARY REPORT
2-0421-15	RHR-V-46B	VALVE(S)	RF88A SUMMARY REPORT
2-0421-16	RHR-V-46C	VALVE(S)	RF88A SUMMARY REPORT
2-0421-17	SW-V-1A	VALVE(S)	RF88A SUMMARY REPORT
2-0421-18	SW-V-1B	VALVE(S)	RF88A SUMMARY REPORT
2-0422	RCIC-V-204	PIPING	RF88A SUMMARY REPORT
2-0423	CIA-RV-5A	VALVE(S)	WORK COMPLETE NIS-2 NOT ISSUED
2-0424	CIA-RV-5B	VALVE(S)	WORK COMPLETE NIS-2 NOT ISSUED
2-0425	CIA-RV-6A	VALVE(S)	RF88A SUMMARY REPORT
2-0426	SLC-V-4B	VALVE(S)	RF88A SUMMARY REPORT
2-0427	MS-V-177A	VALVE(S)	RF88A SUMMARY REPORT
2-0428	MS-RV-2C	RELIEF VALVE(S)	RF88A SUMMARY REPORT
2-0429	MS-RV-4B	RELIEF VALVE(S)	RF88A SUMMARY REPORT

ASME SECTION XI REPAIR/REPLACEMENT LISTING for WNP-2

PLAN, NWR, or PPM No.	COMPONENT IDENT. NUMBER and/or WORK DESCRIPTION	COMPONENT DESCRIPTION	NIS-2 REPORT IN SUMMARY REPORT
2-0430	TIP-V-15	VALVE(S)	RF88A SUMMARY REPORT
2-0431	MS-V-28A	VALVE(S)	NIS-2 NOT REQUIRED
2-0432	MS-V-28B	VALVE(S)	NIS-2 NOT REQUIRED
2-0433	MS-V-28C	VALVE(S)	NIS-2 NOT REQUIRED
2-0434	MS-V-28D	VALVE(S)	NIS-2 NOT REQUIRED
2-0436	MS-V-28C STEM DISC/DISC	VALVE(S)	RF88A SUMMARY REPORT
2-0437	SNUBBERS ON CVB-V-1QR	COMPONENT SUPPORT	WORK COMPLETE NIS-2 NOT ISSUED
2-0438	RCIC-V-752D: REPLACE	PIPING	WORK COMPLETE NIS-2 NOT ISSUED
2-0439	MS-V-28C: REPAIR MAIN DISC	VALVE(S)	NOT COMPLETED
2-0440	RCIC-V-30 ARC STRIKE	VALVE(S)	WORK DEFERRED
2-0443-1	MS-V-37S BOLTING MATERIAL, MS(18)-2 (MSRV LINE)	PIPING	WORK COMPLETE NIS-2 NOT ISSUED
2-0443-2	MS-V-37J	PIPING	WORK COMPLETE NIS-2 NOT ISSUED
2-0443-3	MS-V-38C	PIPING	WORK COMPLETE NIS-2 NOT ISSUED
2-0444	RCIC-V-54: REPLACE	PIPING	WORK COMPLETE NIS-2 NOT ISSUED
2-0445-1	RWCU-RV-2 BOLTING ON RWCU-HX-2A	HEAT EXCHANGER	WORK COMPLETE NIS-2 NOT ISSUED
2-0445-2	RWCU-RV-3 BOLTING ON RWCU-HX-1A	HEAT EXCHANGER	WORK COMPLETE NIS-2 NOT ISSUED
2-0446	OG-V-124	VALVE(S)	RF88A SUMMARY REPORT
2-0447	PSR-V-X77A4 U-BOLT	COMPONENT SUPPORT	RF88A SUMMARY REPORT
2-0448	RRC-V-115 (NEW VALVE): INSTALL	PIPING	WORK COMPLETE NIS-2 NOT ISSUED
2-0449	PIPE CAP FOR 0.75" MS(55)-4: REPLACE	PIPING	NOT COMPLETED
NWR AT2722	RPV	CRD	RF88A SUMMARY REPORT
NWR AT2723	RPV	CRD	RF88A SUMMARY REPORT
NWR AT2724	RPV	CRD	RF88A SUMMARY REPORT
NWR AT2725	RPV	CRD	RF88A SUMMARY REPORT
NWR AT2726	RPV	CRD	RF88A SUMMARY REPORT

ASME SECTION XI REPAIR/REPLACEMENT LISTING for WNP-2

PLAN, MWR, or PPN No.	COMPONENT IDENT. NUMBER and/or WORK DESCRIPTION	COMPONENT DESCRIPTION	NIS-2 REPORT IN SUMMARY REPORT
MWR AT2727	RPV	CRD	RF88A SUMMARY REPORT
MWR AT2728	RPV	CRD	RF88A SUMMARY REPORT
MWR AT2729	RPV	CRD	RF88A SUMMARY REPORT
MWR AT2731	RPV	CRD	RF88A SUMMARY REPORT
MWR AT2732	RPV	CRD	RF88A SUMMARY REPORT
MWR AT4067	SW-915N, SW-987N, SW-21	COMPONENT SUPPORT	RF88A SUMMARY REPORT
MWR AT4071	RRC-1C-14	COMPONENT SUPPORT	RF88A SUMMARY REPORT

TOTAL COUNT = 157

The following summarizes repairs/replacements that have been completed but the NIS-2 forms have not yet been issued.

PLAN NO.	DESCRIPTION	SUMMARY OF WORK
2-0329 R1	RHR-RV-25C	Installed test port on relief valve.
2-0393	RWCU-HX-1B	Replaced diaphragm plate on heat exchanger.
2-0397	RRC-V-20	Made valve body to bonnet seal weld.
2-0400	RHR(1)-4A, 4B, 4C	Removed valves RHR-V-709A, 709B and 709C and capped the lines.
2-0402	RHR-RV-5	Installed test port on relief valve.
2-0408 2-0409 2-0410 2-0411	RWCU(1)-4-P1 and P2	Replaced RWCU pumps. See page 8 for further details.
2-0419	RHR-RV-25B	Installed test port on relief valve.
2-0421-7	HPCS-V-28	Installed valve bushing retainer tab.
2-0421-9	RCIC-V-11	Installed valve bushing retainer tab.
2-0421-10	RCIC-V-30	Installed valve bushing retainer tab.
2-0423	CIA-RV-5A	Changed relief valve seats from hard to soft.

PLAN NO.	DESCRIPTION	SUMMARY OF WORK
2-0424	CIA-RV-5B	Changed relief valve seats from hard to soft.
2-0437	CVB-V-1QR	Replaced snubber for valve.
2-0438	RCIC(13)-4CL2	Replaced valve RCIC-V-752D.
2-0443-1 2-0443-2 2-0443-3	MS-V-37S MS-V-37j MS-V-38C	Replaced nut material for valve flanged joints.
2-0444	RCIC(13)-4CL2	Replaced valve RCIC-V-58.
2-0445-1 2-0445-2	RWCU-RV-2 RWCU-RV-3	Replaced bolting material for relief valve flanged joints.
2-0448	RRC(51)-4	Installed new valve RRC-V-115.

WASHINGTON PUBLIC POWER SUPPLY SYSTEM

PLAN NO. 2-0230

FORM NIS-2 OWNER'S REPORT FOR REPAIRS OR REPLACEMENTS
As Required by the Provisions of the ASME Code Section XI

1. Owner (Name) Washington Public Power Supply System — Date 11/17/87
   Owner (Address) 3000 George Washington Way, Richland, WA — Sheet 1 of 1
2. Plant (Name) WPPSS Nuclear Power Plant (WNP) — Unit WNP-2
   Plant (Address) Hanford, Benton County, WA — C20069 Repair Organization P.O. No., Job No., etc.
3. Work Performed by (Name) Bechtel Construction, Inc.
   Work Performed by (Address) P.O. Box 600, Richland, WA
4. Identification of System Residual Heat Removal (RHR) System
5. (a) Applicable Construction Code ASME Section III 19 71 Edition, W73 Addenda, None Code Case
   (b) Applicable Edition of ASME Section XI Utilized for Repairs or Replacements 19 80 Edition, W80
   Addenda, N308 Code Case
6. Identification of Components Repaired or Replaced and Replacement Components

Name of Component	Name of Manufacturer	Manufacturer Serial No.	National Board No.	Other I.D.	Year Built	Repaired, Replaced, or Replacement	ASME Code Stamped (Yes or No) Code Class
RHR(1)-2A	WPPSS	*	N/A	N/A	1983	Replacement	Yes, Class 2
RHR(1)-2B	WPPSS	*	N/A	N/A	1983	Replacement	Yes, Class 2
RHR(1)-2C	WPPSS	*	N/A	N/A	1983	Replacement	Yes, Class 2

7. Description of Work:

Rerouted instrument tubing from RHR-V-704A, 704B and 704C to RHR-PS-16A, 16B, 16C, 19A, 19B and 19C. The rerouting work was performed as follows:

1) Removed existing tubing by cutting.
2) Installed tubing, fittings and valves. Made required socket welds.
3) Performed PT examination on the final socket welds. PT examination results acceptable.
4) Installed new supports for rerouted tubing.

Notes:
*RHR(1)-2A-P1
*RHR(1)-2B-P1
*RHR(1)-2C-P1

WASHINGTON PUBLIC POWER SUPPLY SYSTEM

PLAN NO. 2-0230

FORM NIS-2 (Back)

8. Tests Conducted: Hydrostatic ☐ Pneumatic ☐ Nominal Operating Pressure ☐ Other ☒ None
Test Pressure _____ psig, Test Temp. _____ °F
Component Design Pressure _____ psig, Temp. _____ °F

9. Remarks:

See attached NPV-1 Code Data Reports for the following new valves.

Serial Numbers PB1095, PB1096, PB1098, PB1100, PB1101, PB1102, PB1103, PB1105, PB1106, PB1107, PB1108, PB1110, PB1111, PB1115, PB1117, PB1121, PB1122, PB1124.

CERTIFICATE OF COMPLIANCE

We certify that the statements made in the report are correct and this replacement (repair or replacement) conforms to the rules of the ASME Code, Section XI.

Type Code Symbol Stamp Not applicable

Certificate Authorization No. Not applicable Expiration Date Not applicable

Signed [signature] (Owner or Owner's Designee,) Title Plant Technical Manager

11/13/87

Date 11/13/ 19 87

CERTIFICATE OF INSERVICE INSPECTION

I, the undersigned, holding a valid commission issued by the National Board of Boiler and Pressure Vessel Inspectors and the State of Washington and employed by Lumbermen's Mutual Casualty Co. of Illinois have inspected the components described in this Owner's Report during the period 4-4-85 to 10-9-87, and state that to the best of my knowledge and belief, the Owner has performed examinations and taken corrective measures described in this Owner's Report in accordance with the requirements of the ASME Code, Section XI.

By signing this certificate neither the Inspector nor his employer makes any warranty, expressed or implied, concerning the examinations and corrective measures described in this Owner's Report. Furthermore, neither the Inspector nor his employer shall be liable in any manner for any personal injury or property damage or a loss of any kind arising from or connected with this inspection.

Dan Hoggarth (Inspector's Signature) Commissions 9556 W (National Board, State, and Endorsements)

Date 11-17 19 87

Plan NO 2-[illegible]
~~Plan No. [illegible]~~ 2

1/8/86

FORM NPV-1 N CERTIFICATE HOLDERS' DATA REPORT FOR NUCLEAR PUMPS OR VALVES* 1 of 2
As Required by the Provisions of the ASME Code, Section III, Div. 1

1 Manufactured by Dragon Valves, Inc., 13457 Excelsior Dr., Norwalk, CA 90650
(Name and Address of N Certificate Holder)

2 Manufactured for Washington Public Power Supply System, P. O. Box 968, Richland, WA 99352-0968
(Name and Address of Purchaser or Owner)

3 Location of Installation WNP-2 Site, Richland, WA 99352
(Name and Address)

4 Pump or Valve Valve Nominal Inlet Size 1/2 (inch) Outlet Size 1/2 (inch)

	(a) Model No., Series No. or Type	(b) N Certificate Holder's Serial No.	(c) Canadian Registration No	(d) Drawing No.	(e) Class	(f) Nat'l Bd. No.	(g) Year Built
(1)	7H058SWD	PB1095	N/A	10580	2	N/A	1985
(2)		thru		Rev. B			
(3)		PB1119					
(4)							
(5)							
(6)							
(7)							
(8)							
(9)							
(10)							

5 Instrument Valves (25 Pcs.)
(Brief description of service for which equipment was designed)

6 Design Conditions 3600 (Pressure) psi 100 (Temperature) °F or Valve Pressure Class ____ (1)

7. Cold Working Pressure 3600 psi at 100°F

8 Pressure Retaining Pieces

Mark No	Material Spec. No.	Manufacturer	Remarks
(a) Castings N/A			
(b) Forgings			
HT 1C4836	ASME SA182 Gr. F316	Ajax Forge Co.	Body
HT A19167	ASME SA182 Gr. F316	Ajax Forge Co.	Yoke

(1) For manually operated valves only N/A

* Supplemental sheets in form of lists, sketches or drawings may be used provided (1) size is 8-1/2" x 11", (2) information in items 1, 2 and 6 on this Data Report is included on each sheet, and (3) each sheet is numbered and number of sheets is recorded at top of this form

(10/77) This form (E00037) may be obtained from the Order Dept., ASME, 345 E. 47th St., New York, N.Y. 10017

FORM NPV-1 (Back)

Mark No.	Material Spec. No.	Manufacturer	Remarks
(c) Bolting N/A			
(d) Other Parts			
HT 50937	ASME SA564 Gr. 630	Carpenter Steel	Disc

9. Hydrostatic test 5400 psi. Disk Differential test pressure 3600 psi.

CERTIFICATE OF COMPLIANCE

We certify that the statements made in this report are correct and that this pump, or valve, conforms to the rules of construction of the ASME Code for Nuclear Power Plant Components, Section III, Div. 1, Edition 1974, Addenda S'75 (Date), Code Case No. N/A, Dated July 1, 1985

Signed DRAGON VALVES, INC. (N Certificate Holder) by [signature]

Our ASME Certificate of Authorization No. N-1033 to use the N (Sym) symbol expires 5-6-87 (Date).

CERTIFICATION OF DESIGN

Design information on file at Washington Public Power Supply System (see Line 2)

Stress analysis report (Class 1 only) on file at N/A

Design specifications certified by (1) David J. Murphy

PE State WA Reg. No. 12542

Stress analysis certified by (1) N/A

PE State ____ Reg. No. ____

(1) Signature not required. List name only.

CERTIFICATE OF SHOP INSPECTION

I, the undersigned, holding a valid commission issued by the National Board of Boiler and Pressure Vessel Inspectors and the State or Province of CALIFORNIA and employed by DOSH of CALIFORNIA have inspected the pump, or valve, described in this Data Report on 7-1, 19 85, and state that to the best of my knowledge and belief, the N Certificate Holder has constructed this pump, or valve, in accordance with the ASME Code, Section III.

By signing this certificate, neither the inspector nor his employer makes any warranty, expressed or implied, concerning the equipment described in this Data Report. Furthermore, neither the inspector nor his employer shall be liable in any manner for any personal injury or property damage or a loss of any kind arising from or connected with this inspection.

Date 7-16, 19 85

[signature] (Inspector) Commissions CALIF 1249 (Nat'l Bd., State, Prov. and No.)

Plan No. 2-0230
~~Plant 1/0~~ K Eng
7/2/85

FORM NPV-1 N CERTIFICATE HOLDERS' DATA REPORT FOR NUCLEAR PUMPS OR VALVES*

As Required by the Provisions of the ASME Code, Section III, Div. 1

1 Manufactured by Dragon Valves, Inc., 13457 Excelsior Dr., Norwalk, CA 90650 (Name and Address of N Certificate Holder)

2 Manufactured for Washington Public Power Supply System, P. O. Box 968, Richland, WA 99352-0968 (Name and Address of Purchaser or Owner)

3 Location of Installation WNP-2 Site, Richland, WA 99352 (Name and Address)

4 Pump or Valve Valve. Nominal Inlet Size 1/2 (inch) Outlet Size 1/2 (inch)

	(a) Model No., Series No. or Type	(b) N Certificate Holder's Serial No.	(c) Canadian Registration No	(d) Drawing No.	(e) Class	(f) Nat'l Bd No.	(g) Year Built
(1)	7N058SWD	PB1120	N/A	10580	2	N/A	1985
(2)		thru		Rev. B			
(3)		PB1125					
(4)							
(5)							
(6)							
(7)							
(8)							
(9)							
(10)							

5 Instrument Valves (6 Pcs.) (Brief description of service for which equipment was designed)

6 Design Conditions 3600 (Pressure) psi 100 (Temperature) °F or Valve Pressure Class ____ (1)

7 Cold Working Pressure 3600 psi at 100°F

8 Pressure Retaining Pieces

Mark No.	Material Spec. No.	Manufacturer	Remarks
(a) Castings N/A			
(b) Forgings			
HT 1C4836	ASME SA182 Gr. F316	Ajax Forge Co.	Body
HT A19167	ASME SA182 Gr. F316	Ajax Forge Co.	Yoke

(1) For manually operated valves only.

* Supplemental sheets in form of lists, sketches or drawings may be used provided (1) size is 8-1/2" x 11", (2) information in items 1, 2 and 5 on this Data Report is included on each sheet, and (3) each sheet is numbered and number of sheets is recorded at top of this form.

(10/77) This form (E00037) may be obtained from the Order Dept., ASME, 345 E. 47th St., New York, N.Y. 10017

FORM NPV-1 (Back)

Mark No.	Material Spec. No	Manufacturer	Remarks
(c) Bolting N/A			
(d) Other Parts			
HT 50937	ASME SA564 Gr. 630	Carpenter Steel	Disc

9. Hydrostatic test 5400 psi. Disk Differential test pressure 3600 psi.

CERTIFICATE OF COMPLIANCE

We certify that the statements made in this report are correct and that this pump, or valve, conforms to the rules of construction of the ASME Code for Nuclear Power Plant Components, Section III, Div. 1, Edition 1974, Addenda S75 (Date). Code Case No. N/A. Date July 1, 1985

Signed DRAGON VALVES, INC. (N Certificate Holder) by [signature]

Our ASME Certificate of Authorization No. N-1033 to use the N (Sym) symbol expires 5-6-87 (Date).

CERTIFICATION OF DESIGN

Design Information on file at Washington Public Power Supply System (see Line 2)

Stress analysis report (Class 1 only) on file at N/A

Design specifications certified by (1) David I. Murphy

PE State WA Reg. No. 12562

Stress analysis certified by (1) N/A

PE State ____ Reg. No. ____

(1) Signature not required. List name only.

CERTIFICATE OF SHOP INSPECTION

I, the undersigned, holding a valid commission issued by the National Board of Boiler and Pressure Vessel Inspectors and the State or Province of CALIFORNIA and employed by DOSH of CALIFORNIA have inspected the pump, or valve, described in this Data Report on 7-1 19 85, and state that to the best of my knowledge and belief, the N Certificate Holder has constructed this pump, or valve, in accordance with the ASME Code, Section III.

By signing this certificate, neither the Inspector nor his employer makes any warranty, expressed or implied, concerning the equipment described in this Data Report. Furthermore, neither the Inspector nor his employer shall be liable in any manner for any personal injury or property damage or a loss of any kind arising from or connected with this Inspection.

Date 7-1 19 85 (Inspector) Commissions CA CIE 1249 (Nat'l Bd., State, Prov. and No.)

WASHINGTON PUBLIC POWER SUPPLY SYSTEM

PLAN NO. 2-0264

FORM NIS-2 OWNER'S REPORT FOR REPAIRS OR REPLACEMENTS
As Required by the Provisions of the ASME Code Section XI

1. Owner (Name) Washington Public Power Supply System — Date 8/12/88
   Owner (Address) 3000 George Washington Way, Richland, WA — Sheet 1 of 1
2. Plant (Name) WPPSS Nuclear Power Plant (WNP) — Unit WNP-2
   Plant (Address) Hanford, Benton County, WA — C20069 Repair Organization P.O. No., Job No., etc.
3. Work Performed by (Name) Bechtel Construction, Inc.
   Work Performed by (Address) P.O. Box 600, Richland, WA
4. Identification of System Containment Monitoring System (CMS)
5. (a) Applicable Construction Code ASME Section III 19 74 Edition, W75 Addenda, None Code Case
   (b) Applicable Edition of ASME Section XI Utilized for Repairs or Replacements 19 80 Edition, W80 Addenda, N308 Code Case
6. Identification of Components Repaired or Replaced and Replacement Components

	Name of Component	Name of Manufacturer	Manufacturer Serial No.	National Board No.	Other I.D.	Year Built	Repaired, Replaced, or Replacement	ASME Code Stamped (Yes or No) Code Class
*	(CMS-SR-14)-C1	JCI	**	N/A	N/A	1983	Replacement	Yes, Class 3
*	(CMS-SR-14)-2	JCI	**	N/A	N/A	1983	Replacement	Yes, Class 3
*	(CMS-SR-14)-3	JCI	**	N/A	N/A	1983	Replacement	Yes, Class 3
	(CMS-SR-14)-C2	JCI	**	N/A	N/A	1983	Replacement	Yes, Class 3
	(CMS-SR-14)-DT	JCI	**	N/A	N/A	1983	Replacement	Yes, Class 3
	X85d	JCI	**	N/A	N/A	1983	Replacement	Yes, Class 2/3
*	X85e	JCI	**	N/A	N/A	1983	Replacement	Yes, Class 2/3
*	X73d	JCI	**	N/A	N/A	1983	Replacement	Yes, Class 2/3
*	X84b	JCI	**	N/A	N/A	1983	Replacement	Yes, Class 2/3

7. Description of Work:

Modified instrument tubing for CMS-SR-14. The modificaton work was performed as follows:

1) Cut and removed existing tubing material.
2) Installed new tubing, tubing fittings and valves.
3) Made required welds.
4) Performed PT examination on final welds. PT examination results acceptable.
5) Fabricated and installed supports for modified tubing.

Notes:

*Preceded by PI(1)-ST-
**Same as items listed under "Name of Component" column
JCI - Johnson Control, Inc.

WASHINGTON PUBLIC POWER SUPPLY SYSTEM

PLAN NO. 2-0264

FORM NIS-2 (Back)

8. Tests Conducted: Hydrostatic ☐ Pneumatic ☐ Nominal Operating Pressure ☐ Other ☒ None
Test Pressure _____ psig, Test Temp. _____ °F
Component Design Pressure _____ psig, Temp. _____ °F

9. Remarks:

See attached NPV-1 Code Data reports for the following new valves:

EPN No.	Serial No.
CMS-V-1446	PB1094
CMS-V-1447	PB1104
CMS-V-1448	PB1092

CERTIFICATE OF COMPLIANCE

We certify that the statements made in the report are correct and this replacement (repair or replacement) conforms to the rules of the ASME Code, Section XI.

Type Code Symbol Stamp Not applicable

Certificate Authorization No. Not applicable Expiration Date Not applicable

Signed [signature] Owner or Owner's Designee, Title Plant Technical Manager

K Gurch 8/12/88 8/17/88

Date [signature] 19

CERTIFICATE OF INSERVICE INSPECTION

I, the undersigned, holding a valid commission issued by the National Board of Boiler and Pressure Vessel Inspectors and the State of Washington and employed by Lumbermen's Mutual Casualty Co. of Illinois have inspected the components described in this Owner's Report during the period 1/30/86 to 8/16/88, and state that to the best of my knowledge and belief, the Owner has performed examinations and taken corrective measures described in this Owner's Report in accordance with the requirements of the ASME Code, Section XI.

By signing this certificate neither the Inspector nor his employer makes any warranty, expressed or implied, concerning the examinations and corrective measures described in this Owner's Report. Furthermore, neither the Inspector nor his employer shall be liable in any manner for any personal injury or property damage or a loss of any kind arising from or connected with this inspection.

[signature] Inspector's Signature Commissions 5470 W National Board, State, and Endorsements

Date 8-17 19 88

PLAN NO. 2-0264 & for H_2O_2 analy.

VEW 1/8/86

FORM NPV-1 (Back)

Mark No.	Material Spec. No.	Manufacturer	Remarks
(c) Bolting N/A			
(d) Other Parts			
NT 30937	ASME SA564 Gr. 630	Carpenter Steel	Disc

8. Hydrostatic test 5100 psi. Disk Differential test pressure 3600 psi.

CERTIFICATE OF COMPLIANCE

We certify that the statements made in this report are correct and that this pump, or valve, conforms to the rules of construction of the ASME Code for Nuclear Power Plant Components, Section III, Div. 1, Edition 1974, Addenda S'75 (Date), Code Case No. N/A, Date July 1, 1985

Signed DRAGON VALVES, INC. (N Certificate Holder) by [signature]

Our ASME Certificate of Authorization No. N-1033 to use the N (Stamp) symbol expires 5-6-87 (Date).

CERTIFICATION OF DESIGN

Design information on file at Washington Public Power Supply System (see Line 2)

Stress analysis report (Class 1 only) on file at N/A

Design specifications certified by (1) David J. Murphy

PE State WA Reg. No. 18542

Stress analysis certified by (1) N/A

PE State _____ Reg. No. _____

(1) Signature not required. List name only.

CERTIFICATE OF SHOP INSPECTION

I, the undersigned, holding a valid commission issued by the National Board of Boiler and Pressure Vessel Inspectors and the State or Province of CALIFORNIA and employed by DOSH of CALIFORNIA have inspected the pump, or valve, described in this Data Report on 7-1 1985, and state that to the best of my knowledge and belief, the N Certificate Holder has constructed this pump, or valve, in accordance with the ASME Code, Section III.

By signing this certificate, neither the Inspector nor his employer makes any warranty, expressed or implied, concerning the equipment described in this Data Report. Furthermore, neither the Inspector nor his employer shall be liable in any manner for any personal injury or property damage or a loss of any kind arising from or connected with this inspection.

Date 7-1 1985 Signed L. A. Ellis (Inspector) Commissions CALIF 1249 (Nat'l Bd., State, Prov. and No.)

FORM NPV-1 N CERTIFICATE HOLDERS' DATA REPORT FOR NUCLEAR PUMPS OR VALVES* 1 of 2

As Required by the Provisions of the ASME Code, Section III, Div. 1

1. Manufactured by Dragon Valves, Inc., 13457 Excelsior Dr., Norwalk, CA 90650 (Name and Address of N Certificate Holder)
2. Manufactured for Washington Public Power Supply System, P. O. Box 968, Richland, WA 99352-0968 (Name and Address of Purchaser or Owner)
3. Location of Installation WNP-2 Site, Richland, WA 99352 (Name and Address)
4. Pump or Valve Valve Nominal Inlet Size 1/2 (inch) Outlet Size 1/2 (inch)

	(a) Model No., Series No. or Type	(b) N Certificate Holder's Serial No.	(c) Canadian Registration No.	(d) Drawing No.	(e) Class	(f) Nat'l Bd. No.	(g) Year Built
(1)	7N058SWD	PB1095	N/A	10580	2	N/A	1985
(2)		thru		Rev. B			
(3)		PB1119					
(4)							
(5)							
(6)							
(7)							
(8)							
(9)							
(10)							

EPN NO SERIAL NO
CMS-V-1447 PB1104

Rudolph Swift 11/18/87.

5. Instrument Valves (25 Pcs.) (Brief description of service for which equipment was designed)
6. Design Conditions 3600 (Pressure) psi 100 (Temperature) °F or Valve Pressure Class _____ (1)
7. Cold Working Pressure 3600 psi at 100°F
8. Pressure Retaining Pieces

Mark No.	Material Spec. No.	Manufacturer	Remarks
(a) Castings N/A			
(b) Forgings			
NT 104816	ASME SA182 Gr. F316	Ajax Forge Co.	Body
NT 119167	ASME SA182 Gr. F316	Ajax Forge Co.	Yoke

(1) For manually operated valves only N/A

* Supplemental sheets on form of bus. sketches or drawings may be used provided (1) size is 8-1/2" x 11", (2) information in items 1, 2 and 5 on this Data Report is included on each sheet, and (3) each sheet is numbered and number of sheets is recorded at top of this form

(10/79) This form (E00037) may be obtained from the Order Dept., ASME, 345 E. 47th St., New York, N.Y. 10017

PLAN NO. 2-0264

FORM NPV-1 N CERTIFICATE HOLDERS' DATA REPORT FOR NUCLEAR PUMPS OR VALVES*

As Required by the Provisions of the ASME Code, Section III, Div. 1

1. Manufactured by Dragon Valves, Inc., 13457 Excelsior Dr., Norwalk, CA. 90650
(Name and Address of N Certificate Holder)

2. Manufactured for Washington Public Power Supply System, P.O. Box 968, Richland, WA. 99352-0968
(Name and Address of Purchaser or Owner)

3. Location of Installation WNP-2 Site, Richland, WA. 99352
(Name and Address)

4. Pump or Valve Valve. Nominal Inlet Size 1/2 (inch) Outlet Size 1/2 (inch)

	(a) Model No., Series No. or Type	(b) N Certificate Holder's Serial No.	(c) Canadian Registration No.	(d) Drawing No.	(e) Class	(f) Nat'l. Bd. No.	(g) Year Built
(1)	7N058SWD	PB1087	N/A	10580	2	N/A	1985
(2)		thru		Rev. B			
(3)		PB1094					
(4)							
(5)		EPN No.		SERIAL NO			
(6)							
(7)		CMS-V-1446		PB1094.			
(8)		CMS-V-1448		PB1092			
(9)							
(10)				Philip Guy's 11/18/87.			

5. Instrument Valves (8 Pcs.)
(Brief description of service for which equipment was designed)

6. Design Conditions 3600 (Pressure) psi 100 (Temperature) °F or Valve Pressure Class _____ (1)

7. Cold Working Pressure 3600 psi at 100°F.

8. Pressure Retaining Pieces

Mark No.	Material Spec. No.	Manufacturer	Remarks
(a) Castings N/A			
(b) Forgings			
HT.1G4836	ASME SA182 GR.F316	Ajax Forge Co.	Body
HT.A19167	ASME SA182 GR.F316	Ajax Forge Co.	Yoke

(1) For manually operated valves only.

* Supplemental sheets in form of lists, sketches or drawings may be used provided (1) size is 8-1/2" x 11", (2) information in items 1, 2 and 5 on this Data Report is included on each sheet, and (3) each sheet is numbered and number of sheets is recorded at top of this form.

FORM NPV-1 (Back)

PLAN No. 2-0264

Mark No.	Material Spec. No.	Manufacturer	Remarks
(c) Bolting N/A			
(d) Other Parts			
HT.50937	ASME SA564 GR.630	Carpenter Steel	Disc

9. Hydrostatic test 5400 psi. Disk Differential test pressure 3600 psi.

CERTIFICATE OF COMPLIANCE

We certify that the statements made in this report are correct and that this pump, or valve, conforms to the rules of construction of the ASME Code for Nuclear Power Plant Components. Section III, Div. I., Edition 1974, Addenda Summer '75 (Date), Code Case No. N/A, Date

Signed DRAGON VALVES, INC. (N Certificate Holder) by

Our ASME Certificate of Authorization No. N-1033 to use the N (N) symbol expires 5-6-87 (Date).

CERTIFICATION OF DESIGN

Design information on file at Washington Public Power Supply System (See Line 2)

Stress analysis report (Class 1 only) on file at N/A

Design specifications certified by (1) David J. Murphy

PE State WA. Reg. No. 12542

Stress analysis certified by (1) N/A

PE State Reg. No.

(1) Signature not required. List name only.

CERTIFICATE OF SHOP INSPECTION

I, the undersigned, holding a valid commission issued by the National Board of Boiler and Pressure Vessel Inspectors and the State or Province of CALIFORNIA and employed by DOSH of CALIFORNIA have inspected the pump, or valve, described in this Data Report on 6-14 19 85, and state that to the best of my knowledge and belief, the N Certificate Holder has constructed this pump, or valve, in accordance with the ASME Code, Section III.

By signing this certificate, neither the Inspector nor his employer makes any warranty, expressed or implied, concerning the equipment described in this Data Report. Furthermore, neither the Inspector nor his employer shall be liable in any manner for any personal injury or property damage or a loss of any kind arising from or connected with this inspection.

Date 6-14 19 85

(Inspector) Commissions Cal 1234 (Nat'l Bd., State, Prov. and No.)

2 2 3 3 6 1 2 4 0

WASHINGTON PUBLIC POWER SUPPLY SYSTEM

PLAN NO. 2-0265

FORM NIS-2 OWNER'S REPORT FOR REPAIRS OR REPLACEMENTS
As Required by the Provisions of the ASME Code Section XI

1. Owner (Name) Washington Public Power Supply System — Date 8/12/88
   Owner (Address) 3000 George Washington Way, Richland, WA — Sheet 1 of 1
2. Plant (Name) WPPSS Nuclear Power Plant (WNP) — Unit WNP-2
   Plant (Address) Hanford, Benton County, WA — C20069 Repair Organization P.O. No., Job No., etc.
3. Work Performed by (Name) Bechtel Construction, Inc.
   Work Performed by (Address) P.O. Box 600, Richland, WA
4. Identification of System Containment Monitoring System (CMS)
5. (a) Applicable Construction Code ASME Section III 19 74 Edition, W75 Addenda, None Code Case
   (b) Applicable Edition of ASME Section XI Utilized for Repairs or Replacements 19 80 Edition, W80 Addenda, N308 Code Case
6. Identification of Components Repaired or Replaced and Replacement Components

	Name of Component	Name of Manufacturer	Manufacturer Serial No.	National Board No.	Other I.D.	Year Built	Repaired, Replaced, or Replacement	ASME Code Stamped (Yes or No) Code Class
*	X72c	JCI	**	N/A	N/A	1983	Replacement	Yes, Class 2/3
*	X72d	JCI	**	N/A	N/A	1983	Replacement	Yes, Class 2/3
*	X72e	JCI	**	N/A	N/A	1983	Replacement	Yes, Class 2/3
	X82c	JCI	**	N/A	N/A	1983	Replacement	Yes, Class 2/3

7. Description of Work:

Modified instrument tubing for CMS-SR-13. The modification work was performed as follows:

1) Cut and removed existing tubing material.
2) Installed new tubing, tubing fittings and valves.
3) Made required welds.
4) Performed PT examination on final welds. PT examination results acceptable.
5) Fabricated and installed supports for modified tubing.

Notes:

*Preceded by PI(1)-ST-
**Same as items listed under "Name of Component" column
JCI - Johnson Control, Inc.

WASHINGTON PUBLIC POWER SUPPLY SYSTEM

PLAN NO. 2-0265

FORM NIS-2 (Back)

8. Tests Conducted: Hydrostatic ☐ Pneumatic ☐ Nominal Operating Pressure ☐ Other ☒ None
Test Pressure _____ psig, Test Temp. _____ °F
Component Design Pressure _____ psig, Temp. _____ °F

9. Remarks:

See attached NPV-1 Code Data reports for the following new valves:

EPN No.	Serial No.
CMS-V-1346	PB1082
CMS-V-1347	PB1086
CMS-V-1348	PB1119

CERTIFICATE OF COMPLIANCE

We certify that the statements made in the report are correct and this replacement (repair or replacement) conforms to the rules of the ASME Code, Section XI.

Type Code Symbol Stamp Not applicable

Certificate Authorization No. Not applicable Expiration Date Not applicable

Signed [signature] (Owner or Owner's Designee,) Title Plant Technical Manager

K Swo's 8/12/88

Date 8/18 19 88

CERTIFICATE OF INSERVICE INSPECTION

I, the undersigned, holding a valid commission issued by the National Board of Boiler and Pressure Vessel Inspectors and the State of Washington and employed by Lumbermen's Mutual Casualty Co. of Illinois have inspected the components described in this Owner's Report during the period 1-30-86 to 8-12-88, and state that to the best of my knowledge and belief, the Owner has performed examinations and taken corrective measures described in this Owner's Report in accordance with the requirements of the ASME Code, Section XI.

By signing this certificate neither the Inspector nor his employer makes any warranty, expressed or implied, concerning the examinations and corrective measures described in this Owner's Report. Furthermore, neither the Inspector nor his employer shall be liable in any manner for any personal injury or property damage or a loss of any kind arising from or connected with this inspection.

[signature] (Inspector's Signature) Commissions 5470W (National Board, State, and Endorsements)

Date 8-17 19 88

PLAN NO. 2-0265

FORM NPV-1 N CERTIFICATE HOLDERS' DATA REPORT FOR NUCLEAR PUMPS OR VALVES*

As Required by the Provisions of the ASME Code, Section III, Div. 1

1. Manufactured by Dragon Valves, Inc., 13457 Excelsior Dr., Norwalk, CA. 90650
(Name and Address of N Certificate Holder)
2. Manufactured for Washington Public Power Supply System, P.O. Box 968, Richland, WA. 99352-0968
(Name and Address of Purchaser or Owner)
3. Location of Installation WNP-2 Site, Richland, WA. 99352
(Name and Address)
4. Pump or Valve Valve. Nominal Inlet Size 1/2 (inch) Outlet Size 1/2 (inch)

	(a) Model No., Series No. or Type	(b) N Certificate Holder's Serial No.	(c) Canadian Registration No.	(d) Drawing No.	(e) Class	(f) Nat'l. Bd. No.	(g) Year Built
(1)	7N058SWD	PB1076	N/A	10580	2	N/A	1985
(2)		thru		Rev. B			
(3)		PB1084					
(4)							
(5)							
(6)		EPN NO		SERIAL NO			
(7)							
(8)		CMS-Y-1346		PB1082			
(9)							
(10)				Philip Sumpb 11/19/87.			

5. Instrument Valves (9 Pcs.)
(Brief description of service for which equipment was designed)

6. Design Conditions 3600 (Pressure) psi 100 (Temperature) °F or Valve Pressure Class _____ (1)
7. Cold Working Pressure 3600 psi at 100°F.
8. Pressure Retaining Pieces

Mark No.	Material Spec. No.	Manufacturer	Remarks
(a) Castings N/A			
(b) Forgings			
HT.74843	ASME SA182 GR.F316	Ajax Forge Co.	Body
HT.75463	ASME SA182 GR.F316	Ajax Forge Co.	Yoke

(1) For manually operated valves only.

* Supplemental sheets in form of lists, sketches or drawings may be used provided (1) size is 8-1/2" x 11", (2) information in items 1, 2 and 5 on this Data Report is included on each sheet, and (3) each sheet is numbered and number of sheets is recorded at top of this form.

FORM NPV-1 (Back) PLAN No. 2-0265

Mark No.	Material Spec. No.	Manufacturer	Remarks
(c) Bolting N/A			
(d) Other Parts			
HT.50937	ASME SA564 GR.630	Carpenter Steel	Disc

9. Hydrostatic test 5400 psi. Disk Differential test pressure 3600 psi.

CERTIFICATE OF COMPLIANCE

We certify that the statements made in this report are correct and that this pump, or valve, conforms to the rules of construction of the ASME Code for Nuclear Power Plant Components. Section III, Div. I., Edition 1974, Addenda Summer '75 (Date), Code Case No. N/A, Date

Signed DRAGON VALVES, INC. (N Certificate Holder) by

Our ASME Certificate of Authorization No. N-1033 to use the N (N) symbol expires 5-6-87 (Date).

CERTIFICATION OF DESIGN

Design information on file at Washington Public Power Supply System (See Line 2)

Stress analysis report (Class 1 only) on file at N/A

Design specifications certified by (1) David J. Murphy

PE State WA. Reg. No. 12542

Stress analysis certified by (1) N/A

PE State Reg. No.

(1) Signature not required. List name only.

CERTIFICATE OF SHOP INSPECTION

I, the undersigned, holding a valid commission issued by the National Board of Boiler and Pressure Vessel Inspectors and the State or Province of CALIFORNIA and employed by DOSH of CALIFORNIA have inspected the pump, or valve, described in this Data Report on 6-14 19 85, and state that to the best of my knowledge and belief, the N Certificate Holder has constructed this pump, or valve, in accordance with the ASME Code, Section III.

By signing this certificate, neither the Inspector nor his employer makes any warranty, expressed or implied, concerning the equipment described in this Data Report. Furthermore, neither the Inspector nor his employer shall be liable in any manner for any personal injury or property damage or a loss of any kind arising from or connected with this inspection.

Date 6-14 19 85

(Inspector) Commissions Cal 1234 (Nat'l Bd. State, Prov. and No.)

PLAN NO. 2-0265

FORM NPV-1 N CERTIFICATE HOLDERS' DATA REPORT FOR NUCLEAR PUMPS OR VALVES*

As Required by the Provisions of the ASME Code, Section III, Div. 1

1. Manufactured by Dragon Valves, Inc., 13457 Excelsior Dr., Norwalk, CA. 90650
(Name and Address of N Certificate Holder)

2. Manufactured for Washington Public Power Supply System, P.O. Box 968, Richland, WA. 99352-0968
(Name and Address of Purchaser or Owner)

3. Location of Installation WNP-2 Site, Richland, WA. 99352
(Name and Address)

4. Pump or Valve Valve. Nominal Inlet Size 1/2 (inch) Outlet Size 1/2 (inch)

	(a) Model No., Series No. or Type	(b) N Certificate Holder's Serial No.	(c) Canadian Registration No.	(d) Drawing No.	(e) Class	(f) Nat'l. Bd. No.	(g) Year Built
(1)	7N058SWD	PB1085	N/A	10580	2	N/A	1985
(2)		thru		Rev. B			
(3)		PB1086					
(4)							
(5)		EPN NO		SERIAL NO			
(6)							
(7)		CMS-V-1347		PB1086			
(8)							
(9)							
(10)				Rutdup Singh 11/18/87.			

5. Instrument Valves (2 Pcs.)
(Brief description of service for which equipment was designed)

6. Design Conditions 3600 (Pressure) psi 100 (Temperature) °F or Valve Pressure Class _____ (1)

7. Cold Working Pressure 3600 psi at 100°F.

8. Pressure Retaining Pieces

Mark No.	Material Spec. No.	Manufacturer	Remarks
(a) Castings N/A			
(b) Forgings			
HT.1G4836	ASME SA182 GR.F316	Ajax Forge Co.	Body
HT.75463	ASME SA182 GR.F316	Ajax Forge Co.	Yoke

(1) For manually operated valves only.

* Supplemental sheets in form of lists, sketches or drawings may be used provided (1) size is 8-1/2" x 11", (2) information in items 1, 2 and 5 on this Data Report is included on each sheet, and (3) each sheet is numbered and number of sheets is recorded at top of this form.

FORM NPV-1 (Back)

PLAN No. 2-0265

Mark No.	Material Spec. No.	Manufacturer	Remarks
(c) Bolting N/A			
(d) Other Parts			
HT.50937	ASME SA564 GR.630	Carpenter Steel	Disc

9. Hydrostatic test 5400 psi. Disk Differential test pressure 3600 psi.

CERTIFICATE OF COMPLIANCE

We certify that the statements made in this report are correct and that this pump, or valve, conforms to the rules of construction of the ASME Code for Nuclear Power Plant Components. Section III, Div. I., Edition 1974, Addenda Summer '75 (Date), Code Case No. N/A, Date

Signed DRAGON VALVES, INC. (N Certificate Holder) by

Our ASME Certificate of Authorization No. N-1033 to use the N (N) symbol expires 5-6-87 (Date).

CERTIFICATION OF DESIGN

Design information on file at Washington Public Power Supply System (See Line 2)

Stress analysis report (Class 1 only) on file at N/A

Design specifications certified by (1) David J. Murphy

PE State WA. Reg. No. 12542

Stress analysis certified by (1) N/A

PE State _____. Reg. No. _____

(1) Signature not required. List name only.

CERTIFICATE OF SHOP INSPECTION

I, the undersigned, holding a valid commission issued by the National Board of Boiler and Pressure Vessel Inspectors and the State or Province of CALIFORNIA and employed by DOSH of CALIFORNIA have inspected the pump, or valve, described in this Data Report on 6-14 19 85 and state that to the best of my knowledge and belief, the N Certificate Holder has constructed this pump, or valve, in accordance with the ASME Code, Section III.

By signing this certificate, neither the Inspector nor his employer makes any warranty, expressed or implied, concerning the equipment described in this Data Report. Furthermore, neither the Inspector nor his employer shall be liable in any manner for any personal injury or property damage or a loss of any kind arising from or connected with this inspection.

Date 6-14 19 85

(Inspector) Commissions CA 1234

(Nat'l Bd., State, Prov. and No.)

PLAN-NO. 2-0265. & For H2O2 analys

FORM NPV-1 N CERTIFICATE HOLDERS' DATA REPORT FOR NUCLEAR PUMPS OR VALVES* 1 of 2

As Required by the Provisions of the ASME Code, Section III, Div. 1

1 Manufactured by Dragon Valves, Inc., 13452 Excelsior Dr., Norwalk, CA 90650 (Name and Address of N Certificate Holder)

2 Manufactured for Washington Public Power Supply System, P. O. Box 968, Richland, WA 99352-0968 (Name and Address of Purchaser or Owner)

3 Location of Installation WNP-2 Site, Richland, WA 99352 (Name and Address)

4 Pump or Valve Valve Nominal Inlet Size 1/2 (inch) Outlet Size 1/2 (inch)

	(a) Model No., Series No. or Type	(b) N Certificate Holder's Serial No.	(c) Canadian Registration No.	(d) Drawing No.	(e) Class	(f) Nat'l Bd. No.	(g) Year Built
(1)	7N058SWD	PB1095	N/A	10580	2	N/A	1985
(2)		thru		Rev. B			
(3)		PB1119					
(4)							
(5)							
(6)							
(7)							
(8)							
(9)							
(10)							

EPN NO. SERIAL NO
CMS-V-1348 PB1119.

5 Instrument Valves (25 Pcs.) (Brief description of service for which equipment was designed)

Vuldip Gupta 11/18/87.

6 Design Conditions 1600 (Pressure) psi 100 (Temperature) °F or Valve Pressure Class _____ (1)

7 Cold Working Pressure 1600 psi at 100°F

8 Pressure Retaining Pieces

Mark No.	Material Spec. No.	Manufacturer	Remarks
(a) Castings N/A			
(b) Forgings			
HT 104816	ASME SA182 Gr. F316	Ajax Forge Co.	Body
HT A19167	ASME SA182 Gr. F316	Ajax Forge Co.	Yoke

(1) For manually operated valves only N/A

* Supplemental sheets in form of lists, sketches or drawings may be used provided (1) size is 8-1/2" x 11", (2) information in items 1, 2 and 5 on this Data Report is included on each sheet, and (3) each sheet is numbered and number of sheets is recorded at top of this form.

(10/77) (This form (E00037) may be obtained from the Order Dept., ASME, 345 E. 47th St., New York, N.Y. 10017)

FORM NPV-1 (Back)

Mark No.	Material Spec. No.	Manufacturer	Remarks
(c) Bolting N/A			
(d) Other Parts			
HT 50937	ASME SA564 Gr. 630	Carpenter Steel	Disc

9 Hydrostatic test 5400 psi. Disk Differential test pressure 3600 psi.

CERTIFICATE OF COMPLIANCE

We certify that the statements made in this report are correct and that this pump, or valve, conforms to the rules of construction of the ASME Code for Nuclear Power Plant Components, Section III, Div. 1, Edition 1974. Addenda S'75 (Date). Code Case No. N/A. Date July 1, 1985

Signed DRAGON VALVES, INC. (N Certificate Holder) by [signature]

Our ASME Certificate of Authorization No. N-1033 to use the N (Sym) symbol expires 5-6-87 (Date)

CERTIFICATION OF DESIGN

Design Information on file at Washington Public Power Supply System (see Line 2)

Stress analysis report (Class 1 only) on file at N/A

Design specifications certified by (1) David J. Murphy

PE State WA Reg. No. 12542

Stress analysis certified by (1) N/A

PE State _____ Reg. No. _____

(1) Signature not required. List name only.

CERTIFICATE OF SHOP INSPECTION

I, the undersigned, holding a valid commission issued by the National Board of Boiler and Pressure Vessel Inspectors and the State or Province of CALIFORNIA and employed by DOSH of CALIFORNIA have inspected the pump, or valve, described in this Data Report on 7-1 19 85, and state that to the best of my knowledge and belief, the N Certificate Holder has constructed this pump, or valve, in accordance with the ASME Code, Section III.

By signing this certificate, neither the inspector nor his employer makes any warranty, expressed or implied, concerning the equipment described in this Data Report. Furthermore, neither the inspector nor his employer shall be liable in any manner for any personal injury or property damage or a loss of any kind arising from or connected with this inspection.

Date 7-1 19 85 Signed [signature] (Inspector) Commissions CALIF 1249 (Nat'l Bd., State, Prov. and No.)

WASHINGTON PUBLIC POWER SUPPLY SYSTEM

PLAN NO. 2-0266

FORM NIS-2 OWNER'S REPORT FOR REPAIRS OR REPLACEMENTS
As Required by the Provisions of the ASME Code Section XI

1. Owner (Name) Washington Public Power Supply System — Date 8/12/88
   Owner (Address) 3000 George Washington Way, Richland, WA — Sheet 1 of 1
2. Plant (Name) WPPSS Nuclear Power Plant (WNP) — Unit WNP-2
   Plant (Address) Hanford, Benton County, WA — C20069 Repair Organization P.O. No., Job No., etc.
3. Work Performed by (Name) Bechtel Construction, Inc.
   Work Performed by (Address) P.O. Box 600, Richland, WA
4. Identification of System Containment Monitoring System (CMS)
5. (a) Applicable Construction Code ASME Section III 19 74 Edition, W75 Addenda, None Code Case
   (b) Applicable Edition of ASME Section XI Utilized for Repairs or Replacements 19 80 Edition, W80 Addenda, N308 Code Case
6. Identification of Components Repaired or Replaced and Replacement Components

Name of Component	Name of Manufacturer	Manufacturer Serial No.	National Board No.	Other I.D.	Year Built	Repaired, Replaced, or Replacement	ASME Code Stamped (Yes or No) Code Class
*	JCI	*	N/A	N/A	1983	Replacement	Yes, Class 3
*	JCI	*	N/A	N/A	1983	Replacement	Yes, Class 3

7. Description of Work:

Modified instrument tubing for CMS-SR-13 and CMS-SR-14. The modification work was performed as follows:

1) Cut and removed existing tubing material.
2) Installed new tubing and tubing material.
3) Made required welds.
4) Fabricated and installed supports for modified tubing.

Notes:

*PI(1)-ST-X73c, D-220-25.0-SR-14
*PI(1)-ST-X72b, D-220-25.0-SR-13
JCI - Johnson Control, Inc.

WASHINGTON PUBLIC POWER SUPPLY SYSTEM

PLAN NO. 2-0266

FORM NIS-2 (Back)

8. Tests Conducted: Hydrostatic ☐ Pneumatic ☐ Nominal Operating Pressure ☐ Other ☑ None
Test Pressure _____ psig, Test Temp. _____ °F
Component Design Pressure _____ psig, Temp. _____ °F

9. Remarks:

None

CERTIFICATE OF COMPLIANCE

We certify that the statements made in the report are correct and this replacement (repair or replacement) conforms to the rules of the ASME Code, Section XI.

Type Code Symbol Stamp Not applicable

Certificate Authorization No. Not applicable Expiration Date Not applicable

Signed [signature] Owner or Owner's Designee, Title Plant Technical Manager

K. Singh 8/12/88

Date 8/17 19 88

CERTIFICATE OF INSERVICE INSPECTION

I, the undersigned, holding a valid commission issued by the National Board of Boiler and Pressure Vessel Inspectors and the State of Washington and employed by Lumbermen's Mutual Casualty Co. of Illinois have inspected the components described in this Owner's Report during the period 2/6/86 to 8/12/88, and state that to the best of my knowledge and belief, the Owner has performed examinations and taken corrective measures described in this Owner's Report in accordance with the requirements of the ASME Code, Section XI.

By signing this certificate neither the Inspector nor his employer makes any warranty, expressed or implied, concerning the examinations and corrective measures described in this Owner's Report. Furthermore, neither the Inspector nor his employer shall be liable in any manner for any personal injury or property damage or a loss of any kind arising from or connected with this inspection.

[signature] Inspector's Signature Commissions 5470W National Board, State, and Endorsements

Date 8/17 19 88

WASHINGTON PUBLIC POWER SUPPLY SYSTEM

PLAN NO. 2-0267

FORM NIS-2 OWNER'S REPORT FOR REPAIRS OR REPLACEMENTS
As Required by the Provisions of the ASME Code Section XI

1. Owner (Name) Washington Public Power Supply System — Date 8/12/88
   Owner (Address) 3000 George Washington Way, Richland, WA — Sheet 1 of 1
2. Plant (Name) WPPSS Nuclear Power Plant (WNP) — Unit WNP-2
   Plant (Address) Hanford, Benton County, WA — C20069 (Repair Organization P.O. No., Job No., etc.)
3. Work Performed by (Name) Bechtel Construction, Inc.
   Work Performed by (Address) P.O. Box 600, Richland, WA
4. Identification of System Containment Monitoring System (CMS)
5. (a) Applicable Construction Code ASME Section III 19 74 Edition, W75 Addenda, None Code Case
   (b) Applicable Edition of ASME Section XI Utilized for Repairs or Replacements 19 80 Edition, W80 Addenda, B308 Code Case
6. Identification of Components Repaired or Replaced and Replacement Components

	Name of Component	Name of Manufacturer	Manufacturer Serial No.	National Board No.	Other I.D.	Year Built	Repaired, Replaced, or Replacement	ASME Code Stamped (Yes or No) Code Class
*	X72b	JCI	**	N/A	N/A	1983	Replacement	Yes, Class 2
*	X72c	JCI	**	N/A	N/A	1982	Replacement	Yes, Class 2
*	X72d	JCI	**	N/A	N/A	1983	Replacement	Yes, Class 2
	X72e	JCI	**	N/A	N/A	1983	Replacement	Yes, Class 2
	X72f	JCI	**	N/A	N/A	1983	Replacement	Yes, Class 2
*	X73c	JCI	**	N/A	N/A	1982	Replacement	Yes, Class 2
*	X73d	JCI	**	N/A	N/A	1983	Replacement	Yes, Class 2
*	X85d	JCI	**	N/A	N/A	1982	Replacement	Yes, Class 2
*	X85e	JCI	**	N/A	N/A	1983	Replacement	Yes, Class 2

7. Description of Work:

Modified piping for containment penetrations X72, X73 and X85. The modification work was performed as follows:

1) Cut and removed piping, fittings and valves.
2) Prepped piping, fitting and valve ends for rewelding.
3) Installed piping, fitting material, new valves and existing valves.
4) Made required welds.
5) Performed PT examination on final welds. PT examination results acceptable.
6) Capped spared penetrations and made required welds.
7) Performed PT examination on the final welds. PT examination results acceptable.
8) Fabricated, reworked and installed new and existing supports.

Notes:

*Preceded by PI(1)-4S-
**Same as items listed under "Name of Component" column
JCI - Johnson Control, Inc.

WASHINGTON PUBLIC POWER SUPPLY SYSTEM

PLAN NO. 2-0267

FORM NIS-2 (Back)

8. Tests Conducted: Hydrostatic ☐ Pneumatic ☐ Nominal Operating Pressure ☐ Other ☒ None
Test Pressure _____ psig, Test Temp. _____ °F
Component Design Pressure _____ psig, Temp. _____ °F

9. Remarks:
See attached NPV-1 Code Data reports for the following new valves:

EPN No.	Serial No.	EPN No.	Serial No.
PI-V-X72C1	12493	PI-V-X73C1	71406
PI-V-X72C2	71389	PI-V-X73C2	53264
PI-V-X72D1	71405	PI-V-X73D1	71413
PI-V-X72D2	12505	PI-V-73D2	71409
PI-V-X72E1	71404		
PI-V-X72E2	71407		

These valves were reused-PI-V-X72c,72d,72e,72f,73d,262,263,264,266 and 268. PI-V-X85d was reused as PI-V-X73c.

CERTIFICATE OF COMPLIANCE

We certify that the statements made in the report are correct and this replacement (repair or replacement) conforms to the rules of the ASME Code, Section XI.

Type Code Symbol Stamp Not applicable

Certificate Authorization No. Not applicable Expiration Date Not applicable

Signed _____ (Owner or Owner's Designee) Title Plant Technical Manager

K Swift 8/12/88

Date 8/17 19 88

CERTIFICATE OF INSERVICE INSPECTION

I, the undersigned, holding a valid commission issued by the National Board of Boiler and Pressure Vessel Inspectors and the State of Washington and employed by Lumbermen's Mutual Casualty Co. of Illinois have inspected the components described in this Owner's Report during the period 3/17/86 to 8/12/88, and state that to the best of my knowledge and belief, the Owner has performed examinations and taken corrective measures described in this Owner's Report in accordance with the requirements of the ASME Code, Section XI.

By signing this certificate neither the Inspector nor his employer makes any warranty, expressed or implied, concerning the examinations and corrective measures described in this Owner's Report. Furthermore, neither the Inspector nor his employer shall be liable in any manner for any personal injury or property damage or a loss of any kind arising from or connected with this inspection.

_____ (Inspector's Signature) Commissions 5470W (National Board, State, and Endorsements)

Date 8/17 19 88

PLAN No. 2-0267
BOOK # 0-339

FORM NPV-1 N CERTIFICATE HOLDERS' DATA REPORT FOR NUCLEAR PUMPS OR VALVES*
As Required by the Provisions of the ASME Code, Section III, Div. 1

1. Manufactured by Nuclear Valve Div., Borg Warner, 7500 Tyrone Ave., Van Nuys, Calif.
(Name and Address of N Certificate Holder)
2. Manufactured for Bovee & Crail/G.E.R.I., P.O. Box 1040, Richland, Washington 99352
(Name and Address of Purchaser or Owner)
3. Location of Installation Richland, Washington WPPSS Hanford #2 Job Site
(Name and Address)
4. Pump or Valve V Globe Valve. Nominal Inlet Size 3/4 (inch) Outlet Size 3/4 (inch)

	(a) Model No., Series No. or Type	(b) N Certificate Holder's Serial No.	(c) Canadian Registration No.	(d) Drawing No.	(e) Class	(f) Nat'l. Bd. No.	(g) Year Built
(1)	15004	71371 thru 71395	N/A	76570	1	N/A	1981
(2)							
(3)							
(4)		EPN NO.		SERIAL NO			
(5)							
(6)		PI-V-X7202		71389.			
(7)							
(8)				Building Engr's 11/18/80.			
(9)							
(10)							

5. The valves are designed to handle a fluid media which includes steam, water condensate, borated water, etc., associated with a BWR and BWR. The temperature pressure rating of the media is stated below.
(Brief description of service for which equipment was designed)

6. Design Conditions 3600 (Pressure) psi 100 (Temperature) °F or Valve Pressure Class N/A (1)
7. Cold Working Pressure 3600 psi at 100°F.
8. Pressure Retaining Pieces

Mark No.	Material Spec. No.	Manufacturer	Remarks
(a) Castings			
Disc-Code 4V20	Colmony #4	Rex Precision	
(b) Forgings			
Body-Code 4R55	SA182 F 316	Kawaguchi	

DEVIEWED
MAR 05 1982
BECHTEL QUALITY CONTROL
BY:

(1) For manually operated valves only.

WBG BR 215-15026

* Supplemental sheets in form of lists, sketches or drawings may be used provided (1) size is 8-1/2" x 11", (2) information in items 1, 2 and 5 on this Data Report is included on each sheet, and (3) each sheet is numbered and number of sheets is recorded at top of this form.

(10/77) This form (E00037) may be obtained from the Order Dept., ASME, 345 E. 47th St., New York, N.Y. 10017

5

PLAN NO. 2-0267

FORM NPV-1 (Back)

Mark No.	Material Spec. No.	Manufacturer	Remarks
(c) Bolting N/A			
(d) Other Parts			
Backseat-Code 4H70	SA564 type 630	Repulic/Jorgensen	

9. Hydrostatic test 5400 psi. Disk Differential test pressure 3600 psi.

CERTIFICATE OF COMPLIANCE

We certify that the statements made in this report are correct and that this pump, or valve, conforms to the rules of construction of the ASME Code for Nuclear Power Plant Components, Section III, Div. I, Edition 1974, Addenda Summer '75 (Date), Code Case No. N/A, Date July 1, 1981

Signed Nuclear Valve Div., Borg Warner (N Certificate Holder) Signature Lorette L. Morris

Our ASME Certificate of Authorization No. N-1254 to use the N (N) symbol expires 10/27/81 (Date).

CERTIFICATION OF DESIGN

Design information on file at NVD of Borg Warner, 7500 Tyrone Ave., Van Nuys, Ca. 91409

Stress analysis report (Class 1 only) on file at NVD of Borg Warner, 7500 Tyrone Van Nuys, Ca. 91409

Design specifications certified by (1) David J. Murphy

PE State Washington Reg. No. 12542

Stress analysis certified by (1) David A. Wurangian

PE State Ca. Reg. No. 19547

(1) Signature not required. List name only.

CERTIFICATE OF SHOP INSPECTION

I, the undersigned, holding a valid commission issued by the National Board of Boiler and Pressure Vessel Inspectors and the State or Province of California and employed by Lumbermen's Mutual Casualty of Long Grove, Illinois have inspected the pump, or valve, described in this Data Report on 7/1 19 81, and state that to the best of my knowledge and belief, the N Certificate Holder has constructed this pump, or valve, in accordance with the ASME Code, Section III.

By signing this certificate, neither the inspector nor his employer makes any warranty, expressed or implied, concerning the equipment described in this Data Report. Furthermore, neither the inspector nor his employer shall be liable in any manner for any personal injury or property damage or a loss of any kind arising from or connected with this inspection.

Date 7/1 19 81

E M Rotter (Inspector) Commissions CA1020 (Nat'l Bd., State, Prov. and No.)

2 12 97 0489

PLAN NO. 2-0267

BOOK # 0 G 5 4 8

FORM NPV-1 N CERTIFICATE HOLDERS' DATA REPORT FOR NUCLEAR PUMPS OR VALVES*

As Required by the Provisions of the ASME Code, Section III, Div. 1

1. Manufactured by Nuclear Valve Div., Borg Warner, 7500 Tyrone Ave., Van Nuys, Calif. (Name and Address of N Certificate Holder)
2. Manufactured for Bovee & Crail/G.E.R.I., P.O. Box 1040, Richland, Washington 99352 (Name and Address of Purchaser or Owner)
3. Location of Installation Richland, Washington WPPSS Hanford #2 Job Site (Name and Address)
4. Pump or Valve Y Globe Valve. Nominal Inlet Size 3/4 (inch) Outlet Size 3/4 (inch)

	(a) Model No., Series No. or Type	(b) N Certificate Holder's Serial No.	(c) Canadian Registration No.	(d) Drawing No.	(e) Class	(f) Nat'l. Bd. No.	(g) Year Built
(1)	1500#	71404 thru 71413	N/A	76570	1	N/A	1981
(2)							
(3)		EPN NO.		SERIAL NO			
(4)		PI-V-X72E1		71404			
(5)		PI-V-X72D1		71405			
(6)		PI-V-X73C1		71406			
(7)		PI-V-X72E2		71407			
(8)		PI-V-X73D2		71409			
(9)		PI-V-X73D1		71413			
(10)							

Fluid Supp 11/20/87

5. The valves are designed to handle a fluid media which includes steam, water condensate, borated water, etc., associated with a PWR and BWR. The temperature pressure rating of the media is stated below. (Brief description of service for which equipment was designed)

6. Design Conditions 3600 (Pressure) psi 100 (Temperature) °F or Valve Pressure Class N/A (1)
7. Cold Working Pressure 3600 psi at 100°F.
8. Pressure Retaining Pieces

Mark No.	Material Spec. No.	Manufacturer	Remarks
(a) Castings			
Disc-Code 4V20, 4M69	Colmonoy #4	Rex Precision	
(b) Forgings			
Body-Code 4R55	SA182 F316	Kawaguchi	

(1) For manually operated valves only.

* Supplemental sheets in form of lists, sketches or drawings may be used provided (1) size is 8-1/2" x 11", (2) information in items 1, 2 and 5 on this Data Report is included on each sheet, and (3) each sheet is numbered and number of sheets is recorded at top of this form.

PLAN NO.2-0267.

FORM NPV-1 (Back)

Mark No.	Material Spec. No.	Manufacturer	Remarks
(c) Bolting N/A			
(d) Other Parts			
Backseat-Code 4B70	SA564 630	Republic/Jorgensen	
4J86	SA564 630	Armco/Jorgensen	

9. Hydrostatic test 5400 psi. Disc Differential test pressure 3600 psi.

CERTIFICATE OF COMPLIANCE

We certify that the statements made in this report are correct and that this pump, or valve, conforms to the rules of construction of the ASME Code for Nuclear Power Plant Components, Section III, Div. I, Edition 1974 Addenda Summer '75 (Date), Code Case No. N/A Date August 20, 1981

Signed Nuclear Valve Div., Borg Warner (N Certificate Holder) [signature]

Our ASME Certificate of Authorization No. N-1254 to use the N (N) symbol expires 10/27/81 (Date).

CERTIFICATION OF DESIGN

Design information on file at NVD of Borg Warner, 7500 Tyrone Ave., Van Nuys, Ca. 91409

Stress analysis report (Class 1 only) on file at NVD of Borg Warner, 7500 Tyrone Ave, Van Nuys, Ca 91409

Design specifications certified by (1) David J. Murphy

PE State Washington Reg. No. 12542

Stress analysis certified by (1) David A. Wurangian

PE State Ca. Reg. No. M19547

(1) Signature not required. List name only.

CERTIFICATE OF SHOP INSPECTION

I, the undersigned, holding a valid commission issued by the National Board of Boiler and Pressure Vessel Inspectors and the State or Province of California and employed by Lumbermen's Mutual Casualty of Long Grove, Illinois have inspected the pump, or valve, described in this Data Report on Aug 19 81, and state that to the best of my knowledge and belief, the N Certificate Holder has constructed this pump, or valve, in accordance with the ASME Code, Section III.

By signing this certificate, neither the Inspector nor his employer makes any warranty, expressed or implied, concerning the equipment described in this Data Report. Furthermore, neither the Inspector nor his employer shall be liable in any manner for any personal injury or property damage or a loss of any kind arising from or connected with this inspection.

Date Aug 19 81

[signature] (Inspector) Commissions 1275 CA (Nat'l Bd., State, Prov. and No.)

2 1 2 8 3 1 1 2 6

0B663

FORM NPV-1 MANUFACTURERS' DATA REPORT FOR NUCLEAR PUMPS OR VALVES*

As Required by the Provisions of the ASME Code Rules PLAN No. 2-0267

1. Manufactured by Nuclear Valve Division of Borg Warner, 7500 Tyrone Avenue, Van Nuys, Ca. Order No. 47713
(Name & Address of Manufacturer)

2. Manufactured for Bovee & Crail/G.E.R.I. P.O. Box 1040, Richland, Washington 99352 Order No. 215-3261
(Name and Address)

3. Owner WPPSS Hanford #2 Job Site EPN NO PI-V-X72D2 SERIAL NO 12505

4. Location of Plant Richland, Washington 99352 Buildup Grp 11/15/87

5. Pump or Valve Identification Nuclear Valve Div., P/N 76570, 3/4 Inch Y Type Globe Valve, SS

Serial Numbers 12465, 12584 & 12505 thru 12527 (25 Valves)
(Brief description of service for which equipment was designed)

(a) Drawing No. 76570 Prepared by Nuclear Valve Division of Borg Warner

(b) National Board No.

6. Design Conditions 3600 (Pressure) psi 100 (Temperature) °F

7. The material, design, construction, and workmanship complies with ASME Code Section III, Class 1

Edition 1971, Addenda Date Winter '73, Case No.

Mark No.	Material Spec. No.	Manufacturer	Remarks
(a) Castings			
Disc - Code 1N77-	Stellite #6		
Casting - 73876	NMS 71043	Rex Precision	
Machined- 73877		NV Division	
Stem - Code 1M12	SA564 Ty.630		
Bar Stock		Allen Fry Steel	
Machined - 73875		Enco, Inc.	
(b) Forgings			
Body - Code 1L89-	SA182 F316		
Forging - 75237		Compton Forge	
Machined - 75238		NV Division	
Assembly - 73898		NV Division	
Back Seat - Code (52FF- (VV10,3EE-	SA564 Ty.630		
Forged Stock		Ducommun Metals/Jorgenson Steel	
Machined - 73886		NV Division	

RECEIVED MAR 31 1982 BECHTEL QUALITY CONTROL BY

2 15 16345A

*Supplemental sheets in form of lists, sketches or drawings may be used provided (1) size is 8½" x 11", (2) information in Items 1, 2, 3a and 3b on this data report is included on each sheet, and (3) each sheet is numbered and number of sheets is recorded at top of this form.

PLAN No. 2-0267.

0B063

FORM NPV-1 (back)

	Mark No.	Material Spec. No.	Manufacturer	Remarks
(c) Bolting				
(d) Other Parts				

8. Hydrostatic test 5400 - 5450 psi.

CERTIFICATION OF DESIGN

Design information on file at Nuclear Valve Div. of Borg Warner, 7500 Tyrone Ave., Van Nuys, Ca.

Stress analysis report on file at NVD of Borg Warner, 7500 Tyrone Ave., Van Nuys, CA

Design specifications certified by David J. Murphy (1) Prof. Eng. State Wash. Reg. No. 12542

Stress analysis report certified by Byron Leonard Jr. (1) Prof. Eng. State CA Reg. No. E123

(1) Signature not required. List name only.

We certify that the statements made in this report are correct.

Date December 20 19 76 Signed Nuclear Valve Div. of Borg Warner (Manufacturer) By [signature]

Certificate of Authorization No. N-1254 expires October 27, 1978

CERTIFICATE OF SHOP INSPECTION

I, the undersigned, holding a valid commission issued by the National Board of Boiler and Pressure Vessel Inspectors and/or the State of Province of California and employed by Dept. of Bldg. & Safety of City of Los Angeles have inspected the equipment described in this Data Report on December 20 19 76, and state that to the best of my knowledge and belief, the Manufacturer has constructed this equipment in accordance with the applicable Subsections of ASME Code, Section III.

By signing this certificate, neither the Inspector nor his employer makes any warranty, expressed or implied, concerning the equipment described in this Data Report. Furthermore, neither the Inspector nor his employer shall be liable in any manner for any personal injury or property damage or a loss of any kind arising from or connected with this inspection.

Date December 20 19 76

WO# 215-16345A

REVIEWED

MAR 8 1982

BECHTEL QUALITY CONTROL

BY:

[signature] (Inspector) Commissions [illegible] (National Board, State, Prov. and No.)

PLAN No. 2-0267

0

FORM NPV-1 MANUFACTURERS' DATA REPORT FOR NUCLEAR PUMPS OR VALVES*

As Required by the Provisions of the ASME Code Rules

1. Manufactured by Nuclear Valve Division of Borg Warner, 7500 Tyrone Avenue, Van Nuys, Ca. Order No. 47713
(Name & Address of Manufacturer)

2. Manufactured for Bovco & Crail/G.E.R.I. P.O. Box 1040, Richland, Washington 99352 Order No. 215-32619
(Name and Address)

EPN No PI-V-X72C1 SERIAL No 12493

3. Owner WPPSS Hanford #2 Job Site

4. Location of Plant Richland, Washington 99352

Rudolf Lupb 11/18/87.

5. Pump or Valve Identification Nuclear Valve Div., P/N 76570 3/4 Inch, Y Type, Globe Cres

Serial Numbers 12491 Thru 12501 (11 Valves)
(Brief description of service for which equipment was designed)

(a) Drawing No. 76570 Prepared by Nuclear Valve Division of Borg Warner

(b) National Board No.

6. Design Conditions 3600 (Pressure) psi 100 (Temperature) °F

7. The material, design, construction, and workmanship complies with ASME Code Section III, Class 1

Edition 1971, Addenda Date Winter '73, Case No.

Mark No.	Material Spec. No.	Manufacturer	Remarks
(a) Castings			
Disc - Code 1N77	Stellite # 6		
Casting 73876		Bex Precision	
Machined- 73877		NV Division	
Stem Code 1M12-	SA564 Type 630		
Bar Stock		Allen Fry Steel	
Machined 73875		N.V. Division	
(b) Forgings			
Body - Code 1L89	SA182 F316		
Forging -75237		Compton Forge	
Machined -75238		NV Division	
Back Seat 52FF, VW10-	SA564 Type 630		
Forged Stock 1L43		Jorgensen	
Machined -73886		NV Division	

REVIEWED MAR 26 1982 BECHTEL QUALITY CONTROL BY:

215-16296A

*Supplemental sheets in form of lists, sketches or drawings may be used provided (1) size is 8½" x 11", (2) information in Items 1, 2, 3a and 3b on this data report is included on each sheet, and (3) each sheet is numbered and number of sheets is recorded at top of this form.

1

PLAN No.2-0267.

FORM NPV-1 (back)

Item No.	Material Spec. No.	Manufacturer	Nat'l Bd. No.
(c) Bolting			
(d) Other Parts			

8. Hydrostatic test 5400 To 5450 psi.

CERTIFICATION OF DESIGN

Design information on file at Nuclear Valve Div.of Borg Warner,7500 Tyrone Ave. Van Nuys,Ca.

Stress analysis report on file at NVD of.Borg Warner, 7500 Tyrone Ave., Van Nuys, CA

Design specifications certified by David J. Murphy (1) Prof. Eng. State Wash. Reg. No. 12542

Stress analysis report certified by Byron Leonard Jr. (1) Prof. Eng. State CA Reg. No. E123

(1) Signature not required. List name only.

We certify that the statements made in this report are correct.

Date December 17 19 76 Signed Nuclear Valve Div. of Borg Warner (Manufacturer) By [signature]

Certificate of Authorization No. N- 1254 expires October 27, 1976

CERTIFICATE OF SHOP INSPECTION

I, the undersigned, holding a valid commission issued by the National Board of Boiler and Pressure Vessel Inspectors and/or the State of Province of California and employed by Dept. of Bldg. & Safety of City of Los Angeles have inspected the equipment described in this Data Report on December 17 19 76, and state that to the best of my knowledge and belief, the Manufacturer has constructed this equipment in accordance with the applicable Subsections of ASME Code, Section III.

By signing this certificate, neither the Inspector nor his employer makes any warranty, expressed or implied, concerning the equipment described in this Data Report. Furthermore, neither the Inspector nor his employer shall be liable in any manner for any personal injury or property damage or a loss of any kind arising from or connected with this inspection.

BECHTEL QUALITY CONTROL
BY:

Date December 17 19 76

215-16296A

[signature] (Inspector) Commissions [signature] (National Board, State, Province and No.)

8

PLAN NO. 2-0267.

FORM NPV-1 N CERTIFICATE HOLDERS' DATA REPORT FOR NUCLEAR PUMPS OR VALVES*

As Required by the Provisions of the ASME Code, Section III, Div. 1

1. Manufactured by Duniar Valve Div., Borg Warner, 7500 Tyrone Ave., Van Nuys, Calif.
(Name and Address of N Certificate Holder)
2. Manufactured for Bovee & Crail/G.E.R.I., P.O. Box 1040, Richland, Washington 99352
(Name and Address of Purchaser or Owner)
3. Location of Installation Richland, Washington WPPSS Hanford #2 Job Site
(Name and Address)
4. Pump or Valve Y Globe Valve. Nominal Inlet Size 3/4 (inch) Outlet Size 3/4 (inch)

	(a) Model No., Series No. or Type	(b) N Certificate Holder's Serial No.	(c) Canadian Registration No.	(d) Drawing No.	(e) Class	(f) Nat'l. Bd. No.	(g) Year Built
(1)	1500#	53263 thru 53282	N/A	76570	1	N/A	1979
(2)							
(3)							
(4)							
(5)							
(6)		EPN NO PI-V-X73C2		SERIAL NO 53264			
(7)							
(8)							
(9)							
(10)							

215-12636

Culdip Singh 10/18/87

5. The valves are designed to handle a fluid media which includes steam, water condensate, borated water, etc., associated with a PWR and BWR. The temperature pressure rating of the media is stated below.
(Brief description of service for which equipment was designed)

6. Design Conditions 3600 (Pressure) psi 100 (Temperature) °F or Valve Pressure Class N/A (1)
7. Cold Working Pressure 3600 psi at 100°F.
8. Pressure Retaining Pieces

Mark No.	Material Spec. No.	Manufacturer	Remarks
(a) Castings:			
(b) Forgings:			
Body - N Code 2J22 & 1V41	SA182F316	Kawaguchi Forge	
Backseat - N Code 2D89	SA564Ty630	Jorgensen Steel	
Disk - N Code 4D32	Colmonoy #4	Rex Precision	

(1) For manually operated valves only.

* Supplemental sheets in form of lists, sketches or drawings may be used provided (1) size is 8-1/2" x 11", (2) information in items 1, 2 and 5 on this Data Report is included on each sheet, and (3) each sheet is numbered and number of sheets is recorded at top of this form.

2 1 2 9 7 0 3 9 3

PLAN No. 2-0267

FORM NPV-1 (Back)

Mark No.	Material Spec. No.	Manufacturer	Remarks
(c) Packing			
(d) Other Parts			

8. Hydrostatic test 5400 psi. Disk Differential test pressure 3600 psi.

CERTIFICATE OF COMPLIANCE

We certify that the statements made in this report are correct and that this pump, or valve, conforms to the rules of construction of the ASME Code for Nuclear Power Plant Components, Section III, Div. I, Edition 1974, Addenda Winter '75 (Date), Code Case No. N/A, Date N/A

Signed Nuclear Valve Div., Borg Warner (N Certificate Holder) by [signature]

Our ASME Certificate of Authorization No. N-1234 to use the N (Stamp) symbol expires 10/27/81 (Date)

CERTIFICATION OF DESIGN

Design information on file at NVD of Borg Warner, 7500 Tyrone Ave., Van Nuys, Ca. 91409

Stress analysis report (Class 1 only) on file at NVD, Borg Warner, 7500 Tyrone Ave., Van Nuys, Ca.

Design specifications certified by (1) David J. Murphy

PE State Washington Reg. No. 13143

Stress analysis certified by (1) William E. Hill

PE State Calif. Reg. No. 11338

(1) Signature not required. List name only.

CERTIFICATE OF SHOP INSPECTION

I, the undersigned, holding a valid commission issued by the National Board of Boiler and Pressure Vessel Inspectors and the State or Province of California and employed by Lumbermen's Mutual Casualty of Long Grove, Illinois have inspected the pump, or valve, described in this Data Report on 12/20 19 79, and state that to the best of my knowledge and belief, the N Certificate Holder has constructed this pump, or valve, in accordance with the ASME Code, Section III.

By signing this certificate, neither the inspector nor his employer makes any warranty, expressed or implied, concerning the equipment described in this Data Report. Furthermore, neither the inspector nor his employer shall be liable in any manner for any personal injury or property damage or a loss of any kind arising from or connected with this inspection.

Date 12/20 19 79

(Inspector)

Commissions 1275 CA.

(Nat'l Bd., State, Prov. and No.)

2 1299 0394

WASHINGTON PUBLIC POWER SUPPLY SYSTEM

PLAN NO. 2-0268
2-0268R1

FORM NIS-2 OWNER'S REPORT FOR REPAIRS OR REPLACEMENTS
As Required by the Provisions of the ASME Code Section XI

1. Owner (Name) Washington Public Power Supply System — Date 8/12/88
   Owner (Address) 3000 George Washington Way, Richland, WA — Sheet 1 of 1
2. Plant (Name) WPPSS Nuclear Power Plant (WNP) — Unit WNP-2
   Plant (Address) Hanford, Benton County, WA — C20069 Repair Organization P.O. No., Job No., etc.
3. Work Performed by (Name) Bechtel Construction, Inc.
   Work Performed by (Address) P.O. Box 600, Richland, WA
4. Identification of System Containment Monitoring System (CMS)
5. (a) Applicable Construction Code ASME Section III 19 74 Edition, W75 Addenda, None Code Case
   (b) Applicable Edition of ASME Section XI Utilized for Repairs or Replacements 19 80 Edition, W80
   Addenda, N308 Code Case
6. Identification of Components Repaired or Replaced and Replacement Components

	Name of Component	Name of Manufacturer	Manufacturer Serial No.	National Board No.	Other I.D.	Year Built	Repaired, Replaced, or Replacement	ASME Code Stamped (Yes or No) Code Class
*	(CMS-SR-13)-9	JCI	**	N/A	N/A	1983	Replacement	Yes, Class 2
*	(CMS-SR-14)-9	JCI	**	N/A	N/A	1983	Replacement	Yes, Class 2

7. Description of Work:

Modified piping for containment penetrations X42 and X78. The modification work was performed as follows:

1) Cut and removed existing caps from penetration X42c and X78a.
2) Prepped valve ends removed from SR-13, 14, X72b and 73c.
3) Installed new piping fitting material, lugs and valves.
4) Made required welds.
5) Performed PT examination on the final welds. PT examination results acceptable.
6) Fabricated, reworked and installed new and existing supports.

Notes:

*Preceded by PI(1)-ST-
**PI(1)-ST-X72b, D-220-025.0-SR-13 **PI(1)-ST-X73c, D-220-025.0-SR-14
JCI - Johnson Control, Inc.

WASHINGTON PUBLIC POWER SUPPLY SYSTEM

PLAN NO. 2-0268
2-0268R1

FORM NIS-2 (Back)

8. Tests Conducted: Hydrostatic ☐ Pneumatic ☐ Nominal Operating Pressure ☐ Other ☒ None
Test Pressure _____ psig, Test Temp. _____ °F
Component Design Pressure _____ psig, Temp. _____ °F

9. Remarks:
The following valves were reused:

Old EPN No.	New EPN No.	Old EPN No.	New EPN No.
SW-V-885	PI-V-X42C1	PI-V-X72b	PI-V-X78A
SW-V-889	PI-V-X42C2	PI-EFC-X72b	PI-EFC-X78A
SW-V-884	PI-V-X78A1		
SW-V-890	PI-V-X78A2		
PI-V-X73C	PI-V-X42C		
PI-EFC-X73C	PI-EFC-X42C		

CERTIFICATE OF COMPLIANCE

We certify that the statements made in the report are correct and this replacement (repair or replacement) conforms to the rules of the ASME Code, Section XI.

Type Code Symbol Stamp Not applicable

Certificate Authorization No. Not applicable Expiration Date Not applicable

Signed _____ (Owner or Owner's Designee,) Title Plant Technical Manager

K Swob 8/12/88

Date 8/17 19 88

CERTIFICATE OF INSERVICE INSPECTION

I, the undersigned, holding a valid commission issued by the National Board of Boiler and Pressure Vessel Inspectors and the State of Washington and employed by Lumbermen's Mutual Casualty Co. of Illinois have inspected the components described in this Owner's Report during the period 3/19/86 to 8/12/88, and state that to the best of my knowledge and belief, the Owner has performed examinations and taken corrective measures described in this Owner's Report in accordance with the requirements of the ASME Code, Section XI.

By signing this certificate neither the Inspector nor his employer makes any warranty, expressed or implied, concerning the examinations and corrective measures described in this Owner's Report. Furthermore, neither the Inspector nor his employer shall be liable in any manner for any personal injury or property damage or a loss of any kind arising from or connected with this inspection.

_____ (Inspector's Signature) Commissions 5470W (National Board, State, and Endorsements)

Date 8/17 19 88

WASHINGTON PUBLIC POWER SUPPLY SYSTEM

PLAN NO. 2-0269

FORM NIS-2 OWNER'S REPORT FOR REPAIRS OR REPLACEMENTS
As Required by the Provisions of the ASME Code Section XI

1. Owner (Name) Washington Public Power Supply System — Date 8/12/88
   Owner (Address) 3000 George Washington Way, Richland, WA — Sheet 1 of 1
2. Plant (Name) WPPSS Nuclear Power Plant (WNP) — Unit WNP-2
   Plant (Address) Hanford, Benton County, WA — C20069 Repair Organization P.O. No., Job No., etc.
3. Work Performed by (Name) Bechtel Construction, Inc.
   Work Performed by (Address) P.O. box 600, Richland, WA
4. Identification of System Containment Monitoring System (CMS)
5. (a) Applicable Construction Code ASME Section III 19 74 Edition, W75 Addenda, None Code Case
   (b) Applicable Edition of ASME Section XI Utilized for Repairs or Replacements 19 80 Edition, W80 Addenda, N308 Code Case
6. Identification of Components Repaired or Replaced and Replacement Components

	Name of Component	Name of Manufacturer	Manufacturer Serial No.	National Board No.	Other I.D.	Year Built	Repaired, Replaced, or Replacement	ASME Code Stamped (Yes or No) Code Class
*	X82c	JCI	**	N/A	N/A	1983	Replacement	Yes, Class 2
*	X84b	JCI	**	N/A	N/A	1983	Replacement	Yes, Class 2

7. Description of Work:

Modified piping for containment penetration X82c and X84b. The modification work was performed as follows:

1) Cut and removed existing piping material.
2) Prepped valve ends for rewelding.
3) Installed new piping, fitting material and valves.
4) Made required welds.
5) Performed PT examination on the final welds. PT examination results acceptable.
6) Fabricated, reworked and installed new and existing supports.

Notes:
*Preceded by PI(1)-4S-
**Same as items listed under "Name of Component" column
JCI - Johnson Control, Inc.

WASHINGTON PUBLIC POWER SUPPLY SYSTEM

PLAN NO. 2-0269

FORM NIS-2 (Back)

8. Tests Conducted: Hydrostatic ☐ Pneumatic ☐ Nominal Operating Pressure ☐ Other ☒ None
Test Pressure _____ psig, Test Temp. _____ °F
Component Design Pressure _____ psig, Temp. _____ °F

9. Remarks:
See attached NPV-1 Code Data reports for the following new valves:

EPN No.	Serial No.
PI-V-X84B1	12597
PI-V-X84B2	71412

The following valves were reused:

Old EPN No.	New EPN No.
SW-V-888	PI-V-X82C1
SW-V-891	PI-V-X82C2

CERTIFICATE OF COMPLIANCE

We certify that the statements made in the report are correct and this replacement (repair or replacement) conforms to the rules of the ASME Code, Section XI.

Type Code Symbol Stamp Not applicable

Certificate Authorization No. Not applicable Expiration Date Not applicable

Signed [signature] Owner or Owner's Designee, Title Plant Technical Manager

K Sawyer 8/12/88

Date 8/17 19 88

CERTIFICATE OF INSERVICE INSPECTION

I, the undersigned, holding a valid commission issued by the National Board of Boiler and Pressure Vessel Inspectors and the State of Washington and employed by Lumbermen's Mutual Casualty Co. of Illinois have inspected the components described in this Owner's Report during the period 3/7/86 to 8/12/88, and state that to the best of my knowledge and belief, the Owner has performed examinations and taken corrective measures described in this Owner's Report in accordance with the requirements of the ASME Code, Section XI.

By signing this certificate neither the Inspector nor his employer makes any warranty, expressed or implied, concerning the examinations and corrective measures described in this Owner's Report. Furthermore, neither the Inspector nor his employer shall be liable in any manner for any personal injury or property damage or a loss of any kind arising from or connected with this inspection.

[signature] Inspector's Signature Commissions 5470W National Board, State, and Endorsements

Date 8/17 19 88

PLAN NO. 2-0269.

BOOK # 0 G5 4 8

FORM NPV-1 N CERTIFICATE HOLDERS' DATA REPORT FOR NUCLEAR PUMPS OR VALVES*

As Required by the Provisions of the ASME Code, Section III, Div. 1

1. Manufactured by Nuclear Valve Div., Borg Warner, 7500 Tyrone Ave., Van Nuys, Calif. (Name and Address of N Certificate Holder)
2. Manufactured for Bovee & Crail/G.E.R.I., P.O. Box 1040, Richland, Washington 99352 (Name and Address of Purchaser or Owner)
3. Location of Installation Richland, Washington WPPSS Hanford #2 Job Site (Name and Address)
4. Pump or Valve Y Globe Valve. Nominal Inlet Size 3/4 (inch) Outlet Size 3/4 (inch)

	(a) Model No., Series No. or Type	(b) N Certificate Holder's Serial No.	(c) Canadian Registration No.	(d) Drawing No.	(e) Class	(f) Nat'l. Bd. No.	(g) Year Built
(1)	15004	71404 thru 71413	N/A	76570	1	N/A	1981
(2)							
(3)							
(4)		EPN NO		SERIAL NO			
(5)							
(6)		PI-V-X84B2		71412			
(7)							
(8)				Rudolph Lugo			
(9)				11/18/87.			
(10)							

5. The valves are designed to handle a fluid media which includes steam, water condensate, borated water, etc., associated with a PWR and BWR. The temperature pressure rating of the media is stated below. (Brief description of service for which equipment was designed)

6. Design Conditions 3600 (Pressure) psi 100 (Temperature) °F or Valve Pressure Class N/A (1)
7. Cold Working Pressure 3600 psi at 100°F.
8. Pressure Retaining Pieces

Mark No.	Material Spec. No.	Manufacturer	Remarks
(a) Castings			
Disc-Code 4V20, 4M69	Colmonoy #4	Rex Precision	
(b) Forgings			
Body-Code 4R55	SA182 F316	Kawaguchi	

(1) For manually operated valves only.

* Supplemental sheets in form of lists, sketches or drawings may be used provided (1) size is 8-1/2" x 11", (2) information in items 1, 2 and 5 on this Data Report is included on each sheet, and (3) each sheet is numbered and number of sheets is recorded at top of this form.

PLAN NO.2-0269.

FORM NPV-1 (Back)

Mark No.	Material Spec. No.	Manufacturer	Remarks
(c) Bolting N/A			
(d) Other Parts			
Backseat-Code 4B70	SA564 630	Republic/Jorgensen	
4J86	SA564 630	Armco/Jorgensen	

9. Hydrostatic test 5400 psi. Disk Differential test pressure 3600 psi.

CERTIFICATE OF COMPLIANCE

We certify that the statements made in this report are correct and that this pump, or valve, conforms to the rules of construction of the ASME Code for Nuclear Power Plant Components, Section III, Div. I, Edition 1974 Addenda Summer '75 (Date), Code Case No. N/A Date August 26, 1981

Signed Nuclear Valve Div., Borg Warner (N Certificate Holder) D. Moritti L. Martin

Our ASME Certificate of Authorization No. N-1254 to use the N (on) symbol expires 10/27/81 (Date).

CERTIFICATION OF DESIGN

Design information on file at NVD of Borg Warner, 7500 Tyrone Ave., Van Nuys, Ca. 91409

Stress analysis report (Class 1 only) on file at NVD of Borg Warner, 7500 Tyrone Ave, Van Nuys, Ca 91409

Design specifications certified by (1) David J. Murphy

PE State Washington Reg. No. 12542

Stress analysis certified by (1) David A. Wurangian

PE State Ca. Reg. No. M19547

(1) Signature not required. List name only.

CERTIFICATE OF SHOP INSPECTION

I, the undersigned, holding a valid commission issued by the National Board of Boiler and Pressure Vessel Inspectors and the State or Province of California and employed by Lumbermen's Mutual Casualty of Long Grove, Illinois have inspected the pump, or valve, described in this Data Report on Aug 19 81, and state that to the best of my knowledge and belief, the N Certificate Holder has constructed this pump, or valve, in accordance with the ASME Code, Section III.

By signing this certificate, neither the Inspector nor his employer makes any warranty, expressed or implied, concerning the equipment described in this Data Report. Furthermore, neither the Inspector nor his employer shall be liable in any manner for any personal injury or property damage or a loss of any kind arising from or connected with this inspection.

Date Aug 19 81

(Inspector) Commissions 1275 CA (Nat'l Bd., State, Prov. and No.)

2 1 2 8 5 1 1 2 6

PLAN NO. 2-0269.

03058

FORM NPV-1 MANUFACTURERS' DATA REPORT FOR NUCLEAR PUMPS OR VALVES*

As Required by the Provisions of the ASME Code Rules

1. Manufactured by Nuclear Valve Division of Borg Warner, 7500 Tyrone Avenue, Van Nuys, Ca. Order No. 47712
(Name & Address of Manufacturer)

2. Manufactured for Bovce & Crail/G.E.R.I. P.O. Box 1040, Richland, Washington 99352 Order No. 215-3261
(Name and Address) EPN NO SERIAL NO

3. Owner WPPSS Hanford #2 Job Site PI-V-X8481 12597

4. Location of Plant Richland, Washington 99352 Rudolf Guy's 11/18/83

5. Pump or Valve Identification Nuclear Valve Div., P/N 76570, 3/4 Inch Y Type Globe Valve, SS

Serial Numbers 12565 thru 12609 (25 Valves)
(Brief description of service for which equipment was designed)

(a) Drawing No. 76570 Prepared by Nuclear Valve Division of Borg Warner

(b) National Board No.

6. Design Conditions 3600 (Pressure) psi 100 (Temperature) °F

7. The material, design, construction, and workmanship complies with ASME Code Section III, Class 1

Edition 1971, Addenda Date Winter '73, Case No.

Mark No.	Material Spec. No.	Manufacturer	Remarks
(a) Castings			
Disc - Code 1N77	Stellite #6		
Casting - 73876	NMS 71043	Rex Precision	
Machined- 73877		NV Division	
(b) Forgings			
Body - Code 1L89	SA182 F316		
Forging - 75237		Compton Forge	
Machined - 75238		NV Division	
Assembly - 73898		NV Division	

REVIEWED
APR 22 1983
BECHTEL QUALITY CONTROL
BY:

*Supplemental sheets in form of lists, sketches or drawings may be used provided (1) size is 8½" x 11", (2) information in items 1, 2, 3a and 3b on this data report is included on each sheet, and (3) each sheet is numbered and number of sheets is recorded at top of this form.

2 1 2 0 0 0 0 8

WBG BR 215 18625

PLAN NO. 2-0209.

0B058

FORM NPV-1 (back)

Mark No.	Material Spec. No.	Manufacturer	Remarks
(c) Bolting			
(d) Other Parts 3EE, VV30			
Back Seat - Code 52FF	SA564 Ty.630		
Bar Stock		Ducommun Metals/Jorgensen Steel	
Machined - 73886		NV Division	
Stem - Code 1M12	SA564 Ty.630		
Bar Stock		Allen Fry Steel	
Machined - 73875		Emco, Inc.	

Hydrostatic test 5400 - 5450 psi.

CERTIFICATION OF DESIGN

Design information on file at Nuclear Valve Div. of Borg Warner, 7500 Tyrone Ave., Van Nuys, Ca.

Stress analysis report on file at NVD of Borg Warner, 7500 Tyrone Ave., Van Nuys, CA

Design specifications certified by David J. Murphy (1) Prof. Eng. State Wash. Reg. No. 12542

Stress analysis report certified by Byron Leonard Jr. (1) Prof. Eng. State CA Reg. No. E123

(1) Signature not required. List name only.

We certify that the statements made in this report are correct.

Date December 17 19 76 Signed Nuclear Valve Div. of Borg Warner (Manufacturer) By [signature]

Certificate of Authorization No. N-1254 expires October 27, 1978

CERTIFICATE OF SHOP INSPECTION

I, the undersigned, holding a valid commission issued by the National Board of Boiler and Pressure Vessel Inspectors and/or the State of Province of California and employed by Dept. of Bldg. & Safety of City of Los Angeles have inspected the equipment described in this Data Report on December 17 19 76, and state that to the best of my knowledge and belief, the Manufacturer has constructed this equipment in accordance with the applicable Subsections of ASME Code, Section III.

By signing this certificate, neither the inspector nor his employer makes any warranty, expressed or implied, concerning the equipment described in this Data Report. Furthermore, neither the inspector nor his employer shall be liable in any manner for any personal injury or property damage or a loss of any kind arising from or connected with this inspection.

Date December 17 19 76

REVIEWED APR 22 1982 BECHTEL QUALITY CONTROL

[signature] (Inspector) Commissions Calif 1010 (National Board, State, Province and No.)

NSC BR 215 18625

Printed in U.S.A. (6/72) This form (E17) is obtainable from the ASME, 345 E. 47th St., New York, N.Y. 10017

2 1 2 3 1 0 0 0 9

WASHINGTON PUBLIC POWER SUPPLY SYSTEM

PLAN NO. 2-0270

FORM NIS-2 OWNER'S REPORT FOR REPAIRS OR REPLACEMENTS
As Required by the Provisions of the ASME Code Section XI

1. Owner (Name) Washington Public Power Supply System — Date 8/12/88
   Owner (Address) 3000 George Washington Way, Richland, WA — Sheet 1 of 1
2. Plant (Name) WPPSS Nuclear Power Plant (WNP) — Unit WNP-2
   Plant (Address) Hanford, Benton County, WA — C20069 Repair Organization P.O. No., Job No., etc.
3. Work Performed by (Name) Bechtel Construction, Inc.
   Work Performed by (Address) P.O. Box 600, Richland, WA
4. Identification of System Containment Monitoring System (CMS)
5. (a) Applicable Construction Code ASME Section III 19 74 Edition, W75 Addenda, None Code Case
   (b) Applicable Edition of ASME Section XI Utilized for Repairs or Replacements 19 80 Edition, W80 Addenda, N308 Code Case
6. Identification of Components Repaired or Replaced and Replacement Components

	Name of Component	Name of Manufacturer	Manufacturer Serial No.	National Board No.	Other I.D.	Year Built	Repaired, Replaced, or Replacement	ASME Code Stamped (Yes or No) Code Class
*	(CMS-SR-13)-C1	JCI	**	N/A	N/A	1983	Replacement	Yes, Class 3
*	(CMS-SR-13)-2	JCI	**	N/A	N/A	1983	Replacement	Yes, Class 3
	(CMS-SR-13)-3	JCI	**	N/A	N/A	1983	Replacement	Yes, Class 3
	(CMS-SR-13)-C2	JCI	**	N/A	N/A	1983	Replacement	Yes, Class 3
*	(CMS-SR-13)-DT	JCI	**	N/A	N/A	1983	Replacement	Yes, Class 3

7. Description of Work:

Modified instrument tubing for CMS-SR-13. The modification work was performed as follows:

1) Installed new tubing and tubing material. All new installation was made using mechanical joints.
2) Fabricated and installed new supports.

Notes:
*Preceded by PI(1)-ST-
**Same as items listed under "Name of Component" column
JCI - Johnson Control, Inc.

WASHINGTON PUBLIC POWER SUPPLY SYSTEM

PLAN NO. 2-0270

FORM NIS-2 (Back)

8. Tests Conducted: Hydrostatic ☐ Pneumatic ☐ Nominal Operating Pressure ☐ Other ☒ None
Test Pressure _____ psig, Test Temp. _____ °F
Component Design Pressure _____ psig, Temp. _____ °F

9. Remarks:

None

CERTIFICATE OF COMPLIANCE

We certify that the statements made in the report are correct and this replacement (repair or replacement) conforms to the rules of the ASME Code, Section XI.

Type Code Symbol Stamp Not applicable

Certificate Authorization No. Not applicable Expiration Date Not applicable

Signed [signature] Owner or Owner's Designee. Title Plant Technical Manager

K Singh 8/12/88

Date 8/17 19 88

CERTIFICATE OF INSERVICE INSPECTION

I, the undersigned, holding a valid commission issued by the National Board of Boiler and Pressure Vessel Inspectors and the State of Washington and employed by Lumbermen's Mutual Casualty Co. of Illinois have inspected the components described in this Owner's Report during the period 3/5/86 to 8/12/88, and state that to the best of my knowledge and belief, the Owner has performed examinations and taken corrective measures described in this Owner's Report in accordance with the requirements of the ASME Code, Section XI.

By signing this certificate neither the Inspector nor his employer makes any warranty, expressed or implied, concerning the examinations and corrective measures described in this Owner's Report. Furthermore, neither the Inspector nor his employer shall be liable in any manner for any personal injury or property damage or a loss of any kind arising from or connected with this inspection.

[signature] Inspector's Signature Commissions 5470 W National Board, State, and Endorsements

Date 8/17 19 88

WASHINGTON PUBLIC POWER SUPPLY SYSTEM

PLAN NO. 2-0272

FORM NIS-2 OWNER'S REPORT FOR REPAIRS OR REPLACEMENTS
As Required by the Provisions of the ASME Code Section XI

1. Owner (Name) Washington Public Power Supply System — Date 11/17/87
   Owner (Address) 3000 George Washington Way, Richland, WA — Sheet 1 of 1
2. Plant (Name) WPPSS Nuclear Power Plant (WNP) — Unit WNP-2
   Plant (Address) Hanford, Benton County, WA — WPPSS (Repair Organization P.O. No., Job No., etc.)
3. Work Performed by (Name) WPPSS
   Work Performed by (Address) 3000 George Wash. Way, Richland, WA
4. Identification of System Process Sampling, Radioactive (PSR) System
5. (a) Applicable Construction Code ASME Section III 19 74 Edition, W75 Addenda, None Code Case
   (b) Applicable Edition of ASME Section XI Utilized for Repairs or Replacements 19 80 Edition, W80
   Addenda, N308 Code Case
6. Identification of Components Repaired or Replaced and Replacement Components

Name of Component	Name of Manufacturer	Manufacturer Serial No.	National Board No.	Other I.D.	Year Built	Repaired, Replaced, or Replacement	ASME Code Stamped (Yes or No) Code Class
PSR-V-X77A3	TRC	003	N/A	N/A	1982	Repaired	Yes, Class 1
PSR-V-X77A4	TRC	002	N/A	N/A	1982	Repaired	Yes, Class 1

7. Description of Work:

Repaired valves PSR-V-X77A3 and PSR-V-X77A4. The repair work was performed as follows:

1) Cut body to bonnet seal weld.
2) Prepped seal weld areas for rewelding.
3) Performed PT examination on the preped areas. PT examination results acceptable.
4) Removed valve internals and performed rework.
5) Reassembled valve internals.
6) Installed bonnet into the valve body and torqued it to the required torque value.
7) Made body to bonnet seal weld.
8) Performed PT examination on the seal weld. PT examination results acceptable.

Notes:
TRC - Target Rock Corporation

WASHINGTON PUBLIC POWER SUPPLY SYSTEM

PLAN NO. 2-0272

FORM NIS-2 (Back)

8. Tests Conducted: Hydrostatic ☐ Pneumatic ☐ Nominal Operating Pressure ☐ Other ☒ None
Test Pressure _____ psig, Test Temp. _____ °F
Component Design Pressure _____ psig, Temp. _____ °F

9. Remarks:

None

CERTIFICATE OF COMPLIANCE

We certify that the statements made in the report are correct and this repair (repair or replacement) conforms to the rules of the ASME Code, Section XI.

Type Code Symbol Stamp Not applicable

Certificate Authorization No. Not applicable Expiration Date Not applicable

Signed [signature] Owner or Owner's Designee, Title Plant Technical Manager

Date 11/13 19 87

CERTIFICATE OF INSERVICE INSPECTION

I, the undersigned, holding a valid commission issued by the National Board of Boiler and Pressure Vessel Inspectors and the State of Washington and employed by Lumbermen's Mutual Casualty Co. of Illinois have inspected the components described in this Owner's Report during the period 2-6-86 to 10-7-87, and state that to the best of my knowledge and belief, the Owner has performed examinations and taken corrective measures described in this Owner's Report in accordance with the requirements of the ASME Code, Section XI.

By signing this certificate neither the Inspector nor his employer makes any warranty, expressed or implied, concerning the examinations and corrective measures described in this Owner's Report. Furthermore, neither the Inspector nor his employer shall be liable in any manner for any personal injury or property damage or a loss of any kind arising from or connected with this inspection.

Dan Hoggard (Inspector's Signature) Commissions 9556 W (National Board, State, and Endorsements)

Date 11-17 19 87

WASHINGTON PUBLIC POWER SUPPLY SYSTEM

PLAN NO. 2-0273

FORM NIS-2 OWNER'S REPORT FOR REPAIRS OR REPLACEMENTS
As Required by the Provisions of the ASME Code Section XI

1. Owner (Name) Washington Public Power Supply System — Date 11/17/87
   Owner (Address) 3000 George Washington Way, Richland, WA — Sheet 1 of 1
2. Plant (Name) WPPSS Nuclear Power Plant (WNP) — Unit WNP-2
   Plant (Address) Hanford, Benton County, WA — C20069 Repair Organization P.O. No., Job No., etc.
3. Work Performed by (Name) Bechtel Construction, Inc.
   Work Performed by (Address) P.O. Box 600, Richland, WA
4. Identification of System High Pressure Core Spray (HPCS) System
5. (a) Applicable Construction Code ASME Section III 19 71 Edition, W73 Addenda, None Code Case
   (b) Applicable Edition of ASME Section XI Utilized for Repairs or Replacements 19 80 Edition, W80
   Addenda, N308 Code Case
6. Identification of Components Repaired or Replaced and Replacement Components

Name of Component	Name of Manufacturer	Manufacturer Serial No.	National Board No.	Other I.D.	Year Built	Repaired, Replaced, or Replacement	ASME Code Stamped (Yes or No) Code Class
HPCS(2)-1	WPPSS	*	N/A	N/A	1983	Replacement	Yes, Class 2

7. Description of Work:

Installed lap joint flange connection for relief valve HPCS-RV-14. The installation work was performed as follows:

1) Cut existing piping.
2) Installed lap joint flange and made required socket welds.
3) Performed PT examination on the final socket welds. PT examination results acceptable.

Notes:
*HPCS(2)-1-P1

968-22684 (9/87)

WASHINGTON PUBLIC POWER SUPPLY SYSTEM

PLAN NO. 2-0273

FORM NIS-2 (Back)

8. Tests Conducted: Hydrostatic ☐ Pneumatic ☐ Nominal Operating Pressure ☐ Other ☑ None
Test Pressure _____ psig, Test Temp. _____ °F
Component Design Pressure _____ psig, Temp. _____ °F

9. Remarks:

None

CERTIFICATE OF COMPLIANCE

We certify that the statements made in the report are correct and this replacement conforms to the rules of the ASME Code, Section XI.
(repair or replacement)

Type Code Symbol Stamp Not applicable

Certificate Authorization No. Not applicable Expiration Date Not applicable

Signed [signature] Owner or Owner's Designee, Title Plant Technical Manager

11/13/87

Date 11/13 19 87

CERTIFICATE OF INSERVICE INSPECTION

I, the undersigned, holding a valid commission issued by the National Board of Boiler and Pressure Vessel Inspectors and the State of Washington and employed by Lumbermen's Mutual Casualty Co. of Illinois have inspected the components described in this Owner's Report during the period 3-10-86 to 10-19-87, and state that to the best of my knowledge and belief, the Owner has performed examinations and taken corrective measures described in this Owner's Report in accordance with the requirements of the ASME Code, Section XI.

By signing this certificate neither the Inspector nor his employer makes any warranty, expressed or implied, concerning the examinations and corrective measures described in this Owner's Report. Furthermore, neither the Inspector nor his employer shall be liable in any manner for any personal injury or property damage or a loss of any kind arising from or connected with this inspection.

[signature] Inspector's Signature Commissions 9556 W
National Board, State, and Endorsements

Date 11-17 19 87

WASHINGTON PUBLIC POWER SUPPLY SYSTEM

PLAN NO. 2-0274

FORM NIS-2 OWNER'S REPORT FOR REPAIRS OR REPLACEMENTS
As Required by the Provisions of the ASME Code Section XI

1. Owner (Name) Washington Public Power Supply System — Date 8/12/88
   Owner (Address) 3000 George Washington Way, Richland, WA — Sheet 1 of 1
2. Plant (Name) WPPSS Nuclear Power Plant (WNP) — Unit WNP-2
   Plant (Address) Hanford, Benton County, WA — C20069 Repair Organization P.O. No., Job No., etc.
3. Work Performed by (Name) Bechtel Construction, Inc.
   Work Performed by (Address) P.O. Box 600, Richland, WA
4. Identification of System Reactor Water Clean Up (RWCU) System
5. (a) Applicable Construction Code ASME Section III 19 * Edition, * Addenda, None Code Case
   (b) Applicable Edition of ASME Section XI Utilized for Repairs or Replacements 19 80 Edition, W80 Addenda, N308 Code Case
6. Identification of Components Repaired or Replaced and Replacement Components

	Name of Component	Name of Manufacturer	Manufacturer Serial No.	National Board No.	Other I.D.	Year Built	Repaired, Replaced, or Replacement	ASME Code Stamped (Yes or No) Code Class
**	(H22-P002)-A8	JCI	***	N/A	N/A	1983	Replacement	Yes, Class 3
**	(H22-P002)-A9	JCI	***	N/A	N/A	1983	Replacement	Yes, Class 3
	(H22-P002)-A12	JCI	***	N/A	N/A	1983	Replacement	Yes, Class 3
	(H22-P002)-A13	JCI	***	N/A	N/A	1983	Replacement	Yes, Class 3
	RWCU(1)-3A	WPPSS	****	N/A	N/A	1983	Replacement	Yes, Class 3

7. Description of Work:

Rerouted instrument tubing and piping for RWCU-FT-15 and 41. The work was performed as follows:

1) Cut and removed existing tubing and piping.
2) Preped valve ends for rewelding.
3) Installed new tubing, tubing fittings, piping, piping fittings and valves.
4) Made required welds.
5) Fabricated and installed supports for the rerouted system.

Notes:

* 71W73 for RWCU(1)-3A. 74W75 for the remaining
** Preceded by PI(1)-ST- ***Same as items listed under "Name of Component" column
****RWCU(1)-3A-P2

WASHINGTON PUBLIC POWER SUPPLY SYSTEM

PLAN NO. 2-0274

FORM NIS-2 (Back)

8. Tests Conducted: Hydrostatic ☐ Pneumatic ☐ Nominal Operating Pressure ☐ Other ☒ None

Test Pressure _____ psig, Test Temp. _____ °F

Component Design Pressure _____ psig, Temp. _____ °F

9. Remarks:

See attached NPV-1 Code Data reports for the following new valves:

EPN No.	Serial No.	EPN No.	Serial No.
* RWCU-V-734	19316	**RWCU-MV-1	GK3006
* RWCU-V-735	19356	* RWCU-MV-1	GK3014
**RWCU-V-772	PB1116		
**RWCU-V-773	PB1123	*For RWCU-FT-15	
* RWCU-V-770	PB1112	**For RWCU-FT-41	
* RWCU-V-771	PB1114		

CERTIFICATE OF COMPLIANCE

We certify that the statements made in the report are correct and this replacement (repair or replacement) conforms to the rules of the ASME Code, Section XI.

Type Code Symbol Stamp Not applicable

Certificate Authorization No. Not applicable Expiration Date Not applicable

Signed _____ (Owner or Owner's Designee,) Title Plant Technical Manager

K Bugh 8/12/88

Date 8/17 19 88

CERTIFICATE OF INSERVICE INSPECTION

I, the undersigned, holding a valid commission issued by the National Board of Boiler and Pressure Vessel Inspectors and the State of Washington and employed by Lumbermen's Mutual Casualty Co. of Illinois have inspected the components described in this Owner's Report during the period 3/17/86 to 8/12/88, and state that to the best of my knowledge and belief, the Owner has performed examinations and taken corrective measures described in this Owner's Report in accordance with the requirements of the ASME Code, Section XI.

By signing this certificate neither the Inspector nor his employer makes any warranty, expressed or implied, concerning the examinations and corrective measures described in this Owner's Report. Furthermore, neither the Inspector nor his employer shall be liable in any manner for any personal injury or property damage or a loss of any kind arising from or connected with this inspection.

_____ (Inspector's Signature) Commissions 5470 W (National Board, State, and Endorsements)

Date 8/17 19 88

2-0274 OB 207

PLAN NO. 2-0274

FORM NPV-1 MANUFACTURERS' DATA REPORT FOR NUCLEAR PUMPS OR VALVES*

As Required by the Provisions of the ASME Code Rules

1. Manufactured by Nuclear Valve Division of Borg Warner, 7500 Tyrone Avenue, Van Nuys, Ca. (Name & Address of Manufacturer) Order No. 47713

2. Manufactured for Bovee & Crail/G.E.R.I. P.O. Box 1040, Richland, Washington 98352 (Name and Address) Order No. 215-3261Q

3. Owner WPPSS Hanford #2 Job Site RWCU-V-734, S/N 19316

4. Location of Plant Richland, Washington 99352 Rudolph Lupb 11/26/87.

5. Pump or Valve Identification Nuclear Valve Div., P/N 79400 1/2 Inch, Y Type, Globe Valve, C.S.

Serial Numbers 19313 Thru 19337 (25 Valves)

(Brief description of service for which equipment was designed)

(a) Drawing No. 79400 Prepared by Nuclear Valve Division of Borg Warner

(b) National Board No.

6. Design Conditions 3600 (Pressure) psi 100 (Temperature) °F

7. The material, design, construction, and workmanship complies with ASME Code Section III, Class 2

Edition 1971, Addenda Date Winter '73, Case No.

Mark No.	Material Spec. No.	Manufacturer	Remarks
(a) Castings			
Disc - Code 1L97, 1N87	Stellite # 6		
Casting - 73908		Rex Precision	
Machined - 73909		NV Division	
(b) Forgings			
Body - Code 1P19	SA 105		
Forging - 73677		Compton Forge	
Machined - 76294		NV Division	
Assembly - 76295		NV Division	15019-A
- Code 1P66	SA276 Type 316		
Forged Stock		Ducommun Metals	
Machined - 73918		NV Division	

RECEIVED MAR 26 1982 SECTION QUALITY CONTROL BY:

FOR INFORMATION ONLY

*Supplemental sheets in form of lists, sketches or drawings may be used provided (1) size is 8½" x 11", (2) information in items 1, 2, 5a and 5b on this data report is included on each sheet, and (3) each sheet is numbered and number of sheets is recorded at top of this form.

1A

PLAN NO. 2-0274.

S/N 19316

FUKN NPV-1 (back)

Mark No.	Material Spec. No.	Manufacturer	Remarks
(c) Bolting			
(d) Other Parts			

8. Hydrostatic test 5400 To 5450 psi.

FOR INFORMATION ONLY

CERTIFICATION OF DESIGN

Design information on file at Nuclear Valve Div. of Borg Warner, 7500 Tyrone Ave., Van Nuys, Ca.

Stress analysis report on file at N/A

Design specifications certified by David J. Murphy (1) Prof. Eng. State Wash. Reg. No. 12542

Stress analysis report certified by N/A (1) Prof. Eng. State _____ Reg. No. _____

(1) Signature not required. List name only.

We certify that the statements made in this report are correct.

Date February 10, 19 77 Signed Nuclear Valve Div. of Borg Warner (Manufacturer) By Carol M. Parker

Certificate of Authorization No. 1254 expires October 27, 1978

CERTIFICATE OF SHOP INSPECTION

I, the undersigned, holding a valid commission issued by the National Board of Boiler and Pressure Vessel Inspectors and/or the State of Province of California and employed by Dept. of Bldg. & Safety of City of Los Angeles have inspected the equipment described in this Data Report on February 10, 19 77, and state that to the best of my knowledge and belief, the Manufacturer has constructed this equipment in accordance with the applicable Subsections of ASME Code, Section III.

By signing this certificate, neither the Inspector nor his employer makes any warranty, expressed or implied, concerning the equipment described in this Data Report. Furthermore, neither the Inspector nor his employer shall be liable in any manner for any personal injury or property damage or a loss of any kind arising from or connected with this inspection.

Date February 10, 19 77

T McGuire (Inspector) Commissions Calif 1010 (National Board, State, Province and No.)

2 1237 1325

2-0274

PLAN NO. 2-0274

FORM NPV-1 MANUFACTURERS' DATA REPORT FOR NUCLEAR PUMPS OR VALVES*

As Required by the Provisions of the ASME Code Rules

1. Manufactured by Nuclear Valve Division of Borg Warner, 7500 Tyrone Avenue, Van Nuys, Ca. (Name & Address of Manufacturer) Order No. 47713

2. Manufactured for Bovee & Crail/G.E.R.I. P.O. Box 1040, Richland, Washington 99352 (Name and Address) Order No. 215-32610

3. Owner WPPSS Hanford #2 Job Site RWCU-V-735 S/N 19356

4. Location of Plant Richland, Washington 99352 Buildup Grp 11/28/83 0B337

5. Pump or Valve Identification Nuclear Valve Div., P/N 79400, 1/2 Inch Y Globe Valve, CS

Serial Numbers 19356 (1 Valve)

(Brief description of service for which equipment was designed)

(a) Drawing No. 79400 Prepared by Nuclear Valve Division of Borg Warner

(b) National Board No.

FOR INFORMATION ONLY

6. Design Conditions 3600 (Pressure) psi 100 (Temperature) °F

7. The material, design, construction, and workmanship complies with ASME Code Section III. Class 2

Edition 1971, Addenda Date Winter '73, Case No.

Mark No.	Material Spec. No.	Manufacturer	Remarks
(a) Castings			
Disc - Code 1P56	Stellite #6		
Casting - 73908	ber NMS 71043	Rex Precision	
Machined - 73909		NV Division	
Other Parts			
Stem - Code 1P65	SA564 Ty. 630		
Bar Stock		Ducommun Metals	
Machined - 73907		NV Division	
(b) Forgings			
Body - Code 1P19	SA105		
Forging - 73677		Compton Forge	
Machined - 76294		NV Division	
Assembly - 76295		NV Division	
Backseat - Code 1P66	SA564 Ty. 630		
Forged Stock		Ducommun Metals	
Machined - 73918		NV Division	

RECEIVED NOV 1 1983 TECHNICAL QUALITY CONTROL BY

*Supplemental sheets in form of lists, sketches or drawings may be used provided (1) size is 8½" x 11", (2) information in items 1, 2, 5a and 5b on this data report is included on each sheet, and (3) each sheet is numbered and number of sheets is recorded at top of this form.

WBG 215 12188

2

PLAN No. 2-0274
S/N 19356

FORM NPV-1 (back)

Mark No.	Material Spec. No.	Manufacturer	Remarks
(c) Bolting			
(d) Other Parts			

RECEIVED NOV 1 1 1981 REGULATORY BR.

0B337

2. Hydrostatic test 5400-5450 psi.

FOR INFORMATION ONLY

CERTIFICATION OF DESIGN

Design information on file at Nuclear Valve Div. of Borg Warner, 7500 Tyrone Ave., Van Nuys, Ca.

Stress analysis report on file at N/A

Design specifications certified by David J. Murphy (1) Prof. Eng. State Wash. Reg. No. 12542

Stress analysis report certified by N/A (1) Prof. Eng. State _____ Reg. No. _____

(1) Signature not required. List name only.

We certify that the statements made in this report are correct.

Date April 22 19 77 Signed Nuclear Valve Div. of Borg Warner (Manufacturer) By Carol M. Parker

Certificate of Authorization No. 1254 expires October 27, 1978

CERTIFICATE OF SHOP INSPECTION

I, the undersigned, holding a valid commission issued by the National Board of Boiler and Pressure Vessel Inspectors and/or the State of Province of California and employed by Dept. of Bldg. & Safety of City of Los Angeles have inspected the equipment described in this Data Report on April 22 19 77, and state that to the best of my knowledge and belief, the Manufacturer has constructed this equipment in accordance with the applicable Subsections of ASME Code, Section III.

By signing this certificate, neither the Inspector nor his employer makes any warranty, expressed or implied, concerning the equipment described in this Data Report. Furthermore, neither the Inspector nor his employer shall be liable in any manner for any personal injury or property damage or a loss of any kind arising from or connected with this inspection.

Date April 22 19 77

(Inspector) (Commissions) CA 1010 (National Board, State, Province and No.)

2 1 5 2 1 8 3 0

PLAN NO. 2 0 74.

FORM NPV-1 N CERTIFICATE HOLDERS' DATA REPORT FOR NUCLEAR PUMPS OR VALVES*

As Required by the Provisions of the ASME Code, Section III, Div. 1

1 Manufactured by Dragon Valves, Inc., 13457 Excelsior Dr., Norwalk, CA 90650 (Name and Address of N Certificate Holder)

2 Manufactured for Johnson Controls, Inc., Richland, WA 99352 (Name and Address of Purchaser or Owner)

3 Location of Installation Hanford Plant, Unit No. 2, Richland, WA 99352 (Name and Address)

4 Pump or Valve Valve Nominal Inlet Size 1/2 (inch) Outlet Size 1/2 (inch)

	(a) Model No Series No or Type	(b) N Certificate Holder's Serial No.	(c) Canadian Registration No	(d) Drawing No	(e) Class	(f) Nat'l Bd No	(g) Year Built
(1)	LON2585W7D-10	GK3006	None	12952	2	None	1983
(2)		thru.					
(3)		GK3025					
(4)							
(5)							
(6)	EPN NO					SERIAL NO.	
(7)	** RWCU-MV-1					GK3006	
(8)							
(9)							
(10)	** RWCU-MV-1					GK3014	

5 3-Valve Instrument Manifolds (20 Pcs.) (Brief description of service for which equipment was designed)

Rudolph Gaspb 11/28/87.

6 Design Conditions 3600 (Pressure) psi 100 (Temperature) F or Valve Pressure-Class (1)

7 Cold Working Pressure 3600 psi at 100 F

8 Pressure Retaining Pieces

Mark No	Material Spec. No	Manufacturer	Remarks
(a) Castings None			
	** FOR RWCU-FT-41		
	* FOR RWCU-FT-15		
(b) Forgings None			

FOR INFORMATION ONLY

(1) For manually operated valves only

* Supplementary sheets in form of lists, sketches or drawings may be used provided (1) size is 8½ x 11, (2) information in items 1, 2 and 5 on this Data Report is included on each sheet, and (3) each sheet is numbered and number of sheets is recorded at top of this form.

(10/71) This form (E00032) may be obtained from the Order Dept. ASME, 345 E. 47th St., New York, N.Y. 10017

FORM NPV-1 (back)

Mark No	Material Spec. No	Manufacturer	Remarks
(c) Bolting None			
(d) Other Parts			
Body	ASME SA479 TY 316	Carpenter Steel	HT 853499
Disc	ASME SA564 Gr. 630	Armco Steel	HT 616080
Bonnet	ASME SA479 TY 316	Universal-Cyclops	HT 103056
Plug, 1/4"	ASME SA479 TY 316	Carpenter Steel	HT 851669
Plug, 1/4"	ASME SA479 TY 316	Carpenter Steel	HT 847025

9. Hydrostatic test 5400 psi. Disk Differential test pressure 3600 psi.

CERTIFICATE OF COMPLIANCE

We certify that the statements made in this report are correct and that this pump, or valve, conforms to the rules of construction of the ASME Code for Nuclear Power Plant Components, Section III, Div. 1, Edition 1974, Addenda 12-31-76 (Date), Code Case No. None, Day July 10, 1983

Signed DRAGON VALVES, INC. (N Certificate Holder) by

Our ASME Certificate of Authorization No. N-1033 to use the N (Type) symbol expires 5-6-84 (Date)

CERTIFICATION OF DESIGN

Design information on file at Johnson Controls, Inc.

Stress analysis report (Class 1 only) on file at not applicable

Design specifications certified by (1) Stanley Fox

PE State VA Reg. No. 16168

Stress analysis certified by (1) not required

PE State Reg. No.

(1) Signature not required. List name only.

CERTIFICATE OF SHOP INSPECTION

I, the undersigned, holding a valid commission issued by the National Board of Boiler and Pressure Vessel Inspectors and the State or Province of CALIFORNIA and employed by DOSH of CALIFORNIA have inspected the pump, or valve, described in this Data Report on July 11 19 83, and state that to the best of my knowledge and belief, the N Certificate Holder has constructed this pump, or valve, in accordance with the ASME Code, Section III.

By signing this certificate, neither the inspector nor his employer makes any warranty, expressed or implied, concerning the equipment described in this Data Report. Furthermore, neither the inspector nor his employer shall be liable in any manner for any personal injury or property damage or a loss of any kind arising from or connected with this inspection.

Date July 11 19 83. Signed Commissions 44155 (Insp. Bd., State, Prov. and No.)

PLAN NO. 2-0274.

FORM NPV-1 N CERTIFICATE HOLDERS' DATA REPORT FOR NUCLEAR PUMPS OR VALVES* 1 of 2

As Required by the Provisions of the ASME Code, Section III, Div. 1

1 Manufactured by Dragon Valves, Inc., 13657 Excelsior Dr., Norwalk, CA 90650 (Name and Address of N Certificate Holder)

2 Manufactured for Washington Public Power Supply System, P. O. Box 968, Richland, WA 99352-0968 (Name and Address of Purchaser or Owner)

3 Location of Installation WNP-2 Site, Richland, WA 99352 (Name and Address)

4 Pump or Valve Valve Nominal Inlet Size 1/2 (inch) Outlet Size 1/2 (inch)

	(a) Model No., Series No or Type	(b) N Certificate Holder's Serial No.	(c) Canadian Registration No	(d) Drawing No.	(e) Class	(f) Nat'l Bd. No	(g) Year Built
(1)	7N058SWD	PB1095	N/A	10580	2	N/A	1985
(2)		thru		Rev. B			
(3)		PB1119					
(4)							
(5)	EPN NO		SERIAL NO				
(6)							
(7)	RWCU-V-772		PB1116				
(8)	RWCU-V-770		PB1112				
(9)	RWCU-V-771		PB1114				
(10)							

5 Instrument Valves (25 Pcs.) (Brief description of service for which equipment was designed)

Gene Hoffman Hoffman Pump & Supply Kent Washington 98032

Philip Eng 11/24/87.

6 Design Conditions 3600 (Pressure) psi 100 (Temperature) °F or Valve Pressure Class (1)

7 Cold Working Pressure 3600 psi at 100°F

8 Pressure Retaining Pieces

Mark No	Material Spec. No.	Manufacturer	Remarks
(a) Castings N/A			
(b) Forgings			
HT 1C4836	ASME SA182 Gr. F316	Ajax Forge Co.	Body
HT A19167	ASME SA182 Gr. F316	Ajax Forge Co.	Yoke

(1) For manually operated valves only N/A

* Supplemental sheets in form of lists, sketches or drawings may be used provided (1) size is 8 1/2" x 11", (2) information in items 1, 2 and 5 on this Data Report is included on each sheet, and (3) each sheet is numbered and number of sheets is recorded at top of this form.

(10/77) This form (E00037) may be obtained from the Order Dept., ASME, 345 E. 47th St., New York, N.Y. 10017

FORM NPV-1 (Back)

Mark No.	Material Spec. No.	Manufacturer	Remarks
(c) Bolting N/A			
(d) Other Parts			
HT 50937	ASME SA564 Gr. 630	Carpenter Steel	Disc

9. Hydrostatic test 5400 psi. Disk Differential test pressure 3600 psi.

CERTIFICATE OF COMPLIANCE

We certify that the statements made in this report are correct and that this pump, or valve, conforms to the rules of construction of the ASME Code for Nuclear Power Plant Components, Section III, Div. 1, Edition 1974. Addenda S'75 (Date). Code Case No. N/A. Date July 1, 1985

Signed DRAGON VALVES, INC. (N Certificate Holder) by [signature]

Our ASME Certificate of Authorization No. N-1033 to use the N (N) symbol expires 5-6-87 (Date).

CERTIFICATION OF DESIGN

Design information on file at Washington Public Power Supply System (see Line 2)

Stress analysis report (Class 1 only) on file at N/A

Design specifications certified by (1) David J. Murphy

PE State WA Reg. No. 12542

Stress analysis certified by (1) N/A

PE State Reg. No.

(1) Signature not required. List name only.

CERTIFICATE OF SHOP INSPECTION

I, the undersigned, holding a valid commission issued by the National Board of Boiler and Pressure Vessel Inspectors and the State or Province of CALIFORNIA and employed by DOSH of CALIFORNIA have inspected the pump, or valve, described in this Data Report on 7-1 1985, and state that to the best of my knowledge and belief, the N Certificate Holder has constructed this pump, or valve, in accordance with the ASME Code, Section III.

By signing this certificate, neither the inspector nor his employer makes any warranty, expressed or implied, concerning the equipment described in this Data Report. Furthermore, neither the inspector nor his employer shall be liable in any manner for any personal injury or property damage or a loss of any kind arising from or connected with this inspection.

Date 7-1 1985 (Inspector) L. A. Estes Commissions CALIF 1249 (Nat'l Bd., State, Prov and No.)

PLAN NO. 2-0274

PLAN NO. 2-0273

FORM NPV-1 N CERTIFICATE HOLDERS' DATA REPORT FOR NUCLEAR PUMPS OR VALVES*

As Required by the Provisions of the ASME Code, Section III, Div. 1

1 Manufactured by Dragon Valves, Inc., 13657 Excelsior Dr., Norwalk, CA 90650 (Name and Address of N Certificate Holder)

2 Manufactured for Washington Public Power Supply System, P. O. Box 968, Richland, WA 99352-0968 (Name and Address of Purchaser or Owner)

3 Location of Installation WNP-2 Site, Richland, WA 99352 (Name and Address)

4 Pump or Valve Valve Nominal Inlet Size 1/2 (inch) Outlet Size 1/2 (inch)

	(a) Model No., Series No or Type	(b) N Certificate Holder's Serial No.	(c) Canadian Registration No	(d) Drawing No.	(e) Class	(f) Nat'l Bd. No	(g) Year Built
(1)	7N058SWD	PB1120	N/A	10580	2	N/A	1985
(2)		thru		Rev. B			
(3)		PB1125					
(4)							
(5)		EPN NO		SERIAL NO			
(6)		RWCU-V-113		PB1123			
(7)							
(8)							
(9)							
(10)							

Rudolph Swob 11/28/87.

5 Instrument Valves (6 Pcs.) (Brief description of service for which equipment was designed)

6 Design Conditions 3600 (Pressure) psi 100 (Temperature) °F or Valve Pressure Class (1)

7 Cold Working Pressure 3600 psi at 100°F

8 Pressure Retaining Pieces

Mark No	Material Spec. No.	Manufacturer	Remarks
(a) Castings N/A			
(b) Forgings			
HT 1G4836	ASME SA182 Gr. F316	Ajax Forge Co.	Body
HT A19167	ASME SA182 Gr. F316	Ajax Forge Co.	Yoke

(1) For manually operated valves only.

* Supplemental sheets on form of lists, sketches or drawings may be used provided (1) size is 8-1/2" x 11", (2) information in items 1, 2 and 5 on this Data Report is included on each sheet, and (3) each sheet is numbered and number of sheets is recorded at top of this form.

(10/77) This form (E00037) may be obtained from the Order Dept., ASME, 345 E. 47th St., New York, N.Y. 10017

FORM NPV-1 (Back)

Mark No.	Material Spec. No	Manufacturer	Remarks
(c) Bolting N/A			
(d) Other Parts			
HT 50937	ASME SA564 Gr. 630	Carpenter Steel	Disc

9. Hydrostatic test 5400 psi. Disk Differential test pressure 3600 psi.

CERTIFICATE OF COMPLIANCE

We certify that the statements made in this report are correct and that this pump, or valve, conforms to the rules of construction of the ASME Code for Nuclear Power Plant Components, Section III, Div. 1, Edition 1974, Addenda S'75 (Date). Code Case No. N/A. Date July 1, 1985

Signed DRAGON VALVES, INC. (N Certificate Holder) by [signature]

Our ASME Certificate of Authorization No. N-1033 to use the N (stamp) symbol expires 5-6-87 (Date).

CERTIFICATION OF DESIGN

Design information on file at Washington Public Power Supply System (see Line 2)

Stress analysis report (Class 1 only) on file at N/A

Design specifications certified by (1) David J. Murphy

PE State WA Reg. No. 12562

Stress analysis certified by (1) N/A

PE State ..... Reg. No.

(1) Signature not required. List name only.

CERTIFICATE OF SHOP INSPECTION

I, the undersigned, holding a valid commission issued by the National Board of Boiler and Pressure Vessel Inspectors and the State or Province of CALIFORNIA and employed by DOSH of CALIFORNIA have inspected the pump, or valve, described in this Data Report on 7-1 19 85, and state that to the best of my knowledge and belief, the N Certificate Holder has constructed this pump, or valve, in accordance with the ASME Code, Section III.

By signing this certificate, neither the Inspector nor his employer makes any warranty, expressed or implied, concerning the equipment described in this Data Report. Furthermore, neither the Inspector nor his employer shall be liable in any manner for any personal injury or property damage or a loss of any kind arising from or connected with this Inspection.

Date 7-1 19 85 [signature] (Inspector) Commissions CALIF 1249 (Nat'l Bd., State, Prov. and No.)

WASHINGTON PUBLIC POWER SUPPLY SYSTEM

PLAN NO. 2-0275

FORM NIS-2 OWNER'S REPORT FOR REPAIRS OR REPLACEMENTS
As Required by the Provisions of the ASME Code Section XI

1. Owner (Name) Washington Public Power Supply System — Date 11/17/87
   Owner (Address) 3000 George Washington Way, Richland, WA — Sheet 1 of 1
2. Plant (Name) WPPSS Nuclear Power Plant (WNP) — Unit WNP-2
   Plant (Address) Hanford, Benton County, WA — WPPSS
   Repair Organization P.O. No., Job No., etc.
3. Work Performed by (Name) WPPSS
   Work Performed by (Address) 3000 George Wash. Way, Richland, WA
4. Identification of System Residual Heat Removal (RHR) System
5. (a) Applicable Construction Code ASME Section III 19 74 Edition, W75 Addenda, None Code Case
   (b) Applicable Edition of ASME Section XI Utilized for Repairs or Replacements 19 80 Edition, W80 Addenda, N308 Code Case
6. Identification of Components Repaired or Replaced and Replacement Components

Name of Component	Name of Manufacturer	Manufacturer Serial No.	National Board No.	Other I.D.	Year Built	Repaired, Replaced, or Replacement	ASME Code Stamped (Yes or No) Code Class
*	JCI	*	N/A	N/A	1983	Replacement	Yes, Class 2

7. Description of Work:

Spared instrument tubing and piping associated with RHR-DPIS-9A, 9B and 9C. The modification work was performed as follows:

1) Cut and removed piping, tubing material and valves.
2) Threaded pipe ends for installation of threaded pipe caps.
3) Installed threaded pipe caps.

Notes:
*D220-3500-9.0-RHR-DP1S-9A, 9B and 9C
JCI - Johnson Control, Inc.

WASHINGTON PUBLIC POWER SUPPLY SYSTEM

PLAN NO. 2-0275

FORM NIS-2 (Back)

8. Tests Conducted: Hydrostatic ☐ Pneumatic ☐ Nominal Operating Pressure ☐ Other ☒ None
Test Pressure _____ psig, Test Temp. _____ °F
Component Design Pressure _____ psig, Temp. _____ °F

9. Remarks:

None

CERTIFICATE OF COMPLIANCE

We certify that the statements made in the report are correct and this replacement (repair or replacement) conforms to the rules of the ASME Code, Section XI.

Type Code Symbol Stamp Not applicable

Certificate Authorization No. Not applicable Expiration Date Not applicable

Signed R C Webster (Owner or Owner's Designee.) Title Plant Technical Manager

11/12/87

Date 11/13 19 87

CERTIFICATE OF INSERVICE INSPECTION

I, the undersigned, holding a valid commission issued by the National Board of Boiler and Pressure Vessel Inspectors and the State of Washington and employed by Lumbermen's Mutual Casualty Co. of Illinois have inspected the components described in this Owner's Report during the period 8-26-86 to 10-9-87, and state that to the best of my knowledge and belief, the Owner has performed examinations and taken corrective measures described in this Owner's Report in accordance with the requirements of the ASME Code, Section XI.

By signing this certificate neither the Inspector nor his employer makes any warranty, expressed or implied, concerning the examinations and corrective measures described in this Owner's Report. Furthermore, neither the Inspector nor his employer shall be liable in any manner for any personal injury or property damage or a loss of any kind arising from or connected with this inspection.

Don Hoggard (Inspector's Signature) Commissions 9556 W (National Board, State, and Endorsements)

Date 11-17 19 87

WASHINGTON PUBLIC POWER SUPPLY SYSTEM

PLAN NO. 2-0276

FORM NIS-2 OWNER'S REPORT FOR REPAIRS OR REPLACEMENTS
As Required by the Provisions of the ASME Code Section XI

1. Owner (Name) Washington Public Power Supply System — Date 8/16/88
   Owner (Address) 3000 George Washington Way, Richland, WA — Sheet 1 of 1
2. Plant (Name) WPPSS Nuclear Power Plant (WNP) — Unit WNP-2
   Plant (Address) Hanford, Benton County, WA — WPPSS (Repair Organization P.O. No., Job No., etc.)
3. Work Performed by (Name) WPPSS
   Work Performed by (Address) 3000 George Wash. Way, Richland, WA
4. Identification of System Main Steam Leakage Control (MSLC) System
5. (a) Applicable Construction Code ASME Section III 19 74 Edition, W75 Addenda, None Code Case
   (b) Applicable Edition of ASME Section XI Utilized for Repairs or Replacements 19 80 Edition, W80 Addenda, N308 Code Case
6. Identification of Components Repaired or Replaced and Replacement Components

Name of Component	Name of Manufacturer	Manufacturer Serial No.	National Board No.	Other I.D.	Year Built	Repaired, Replaced, or Replacement	ASME Code Stamped (Yes or No) Code Class
*	JCI	*	N/A	N/A	1982	Replacement	Yes, Class 2
*	JCI	*	N/A	N/A	1982	Replacement	Yes, Class 2

7. Description of Work:

Modified instrument tubing to MSLC-FT-3A and MSLC-FT-3C. The modification work was performed as follows:

1) Cut and removed existing tubing and tubing fittings.
2) Prepped valve and tubing fitting ends for rewelding.
3) Installed new tubing, tubing fittings and valves.
4) Made required welds.
5) Performed PT examination on final welds. PT examination results acceptable.
6) Modified existing supports to accommodate modified tubing design.

Notes:
*PI(1)-ST-MSLC-FT-3A, D-220-3500-63.2-MSLC-FT-3
*PI(1)-ST-MSLC-FT-3C, D-220-3500-63.2-MSLC-FT-3
JCI - Johnson Control, Inc.

WASHINGTON PUBLIC POWER SUPPLY SYSTEM

PLAN NO. 2-0276

FORM NIS-2 (Back)

8. Tests Conducted: Hydrostatic ☐ Pneumatic ☐ Nominal Operating Pressure ☐ Other ☒ None
Test Pressure _____ psig, Test Temp. _____ °F
Component Design Pressure _____ psig, Temp. _____ °F

9. Remarks:

See attached NPV-1 Code Data reports for the following new valves:

Serial Numbers GP2033, GP2037, GP2042 and GP2076.

CERTIFICATE OF COMPLIANCE

We certify that the statements made in the report are correct and this replacement (repair or replacement) conforms to the rules of the ASME Code, Section XI.

Type Code Symbol Stamp Not applicable

Certificate Authorization No. Not applicable Expiration Date Not applicable

Signed [signature] Owner or Owner's Designee, Title Plant Technical Manager

KSmes 8/16/88

Date 8/17 19 88

CERTIFICATE OF INSERVICE INSPECTION

I, the undersigned, holding a valid commission issued by the National Board of Boiler and Pressure Vessel Inspectors and the State of Washington and employed by Lumbermen's Mutual Casualty Co. of Illinois have inspected the components described in this Owner's Report during the period 4/4/86 to 8/16/88, and state that to the best of my knowledge and belief, the Owner has performed examinations and taken corrective measures described in this Owner's Report in accordance with the requirements of the ASME Code, Section XI.

By signing this certificate neither the Inspector nor his employer makes any warranty, expressed or implied, concerning the examinations and corrective measures described in this Owner's Report. Furthermore, neither the Inspector nor his employer shall be liable in any manner for any personal injury or property damage or a loss of any kind arising from or connected with this inspection.

[signature] Inspector's Signature Commissions 5470 (W) National Board, State, and Endorsements

Date 8/17 19 88

GP-2033, GP-2037, GP-2042, GP-2051 PLAN No. 2-0276

FORM NPV-1 N CERTIFICATE HOLDERS' DATA REPORT FOR NUCLEAR PUMPS OR VALVES*

As Required by the Provisions of the ASME Code, Section III, Div. 1

1. Manufactured by Dragon Valves, Inc., 13457 Excelsior Dr., Norwalk, CA 90650
(Name and Address of N Certificate Holder)

2. Manufactured for Johnson Controls, Inc., P. O. Box 429, Richland, WA 99352
(Name and Address of Purchaser or Owner)

3. Location of Installation WNP2 Hanford Jobsite, Richland, WA 99352
(Name and Address)

4. Pump or Valve Valve, Nominal Inlet Size 1/2 Tube (inch) Outlet Size 1/2 Tube (inch)

	(a) Model No., Series No. or Type	(b) N Certificate Holder's Serial No.	(c) Canadian Registration No.	(d) Drawing No.	(e) Class	(f) Nat'l. Bd. No.	(g) Year Built
(1)	7N058SWD	GP2031	None	10580	2	None	1982
(2)		thru					
(3)		GP2055					
(4)							
(5)							
(6)		GP 2033, GP2037 and GP2042					
(7)							
(8)		Rudolph Gupta					
(9)							
(10)					11/16/87		

5. OS&Y Instrumentation Valves (25 Pcs.)
(Brief description of service for which equipment was designed)

6. Design Conditions 3600 (Pressure) psi 100 (Temperature) °F or Valve Pressure Class _____ (1)

7. Working Pressure 3600 psi at 100°F.

8. Pressure Retaining Pieces

Mark No.	Material Spec. No.	Manufacturer	Remarks
(a) Castings None			
(b) Forgings			
Body	ASME SA182 Gr. F316	Ajax Forge Co.	HT 843801
Yoke	ASME SA182 Gr. F316	Ajax Forge Co.	HT 75463

(1) For manually operated valves only.

* Supplemental sheets in form of lists, sketches or drawings may be used provided (1) size is 8-1/2" x 11", (2) information in lists [illegible]

Mark No.	Material Spec. No.	Manufacturer	Remarks
(c) Bolting None			
		GP-2033, GP-2037, GP-20	
			1/8 mpl 3/10/80
(d) Other Parts			
Disc	ASME SA564 Gr. 630	Carpenter Tech.	HT 840603

9. Hydrostatic test 5400 psi. Disk Differential test pressure 3600 psi.

CERTIFICATE OF COMPLIANCE

We certify that the statements made in this report are correct and that this pump, or valve, conforms to the rules of construction of the ASME Code for Nuclear Power Plant Components. Section III, Div. I., Edition 1974.
Addenda 6-30-75 (Date), Code Case No. None; Date September 30, 1982
Signed DRAGON VALVES, INC. (N Certificate Holder) by [illegible]
Our ASME Certificate of Authorization No. N-1033 to use the N (N) symbol expires 5-6-84 (Date).

CERTIFICATION OF DESIGN

Design information on file at Johnson Controls, Inc.
Stress analysis report (Class 1 only) on file at not applicable

Design specifications certified by (1) David J. Murphy
PE State WA Reg. No. 12542
Stress analysis certified by (1) not required
PE State _____ Reg. No. _____

(1) Signature not required. List name only.

CERTIFICATE OF SHOP INSPECTION

I, the undersigned, holding a valid commission issued by the National Board of Boiler and Pressure Vessel Inspectors and the State or Province of CALIFORNIA and employed by DOSH of CALIFORNIA have inspected the pump, or valve, described in this Data Report on 9-30 19 82, and state that to the best of my knowledge and belief, the N Certificate Holder has constructed this pump, or valve, in accordance with the ASME Code, Section III.

By signing this certificate, neither the Inspector nor his employer makes any warranty, expressed or implied, concerning the equipment described in this Data Report. Furthermore, neither the Inspector nor his employer shall be liable in any manner for any personal injury or property damage or a loss of any kind arising from or connected with this inspection.

Date 9-30 19 82.
[signature] Commissions Cal 1234
(Nat'l Bd., State, Prov. and No.)

FORM NPV-1 N CERTIFICATE HOLDER'S DATA REPORT FOR NUCLEAR PUMPS OR VALVES

GP-2076

As Required by the Provisions of the ASME Code, Section III, Div. 1

1. Manufactured by Dragon Valves, Inc., 13457 Excelsior Dr., Norwalk, CA 90650 PLAN No. 2-0276
(Name and Address of N Certificate Holder)

2. Manufactured for Johnson Controls, Inc., P. O. Box 429, Richland, WA 99352
(Name and Address of Purchaser or Owner)

3. Location of Installation WNP2 Hanford Jobsite, Richland, WA 99352
(Name and Address)

4. Pump or Valve Valve. Nominal Inlet Size 1/2 Tube (inch) Outlet Size 1/2 Tube (inch)

	(a) Model No., Series No. or Type	(b) N Certificate Holder's Serial No.	(c) Canadian Registration No.	(d) Drawing No.	(e) Class	(f) Nat'l. Bd. No.	(g) Year Built
(1)	7N058SWD	GP2056	None	10580	2	None	1982
(2)		thru					
(3)		GP2080					
(4)							
(5)			GP2076				
(6)							
(7)				Rudip Gupta			
(8)							
(9)				11/16/87.			
(10)							

5. OS&Y Instrumentation Valves (25 Pcs.)
(Brief description of service for which equipment was designed)

6. Design Conditions 3600 (Pressure) psi 100 (Temperature) °F or Valve Pressure Class _____ (1)

Cold Working Pressure 3600 psi at 100°F.

Pressure Retaining Pieces

Mark No.	Material Spec. No.	Manufacturer	Remarks
(a) Castings None			
(b) Forgings			
Body	ASME SA182 Gr. F316	Ajax Forge Co.	HT 843891
Yoke	ASME SA182 Gr. F316	Ajax Forge Co.	HT 75463

(1) For manually operated valves only.

Supplemental sheets in form of lists, sketches or drawings may be used provided (1) size is 8½" x 11", (2) information in items 1, 2 and 5 on this Data Report is included on each sheet, and (3) each sheet is numbered and number of sheets is recorded at top of this form.

(c) Bolting None			GP-2076
(d) Other Parts			
Disc	ASME SA564 Gr. 630	Carpenter Tech.	HT 840603

9. Hydrostatic test: 5400 psi. Disk Differential test pressure 3600 psi.

CERTIFICATE OF COMPLIANCE

We certify that the statements made in this report are correct and that this pump, or valve, conforms to the rules of construction of the ASME Code for Nuclear Power Plant Components. Section III, Div. I., Edition 1974, Addenda 6-30-75 (Date), Code Case No. None, Date September 30, 1982

Signed DRAGON VALVES, INC. (N Certificate Holder) by

Our ASME Certificate of Authorization No. N-1033 to use the N (H) symbol expires 5-6-84 (Date).

CERTIFICATION OF DESIGN

Design information on file at Johnson Controls, Inc.

Stress-analysis report (Class 1 only) on file at not applicable

Design specifications certified by (1) David J. Murphy

PE State NA Reg. No. 12542

Stress analysis certified by (1) not required

PE State _____ Reg. No. _____

(1) Signature not required. List name only.

CERTIFICATE OF SHOP INSPECTION

I, the undersigned, holding a valid commission issued by the National Board of Boiler and Pressure Vessel Inspectors and the State or Province of CALIFORNIA and employed by DOSH of CALIFORNIA have inspected the pump, or valve, described in this Data Report on 9-30 19 82, and state that to the best of my knowledge and belief, the N Certificate Holder has constructed this pump, or valve, in accordance with the ASME Code, Section III.

By signing this certificate, neither the Inspector nor his employer makes any warranty, expressed or implied, concerning the equipment described in this Data Report. Furthermore, neither the Inspector nor his employer shall be liable in any manner for any personal injury or property damage or a loss of any kind arising from or connected with this inspection.

Date 9-30 19 82.

Commissions Cal. 1234 (Nat'l Bd. State, Prov. and No.)

WASHINGTON PUBLIC POWER SUPPLY SYSTEM

PLAN NO. 2-0281

FORM NIS-2 OWNER'S REPORT FOR REPAIRS OR REPLACEMENTS
As Required by the Provisions of the ASME Code Section XI

1. Owner (Name) Washington Public Power Supply System — Date 8/2/88
   Owner (Address) 3000 George Washington Way, Richland, WA — Sheet 1 of 1
2. Plant (Name) WPPSS Nuclear Power Plant (WNP) — Unit WNP-2
   Plant (Address) Hanford, Benton County, WA — WPPSS (Repair Organization P.O. No., Job No., etc.)
3. Work Performed by (Name) WPPSS
   Work Performed by (Address) 3000 George Washington Way, Richland, WA
4. Identification of System Main Steam Leakage Control (MSLC) System
5. (a) Applicable Construction Code ASME Section III 19 74 Edition, W75 Addenda, None Code Case
   (b) Applicable Edition of ASME Section XI Utilized for Repairs or Replacements 19 80 Edition, W80 Addenda, N308 Code Case
6. Identification of Components Repaired or Replaced and Replacement Components

Name of Component	Name of Manufacturer	Manufacturer Serial No.	National Board No.	Other I.D.	Year Built	Repaired, Replaced, or Replacement	ASME Code Stamped (Yes or No). Code Class
*	JCI	*	N/A	N/A	1983	Replacement	Yes, Class 1

7. Description of Work:

Installed test connections. The installation work was performed as follows:

1) Cut piping at locations shown on the design drawings.
2) Installed new piping and valves.
3) Made required socket welds.
4) Performed PT examination on the final welds. PT examination results acceptable.

Notes:
*P(1)-ST-MSLC-PT-10A, 10B, 10C and 10D

WASHINGTON PUBLIC POWER SUPPLY SYSTEM

PLAN NO. 2-0281

FORM NIS-2 (Back)

8. Tests Conducted: Hydrostatic ☐ Pneumatic ☐ Nominal Operating Pressure ☐ Other ☒ None
Test Pressure _____ psig, Test Temp. _____ °F
Component Design Pressure _____ psig, Temp. _____ °F

9. Remarks:

See attached NPV-1 Code Data Reports for the following valves:

EPN NO.	SERIAL NO.	EPN NO.	SERIAL NO.
PI-V-18A1	A3954	PI-V-18C1	A3962
PI-V-18A2	A4011	PI-V-18C2	A3961
PI-V-18B1	A4001	PI-V-18D1	A3983
PI-V-18B2	A3958	PI-V-18D2	A3972

CERTIFICATE OF COMPLIANCE

We certify that the statements made in the report are correct and this replacement (repair or replacement) conforms to the rules of the ASME Code, Section XI.

Type Code Symbol Stamp Not applicable

Certificate Authorization No. Not applicable Expiration Date Not applicable

Signed K D Conner (Owner or Owner's Designee) Title Plant Technical Manager

K Smith 8/2/88

Date 8/2 19 88

CERTIFICATE OF INSERVICE INSPECTION

I, the undersigned, holding a valid commission issued by the National Board of Boiler and Pressure Vessel Inspectors and the State of Washington and employed by Lumbermen's Mutual Casualty Co. of Illinois have inspected the components described in this Owner's Report during the period 4/26/86 to 8/2/88, and state that to the best of my knowledge and belief, the Owner has performed examinations and taken corrective measures described in this Owner's Report in accordance with the requirements of the ASME Code, Section XI.

By signing this certificate neither the Inspector nor his employer makes any warranty, expressed or implied, concerning the examinations and corrective measures described in this Owner's Report. Furthermore, neither the Inspector nor his employer shall be liable in any manner for any personal injury or property damage or a loss of any kind arising from or connected with this inspection.

Dan Hoggatt (Inspector's Signature) Commissions 9556 W (National Board, State, and Endorsements)

Date 8/2 19 88

(12)

FORM NPV-1 MANUFACTURERS' DATA REPORT FOR NUCLEAR PUMPS OR VALVES*

As Required by the Provisions of the ASME Code Rules

PLAN NO. 2-0281
Rudolf Smith 7/28/88.

1. Manufactured by YARWAY CORPORATION, BLUE BELL, PA. Order No. 72041
(Name & Address of Manufacturer)

2. Manufactured for WASHINGTON PUBLIC POWER SUPPLY SYSTEM Order No. 9779-41G
(Name and Address)
RICHLAND WASHINGTON

3. Owner WASHINGTON PUBLIC POWER SUPPLY SYSTEM (WPPSS)

4. Location of Plant RICHLAND WASHINGTON

5. Pump or Valve Identification NUCLEAR SERVICE VALVES - SIZE 3/4"
SERIAL NOS. A3950 THRU A3974
(Brief description of service for which equipment was designed)

(a) Drawing No. 104561-05 Prepared by YARWAY CORPORATION

(b) National Board No. 15 - 39

6. Design Conditions --- (Pressure) psi ---- (Temperature) °F or Pressure Class 1500 psi (1)

7. The material, design, construction, and workmanship complies with ASME Code Section III. Class 1

Edition 1974, Addenda Date WINTER 1975, Case No.

	Mark No.	Material Spec. No.	Manufacturer	Remarks
(a) Castings	C3	AMS 5385	NOVA/HOWMET	DISC
	EPN NO	SERIAL NO		
	PI-V-18A1	A3954		DOCUMENT REVIEWED 8-25-78
	PI-V-18B2	A3958		
	PI-V-18C1	A3962		
	PI-V-18C2	A3961		
	PI-V-18D2.	A3972		
(b) Forgings	T9	SA182 F316	CAPE ANN TOOL COMPANY	BODY
	YW904	SA564 Gr 630	CARPENTER TECHNOLOGY CORPORATION	BACKSEAT BUSHING

INFORMATION ONLY

(1) For manually operated valves only.

*Supplemental sheets in form of lists, sketches or drawings may be used provided (1) size is 8½" x 11", (2) information in items 1, 2, 5a and 5b on this data report is included on each sheet, and (3) each sheet is numbered and number of sheets is recorded at top of this form.

3/75

This form (E00037, may be obtained from the Order Dept., ASME, 345 E. 47 St., New York, N.Y. 10017.

(13)

FORM NPV-1 (back) S/NS A3950 THRU A3974
Culdip Sub
7/28/88.

	Mark No.	Material Spec. No.	Manufacturer	Remarks
(c) Bolting	NONE			
(d) Other Parts	NONE			

8. Hydrostatic test 5600 psi.

CERTIFICATION OF DESIGN

Design information on file at W P P S S - RICHLAND WASHINGTON
Stress analysis report on file at W P P S S - RICHLAND WASHINGTON
Design specifications certified by PATHIN BASU (1) Prof. Eng. State WASH Reg. No. 15049
Stress analysis report certified by DR. KHAC - SOUN SU (1) Prof. Eng. State N.J. Reg. No. 18049
(1) Signature not required. List name only.

We certify that the statements made in this report are correct.

Date JULY 28 19 78 Signed YARWAY CORPORATION By W. A. Voyger
(Manufacturer) W. A. VOYGER

Certificate of Authorization No. N 1891 expires OCTOBER 21, 1980

CERTIFICATE OF SHOP INSPECTION

I, the undersigned, holding a valid commission issued by the National Board of Boiler and Pressure Vessel Inspectors and/or the State of Province of PENNSYLVANIA and employed by PHILA MFG MUTUAL INS CO.* of PHILADELPHIA, PA. have inspected the equipment described in this Data Report on JULY 28 19 78, and state that to the best of my knowledge and belief, the Manufacturer has constructed this equipment in accordance with the applicable Subsections of ASME Code, Section III.

By signing this certificate, neither the Inspector nor his employer makes any warranty, expressed or implied, concerning the equipment described in this Data Report. Furthermore, neither the Inspector nor his employer shall be liable in any manner for any personal injury or property damage or a loss of any kind arising from or connected with this inspection.

DOCUMENT REVIEWED 8-23-78 UE&C D.J.B.

Date JULY 28 19 78

N. S. Hewitt (Inspector) Commissions NB 6344 PA 2056
N. S. HEWITT (National Board, State, Province and No.)

* PART OF THE FACTORY MUTUAL SYSTEM

INFORMATION ONLY

(14)

FORM NPV-1 MANUFACTURERS' DATA REPORT FOR NUCLEAR PUMPS OR VALVES*

As Required by the Provisions of the ASME Code Rules

PLAN No 2-0281
Rudolp Swift 7/28/88

1. Manufactured by YARWAY CORPORATION, BLUE BELL, PA. (Name & Address of Manufacturer) Order No. 72041

2. Manufactured for WASHINGTON PUBLIC POWER SUPPLY SYSTEM (Name and Address) Order No. 9779-41C
RICHLAND WASHINGTON

3. Owner WASHINGTON PUBLIC POWER SUPPLY SYSTEM (WPPSS)

4. Location of Plant RICHLAND WASHINGTON

5. Pump or Valve Identification NUCLEAR SERVICE VALVES - SIZE 3/4"

SERIAL NOS. A3975 THRU A3999
(Brief description of service for which equipment was designed)

(a) Drawing No. 104561-05 Prepared by YARWAY CORPORATION

(b) National Board No. 40 - 64

6. Design Conditions --- (Pressure) psi --- (Temperature) °F or Pressure Class 1500 psi (1)

7. The material, design, construction, and workmanship complies with ASME Code Section III. Class 1

Edition 1974, Addenda Date WINTER 1975, Case No. ---

	Mark No.	Material Spec. No.	Manufacturer	Remarks
(a) Castings	C3	AMS 5385	NOVA/HOWMET	DISC
	EPN NO	SERIAL NO		
	PI-V-18D1	A3983		DOCUMENT REVIEWED 8-23-78 UE&C
(b) Forgings	T9	SA182 F316	CAPE ANN TOOL COMPANY	BODY
	YW904	SA564 Gr.630	CARPENTER TECHNOLOGY CORPORATION	BACKSEAT BUSHING

(1) For manually operated valves only.

Supplemental sheets in form of lists, sketches or drawings may be used provided (1) size is 8½" x 11", (2) information in items 1, 2, 5a and 5b on this data report is included on each sheet, and (3) each sheet is numbered and number of sheets is recorded at top of this form.

3/75

This form (E00037) may be obtained from the Order Dept., ASME, 345 E. 47 St., New York, N.Y. 10017.

(15)

S/NS A 3975 THRU A

Rudolph Swift 7/28/88.

FORM NPV-1 (back)

	Mark No.	Material Spec. No.	Manufacturer	Remarks
(c) Bolting	NONE			
(d) Other Parts	NONE			

8. Hydrostatic test 5600 psi.

CERTIFICATION OF DESIGN

Design information on file at W P P S S - RICHLAND WASHINGTON

Stress analysis report on file at W P P S S - RICHLAND WASHINGTON

Design specifications certified by RATHIN BASU (1) Prof. Eng. State WASH. Reg. No. 15049

Stress analysis report certified by DR. KHAC - SOUN SU (1) Prof. Eng. State N.J. Reg. No. 18049

(1) Signature not required. List name only.

We certify that the statements made in this report are correct.

Date JULY 28 19 78 Signed YARWAY CORPORATION (Manufacturer) By W. A. Volger W. A. VOLGER

Certificate of Authorization No. N 1891 expires OCTOBER 21, 1980

CERTIFICATE OF SHOP INSPECTION

I, the undersigned, holding a valid commission issued by the National Board of Boiler and Pressure Vessel Inspectors and/or the State of Province of PENNSYLVANIA and employed by PHILA. MFG. MUTUAL INS. CO.* of PHILADELPHIA, PA have inspected the equipment described in this Data Report on JULY 28 19 78, and state that to the best of my knowledge and belief, the Manufacturer has constructed this equipment in accordance with the applicable Subsections of ASME Code, Section III.

By signing this certificate, neither the Inspector nor his employer makes any warranty, expressed or implied, concerning the equipment described in this Data Report. Furthermore, neither the Inspector nor his employer shall be liable in any manner for any personal injury or property damage or a loss of any kind arising from or connected with this inspection.

DOCUMENT REVIEWED 8-23-78 UE&C DJB

Date JULY 28 19 78

N. S. Hewitt (Inspector) N. S. HEWITT

Commissions NB 6344 PA 2056 (National Board, State, Province and No.)

* PART OF THE FACTORY MUTUAL SYSTEM

INFORMATION ONLY

(16)

FORM NPV-1 MANUFACTURERS' DATA REPORT FOR NUCLEAR PUMPS OR VALVES*

As Required by the Provisions of the ASME Code Rules

PLAN No. 2-0281
Kuldip Singh 7/28/88.

1. Manufactured by YARWAY CORPORATION, BLUE BELL, PA. Order No. 72041
(Name & Address of Manufacturer)

2. Manufactured for WASHINGTON PUBLIC POWER SUPPLY SYSTEM Order No. 9779-41G
(Name and Address)
RICHLAND WASHINGTON

3. Owner WASHINGTON PUBLIC POWER SUPPLY SYSTEM (WPPSS)

4. Location of Plant RICHLAND WASHINGTON

5. Pump or Valve Identification NUCLEAR SERVICE VALVES - SIZE 3/4"

SERIAL NOS. A4000 THRU A4016
(Brief description of service for which equipment was designed)

(a) Drawing No. 104561-05 Prepared by YARWAY CORPORATION

(b) National Board No. 65 - 81

6. Design Conditions --- (Pressure) psi -=- (Temperature) °F or Pressure Class 1500 psi (1)

7. The material, design, construction, and workmanship complies with ASME Code Section III. Class 1

Edition 1974, Addenda Date WINTER 1975, Case No.

	Mark No.	Material Spec. No.	Manufacturer	Remarks
(a) Castings	C3	AMS 5385	NOVA/HOWMET	DISC
	EPN NO	SERIAL NO		DOCUMENT REVIEWED 7-23-78 UE&C
	PI-V-18A2	A 4011		
	PI-V-18B1	A 4001		
(b) Forgings	T9	SA182 F316	CAPE ANN TOOL COMPANY	BODY
	VW904	SA564 Gr. 630	CARPENTER TECHNOLOGY CORPORATION	BACKSEAT BUSHING

(1) For manually operated valves only.

*Supplemental sheets in form of lists, sketches or drawings may be used provided (1) size is 8½" x 11", (2) information in items 1, 2, 5a and 5b on this data report is included on each sheet, and (3) each sheet is numbered and number of sheets is recorded at top of this form.

3/75 This form (E00037, [illegible] obtained from the Order Dept., ASME, 345 E. 47th St., New York, N.Y. 10017.

FORM NPV-1 (back) S/Ns A 4000 THRU A 40 Buildup Supts 7/28/78

	Mark No.	Material Spec. No.	Manufacturer	Remarks
(c) Bolting	NONE			
(d) Other Parts	NONE			

8. Hydrostatic test 5600 psi.

CERTIFICATION OF DESIGN

Design information on file at W P P S S - RICHLAND WASHINGTON

Stress analysis report on file at W P P S S - RICHLAND WASHINGTON

Design specifications certified by RATHIN BASU (1) Prof. Eng. State WASH Reg. No 15049

Stress analysis report certified by DR. KHAC-SOUN SU (1) Prof. Eng. State N.J. Reg. No 18049

(1) Signature not required. List name only.

We certify that the statements made in this report are correct.

Date JULY 28 19 78 Signed YARWAY CORPORATION (Manufacturer) By W. A. Volger W. A. VOLGER

Certificate of Authorization No. N 1891 expires OCTOBER 21, 1980

CERTIFICATE OF SHOP INSPECTION

I, the undersigned, holding a valid commission issued by the National Board of Boiler and Pressure Vessel Inspectors and/or the State of Province of PENNSYLVANIA and employed by PHILA. MFG. MUTUAL INS. CO.* of PHILADELPHIA, PA. have inspected the equipment described in this Data Report on JULY 28 19 78, and state that to the best of my knowledge and belief, the Manufacturer has constructed this equipment in accordance with the applicable Subsections of ASME Code, Section III.

By signing this certificate, neither the Inspector nor his employer makes any warranty, expressed or implied, concerning the equipment described in this Data Report. Furthermore, neither the Inspector nor his employer shall be liable in any manner for any personal injury or property damage or a loss of any kind arising from or connected with this inspection.

DOCUMENT REVIEWED 8-23-78 UE&C

Date JULY 28 19 78

N. S. Hewitt (Inspector) N. S. HEWITT

Commissions NB 6344 PA 2056 (National Board, State, Province and No.)

* PART OF THE FACTORY MUTUAL SYSTEM

INFORMATION ONLY

WASHINGTON PUBLIC POWER SUPPLY SYSTEM

PLAN NO. 2-0284

FORM NIS-2 OWNER'S REPORT FOR REPAIRS OR REPLACEMENTS
As Required by the Provisions of the ASME Code Section XI

1. Owner (Name) Washington Public Power Supply System — Date 11-19-87
   Owner (Address) 3000 George Washington Way, Richland, WA — Sheet 1 of 1
2. Plant (Name) WPPSS Nuclear Power Plant (WNP) — Unit WNP-2
   Plant (Address) Hanford, Benton County, WA — WPPSS (Repair Organization P.O. No., Job No., etc.)
3. Work Performed by (Name) WPPSS
   Work Performed by (Address) 3000 George Wash. Way, Richland, WA
4. Identification of System Residual Heat Removal (RHR) System
5. (a) Applicable Construction Code ASME Section III 19 71 Edition, W73 Addenda, None Code Case
   (b) Applicable Edition of ASME Section XI Utilized for Repairs or Replacements 19 80 Edition, W80 Addenda, N308 Code Case
6. Identification of Components Repaired or Replaced and Replacement Components

Name of Component	Name of Manufacturer	Manufacturer Serial No.	National Board No.	Other I.D.	Year Built	Repaired, Replaced, or Replacement	ASME Code Stamped (Yes or No) Code Class
RHR(1)-4B1	WPPSS	*	N/A	N/A	1983	Replacement	Yes, Class 1 (NF)

7. Description of Work:

Modified support RHR-2264-22. The modification work was performed as follows:

1) Removed existing snubber and snubber parts.
2) Installed new snubber parts.
3) Made required welds.
4) Reinstalled the existing snubber.

Notes:
*RHR(1)-4B1-P1

WASHINGTON PUBLIC POWER SUPPLY SYSTEM

PLAN NO. 2-0284

FORM NIS-2 (Back)

8. Tests Conducted: Hydrostatic ☐ Pneumatic ☐ Nominal Operating Pressure ☐ Other ☒ None
Test Pressure _____ psig, Test Temp. _____ °F
Component Design Pressure _____ psig, Temp. _____ °F

9. Remarks:

None

CERTIFICATE OF COMPLIANCE

We certify that the statements made in the report are correct and this replacement (repair or replacement) conforms to the rules of the ASME Code, Section XI.

Type Code Symbol Stamp Not applicable

Certificate Authorization No. Not applicable Expiration Date Not applicable

Signed: [signature] Owner or Owner's Designee, Title Plant Technical Manager

11/17/87

Date 11/18 19 87

CERTIFICATE OF INSERVICE INSPECTION

I, the undersigned, holding a valid commission issued by the National Board of Boiler and Pressure Vessel Inspectors and the State of Washington and employed by Lumbermen's Mutual Casualty Co. of Illinois have inspected the components described in this Owner's Report during the period 4-1-86 to 11-16-87, and state that to the best of my knowledge and belief, the Owner has performed examinations and taken corrective measures described in this Owner's Report in accordance with the requirements of the ASME Code, Section XI.

By signing this certificate neither the Inspector nor his employer makes any warranty, expressed or implied, concerning the examinations and corrective measures described in this Owner's Report. Furthermore, neither the Inspector nor his employer shall be liable in any manner for any personal injury or property damage or a loss of any kind arising from or connected with this inspection.

[signature] Inspector's Signature Commissions 9556 W National Board, State, and Endorsements

Date 11-19 19 87

Plan No. 2-0287

WASHINGTON PUBLIC POWER SUPPLY SYSTEM
FORM NIS-2 OWNER'S REPORT OF REPAIR OR REPLACEMENT
As Required by the Provisions of ASME Code Section XI

1. Owner Washington Public Power Supply System (Name) Date 8/12/88
3000 George Washington Way, Richland, Washington (Address) Sheet 1 of 1
2. Plant WNP-2 Unit N/A
Hanford, Benton County, WA. (Name) (Address)
3. Work Performed by Bechtel Power Corporation (Name) C-250 Repair Organization P.O No., Job No., etc.
P.O. Box 600, Richland, WA. (Address)
4. Identification of System Instrument Lines PI (1)-4S-X75A and PI (1)-4S-X75B
5. (a) Applicable Construction Code ASME III 19 74 Edition, W75 Addenda, Code Cases None
(b) Applicable Edition of Section XI Utilized for Repairs or Replacements — 19 80, W80 Addenda, Code Cases N308
6. Identification of Components Repaired or Replaced, and Replacement Components

Name of Component	Name of Mfr.	Mfrs. Ser. No.	Nat'l. Bd. No.	CRN No.	Other Identi-fication	Year Built	Repaired, Replaced, or Replacement	ASME Code Stamped (Yes or No)
*	JCI	*	N/A	N/A	N/A	1978	Repair	Yes, Class 1

7. Description of Work Removed and reinstalled support B220-780-41 for instrument lines PI (1)-4S-X75A and PI (1)-4S-X75B. The support work was performed as follows:

1. Removed support to facilitate Induction Heating Stress Improvement (IHSI) process.
2. Reinstalled support by welding.

8. Tests Conducted: Hydrostatic ☐ Pneumatic ☐ Nominal Operating Pressure ☐ Other ☒ None
Test Pressure _____ psi Test Temp _____ °F Component Design Pressure _____ Temp. _____

9. Remarks None
(Applicable Manufacturer's Data Reports to be attached)

JCI - Johnson Control, Inc.
* - PI (1)-4S-X75A
* - PI (1)-4S-X75B

Plan No. 2-0287

CERTIFICATE OF COMPLIANCE

We certify that the statements made in this report are correct and this repair conforms to Section XI of the ASME Code.

Signed [signature] Plant Technical Manager 8/17, 19 88
(Owner or Owner's Designee) Title (Date)

K Swab 8/12/88

CERTIFICATE OF INSPECTION

I, the undersigned, holding a valid commission issued by the National Board of Boiler and Pressure Vessel Inspectors and the State of Province of Washington, employed by Lumbermens Mutual Casualty Co. of Illinois have inspected the repair (Repair(s) or Replacement(s)) described in this Report on 8/12, 19 88

and state that to the best of my knowledge and belief, this repair or replacement has been constructed in accordance with Section XI of the ASME Code. By signing this certificate, neither the Inspector nor his employer makes any warranty, expressed or implied, concerning the repair or replacement described in this Report. Furthermore, neither the Inspector nor his employer shall be liable in any manner for any personal injury or property damage or a loss of any kind arising from or connected with this inspection.

Date 8/17/88 [signature] (Inspector) Commissions 5470 W (State or Province, National Board)

Note: Supplemental sheets in form of lists, sketches, or drawings may be used provided (1) size 8½ in. X 11 in., (2) information in items 1 through 4 on this data report is included on each sheet, and (3) each sheet is numbered and the number of sheets is recorded at the top of this form.

Plan No. 2-0292

WASHINGTON PUBLIC POWER SUPPLY SYSTEM
FORM NIS-2 OWNER'S REPORT OF REPAIR OR REPLACEMENT
As Required by the Provisions of ASME Code Section XI

1. Owner Washington Public Power Supply System (Name) Date 9/21/87
3000 George Washington Way, Richland, WA. 99352 (Address) Sheet 1 of 1
2. Plant WNP-2 Unit N/A
Hanford, Benton County, WA (Name) (Address)
3. Work Performed by WPPSS (Name) WPPSS Repair Organization P.O No., Job No., etc.
3000 Geo. Wash. Way, Richland, WA (Address)
4. Identification of System Reactor Building Closed Cooling (RCC) and Reactor Recirc. Cooling (RRC)
5. (a) Applicable Construction Code ASME III 19 71 Edition, W73 Addenda, Code Cases None
(b) Applicable Edition of Section XI Utilized for Repairs or Replacements — 19 80, W80 Addenda, Code Cases N308
6. Identification of Components Repaired or Replaced, and Replacement Components

Name of Component	Name of Mfr.	Mfrs. Ser. No.	Nat'l. Bd. No.	CRN No.	Other Identification	Year Built	Repaired, Replaced, or Replacement	ASME Code Stamped (Yes or No)
RCC(36)-1	WPPSS	*	N/A	N/A	N/A	1983	Modification	Yes, Class 3
RRC(51)-1	WPPSS	*	N/A	N/A	N/A	1983	Modification	Yes, Class 2

7. Description of Work Modified Reactor Building Closed Cooling (RCC) and Reactor Recirculation Cooling (RRC) lines by installing flange connections. The modification work was performed as follows:

1. Cut existing piping to accomodate flange connections.
2. Installed flanges in both the lines.
3. Made required welds.
4. Performed PT examinations on final welds (RRC welds only). PT examination results acceptable.
5. Installed bolting material for the new flange connections and torqued the bolting material to the required torqued values.
6. Performed hydrostatic test (RCC line only) to confirm pressure boundary integrity. No evidence of leakage during the hydrostatic test.

8. Tests Conducted: Hydrostatic ☒ Pneumatic ☐ Nominal Operating Pressure ☐ Other ☐
Test Pressure 181 psig Test Temp 83 °F Component Design Pressure 195 psig Temp. 150 °F

9. Remarks None
(Applicable Manufacturer's Data Reports to be attached)

* RCC(36)-1-P1
* RRC(51)-1-P1
WPPSS - Washington Public Power Supply System

Plan No. 2-0292

CERTIFICATE OF COMPLIANCE

We certify that the statements made in this report are correct and this modification conforms to Section XI of the ASME Code.

Signed [signature] RW 9/21/87 Plant Technical Manager 12/26/ .19 86
(Owner or Owner's Designee) Title (Date)

K. Smith 12/19/86 KS 9/15/87

CERTIFICATE OF INSPECTION

I, the undersigned, holding a valid commission issued by the National Board of Boiler and Pressure Vessel Inspectors and the State of Province of Washington, employed by Lumbermens Mutual Casualty Co. of Illinois have inspected the modification (Repair(s) or Replacement(s)) described in this Report on 11/22 AND 6/2 .19 86 87

and state that to the best of my knowledge and belief, this repair or replacement has been constructed in accordance with Section XI of the ASME Code. By signing this certificate, neither the Inspector nor his employer makes any warranty, expressed or implied, concerning the repair or replacement described in this Report. Furthermore, neither the Inspector nor his employer shall be liable in any manner for any personal injury or property damage or a loss of any kind arising from or connected with this inspection.

Date 1/5/87 9/18/87 [signature] (Inspector) Commissions 7447W (State or Province, National Board) 9556 W

Note: Supplemental sheets in form of lists, sketches, or drawings may be used provided (1) size 8½ in. X 11 in., (2) information in items 1 through 4 on this data report is included on each sheet, and (3) each sheet is numbered and the number of sheets is recorded at the top of this form.

WASHINGTON PUBLIC POWER SUPPLY SYSTEM

PLAN NO. 2-0296

FORM NIS-2 OWNER'S REPORT FOR REPAIRS OR REPLACEMENTS
As Required by the Provisions of the ASME Code Section XI

1. Owner (Name) Washington Public Power Supply System — Date 11/17/87
   Owner (Address) 3000 George Washington Way, Richland, WA — Sheet 1 of 1
2. Plant (Name) WPPSS Nuclear Power Plant (WNP) — Unit WNP-2
   Plant (Address) Hanford, Benton County, WA — C20069 Repair Organization P.O. No., Job No., etc.
3. Work Performed by (Name) Bechtel Construction, Inc.
   Work Performed by (Address) P.O. Box 600, Richland, WA
4. Identification of System Reactor Core Injection Cooling (RCIC) System
5. (a) Applicable Construction Code ASME Section III 19 71 Edition, W73 Addenda, None Code Case
   (b) Applicable Edition of ASME Section XI Utilized for Repairs or Replacements 19 80 Edition, W80
   Addenda, N308 Code Case
6. Identification of Components Repaired or Replaced and Replacement Components

Name of Component	Name of Manufacturer	Manufacturer Serial No.	National Board No.	Other I.D.	Year Built	Repaired, Replaced, or Replacement	ASME Code Stamped (Yes or No) Code Class
RCIC(13)-4CL2	WPPSS	*	N/A	N/A	1983	Repaired	Yes, Class 2

7. Description of Work:

Support RCIC-33:

Repaired undersized fillet weld by welding. Performed MT examination on the weld. MT examination results acceptable.

Support RCIC-34:

Modified support by removing existing snubber and replacing it with new fabricated rigid strut.

Notes:
*RCIC(13)-4CL2-P1

WASHINGTON PUBLIC POWER SUPPLY SYSTEM

PLAN NO. 2-0296

FORM NIS-2 (Back)

8. Tests Conducted: Hydrostatic ☐ Pneumatic ☐ Nominal Operating Pressure ☐ Other ☒ None
Test Pressure _____ psig, Test Temp. _____ °F
Component Design Pressure _____ psig, Temp. _____ °F

9. Remarks:

None

CERTIFICATE OF COMPLIANCE

We certify that the statements made in the report are correct and this repair (repair or replacement) conforms to the rules of the ASME Code, Section XI.

Type Code Symbol Stamp Not applicable

Certificate Authorization No. Not applicable Expiration Date Not applicable

Signed R L Weber (Owner or Owner's Designee,) Title Plant Technical Manager

K Smith 11/12/87

Date 11/13/ 19 87

CERTIFICATE OF INSERVICE INSPECTION

I, the undersigned, holding a valid commission issued by the National Board of Boiler and Pressure Vessel Inspectors and the State of Washington and employed by Lumbermen's Mutual Casualty Co. of Illinois have inspected the components described in this Owner's Report during the period 5-6-86 to 10-19-87, and state that to the best of my knowledge and belief, the Owner has performed examinations and taken corrective measures described in this Owner's Report in accordance with the requirements of the ASME Code, Section XI.

By signing this certificate neither the Inspector nor his employer makes any warranty, expressed or implied, concerning the examinations and corrective measures described in this Owner's Report. Furthermore, neither the Inspector nor his employer shall be liable in any manner for any personal injury or property damage or a loss of any kind arising from or connected with this inspection.

Dan Hoggard (Inspector's Signature) Commissions 9556 W (National Board, State, and Endorsements)

Date 11-17 19 87

WASHINGTON PUBLIC POWER SUPPLY SYSTEM

PLAN NO. 2-0297

FORM NIS-2 OWNER'S REPORT FOR REPAIRS OR REPLACEMENTS
As Required by the Provisions of the ASME Code Section XI

1. Owner (Name) Washington Public Power Supply System — Date 11/17/87
   Owner (Address) 3000 George Washington Way, Richland, WA — Sheet 1 of 1
2. Plant (Name) WPPSS Nuclear Power Plant (WNP) — Unit WNP-2
   Plant (Address) Hanford, Benton County, WA — WPPSS (Repair Organization P.O. No., Job No., etc.)
3. Work Performed by (Name) WPPSS
   Work Performed by (Address) 3000 George Wash. Way, Richland, WA
4. Identification of System Main Steam (MS) System
5. (a) Applicable Construction Code ASME Section III 19 71 Edition, W73 Addenda, None Code Case
   (b) Applicable Edition of ASME Section XI Utilized for Repairs or Replacements 19 80 Edition, W80 Addenda, N308 Code Case
6. Identification of Components Repaired or Replaced and Replacement Components

Name of Component	Name of Manufacturer	Manufacturer Serial No.	National Board No.	Other I.D.	Year Built	Repaired, Replaced, or Replacement	ASME Code Stamped (Yes or No) Code Class	
MS(1)-4A	WPPSS	*	N/A	N/A	1983	Repaired	Yes, Class 2	(NF)
MS(1)-4B	WPPSS	*	N/A	N/A	1983	Repaired	Yes, Class 2	(NF)
MS(1)-4C	WPPSS	*	N/A	N/A	1983	Repaired	Yes, Class 2	(NF)
MS(1)-4D	WPPSS	*	N/A	N/A	1983	Repaired	Yes, Class 2	(NF)

7. Description of Work:

Modified main steam drip leg supports MS-1011S, MS-1012S, MS-1013S, MS-1014S, MS-1015S and MS-1016S. The modification work was performed as follows:

1) Fabricated new supports by welding.
2) Removed existing support material.
3) Installed new supports by welding.
4) Performed MT examination on welds. MT examination results acceptable.

Notes:
*MS(1)-4A-P4 *MS(1)-4B-P3
*MS(1)-4C-P3 *MS(1)-4D-P3

WASHINGTON PUBLIC POWER SUPPLY SYSTEM

PLAN NO. 2-0297

FORM NIS-2 (Back)

8. Tests Conducted: Hydrostatic ☐ Pneumatic ☐ Nominal Operating Pressure ☐ Other ☒ None
Test Pressure _____ psig, Test Temp. _____ °F
Component Design Pressure _____ psig, Temp. _____ °F

9. Remarks:

None

CERTIFICATE OF COMPLIANCE

We certify that the statements made in the report are correct and this repair (repair or replacement) conforms to the rules of the ASME Code, Section XI.

Type Code Symbol Stamp Not applicable

Certificate Authorization No. Not applicable Expiration Date Not applicable

Signed R L Weber (Owner or Owner's Designee,) Title Plant Technical Manager

Date 11/12 19 87

CERTIFICATE OF INSERVICE INSPECTION

I, the undersigned, holding a valid commission issued by the National Board of Boiler and Pressure Vessel Inspectors and the State of Washington and employed by Lumbermen's Mutual Casualty Co. of Illinois have inspected the components described in this Owner's Report during the period 5-6-86 to 11-16-87, and state that to the best of my knowledge and belief, the Owner has performed examinations and taken corrective measures described in this Owner's Report in accordance with the requirements of the ASME Code, Section XI.

By signing this certificate neither the Inspector nor his employer makes any warranty, expressed or implied, concerning the examinations and corrective measures described in this Owner's Report. Furthermore, neither the Inspector nor his employer shall be liable in any manner for any personal injury or property damage or a loss of any kind arising from or connected with this inspection.

Dan Hoggard (Inspector's Signature) Commissions 9556 W (National Board, State, and Endorsements)

Date 11-17 19 87

Plan No. 2-0298

WASHINGTON PUBLIC POWER SUPPLY SYSTEM
FORM NIS-2 OWNER'S REPORT OF REPAIR OR REPLACEMENT
As Required by the Provisions of ASME Code Section XI

1. Owner Washington Public Power Supply System (Name) Date 10/28/86
3000 George Wash. Way, Richland, Washington (Address) Sheet 1 of 1
2. Plant WNP-2 (Name) Unit N/A
Hanford, Benton County, WA (Address)
3. Work Performed by WPPSS (Name) WPPSS Repair Organization P.O No., Job No., etc.
3000 Geo. Wash. Way, Richland, WA (Address)
4. Identification of System Reactor Core Injection Cooling (RCIC) System
5. (a) Applicable Construction Code ASME III 19 71 Edition W73 Addenda, Code Cases None
(b) Applicable Edition of Section XI Utilized for Repairs or Replacements — 1980 W80 Addenda, Code Cases N308
6. Identification of Components Repaired or Replaced, and Replacement Components

Name of Component	Name of Mfr.	Mfrs. Ser. No.	Nat'l. Bd. No.	CRN No.	Other Identification	Year Built	Repaired, Replaced, or Replacement	ASME Code Stamped (Yes or No)
RCIC(1)-4CL1	WPPSS	*	N/A	N/A	N/A	1984	Repair	Yes, Class 1

7. Description of Work Repaired support RCIC-129 in Reactor Core Injection Cooling (RCIC) System.
The repair work was performed as follows -
1. Removed broken hanger rod from the beam bracket
2. Welded new hanger rod to the beam bracket
3. Installed fabricated piece in support RCIC-129

8. Tests Conducted: Hydrostatic ☐ Pneumatic ☐ Nominal Operating Pressure ☐ Other ☒ None
Test Pressure _____ psi Test Temp _____ °F Component Design Pressure _____ Temp. _____

9. Remarks None
(Applicable Manufacturer's Data Reports to be attached)

WPPSS - Washington Public Power Supply System
* RCIC(1)-4CL1-P1

Plan No. 2-0298

CERTIFICATE OF COMPLIANCE

We certify that the statements made in this report are correct and this repair conforms to Section XI of the ASME Code.

Signed [illegible] Plant Technical Manager 10/22 .19 86
(Owner or Owner's Designee) Title (Date)

K. Sauer 10/22/86

CERTIFICATE OF INSPECTION

I, the undersigned, holding a valid commission issued by the National Board of Boiler and Pressure Vessel Inspectors and the State of Province of Washington, employed by Lumbermens Mutual Casualty Co. of Illinois have inspected the repair (Repair(s) or Replacement(s)) described in this Report on OCT. 15 .19 86

and state that to the best of my knowledge and belief, this repair or replacement has been constructed in accordance with Section XI of the ASME Code. By signing this certificate, neither the Inspector nor his employer makes any warranty, expressed or implied, concerning the repair or replacement described in this Report. Furthermore, neither the Inspector nor his employer shall be liable in any manner for any personal injury or property damage or a loss of any kind arising from or connected with this inspection.

Date 10/28/86 D. L. Vance (Inspector) Commissions 7447-W (State or Province, National Board)

Note: Supplemental sheets in form of lists, sketches, or drawings may be used provided (1) size 8½ in. X 11 in., (2) information in items 1 through 4 on this data report is included on each sheet, and (3) each sheet is numbered and the number of sheets is recorded at the top of this form.

WASHINGTON PUBLIC POWER SUPPLY SYSTEM

PLAN NO. 2-0301R1

FORM NIS-2 OWNER'S REPORT FOR REPAIRS OR REPLACEMENTS
As Required by the Provisions of the ASME Code Section XI

1. Owner (Name) Washington Public Power Supply System — Date 11/17/87
   Owner (Address) 3000 George Washington Way, Richland, WA — Sheet 1 of 1
2. Plant (Name) WPPSS Nuclear Power Plant (WNP) — Unit WNP-2
   Plant (Address) Hanford, Benton County, WA — WPPSS (Repair Organization P.O. No., Job No., etc.)
3. Work Performed by (Name) WPPSS
   Work Performed by (Address) 3000 George Wash. Way, Richland, WA
4. Identification of System Reactor Recirculation Cooling (RRC) System
5. (a) Applicable Construction Code ASME Section III 19 71 Edition, W73 Addenda, None Code Case
   (b) Applicable Edition of ASME Section XI Utilized for Repairs or Replacements 19 80 Edition, W80 Addenda, N308 Code Case
6. Identification of Components Repaired or Replaced and Replacement Components

Name of Component	Name of Manufacturer	Manufacturer Serial No.	National Board No.	Other I.D.	Year Built	Repaired, Replaced, or Replacement	ASME Code Stamped (Yes or No) Code Class
RRC(51)-4	WPPSS	*	N/A	N/A	1983	Replacement	Yes, Class 1

7. Description of Work:

Replaced valve RRC-V-20 in reactor recirculation cooling system. The replacement work was performed as follows:

1) Cut and removed existing valve.
2) Prepared fitting ends for rewelding. Performed PT examination on the fitting prepped ends. PT examination results acceptable.
3) Installed new valve and made required socket welds.
4) Performed PT examination on the final socket welds. PT examination results acceptable.
5) Modified existing support to accommodate new valve configuration.

Notes:
*RRC(51)-4-P1

WASHINGTON PUBLIC POWER SUPPLY SYSTEM

PLAN NO. 2-0301R1

FORM NIS-2 (Back)

8. Tests Conducted: Hydrostatic ☐ Pneumatic ☐ Nominal Operating Pressure ☐ Other ☒ None
Test Pressure _____ psig, Test Temp. _____ °F
Component Design Pressure _____ psig, Temp. _____ °F

9. Remarks:

See attached NPV-1 Code Data Report for the following new valve.

EPN NO.	SERIAL NO.
RRC-V-20	1

CERTIFICATE OF COMPLIANCE

We certify that the statements made in the report are correct and this replacement (repair or replacement) conforms to the rules of the ASME Code, Section XI.

Type Code Symbol Stamp Not applicable

Certificate Authorization No. Not applicable Expiration Date Not applicable

Signed R. C. Lebrun (Owner or Owner's Designee) Title Plant Technical Manager

R. Emp's 11/13/87

Date 11/13 19 87

CERTIFICATE OF INSERVICE INSPECTION

I, the undersigned, holding a valid commission issued by the National Board of Boiler and Pressure Vessel Inspectors and the State of Washington and employed by Lumbermen's Mutual Casualty Co. of Illinois have inspected the components described in this Owner's Report during the period 2-17-87 to 10-16-87, and state that to the best of my knowledge and belief, the Owner has performed examinations and taken corrective measures described in this Owner's Report in accordance with the requirements of the ASME Code, Section XI.

By signing this certificate neither the Inspector nor his employer makes any warranty, expressed or implied, concerning the examinations and corrective measures described in this Owner's Report. Furthermore, neither the Inspector nor his employer shall be liable in any manner for any personal injury or property damage or a loss of any kind arising from or connected with this inspection.

Dan Hoggatt (Inspector's Signature) Commissions 9556 W (National Board, State, and Endorsements)

Date 11-17 19 87

PLAN NO. 2-0301R1
RRC-V-20,S/N 1
Rudolph Swift
10/16/87.

FORM NPV-1 CERTIFICATE HOLDERS' DATA REPORT FOR NUCLEAR PUMPS OR VALVES*
As Required by the Provisions of the ASME Code, Section III, Div. 1

1. Manufactured and certified by Target Rock Corp., 1966E Broadhollow Rd, E. Farmingdale, NY 11735
(name and address of N Certificate Holder)

2. Manufactured for Washington Public Power Supply System, Richland, WA
(name and address of Purchaser or Owner)

3. Location of installation WNP-2, Richland, WA
(name and address)

4. Model No., Series No., or Type 86Z-577-001 Drawing 1011105-3 Rev. C CRN N/A

5. ASME Code Section III: 1974 (Edition) W 75 (Addenda date) 1 (Class) N/A (Code Case no.)

6. Pump or valve Valve Nominal inlet size 1 (in.) Outlet size 1 (in.)

7. Material: Body SA 479 316L Bonnet SA 479 316 Disk SA 564 630 Bolting N/A

(a) Cert. Holder's Serial No.	(b) Nat'l Board No.	(c) Body Serial No.	(d) Bonnet Serial No.	(e) Disk Serial No.
1	N/A	516	1023	649

*Supplemental information in the form of lists, sketches, or drawings may be used provided (1) size is 8½ × 11, (2) information in items 1 through 4 on this Data Report is included on each sheet, (3) each sheet is numbered and the number of sheets is recorded at the top of this form.

(6/85) This form (E00037) may be obtained from the Order Dept., ASME, 345 E. 47th St., New York, N.Y. 10017

REVIEWED
4/16/87
D.S. [illegible]

PLAN NO. 2-0301R1
RRC-V-20, S/N 1

FORM NPV-1 (back)

Mfr. Serial No. 1 Rudolph Ru... 10/16...

8. Remarks Nipple, SA-312 304, S/N 1, 2
Disc, P/N 202643-1, S/N 649, Material is in accordance with the 1980 Code WAZ 3/30/87

9. Design conditions 1550 (pressure) psi 575 (temperature) °F or valve pressure class 1500 (1)

10. Cold working pressure 2570 psi at 100°F

11. Hydrostatic test 3875 psi Temp. N/A °F Disk differential test pressure 2850 psi

CERTIFICATION OF DESIGN

Design Specification certified by Jack R. Cole Prof. Eng. state WA Reg. No. 20653
Design Report certified by Martin Goldstone Prof. Eng. state NY Reg. No. 31940

CERTIFICATE OF SHOP COMPLIANCE

We certify that the statements made in this report are correct and that this pump or valve conforms to the rules for construction of the ASME Code, Section III.

N Certificate of Authorization No. 1947 Expires 12-9-89

Date 3-2-87 Name Target Rock Corporation (N Certificate Holder) Signed (Representative) G. Abruzzo, Q.A. Manager

CERTIFICATE OF SHOP INSPECTION

I, the undersigned, holding a valid commission issued by the National Board of Boiler and Pressure Vessel Inspectors and the State or Province of New York and employed by Commercial Union Ins. Co. of Boston, Mass. have inspected the pump, or valve, described in this Data Report on 3/2 19 87, and state that to the best of my knowledge and belief, the N Certificate Holder has constructed this pump, or valve, in accordance with the ASME Code, Section III.

By signing this certificate, neither the Inspector nor his employer makes any warranty, expressed or implied, concerning the equipment described in this Data Report. Furthermore, neither the Inspector nor his employer shall be liable in any manner for any personal injury or property damage or a loss of any kind arising from or connected with this inspection.

Date 3/2 19 87

William A. Roland (Inspector)

Commissions NEW YORK STATE COMMISSION NO. 2288
ALSO COMMISSIONED IN Penn., Ohio & Conn.
(Nat'l Bd., (incl. endorsements) State, Prov. and No.)

(1) For manually operated valves only.

CORRECTED.

Plan No. 2-0303

WASHINGTON PUBLIC POWER SUPPLY SYSTEM
FORM NIS-2 OWNER'S REPORT OF REPAIR OR REPLACEMENT
As Required by the Provisions of ASME Code Section XI

1. Owner Washington Public Power Supply System (Name) Date 10/28/86
3000 George Washington Way, Richland, WA (Address) Sheet 1 of 1

2. Plant WNP-2 (Name) Unit N/A
Hanford, Benton County, WA (Address)

3. Work Performed by WPPSS (Name) WPPSS Repair Organization P.O No., Job No., etc.
3000 Geo. Wash. Way, Richland, WA (Address)

4. Identification of System Main Steam (MS) System

5. (a) Applicable Construction Code ASMEIII 19 71 Edition, W73 Addenda, Code Cases None
(b) Applicable Edition of Section XI Utilized for Repairs or Replacements — 19 80 W80 Addenda, Code Cases N308

6. Identification of Components Repaired or Replaced, and Replacement Components

Name of Component	Name of Mfr.	Mfrs. Ser. No.	Nat'l. Bd. No.	CRN No.	Other Identification	Year Built	Repaired, Replaced, or Replacement	ASME Code Stamped (Yes or No)
MS(1)-40	WPPSS	*	N/A	N/A	N/A	1983	Modification	Yes, Class 2
C								
KGupb								
10/12/87.								
CH 10/12/87								

7. Description of Work Modified support MS-1427-15 in Main Steam (MS) System. The modification work was performed as follows -
1. Fabricated new lugs
2. Welded new lugs to the pipe
3. Performed MT examination on the welds. MT examination results acceptable

8. Tests Conducted: Hydrostatic ☐ Pneumatic ☐ Nominal Operating Pressure ☐ Other ☒ None
Test Pressure _____ psi Test Temp _____ °F Component Design Pressure _____ Temp. _____

9. Remarks None
(Applicable Manufacturer's Data Reports to be attached)

WPPSS - Washington Public Power Supply System
* MS(1)-4C-P3

Plan No. 2-0303

CERTIFICATE OF COMPLIANCE

We certify that the statements made in this report are correct and this modification conforms to Section XI of the ASME Code.

Signed R Clubbin (Owner or Owner's Designee) Plant Technical Manager (Title) 10/22/ (Date) .19 86

K Supp 10/22/86

CERTIFICATE OF INSPECTION

I, the undersigned, holding a valid commission issued by the National Board of Boiler and Pressure Vessel Inspectors and the State of Province of Washington, employed by Lumbermens Mutual Casualty Co. of Illinois, have inspected the modification (Repair(s) or Replacement(s)) described in this Report on OCT. 20, 19 86

and state that to the best of my knowledge and belief, this repair or replacement has been constructed in accordance with Section XI of the ASME Code. By signing this certificate, neither the Inspector nor his employer makes any warranty, expressed or implied, concerning the repair or replacement described in this Report. Furthermore, neither the Inspector nor his employer shall be liable in any manner for any personal injury or property damage or a loss of any kind arising from or connected with this inspection.

Date 10/28/86 D. L. Vance (Inspector) Commissions 7447-W (State or Province, National Board)

Note: Supplemental sheets in form of lists, sketches, or drawings may be used provided (1) size 8½ in. X 11 in., (2) information in items 1 through 4 on this data report is included on each sheet, and (3) each sheet is numbered and the number of sheets is recorded at the top of this form.

WASHINGTON PUBLIC POWER SUPPLY SYSTEM

PLAN NO. 2-0304

FORM NIS-2 OWNER'S REPORT FOR REPAIRS OR REPLACEMENTS
As Required by the Provisions of the ASME Code Section XI

1. Owner (Name) Washington Public Power Supply System — Date 11/17/87
   Owner (Address) 3000 George Washington Way, Richland, WA — Sheet 1 of 1
2. Plant (Name) WPPSS Nuclear Power Plant (WNP) — Unit WNP-2
   Plant (Address) Hanford, Benton County, WA — WPPSS Repair Organization P.O. No., Job No., etc.
3. Work Performed by (Name) WPPSS
   Work Performed by (Address) 3000 George Wash. Way, Richland, WA
4. Identification of System Reactor Core Injection Cooling (RCIC) System
5. (a) Applicable Construction Code ASME Section III 19 71 Edition, W73 Addenda, None Code Case
   (b) Applicable Edition of ASME Section XI Utilized for Repairs or Replacements 19 80 Edition, W80 Addenda, N308 Code Case
6. Identification of Components Repaired or Replaced and Replacement Components

Name of Component	Name of Manufacturer	Manufacturer Serial No.	National Board No.	Other I.D.	Year Built	Repaired, Replaced, or Replacement	ASME Code Stamped (Yes or No) Code Class
RCIC(12)-4CL1	WPPSS	*	N/A	N/A	1983	Replacement	Yes, Class 1 (NF)

7. Description of Work:

Modified support RCIC-1C-4. The modification work was performed as follows:

1) Removed existing snubber and snubber parts.
2) Installed new snubber and snubber parts.
3) Made required welds.
4) Replaced existing PSA-1 snubber, S/N 618 with new PSA-3 snubber, S/N 653.

Notes:
*RCIC(12)-4CL1-P1

WASHINGTON PUBLIC POWER SUPPLY SYSTEM

PLAN NO. 2-0304

FORM NIS-2 (Back)

8. Tests Conducted: Hydrostatic ☐ Pneumatic ☐ Nominal Operating Pressure ☐ Other ☒ None
Test Pressure _____ psig, Test Temp. _____ °F
Component Design Pressure _____ psig, Temp. _____ °F

9. Remarks:

See attached Certificate of Conformance for replacement PSA-3 snubber, S/N 653.

CERTIFICATE OF COMPLIANCE

We certify that the statements made in the report are correct and this replacement (repair or replacement) conforms to the rules of the ASME Code, Section XI.

Type Code Symbol Stamp Not applicable

Certificate Authorization No. Not applicable Expiration Date Not applicable

Signed R C Weber (Owner or Owner's Designee,) Title Plant Technical Manager

K Sayers 11/12/87

Date 11/13 19 87

CERTIFICATE OF INSERVICE INSPECTION

I, the undersigned, holding a valid commission issued by the National Board of Boiler and Pressure Vessel Inspectors and the State of Washington and employed by Lumbermen's Mutual Casualty Co. of Illinois have inspected the components described in this Owner's Report during the period 5-13-86 to 11-5-87, and state that to the best of my knowledge and belief, the Owner has performed examinations and taken corrective measures described in this Owner's Report in accordance with the requirements of the ASME Code, Section XI.

By signing this certificate neither the Inspector nor his employer makes any warranty, expressed or implied, concerning the examinations and corrective measures described in this Owner's Report. Furthermore, neither the Inspector nor his employer shall be liable in any manner for any personal injury or property damage or a loss of any kind arising from or connected with this inspection.

Dan Hoggard (Inspector's Signature) Commissions 9556 W (National Board, State, and Endorsements)

Date 11-17 19 87

Km-Tech Division

PACIFIC SCIENTIFIC

L-0304 Anaheim

Plan No. 2-0304
RCIC-IC-4, S/N 653. Rudolph Rupp 10/19/87.

CERTIFICATE OF CONFORMANCE

SC/F REVIEWED
DATE 3-9-82
BY TES. [illegible]
ISQ 3.21.3. [illegible]
RET: L

REFERENCE: P.O. No. 75-2004-2
NPS INDUSTRIES, INC.

PSCo P.O. No. ANC 19834-03
P/N 1801106-05 PSA-3
S/N 614 thru 663

TO WHOM IT MAY CONCERN:

We, Pacific Scientific Company, 1346 S. State College Blvd., Anaheim, California, certify that the materials supplied on the referenced order comply with all the requirements of ASME Section III, Subsection NF, Article NF 2000-1974 edition, including the winter of 1975 addenda.

We also certify that the fabrication complies with the requirements of ASME Section III, Subsection NF, Article NF 4000-1974 edition, including the winter of 1975 addenda.

Code Cases applicable: 1644 Rev. 4, 1651, 1685, 1686, 1706 and 1728.

P. A. Hadnagy, Q. A. Manager

WBG BR 215 17110

Subscribed and sworn to before me

this 15th day of December, 1976.

Jeanne R. Coykendall
(Notary)

DOCUMENT REVIEWED

QA Manager	Date
	9/27-77

OFFICIAL SEAL
JEANNE R. COYKENDALL
NOTARY PUBLIC - CALIFORNIA
PRINCIPAL OFFICE IN
ORANGE COUNTY
My Commission Expires April 23, 1980

1346 S. STATE COLLEGE BLVD., ANAHEIM, CA 92803

JOB #215
CHECKED BY OCT DATE 9/28/77

WBG BR 215 4728 B

PM 214 9/76

WASHINGTON PUBLIC POWER SUPPLY SYSTEM

PLAN NO. 2-0309

FORM NIS-2 OWNER'S REPORT FOR REPAIRS OR REPLACEMENTS
As Required by the Provisions of the ASME Code Section XI

1. Owner (Name) Washington Public Power Supply System — Date 11/17/87
   Owner (Address) 3000 George Washington Way, Richland, WA — Sheet 1 of 1
2. Plant (Name) WPPSS Nuclear Power Plant (WNP) — Unit WNP-2
   Plant (Address) Hanford, Benton County, WA — C20069 Repair Organization P.O. No., Job No., etc.
3. Work Performed by (Name) Bechtel Construction, Inc.
   Work Performed by (Address) P.O. Box 600, Richland, WA
4. Identification of System Reactor Core Injection Cooling (RCIC) System
5. (a) Applicable Construction Code ASME Section III 19 71 Edition, W73 Addenda, None Code Case
   (b) Applicable Edition of ASME Section XI Utilized for Repairs or Replacements 19 80 Edition, W80 Addenda, N308 Code Case
6. Identification of Components Repaired or Replaced and Replacement Components

Name of Component	Name of Manufacturer	Manufacturer Serial No.	National Board No.	Other I.D.	Year Built	Repaired, Replaced, or Replacement	ASME Code Stamped (Yes or No) Code Class
RCIC(16)-1	WPPSS	*	N/A	N/A	1984	Replacement	Yes, Class 2 (NF)

7. Description of Work:

Modified support RCIC-5. The modification work was performed as follows:

1) Removed parts of existing support.
2) Installed new support parts and material.
3) Made required welds.

Replaced existing PSA-1/2 snubber, S/N 388, with new PSA 1/2 snubber, S/N 2465. Reference document NCR-286-144.

Notes:
*RCIC(16)-1-P1

WASHINGTON PUBLIC POWER SUPPLY SYSTEM

PLAN NO. 2-0309

FORM NIS-2 (Back)

8. Tests Conducted: Hydrostatic ☐ Pneumatic ☐ Nominal Operating Pressure ☐ Other ☒ None
Test Pressure _____ psig, Test Temp. _____ °F
Component Design Pressure _____ psig, Temp. _____ °F

9. Remarks:

See attached Certificate of Conformance for replacement PSA 1/2 snubber, S/N 2465.

CERTIFICATE OF COMPLIANCE

We certify that the statements made in the report are correct and this replacement (repair or replacement) conforms to the rules of the ASME Code, Section XI.

Type Code Symbol Stamp Not applicable

Certificate Authorization No. Not applicable Expiration Date Not applicable

Signed [signature] (Owner or Owner's Designee,) Title Plant Technical Manager

11/12/87

Date 11/13 19 87

CERTIFICATE OF INSERVICE INSPECTION

I, the undersigned, holding a valid commission issued by the National Board of Boiler and Pressure Vessel Inspectors and the State of Washington and employed by Lumbermen's Mutual Casualty Co. of Illinois have inspected the components described in this Owner's Report during the period 5-15-86 to 10-23-87, and state that to the best of my knowledge and belief, the Owner has performed examinations and taken corrective measures described in this Owner's Report in accordance with the requirements of the ASME Code, Section XI.

By signing this certificate neither the Inspector nor his employer makes any warranty, expressed or implied, concerning the examinations and corrective measures described in this Owner's Report. Furthermore, neither the Inspector nor his employer shall be liable in any manner for any personal injury or property damage or a loss of any kind arising from or connected with this inspection.

[signature] (Inspector's Signature) Commissions 9556 W (National Board, State, and Endorsements)

Date 11-17 19 87

'0'-9 8

Kin-Tech Division

Plan No. 2-0309

RCIC-5, S/N 2465

Date: February 3, 1978

Rudolph Gupta 10/19/81

PACIFIC SCIENTIFIC

B&C/G.E.R.I. JOB #215

CHECKED BY [illegible] DATE 5-16-78

CERTIFICATE OF CONFORMANCE

NPS INDUSTRIES, INC.	75-2004-4
Customer	Customer P.O.
1801104-07 (PSA-1)	ANC 23536-02
Part Number(s)	PSCo ANC(s)
100	2461 thru 2490, 2516 thru 2585
Quantity Shipped	Serial Number(s)

We, Pacific Scientific, certify that the materials supplied on the referenced order comply with all the requirements of ASME Section III, Subsection NF.

We also certify that the fabrication complies with the requirements of ASME Section III, Subsection NF.

Code cases applicable: 1644-6 ~~[illegible]~~.

Edition: 1974, Addenda: Winter 1976 (Note 1.)

Note: 1. Current Manufacturing complies with the 1974 Edition and all of the mandatory addenda through the winter of 1976. We, certify that the addenda required after the 1974 Edition does not degrade the product below the level of requirements stated in the applicable drawings and/or specifications.

SC/F REVIEWED
DATE

FOR INFORMATION ONLY

WBG BR 210 17110

Documentation Packages are being sent under separate cover by certified mail to the attention of: NPS Industries, Inc.
2750 Southwest Moody
Portland, Oregon 97201

P.A. Hadnagy, Q.A. Manager

Subscribed and sworn to before me

this _____ day of _____

(Notary)

SC/F REVIEWED
2-1-82
DATE 2-2-82
MES
3.21-82

NF

WBG BR 215 5577A

11/30/77

RET: L

1346 S. State College Boulevard, Anaheim, California 92803, (714) 774-5217, TELEX 65-5421

WASHINGTON PUBLIC POWER SUPPLY SYSTEM

PLAN NO. 2-0310

FORM NIS-2 OWNER'S REPORT FOR REPAIRS OR REPLACEMENTS
As Required by the Provisions of the ASME Code Section XI

1. Owner (Name) Washington Public Power Supply System — Date 11-19-87
   Owner (Address) 3000 George Washington Way, Richland, WA — Sheet 1 of 1
2. Plant (Name) WPPSS Nuclear Power Plant (WNP) — Unit WNP-2
   Plant (Address) Hanford, Benton County, WA — WPPSS (Repair Organization P.O. No., Job No., etc.)
3. Work Performed by (Name) WPPSS
   Work Performed by (Address) 3000 George Wash. Way, Richland, WA
4. Identification of System Reactor Building Closed Cooling (RCIC) System
5. (a) Applicable Construction Code ASME Section III 19 71 Edition, W73 Addenda, None Code Case
   (b) Applicable Edition of ASME Section XI Utilized for Repairs or Replacements 19 80 Edition, W80 Addenda, N308 Code Case
6. Identification of Components Repaired or Replaced and Replacement Components

Name of Component	Name of Manufacturer	Manufacturer Serial No.	National Board No.	Other I.D.	Year Built	Repaired, Replaced, or Replacement	ASME Code Stamped (Yes or No) Code Class
RCC(36)-1	WPPSS	*	N/A	N/A	1983	Replacement	Yes, Class 3 (NF)

7. Description of Work:

Modified supports RCC-150, RCC-151 and RCC-161. The modification work was performed as follows:

1) Removed parts of existing support.
2) Installed new support parts and material.
3) Made required welds.

Replaced existing PSA-1/2 snubbers with new PSA-1/2 snubbers. Reference document NCR-286-168.

Support No.	Existing Snubber S/N	Replacement Snubbers S/N
RCC-150	2110	104
RCC-151(top)	2116	2472
RCC-151(bottom)	2120	2475
RCC-161	2153	2581

Notes:
*RCC(36)-1-P1

WASHINGTON PUBLIC POWER SUPPLY SYSTEM

PLAN NO. 2-0310

FORM NIS-2 (Back)

8. Tests Conducted: Hydrostatic ☐ Pneumatic ☐ Nominal Operating Pressure ☐ Other ☒ None
Test Pressure _____ psig, Test Temp. _____ °F
Component Design Pressure _____ psig, Temp. _____ °F

9. Remarks:
See attached Certificate of Conformance for the following new snubbers.

Support No.	Serial No.
RCC-150	104
RCC-151 (top)	2472
RCC-151 (bottom)	2475
RCC-161	2581

CERTIFICATE OF COMPLIANCE

We certify that the statements made in the report are correct and this replacement (repair or replacement) conforms to the rules of the ASME Code, Section XI.

Type Code Symbol Stamp Not applicable

Certificate Authorization No. Not applicable Expiration Date Not applicable

Signed [signature] (Owner or Owner's Designee.) Title Plant Technical Manager

K Bivins 11/17/87

Date 11/18 19 87

CERTIFICATE OF INSERVICE INSPECTION

I, the undersigned, holding a valid commission issued by the National Board of Boiler and Pressure Vessel Inspectors and the State of Washington and employed by Lumbermen's Mutual Casualty Co. of Illinois have inspected the components described in this Owner's Report during the period 5-17-86 to 11-16-87, and state that to the best of my knowledge and belief, the Owner has performed examinations and taken corrective measures described in this Owner's Report in accordance with the requirements of the ASME Code, Section XI.

By signing this certificate neither the Inspector nor his employer makes any warranty, expressed or implied, concerning the examinations and corrective measures described in this Owner's Report. Furthermore, neither the Inspector nor his employer shall be liable in any manner for any personal injury or property damage or a loss of any kind arising from or connected with this inspection.

[signature] (Inspector's Signature) Commissions 9556 W (National Board, State, and Endorsements)

Date 11-19 19 87

Plan No 2-0310.

Pacific

1346 SO. STATE COLLEGE BLVD.
ANAHEIM, CALIFORNIA 92803
Telephone (714) 774-5217
TELEX 65-5421

REFERENCE: NPS Industries, Inc.
P.O. No. 75-2004-1
PSCo P.O. No. 18042-03
P/N 1801104-07 (PSA-1/2), S/Ns 100-124

RCC-104, S/N 104
K Smyth
10/20/82.

SC/F
REVIEWED
DATE 3-9-82
BY MES
150 3.21.3.X1
RETL

TO WHOM IT MAY CONCERN:

We, Pacific Scientific Company, 1346 S. State College Blvd., Anaheim, California, certify that the materials supplied on the referenced order comply with all the requirements of ASME Section III, Subsection NF Article NF 2000-1074 edition, including the winter of 1975 addenda.

We also certify that the fabrication complies with the requirements of ASME Section III, Subsection NF, Article NF 4000-1974 edition including the winter of 1975 addenda.

Code Cases applicable: 1644 Rev. 4, 1651, 1685, 1686, 1706 and 1728

WBG BR 215 4728B

P. A. Hadnagy, Q. A. Manager

Subscribed and sworn to before me

this 13th day of August 1976.

BRCA/C.F.R.I. JOB #215
CHECKED BY MT DATE 9/28/77

WBG BR 215 17110

Jeanne R. Coykendall
(Notary)

OFFICIAL SEAL
JEANNE R. COYKENDALL
NOTARY PUBLIC-CALIFORNIA
PRINCIPAL OFFICE IN
ORANGE COUNTY
My Commission Expires April 28, 1980

1346 S. STATE COLLEGE BLVD., ANAHEIM, CA 92803

DOCUMENT REVIEWED

QA Manager	Date 9/27-77

RCC-151, S/N 2472
RCC-151, S/N 2475
RCC-161, S/N 2581
Kuldip Singh 10/20/87.

'0'-9 8
Plan No 2-0310.

Kin-Tech Division

Date: February 3, 1978

PACIFIC SCIENTIFIC

B&C/G.E.R.I. JOB #215
CHECKED BY CJP DATE 3-16-78

CERTIFICATE OF CONFORMANCE

NPS INDUSTRIES, INC.	75-2004-4
Customer	Customer P.O.
1801104-07 (FSA-½)	ANC 23536-02
Part Number(s)	PSCo ANC(s)
100	2461 thru 2490, 2516 thru 2585
Quantity Shipped	Serial Number(s)

We, Pacific Scientific, certify that the materials supplied on the referenced order comply with all the requirements of ASME Section III, Subsection NF.

We also certify that the fabrication complies with the requirements of ASME Section III, Subsection NF.

Code cases applicable: 1644-6 ~~[illegible]~~.

Edition: 1974, Addenda: Winter 1976 (Note 1.)

Note: 1. Current Manufacturing complies with the 1974 Edition and all of the mandatory addenda through the winter of 1976. We, certify that the addenda required after the 1974 Edition does not degrade the product below the level of requirements stated in the applicable drawings and/or specifications.

SC/F REVIEWED
DATE

FOR INFORMATION ONLY

WBG BR 210 17110

Documentation Packages are being sent under separate cover by certified mail to the attention of: NPS Industries, Inc.
2750 Southwest Moody
Portland, Oregon 97201

P.A. Hadnagy, Q.A. Manager

Subscribed and sworn to before me

this _____ day of _____.

SC/F REVIEWED 2-1-82

(Notary)

NF

WBG BR 215 5577A

11/30/77

RET: L

1346 S. State College Boulevard, Anaheim, California 92803, (714) 774-5217, TELEX 65-5421

WASHINGTON PUBLIC POWER SUPPLY SYSTEM

PLAN NO. 2-0311

FORM NIS-2 OWNER'S REPORT FOR REPAIRS OR REPLACEMENTS
As Required by the Provisions of the ASME Code Section XI

1. Owner (Name) Washington Public Power Supply System — Date 11-19-87
   Owner (Address) 3000 George Washington Way, Richland, WA — Sheet 1 of 1
2. Plant (Name) WPPSS Nuclear Power Plant (WNP) — Unit WNP-2
   Plant (Address) Hanford, Benton County, WA — WPPSS (Repair Organization P.O. No., Job No., etc.)
3. Work Performed by (Name) WPPSS
   Work Performed by (Address) 3000 George Wash. Way, Richland, WA
4. Identification of System Main Steam (MS) System
5. (a) Applicable Construction Code ASME Section III 19 71 Edition, W73 Addenda, None Code Case
   (b) Applicable Edition of ASME Section XI Utilized for Repairs or Replacements 19 80 Edition, W80
   Addenda, N308 Code Case
6. Identification of Components Repaired or Replaced and Replacement Components

Name of Component	Name of Manufacturer	Manufacturer Serial No.	National Board No.	Other I.D.	Year Built	Repaired, Replaced, or Replacement	ASME Code Stamped (Yes or No) Code Class
MS(1)-4B	WPPSS	*	N/A	N/A	1983	Replacement	Yes, Class 2 (NF)

7. Description of Work:

Modified support MS-147. The modification work was performed as follows:

1) Removed existing snubber and snubber parts.
2) Installed new snubber and snubber parts.
3) Made required welds.
4) Replaced existing PSA-10 snubbers with new PSA-35 snubbers.

Support No.	Existing Snubber S/N	Replacement Snubber S/N
MS-147(north)	688	6543
MS-147(south)	709	4970

Notes:
*MS(1)-4B-P3

WASHINGTON PUBLIC POWER SUPPLY SYSTEM

PLAN NO. 2-0311

FORM NIS-2 (Back)

8. Tests Conducted: Hydrostatic ☐ Pneumatic ☐ Nominal Operating Pressure ☐ Other ☒ None
Test Pressure _____ psig, Test Temp. _____ °F
Component Design Pressure _____ psig, Temp. _____ °F

9. Remarks:

See attached NF-1 Code Data reports for the following new snubbers.

Support No.	Serial No.
MS-147 (north)	6543
MS-147 (south)	4970

CERTIFICATE OF COMPLIANCE

We certify that the statements made in the report are correct and this replacement (repair or replacement) conforms to the rules of the ASME Code, Section XI.

Type Code Symbol Stamp Not applicable

Certificate Authorization No. Not applicable Expiration Date Not applicable

Signed [signature] Owner or Owner's Designee, Title Plant Technical Manager

K. Stroyb 11/17/87

Date 11/18 19 87

CERTIFICATE OF INSERVICE INSPECTION

I, the undersigned, holding a valid commission issued by the National Board of Boiler and Pressure Vessel Inspectors and the State of Washington and employed by Lumbermen's Mutual Casualty Co. of Illinois have inspected the components described in this Owner's Report during the period 5-17-86 to 11-16-87, and state that to the best of my knowledge and belief, the Owner has performed examinations and taken corrective measures described in this Owner's Report in accordance with the requirements of the ASME Code, Section XI.

By signing this certificate neither the Inspector nor his employer makes any warranty, expressed or implied, concerning the examinations and corrective measures described in this Owner's Report. Furthermore, neither the Inspector nor his employer shall be liable in any manner for any personal injury or property damage or a loss of any kind arising from or connected with this inspection.

[signature] Inspector's Signature Commissions 9556W National Board, State, and Endorsements

Date 11-19 19 87

Equip List S/N 7710

FORM NF-1 NPT CERTIFICATE HOLDERS' DATA REPORT FOR COMPONENT SUPPORTS

As Required by the Provisions of the ASME Code Rules, Section III, Division 1

#35

Plan No. 2-0311

1. Manufactured by Pacific Scientific 1346 S. State College Blvd. Anaheim, Ca. 92803
(Name and address of NPT Certificate Holder)

2. Manufacturer for ITT Grinnell Corp. 621 Dana Street N.E. Warren, Ohio 44481
(Name and address of purchaser or owner)

3. Location of Installation Unknown

Plan No. 2-0311

4. Identification

MS-147(SOUTH) S/N 4970

Kulgip Singh 10/20/87

(a) Component Support I.D. No.	(b) Canadian Registration No.	(c) Applicable Drawings with Last Rev. & Date	(d) Stress Report or Load Capacity Data Sheet	(e) Type of Component Support	(f) Class	(g) Nat'l Board No.	(h) Year Built
(1) 4966-5001	None	1801112-09-D	DR-1333- Rev. A	Linear	1	None	1979
(2)							
(3)							
(4)							
(5)							
(6)							
(7)							
(8)							
(9)							
(10)							

5. Remarks:

CERTIFICATE OF COMPLIANCE

We certify that the statements made in this report are correct and that these components supports conform to the rules of construction of the ASME Code for Nuclear Power Plant Components, Section III, Division 1, Edition '74, Addenda Winter '76 (Date), Code Case No. 1644-5

Date 11-16-79 Signed Pacific Scientific (NPT Certificate Holder) by D L Yager

Our ASME Certificate of Authorization No. 1198 to use the Component Supports (NPT)

Symbol expires Aug. 4, 1981 (Date).

CERTIFICATION OF DESIGN

Design Information on File at Pacific Scientific

Stress Report or Load Capacity Data Sheets on File at:
Pacific Scientific
Filed Per NA 3256

Design Specifications Certified by (1) Leo E. Av PE State FSI California

Reg. No. 13533.

Stress Analysis Report or Load Capacity Data Sheets Certified by (1)

PE State California Reg. No. 13533.

(1) List name only, signature not required.

QA RECORDS FILE COPY
OCT 26 1981
Leo E. Av
FILE NO: NPP-200
DETERMINATION:

Supplemental sheets in form of lists, sketches or drawings may be used provided (1) size is 8½ in., (2) information in items 1, 2, 3, 4g on this Data Report is included on each sheet, and (3) each sheet is numbered and number of sheets is recorded at top of this form.

(10/77) This form (E00075) may be obtained from the Order Dept., ASME, 345 E. 47th St., New York, N.Y. 10017

FORM NF-1 (Back)

CERTIFICATE OF SHOP INSPECTION

I, the undersigned, holding a valid commission issued by the National Board of Boiler and Pressure Vessel Inspectors and the State or Province of California and employed by HSBI&I Co. of Hartford, CT have inspected the component supports described in this Data Report on 11-16, 1979 and state that to the best of my knowledge and belief the NPT Certificate Holder has constructed these component supports in accordance with the ASME Code for Nuclear Power Plant Components.

By signing this certificate, neither the Inspector nor his employer makes any warranty, expressed or implied, concerning the component supports described in this Data Report. Furthermore, neither the Inspector nor his employer shall be liable in any manner for any personal injury or property damage or a loss of any kind arising from or connected with this inspection.

Date 11-16-79.

Signed W.H. Bueler Commissions CA.1280 / OHIO COMMISSION
(Nat'l Bd., State, Prov., and No.)

CERTIFICATION OF FIELD INSPECTION

I, the undersigned, holding a valid commission issued by the National Board of Boiler and Pressure Vessel Inspectors and the State or Province of _____ and employed by _____ of _____ have compared the statements in this Data Report with the described component supports and state that the parts referred to as data items _____, not included in the certificate of shop inspection, have been inspected by me and that to the best of my knowledge and belief the NPT Certificate Holder has constructed these component supports in accordance with the ASME Code for Nuclear Power Plant Components.

By signing this certificate neither the Inspector nor his employer makes any warranty, expressed or implied, concerning the component supports described in this Data Report. Furthermore, neither the Inspector nor his employer shall be liable in any manner for any personal injury or property damage or a loss of any kind arising from or connected with this inspection.

Date _____.

Signed _____ Commissions _____
(Nat'l Bd., State, Prov., and No.)

34

FORM NF-1 NPT CERTIFICATE HOLDERS' DATA REPORT FOR COMPONENT SUPPORTS*

As Required by the Provisions of the ASME Code Rules, Section III, Division 1 Plan No. 2-0311

1. Manufactured by Pacific Scientific 1346 S. State College Blvd. Anaheim, CA. 92803
(Name and address of NPT Certificate Holder)

2. Manufacturer for Bergen Paterson Pipesupport Corp. 74C commerce Way Woburn, Mass. 01801
(Name and address of purchaser or owner)

3. Location of Installation Unknown Plan No. 2-0311

4. Identification MS-147 (North) S/N 6543 Rubship Evans 10/20/87

(a) Component Support I.D. No.*	(b) Canadian Registration No.	(c) Applicable Drawings with Last Rev. & Date	(d) Stress Report or Load Capacity Data Sheet	(e) Type of Component Support	(f) Class	Nat'l Board No.	Year Built
(1) 6535-6546	None	1801112-09-E	DR-1333-Rev. A	Linear	1	None	1980
(2)							
(3)							
(4)							
(5)							
(6)							
(7)							
(8)							
(9)							
(10)							

5. Remarks:

DOCUMENT REVIEWED JAN 5 1981 By J. R. McWILLIAMS HUICO, INC.

DOCUMENT REVIEWED AUG 0 3 1980 By I. I. DAVIS U. E. & C.

DOCUMENT REVIEWED JUL 15 1981 By: J.S.K. U.E.&C.

CERTIFICATE OF COMPLIANCE

We certify that the statements made in this report are correct and that these components supports conform to the rules of construction of the ASME Code for Nuclear Power Plant Components, Section III, Division 1, Edition 1976 Addenda Summer '76 (Date)

Code Case No. 1644-7

Date 8/26/80 Signed Pacific Scientific (NPT Certificate Holder) by

Our ASME Certificate of Authorization No. 1198 to use the Component Supports (NPT)

Symbol expires Aug. 4, 1981 (Date).

CERTIFICATION OF DESIGN

Design Information on File at Pacific Scientific

Stress Report or Load Capacity Data Sheets on File at:
Pacific Scientific
Filed Per NA 3256

Design Specifications Certified by (1) Leo E. Ay PE State California

Reg. No. 13533.

Stress Analysis Report or Load Capacity Data Sheets Certified by (1) Leo E. Ay

PE State California Reg. No. 13533.

(1) List name only, signature not required.

*Supplemental sheets in form of lists, sketches or drawings may be used provided (1) size is 8½ in., (2) information in items 1, 2, 3, 4a on this Data Report is included on each sheet, and (3) each sheet is numbered and number of sheets is recorded at top of this form.

FORM NF-1 (Back)

CERTIFICATE OF SHOP INSPECTION

I, the undersigned, holding a valid commission issued by the National Board of Boiler and Pressure Vessel Inspectors and the State or Province of California and employed by ESAT&T Co. of Hartford, Ct. have inspected the component supports described in this Data Report on 8/28/80, 19__ and state that to the best of my knowledge and belief the NPT Certificate Holder has constructed these component supports in accordance with the ASME Code for Nuclear Power Plant Components.

By signing this certificate, neither the Inspector nor his employer makes any warranty, expressed or implied, concerning the component supports described in this Data Report. Furthermore, neither the Inspector nor his employer shall be liable in any manner for any personal injury or property damage or a loss of any kind arising from or connected with this inspection.

Date 8/28/80

Signed William Meigel Commissions Ca #1494
(Nat'l Bd., State, Prov., and No.)

CERTIFICATION OF FIELD INSPECTION

I, the undersigned, holding a valid commission issued by the National Board of Boiler and Pressure Vessel Inspectors and the State or Province of _____ and employed by _____ of _____ have compared the statements in this Data Report with the described component supports and state that the parts referred to as data items _____, not included in the certificate of shop inspection, have been inspected by me, that to the best of my knowledge and belief the NPT Certificate Holder has constructed these component supports in accordance with the ASME Code for Nuclear Power Plant Components.

By signing this certificate neither the Inspector nor his employer makes any warranty, expressed or implied, concerning the component supports described in this Data Report. Furthermore, neither the Inspector nor his employer shall be liable in any manner for any personal injury or property damage or a loss of any kind arising from or connected with this inspection.

Date _____

Signed _____ Commissions _____
(Nat'l Bd., State, Prov., and No.)

DOCUMENT REVIEWED
SEPT. XXX
~~AUG~~ 0 3 1980
By L. L. DAVIS
U. E. & C.

WASHINGTON PUBLIC POWER SUPPLY SYSTEM

PLAN NO. 2-0317

FORM NIS-2 OWNER'S REPORT FOR REPAIRS OR REPLACEMENTS
As Required by the Provisions of the ASME Code Section XI

Owner (Name) Washington Public Power Supply System — Date 9/9/87

Owner (Address) 3000 George Washington Way, Richland, WA — Sheet 1 of 1

Plant (Name) WPPSS Nuclear Power Plant (WNP) — Unit WNP-2

Plant (Address) Hanford, Benton County, WA — C-20069 Repair Organization P.O No., Job No., etc.

Work Performed by (Name) Bechtel Construction Co.

Work Performed by (Address) P.O. Box 600, Richland, WA

Identification of System Containment Vessel

(a) Applicable Construction Code ASME Section III 19 71 Edition, S72 Addenda, None Code Case

(b) Applicable Edition of ASME Section XI Utilized for Repairs or Replacements 19 80 Edition, W80 Addenda, N308 Code Case

6. Identification of Components Repaired or Replaced and Replacement Components

Name of Component	Name of Manufacturer	Manufacturer Serial No.	National Board No.	Other I.D.	Year Built	Repaired, Replaced, or Replacement	ASME Code Stamped (Yes or No) Code Class
Containment Vessel Penet. X-51	Tube Turns	BY 25	N/A	N/A	1975	Repair	Yes, Class MC

7. Description of Work:

Repaired yoke roller mounts for suppression chamber access hatch closure for penetration X-51. The repair work was performed as follows:

1) Removed yoke roller mounts by grinding/cutting.
2) Prepped areas for rewelding.
3) Rewelded yoke roller mounts.
4) Performed MT examination on the final welds. MT examination results acceptable.

Notes:

Access hatch closure was manufactured by Tube Turns for PDM. PDM installed the closure (door) for suppression chamber access hatch.

870054

Plan No. 2-0317

WASHINGTON PUBLIC POWER SUPPLY SYSTEM

FORM NIS-2 (Back)

8. Tests Conducted: Hydrostatic ☐ Pneumatic ☐ Nominal Operating Pressure ☐ Other ☒ None
Test Pressure _____ psig, Test Temp. _____ °F
Component Design Pressure _____ psig, Temp. _____ °F

9. Remarks

None

CERTIFICATE OF COMPLIANCE

We certify that the statements made in the report are correct and this repair (repair or replacement) conforms to the rules of the ASME Code, Section XI.

Type Code Symbol Stamp Not Applicable

Certificate Authorization No. Not Applicable Expiration Date Not Applicable

Signed R C Webster (Owner or Owner's Designee) Title Plant Technical Manager

K Stuys 9/4/87

Date 9/4/ 19 87

CERTIFICATE OF INSERVICE INSPECTION

I, the undersigned, holding a valid commission issued by the National Board of Boiler and Pressure Vessel Inspectors and the State of Washington and employed by Lumbermen's Mutual Casualty Co. of Illinois have inspected the components described in this Owner's Report during the period 10-27-86 to 9-9-87, and state that *Owner's Report in accordance with the requirements of the ASME Code, Section XI.

By signing this certificate neither the Inspector nor his employer makes any warranty, expressed or implied, concerning the examinations and corrective measures described in this Owner's Report. Furthermore, neither the Inspector nor his employer shall be liable in any manner for any personal injury or property damage or a loss of any kind arising from or connected with this inspection.

Dan Hoggatt (Inspector's Signature) Commissions 9556 W (National Board, State, and Endorsements)

Date 9-9 19 87

*to the best of my knowledge and belief, the Owner has performed examinations and taken corrective measures described in this

870054

WASHINGTON PUBLIC POWER SUPPLY SYSTEM

PLAN NO. 2-0318

FORM NIS-2 OWNER'S REPORT FOR REPAIRS OR REPLACEMENTS
As Required by the Provisions of the ASME Code Section XI

1. Owner (Name) Washington Public Power Supply System — Date 7/21/88
   Owner (Address) 3000 George Washington Way, Richland, WA — Sheet 1 of 1
2. Plant (Name) WPPSS Nuclear Power Plant (WNP) — Unit WNP-2
   Plant (Address) Hanford, Benton County, WA — WPPSS Repair Organization P.O. No., Job No., etc.
3. Work Performed by (Name) WPPSS
   Work Performed by (Address) 3000 George Washington Way, Richland, WA.
4. Identification of System Fuel pool Cooling (FPC) System
5. (a) Applicable Construction Code ASME Section III 19 71 Edition, None Addenda, None Code Case
   (b) Applicable Edition of ASME Section XI Utilized for Repairs or Replacements 19 80 Edition, W80 Addenda, N308 Code Case
6. Identification of Components Repaired or Replaced and Replacement Components

Name of Component	Name of Manufacturer	Manufacturer Serial No.	National Board No.	Other I.D.	Year Built	Repaired, Replaced, or Replacement	ASME Code Stamped (Yes or No) Code Class
FPC-V-12A	Tufline	807430-1	N/A	N/A	1975	Replacement	Yes, Class 3

7. Description of Work:

Replaced valve plug for valve FPC-V-12A. The replacement work was performed as follows:

1. Removed existing valve plug.
2. Installed new replacement valve plug.

Notes:

WASHINGTON PUBLIC POWER SUPPLY SYSTEM

PLAN NO. 2-0318

FORM NIS-2 (Back)

8. Tests Conducted: Hydrostatic ☐ Pneumatic ☐ Nominal Operating Pressure ☐ Other ☒ None
Test Pressure _____ psig, Test Temp. _____ °F
Component Design Pressure _____ psig, Temp. _____ °F

9. Remarks:

None

CERTIFICATE OF COMPLIANCE

We certify that the statements made in the report are correct and this replacement (repair or replacement) conforms to the rules of the ASME Code, Section XI.

Type Code Symbol Stamp Not applicable

Certificate Authorization No. Not applicable Expiration Date Not applicable

Signed [signature] Owner or Owner's Designee, Title Plant Technical Manager

R Ewich 7/21/88

Date 7/21 19 88

CERTIFICATE OF INSERVICE INSPECTION

I, the undersigned, holding a valid commission issued by the National Board of Boiler and Pressure Vessel Inspectors and the State of Washington and employed by Lumbermen's Mutual Casualty Co. of Illinois have inspected the components described in this Owner's Report during the period 10/29/86 to 6/30/88, and state that to the best of my knowledge and belief, the Owner has performed examinations and taken corrective measures described in this Owner's Report in accordance with the requirements of the ASME Code, Section XI.

By signing this certificate neither the Inspector nor his employer makes any warranty, expressed or implied, concerning the examinations and corrective measures described in this Owner's Report. Furthermore, neither the Inspector nor his employer shall be liable in any manner for any personal injury or property damage or a loss of any kind arising from or connected with this inspection.

[signature] Inspector's Signature Commissions 5470W National Board, State, and Endorsements

Date 7/22 19 88

WASHINGTON PUBLIC POWER SUPPLY SYSTEM

PLAN NO. 2-0319

FORM NIS-2 OWNER'S REPORT FOR REPAIRS OR REPLACEMENTS
As Required by the Provisions of the ASME Code Section XI

1. Owner (Name) Washington Public Power Supply System — Date 11/17/87
   Owner (Address) 3000 George Washington Way, Richland, WA — Sheet 1 of 1
2. Plant (Name) WPPSS Nuclear Power Plant (WNP) — Unit WNP-2
   Plant (Address) Hanford, Benton County, WA — WPPSS (Repair Organization P.O. No., Job No., etc.)
3. Work Performed by (Name) WPPSS
   Work Performed by (Address) 3000 George Wash. Way, Richland, WA
4. Identification of System Main Steam (MS) System
5. (a) Applicable Construction Code ASME Section III 19 71 Edition, W73 Addenda, None Code Case
   (b) Applicable Edition of ASME Section XI Utilized for Repairs or Replacements 19 80 Edition, W80
   Addenda, N308 Code Case
6. Identification of Components Repaired or Replaced and Replacement Components

Name of Component	Name of Manufacturer	Manufacturer Serial No.	National Board No.	Other I.D.	Year Built	Repaired, Replaced, or Replacement	ASME Code Stamped (Yes or No) Code Class
MS-TK-3M	Jet Air	N120	N/A	N/A	1980	Replacement	Yes, Class 2
MS-TK-3N	Jet Air	N121	N/A	N/A	1980	Replacement	Yes, Class 2
MS-TK-3P	Jet Air	N122	N/A	N/A	1980	Replacement	Yes, Class 2
MS-TK-3R	Jet Air	N123	N/A	N/A	1980	Replacement	Yes, Class 2
MS-TK-3S	Jet Air	N124	N/A	N/A	1980	Replacement	Yes, Class 2
MS-TK-3U	Jet Air	N125	N/A	N/A	1980	Replacement	Yes, Class 2
MS-TK-3V	Jet Air	N126	N/A	N/A	1980	Replacement	Yes, Class 2

7. Description of Work:

Installed test connections on ADS air accumulator tanks. The modification work was performed as follows:

1) Installed pipe, fitting and valves.
2) Made required socket welds.
3) Performed PT examination on the final socket welds. PT examination results acceptable.
4) Performed pressure test to confirm pressure boundary integrity. No evidence of leakage during pressure test.

Notes:

WASHINGTON PUBLIC POWER SUPPLY SYSTEM

PLAN NO. 2-0319

FORM NIS-2 (Back)

8. Tests Conducted: Hydrostatic ☐ Pneumatic ☒ Nominal Operating Pressure ☐ Other ☐ _____
Test Pressure 141 to 161 psig, Test Temp. Ambient °F
Component Design Pressure 300 psig, Temp. 340 °F

9. Remarks:

See attached NPV-1 Code Data Reports for following new valves.

EPN No.	Serial No.	EPN No.	Serial No.
CIA-V-19M	GT 1277	CIA-V-19V	GT 1369
CIA-V-19N	GT 1307		
CIA-V-19P	GT 1314		
CIA-V-19R	GT 1318		
CIA-V-19S	GT 1320		
CIA-V-19U	GT 1330		

CERTIFICATE OF COMPLIANCE

We certify that the statements made in the report are correct and this replacement (repair or replacement) conforms to the rules of the ASME Code, Section XI.

Type Code Symbol Stamp Not applicable

Certificate Authorization No. Not applicable Expiration Date Not applicable

Signed R. Wiseler (Owner or Owner's Designee.) Title Plant Technical Manager

R. Swope 11/12/87

Date 11/13/87 19

CERTIFICATE OF INSERVICE INSPECTION

I, the undersigned, holding a valid commission issued by the National Board of Boiler and Pressure Vessel Inspectors and the State of Washington and employed by Lumbermen's Mutual Casualty Co. of Illinois have inspected the components described in this Owner's Report during the period 2-18-87 to 10-9-87, and state that to the best of my knowledge and belief, the Owner has performed examinations and taken corrective measures described in this Owner's Report in accordance with the requirements of the ASME Code, Section XI.

By signing this certificate neither the Inspector nor his employer makes any warranty, expressed or implied, concerning the examinations and corrective measures described in this Owner's Report. Furthermore, neither the Inspector nor his employer shall be liable in any manner for any personal injury or property damage or a loss of any kind arising from or connected with this inspection.

Dan Hogarth (Inspector's Signature) Commissions 9556 W (National Board, State, and Endorsements)

Date 11-17 19 87

PLAN NO. 2-0319
WBG BR 215-14029

FORM NPV-1 MANUFACTURERS' DATA REPORT FOR NUCLEAR PUMPS OR VALVES*

As Required by the Provisions of the ASME Code Rules

CIA-V-719V
S/N 1369
Rudolph Smith 10/9/87

1. Manufactured by DRAGON VALVES, INC. • 13467 Excelsior Drive • Norwalk, CA. 90650 (Name & Address of Manufacturer) Order No. N17709R SUPPL. 05

2. Manufactured for WSH/BOECON/GERI, Richland, Washington 99352 (Name and Address) Order No. 215-15410

3. Owner Washington Public Power Supply System, Hanford Jobsite No. 2

4. Location of Plant Richland, Washington

5. Pump or Valve Identification Serial Numbers GT1341 thru GT1365 (25 Pcs.)

1/2 Inch FNPT Instrument Globe Valves. Part Number 500FN057D1.
(Brief description of service for which equipment was designed)

(a) Drawing No. 12997 Prepared by Dragon Valves, Inc.

(b) National Board No. ——

6. Design Conditions 3600 (Pressure) psi 100 (Temperature) °F or Pressure Class ____ (1)

7. The material, design, construction, and workmanship complies with ASME Code Section III, Class 2

Edition 1974, Addenda Date 6-30-76, Case No. ____

Mark No.	Material Spec. No.	Manufacturer	Remarks
(a) Castings None			
(b) Forgings			
Body HT 76285	SA182 Gr. F316	Ajax Forge Co.	

FOR INFORMATION ONLY

(1) For manually operated valves only

*Supplemental sheets in form of lists, sketches or drawings may be used provided (1) size is 8½" x 11", (2) information in items 1, 2, 5a and 5b on this data report is included on each sheet, and (3) each sheet is numbered and number of sheets is recorded at top of this form.

8

FORM NPV-1 (back) WBG BR 215-14029

	Mark No.	Material Spec. No.	Manufacturer	Remarks
(c) Bolting	None			
(d) Other Parts				
Bonnet	HT 8643313	SA479 TY 316	Republic Steel Corp.	
Disc	HT 1810-3-1062	Stellite No. 6	Cabot Corp. Stellite Div.	
Union Nut	HT 11684	SA479 TY 316	Carpenter Technology Corp.	

8. Hydrostatic test 5400 psi.

CERTIFICATION OF DESIGN

Design information on file at WSH/BOECON/GERI

Stress analysis report on file at not applicable

Design specifications certified by David J. Murphy (1) Prof. Eng. State WA Reg. No. 12562

Stress analysis report certified by not required (1) Prof. Eng. State _____ Reg. No. _____

(1) Signature not required. List name only.

We certify that the statements made in this report are correct.

Date December 11, 1978 Signed DRAGON VALVES, INC. (Manufacturer) By [signature]

Certificate of Authorization No. N-1033 expires May 6, 1981

CERTIFICATE OF SHOP INSPECTION

I, the undersigned, holding a valid commission issued by the National Board of Boiler and Pressure Vessel Inspectors and/or the State of Province of CALIFORNIA and employed by Division of Industrial Safety of CALIFORNIA have inspected the equipment described in this Data Report on 12-11-1978, and state that to the best of my knowledge and belief, the Manufacturer has constructed this equipment in accordance with the applicable Subsections of ASME Code, Section III.

By signing this certificate, neither the Inspector nor his employer makes any warranty, expressed or implied, concerning the equipment described in this Data Report. Furthermore, neither the Inspector nor his employer shall be liable in any manner for any personal injury or property damage or a loss of any kind arising from or connected with this inspection.

Date 12-11-1978

FOR INFORMATION ONLY

[signature] (Inspector) Commissions Cal. 857 (National Board, State, Province and No.)

Printed in U.S.A.

9

PLAN NO. 2-0319

 WPPSS DR 215-14029

FORM NPV-1 MANUFACTURERS' DATA REPORT FOR NUCLEAR PUMPS OR VALVES*

As Required by the Provisions of the ASME Code Rules

CIA-V-719R S/N 1316
~~CIA-V-719S~~ S/N 1320
CIA-V-719U S/N 1330

1. Manufactured by DRAGON VALVES, INC. • 13457 Excelsior Drive • Norwalk, CA. 90650 Order No. N17709R SUPPL. 95
(Name & Address of Manufacturer)

2. Manufactured for WSH/BOECON/GERI, Richland, Washington 99352 Order No. 215-15410
(Name and Address)

3. Owner Washington Public Power Supply System, Hanford Jobsite No. 2 Philip Gupta 10/9/87.

4. Location of Plant Richland, Washington

5. Pump or Valve Identification Serial Numbers GT1316 thru GT1340 (25 Pcs.)

1/2 Inch FNPT Instrument Globe Valves. Part Number 500FN057D1.
(Brief description of service for which equipment was designed)

(a) Drawing No. 12997 Prepared by Dragon Valves, Inc.

(b) National Board No. ——

6. Design Conditions 3600 (Pressure) psi 100 (Temperature) °F or Pressure Class ____ (1)

7. The material, design, construction, and workmanship complies with ASME Code Section III. Class 2

Edition 1974, Addenda Date 6-30-76, Case No. ____

Mark No.	Material Spec. No.	Manufacturer	Remarks
(a) Castings None.			
(b) Forgings			
Body HT 76285	SA182 Gr. F316	Ajax Forge Co.	

FOR INFORMATION ONLY

(1) For manually operated valves only

*Supplemental sheets in form of lists, sketches or drawings may be used provided (1) size is 8½" x 11", (2) information in items 1, 2, 3a and 3b on this data report is included on each sheet, and (3) each sheet is numbered and number of sheets is recorded at top of this form.

6

FORM NPV-1 (back) WBG BR 215-14029

	Mark No.	Material Spec. No.	Manufacturer	Remarks
(c) Bolting	None			
(d) Other Parts -				
Bonnet	HT 8643313	SA479 TY 316	Republic Steel Corp.	
Disc	HT 1810-3-1062	Stellite No. 6	Cabot Corp. Stellite Div.	
Union Nut	HT 11684	SA479 TY 316	Carpenter Technology Corp.	

8. Hydrostatic test 5400 psi.

CERTIFICATION OF DESIGN

Design information on file at WSH/BOECON/GERI

Stress analysis report on file at not applicable

Design specifications certified by David J. Murphy (1) Prof. Eng. State WA Reg. No. 12542

Stress analysis report certified by not required (1) Prof. Eng. State _____ Reg. No. _____

(1) Signature not required. List name only.

We certify that the statements made in this report are correct.

Date December 11, 19 78 Signed DRAGON VALVES, INC. (Manufacturer) By [signature]

Certificate of Authorization No. N-1033 expires May 6, 1981

CERTIFICATE OF SHOP INSPECTION

I, the undersigned, holding a valid commission issued by the National Board of Boiler and Pressure Vessel Inspectors and/or the State of Province of CALIFORNIA and employed by Division of Industrial Safety of CALIFORNIA have inspected the equipment described in this Data Report on 12-11- 19 78, and state that to the best of my knowledge and belief, the Manufacturer has constructed this equipment in accordance with the applicable Subsections of ASME Code, Section III.

By signing this certificate, neither the Inspector nor his employer makes any warranty, expressed or implied, concerning the equipment described in this Data Report. Furthermore, neither the Inspector nor his employer shall be liable in any manner for any personal injury or property damage or a loss of any kind arising from or connected with this inspection.

Date 12-11- 19 78

FOR INFORMATION ONLY

[signature] (Inspector) Commissions Cal. 857 (National Board, State, Province and No.)

Printed in U.S.A.

7

2 1 2 8 0 2 0 3

PLAN NO. 2-0319

WBG BR 215-14029

FORM NPV-1 MANUFACTURERS' DATA REPORT FOR NUCLEAR PUMPS OR VALVES

As Required by the Provisions of the ASME Code Rules

CIA-V-719N S/N 1307
CIA-V-719P S/N 1314

1. Manufactured by DRAGON VALVES, INC. • 13467 Excelsior Drive • Norwalk, CA. 90650 (Name & Address of Manufacturer) Order No. N17709R SUPPL. 05

Rudolf Singh 10/9/87

2. Manufactured for WSH/BOECON/GERI, Richland, Washington 99352 (Name and Address) Order No. 215-15410

3. Owner Washington Public Power Supply System, Hanford Johsita No. 2

4. Location of Plant Richland, Washington

5. Pump or Valve Identification Serial Numbers GT1291 thru GT1315 (25 Pcs.) ✓

1/2 Inch FNPT Instrument Globe Valves. Part Number 500FN057D1.
(Brief description of service for which equipment was designed)

(a) Drawing No. 12997 Prepared by Dragon Valves, Inc.

(b) National Board No. ——

6. Design Conditions 3600 (Pressure) psi 100 (Temperature) °F or Pressure Class ____ (1)

7. The material, design, construction, and workmanship complies with ASME Code Section III, Class 2

Edition 1974, Addenda Date 6-30-76, Case No. ____

	Mark No.	Material Spec. No.	Manufacturer	Remarks
(a) Castings None				
(b) Forgings				
Body	HT 76285	SA182 Gr. F316	Ajax Forge Co.	

FOR INFORMATION ONLY

(1) For manually operated valves only

*Supplemental sheets in form of lists, sketches or drawings may be used provided (1) size is 8½" x 11", (2) information in items 1, 2, 5a and 5b on this data report is included on each sheet, and (3) each sheet is numbered and number of sheets is recorded at top of this form.

4

2 1 2 3 0 0 2 0 0

FORM NPV-1 (back) WBG ER 215-14029

	Mark No.	Material Spec. No.	Manufacturer	Remarks
(c) Bolting	None			
(d) Other Parts				
Bonnet	HT 8643313	SA479 TY 316	Republic Steel Corp.	
Disc	HT 1810-3-1062	Stellite No. 6	Cabot Corp. Stellite Div.	
Union Nut	HT 11684	SA479 TY 316	Carpenter Technology Corp.	

8. Hydrostatic test 5400 psi.

CERTIFICATION OF DESIGN

Design information on file at WSH/BOECON/GERI

Stress analysis report on file at not applicable

Design specifications certified by David J. Murphy (1) Prof. Eng. State WA Reg. No. 12542

Stress analysis report certified by not required (1) Prof. Eng. State _____ Reg. No. _____

(1) Signature not required. List name only.

We certify that the statements made in this report are correct.

Date December 11, 19 78 Signed DRAGON VALVES, INC. (Manufacturer) By [signature]

Certificate of Authorization No. N-1033 expires May 6, 1981

CERTIFICATE OF SHOP INSPECTION

I, the undersigned, holding a valid commission issued by the National Board of Boiler and Pressure Vessel Inspectors and/or the State or Province of CALIFORNIA and employed by Division of Industrial Safety of CALIFORNIA have inspected the equipment described in this Data Report on 12-11 19 78, and state that to the best of my knowledge and belief, the Manufacturer has constructed this equipment in accordance with the applicable Subsections of ASME Code, Section III.

By signing this certificate, neither the inspector nor his employer makes any warranty, expressed or implied, concerning the equipment described in this Data Report. Furthermore, neither the inspector nor his employer shall be liable in any manner for any personal injury or property damage or a loss of any kind arising from or connected with this inspection.

FOR INFORMATION ONLY

Date 12-11 19 78

[signature] (Inspector) Commissions Cal. 857 (National Board, State, Province and No.)

Printed in U.S.A.

5

PLAN NO. 2-0319

 WSG BR 215-14029

FORM NPV-1 MANUFACTURERS' DATA REPORT FOR NUCLEAR PUMPS OR VALVES*

CIA-V-719 M

As Required by the Provisions of the ASME Code Rules

S/N 1277

Kuldip Singh 10/9/87.

1. Manufactured by DRAGON VALVES, INC. • 13467 Excelsior Drive • Norwalk, CA. 90650 Order No. N17709R SUPPL. 05
(Name & Address of Manufacturer)

2. Manufactured for WSH/BOECON/GERI, Richland, Washington 99352 Order No. 215-15410
(Name and Address)

3. Owner Washington Public Power Supply System, Hanford Johsite No. 2

4. Location of Plant Richland, Washington

5. Pump or Valve Identification Serial Numbers GT1266 thru GT1290 (25 Pcs.) ✓

1/2 Inch FNPT Instrument Globe Valves. Part Number 500FN057D1. ✓
(Brief description of service for which equipment was designed)

(a) Drawing No. 12997 Prepared by Dragon Valves, Inc.

(b) National Board No. ----

6. Design Conditions 3600 (Pressure) psi 100 (Temperature) °F or Pressure Class ____ (1)

7. The material, design, construction, and workmanship complies with ASME Code Section III, Class 2

Edition 1974, Addenda Date 6-30-76, Case No. ____

Mark No.	Material Spec. No.	Manufacturer	Remarks
(a) Castings None.			
(b) Forgings			
Body HT 76285	SA182 Gr. F316	Ajax Forge Co.	

FOR INFORMATION ONLY

(1) For manually operated valves only

*Supplemental sheets in form of lists, sketches or drawings may be used provided (1) size is 8½" x 11", (2) information in items 1, 2, 5a and 5b on this data report is included on each sheet, and (3) each sheet is numbered and number of sheets is recorded at top of this form.

2

2 1 3 1 9 8

FORM NPV-1 (back)

WDG DR 215-14029

	Mark No.	Material Spec. No.	Manufacturer	Remarks
(c) Bolting	None			
(d) Other Parts				
Bonnet	HT 8643313	SA479 TY 316	Republic Steel Corp.	
Disc	HT 1810-3-1062	Stellite No. 6	Cabot Corp. Stellite Div.	
Union Nut	HT 11684	SA479 TY 316	Carpenter Technology Corp.	

8. Hydrostatic test 5400 psi.

CERTIFICATION OF DESIGN

Design information on file at WSH/BORCON/CERI

Stress analysis report on file at not applicable

Design specifications certified by David J. Murphy (1) Prof. Eng. State WA Reg. No. 12542

Stress analysis report certified by not required (1) Prof. Eng. State ____ Reg. No. ____

(1) Signature not required. List name only.

We certify that the statements made in this report are correct.

Date December 11, 19 78 Signed DRAGON VALVES, INC. (Manufacturer) By [signature]

Certificate of Authorization No. N-1033 expires May 6, 1981.

CERTIFICATE OF SHOP INSPECTION

I, the undersigned, holding a valid commission issued by the National Board of Boiler and Pressure Vessel Inspectors and/or the State of Province of CALIFORNIA and employed by Division of Industrial Safety of CALIFORNIA have inspected the equipment described in this Data Report on 12-11 19 78, and state that to the best of my knowledge and belief, the Manufacturer has constructed this equipment in accordance with the applicable Subsections of ASME Code, Section III.

By signing this certificate, neither the Inspector nor his employer makes any warranty, expressed or implied, concerning the equipment described in this Data Report. Furthermore, neither the Inspector nor his employer shall be liable in any manner for any personal injury or property damage or a loss of any kind arising from or connected with this inspection.

Date 12-11 19 78

FOR INFORMATION ONLY

J Warren (Inspector) Commissions Cal. 8551 (National Board, State, Province and No.)

Printed in U.S.A.

3

WASHINGTON PUBLIC POWER SUPPLY SYSTEM

PLAN NO. 2-0322

FORM NIS-2 OWNER'S REPORT FOR REPAIRS OR REPLACEMENTS
As Required by the Provisions of the ASME Code Section XI

1. Owner (Name) Washington Public Power Supply System — Date 11/17/87
   Owner (Address) 3000 George Washington Way, Richland, WA — Sheet 1 of 1
2. Plant (Name) WPPSS Nuclear Power Plant (WNP) — Unit WNP-2
   Plant (Address) Hanford, Benton County, WA — C20069 Repair Organization P.O. No., Job No., etc.
3. Work Performed by (Name) Bechtel Construction, Inc.
   Work Performed by (Address) P.O. Box 600, Richland, WA
4. Identification of System Equipment and Floor Drain Radioactive (EDR and FDR)
5. (a) Applicable Construction Code ASME Section III 19 71 Edition, W73 Addenda, None Code Case
   (b) Applicable Edition of ASME Section XI Utilized for Repairs or Replacements 19 80 Edition, W80 Addenda, N308 Code Case
6. Identification of Components Repaired or Replaced and Replacement Components

Name of Component	Name of Manufacturer	Manufacturer Serial No.	National Board No.	Other I.D.	Year Built	Repaired, Replaced, or Replacement	ASME Code Stamped (Yes or No) Code Class
EDR(48)-1	WPPSS	*	N/A	N/A	1983	Replacement	Yes, Class 2
FDR(48)-1	WPPSS	*	N/A	N/A	1983	Replacement	Yes, Class 2

7. Description of Work:

Installed new valves. The installation work was performed as follows:

1) Cut and removed pipe.
2) Installed new pipe material and valves.
3) Made required socket welds.
4) Performed PT examination on the final socket welds. PT examination results acceptable:

Notes:
*EDR(48)-1-P1
*FDR(48)-1-P1

WASHINGTON PUBLIC POWER SUPPLY SYSTEM

PLAN NO. 2-0322

FORM NIS-2 (Back)

8. Tests Conducted: Hydrostatic ☐ Pneumatic ☐ Nominal Operating Pressure ☐ Other ☒ None
Test Pressure _____ psig, Test Temp. _____ °F
Component Design Pressure _____ psig, Temp. _____ °F

9. Remarks:

See attached NPV-1 Code Data reports for the following valves:

EPN No.	Serial No.
EDR-V-661	22567
FDR-V-647	22699

CERTIFICATE OF COMPLIANCE

We certify that the statements made in the report are correct and this replacement (repair or replacement) conforms to the rules of the ASME Code, Section XI.

Type Code Symbol Stamp Not applicable

Certificate Authorization No. Not applicable Expiration Date Not applicable

Signed R L Weberin (Owner or Owner's Designee,) Title Plant Technical Manager

K Bush 11/17/87

Date 11/13 19 87

CERTIFICATE OF INSERVICE INSPECTION

I, the undersigned, holding a valid commission issued by the National Board of Boiler and Pressure Vessel Inspectors and the State of Washington and employed by Lumbermen's Mutual Casualty Co. of Illinois have inspected the components described in this Owner's Report during the period 1-14-87 to 10-14-87, and state that to the best of my knowledge and belief, the Owner has performed examinations and taken corrective measures described in this Owner's Report in accordance with the requirements of the ASME Code, Section XI.

By signing this certificate neither the Inspector nor his employer makes any warranty, expressed or implied, concerning the examinations and corrective measures described in this Owner's Report. Furthermore, neither the Inspector nor his employer shall be liable in any manner for any personal injury or property damage or a loss of any kind arising from or connected with this Inspection.

Dan Hoggard (Inspector's Signature) Commissions 9556 W (National Board, State, and Endorsements)

Date 11-17 19 87

PLAN NO. 2-0322

FORM NPV-1 MANUFACTURERS' DATA REPORT FOR NUCLEAR PUMPS OR VALVES*

As Required by the Provisions of the ASME Code Rules

OR277

1. Manufactured by Nuclear Valve Division of Borg Warner, 7500 Tyrone Avenue, Van Nuys, Ca. (Name & Address of Manufacturer) Order No. 47713

2. Manufactured for Bovee & Crail/G.E.R.I. P.O. Box 1040, Richland, Washington 99352 (Name and Address) Order No. 215-32610

3. Owner WPPSS Hanford #2 Job Site

4. Location of Plant Richland, Washington 99352

5. Pump or Valve Identification Nuclear Valve Div., P/N 76590, 3/4 Inch Y Type Globe Valve, CS

Serial Numbers 22563 thru 22569 (7 Valves)

(Brief description of service for which equipment was designed)

(a) Drawing No. 76590 Prepared by Nuclear Valve Division of Borg Warner

(b) National Board No.

EDR-V-661, S/N 22567

Rudolph Sanz 9/24/87.

6. Design Conditions 3600 (Pressure) psi 100 (Temperature) °F

7. The material, design, construction, and workmanship complies with ASME Code Section III, Class 1

Edition 1971, Addenda Date Winter '73, Case No.

Mark No.	Material Spec. No.	Manufacturer	Remarks
(a) Castings			
Disc - Code 1N89, 1N90	Stellite #6		
Casting - 73876	Per NMS 71043	Rex Precision	
Machined - 73877		NV. Division	
(b) Forgings			
Body - Code 1N80, 1M92	SA 105		
Forging - 75235		Pacific Forge	
Machined - 75236		NV Division	
Assembly - 73899		NV Division	
Backseat - Code 1P32	SA564 Ty. 630		
Forged Stock		Ducommun Metals	
Machined - 73886		NV Division	

REVIEWED
NOV 03 1981
BECHTEL QUALITY CONTROL
BY

*Supplemental sheets in form of lists, sketches or drawings may be used provided (1) size is 8½" x 11", (2) information in Items 1, 2, 3a and 3b on this data report is included on each sheet, and (3) each sheet is numbered and number of sheets is recorded at top of this form.

2

EDR- V-661; S/N 22567
Rudolph Smith
0327 79

FORM NPV-1 (back)

	Mark No.	Material Spec. No.	Manufacturer	Remarks
(c) Bolting				
(d) Other Parts				

REVIEWED
NOV 03 1981
BECHTEL QUALITY CONTROL
BY:

8. Hydrostatic test 5400 - 5450 psi.

CERTIFICATION OF DESIGN

Design information on file at Nuclear Valve Div. of Borg Warner, 7500 Tyrone Ave., Van Nuys, Ca.
Stress analysis report on file at NVD of Borg Warner, 7500 Tyrone Ave., Van Nuys, CA
Design specifications certified by David J. Murphy (1) Prof. Eng. State Wash. Reg. No. 12542
Stress analysis report certified by Byron Leonard Jr. (1) Prof. Eng. State CA Reg. No. E123
(1) Signature not required. List name only.

We certify that the statements made in this report are correct.

Date March 16 19 77 Signed Nuclear Valve Div. of Borg Warner (Manufacturer) By Carol Parker

Certificate of Authorization No. N-1254 expires October 27, 1978

CERTIFICATE OF SHOP INSPECTION

I, the undersigned, holding a valid commission issued by the National Board of Boiler and Pressure Vessel Inspectors and/or the State of Province of California and employed by Dept. of Bldg. & Safety of City of Los Angeles have inspected the equipment described in this Data Report on March 16 19 77, and state that to the best of my knowledge and belief, the Manufacturer has constructed this equipment in accordance with the applicable Subsections of ASME Code, Section III.

By signing this certificate, neither the Inspector nor his employer makes any warranty, expressed or implied, concerning the equipment described in this Data Report. Furthermore, neither the Inspector nor his employer shall be liable in any manner for any personal injury or property damage or a loss of any kind arising from or connected with this inspection.

Date March 16 19 77

[signature] (Inspector) Commissions Cal 1010 (National Board, State, Province and No.)

3

PLAN NO. 2-0322

0B232

FORM NPV-1 MANUFACTURERS' DATA REPORT FOR NUCLEAR PUMPS OR VALVES*

As Required by the Provisions of the ASME Code Rules

1. Manufactured by Nuclear Valve Division of Borg Warner, 7500 Tyrone Avenue, Van Nuys, Ca. Order No. 47713
(Name & Address of Manufacturer)

2. Manufactured for Bovee & Crail/G.E.R.I. P.O. Box 1040, Richland, Washington 99352 Order No. 21532610
(Name and Address)

3. Owner WPPSS Hanford #2 Job Site.

4. Location of Plant Richland, Washington 99352

5. Pump or Valve Identification Nuclear Valve Div., P/N 76590 3/4 Inch Y Type Globe Valve, CS
Serial Numbers 22691 Thru 22710 (20 Valves)
(Brief description of service for which equipment was designed)

(a) Drawing No. 76590 Prepared by Nuclear Valve Division of Borg Warner

(b) National Board No.

FDR-V-647, S/N 22699
Rudolph Gupta
9/24/87.

6. Design Conditions 3600 (Pressure) psi 100 (Temperature) °F

7. The material, design, construction, and workmanship complies with ASME Code Section III, Class 1

Edition 1971, Addenda Date Winter '73, Case No.

Mark No.	Material Spec. No.	Manufacturer	Remarks.
(a) Castings 1N77, 1N89, 1N90			
Disc - Code 1P07, 1P15	Stellite # 6		
Casting 73876	per NMS 71043	Rex Precision	
Machined- 73877		NV Division	
(b) Forgings			
Body - Code 1N80	SA105		
Forging - 75235		Pacific Forge	
Machined - 75236		NV Division	
Assembly - 73899		NV Division	
Backseat - Code 3EE, 1P32	SA564 Type 630		
Forged Stock		Ducommun Metals	
Machined - 73886		NV Division	

REVIEWED
NOV 03 1981
BECHTEL QUALITY CONTROL
BY

*Supplemental sheets in form of lists, sketches or drawings may be used provided (1) size is 8½" x 11", (2) information in Items 1, 2, 3a and 3b on this data report is included on each sheet, and (3) each sheet is numbered and number of sheets is recorded at top of this form.

FORM NPV-1 (back)

0D232

FDR-V-647, S/N 22699

Rulaup Sup 9/24/87

Mark No.	Material Spec. No.	Manufacturer	Remarks
(c) Bolting			
(d) Other Parts			

REVIEWED
NOV 03 1981
BECHTEL QUALITY CONTROL
BY: JB

8. Hydrostatic test 5400 To 5450 psi.

CERTIFICATION OF DESIGN

Design information on file at Nuclear Valve Div. of Borg Warner, 7500 Tyrone Ave., Van Nuys, Ca.

Stress analysis report on file at NVD of Borg Warner, 7500 Tyrone Ave., Van Nuys, CA

Design specifications certified by David J. Murphy (1) Prof. Eng. State Wash. Reg. No. 12542

Stress analysis report certified by Byron Leonard Jr. (1) Prof. Eng. State CA Reg. No. E123

(1) Signature not required. List name only.

We certify that the statements made in this report are correct.

Date March 8, 19 77 Signed Nuclear Valve Div. of Borg Warner (Manufacturer) By David M Forbes

Certificate of Authorization No. N- 1254 expires Octobor 27, 1978

CERTIFICATE OF SHOP INSPECTION

I, the undersigned, holding a valid commission issued by the National Board of Boiler and Pressure Vessel Inspectors and/or the State of Province of California and employed by Dept. of Bldg. & Safety of City of Los Angeles have inspected the equipment described in this Data Report on March 8, 19 77, and state that to the best of my knowledge and belief, the Manufacturer has constructed this equipment in accordance with the applicable Subsections of ASME Code, Section III.

By signing this certificate, neither the Inspector nor his employer makes any warranty, expressed or implied, concerning the equipment described in this Data Report. Furthermore, neither the Inspector nor his employer shall be liable in any manner for any personal injury or property damage or a loss of any kind arising from or connected with this inspection.

Date March 8, 19 77

(Inspector) Commissions Cal 1010 (National Board, State, Province and No.)

WASHINGTON PUBLIC POWER SUPPLY SYSTEM

PLAN NO. 2-0324

FORM NIS-2 OWNER'S REPORT FOR REPAIRS OR REPLACEMENTS
As Required by the Provisions of the ASME Code Section XI

Owner (Name) Washington Public Power Supply System — Date 9/9/87

Owner (Address) 3000 George Washington Way, Richland, WA — Sheet 1 of 1

Plant (Name) WPPSS Nuclear Power Plant (WNP) — Unit WNP-2

Plant (Address) Hanford, Benton County, WA — WPPSS (Repair Organization P.O No., Job No., etc.)

Work Performed by (Name) WPPSS

Work Performed by (Address) 3000 George Wash. Way, Richland, WA

Identification of System Main Steam (MS) System

(a) Applicable Construction Code ASME Section III 19 71 Edition, W73 Addenda, None Code Case

(b) Applicable Edition of ASME Section XI Utilized for Repairs or Replacements 19 80 Edition, W80 Addenda, N308 Code Case

6. Identification of Components Repaired or Replaced and Replacement Components

Name of Component	Name of Manufacturer	Manufacturer Serial No.	National Board No.	Other I.D.	Year Built	Repaired, Replaced, or Replacement	ASME Code Stamped (Yes or No) Code Class
MS(1)-4C	WPPSS	*	N/A	N/A	1983	Replacement	Yes, Class 2

7. Description of Work:

Replaced valve MS-V-177B for the drain line. The replacement work was performed as follows:

1) Cut and removed existing valve.
2) Installed new valve and made required welds.
3) Performed PT examination on the final welds. PT examination results acceptable.

Notes:
*MS(1)-4C-P3

870054

Plan No. 2-0324

WASHINGTON PUBLIC POWER
SUPPLY SYSTEM

FORM NIS-2 (Back)

8. Tests Conducted: Hydrostatic ☐ Pneumatic ☐ Nominal Operating Pressure ☐ Other ☒ None
Test Pressure _____ psig, Test Temp. _____ °F
Component Design Pressure _____ psig, Temp. _____ °F

9. Remarks

See attached NPV-1 code data report for the new valve.

MS-V-177B S/N 80003

CERTIFICATE OF COMPLIANCE

We certify that the statements made in the report are correct and this replacement (repair or replacement) conforms to the rules of the ASME Code, Section XI.

Type Code Symbol Stamp Not Applicable

Certificate Authorization No. Not Applicable Expiration Date Not Applicable

Signed [signature] (Owner or Owner's Designee) Title Plant Technical Manager

K Gates 9/4/87

Date 9/4/ 19 87

CERTIFICATE OF INSERVICE INSPECTION

I, the undersigned, holding a valid commission issued by the National Board of Boiler and Pressure Vessel Inspectors and the State of Washington and employed by Lumbermen's Mutual Casualty Co. of Illinois have inspected the components described in this Owner's Report during the period 2-18-87 to 8-28-87, and state that Owner's Report in accordance with the requirements of the ASME Code, Section XI.

By signing this certificate neither the Inspector nor his employer makes any warranty, expressed or implied, concerning the examinations and corrective measures described in this Owner's Report. Furthermore, neither the Inspector nor his employer shall be liable in any manner for any personal injury or property damage or a loss of any kind arising from or connected with this inspection.

[signature] (Inspector's Signature) Commissions 9556 W (National Board, State, and Endorsements)

Date 9-9 19 87

*to the best of my knowledge and belief, the Owner has performed examinations and taken corrective measures described in this

870054

Plan No. 20324.

FORM NPV-1 N CERTIFICATE HOLDERS' DATA REPORT FOR NUCLEAR PUMPS OR VALVES*

As Required by the Provisions of the ASME Code, Section III, Div. 1

1. Manufactured by Nuclear Valve Div., Borg Warner, 7500 Tyrone Ave., Van Nuys, Calif. 3000 George Washington Way
(Name and Address of N Certificate Holder)
2. Manufactured for Washington Public Power Supply Systems, Richland, Washington
(Name and Address of Purchaser or Owner)
3. Location of Installation Richland, Washington WPPSS Hanford #2 Job Site
(Name and Address)
4. Pump or Valve Y Globe Valve. Nominal Inlet Size 1/2 (inch) Outlet Size 1/2 (inch)

	(a) Model No., Series No. or Type	(b) N Certificate Holder's Serial No.	(c) Canadian Registration No.	(d) Drawing No.	(e) Class	(f) Nat'l. Bd. No.	(g) Year Built
(1)	1500#	80003 thru	N/A	76590-1	1	N/A	1983
(2)		80019					
(3)						DH 8/23/87	
(4)						APS	
(5)							
(6)			MS-V-177B S/N 80003				
(7)							
(8)					Kuldip Gupta		
(9)							
(10)							

5. The valves are designed to handle a fluid media which includes steam, water condensate, borated water, etc., associated with a PWR and BWR. The temperature pressure rating of the media is stated below.
(Brief description of service for which equipment was designed)

6. Design Conditions 3600 (Pressure) psi 100 (Temperature) °F or Valve Pressure Class N/A (1)
7. Cold Working Pressure 3600 psi at 100°F.
8. Pressure Retaining Pieces*

Mark No.	Material Spec. No.	Manufacturer	Remarks
(a) Castings			
Disc-Code 5F32	Stellite #6	Rex Precision	
(b) Forgings			
Body-Code 5E99	SA 105	Pacific Forge	

FOR INFORMATION ONLY

(1) For manually operated valves only.

* Supplemental sheets in form of lists, sketches or drawings may be used provided (1) size is 8-1/2" x 11", (2) information in items 1, 2 and 5 on this Data Report is included on each sheet, and (3) each sheet is numbered and number of sheets is recorded at top of this form.

RECEIVED

(10/77) This form (500077) may be obtained from ...

MS-V-1778
S/N 80003

FORM NPV-1 (Back)

Mark No.	Material Spec. No.	Manufacturer	Remarks
(c) Bolting N/A			
(d) Other Parts			
Backseat-Code 5E84	SA 564 Ty 630	Jorgensen Steel	

FOR INFORMATION ONLY

9. Hydrostatic test 5400 psi. Disk Differential test pressure 3600 psi.

CERTIFICATE OF COMPLIANCE

We certify that the statements made in this report are correct and that this pump, or valve, conforms to the rules of construction of the ASME Code for Nuclear Power Plant Components, Section III, Div. I, Edition 1974, Addenda Winter '75 (Date), Code Case No. N/A, Date 7/20/83

Signed Nuclear Valve Div., Borg Warner (N Certificate Holder) by [signature]

Our ASME Certificate of Authorization No. N-1254 to use the N (N) symbol expires 10/27/84 (Date).

CERTIFICATION OF DESIGN

Design information on file at NVD of Borg Warner, 7500 Tyrone Ave., Van Nuys, Ca. 91409

Stress analysis report (Class 1 only) on file at NVD of Borg Warner, 7500 Tyrone Ave., Van Nuys, CA

Design specifications certified by (1) David J. Murphy

PE State Washington Reg. No. 12542

Stress analysis certified by (1) Byron E. Leonard

PE State CA Reg. No. E123

(1) Signature not required. List name only.

CERTIFICATE OF SHOP INSPECTION

I, the undersigned, holding a valid commission issued by the National Board of Boiler and Pressure Vessel Inspectors and the State or Province of California and employed by Lumbermen's Mutual Casualty of Long Grove, Illinois have inspected the pump, or valve, described in this Data Report on 7/29 19 83, and state that to the best of my knowledge and belief, the N Certificate Holder has constructed this pump, or valve, in accordance with the ASME Code, Section III.

By signing this certificate, neither the Inspector nor his employer makes any warranty, expressed or implied, concerning the equipment described in this Data Report. Furthermore, neither the Inspector nor his employer shall be liable in any manner for any personal injury or property damage or a loss of any kind arising from or connected with this inspection.

Date 7/29 19 83

(Inspector) Commissions 1275 CA. NB7669 (Nat'l Bd., State, Prov. and No.)

WASHINGTON PUBLIC POWER SUPPLY SYSTEM

PLAN NO. 2-0325R1

FORM NIS-2 OWNER'S REPORT FOR REPAIRS OR REPLACEMENTS
As Required by the Provisions of the ASME Code Section XI

1. Owner (Name) Washington Public Power Supply System — Date 11/17/87
   Owner (Address) 3000 George Washington Way, Richland, WA — Sheet 1 of 1
2. Plant (Name) WPPSS Nuclear Power Plant (WNP) — Unit WNP-2
   Plant (Address) Hanford, Benton County, WA — WPPSS (Repair Organization P.O. No., Job No., etc.)
3. Work Performed by (Name) WPPSS
   Work Performed by (Address) 3000 George Wash. Way, Richland, WA
4. Identification of System Low Pressure Core Spray (LPCS) System
5. (a) Applicable Construction Code ASME Section III 19 74 Edition, W74 Addenda, None Code Case
   (b) Applicable Edition of ASME Section XI Utilized for Repairs or Replacements 19 80 Edition, W80 Addenda, N308 Code Case
6. Identification of Components Repaired or Replaced and Replacement Components

Name of Component	Name of Manufacturer	Manufacturer Serial No.	National Board No.	Other I.D.	Year Built	Repaired, Replaced, or Replacement	ASME Code Stamped (Yes or No) Code Class
LPCS-RV-18	JEL	*	N/A	N/A	1978	Replacement	Yes, Class 2

7. Description of Work:

Installed test port for relief valve LPCS-RV-18. The modification work was performed as follows:

1) Machined grooves on relief valve discharge flange to accommodate elastomeric O-rings.
2) Drilled hole in the flange outer edge.
3) Installed male connector and made required weld.
4) Performed PT examination on the final weld. PT examination results acceptable.
5) Performed pressure test to confirm pressure boundary integrity. No evidence of leakage during pressure test.

Notes:
JEL-JE Lonergan Co.
*Serial Number 509258-70-1

WASHINGTON PUBLIC POWER SUPPLY SYSTEM

PLAN NO. 2-0325R1

FORM NIS-2 (Back)

8. Tests Conducted: Hydrostatic ☐ Pneumatic ☐ Nominal Operating Pressure ☒ * Other ☒ * LLRT

Test Pressure * psig, Test Temp. * °F

Component Design Pressure 550 psig, Temp. 450 °F

9. Remarks:

* Nominal operating pressure test for relief valve inlet flange joint, pressure 365 psig at normal operating temperature.

* Local leak rate test (LLRT) for relief valve discharge flange joint, pressure 35.2 psig at 78°F.

CERTIFICATE OF COMPLIANCE

We certify that the statements made in the report are correct and this replacement (repair or replacement) conforms to the rules of the ASME Code, Section XI.

Type Code Symbol Stamp Not applicable

Certificate Authorization No. Not applicable Expiration Date Not applicable

Signed R L Beckin (Owner or Owner's Designee) Title Plant Technical Manager

K Enigh 11/14/87

Date 11/13 19 87

CERTIFICATE OF INSERVICE INSPECTION

I, the undersigned, holding a valid commission issued by the National Board of Boiler and Pressure Vessel Inspectors and the State of Washington and employed by Lumbermen's Mutual Casualty Co. of Illincis have inspected the components described in this Owner's Report during the period 5-4-87 to 10-19-87, and state that to the best of my knowledge and belief, the Owner has performed examinations and taken corrective measures described in this Owner's Report in accordance with the requirements of the ASME Code, Section XI.

By signing this certificate neither the Inspector nor his employer makes any warranty, expressed or implied, concerning the examinations and corrective measures described in this Owner's Report. Furthermore, neither the Inspector nor his employer shall be liable in any manner for any personal injury or property damage or a loss of any kind arising from or connected with this inspection.

Dan Abgarth (Inspector's Signature) Commissions 9556 W (National Board, State, and Endorsements)

Date 11-17 19 87

WASHINGTON PUBLIC POWER SUPPLY SYSTEM

PLAN NO. 2-0326R1

FORM NIS-2 OWNER'S REPORT FOR REPAIRS OR REPLACEMENTS
As Required by the Provisions of the ASME Code Section XI

1. Owner (Name) Washington Public Power Supply System — Date 11/17/87
   Owner (Address) 3000 George Washington Way, Richland, WA — Sheet 1 of 1
2. Plant (Name) WPPSS Nuclear Power Plant (WNP) — Unit WNP-2
   Plant (Address) Hanford, Benton County, WA — WPPSS (Repair Organization P.O. No., Job No., etc.)
3. Work Performed by (Name) WPPSS
   Work Performed by (Address) 3000 George Wash. Way, Richland, WA
4. Identification of System Residual Heat Removal (RHR) System
5. (a) Applicable Construction Code ASME Section III 19 * Edition, * Addenda, None Code Case
   (b) Applicable Edition of ASME Section XI Utilized for Repairs or Replacements 19 80 Edition, W80
   Addenda, N308 Code Case
6. Identification of Components Repaired or Replaced and Replacement Components

Name of Component	Name of Manufacturer	Manufacturer Serial No.	National Board No.	Other I.D.	Year Built	Repaired, Replaced, or Replacement	ASME Code Stamped (Yes or No) Code Class
RHR(1)-2A	WPPSS	**	N/A	N/A	1983	Replacement	Yes, Class 2
RHR-RV-1A	CV&GC	***	N/A	N/A	1979	Replacement	Yes, Class 2

7. Description of Work:

Installed test port for relief valve RHR-RV-1A. The modification work was performed as follows:

1) Machined off the raised face on the new pipe flange.
2) Machined grooves on the new pipe flange to accommodate elastomeric O- rings. Weld built up the flange beveled end. Performed PT examination on the beveled end and the weld built up area. PT examination results acceptable.
3) Machined off the raised face on the valve discharge flange.
4) Installed new pipe flange and made circumferential butt weld. Performed PT and RT examination on the weld. PT and RT examination results acceptable.
5) Drilled hole in the flange outer edge, installed male connector and made required weld. Performed PT examination on the final weld.. PT examination results acceptable.

Notes:
*1971W73 for RHR(1)-2A *1974S75 for RHR-RV-1A
**RHR(1)-2A-P1 ***Serial Number N60597-00-0001
CV&GC - Crosby Valve and Gage Company

WASHINGTON PUBLIC POWER SUPPLY SYSTEM

PLAN NO. 2-0326R1

FORM NIS-2 (Back)

8. Tests Conducted: Hydrostatic ☐ Pneumatic ☐ Nominal Operating Pressure ☐ Other ☒ None
Test Pressure _____ psig, Test Temp. _____ °F
Component Design Pressure _____ psig, Temp. _____ °F

9. Remarks:

None

CERTIFICATE OF COMPLIANCE

We certify that the statements made in the report are correct and this replacement (repair or replacement) conforms to the rules of the ASME Code, Section XI.

Type Code Symbol Stamp Not applicable

Certificate Authorization No. Not applicable Expiration Date Not applicable

Signed R L Weber (Owner or Owner's Designee.) Title Plant Technical Manager

R L Weber 11/12/87

Date 11/13 19 87

CERTIFICATE OF INSERVICE INSPECTION

I, the undersigned, holding a valid commission issued by the National Board of Boiler and Pressure Vessel Inspectors and the State of Washington and employed by Lumbermen's Mutual Casualty Co. of Illinois have inspected the components described in this Owner's Report during the period 5-5-87 to 10-22-87, and state that to the best of my knowledge and belief, the Owner has performed examinations and taken corrective measures described in this Owner's Report in accordance with the requirements of the ASME Code, Section XI.

By signing this certificate neither the Inspector nor his employer makes any warranty, expressed or implied, concerning the examinations and corrective measures described in this Owner's Report. Furthermore, neither the Inspector nor his employer shall be liable in any manner for any personal injury or property damage or a loss of any kind arising from or connected with this inspection.

Jim Hogyard (Inspector's Signature) Commissions 9556 W (National Board, State, and Endorsements)

Date 11-17 19 87

WASHINGTON PUBLIC POWER SUPPLY SYSTEM

PLAN NO. 2-0327R1

FORM NIS-2 OWNER'S REPORT FOR REPAIRS OR REPLACEMENTS
As Required by the Provisions of the ASME Code Section XI

1. Owner (Name) Washington Public Power Supply System — Date 11-19-87
   Owner (Address) 3000 George Washington Way, Richland, WA — Sheet 1 of 1
2. Plant (Name) WPPSS Nuclear Power Plant (WNP) — Unit WNP-2
   Plant (Address) Hanford, Benton County, WA — WPPSS (Repair Organization P.O. No., Job No., etc.)
3. Work Performed by (Name) WPPSS
   Work Performed by (Address) 3000 George Wash. Way, Richland, WA
4. Identification of System High Pressure Core Spray (HPCS) System
5. (a) Applicable Construction Code ASME Section III 19 * Edition, * Addenda, None Code Case
   (b) Applicable Edition of ASME Section XI Utilized for Repairs or Replacements 19 80 Edition, W80 Addenda, N308 Code Case
6. Identification of Components Repaired or Replaced and Replacement Components

Name of Component	Name of Manufacturer	Manufacturer Serial No.	National Board No.	Other I.D.	Year Built	Repaired, Replaced, or Replacement	ASME Code Stamped (Yes or No) Code Class
HPCS(3)-1	WPPSS	**	N/A	N/A	1983	Replacement	Yes, Class 2
HPCS-RV-14	JEL	***	N/A	N/A	1979	Replacement	Yes, Class 2

7. Description of Work:

Installed test port for relief valve HPCS-RV-14. The modification work was performed as follows:

1) Machined off the raised face on the new pipe flange.
2) Machined grooves on the new pipe flange to accommodate elastomeric O-rings.
3) Beveled pipe end. Performed PT examination on the beveled end. PT examination results acceptable.
4) Installed pipe flange, pipe, coupling and made required welds. Performed PT examination on the final socket welds and RT examination on the final circumferential butt welds. PT and RT examination results acceptable. Drilled hole in the flange outer edge, installed male connector and made required weld. Performed PT examination on the final weld. PT examination results acceptable.
5) Machined off the raised face on the new relief valve flange.
6) Installed new flange on the relief valve and made required weld.
7) Performed PT examination on the final socket weld. PT examination results acceptable.

Notes:
*1971W73 for HPCS(3)-1 *1974W74 for HPCS-RV-14
**HPCS(3)-1 ***Serial Number 509258-72-1
JEL - JE Lonergan Co.

WASHINGTON PUBLIC POWER SUPPLY SYSTEM

PLAN NO. 2-0327R1

FORM NIS-2 (Back)

8. Tests Conducted: Hydrostatic ☐ Pneumatic ☐ Nominal Operating Pressure ☐ Other ☒ None
Test Pressure _____ psig, Test Temp. _____ °F
Component Design Pressure _____ psig, Temp. _____ °F

9. Remarks:

None

CERTIFICATE OF COMPLIANCE

We certify that the statements made in the report are correct and this replacement (repair or replacement) conforms to the rules of the ASME Code, Section XI.

Type Code Symbol Stamp Not applicable

Certificate Authorization No. Not applicable Expiration Date Not applicable

Signed [signature] (Owner or Owner's Designee.) Title Plant Technical Manager

11/17/87

Date 11/18 19 87

CERTIFICATE OF INSERVICE INSPECTION

I, the undersigned, holding a valid commission issued by the National Board of Boiler and Pressure Vessel Inspectors and the State of Washington and employed by Lumbermen's Mutual Casualty Co. of Illinois have inspected the components described in this Owner's Report during the period 5-9-87 to 11-18-87, and state that to the best of my knowledge and belief, the Owner has performed examinations and taken corrective measures described in this Owner's Report in accordance with the requirements of the ASME Code, Section XI.

By signing this certificate neither the Inspector nor his employer makes any warranty, expressed or implied, concerning the examinations and corrective measures described in this Owner's Report. Furthermore, neither the Inspector nor his employer shall be liable in any manner for any personal injury or property damage or a loss of any kind arising from or connected with this inspection.

[signature] (Inspector's Signature) Commissions 9556 W (National Board, State, and Endorsements)

Date 11-19 19 87

WASHINGTON PUBLIC POWER SUPPLY SYSTEM

PLAN NO. 2-0328R1

FORM NIS-2 OWNER'S REPORT FOR REPAIRS OR REPLACEMENTS
As Required by the Provisions of the ASME Code Section XI

1. Owner (Name) Washington Public Power Supply System — Date 11/17/87
   Owner (Address) 3000 George Washington Way, Richland, WA — Sheet 1 of 1
2. Plant (Name) WPPSS Nuclear Power Plant (WNP) — Unit WNP-2
   Plant (Address) Hanford, Benton County, WA — WPPSS Repair Organization P.O. No., Job No., etc.
3. Work Performed by (Name) WPPSS
   Work Performed by (Address) 3000 George Wash. Way, Richland, WA
4. Identification of System Residual Heat Removal (RHR) System
5. (a) Applicable Construction Code ASME Section III 19 74 Edition, W74 Addenda, None Code Case
   (b) Applicable Edition of ASME Section XI Utilized for Repairs or Replacements 1980 Edition, W80 Addenda, N308 Code Case
6. Identification of Components Repaired or Replaced and Replacement Components

Name of Component	Name of Manufacturer	Manufacturer Serial No.	National Board No.	Other I.D.	Year Built	Repaired, Replaced, or Replacement	ASME Code Stamped (Yes or No) Code Class
RHR-RV-25A	JEL	*	N/A	N/A	1978	Replacement	Yes, Class 2

7. Description of Work:

Installed test port for relief valve RHR-RV-25A. The modification work was performed as follows:

1) Machined grooves on relief valve discharge flange to accommodate elastomeric O-rings.
2) Drilled hole in the flange outer edge.
3) Installed male connector and made required weld.
4) Performed PT examination on the final weld. PT examination results acceptable.
5) Performed pressure test to confirm pressure boundary integrity. No evidence of leakage during pressure test.

Notes:

JEL - JE Lonergan Co.
*Serial Number 509258-74-1

968-22684 (9/87)

WASHINGTON PUBLIC POWER SUPPLY SYSTEM

PLAN NO. 2-0328R1

FORM NIS-2 (Back)

8. Tests Conducted: Hydrostatic ☐ Pneumatic ☐ Nominal Operating Pressure ☐ Other ☒ LLRT
Test Pressure 35.2 psig, Test Temp. 75.4 °F
Component Design Pressure 125 psig, Temp. 480 °F

9. Remarks:

None

CERTIFICATE OF COMPLIANCE

We certify that the statements made in the report are correct and this replacement (repair or replacement) conforms to the rules of the ASME Code, Section XI.

Type Code Symbol Stamp Not applicable

Certificate Authorization No. Not applicable Expiration Date Not applicable

Signed R L Webb (Owner or Owner's Designee.) Title Plant Technical Manager

11/13/87

Date 11/13 19 87

CERTIFICATE OF INSERVICE INSPECTION

I, the undersigned, holding a valid commission issued by the National Board of Boiler and Pressure Vessel Inspectors and the State of Washington and employed by Lumbermen's Mutual Casualty Co. of Illinois have inspected the components described in this Owner's Report during the period 5-4-87 to 10-6-87, and state that to the best of my knowledge and belief, the Owner has performed examinations and taken corrective measures described in this Owner's Report in accordance with the requirements of the ASME Code, Section XI.

By signing this certificate neither the Inspector nor his employer makes any warranty, expressed or implied, concerning the examinations and corrective measures described in this Owner's Report. Furthermore, neither the Inspector nor his employer shall be liable in any manner for any personal injury or property damage or a loss of any kind arising from or connected with this inspection.

Dan Hogarth (Inspector's Signature) Commissions 9556 W (National Board, State, and Endorsements)

Date 11-17 19 87

WASHINGTON PUBLIC POWER SUPPLY SYSTEM

PLAN NO. 2-0330

FORM NIS-2 OWNER'S REPORT FOR REPAIRS OR REPLACEMENTS
As Required by the Provisions of the ASME Code Section XI

1. Owner (Name) Washington Public Power Supply System — Date 11/17/87
   Owner (Address) 3000 George Washington Way, Richland, WA — Sheet 1 of 1
2. Plant (Name) WPPSS Nuclear Power Plant (WNP) — Unit WNP-2
   Plant (Address) Hanford, Benton County, WA — WPPSS (Repair Organization P.O. No., Job No., etc.)
3. Work Performed by (Name) WPPSS
   Work Performed by (Address) 3000 George Wash. Way, Richland, WA
4. Identification of System Instrument Line
5. (a) Applicable Construction Code ASME Section III 19 74 Edition, W75 Addenda, None Code Case
   (b) Applicable Edition of ASME Section XI Utilized for Repairs or Replacements 19 80 Edition, W80 Addenda, N308 Code Case
6. Identification of Components Repaired or Replaced and Replacement Components

Name of Component	Name of Manufacturer	Manufacturer Serial No.	National Board No.	Other I.D.	Year Built	Repaired, Replaced, or Replacement	ASME Code Stamped (Yes or No) Code Class
*	JCI	*	N/A	N/A	1982	Replacement	Yes, Class 3

7. Description of Work:

Fabricated new block clamps for supports 320-1-121 and 100-1-77. Installed new block clamps and associated support material.

Notes:
*D-220-58.0-1R-22

968-22684 (9/87)

WASHINGTON PUBLIC POWER SUPPLY SYSTEM

PLAN NO. 2-0330

FORM NIS-2 (Back)

8. Tests Conducted: Hydrostatic ☐ Pneumatic ☐ Nominal Operating Pressure ☐ Other ☒ None
Test Pressure _____ psig, Test Temp. _____ °F
Component Design Pressure _____ psig, Temp. _____ °F

9. Remarks:

None

CERTIFICATE OF COMPLIANCE

We certify that the statements made in the report are correct and this replacement (repair or replacement) conforms to the rules of the ASME Code, Section XI.

Type Code Symbol Stamp Not applicable

Certificate Authorization No. Not applicable Expiration Date Not applicable

Signed R L Webb (Owner or Owner's Designee.) Title Plant Technical Manager

K Rupp 11/12/87

Date 11/13 19 87

CERTIFICATE OF INSERVICE INSPECTION

I, the undersigned, holding a valid commission issued by the National Board of Boiler and Pressure Vessel Inspectors and the State of Washington and employed by Lumbermen's Mutual Casualty Co. of Illinois have inspected the components described in this Owner's Report during the period 1-29-87 to 10-22-87, and state that to the best of my knowledge and belief, the Owner has performed examinations and taken corrective measures described in this Owner's Report in accordance with the requirements of the ASME Code, Section XI.

By signing this certificate neither the Inspector nor his employer makes any warranty, expressed or implied, concerning the examinations and corrective measures described in this Owner's Report. Furthermore, neither the Inspector nor his employer shall be liable in any manner for any personal injury or property damage or a loss of any kind arising from or connected with this inspection.

Dan Hoggard (Inspector's Signature) Commissions 9556 W (National Board, State, and Endorsements)

Date 11-17 19 87

WASHINGTON PUBLIC POWER SUPPLY SYSTEM

PLAN NO. 2-0332

FORM NIS-2 OWNER'S REPORT FOR REPAIRS OR REPLACEMENTS
As Required by the Provisions of the ASME Code Section XI

1. Owner (Name) Washington Public Power Supply System — Date 8/16/88
   Owner (Address) 3000 George Washington Way, Richland, WA — Sheet 1 of 1
2. Plant (Name) WPPSS Nuclear Power Plant (WNP) — Unit WNP-2
   Plant (Address) Hanford, Benton County, WA — WPPSS (Repair Organization P.O. No., Job No., etc.)
3. Work Performed by (Name) WPPSS
   Work Performed by (Address) 3000 George Wash. Way, Richland, WA
4. Identification of System Reactor Recirculation Cooling (RRC) System
5. (a) Applicable Construction Code ASME Section III 19 71 Edition, W73 Addenda, None Code Case
   (b) Applicable Edition of ASME Section XI Utilized for Repairs or Replacements 19 80 Edition, W80 Addenda, N308 Code Case
6. Identification of Components Repaired or Replaced and Replacement Components

Name of Component	Name of Manufacturer	Manufacturer Serial No.	National Board No.	Other I.D.	Year Built	Repaired, Replaced, or Replacement	ASME Code Stamped (Yes or No) Code Class
RRC(51)-4	WPPSS	*	N/A	N/A	1983	Replacement	Yes, Class 1

7. Description of Work:

Replaced reactor recirculation cooling (RRC) Loop A and Loop B drain lines. The replacement work was performed as follows:

1) Cut and removed existing drain lines.
2) Performed PT examination on the prepped pipe and fitting ends. PT examination results acceptable.
3) Installed new pipe, fitting material and valves.
4) Made required circumferential butt welds.
5) Performed PT and RT examination on the final circumferential butt welds. PT and RT examination results acceptable.
6) Performed pressure test to confirm pressure boundary integrity. No evidence of leakage during pressure test.

Notes:

*RRC(51)-4-P1

WASHINGTON PUBLIC POWER SUPPLY SYSTEM

PLAN NO. 2-0332

FORM NIS-2 (Back)

8. Tests Conducted: Hydrostatic ☒ Pneumatic ☐ Nominal Operating Pressure ☐ Other ☐ _____
Test Pressure 1145 psig, Test Temp. * °F
Component Design Pressure 1250 psig, Temp. 575 °F

9. Remarks:
See attached NPV-1 Code Data report for the following new valves.

EPN No.	Serial No.
RRC-V-51A	N24361
RRC-V-52A	N24362
RRC-V-51B	N24363
RRC-V-52B	N24364

* Loop A - Temperature 78.5°F
* Loop B - Temperature 81.6°F

CERTIFICATE OF COMPLIANCE

We certify that the statements made in the report are correct and this replacement (repair or replacement) conforms to the rules of the ASME Code, Section XI.

Type Code Symbol Stamp Not applicable

Certificate Authorization No. Not applicable Expiration Date Not applicable

Signed [signature] (Owner or Owner's Designee) Title Plant Technical Manager

K Smith 8/16/88.

Date 8/17 19 88

CERTIFICATE OF INSERVICE INSPECTION

I, the undersigned, holding a valid commission issued by the National Board of Boiler and Pressure Vessel Inspectors and the State of Washington and employed by Lumbermen's Mutual Casualty Co. of Illinois have inspected the components described in this Owner's Report during the period 4/8/87 to 8/16/88, and state that to the best of my knowledge and belief, the Owner has performed examinations and taken corrective measures described in this Owner's Report in accordance with the requirements of the ASME Code, Section XI.

By signing this certificate neither the Inspector nor his employer makes any warranty, expressed or implied, concerning the examinations and corrective measures described in this Owner's Report. Furthermore, neither the Inspector nor his employer shall be liable in any manner for any personal injury or property damage or a loss of any kind arising from or connected with this inspection.

[signature] (Inspector's Signature) Commissions 5470ce (National Board, State, and Endorsements)

Date 8/17 19 88

PLAN No. 2-0332.

PAGE 3

FORM NPV-1 MANUFACTURERS' DATA REPORT FOR NUCLEAR PUMPS OR VALVES*
(As Required by the Provisions of the ASME Code, Section III, Div. 1)

S/O 3.8906.01
P.O. 84654

1. Manufactured by Anderson Greenwood USA, Inc., 5425 S. Rice Ave., Houston, TX 77081
(Name and Address of Manufacturer)

2. Manufactured for Washington Public Power Supply System, P.O. Box 968, Richland WA 99352
(Name and Address of Purchaser or Owner)

3. Location of Installation Washington Public Power Supply System Plant WNP-2 Warehouse 1, Richland, WA 99352
(Name and Address)

4. Pump or Valve ___ Valve. Nominal Inlet Size 2 (inch) Outlet Size 2 (inch)

	(a) Model No., Series No. or Type	(b) Manufacturers' Serial No.	(c) Canadian Registration No.	(d) Drawing No.	(e) Class	(f) Nat'l. Bd. No.	(g) Year Built
(1)	Y11B15S-8W8W-1	N24361	N/A	N04-4130-510	1	N/A	1987
(2)		thru					
(3)		N24363					
(4)							
(5)		RRC-V-51A, S/N N24361					
(6)		RRC-V-52A, S/N N24362					
(7)		RRC-V-51B, S/N N24363					
(8)							
(9)				Rudolph Fuchs			
(10)				10/21/87			

5. Y Pattern Packed Globe Valve
(Brief description of service for which equipment was designed)

6. Design Conditions 1645 psi (Pressure) psi 800 °F (Temperature) °F or Valve Pressure Class 1500# (1)

GPBar 4-9-87

7. Cold Working Pressure 3000 psi at 100°F.

8. Pressure Retaining Pieces

Mark No.	Material Spec. No.	Manufacturer	Remarks
(a) Castings			
N04-3992-001	SA217-CA15	Anderson-Greenwood	Disc Hardfaced
(b) Forgings			
N04-3997-501	SA182-F316L	Anderson-Greenwood	Body

(1) For manually operated valves only.

* Supplemental sheets in form of lists, sketches or drawings may be used provided (1) size is 8-1/2" x 11", (2) information in items 1, 2 and 5 on this data report is included on each sheet, and (3) each sheet is numbered and number of sheets is recorded at top of this form.

(3/77) This form (E00037) may be obtained from the Order Dept., ASME, 345 E. 47 St., New York, N.Y. 10017

FORM # 516 10/78

FORM NPV-1 (Back)

Mark No.	Material Spec. No.	Manufacturer	Remarks
(c) Bolting			
N/A			
(d) Other Parts			
N04-4012-007	SA479-316L	Anderson-Greenwood	Bonnet Assy

9. Hydrostatic test 4500 psi.

CERTIFICATE OF COMPLIANCE

We certify that the statements made in this report are correct and that this pump, or valve, conforms to the rules of construction of the ASME Code for Nuclear Power Plant Components. Section III, Div. I., Edition 1977, Addenda W-77 (Date), Code Case No. N-345. Date 3/20/87

Signed Anderson-Greenwood USA, Inc (Manufacturer) by Joseph A. Parks

Our ASME Certificate of Authorization No. 2203 to use the N (N) (NPV) symbol expires 8-4-87 (Date).

CERTIFICATION OF DESIGN

Design information on file at Anderson-Greenwood USA, Inc.

Stress analysis report (Class 1 only) on file at N/A

Design specifications certified by (1) Jack R. Cole

PE State WA Reg. No. 20653

Stress analysis certified by (1) J. Alan West

PE State Tx Reg. No. 41731

(1) Signature not required. List name only.

CERTIFICATE OF SHOP INSPECTION

I, the undersigned, holding a valid commission issued by the National Board of Boiler and Pressure Vessel Inspectors and the State or Province of TX and employed by C.U.I.C. of Boson, MA have inspected the pump, or valve, described in this Data Report on 3-23 19 87 and state that to the best of my knowledge and belief, the Manufacturer has constructed this pump, or valve, in accordance with the ASME Code, Section III.

By signing this certificate, neither the Inspector nor his employer makes any warranty, expressed or implied, concerning the equipment described in this Data Report. Furthermore, neither the Inspector nor his employer shall be liable in any manner for any personal injury or property damage or a loss of any kind arising from or connected with this inspection.

Date 3-23 19 87

Roger Lottis (Inspector) Commissions TX #1056 (Nat'l Bd., State, Prov. and No.)

PLAN NO. 2-0332

PAGE 3

FORM NPV-1 MANUFACTURERS' DATA REPORT FOR NUCLEAR PUMPS OR VALVES*
(As Required by the Provisions of the ASME Code, Section III, Div. 1)

S/O 3.8906.01
P.O. 84654

1. Manufactured by Anderson Greenwood USA, Inc., 5425 S. Rice Ave., Houston, TX 77081
(Name and Address of Manufacturer)

2. Manufactured for Washington Public Power Supply System, P.O. Box 968, Richland WA 99352
(Name and Address of Purchaser or Owner)

3. Location of Installation Washington Public Power Supply System Plant WNP-2 Warehouse 1, Richland, WA 99352 (Name and Address)

4. Pump or Valve Valve. Nominal Inlet Size 2 (Inch) Outlet Size 2 (Inch)

	(a) Model No., Series No. or Type	(b) Manufacturers' Serial No.	(c) Canadian Registration No.	(d) Drawing No.	(e) Class	(f) Nat'l. Bd. No.	(g) Year Built
(1)	Y11B15S-8W8W-1	N24364	N/A	N04-4130-510	1	N/A	1987
(2)							
(3)							
(4)			RRC-V-52B, S/N N24364				
(5)							
(6)					Rudolf Emph		
(7)					10/21/87		
(8)							
(9)							
(10)							

5. Y Pattern Packed Globe Valve
(Brief description of service for which equipment was designed)

J. Rocha 5/1/87

6. Design Conditions 1645 psi (Pressure) psi 800 ~~psi~~ (Temperature) °F or Valve Pressure Class 1500# (1)

7. Cold Working Pressure 3000 psi at 100°F.

8. Pressure Retaining Pieces

Mark No.	Material Spec. No.	Manufacturer	Remarks
(a) Castings			
N04-3992-001	SA217-CA15	Anderson-Greenwood	Disc Hardfaced
(b) Forgings			
N04-3997-501	SA182-F316L	Anderson-Greenwood	Body

(1) For manually operated valves only.

* Supplemental sheets in form of lists, sketches or drawings may be used provided (1) size is 8-1/2" x 11", (2) information in items 1, 2 and 6 on this data report is included on each sheet, and (3) each sheet is numbered and number of sheets is recorded at top of this form.

This form (500027) may be obtained from the Order Dept., ASME, 345 E. 47 St., New York, N.Y. 10017

FORM NPV-1 (Back)

Mark No.	Material Spec. No.	Manufacturer	Remarks
(c) Bolting N/A			S/N N24364 J. Parke 5-1-87
(d) Other Parts			
N04-4012-007	SA479-316L	Anderson-Greenwood	Bonnet Assy

9. Hydrostatic test 4500 psi.

CERTIFICATE OF COMPLIANCE

We certify that the statements made in this report are correct and that this pump, or valve, conforms to the rules of construction of the ASME Code for Nuclear Power Plant Components, Section III, Div. I., Edition 1977, Addenda W-77 (Date), Code Case No. N-345, Date 4-6-87

Signed Anderson-Greenwood USA, Inc. (Manufacturer) by Jerry L. A. Parke 4-22-87

Our ASME Certificate of Authorization No. 2203 to use the N (N) (NPV) symbol expires 8-4-87 (Date).

CERTIFICATION OF DESIGN

Design information on file at Anderson-Greenwood USA, Inc.

Stress analysis report (Class 1 only) on file at N/A

Design specifications certified by (1) Jack R. Cole

PE State WA Reg. No. 20653

Stress analysis certified by (1) J. Alan West

PE State TX Reg. No. 41731

(1) Signature not required. List name only.

CERTIFICATE OF SHOP INSPECTION

I, the undersigned, holding a valid commission issued by the National Board of Boiler and Pressure Vessel Inspectors and the State or Province of TX and employed by C.U.I.C. of Boston, MA have inspected the pump, or valve, described in this Data Report on 4-22, 19 87, and state that to the best of my knowledge and belief, the Manufacturer has constructed this pump, or valve, in accordance with the ASME Code, Section III.

By signing this certificate, neither the Inspector nor his employer makes any warranty, expressed or implied, concerning the equipment described in this Data Report. Furthermore, neither the Inspector nor his employer shall be liable in any manner for any personal injury or property damage or a loss of any kind arising from or connected with this Inspection.

Date 4-22, 19 87

(Inspector)

Commissions 2 ex 1027

(Nat'l Bd., State, Prov. and No.)

WASHINGTON PUBLIC POWER SUPPLY SYSTEM

PLAN NO. 2-0335

FORM NIS-2 OWNER'S REPORT FOR REPAIRS OR REPLACEMENTS
As Required by the Provisions of the ASME Code Section XI

1. Owner (Name) Washington Public Power Supply System — Date 11/17/87
   Owner (Address) 3000 George Washington Way, Richland, WA — Sheet 1 of 1
2. Plant (Name) WPPSS Nuclear Power Plant (WNP) — Unit WNP-2
   Plant (Address) Hanford, Benton County, WA — C20069 Repair Organization P.O. No., Job No., etc.
3. Work Performed by (Name) Bechtel Construction, Inc.
   Work Performed by (Address) P.O. Box 600, Richland, WA
4. Identification of System Containment Vessel - Penetration X27F
5. (a) Applicable Construction Code ASME Section III 19 71 Edition, S72 Addenda, None Code Case
   (b) Applicable Edition of ASME Section XI Utilized for Repairs or Replacements 19 80 Edition, W80
   Addenda, N308 Code Case
6. Identification of Components Repaired or Replaced and Replacement Components

Name of Component	Name of Manufacturer	Manufacturer Serial No.	National Board No.	Other I.D.	Year Built	Repaired, Replaced, or Replacement	ASME Code Stamped (Yes or No) Code Class
Cont. Vessel Penet. X-27F TIP Purge Line	PDM	12764	790	N/A	1976	Replacement	Yes, Class 2

7. Description of Work:

Modified TIP purge line. The modification work was performed as follows:

1) Cut and removed existing material.
2) Installed new pipe and tubing material.
3) Made required welds.
4) Performed PT examination on the final welds. PT examination results acceptable.
5) Installed new supports.
6) Performed pressure test to confirm pressure boundary integrity. No evidence of leakage during pressure test.

Notes:

WASHINGTON PUBLIC POWER SUPPLY SYSTEM

PLAN NO. 2-0335

FORM NIS-2 (Back)

8. Tests Conducted: Hydrostatic ☐ Pneumatic ☐ Nominal Operating Pressure ☐ Other ☒ LLRT
Test Pressure 35 psig, Test Temp. 78.6 °F
Component Design Pressure 45 psig, Temp. 340 °F

9. Remarks:
See attached NPV-1 Code Data reports for the following new valves.

EPN No.	Serial No.
TIP-V-6	PB 1053
TIP-V-13	PB 1085
TIP-V-15	13

CERTIFICATE OF COMPLIANCE

We certify that the statements made in the report are correct and this replacement (repair or replacement) conforms to the rules of the ASME Code, Section XI.

Type Code Symbol Stamp Not applicable

Certificate Authorization No. Not applicable Expiration Date Not applicable

Signed R L Weber (Owner or Owner's Designee) Title Plant Technical Manager

11/12/87

Date 11/13/ 19 87

CERTIFICATE OF INSERVICE INSPECTION

I, the undersigned, holding a valid commission issued by the National Board of Boiler and Pressure Vessel Inspectors and the State of Washington and employed by Lumbermen's Mutual Casualty Co. of Illinois have inspected the components described in this Owner's Report during the period 3-16-87 to 11-2-87, and state that to the best of my knowledge and belief, the Owner has performed examinations and taken corrective measures described in this Owner's Report in accordance with the requirements of the ASME Code, Section XI.

By signing this certificate neither the Inspector nor his employer makes any warranty, expressed or implied, concerning the examinations and corrective measures described in this Owner's Report. Furthermore, neither the Inspector nor his employer shall be liable in any manner for any personal injury or property damage or a loss of any kind arising from or connected with this inspection.

Dan Hoggard (Inspector's Signature) Commissions 9556 W (National Board, State, and Endorsements)

Date 11-17 19 87

S/N PB1053 TIP-V-6 PLAN NO. 2-03

FORM NPV-1 N CERTIFICATE HOLDER'S* DATA REPORT FOR NUCLEAR PUMPS OR VALVES*

As Required by the Provisions of the ASME Code, Section XI, Div. 1

1. Manufactured by Dragon Valves, Inc., 13657 Excelsior Dr., Norwalk, CA 90650 (Name and Address of N Certificate Holder)
2. Manufactured for Washington Public Power Supply System, 3000 George Washington Way, Richland, WA 99352 (Name and Address of Purchaser or Owner)
3. Location of Installation WNP-2 Site, Richland, WA 99352 (Name and Address)
4. Pump or Valve .. Valve. Nominal Inlet Size 1/2 (inch) Outlet Size 1/2 (inch)

	(a) Model No., Series No. or Type	(b) N Certificate Holder's Serial No.	(c) Canadian Registration No.	(d) Drawing No.	(e) Class	(f) Nat'l Bd. No.	(g) Year Built
(1)	12445-75W	PB1053	None	12445	2	None	1983
(2)		thru					
(3)		PB1056					
(4)							
(5)							
(6)							
(7)		TIP-V-6, S/N PB1053					
(8)							
(9)							
(10)							

Ruddy Gupta 10/20/87.

5. Nuclear Service Check Valves (4 Pcs.) (Brief description of service for which equipment was designed)
6. Design Conditions 1440 (Pressure) psi 100 (Temperature) °F or Valve Pressure Class ____ (1)
7. Cold Working Pressure 1440 psi at 100°F.
8. Pressure Retaining Pieces

Mark No.	Material Spec. No.	Manufacturer	Remarks
(a) Castings None			
(b) Forgings None			

(1) For manually operated valves only

* Supplemental sheets in form of lists, sketches or drawings may be used provided (1) size is 8-1/2" x 11", (2) information in Items 1, 2 and 5 on this Data Report is included on each sheet, and (3) each sheet is numbered and number of sheets is recorded at top of this form

(10/77) This form (E00037) may be obtained from the Order Dept., ASME, 345 E. 47th St., New York, N.Y. 10017

Mark No.	Material Spec. No.	Manufacturer	Remarks
(c) Bolting. None			
(d) Other Parts			
Body	ASME SA479 TY 316	Al Tech Spec. Stlg.	HT 01623
Plug	ASME SA479 TY 316	Al Tech Spec. Stlg.	HT 07078

9. Hydrostatic test 2175 psi. Disk Differential test pressure 1440 psi.

CERTIFICATE OF COMPLIANCE

We certify that the statements made in this report are correct and that this pump, or valve, conforms to the rules of construction of the ASME Code for Nuclear Power Plant Components, Section III, Div. 1, Edition 1974, Addenda 12-31-76 (Date), Code Case No. None, Date March 11, 1983

Signed DRAGON VALVES, INC. (N Certificate Holder) by [signature]

Our ASME Certificate of Authorization No. N-1033 to use the N (Stamp) symbol expires 5-6-84 (Date)

CERTIFICATION OF DESIGN

Design Information on file at Washington Public Power Supply Systems

Stress analysis report (Class 1 only) on file at not applicable

Design specifications certified by (1) Shafik H. Rifaey

PE State VA Reg. No. 17626

Stress analysis certified by (1) not required

PE State ____ Reg. No. ____

(1) Signature not required. List name only.

CERTIFICATE OF SHOP INSPECTION

I, the undersigned, holding a valid commission issued by the National Board of Boiler and Pressure Vessel Inspectors and the State or Province of CALIFORNIA and employed by POSII of CALIFORNIA have inspected the pump, or valve, described in this Data Report on March 11, 19 83, and state that to the best of my knowledge and belief, the N Certificate Holder has constructed this pump, or valve, in accordance with the ASME Code, Section III.

By signing this certificate, neither the inspector nor his employer makes any warranty, expressed or implied, concerning the equipment described in this Data Report. Furthermore, neither the inspector nor his employer shall be liable in any manner for any personal injury or property damage or a loss of any kind arising from or connected with this inspection.

Date 3-11- 19 83. Signed [signature] (Inspector) Commissions CA 658 (Nat'l Bd., State, Prov. and No.)

PLAN NO. 2-0335

FORM NPV-1 N CERTIFICATE HOLDERS' DATA REPORT FOR NUCLEAR PUMPS OR VALVES*

As Required by the Provisions of the ASME Code, Section III, Div. 1

1. Manufactured by Dragon Valves, Inc., 13457 Excelsior Dr., Norwalk, CA. 90650
(Name and Address of N Certificate Holder)

2. Manufactured for Washington Public Power Supply System, P.O. Box 968, Richland, WA. 99352-0968
(Name and Address of Purchaser or Owner)

3. Location of Installation WNP-2 Site, Richland, WA. 99352
(Name and Address)

4. Pump or Valve Valve Nominal Inlet Size 1/2 (inch) Outlet Size 1/2 (inch)

	(a) Model No., Series No. or Type	(b) N Certificate Holder's Serial No.	(c) Canadian Registration No.	(d) Drawing No.	(e) Class	(f) Nat'l Bd. No.	(g) Year Built
(1)	78058SMD	PB1085	N/A	10580	2	N/A	1985
(2)		thru		Rev. B			
(3)		PB1086					
(4)							
(5)							
(6)							
(7)							
(8)							
(9)							
(10)							

TIP-V-13, SIN PB1085

Rudolf Swift 10/20/87.

5. Instrument Valves (2 Pcs.)
(Brief description of systems for which equipment was designed)

6. Design Conditions 3600 (Pressure) psi 100 (Temperature) °F or Valve Pressure Class _____ (1)

7. Cold Working Pressure 3600 psi at 100°F

8. Pressure Retaining Pieces

Mark No.	Material Spec. No.	Manufacturer	Remarks
(a) Castings N/A			
(b) Forgings			
HT.16652	ASME SA182 GR.F316	Ajax Forge Co.	Body
HT.75463	ASME SA182 GR.F316	Ajax Forge Co.	Yoke

(1) For manually operated valves only.

* Supplemental sheets in form of lists, sketches or drawings may be used provided (1) size is 8-1/2" x 11", (2) information in items 1, 2 and 5 on this Data Report is included on each sheet, and (3) each sheet is numbered and number of sheets is recorded at top of this form.

FORM NPV-1 (Back)

Mark No	Material Spec No	Manufacturer	Remarks
(c) Bolting N/A			
(d) Other Parts			
HT.50937	ASME SA564 GR.630	Carpenter Steel	Disc

D. Hydrostatic test 5400 psi. Disc Differential test pressure 3600 psi.

CERTIFICATE OF COMPLIANCE

We certify that the statements made in this report are correct and that this pump, or valve, conforms to the rules of construction of the ASME Code for Nuclear Power Plant Components, Section III, Div. I, Edition 1974.
Addenda Summer'75 (Date). Code Case No. N/A (Date)
Signed DRAGON VALVES, INC. (N Certificate Holder) by
Our ASME Certificate of Authorization No. N-1033 to use the N (Stamp) symbol expires 5-6-87 (Date).

CERTIFICATION OF DESIGN

Design information on file at Washington Public Power Supply System (See Line 2)
Stress analysis report (Class 1 only) on file at N/A

Design specifications certified by (1) David J. Murphy
PE State WA. Reg. No. 12542
Stress analysis certified by (1) N/A
PE State Reg. No.

(1) Signature not required. List name only.

CERTIFICATE OF SHOP INSPECTION

I, the undersigned, holding a valid commission issued by the National Board of Boiler and Pressure Vessel Inspectors and the State or Province of CALIFORNIA and employed by DOSH of CALIFORNIA have inspected the pump, or valve, described in this Data Report on 6-14 19 85, and state that to the best of my knowledge and belief, the N Certificate Holder has constructed this pump, or valve, in accordance with the ASME Co- ion III.

By signing this certificate, neither the inspector nor his employer makes any warranty, expressed or implied, concerning the equipment described in this Data Report. Furthermore, neither the inspector nor his employer shall be liable in any manner for any personal injury or property damage or a loss of any kind arising from or connected with this inspection.

Date 6-14 19 85
(Inspector) Commissions CA 1234 (Nat'l Bd., State, Prov. and No.)

PLAN No.2-0335

FORM NPV-1 N CERTIFICATE HOLDERS' DATA REPORT FOR NUCLEAR PUMPS OR VALVES*

As Required by the Provisions of the ASME Code, Section III, Div. 1

1. Manufactured by Target Rock Corporation 1966 E. Broadhollow Rd E. Farmingdale, N.Y.
(Name and Address of N Certificate Holder)
2. Manufactured for Washington Public Supply System, Hanford, Washington
(Name and Address of Purchaser or Owner)
3. Location of Installation Hanford Nuclear Plant, 2, Hanford, Washington
(Name and Address)
4. Pump or Valve Valve. Nominal Inlet Size 1 (inch) Outlet Size 1 (inch)

	(a) Model No., Series No. or Type	(b) N Certificate Holder's Serial No.	(c) Canadian Registration No.	(d) Drawing No.	(e) Class	(f) Nat'l. Bd. No.	(g) Year Built
(1)	82M-002	1 thru 13	-----	1032110-4	2	-----	1982
(2)							
(3)							
(4)		TIP-V-15, S/N 13					
(5)							
(6)				Rudolf Krupb			
(7)				10/20/87			
(8)							
(9)							
(10)							

5. Hydraulic Sub System
(Brief description of service for which equipment was designed)

6. Design Conditions 2200 (Pressure) psi 180 (Temperature) °F or Valve Pressure Class - (1)
7. Cold Working Pressure 2570 psi at 100°F.
8. Pressure Retaining Pieces

Mark No.	Material Spec. No.	Manufacturer	Remarks
(a) Castings			
(b) Forgings			
Body	ASME SA 182, SS 316L	Ideal Forge	Joslyn

(1) For manually operated valves only.

* Supplemental sheets in form of lists, sketches or drawings may be used provided (1) size is 8-1/2" x 11", (2) information in items 1, 2 and 5 on this Data Report is included on each sheet, and (3) each sheet is numbered and number of sheets is recorded at top of this form.

(10/77) This form (E00037) may be obtained from the Order Dept., ASME, 345 E. 47th St., New York, N.Y. 10017

FORM NPV-1 (Back)

Mark No.	Material Spec. No.	Manufacturer	Remarks
(c) Bolting			
(d) Other Parts			
Bonnet	ASME SA 479, SS 316	Universal Cyclops	
Indicator Tube	ASME SA 479, SS 316	Jessop Steel	
Main Disc	ASME SA 564 GR 630 SS 17-4PH	ARMCO Inc.	

9. Hydrostatic test 3850 psi. Disk Differential test pressure 2570 psi.

CERTIFICATE OF COMPLIANCE

We certify that the statements made in this report are correct and that this pump, or valve, conforms to the rules of construction of the ASME Code for Nuclear Power Plant Components, Section III, Div. I, Edition 1974, Addenda W-75 (Date), Code Case No. ------ Date ------

Signed Target Rock Corporation (N Certificate Holder) by R. Riesolen 12/14/82 For G. Abruzzo, Mgr. of Quality

Our ASME Certificate of Authorization No. 1947 to use the N (N) symbol expires 12/9/83 (Date).

CERTIFICATION OF DESIGN

Design information on file at Target Rock Corporation

Stress analysis report (Class 1 only) on file at ------

Design specifications certified by (1) Glenn L. Mayfield

PE State Oregon Reg. No. 7140

Stress analysis certified by (1) ------

PE State ------ Reg. No. ------

(1) Signature not required. List name only.

CERTIFICATE OF SHOP INSPECTION

I, the undersigned, holding a valid commission issued by the National Board of Boiler and Pressure Vessel Inspectors and the State or Province of New York and employed by Commercial Union Ins. of Boston, Mass. have inspected the pump, or valve, described in this Data Report on 12/14 19 82, and state that to the best of my knowledge and belief, the N Certificate Holder has constructed this pump, or valve, in accordance with the ASME Code, Section III.

By signing this certificate, neither the Inspector nor his employer makes any warranty, expressed or implied, concerning the equipment described in this Data Report. Furthermore, neither the Inspector nor his employer shall be liable in any manner for any personal injury or property damage or a loss of any kind arising from or connected with this inspection.

Date 12/14 19 82. NEW YORK STATE COMMISSION NO. 2288

William O. Rickard (Inspector) Commissions ALSO COMMISSIONED IN Penn., Ohio & Conn. (Nat'l Bd., State, Prov. and No.)

2 1 5 4 5 0 9 7 3

WASHINGTON PUBLIC POWER SUPPLY SYSTEM

PLAN NO. 2-0336 and 2-0337

FORM NIS-2 OWNER'S REPORT FOR REPAIRS OR REPLACEMENTS
As Required by the Provisions of the ASME Code Section XI

1. Owner (Name) Washington Public Power Supply System — Date 11/17/87
   Owner (Address) 3000 George Washington Way, Richland, WA — Sheet 1 of 1
2. Plant (Name) WPPSS Nuclear Power Plant (WNP) — Unit WNP-2
   Plant (Address) Hanford, Benton County, WA — WPPSS Repair Organization P.O. No., Job No., etc.
3. Work Performed by (Name) WPPSS
   Work Performed by (Address) 3000 George Wash. Way, Richland, WA
4. Identification of System Service Water (SW) System
5. (a) Applicable Construction Code ASME Section III 19 71 Edition, W73 Addenda, None Code Case
   (b) Applicable Edition of ASME Section XI Utilized for Repairs or Replacements 19 80 Edition, W80 Addenda, N308 Code Case
6. Identification of Components Repaired or Replaced and Replacement Components

Name of Component	Name of Manufacturer	Manufacturer Serial No.	National Board No.	Other I.D.	Year Built	Repaired, Replaced, or Replacement	ASME Code Stamped (Yes or No) Code Class
SW(1)-2	WPPSS	*	N/A	N/A	1983	Replacement	Yes, Class 3
SW(2)-2	WPPSS	*	N/A	N/A	1983	Replacement	Yes, Class 3
SW(21)-2	WPPSS	*	N/A	N/A	1983	Replacement	Yes, Class 3
SW(22)-2	WPPSS	*	N/A	N/A	1983	Replacement	Yes, Class 3

7. Description of Work:

Plan No. 2-0336:
1) Fabricated four (4) restricting orifice (RO) plates for SW-RO-10A, 10B, 11A and 11B.

Plan No. 2-0337:
1) Removed existing restricting orifice (RO) plates.
2) Installed new restricting orifice (RO) plates for SW-RO-10A, 10B, 11A and 11B.
3) Torqued the bolting material to the required torque value.
4) Performed pressure test to confirm pressure boundary integrity. No evidence of leakage during pressure test.

Notes:
*SW(1)-2-P2 *SW(21)-2-P2
*SW(2)-2-P2 *SW(22)-2-P2

WASHINGTON PUBLIC POWER SUPPLY SYSTEM

PLAN NO. 2-0336 and 2-0337

FORM NIS-2 (Back)

8. Tests Conducted: Hydrostatic ☐ Pneumatic ☐ Nominal Operating Pressure ☒ Other ☐ _____
Test Pressure 229/215* psig, Test Temp. Ambient °F
Component Design Pressure 309 psig, Temp. 150 °F

9. Remarks:

* 229 psig for SW-RO-10A and 10B
* 215 psig for SW-RO-11A and 11B

CERTIFICATE OF COMPLIANCE

We certify that the statements made in the report are correct and this replacement (repair or replacement) conforms to the rules of the ASME Code, Section XI.

Type Code Symbol Stamp Not applicable

Certificate Authorization No. Not applicable Expiration Date Not applicable

Signed R C Webb (Owner or Owner's Designee,) Title Plant Technical Manager

11/12/87

Date 11/13 19 87

CERTIFICATE OF INSERVICE INSPECTION

I, the undersigned, holding a valid commission issued by the National Board of Boiler and Pressure Vessel Inspectors and the State of Washington and employed by Lumbermen's Mutual Casualty Co. of Illinois have inspected the components described in this Owner's Report during the period 4-13-87 to 9-29-87, and state that to the best of my knowledge and belief, the Owner has performed examinations and taken corrective measures described in this Owner's Report in accordance with the requirements of the ASME Code, Section XI.

By signing this certificate neither the Inspector nor his employer makes any warranty, expressed or implied, concerning the examinations and corrective measures described in this Owner's Report. Furthermore, neither the Inspector nor his employer shall be liable in any manner for any personal injury or property damage or a loss of any kind arising from or connected with this inspection.

Dan Hoggard (Inspector's Signature) Commissions 9556 W (National Board, State, and Endorsements)

Date 11-17 19 87

WASHINGTON PUBLIC POWER SUPPLY SYSTEM

PLAN NO. 2-0338

FORM NIS-2 OWNER'S REPORT FOR REPAIRS OR REPLACEMENTS
As Required by the Provisions of the ASME Code Section XI

1. Owner (Name) Washington Public Power Supply System — Date 12-4-87
   Owner (Address) 3000 George Washington Way, Richland, WA — Sheet 1 of 1
2. Plant (Name) WPPSS Nuclear Power Plant (WNP) — Unit WNP-2
   Plant (Address) Hanford, Benton County, WA — C20069 Repair Organization P.O. No., Job No., etc.
3. Work Performed by (Name) Bechtel Construction, Inc.
   Work Performed by (Address) P.O. Box 600, Richland, WA
4. Identification of System Service Water (SW) System
5. (a) Applicable Construction Code ASME Section III 19 71 Edition, W73 Addenda, None Code Case
   (b) Applicable Edition of ASME Section XI Utilized for Repairs or Replacements 19 80 Edition, W80
   Addenda, N308 Code Case
6. Identification of Components Repaired or Replaced and Replacement Components

Name of Component	Name of Manufacturer	Manufacturer Serial No.	National Board No.	Other I.D.	Year Built	Repaired, Replaced, or Replacement	ASME Code Stamped (Yes or No) Code Class
SW(21)-2UG	WPPSS	*	N/A	N/A	1983	Replacement	Yes, Class 3
SW(22)-2UG	WPPSS	*	N/A	N/A	1983	Replacement	Yes, Class 3

7. Description of Work:

Modified service water keep full system. The modification work was performed as follows:

1) Cut and removed existing piping.
2) Installed new pipe, fittings, and valves.
3) Made required socket welds.
4) Performed pressure test to confirm pressure boundary integrity. No evidence of leakage during pressure test.

Notes:

*SW(21)-2UG-P1
*SW(22)-2UG-P1

WASHINGTON PUBLIC POWER SUPPLY SYSTEM

PLAN NO. 2-0338

FORM NIS-2 (Back)

8. Tests Conducted: Hydrostatic ☒ Pneumatic ☐ Nominal Operating Pressure ☐ Other ☐ _____
Test Pressure * psig, Test Temp. * °F
Component Design Pressure 309 psig, Temp. 150 °F

9. Remarks:

See attached NPV-1 Code Data reports for the following new valves.

EPN No.	Serial No.
SW-V-931A	17619
SW-V-931B	17616

* Loop A, test pressure 463 psig, test temp 71.4°F
* Loop B, test pressure 455 psig, test temp 72.6°F

CERTIFICATE OF COMPLIANCE

We certify that the statements made in the report are correct and this replacement (repair or replacement) conforms to the rules of the ASME Code, Section XI.

Type Code Symbol Stamp Not applicable

Certificate Authorization No. Not applicable Expiration Date Not applicable

Signed [signature] Owner or Owner's Designee. Title Plant Technical Manager

11/12/87

Date 11/13 19 87

CERTIFICATE OF INSERVICE INSPECTION

I, the undersigned, holding a valid commission issued by the National Board of Boiler and Pressure Vessel Inspectors and the State of Washington and employed by Lumbermen's Mutual Casualty Co. of Illinois have inspected the components described in this Owner's Report during the period 4-13-87 to 9-29-87, and state that to the best of my knowledge and belief, the Owner has performed examinations and taken corrective measures described in this Owner's Report in accordance with the requirements of the ASME Code, Section XI.

By signing this certificate neither the Inspector nor his employer makes any warranty, expressed or implied, concerning the examinations and corrective measures described in this Owner's Report. Furthermore, neither the Inspector nor his employer shall be liable in any manner for any personal injury or property damage or a loss of any kind arising from or connected with this inspection.

Dan Hoggard Commissions 9556 W
Inspector's Signature National Board, State, and Endorsements

Date 12-4 19 87

PLAN NO. 2-0338

Ludolph Smith 10/12/87

FORM NPV-1 MANUFACTURERS' DATA REPORT FOR NUCLEAR PUMPS OR VALVES*

As Required by the Provisions of the ASME Code Rules

0A1115

1. Manufactured by Nuclear Valve Division of Borg Warner, 7500 Tyrone Avenue, Van Nuys, Ca. Order No. 47713
(Name & Address of Manufacturer)

2. Manufactured for Bovee & Crail/G.E.R.I. P.O. Box 1040, Richland, Washington 99352 Order No. 215-3261
(Name and Address)

3. Owner WPPSS Hanford #2 Job Site SW-V-931A, S/N 17619.

4. Location of Plant Richland, Washington 99352 SW-V-931B, S/N 17616

5. Pump or Valve Identification Nuclear Valve Div., P/N 76750-2, 1 INCH Y TYPE LIFT CHECK VALVE ASSEMBLY, CS
Serial Numbers 17613 thru 17619 (7 Valves)
(Brief description of service for which equipment was designed)

(a) Drawing No. 76750-2 Prepared by Nuclear Valve Division of Borg Warner

(b) National Board No.

6. Design Conditions 3600 (Pressure) psi 100 (Temperature) °F

7. The material, design, construction, and workmanship complies with ASME Code Section III, Class 2

Edition 1971, Addenda Date Winter '73, Case No.

Mark No.	Material Spec. No.	Manufacturer	Remarks
(a) Castings			
Disc - Code 1E44, 1H07	Stellite #6		
Casting - 71256	NMS 71043	Rex Precision	
Machined - 71637		NV Division	
(b) Forgings			
Body - Code 1D72	SA105		
Forging - 71217		Compton Forge	
Machined - 71227-11		NV Division	
Assembly - 71228-13			
Bonnet - Code 1G20, 1H67	SA105	Airco Viking	
Forged Stock		Jorgensen Co.	
Machined - 71578		NV Division	

REVIEWED FEB 25 1982 BECHTEL QUALITY CONTROL BY:

WBG BR 215 15021

*Supplemental sheets in form of lists, sketches or drawings may be used provided (1) size is 8½" x 11", (2) information in items 1, 2, 5a and 5b on this data report is included on each sheet, and (3) each sheet is numbered and number of sheets is recorded at top of this form.

2

Plan No. 2-0338

FORM NPV-1 (back)

	Mark No.	Material Spec. No.	Manufacturer	Remarks
(c) Bolting				
(d) Other Parts				

8. Hydrostatic test 5400 - 5450 psi.

CERTIFICATION OF DESIGN

Design information on file at Nuclear Valve Div. of Borg Warner, 7500 Tyrone Ave., Van Nuys, Ca.

Stress analysis report on file at N/A

Design specifications certified by David J. Murphy (1) Prof. Eng. State Wash. Reg. No. 12542

Stress analysis report certified by N/A (1) Prof. Eng. State _____ Reg. No. _____

(1) Signature not required. List name only.

We certify that the statements made in this report are correct.

Date Nov. 10 19 76 Signed Nuclear Valve Div. of Borg Warner (Manufacturer) By Norma J. Moore

Certificate of Authorization No. 1254 expires October 27, 1978

CERTIFICATE OF SHOP INSPECTION

I, the undersigned, holding a valid commission issued by the National Board of Boiler and Pressure Vessel Inspectors and/or the State of Province of California and employed by Dept. of Bldg. & Safety of City of Los Angeles have inspected the equipment described in this Data Report on Nov. 10 19 76, and state that to the best of my knowledge and belief, the Manufacturer has constructed this equipment in accordance with the applicable Subsections of ASME Code, Section III.

By signing this certificate, neither the Inspector nor his employer makes any warranty, expressed or implied, concerning the equipment described in this Data Report. Furthermore, neither the Inspector nor his employer shall be liable in any manner for any personal injury or property damage or a loss of any kind arising from or connected with this inspection.

Date November 10 19 76

(Inspector) Commissions (National Board, State, Province and No.)

WASHINGTON PUBLIC POWER SUPPLY SYSTEM

PLAN NO. 2-0336 and 2-0339

FORM NIS-2 OWNER'S REPORT FOR REPAIRS OR REPLACEMENTS
As Required by the Provisions of the ASME Code Section XI

1. Owner (Name) Washington Public Power Supply System — Date 11/17/87
   Owner (Address) 3000 George Washington Way, Richland, WA — Sheet 1 of 1
2. Plant (Name) WPPSS Nuclear Power Plant (WNP) — Unit WNP-2
   Plant (Address) Hanford, Benton County, WA — WPPSS Repair Organization P.O. No., Job No., etc.
3. Work Performed by (Name) WPPSS
   Work Performed by (Address) 3000 George Wash. Way, Richland, WA
4. Identification of System Service Water (SW) System
5. (a) Applicable Construction Code ASME Section III 19 71 Edition, W73 Addenda, None Code Case
   (b) Applicable Edition of ASME Section XI Utilized for Repairs or Replacements 19 80 Edition, W80
   Addenda, N308 Code Case
6. Identification of Components Repaired or Replaced and Replacement Components

Name of Component	Name of Manufacturer	Manufacturer Serial No.	National Board No.	Other I.D.	Year Built	Repaired, Replaced, or Replacement	ASME Code Stamped (Yes or No) Code Class
SW(1)-2UG	WPPSS	*	N/A	N/A	1983	Replacement	Yes, Class 3
SW(2)-2UG	WPPSS	*	N/A	N/A	1983	Replacement	Yes, Class 3

7. Description of Work:

Plan No. 2-0336:
1) Fabricated four (4) spacer rings for valves SW-V-2A and SW-V-2B.

Plan No. 2-0339:
1) Removed existing valves SW-V-2A and SW-V-2B.
2) Installed new valves SW-V-2A, SW-V-2B, spacer rings and bolting material.
3) Torqued the bolting material to the required torque value.
4) Performed pressure test to confirm pressure boundary integrity. No evidence of leakage during pressure test.

Notes:
*SW(1)-2UG-P1
*SW(2)-2UG-P1

WASHINGTON PUBLIC POWER SUPPLY SYSTEM

PLAN NO. 2-0336 and 2-0339

FORM NIS-2 (Back)

8. Tests Conducted: Hydrostatic ☐ Pneumatic ☐ Nominal Operating Pressure ☒ Other ☐ _____
Test Pressure 221/225* psig, Test Temp. Ambient °F
Component Design Pressure 309 psig, Temp. 150 °F

9. Remarks:

See attached NPV-1 Code Data reports for the following new valves.

EPN No.	Serial No.
SW-V-2A	84962-4-1
SW-V-2B	84962-4-2

*221 psig for SW-V-2A
*225 psig for SW-V-2B

CERTIFICATE OF COMPLIANCE

We certify that the statements made in the report are correct and this replacement (repair or replacement) conforms to the rules of the ASME Code, Section XI.

Type Code Symbol Stamp Not applicable

Certificate Authorization No. Not applicable Expiration Date Not applicable

Signed R L Wilkins Owner or Owner's Designee, Title Plant Technical Manager

Date 11/12/87 11/13 19 87

CERTIFICATE OF INSERVICE INSPECTION

I, the undersigned, holding a valid commission issued by the National Board of Boiler and Pressure Vessel Inspectors and the State of Washington and employed by Lumbermen's Mutual Casualty Co. of Illinois have inspected the components described in this Owner's Report during the period 3-16-87 to 9-28-87, and state that to the best of my knowledge and belief, the Owner has performed examinations and taken corrective measures described in this Owner's Report in accordance with the requirements of the ASME Code, Section XI.

By signing this certificate neither the Inspector nor his employer makes any warranty, expressed or implied, concerning the examinations and corrective measures described in this Owner's Report. Furthermore, neither the Inspector nor his employer shall be liable in any manner for any personal injury or property damage or a loss of any kind arising from or connected with this inspection.

Sm Hoggard Inspector's Signature Commissions 9556 W National Board, State, and Endorsements

Date 11-17 19 87

FORM NPV-1 N CERTIFICATE HOLDERS' DATA REPORT FOR NUCLEAR PUMPS OR VALVES
As Required by the Provisions of the ASME Code, Section III, Div. 1 PLAN NO. 2-0339

1. Manufactured by Contromatics Div., 222 Roberts St., E. Hartford, Ct. 06108
(Name and Address of N Certificate Holder)
2. Manufactured for WPPSS, 3000 George Washington Way, Richland, Washington 99352
(Name and Address of Purchaser or Owner)
3. Location of Installation Hanford Reservation Project 4, Richland, Washington
(Name and Address)
4. Pump or Valve Butterfly Valve. Nominal Inlet Size 20 (inch) Outlet Size 20 (inch)

	(a) Model No., Series No. or Type	(b) N Certificate Holder's Serial No.	(c) Canadian Registration No.	(d) Drawing No.	(e) Class	(f) Nat'l. Bd. No.	(g) Year Built
(1)	Butterfly	84962-4-1	N/A	2498-20-06E	3	309	1979
(2)							
(3)							
(4)		SW-V-2A, S/N 84962-4-1					
(5)							
(6)				Culdip Singh			
(7)				10/5/87.			
(8)							
(9)							
(10)							

5. Shutdown Cooling Water Tag #4-NSW-V-220A
(Brief description of service for which equipment was designed)

6. Design Conditions 200 (Pressure) psi 350 (Temperature) °F or Valve Pressure Class 300 (1)
7. Cold Working Pressure 680 psi at 100°F.
8. Pressure Retaining Pieces

Mark No.	Material Spec. No.	Manufacturer	Remarks
(a) Castings			
Disc	ASME-SA-351 CF8M	Lodi IronWorks	
Ht #E529			
(b) Forgings			

(1) For manually operated valves only.

* Supplemental sheets in form of lists, sketches or drawings may be used provided (1) size is 8-1/2" x 11", (2) information in items 1, 2 and 5 on this Data Report is included on each sheet, and (3) each sheet is numbered and number of sheets is recorded at top of this form.

(10/77) NSW-2201A This form (E00037) may be obtained from the Order Dept., ASME, 345 E. 47th St., New York, N.Y. 10017

SW-V-2A
S/N 84962-4-1

FORM NPV-1 (Back)

Mark No.	Material Spec. No.	Manufacturer	Remarks
(c) Bolting			Philip Engel 10/5/87
(d) Other Parts			
Body (Plate)	ASME-SA-516 Gr 70	Luken Steel	
Ht #B2010			
Slab 1			

8. Hydrostatic test 1100 psi. Disk Differential test pressure 300 psi.

CERTIFICATE OF COMPLIANCE

We certify that the statements made in this report are correct and that this pump, or valve, conforms to the rules of construction of the ASME Code for Nuclear Power Plant Components. Section III, Div. I, Edition 1974, Addenda Winter 1975 (Date), Code Case No. N/A, Date 2/13/78

Signed Contromatics Division (N Certificate Holder) by William A. Hale (William Hale, Quality Control)

Our ASME Certificate of Authorization No. N-1934 to use the N (N) symbol expires 11/18/80 (Date).

CERTIFICATION OF DESIGN

Design information on file at Contromatics Division

Stress analysis report (Class 1 only) on file at

Design specifications certified by (1) John E. Herman

PE State Wash Reg. No. 15137

Stress analysis certified by (1)

PE State Reg. No.

(1) Signature not required. List name only.

CERTIFICATE OF SHOP INSPECTION

I, the undersigned, holding a valid commission issued by the National Board of Boiler and Pressure Vessel Inspectors and the State or Province of Connecticut and employed by Lumbermens Mutual Co. of North Quincy, Mass. have inspected the pump, or valve, described in this Data Report on 2-15- 19 78, and state that to the best of my knowledge and belief, the N Certificate Holder has constructed this pump, or valve, in accordance with the ASME Code, Section III.

By signing this certificate, neither the Inspector nor his employer makes any warranty, expressed or implied, concerning the equipment described in this Data Report. Furthermore, neither the Inspector nor his employer shall be liable in any manner for any personal injury or property damage or a loss of any kind arising from or connected with this inspection.

Date 2-15- 19 78

Frank Arenzi (Inspector) Commissions NB 5846 (Nat'l Bd., State, Prov. and No.)

P.O. 9779-40A, Item # 21 S.O. Nr84962, Item #4

FORM NPV-1 N CERTIFICATE HOLDERS' DATA REPORT FOR NUCLEAR PUMPS OR VALVES*

As Required by the Provisions of the ASME Code, Section III, Div. 1 PLAN NO. 2-0339

1. Manufactured by Contromatics Div., 222 Roberts St., E. Hartford, Ct. 06108
(Name and Address of N Certificate Holder)
2. Manufactured for WPPSS, 3000 George Washington Way, Richland, Washington 99352
(Name and Address of Purchaser or Owner)
3. Location of Installation Hanford Reservation Project 4, Richland, Washington
(Name and Address)
4. Pump or Valve Butterfly Valve. Nominal Inlet Size 20 (inch) Outlet Size 20 (inch)

	(a) Model No., Series No. or Type	(b) N Certificate Holder's Serial No.	(c) Canadian Registration No.	(d) Drawing No.	(e) Class	(f) Nat'l. Bd. No.	(g) Year Built
(1)	Butterfly	84962-4-2	N/A	2498-20-06E	3	225	1979
(2)							
(3)							
(4)			SW-V-2B, S/N 84962-4-2				
(5)							
(6)				Rudolf Gupb			
(7)				10/5/87.			
(8)							
(9)							
(10)							

5. Shutdown Cooling Water Tag #4-NSW-V-302B
(Brief description of service for which equipment was designed)

6. Design Conditions 200 (Pressure) psi 350 (Temperature) °F or Valve Pressure Class 300 (1)
7. Cold Working Pressure 720 psi at 100°F.
8. Pressure Retaining Pieces

Mark No.	Material Spec. No.	Manufacturer	Remarks
(a) Castings			
Disc	ASME-SA-351 CF8M	Lodi Iron Works	
Ht #E535			
(b) Forgings			

(1) For manually operated valves only.

* Supplemental sheets in form of lists, sketches or drawings may be used provided (1) size is 8-1/2" x 11", (2) information in items 1, 2 and 5 on this Data Report is included on each sheet, and (3) each sheet is numbered and number of sheets is recorded at top of this form.

SW-V-2B
S/N 84962-4-2.
Rudis Eng
10/5/8

FORM NPV-1 (Back)

Mark No.	Material Spec. No.	Manufacturer	Remarks
(c) Bolting			
(d) Other Parts			
Body(Plate)	ASME-SA-516 Gr. 70	Lukens Steel Company	
Ht #D6264			
Slab 5			

9. Hydrostatic test 1100 psi. Disk Differential test pressure 200 psi.

CERTIFICATE OF COMPLIANCE

We certify that the statements made in this report are correct and that this pump, or valve, conforms to the rules of construction of the ASME Code for Nuclear Power Plant Components. Section III, Div. I., Edition 1974.
Addenda Winter 1975 (Date), Code Case No. N/A Date 4/23/79
Signed Contromatics Division (N Certificate Holder) by R. Schwanda, Asst. Quality Control Mg
Our ASME Certificate of Authorization No. N-1934 to use the N (N) symbol expires 11/18/80 (Date).

CERTIFICATION OF DESIGN

Design information on file at Contromatics Division
Stress analysis report (Class 1 only) on file at
Design specifications certified by (1) John E. Herman
PE State Wash Reg. No. 15137
Stress analysis certified by (1)
PE State Reg. No.

(1) Signature not required. List name only.

CERTIFICATE OF SHOP INSPECTION

I, the undersigned, holding a valid commission issued by the National Board of Boiler and Pressure Vessel Inspectors and the State or Province of Connecticut and employed by Lumbermens Mutual Co. of North Quincy, Mass. have inspected the pump, or valve, described in this Data Report on 4-23 19 79, and state that to the best of my knowledge and belief, the N Certificate Holder has constructed this pump, or valve, in accordance with the ASME Code, Section III.

By signing this certificate, neither the Inspector nor his employer makes any warranty, expressed or implied, concerning the equipment described in this Data Report. Furthermore, neither the Inspector nor his employer shall be liable in any manner for any personal injury or property damage or a loss of any kind arising from or connected with this inspection.

Date 4-23 19 79.

WASHINGTON PUBLIC POWER SUPPLY SYSTEM

PLAN NO. 2-0340

FORM NIS-2 OWNER'S REPORT FOR REPAIRS OR REPLACEMENTS
As Required by the Provisions of the ASME Code Section XI

1. Owner (Name) Washington Public Power Supply System — Date 8/12/88
   Owner (Address) 3000 George Washington Way, Richland, WA — Sheet 1 of 1
2. Plant (Name) WPPSS Nuclear Power Plant (WNP) — Unit WNP-2
   Plant (Address) Hanford, Benton County, WA — WPPSS (Repair Organization P.O. No., Job No., etc.)
3. Work Performed by (Name) WPPSS
   Work Performed by (Address) 3000 George Wash. Way, Richland, WA
4. Identification of System Service Water (SW) System
5. (a) Applicable Construction Code ASME Section III 19 74 Edition, W73 Addenda, None Code Case
   (b) Applicable Edition of ASME Section XI Utilized for Repairs or Replacements 19 80 Edition, W80 Addenda, N308 Code Case
6. Identification of Components Repaired or Replaced and Replacement Components

Name of Component	Name of Manufacturer	Manufacturer Serial No.	National Board No.	Other I.D.	Year Built	Repaired, Replaced, or Replacement	ASME Code Stamped (Yes or No) Code Class
PI(1)-ST-(SW-SR-42)A&B	JCI	*	N/A	N/A	1983	Replacement	Yes, Class 3
PI(1)-ST-(SW-SR-43)A&B	JCI	*	N/A	N/A	1983	Replacement	Yes, Class 3

7. Description of Work:

Fabricated service water radiation detector chambers for sample racks SW-SR-42 and SW-SR-43. The fabrication work was performed as follows:

1) Cut material to the required dimensions.
2) Prepared cut material for welding.
3) Made required welds.
4) Performed PT examination on welds. PT examination results acceptable.
5) Performed pressure test under ASME Section XI Plan No. 2-0341 to confirm pressure boundary integrity. No evidence of leakage during pressure test.

Note: Service water radiation detector chambers were installed under ASME Section Plan No. 2-0341.

Notes:
*PI(1)-ST-(SW-SR-42)-A and B
*PI(1)-ST-(SW-SR-43)-A and B

JCI - Johnson Control, Inc.

WASHINGTON PUBLIC POWER SUPPLY SYSTEM

PLAN NO. 2-0340

FORM NIS-2 (Back)

8. Tests Conducted: Hydrostatic ☒ Pneumatic ☐ Nominal Operating Pressure ☐ Other ☐ _____
Test Pressure 308/312 psig, Test Temp. 78/81 °F
Component Design Pressure _____ psig, Temp. _____ °F

9. Remarks:

The hydrostatic test on the radiation detector chambers was performed under ASME Section XI Plan No. 2-0341.

CERTIFICATE OF COMPLIANCE

We certify that the statements made in the report are correct and this replacement (repair or replacement) conforms to the rules of the ASME Code, Section XI.

Type Code Symbol Stamp Not applicable

Certificate Authorization No. Not applicable Expiration Date Not applicable

Signed [signature] (Owner or Owner's Designee,) Title Plant Technical Manager

K Swob 8/12/88

Date 8/17 19 88

CERTIFICATE OF INSERVICE INSPECTION

I, the undersigned, holding a valid commission issued by the National Board of Boiler and Pressure Vessel Inspectors and the State of Washington and employed by Lumbermen's Mutual Casualty Co. of Illinois have inspected the components described in this Owner's Report during the period 3/20/87 to 8/12/88, and state that to the best of my knowledge and belief, the Owner has performed examinations and taken corrective measures described in this Owner's Report in accordance with the requirements of the ASME Code, Section XI.

By signing this certificate neither the Inspector nor his employer makes any warranty, expressed or implied, concerning the examinations and corrective measures described in this Owner's Report. Furthermore, neither the Inspector nor his employer shall be liable in any manner for any personal injury or property damage or a loss of any kind arising from or connected with this inspection.

[signature] (Inspector's Signature) Commissions 5470 W (National Board, State, and Endorsements)

Date 8/17 19 88

WASHINGTON PUBLIC POWER SUPPLY SYSTEM

PLAN NO. 2-0341
2-0341R1

FORM NIS-2 OWNER'S REPORT FOR REPAIRS OR REPLACEMENTS
As Required by the Provisions of the ASME Code Section XI

1. Owner (Name) Washington Public Power Supply System — Date 8/12/88
   Owner (Address) 3000 George Washington Way, Richland, WA — Sheet 1 of 1
2. Plant (Name) WPPSS Nuclear Power Plant (WNP) — Unit WNP-2
   Plant (Address) Hanford, Benton County, WA — C20069 (Repair Organization P.O. No., Job No., etc.)
3. Work Performed by (Name) Bechtel Construction, Inc.
   Work Performed by (Address) P.O. Box 600, Richland, WA
4. Identification of System Service Water (SW) System
5. (a) Applicable Construction Code ASME Section III 19 * Edition, * Addenda, None Code Case
   (b) Applicable Edition of ASME Section XI Utilized for Repairs or Replacements 19 80 Edition, W80 Addenda, N308 Code Case
6. Identification of Components Repaired or Replaced and Replacement Components

Name of Component	Name of Manufacturer	Manufacturer Serial No.	National Board No.	Other I.D.	Year Built	Repaired, Replaced, or Replacement	ASME Code Stamped (Yes or No) Code Class
SW(21)-2	WPPSS	**	N/A	N/A	1983	Replacement	Yes, Class 3
SW(22)-2	WPPSS	**	N/A	N/A	1983	Replacement	Yes, Class 3
PI(1)-ST-(SW-SR-42)-A&B	JCI	**	N/A	N/A	1983	Replacement	Yes, Class 3
PI(1)-ST-(SW-SR-43)-A&B	JCI	**	N/A	N/A	1983	Replacement	Yes, Class 3

7. Description of Work:

Installed piping material, tubing material and valves. The installation work was performed as follows:

1) Cut and removed existing piping and tubing.
2) Installed new piping material, tubing material and valves.
3) Installed new radiation detector chambers fabricated under Plan No. 2-0340.
4) Made required socket welds.
5) Installed new supports.
6) Performed pressure test to confirm pressure boundary integrity. No evidence of leakage during pressure test.

Notes:
*1971W73 for SW(21)-2 and SW(22)-2
**SW(21)-2-P1 and SW(22)-2-P1
***PI(1)-ST-(SW-SR-42)-A&B and PI(1)-ST-(SW-SR-43)-A&B
*1974W75 for PI(1)-ST-(SW-SR-42)-A&B and PI(1)-ST-(SW-SR-43)-A&B
JCI - Johnson Control, Inc.

WASHINGTON PUBLIC POWER SUPPLY SYSTEM

PLAN NO. 2-0341
2-0341R1

FORM NIS-2 (Back)

8. Tests Conducted: Hydrostatic ☒ Pneumatic ☐ Nominal Operating Pressure ☐ Other ☐ _____
Test Pressure 308 psig, Test Temp. 71/93.8 °F
Component Design Pressure 309 psig, Temp. 150 °F

9. Remarks:
See attached NPV-1 Code Data reports for the following valves.

EPN No.	Serial No.	EPN No.	Serial No.
SW-V-926	89014L-2	PI-V-916	89055L-3
SW-V-924	89014L-1	PI-V-915	89055L-21
SW-V-920	89014L-3	PI-V-917	89055L-28
SW-V-922	89014L-2	PI-V-918	89055L-45
		PI-V-913	GT 1226
		PI-V-914	GT 1200

CERTIFICATE OF COMPLIANCE

We certify that the statements made in the report are correct and this replacement (repair or replacement) conforms to the rules of the ASME Code, Section XI.

Type Code Symbol Stamp Not applicable

Certificate Authorization No. Not applicable Expiration Date Not applicable

Signed [signature] Owner or Owner's Designee, Title Plant Technical Manager

K Swiss 8/12/88

Date 8/17 19 88

CERTIFICATE OF INSERVICE INSPECTION

I, the undersigned, holding a valid commission issued by the National Board of Boiler and Pressure Vessel Inspectors and the State of Washington and employed by Lumbermen's Mutual Casualty Co. of Illinois have inspected the components described in this Owner's Report during the period 4/15/87 to 8/12/88, and state that to the best of my knowledge and belief, the Owner has performed examinations and taken corrective measures described in this Owner's Report in accordance with the requirements of the ASME Code, Section XI.

By signing this certificate neither the Inspector nor his employer makes any warranty, expressed or implied, concerning the examinations and corrective measures described in this Owner's Report. Furthermore, neither the Inspector nor his employer shall be liable in any manner for any personal injury or property damage or a loss of any kind arising from or connected with this inspection.

[signature] Inspector's Signature Commissions 5470W National Board, State, and Endorsements

Date 8/17 19 88

FORM NPV-1 MANUFACTURERS' DATA REPORT FOR NUCLEAR PUMPS OR VALVES*
(As Required by the Provisions of the ASME Code, Section III, Div. 1)

SW-V-920
SW-V-922
SW-V-924
SW-V-926

1. Manufactured by Xomox Corporation Tufline Division (Name and Address of Manufacturer) Order #E 3961
2. Manufactured for Washington Public Power Supply System (Name and Address of Purchaser or Owner) Order # 9779-41
3. Location of Installation WNP 1/4 site, Hanford Works, Richland, Washington (Name and Address)
4. Pump or Valve Plug valve. Nominal Inlet Size 2" (inch) Outlet Size 2" (inch)

Dildip Singh 3/23/87.

PLAN NO. 2-0341

	(a) Model No., Series No. or Type	(b) Manufacturers' Serial No.	(c) Canadian Registration No.	(d) Drawing No.	(e) Class	(f) Nat'l. Bd. No.	(g) Year Built
(1)	1366SW	89014L-1 thru -8	---	NP 3511B	2	3593-3600	1980
(2)		(Consecutive)				(Consecutive w/	
(3)						serial numbers)	
(4)	WNP-2 EPN		WNP-1/4 EPN		S/N		
(5)	SW-V-926		4CC-V-161A		89014L-2		
(6)	SW-V-924		4CC-V-160A		89014L-1		
(7)	SW-V-920		4CC-V-164B		89014L-3		
(8)	SW-V-922		4CC-V-165B		89014L-4		
(9)							
(10)							

Dildip Singh 10/13/87

5. Item #010, Customer Item #88, UHMWP sleeve & seals compl. w/wrench operator. (Brief description of service for which equipment was designed)
Tag I.D. 4-CSS-V-160A, 161A, 164B, 165B, 166B, 167B, 170A, 171A

6. Design Conditions n/a (Pressure) psi n/a (Temperature) °F or Valve Pressure Class 300 lb (1)
7. Cold Working Pressure 720 psi at 100°F.
8. Pressure Retaining Pieces

Heat #	Mark No.	Material Spec. No.	Manufacturer	Remarks
	(a) Castings			Serial Number
9380D	(1) Body	ASME SA 351 GR CF8M	Lebanon Steel Fdry.	B2113
9439D	(1) Body	ASME SA 351 GR CF8M	Lebanon Steel Fdry.	B2125
776B	(1) Body	ASME SA 351 GR CF8M	Lebanon Steel Fdry.	B2120
777B	(1) Body	ASME SA 351 GR CF8M	Lebanon Steel Fdry.	B2122
9727C	(1) Body	ASME SA 351 GR CF8M	Lebanon Steel Fdry.	B2118
9442D	(2) Body	ASME SA 351 GR CF8M	Lebanon Steel Fdry.	B2126, B2123
9375D	(1) Body	ASME SA 351 GR CF8M	Lebanon Steel Fdry.	B2108
2385B	(4) Plug	ASME SA 351 GR CF8M	Lebanon Steel Fdry.	P2263,P2253,P2260,P22
2386B	(2) Plug	ASME SA 351 GR CF8M	Lebanon Steel Fdry.	P2259,P2256
2387B	(1) Plug	ASME SA 351 GR CF8M	Lebanon Steel Fdry.	P2248
	(b) Forgings			
8800A	(1) Plug	ASME SA 351 GR CF8M	Lebanon Steel Fdry.	P2246
1880B	(2) Cover	ASME SA 351 GR CF8	Lebanon Steel Fdry.	C2121, C2130
1881B	(1) Cover	ASME SA 351 GR CF8	Lebanon Steel Fdry.	C2123
1887B	(3) Cover	ASME SA 351 GR CF8	Lebanon Steel Fdry.	C2126, C2113, C2116
1913B	(1) Cover	ASME SA 351 GR CF8	Lebanon Steel Fdry.	C2118
1894B	(1) Cover	ASME SA 351 GR CF8	Lebanon Steel Fdry.	C2127

DOCUMENT REVIEWED FEB 5 1980 By S.V. U.E.S.C.

(1) For manually operated valves only.

* Supplemental sheets in form of lists, sketches or drawings may be used provided (1) size is 8-1/2" x 11", (2) information in items 1, 2 and 5 on this data report is included on each sheet, and (3) each sheet is numbered and number of sheets is recorded at top of this form.

(3/77) This form (E00037) may be obtained from the Order Dept., ASME, 345 E. 47 St., New York, N.Y. 10017

063-01-1036

FORM NPV-1 (Back)

Mark No.	Material Spec. No.	Manufacturer	Remarks
(c) Bolting			PLAN No. 2-0341
Heat 58002 Bolt	ASME SA193 Gr B6	Texas Bolt Company	
		SW-V-920	
		SW-V-922	
		SW-V-924	
		SW-V-926	
			Rudolph Lewis 10/13/87
(d) Other Parts			

9. Hydrostatic test 1100 psi.

CERTIFICATE OF COMPLIANCE

We certify that the statements made in this report are correct and that this pump, or valve, conforms to the rules of construction of the ASME Code for Nuclear Power Plant Components. Section III, Div. I., Edition 1974, Addenda Winter 1975 (Date), Code Case No. n/a, Date January 8, 1980

Signed Xomox Corporation-Tufline Div. (Manufacturer) by David Bieterman

Our ASME Certificate of Authorization No. N 1086 to use the "N" (N) (NPV) symbol expires 5/6/81 (Date).

CERTIFICATION OF DESIGN

Design information on file at Xomox Corporation-Tufline Division-Cincinnati, Ohio

Stress analysis report (Class 1 only) on file at n/a

Design specifications certified by (1) Rathin Basu

PE State Washington Reg. No. 15049

Stress analysis certified by (1) n/a

PE State _____ Reg. No. _____

(1) Signature not required. List name only.

DOCUMENT REVIEWED FEB 6 1980 J.S.V. U.S.N.C.

CERTIFICATE OF SHOP INSPECTION

I, the undersigned, holding a valid commission issued by the National Board of Boiler and Pressure Vessel Inspectors and the State or Province of OHIO and employed by Commercial Union Ins. of Boston, Massachusetts have inspected the pump, or valve, described in this Data Report on Jan 10 19 80, and state that to the best of my knowledge and belief, the Manufacturer has constructed this pump, or valve, in accordance with the ASME Code, Section III.

By signing this certificate, neither the Inspector nor his employer makes any warranty, expressed or implied, concerning the equipment described in this Data Report. Furthermore, neither the Inspector nor his employer shall be liable in any manner for any personal injury or property damage or a loss of any kind arising from or connected with this inspection.

Date Jan 10 19 80

(Inspector) Commissions NB438C (Nat'l Bd., State, Prov. and No.)

CORRECTED COPY

FORM NPV-1 MANUFACTURERS' DATA REPORT FOR NUCLEAR PUMPS OR VALVES*

(As Required by the Provisions of the ASME Code, Section III, Div. 1)

PI-V-915
PI-V-916
PI-V-917
PI-V-918

1. Manufactured by Xomox Corporation Tufline Division, Order 39631
(Name and Address of Manufacturer)

2. Manufactured for Washington Public Power Supply System, Order 9779-41H
(Name and Address of Purchaser or Owner)

3. Location of Installation WNP-1/4 site, Hanford Works, Richland, Washington
(Name and Address)

4. Pump or Valve plug valve. Nominal Inlet Size 3/4" (inch) Outlet Size 3/4" (inch) Plan No. Z-0341 Kuldip Singh 3/23/87

	(a) Model No., Series No. or Type	(b) Manufacturers' Serial No.	(c) Canadian Registration No.	(d) Drawing No.	(e) Class	(f) Nat'l. Bd. No.	(g) Year Built
(1)	1366SW	89055L-1 thru -6	--	NP3519B	2	3188-3211	1979
(2)		-8 thru -25				(consecutive	
(3)		Consecutive				w/Serial nos.)	
(4)	WNP-2 EPN	WNP-1/4 EPN		S/N			
(5)	PI-V-916	VPIJ67BAS-2		89055L-3			
(6)	PI-V-915	VPIJ67BAS-2		89055L-21			
(7)	PI-V-917	VPIJ67BAS-2		89055L-28			
(8)	PI-V-918	VPIJ67BAS-2		89055L-45			
(9)							
(10)							

Kuldip Singh 10/13/87

FOR INFORMATION ONLY

5. Radwaste, Item #4, Customer Item #93, UHMWP sleeve and seal
(Brief description of service for which equipment was designed)

Tag I.D.: VPIJ67BAS2

6. Design Conditions ~~PSD~~ IPS n/a psi (Pressure) n/a °F (Temperature) or Valve Pressure Class 300 lb. (1)

7. Cold Working Pressure 720 psi at 100°F.

8. Pressure Retaining Pieces

Heat #	Mark No.	Material Spec. No.	Manufacturer	Remarks
	(a) Castings			Serial Numbers
858B	(1) Body	ASME SA351 GR CF8M	Lebanon Steel Fdry.	B1405
8841A	(1) Body	ASME SA351 GR CF8M	Lebanon Steel Fdry.	B1410
8936D	(9) Body	ASME SA351 GR CF8M	Lebanon Steel Fdry.	B1749,B1795,B174
				B1773,B1812,B1801,
				B1759,B1751,B1755
9577D	(4) Body	ASME SA351 GR CF8M	Lebanon Steel Fdry.	B1782,B1783,
				B1792,B1767
8942A	(6) Body	ASME SA351 GR CF8M	Lebanon Steel Fdry.	B1737,B1720,B173
				B1769,B1788,B1731
735B	(2) Body	ASME SA351 GR CF8M	Lebanon Steel Fdry.	B1404,B1406
8698A	(1) Body	ASME SA351 GR CF8M	Lebanon Steel Fdry.	B1412
Y4155	(21) Plug	ASME SA351 GR CF8M	Hitchiner Mfg.	P1855,P1858,P1903,
				P1904,P1865,P1921,
				P1922,P1931,P1932,
				P1936,P1937,P1971,
				P1857,P1861,P2029,
				P2041,P1945,P1946,
				P1933,P1935,P1948

DOCUMENT REVIEWED SEP 29 1979

(1) For manually operated valves only.

* Supplemental sheets in form of lists, sketches or drawings may be used provided (1) size is 8-1/2" x 11", (2) information in items 1, 2 and 5 on this data report is included on each sheet, and (3) each sheet is numbered and number of sheets is recorded at top of this form.

(3/77) This form (E00037) may be obtained from the Order Dept., ASME, 345 E. 47 St., New York, N.Y. 10017

063-01-1036

Mark No.	Material Spec. No.	Manufacturer	Remarks
Heat # (c) Bolting			Plan No. 2-0341
8643795 Bolt	ASME SA193 GR B6	Texas Bolt Co.	
7632 Bolt	ASME SA193 GR B6	Texas Bolt Co.	
		PI-V-915	
		PI-V-916	
		PI-V-917	
		PI-V-918	
			Philip Sumpb 10/13/79
(d) Other Parts			

9. Hydrostatic test 1100 psi.

CERTIFICATE OF COMPLIANCE

We certify that the statements made in this report are correct and that this pump, or valve, conforms to the rules of construction of the ASME Code for Nuclear Power Plant Components, Section III, Div. I, Edition 1974, Addenda Winter 1975 (Date), Code Case No. n/a, Date September 20, 1979

Signed Xomox Corp. Tufline Div. (Manufacturer) by D. J. Bieterman

Our ASME Certificate of Authorization No. N 1086 to use the "N" (N) (NPV) symbol expires 5/6/81 (Date).

CERTIFICATION OF DESIGN

Design information on file at Xomox Corp. Tufline Div., Cincinnati, Ohio

Stress analysis report (Class 1 only) on file at n/a

Design specifications certified by (1) Rathin Basu

PE State Washington Reg. No. 15049

Stress analysis certified by (1) n/a

PE State _____ Reg. No. _____

(1) Signature not required. List name only.

DOCUMENT REVIEWED SEP. 29 1979 J.S.V. BY

CERTIFICATE OF SHOP INSPECTION

I, the undersigned, holding a valid commission issued by the National Board of Boiler and Pressure Vessel Inspectors and the State or Province of Ohio and employed by Commercial Union Ins of Boston, Massachusetts have inspected the pump, or valve, described in this Data Report on Sept 24 1979 and state that to the best of my knowledge and belief, the Manufacturer has constructed this pump, or valve, in accordance with the ASME Code, Section III.

By signing this certificate, neither the Inspector nor his employer makes any warranty, expressed or implied, concerning the equipment described in this Data Report. Furthermore, neither the Inspector nor his employer shall be liable in any manner for any personal injury or property damage or a loss of any kind arising from or connected with this inspection.

Date Sept 24 1979

Robert E. Brown (Inspector) Commissions NB 4386 (Nat'l Bd., State, Prov. and No.)

SUPPORTED DRAWING NO. 12997 (was) 10880

PLAN NO. 2-0341

FORM NPV-1 MANUFACTURERS' DATA REPORT FOR NUCLEAR PUMPS OR VALVES*

As Required by the Provisions of the ASME Code Rules

PI-V-913, S/N GT1226

Rudolph Swift 10/14/87

1. Manufactured by DRAGON VALVES, INC. • 13457 Excelsior Drive • Norwalk, CA. 90650 Order No. N17709R SUPPL. #3
(Name & Address of Manufacturer)

2. Manufactured for WSH/BOECON/GERI, Richland, Washington 99352 Order No. 215-15410
(Name and Address)

3. Owner Washington Public Power Supply System, Hanford Jobsite No. 2

4. Location of Plant Richland, Washington

5. Pump or Valve Identification Serial Numbers GT1210 thru GT1231 (22 Pcs.)

1/2 Inch FNPT Instrument Globe Valves, Part Number 500FN057D.
(Brief description of service for which equipment was designed)

A.I. 8/11/82

(a) Drawing No. ~~10880~~ 12997 Prepared by Dragon Valves, Inc.

(b) National Board No. ----

WBGBR 215 16356

6. Design Conditions 3600 (Pressure) psi 100 (Temperature) °F or Pressure Class _____ (1)

7. The material, design, construction, and workmanship complies with ASME Code Section III, Class 2

Edition 1974, Addenda Date 6-30-76, Case No. _____

Mark No.	Material Spec. No.	Manufacturer	Remarks
(a) Castings None			
(b) Forgings			
Body HT 76285	SA182 Gr. F316	Ajax Forge Co.	

REVIEWED
MAR 26 1982
BECHTEL QUALITY CONTROL
BY: CX

FOR INFORMATION ONLY

(1) For manually operated valves only

*Supplemental sheets in form of lists, sketches or drawings may be used provided (1) size is 8½" x 11", (2) information in items 1, 2, 5a and 5b on this data report is included on each sheet, and (3) each sheet is numbered and number of sheets is recorded at top of this form.

6

PLAN No. 2-5341
PI-V-913

FORM NPV-1 (back)

	Mark No.	Material Spec. No.	Manufacturer	Remarks
(c) Bolting None				
(d) Other Parts -				
Bonnet	HT 8643313	SA479 TY 316	Republic Steel Corp.	
Disc	HT 02984	SA564 Gr. 630	Al Tech Spec. Metals Div.	
Union Nut	HT 11684	SA479 TY 316	Carpenter Technology Corp.	

8. Hydrostatic test 5400 psi.

CERTIFICATION OF DESIGN

Design information on file at WSH/BOECON/GERI
Stress analysis report on file at not applicable
Design specifications certified by David J. Murphy (1) Prof. Eng. State WA Reg. No. 12542
Stress analysis report certified by not required (1) Prof. Eng. State ____ Reg. No. ____
(1) Signature not required. List name only.

FOR INFORMATION ONLY

We certify that the statements made in this report are correct.

Date December 11, 1978 Signed DRAGON VALVES, INC. (Manufacturer) By [signature]

Certificate of Authorization No. N-1033 expires May 6, 1981

CERTIFICATE OF SHOP INSPECTION

I, the undersigned, holding a valid commission issued by the National Board of Boiler and Pressure Vessel Inspectors and/or the State of Province of CALIFORNIA and employed by Division of Industrial Safety of CALIFORNIA have inspected the equipment described in this Data Report on 12-11-1978, and state that to the best of my knowledge and belief, the Manufacturer has constructed this equipment in accordance with the applicable Subsections of ASME Code, Section III.

By signing this certificate, neither the Inspector nor his employer makes any warranty, expressed or implied, concerning the equipment described in this Data Report. Furthermore, neither the Inspector nor his employer shall be liable in any manner for any personal injury or property damage or a loss of any kind arising from or connected with this inspection.

WBGBR 215 16356

Date 12-11-1978

[signature] (Inspector) Commissions Cal. 857 (National Board, State, Province and No.)

Printed in U.S.A.

CORRECTED DRAWING NO. 12997 (was) 10880

WBGR 215 16558

PLAN NO. 2-0341.

FORM NPV-1 MANUFACTURERS' DATA REPORT FOR NUCLEAR PUMPS OR VALVES*

As Required by the Provisions of the ASME Code Rules

PI-V-914, S/N GT1200

Rudolph Swift 10/14/87.

1. Manufactured by DRAGON VALVES, INC. • 13457 Excelsior Drive • Norwalk, CA. 90650 Order No. N17709R SUPPL. #3
(Name & Address of Manufacturer)

2. Manufactured for WSH/BOECON/GERI, Richland, Washington 99352 Order No. 215-15410
(Name and Address)

3. Owner Washington Public Power Supply System, Hanford Jobsite No. 2

4. Location of Plant Richland, Washington

5. Pump or Valve Identification Serial Numbers GT1185 thru GT1209 (25 Pcs.)

1/2 Inch FNPT Instrument Globe Valves, Part Number 500FN057D.
(Brief description of service for which equipment was designed)

A.I-gw 2/11/82 MB

(a) Drawing No. ~~10880~~ 12997 Prepared by Dragon Valves, Inc.

(b) National Board No. ——

6. Design Conditions 3600 (Pressure) psi 100 (Temperature) °F or Pressure Class _____ (1)

7. The material, design, construction, and workmanship complies with ASME Code Section III, Class 2

Edition 1974, Addenda Date 6-30-76, Case No. _____

Mark No.	Material Spec. No.	Manufacturer	Remarks
(a) Castings None			
(b) Forgings			
Body HT 76285	SA182 Gr. F316	Ajax Forge Co.	

REVIEWED BY MAR 26 1982 BECHTEL QUALITY CONTROL BY: _____

FOR INFORMATION ONLY

(1) For manually operated valves only

*Supplemental sheets in form of lists, sketches or drawings may be used provided (1) size is 8½" x 11", (2) information in items 1, 2, 5a and 5b on this data report is included on each sheet, and (3) each sheet is numbered and number of sheets is recorded at top of this form.

FORM NPV-1 (back)

Plan No. 2-0341
PI-V-914.

	Mark No.	Material Spec. No.	Manufacturer	Remarks
(c) Bolting None				
(d) Other Parts -				
Bonnet	HT 8643313	SA479 TY 316	Republic Steel Corp.	
Disc	HT 02984	SA564 Gr. 630	Al Tech Spec. Metals Div.	
Union Nut	HT 11684	SA479 TY 316	Carpenter Technology Corp.	

8. Hydrostatic test 5400 psi.

CERTIFICATION OF DESIGN

Design information on file at WSH/BOECON/GERI

Stress analysis report on file at not applicable

Design specifications certified by David J. Murphy (1) Prof. Eng. State WA Reg. No. 12542

Stress analysis report certified by not required (1) Prof. Eng. State _____ Reg. No. _____

(1) Signature not required. List name only.

We certify that the statements made in this report are correct.

Date December 11, 19 78 Signed DRAGON VALVES, INC. (Manufacturer) By [signature]

Certificate of Authorization No. N-1033 expires May 6, 1981

CERTIFICATE OF SHOP INSPECTION

I, the undersigned, holding a valid commission issued by the National Board of Boiler and Pressure Vessel Inspectors and/or the State of Province of CALIFORNIA and employed by Division of Industrial Safety of CALIFORNIA have inspected the equipment described in this Data Report on 12-11- 19 78, and state that to the best of my knowledge and belief, the Manufacturer has constructed this equipment in accordance with the applicable Subsections of ASME Code, Section III.

By signing this certificate, neither the Inspector nor his employer makes any warranty, expressed or implied, concerning the equipment described in this Data Report. Furthermore, neither the Inspector nor his employer shall be liable in any manner for any personal injury or property damage or a loss of any kind arising from or connected with this inspection.

WBGBR 215 16356

Date 12-11- 19 78

FOR INFORMATION ONLY

[signature] (Inspector) Commissions Cal. 857 (National Board, State, Province and No.)

Printed in U.S.A.

2 1 2 3 0 3 0 4 0

WASHINGTON PUBLIC POWER SUPPLY SYSTEM

PLAN NO. 2-0342

FORM NIS-2 OWNER'S REPORT FOR REPAIRS OR REPLACEMENTS
As Required by the Provisions of the ASME Code Section XI

1. Owner (Name) Washington Public Power Supply System — Date 11/17/87
   Owner (Address) 3000 George Washington Way, Richland, WA — Sheet 1 of 1
2. Plant (Name) WPPSS Nuclear Power Plant (WNP) — Unit WNP-2
   Plant (Address) Hanford, Benton County, WA — WPPSS (Repair Organization P.O. No., Job No., etc.)
3. Work Performed by (Name) WPPSS
   Work Performed by (Address) 3000 George Wash. Way, Richland, WA
4. Identification of System Service Water (SW) System
5. (a) Applicable Construction Code ASME Section III 19 71 Edition, W73 Addenda, None Code Case
   (b) Applicable Edition of ASME Section XI Utilized for Repairs or Replacements 19 80 Edition, W80 Addenda, N308 Code Case
6. Identification of Components Repaired or Replaced and Replacement Components

Name of Component	Name of Manufacturer	Manufacturer Serial No.	National Board No.	Other I.D.	Year Built	Repaired, Replaced, or Replacement	ASME Code Stamped (Yes or No) Code Class
SW(1)-2	WPPSS	*	N/A	N/A	1983	Replacement	Yes, Class 3

7. Description of Work:

Replaced dented pipe. The replacement work was performed as follows:

1) Cut and removed dented pipe.
2) Beveled pipe ends for welding.
3) Installed new piece of pipe and made circumferential butt welds.
4) Performed MT examination on the final circumferential butt welds. MT examination results acceptable.
5) Performed pressure test to confirm pressure boundary integrity. No evidence of leakage during pressure test.

Notes:
*SW(1)-2-P2

WASHINGTON PUBLIC POWER SUPPLY SYSTEM

PLAN NO. 2-0342

FORM NIS-2 (Back)

8. Tests Conducted: Hydrostatic ☒ Pneumatic ☐ Nominal Operating Pressure ☐ Other ☐ _____
Test Pressure 307 psig, Test Temp. 74 °F
Component Design Pressure 309 psig, Temp. 150 °F

9. Remarks:

CERTIFICATE OF COMPLIANCE

We certify that the statements made in the report are correct and this replacement (repair or replacement) conforms to the rules of the ASME Code, Section XI.

Type Code Symbol Stamp Not applicable

Certificate Authorization No. Not applicable Expiration Date Not applicable

Signed R C Wehrlin (Owner or Owner's Designee) Title Plant Technical Manager

11/12/87

Date 11/13 19 87

CERTIFICATE OF INSERVICE INSPECTION

I, the undersigned, holding a valid commission issued by the National Board of Boiler and Pressure Vessel Inspectors and the State of Washington and employed by Lumbermen's Mutual Casualty Co. of Illinois have inspected the components described in this Owner's Report during the period 3-20-87 to 10-19-87, and state that to the best of my knowledge and belief, the Owner has performed examinations and taken corrective measures described in this Owner's Report in accordance with the requirements of the ASME Code, Section XI.

By signing this certificate neither the Inspector nor his employer makes any warranty, expressed or implied, concerning the examinations and corrective measures described in this Owner's Report. Furthermore, neither the Inspector nor his employer shall be liable in any manner for any personal injury or property damage or a loss of any kind arising from or connected with this inspection.

Dan Hoggard (Inspector's Signature) Commissions 9556 W (National Board, State, and Endorsements)

Date 11-17 19 87

WASHINGTON PUBLIC POWER SUPPLY SYSTEM

PLAN NO. 2-0343

FORM NIS-2 OWNER'S REPORT FOR REPAIRS OR REPLACEMENTS
As Required by the Provisions of the ASME Code Section XI

1. Owner (Name) Washington Public Power Supply System — Date 11/17/87
   Owner (Address) 3000 George Washington Way, Richland, WA — Sheet 1 of 1
2. Plant (Name) WPPSS Nuclear Power Plant (WNP) — Unit WNP-2
   Plant (Address) Hanford, Benton County, WA — WPPSS (Repair Organization P.O. No., Job No., etc.)
3. Work Performed by (Name) WPPSS
   Work Performed by (Address) 3000 George Wash. Way, Richland, WA
4. Identification of System Low Pressure Core Spray (LPCS) and Instrument Lines
5. (a) Applicable Construction Code ASME Section III 19 * Edition, * Addenda, None Code Case
   (b) Applicable Edition of ASME Section XI Utilized for Repairs or Replacements 19 80 Edition, W80 Addenda, N308 Code Case
6. Identification of Components Repaired or Replaced and Replacement Components

Name of Component	Name of Manufacturer	Manufacturer Serial No.	National Board No.	Other I.D.	Year Built	Repaired, Replaced, or Replacement	ASME Code Stamped (Yes or No) Code Class
LPCS(1)-2	WPPSS	**	N/A	N/A	1983	Replacement	Yes, Class 2
LPCS(1)-4	WPPSS	**	N/A	N/A	1983	Replacement	Yes, Class 2
PI(1)-ST-(H22-P001)-A4 and A5	JCI	***	N/A	N/A	1983	Replacement	Yes, Class 2

7. Description of Work:

Spared instrument tubing and piping associated with LPCS-DPI-10. The installation work was performed as follows:

1) Cut instrument tubing and piping.
2) Installed compression type tube caps for tubing.
3) Installed pipe caps for piping and made required socket welds.
4) Performed PT examination on the socket welds. PT examination results acceptable.

Notes:
*1971W73 for LPCS(1)-2 and LPCS(1)-4
**LPCS(1)-2-P1 and LPCS(1)-4-P1
JCI - Johnson Control, Inc.
*1974W75 for PI(1)-ST-(H22-P001)A4 and A5
***PI(1)-ST-(H22-P001)-A4 and A5

WASHINGTON PUBLIC POWER SUPPLY SYSTEM

PLAN NO. 2-0343

FORM NIS-2 (Back)

8. Tests Conducted: Hydrostatic ☐ Pneumatic ☐ Nominal Operating Pressure ☐ Other ☒ None
Test Pressure _____ psig, Test Temp. _____ °F
Component Design Pressure _____ psig, Temp. _____ °F

9. Remarks:

None

CERTIFICATE OF COMPLIANCE

We certify that the statements made in the report are correct and this replacement (repair or replacement) conforms to the rules of the ASME Code, Section XI.

Type Code Symbol Stamp Not applicable

Certificate Authorization No. Not applicable Expiration Date Not applicable

Signed [signature] Owner or Owner's Designee, Title Plant Technical Manager

11/12/87

Date 11/13 19 87

CERTIFICATE OF INSERVICE INSPECTION

I, the undersigned, holding a valid commission issued by the National Board of Boiler and Pressure Vessel Inspectors and the State of Washington and employed by Lumbermen's Mutual Casualty Co. of Illinois have inspected the components described in this Owner's Report during the period 4-2-87 to 10-9-87, and state that to the best of my knowledge and belief, the Owner has performed examinations and taken corrective measures described in this Owner's Report in accordance with the requirements of the ASME Code, Section XI.

By signing this certificate neither the Inspector nor his employer makes any warranty, expressed or implied, concerning the examinations and corrective measures described in this Owner's Report. Furthermore, neither the Inspector nor his employer shall be liable in any manner for any personal injury or property damage or a loss of any kind arising from or connected with this inspection.

[signature] Inspector's Signature Commissions 9556 National Board, State, and Endorsements

Date 11-17 19 87

WASHINGTON PUBLIC POWER SUPPLY SYSTEM

PLAN NO. 2-0344

FORM NIS-2 OWNER'S REPORT FOR REPAIRS OR REPLACEMENTS
As Required by the Provisions of the ASME Code Section XI

1. Owner (Name) Washington Public Power Supply System — Date 1-4-88
   Owner (Address) 3000 George Washington Way, Richland, WA — Sheet 1 of 1
2. Plant (Name) WPPSS Nuclear Power Plant (WNP) — Unit WNP-2
   Plant (Address) Hanford, Benton County, WA — WPPSS (Repair Organization P.O. No., Job No., etc.)
3. Work Performed by (Name) WPPSS
   Work Performed by (Address) 3000 George Washington Way, Richland, WA. 99352
4. Identification of System High Pressure Core Spray (HPCS) System
5. (a) Applicable Construction Code ASME Section III 19 * Edition, * Addenda, None Code Case
   (b) Applicable Edition of ASME Section XI Utilized for Repairs or Replacements 19 80 Edition, W80 Addenda, N308 Code Case
6. Identification of Components Repaired or Replaced and Replacement Components

Name of Component	Name of Manufacturer	Manufacturer Serial No.	National Board No.	Other I.D.	Year Built	Repaired, Replaced, or Replacement	ASME Code Stamped (Yes or No) Code Class
HPCS(1)-4CL2	WPPSS	**	N/A	N/A	1983	Replacement	Yes, Class 2
***	JCI	***	N/A	N/A	1983	Replacement	Yes, Class 2

7. Description of Work:

Spared instrument tubing and piping associated with HPCS-P1-2. The required work was performed as follows:

1. Cut and removed existing tubing and piping.
2. Installed welded caps on piping connections and compression type caps on tubing connections.
3. Made socket welds for pipe caps.
4. Performed PT examination on final socket welds. PT examination results acceptable.

Notes:
* - 71W73 for HPCS(1)-4CL2
* - 74W75 for PI(1)-ST(H22-P024)-A8
** - HPCS(1)-4CL2-P2
*** - PI(1)-ST(H22-P024)-A8

WASHINGTON PUBLIC POWER SUPPLY SYSTEM

PLAN NO. 2-0344

FORM NIS-2 (Back)

8. Tests Conducted: Hydrostatic ☐ Pneumatic ☐ Nominal Operating Pressure ☐ Other ☒ None
Test Pressure _____ psig, Test Temp. _____ °F
Component Design Pressure _____ psig, Temp. _____ °F

9. Remarks:

None.

CERTIFICATE OF COMPLIANCE

We certify that the statements made in the report are correct and this replacement (repair or replacement) conforms to the rules of the ASME Code, Section XI.

Type Code Symbol Stamp Not applicable

Certificate Authorization No. Not applicable Expiration Date Not applicable

Signed [signature] Owner or Owner's Designee, Title Plant Technical Manager

Date 1/4 19 88

CERTIFICATE OF INSERVICE INSPECTION

I, the undersigned, holding a valid commission issued by the National Board of Boiler and Pressure Vessel Inspectors and the State of Washington and employed by Lumbermen's Mutual Casualty Co. of Illinois have inspected the components described in this Owner's Report during the period 7-31-87 to 12-30-87, and state that to the best of my knowledge and belief, the Owner has performed examinations and taken corrective measures described in this Owner's Report in accordance with the requirements of the ASME Code, Section XI.

By signing this certificate neither the Inspector nor his employer makes any warranty, expressed or implied, concerning the examinations and corrective measures described in this Owner's Report. Furthermore, neither the Inspector nor his employer shall be liable in any manner for any personal injury or property damage or a loss of any kind arising from or connected with this inspection.

[signature] Inspector's Signature Commissions 9556 W National Board, State, and Endorsements

Date 1-4 19 88

WASHINGTON PUBLIC POWER SUPPLY SYSTEM

PLAN NO. 2-0348

FORM NIS-2 OWNER'S REPORT FOR REPAIRS OR REPLACEMENTS
As Required by the Provisions of the ASME Code Section XI

1. Owner (Name) Washington Public Power Supply System — Date 11/17/87
   Owner (Address) 3000 George Washington Way, Richland, WA — Sheet 1 of 1
2. Plant (Name) WPPSS Nuclear Power Plant (WNP) — Unit WNP-2
   Plant (Address) Hanford, Benton County, WA — WPPSS Repair Organization P.O. No., Job No., etc.
3. Work Performed by (Name) WPPSS
   Work Performed by (Address) 3000 George Wash. Way, Richland, WA
4. Identification of System Reactor Recirculation Cooling (RRC) System
5. (a) Applicable Construction Code ASME Section III 19 71 Edition, W73 Addenda, None Code Case
   (b) Applicable Edition of ASME Section XI Utilized for Repairs or Replacements 19 80 Edition, W80
   Addenda, N308 Code Case
6. Identification of Components Repaired or Replaced and Replacement Components

Name of Component	Name of Manufacturer	Manufacturer Serial No.	National Board No.	Other I.D.	Year Built	Repaired, Replaced, or Replacement	ASME Code Stamped (Yes or No) Code Class
RRC(51)-1	WPPSS	*	N/A	N/A	1983	Replacement	Yes, Class 2

7. Description of Work:

Installed new flange connection in RRC(51)-1 line. The installation work was performed as follows:

1) Cut existing piping.
2) Installed new flanges and made required socket welds.
3) Performed PT examination on the socket welds. PT examination results acceptable.
4) Installed bolting material for the flange connection and torqued to the required torque value.

Notes:
*RRC(51)-1-P1

WASHINGTON PUBLIC POWER SUPPLY SYSTEM

PLAN NO. 2-0348

FORM NIS-2 (Back)

8. Tests Conducted: Hydrostatic ☐ Pneumatic ☐ Nominal Operating Pressure ☐ Other ☒ None
Test Pressure _____ psig, Test Temp. _____ °F
Component Design Pressure _____ psig, Temp. _____ °F

9. Remarks:

None

CERTIFICATE OF COMPLIANCE

We certify that the statements made in the report are correct and this replacement (repair or replacement) conforms to the rules of the ASME Code, Section XI.

Type Code Symbol Stamp Not applicable

Certificate Authorization No. Not applicable Expiration Date Not applicable

Signed R L Weber (Owner or Owner's Designee.) Title Plant Technical Manager

11/12/87

Date 11/13 19 87

CERTIFICATE OF INSERVICE INSPECTION

I, the undersigned, holding a valid commission issued by the National Board of Boiler and Pressure Vessel Inspectors and the State of Washington and employed by Lumbermen's Mutual Casualty Co. of Illinois have inspected the components described in this Owner's Report during the period 4-17-87 to 10-6-87, and state that to the best of my knowledge and belief, the Owner has performed examinations and taken corrective measures described in this Owner's Report in accordance with the requirements of the ASME Code, Section XI.

By signing this certificate neither the Inspector nor his employer makes any warranty, expressed or implied, concerning the examinations and corrective measures described in this Owner's Report. Furthermore, neither the Inspector nor his employer shall be liable in any manner for any personal injury or property damage or a loss of any kind arising from or connected with this inspection.

Dan Hoggard (Inspector's Signature) Commissions 9556 W (National Board, State, and Endorsements)

Date 11-17 19 87

WASHINGTON PUBLIC POWER SUPPLY SYSTEM

PLAN NO. 2-0349

FORM NIS-2 OWNER'S REPORT FOR REPAIRS OR REPLACEMENTS
As Required by the Provisions of the ASME Code Section XI

1. Owner (Name) Washington Public Power Supply System — Date 11/17/87
   Owner (Address) 3000 George Washington Way, Richland, WA — Sheet 1 of 1
2. Plant (Name) WPPSS Nuclear Power Plant (WNP) — Unit WNP-2
   Plant (Address) Hanford, Benton County, WA — WPPSS (Repair Organization P.O. No., Job No., etc.)
3. Work Performed by (Name) WPPSS
   Work Performed by (Address) 3000 George Wash. Way, Richland, WA
4. Identification of System Reactor Building Closed Cooling (RCC) System
5. (a) Applicable Construction Code ASME Section III 19 71 Edition, W73 Addenda, None Code Case
   (b) Applicable Edition of ASME Section XI Utilized for Repairs or Replacements 19 80 Edition, W80 Addenda, N308 Code Case
6. Identification of Components Repaired or Replaced and Replacement Components

Name of Component	Name of Manufacturer	Manufacturer Serial No.	National Board No.	Other I.D.	Year Built	Repaired, Replaced, or Replacement	ASME Code Stamped (Yes or No) Code Class
RCC(3)-1	WPPSS	*	N/A	N/A	1983	Replacement	Yes, Class 3

7. Description of Work:

Installed new flange connection in RCC(37)-1 line. The installation work was performed as follows:

1) Cut existing pipe.
2) Beveled pipe ends for welding.
3) Installed new flanges and made required circumferential butt welds.
4) Installed bolting material for the flange connection and torqued to the required torque value.
5) Performed pressure test to confirm pressure boundary integrity. No evidence of leakage during pressure test.

Notes:
*RCC(3)-1-P1

WASHINGTON PUBLIC POWER SUPPLY SYSTEM

PLAN NO. 2-0349

FORM NIS-2 (Back)

8. Tests Conducted: Hydrostatic ☒ Pneumatic ☐ Nominal Operating Pressure ☐ Other ☐ _____

Test Pressure 181 psig, Test Temp. 83 °F

Component Design Pressure 195 psig, Temp. 150 °F

9. Remarks:

None

CERTIFICATE OF COMPLIANCE

We certify that the statements made in the report are correct and this replacement (repair or replacement) conforms to the rules of the ASME Code, Section XI.

Type Code Symbol Stamp Not applicable

Certificate Authorization No. Not applicable Expiration Date Not applicable

Signed [signature] (Owner or Owner's Designee) Title Plant Technical Manager

11/12/87

Date 11/13 19 87

CERTIFICATE OF INSERVICE INSPECTION

I, the undersigned, holding a valid commission issued by the National Board of Boiler and Pressure Vessel Inspectors and the State of Washington and employed by Lumbermen's Mutual Casualty Co. of Illinois have inspected the components described in this Owner's Report during the period 4-15-87 to 10-6-87, and state that to the best of my knowledge and belief, the Owner has performed examinations and taken corrective measures described in this Owner's Report in accordance with the requirements of the ASME Code, Section XI.

By signing this certificate neither the Inspector nor his employer makes any warranty, expressed or implied, concerning the examinations and corrective measures described in this Owner's Report. Furthermore, neither the Inspector nor his employer shall be liable in any manner for any personal injury or property damage or a loss of any kind arising from or connected with this inspection.

[signature] (Inspector's Signature) Commissions 9556 W (National Board, State, and Endorsements)

Date 11-17 19 87

WASHINGTON PUBLIC POWER SUPPLY SYSTEM

PLAN NO. 2-0350

FORM NIS-2 OWNER'S REPORT FOR REPAIRS OR REPLACEMENTS
As Required by the Provisions of the ASME Code Section XI

1. Owner (Name) Washington Public Power Supply System — Date 11/17/87
   Owner (Address) 3000 George Washington Way, Richland, WA — Sheet 1 of 1
2. Plant (Name) WPPSS Nuclear Power Plant (WNP) — Unit WNP-2
   Plant (Address) Hanford, Benton County, WA — WPPSS (Repair Organization P.O. No., Job No., etc.)
3. Work Performed by (Name) WPPSS
   Work Performed by (Address) 3000 George Wash. Way, Richland, WA
4. Identification of System Reactor Recirculation Cooling (RCC) System
5. (a) Applicable Construction Code ASME Section III 19 71 Edition, W73 Addenda, None Code Case
   (b) Applicable Edition of ASME Section XI Utilized for Repairs or Replacements 19 80 Edition, W80 Addenda, N308 Code Case
6. Identification of Components Repaired or Replaced and Replacement Components

Name of Component	Name of Manufacturer	Manufacturer Serial No.	National Board No.	Other I.D.	Year Built	Repaired, Replaced, or Replacement	ASME Code Stamped (Yes or No) Code Class
RCC(36)-1	WPPSS	*	N/A	N/A	1983	Replacement	Yes, Class 3

7. Description of Work:

Installed new flange connection in RRC(25)-1 line. The installation work was performed as follows:

1) Cut existing piping.
2) Installed new flanges and made required socket welds.
3) Performed PT examination on the socket welds. PT examination results acceptable.
4) Installed bolting material and torqued to the required torque value.
5) Performed pressure test to confirm pressure boundary integrity. No evidence of leakage during pressure test.

Notes:

*RCC(36)-1-P1

WASHINGTON PUBLIC POWER SUPPLY SYSTEM

PLAN NO. 2-0350

FORM NIS-2 (Back)

8. Tests Conducted: Hydrostatic ☒ Pneumatic ☐ Nominal Operating Pressure ☐ Other ☐ _____
Test Pressure 181 psig, Test Temp. 83 °F
Component Design Pressure 195 psig, Temp. 150 °F

9. Remarks:

None

CERTIFICATE OF COMPLIANCE

We certify that the statements made in the report are correct and this replacement (repair or replacement) conforms to the rules of the ASME Code, Section XI.

Type Code Symbol Stamp Not applicable

Certificate Authorization No. Not applicable Expiration Date Not applicable

Signed R C Webb (Owner or Owner's Designee,) Title Plant Technical Manager

R Webb 11/13/87

Date 11/13 19 87

CERTIFICATE OF INSERVICE INSPECTION

I, the undersigned, holding a valid commission issued by the National Board of Boiler and Pressure Vessel Inspectors and the State of Washington and employed by Lumbermen's Mutual Casualty Co. of Illinois have inspected the components described in this Owner's Report during the period 4-17-87 to 10-13-87, and state that to the best of my knowledge and belief, the Owner has performed examinations and taken corrective measures described in this Owner's Report in accordance with the requirements of the ASME Code, Section XI.

By signing this certificate neither the Inspector nor his employer makes any warranty, expressed or implied, concerning the examinations and corrective measures described in this Owner's Report. Furthermore, neither the Inspector nor his employer shall be liable in any manner for any personal injury or property damage or a loss of any kind arising from or connected with this inspection.

Dan Hagewald (Inspector's Signature) Commissions 9556 W (National Board, State, and Endorsements)

Date 11-17 19 87

WASHINGTON PUBLIC POWER SUPPLY SYSTEM

PLAN NO. 2-0353

FORM NIS-2 OWNER'S REPORT FOR REPAIRS OR REPLACEMENTS
As Required by the Provisions of the ASME Code Section XI

1. Owner (Name) Washington Public Power Supply System — Date 11/17/87
   Owner (Address) 3000 George Washington Way, Richland, WA — Sheet 1 of 1
2. Plant (Name) WPPSS Nuclear Power Plant (WNP) — Unit WNP-2
   Plant (Address) Hanford, Benton County, WA — WPPSS (Repair Organization P.O. No., Job No., etc.)
3. Work Performed by (Name) WPPSS
   Work Performed by (Address) 3000 George Wash. Way, Richland, WA
4. Identification of System Reactor Building Closed Cooling (RCC) System
5. (a) Applicable Construction Code ASME Section III 19 71 Edition, W73 Addenda, None Code Case
   (b) Applicable Edition of ASME Section XI Utilized for Repairs or Replacements 19 80 Edition, W80 Addenda, N308 Code Case
6. Identification of Components Repaired or Replaced and Replacement Components

Name of Component	Name of Manufacturer	Manufacturer Serial No.	National Board No.	Other I.D.	Year Built	Repaired, Replaced, or Replacement	ASME Code Stamped (Yes or No) Code Class
RCC(3)-1	WPPSS	*	N/A	N/A	1983	Replacement	Yes, Class 3

7. Description of Work:

Installed new flange connection in RCC(24)-1 line. The installation work was performed as follows:

1) Cut existing pipe.
2) Beveled pipe ends for welding.
3) Installed new flanges and made required circumferential butt welds.
4) Installed bolting material for the flange connection and torqued to the required torque value.
5) Performed pressure test to confirm pressure boundary integrity. No evidence of leakage during pressure test.

Notes:

*RCC(3)-1-P1

WASHINGTON PUBLIC POWER SUPPLY SYSTEM

PLAN NO. 2-0353

FORM NIS-2 (Back)

8. Tests Conducted: Hydrostatic ☒ Pneumatic ☐ Nominal Operating Pressure ☐ Other ☐ _____
Test Pressure 181 psig, Test Temp. 83 °F
Component Design Pressure 195 psig, Temp. 150 °F

9. Remarks:

None

CERTIFICATE OF COMPLIANCE

We certify that the statements made in the report are correct and this replacement (repair or replacement) conforms to the rules of the ASME Code, Section XI.

Type Code Symbol Stamp Not applicable.

Certificate Authorization No. Not applicable Expiration Date Not applicable

Signed R L Weber (Owner or Owner's Designee.) K Smith 11/12/87 Title Plant Technical Manager

Date 11/13 19 87

CERTIFICATE OF INSERVICE INSPECTION

I, the undersigned, holding a valid commission issued by the National Board of Boiler and Pressure Vessel Inspectors and the State of Washington and employed by Lumbermen's Mutual Casualty Co. of Illinois have inspected the components described in this Owner's Report during the period 4-20-87 to 10-9-87, and state that to the best of my knowledge and belief, the Owner has performed examinations and taken corrective measures described in this Owner's Report in accordance with the requirements of the ASME Code, Section XI.

By signing this certificate neither the Inspector nor his employer makes any warranty, expressed or implied, concerning the examinations and corrective measures described in this Owner's Report. Furthermore, neither the Inspector nor his employer shall be liable in any manner for any personal injury or property damage or a loss of any kind arising from or connected with this inspection.

Dan Hoggard (Inspector's Signature) Commissions 9556 W (National Board, State, and Endorsements)

Date 11-17 19 87

WASHINGTON PUBLIC POWER SUPPLY SYSTEM

PLAN NO. 2-0358

FORM NIS-2 OWNER'S REPORT FOR REPAIRS OR REPLACEMENTS
As Required by the Provisions of the ASME Code Section XI

1. Owner (Name) Washington Public Power Supply System — Date 8/12/88
   Owner (Address) 3000 George Washington Way, Richland, WA — Sheet 1 of 1
2. Plant (Name) WPPSS Nuclear Power Plant (WNP) — Unit WNP-2
   Plant (Address) Hanford, Benton County, WA — C20069 Repair Organization P.O. No., Job No., etc.
3. Work Performed by (Name) Bechtel Construction, Inc.
   Work Performed by (Address) P.O. Box 600; Richland, WA
4. Identification of System Instrument Line PI(1)-4S-X80b
5. (a) Applicable Construction Code ASME Section III 19 74 Edition, W75 Addenda, None Code Case
   (b) Applicable Edition of ASME Section XI Utilized for Repairs or Replacements 19 80 Edition, W80 Addenda, N308 Code Case
6. Identification of Components Repaired or Replaced and Replacement Components

Name of Component	Name of Manufacturer	Manufacturer Serial No.	National Board No.	Other I.D.	Year Built	Repaired, Replaced, or Replacement	ASME Code Stamped (Yes or No) Code Class
PI(1)-4S-X80b	JCI	*	N/A	N/A	1983	Replacement	Yes, Class 2

7. Description of Work:

Modified instrument line. The modification work was performed as follows:

1) Cut and removed section of existing piping and tubing.
2) Installed new piping material and made required welds.
3) Performed PT examination on the final welds. PT examination results acceptable.
4) Modified existing supports.

Notes:

JCI - Johnson Control, Inc.
*PI(1)-4S-X80b

WASHINGTON PUBLIC POWER SUPPLY SYSTEM

PLAN NO. 2-0358

FORM NIS-2 (Back)

8. Tests Conducted: Hydrostatic ☐ Pneumatic ☐ Nominal Operating Pressure ☐ Other ☒ None
Test Pressure _____ psig, Test Temp. _____ °F
Component Design Pressure _____ psig, Temp. _____ °F

9. Remarks:

None

CERTIFICATE OF COMPLIANCE

We certify that the statements made in the report are correct and this replacement (repair or replacement) conforms to the rules of the ASME Code, Section XI.

Type Code Symbol Stamp Not applicable

Certificate Authorization No. Not applicable Expiration Date Not applicable

Signed [signature] Owner or Owner's Designee, Title Plant Technical Manager

K Swift 8/12/88

Date 8/17 19 88

CERTIFICATE OF INSERVICE INSPECTION

I, the undersigned, holding a valid commission issued by the National Board of Boiler and Pressure Vessel Inspectors and the State of Washington and employed by Lumbermen's Mutual Casualty Co. of Illinois have inspected the components described in this Owner's Report during the period 4/24/87 to 8/15/88, and state that to the best of my knowledge and belief, the Owner has performed examinations and taken corrective measures described in this Owner's Report in accordance with the requirements of the ASME Code, Section XI.

By signing this certificate neither the Inspector nor his employer makes any warranty, expressed or implied, concerning the examinations and corrective measures described in this Owner's Report. Furthermore, neither the Inspector nor his employer shall be liable in any manner for any personal injury or property damage or a loss of any kind arising from or connected with this inspection.

[signature] Inspector's Signature Commissions 5470(W) National Board, State, and Endorsements

Date 8/17 19 88

WASHINGTON PUBLIC POWER SUPPLY SYSTEM

PLAN NO. 2-0365

FORM NIS-2 OWNER'S REPORT FOR REPAIRS OR REPLACEMENTS
As Required by the Provisions of the ASME Code Section XI

1. Owner (Name) Washington Public Power Supply System — Date 11/17/87
   Owner (Address) 3000 George Washington Way, Richland, WA — Sheet 1 of 1
2. Plant (Name) WPPSS Nuclear Power Plant (WNP) — Unit WNP-2
   Plant (Address) Hanford, Benton County, WA — WPPSS (Repair Organization P.O. No., Job No., etc.)
3. Work Performed by (Name) WPPSS
   Work Performed by (Address) 3000 George Wash. Way, Richland, WA
4. Identification of System Main Steam (MS) System
5. (a) Applicable Construction Code ASME Section III 19 77 Edition, 6/30/77 Addenda, None Code Case
   (b) Applicable Edition of ASME Section XI Utilized for Repairs or Replacements 19 80 Edition, W80
   Addenda, N308 Code Case
6. Identification of Components Repaired or Replaced and Replacement Components

Name of Component	Name of Manufacturer	Manufacturer Serial No.	National Board No.	Other I.D.	Year Built	Repaired, Replaced, or Replacement	ASME Code Stamped (Yes or No) Code Class
MS-V-37E	GPE	*	N/A	N/A	1979	Replacement	Yes, Class 3
MS-V-37G	GPE	*	N/A	N/A	1979	Replacement	Yes, Class 3
MS-V-38E	GPE	*	N/A	N/A	1979	Replacement	Yes, Class 3
MS-V-38G	GPE	*	N/A	N/A	1979	Replacement	Yes, Class 3

7. Description of Work:

Performed work on valves as follows:

1) Drilled and tapped two (2) ½ inch holes into the valve body for each one of the valves.
2) Machined valve disc.

The above work was performed on each one of the valves to install new valve parts.

Notes:
GPE-GPE Controls
*MS-V-37G, S/N 7802-0509-7
*MS-V-38G, S/N 7802-0509-26
*MS-V-37E, S/N 7802-0509-5
*MS-V-38E, S/N 7802-0509-24

WASHINGTON PUBLIC POWER SUPPLY SYSTEM

PLAN NO. 2-0365

FORM NIS-2 (Back)

8. Tests Conducted: Hydrostatic ☐ Pneumatic ☐ Nominal Operating Pressure ☐ Other ☒ None
Test Pressure _____ psig, Test Temp. _____ °F
Component Design Pressure _____ psig, Temp. _____ °F

9. Remarks:

None

CERTIFICATE OF COMPLIANCE

We certify that the statements made in the report are correct and this replacement (repair or replacement) conforms to the rules of the ASME Code, Section XI.

Type Code Symbol Stamp Not applicable

Certificate Authorization No. Not applicable Expiration Date Not applicable

Signed R L Webster (Owner or Owner's Designee.) Title Plant Technical Manager

K Gwyn 11/12/87

Date 11/13 19 87

CERTIFICATE OF INSERVICE INSPECTION

I, the undersigned, holding a valid commission issued by the National Board of Boiler and Pressure Vessel Inspectors and the State of Washington and employed by Lumbermen's Mutual Casualty Co. of Illinois have inspected the components described in this Owner's Report during the period 5-5-87 to 10-29-87, and state that to the best of my knowledge and belief, the Owner has performed examinations and taken corrective measures described in this Owner's Report in accordance with the requirements of the ASME Code, Section XI.

By signing this certificate neither the Inspector nor his employer makes any warranty, expressed or implied, concerning the examinations and corrective measures described in this Owner's Report. Furthermore, neither the Inspector nor his employer shall be liable in any manner for any personal injury or property damage or a loss of any kind arising from or connected with this inspection.

Dan Hoggarth (Inspector's Signature) Commissions 9556 W (National Board, State, and Endorsements)

Date 11-17 19 87

WASHINGTON PUBLIC POWER SUPPLY SYSTEM

PLAN NO. 2-0370

FORM NIS-2 OWNER'S REPORT FOR REPAIRS OR REPLACEMENTS
As Required by the Provisions of the ASME Code Section XI

1. Owner (Name) Washington Public Power Supply System — Date 11-25-87
   Owner (Address) 3000 George Washington Way, Richland, WA — Sheet 1 of 1
2. Plant (Name) WPPSS Nuclear Power Plant (WNP) — Unit WNP-2
   Plant (Address) Hanford, Benton County, WA — C20069 Repair Organization P.O. No., Job No., etc.
3. Work Performed by (Name) Bechtel Construction, Inc.
   Work Performed by (Address) P.O. Box 600, Richland, WA
4. Identification of System Standby Liquid Control (SLC) System
5. (a) Applicable Construction Code ASME Section III 19 71 Edition, W73 Addenda, None Code Case
   (b) Applicable Edition of ASME Section XI Utilized for Repairs or Replacements 19 80 Edition, W80 Addenda, N308 Code Case
6. Identification of Components Repaired or Replaced and Replacement Components

Name of Component	Name of Manufacturer	Manufacturer Serial No.	National Board No.	Other I.D.	Year Built	Repaired, Replaced, or Replacement	ASME Code Stamped (Yes or No) Code Class
SLC(2)-4S	WPPSS	*	N/A	N/A	1982	Replacement	Yes, Class 1 (NF)

7. Description of Work:

1) Supports SL-4475-12, 19, 112, 114, 117, 120 and 122.
Removed existing snubbers from the above listed supports and replaced them with rigid struts.

2) Supports SL-4475-21, 22, 23, 24 and 25.
Fabricated and installed above listed new supports for SLC piping system modified under ASME Section XI Plan No. 2-0354.

NOTE - Snubber Serial No. 366 removed from support SLC-4475-116 was installed for support SLC-4475-21.

Notes:
*SL(2)-4S-P2

WASHINGTON PUBLIC POWER SUPPLY SYSTEM

PLAN NO. 2-0370

FORM NIS-2 (Back)

8. Tests Conducted: Hydrostatic ☐ Pneumatic ☐ Nominal Operating Pressure ☐ Other ☒ None
Test Pressure _____ psig, Test Temp. _____ °F
Component Design Pressure _____ psig, Temp. _____ °F

9. Remarks:

See attached NF-1 Code Data reports for the following new rigid struts:

Support No.	Serial No.	Support No.	Serial No.
SLC-4475-12	41-1511-2	SLC-4475-114	41-1511-3
SLC-4475-19	41-1511-6	SLC-4475-117	41-1511-7
SLC-4475-112	41-1511-5	SLC-4475-120	41-1511-1
		SLC-4475-122	41-1511-4

CERTIFICATE OF COMPLIANCE

We certify that the statements made in the report are correct and this replacement (repair or replacement) conforms to the rules of the ASME Code, Section XI.

Type Code Symbol Stamp Not applicable

Certificate Authorization No. Not applicable Expiration Date Not applicable

Signed [signature] Owner or Owner's Designee, Title Plant Technical Manager

11/24/87

Date 11/25 19 87

CERTIFICATE OF INSERVICE INSPECTION

I, the undersigned, holding a valid commission issued by the National Board of Boiler and Pressure Vessel Inspectors and the State of Washington and employed by Lumbermen's Mutual Casualty Co. of Illinois have inspected the components described in this Owner's Report during the period 5-15-87 to 11-20-87, and state that to the best of my knowledge and belief, the Owner has performed examinations and taken corrective measures described in this Owner's Report in accordance with the requirements of the ASME Code, Section XI.

By signing this certificate neither the Inspector nor his employer makes any warranty, expressed or implied, concerning the examinations and corrective measures described in this Owner's Report. Furthermore, neither the Inspector nor his employer shall be liable in any manner for any personal injury or property damage or a loss of any kind arising from or connected with this inspection.

[signature] Inspector's Signature Commissions 9556 W National Board, State, and Endorsements

Date 11-25 19 87

FORM NF-1 NPT CERTIFICATE HOLDERS' DATA REPORT FOR COMPONENT SUPPORTS
As Required by the Provisions of the ASME Code Rules Section III, Division 1 PLAN NO. 2-0370

1. Manufactured by Grinnell Corporation, 294 West Exchange St., Providence, RI 02901
(Name and address of NPT Certificate Holder)

2. Manufactured for Washington Public Power Supply System, P.O. Box 968, Richland, WA 99352
(Name and address of purchaser or owner)

3. Location of Installation WNP-2 OPS WHS Complex, North Power Plant Loop, Richland, WA 99352

4. Identification

	(a) Component Support I.D. No.	(b) Canadian Registration No.	(c) Applicable Drawings With Last Rev. & Date	(d) Design Report or Load Capacity Data Sheet	(e) Type of Component Support	(f) Class	(g) Nat'l Board No.*	(h) Year Built
(1)	41-1511-1	N/A	210-10000	DRS	CSS	1	N/A	1987
(2)			Rev.-	Rev.0	Fig.210			
(3)			Dated 3/13/87					
(4)								
(5)								
(6)								
(7)			Support NO. SLC-4475-120					
(8)								
(9)								
(10)								

5. Remarks: Kuldip Singh 11/24/87.

CERTIFICATE OF COMPLIANCE

We certify that the statements made in this report are correct and that these component supports conform to the rules of construction of the ASME Code for Nuclear Power Plant Components, Section III, Division 1, Edition 1971 Addenda Winter 1973 (Date)
Code Case No. N-249
Date 5/26/87 Signed Grinnell Corp. (NPT Certificate Holder) by David V. Walsh
Our ASME Certificate of Authorization No. N-2444-1 to use the NPT (NPT)
Symbol expires 10/27/89 (Date)

CERTIFICATION OF DESIGN

Design Information on File at Grinnell Corporation, 294 West Exchange St., Prov., RI 02901
Stress Report or Load Capacity Data Sheets on File at:
Grinnell Corporation, 294 West Exchange St., Prov., RI 02901
Design Specifications Certified by (1) Robert B. Mulcahey PE State Rhode Island
Reg. No. 3484
Stress Analysis Report or Load Capacity Data Sheets Certified by (1) Frank J. Birch
PE State Rhode Island Reg. No. 4149

(1) List name only, signature not required.

*Supplemental information in the form of lists, sketches, or drawings may be used provided (1) size is 8½ X 11, (2) information 1 through 4 on this Data Report is included on each sheet, (3) each sheet is numbered and number of sheets is recorded at th this form.

(6/85) This form (E00075) may be obtained from the Order Dept., ASME, 345 E. 47th St., New York, N.Y

Jm X 5-31-87

INTERNAL USE ONLY J Ray Rose

FORM NF-1 (Back)

Mfr. Serial No. 41-151

CERTIFICATE OF SHOP INSPECTION

I, the undersigned, holding a valid commission issued by the National Board of Boiler and Pressure Vessel Inspectors and the State or Province of Massachusetts and employed by Hartford Steam Boiler Inspection & Insurance Co., Hartford, CT of _____ have inspected the component supports described in this Data Report on May 26 19 87 and state that to the best of my knowledge and belief the NPT Certificate Holder has constructed these component supports in accordance wit ASME Code for Nuclear Power Plant Components.

By signing this certificate, neither the Inspector nor his employer makes any warranty, expressed or implied, concerning the component supports desc in this Data Report. Furthermore, neither the Inspector nor his employer shall be liable in any manner for any personal injury or property damage or a of any kind arising from or connected with this inspection.

Date 5-27-87

Signed W J Smith Commissions MA 946 RI 609
(Nat'l Bd., State, Prov., and No.)

CERTIFICATION OF FIELD INSPECTION

I, the undersigned, holding a valid commission issued by the National Board of Boiler and Pressure Vessel Inspectors and the State or Province of _____ and employed by _____ of _____ have compared the statements in this Data Report with the described component supports and state that the referred to as data items _____, not included in the certificate of shop inspection, have been inspected by me and to the best of my knowledge and belief the NPT Certificate Holder has constructed these component supports in accordance with the ASME Code for Nu Power Plant Components.

By signing this certificate neither the Inspector nor his employer makes any warranty, expressed or implied, concerning the component supports describ this Data Report. Furthermore, neither the Inspector nor his employer shall be liable in any manner for any personal injury or property damage or a loss o kind arising from or connected with this inspection.

Date _____

Signed _____ Commissions _____
(Nat'l Bd., State, Prov., and No.)

INFORMATION ONLY

PLAN NO. 2-0370

FORM NF-1 NPT C TIFICATE HOLDERS' DATA REPORT FOR MPONENT SUPPORTS*

As Required by the Provisions of the ASME Code Rules, Section III, Division 1

1. Manufactured by Grinnell Corporation, 294 West Exchange St., Prov., RI 02901
(Name and address of NPT Certificate Holder)

2. Manufactured for Washington Public Power Supply System, P.O. Box 968, Richland, WA 99352
(Name and address of purchaser or owner)

3. Location of Installation WNP-2 OPS WHS Complex, North Power Plant Loop, Richland, WA 99352

4. Identification

	(a) Component Support I.D. No.	(b) Canadian Registration No.	(c) Applicable Drawings With Last Rev. & Date	(d) Design Report or Load Capacity Data Sheet	(e) Type of Component Support	(f) Class	(g) Nat'l Board No.	(h) Year Built
(1)	41-1511-2	N/A	210-10000	DRS210	CSS	1	N/A	1987
(2)			Rev.-	Rev.0	Fig.210			
(3)			Dated 3/13/87					
(4)								
(5)								
(6)			Support No. SLC-4475-12					
(7)								
(8)								
(9)					Guldup Supts			
(10)								

5. Remarks: 11/24/87.

CERTIFICATE OF COMPLIANCE

We certify that the statements made in this report are correct and that these component supports conform to the rules of construction of the ASME Code for Nuclear Power Plant Components, Section III, Division 1, Edition 1971 Addenda Winter 1973 (Date)

Code Case No. N-249

5/26/87 Signed Grinnell Corporation (NPT Certificate Holder) by David V. Walshe

Our ASME Certificate of Authorization No. N-2444-1 to use the NPS (NPT)

Symbol expires 10/27/89 (Date)

CERTIFICATION OF DESIGN

Design Information on File at Grinnell Corporation, 294 West Exchange St., Prov., RI 02901

Stress Report or Load Capacity Data Sheets on File at:
Grinnell Corporation, 294 West Exchange St., Prov., RI 02901

Design Specifications Certified by (1) Robert B. Mulcahey PE State Rhode Island
Reg. No. 3484

Stress Analysis Report or Load Capacity Data Sheets Certified by (1) Frank J. Birch
PE State Rhode Island Reg. No. 4149

(1) List name only, signature not required.

*Supplemental information in the form of lists, sketches, or drawings may be used provided (1) size is 8½ X 11, (2) information in items 1 through 4 on this Data Report is included on each sheet, (3) each sheet is numbered and number of sheets is recorded at the top of this form.

(6/85) This form (E00075) may be obtained from the Order Dept., ASME, 345 E. 47th St., New York, N.Y. 10017.

Jm L 5-28-87

INFORMATION ONLY

FORM NF-1 (Back)

Mfr. Serial No. 41-1511-2

CERTIFICATE OF SHOP INSPECTION

I, the undersigned, holding a valid commission issued by the National Board of Boiler and Pressure Vessel Inspectors and the State or Province of Massachusetts and employed by Hartford Steam Boiler Inspection & Insurance Co., Hartford, CT of have inspected the component supports described in this Data Report on May 26 19 87 and state that to the best of my knowledge and belief the NPT Certificate Holder has constructed these component supports in accordance with the ASME Code for Nuclear Power Plant Components.

By signing this certificate, neither the Inspector nor his employer makes any warranty, expressed or implied, concerning the component supports described in this Data Report. Furthermore, neither the Inspector nor his employer shall be liable in any manner for any personal injury or property damage or a loss of any kind arising from or connected with this inspection.

Date 5-27-87

Signed N J Smith Commissions MA 946 RI 609
(Nat'l Bd., State, Prov., and No.)

CERTIFICATION OF FIELD INSPECTION

I, the undersigned, holding a valid commission issued by the National Board of Boiler and Pressure Vessel Inspectors and the State or Province of _____ and employed by _____ of _____ have compared the statements in this Data Report with the described component supports and state that the parts referred to as data items _____, not included in the certificate of shop inspection, have been inspected by me and that to the best of my knowledge and belief the NPT Certificate Holder has constructed these component supports in accordance with the ASME Code for Nuclear Power Plant Components.

By signing this certificate neither the Inspector nor his employer makes any warranty, expressed or implied, concerning the component supports described in this Data Report. Furthermore, neither the Inspector nor his employer shall be liable in any manner for any personal injury or property damage or a loss of any kind arising from or connected with this inspection.

Date _____

Signed _____ Commissions _____
(Nat'l Bd., State, Prov., and No.)

PLAN NO. 2-0370

FORM NF-1 NPT TIFICATE HOLDERS' DATA REPORT FOI ·)MPONENT SUPPORTS*

As Required by the Provisions of the ASME Code Rules, Section III, Division 1

1. Manufactured by Grinnell Corporation, 294 West Exchange St., Prov., RI 02901
(Name and address of NPT Certificate Holder)

2. Manufactured for Washington Public Power Supply System, P.O. Box 968, Richland, WA 99352
(Name and address of purchaser or owner)

3. Location of Installation WNP-2 OPS WHS Complex, North Power Plant Loop, Richland, WA 99352

4. Identification

	(a) Component Support I.D. No.	(b) Canadian Registration No.	(c) Applicable Drawings With Last Rev. & Date	(d) Design Report or Load Capacity Data Sheet	(e) Type of Component Support	(f) Class	(g) Nat'l Board No.	(h) Year Built
(1)	41-1511-3	N/A	210-10000	DRS210	CSS	1	N/A	1987
(2)			Rev.-	Rev.0	Fig.210			
(3)			Dated 3/13/87					
(4)								
(5)								
(6)								
(7)			Support No. SLL-2475-114.					
(8)								
(9)								
(10)					Philip Smith			

5. Remarks: 11/24/87.

CERTIFICATE OF COMPLIANCE

We certify that the statements made in this report are correct and that these component supports conform to the rules of construction of the ASME Code for Nuclear Power Plant Components, Section III, Division 1, Edition 1971 Addenda Winter 1973 (Date)

Case No. N-249

5/26/87 Signed Grinnell Corporation (NPT Certificate Holder) by David V. Walsne

Our ASME Certificate of Authorization No. N-2444-1 to use the NPT (NPT)

Symbol expires 10/27/89 (Date)

CERTIFICATION OF DESIGN

Design Information on File at Grinnell Corporation, 294 West Exchange St., Prov., RI 02901

Stress Report or Load Capacity Data Sheets on File at: Grinnell Corporation, 294 West Exchange St., Prov., RI 02901

Design Specifications Certified by (1) Robert B. Mulcahey PE State Rhode Island Reg. No. 3484

Stress Analysis Report or Load Capacity Data Sheets Certified by (1) Frank J. Birch PE State Rhode Island Reg. No. 4149

(1) List name only, signature not required.

*Supplemental information in the form of lists, sketches, or drawings may be used provided (1) size is 8½ X 11, (2) information in items 1 through 4 on this Data Report is included on each sheet, (3) each sheet is numbered and number of sheets is recorded at the top of this form.

(6/85) This form (E00075) may be obtained from the Order Dept., ASME, 345 E. 47th St., New York, N.Y. 10017.

INFORMATION ONLY

5-28-87

FORM NF-1 (Back)

Mfr. Serial No. 41-1511-3

CERTIFICATE OF SHOP INSPECTION

I, the undersigned, holding a valid commission issued by the National Board of Boiler and Pressure Vessel Inspectors and the State or Province of Massachusetts and employed by Hartford Steam Boiler Inspection & Insurance Co., Hartford, CT of _____ have inspected the component supports described in this Data Report on May 26 19 87 and state that to the best of my knowledge and belief the NPT Certificate Holder has constructed these component supports in accordance with the ASME Code for Nuclear Power Plant Components.

By signing this certificate, neither the Inspector nor his employer makes any warranty, expressed or implied, concerning the component supports described in this Data Report. Furthermore, neither the Inspector nor his employer shall be liable in any manner for any personal injury or property damage or a loss of any kind arising from or connected with this inspection.

Date 5-27-87

Signed N J Smith Commissions MA 946 RI 609
(Nat'l Bd., State, Prov., and No.)

CERTIFICATION OF FIELD INSPECTION

I, the undersigned, holding a valid commission issued by the National Board of Boiler and Pressure Vessel Inspectors and the State or Province of _____ and employed by _____ of _____ have compared the statements in this Data Report with the described component supports and state that the parts referred to as data items _____, not included in the certificate of shop inspection, have been inspected by me and that to the best of my knowledge and belief the NPT Certificate Holder has constructed these component supports in accordance with the ASME Code for Nuclear Power Plant Components.

By signing this certificate neither the Inspector nor his employer makes any warranty, expressed or implied, concerning the component supports described in this Data Report. Furthermore, neither the Inspector nor his employer shall be liable in any manner for any personal injury or property damage or a loss of any kind arising from or connected with this inspection.

Date _____

Signed _____ Commissions _____
(Nat'l Bd., State, Prov., and No.)

PLAN NO. 2-0370

FORM NF-1 NPT TIFICATE HOLDERS' DATA REPORT FOI)MPONENT SUPPORTS*

As Required by the Provisions of the ASME Code Rules, Section III, Division 1

1. Manufactured by Grinnell Corporation, 294 West Exchange St., Prov., RI 02901
(Name and address of NPT Certificate Holder)

2. Manufactured for Washington Public Power Supply System, P.O.Box 968, Richland, WA 99352
(Name and address of purchaser or owner)

3. Location of Installation WMP-2 OPS WHS Complex, North Power Plant Loop, Richland, WA 99352

4. Identification

	(a) Component Support I.D. No.	(b) Canadian Registration No.	(c) Applicable Drawings With Last Rev. & Date	(d) Design Report or Load Capacity Data Sheet	(e) Type of Component Support	(f) Class	(g) Nat'l Board No.	(h) Year Built
(1)	41-1511-4	N/A	210-10000	DRS210	CSS	1	N/A	1987
(2)			Rev.-	Rev.0	Fig.210			
(3)			Dated 3/13/87					
(4)								
(5)								
(6)			Support NO. SCC-4475-122					
(7)								
(8)								
(9)					Kuldip Gupta			
(10)								

5. Remarks: 11/24/87.

CERTIFICATE OF COMPLIANCE

We certify that the statements made in this report are correct and that these component supports conform to the rules of construction of the ASME Code for Nuclear Power Plant Components, Section III, Division 1, Edition 1971 Addenda Winter 1973 (Date)

Case No. N-249

5/26/87 Signed Grinnell Corporation (NPT Certificate Holder) by David V. Walshe

Our ASME Certificate of Authorization No. N-2444-1 to use the NPT (NPT)

Symbol expires 10/27/89 (Date)

CERTIFICATION OF DESIGN

Design Information on File at Grinnell Corporation, 294 West Exchange St., Prov., RI 02901

Stress Report or Load Capacity Data Sheets on File at:
Grinnell Corporation, 294 West Exchange St., Prov., RI 02901

Design Specifications Certified by (1) Robert B. Mulcahey PE State Rhode Island
Reg. No. 3484

Stress Analysis Report or Load Capacity Data Sheets Certified by (1) Frank J. Birch
PE State Rhode Island Reg. No. 4149

(1) List name only, signature not required.

*Supplemental information in the form of lists, sketches, or drawings may be used provided (1) size is 8½ X 11, (2) information in items 1 through 4 on this Data Report is included on each sheet, (3) each sheet is numbered and number of sheets is recorded at the top of this form.

(6/85) This form (E00075) may be obtained from the Order Dept., ASME, 345 E. 47th St., New York, N.Y. 10017.

INFORMATION ONLY

JM 7/5-28-87

FORM NF-1 (Back)

Mfr. Serial No. 41-1511-4

CERTIFICATE OF SHOP INSPECTION

I, the undersigned, holding a valid commission issued by the National Board of Boiler and Pressure Vessel Inspectors and the State or Province of Massachusetts and employed by Hartford Steam Boiler Inspection & Insurance Co., Hartford, CT of _____ have inspected the component supports described in this Data Report on May 26 '9 87 and state that to the best of my knowledge and belief the NPT Certificate Holder has constructed these component supports in accordance with the ASME Code for Nuclear Power Plant Components.

By signing this certificate, neither the Inspector nor his employer makes any warranty, expressed or implied, concerning the component supports described in this Data Report. Furthermore, neither the Inspector nor his employer shall be liable in any manner for any personal injury or property damage or a loss of any kind arising from or connected with this inspection.

Date 5-27-87

Signed V J Smith Commissions MA 946 RI 609
(Nat'l Bd., State, Prov., and No.)

CERTIFICATION OF FIELD INSPECTION

I, the undersigned, holding a valid commission issued by the National Board of Boiler and Pressure Vessel Inspectors and the State or Province of _____ and employed by _____ of _____ have compared the statements in this Data Report with the described component supports and state that the parts referred to as data items _____, not included in the certificate of shop inspection, have been inspected by me and that to the best of my knowledge and belief the NPT Certificate Holder has constructed these component supports in accordance with the ASME Code for Nuclear Power Plant Components.

By signing this certificate neither the Inspector nor his employer makes any warranty, expressed or implied, concerning the component supports described in this Data Report. Furthermore, neither the Inspector nor his employer shall be liable in any manner for any personal injury or property damage or a loss of any kind arising from or connected with this inspection.

Date _____

Signed _____ Commissions _____
(Nat'l Bd., State, Prov., and No.)

PLAN NO. 2-0370

FORM NF-1 NPT C TIFICATE HOLDERS' DATA REPORT FOR MPONENT SUPPORTS*

As Required by the Provisions of the ASME Code Rules, Section III, Division 1

1. Manufactured by Grinnell Corporation, 294 West Exchange St., Prov., RI 02901
(Name and address of NPT Certificate Holder)

2. Manufactured for Washington Public Power Supply System, P.O. Box 968, Richland, WA 99352
(Name and address of purchaser or owner)

3. Location of Installation WMP-2 OPS WHS Complex, North Power Plant Loop, Richland, WA 99352

4. Identification

	(a) Component Support I.D. No.	(b) Canadian Registration No.	(c) Applicable Drawings With Last Rev. & Date	(d) Design Report or Load Capacity Data Sheet	(e) Type of Component Support	(f) Class	(g) Nat'l Board No.	(h) Year Built
(1)	41-1511-5	N/A	210-10000	DRS210	CSS	1	N/A	1987
(2)			Rev.-	Rev.0	Fig.210			
(3)			Dated 3/13/87					
(4)								
(5)								
(6)			Support NO. SLC-4475-112					
(7)								
(8)								
(9)					Pradip Gupta			
(10)								

5. Remarks: 11/24/87.

CERTIFICATE OF COMPLIANCE

We certify that the statements made in this report are correct and that these component supports conform to the rules of construction of the ASME Code for Nuclear Power Plant Components, Section III, Division 1, Edition 1971 Addenda Winter 1973 (Date)

Case No. N-249

5/26/87 Signed Grinnell Corporation (NPT Certificate Holder) by David V. Walshe

Our ASME Certificate of Authorization No. N-2444-1 to use the NPT (NPT)

Symbol expires 10/27/89 (Date)

CERTIFICATION OF DESIGN

Design Information on File at Grinnell Corporation, 294 West Exchange St., Prov., RI 02901

Stress Report or Load Capacity Data Sheets on File at:
Grinnell Corporation, 294 West Exchange St., Prov., RI 02901

Design Specifications Certified by (1) Robert B. Mulcahey PE State Rhode Island
Reg. No. 3484

Stress Analysis Report or Load Capacity Data Sheets Certified by (1) Frank J. Birch
PE State Rhode Island Reg. No. 4149

(1) List name only, signature not required.

*Supplemental information in the form of lists, sketches, or drawings may be used provided (1) size is 8½ X 11, (2) information in items 1 through 4 on this Data Report is included on each sheet, (3) each sheet is numbered and number of sheets is recorded at the top of this form.

(6/85) This form (E00075) may be obtained from the Order Dept., ASME, 345 E. 47th St., New York, N.Y. 10017.

5-28-87

FORM NF-1 NPT C TIFICATE HOLDERS' DATA REPORT FOR MPONENT SUPPORTS*

As Required by the Provisions of the ASME Code Rules, Section III, Division 1

1. Manufactured by Grinnell Corporation, 294 West Exchange St., Prov., RI 02901
(Name and address of NPT Certificate Holder)

2. Manufactured for Washington Public Power Supply System, P.O. Box 968, Richland, WA 99352
(Name and address of purchaser or owner)

3. Location of Installation WMP-2 OPS WHS Complex, North Power Plant Loop, Richland, WA 99352

4. Identification

	(a) Component Support I.D. No.	(b) Canadian Registration No.	(c) Applicable Drawings With Last Rev. & Date	(d) Design Report or Load Capacity Data Sheet	(e) Type of Component Support	(f) Class	(g) Nat'l Board No.	(h) Year Built
(1)	41-1511-5	N/A	210-10000	DRS210	CSS	1	N/A	1987
(2)			Rev.-	Rev.0	Fig.210			
(3)			Dated 3/13/87					
(4)								
(5)								
(6)								
(7)								
(8)								
(9)								
(10)								

5. Remarks:

CERTIFICATE OF COMPLIANCE

We certify that the statements made in this report are correct and that these component supports conform to the rules of construction of the ASME Code for Nuclear Power Plant Components, Section III, Division 1, Edition 1971 Addenda Winter 1973 (Date)

Code Case No. N-249

Date 5/26/87 Signed Grinnell Corporation (NPT Certificate Holder) by David V. Walshe

Our ASME Certificate of Authorization No. N-2444-1 to use the NPT (NPT)

Symbol expires 10/27/89 (Date)

CERTIFICATION OF DESIGN

Design Information on File at Grinnell Corporation, 294 West Exchange St., Prov., RI 02901

Stress Report or Load Capacity Data Sheets on File at:
Grinnell Corporation, 294 West Exchange St., Prov., RI 02901

Design Specifications Certified by (1) Robert B. Mulcahey PE State Rhode Island
Reg. No. 3484

Stress Analysis Report or Load Capacity Data Sheets Certified by (1) Frank J. Birch
PE State Rhode Island Reg. No. 4149

(1) List name only, signature not required.

*Supplemental information in the form of lists, sketches, or drawings may be used provided (1) size is 8½ X 11, (2) information in items 1 through 4 on this Data Report is included on each sheet, (3) each sheet is numbered and number of sheets is recorded at the top of this form.

(6/85) This form (E00075) may be obtained from the Order Dept., ASME, 345 E. 47th St., New York, N.Y. 10017.

5-28-87

PLAN NO. 2-0370

FORM NF-1 NPT (TIFICATE HOLDERS' DATA REPORT FOF MPONENT SUPPORTS*

As Required by the Provisions of the ASME Code Rules, Section III, Division 1

1. Manufactured by Grinnell Corporation, 294 West Exchange St., Prov., RI 02901
(Name and address of NPT Certificate Holder)

2. Manufactured for Washington Public Power Supply System, P.O. Box 968, Richland, WA 99352
(Name and address of purchaser or owner)

3. Location of Installation WNP-2 OPS WHS Complex, North Power Plant Loop, Richland, WA 99352

4. Identification

	(a) Component Support I.D. No.	(b) Canadian Registration No.	(c) Applicable Drawings With Last Rev. & Date	(d) Design Report or Load Capacity Data Sheet	(e) Type of Component Support	(f) Class	(g) Nat'l Board No.	(h) Year Built
(1)	41-1511-6	N/A	210-10000	DRS210	CSS	1	N/A	1987
(2)			Rev.-	Rev.0	Fig.210			
(3)			Dated 3/13/87					
(4)								
(5)								
(6)								
(7)			Support No. SLC-4475-19					
(8)								
(9)								
(10)					Rudolf Guys			

5. Remarks: 11/24/87

CERTIFICATE OF COMPLIANCE

We certify that the statements made in this report are correct and that these component supports conform to the rules of construction of the ASME Code for Nuclear Power Plant Components, Section III, Division 1, Edition 1971 Addenda Winter 1973 (Date)

Code Case No. N-249

5/26/87 Signed Grinnell Corporation (NPT Certificate Holder) by David V. Walshe

Our ASME Certificate of Authorization No. N-2444-1 to use the NPT (NPT)

Symbol expires 10/27/89 (Date)

CERTIFICATION OF DESIGN

Design Information on File at Grinnell Corp., 294 West Exchange St., Prov., RI 02901

Stress Report or Load Capacity Data Sheets on File at:
Grinnell Corp., 294 West Exchange St., Prov., RI 20901

Design Specifications Certified by (1) Robert B. Mulcahey PE State Rhode Island
Reg. No. 3484

Stress Analysis Report or Load Capacity Data Sheets Certified by (1) Frank J. Birch
PE State Rhode Island Reg. No. 4149

(1) List name only, signature not required.

*Supplemental information in the form of lists, sketches, or drawings may be used provided (1) size is 8½ X 11, (2) information in items 1 through 4 on this Data Report is included on each sheet, (3) each sheet is numbered and number of sheets is recorded at the top of this form.

(6/85) This form (E00075) may be obtained from the Order Dept., ASME, 345 E. 47th St., New York, N.Y. 10017.

Jen X.
5-28-87

FORM NF-1 (Back)

Mfr. Serial No. 41-1511-6

CERTIFICATE OF SHOP INSPECTION

I, the undersigned, holding a valid commission issued by the National Board of Boiler and Pressure Vessel Inspectors and the State or Province of Massachusetts and employed by Hartford Steam Boiler Inspection & Insurance Co., Hartford, CT have inspected the component supports described in this Data Report on May 26 19 87 and state that to the best of my knowledge and belief the NPT Certificate Holder has constructed these component supports in accordance with the ASME Code for Nuclear Power Plant Components.

By signing this certificate, neither the Inspector nor his employer makes any warranty, expressed or implied, concerning the component supports described in this Data Report. Furthermore, neither the Inspector nor his employer shall be liable in any manner for any personal injury or property damage or a loss of any kind arising from or connected with this inspection.

Date 5-27-87

Signed [signature] Commissions MA 946 RI 609
(Nat'l Bd., State, Prov., and No.)

CERTIFICATION OF FIELD INSPECTION

I, the undersigned, holding a valid commission issued by the National Board of Boiler and Pressure Vessel Inspectors and the State or Province of _____ and employed by _____ of _____ have compared the statements in this Data Report with the described component supports and state that the parts referred to as data items _____, not included in the certificate of shop inspection, have been inspected by me and that to the best of my knowledge and belief the NPT Certificate Holder has constructed these component supports in accordance with the ASME Code for Nuclear Power Plant Components.

By signing this certificate neither the Inspector nor his employer makes any warranty, expressed or implied, concerning the component supports described in this Data Report. Furthermore, neither the Inspector nor his employer shall be liable in any manner for any personal injury or property damage or a loss of any kind arising from or connected with this inspection.

Date _____

Signed _____ Commissions _____
(Nat'l Bd., State, Prov., and No.)

PLAN NO. 2-0370.

FORM NF-1 NPT C TIFICATE HOLDERS' DATA REPORT FOF MPONENT SUPPORTS*

As Required by the Provisions of the ASME Code Rules, Section III, Division 1

1. Manufactured by Grinnell Corporation, 294 West Exchange St., Prov., RI 02901
(Name and address of NPT Certificate Holder)

2. Manufactured for Washington Public Power Supply System, P.O. Box 968, Richland, WA 99352
(Name and address of purchaser or owner)

3. Location of Installation WNP-2 OPS WHS Complex, North Power Plant Loop, Richland, WA 99352

4. Identification

	(a) Component Support I.D. No.	(b) Canadian Registration No.	(c) Applicable Drawings With Last Rev. & Date	(d) Design Report or Load Capacity Data Sheet	(e) Type of Component Support	(f) Class	(g) Nat'l Board No.	(h) Year Built
(1)	41-1511-7	N/A	210-10000	DRS210	CSS	1	N/A	1987
(2)			Rev.-	Rev.0	Fig.210			
(3)			Dated 3/13/87					
(4)								
(5)								
(6)								
(7)								
(8)								
(9)								
(10)								

Support NO. SCC-2475-117

Pradip Gupta

5. Remarks: 11/24/87.

CERTIFICATE OF COMPLIANCE

We certify that the statements made in this report are correct and that these component supports conform to the rules of construction of the ASME Code for Nuclear Power Plant Components, Section III, Division 1, Edition 1971 Addenda Winter 1973 (Date)

Case No. N-249

5/26/87 Signed Grinnell Corporation (NPT Certificate Holder) by David V. Walshe

Our ASME Certificate of Authorization No. N-2444-1 to use the NPT (NPT)

Symbol expires 10/27/89 (Date)

CERTIFICATION OF DESIGN

Design Information on File at Grinnell Corporation, 294 West Exchange St., Prov., RI 02901

Stress Report or Load Capacity Data Sheets on File at:
Grinnell Corporation, 294 West Exchange St., Prov., RI 02901

Design Specifications Certified by (1) Robert B. Mulcahey PE State Rhode Island
Reg. No. 3484

Stress Analysis Report or Load Capacity Data Sheets Certified by (1) Frank J. Birch
PE State Rhode Island Reg. No. 4149

(1) List name only, signature not required.

*Supplemental information in the form of lists, sketches, or drawings may be used provided (1) size is 8½ X 11, (2) information in items 1 through 4 on this Data Report is included on each sheet, (3) each sheet is numbered and number of sheets is recorded at the top of this form.

(6/85) This form (E00075) may be obtained from the Order Dept., ASME, 345 E. 47th St., New York, N.Y. 10017.

INFORMATION ONLY

Jun X
5-28-87

FORM NF-1 (Back)

Mfr. Serial No. 41-1511-7

CERTIFICATE OF SHOP INSPECTION

I the undersigned, holding a valid commission issued by the National Board of Boiler and Pressure Vessel Inspectors and the State or Province of Massachusetts and employed by Hartford Steam Boiler Inspection & Insurance Co., Hartford, CT have inspected the component supports described in this Data Report on May 26 9 87 and state that to the best of my knowledge and belief the NPT Certificate Holder has constructed these component supports in accordance with the ASME Code for Nuclear Power Plant Components.

By signing this certificate, neither the Inspector nor his employer makes any warranty, expressed or implied, concerning the component supports described in this Data Report. Furthermore, neither the Inspector nor his employer shall be liable in any manner for any personal injury or property damage or a loss of any kind arising from or connected with this inspection.

Date 5-27-87

Signed [signature] Commissions MA 946 RI 609
(Nat'l Bd., State, Prov., and No.)

CERTIFICATION OF FIELD INSPECTION

I, the undersigned, holding a valid commission issued by the National Board of Boiler and Pressure Vessel Inspectors and the State or Province of _____ and employed by _____ of _____ have compared the statements in this Data Report with the described component supports and state that the parts referred to as data items _____, not included in the certificate of shop inspection, have been inspected by me and that to the best of my knowledge and belief the NPT Certificate Holder has constructed these component supports in accordance with the ASME Code for Nuclear Power Plant Components.

By signing this certificate neither the Inspector nor his employer makes any warranty, expressed or implied, concerning the component supports described in this Data Report. Furthermore, neither the Inspector nor his employer shall be liable in any manner for any personal injury or property damage or a loss of any kind arising from or connected with this inspection.

Date _____

Signed _____ Commissions _____
(Nat'l Bd., State, Prov., and No.)

WASHINGTON PUBLIC POWER SUPPLY SYSTEM

PLAN NO. 2-0371

FORM NIS-2 OWNER'S REPORT FOR REPAIRS OR REPLACEMENTS
As Required by the Provisions of the ASME Code Section XI

1. Owner (Name) Washington Public Power Supply System — Date 11/17/87
   Owner (Address) 3000 George Washington Way, Richland, WA — Sheet 1 of 1
2. Plant (Name) WPPSS Nuclear Power Plant (WNP) — Unit WNP-2
   Plant (Address) Hanford, Benton County, WA — C20069 Repair Organization P.O. No., Job No., etc.
3. Work Performed by (Name) Bechtel Construction, Inc.
   Work Performed by (Address) P.O. Box 600, Richland, WA
4. Identification of System Residual Heat Removal (RHR) system
5. (a) Applicable Construction Code ASME Section III 19 71 Edition, W73 Addenda, None Code Case
   (b) Applicable Edition of ASME Section XI Utilized for Repairs or Replacements 19 80 Edition, W80
   Addenda, N308 Code Case
6. Identification of Components Repaired or Replaced and Replacement Components

Name of Component	Name of Manufacturer	Manufacturer Serial No.	National Board No.	Other I.D.	Year Built	Repaired, Replaced, or Replacement	ASME Code Stamped (Yes or No) Code Class
RHR(1)-2B	WPPSS	*	N/A	N/A	1984	Replacement	Yes, Class 2 (NF)

7. Description of Work:

Modified support RHR-441. The modification work was performed as follows:

1) Fabricated rigid strut.
2) Removed existing snubber and replaced it with rigid strut.

Notes:
*RHR(1)-2B-P1

968-22684 (9/87)

WASHINGTON PUBLIC POWER SUPPLY SYSTEM

PLAN NO. 2-0371

FORM NIS-2 (Back)

8. Tests Conducted: Hydrostatic ☐ Pneumatic ☐ Nominal Operating Pressure ☐ Other ☒ None
Test Pressure _____ psig, Test Temp. _____ °F
Component Design Pressure _____ psig, Temp. _____ °F

9. Remarks:

None

CERTIFICATE OF COMPLIANCE

We certify that the statements made in the report are correct and this replacement (repair or replacement) conforms to the rules of the ASME Code, Section XI.

Type Code Symbol Stamp Not applicable

Certificate Authorization No. Not applicable Expiration Date Not applicable

Signed [signature] (Owner or Owner's Designee) Title Plant Technical Manager

K Swab 11/12/87

Date 11/13 19 87

CERTIFICATE OF INSERVICE INSPECTION

I, the undersigned, holding a valid commission issued by the National Board of Boiler and Pressure Vessel Inspectors and the State of Washington and employed by Lumbermen's Mutual Casualty Co. of Illinois have inspected the components described in this Owner's Report during the period 5-14-87 to 10-29-87, and state that to the best of my knowledge and belief, the Owner has performed examinations and taken corrective measures described in this Owner's Report in accordance with the requirements of the ASME Code, Section XI.

By signing this certificate neither the Inspector nor his employer makes any warranty, expressed or implied, concerning the examinations and corrective measures described in this Owner's Report. Furthermore, neither the Inspector nor his employer shall be liable in any manner for any personal injury or property damage or a loss of any kind arising from or connected with this inspection.

[signature] (Inspector's Signature) Commissions 9556 W (National Board, State, and Endorsements)

Date 11-17 19 87

WASHINGTON PUBLIC POWER SUPPLY SYSTEM

PLAN NO. 2-0373

FORM NIS-2 OWNER'S REPORT FOR REPAIRS OR REPLACEMENTS
As Required by the Provisions of the ASME Code Section XI

1. Owner (Name) Washington Public Power Supply System Date 11/17/87
   Owner (Address) 3000 George Washington Way, Richland, WA Sheet 1 of 1
2. Plant (Name) WPPSS Nuclear Power Plant (WNP) Unit WNP-2
   Plant (Address) Hanford, Benton County, WA WPPSS
   Repair Organization P.O. No., Job No., etc.
3. Work Performed by (Name) WPPSS
   Work Performed by (Address) 3000 George Wash. Way, Richland, WA
4. Identification of System Main Steam (MS) System
5. (a) Applicable Construction Code ASME Section III 19 71 Edition, None Addenda, 1567 and 1711 Code Case
   (b) Applicable Edition of ASME Section XI Utilized for Repairs or Replacements 19 80 Edition, W80
   Addenda, N308 Code Case
6. Identification of Components Repaired or Replaced and Replacement Components

Name of Component	Name of Manufacturer	Manufacturer Serial No.	National Board No.	Other I.D.	Year Built	Repaired, Replaced, or Replacement	ASME Code Stamped (Yes or No) Code Class
MS-RV-4D	CV&G	*	N/A	**	1980	Replacement	Yes, Class 1

7. Description of Work:

Replaced disc insert for relief valve MS-RV-4D. Replacement work was performed as follows:

1) Removed existing disc insert.
2) Installed new disc insert furnished by Crosby, the original valve manufacturer.

Notes:
CV&G - Crosby Valve and Gage Company
*Serial Number N63790-00-0060
**MPL Number B22-F013

968-22684 (9/87)

WASHINGTON PUBLIC POWER SUPPLY SYSTEM

PLAN NO. 2-0373

FORM NIS-2 (Back)

8. Tests Conducted: Hydrostatic ☐ Pneumatic ☐ Nominal Operating Pressure ☐ Other ☒ None
Test Pressure _____ psig, Test Temp. _____ °F
Component Design Pressure _____ psig, Temp. _____ °F

9. Remarks:

None

CERTIFICATE OF COMPLIANCE

We certify that the statements made in the report are correct and this replacement (repair or replacement) conforms to the rules of the ASME Code, Section XI.

Type Code Symbol Stamp Not applicable

Certificate Authorization No. Not applicable Expiration Date Not applicable

Signed R L Webring (Owner or Owner's Designee.) Title Plant Technical Manager

11/12/87

Date 11/13 19 87

CERTIFICATE OF INSERVICE INSPECTION

I, the undersigned, holding a valid commission issued by the National Board of Boiler and Pressure Vessel Inspectors and the State of Washington and employed by Lumbermen's Mutual Casualty Co. of Illinois have inspected the components described in this Owner's Report during the period 5-14-87 to 10-28-87, and state that to the best of my knowledge and belief, the Owner has performed examinations and taken corrective measures described in this Owner's Report in accordance with the requirements of the ASME Code, Section XI.

By signing this certificate neither the Inspector nor his employer makes any warranty, expressed or implied, concerning the examinations and corrective measures described in this Owner's Report. Furthermore, neither the Inspector nor his employer shall be liable in any manner for any personal injury or property damage or a loss of any kind arising from or connected with this inspection.

Dan Hoggard (Inspector's Signature) Commissions 9556 W (National Board, State, and Endorsements)

Date 11-17 19 87

WASHINGTON PUBLIC POWER SUPPLY SYSTEM

PLAN NO. 2-0375

FORM NIS-2 OWNER'S REPORT FOR REPAIRS OR REPLACEMENTS
As Required by the Provisions of the ASME Code Section XI

1. Owner (Name) Washington Public Power Supply System — Date 11/17/87
   Owner (Address) 3000 George Washington Way, Richland, WA — Sheet 1 of 1
2. Plant (Name) WPPSS Nuclear Power Plant (WNP) — Unit WNP-2
   Plant (Address) Hanford, Benton County, WA — WPPSS (Repair Organization P.O. No., Job No., etc.)
3. Work Performed by (Name) WPPSS
   Work Performed by (Address) 3000 George Wash. Way, Richland, WA
4. Identification of System Residual Heat Removal (RHR) System
5. (a) Applicable Construction Code ASME Section III 19 * Edition, * Addenda, None Code Case
   (b) Applicable Edition of ASME Section XI Utilized for Repairs or Replacements 19 80 Edition, W80 Addenda, N308 Code Case
6. Identification of Components Repaired or Replaced and Replacement Components

Name of Component	Name of Manufacturer	Manufacturer Serial No.	National Board No.	Other I.D.	Year Built	Repaired, Replaced, or Replacement	ASME Code Stamped (Yes or No) Code Class
RHR(3)-2A	WPPSS	**	N/A	N/A	1983	Replacement	Yes, Class 2
RHR(4)-1A	WPPSS	**	N/A	N/A	1983	Replacement	Yes, Class 2
RHR-RV-88A	JEL	***	N/A	N/A	1981	Replacement	Yes, Class 2

7. Description of Work:

Installed test port and lap joint flange for relief valve RHR-RV-88A. The modification work was performed as follows:

1) Machined off the raised face on valve discharge flange.
2) Machined grooves on new pipe flange to accommodate elastomeric O-rings. Weld built up the flange beveled end. Performed PT examination on the beveled end and the weld built up area. PT examination results acceptable.
3) Cut existing pipe flange and installed new flange. Made circumferential butt weld. Performed PT and RT examination on the weld. PT and RT examination results acceptable.
4) Drilled hole in the flange outer edge, installed male connector and made required weld. Performed PT examination on the final weld. PT examination results acceptable.
5) Cut existing pipe and installed lap joint flange. Made required welds.
6) Performed PT examination on the final welds. PT examination results acceptable.

Notes:
*1971W73 for RHR(3)-2A and RHR(4)-1A
*1974W74 for RHR-RV-88A
**RHR(3)-2A-P1 and RHR(4)-1A-P1
***Serial Number 509258-105-1
JEL - JE Lonergan Co.

WASHINGTON PUBLIC POWER SUPPLY SYSTEM

PLAN NO. 2-0375

FORM NIS-2 (Back)

8. Tests Conducted: Hydrostatic ☐ Pneumatic ☐ Nominal Operating Pressure ☐ Other ☒ None
Test Pressure _____ psig, Test Temp. _____ °F
Component Design Pressure _____ psig, Temp. _____ °F

9. Remarks:
None

CERTIFICATE OF COMPLIANCE

We certify that the statements made in the report are correct and this replacement (repair or replacement) conforms to the rules of the ASME Code, Section XI.

Type Code Symbol Stamp Not applicable

Certificate Authorization No. Not applicable Expiration Date Not applicable

Signed [signature] Owner or Owner's Designee, Title Plant Technical Manager

11/12/87

Date 11/13 19 87

CERTIFICATE OF INSERVICE INSPECTION

I, the undersigned, holding a valid commission issued by the National Board of Boiler and Pressure Vessel Inspectors and the State of Washington and employed by Lumbermen's Mutual Casualty Co. of Illinois have inspected the components described in this Owner's Report during the period 5-18-87 to 10-6-87, and state that to the best of my knowledge and belief, the Owner has performed examinations and taken corrective measures described in this Owner's Report in accordance with the requirements of the ASME Code, Section XI.

By signing this certificate neither the Inspector nor his employer makes any warranty, expressed or implied, concerning the examinations and corrective measures described in this Owner's Report. Furthermore, neither the Inspector nor his employer shall be liable in any manner for any personal injury or property damage or a loss of any kind arising from or connected with this inspection.

Dan Hoggard (Inspector's Signature) Commissions 9556 W (National Board, State, and Endorsements)

Date 11-17 19 87

WASHINGTON PUBLIC POWER SUPPLY SYSTEM

PLAN NO. 2-0376

FORM NIS-2 OWNER'S REPORT FOR REPAIRS OR REPLACEMENTS
As Required by the Provisions of the ASME Code Section XI

1. Owner (Name) Washington Public Power Supply System — Date 7/26/88
   Owner (Address) 3000 George Washington Way, Richland, WA — Sheet 1 of 1
2. Plant (Name) WPPSS Nuclear Power Plant (WNP) — Unit WNP-2
   Plant (Address) Hanford, Benton County, WA — WPPSS Repair Organization P.O. No., Job No., etc.
3. Work Performed by (Name) WPPSS
   Work Performed by (Address) 3000 George Washington Way, Richland, WA
4. Identification of System Residual Heat Removal (RHR) System
5. (a) Applicable Construction Code ASME Section III 19 * Edition, * Addenda, None Code Case
   (b) Applicable Edition of ASME Section XI Utilized for Repairs or Replacements 19 80 Edition, W80 Addenda, N308 Code Case
6. Identification of Components Repaired or Replaced and Replacement Components

Name of Component	Name of Manufacturer	Manufacturer Serial No.	National Board No.	Other I.D.	Year Built	Repaired, Replaced, or Replacement	ASME Code Stamped (Yes or No) Code Class
RHR(3)-2B	WPPSS	**	N/A	N/A	1983	Replacement	Yes, Class 2
RHR(4)-1B	WPPSS	**	N/A	N/A	1983	Replacement	Yes, Class 2
RHR-RV-88B	JEL	***	N/A	N/A	1981	Replacement	Yes, Class 2

7. Description of Work:

Installed test port for relief valve RHR-RV-88B. The modification work was performed as follows:

1) Machined off the raised face on the valve flange.
2) Machined grooves on the new pipe flange to accommodate elastomeric O-rings.
3) Beveled pipe end. Performed PT examination on the beveled end. PT examination results acceptable.
4) Installed pipe flange, pipe, coupling and made required welds. Performed PT examination on the final socket welds and RT examination on circumferential butt weld. PT and RT examination results acceptable.
5) Drilled hole in the flange outer edge. Installed male connector and made required weld. Performed PT examination on the final weld. PT examination results acceptable.

Notes:

*1971W73 for RHR(3)-2B and RHR(4)-1B
**RHR(3)-2B-P1 and RHR(4)-1B-P1
JEL - JE Longergan Co.
*1974W74 for RHR-RV-88B
***Serial Number 509258-106-1

WASHINGTON PUBLIC POWER SUPPLY SYSTEM

PLAN NO. 2-0376

FORM NIS-2 (Back)

8. Tests Conducted: Hydrostatic ☐ Pneumatic ☐ Nominal Operating Pressure ☐ Other ☒ None
Test Pressure _____ psig, Test Temp. _____ °F
Component Design Pressure _____ psig, Temp. _____ °F

9. Remarks:

None

CERTIFICATE OF COMPLIANCE

We certify that the statements made in the report are correct and this replacement (repair or replacement) conforms to the rules of the ASME Code, Section XI.

Type Code Symbol Stamp Not applicable

Certificate Authorization No. Not applicable Expiration Date Not applicable

Signed [signature] Owner or Owner's Designee, Title Plant Technical Manager

K Swops 7/26/88

Date 7/26 19 88

CERTIFICATE OF INSERVICE INSPECTION

I, the undersigned, holding a valid commission issued by the National Board of Boiler and Pressure Vessel Inspectors and the State of Washington and employed by Lumbermen's Mutual Casualty Co. of Illinois have inspected the components described in this Owner's Report during the period 5/18/87 to 7/27/88, and state that to the best of my knowledge and belief, the Owner has performed examinations and taken corrective measures described in this Owner's Report in accordance with the requirements of the ASME Code, Section XI.

By signing this certificate neither the Inspector nor his employer makes any warranty, expressed or implied, concerning the examinations and corrective measures described in this Owner's Report. Furthermore, neither the Inspector nor his employer shall be liable in any manner for any personal injury or property damage or a loss of any kind arising from or connected with this inspection.

[signature] Inspector's Signature Commissions 7447-W National Board, State, and Endorsements

Date July 27 19 88

WASHINGTON PUBLIC POWER SUPPLY SYSTEM

PLAN NO. 2-0377

FORM NIS-2 OWNER'S REPORT FOR REPAIRS OR REPLACEMENTS
As Required by the Provisions of the ASME Code Section XI

1. Owner (Name) Washington Public Power Supply System — Date 7/26/88
   Owner (Address) 3000 George Washington Way, Richland, WA — Sheet 1 of 1
2. Plant (Name) WPPSS Nuclear Power Plant (WNP) — Unit WNP-2
   Plant (Address) Hanford, Benton County, WA — WPPSS Repair Organization P.O. No., Job No., etc.
3. Work Performed by (Name) WPPSS
   Work Performed by (Address) 3000 George Washington Way, Richland, WA
4. Identification of System Residual Heat Removal (RHR) System
5. (a) Applicable Construction Code ASME Section III 19 * Edition, * Addenda, None Code Case
   (b) Applicable Edition of ASME Section XI Utilized for Repairs or Replacements 19 80 Edition, W80
   Addenda, N308 Code Case
6. Identification of Components Repaired or Replaced and Replacement Components

Name of Component	Name of Manufacturer	Manufacturer Serial No.	National Board No.	Other I.D.	Year Built	Repaired, Replaced, or Replacement	ASME Code Stamped (Yes or No) Code Class
RHR(3)-1C	WPPSS	**	N/A	N/A	1983	Replacement	Yes, Class 2
RHR(4)-1C	WPPSS	**	N/A	N/A	1983	Replacement	Yes, Class 2
RHR-RV-88C	JEL	***	N/A	N/A	1978	Replacement	Yes, Class 2

7. Description of Work:

Installed test port for relief valve RHR-RV-88C. The modification work was performed as follows:

1) Machined off the raised face on the valve flange.
2) Cut existing pipe and installed lap joint flange. Made required socket welds.
3) Performed PT examination on the final socket welds. PT examination results acceptable.
4) Machined grooves on the new pipe flange to accommodate elastomeric O-rings.
5) Beveled pipe end. Performed PT examination on the beveled end. PT examination results acceptable.
6) Installed pipe flange, pipe, coupling and made required welds. Performed PT examination on the final socket welds and RT examination on circumferential butt weld. PT and RT exmaination results acceptable.
7) Drilled hole in the flange outer edge. Installed male connector and made required weld. Performed PT examination on the final weld. PT examination results acceptable.

Notes:
*1971W73 for RHR(3)-1C and RHR(4)-1C
**RHR(3)-1C-P1 and RHR(4)-1C-P1
JEL - JE Lonergan Co.
*1974W74 for RHR-RV-88C
***Serial Number 509258-81-1

WASHINGTON PUBLIC POWER SUPPLY SYSTEM

PLAN NO. 2-0377

FORM NIS-2 (Back)

8. Tests Conducted: Hydrostatic ☐ Pneumatic ☐ Nominal Operating Pressure ☐ Other ☒ None
Test Pressure _____ psig, Test Temp. _____ °F
Component Design Pressure _____ psig, Temp. _____ °F

9. Remarks:

None

CERTIFICATE OF COMPLIANCE

We certify that the statements made in the report are correct and this replacement (repair or replacement) conforms to the rules of the ASME Code, Section XI.

Type Code Symbol Stamp Not applicable

Certificate Authorization No. Not applicable Expiration Date Not applicable

Signed [signature] Owner or Owner's Designee, Title Plant Technical Manager

7/26/88

Date 7/26 19 88

CERTIFICATE OF INSERVICE INSPECTION

I, the undersigned, holding a valid commission issued by the National Board of Boiler and Pressure Vessel Inspectors and the State of Washington and employed by Lumbermen's Mutual Casualty Co. of Illinois have inspected the components described in this Owner's Report during the period 5/18/~~88~~ 87 to 7/27/88, and state that to the best of my knowledge and belief, the Owner has performed examinations and taken corrective measures described in this Owner's Report in accordance with the requirements of the ASME Code, Section XI.

By signing this certificate neither the Inspector nor his employer makes any warranty, expressed or implied, concerning the examinations and corrective measures described in this Owner's Report. Furthermore, neither the Inspector nor his employer shall be liable in any manner for any personal injury or property damage or a loss of any kind arising from or connected with this inspection.

[signature] Inspector's Signature Commissions 7447-W National Board, State, and Endorsements

Date 27 July 19 88

WASHINGTON PUBLIC POWER SUPPLY SYSTEM

PLAN NO. 2-0378

FORM NIS-2 OWNER'S REPORT FOR REPAIRS OR REPLACEMENTS
As Required by the Provisions of the ASME Code Section XI

1. Owner (Name) Washington Public Power Supply System — Date 8/12/88
   Owner (Address) 3000 George Washington Way, Richland, WA — Sheet 1 of 1
2. Plant (Name) WPPSS Nuclear Power Plant (WNP) — Unit WNP-2
   Plant (Address) Hanford, Benton County, WA — WPPSS
   Repair Organization P.O. No., Job No., etc.
3. Work Performed by (Name) WPPSS
   Work Performed by (Address) 3000 George Wash. Way, Richland, WA
4. Identification of System Low Pressure Core Spray (LPCS) System
5. (a) Applicable Construction Code ASME Section III 19 * Edition, * Addenda, None Code Case
   (b) Applicable Edition of ASME Section XI Utilized for Repairs or Replacements 19 80 Edition, W80 Addenda, N308 Code Case
6. Identification of Components Repaired or Replaced and Replacement Components

Name of Component	Name of Manufacturer	Manufacturer Serial No.	National Board No.	Other I.D.	Year Built	Repaired, Replaced, or Replacement	ASME Code Stamped (Yes or No) Code Class
LPCS(2)-1	WPPSS	**	N/A	N/A	1983	Replacement	Yes, Class 2
LPCS-RV-31	JEL	***	N/A	N/A	1979	Replacement	Yes, Class 2

7. Description of Work:

Installed test port for relief valve LPCS-RV-31. The modification work was performed as follows:

1) Machined off the raised face on the valve flange.
2) Cut existing pipe and installed lap joint flange. Made required socket welds.
3) Performed PT examination on the final socket welds. PT examination results acceptable.
4) Machined grooves on the new pipe flange to accommodate elastomeric O-rings.
5) Beveled pipe end. Performed PT examination on the beveled end. PT examination results acceptable.
6) Installed pipe flange, pipe, coupling and made required welds. Performed PT examination on the final socket welds and RT examination on circumferential butt weld. PT and RT examination results acceptable.
7) Drilled hole in the flange outer edge. Installed male connector and made required weld. Performed PT examination on the final weld. PT examination results acceptable.

Notes:

*1971W73 for LPCS(2)-1
**LPCS(2)-1-P1
JEL - JE Lonergan Co.
*1974W74 for LPCS-RV-31
***Serial Number 509258-71-1

WASHINGTON PUBLIC POWER SUPPLY SYSTEM

PLAN NO. 2-0378

FORM NIS-2 (Back)

8. Tests Conducted: Hydrostatic ☐ Pneumatic ☐ Nominal Operating Pressure ☐ Other ☒ None
Test Pressure _____ psig, Test Temp. _____ °F
Component Design Pressure _____ psig, Temp. _____ °F

9. Remarks:

None

CERTIFICATE OF COMPLIANCE

We certify that the statements made in the report are correct and this replacement (repair or replacement) conforms to the rules of the ASME Code, Section XI.

Type Code Symbol Stamp Not applicable

Certificate Authorization No. Not applicable Expiration Date Not applicable

Signed [signature] Owner or Owner's Designee, Title Plant Technical Manager

K Swob 8/12/88

Date 8/17 19 88

CERTIFICATE OF INSERVICE INSPECTION

I, the undersigned, holding a valid commission issued by the National Board of Boiler and Pressure Vessel Inspectors and the State of Washington and employed by Lumbermen's Mutual Casualty Co. of Illinois have inspected the components described in this Owner's Report during the period 5/19/87 to 8/12/88, and state that to the best of my knowledge and belief, the Owner has performed examinations and taken corrective measures described in this Owner's Report in accordance with the requirements of the ASME Code, Section XI.

By signing this certificate neither the Inspector nor his employer makes any warranty, expressed or implied, concerning the examinations and corrective measures described in this Owner's Report. Furthermore, neither the Inspector nor his employer shall be liable in any manner for any personal injury or property damage or a loss of any kind arising from or connected with this inspection.

[signature] Inspector's Signature Commissions 5470 (e) National Board, State, and Endorsements

Date 8/17 19 88

WASHINGTON PUBLIC POWER SUPPLY SYSTEM

PLAN NO. 2-0381

FORM NIS-2 OWNER'S REPORT FOR REPAIRS OR REPLACEMENTS
As Required by the Provisions of the ASME Code Section XI

Owner (Name) Washington Public Power Supply System — Date 9/9/87

Owner (Address) 3000 George Washington Way, Richland, WA — Sheet 1 of 1

Plant (Name) WPPSS Nuclear Power Plant (WNP) — Unit WNP-2

Plant (Address) Hanford, Benton County, WA — WPPSS (Repair Organization P.O No., Job No., etc.)

Work Performed by (Name) WPPSS

Work Performed by (Address) 3000 George Wash. Way, Richland, WA

Identification of System Main Steam (MS) System

(a) Applicable Construction Code ASME Section III 1971 Edition, W73 Addenda, None Code Case

(b) Applicable Edition of ASME Section XI Utilized for Repairs or Replacements 1980 Edition, W80 Addenda, N308 Code Case

6. Identification of Components Repaired or Replaced and Replacement Components

Name of Component	Name of Manufacturer	Manufacturer Serial No.	National Board No.	Other I.D.	Year Built	Repaired, Replaced, or Replacement	ASME Code Stamped (Yes or No) Code Class
MS(18)-2-6	WPPSS	*	N/A	N/A	1983	Replacement	Yes, Class 3
MS(18)-2-7	WPPSS	*	N/A	N/A	1983	Replacement	Yes, Class 3
MS(18)-2-11	WPPSS	*	N/A	N/A	1983	Replacement	Yes, Class 3

7. Description of Work:

Removed snubbers and replaced them with rigid struts for pipe supports MSRV-2B-5, MSRV-3C-4 and MSRV-4C-4. The replacement work was performed as follows:

1) Fabricated rigid struts by welding.

2) Removed existing snubbers and replaced them with rigid struts.

Notes:
*MS(18)-2-6-P1
*MS(18)-2-7-P1
*MS(18)-2-11-P1

Plan No. 2-0381

WASHINGTON PUBLIC POWER SUPPLY SYSTEM

FORM NIS-2 (Back)

8. Tests Conducted: Hydrostatic ☐ Pneumatic ☐ Nominal Operating Pressure ☐ Other ☒ None
Test Pressure _____ psig, Test Temp. _____ °F
Component Design Pressure _____ psig, Temp. _____ °F

9. Remarks

None

CERTIFICATE OF COMPLIANCE

We certify that the statements made in the report are correct and this replacement (repair or replacement) conforms to the rules of the ASME Code, Section XI.

Type Code Symbol Stamp Not Applicable

Certificate Authorization No. Not Applicable Expiration Date Not Applicable

Signed [signature] (Owner or Owner's Designee) Title Plant Technical Manager

9/4/87

Date 9/4/ 19 87

CERTIFICATE OF INSERVICE INSPECTION

I, the undersigned, holding a valid commission issued by the National Board of Boiler and Pressure Vessel Inspectors and the State of Washington and employed by Lumbermen's Mutual Casualty Co. of Illinois have inspected the components described in this Owner's Report during the period 5-25-87 to 9-4-87, and state that *Owner's Report in accordance with the requirements of the ASME Code, Section XI.

By signing this certificate neither the Inspector nor his employer makes any warranty, expressed or implied, concerning the examinations and corrective measures described in this Owner's Report. Furthermore, neither the Inspector nor his employer shall be liable in any manner for any personal injury or property damage or a loss of any kind arising from or connected with this inspection.

[signature] (Inspector's Signature) Commissions 9556 W (National Board, State, and Endorsements)

Date 9/9 19 87

*to the best of my knowledge and belief, the Owner has performed examinations and taken corrective measures described in this

870054

WASHINGTON PUBLIC POWER SUPPLY SYSTEM

PLAN NO. 2-0386

FORM NIS-2 OWNER'S REPORT FOR REPAIRS OR REPLACEMENTS
As Required by the Provisions of the ASME Code Section XI

1. Owner (Name) Washington Public Power Supply System — Date 11/17/87
   Owner (Address) 3000 George Washington Way, Richland, WA — Sheet 1 of 1
2. Plant (Name) WPPSS Nuclear Power Plant (WNP) — Unit WNP-2
   Plant (Address) Hanford, Benton County, WA — C20069 Repair Organization P.O. No., Job No., etc.
3. Work Performed by (Name) Bechtel Construction, Inc.
   Work Performed by (Address) P.O. Box 600, Richland, WA
4. Identification of System Instrument Line PI(1)-4S-X74a
5. (a) Applicable Construction Code ASME Section III 19 74 Edition, W75 Addenda, None Code Case
   (b) Applicable Edition of ASME Section XI Utilized for Repairs or Replacements 19 80 Edition, W80 Addenda, N308 Code Case
6. Identification of Components Repaired or Replaced and Replacement Components

Name of Component	Name of Manufacturer	Manufacturer Serial No.	National Board No.	Other I.D.	Year Built	Repaired, Replaced, or Replacement	ASME Code Stamped (Yes or No) Code Class
PI(1)-4S-X74a	JCI	*	N/A	N/A	1983	Replacement	Yes, Class 1 (NF)

7. Description of Work:

Replaced U bolt for support HGR-794-31, No. 5 for instrument line PI(1)-4S-X74a.

Notes:
JCI - Johnson Control, Inc.
*PI(1)-4S-X74a

968-22584 (9/87)

WASHINGTON PUBLIC POWER SUPPLY SYSTEM

PLAN NO. 2-0386

FORM NIS-2 (Back)

8. Tests Conducted: Hydrostatic ☐ Pneumatic ☐ Nominal Operating Pressure ☐ Other ☒ None
Test Pressure _____ psig, Test Temp. _____ °F
Component Design Pressure _____ psig, Temp. _____ °F

9. Remarks:

None

CERTIFICATE OF COMPLIANCE

We certify that the statements made in the report are correct and this replacement (repair or replacement) conforms to the rules of the ASME Code, Section XI.

Type Code Symbol Stamp Not applicable

Certificate Authorization No. Not applicable Expiration Date Not applicable

Signed [signature] Owner or Owner's Designee, Title Plant Technical Manager

K Swift 11/12/87

Date 11/13 19 87

CERTIFICATE OF INSERVICE INSPECTION

I, the undersigned, holding a valid commission issued by the National Board of Boiler and Pressure Vessel Inspectors and the State of Washington and employed by Lumbermen's Mutual Casualty Co. of Illinois have inspected the components described in this Owner's Report during the period 5-28-87 to 9-29-87, and state that to the best of my knowledge and belief, the Owner has performed examinations and taken corrective measures described in this Owner's Report in accordance with the requirements of the ASME Code, Section XI.

By signing this certificate neither the Inspector nor his employer makes any warranty, expressed or implied, concerning the examinations and corrective measures described in this Owner's Report. Furthermore, neither the Inspector nor his employer shall be liable in any manner for any personal injury or property damage or a loss of any kind arising from or connected with this inspection.

[signature] Inspector's Signature Commissions 9556 W National Board, State, and Endorsements

Date 11-13-87 19 87

WASHINGTON PUBLIC POWER SUPPLY SYSTEM

PLAN NO. 2-0389

FORM NIS-2 OWNER'S REPORT FOR REPAIRS OR REPLACEMENTS
As Required by the Provisions of the ASME Code Section XI

Owner (Name) Washington Public Power Supply System — Date 9/9/87

Owner (Address) 3000 George Washington Way, Richland, WA — Sheet 1 of 1

Plant (Name) WPPSS Nuclear Power Plant (WNP) — Unit WNP-2

Plant (Address) Hanford, Benton County, WA — WPPSS (Repair Organization P.O No., Job No., etc.)

Work Performed by (Name) WPPSS

Work Performed by (Address) 3000 George Wash. Way, Richland, WA

Identification of System Standby Liquid Control (SLC) System

(a) Applicable Construction Code ASME Section III 19 71 Edition, W73 Addenda, None Code Case

(b) Applicable Edition of ASME Section XI Utilized for Repairs or Replacements 19 80 Edition, W80 Addenda, N308 Code Case

6. Identification of Components Repaired or Replaced and Replacement Components

Name of * Component	Name of Manufacturer	Manufacturer Serial No.	National Board No.	Other I.D.	Year Built	Repaired, Replaced, or Replacement	ASME Code Stamped (Yes or No) Code Class
SLC-4475-12	Grinnell	41-1511-2	N/A	N/A	1987	Modified	Yes, Class 1
SLC-4475-120	Grinnell	41-1511-1	N/A	N/A	1987	Modified	Yes, Class 1

7. Description of Work:

Modified rigid struts for pipe supports SLC-4475-12 and SLC-4475-120. The rigid struts were modified to increase pin to pin dimensions. The modification work was performed as follows:

1) Cut pipe between two (2) end pins.
2) Welded in a new pipe piece between two (2) rigid strut pieces.
3) Performed PT examination on the final welds. PT examination results acceptable.

*Rigid struts for pipe supports SLC-4475-12 and SLC-4475-120 installed in piping system SLC(2)-4S-P2

Notes:
Modified rigid struts were installed in place of existing snubbers in piping system SLC(2)-4S in accordance with ASME Section XI Plan No. 2-0370

Plan No. 2-0389

WASHINGTON PUBLIC POWER
SUPPLY SYSTEM

FORM NIS-2 (Back)

8. Tests Conducted: Hydrostatic ☐ Pneumatic ☐ Nominal Operating Pressure ☐ Other ☒ None
Test Pressure _____ psig, Test Temp. _____ °F
Component Design Pressure _____ psig, Temp. _____ °F

9. Remarks

- o SLC-4475-12 S/N 41-1511-2
- o SCL-4475-120 S/N 41-1511-1

CERTIFICATE OF COMPLIANCE

We certify that the statements made in the report are correct and this modification (repair or replacement) conforms to the rules of the ASME Code, Section XI.

Type Code Symbol Stamp Not Applicable

Certificate Authorization No. Not Applicable Expiration Date Not Applicable

Signed R L Vielbrin (Owner or Owner's Designee.) Title Plant Technical Manager

K Smith 9/4/87

Date 9/9/87 19 87

CERTIFICATE OF INSERVICE INSPECTION

I, the undersigned, holding a valid commission issued by the National Board of Boiler and Pressure Vessel Inspectors and the State of Washington and employed by Lumbermen's Mutual Casualty Co. of Illinois have inspected the components described in this Owner's Report during the period 6-2-87 to 9-4-87, and state that* Owner's Report in accordance with the requirements of the ASME Code, Section XI.

By signing this certificate neither the Inspector nor his employer makes any warranty, expressed or implied, concerning the examinations and corrective measures described in this Owner's Report. Furthermore, neither the Inspector nor his employer shall be liable in any manner for any personal injury or property damage or a loss of any kind arising from or connected with this inspection.

Dan Hoggard (Inspector's Signature) Commissions 9556 W (National Board, State, and Endorsements)

Date 9/9 19 87

*to the best of my knowledge and belief, the Owner has performed examinations and taken corrective measures described in this

870054

As Required by the Provisions of the ASME Code

PLAN NO. 2-0389

1. Manufactured by Grinnell Corporation, 294 West Exchange St., Providence, RI 02901
(Name and address of NPT Certificate Holder)

2. Manufactured for Washington Public Power Supply System, P.O. Box 968, Richland, WA 99352
(Name and address of purchaser or owner)

3. Location of Installation WNP-2 OPS WHS Complex, North Power Plant Loop, Richland, WA 99352

4. Identification

	(a) Component Support I.D. No.	(b) Canadian Registration No.	(c) Applicable Drawings With Last Rev. & Date	(d) Design Report or Load Capacity Data Sheet	(e) Type of Component Support	(f) Class	(g) Nat'l Board No.*	(h) Year Built
(1)	41-1511-1	N/A	210-10000	DRS	CSS	1	N/A	1967
(2)			Rev.-	Rev.0	Fig.210			
(3)			Dated 3/13/87					
(4)								
(5)								
(6)								
(7)				SLC-4475-120.				
(8)								
(9)								
(10)								

5. Remarks:

CERTIFICATE OF COMPLIANCE

We certify that the statements made in this report are correct and that these component supports conform to the rules of construction of the ASME Nuclear Power Plant Components, Section III, Division 1, Edition 1971 Addenda Winter 1973 (Date)

Code Case No. N-249

Date 5/26/87 Signed Grinnell Corp. (NPT Certificate Holder) by David V. Walshe

Our ASME Certificate of Authorization No. N-2444-1 to use the NPT (NPT)

Symbol expires 10/27/89 (Date)

CERTIFICATION OF DESIGN

Design Information on File at Grinnell Corporation, 294 West Exchange St., Prov., RI 02901

Stress Report or Load Capacity Data Sheets on File at:
Grinnell Corporation, 294 West Exchange St., Prov., RI 02901

Design Specifications Certified by (1) Robert B. Mulcahey PE State Rhode Island
Reg. No. 3484

Stress Analysis Report or Load Capacity Data Sheets Certified by (1) Frank J. Birch
PE State Rhode Island Reg. No. 4149

(1) List name only, signature not required.

*Supplemental information in the form of lists, sketches, or drawings may be used provided (1) size is 8½ X 11, (2) information 1 through 4 on this Data Report is included on each sheet, (3) each sheet is numbered and number of sheets is recorded on this form.

(6/85) This form (E00073) may be obtained from the Order Dept., ASME, 345 E. 47th St., New York

J. Raj Rana

PLAN NO. 2-0389.

FORM NF-1 (Back)

Mfr. Serial No. 41-2511

CERTIFICATE OF SHOP INSPECTION

I, the undersigned, holding a valid commission issued by the National Board of Boiler and Pressure Vessel Inspectors and the State or Province of Massachusetts and employed by Hartford Steam Boiler Inspection & Insurance Co., Hartford, Ct. have inspected the component supports described in this Data Report on May 26, 19 87 and state that to the best of my knowledge and belief the NPT Certificate Holder has constructed these component supports in accordance w. ASME Code for Nuclear Power Plant Components.

By signing this certificate, neither the Inspector nor his employer makes any warranty, expressed or implied, concerning the component supports de: in this Data Report. Furthermore, neither the Inspector nor his employer shall be liable in any manner for any personal injury or property damage o of any kind arising from or connected with this inspection.

Date 5-27-87

Signed N J Smith Commissions MA 945 RI 609

(Nat'l Bd., State, Prov., and No.)

CERTIFICATION OF FIELD INSPECTION

I, the undersigned, holding a valid commission issued by the National Board of Boiler and Pressure Vessel Inspectors and the State or Province of _____ and employed by _____ of _____ have compared the statements in this Data Report with the described component supports and state that th: referred to as data items _____, not included in the certificate of shop inspection, have been inspected by me ar to the best of my knowledge and belief the NPT Certificate Holder has constructed these component supports in accordance with the ASME Code for N Power Plant Components.

By signing this certificate neither the Inspector nor his employer makes any warranty, expressed or implied, concerning the component supports descr this Data Report. Furthermore, neither the Inspector nor his employer shall be liable in any manner for any personal injury or property damage or a loss kind arising from or connected with this inspection.

Date _____

Signed _____ Commissions _____

(Nat'l Bd., State, Prov., and No.)

FORM NF-1 NPT CERTIFICATE HOLDERS' DATA REPORT FOR COMPONENT SUPPORTS*

As Required by the Provisions of the ASME Code Rules, Section III, Division 1 PLAN NO 2-0389

1. Manufactured by Grinnell Corporation, 294 West Exchange St., Prov., RI 02901
(Name and address of NPT Certificate Holder)

2. Manufactured for Washington Public Power Supply System, P.O. Box 968, Richland, WA 99352
(Name and address of purchaser or owner)

3. Location of Installation WNP-2 OPS WHS Complex, North Power Plant Loop, Richland, WA 99352

4. Identification

	(a) Component Support I.D. No.	(b) Canadian Registration No.	(c) Applicable Drawings With Last Rev. & Date	(d) Design Report or Load Capacity Data Sheet	(e) Type of Component Support	(f) Class	(g) Nat'l Board No.	(h) Year Built
(1)	41-1511-2	N/A	210-10000	DRS210	CSS	1	N/A	1987
(2)			Rev.-	Rev.0				
(3)			Dated 3/13/87					
(4)								
(5)								
(6)								
(7)				SLC- 4475-12				
(8)								
(9)								
(10)								

Rudip Singh 9/2/87.

5. Remarks:

CERTIFICATE OF COMPLIANCE

We certify that the statements made in this report are correct and that these component supports conform to the rules of construction of the ASME Code for Nuclear Power Plant Components, Section III, Division 1, Edition 1971 Addenda Winter 1973 (Date)

Case No. N-249

5/26/87 Signed Grinnell Corporation (NPT Certificate Holder) by David V. Walshe

Our ASME Certificate of Authorization No. N-2444-1 to use the NPS (NPT)

Symbol expires 10/27/89 (Date)

CERTIFICATION OF DESIGN

Design Information on File at Grinnell Corporation, 294 West Exchange St., Prov., RI 02901

Stress Report or Load Capacity Data Sheets on File at:
Grinnell Corporation, 294 West Exchange St., Prov., RI 02901

Design Specifications Certified by (1) Robert B. Mulcahey PE State Rhode Island
Reg. No. 3484.

Stress Analysis Report or Load Capacity Data Sheets Certified by (1) Frank J. Birch
PE State Rhode Island Reg. No. 4149

(1) List name only, signature not required.

*Supplemental information in the form of lists, sketches, or drawings may be used provided (1) size is 8½ X 11, (2) information in 1 through 4 on this Data Report is included on each sheet, (3) each sheet is numbered and number of sheets is recorded at the t this form.

(6/85) This form (E00075) may be obtained from the Order Dept., ASME, 345 E. 47th St., New York, N.Y. 10

PLAN NO 2-0389

Mfr. Serial No. 41-1511-2

CERTIFICATE OF SHOP INSPECTION

I, the undersigned, holding a valid commission issued by the National Board of Boiler and Pressure Vessel Inspectors and the State or Province of Massachusetts and employed by Hartford Steam Boiler Inspection & Insurance Co., Hartford, CT have inspected the component supports described in this Data Report on May 26 19 87 and state that to the best of my knowledge and belief the NPT Certificate Holder has constructed these component supports in accordance with the ASME Code for Nuclear Power Plant Components.

By signing this certificate, neither the Inspector nor his employer makes any warranty, expressed or implied, concerning the component supports described in this Data Report. Furthermore, neither the Inspector nor his employer shall be liable in any manner for any personal injury or property damage or a loss of any kind arising from or connected with this inspection.

Date 5-27-87

Signed [signature] Commissions MA 946 RI 609
(Nat'l Bd., State, Prov., and No.)

CERTIFICATION OF FIELD INSPECTION

I, the undersigned, holding a valid commission issued by the National Board of Boiler and Pressure Vessel Inspectors and the State or Province of _____ and employed by _____ of _____ have compared the statements in this Data Report with the described component supports and state that the parts referred to as data items _____, not included in the certificate of shop inspection, have been inspected by me and that to the best of my knowledge and belief the NPT Certificate Holder has constructed these component supports in accordance with the ASME Code for Nuclear Power Plant Components.

By signing this certificate neither the Inspector nor his employer makes any warranty, expressed or implied, concerning the component supports described in this Data Report. Furthermore, neither the Inspector nor his employer shall be liable in any manner for any personal injury or property damage or a loss of any kind arising from or connected with this inspection.

Date _____

Signed _____ Commissions _____
(Nat'l Bd., State, Prov., and No.)

WASHINGTON PUBLIC POWER SUPPLY SYSTEM

PLAN NO. 2-0395

FORM NIS-2 OWNER'S REPORT FOR REPAIRS OR REPLACEMENTS
As Required by the Provisions of the ASME Code Section XI

1. Owner (Name) Washington Public Power Supply System — Date 11-25-87
   Owner (Address) 3000 George Washington Way, Richland, WA — Sheet 1 of 1
2. Plant (Name) WPPSS Nuclear Power Plant (WNP) — Unit WNP-2
   Plant (Address) Hanford, Benton County, WA — WPPSS Repair Organization P.O. No., Job No., etc.
3. Work Performed by (Name) WPPSS
   Work Performed by (Address) 3000 George Wash. Way, Richland, WA
4. Identification of System Fuel Pool Cooling (FPC) System
5. (a) Applicable Construction Code ASME Section III 19 71 Edition, W72 Addenda, None Code Case
   (b) Applicable Edition of ASME Section XI Utilized for Repairs or Replacements 19 80 Edition, W80 Addenda, N308 Code Case
6. Identification of Components Repaired or Replaced and Replacement Components

Name of Component	Name of Manufacturer	Manufacturer Serial No.	National Board No.	Other I.D.	Year Built	Repaired, Replaced, or Replacement	ASME Code Stamped (Yes or No) Code Class
FPC-V-112A	A/D	3N-381	N/A	N/A	1975	Replacement	Yes, Class 3
FPC-V-112B	A/D	3N-376	N/A	N/A	1974	Replacement	Yes, Class 3

7. Description of Work:

Modified tilting disc check valves by installing disc travel stop. The modification work was performed as follows:

1) Installed travel stop on valve disc counterweight.
2) Made required welds.
3) Performed pressure test to confirm pressure boundary integrity. No evidence of leakage during pressure test.

Notes:

A/D - Anchor/Darling Valve Co.

WASHINGTON PUBLIC POWER SUPPLY SYSTEM

PLAN NO. 2-0395

FORM NIS-2 (Back)

8. Tests Conducted: Hydrostatic ☐ Pneumatic ☐ Nominal Operating Pressure ☒ Other ☐ _____
Test Pressure * psig, Test Temp. * °F
Component Design Pressure 275 psig, Temp. 100 °F

9. Remarks:

None

*FPC-V-112A - Test pressure 87 psig at test temperature 95°F
*FPC-V-112B - Test pressure 86 psig at test temperature 90°F

CERTIFICATE OF COMPLIANCE

We certify that the statements made in the report are correct and this replacement (repair or replacement) conforms to the rules of the ASME Code, Section XI.

Type Code Symbol Stamp Not applicable

Certificate Authorization No. Not applicable Expiration Date Not applicable

Signed [signature] (Owner or Owner's Designee,) Title Plant Technical Manager

11/29/87.

Date 11-25 19 87

CERTIFICATE OF INSERVICE INSPECTION

I, the undersigned, holding a valid commission issued by the National Board of Boiler and Pressure Vessel Inspectors and the State of Washington and employed by Lumbermen's Mutual Casualty Co. of Illinois have inspected the components described in this Owner's Report during the period 9-2-87 to 11-23-87, and state that to the best of my knowledge and belief, the Owner has performed examinations and taken corrective measures described in this Owner's Report in accordance with the requirements of the ASME Code, Section XI.

By signing this certificate neither the Inspector nor his employer makes any warranty, expressed or implied, concerning the examinations and corrective measures described in this Owner's Report. Furthermore, neither the Inspector nor his employer shall be liable in any manner for any personal injury or property damage or a loss of any kind arising from or connected with this inspection.

[signature] (Inspector's Signature) Commissions 4556 W (National Board, State, and Endorsements)

Date 11-25 19 87

WASHINGTON PUBLIC POWER SUPPLY SYSTEM

PLAN NO. 2-0396

FORM NIS-2 OWNER'S REPORT FOR REPAIRS OR REPLACEMENTS
As Required by the Provisions of the ASME Code Section XI

1. Owner (Name) Washington Public Power Supply System — Date 12-4-87
   Owner (Address) 3000 George Washington Way, Richland, WA — Sheet 1 of 1
2. Plant (Name) WPPSS Nuclear Power Plant (WNP) — Unit WNP-2
   Plant (Address) Hanford, Benton County, WA — WPPSS Repair Organization P.O. No., Job No., etc.
3. Work Performed by (Name) WPPSS
   Work Performed by (Address) 3000 George Wash. Way, Richland, WA
4. Identification of System Fuel Pool Cooling (FPC) System
5. (a) Applicable Construction Code ASME Section III 19 71 Edition, W73 Addenda, None Code Case
   (b) Applicable Edition of ASME Section XI Utilized for Repairs or Replacements 19 80 Edition, W80 Addenda, N308 Code Case
6. Identification of Components Repaired or Replaced and Replacement Components

Name of Component	Name of Manufacturer	Manufacturer Serial No.	National Board No.	Other I.D.	Year Built	Repaired, Replaced, or Replacement	ASME Code Stamped (Yes or No) Code Class
FPC(1)-1	WPPSS	*	N/A	N/A	1983	Replacement	Yes, Class 3

7. Description of Work:

Replaced one (1) missing stud and two (2) nuts for flanged joint in line 2"FPC(25)-1. Performed pressure test to confirm pressure boundary integrity. No evidence of leakage during pressure test.

Notes:

*FPC(1)-1-P1

WASHINGTON PUBLIC POWER SUPPLY SYSTEM

PLAN NO. 2-0396

FORM NIS-2 (Back)

8. Tests Conducted: Hydrostatic ☐ Pneumatic ☐ Nominal Operating Pressure ☒ Other ☐ _____
Test Pressure 220 psig, Test Temp. 60 °F
Component Design Pressure 150 psig, Temp. 175 °F

9. Remarks:

None

CERTIFICATE OF COMPLIANCE

We certify that the statements made in the report are correct and this replacement (repair or replacement) conforms to the rules of the ASME Code, Section XI.

Type Code Symbol Stamp Not applicable

Certificate Authorization No. Not applicable Expiration Date Not applicable

Signed [signature] Owner or Owner's Designee, Title Plant Technical Manager

Date 12/4/87 19 87

CERTIFICATE OF INSERVICE INSPECTION

I, the undersigned, holding a valid commission issued by the National Board of Boiler and Pressure Vessel Inspectors and the State of Washington and employed by Lumbermen's Mutual Casualty Co. of Illinois have inspected the components described in this Owner's Report during the period 9-22-87 to 11-11-87, and state that to the best of my knowledge and belief, the Owner has performed examinations and taken corrective measures described in this Owner's Report in accordance with the requirements of the ASME Code, Section XI.

By signing this certificate neither the Inspector nor his employer makes any warranty, expressed or implied, concerning the examinations and corrective measures described in this Owner's Report. Furthermore, neither the Inspector nor his employer shall be liable in any manner for any personal injury or property damage or a loss of any kind arising from or connected with this inspection.

Dan Hoggarth (Inspector's Signature) Commissions 9556 W (National Board, State, and Endorsements)

Date 12-4 19 87

WASHINGTON PUBLIC POWER SUPPLY SYSTEM

PLAN NO. 2-0398 and 2-0398 R1

FORM NIS-2 OWNER'S REPORT FOR REPAIRS OR REPLACEMENTS
As Required by the Provisions of the ASME Code Section XI

1. Owner (Name) Washington Public Power Supply System — Date 12/24/87
   Owner (Address) 3000 George Washington Way, Richland, WA — Sheet 1 of 1
2. Plant (Name) WPPSS Nuclear Power Plant (WNP) — Unit WNP-2
   Plant (Address) Hanford, Benton County, WA — WPPSS Repair Organization P.O. No., Job No., etc.
3. Work Performed by (Name) WPPSS
   Work Performed by (Address) 3000 George Washington Way, Richland, WA. 99352
4. Identification of System Low Pressure Core Spray (LPCS) System
5. (a) Applicable Construction Code ASME Section III 19 71 Edition, W73 Addenda, None Code Case
   (b) Applicable Edition of ASME Section XI Utilized for Repairs or Replacements 19 80 Edition, W80 Addenda, N308 Code Case
6. Identification of Components Repaired or Replaced and Replacement Components

Name of Component	Name of Manufacturer	Manufacturer Serial No.	National Board No.	Other I.D.	Year Built	Repaired, Replaced, or Replacement	ASME Code Stamped (Yes or No) Code Class
LPCS(1)-2	WPPSS	*	N/A	N/A	1983	Replacement	Yes, Class 2

7. Description of Work:

Replaced one missing stud and two nuts for 6" flange joint. Torqued the bolting material to the required torque value.

Notes:

*LPCS(1)-2-P1

968-22684 (9/87)

WASHINGTON PUBLIC POWER SUPPLY SYSTEM

PLAN NO. 2-0398 and 2-0398 R1

FORM NIS-2 (Back)

8. Tests Conducted: Hydrostatic ☐ Pneumatic ☐ Nominal Operating Pressure ☐ Other ☒ NONE
Test Pressure _____ psig, Test Temp. _____ °F
Component Design Pressure _____ psig, Temp. _____ °F

9. Remarks:

None.

CERTIFICATE OF COMPLIANCE

We certify that the statements made in the report are correct and this replacement (repair or replacement) conforms to the rules of the ASME Code, Section XI.

Type Code Symbol Stamp Not applicable

Certificate Authorization No. Not applicable Expiration Date Not applicable

Signed R L Wehrin (Owner or Owner's Designee, Title) Title Plant Technical Manager

12/29/87.

Date 12/29 19 87

CERTIFICATE OF INSERVICE INSPECTION

I, the undersigned, holding a valid commission issued by the National Board of Boiler and Pressure Vessel Inspectors and the State of Washington and employed by Lumbermen's Mutual Casualty Co. of Illinois have inspected the components described in this Owner's Report during the period 10/30/87 to 12/28/87, and state that to the best of my knowledge and belief, the Owner has performed examinations and taken corrective measures described in this Owner's Report in accordance with the requirements of the ASME Code, Section XI.

By signing this certificate neither the Inspector nor his employer makes any warranty, expressed or implied, concerning the examinations and corrective measures described in this Owner's Report. Furthermore, neither the Inspector nor his employer shall be liable in any manner for any personal injury or property damage or a loss of any kind arising from or connected with this inspection.

David L. Jones (Inspector's Signature) Commissions 7447 W (National Board, State, and Endorsements)

Date December 29, 19 87

WASHINGTON PUBLIC POWER SUPPLY SYSTEM

PLAN NO. 2-0403

FORM NIS-2 OWNER'S REPORT FOR REPAIRS OR REPLACEMENTS
As Required by the Provisions of the ASME Code Section XI

1. Owner (Name) Washington Public Power Supply System — Date 7/21/88
   Owner (Address) 3000 George Washington Way, Richland, WA — Sheet 1 of 1
2. Plant (Name) WPPSS Nuclear Power Plant (WNP) — Unit WNP-2
   Plant (Address) Hanford, Benton County, WA — WPPSS Repair Organization P.O. No., Job No., etc.
3. Work Performed by (Name) WPPSS
   Work Performed by (Address) 3000 George Washington Way, Richland, WA.
4. Identification of System Main Steam (MS) System Vacuum Breaker Valves
5. (a) Applicable Construction Code ASME Section III 19 77 Edition, 6/30/77 Addenda, None Code Case
   (b) Applicable Edition of ASME Section XI Utilized for Repairs or Replacements 19 80 Edition, W80 Addenda, N308 Code Case
6. Identification of Components Repaired or Replaced and Replacement Components

Name of Component	Name of Manufacturer	Manufacturer Serial No.	National Board No.	Other I.D.	Year Built	Repaired, Replaced, or Replacement	ASME Code Stamped (Yes or No) Code Class
MS-V-37*	GPE	*	N/A	N/A	1979	Modification	Yes, Class 3
MS-V-38*	GPE	*	N/A	N/A	1979	Modification	Yes, Class 3

7. Description of Work:

Modified valves as follows:

1. Machined valve disc (pellet) for each valve.
2. Drilled and tapped two (2) 1/2" holes in each of the valve body.

Notes:
*MS-V-37A,B,C,D,F,H,J,K,L,M,N,P,R,S,U & V. S/N 7802-0509-1,2,3,4,6,8,9,10,11,12,13, 14,15,16,17 and 18 respectively.
*MS-V-38A,B,C,D,F,H,J,K,L,M,N,P,R,S,U & V. S/N 7802-0509-20,21,22,23,25,27,28,29, 30,31,32,33,34,35,36 and 37 respectively.

WASHINGTON PUBLIC POWER SUPPLY SYSTEM

PLAN NO. 2-0403

FORM NIS-2 (Back)

8. Tests Conducted: Hydrostatic ☐ Pneumatic ☐ Nominal Operating Pressure ☐ Other ☒ None
Test Pressure _____ psig, Test Temp. _____ °F
Component Design Pressure _____ psig, Temp. _____ °F

9. Remarks:

None

CERTIFICATE OF COMPLIANCE

We certify that the statements made in the report are correct and this modification (repair or replacement) conforms to the rules of the ASME Code, Section XI.

Type Code Symbol Stamp Not applicable

Certificate Authorization No. Not applicable Expiration Date Not applicable

Signed [signature] Owner or Owner's Designee, Title Plant Technical Manager

Date 7/29/88 19 88

CERTIFICATE OF INSERVICE INSPECTION

I, the undersigned, holding a valid commission issued by the National Board of Boiler and Pressure Vessel Inspectors and the State of Washington and employed by Lumbermen's Mutual Casualty Co. of Illinois have inspected the components described in this Owner's Report during the period 3/9/88 to 6/30/88, and state that to the best of my knowledge and belief, the Owner has performed examinations and taken corrective measures described in this Owner's Report in accordance with the requirements of the ASME Code, Section XI.

By signing this certificate neither the Inspector nor his employer makes any warranty, expressed or implied, concerning the examinations and corrective measures described in this Owner's Report. Furthermore, neither the Inspector nor his employer shall be liable in any manner for any personal injury or property damage or a loss of any kind arising from or connected with this inspection.

[signature] Inspector's Signature Commissions 5470 W National Board, State, and Endorsements

Date 7/29 19 88

WASHINGTON PUBLIC POWER SUPPLY SYSTEM

PLAN NO. 2-0404

FORM NIS-2 OWNER'S REPORT FOR REPAIRS OR REPLACEMENTS
As Required by the Provisions of the ASME Code Section XI

1. Owner (Name) Washington Public Power Supply System — Date 7/21/88
   Owner (Address) 3000 George Washington Way, Richland, WA — Sheet 1 of 1
2. Plant (Name) WPPSS Nuclear Power Plant (WNP) — Unit WNP-2
   Plant (Address) Hanford, Benton County, WA — WPPSS Repair Organization P.O. No., Job No., etc.
3. Work Performed by (Name) WPPSS
   Work Performed by (Address) 3000 George Washington Way, Richland, WA.
4. Identification of System Reactor Water Cleanup (RWCU) Systems
5. (a) Applicable Construction Code ASME Section III 19 71 Edition, W72 Addenda, None Code Case
   (b) Applicable Edition of ASME Section XI Utilized for Repairs or Replacements 19 80 Edition, W80 Addenda, N308 Code Case
6. Identification of Components Repaired or Replaced and Replacement Components

Name of Component	Name of Manufacturer	Manufacturer Serial No.	National Board No.	Other I.D.	Year Built	Repaired, Replaced, or Replacement	ASME Code Stamped (Yes or No) Code Class
RWCU-V-39	A/D	3N-347	N/A	N/A	1975	Repaired	Yes, Class 3

7. Description of Work:

Repaired steam cuts on valve RWCU-V-39 bonnet area. The repair work was performed as follows:

1. Prepped steam cut areas.
2. Repaired steam cut prepped areas by welding.
3. Machined/ground weld repaired areas flush with the adjacent base metal.
4. Performed pressure test to confirm pressure boundary integrity. No evidence of leakage during pressure test.

Notes:

WASHINGTON PUBLIC POWER SUPPLY SYSTEM

PLAN NO. 2-0404

FORM NIS-2 (Back)

8. Tests Conducted: Hydrostatic ☐ Pneumatic ☐ Nominal Operating Pressure ☒ Other ☐ _____

Test Pressure 1140 psig. · Test Temp. 425 °F

Component Design Pressure 2160 / 1410 psig, Temp. 100 / 700 °F

9. Remarks:

None.

CERTIFICATE OF COMPLIANCE

We certify that the statements made in the report are correct and this repair (repair or replacement) conforms to the rules of the ASME Code, Section XI.

Type Code Symbol Stamp Not applicable

Certificate Authorization No. Not applicable Expiration Date Not applicable

Signed R L Wilson (Owner or Owner's Designee.) Title Plant Technical Manager

K Bruce 7/21/88

Date 7/21 19 88

CERTIFICATE OF INSERVICE INSPECTION

I, the undersigned, holding a valid commission issued by the National Board of Boiler and Pressure Vessel Inspectors and the State of Washington and employed by Lumbermen's Mutual Casualty Co. of Illinois have inspected the components described in this Owner's Report during the period 3/1/88 to 7/7/88, and state that to the best of my knowledge and belief, the Owner has performed examinations and taken corrective measures described in this Owner's Report in accordance with the requirements of the ASME Code, Section XI.

By signing this certificate neither the Inspector nor his employer makes any warranty, expressed or implied, concerning the examinations and corrective measures described in this Owner's Report. Furthermore, neither the Inspector nor his employer shall be liable in any manner for any personal injury or property damage or a loss of any kind arising from or connected with this inspection.

[signature] (Inspector's Signature) Commissions 5970W (National Board, State, and Endorsements)

Date 7/22 19 88

WASHINGTON PUBLIC POWER SUPPLY SYSTEM

PLAN NO. 2-0405

FORM NIS-2 OWNER'S REPORT FOR REPAIRS OR REPLACEMENTS
As Required by the Provisions of the ASME Code Section XI

1. Owner (Name) Washington Public Power Supply System — Date 7/21/88
   Owner (Address) 3000 George Washington Way, Richland, WA — Sheet 1 of 1
2. Plant (Name) WPPSS Nuclear Power Plant (WNP) — Unit WNP-2
   Plant (Address) Hanford, Benton County, WA — C20069 Repair Organization P.O. No., Job No., etc.
3. Work Performed by (Name) Bechtel Construction, Inc.
   Work Performed by (Address) P.O. Box 600, Richland, WA.
4. Identification of System Containment Vessel
5. (a) Applicable Construction Code ASME Section III 19 71 Edition, S72 Addenda, None Code Case
   (b) Applicable Edition of ASME Section XI Utilized for Repairs or Replacements 19 80 Edition, W80 Addenda, N308 Code Case
6. Identification of Components Repaired or Replaced and Replacement Components

Name of Component	Name of Manufacturer	Manufacturer Serial No.	National Board No.	Other I.D.	Year Built	Repaired, Replaced, or Replacement	ASME Code Stamped (Yes or No) Code Class
Cont. Vessel Penet. X-27a thru X-27e	PDM	12764	790	N/A	1976	Replacement	Yes, Class 2

7. Description of Work:

Replaced material and valves for containment penetration lines PI(1)-ST-X27a through X27e. The replacement work was performed as follows:

1. Removed existing material and valves.
2. Installed new replacement material and valves.
3. Made required welds.
4. Performed PT examination on the final welds. PT examination results acceptable.
5. Performed pressure test to confirm pressure boundary integrity. No evidence of leakage during pressure test.

Notes:

WASHINGTON PUBLIC POWER SUPPLY SYSTEM

PLAN NO. 2-0405

FORM NIS-2 (Back)

8. Tests Conducted: Hydrostatic ☐ Pneumatic ☐ Nominal Operating Pressure ☐ Other ☒ LLRT
Test Pressure 35.1 to 35.6 psig. Test Temp. Ambient °F
Component Design Pressure 45 psig, Temp. 340 °F

9. Remarks:

See attached NPV-1 code data reports for the following:

Valve EPN No.	Valve Serial No.
TIP-V-1	N96297-00-0001
TIP-V-2	N96297-00-0002
TIP-V-3	N96297-00-0003
TIP-V-4	N96297-00-0004
TIP-V-5	N96297-00-0005

CERTIFICATE OF COMPLIANCE

We certify that the statements made in the report are correct and this replacement (repair or replacement) conforms to the rules of the ASME Code, Section XI.

Type Code Symbol Stamp Not applicable

Certificate Authorization No. Not applicable Expiration Date Not applicable

Signed [signature] Owner or Owner's Designee, Title Plant Technical Manager

7/21/88

Date 7/21 19 88

CERTIFICATE OF INSERVICE INSPECTION

I, the undersigned, holding a valid commission issued by the National Board of Boiler and Pressure Vessel Inspectors and the State of Washington and employed by Lumbermen's Mutual Casualty Co. of Illinois have inspected the components described in this Owner's Report during the period 4/12/88 to 7/6/88, and state that to the best of my knowledge and belief, the Owner has performed examinations and taken corrective measures described in this Owner's Report in accordance with the requirements of the ASME Code, Section XI.

By signing this certificate neither the Inspector nor his employer makes any warranty, expressed or implied, concerning the examinations and corrective measures described in this Owner's Report. Furthermore, neither the Inspector nor his employer shall be liable in any manner for any personal injury or property damage or a loss of any kind arising from or connected with this inspection.

[signature] Inspector's Signature Commissions 5470W National Board, State, and Endorsements

Date 7/22 19 88

QC-398

FORM NPV-1 N CERTIFICATE HOLDERS' DATA REPORT FOR NUCLEAR PUMPS OR VALVES

PLAN NO. 2-0405

As Required by the Provisions of the ASME Code, Section III, Div. 1

1. Manufactured by Crosby Valve & Gage Company 43 Kendrick St. Wrentham, MA 02093
(Name and Address of N Certificate Holder)

2. Manufactured for Washington Public Power Supply System PO Box 968 Richland, WA 99352
(Name and Address of Purchaser or Owner)

3. Location of Installation Hanford 2 North Power Plant Richland, WA
(Name and Address)

4. Pump or Valve Ball Valve Nominal Inlet Size 3/8" (Inch) Outlet Size 3/8" (Inch)

	(a) Model No., Series No., or Type	(b) N Certificate Holder's Serial No.	(c) Canadian Registration No.	(d) Drawing No.	(e) Class	(f) National Board No.	(g) Year Built
(1)	N96297	N96297-00-0001		DS-C-96297 Rev. D	2	N/A	1988
(2)							
(3)							
(4)							
(5)			T/P-V-1				
(6)				Curtis Kinch			
(7)				6/23/88			
(8)							
(9)							
(10)							

5. 3/8" CL. 150 Ball Valve
(Brief description of service for which equipment was designed)

6. Design Conditions 75 psi (Pressure) 200 (Temperature) For Valve Pressure Class 150 Special (1)

7. Cold Working Pressure 275 psi at 100°F.

8. Pressure Retaining Pieces

Mark No.	Material Spec. No.	Manufacturer	Remarks
(a) ~~Castings~~ Barstock			
N95058-31-0002	ASME SA 479 Type 316	ARMCO	BODY
N95059-31-0001	ASME SA 479 Type 316	ARMCO	BONNET
N95060-31-0001	ASME SA 479 Type 316	ARMCO	BALL
N95061-31-0001	ASME SA 479 Type 316	ARMCO	END CAP
N95061-31-0002	ASME SA 479 Type 316	ARMCO	END CAP
118697	ASME SA 193 Gr. B8	MULTI-FASTENERS	BODY SCREWS
118696	ASME SA 193 Gr. B8	E.A. GREENHALGH	BONNET SCREWS
(b) Forgings			

(1) For manually operated valves only.

FORM NPV-1 (Back)

Mark No.	Material Spec. No.	Manufacturer	Remarks

(c) Bolting

(d) Other Parts

9. Hydrostatic test 425 psi. Disk Differential test pressure 325. psi.

CERTIFICATE OF COMPLIANCE

We certify that the statements made in this report are correct and that this pump, or valve, conforms to the rules construction of the ASME Code for Nuclear Power Plant Components, Section III, Div. 1, Edition 1986, Addenda 1986 (Date), Code Case No. ----, Date ---

Signed Crosby Valve & Gage Co. (N Certificate Holder) By L. J. Pires 5-20-88

Our ASME Certificate of Authorization No. N-1876 to use the N (N) symbol expires 9-30-8[illegible] (Date)

CERTIFICATION OF DESIGN

Design information on file at Crosby Valve & Gage Company

Stress analysis report (Class 1 only) on file at

Design specifications certified by (1) J. R. Cole

PE State Washington Reg. No. 20653

Stress analysis certified by (1) ----

PE State ---- Reg. No. ----

(1) Signature not required. List name only.

CERTIFICATE OF SHOP INSPECTION

I, the undersigned, holding a valid commission issued by the National Board of Boiler and Pressure Vessel Inspectors and the State, or Province, of Massachusetts and employed by Arkwright-Mutual Ins. Co. of Norwood Ma, have inspected the pump, or valve, described in this Data Report on May 20, 1988, and state that to the best of my knowledge and belief, the N Certificate Holder has constructed this pump, or valve, in accordance with the ASME Code, Section III.

By signing this certificate, neither the inspector, nor his employer, makes any warranty, expressed or implied, concerning the equipment described in this Data Report. Furthermore, neither the inspector, nor his employer, shall be liable in any manner for any personal injury, or property damage, or a loss of any kind, arising from, or connected with, this inspection.

Date 5-20-88

Kenneth O. Holstrom (Inspector)

Commissions Factory Mutual System - Ma 1418 (National Board State, Prov. and No.)

QC-330

PLAN NO. 2-0405
TIP-V-2

FORM NPV-1 N CERTIFICATE HOLDERS' DATA REPORT FOR NUCLEAR PUMPS OR VALVES

As Required by the Provisions of the ASME Code, Section III, Div. 1

1. Manufactured by Crosby Valve & Gage Company 43 Kendrick St. Wrentham, MA 02093
(Name and Address of N Certificate Holder)

2. Manufactured for Washington Public Power Supply System PO Box 968 Richland, WA 99352
(Name and Address of Purchaser or Owner)

3. Location of Installation Hanford 2 North Power Plant Richland, WA
(Name and Address)

4. Pump or Valve Ball Valve Nominal Inlet Size 3/8" (Inch) Outlet Size 3/8" (Inch)

	(a) Model No., Series No., or Type	(b) N Certificate Holder's Serial No.	(c) Canadian Registration No.	(d) Drawing No.	(e) Class	(f) National Board No.	(g) Year Built
(1)	N96297	N96297-00-0002		DS-C-96297 Rev. D	2	N/A	1988
(2)							
(3)							
(4)							
(5)							
(6)							
(7)							
(8)							
(9)							
(10)							

5. 3/8" CL. 150 Ball Valve
(Brief description of service for which equipment was designed)

6. Design Conditions 75 (Pressure) psi 200 (Temperature) For Valve Pressure Class 150 Special (1)

7. Cold Working Pressure 275 psi at 100°F.

8. Pressure Retaining Pieces

Mark No.	Material Spec. No.	Manufacturer	Remarks
(a) ~~Castings~~ Barstock			
N95058-31-0003	ASME SA 479 Type 316	ARMCO	BODY
N95059-31-0002	ASME SA 479 Type 316	ARMCO	BONNET
N95060-31-0002	ASME SA 479 Type 316	ARMCO	BALL
N95061-31-0005	ASME SA 479 Type 316	ARMCO	END CAP
N95061-31-0006	ASME SA 479 Type 316	ARMCO	END CAP
118697	ASME SA 193 Gr. B8	MULTI-FASTENERS	BODY SCREWS
118696	ASME SA 193 Gr. B8	E.A. GREENHALGH	BONNET SCREWS
(b) Forgings			

(1) For manually operated valves only.

FORM NV-1 (Back)

Mark No.	Material Spec. No.	Manufacturer	Remarks

(c) Bolting

(d) Other Parts

9. Hydrostatic test 425 psi. Disk Differential test pressure 325 psi.

CERTIFICATE OF COMPLIANCE

We certify that the statements made in this report are correct and that this pump, or valve, conforms to the rules construction of the ASME Code for Nuclear Power Plant Components, Section III, Div. 1, Edition 1986, Addenda 1986 (Date), Code Case No. ----, Date ---

Signed Crosby Valve & Gage Co. (N Certificate Holder) By [signature] 5-20-88

Our ASME Certificate of Authorization No. N-1876 to use the N (N) symbol expires 9-30-8 (Date)

CERTIFICATION OF DESIGN

Design information on file at Crosby Valve & Gage Company

Stress analysis report (Class 1 only) on file at

Design specifications certified by (1) J. R. Cole

PE State Washington Reg. No. 20653

Stress analysis certified by (1) ----

PE State ---- Reg. No. ----

(1) Signature not required. List name only.

N CERTIFICATE OF SHOP INSPECTION

I, the undersigned, holding a valid commission issued by the National Board of Boiler and Pressure Vessel Inspectors and the State, or Province, of Massachusetts and employed by Arkwright Mutual Ins. Co. of Norwood Ma, have inspected the pump, or valve, described in this Data Report on May 20, 1988, and state that to the best of my knowledge and belief, the N Certificate Holder has constructed this pump, or valve, in accordance with the ASME Code, Section III.

By signing this certificate, neither the inspector, nor his employer, makes any warranty, expressed or implied, concerning the equipment described in this Data Report. Furthermore, neither the inspector, nor his employer, shall be liable in any manner for any personal injury, or property damage, or a loss of any kind, arising from, or connected with, this inspection.

Date 5-20-88

Kenneth C. Hobson (Inspector)

Factory Mutual System

Commission Ma 1418 (National Board State, Prov. and No.)

QC-398

PLAN No. 2-0405
TID-V-3
Rudolp Gupta 6/23/85

FORM NPV-1 N CERTIFICATE HOLDERS' DATA REPORT FOR NUCLEAR PUMPS OR VALVES

As Required by the Provisions of the ASME Code, Section III, Div. 1

Manufactured by Crosby Valve & Gage Company 43 Kendrick St. Wrentham, MA 02093
(Name and Address of N Certificate Holder)

2. Manufactured for Washington Public Power Supply System PO Box 968 Richland, WA 99352
(Name and Address of Purchaser or Owner)

3. Location of Installation Hanford 2 North Power Plant Richland, WA
(Name and Address)

4. Pump or Valve Ball Valve Nominal Inlet Size 3/8" (Inch) Outlet Size 3/8" (Inch)

	(a) Model No., Series No., or Type	(b) N Certificate Holder's Serial No.	(c) Canadian Registration No.	(d) Drawing No.	(e) Class	(f) National Board No.	(g) Year Built
(1)	N96297	N96297-00-0003		DS-C-96297 Rev. D	2	N/A	1988
(2)							
(3)							
(4)							
(5)							
(6)							
(7)							
(8)							
(9)							
(10)							

5. 3/8" CL. 150 Ball Valve
(Brief description of service for which equipment was designed)

6. Design Conditions 75 (Pressure) psi 200 (Temperature) ° For Valve Pressure Class 150 Special (1)

7. Cold Working Pressure 275 psi at 100°F.

8. Pressure Retaining Pieces

Mark No.	Material Spec. No.	Manufacturer	Remarks
(a) ~~Castings~~ Barstock			
N95058-31-0004	ASME SA 479 Type 316	ARMCO	BODY
N95059-31-0003	ASME SA 479 Type 316	ARMCO	BONNET
N95060-31-0003	ASME SA 479 Type 316	ARMCO	BALL
N95061-31-0007	ASME SA 479 Type 316	ARMCO	END CAP
N95061-31-0008	ASME SA 479 Type 316	ARMCO	END CAP
118697	ASME SA 193 Gr. B8	MULTI-FASTENERS	BODY SCREWS
118696	ASME SA 193 Gr. B8	E.A. GREENHALGH	BONNET SCREWS
(b) Forgings			

(1) For manually operated valves only.

FORM NV-1 (Back)

Mark No.	Material Spec. No.	Manufacturer	Remarks

(c) Bolting

(d) Other Parts

9. Hydrostatic test 425 psi. Disk Differential test pressure 325 psi.

CERTIFICATE OF COMPLIANCE

We certify that the statements made in this report are correct and that this pump, or valve, conforms to the rules construction of the ASME Code for Nuclear Power Plant Components, Section III, Div. 1, Edition 1986, Addenda 1986 (Date), Code Case No. ----, Date ---

Signed Crosby Valve & Gage Co. (N Certificate Holder) By [signature] 5-20-88

Our ASME Certificate of Authorization No. N-1876 to use the N (N) symbol expires 9-30- (Date)

CERTIFICATION OF DESIGN

Design information on file at Crosby Valve & Gage Company

Stress analysis report (Class 1 only) on file at

Design specifications certified by (1) J. R. Cole

PE State Washington Reg. No. 20653

Stress analysis certified by (1) ----

PE State ---- Reg. No. ----

(1) Signature not required. List name only.

CERTIFICATE OF SHOP INSPECTION

I, the undersigned, holding a valid commission issued by the National Board of Boiler and Pressure Vessel Inspectors and the State, or Province, of Massachusetts and employed by Arkwright Mutual Ins. Co. of Norwood Ma, have inspected the pump, or valve, described in this Data Report on May 20, 1988, and state that to the best of my knowledge and belief, the N Certificate Holder has constructed this pump, or valve, in accordance with the ASME Code, Section III.

By signing this certificate, neither the inspector, nor his employer, makes any warranty, expressed or implied, concerning the equipment described in this Data Report. Furthermore, neither the inspector, nor his employer, shall be liable in any manner for any personal injury, or property damage, or a loss of any kind, arising from, or connected with, this inspection.

Date 5/20/88

[signature] (Inspector)

Commissions Factory Mutual System Ma 1418 (National Board State, Prov. and No.)

QC-393

PLAN NO. 2-0405
TIP-V-4
Rudolph Gupy 6/23/85

FORM NPV-1 N CERTIFICATE HOLDERS' DATA REPORT FOR NUCLEAR PUMPS OR VALVES

As Required by the Provisions of the ASME Code, Section III, Div. 1

1. Manufactured by Crosby Valve & Gage Company 43 Kendrick St. Wrentham, MA 02093
(Name and Address of N Certificate Holder)

2. Manufactured for Washington Public Power Supply System PO Box 968 Richland, WA 99352
(Name and Address of Purchaser or Owner)

3. Location of Installation Hanford 2 North Power Plant Richland, WA
(Name and Address)

4. Pump or Valve Ball Valve Nominal Inlet Size 3/8" (Inch) Outlet Size 3/8" (Inch)

	(a) Model No., Series No., or Type	(b) N Certificate Holder's Serial No.	(c) Canadian Registration No.	(d) Drawing No.	(e) Class	(f) National Board No.	(g) Year Built
(1)	N96297	N96297-00-0004		DS-C-96297 Rev. D	2	N/A	1988
(2)							
(3)							
(4)							
(5)							
(6)							
(7)							
(8)							
(9)							
(10)							

5. 3/8" CL. 150 Ball Valve
(Brief description of service for which equipment was designed)

6. Design Conditions 75 psi (Pressure) 200 °F (Temperature) For Valve Pressure Class 150 Special (1)

7. Cold Working Pressure 275 psi at 100°F.

8. Pressure Retaining Pieces

Mark No.	Material Spec. No.	Manufacturer	Remarks
(a) ~~Castings~~ Barstock			
N95058-31-0005	ASME SA 479 Type 316	ARMCO	BODY
N95059-31-0004	ASME SA 479 Type 316	ARMCO	BONNET
N95060-31-0004	ASME SA 479 Type 316	ARMCO	BALL
N95061-31-0009	ASME SA 479 Type 316	ARMCO	END CAP
N95061-31-0010	ASME SA 479 Type 316	ARMCO	END CAP
118697	ASME SA 193 Gr. B8	MULTI-FASTENERS	BODY SCREWS
118696	ASME SA 193 Gr. B8	E.A. GREENHALGH	BONNET SCREWS
(b) Forgings			

(1) For manually operated valves only.

FORM NPV-1 (Back)

Mark No.	Material Spec. No.	Manufacturer	Remarks

(c) Bolting

(d) Other Parts

9. Hydrostatic test 425 psi. Disk Differential test pressure 325 psi.

CERTIFICATE OF COMPLIANCE

We certify that the statements made in this report are correct and that this pump, or valve, conforms to the rul construction of the ASME Code for Nuclear Power Plant Components, Section III, Div. 1, Edition 1986 Addenda 1986 (Date), Code Case No. ---- , Date ---

Signed Crosby Valve & Gage Co. (N Certificate Holder) By [signature] 5-20-88

Our ASME Certificate of Authorization No. N-1876 to use the N (N) symbol expires 9-30-[illegible] (Date).

CERTIFICATION OF DESIGN

Design information on file at Crosby Valve & Gage Company

Stress analysis report (Class 1 only) on file at

Design specifications certified by (1) J. R. Cole

PE State Washington Reg. No. 20653

Stress analysis certified by (1) ----

PE State ---- Reg. No. ----

(1) Signature not required. List name only.

CERTIFICATE OF SHOP INSPECTION

I, the undersigned, holding a valid commission issued by the National Board of Boiler and Pressure Vessel Inspect and the State, or Province, of Massachusetts and employed by Arkwright Mutual Ins. Co. of Norwood, Ma, have inspected the pump, or valve, described in this Data Report on May 20, 1988, and state that to the best of my knowledge and belief, the N Certificate Holder ha constructed this pump, or valve, in accordance with the ASME Code, Section III.

By signing this certificate, neither the inspector, nor his employer, makes any warranty, expressed or implied, concerning the equipment described in this Data Report. Furthermore, neither the inspector, nor his employer, sh be liable in any manner for any personal injury, or property damage, or a loss of any kind, arising from, or connected with, this inspection.

Date 5-20-88

Kenneth O Hobson (Inspector)

Commissions Factory Mutual System Ma 1418 (National Board State, Prov. and No.)

QC-393

PLAN No. 2-0405
TIP-V-5
Guldip Singh 6/23/88

FORM NPV-1 N CERTIFICATE HOLDERS' DATA REPORT FOR NUCLEAR PUMPS OR VALVES

As Required by the Provisions of the ASME Code, Section III, Div. 1

1. Manufactured by Crosby Valve & Gage Company 43 Kendrick St. Wrentham, MA 02093
(Name and Address of N Certificate Holder)

2. Manufactured for Washington Public Power Supply System PO Box 968 Richland, WA 99352
(Name and Address of Purchaser or Owner)

3. Location of Installation Hanford 2 North Power Plant Richland, WA
(Name and Address)

4. Pump or Valve Ball Valve Nominal Inlet Size 3/8" (Inch) Outlet Size 3/8" (Inch)

	(a) Model No., Series No., or Type	(b) N Certificate Holder's Serial No.	(c) Canadian Registration No.	(d) Drawing No.	(e) Class	(f) National Board No.	(g) Year Built
(1)	N96297	N96297-00-0005		DS-C-96297 Rev. D	2	N/A	1988
(2)							
(3)							
(4)							
(5)							
(6)							
(7)							
(8)							
(9)							
10)							

5. 3/8" CL. 150 Ball Valve
(Brief description of service for which equipment was designed)

6. Design Conditions 75 (Pressure) psi 200 (Temperature) For Valve Pressure Class 150 Special (1)

Cold Working Pressure 275 psi at 100°F.

7. Pressure Retaining Pieces

Mark No.	Material Spec. No.	Manufacturer	Remarks
(a) ~~Castings~~ Barstock			
N95058-32-0006	ASME SA 479 Type 316	SLATER STEEL	BODY
N95059-31-0005	ASME SA 479 Type 316	ARMCO	BONNET
N95060-31-0005	ASME SA 479 Type 316	ARMCO	BALL
N95061-32-0011	ASME SA 479 Type 316	SLATER STEEL	END CAP
N95061-32-0012	ASME SA 479 Type 316	SLATER STEEL	END CAP
118697	ASME SA 193 Gr. B8	MULTI-FASTENERS	BODY SCREWS
118696	ASME SA 193 Gr. B8	E.A. GREENHALGH	BONNET SCREWS
(b) Forgings			

(1) For manually operated valves only.

Form NV-1 (Back)

Mark No.	Material Spec. No.	Manufacturer	Remarks

(c) Bolting

(d) Other Parts

9. Hydrostatic test 425 psi. Disk Differential test pressure 325 psi.

CERTIFICATE OF COMPLIANCE

We certify that the statements made in this report are correct and that this pump, or valve, conforms to the rul construction of the ASME Code for Nuclear Power Plant Components, Section III, Div. 1, Edition 1986 Addenda 1986 (Date), Code Case No. ---- , Date ---

Signed Crosby Valve & Gage Co. (N Certificate Holder) By [signature] 5-20-88

Our ASME Certificate of Authorization No. N-1876 to use the N (N) symbol expires 9-30-8 (Date)

CERTIFICATION OF DESIGN

Design information on file at Crosby Valve & Gage Company

Stress analysis report (Class 1 only) on file at

Design specifications certified by (1) J. R. Cole

PE State Washington Reg. No. 20653

Stress analysis certified by (1) ----

PE State ---- Reg. No. ----

(1) Signature not required. List name only.

CERTIFICATE OF SHOP INSPECTION

I, the undersigned, holding a valid commission issued by the National Board of Boiler and Pressure Vessel Inspect and the State, or Province, of Massachusetts and employed by Arkwright Mutual Ins. Co. of Norwood, Ma, have inspected the pump, or valve, described in this Data Report on May 20, 1988, and state that to the best of my knowledge and belief, the N Certificate Holder ha constructed this pump, or valve, in accordance with the ASME Code, Section III.

By signing this certificate, neither the inspector, nor his employer, makes any warranty, expressed or implied, concerning the equipment described in this Data Report. Furthermore, neither the inspector, nor his employer, sh be liable in any manner for any personal injury, or property damage, or a loss of any kind, arising from, or connected with, this inspection.

Date 5-20-88

[signature] (Inspector)

Factory Mutual System

Commissions Ma. 1418 (National Board State, Prov. and No.)

WASHINGTON PUBLIC POWER SUPPLY SYSTEM

PLAN NO. 2-0413-1 / 2-0413-2

FORM NIS-2 OWNER'S REPORT FOR REPAIRS OR REPLACEMENTS
As Required by the Provisions of the ASME Code Section XI

1. Owner (Name) Washington Public Power Supply System — Date 7/21/88
   Owner (Address) 3000 George Washington Way, Richland, WA — Sheet 1 of 1
2. Plant (Name) WPPSS Nuclear Power Plant (WNP) — Unit WNP-2
   Plant (Address) Hanford, Benton County, WA — C20069 Repair Organization P.O. No., Job No., etc.
3. Work Performed by (Name) Bechtel Construction, Inc.
   Work Performed by (Address) P.O. Box 600, Richland, WA.
4. Identification of System Containment Instrument Air (CIA) System
5. (a) Applicable Construction Code ASME Section III 19 71 Edition, W73 Addenda, None Code Case
   (b) Applicable Edition of ASME Section XI Utilized for Repairs or Replacements 19 80 Edition, W80 Addenda, N308 Code Case
6. Identification of Components Repaired or Replaced and Replacement Components

Name of Component	Name of Manufacturer	Manufacturer Serial No.	National Board No.	Other I.D.	Year Built	Repaired, Replaced, or Replacement	ASME Code Stamped (Yes or No) Code Class
CIA(5)-1A	~~BPC~~ WPPSS K Smith 9/8/88 [illegible] 9/8/88	*	N/A	N/A	1983	Replacement	Yes, Class 3

7. Description of Work:

Replaced piping material and valves for Containment Instrument Air (CIA) Loop A system. The replacement work was performed as follows:

1. Cut and removed existing piping material.
2. Installed new piping material and valves.
3. Reinstalled (reused) existing valve CIA-V-41A.
4. Made required socket welds.
5. Installed new support material.

Notes:

*CIA(5)-1A-P1

WASHINGTON PUBLIC POWER SUPPLY SYSTEM

PLAN NO. 2-0413-1
2-0413-2

FORM NIS-2 (Back)

8. Tests Conducted: Hydrostatic ☐ Pneumatic ☐ Nominal Operating Pressure ☐ Other ☒ None
Test Pressure _____ psig, Test Temp. _____ °F
Component Design Pressure _____ psig, Temp. _____ °F

9. Remarks:

See attached NPV-1 code data reports for the following:

Valve EPN No.	Valve Serial No.	Valve EPN No.	Valve Serial No.
CIA-V-39A	N96302-00-0001	CIA-V-734A	80019
CIA-V-730A	17104	CIA-V-735A	17099
CIA-V-731A	53258	CIA-V-736A	80016
CIA-V-732A	17095	CIA-V-737A	80025
CIA-V-733A	GT1406		

CERTIFICATE OF COMPLIANCE

We certify that the statements made in the report are correct and this replacement (repair or replacement) conforms to the rules of the ASME Code, Section XI.

Type Code Symbol Stamp Not applicable

Certificate Authorization No. Not applicable Expiration Date Not applicable

Signed R L Lubin (Owner or Owner's Designee.) Title Plant Technical Manager

7/21/88

Date 7/21 1988

CERTIFICATE OF INSERVICE INSPECTION

I, the undersigned, holding a valid commission issued by the National Board of Boiler and Pressure Vessel Inspectors and the State of Washington and employed by Lumbermen's Mutual Casualty Co. of Illinois have inspected the components described in this Owner's Report during the period 4/8/88 to 7/11/88, and state that to the best of my knowledge and belief, the Owner has performed examinations and taken corrective measures described in this Owner's Report in accordance with the requirements of the ASME Code, Section XI.

By signing this certificate neither the Inspector nor his employer makes any warranty, expressed or implied, concerning the examinations and corrective measures described in this Owner's Report. Furthermore, neither the Inspector nor his employer shall be liable in any manner for any personal injury or property damage or a loss of any kind arising from or connected with this inspection.

C D [illegible] (Inspector's Signature) Commissions 5470 W (National Board, State, and Endorsements)

Date 7/22 19 88

QC-398

FORM NPV-1 N CERTIFICATE HOLDERS' DATA REPORT FOR NUCLEAR PUMPS OR VALVES

PLAN NO. 2-0413-1
PLAN NO. 2-0413-2.

As Required by the Provisions of the ASME Code, Section III, Div. 1

Buddy Smith 6/29/88

1. Manufactured by Crosby Valve & Gage Company 43 Kendrick St. Wrentham, MA 02093
(Name and Address of N Certificate Holder)

2. Manufactured for Washington Public Power Supply PO Box 968 Richland, WA 99352
(Name and Address of Purchaser or Owner)

3. Location of Installation Hanford 2 North Power Plant Richland, WA
(Name and Address)

4. Pump or Valve Ball Valve Nominal Inlet Size ½" (Inch) Outlet Size ½" (Inch)

	(a) Model No., Series No., or Type	(b) N Certificate Holder's Serial No.	(c) Canadian Registration No.	(d) Drawing No.	(e) Class	(f) National Board No.	(g) Year Built
(1)	N96302	N96302-00-0001	DS-C-96302 Rev. A		3	N/A	1988
(2)							
(3)							
(4)							
(5)			CIA-V-39A				
(6)							
(7)							
(8)							
(9)							
(10)							

5. ½" CL. 150 Ball Valve
(Brief description of service for which equipment was designed)

6. Design Conditions 200 (Pressure) psi 200 (Temperature) For Valve Pressure Class 150 Special (1)

7. Cold Working Pressure -- psi at 100°F.

8. Pressure Retaining Pieces

Mark No.	Material Spec. No.	Manufacturer	Remarks
(a) Castings			
(b) Forgings			
N95062-31-0001	ASME SA 105	Charles Larson	Body
N95063-31-0001	ASME SA 105	Charles Larson	Bonnet

(1) For manually operated valves only.

FORM NPV-1 (Back)

S/N N96302-00-0001

Mark No.	Material Spec. No.	Manufacturer	Remarks
(c) Bolting			Quality Surv 5/15/88.

(d) Other Parts

N95064-31-0001	ASME SA 479 Type 316	Armco	Ball
801956	ASME SA 193 Gr. B7	E.A. Greenhalgh	Cap Screw

9. Hydrostatic test 450 psi. Disk Differential test pressure 220 psi.

CERTIFICATE OF COMPLIANCE

We certify that the statements made in this report are correct and that this pump, or valve, conforms to the rules construction of the ASME Code for Nuclear Power Plant Components, Section III, Div. 1, Edition 1986, Addenda 1986 (Date), Code Case No. ---, Date ---

Signed Crosby Valve & Gage Co. (N Certificate Holder) By Lawrence J. Price 5-12-88

Our ASME Certificate of Authorization No. N-1876 to use the N (N) symbol expires 9-30-89 (Date)

CERTIFICATION OF DESIGN

Design information on file at Crosby Valve & Gage Company

Stress analysis report (Class 1 only) on file at

Design specifications certified by (1) D. M. Bosi

PE State Washington Reg. No. 20941

Stress analysis certified by (1) ----

PE State ---- Reg. No. ----

(1) Signature not required. List name only.

CERTIFICATE OF SHOP INSPECTION

I, the undersigned, holding a valid commission issued by the National Board of Boiler and Pressure Vessel Inspectors and the State, or Province, of MASSACHUSETTS and employed by ARKWRIGHT MUTUAL INS. CO. of NORWOOD MA., have inspected the pump, or valve, described in this Data Report on MAY 13, 1988, and state that to the best of my knowledge and belief, the N Certificate Holder has constructed this pump, or valve, in accordance with the ASME Code, Section III.

By signing this certificate, neither the inspector, nor his employer, makes any warranty, expressed or implied, concerning the equipment described in this Data Report. Furthermore, neither the inspector, nor his employer, shall be liable in any manner for any personal injury, or property damage, or a loss of any kind, arising from, or connected with, this inspection.

Date MAY 13 1988

(Inspector)

Factory Mutual System

Commission MA 1375

(National Board State, Prov. and No.)

PLAN NO. 2-0413-1
PLAN NO. 2-0413-2.

FORM NPV-1 N CERTIFICATE HOLDERS' DATA REPORT FOR NUCLEAR PUMPS OR VALVES*

As Required by the Provisions of the ASME Code, Section III, Div. 1

Ralph Swe 6/29/88

1. Manufactured by Nuclear Valve Div., Borg Warner, 7500 Tyrone Ave., Van Nuys, Calif.
(Name and Address of N Certificate Holder)
2. Manufactured for 3000 George Washington Way Washington Public Power Supply Systems, Richland, Washington
(Name and Address of Purchaser or Owner)
3. Location of Installation Richland, Washington WPPSS Hanford #2 Job Site
(Name and Address)
4. Pump or Valve Y Globe Valve. Nominal Inlet Size 1/2 (inch) Outlet Size 1/2 (inch)

	(a) Model No., Series No. or Type	(b) N Certificate Holder's Serial No.	(c) Canadian Registration No.	(d) Drawing No.	(e) Class	(f) Nat'l. Bd. No.	(g) Year Built
(1)	1500#	80003 thru	N/A	76590-1	1	N/A	1983
(2)		80019					
(3)							
(4)							
(5)		EPN NO.		SERIAL NO.			
(6)							
(7)		C1A-V-734A		80019			
(8)		C1A-V-736A		80016			
(9)							
(10)							

5. The valves are designed to handle a fluid media which includes steam, water condensate, borated water, etc., associated with a PWR and BWR. The temperature pressure rating of the media is stated below.
(Brief description of service for which equipment was designed)

6. Design Conditions 3600 (Pressure) psi 100 (Temperature) °F or Valve Pressure Class N/A (1)
7. Cold Working Pressure 3600 psi at 100°F.
8. Pressure Retaining Pieces:

FOR INFORMATION ONLY

Mark No.	Material Spec. No.	Manufacturer	Remarks
(a) Castings			
Disc-Code 5F32	Stellite #6	Rex Precision	
(b) Forgings			
Body-Code 5E99	SA 105	Pacific Forge	

(1) For manually operated valves only.

* Supplemental sheets in form of lists, sketches or drawings may be used provided (1) size is 8-1/2" x 11", (2) information in items 1, 2 and 5 on this Data Report is included on each sheet, and (3) each sheet is numbered and number of sheets is recorded at top of this form.

RECEIVED

FORM NPV-1 (Back)

Mark No.	Material Spec. No.	Manufacturer	Remarks
(c) Bolting N/A			
(d) Other Parts			
Backseat-Code 5E84	SA 564 Ty 630	Jorgensen Steel	

9. Hydrostatic test 5400 psi. Disk Differential test pressure 3600 psi.

FOR INFORMATION ONLY

CERTIFICATE OF COMPLIANCE

We certify that the statements made in this report are correct and that this pump, or valve, conforms to the rules of construction of the ASME Code for Nuclear Power Plant Components. Section III, Div. I, Edition 1974 Addenda Winter '75 (Date), Code Case No. N/A Date 7/29/83

Signed Nuclear Valve Div., Borg Warner (N Certificate Holder) by [signature]

Our ASME Certificate of Authorization No. N-1254 to use the N (N) symbol expires 10/27/84 (Date).

CERTIFICATION OF DESIGN

Design information on file at NVD of Borg Warner, 7500 Tyrone Ave., Van Nuys, Ca. 91409

Stress analysis report (Class 1 only) on file at NVD of Borg Warner, 7500 Tyrone Ave., Van Nuys, CA

Design specifications certified by (1) David J. Murphy

PE State Washington Reg. No. 12542

Stress analysis certified by (1) Byron E. Leonard

PE State CA Reg. No. E123

(1) Signature not required. List name only.

CERTIFICATE OF SHOP INSPECTION

I, the undersigned, holding a valid commission issued by the National Board of Boiler and Pressure Vessel Inspectors and the State or Province of California and employed by Lumbermen's Mutual Casualty of Long Grove, Illinois have inspected the pump, or valve, described in this Data Report on 7/29 19 83, and state that to the best of my knowledge and belief, the N Certificate Holder has constructed this pump, or valve, in accordance with the ASME Code, Section III.

By signing this certificate, neither the Inspector nor his employer makes any warranty, expressed or implied, concerning the equipment described in this Data Report. Furthermore, neither the Inspector nor his employer shall be liable in any manner for any personal injury or property damage or a loss of any kind arising from or connected with this inspection.

Date 7/29 19 83

Commissions 1275 CA, NB7669 (Nat'l Bd., State, Prov. and No.)

PLAN NO. 2-0413-1
PLAN NO. 2-0413-2

FORM NPV-1 N CERTIFICATE HOLDERS' DATA REPORT FOR NUCLEAR PUMPS OR VALVES*

As Required by the Provisions of the ASME Code, Section III, Div. 1

Fluidp Supply 6/29/88.

1. Manufactured by Nuclear Valve Div., Borg Warner, 7500 Tyrone Ave., Van Nuys, Calif.
(Name and Address of N Certificate Holder)
2. Manufactured for Washington Public Power Supply Systems, 3000 George Washington Way, Richland, Washington
(Name and Address of Purchaser or Owner)
3. Location of Installation Richland, Washington WPPSS Hanford #2 Job Site
(Name and Address)
4. Pump or Valve Y Globe Valve. Nominal Inlet Size 1/2 (inch) Outlet Size 1/2 (inch)

	(a) Model No., Series No. or Type	(b) N Certificate Holder's Serial No.	(c) Canadian Registration No.	(d) Drawing No.	(e) Class	(f) Nat'l. Bd. No.	(g) Year Built
(1)	1500#	80020 thru 80027	N/A	76590-1	1	N/A	1983
(2)							
(3)							
(4)		EPN NO.		SERIAL NO			
(5)							
(6)		CIA-V-737A		80025			
(7)							
(8)							
(9)							
(10)							

5. The valves are designed to handle a fluid media which includes steam, water condensate, borated water, etc., associated with a BWR and BWR. The temperature pressure rating of the media is stated below.
(Brief description of service for which equipment was designed)

6. Design Conditions 3600 (Pressure) psi 100 (Temperature) °F or Valve Pressure Class N/A (1)
7. Cold Working Pressure 3600 psi at 100°F.
8. Pressure Retaining Pieces

FOR INFORMATION ONLY

Mark No.	Material Spec. No.	Manufacturer	Remarks
(a) Castings			
Disc-Code 5F32	Stellite #6	Rex Precision	
1T01			
(b) Forgings			
Body-Code 5E99	SA 105	Pacific Forge	

(1) For manually operated valves only.

* Supplemental sheets in form of lists, sketches or drawings may be used provided (1) size is 8-1/2" x 11", (2) information in items 1, 2 and 5 on this Data Report is included on each sheet, and (3) each sheet is numbered and number of sheets is recorded at top of this form.

FORM NPV-1 (Back)

Mark No.	Material Spec. No.	Manufacturer	Remarks
(c) Bolting N/A			
(d) Other Parts			
Backseat-Code 5E84	SA 564 Ty 630	Jorgensen Steel	

9. Hydrostatic test 5400 psi. Disk Differential test pressure 3600 psi. FOR INFORMATION ONLY

CERTIFICATE OF COMPLIANCE

We certify that the statements made in this report are correct and that this pump, or valve, conforms to the rules of construction of the ASME Code for Nuclear Power Plant Components, Section III, Div. I, Edition 1974, Addenda Winter '75 (Date), Code Case No. N/A, Date 8/31/83

Signed Nuclear Valve Div., Borg Warner (N Certificate Holder) by Neal R. Smith

Our ASME Certificate of Authorization No. N-1254 to use the N (N) symbol expires 10/27/84 (Date).

CERTIFICATION OF DESIGN

Design information on file at NVD of Borg Warner, 7500 Tyrone Ave., Van Nuys, Ca. 91409

Stress analysis report (Class 1 only) on file at NVD of Borg Warner, 7500 Tyrone Ave., Van Nuys, CA

Design specifications certified by (1) David J. Murphy

PE State Washington Reg. No. 12542

Stress analysis certified by (1) Byron E. Leonard

PE State CA Reg. No. E123

(1) Signature not required. List name only.

CERTIFICATE OF SHOP INSPECTION

I, the undersigned, holding a valid commission issued by the National Board of Boiler and Pressure Vessel Inspectors and the State or Province of California and employed by Lumbermen's Mutual Casualty of Long Grove, Illinois have inspected the pump, or valve, described in this Data Report on 8/31, 19 83, and state that to the best of my knowledge and belief, the N Certificate Holder has constructed this pump, or valve, in accordance with the ASME Code, Section III.

By signing this certificate, neither the inspector nor his employer makes any warranty, expressed or implied, concerning the equipment described in this Data Report. Furthermore, neither the inspector nor his employer shall be liable in any manner for any personal injury or property damage or a loss of any kind arising from or connected with this inspection.

Date 8/31, 19 83

(Inspector) Commissions 1275 CA (Nat'l Bd., State, Prov. and No.)

PLAN NO. 2-0413-1
PLAN NO. 2-0413-2

WBG BR 215-14396

FORM NPV-1 N CERTIFICATE HOLDERS' DATA REPORT FOR NUCLEAR PUMPS OR VALVES*

As Required by the Provisions of the ASME Code, Section III, Div. 1

Kuldip Gupta 6/29/88

1. Manufactured by Nuclear Valve Div., Borg Warner, 7500 Tyrone Ave., Van Nuys, Calif. (Name and Address of N Certificate Holder)
2. Manufactured for Bovee & Crail/G.E.R.I., P.O. Box 1040, Richland, Washington 99352 (Name and Address of Purchaser or Owner)
3. Location of Installation Richland, Washington WPPSS Hanford #2 Job Site (Name and Address)
4. Pump or Valve Gate Valve. Nominal Inlet Size 3/4 (inch) Outlet Size 3/4 (inch)

	(a) Model No., Series No. or Type	(b) N Certificate Holder's Serial No.	(c) Canadian Registration No.	(d) Drawing No.	(e) Class	(f) Nat'l. Bd. No.	(g) Year Built
(1)	1500#	53253 THRU	N/A	76700-5	2	N/A	1980
(2)		53262					
(3)							
(4)							
(5)		EPN NO	SERIAL NO				035-26
(6)							
(7)		CIA-V-731A	53258.				
(8)							
(9)							
(10)							

5. The valves are designed to handle a fluid media which includes steam, water condensate, borated water, etc., associated with a BWR and BWR. The temperature pressure rating of the media is stated below. (Brief description of service for which equipment was designed)
6. Design Conditions 3600 (Pressure) psi -100 (Temperature) °F or Valve Pressure Class N/A (1)
7. Cold Working Pressure 3600 psi at 100°F.
8. Pressure Retaining Pieces

Mark No.	Material Spec. No.	Manufacturer	Remarks
(a) Castings			
Gate - N'Code	SA487 Gr.CA6NM	Rex Precision	
1T73, 4B39 &	A-296 Gr.CA6NM		
1P51			
(b) Forgings			
Body - N'Code	SA 105	Pacific Forge	
4C72			
Bonnet - N'Code	SA 105	Compton Forge	
1H53			

(1) For manually operated valves only.

* Supplemental sheets in form of lists, sketches or drawings may be used provided (1) size is 8-1/2" x 11", (2) information in items 1, 2 and 5 on this Data Report is included on each sheet, and (3) each sheet is numbered and number of sheets is recorded at top of this form.

(10/77) This form (E00037) may be obtained from the Order Dept., ASME, 345 E. 47th St., New York, N.Y. 10017

2129 1646

FORM NPV-1 (Back)

Mark No.	Material Spec. No.	Manufacturer	Remarks
(c) Bolting N/A			
(d) Other Parts N/A			

9. Hydrostatic test 5400 psi. Disk Differential test pressure 3600 psi.

CERTIFICATE OF COMPLIANCE

We certify that the statements made in this report are correct and that this pump, or valve, conforms to the rules of construction of the ASME Code for Nuclear Power Plant Components, Section III, Div. I, Edition 1974, Addenda Summer '75 (Date), Code Case No. N/A, Date 2/7/80

Signed Nuclear Valve Div., Borg Warner (N Certificate Holder) by [signature]

Our ASME Certificate of Authorization No. N-1254 to use the N (or) symbol expires 10/27/81 (Date).

CERTIFICATION OF DESIGN

Design information on file at NVD of Borg Warner, 7500 Tyrone Ave., Van Nuys, Ca. 91409

Stress analysis report (Class 1 only) on file at N/A

Design specifications certified by (1) David J. Murphy

PE State Washington Reg. No. 12542

Stress analysis certified by (1) N/A

PE State N/A Reg. No. N/A

(1) Signature not required. List name only.

CERTIFICATE OF SHOP INSPECTION

I, the undersigned, holding a valid commission issued by the National Board of Boiler and Pressure Vessel Inspectors and the State or Province of California and employed by Lumbermen's Mutual Casualty of Long Grove, Illinois have inspected the pump, or valve, described in this Data Report on 2/7 19 80, and state that to the best of my knowledge and belief, the N Certificate Holder has constructed this pump, or valve, in accordance with the ASME Code, Section III.

By signing this certificate, neither the inspector nor his employer makes any warranty, expressed or implied, concerning the equipment described in this Data Report. Furthermore, neither the inspector nor his employer shall be liable in any manner for any personal injury or property damage or a loss of any kind arising from or connected with this inspection.

Date 2/7 19 80

[signature] (Inspector) Commissions 1275 CA. (Nat'l Bd., State, Prov. and No.)

WBGTER 215-299 14396 16647

*Modified NPV-1 See8a Remarks

PLAN No. 2-0413-1
PLAN No. 2-0413-2.

FORM NPV-1 N CERTIFICATE HOLDERS' DATA REPORT FOR NUCLEAR PUMPS OR VALVES
As required by the Provisions of the ASME Code, Section III, Div. 1

1. Manufactured by Hopkins Valve Div., Borg Warner, 7500 Tyrone Ave., Van Nuys, Calif.
(Name and Address of N Certificate holder)

2. Manufactured for Bovee & Crail/G.E.B.I., P.O. Box 1040, Richland, Washington 99352
(Name and Address of Purchaser or Owner)

3. Location of Installation Richland, Washington WPPSS Hanford #2 Job Site
(Name and Address)

4. Pump or Valve Gate Valve. Nominal Inlet Size 3/4 (inch) Outlet Size 3/4 (inch)

	(a) Model No., Series No. or Type	(b) N Certificate Holder's Serial No.	(c) Canadian Registration No.	(d) Drawing No.	(e) Class	(f) Nat'l Bd. No.	(g) Year Built
(1)	1500#	17093 thru 17117	N/A	76700-5	2	N/A	1977
(2)							
(3)							
(4)							
(5)		EPN NO.		SERIAL NO.			
(6)							
(7)		CIA-V-730A		17104			
(8)		CIA-V-732A		17095			
(9)		CIA-V-735A		17099.			
(10)							

Rudolph Lynch 6/29/88

5. The valves are designed to handle a fluid media which includes steam, water condensate, borated water, etc., associated with a RCP and RHR. The temperature pressure rating of the media is stated below.
(Brief description of service for which equipment was designed)

6. Design Conditions 3600 (Pressure) psi 100 (Temperature) °F or Valve Pressure Class N/A (1)

7. Cold Working Pressure 3600 psi at 100°F.

8. Pressure Retaining Pieces

Mark No.	Material Spec. No.	Manufacturer	Remarks
(a) Castings			
Gate-Code 1P14-	A296 Gr. CA6NM		*Mat'l Spec. Was SA487
Casting-75347		Rex Precision	
Machined-75346		NV Division	
(b) Forgings			
Body - Code 1K69;1J60-			
Forging-70453	SA 105	Pacific Forge	
Machined-70474		NV Division	
Assembly-75349		NV Division	
Bonnet-Code 1M28-			
Forged Stock	SA 105	Compton Forge	
Machined		NV Division	

FOR INFORMATION ONLY

DOCUMENT CONTROL
MAR 30 1982
BECHTEL QUALITY CONTROL
BY: ch

(1) For manually operated valves only.

* Supplemental sheets in form of lists, sketches or drawings may be used provided (1) size is 8-1/2" x 11", (2) information in items 1, 2 and 5 on this Data Report is included on each sheet, and (2) each sheet is numbered and number of sheets is recorded at top of this form.

WBG-BR 215-16292

(10/77) This form (E00007) may be obtained from the Order Dept., ASME, 345 E. 47th St., New York, N.Y. 10017

Mark No.	Material Spec. No.	Manufacturer	Remarks
(c) Bolting			
(d) Other Parts			
Stem-Code 1N54			
Stock	SA564 Type 630	Jorgensen Steel	
Machined 75323		NV Division	

8. Hydrostatic test 5400 psi. Disk Differential test pressure 3600 psi.

CERTIFICATE OF COMPLIANCE

We certify that the statements made in this report are correct and that this pump, or valve, conforms to the rules of construction of the ASME Code for Nuclear Power Plant Components, Section III, Div. 1, Edition 1971, Addenda Winter '73. (Date), Code Case No. _____ Date December 18, 1981

Signed Nuclear Valve Div., Borg Warner (N Certificate Holder) by [signature]

Our ASME Certificate of Authorization No. N-1254 to use the N (N) symbol expires 10/27/84 (Date)

CERTIFICATION OF DESIGN

Design information on file at NVD of Borg Warner, 7500 Tyrone Ave., Van Nuys, Ca. 91409

Stress analysis report (Class 1 only) on file at _____

Design specifications certified by (1) David J. Murphy

PE State Washington Reg. No. 12542

Stress analysis certified by (1) _____

PE State _____ Reg. No. FOR INFORMATION ONLY

(1) Signature not required. List name only.

RECEIVED MAR 30 1982 BECHTEL QUALITY CONTROL BY: _____

CERTIFICATE OF SHOP INSPECTION

I, the undersigned, holding a valid commission issued by the National Board of Boiler and Pressure Vessel Inspectors and the State or Province of California and employed by Lumbermen's Mutual Casualty of Long Grove, Illinois have inspected the pump, or valve, described in this Data Report on December 18 19 81, and state that to the best of my knowledge and belief, the N Certificate Holder has constructed this pump, or valve, in accordance with the ASME Code, Section III.

By signing this certificate, neither the Inspector nor his employer makes any warranty, expressed or implied, concerning the equipment described in this Data Report. Furthermore, neither the Inspector nor his employer shall be liable in any manner for any personal injury or property damage or a loss of any kind arising from or connected with this inspection.

Date December 18, 1981

[signature] (Inspector)

Commissions 1275 Cal. WBG BR 215-16292 (Nat'l Bd., State, Prov. and No.)

FORM NPV-1 N CERTIFICATE HOLDERS' DATA REPORT FOR NUCLEAR PUMPS OR VALVES

As Required by the Provisions of the ASME Code, Section III, Div. 1

PLAN NO. 2-0413-1
PLAN NO. 2-0413-2

1. Manufactured by Dragon Valves, Inc., 13437 Excelsior Dr., [illegible]
(Name and Address of N Certificate Holder)

2. Manufactured for WSH/BOECON/GERI, P. O. Box 1044, Richland, Wa. [illegible]
(Name and Address of Purchaser or Owner)

3. Location of Installation WPPSS, Hanford Jobsite #2, Richland, Wa. [illegible]
(Plant or Jobsite)

Rudolp Engr's
6/29/88.

4. Pump or Valve Valve. Nominal Inlet Size 1/2 Pipe (Inch) Outlet Size [illegible] (mm)

	(a) Model No., Series No. or Type	(b) N Certificate Holder's Serial No.	(c) Canadian Registration No.	(d) Drawing No	(e) Class	(f) Nat'l Bd. No	(g) Year Built
(1)	502FN057SWD2	GT1401	N/A	13753	2	N/A	1980
(2)		thru					
(3)		GT1404,					
(4)		GT1406		EPN NO		SERIAL NO	
(5)		thru					
(6)		GT1408,		CIA-V-733A		GT 1406	
(7)		GT1410					
(8)		thru					
(9)		GT1415					
(10)		and GT1571				WBGBR 215 16375	

5. Instrument Shut-Off Valve (14 Pcs.)
(Brief description of service for which equipment was designed)

6. Design Conditions _____ psi (Pressure) _____ °F (Temperature) or Valve Pressure Class 2500 (1)

7. Cold Working Pressure 6000 psi at 100°F

8. Pressure Retaining Pieces

Mark No.	Material Spec. No.	Manufacturer	Remarks
(a) Castings None			
(b) Forgings			
Body	ASME SA182 Gr. F316	Ajax Forge Co.	[illegible]

(1) For manually operated valves only.

* Supplemental sheets in form of lists, sketches or drawings may be used provided (1) size is 8 1/2" x 11" (2) information in items 1, 2 and 3 on this Data Report is included on each sheet, and (3) each sheet is numbered and number of sheets is recorded at top of this form.

Mark No	Material Spec. No	Manufacturer	Remarks
(c) Bolting None			
			WBGBR 215 16375
(d) Other Parts			
Disc	Stellite Alloy 6B	Cabot Corp. Stellite	HT 1810-2-1055
Bonnet	ASME SA479 TY 316	Joslyn Stainless	HT 76487
Union Nut	ASME SA479 TY 316	Al Tech Spec. Steels	HT 05030

B. Hydrostatic test 9000 psi. Disk Differential test pressure 6000 psi.

CERTIFICATE OF COMPLIANCE

We certify that the statements made in this report are correct and that this pump, or valve, conforms to the rules of construction of the ASME Code for Nuclear Power Plant Components. Section III. Div. I., Edition 1974.

Addenda 6-30-76 (Date). Code Case No. N/A. Date November 10, 1980

Signed DRAGON VALVES, INC. (N Certificate Holder) by [signature]

Our ASME Certificate of Authorization No. N-1033 to use the N (Stamp) symbol expires 5-6-81 (Date)

CERTIFICATION OF DESIGN

Design information on file at WSH/BOECON/GERI

Stress analysis report (Class 1 only) on file at not applicable

Design specifications certified by (1) David J. Murphy

PE State VA Reg. No. 12542

Stress analysis certified by (1) not required

PE State Reg. No.

(1) Signature not required. List name only.

CERTIFICATE OF SHOP INSPECTION

I, the undersigned, holding a valid commission issued by the National Board of Boiler and Pressure Vessel Inspectors and the State or Province of CALIFORNIA and employed by DOSH of CALIFORNIA have inspected the pump, or valve, described in the Data Report on Nov 10, 19 80 and state that to the best of my knowledge and belief, the N Certificate Holder has constructed this pump, or valve, in accordance with the ASME Code, Section III.

By signing this certificate, neither the Inspector nor his employer makes any warranty, expressed or implied, concerning the equipment described in this Data Report. Furthermore, neither the Inspector nor his employer shall be liable in any manner for any personal injury or property damage or a loss of any kind arising from or connected with this inspection.

Date Nov 10 19 80

[signature] Commissions Ca 658 (Nat'l Bd., State, Prov. and No.)

3

WASHINGTON PUBLIC POWER SUPPLY SYSTEM

PLAN NO. 2-0414-1
2-0414-2

FORM NIS-2 OWNER'S REPORT FOR REPAIRS OR REPLACEMENTS
As Required by the Provisions of the ASME Code Section XI

1. Owner (Name) Washington Public Power Supply System — Date 7/21/88
   Owner (Address) 3000 George Washington Way, Richland, WA — Sheet 1 of 1
2. Plant (Name) WPPSS Nuclear Power Plant (WNP) — Unit WNP-2
   Plant (Address) Hanford, Benton County, WA — C20069 Repair Organization P.O. No., Job No., etc.
3. Work Performed by (Name) Bechtel Construction, Inc.
   Work Performed by (Address) P.O. Box 600, Richland, WA.
4. Identification of System Containment Instrument Air (CIA) System
5. (a) Applicable Construction Code ASME Section III 19 71 Edition, W73 Addenda, None Code Case
   (b) Applicable Edition of ASME Section XI Utilized for Repairs or Replacements 19 80 Edition, W80 Addenda, N308 Code Case
6. Identification of Components Repaired or Replaced and Replacement Components

Name of Component	Name of Manufacturer	Manufacturer Serial No.	National Board No.	Other I.D.	Year Built	Repaired, Replaced, or Replacement	ASME Code Stamped (Yes or No) Code Class
CIA(5)-1B	~~BPC~~ WPPSS K Swen 9/8/88 9/2/88	*	N/A	N/A	1983	Replacement	Yes, Class 3

7. Description of Work:

Replaced piping material and valves for Containment Instrument Air (CIA) Loop B system. The replacement work was performed as follows:

1. Cut and removed existing piping material.
2. Installed new piping material and valves.
3. Reinstalled (reused) existing valve CIA-V-41B.
4. Made required socket welds.
5. Installed new support material.

Notes:

*CIA(5)-1B-P1

WASHINGTON PUBLIC POWER SUPPLY SYSTEM

PLAN NO. 2-0414-1
2-0414-2

FORM NIS-2 (Back)

8. Tests Conducted: Hydrostatic ☐ Pneumatic ☐ Nominal Operating Pressure ☐ Other ☒ None
Test Pressure _____ psig, Test Temp. _____ °F
Component Design Pressure _____ psig, Temp. _____ °F

9. Remarks:

See attached NPV-1 code data reports for the following:

Valve EPN No.	Valve Serial No.	Valve EPN No.	Valve Serial No.
CIA-V-39B	N96302-00-0002	CIA-V-734B	80017
CIA-V-730B	17032	CIA-V-735B	16964
CIA-V-731B	17112	CIA-V-736B	80015
CIA-V-732B	17097	CIA-V-737B	80018
CIA-V-733B	GT1402		

CERTIFICATE OF COMPLIANCE

We certify that the statements made in the report are correct and this replacement (repair or replacement) conforms to the rules of the ASME Code, Section XI.

Type Code Symbol Stamp Not applicable

Certificate Authorization No. Not applicable Expiration Date Not applicable

Signed [signature] Owner or Owner's Designee. Title Plant Technical Manager

7/21/88

Date 7/21 19 88

CERTIFICATE OF INSERVICE INSPECTION

I, the undersigned, holding a valid commission issued by the National Board of Boiler and Pressure Vessel Inspectors and the State of Washington and employed by Lumbermen's Mutual Casualty Co. of Illinois have inspected the components described in this Owner's Report during the period 4/8/88 to 7/11/88, and state that to the best of my knowledge and belief, the Owner has performed examinations and taken corrective measures described in this Owner's Report in accordance with the requirements of the ASME Code, Section XI.

By signing this certificate neither the Inspector nor his employer makes any warranty, expressed or implied, concerning the examinations and corrective measures described in this Owner's Report. Furthermore, neither the Inspector nor his employer shall be liable in any manner for any personal injury or property damage or a loss of any kind arising from or connected with this inspection.

[signature] Inspector's Signature Commissions 5470 U National Board, State, and Endorsements

Date 7/22 19 88

QC-398

PLAN No. 2-0414-1
PLAN No. 2-0414-2

FORM NPV-1 N CERTIFICATE HOLDERS' DATA REPORT FOR NUCLEAR PUMPS OR VALVES

As Required by the Provisions of the ASME Code, Section III, Div. 1

Quality Supt
6/29/88

1. Manufactured by Crosby Valve & Gage Company 43 Kendrick St. Wrentham, MA 02093
(Name and Address of N Certificate Holder)

2. Manufactured for Washington Public Power Supply PO Box 968 Richland, WA 99352
(Name and Address of Purchaser or Owner)

3. Location of Installation Hanford 2 North Power Plant Richland, WA
(Name and Address)

4. Pump or Valve Ball Valve Nominal Inlet Size ½" (Inch) Outlet Size ½" (Inch)

	(a) Model No., Series No., or Type	(b) N Certificate Holder's Serial No.	(c) Canadian Registration No.	(d) Drawing No.	(e) Class	(f) National Board No.	(g) Year Built
(1)	N96302	N96302-00-0002		DS-C-96302 Rev. A	3	N/A	1988
(2)							
(3)							
(4)							
(5)			C1A-V-39B				
(6)							
(7)							
(8)							
(9)							
(10)							

5. ½" CL. 150 Ball Valve
(Brief description of service for which equipment was designed)

6. Design Conditions 200 (Pressure) psi 200 (Temperature) ° For Valve Pressure Class 150 Special (1)

7. Cold Working Pressure -- psi at 100°F.

8. Pressure Retaining Pieces

Mark No.	Material Spec. No.	Manufacturer	Remarks
(a) Castings			
(b) Forgings			
N95062-31-0002	ASME SA 105	Charles Larson	Body
N95063-31-0002	ASME SA 105	Charles Larson	Bonnet

(1) For manually operated valves only.

NCA RV-1 (Back)

S/N N96302-00-0002

Mark No.	Material Spec. No.	Manufacturer	Remarks
(c) Bolting			Welding Engr 5/18/88

(d) Other Parts

N95064-31-0002	ASME SA 479 Type 316	Armco	Ball
801956	ASME SA 193 Gr. B7	E.A. Greenhalgh	Cap Screw

9. Hydrostatic test 450 psi. Disk Differential test pressure 220 psi.

CERTIFICATE OF COMPLIANCE

We certify that the statements made in this report are correct and that this pump, or valve, conforms to the rules construction of the ASME Code for Nuclear Power Plant Components, Section III, Div. 1, Edition 1986, Addenda 1986 (Date), Code Case No. ---, Date ---

Signed Crosby Valve & Gage Co. (N Certificate Holder). By Lawrence J. Ries 5-13-88

Our ASME Certificate of Authorization No. N-1876 to use the N (N) symbol expires 9-30-89 (Date)

CERTIFICATION OF DESIGN

Design information on file at Crosby Valve & Gage Company

Stress analysis report (Class 1 only) on file at

Design specifications certified by (1) D. M. Bosi

PE State Washington Reg. No. 20941

Stress analysis certified by (1) ----

PE State ---- Reg. No. ----

(1) Signature not required. List name only.

CERTIFICATE OF SHOP INSPECTION

I, the undersigned, holding a valid commission issued by the National Board of Boiler and Pressure Vessel Inspectors and the State, or Province, of MASSACHUSETTS and employed by ARKWRIGHT MUTUAL INS CO. of NORWOOD MA, have inspected the pump, or valve, described in this Data Report on MAY 13, 1988, and state that to the best of my knowledge and belief, the N Certificate Holder has constructed this pump, or valve, in accordance with the ASME Code, Section III.

By signing this certificate, neither the inspector, nor his employer, makes any warranty, expressed or implied, concerning the equipment described in this Data Report. Furthermore, neither the inspector, nor his employer, shall be liable in any manner for any personal injury, or property damage, or a loss of any kind, arising from, or connected with, this inspection.

Date MAY 13 1988

(Inspector)

Factory Mutual System

Commissions MA 1375

(National Board State, Prov. and No.)

PLAN NO. 2-0414-1
PLAN NO. 2-0414-2

FORM NPV-1 N CERTIFICATE HOLDERS' DATA REPORT FOR NUCLEAR PUMPS OR VALVES*

As Required by the Provisions of the ASME Code, Section III, Div. 1

Buildup Sugh 6/29/88

1. Manufactured by Nuclear Valve Div., Borg Warner, 7500 Tyrone Ave., Van Nuys, Calif.
(Name and Address of N Certificate Holder)
2. Manufactured for Washington Public Power Supply Systems, 3000 George Washington Way, Richland, Washington
(Name and Address of Purchaser or Owner)
3. Location of Installation Richland, Washington WPPSS Hanford #2 Job Site
(Name and Address)
4. Pump or Valve Y Globe Valve. Nominal Inlet Size 1/2 (inch) Outlet Size 1/2 (inch)

	(a) Model No., Series No. or Type	(b) N Certificate Holder's Serial No.	(c) Canadian Registration No.	(d) Drawing No.	(e) Class	(f) Nat'l. Bd. No.	(g) Year Built
(1)	1500#	80003 thru	N/A	76590-1	1	N/A	1983
(2)		80019					
(3)							
(4)							
(5)		EPN NO		SERIAL NO.			
(6)							
(7)		CIA-V-734B		80017			
(8)		CIA-V-736B		80015			
(9)		CIA-V-737B		80018.			
(10)							

5. The valves are designed to handle a fluid media which includes steam, water condensate, borated water, etc., associated with a PWR and BWR. The temperature pressure rating of the media is stated below.
(Brief description of service for which equipment was designed)

6. Design Conditions 3600 (Pressure) psi 100 (Temperature) °F or Valve Pressure Class N/A (1)
7. Cold Working Pressure 3600 psi at 100°F.
8. Pressure Retaining Pieces

FOR INFORMATION ONLY

Mark No.	Material Spec. No.	Manufacturer	Remarks
(a) Castings			
Disc-Code 5F32	Stellite #6	Rex Precision	
(b) Forgings			
Body-Code 5E99	SA 105	Pacific Forge	

(1) For manually operated valves only.

* Supplemental sheets in form of lists, sketches or drawings may be used provided (1) size is 8-1/2" x 11", (2) information in items 1, 2 and 5 on this Data Report is included on each sheet, and (3) each sheet is numbered and number of sheets is recorded at top of this form.

BECHTEL

2 15 0723

FORM NPV-1 (Back)

Mark No.	Material Spec. No.	Manufacturer	Remarks
(c) Bolting N/A			
(d) Other Parts			
Backseat-Code 5E84	SA 564 Ty 630	Jorgensen Steel	

9. Hydrostatic test 5400 psi. Disk Differential test pressure 3600 psi.

FOR INFORMATION ONLY

CERTIFICATE OF COMPLIANCE

We certify that the statements made in this report are correct and that this pump, or valve, conforms to the rules of construction of the ASME Code for Nuclear Power Plant Components. Section III, Div. I, Edition 1974, Addenda Winter '75 (Date), Code Case No. N/A, Date 7/29/83

Signed Nuclear Valve Div., Borg Warner (N Certificate Holder) by [signature]

Our ASME Certificate of Authorization No. N-1254 to use the N (N) symbol expires 10/27/84 (Date).

CERTIFICATION OF DESIGN

Design information on file at NVD of Borg Warner, 7500 Tyrone Ave., Van Nuys, Ca. 91409

Stress analysis report (Class 1 only) on file at NVD of Borg Warner, 7500 Tyrone Ave., Van Nuys, CA

Design specifications certified by (1) David J. Murphy

PE State Washington Reg. No. 12542

Stress analysis certified by (1) Byron E. Leonard

PE State CA Reg. No. E123

(1) Signature not required. List name only.

CERTIFICATE OF SHOP INSPECTION

I, the undersigned, holding a valid commission issued by the National Board of Boiler and Pressure Vessel Inspectors and the State or Province of California and employed by Lumbermen's Mutual Casualty of Long Grove, Illinois have inspected the pump, or valve, described in this Data Report on 7/29 19 83, and state that to the best of my knowledge and belief, the N Certificate Holder has constructed this pump, or valve, in accordance with the ASME Code, Section III.

By signing this certificate, neither the inspector nor his employer makes any warranty, expressed or implied, concerning the equipment described in this Data Report. Furthermore, neither the inspector nor his employer shall be liable in any manner for any personal injury or property damage or a loss of any kind arising from or connected with this inspection.

[signature] 7/29 19 83

1275 CA. NB7669

*Modified NPV-1 Second Remarks

FORM NPV-1 N CERTIFICATE HOLDERS' DATA REPORT FOR NUCLEAR PUMPS OR VALVES*

As required by the Provisions of the ASME Code, Section III, Div. 1

1. Manufactured by Nuclear Valve Div., Borg Warner, 7500 Tyrone Ave., Van Nuys, Calif.
(Name and Address of N Certificate Holder)

2. Manufactured for Bechtel & Conti/G.E.B.I., P.O. Box 1040, Richland, Washington 99352
(Name and Address of Purchaser or Owner)

3. Location of Installation Richland, Washington WPPSS Hanford #2 Job Site
(Name and Address)

4. Pump or Valve Gate Valve. Nominal Inlet Size 3/4 (inch) Outlet Size 3/4 (inch)

	(a) Model No., Series No. or Type	(b) N Certificate Holder's Serial No.	(c) Canadian Registration No.	(d) Drawing No.	(e) Class	(f) Nat'l Bd. No.	(g) Year Built
(1)	1500#	17093 thru 17117	N/A	76700-5	2	N/A	1977.
(2)							
(3)						PLAN NO. 2-0414-1	
(4)						PLAN NO. 2-0414-2.	
(5)		EPN NO.	SERIAL NO.				
(6)						Philip Sands	
(7)		CIA-V-731B	17112			12/29/88	
(8)		CIA-V-732B	17097				
(9)							
(10)							

5. The valves are designed to handle a fluid media which includes steam, water condensate, borated water, etc., associated with a PRZ and RHR. The temperature pressure rating of the media is stated below.
(Brief description of service for which equipment was designed)

6. Design Conditions 3600 (Pressure) psi 100 (Temperature) °F or Valve Pressure Class N/A (1)

7. Cold Working Pressure 3600 psi at 100°F.

8. Pressure Retaining Pieces

Mark No.	Material Spec. No.	Manufacturer	Remarks
(a) Castings			
Gate-Code 1P14-	A290 Gr. CA6NM		*Mat'l Spec. Was SA487
Casting-75347		Rex Precision	
Machined-75346		NV Division	
(b) Forgings			
Body - Code 1K69;1J60-			
Forging-70453	SA 105	Pacific Forge	
Machined-70474		NV Division	
Assembly-75349		NV Division	
Bonnet-Code 1M28-			
Forged Stock	SA 105	Compton Forge	
Machined		NV Division	

FOR INFORMATION ONLY

RECEIVED MAR 30 1982 BECHTEL QUALITY CONTROL BY: CR

(1) For manually operated valves only.

* Supplemental sheets in form of lists, sketches or drawings may be used provided (1) size is 8-1/2" x 11", (2) information in items 1, 2 and 5 on this Data Report is included on each sheet, and (2) each sheet is numbered and number of sheets is recorded at top of this form.

WBG-BR 215-16292

Mark No.	Material Spec. No.	Manufacturer	Remarks
(c) Boning			
(d) Other Parts			
Stem-Code IN54 -			
Stock	SA564 Type 630	Jorgensen Steel	
Machined 75323		NV DIVISION	

9. Hydrostatic test 5400 psi. Disk Differential test pressure 3600 psi.

CERTIFICATE OF COMPLIANCE

We certify that the statements made in this report are correct and that this pump, or valve, conforms to the rules of construction of the ASME Code for Nuclear Power Plant Components, Section III, Div. I, Edition 1971 Addenda Winter '73. (Date), Code Case No. _____ Date December 18, 1981

Signed Nuclear Valve Div., Borg Warner (N Certificate Holder) by [signature]

Our ASME Certificate of Authorization No. N-1254 to use the N (N) symbol expires 10/27/84 (Date)

CERTIFICATION OF DESIGN

Design information on file at HVD of Borg Warner, 7500 Tyrone Ave., Van Nuys, Ca. 91409

Stress analysis report (Class 1 only) on file at _____

Design specifications certified by (1) David J. Murphy

PE State Washington Reg. No. 12542

Stress analysis certified by (1) _____

PE State _____ Reg. No. _____

(1) Signature not required. List name only.

FOR INFORMATION ONLY

MAR 30 1982

BECHTEL QUALITY CONTROL

BY: _____

CERTIFICATE OF SHOP INSPECTION

I, the undersigned, holding a valid commission issued by the National Board of Boiler and Pressure Vessel Inspectors and the State or Province of California and employed by Lumbermen's Mutual Casualty of Lake Grove, Illinois have inspected the pump, or valve, described in this Data Report on December 18 19 81, and state that to the best of my knowledge and belief, the N Certificate Holder has constructed this pump, or valve, in accordance with the ASME Code, Section III.

By signing this certificate, neither the Inspector nor his employer makes any warranty, expressed or implied, concerning the equipment described in this Data Report. Furthermore, neither the Inspector nor his employer shall be liable in any manner for any personal injury or property damage or a loss of any kind arising from or connected with this inspection.

Date December 18, 1981

(Inspector) Commissions 1275 CA. WBG BR 215-16292 (Nat'l Bd., State, Prov. and No.)

PAGE 8 OF 16 of 07

* Modified NPV-1 see :8a and 8b Remarks

PLAN NO. 2-0414-1

PLAN NO. 2-0414-2.

FORM NPV-1 N CERTIFICATE HOLDERS' DATA REPORT FOR NUCLEAR PUMPS OR VALVES*

As Required by the Provisions of the ASME Code, Section III, Div. 1

1. Manufactured by Nuclear Valve Div., Borg Warner, 7500 Tyrone Ave., Van Nuys, Calif. (Name and Address of N Certificate Holder)
2. Manufactured for Bovee & Crail/G.E.R.I., P.O. Box 1040, Richland, Washington 99352 (Name and Address of Purchaser or Owner)
3. Location of Installation Richland, Washington WPPSS Hanford #2 Job Site (Name and Address)
4. Pump or Valve Gate Valve. Nominal Inlet Size 3/4 (inch) Outlet Size 3/4 (inch)

	(a) Model No., Series No. or Type	(b) N Certificate Holder's Serial No.	(c) Canadian Registration No.	(d) Drawing No.	(e) Class	(f) Nat'l. Bd. No.	(g) Year Built
(1)		16961 thru 16964		76700-1	2		1977
(2)		17055 thru 17070					
(3)							
(4)							
(5)		EPN NO		SERIAL NO.			
(6)							
(7)		CIA-V-735B		16964			
(8)							
(9)							Culdip Singh
(10)							6/29/88

5. The valves are designed to handle a fluid media which includes steam, water condensate, borated water, etc., associated with a PHR and BWR. The temperature pressure rating of the media is stated below. (Brief description of service for which equipment was designed)

6. Design Conditions 3600 (Pressure) psi 100 (Temperature) °F or Valve Pressure Class N/a (1)
7. Cold Working Pressure 3600 psi at 100°F.
8. Pressure Retaining Pieces

Mark No.	Material Spec. No.	Manufacturer	Remarks
(a) Castings			
Gate-Code 1P14, 1P38	A296. GR CA		*Mark No. 1P38 added
Casting-75347	6NM	Rex Precision	* Mat'l Spec. was SA487
Machined-75346		NV Division	
(b) Forgings			
Body-Code 1J60; 1K69	SA105		
Forging-70453		Pacific Forge	
Machined-70474		NV Division	
Assembly-75349		NV Division	
Bonnet-Code 1M28; 1M53	SA105		*Material 1M53 added
Forged Stock		Sampton Forge	
Machined-73973-1		NV Division	

FOR INFORMATION ONLY

REVIEWED FEB 25 1982 BECHTEL QUALITY CONTROL BY:

(1) For manually operated valves only.

215 14928

* Supplemental sheets in form of lists, sketches or drawings may be used provided (1) size is 8-1/2" x 11", (2) information in Items 1, 2 and 5 on this Data Report is included on each sheet, and (3) each sheet is numbered and number of sheets is recorded at top of this form.

(10/77) This form (E00037) may be obtained from the Order Dept., ASME, 345 E. 47th St., New York, N.Y. 10017

2

FORM NPV-1 (Back)

Mark No.	Material Spec. No.	Manufacturer	Remarks
(c) Bolting			
(d) Other Parts			

8. Hydrostatic test 5400 psi. Disk Differential test pressure 3600 psi.

CERTIFICATE OF COMPLIANCE

We certify that the statements made in this report are correct and that this pump, or valve, conforms to the rules of construction of the ASME Code for Nuclear Power Plant Components, Section III, Div. I, Edition 1971, Addenda Winter 1973 (Date). Code Case No. _____ Date December 18, 1981

Signed Nuclear Valve Div., Borg Warner (N Certificate Holder) By [signature]

Our ASME Certificate of Authorization No. N-1254 to use the N (Mk) symbol expires 10/27/84 (Date).

CERTIFICATION OF DESIGN

Design information on file at NVD of Borg Warner, 7500 Tyrone Ave., Van Nuys, Ca. 91409

Stress analysis report (Class 1 only) on file at _____

Design specifications certified by (1) David J. Murphy

PE State Washington Reg. No. 12542

Stress analysis certified by (1) _____

PE State _____ Reg. No. _____

(1) Signature not required. List name only.

FOR INFORMATION ONLY

215-14928

CERTIFICATE OF SHOP INSPECTION

I, the undersigned, holding a valid commission issued by the National Board of Boiler and Pressure Vessel Inspectors and the State or Province of California and employed by Lumbermen's Mutual Casualty of Long Grove, Illinois have inspected the pump, or valve, described in this Data Report on December 18 19 81, and state that to the best of my knowledge and belief, the N Certificate Holder has constructed this pump, or valve, in accordance with the ASME Code, Section III.

By signing this certificate, neither the Inspector nor his employer makes any warranty, expressed or implied, concerning the equipment described in this Data Report. Furthermore, neither the Inspector nor his employer shall be liable in any manner for any personal injury or property damage or a loss of any kind arising from or connected with this inspection.

Date December 18 19 81

(Inspector) Commissions 1125 CA - (Nat'l Bd., State, Prov. and No.)

REVIEWED FEB 25 1982 RECEIVED QUALITY CONTROL

BY: [signature]

PLAN NO. 2-0414-1
PLAN NO. 2-0414-2 0014

FORM NPV-1 MANUFACTURERS' DATA REPORT FOR NUCLEAR PUMPS OR VALVES*

As Required by the Provisions of the ASME Code Rules

1. Manufactured by Nuclear Valve Division of Borg Warner, 7500 Tyrone Ave., Van Nuys, Ca. 91409 (Name & Address of Manufacturer) Order No. 47713/04180

2. Manufactured for Bovee & Crail/G.E.R.I. P.O. Box 1040, Richland, Washington 99352 (Name and Address) Order No. 215-32610

3. Owner WPPSS Hanford #2 Jobsite EPN NO. C1A-V-730B SERIAL NO 17032

4. Location of Plant Richland, Washington 99352 Rudolf Supp 6/29/88

5. Pump or Valve Identification NVD Part Number 76700-1, 3/4 Inch Gate Valve, 1500#, CS Serial Numbers 17022 thru 17029 and 17032 thru 17046 (23 Valves)
(Brief description of service for which equipment was designed)

6. Drawing No. 76700-1 Prepared by Nuclear Valve Division of Borg Warner

7. National Board No. N/A

8. Design Conditions 3600 (Pressure) psi 100 (Temperature) °F

9. The material, design, construction, and workmanship complies with ASME Code Section III. Class 2

Edition 1971, Addenda Date Winter '73, Case No. N/A

MODIFIED NPV-1

FOR INFORMATION ONLY

Original NPV-1 was dated and signed on December 30, 1976

Seat replaced and weld material removed from seal weld - re-welded with Weld Material N-Code 2E17

Hydrostatic Tested.

RECEIVED
MAY 10 1982
SECTION QUALITY CONTROL

APPROVED
FOR SUPPLY
SECTION QUALITY CONTROL

WEBER LID-13533A

Mark No.	Material Spec. No.	Manufacturer	Remarks
(c) Bolting			
N/A			
(d) Other Parts			
N/A			

FOR INFORMATION ONLY

c. Hydrostatic test 5400 psi.

CERTIFICATION OF DESIGN

Design information on file at Nuclear Valve Div. of Borg Warner, 7500 Tyrone Ave., Van Nuys, Ca.

Stress analysis report on file at N/A

Design specifications certified by David J. Murphy (1) Prof. Eng. State Was. Reg. No. 12542

Stress analysis report certified by N/A (1) Prof. Eng. State _____ Reg. No. _____

(1) Signature not required. List name only.

We certify that the statements made in this report are correct.

Date February 13 19 78 Signed Nuclear Valve Division of Borg Warner (Manufacturer) By [signature]

Certificate of Authorization No. N-1254 expires October 27, 1978

CERTIFICATE OF SHOP INSPECTION

I, the undersigned, holding a valid commission issued by the National Board of Boiler and Pressure Vessel Inspectors and/or the State of Province of California and employed by Lumbermen's Mutual Casualty of Long Grove, Illinois have inspected the equipment described in this Data Report on February 13 19 78, and state that to the best of my knowledge and belief, the Manufacturer has constructed this equipment in accordance with the applicable Subsections of ASME Code, Section III.

By signing this certificate, neither the Inspector nor his employer makes any warranty, expressed or implied, concerning the equipment described in this Data Report. Furthermore, neither the Inspector nor his employer shall be liable in any manner for any personal injury or property damage or a loss of any kind arising from or connected with this inspection.

Date February 13 19 78

[signature] Commissions CA 1275

(Inspector) (National Board, State, Province and No.)

Manuel B. Diana

FORM NPV-1 N CERTIFICATE HOLDERS' DATA REPORT FOR NUCLEAR PUMPS OR VALVES

As Required by the Provisions of the ASME Code, Section III, Div 1

PLAN No. 2-0414-1
PLAN No. 2-0414-2
Rulaif Supts
6/29/88

1. Manufactured by Dragon Valves, Inc., 13437 Excelsior Dr., [illegible], [illegible]
(Name and Address of N C. Certificate Holder)

2. Manufactured for WSH/BOECON/GERL P. O. Box 1040, Richland, WA 99352
(Name and Address of Purchaser or Owner)

3. Location of Installation WPPSS, Hanford Jobsite #2, Richland, WA 99352
(Plant Name and Address)

4. Pump or Valve Valve. Nominal Inlet Size 1/2 Pipe (inch) [illegible] (mm)

	(a) Model No., Series No. or Type	(b) N Certificate Holder's Serial No.	(c) Canadian Registration No.	(d) Drawing No.	(e) Class	(f) Nat'l Bd. No.	(g) Year Built
(1)	502FN057SWD2	GT1401	N/A	13753	2	N/A	1980
(2)		thru					
(3)		GT1404,					
(4)		GT1406	EPN No.		SERIAL NO		
(5)		thru					
(6)		GT1408,	CIA-V-733B		GT1402.		
(7)		GT1410					
(8)		thru					
(9)		GT1415					
(10)		and GT1571				WBGBR 215 16375	

5. Instrument Shut-Off Valve (14 Pcs.)
(Brief description of service for which equipment was designed)

6. Design Conditions _____ psi (Pressure) _____ °F (Temperature) or Valve Pressure Class 2500 (1)

7. Cold Working Pressure 6000 psi at 100°F

8. Pressure Retaining Pieces

Mark No.	Material Spec. No.	Manufacturer	Remarks
(a) Castings None			
(b) Forgings			
Body	ASME SA182 Gr. F316	Ajax Forge Co.	[illegible]

(1) For manually operated valves only.

* Supplemental sheets in form of lists, sketches or drawings may be used provided (1) size is 8 1/2" x 11", (2) information in items 1, 2 and 3 on this Data Report is included on each sheet, and (3) each sheet is numbered and number of sheets is recorded at top of this form.

Mark No	Material Spec No	Manufacturer	Remarks
(c) Bolting None			
			WBGBR 215 16375
(d) Other Parts			
Disc	Stellite Alloy 6B	Cabot Corp. Stellite	HT 1810-2-1055
Bonnet	ASME SA479 TY 316	Joslyn Stainless	HT 76487
Union Nut	ASME SA479 TY 316	Al Tech Spec. Steels	HT 05030

8. Hydrostatic test 9000 psi. Disk Differential test pressure 6000 psi.

CERTIFICATE OF COMPLIANCE

We certify that the statements made in this report are correct and that this pump, or valve, conforms to the rules of construction of the ASME Code for Nuclear Power Plant Components. Section III, Div. 1. Edition 1974;

Addenda 6-30-76 (Date), Code Case No. N/A Date November 10, 1980

Signed DEACON VALVES, INC. (N Certificate Holder) by

Our ASME Certificate of Authorization No. N-1033 to use the N (N) symbol expires 5-6-81 (Date)

CERTIFICATION OF DESIGN

Design information on file at WSH/BOECON/GERI

Stress analysis report (Class 1 only) on file at not applicable

Design specifications certified by (1) David J. Murphy

PE State WA Reg. No. 12542

Stress analysis certified by (1) not required

PE State Reg. No.

(1) Signature not required. List name only.

CERTIFICATE OF SHOP INSPECTION

I, the undersigned, holding a valid commission issued by the National Board of Boiler and Pressure Vessel Inspectors and the State or Province of CALIFORNIA and employed by DOSH of CALIFORNIA have inspected the pump, or valve, described in this Data Report on Nov. 10, 19 80 and state that to the best of my knowledge and belief, the N Certificate Holder has constructed this pump, or valve, in accordance with the ASME Code, Section III.

By signing this certificate, neither the Inspector nor his employer makes any warranty, expressed or implied, concerning the equipment described in this Data Report. Furthermore, neither the Inspector nor his employer shall be liable in any manner for any personal injury or property damage or a loss of any kind arising from or connected with this inspection.

Date Nov 10 19 80

(Inspector) Commissions Ca 658 (Nat'l Bd., State, Prov. and No.)

3

212311282

WASHINGTON PUBLIC POWER SUPPLY SYSTEM

PLAN NO. 2-0415

FORM NIS-2 OWNER'S REPORT FOR REPAIRS OR REPLACEMENTS
As Required by the Provisions of the ASME Code Section XI

1. Owner (Name) Washington Public Power Supply System — Date 7/21/88
   Owner (Address) 3000 George Washington Way, Richland, WA — Sheet 1 of 1
2. Plant (Name) WPPSS Nuclear Power Plant (WNP) — Unit WNP-2
   Plant (Address) Hanford, Benton County, WA — WPPSS Repair Organization P.O. No., Job No., etc.
3. Work Performed by (Name) WPPSS
   Work Performed by (Address) 3000 George Washington Way, Richland, WA.
4. Identification of System Residual heat Removal (RHR) System
5. (a) Applicable Construction Code ASME Section III 19 71 Edition, W73 Addenda, None Code Case
   (b) Applicable Edition of ASME Section XI Utilized for Repairs or Replacements 19 80 Edition, W80 Addenda, N308 Code Case
6. Identification of Components Repaired or Replaced and Replacement Components

Name of Component	Name of Manufacturer	Manufacturer Serial No.	National Board No.	Other I.D.	Year Built	Repaired, Replaced, or Replacement	ASME Code Stamped (Yes or No) Code Class
RHR(1)-2B	~~BPC~~ WPPSS K Smith 9/8/88 [illegible] 9/8/88	*	N/A	N/A	1984	Replacement	Yes, Class 2

7. Description of Work:

Fabricated restricting orifice (RO) plate and modified flanges for RHR-RO-10B. The fabrication and modification work was performed as follows:

1. Fabricated restricting orifice (RO) plate to the design requirements.
2. Modified (counterbored) the flanges to the design requirements.
3. Performed PT examination on accessible machined surfaces of the counterbore. PT examination results acceptable.

Note: Fabricated restricting orifice (RO) plate and modified flanges were installed under ASME Section XI Plan No. 2-0416.

Notes:

*RHR(1)-2B-P1

368-22684 (9/87)

WASHINGTON PUBLIC POWER SUPPLY SYSTEM

PLAN NO. 2-0415

FORM NIS-2 (Back)

8. Tests Conducted: Hydrostatic ☐ Pneumatic ☐ Nominal Operating Pressure ☐ Other ☒ None
Test Pressure _____ psig, Test Temp. _____ °F
Component Design Pressure _____ psig, Temp. _____ °F

9. Remarks:

None

CERTIFICATE OF COMPLIANCE

We certify that the statements made in the report are correct and this replacement (repair or replacement) conforms to the rules of the ASME Code, Section XI.

Type Code Symbol Stamp Not applicable

Certificate Authorization No. Not applicable Expiration Date Not applicable

Signed [signature] (Owner or Owner's Designee.) Title Plant Technical Manager

K Gough 7/21/88

Date 7/21 19 88

CERTIFICATE OF INSERVICE INSPECTION

I, the undersigned, holding a valid commission issued by the National Board of Boiler and Pressure Vessel Inspectors and the State of Washington and employed by Lumbermen's Mutual Casualty Co. of Illinois have inspected the components described in this Owner's Report during the period 4/21/88 to 6/30/88, and state that to the best of my knowledge and belief, the Owner has performed examinations and taken corrective measures described in this Owner's Report in accordance with the requirements of the ASME Code, Section XI.

By signing this certificate neither the Inspector nor his employer makes any warranty, expressed or implied, concerning the examinations and corrective measures described in this Owner's Report. Furthermore, neither the Inspector nor his employer shall be liable in any manner for any personal injury or property damage or a loss of any kind arising from or connected with this inspection.

[signature] (Inspector's Signature) Commissions 5470W (National Board, State, and Endorsements)

Date 9/22 19 88

WASHINGTON PUBLIC POWER SUPPLY SYSTEM

PLAN NO. 2-0416

FORM NIS-2 OWNER'S REPORT FOR REPAIRS OR REPLACEMENTS
As Required by the Provisions of the ASME Code Section XI

1. Owner (Name) Washington Public Power Supply System — Date 7/21/88
   Owner (Address) 3000 George Washington Way, Richland, WA — Sheet 1 of 3
2. Plant (Name) WPPSS Nuclear Power Plant (WNP) — Unit WNP-2
   Plant (Address) Hanford, Benton County, WA — C20069 Repair Organization P.O. No., Job No., etc.
3. Work Performed by (Name) Bechtel Construction, Inc.
   Work Performed by (Address) P.O. Box 600, Richland, WA.
4. Identification of System Residual Heat Removal (RHR) System
5. (a) Applicable Construction Code ASME Section III 19 71 Edition, W73 Addenda, None Code Case
   (b) Applicable Edition of ASME Section XI Utilized for Repairs or Replacements 19 80 Edition, W80 Addenda, N308 Code Case
6. Identification of Components Repaired or Replaced and Replacement Components

Name of Component	Name of Manufacturer	Manufacturer Serial No.	National Board No.	Other I.D.	Year Built	Repaired, Replaced, or Replacement	ASME Code Stamped (Yes or No) Code Class
RHR(1)-2B	~~BPC~~ WPPSS	*	N/A	N/A	1984	Replacement	Yes, Class 2
RHR(1)-4B	~~BPC~~ WPPSS K Smith 9/8/88 9/8/88	*	N/A	N/A	1983	Replacement	Yes, Class 1

7. Description of Work:

Replaced existing valve RHR-V-53B and installed restricting orifice (RO) plate RHR-RO-10B. The replacement work was performed as follows:

A. RHR-V-53B

1. Cut and removed existing valve.
2. Beveled and counterbored pipe cut ends.
3. Performed PT examination on the beveled and counterbored pipe ends. PT examination results acceptable.
4. Installed new replacement valve and made required circumferential butt welds
5. Performed PT and RT examinations on the final circumferential butt welds. PT and RT examination results acceptable.
6. Performed PT and UT examinations on the final circumferential butt welds for Inservice Inspections (ISI). PT and UT examination results acceptable.

Notes:
*RHR(1)-2B-P1
*RHR(1)-4B-P1

WASHINGTON PUBLIC POWER SUPPLY SYSTEM

PLAN NO. 2-0416

FORM NIS-2 (Back)

8. Tests Conducted: Hydrostatic ☒ Pneumatic ☒ Nominal Operating Pressure ☐ Other ☐ _____
Test Pressure * psig, Test Temp. * °F
Component Design Pressure * psig, Temp. * °F

9. Remarks:

See attached NPV-1 Code Data Reports for the following:

VALVE EPN NO.	VALVE SERIAL NO.
RHR-V-53B	E6330-2-1
RHR-V-639	28773

*See Sheet 3 of 3

CERTIFICATE OF COMPLIANCE

We certify that the statements made in the report are correct and this replacement (repair or replacement) conforms to the rules of the ASME Code, Section XI.

Type Code Symbol Stamp Not applicable

Certificate Authorization No. Not applicable Expiration Date Not applicable

Signed R L Wilkins (Owner or Owner's Designee.) Title Plant Technical Manager

R Emery 7/21/88

Date 7/21 19 88

CERTIFICATE OF INSERVICE INSPECTION

I, the undersigned, holding a valid commission issued by the National Board of Boiler and Pressure Vessel Inspectors and the State of Washington and employed by Lumbermen's Mutual Casualty Co. of Illinois have inspected the components described in this Owner's Report during the period 4/28/88 to 7/12/88, and state that to the best of my knowledge and belief, the Owner has performed examinations and taken corrective measures described in this Owner's Report in accordance with the requirements of the ASME Code, Section XI.

By signing this certificate neither the Inspector nor his employer makes any warranty, expressed or implied, concerning the examinations and corrective measures described in this Owner's Report. Furthermore, neither the Inspector nor his employer shall be liable in any manner for any personal injury or property damage or a loss of any kind arising from or connected with this inspection.

C K Hutchins (Inspector's Signature) Commissions 5470W (National Board, State, and Endorsements)

Date 7/22 19 88

WASHINGTON PUBLIC POWER SUPPLY SYSTEM

PLAN NO. 2-0416

FORM NIS-2 OWNER'S REPORT FOR REPAIRS OR REPLACEMENTS
As Required by the Provisions of the ASME Code Section XI

1. Owner (Name) Washington Public Power Supply System — Date 7/21/88
Owner (Address) 3000 George Washington Way, Richland, WA — Sheet 2 of 3
2. Plant (Name) WPPSS Nuclear Power Plant (WNP) — Unit WNP-2
Plant (Address) Hanford, Benton County, WA — C20069 Repair Organization P.O. No., Job No., etc.
3. Work Performed by (Name) Bechtel Construction, Inc.
Work Performed by (Address) P.O. Box 600, Richland, WA.

7. Description of Work (continued from Sheet 1):

7. Performed VT-3 visual examination on valve accessible internal surfaces. VT-3 visual examination results acceptable.
8. Capped valve vent and leak off connections by welding caps.
9. Performed PT examination on final socket welds. PT examination results acceptable.
10. Installed new material and new valve for drain connection for RHR-V-53B.
11. Made required socket welds.
12. Performed PT examination on the final socket welds. PT examination results acceptable.

B. RHR-RO-10B

1. Cut piping to install flanges for RHR-RO-10B.
2. Beveled and counterbored pipe cut ends.
3. Performed PT examination on the beveled and counterbored pipe ends. PT examination results acceptable.
4. Installed new flanges and made required circumferential butt welds.
5. Performed RT examination on the final circumferential butt welds. RT examination results acceptable.
6. Performed PT and UT examination on the final circumferential butt welds for Inservice Inspections (ISI). PT and UT examination results acceptable.
7. Installed restricting orifice (RO) plate and the bolting material.

Note: Restricting orifice (RO) plate was fabricated and flanges were modified under ASME Section XI Plan No. 2-0415.

WASHINGTON PUBLIC POWER SUPPLY SYSTEM

PLAN NO. 2-0416

FORM NIS-2 OWNER'S REPORT FOR REPAIRS OR REPLACEMENTS
As Required by the Provisions of the ASME Code Section XI

1. Owner (Name) Washington Public Power Supply System — Date 7/21/88
Owner (Address) 3000 George Washington Way, Richland, WA — Sheet 3 of 3
2. Plant (Name) WPPSS Nuclear Power Plant (WNP) — Unit WNP-2
Plant (Address) Hanford, Benton County, WA — C20069 Repair Organization P.O. No., Job No., etc.
3. Work Performed by (Name) Bechtel Construction, Inc.
Work Performed by (Address) P.O. Box 600, Richland, WA.

8. Tests Conducted: (continued from Sheet 1)

A. ASME Section III, Code Class 1 weld, RHR(1)-4B.

Performed hydrostatic test to confirm pressure boundary integrity. No evidence of leakage during hydrostatic test.

Test Pressure: 1395 psig
Test Temperature: 81°F
Design Pressure: 1550 psig
Design Temperature: 575°F

B. ASME Section III, Code Class 2 welds, RHR(1)-2B.

Performed hydrostatic test to confirm pressure boundary integrity. No evidence of leakage during hydrostatic test.

Test Pressure: 600 psig
Test Temperature: 81.6°F
Design Pressure: 500 psig
Design Temperature: 480°F

C. ASME Section III, Code Class 2, RHR-RO-10B flange joint, RHR(1)-2B.

Performed pressure test at normal operating pressure to confirm pressure boundary integrity. No evidence of leakage during pressure test.

Test Pressure: 170 psig
Test Temperature: 90°F
Design Pressure: 500 psig
Design Temperature: 480°F

Anchor/Darling
Valve Company, WILLIAMSPORT, PA 17701

PCAN No 2-0416 RHR-V-53B
Rudolph Eng 5
4/29/88

FORM QAS-14-1 SUPPLEMENTAL DATA REPORT FOR NUCLEAR VALVES OR PARTS

1. Work performed by Anchor/Darling Valve Company E-A564 (Shop Order No.)
701 First Street, Williamsport, PA 17701

2. Owner Washington Public Power Supply System, P.O. Box 968, Richland, WA 99352-0968 (Name and Address)

3. Name of Nuclear Power Plant WPPSS, North Power Plant Loop

4. Address of Nuclear Power Plant Richland, WA 99352

5. a: Identification of Component Repaired or Replacement Component 12"-778#-FW Gate Valve
b: Name of Manufacturer (If different from Line 1) N/A
c: Identifying Nos. E6330-2-1 (Mfr.'s Serial No.) N/A (Nat'l Bd. No.) N/A (Other) 1979 (Year Built)

6. Applicable Edition of Section III of ASME Code 19 74 Addenda Summer 1976 Code Case 1516-2, 1567, 1677, 1535-2, 1773

7. Description of Work The subject valve was disassembled and cleaned, part heat and (Use of additional sheet(s) or sketch(es) is acceptable if properly identified)
serial numbers were verified. Valve was re-assembled using a new stem, bonnet gasket, and adapter plate on the yoke. Bonnet and yoke bolting torqued in accordance with TA-108 Rev. 8. Valve was hydrostatically body & seat tested. After testing service packing was installed. Design specification certified by David M. Bosi, Reg. #20941, State of Washington. Design Report certified by Mark D. Cowell, Reg. #PE032082-E, State of Pennsylvania. Valve Drawing No. 93-15823 R/-. WPPSS design condition 1550 psig at 575°F.

CERTIFICATE OF COMPLIANCE

We certify that the statements made in this report are correct and this repair or replacement conforms to Section III of the ASME Code. Signed Leon D. Snyder (Authorized Representative of Repair Organization) Q. A. Engineer (Title)
Leon D. Snyder
APRIL 15, 19 88. (Date) Our ASME Certificate of Authorization No. N1712 to use the N symbol expires 4/15/89.

CERTIFICATE OF INSPECTION

I, the undersigned, holding a valid commission issued by the National Board of Boiler and Pressure Vessel Inspectors, employed by Commercial Union Insurance Company of Boston, Mass. have inspected the repair or replacement described in this Report on 4-15, 19 88 and state that to the best of my knowledge and belief, this repair or replacement has been made or constructed in accordance with Section III of the ASME Code. By signing this certificate, neither the Inspector nor his employer makes any warranty, expressed or implied, concerning the repair or replacement described in this Report. Furthermore, neither the Inspector nor his employer shall be liable in any manner for any personal injury or property damage or a loss of any kind arising from or connected with this inspection.

Date 4-15-88 (Inspector) Charles Young Commissions Pennsylvania 2392 (State or Providence, Nat'l Board)
Charles Young

Form QAS-14-1, Rev. -

PLAN NO. 2-0416 EDZ-V-538

FORM NPV-1 MANUFACTURERS' DATA REPORT FOR NUCLEAR PUMPS OR VALVES* Rudolph Sue 5 4/29/88

(As Required by the Provisions of the ASME Code, Section III, Div. 1)

1. Manufactured by Anchor/Darling Valve Co. 701 First St., Williamsport, PA 17701
(Name and Address of Manufacturer)

2. Manufactured for General Electric Co., 175 Curtner Ave., San Jose, CA 95125
(Name and Address of Purchaser or Owner)

3. Location of Installation Blackfox Station, Inola, Oklahoma 74036
(Name and Address)

4. Pump or Valve Valve. Nominal Inlet Size 12" (inch) Outlet Size 12"

	(a) Model No., Series No. or Type	(b) Manufacturers' Serial No.	(c) Canadian Registration No.	(d) Drawing No.	(e) Class	(f) Nat'l. Bd. No.	(g) Year Built
(1)	Flex Wedge	E-6330-2-1	N/A	93-14883 R/G	1	N/A	1979
(3)							
(4)							
(5)							
(6)							
(7)							
(8)							
(9)							
(10)							

5. HIGH PRESSURE CORE SPRAY
(Brief description of service for which equipment was designed)

6. Design Conditions 1575 (Pressure) psi 575 (Temperature) °F or Valve Pressure Class N/A (1)

7. Cold Working Pressure 1867 psi at 100°F.

8. Pressure Retaining Pieces

Mark No.	Material Spec. No.	Manufacturer	Remarks
(a) Castings			
Body HT.# F5583 S/N R6344	SA352-LCB	Quaker Alloy Casting Co.	
Bonnet HT.# F5500 S/N R6304	SA352-LCB	Quaker Alloy Casting Co.	
Disc HT.# 3678 S/N R7072	SA352-LCB	Quaker Alloy Casting Co.	
(b) Forgings			
Drain Connection HT.# 631827	SA350-LF2	Cann and Saul Steel Co.	
Vent Connection HT.# 631827	SA350-LF2	Cann and Saul Steel Co.	
Leakoff Connection HT.# 631827	SA350-LF2	Cann and Saul Steel Co.	

JL 4/11/88

(1) For manually operated valves only.

* Supplemental sheets in form of lists, sketches or drawings may be used provided (1) size is 8-1/2" x 11", (2) information in items 1, 2 and 5 on this data report is included on each sheet, and (3) each sheet is numbered and number of sheets is recorded at top of this form.

(1/76) This form (E00037) may be obtained from the Order Dept., ASME, 345 E. 47 St., New York, N.Y. 10017

FORM NPV-1 (Back) PLAN No. 2-0416 LER-V-538 Relief Engr 4/29/88

Mark No.	Material Spec. No	Manufacturer	Remarks
(c) Bolting			
Bonnet Studs	SA193-87	R.E.C. Corporation	
HT.# 285004			
Bonnet Nuts	SA194-7	Vitco Nuclear Products Inc.	
HT.# 576E1973			
(d) Other Parts			
N/A			

9. Hydrostatic test 2525 psi.

CERTIFICATE OF COMPLIANCE

We certify that the statements made in this report are correct and that this ~~pump or~~ valve, conforms to the rules of construction of the ASME Code for Nuclear Power Plant Components, Section III, Div. I., Edition 1974, Addenda Summer 1976 (Date), Code Case No. 1516-2,1535-2, 1567, 1677, 1773. Date 12-28-79

Signed Anchor/Darling Valve Co. (Manufacturer) by R.L. Houseknecht

Our ASME Certificate of Authorization No. N1712 to use the N (N) (NPV) symbol expires 4/15/80 (Date)

CERTIFICATION OF DESIGN

Design information on file at General Electric Co., 175 Curtner Ave., San Jose, CA 95125

Stress analysis report (Class 1 only) on file at Anchor/Darling Valve Co., 701 First St., Williamsport, PA 17701

Design specifications certified by (1) C.B. Johnson

PE State CA Reg. No. M13852

Stress analysis certified by (1) Robert D. Burns

PE State MS Reg. No. 25401

(1) Signature not required. List name only.

CERTIFICATE OF SHOP INSPECTION

I, the undersigned, holding a valid commission issued by the National Board of Boiler and Pressure Vessel Inspectors and the State or ~~Province of~~ Pennsylvania and employed by Commercial Union Ins. Co of Boston, Mass. have inspected the ~~pump or~~ valve, described in this Data Report on 3-19 thru 12-28 19 79 and state that to the best of my knowledge and belief, the Manufacturer has constructed this ~~pump or~~ valve, in accordance with the ASME Code, Section III.

By signing this certificate, neither the Inspector nor his employer makes any warranty, expressed or implied, concerning the equipment described in this Data Report. Furthermore, neither the Inspector nor his employer shall be liable in any manner for any personal injury or property damage or a loss of any kind arising from or connected with this inspection.

Date 12-28-79

Russell E. Montgomery

Commissions Pennsylvania WC972 (Nat'l Bd., State, Prov. and No.)

QA-11 12/11/86

00139

PLAN NO. 2-0413

FORM NPV-1 MANUFACTURERS' DATA REPORT FOR NUCLEAR PUMPS OR VALVES*

As Required by the Provisions of the ASME Code Rules

1. Manufactured by Nuclear Valve Division of Borg Warner, 7500 Tyrone Ave., Van Nuys, Ca. Order No. 47713
(Name & Address of Manufacturer)

2. Manufactured for Bovee & Crail/G.E.R.I. P.O. Box 1040, Richland, Washington 99352. Order No. 215-32610
(Name and Address)

3. Owner WPPSS Hanford #2 Job Site RHR-V-639, S/N 28773

4. Location of Plant Richland, Washington 99352 Rudolph Guy 6/27/88

5. Pump or Valve Identification Nuclear Valve Div. P/N 76590-2, 3/4" Y Globe Valve, 1500#, CS

Serial Numbers 28753 thru 28757, 28759 thru 28777 (24 Valves)
(Brief description of service for which equipment was designed)

(a) Drawing No. 76590 Prepared by Nuclear Valve Division of Borg Warner

(b) National Board No. N/A

6. Design Conditions 3600 (Pressure) psi 100 (Temperature) °F

7. The material, design, construction, and workmanship complies with ASME Code Section III, Class 1

Edition 1974, Addenda Date Summer '75, Case No. N/A

Mark No.	Material Spec. No.	Manufacturer	Remarks
(a) Castings			
Disc - Code 1W10; 1W47; 1W95	Stellite #6	Rex Precision	
			RECEIVED MAR 24 1992 SECTION QUALITY CONTROL BY:
(b) Forgings			
Body - Code 1V46	SA 105	Chiang & Assoc.	
Backseat - Code 2D89	SA 564 Ty 630	Jorgensen Steel	WBCOR 215 16344

*Supplemental sheets in form of lists, sketches or drawings may be used provided (1) size is 8½" x 11", (2) information in Items 1, 2, 5a and 5b on this data report is included on each sheet, and (3) each sheet is numbered and number of sheets is recorded at top of this form.

2

FORM NPV-1 (back)

	Mark No.	Material Spec. No.	Manufacturer	Remarks
(c) Bolting	N/A			
(d) Other Parts	N/A			

8. Hydrostatic test 5400 psi.

CERTIFICATION OF DESIGN

Design information on file at NVD of Borg Warner, 7500 Tyrone Ave., Van Nuys, Ca. 91409

Stress analysis report on file at NVD of Borg Warner, 7500 Tyrone Ave., Van Nuys, CA 91409

Design specifications certified by David J. Murphy (1) Prof. Eng. State Wash. Reg. No. 12542

Stress analysis report certified by William E. Hill (1) Prof. Eng. State CA Reg. No. 11338

(1) Signature not required. List name only.

We certify that the statements made in this report are correct.

Date March 16 19 78 Signed Nuclear Valve Division of Borg Warner (Manufacturer) By [signature]

Certificate of Authorization No. N-1254 expires October 27, 1978

CERTIFICATE OF SHOP INSPECTION

I, the undersigned, holding a valid commission issued by the National Board of Boiler and Pressure Vessel Inspectors and/or the State of Province of California and employed by Lumbermen's Mutual Casualty of Long Grove, Illinois have inspected the equipment described in this Data Report on March 16 19 78, and state that to the best of my knowledge and belief, the Manufacturer has constructed this equipment in accordance with the applicable Subsections of ASME Code, Section III.

By signing this certificate, neither the Inspector nor his employer makes any warranty, expressed or implied, concerning the equipment described in this Data Report. Furthermore, neither the Inspector nor his employer shall be liable in any manner for any personal injury or property damage or a loss of any kind arising from or connected with this inspection.

Date March 16 19 78

[signature] (Inspector) Commissions CA 1275 (National Board, State, Province and No.)

Manuel B. Diana

WASHINGTON PUBLIC POWER SUPPLY SYSTEM

PLAN NO. 2-0417-1
2-0417-2
2-0417-3

FORM NIS-2 OWNER'S REPORT FOR REPAIRS OR REPLACEMENTS
As Required by the Provisions of the ASME Code Section XI

1. Owner (Name) Washington Public Power Supply System — Date 7/21/88
   Owner (Address) 3000 George Washington Way, Richland, WA — Sheet 1 of 2
2. Plant (Name) WPPSS Nuclear Power Plant (WNP) — Unit WNP-2
   Plant (Address) Hanford, Benton County, WA — WPPSS Repair Organization P.O. No., Job No., etc.
3. Work Performed by (Name) WPPSS
   Work Performed by (Address) 3000 George Washington Way, Richland, WA.
4. Identification of System MS, RHR, and SLC Systems
5. (a) Applicable Construction Code ASME Section III 19 71 Edition, W73 Addenda, None Code Case
   (b) Applicable Edition of ASME Section XI Utilized for Repairs or Replacements 19 80 Edition, W80
   Addenda, N308 Code Case
6. Identification of Components Repaired or Replaced and Replacement Components

Name of Component	Name of Manufacturer	Manufacturer Serial No.	National Board No.	Other I. D.	Year Built	Repaired, Replaced, or Replacement	ASME Code Stamped (Yes or No) Code Class
MS(1)-4A	~~BPC~~ WPPSS	Same	N/A	N/A	1984	Replacement	Yes, Cl NF(2)
MS(1)-4B	~~BPC~~ WPPSS	as	N/A	N/A	1983	Replacement	Yes, Cl NF(2)
MS(1)-4C	~~BPC~~ WPPSS	Name of	N/A	N/A	1984	Replacement	Yes, Cl NF(2)
MS(18)-2-3	~~BPC~~ WPPSS	Component	N/A	N/A	1983	Replacement	Yes, Cl NF(3)
MS(18)-2-4	~~BPC~~ WPPSS		N/A	N/A	1983	Replacement	Yes, Cl NF(3)
MS(18)-2-15	~~BPC~~ WPPSS		N/A	N/A	1984	Replacement	Yes, Cl NF(3)
MS(18)-2-16	~~BPC~~ WPPSS		N/A	N/A	1984	Replacement	Yes, Cl NF(3)
RHR(1)-2A	~~BPC~~ WPPSS		N/A	N/A	1983	Replacement	Yes, Cl NF(2)
RHR(1)-4B	~~BPC~~ WPPSS		N/A	N/A	1984	Replacement	Yes, Cl NF(1)
SLC(2)-4S	~~BPC~~ WPPSS		N/A	N/A	1984	Replacement	Yes, Cl NF(1)

7. Description of Work: K Smith 9/8/88 9/7/88

A. Plan No. 2-0417-1

Machined pins to 1/16 undersize. The required work was performed as follows:

1. Standard snubber pins were machined to the required dimensions.
2. Performed visual examinations on the machined surfaces. Visual examination results acceptable.

Note: These machined pins were used for ASME Section XI Plan No. 2-0417-2, 2-0418, and 2-0418-1.

Notes:

WASHINGTON PUBLIC POWER SUPPLY SYSTEM

PLAN NO. 2-0417-1 2-0417-2 2-0417-3

FORM NIS-2 (Back)

8. Tests Conducted: Hydrostatic ☐ Pneumatic ☐ Nominal Operating Pressure ☐ Other ☒ None
Test Pressure _____ psig, Test Temp. _____ °F
Component Design Pressure _____ psig, Temp. _____ °F

9. Remarks:

See attached NF-2 Code Data Report for the following:

Support No.	NF-2 S/N	Support No.	NF-2 S/N
MS-31	MS-31	MSRV-4A-6	MSRV-4A-6
MS-118	MS-118	MSRV-4D-5	MSRV-4D-5
MS-140	MS-140	RHR-603	RHR-603
MS-997N	MS-979N	RHR-SB-40	RHR-SB-40
MSLC-2822-12	MSLC-2822-12	SLC-4475-113	SLC-4475-113
MSRV-3A-4	MSRV-3A-4		
MSRV-3D-7	MSRV-3D-7		

CERTIFICATE OF COMPLIANCE

We certify that the statements made in the report are correct and this replacement (repair or replacement) conforms to the rules of the ASME Code, Section XI.

Type Code Symbol Stamp Not applicable

Certificate Authorization No. Not applicable Expiration Date Not applicable

Signed R.L. Welsin, Owner or Owner's Designee. Title Plant Technical Manager

K.Smith 7/21/88

Date 7/21 19 88

CERTIFICATE OF INSERVICE INSPECTION

I, the undersigned, holding a valid commission issued by the National Board of Boiler and Pressure Vessel Inspectors and the State of Washington and employed by Lumbermen's Mutual Casualty Co. of Illinois have inspected the components described in this Owner's Report during the period 4/7/88 to 6/30/88, and state that to the best of my knowledge and belief, the Owner has performed examinations and taken corrective measures described in this Owner's Report in accordance with the requirements of the ASME Code, Section XI.

By signing this certificate neither the Inspector nor his employer makes any warranty, expressed or implied, concerning the examinations and corrective measures described in this Owner's Report. Furthermore, neither the Inspector nor his employer shall be liable in any manner for any personal injury or property damage or a loss of any kind arising from or connected with this inspection.

Inspector's Signature _____ Commissions 5970W (National Board, State, and Endorsements)

Date 7/22 19 88

WASHINGTON PUBLIC POWER SUPPLY SYSTEM

PLAN NO. 2-0417-1
2-0417-2
2-0417-3

FORM NIS-2 OWNER'S REPORT FOR REPAIRS OR REPLACEMENTS
As Required by the Provisions of the ASME Code Section XI

1. Owner (Name) Washington Public Power Supply System — Date 7/21/88
Owner (Address) 3000 George Washington Way, Richland, WA — Sheet 2 of 2
2. Plant (Name) WPPSS Nuclear Power Plant (WNP) — Unit WNP-2
Plant (Address) Hanford, Benton County, WA — WPPSS
3. Work Performed by (Name) WPPSS — Repair Organization P.O. No., Job No., etc.
Work Performed by (Address) 3000 George Washington Way, Richland, WA.

7. **Description of Work:** (continued from Sheet 1)

B. Plan No. 2-0417-2

Replaced existing snubbers with rigid struts. The replacement work was performed as follows:

1. Removed existing snubbers.
2. Intalled new rigid struts.
3. Installed undersized pins machined under Plan No. 2-0417-1.
4. Performed preservice inspections (PSI). PSI results satisfactory.

C. Plan No. 2-0417-3

Modified rigid strut SLC-4475-113. The modification work was performed as follows:

1. Cut existing lug plate from rigid strut.
2. Installed lug plate (removed from transition tube kit) on the rigid strut.
3. Made required weld.
4. Performed PT examination on the final weld. PT examination results acceptable.

Note: Modified rigid strut SLC-4475-113 was installed under Plan No. 2-0417-2.

FORM NF-2 NPT CERTIFICATE HOLDERS' PARTIAL DATA REPORT FOR PARTS FOR COMPONENT SUPPORTS
As Required by the Provisions of the ASME Code Rules, Section III, Division 1

2-0417-2.

PLAN NO. 2-0417-2
Quality Sup's
6/23/88.

1. Manufactured by NPS INDUSTRIES, INC., 10420 METRIC BLVD., AUSTIN, TEXAS 78758
(Name and address of NPT Certificate Holder)

2. Manufactured for WASHINGTON PUBLIC POWER SUPPLY SYSTEM, PO BOX 968, RICHLAND, WA 99352
(Name and address of purchaser or owner)

3. Location of Installation WNP-2 OPS WHS COMPLEX, WHS#1 N. PWR. PLANT LOOP, RICHLAND, WA 99352

4.

	(a) Part Serial No.	(b) Canadian Registration No.	(c) Part Drawing No.	(d) Description of Part	(e) Class	(f) National Board No.	(g) Year Built
(1)	*	N/A	NPS-130	MODIFIED	1	N/A	1988
(2)			REV.0	SWAY STRUT			
(3)				ASSEMBLY			
(4)				SRM-06M-SO			
(5)	*MSLC-2822-12						
(6)	QTY.1						
(7)							
(8)							
(9)							
(10)							

:pma

CERTIFICATE OF COMPLIANCE

We certify that the statements made in this report are correct and that these component support parts conform to the rules of construction of the ASME Code for Nuclear Power Plant Components, Section III, Division 1, Edition 1971, Addenda WINTER 1973 (Date) Code Case no. N247.

Date MARCH 25 19 88. Signed NPS INDUSTRIES (NPT Certificate Holder) by SANDY REYNOLDS.

Our ASME Certificate of Authorization No. N-2689 to use the NPT (NPT) Symbol expires JULY 12, 1988 (Date)

CERTIFICATE OF SHOP INSPECTION

I, the undersigned, holding a valid commission issued by the National Board of Boiler and Pressure Vessel Inspectors and the State or Province of TEXAS and employed by *HSBI&I CO. of HARTFORD, CONNECTICUT have inspected the parts for the component supports described in this Data Report on 3/25, 19 88, and state that to the best of my knowledge and belief the NPT Certificate Holder has constructed these component support parts in accordance with the ASME Code for Nuclear Power Plant Components.

*THE HARTFORD STEAM BOILER INSPECTION AND INSURANCE CO.

By signing this certificate, neither the Inspector nor his employer makes any warranty, expressed or implied, concerning the component supports described in this Data Report. Furthermore neither the Inspector nor his employer shall be liable in any manner for any personal injury or property damage or a loss of any kind arising from or connected with this inspection.

Date 3/25/88

Signed [signature] Commissions TEXAS 1186
(~~Nat'l Board~~, State, Province, and No.)

*Supplemental sheets in form of lists, sketches or drawings may be used provided (1) size is 8½ in. x 11 in., (2) information on items 1–4 on this Data Report is included on each sheet, and (3) each sheet is numbered and number of sheets is recorded at the top of this form.

T. 3-29-88

(10/77) This form (E00076) may be obtained from the Order Dept., ASME, 345 E. 47th St., New York, N.Y. 10017

FORM NF-2 NPT CERTIFICATE HOLDERS' PARTIAL DATA REPORT FOR PARTS FOR COMPONENT SUPPORT*
As Required by the Provisions of the ASME Code Rules, Section III, Division 1

PLAN No. 2-0417-2

1. Manufactured by NPS INDUSTRIES, INC., 10420 METRIC BLVD., AUSTIN, TEXAS 78758
(Name and address of NPT Certificate Holder)

2. Manufactured for WASHINGTON PUBLIC POWER SUPPLY SYSTEM, PO BOX 968, RICHLAND, WA 99352
(Name and address of purchaser or owner)

3. Location of Installation WNP-2 OPS WHS COMPLEX, WHS#1 N. PWR. PLANT LOOP, RICHLAND, WA 99352

4.

	(a) Part Serial No.	(b) Canadian Registration No.	(c) Part Drawing No.	(d) Description of Part	(e) Class	(f) National Board No.	(g) Year Built
(1)	*	N/A	NPS-130	MODIFIED	1	N/A	1988
(2)			REV.0	SWAY STRUT			
(3)				ASSEMBLY			
(4)				SRM-06M-SO			
(5)	* SLC-4475-113						
(6)	QTY.1.						
(7)							
(8)							
(9)							
(10)							

pma

CERTIFICATE OF COMPLIANCE

We certify that the statements made in this report are correct and that these component support parts conform to the rules of construction of the ASME Code for Nuclear Power Plant Components, Section III, Division 1, Edition 1971, Addenda WINTER 1973 (Date), Code Case no. N247.

Date MARCH 25 19 88. Signed NPS INDUSTRIES (NPT Certificate Holder) by SANDY REYNOLDS

Our ASME Certificate of Authorization No. N-2689 to use the NPT (NPT) Symbol expires JULY 12, 1988 (Date)

CERTIFICATE OF SHOP INSPECTION

I, the undersigned, holding a valid commission issued by the National Board of Boiler and Pressure Vessel Inspectors and the State or Province of TEXAS and employed by *HSBI&I CO. of HARTFORD, CONNECTICUT have inspected the parts for the component supports described in this Data Report on 3/25, 19 88, and state that to the best of my knowledge and belief the NPT Certificate Holder has constructed these component support parts in accordance with the ASME Code for Nuclear Power Plant Components.

*THE HARTFORD STEAM BOILER INSPECTION AND INSURANCE CO.

By signing this certificate, neither the Inspector nor his employer makes any warranty, expressed or implied, concerning the component supports described in this Data Report. Furthermore neither the Inspector nor his employer shall be liable in any manner for any personal injury or property damage or a loss of any kind arising from or connected with this inspection.

Date 3/25/88

Signed [signature] Commissions TEXAS 1186
(Nat'l Board, State, Province, and No.)

*Supplemental sheets in form of lists, sketches or drawings may be used provided (1) size is 8½ in. x 11 in., (2) information on items 1-4 on this Data Report is included on each sheet, and (3) each sheet is numbered and number of sheets is recorded at the top of this form.

3-29-88

(10/77) This form (E00076) may be obtained from the Order Dept., ASME, 345 E. 47th St., New York, N.Y. 10017

FORM NF-2 NPT CERTIFICATE HOLDERS' PARTIAL DATA REPORT FOR PARTS FOR COMPONENT SUPPORTS
As Required by the Provisions of the ASME Code Rules, Section III, Division 1

PLAN NO.2-0417-2

1. Manufactured by NPS INDUSTRIES, INC., 10420 METRIC BLVD., AUSTIN, TEXAS 78758
(Name and address of NPT Certificate Holder)

2. Manufactured for WASHINGTON PUBLIC POWER SUPPLY SYSTEM, PO BOX 968, RICHLAND, WA 99352
(Name and address of purchaser or owner)

3. Location of Installation WNP-2 OPS WHS COMPLEX, WHS#1 N. PWR. PLANT LOOP, RICHLAND, WA 99352

4.

	(a) Part Serial No.	(b) Canadian Registration No.	(c) Part Drawing No.	(d) Description of Part	(e) Class	(f) National Board No.	(g) Year Built
(1)	*	N/A	NPS-110	MODIFIED	1	N/A	1988
(2)			REV.0	SWAY STRUT			
(3)				ASSEMBLY			
(4)				SRS-1CM-SO			
(5)	* MS-31						
(6)	QTY.2						
(7)							
(8)							
(9)							
(10)							

pma

CERTIFICATE OF COMPLIANCE

We certify that the statements made in this report are correct and that these component support parts conform to the rules of construction of the ASME Code for Nuclear Power Plant Components, Section III, Division 1, Edition 1971, Addenda WINTER 1973 (Date), Code Case no. N247.

Date MARCH 25 19 88. Signed NPS INDUSTRIES (NPT Certificate Holder) by SANDY REYNOLDS

Our ASME Certificate of Authorization No. N-2689 to use the NPT (NPT) Symbol expires JULY 12, 1988 (Date)

CERTIFICATE OF SHOP INSPECTION

I, the undersigned, holding a valid commission issued by the National Board of Boiler and Pressure Vessel Inspectors and the State or Province of TEXAS and employed by *HSBI&I CO. of HARTFORD, CONNECTICUT have inspected the parts for the component supports described in this Data Report on 3/25, 19 88, and state that to the best of my knowledge and belief the NPT Certificate Holder has constructed these component support parts in accordance with the ASME Code for Nuclear Power Plant Components.

*THE HARTFORD STEAM BOILER INSPECTION AND INSURANCE CO.

By signing this certificate, neither the Inspector nor his employer makes any warranty, expressed or implied, concerning the component supports described in this Data Report. Furthermore neither the Inspector nor his employer shall be liable in any manner for any personal injury or property damage or a loss of any kind arising from or connected with this inspection.

Date 3/25/88

Signed R R Jones Commissions TEXAS 1186 (Nat'l Board, State, Province, and No.)

*Supplemental sheets in form of lists, sketches or drawings may be used provided (1) size is 8½ in. x 11 in., (2) information on items 1-4 on this Data Report is included on each sheet, and (3) each sheet is numbered and number of sheets is recorded at the top of this form.

3-29-88

(10/77) This form (E00076) may be obtained from the Order Dept., ASME, 345 E. 47th St., New York, N.Y. 10017

FORM NF-2 NPT CERTIFICATE HOLDERS' PARTIAL DATA REPORT FOR PARTS FOR COMPONENT SUPPORT*
As Required by the Provisions of the ASME Code Rules, Section III, Division 1

PLAN NO. 2-0417-2

1. Manufactured by NPS INDUSTRIES, INC., 10420 METRIC BLVD., AUSTIN, TEXAS 78758
(Name and address of NPT Certificate Holder)

2. Manufactured for WASHINGTON PUBLIC POWER SUPPLY SYSTEM, PO BOX 968, RICHLAND, WA 99352
(Name and address of purchaser or owner)

3. Location of Installation WNP-2 OPS WHS COMPLEX, WHS#1 N. PWR. PLANT LOOP, RICHLAND, WA 99352

4.

(a) Part Serial No.	(b) Canadian Registration No.	(c) Part Drawing No.	(d) Description of Part	(e) Class	(f) National Board No.	(g) Year Built
(1) *	N/A	NPS-110	MODIFIED	1	N/A	1988
(2)		REV.0	SWAY STRUT			
(3)			ASSEMBLY			
(4)			SRS-10M-SO			
(5) * MS-140						
(6) QTY.1						
(7)						
(8)						
(9)						
(10)						

pma

CERTIFICATE OF COMPLIANCE

We certify that the statements made in this report are correct and that these component support parts conform to the rules of construction of the ASME Code for Nuclear Power Plant Components, Section III, Division 1, Edition 1971, Addenda WINTER 1973 (Date), Code Case no. N247.

Date MARCH 25 19 88. Signed NPS INDUSTRIES (NPT Certificate Holder) by SANDY REYNOLDS

Our ASME Certificate of Authorization No. N-2689 to use the NPT (NPT) Symbol expires JULY 12, 1988 (Date)

CERTIFICATE OF SHOP INSPECTION

I, the undersigned, holding a valid commission issued by the National Board of Boiler and Pressure Vessel Inspectors and the State or Province of TEXAS and employed by *HSBI&I CO. of HARTFORD, CONNECTICUT have inspected the parts for the component supports described in this Data Report on 3/25, 19 88, and state that to the best of my knowledge and belief the NPT Certificate Holder has constructed these component support parts in accordance with the ASME Code for Nuclear Power Plant Components.

*THE HARTFORD STEAM BOILER INSPECTION AND INSURANCE CO.

By signing this certificate, neither the Inspector nor his employer makes any warranty, expressed or implied, concerning the component supports described in this Data Report. Furthermore neither the Inspector nor his employer shall be liable in any manner for any personal injury or property damage or a loss of any kind arising from or connected with this inspection.

Date 3/25/88

Signed L. L. Jones Commissions TEXAS 1186
(~~Nat'l Board~~, State, Province, and No.)

*Supplemental sheets in form of lists, sketches or drawings may be used provided (1) size is 8½ in. x 11 in., (2) information on items 1-4 on this Data Report is included on each sheet, and (3) each sheet is numbered and number of sheets is recorded at the top of this form.

3-29-88

(10/77) This form (E00076) may be obtained from the Order Dept., ASME, 345 E. 47th St., New York, N.Y. 10017

FORM NF-2 NPT CERTIFICATE HOLDERS' PARTIAL DATA REPORT FOR PARTS FOR COMPONENT SUPPORT*
As Required by the Provisions of the ASME Code Rules, Section III, Division 1

PLBN NO. 2-0417-2

1. Manufactured by NPS INDUSTRIES, INC., 10420 METRIC BLVD., AUSTIN, TEXAS 78758
(Name and address of NPT Certificate Holder)

2. Manufactured for WASHINGTON PUBLIC POWER SUPPLY SYSTEM, PO BOX 968, RICHLAND, WA 99352
(Name and address of purchaser or owner)

3. Location of Installation WNP-2 OPS WHS COMPLEX, WHS#1 N. PWR. PLANT LOOP, RICHLAND, WA 99352

4.

	(a) Part Serial No.	(b) Canadian Registration No.	(c) Part Drawing No.	(d) Description of Part	(e) Class	(f) National Board No.	(g) Year Built
(1)	*	N/A	NPS-110	MODIFIED	1	N/A	1988
(2)			REV.0	SWAY STRUT			
(3)				ASSEMBLY			
(4)				SRS-14M-SO			
(5)	* MSRV-40-5						
(6)	QTY.1						
(7)							
(8)							
(9)							
(10)							

pma

CERTIFICATE OF COMPLIANCE

We certify that the statements made in this report are correct and that these component support parts conform to the rules of construction of the ASME Code for Nuclear Power Plant Components, Section III, Division 1, Edition 1971, Addenda WINTER 1973 (Date), Code Case no. N247.

Date MARCH 25 19 88. Signed NPS INDUSTRIES (NPT Certificate Holder) by SANDY REYNOLDS

Our ASME Certificate of Authorization No. N-2689 to use the NPT (NPT) Symbol expires JULY 12, 1988 (Date)

CERTIFICATE OF SHOP INSPECTION

I, the undersigned, holding a valid commission issued by the National Board of Boiler and Pressure Vessel Inspectors and the State or Province of TEXAS and employed by *HSBI&I CO. of HARTFORD, CONNECTICUT have inspected the parts for the component supports described in this Data Report on 3/25, 19 88, and state that to the best of my knowledge and belief the NPT Certificate Holder has constructed these component support parts in accordance with the ASME Code for Nuclear Power Plant Components.

*THE HARTFORD STEAM BOILER INSPECTION AND INSURANCE CO.

By signing this certificate, neither the Inspector nor his employer makes any warranty, expressed or implied, concerning the component supports described in this Data Report. Furthermore neither the Inspector nor his employer shall be liable in any manner for any personal injury or property damage or a loss of any kind arising from or connected with this inspection.

Date 3/25/88

Signed [signature] Commissions TEXAS 1186
(~~Nat'l Board~~, State, Province, and No.)

*Supplemental sheets in form of lists, sketches or drawings may be used provided (1) size is 8½ in. x 11 in., (2) information on items 1-4 on this Data Report is included on each sheet, and (3) each sheet is numbered and number of sheets is recorded at the top of this form.

2-29-88

(10/77) This form (500076) may be obtained from the Order Dept., ASME, 345 E. 47th St., New York, N.Y. 10017

FORM NF-2 NPT CERTIFICATE HOLDERS' PARTIAL DATA REPORT FOR PARTS FOR COMPONENT SUPPORTS

As Required by the Provisions of the ASME Code Rules, Section III, Division 1

PLAN NO. 2-0017-2

1. Manufactured by NPS INDUSTRIES, INC., 10420 METRIC BLVD., AUSTIN, TEXAS 78758
(Name and address of NPT Certificate Holder)

2. Manufactured for WASHINGTON PUBLIC POWER SUPPLY SYSTEM, PO BOX 968, RICHLAND, WA 99352
(Name and address of purchaser or owner)

3. Location of Installation WNP-2 OPS WHS COMPLEX, WHS#1 N. PWR. PLANT LOOP, RICHLAND, WA 99352

4.

	(a) Part Serial No.	(b) Canadian Registration No.	(c) Part Drawing No.	(d) Description of Part	(e) Class	(f) National Board No.	(g) Year Built
(1)	*	N/A	NPS-110	MODIFIED	1	N/A	1988
(2)			REV.0	SWAY STRUT			
(3)				ASSEMBLY			
(4)				SRS-14M-SO			
(5)	* MSRV-4A-6						
(6)	QTY.1						
(7)							
(8)							
(9)							
(10)							

pma

CERTIFICATE OF COMPLIANCE

We certify that the statements made in this report are correct and that these component support parts conform to the rules of construction of the ASME Code for Nuclear Power Plant Components, Section III, Division 1, Edition 1971, Addenda WINTER 1973 (Date), Code Case no. N247.

Date MARCH 25 19 88. Signed NPS INDUSTRIES (NPT Certificate Holder) by SANDY REYNOLDS

Our ASME Certificate of Authorization No. N-2689 to use the NPT (NPT) Symbol expires JULY 12, 1988 (Date)

CERTIFICATE OF SHOP INSPECTION

I, the undersigned, holding a valid commission issued by the National Board of Boiler and Pressure Vessel Inspectors and the State or Province of TEXAS and employed by *HSBI&I CO. of HARTFORD, CONNECTICUT have inspected the parts for the component supports described in this Data Report on 3/25, 19 88, and state that to the best of my knowledge and belief the NPT Certificate Holder has constructed these component support parts in accordance with the ASME Code for Nuclear Power Plant Components.

*THE HARTFORD STEAM BOILER INSPECTION AND INSURANCE CO.

By signing this certificate, neither the Inspector nor his employer makes any warranty, expressed or implied, concerning the component supports described in this Data Report. Furthermore neither the Inspector nor his employer shall be liable in any manner for any personal injury or property damage or a loss of any kind arising from or connected with this inspection.

Date 3/25/88

Signed [signature] Commissions TEXAS 1186
(~~Nat'l Board~~, State, Province, and No.)

*Supplemental sheets in form of lists, sketches or drawings may be used provided (1) size is 8½ in. x 11 in., (2) information on items 1-4 on this Data Report is included on each sheet, and (3) each sheet is numbered and number of sheets is recorded at the top of this form.

3-29-88

(10/77) This form (E00076) may be obtained from the Order Dept., ASME, 345 E. 47th St., New York, N.Y. 10017

FORM NF-2 NPT CERTIFICATE HOLDERS' PARTIAL DATA REPORT FOR PARTS FOR COMPONENT SUPPORTS

As Required by the Provisions of the ASME Code Rules, Section III, Division 1 PLAN NO. 2-0417-2

1. Manufactured by NPS INDUSTRIES, INC., 10420 METRIC BLVD., AUSTIN, TEXAS 78758
(Name and address of NPT Certificate Holder)

2. Manufactured for WASHINGTON PUBLIC POWER SUPPLY SYSTEM, PO BOX 968, RICHLAND, WA 99352
(Name and address of purchaser or owner)

3. Location of Installation WNP-2 OPS WHS COMPLEX, WHS#1 N. PWR. PLANT LOOP, RICHLAND, WA 99352

4.

(a) Part Serial No.	(b) Canadian Registration No.	(c) Part Drawing No.	(d) Description of Part	(e) Class	(f) National Board No.	(g) Year Built
(1) *	N/A	NPS-130	MODIFIED	1	N/A	1988
(2)		REV.0	SWAY STRUT			
(3)			ASSEMBLY			
(4)			SRM-10M-SO			
(5) *	RHR-603					
(6)	QTY.2					
(7)						
(8)						
(9)						
(10)						

: pma

CERTIFICATE OF COMPLIANCE

We certify that the statements made in this report are correct and that these component support parts conform to the rules of construction of the ASME Code for Nuclear Power Plant Components, Section III, Division 1, Edition 1971, Addenda WINTER 1973 (Date) Code Case no. N247.

Date MARCH 25 19 88. Signed NPS INDUSTRIES (NPT Certificate Holder) by SANDY REYNOLDS

Our ASME Certificate of Authorization No. N-2689 to use the NPT (NPT) Symbol expires JULY 12, 1988 (Date)

CERTIFICATE OF SHOP INSPECTION

I, the undersigned, holding a valid commission issued by the National Board of Boiler and Pressure Vessel Inspectors and the State or Province of TEXAS and employed by *HSBI&I CO. of HARTFORD, CONNECTICUT have inspected the parts for the component supports described in this Data Report on 3/25 . 19 88 . and state that to the best of my knowledge and belief the NPT Certificate Holder has constructed these component support parts in accordance with the ASME Code for Nuclear Power Plant Components.

*THE HARTFORD STEAM BOILER INSPECTION AND INSURANCE CO.

By signing this certificate, neither the Inspector nor his employer makes any warranty, expressed or implied, concerning the component supports described in this Data Report. Furthermore neither the Inspector nor his employer shall be liable in any manner for any personal injury or property damage or a loss of any kind arising from or connected with this inspection.

Date 3/25/88

Signed [signature] Commissions TEXAS 1186
(~~Nat'l Board~~, State, Province, and No.)

*Supplemental sheets in form of lists, sketches or drawings may be used provided (1) size is 8½ in. x 11 in., (2) information on items 1-4 on this Data Report is included on each sheet, and (3) each sheet is numbered and number of sheets is recorded at the top of this form.

I-27-88.

(10/77) This form (E00075) may be obtained from the Order Dept., ASME, 345 E. 47th St., New York, N.Y. 10017

FORM NF-2 NPT CERTIFICATE HOLDERS' PARTIAL DATA REPORT FOR PARTS FOR COMPONENT SUPPORTS

As Required by the Provisions of the ASME Code Rules, Section III, Division 1

PLAN No. 2-0417-2

1. Manufactured by NPS INDUSTRIES, INC., 10420 METRIC BLVD., AUSTIN, TEXAS 78758
(Name and address of NPT Certificate Holder)

2. Manufactured for WASHINGTON PUBLIC POWER SUPPLY SYSTEM, PO BOX 968, RICHLAND, WA 99352
(Name and address of purchaser or owner)

3. Location of Installation WNP-2 OPS WHS COMPLEX, WHS#1 N. PWR. PLANT LOOP, RICHLAND, WA 99352

4.

(a) Part Serial No.	(b) Canadian Registration No.	(c) Part Drawing No.	(d) Description of Part	(e) Class	(f) National Board No.	(g) Year Built
(1) *	N/A	NPS-130	MODIFIED	1	N/A	1988
(2)		REV.0	SWAY STRUT			
(3)			ASSEMBLY			
(4)			SRM-14M-SO			
(5) * MSRV-3A-4						
(6) QTY.1						
(7)						
(8)						
(9)						
(10)						

: pma

CERTIFICATE OF COMPLIANCE

We certify that the statements made in this report are correct and that these component support parts conform to the rules of construction of the ASME Code for Nuclear Power Plant Components, Section III, Division 1, Edition 1971, Addenda WINTER 1973 (Date)
Code Case no. N247.

Date MARCH 25 19 88. Signed NPS INDUSTRIES (NPT Certificate Holder) by SANDY REYNOLDS

Our ASME Certificate of Authorization No. N-2689 to use the NPT (NPT) Symbol expires JULY 12, 1988 (Date)

CERTIFICATE OF SHOP INSPECTION

I, the undersigned, holding a valid commission issued by the National Board of Boiler and Pressure Vessel Inspectors and the State or Province of TEXAS and employed by *HSBI&I CO. of HARTFORD, CONNECTICUT have inspected the parts for the component supports described in this Data Report on 3/25, 19 88, and state that to the best of my knowledge and belief the NPT Certificate Holder has constructed these component support parts in accordance with the ASME Code for Nuclear Power Plant Components.

*THE HARTFORD STEAM BOILER INSPECTION AND INSURANCE CO.

By signing this certificate, neither the Inspector nor his employer makes any warranty, expressed or implied, concerning the component supports described in this Data Report. Furthermore neither the Inspector nor his employer shall be liable in any manner for any personal injury or property damage or a loss of any kind arising from or connected with this inspection.

Date 3/25/88

Signed [signature] Commissions TEXAS 1136
(~~Nat'l Board~~, State, Province, and No.)

*Supplemental sheets in form of lists, sketches or drawings may be used provided (1) size is 8½ in. x 11 in., (2) information on items 1-4 on this Data Report is included on each sheet, and (3) each sheet is numbered and number of sheets is recorded at the top of this form.

3-29-88

(10/77) This form (E00076) may be obtained from the Order Dept., ASME, 345 E. 47th St., New York, N.Y. 10017

FORM NF-2 NPT CERTIFICATE HOLDERS' PARTIAL DATA REPORT FOR PARTS FOR COMPONENT SUPPORTS

As Required by the Provisions of the ASME Code Rules, Section III, Division 1

PLAN NO. 2-0417-2

1. Manufactured by NPS INDUSTRIES, INC., 10420 METRIC BLVD., AUSTIN, TEXAS 78758
(Name and address of NPT Certificate Holder)

2. Manufactured for WASHINGTON PUBLIC POWER SUPPLY SYSTEM, PO BOX 968, RICHLAND, WA 99352
(Name and address of purchaser or owner)

3. Location of Installation WNP-2 OPS WHS COMPLEX, WHS#1 N. PWR. PLANT LOOP, RICHLAND, WA 99352

4.

	(a) Part Serial No.	(b) Canadian Registration No.	(c) Part Drawing No.	(d) Description of Part	(e) Class	(f) National Board No.	(g) Year Built
(1)	*	N/A	NPS-110	MODIFIED	1	N/A	1988
(2)			REV.0	SWAY STRUT			
(3)				ASSEMBLY			
(4)				SRS-14M-SO			
(5)	* MSRV-3D-7						
(6)	QTY.1						
(7)							
(8)							
(9)							
(10)							

pma

CERTIFICATE OF COMPLIANCE

We certify that the statements made in this report are correct and that these component support parts conform to the rules of construction of the ASME Code for Nuclear Power Plant Components, Section III, Division 1, Edition 1971, Addenda WINTER 1973 (Date) Code Case no. N247.

Date MARCH 25 19 88. Signed NPS INDUSTRIES (NPT Certificate Holder) by SANDY REYNOLDS

Our ASME Certificate of Authorization No. N-2689 to use the NPT (NPT) Symbol expires JULY 12, 1988 (Date)

CERTIFICATE OF SHOP INSPECTION

I, the undersigned, holding a valid commission issued by the National Board of Boiler and Pressure Vessel Inspectors and the State or Province of TEXAS and employed by *HSBI&I CO. of HARTFORD, CONNECTICUT have inspected the parts for the component supports described in this Data Report on 3/25, 19 88, and state that to the best of my knowledge and belief the NPT Certificate Holder has constructed these component support parts in accordance with the ASME Code for Nuclear Power Plant Components.

*THE HARTFORD STEAM BOILER INSPECTION AND INSURANCE CO.

By signing this certificate, neither the Inspector nor his employer makes any warranty, expressed or implied, concerning the component supports described in this Data Report. Furthermore neither the Inspector nor his employer shall be liable in any manner for any personal injury or property damage or a loss of any kind arising from or connected with this inspection.

Date 3/25/88

Signed [signature] Commissions TEXAS 1186 (Nat'l Board, State, Province, and No.)

*Supplemental sheets in form of lists, sketches or drawings may be used provided (1) size is 8½ in. x 11 in., (2) information on items 1-4 on this Data Report is included on each sheet, and (3) each sheet is numbered and number of sheets is recorded at the top of this form.

R 2-27-88

(10/77) This form (E00076) may be obtained from the Order Dept., ASME, 345 E. 47th St., New York, N.Y. 10017

FORM NF-2 NPT CERTIFICATE HOLDERS' PARTIAL DATA REPORT FOR PARTS FOR COMPONENT SUPPORT*
As Required by the Provisions of the ASME Code Rules, Section III, Division 1

PLAN NO. 2-0417-2

1. Manufactured by NPS INDUSTRIES, INC., 10420 METRIC BLVD., AUSTIN, TEXAS 78758
(Name and address of NPT Certificate Holder)

2. Manufactured for WASHINGTON PUBLIC POWER SUPPLY SYSTEM, PO BOX 968, RICHLAND, WA 99352
(Name and address of purchaser or owner)

3. Location of Installation WNP-2 OPS WHS COMPLEX, WHS#1 N. PWR. PLANT LOOP, RICHLAND, WA 99352

4.

	(a) Part Serial No.	(b) Canadian Registration No.	(c) Part Drawing No.	(d) Description of Part	(e) Class	(f) National Board No.	(g) Year Built
(1)	*	N/A	NPS-110	MODIFIED	1	N/A	1988
(2)			REV.0	SWAY STRUT			
(3)				ASSEMBLY			
(4)				SRS-14M-SO			
(5)	* MS-118						
(6)	QTY.2						
(7)							
(8)							
(9)							
(10)							

pma

CERTIFICATE OF COMPLIANCE

We certify that the statements made in this report are correct and that these component support parts conform to the rules of construction of the ASME Code for Nuclear Power Plant Components, Section III, Division 1, Edition 1971, Addenda WINTER 1973 (Date), Code Case no. N247.

Date MARCH 25 19 88. Signed NPS INDUSTRIES (NPT Certificate Holder) by SANDY REYNOLDS

Our ASME Certificate of Authorization No. N-2689 to use the NPT (NPT) Symbol expires JULY 12, 1988 (Date)

CERTIFICATE OF SHOP INSPECTION

I, the undersigned, holding a valid commission issued by the National Board of Boiler and Pressure Vessel Inspectors and the State or Province of TEXAS and employed by *HSBI&I CO. of HARTFORD, CONNECTICUT have inspected the parts for the component supports described in this Data Report on 3/25, 19 88, and state that to the best of my knowledge and belief the NPT Certificate Holder has constructed these component support parts in accordance with the ASME Code for Nuclear Power Plant Components.

*THE HARTFORD STEAM BOILER INSPECTION AND INSURANCE CO.

By signing this certificate, neither the Inspector nor his employer makes any warranty, expressed or implied, concerning the component supports described in this Data Report. Furthermore neither the Inspector nor his employer shall be liable in any manner for any personal injury or property damage or a loss of any kind arising from or connected with this inspection.

Date 3/25/88

Signed [signature] Commissions TEXAS 1886
(Nat'l Board, State, Province, and No.)

*Supplemental sheets in form of lists, sketches or drawings may be used provided (1) size is 8½ in. x 11 in., (2) information on items 1-4 on this Data Report is included on each sheet, and (3) each sheet is numbered and number of sheets is recorded at the top of this form.

E 3-29-88

FORM NF-2 NPT CERTIFICATE HOLDERS' PARTIAL DATA REPORT FOR PARTS FOR COMPONENT SUPPORT*

As Required by the Provisions of the ASME Code Rules, Section III, Division 1

PLAN NO. 2-0417-2

1. Manufactured by NPS INDUSTRIES, INC., 10420 METRIC BLVD., AUSTIN, TEXAS 78758
(Name and address of NPT Certificate Holder)

2. Manufactured for WASHINGTON PUBLIC POWER SUPPLY SYSTEM, PO BOX 968, RICHLAND, WA 99352
(Name and address of purchaser or owner)

3. Location of Installation WNP-2 OPS WHS COMPLEX, WHS#1 N. PWR. PLANT LOOP, RICHLAND, WA 99352

4.

(a) Part Serial No.	(b) Canadian Registration No.	(c) Part Drawing No.	(d) Description of Part	(e) Class	(f) National Board No.	(g) Year Built
(1) *	N/A	NPS-130	MODIFIED	1	N/A	1988
(2)		REV.0	SWAY STRUT			
(3)			ASSEMBLY			
(4)			SRS-14M-SO			
(5) * RHR-SB-40						
(6) QTY.1						
(7)						
(8)						
(9)						
(10)						

pma

CERTIFICATE OF COMPLIANCE

We certify that the statements made in this report are correct and that these component support parts conform to the rules of construction of the ASME Code for Nuclear Power Plant Components, Section III, Division 1, Edition 1971, Addenda WINTER 1973 (Date), Code Case no. N247.

Date MARCH 25 19 88. Signed NPS INDUSTRIES (NPT Certificate Holder) by SANDY REYNOLDS

Our ASME Certificate of Authorization No. N-2689 to use the NPT (NPT) Symbol expires JULY 12, 1988 (Date)

CERTIFICATE OF SHOP INSPECTION

I, the undersigned, holding a valid commission issued by the National Board of Boiler and Pressure Vessel Inspectors and the State or Province of TEXAS and employed by *HSBI&I CO. of HARTFORD, CONNECTICUT have inspected the parts for the component supports described in this Data Report on 3/25, 19 88, and state that to the best of my knowledge and belief the NPT Certificate Holder has constructed these component support parts in accordance with the ASME Code for Nuclear Power Plant Components.

*THE HARTFORD STEAM BOILER INSPECTION AND INSURANCE CO.

By signing this certificate, neither the Inspector nor his employer makes any warranty, expressed or implied, concerning the component supports described in this Data Report. Furthermore neither the Inspector nor his employer shall be liable in any manner for any personal injury or property damage or a loss of any kind arising from or connected with this inspection.

Date 3/25/88

Signed [signature] Commissions TEXAS 1186 (~~Nat'l Board~~, State, Province, and No.)

*Supplemental sheets in form of lists, sketches or drawings may be used provided (1) size is 8½ in. x 11 in., (2) information on items 1-4 on this Data Report is included on each sheet, and (3) each sheet is numbered and number of sheets is recorded at the top of this form.

3-29-88

10017

FORM NF-2 NPT CERTIFICATE HOLDERS' PARTIAL DATA REPORT FOR ANCHOR OR COMPONENT SUPPORT PARTS

As Required by the Provisions of the ASME Code Rules, Section III, Division 1

PLAN No.2-0417-2

1. Manufactured by NPS INDUSTRIES, INC., 10420 METRIC BLVD., AUSTIN, TEXAS 78758
(Name and address of NPT Certificate Holder)

2. Manufactured for WASHINGTON PUBLIC POWER SUPPLY SYSTEM, PO BOX 968, RICHLAND, WA 99352
(Name and address of purchaser or owner)

3. Location of Installation WNP-2 OPS WHS COMPLEX, WHS#1 N. PWR. PLANT LOOP, RICHLAND, WA 99352

4.

	(a) Part Serial No.	(b) Canadian Registration No.	(c) Part Drawing No.	(d) Description of Part	(e) Class	(f) National Board No.	(g) Year Built
(1)	*	N/A	NPS-110	MODIFIED	1	N/A	1988
(2)			REV.0	SWAY STRUT			
(3)				ASSEMBLY			
(4)				SRS-14M-SO			
(5)	* MS-997N						
(6)	QTY.2						
(7)							
(8)							
(9)							
(10)							

pma

CERTIFICATE OF COMPLIANCE

We certify that the statements made in this report are correct and that these component support parts conform to the rules of construction of the ASME Code for Nuclear Power Plant Components, Section III, Division 1, Edition 1971, Addenda WINTER 1973 (Date), Code Case no. N247.

Date MARCH 25 19 88. Signed NPS INDUSTRIES (NPT Certificate Holder) by SANDY REYNOLDS

Our ASME Certificate of Authorization No. N-2689 to use the NPT (NPT) Symbol expires JULY 12, 1988 (Date)

CERTIFICATE OF SHOP INSPECTION

I, the undersigned, holding a valid commission issued by the National Board of Boiler and Pressure Vessel Inspectors and the State or Province of TEXAS and employed by *HSBI&I CO. of HARTFORD, CONNECTICUT have inspected the parts for the component supports described in this Data Report on 3/25, 19 88, and state that to the best of my knowledge and belief the NPT Certificate Holder has constructed these component support parts in accordance with the ASME Code for Nuclear Power Plant Components.

*THE HARTFORD STEAM BOILER INSPECTION AND INSURANCE CO.

By signing this certificate, neither the Inspector nor his employer makes any warranty, expressed or implied, concerning the component supports described in this Data Report. Furthermore neither the Inspector nor his employer shall be liable in any manner for any personal injury or property damage or a loss of any kind arising from or connected with this inspection.

Date 3/25/88

Signed [signature] Commissions TEXAS 1186
(~~Nat'l Board~~, State, Province, and No.)

*Supplemental sheets in form of lists, sketches or drawings may be used provided (1) size is 8½ in. x 11 in., (2) information on items 1-4 on this Data Report is included on each sheet, and (3) each sheet is numbered and number of sheets is recorded at the top of this form.

3-25-88

(10/77) This form (E00076) may be obtained from the Order Dept., ASME, 345 E. 47th St., New York, N.Y. 10017

WASHINGTON PUBLIC POWER SUPPLY SYSTEM

PLAN NO. 2-0418
2-0418-1

FORM NIS-2 OWNER'S REPORT FOR REPAIRS OR REPLACEMENTS
As Required by the Provisions of the ASME Code Section XI

1. Owner (Name) Washington Public Power Supply System — Date 7/21/88
   Owner (Address) 3000 George Washington Way, Richland, WA — Sheet 1 of 2
2. Plant (Name) WPPSS Nuclear Power Plant (WNP) — Unit WNP-2
   Plant (Address) Hanford, Benton County, WA — WPPSS
3. Work Performed by (Name) WPPSS — Repair Organization P.O. No., Job No., etc.
   Work Performed by (Address) 3000 George Washington Way, Richland, WA.
4. Identification of System MS, RCIC, RHR, RWCU and SW Systems
5. (a) Applicable Construction Code ASME Section III 19 71 Edition, W73 Addenda, None Code Case
   (b) Applicable Edition of ASME Section XI Utilized for Repairs or Replacements 19 80 Edition, W80 Addenda, N308 Code Case
6. Identification of Components Repaired or Replaced and Replacement Components

Name of Component	Name of Manufacturer	Manufacturer Serial No.	National Board No.	Other I.D.	Year Built	Repaired, Replaced, or Replacement	ASME Code Stamped (Yes or No) Code Class
MS(1)-4A	~~BPC~~ WPPSS	Same	N/A	N/A	1984	Replacement	Yes, Cl NF(1)
MS(1)-4B	~~BPC~~ WPPSS	as	N/A	N/A	1983	Replacement	Yes, Cl NF(2)
MS(1)-4D	~~BPC~~ WPPSS	Name of	N/A	N/A	1984	Replacement	Yes, Cl NF(2)
MS(18)-2-1	~~BPC~~ WPPSS	Component	N/A	N/A	1983	Replacement	Yes, Cl NF(3)
MS(18)-2-3	~~BPC~~ WPPSS		N/A	N/A	1983	Replacement	Yes, Cl NF(3)
MS(18)-2-7	~~BPC~~ WPPSS		N/A	N/A	1983	Replacement	Yes, Cl NF(3)
RCIC(16)-1	~~BPC~~ WPPSS		N/A	N/A	1984	Replacement	Yes, Cl NF(2)
RCIC(12)-4CL2	~~BPC~~ WPPSS		N/A	N/A	1984	Replacement	Yes, Cl NF(2)
	K Swift 9/8/88	See Sheet 2 for		Continuation			

7. Description of Work: 9/8/88

A. Plan No. 2-0418

Replaced existing snubbers with rigid struts. The replacement work was performed as follows:

1. Removed existing snubbers.
2. Installed new rigid struts.
3. Installed undersized pins for RWCU-1C-11. Undersized pins were machined under Plan No. 2-0417-1.
4. Performed preservice inspection (PSI). PSI results satisfactory.

Notes:

WASHINGTON PUBLIC POWER SUPPLY SYSTEM

PLAN NO. 2-0418
2-0418-1

FORM NIS-2 (Back)

8. Tests Conducted: Hydrostatic ☐ Pneumatic ☐ Nominal Operating Pressure ☐ Other ☒ None
Test Pressure _____ psig, Test Temp. _____ °F
Component Design Pressure _____ psig, Temp. _____ °F

9. Remarks: See NF-2 Code Data Reports for the following:

Support No.	NF S/N	Support No.	NF-2 S/N
RCIC-5	RCIC-5	MS-179	NA-2295-025-1 & 2
RHR-911N	RHR-911N	MS-2619-310	NA-2295-025-3
MSRV-1A-4	NA-2295-027-1	RCIC-2	NA-2295-025-6
MSRV-3A-6	NA-2295-027-2	RCIC-108	NA-2295-025-9
MSRV-3C-10	NA-2295-027-7 & 8	MS-906N	NA-2295-026-1 & 2
SW-914N	NA-2295-027 10 & 14	RHR-556	NA-2295-026-4

See Sheet 2 for continuation

CERTIFICATE OF COMPLIANCE

We certify that the statements made in the report are correct and this replacement (repair or replacement) conforms to the rules of the ASME Code, Section XI.

Type Code Symbol Stamp Not applicable

Certificate Authorization No. Not applicable Expiration Date Not applicable

Signed [signature] (Owner or Owner's Designee) Title Plant Technical Manager

K Swep 7/21/88

Date 7/21 19 88

CERTIFICATE OF INSERVICE INSPECTION

I, the undersigned, holding a valid commission issued by the National Board of Boiler and Pressure Vessel Inspectors and the State of Washington and employed by Lumbermen's Mutual Casualty Co. of Illinois have inspected the components described in this Owner's Report during the period 4/15/88 to 6/30/88, and state that to the best of my knowledge and belief, the Owner has performed examinations and taken corrective measures described in this Owner's Report in accordance with the requirements of the ASME Code, Section XI.

By signing this certificate neither the Inspector nor his employer makes any warranty, expressed or implied, concerning the examinations and corrective measures described in this Owner's Report. Furthermore, neither the Inspector nor his employer shall be liable in any manner for any personal injury or property damage or a loss of any kind arising from or connected with this inspection.

[signature] (Inspector's Signature) Commissions 5670-W (National Board, State, and Endorsements)

Date 7/22 19 88

WASHINGTON PUBLIC POWER SUPPLY SYSTEM

PLAN NO. 2-0418
2-0418-1

FORM NIS-2 OWNER'S REPORT FOR REPAIRS OR REPLACEMENTS
As Required by the Provisions of the ASME Code Section XI

1. Owner (Name) Washington Public Power Supply System — Date 7/21/88
   Owner (Address) 3000 George Washington Way, Richland, WA — Sheet 2 of 2
2. Plant (Name) WPPSS Nuclear Power Plant (WNP) — Unit WNP-2
   Plant (Address) Hanford, Benton County, WA — WPPSS
3. Work Performed by (Name) WPPSS — Repair Organization P.O. No., Job No., etc.
   Work Performed by (Address) 3000 George Washington Way, Richland, WA.

6. **Identification of Components Repaired or Relaced:** (continued from Sheet 1)

RHR(1)-2A	~~BPC~~ WPPSS	Same	N/A	N/A	1983	Replacement	Yes, Cl NF(2)
RHR(1)-2B	~~BPC~~ WPPSS	as	N/A	N/A	1984	Replacement	Yes, Cl NF(2)
RWCU(3)-4	~~BPC~~ WPPSS	Name of	N/A	N/A	1984	Replacement	Yes, Cl NF(1)
SW(22)-2	~~BPC~~ WPPSS	Component	N/A	N/A	1984	Replacement	Yes, Cl NF(3)
FPC(5)-2	~~BPC~~ WPPSS		N/A	N/A	1983	Replacement	Yes, Cl NF(3)
RCIC(2)-1	~~BPC~~ WPPSS		N/A	N/A	1984	Replacement	Yes, Cl NF(2)

7. **Description of Work:** (continued from Sheet 1)

8. Plan No. 2-0418-1

Replaced existing snubbers with rigid struts. The replacement work was performed as follows:

1. Removed existing snubbers.
2. Installed new rigid struts.
3. Modified rigid strut for RCIC-967N.. The modification work was performed as follows:
   - o Cut pipe to the required length.
   - o Installed strut end assembly.
   - o Made required welds.
   - o Performed PT examination on the final welds. PT examination results acceptable.
4. Installed undersized pins for RCIC-967N. Undersized pins were machined under Plan No. 2-0417-1.
5. Installed new pipe clamp for RHR-435.
6. Performed preservice inspections (PSI). PSI results satisfactory.

9. **Remarks:** (continued from Sheet 1)

Support No.	NF-2 S/N	Support No.	NF-2 S/N
RWCU-1C-11	NA-2295-026-7	RCIC-109	NA-2295-026-1
RHR-355	NA-2295-026-13	RHR-557	NA-2295-026-12 & 19
RHR-569	NA-2295-026-14	RHR-565	NA-2295-026-17
RHR-564	NA-2295-026-20	RHR-573	NA-2295-026-8
RCIC-967N	NA-2295-001-1 & 16	RHR-574	NA-2295-026-15
FPC-225	NA-2295-025-11	RHR-459	NA-2295-027-11

FORM NP-2 NPT CERTIFICATE HOLDER'S PARTS REPORT

As Required by the Provisions of the ASME Code Rules, Section III, Division 1

2-0418

PLAN NO. 2-0418.

1. Manufactured by NPS INDUSTRIES, INC., 10420 METRIC BLVD., AUSTIN, TEXAS 78758
(Name and address of NPT Certificate Holder)

2. Manufactured for WASHINGTON PUBLIC POWER SUPPLY SYSTEM, PO BOX 968, RICHLAND, WA 99352
(Name and address of purchaser or owner)

3. Location of Installation WNP-2 OPS WHS COMPLEX, WHS#1 N. PWR. PLANT LOOP, RICHLAND, WA 99352

4.

	(a) Part Serial No.	(b) Canadian Registration No.	(c) Part Drawing No.	(d) Description of Part	(e) Class	(f) National Board No.	(g) Year Built
(1)	*	N/A	NPS-110	MODIFIED	1	N/A	1988
(2)			REV.0	SWAY STRUT			
(3)				ASSEMBLY			
(4)				SRS-06M-SO			
(5)	*RCIC-5						
(6)	QTY.2						
(7)							
(8)							
(9)							
(10)							

pma

CERTIFICATE OF COMPLIANCE

We certify that the statements made in this report are correct and that these component support parts conform to the rules of construction of the ASME Code for Nuclear Power Plant Components, Section III, Division 1, Edition 1971, Addenda WINTER 1973 (Date), Code Case no. N247.

Date MARCH 25 19 88. Signed NPS INDUSTRIES (NPT Certificate Holder) by SANDY REYNOLDS

Our ASME Certificate of Authorization No. N-2689 to use the NPT (NPT) Symbol expires JULY 12, 1988 (Date)

CERTIFICATE OF SHOP INSPECTION

I, the undersigned, holding a valid commission issued by the National Board of Boiler and Pressure Vessel Inspectors and the State or Province of TEXAS and employed by *HSBI&I CO. of HARTFORD, CONNECTICUT have inspected the parts for the component supports described in this Data Report on 3/25, 19 88, and state that to the best of my knowledge and belief the NPT Certificate Holder has constructed these component support parts in accordance with the ASME Code for Nuclear Power Plant Components.

*THE HARTFORD STEAM BOILER INSPECTION AND INSURANCE CO.

By signing this certificate, neither the Inspector nor his employer makes any warranty, expressed or implied, concerning the component supports described in this Data Report. Furthermore neither the Inspector nor his employer shall be liable in any manner for any personal injury or property damage or a loss of any kind arising from or connected with this inspection.

Date 3/25/88

Signed [signature] Commissions TEXAS 1136 (~~Nat'l Board~~, State, Province, and No.)

*Supplemental sheets in form of lists, sketches or drawings may be used provided (1) size is 8½ in. x 11 in., (2) information on items 1-4 on this Data Report is included on each sheet, and (3) each sheet is numbered and number of sheets is recorded at the top of this form.

[signature] 3-29-88

(10/77) This form (E00076) may be obtained from the Order Dept., ASME, 345 E. 47th St., New York, N.Y. 10017

FORM NF-2 NPT CERTIFICATE HOLDER'S [illegible]

As Required by the Provisions of the ASME Code Rules, Section III, Division 1

PLAN No. 2-0418.

1. Manufactured by NPS INDUSTRIES, INC., 10420 METRIC BLVD., AUSTIN, TEXAS 78758
(Name and address of NPT Certificate Holder)

2. Manufactured for WASHINGTON PUBLIC POWER SUPPLY SYSTEM, PO BOX 968, RICHLAND, WA 99352
(Name and address of purchaser or owner)

3. Location of Installation WNP-2 OPS WHS COMPLEX, WHS#1 N. PWR. PLANT LOOP, RICHLAND, WA 99352

4.

	(a) Part Serial No.	(b) Canadian Registration No.	(c) Part Drawing No.	(d) Description of Part	(e) Class	(f) National Board No.	(g) Year Built
(1)	*	N/A	S-1086	MODIFIED	1	N/A	1988
(2)			REV.0	SWAY STRUT			
(3)				ASSEMBLY			
(4)				SRM-24-SO			
(5)	* RHR-911N			SRM-24M-SO			
(6)	QTY.1			SEE ATTACHED LETTER			
(7)				FROM NPS DATED MARCH 9, 1988			
(8)				REGARDING PART NUMBERS.			
(9)				ie SRM-XXM-SO			
(10)				Dulip Sup's 6/23/88			

:pma

CERTIFICATE OF COMPLIANCE

We certify that the statements made in this report are correct and that these component support parts conform to the rules of construction of the ASME Code for Nuclear Power Plant Components, Section III, Division 1, Edition 1971, Addenda WINTER 1973 (Date), Code Case no. N247.

Date MARCH 25 19 88. Signed NPS INDUSTRIES (NPT Certificate Holder) by SANDY REYNOLDS

Our ASME Certificate of Authorization No. N-2689 to use the NPT (NPT) Symbol expires JULY 12, 1988 (Date)

CERTIFICATE OF SHOP INSPECTION

I, the undersigned, holding a valid commission issued by the National Board of Boiler and Pressure Vessel Inspectors and the State or Province of TEXAS and employed by *HSBI&I CO. of HARTFORD, CONNECTICUT have inspected the parts for the component supports described in this Data Report on 3/25, 19 88, and state that to the best of my knowledge and belief the NPT Certificate Holder has constructed these component support parts in accordance with the ASME Code for Nuclear Power Plant Components.

*THE HARTFORD STEAM BOILER INSPECTION AND INSURANCE CO.

By signing this certificate, neither the Inspector nor his employer makes any warranty, expressed or implied, concerning the component supports described in this Data Report. Furthermore neither the Inspector nor his employer shall be liable in any manner for any personal injury or property damage or a loss of any kind arising from or connected with this inspection.

Date 3/25/88

Signed [signature] Commissions TEXAS 1186 (Nat'l Board, State, Province, and No.)

*Supplemental sheets in form of lists, sketches or drawings may be used provided (1) size is 8½ in. x 11 in., (2) information on items 1-4 on this Data Report is included on each sheet, and (3) each sheet is numbered and number of sheets is recorded at the top of this form.

KP - 3-30-88

(10/77) This form (E00076) may be obtained from the Order Dept., ASME, 345 E. 47th St., New York, N.Y. 10017

NPS Industries, Inc.
10420 Metric Boulevard · Austin, Texas 78758-4959
Telephone 512-836-4161

March 9, 1988

Washington Public Power Supply Station
FAX # (509) 377-8357

Attention: P.J. Enyeart

Reference: P.O. #093175

The following Fig. 1 support mark numbers on the above P.O. require a C-C dimension less than the minimum C-C dimensions on our snubber replacement sway-struts:

MSLC-2822-12
SLC-4475-113
RHR-603
RHR-603
MSRV-3A-4
RHR-58-40
RHR-91IN

In accordance with your technical specification #1120I, Section 2.01 A, we are replacing the NPSI part numbers SRS-XXM-SO with NPSI part numbers SRM-XXM-SO, for these items only, as an allowable substitution.

We are requesting a change notice to your purchase order to reflect this substitution.

Thank you,

Wayne Henderson

Wayne Henderson
Project Manager

FORM NF-2 NPT CERTIFICATE HOLDERS' PARTIAL DATA REPORT FOR PARTS FOR COMPONENT SUPPORTS

As Required by the Provisions of the ASME Code Rules, Section III, Division 1 PLAN NO.2-0418.

1. Manufactured by NPS INDUSTRIES, INC., 10420 METRIC BLVD., AUSTIN, TEXAS 78758
(Name and address of NPT Certificate Holder)

2. Manufactured for WASHINGTON PUBLIC POWER SUPPLY SYSTEM, PO BOX 968, RICHLAND, WA 99352
(Name and address of purchaser or owner)

3. Location of Installation WNP-2 OPS WHS COMPLEX, WHS#1 N. PWR. PLANT LOOP, RICHLAND, WA 99352

4.

	(a) Part Serial No.	(b) Canadian Registration No.	(c) Part Drawing No.	(d) Description of Part	(e) Class	(f) National Board No.	(g) Year Built
(1)	*	N/A	NPS-140	REPLACEMENT	1	N/A	1988
(2)			REV.0	SNUBBER			
(3)				SMR-10			
(4)							
(5)	* NA-2295-027-1			SUPPORT NO.		SERIAL NO	
(6)	THRU			MSRV-1A-4		NA-2295-027-1	
(7)	NA-2295-027-21			MSRV-3A-6		NA-2295-027-2.	
(8)				MSRV-3C-10		NA-2295-027-7 AND 8.	
(9)				SW-914N		NA-2295-027-10 AND 14.	
(10)							

Rudolph Swift 6/23/88

CERTIFICATE OF COMPLIANCE

We certify that the statements made in this report are correct and that these component support parts conform to the rules of construction of the ASME Code for Nuclear Power Plant Components, Section III, Division 1, Edition 1971, Addenda WINTER 1973 (Date), Code Case no. N247.

Date MARCH 25 19 88. Signed NPS INDUSTRIES (NPT Certificate Holder) by SANDY REYNOLDS

Our ASME Certificate of Authorization No. N-2689 to use the NPT (NPT) Symbol expires JULY 12, 1988 (Date)

CERTIFICATE OF SHOP INSPECTION

I, the undersigned, holding a valid commission issued by the National Board of Boiler and Pressure Vessel Inspectors and the State or Province of TEXAS and employed by *HSBI&I CO. of HARTFORD, CONNECTICUT have inspected the parts for the component supports described in this Data Report on 3/25, 19 88, and state that to the best of my knowledge and belief the NPT Certificate Holder has constructed these component support parts in accordance with the ASME Code for Nuclear Power Plant Components.

By signing this certificate, neither the Inspector nor his employer makes any warranty, expressed or implied, concerning the component supports described in this Data Report. Furthermore neither the Inspector nor his employer shall be liable in any manner for any personal injury or property damage or a loss of any kind arising from or connected with this inspection.

Date 3/25/88

Signed [illegible] Commissions TEXAS 1186 (Nat'l Board, State, Province, and No.)

*Supplemental sheets in form of lists, sketches or drawings may be used provided (1) size is 8½ in. x 11 in., (2) information on items 1-4 on this Data Report is included on each sheet, and (3) each sheet is numbered and number of sheets is recorded at the top of this form.

[illegible] 3-30-88

FORM NF-2 NPT CERTIFICATE HOLDERS' PARTIAL DATA REPORT FOR PARTS FOR COMPONENT SUPPORT*
As Required by the Provisions of the ASME Code Rules, Section III, Division 1 PLAN NO. 2-048

1. Manufactured by NPS INDUSTRIES, INC., 10420 METRIC BLVD., AUSTIN, TEXAS 78758
(Name and address of NPT Certificate Holder)

2. Manufactured for WASHINGTON PUBLIC POWER SUPPLY SYSTEM, PO BOX 968, RICHLAND, WA 99352
(Name and address of purchaser or owner)

3. Location of Installation WNP-2 OPS WHS COMPLEX, WHS#1 N. PWR. PLANT LOOP, RICHLAND, WA 99352

4.

	(a) Part Serial No.	(b) Canadian Registration No.	(c) Part Drawing No.	(d) Description of Part	(e) Class	(f) National Board No.	(g) Year Built
(1)	*	N/A	NPS-140	REPLACEMENT	1	N/A	1988
(2)			REV.0	SNUBBER			
(3)				SMR-1			
(4)							
(5)	*NA-2295-025-1			SUPPORT NO.		SERIAL NO.	
(6)	THRU			MS-179		NA-2295-025-1 AND 2.	
(7)	NA-2295-025-15			MS-2619-310		NA-2295-025-3	
(8)				RCIC-2		NA-2295-025-6	
(9)				RCIC-108		NA-2295-025-9.	
(10)						Rudip Singh 6/23/88	

CERTIFICATE OF COMPLIANCE

We certify that the statements made in this report are correct and that these component support parts conform to the rules of construction of the ASME Code for Nuclear Power Plant Components, Section III, Division 1, Edition 1971, Addenda WINTER 1973 (Date), Code Case no. N247.

Date MARCH 25 19 88. Signed NPS INDUSTRIES (NPT Certificate Holder) by SANDY REYNOLDS

Our ASME Certificate of Authorization No. N-2689 to use the NPT (NPT) Symbol expires JULY 12, 1988 (Date)

CERTIFICATE OF SHOP INSPECTION

I, the undersigned, holding a valid commission issued by the National Board of Boiler and Pressure Vessel Inspectors and the State or Province of TEXAS and employed by *HSBI&I CO. of HARTFORD, CONNECTICUT have inspected the parts for the component supports described in this Data Report on 3/25, 19 88, and state that to the best of my knowledge and belief the NPT Certificate Holder has constructed these component support parts in accordance with the ASME Code for Nuclear Power Plant Components.

By signing this certificate, neither the Inspector nor his employer makes any warranty, expressed or implied, concerning the component supports described in this Data Report. Furthermore neither the Inspector nor his employer shall be liable in any manner for any personal injury or property damage or a loss of any kind arising from or connected with this inspection.

Date 3/25/88

Signed R. Jones Commissions TEXAS 1186
(Nat'l Board, State, Province, and No.)

*Supplemental sheets in form of lists, sketches or drawings may be used provided (1) size is 8½ in. x 11 in., (2) information on items 1-4 on this Data Report is included on each sheet, and (3) each sheet is numbered and number of sheets is recorded at the top of this form.

3-30-88

FORM NF-2 NPT CERTIFICATE HOLDERS' PARTIAL DATA REPORT FOR PARTS FOR COMPONENT SUPPORT

As Required by the Provisions of the ASME Code Rules, Section III, Division 1 PLAN NO. 2-0418.

1. Manufactured by NPS INDUSTRIES, INC., 10420 METRIC BLVD., AUSTIN, TEXAS 78758
(Name and address of NPT Certificate Holder)

2. Manufactured for WASHINGTON PUBLIC POWER SUPPLY SYSTEM, PO BOX 968, RICHLAND, WA 99352
(Name and address of purchaser or owner)

3. Location of Installation WNP-2 OPS WHS COMPLEX, WHS#1 N. PWR. PLANT LOOP, RICHLAND, WA 99352

4.

	(a) Part Serial No.	(b) Canadian Registration No.	(c) Part Drawing No.	(d) Description of Part	(e) Class	(f) National Board No.	(g) Year Built
(1)	*	N/A	NPS-140	REPLACEMENT	1	N/A	1988
(2)			REV.0	SNUBBER			
(3)				SMR-3			
(4)				SUPPORT NO.		SERIAL NO.	
(5)	* NA-2295-026-1			MS-906N		NA-2295-026-1 AND 2.	
(6)	THRU			RHR-556		NA-2295-026-4.	
(7)	NA-2295-026-20			RWCU-IC-11		NA-2295-026-7.	
(8)				RHR-355		NA-2295-026-13	
(9)				RHR-569		NA-2295-026-14.	
(10)				RHR-564		NA-2295-026-20.	

Rudolf Smith 6/23/88

CERTIFICATE OF COMPLIANCE

We certify that the statements made in this report are correct and that these component support parts conform to the rules of construction of the ASME Code for Nuclear Power Plant Components, Section III, Division 1, Edition 1971, Addenda WINTER 1973 (Date), Code Case no. N247.

Date MARCH 25 19 88. Signed NPS INDUSTRIES (NPT Certificate Holder) by SANDY REYNOLDS

Our ASME Certificate of Authorization No. N-2689 to use the NPT (NPT) Symbol expires JULY 12, 1988 (Date)

CERTIFICATE OF SHOP INSPECTION

I, the undersigned, holding a valid commission issued by the National Board of Boiler and Pressure Vessel Inspectors and the State or Province of TEXAS and employed by *HSBI&I CO. of HARTFORD, CONNECTICUT have inspected the parts for the component supports described in this Data Report on 3/25, 19 88, and state that to the best of my knowledge and belief the NPT Certificate Holder has constructed these component support parts in accordance with the ASME Code for Nuclear Power Plant Components.

By signing this certificate, neither the Inspector nor his employer makes any warranty, expressed or implied, concerning the component supports described in this Data Report. Furthermore neither the Inspector nor his employer shall be liable in any manner for any personal injury or property damage or a loss of any kind arising from or connected with this inspection.

Date 3/25/88

Signed L. L. Jones Commissions TEXAS 1186
(~~Nat'l Board~~, State, Province, and No.)

*Supplemental sheets in form of lists, sketches or drawings may be used provided (1) size is 8½ in. x 11 in., (2) information on items 1-4 on this Data Report is included on each sheet, and (3) each sheet is numbered and number of sheets is recorded at the top of this form.

3-29-88

FORM NF-2 NPT CERTIFICATE HOLDERS' PARTIAL DATA REPORT FOR PARTS FOR COMPONENT SUPPORTS

As Required by the Provisions of the ASME Code Rules, Section III, Division 1 PLAN No. 2-0418-1

1. Manufactured by NPS INDUSTRIES, INC., 10420 METRIC BLVD., AUSTIN, TEXAS 78758
(Name and address of NPT Certificate Holder)

2. Manufactured for WASHINGTON PUBLIC POWER SUPPLY SYSTEM, PO BOX 968, RICHLAND, WA 99352
(Name and address of purchaser or owner)

3. Location of Installation WNP-2 OPS WHS COMPLEX, WHS#1 N. PWR. PLANT LOOP, RICHLAND, WA 99352

4.

	(a) Part Serial No.	(b) Canadian Registration No.	(c) Part Drawing No.	(d) Description of Part	(e) Class	(f) National Board No.	(g) Year Built
(1)	*	N/A	NPS-110	MODIFIED	1	N/A	1988
(2)			REV.0	SWAY STRUT			
(3)				ASSEMBLY			
(4)				SRS-06M-SO			
(5)	* NA-2295-001-1						
(6)	THRU			SUPPORT NO.		SERIAL NO.	
(7)	NA-2295-001-16			RCIC-967N		NA-2295-001-1 AND 16	
(8)							
(9)						Kuldip Raj	
(10)						6/23/88	

CERTIFICATE OF COMPLIANCE

We certify that the statements made in this report are correct and that these component support parts conform to the rules of construction of the ASME Code for Nuclear Power Plant Components, Section III, Division 1, Edition 1971, Addenda WINTER 1973 (Date), Code Case no. N247.

Date MARCH 25 19 88. Signed NPS INDUSTRIES (NPT Certificate Holder) by SANDY REYNOLDS

Our ASME Certificate of Authorization No. N-2689 to use the NPT (NPT) Symbol expires JULY 12, 1988 (Date)

CERTIFICATE OF SHOP INSPECTION

I, the undersigned, holding a valid commission issued by the National Board of Boiler and Pressure Vessel Inspectors and the State or Province of TEXAS and employed by *HSBI&I CO. of HARTFORD, CONNECTICUT have inspected the parts for the component supports described in this Data Report on 3/25, 19 88, and state that to the best of my knowledge and belief the NPT Certificate Holder has constructed these component support parts in accordance with the ASME Code for Nuclear Power Plant Components.

*THE HARTFORD STEAM BOILER INSPECTION AND INSURANCE CO.

By signing this certificate, neither the Inspector nor his employer makes any warranty, expressed or implied, concerning the component supports described in this Data Report. Furthermore neither the Inspector nor his employer shall be liable in any manner for any personal injury or property damage or a loss of any kind arising from or connected with this inspection.

Date 3/25/88

Signed L.L. Jones Commissions TEXAS 1186 (Nat'l Board, State, Province, and No.)

*Supplemental sheets in form of lists, sketches or drawings may be used provided (1) size is 8½ in. x 11 in., (2) information on items 1-4 on this Data Report is included on each sheet, and (3) each sheet is numbered and number of sheets is recorded at the top of this form.

3-30-88

(10/77) This form (E00076) may be obtained from the Order Dept., ASME, 345 E. 47th St., New York, N.Y. 10017

FORM NF-2 NPT CERTIFICATE HOLDERS' PARTIAL DATA REPORT FOR PARTS FOR COMPONENT SUPPORT*
As Required by the Provisions of the ASME Code Rules, Section III, Division 1 PLAN No. 2-0418-1.

1. Manufactured by NPS INDUSTRIES, INC., 10420 METRIC BLVD., AUSTIN, TEXAS 78758
(Name and address of NPT Certificate Holder)

2. Manufactured for WASHINGTON PUBLIC POWER SUPPLY SYSTEM, PO BOX 968, RICHLAND, WA 99352
(Name and address of purchaser or owner)

3. Location of Installation WNP-2 OPS WHS COMPLEX, WHS#1 N. PWR. PLANT LOOP, RICHLAND, WA 99352

4.

	(a) Part Serial No.	(b) Canadian Registration No.	(c) Part Drawing No.	(d) Description of Part	(e) Class	(f) National Board No.	(g) Year Built
(1)	*	N/A	NPS-140	REPLACEMENT	1	N/A	1988
(2)			REV.0	SNUBBER			
(3)				SMR-1			
(4)							
(5)	*NA-2295-025-1			SUPPORT NO.		SERIAL NO	
(6)	THRU			EPC-225		NA-2295-25-11	
(7)	NA-2295-025-15						
(8)				Rudip Supb			
(9)				6/23/88			
(10)							

: pma

CERTIFICATE OF COMPLIANCE

We certify that the statements made in this report are correct and that these component support parts conform to the rules of construction of the ASME Code for Nuclear Power Plant Components, Section III, Division 1, Edition 1971, Addenda WINTER 1973 (Date), Code Case no. N247.

Date MARCH 25 19 88. Signed NPS INDUSTRIES (NPT Certificate Holder) by SANDY REYNOLDS

Our ASME Certificate of Authorization No. N-2689 to use the NPT (NPT) Symbol expires JULY 12, 1988 (Date)

CERTIFICATE OF SHOP INSPECTION

I, the undersigned, holding a valid commission issued by the National Board of Boiler and Pressure Vessel Inspectors and the State or Province of TEXAS and employed by *HSBI&I CO. of HARTFORD, CONNECTICUT have inspected the parts for the component supports described in this Data Report on 3/25, 19 88, and state that to the best of my knowledge and belief the NPT Certificate Holder has constructed these component support parts in accordance with the ASME Code for Nuclear Power Plant Components.

By signing this certificate, neither the Inspector nor his employer makes any warranty, expressed or implied, concerning the component supports described in this Data Report. Furthermore neither the Inspector nor his employer shall be liable in any manner for any personal injury or property damage or a loss of any kind arising from or connected with this inspection.

Date 3/25/88

Signed D.D. Jones Commissions TEXAS 1186
(~~Nat'l Board~~, State, Province, and No.)

*Supplemental sheets in form of lists, sketches or drawings may be used provided (1) size is 8½ in. x 11 in., (2) information on items 1-4 on this Data Report is included on each sheet, and (3) each sheet is numbered and number of sheets is recorded at the top of this form.

3-30-88

(10/77) This form (E00076) may be obtained from the Order Dept., ASME, 345 E. 47th St., New York, N.Y. 10017

FORM NF-2 NPT CERTIFICATE HOLDERS' PARTIAL DATA REPORT FOR PARTS FOR COMPONENT SUPPORT*

As Required by the Provisions of the ASME Code Rules, Section III, Division 1

PLAN NO. 2-0018-1

1. Manufactured by NPS INDUSTRIES, INC., 10420 METRIC BLVD., AUSTIN, TEXAS 78758
(Name and address of NPT Certificate Holder)

2. Manufactured for WASHINGTON PUBLIC POWER SUPPLY SYSTEM, PO BOX 968, RICHLAND, WA 99352
(Name and address of purchaser or owner)

3. Location of Installation WNP-2 OPS WHS COMPLEX, WHS#1 N. PWR. PLANT LOOP, RICHLAND, WA 99352

4.

	(a) Part Serial No.	(b) Canadian Registration No.	(c) Part Drawing No.	(d) Description of Part	(e) Class	(f) National Board No.	(g) Year Built
(1)	*	N/A	NPS-140	REPLACEMENT	1	N/A	1988
(2)			REV.0	SNUBBER			
(3)				SMR-3			
(4)							
(5)	* NA-2295-026-1			SUPPORT NO		SERIAL NO	
(6)	THRU			RCIC-109		NA-2295-026-1	
(7)	NA-2295-026-20			RHR-557		NA-2295-026-12 AND 19	
(8)				RHR-565		NA-2295-026-17	
(9)				RHR-573		NA-2295-026-8	
(10)				RHR-574		NA-2295-026-15	

:pma

Rudolp Gomez 6/23/88

CERTIFICATE OF COMPLIANCE

We certify that the statements made in this report are correct and that these component support parts conform to the rules of construction of the ASME Code for Nuclear Power Plant Components, Section III, Division 1, Edition 1971, Addenda WINTER 1973 (Date), Code Case no. N247.

Date MARCH 25 19 88. Signed NPS INDUSTRIES (NPT Certificate Holder) by SANDY REYNOLDS

Our ASME Certificate of Authorization No. N-2689 to use the NPT (NPT) Symbol expires JULY 12, 1988 (Date)

CERTIFICATE OF SHOP INSPECTION

I, the undersigned, holding a valid commission issued by the National Board of Boiler and Pressure Vessel Inspectors and the State or Province of TEXAS and employed by *HSBI&I CO. of HARTFORD, CONNECTICUT have inspected the parts for the component supports described in this Data Report on 3/25, 19 88, and state that to the best of my knowledge and belief the NPT Certificate Holder has constructed these component support parts in accordance with the ASME Code for Nuclear Power Plant Components.

By signing this certificate, neither the Inspector nor his employer makes any warranty, expressed or implied, concerning the component supports described in this Data Report. Furthermore neither the Inspector nor his employer shall be liable in any manner for any personal injury or property damage or a loss of any kind arising from or connected with this inspection.

Date 3/25/88

Signed L. L. Jones Commissions TEXAS 1186
(~~Nat'l Board~~, State, Province, and No.)

*Supplemental sheets in form of lists, sketches or drawings may be used provided (1) size is 8½ in. x 11 in., (2) information on items 1-4 on this Data Report is included on each sheet, and (3) each sheet is numbered and number of sheets is recorded at the top of this form.

3-29-88

(10/77) This form (E00076) may be obtained from the Order Dept., ASME, 345 E. 47th St., New York, N.Y. 10017

FORM NF-2 NPT CERTIFICATE HOLDERS' PARTIAL DATA REPORT FOR PARTS FOR COMPONENT SUPPORT*
As Required by the Provisions of the ASME Code Rules, Section III, Division 1

PLAN NO. 2-0418-1

1. Manufactured by NPS INDUSTRIES, INC., 10420 METRIC BLVD., AUSTIN, TEXAS 78758
(Name and address of NPT Certificate Holder)

2. Manufactured for WASHINGTON PUBLIC POWER SUPPLY SYSTEM, PO BOX 968, RICHLAND, WA 99352
(Name and address of purchaser or owner)

3. Location of Installation WNP-2 OPS WHS COMPLEX, WHS#1 N. PWR. PLANT LOOP, RICHLAND, WA 99352

4.

(a)* Part Serial No.	(b) Canadian Registration No.	(c) Part Drawing No.	(d) Description of Part	(e) Class	(f) National Board No.	(g) Year Built
(1) *	N/A	NPS-140	REPLACEMENT	1	N/A	1988
(2)		REV.0	SNUBBER			
(3)			SMR-10			
(4)						
(5) * NA-2295-027-1			SUPPORT NO		SERIAL NO	
(6) THRU			RHR-459		NA-2295-027-11	
(7) NA-2295-027-21						
(8)					Rudolph Gupta	
(9)					6/23/88	
(10)						

pma

CERTIFICATE OF COMPLIANCE

We certify that the statements made in this report are correct and that these component support parts conform to the rules of construction of the ASME Code for Nuclear Power Plant Components, Section III, Division 1, Edition 1971, Addenda WINTER 1973 (Date), Code Case no. N247.

Date MARCH 25 19 88. Signed NPS INDUSTRIES (NPT Certificate Holder) by SANDY REYNOLDS

Our ASME Certificate of Authorization No. N-2689 to use the NPT (NPT) Symbol expires JULY 12, 1988 (Date)

CERTIFICATE OF SHOP INSPECTION

I, the undersigned, holding a valid commission issued by the National Board of Boiler and Pressure Vessel Inspectors and the State or Province of TEXAS and employed by *HSBI&I CO. of HARTFORD, CONNECTICUT have inspected the parts for the component supports described in this Data Report on 3/25, 19 88, and state that to the best of my knowledge and belief the NPT Certificate Holder has constructed these component support parts in accordance with the ASME Code for Nuclear Power Plant Components.

By signing this certificate, neither the Inspector nor his employer makes any warranty, expressed or implied, concerning the component supports described in this Data Report. Furthermore neither the Inspector nor his employer shall be liable in any manner for any personal injury or property damage or a loss of any kind arising from or connected with this inspection.

Date 3/25/88

Signed [illegible] Commissions TEXAS 1186
(~~Nat'l Board~~, State, Province, and No.)

*Supplemental sheets in form of lists, sketches or drawings may be used provided (1) size is 8½ in. x 11 in., (2) information on items 1-4 on this Data Report is included on each sheet, and (3) each sheet is numbered and number of sheets is recorded at the top of this form.

2-20-88

(10/77) This form (E00076) may be obtained from the Order Dept., ASME, 345 E. 47th St., New York, N.Y. 10017

WASHINGTON PUBLIC POWER SUPPLY SYSTEM

PLAN NO. 2-0421-4

FORM NIS-2 OWNER'S REPORT FOR REPAIRS OR REPLACEMENTS
As Required by the Provisions of the ASME Code Section XI

1. Owner (Name) Washington Public Power Supply System — Date 7/26/88
   Owner (Address) 3000 George Washington Way, Richland, WA — Sheet 1 of 1
2. Plant (Name) WPPSS Nuclear Power Plant (WNP) — Unit WNP-2
   Plant (Address) Hanford, Benton County, WA — WPPSS (Repair Organization P.O. No., Job No., etc.)
3. Work Performed by (Name) WPPSS
   Work Performed by (Address) 3000 George Washington Way, Richland, WA
4. Identification of System High Pressure Core Spray (HPCS) System
5. (a) Applicable Construction Code ASME Section III 19 71 Edition, W72 Addenda, None Code Case
   (b) Applicable Edition of ASME Section XI Utilized for Repairs or Replacements 19 80 Edition, W80 Addenda, N308 Code Case
6. Identification of Components Repaired or Replaced and Replacement Components

Name of Component	Name of Manufacturer	Manufacturer Serial No.	National Board No.	Other I.D.	Year Built	Repaired, Replaced, or Replacement	ASME Code Stamped (Yes or No) Code Class
HPCS-V-16	A/D	2N689	N/A	N/A	1976	Replacement	Yes, Class 2

7. Description of Work:

Installed bushing retainer tab on Anchor/Darling tilting disc check valve. The installation work was performed as follows:

1) Fabricated bushing retainer tab.
2) Installed bushing retainer tab and made required welds.
3) Performed visual examination on the final welds. Visual examination results acceptable.
4) Performed pressure test on valve body to bonnet joint to confirm pressure boundary integrity. No evidence of leakage during pressure test.

Notes:
A/D - Anchor/Darling Valve Co.

WASHINGTON PUBLIC POWER SUPPLY SYSTEM

PLAN NO. 2-0421-4

FORM NIS-2 (Back)

8. Tests Conducted: Hydrostatic ☐ Pneumatic ☐ Nominal Operating Pressure ☒ Other ☐ _____
Test Pressure 17 psig, Test Temp. 76 °F
Component Design Pressure 275 psig, Temp. 100 °F

9. Remarks:

None

CERTIFICATE OF COMPLIANCE

We certify that the statements made in the report are correct and this replacement (repair or replacement) conforms to the rules of the ASME Code, Section XI.

Type Code Symbol Stamp Not applicable

Certificate Authorization No. Not applicable Expiration Date Not applicable

Signed [signature] Owner or Owner's Designee, Title Plant Technical Manager

7/26/88

Date 7/26 19 88

CERTIFICATE OF INSERVICE INSPECTION

I, the undersigned, holding a valid commission issued by the National Board of Boiler and Pressure Vessel Inspectors and the State of Washington and employed by Lumbermen's Mutual Casualty Co. of Illinois have inspected the components described in this Owner's Report during the period 4/19/88 to 7/27/88, and state that to the best of my knowledge and belief, the Owner has performed examinations and taken corrective measures described in this Owner's Report in accordance with the requirements of the ASME Code, Section XI.

By signing this certificate neither the Inspector nor his employer makes any warranty, expressed or implied, concerning the examinations and corrective measures described in this Owner's Report. Furthermore, neither the Inspector nor his employer shall be liable in any manner for any personal injury or property damage or a loss of any kind arising from or connected with this inspection.

[signature] Inspector's Signature Commissions 7447-W National Board, State, and Endorsements

Date 27 July 19 88

WASHINGTON PUBLIC POWER SUPPLY SYSTEM

PLAN NO. 2-0421-5

FORM NIS-2 OWNER'S REPORT FOR REPAIRS OR REPLACEMENTS
As Required by the Provisions of the ASME Code Section XI

1. Owner (Name) Washington Public Power Supply System — Date 7/26/88
   Owner (Address) 3000 George Washington Way, Richland, WA — Sheet 1 of 1
2. Plant (Name) WPPSS Nuclear Power Plant (WNP) — Unit WNP-2
   Plant (Address) Hanford, Benton County, WA — WPPSS (Repair Organization P.O. No., Job No., etc.)
3. Work Performed by (Name) WPPSS
   Work Performed by (Address) 3000 George Washington Way, Richland, WA
4. Identification of System High Pressure Core Spray (HPCS) System
5. (a) Applicable Construction Code ASME Section III 19 71 Edition, W72 Addenda, None Code Case
   (b) Applicable Edition of ASME Section XI Utilized for Repairs or Replacements 19 80 Edition, W80 Addenda, N308 Code Case
6. Identification of Components Repaired or Replaced and Replacement Components

Name of Component	Name of Manufacturer	Manufacturer Serial No.	National Board No.	Other I.D.	Year Built	Repaired, Replaced, or Replacement	ASME Code Stamped (Yes or No) Code Class
HPCS-V-2	A/D	2N557	N/A	N/A	1975	Replacement	Yes, Class 2

7. Description of Work:

Installed bushing retainer tab on Anchor/Darling tilting disc check valve. The installation work was performed as follows:

1) Fabricated bushing retainer tab.
2) Installed bushing retainer tab and made required welds.
3) Performed visual examination on the final welds. Visual examination results acceptable.
4) Performed pressure test on valve body to bonnet joint to confirm pressure boundary integrity. No evidence of leakage during pressure test.

Notes:

A/D - Anchor/Darling Valve Co.

WASHINGTON PUBLIC POWER SUPPLY SYSTEM

PLAN NO. 2-0421-5

FORM NIS-2 (Back)

8. Tests Conducted: Hydrostatic ☐ Pneumatic ☐ Nominal Operating Pressure ☒ Other ☐ _____
Test Pressure 17 psig, Test Temp. 79 °F
Component Design Pressure 275 psig, Temp. 100 °F

9. Remarks:

None

CERTIFICATE OF COMPLIANCE

We certify that the statements made in the report are correct and this replacement (repair or replacement) conforms to the rules of the ASME Code, Section XI.

Type Code Symbol Stamp Not applicable

Certificate Authorization No. Not applicable Expiration Date Not applicable

Signed [signature] Owner or Owner's Designee, Title Plant Technical Manager

K Smith 7/26/88

Date 7/26 19 88

CERTIFICATE OF INSERVICE INSPECTION

I, the undersigned, holding a valid commission issued by the National Board of Boiler and Pressure Vessel Inspectors and the State of Washington and employed by Lumbermen's Mutual Casualty Co. of Illinois have inspected the components described in this Owner's Report during the period 4/9/88 to 7/27/88, and state that to the best of my knowledge and belief, the Owner has performed examinations and taken corrective measures described in this Owner's Report in accordance with the requirements of the ASME Code, Section XI.

By signing this certificate neither the Inspector nor his employer makes any warranty, expressed or implied, concerning the examinations and corrective measures described in this Owner's Report. Furthermore, neither the Inspector nor his employer shall be liable in any manner for any personal injury or property damage or a loss of any kind arising from or connected with this inspection.

[signature] Inspector's Signature Commissions 7447W National Board, State, and Endorsements

Date 27 July 19 88

WASHINGTON PUBLIC POWER SUPPLY SYSTEM

PLAN NO. 2-0421-6

FORM NIS-2 OWNER'S REPORT FOR REPAIRS OR REPLACEMENTS
As Required by the Provisions of the ASME Code Section XI

1. Owner (Name) Washington Public Power Supply System — Date 7/26/88
   Owner (Address) 3000 George Washington Way, Richland, WA — Sheet 1 of 1
2. Plant (Name) WPPSS Nuclear Power Plant (WNP) — Unit WNP-2
   Plant (Address) Hanford, Benton County, WA — WPPSS (Repair Organization P.O. No., Job No., etc.)
3. Work Performed by (Name) WPPSS
   Work Performed by (Address) 3000 George Washington Way, Richland, WA
4. Identification of System High Pressure Core Spray (HPCS) System
5. (a) Applicable Construction Code ASME Section III 19 71 Edition, W72 Addenda, None Code Case
   (b) Applicable Edition of ASME Section XI Utilized for Repairs or Replacements 19 80 Edition, W80 Addenda, N308 Code Case
6. Identification of Components Repaired or Replaced and Replacement Components

Name of Component	Name of Manufacturer	Manufacturer Serial No.	National Board No.	Other I.D.	Year Built	Repaired, Replaced, or Replacement	ASME Code Stamped (Yes or No) Code Class
HPCS-V-24	A/D	2N491	N/A	N/A	1975	Replacement	Yes, Class 2

7. Description of Work:

Installed bushing retainer tab on Anchor/Darling tilting disc check valve. The installation work was performed as follows:

1) Fabricated bushing retainer tab.
2) Installed bushing retainer tab and made required welds.
3) Performed visual examination on the final welds. Visual examination results acceptable.
4) Performed pressure tests on valve body and bonnet joint to confirm pressure boundary integrity. No evidence of leakage during pressure test.

Notes:

A/D - Anchor/Darling Valve Co.

WASHINGTON PUBLIC POWER SUPPLY SYSTEM

PLAN NO. 2-0421-6

FORM NIS-2 (Back)

8. Tests Conducted: Hydrostatic ☐ Pneumatic ☐ Nominal Operating Pressure ☒ Other ☐ _____
Test Pressure 1100 psig, Test Temp. 72 °F
Component Design Pressure 2160 psig, Temp. 100 °F

9. Remarks:

None

CERTIFICATE OF COMPLIANCE

We certify that the statements made in the report are correct and this replacement (repair or replacement) conforms to the rules of the ASME Code, Section XI.

Type Code Symbol Stamp Not applicable

Certificate Authorization No. Not applicable Expiration Date Not applicable

Signed [signature] (Owner or Owner's Designee.) Title Plant Technical Manager

K Singh 7/26/88

Date 7/26 19 88

CERTIFICATE OF INSERVICE INSPECTION

I, the undersigned, holding a valid commission issued by the National Board of Boiler and Pressure Vessel Inspectors and the State of Washington and employed by Lumbermen's Mutual Casualty Co. of Illinois have inspected the components described in this Owner's Report during the period 4/19/88 to 7/27/88, and state that to the best of my knowledge and belief, the Owner has performed examinations and taken corrective measures described in this Owner's Report in accordance with the requirements of the ASME Code. Section XI.

By signing this certificate neither the Inspector nor his employer makes any warranty, expressed or implied, concerning the examinations and corrective measures described in this Owner's Report. Furthermore, neither the Inspector nor his employer shall be liable in any manner for any personal injury or property damage or a loss of any kind arising from or connected with this inspection.

[signature] (Inspector's Signature) Commissions 7447-W (National Board, State, and Endorsements)

Date 7/27 19 88

WASHINGTON PUBLIC POWER SUPPLY SYSTEM

PLAN NO. 2-0421-8

FORM NIS-2 OWNER'S REPORT FOR REPAIRS OR REPLACEMENTS
As Required by the Provisions of the ASME Code Section XI

1. Owner (Name) Washington Public Power Supply System — Date 7/26/88
   Owner (Address) 3000 George Washington Way, Richland, WA — Sheet 1 of 1
2. Plant (Name) WPPSS Nuclear Power Plant (WNP) — Unit WNP-2
   Plant (Address) Hanford, Benton County, WA — WPPSS (Repair Organization P.O. No., Job No., etc.)
3. Work Performed by (Name) WPPSS
   Work Performed by (Address) 3000 George Washington Way, Richland, WA
4. Identification of System Low Pressure Core Spray (LPCS) System
5. (a) Applicable Construction Code ASME Section III 19 71 Edition, W72 Addenda, None Code Case
   (b) Applicable Edition of ASME Section XI Utilized for Repairs or Replacements 19 80 Edition, W80 Addenda, N308 Code Case
6. Identification of Components Repaired or Replaced and Replacement Components

Name of Component	Name of Manufacturer	Manufacturer Serial No.	National Board No.	Other I.D.	Year Built	Repaired, Replaced, or Replacement	ASME Code Stamped (Yes or No) Code Class
LPCS-V-3	A/D	2N563	N/A	N/A	1975	Replacement	Yes, Class 2

7. Description of Work:

Installed bushing retainer tab on Anchor/Darling tilting disc check valve. The installation work was performed as follows:

1) Fabricated bushing retainer tab.
2) Installed bushing retainer tab and made required welds.
3) Performed visual examination on the final welds. Visual examination results acceptable.
4) Performed pressure test on valve body to bonnet joint to confirm pressure boundary integrity. No evidence of leakage during pressure test.

Notes:

A/D - Anchor/Darling Valve Co.

WASHINGTON PUBLIC POWER SUPPLY SYSTEM

PLAN NO. 2-0421-8

FORM NIS-2 (Back)

8. Tests Conducted: Hydrostatic ☐ Pneumatic ☐ Nominal Operating Pressure ☒ Other ☐ _____
Test Pressure 410 psig, Test Temp. 66 °F
Component Design Pressure 720 psig, Temp. 100 °F

9. Remarks:

None

CERTIFICATE OF COMPLIANCE

We certify that the statements made in the report are correct and this replacement (repair or replacement) conforms to the rules of the ASME Code, Section XI.

Type Code Symbol Stamp Not applicable

Certificate Authorization No. Not applicable Expiration Date Not applicable

Signed [signature] (Owner or Owner's Designee.) Title Plant Technical Manager

K. Smith 7/26/88

Date 7/26 19 88

CERTIFICATE OF INSERVICE INSPECTION

I, the undersigned, holding a valid commission issued by the National Board of Boiler and Pressure Vessel Inspectors and the State of Washington and employed by Lumbermen's Mutual Casualty Co. of Illinois have inspected the components described in this Owner's Report during the period 4/26/88 to 7/27/88, and state that to the best of my knowledge and belief, the Owner has performed examinations and taken corrective measures described in this Owner's Report in accordance with the requirements of the ASME Code, Section XI.

By signing this certificate neither the Inspector nor his employer makes any warranty, expressed or implied, concerning the examinations and corrective measures described in this Owner's Report. Furthermore, neither the Inspector nor his employer shall be liable in any manner for any personal injury or property damage or a loss of any kind arising from or connected with this inspection.

[signature] (Inspector's Signature) Commissions 7447-W (National Board, State, and Endorsements)

Date 27 July 19 88

WASHINGTON PUBLIC POWER SUPPLY SYSTEM

PLAN NO. 2-0421-11

FORM NIS-2 OWNER'S REPORT FOR REPAIRS OR REPLACEMENTS
As Required by the Provisions of the ASME Code Section XI

1. Owner (Name) Washington Public Power Supply System — Date 7/26/88
   Owner (Address) 3000 George Washington Way, Richland, WA — Sheet 1 of 1
2. Plant (Name) WPPSS Nuclear Power Plant (WNP) — Unit WNP-2
   Plant (Address) Hanford, Benton County, WA — WPPSS (Repair Organization P.O. No., Job No., etc.)
3. Work Performed by (Name) WPPSS
   Work Performed by (Address) 3000 George Washington Way, Richland, WA
4. Identification of System Residual Heat Removal (RHR) System
5. (a) Applicable Construction Code ASME Section III 19 71 Edition, W72 Addenda, None Code Case
   (b) Applicable Edition of ASME Section XI Utilized for Repairs or Replacements 19 80 Edition, W80
   Addenda, N308 Code Case
6. Identification of Components Repaired or Replaced and Replacement Components

Name of Component	Name of Manufacturer	Manufacturer Serial No.	National Board No.	Other I.D.	Year Built	Repaired, Replaced, or Replacement	ASME Code Stamped (Yes or No) Code Class
RHR-V-31A	A/D	2N448	N/A	N/A	1975	Replacement	Yes, Class 2

7. Description of Work:

Installed bushing retainer tab on Anchor/Darling tilting disc check valve. The installation work was performed as follows:

1) Fabricated bushing retainer tab.
2) Installed bushing retainer tab and made required welds.
3) Performed visual examination on the final welds. Visual examination results acceptable.
4) Performed pressure test on valve body to bonnet joint to confirm pressure boundary integrity. No evidence of leakage during pressure test.

Notes:
A/D - Anchor/Darling Valve Co.

WASHINGTON PUBLIC POWER SUPPLY SYSTEM

PLAN NO. 2-0421-11

FORM NIS-2 (Back)

8. Tests Conducted: Hydrostatic ☐ Pneumatic ☐ Nominal Operating Pressure ☒ Other ☐ _____
Test Pressure 200 psig, Test Temp. 72 °F
Component Design Pressure 720 psig, Temp. 100 °F

9. Remarks:

None

CERTIFICATE OF COMPLIANCE

We certify that the statements made in the report are correct and this replacement (repair or replacement) conforms to the rules of the ASME Code, Section XI.

Type Code Symbol Stamp Not applicable

Certificate Authorization No. Not applicable Expiration Date Not applicable

Signed [signature] Owner or Owner's Designee. Title Plant Technical Manager

K Ewis 7/26/88.

Date 7/26 19 88

CERTIFICATE OF INSERVICE INSPECTION

I, the undersigned, holding a valid commission issued by the National Board of Boiler and Pressure Vessel Inspectors and the State of Washington and employed by Lumbermen's Mutual Casualty Co. of Illinois have inspected the components described in this Owner's Report during the period 4/26/88 to 7/27/88, and state that to the best of my knowledge and belief, the Owner has performed examinations and taken corrective measures described in this Owner's Report in accordance with the requirements of the ASME Code, Section XI.

By signing this certificate neither the Inspector nor his employer makes any warranty, expressed or implied, concerning the examinations and corrective measures described in this Owner's Report. Furthermore, neither the Inspector nor his employer shall be liable in any manner for any personal injury or property damage or a loss of any kind arising from or connected with this inspection.

[signature] Inspector's Signature Commissions 7447-W National Board, State, and Endorsements

Date 27 July 19 88

WASHINGTON PUBLIC POWER SUPPLY SYSTEM

PLAN NO. 2-0421-12

FORM NIS-2 OWNER'S REPORT FOR REPAIRS OR REPLACEMENTS
As Required by the Provisions of the ASME Code Section XI

1. Owner (Name) Washington Public Power Supply System — Date 7/26/88
   Owner (Address) 3000 George Washington Way, Richland, WA — Sheet 1 of 1
2. Plant (Name) WPPSS Nuclear Power Plant (WNP) — Unit WNP-2
   Plant (Address) Hanford, Benton County, WA — WPPSS Repair Organization P.O. No., Job No., etc.
3. Work Performed by (Name) WPPSS
   Work Performed by (Address) 3000 George Washington Way, Richland, WA
4. Identification of System Residual Heat Removal (RHR) System
5. (a) Applicable Construction Code ASME Section III 19 71 Edition, W72 Addenda, None Code Case
   (b) Applicable Edition of ASME Section XI Utilized for Repairs or Replacements 19 80 Edition, W80
   Addenda, N308 Code Case
6. Identification of Components Repaired or Replaced and Replacement Components

Name of Component	Name of Manufacturer	Manufacturer Serial No.	National Board No.	Other I.D.	Year Built	Repaired, Replaced, or Replacement	ASME Code Stamped (Yes or No) Code Class
RHR-V-31B	A/D	2N432	N/A	N/A	1975	Replacement	Yes, Class 2

7. Description of Work:

Installed bushing retainer tab on Anchor/Darling tilting disc check valve. The installation work was performed as follows:

1) Fabricated bushing retainer tab.
2) Installed bushing retainer tab and made required welds.
3) Performed visual examination on the final welds. Visual examination results acceptable.
4) Performed pressure test on valve body to bonnet joint to confirm pressure boundary integrity. No evidence of leakage during pressure test.

Notes:

A/D - Anchor/Darling Valve Co.

WASHINGTON PUBLIC POWER SUPPLY SYSTEM

PLAN NO. 2-0421-12

FORM NIS-2 (Back)

8. Tests Conducted: Hydrostatic ☐ Pneumatic ☐ Nominal Operating Pressure XX Other ☐ _____
Test Pressure 140 psig, Test Temp. 76 °F
Component Design Pressure 720 psig, Temp. 100 °F

9. Remarks:

None

CERTIFICATE OF COMPLIANCE

We certify that the statements made in the report are correct and this replacement (repair or replacement) conforms to the rules of the ASME Code, Section XI.

Type Code Symbol Stamp Not applicable

Certificate Authorization No. Not applicable Expiration Date Not applicable

Signed [signature] Owner or Owner's Designee, Title Plant Technical Manager

7/26/88

Date 7/26/ 19 88

CERTIFICATE OF INSERVICE INSPECTION

I, the undersigned, holding a valid commission issued by the National Board of Boiler and Pressure Vessel Inspectors and the State of Washington and employed by Lumbermen's Mutual Casualty Co. of Illinois have inspected the components described in this Owner's Report during the period 4/25/88 to 7/28/88, and state that to the best of my knowledge and belief, the Owner has performed examinations and taken corrective measures described in this Owner's Report in accordance with the requirements of the ASME Code, Section XI.

By signing this certificate neither the Inspector nor his employer makes any warranty, expressed or implied, concerning the examinations and corrective measures described in this Owner's Report. Furthermore, neither the Inspector nor his employer shall be liable in any manner for any personal injury or property damage or a loss of any kind arising from or connected with this inspection.

[signature] Inspector's Signature Commissions 7447-W National Board, State, and Endorsements

Date 28 July 19 88

WASHINGTON PUBLIC POWER SUPPLY SYSTEM

PLAN NO. 2-0421-13

FORM NIS-2 OWNER'S REPORT FOR REPAIRS OR REPLACEMENTS
As Required by the Provisions of the ASME Code Section XI

1. Owner (Name) Washington Public Power Supply System — Date 7/26/88
   Owner (Address) 3000 George Washington Way, Richland, WA — Sheet 1 of 1
2. Plant (Name) WPPSS Nuclear Power Plant (WNP) — Unit WNP-2
   Plant (Address) Hanford, Benton County, WA — WPPSS Repair Organization P.O. No., Job No., etc.
3. Work Performed by (Name) WPPSS
   Work Performed by (Address) 3000 George Washington Way, Richland, WA
4. Identification of System Residual Heat Removal (RHR) System
5. (a) Applicable Construction Code ASME Section III 19 71 Edition, W72 Addenda, None Code Case
   (b) Applicable Edition of ASME Section XI Utilized for Repairs or Replacements 19 80 Edition, W80 Addenda, N308 Code Case
6. Identification of Components Repaired or Replaced and Replacement Components

Name of Component	Name of Manufacturer	Manufacturer Serial No.	National Board No.	Other I.D.	Year Built	Repaired, Replaced, or Replacement	ASME Code Stamped (Yes or No) Code Class
RHR-V-31C	A/D	2N424	N/A	N/A	1975	Replacement	Yes, Class 2

7. Description of Work:

Installed bushing retainer tab on Anchor/Darling tilting disc check valve. The installation work was performed as follows:

1) Fabricated bushing retainer tab.
2) Installed bushing retainer tab and made required welds.
3) Performed visual examination on the final welds. Visual examination results acceptable.
4) Performed pressure test on valve body to bonnet joint to confirm pressure boundary integrity. No evidence of leakage during pressure test.

Notes:

A/D - Anchor/Darling Valve Co.

WASHINGTON PUBLIC POWER SUPPLY SYSTEM

PLAN NO. 2-0421-13

FORM NIS-2 (Back)

8. Tests Conducted: Hydrostatic ☐ Pneumatic ☐ Nominal Operating Pressure ☒ Other ☐ _____
Test Pressure 145 psig, Test Temp. 78 °F
Component Design Pressure 720 psig, Temp. 100 °F

9. Remarks:

None

CERTIFICATE OF COMPLIANCE

We certify that the statements made in the report are correct and this replacement (repair or replacement) conforms to the rules of the ASME Code, Section XI.

Type Code Symbol Stamp Not applicable

Certificate Authorization No. Not applicable Expiration Date Not applicable

Signed [signature] Owner or Owner's Designee, Title Plant Technical Manager

R Lewis 7/22/88

Date 8/26/88 19

CERTIFICATE OF INSERVICE INSPECTION

I, the undersigned, holding a valid commission issued by the National Board of Boiler and Pressure Vessel Inspectors and the State of Washington and employed by Lumbermen's Mutual Casualty Co. of Illinois have inspected the components described in this Owner's Report during the period 4/25/88 to 7/27/88, and state that to the best of my knowledge and belief, the Owner has performed examinations and taken corrective measures described in this Owner's Report in accordance with the requirements of the ASME Code, Section XI.

By signing this certificate neither the Inspector nor his employer makes any warranty, expressed or implied, concerning the examinations and corrective measures described in this Owner's Report. Furthermore, neither the Inspector nor his employer shall be liable in any manner for any personal injury or property damage or a loss of any kind arising from or connected with this inspection.

[signature] Inspector's Signature Commissions 7447 W National Board, State, and Endorsements

Date 7/27 19 88

WASHINGTON PUBLIC POWER SUPPLY SYSTEM

PLAN NO. 2-0421-14

FORM NIS-2 OWNER'S REPORT FOR REPAIRS OR REPLACEMENTS
As Required by the Provisions of the ASME Code Section XI

1. Owner (Name) Washington Public Power Supply System — Date 7/26/88
   Owner (Address) 3000 George Washington Way, Richland, WA — Sheet 1 of 1
2. Plant (Name) WPPSS Nuclear Power Plant (WNP) — Unit WNP-2
   Plant (Address) Hanford, Benton County, WA — WPPSS (Repair Organization P.O. No., Job No., etc.)
3. Work Performed by (Name) WPPSS
   Work Performed by (Address) 3000 George Washington Way, Richland, WA
4. Identification of System Residual Heat Removal (RHR) System
5. (a) Applicable Construction Code ASME Section III 19 71 Edition, W72 Addenda, None Code Case
   (b) Applicable Edition of ASME Section XI Utilized for Repairs or Replacements 19 80 Edition, W80 Addenda, N308 Code Case
6. Identification of Components Repaired or Replaced and Replacement Components

Name of Component	Name of Manufacturer	Manufacturer Serial No.	National Board No.	Other I.D.	Year Built	Repaired, Replaced, or Replacement	ASME Code Stamped (Yes or No) Code Class
RHR-V-46A	A/D	2N1052	N/A	N/A	1977	Replacement	Yes, Class 2

7. Description of Work:

Installed bushing retainer tab on Anchor/Darling tilting disc check valve. The installation work was performed as follows:

1) Fabricated bushing retainer tab.
2) Installed bushing retainer tab and made required welds.
3) Performed visual examination on the final welds. Visual examination results acceptable.

Notes:

A/D - Anchor/Darling Valve Co.

WASHINGTON PUBLIC POWER SUPPLY SYSTEM

PLAN NO. 2-0421-14

FORM NIS-2 (Back)

8. Tests Conducted: Hydrostatic ☐ Pneumatic ☐ Nominal Operating Pressure ☐ Other ☒ None
Test Pressure _____ psig, Test Temp. _____ °F
Component Design Pressure _____ psig, Temp. _____ °F

9. Remarks:

None

CERTIFICATE OF COMPLIANCE

We certify that the statements made in the report are correct and this replacement (repair or replacement) conforms to the rules of the ASME Code, Section XI.

Type Code Symbol Stamp Not applicable

Certificate Authorization No. Not applicable Expiration Date Not applicable

Signed [signature] (Owner or Owner's Designee,) Title Plant Technical Manager

K Smith 7/26/88

Date 7/26 19 88

CERTIFICATE OF INSERVICE INSPECTION

I, the undersigned, holding a valid commission issued by the National Board of Boiler and Pressure Vessel Inspectors and the State of Washington and employed by Lumbermen's Mutual Casualty Co. of Illinois have inspected the components described in this Owner's Report during the period 4/25/88 to 7/27/88, and state that to the best of my knowledge and belief, the Owner has performed examinations and taken corrective measures described in this Owner's Report in accordance with the requirements of the ASME Code, Section XI.

By signing this certificate neither the Inspector nor his employer makes any warranty, expressed or implied, concerning the examinations and corrective measures described in this Owner's Report. Furthermore, neither the Inspector nor his employer shall be liable in any manner for any personal injury or property damage or a loss of any kind arising from or connected with this inspection.

[signature] (Inspector's Signature) Commissions 7447-W (National Board, State, and Endorsements)

Date 27 July 19 88

WASHINGTON PUBLIC POWER SUPPLY SYSTEM

PLAN NO. 2-0421-15

FORM NIS-2 OWNER'S REPORT FOR REPAIRS OR REPLACEMENTS
As Required by the Provisions of the ASME Code Section XI

1. Owner (Name) Washington Public Power Supply System — Date 7/26/88
   Owner (Address) 3000 George Washington Way, Richland, WA — Sheet 1 of 1
2. Plant (Name) WPPSS Nuclear Power Plant (WNP) — Unit WNP-2
   Plant (Address) Hanford, Benton County, WA — WPPSS (Repair Organization P.O. No., Job No., etc.)
3. Work Performed by (Name) WPPSS
   Work Performed by (Address) 3000 George Washington Way, Richland, WA
4. Identification of System Residual Heat Removal (RHR) System
5. (a) Applicable Construction Code ASME Section III 19 71 Edition, W72 Addenda, None Code Case
   (b) Applicable Edition of ASME Section XI Utilized for Repairs or Replacements 19 80 Edition, W80
   Addenda, N308 Code Case
6. Identification of Components Repaired or Replaced and Replacement Components

Name of Component	Name of Manufacturer	Manufacturer Serial No.	National Board No.	Other I.D.	Year Built	Repaired, Replaced, or Replacement	ASME Code Stamped (Yes or No) Code Class
RHR-V-468	A/D	2N1010	N/A	N/A	1977	Replacement	Yes, Class 2

7. Description of Work:

Installed bushing retainer tab on Anchor/Darling tilting disc check valve. The installation work was performed as follows:

1) Fabricated bushing retainer tab.
2) Installed bushing retainer tab and made required welds.
3) Performed visual examination on the final welds. Visual examination results acceptable.

Notes:

A/D - Anchor/Darling Valve Co.

WASHINGTON PUBLIC POWER SUPPLY SYSTEM

PLAN NO. 2-0421-15

FORM NIS-2 (Back)

8. Tests Conducted: Hydrostatic ☐ Pneumatic ☐ Nominal Operating Pressure ☐ Other ☒ None
Test Pressure _____ psig, Test Temp. _____ °F
Component Design Pressure _____ psig, Temp. _____ °F

9. Remarks:

None

CERTIFICATE OF COMPLIANCE

We certify that the statements made in the report are correct and this replacement (repair or replacement) conforms to the rules of the ASME Code, Section XI.

Type Code Symbol Stamp Not applicable

Certificate Authorization No. Not applicable Expiration Date Not applicable

Signed [signature] Owner or Owner's Designee, Title Plant Technical Manager

L. Sims 7/26/88

Date 7/26 19 88

CERTIFICATE OF INSERVICE INSPECTION

I, the undersigned, holding a valid commission issued by the National Board of Boiler and Pressure Vessel Inspectors and the State of Washington and employed by Lumbermen's Mutual Casualty Co. of Illinois have inspected the components described in this Owner's Report during the period 4/25/88 to 7/27/88, and state that to the best of my knowledge and belief, the Owner has performed examinations and taken corrective measures described in this Owner's Report in accordance with the requirements of the ASME Code, Section XI.

By signing this certificate neither the Inspector nor his employer makes any warranty, expressed or implied, concerning the examinations and corrective measures described in this Owner's Report. Furthermore, neither the Inspector nor his employer shall be liable in any manner for any personal injury or property damage or a loss of any kind arising from or connected with this inspection.

[signature] Inspector's Signature Commissions 7447-W National Board, State, and Endorsements

Date 27 July 19 88

WASHINGTON PUBLIC POWER SUPPLY SYSTEM

PLAN NO. 2-0421-16

FORM NIS-2 OWNER'S REPORT FOR REPAIRS OR REPLACEMENTS
As Required by the Provisions of the ASME Code Section XI

1. Owner (Name) Washington Public Power Supply System — Date 7/26/88
   Owner (Address) 3000 George Washington Way, Richland, WA — Sheet 1 of 1
2. Plant (Name) WPPSS Nuclear Power Plant (WNP) — Unit WNP-2
   Plant (Address) Hanford, Benton County, WA — WPPSS (Repair Organization P.O. No., Job No., etc.)
3. Work Performed by (Name) WPPSS
   Work Performed by (Address) 3000 George Washington Way, Richland, WA
4. Identification of System Residual Heat Removal (RHR) System
5. (a) Applicable Construction Code ASME Section III 19 71 Edition, W72 Addenda, None Code Case
   (b) Applicable Edition of ASME Section XI Utilized for Repairs or Replacements 19 80 Edition, W80 Addenda, N308 Code Case
6. Identification of Components Repaired or Replaced and Replacement Components

Name of Component	Name of Manufacturer	Manufacturer Serial No.	National Board No.	Other I.D.	Year Built	Repaired, Replaced, or Replacement	ASME Code Stamped (Yes or No) Code Class
RHR-V-46C	A/D	2N943	N/A	N/A	1977	Replacement	Yes, Class 2

7. Description of Work:

Installed bushing retainer tab on Anchor/Darling tilting disc check valve. The installation work was performed as follows:

1) Fabricated bushing retainer tab.
2) Installed bushing retainer tab and made required welds.
3) Performed visual examination on the final welds. Visual examination results acceptable.

Notes:

A/D - Anchor/Darling Valve Co.

WASHINGTON PUBLIC POWER SUPPLY SYSTEM

PLAN NO. 2-0421-16

FORM NIS-2 (Back)

8. Tests Conducted: Hydrostatic ☐ Pneumatic ☐ Nominal Operating Pressure ☐ Other ☒ None
Test Pressure _____ psig, Test Temp. _____ °F
Component Design Pressure _____ psig, Temp. _____ °F

9. Remarks:

None

CERTIFICATE OF COMPLIANCE

We certify that the statements made in the report are correct and this replacement (repair or replacement) conforms to the rules of the ASME Code, Section XI.

Type Code Symbol Stamp Not applicable

Certificate Authorization No. Not applicable Expiration Date Not applicable

Signed [signature] Owner or Owner's Designee, Title Plant Technical Manager

7/26/88

Date 7/26 19 88

CERTIFICATE OF INSERVICE INSPECTION

I, the undersigned, holding a valid commission issued by the National Board of Boiler and Pressure Vessel Inspectors and the State of Washington and employed by Lumbermen's Mutual Casualty Co. of Illinois have inspected the components described in this Owner's Report during the period 4/25/88 to 7/27/88, and state that to the best of my knowledge and belief, the Owner has performed examinations and taken corrective measures described in this Owner's Report in accordance with the requirements of the ASME Code, Section XI.

By signing this certificate neither the Inspector nor his employer makes any warranty, expressed or implied, concerning the examinations and corrective measures described in this Owner's Report. Furthermore, neither the Inspector nor his employer shall be liable in any manner for any personal injury or property damage or a loss of any kind arising from or connected with this inspection.

[signature] Inspector's Signature Commissions 7447-W National Board, State, and Endorsements

Date 27 July 19 88

WASHINGTON PUBLIC POWER SUPPLY SYSTEM

PLAN NO. 2-0421-17

FORM NIS-2 OWNER'S REPORT FOR REPAIRS OR REPLACEMENTS
As Required by the Provisions of the ASME Code Section XI

1. Owner (Name) Washington Public Power Supply System — Date 7/26/88
   Owner (Address) 3000 George Washington Way, Richland, WA — Sheet 1 of 1
2. Plant (Name) WPPSS Nuclear Power Plant (WNP) — Unit WNP-2
   Plant (Address) Hanford, Benton County, WA — WPPSS Repair Organization P.O. No., Job No., etc.
3. Work Performed by (Name) WPPSS
   Work Performed by (Address) 3000 George Washington Way, Richland, WA
4. Identification of System Service (SW) System
5. (a) Applicable Construction Code ASME Section III 19 71 Edition, W72 Addenda, none Code Case
   (b) Applicable Edition of ASME Section XI Utilized for Repairs or Replacements 19 80 Edition, W80 Addenda, N308 Code Case
6. Identification of Components Repaired or Replaced and Replacement Components

Name of Component	Name of Manufacturer	Manufacturer Serial No.	National Board No.	Other I.D.	Year Built	Repaired, Replaced, or Replacement	ASME Code Stamped (Yes or No) Code Class
SW-V-1A	A/D	3N446	N/A	N/A	1975	Replacement	Yes, Class 3

7. Description of Work:

Installed bushing retainer tab on Anchor/Darling tilting disc check valve. The installation work was performed as follows:

1) Fabricated bushing retainer tab.
2) Installed bushing retainer tab and made required welds.
3) Performed visual examination on the final welds. Visual examination results acceptable.
4) Performed pressure test on valve body to bonnet joint to confirm pressure boundary integrity. No evidence of leakage during pressure test.

Notes:

A/D - Anchor/Darling Valve Co.

WASHINGTON PUBLIC POWER SUPPLY SYSTEM

PLAN NO. 2-0421-17

FORM NIS-2 (Back)

8. Tests Conducted: Hydrostatic ☐ Pneumatic ☐ Nominal Operating Pressure ☒ Other ☐ _____
Test Pressure 230 psig, Test Temp. 59 °F
Component Design Pressure 720 psig, Temp. 100 °F

9. Remarks:

None

CERTIFICATE OF COMPLIANCE

We certify that the statements made in the report are correct and this replacement (repair or replacement) conforms to the rules of the ASME Code, Section XI.

Type Code Symbol Stamp Not applicable

Certificate Authorization No. Not applicable Expiration Date Not applicable

Signed [signature] Owner or Owner's Designee, Title Plant Technical Manager

R Sluys 7/26/88

Date 7/26 19 88

CERTIFICATE OF INSERVICE INSPECTION

I, the undersigned, holding a valid commission issued by the National Board of Boiler and Pressure Vessel Inspectors and the State of Washington and employed by Lumbermen's Mutual Casualty Co. of Illinois have inspected the components described in this Owner's Report during the period 4/25/88 to 7/27/88, and state that to the best of my knowledge and belief, the Owner has performed examinations and taken corrective measures described in this Owner's Report in accordance with the requirements of the ASME Code, Section XI.

By signing this certificate neither the Inspector nor his employer makes any warranty, expressed or implied, concerning the examinations and corrective measures described in this Owner's Report. Furthermore, neither the Inspector nor his employer shall be liable in any manner for any personal injury or property damage or a loss of any kind arising from or connected with this inspection.

[signature] Inspector's Signature Commissions 7447-W National Board, State, and Endorsements

Date 27 July 19 88

WASHINGTON PUBLIC POWER SUPPLY SYSTEM

PLAN NO. 2-0421-18

FORM NIS-2 OWNER'S REPORT FOR REPAIRS OR REPLACEMENTS
As Required by the Provisions of the ASME Code Section XI

1. Owner (Name) Washington Public Power Supply System — Date 7/26/88
   Owner (Address) 3000 George Washington Way, Richland, WA — Sheet 1 of 1
2. Plant (Name) WPPSS Nuclear Power Plant (WNP) — Unit WNP-2
   Plant (Address) Hanford, Benton County, WA — WPPSS (Repair Organization P.O. No., Job No., etc.)
3. Work Performed by (Name) WPPSS
   Work Performed by (Address) 3000 George Washington Way, Richland, WA
4. Identification of System Service Water (SW) System
5. (a) Applicable Construction Code ASME Section III 19 71 Edition, W72 Addenda, None Code Case
   (b) Applicable Edition of ASME Section XI Utilized for Repairs or Replacements 19 80 Edition, W80 Addenda, N308 Code Case
6. Identification of Components Repaired or Replaced and Replacement Components

Name of Component	Name of Manufacturer	Manufacturer Serial No.	National Board No.	Other I.D.	Year Built	Repaired, Replaced, or Replacement	ASME Code Stamped (Yes or No) Code Class
SW-V-1B	A/D	3N444	N/A	N/A	1975	Replacement	Yes, Class 3

7. Description of Work:

Installed bushing retainer tab on Anchor/Darling tilting disc check valve. The installation work was performed as follows:

1) Fabricated bushing retainer tab.
2) Installed bushing retainer tab and made required welds.
3) Performed visual examination on the final welds. Visual examination results acceptable.
4) Performed pressure test on valve body to bonnet joint to confirm pressure boundary integrity. No evidence of leakage during pressure test.

Notes:

A/D - Anchor/Darling Valve Co.

WASHINGTON PUBLIC POWER SUPPLY SYSTEM

PLAN NO. 2-0421-18

FORM NIS-2 (Back)

8. Tests Conducted: Hydrostatic ☐ Pneumatic ☐ Nominal Operating Pressure ☒ Other ☐ _____
Test Pressure 220 psig, Test Temp. 57 °F
Component Design Pressure 720 psig, Temp. 100 °F

9. Remarks:

None

CERTIFICATE OF COMPLIANCE

We certify that the statements made in the report are correct and this replacement (repair or replacement) conforms to the rules of the ASME Code, Section XI.

Type Code Symbol Stamp Not applicable

Certificate Authorization No. Not applicable Expiration Date Not applicable

Signed [signature] Owner or Owner's Designee, Title Plant Technical Manager

7/26/88

Date 7/26 19 88

CERTIFICATE OF INSERVICE INSPECTION

I, the undersigned, holding a valid commission issued by the National Board of Boiler and Pressure Vessel Inspectors and the State of Washington and employed by Lumbermen's Mutual Casualty Co. of Illinois have inspected the components described in this Owner's Report during the period 4/25/88 to 7/27/88, and state that to the best of my knowledge and belief, the Owner has performed examinations and taken corrective measures described in this Owner's Report in accordance with the requirements of the ASME Code, Section XI.

By signing this certificate neither the Inspector nor his employer makes any warranty, expressed or implied, concerning the examinations and corrective measures described in this Owner's Report. Furthermore, neither the Inspector nor his employer shall be liable in any manner for any personal injury or property damage or a loss of any kind arising from or connected with this inspection.

[signature] Inspector's Signature Commissions 7447-W National Board, State, and Endorsements

Date 27 July 19 88

WASHINGTON PUBLIC POWER SUPPLY SYSTEM

PLAN NO. 2-0422

FORM NIS-2 OWNER'S REPORT FOR REPAIRS OR REPLACEMENTS
As Required by the Provisions of the ASME Code Section XI

1. Owner (Name) Washington Public Power Supply System — Date 7/26/88
   Owner (Address) 3000 George Washington Way, Richland, WA — Sheet 1 of 1
2. Plant (Name) WPPSS Nuclear Power Plant (WNP) — Unit WNP-2
   Plant (Address) Hanford, Benton County, WA — WPPSS (Repair Organization P.O. No., Jcb No., etc.)
3. Work Performed by (Name) WPPSS
   Work Performed by (Address) 3000 George Washington Way, Richland, WA
4. Identification of System Reactor Core Isolation Cooling (RCIC) System
5. (a) Applicable Construction Code ASME Section III 19 71 Edition, W73 Addenda, None Code Case
   (b) Applicable Edition of ASME Section XI Utilized for Repairs or Replacements 19 80 Edition, W80 Addenda, N308 Code Case
6. Identification of Components Repaired or Replaced and Replacement Components

Name of Component	Name of Manufacturer	Manufacturer Serial No.	National Board No.	Other I.D.	Year Built	Repaired, Replaced, or Replacement	ASME Code Stamped (Yes or No) Code Class
RCIC(2)-1	WPPSS	*	N/A	N/A	1983	Replacement	Yes, Class 2

7. Description of Work:

Installed new check valve RCIC-V-204 and rerouted 2" water leg pump suction line. The work was performed as follows:

1) Cut pipe and beveled pipe ends.
2) Installed valve and made required circumferential butt welds.
3) Performed RT examination on the final circumferential butt welds. RT examination results acceptable.
4) Installed new piping and fitting material and made required socket welds.
5) Performed PT examination on the final socket welds. PT examination results acceptable.
6) Performed pressure test to confirm pressure boundary integrity. No evidence of leakage during pressure test.

Notes:

*RCIC(2)-1-P1

WASHINGTON PUBLIC POWER SUPPLY SYSTEM

PLAN NO. 2-0422

FORM NIS-2 (Back)

8. Tests Conducted: Hydrostatic ☒ Pneumatic ☐ Nominal Operating Pressure ☐ Other ☐ _____
Test Pressure 152 psig, Test Temp. 73 °F
Component Design Pressure 125 psig, Temp. 170 °F

9. Remarks:

See attached NPV-1 Code Data Report for -

EPN NO.	SERIAL NO.
RCIC-V-204	42-15008

CERTIFICATE OF COMPLIANCE

We certify that the statements made in the report are correct and this replacement (repair or replacement) conforms to the rules of the ASME Code, Section XI.

Type Code Symbol Stamp Not applicable

Certificate Authorization No. Not applicable Expiration Date Not applicable

Signed R L Webb (Owner or Owner's Designee) Title Plant Technical Manager

7/26/88

Date 7/26 19 88

CERTIFICATE OF INSERVICE INSPECTION

I, the undersigned, holding a valid commission issued by the National Board of Boiler and Pressure Vessel Inspectors and the State of Washington and employed by Lumbermen's Mutual Casualty Co. of Illinois have inspected the components described in this Owner's Report during the period 4/27/88 to 8/2/88, and state that to the best of my knowledge and belief, the Owner has performed examinations and taken corrective measures described in this Owner's Report in accordance with the requirements of the ASME Code, Section XI.

By signing this certificate neither the Inspector nor his employer makes any warranty, expressed or implied, concerning the examinations and corrective measures described in this Owner's Report. Furthermore, neither the Inspector nor his employer shall be liable in any manner for any personal injury or property damage or a loss of any kind arising from or connected with this inspection.

Dan Hogg (Inspector's Signature) Commissions 9556 W (National Board, State, and Endorsements)

Date 8/2 19 88

FORM NPV-1 N CERTIFICATE HOLDERS' DATA REPORT FOR NUCLEAR PUMPS OR VALVES*
As Required by the Provisions of the ASME Code, Section III, Div. 1 PLAN NO. 2-0422

1. Manufactured by Atwood & Morrill Co., Inc. Salem, Mass. 01970
(Name and Address of N Certificate Holder)

2. Manufactured for Washington Public Power Supply System
(Name and Address of Purchaser or Owner)

3. Location of Installation WPPS Nuclear Projects Richland, Washington
(Name and Address)

4. Pump or Valve Valve. Nominal Inlet Size 8 (inch) Outlet Size 8 (inch)

	(a) Model No., Series No. or Type	(b) N Certificate Holder's Serial No.	(c) Canadian Registration No.	(d) Drawing No.	(e) Class	(f) Nat'l. Bd. No.	(g) Year Built
(1)	8" Check Valve	42-15008	N/A	15008-11-F	2	N/A	1980
(2)				Rev. 0			
(3)							
(4)							
(5)							
(6)							
(7)						RCIC-V-204	
(8)							
(9)						Rudolph Engels	
(10)						4/16/88.	

5. 8" Check Valve Plant Fire Protect.
(Brief description of service for which equipment was designed)

6. Design Conditions 175 (Pressure) psi 100 (Temperature) °F or Valve Pressure Class N/A (1)

Cold Working Pressure 275 psi at 100°F.

Pressure Retaining Pieces

Mark No.	Material Spec. No.	Manufacturer	Remarks
(a) Castings			
Body	SA 216, Gr. WCB	Quaker Alloy	S/N 42-15008
RT# U216			
Ht.# F7451			
Disc	SA 351 Gr. CF8M	Post Precision	S/N 42-15008
RT# K765			
Ht.# C584			
(b) Forgings			

DOCUMENT REVIEWED MAY 1 '80 C.B. WESTON By: U.C. & C.

(1) For manually operated valves only.

* Supplemental sheets in form of lists, sketches or drawings may be used provided (1) size is 8-1/2" x 11", (2) information in items 1, 2 and 5 on this Data Report is included on each sheet, and (3) each sheet is numbered and number of sheets is recorded at top of this form.

FORM NPV-1 (Back)

RCIC-V-204
S/N 42-15008

Mark No.	Material Spec. No.	Manufacturer	Remarks
(c) Bolting			
Cover Studs	SA 193 Gr. B7	R.E.C. Corp.	Ht.#92678
Cover Nuts	SA 194 Gr. 2H	R.E.C. Corp.	Ht.# K83960
(d) Other Parts			
Cover Ht.# 74E022	SA 515 Gr. 70	U.S. Steel Corp.	S/N 42-15008
Body Ring Ht.# K84163	SA 240 Gr. 316	Industrial Service Center	S/N 42-15008

9. Hydrostatic test 425 psi. Back Differential Pressure _____ psi.

COPY-FILE CODE

CERTIFICATE OF COMPLIANCE

We certify that the statements made in this report are correct and that this pump, or valve, conforms to the rules of construction of the ASME Code for Nuclear Power Plant Components, Section III, Div. I, Edition 1974, Addenda Winter 1975 (Date), Code Case No. N/A, Date N/A

Signed Atwood & Morrill Co., Inc. (N Certificate Holder) by [signature] for V.W.T.

Our ASME Certificate of Authorization No. N-1766 to use the N (N) symbol expires 5-20-80 (Date)

CERTIFICATION OF DESIGN

Design information on file at Washington Public Power Supply System

Stress analysis report (Class 1 only) on file at N/A

Design specifications certified by (1) Rathin Basu

PE State Washington Reg. No. 15049

Stress analysis certified by (1) N/A

PE State N/A Reg. No. N/A

(1) Signature not required. List name only.

DOCUMENT REVIEWED
MAY 1 '80 C.B.WESTON
By: U.E. & C.

CERTIFICATE OF SHOP INSPECTION

I, the undersigned, holding a valid commission issued by the National Board of Boiler and Pressure Vessel Inspectors and the State or Province of Massachusetts and employed by H.S.B.I. & I. Co. of Hartford, CT. have inspected the pump, or valve, described in this Data Report on April 29th 1980, and state that to the best of my knowledge and belief, the N Certificate Holder has constructed this pump, or valve, in accordance with the ASME Code, Section III.

By signing this certificate, neither the Inspector nor his employer makes any warranty, expressed or implied, concerning the equipment described in this Data Report. Furthermore, neither the Inspector nor his employer shall be liable in any manner for any personal injury or property damage or a loss of any kind arising from or connected with this inspection.

Date April 29th 1980

[signature] (Inspector) Commissions Mass. 1196 (Nat'l Bd., State, Prov. and No.)

WASHINGTON PUBLIC POWER SUPPLY SYSTEM

PLAN NO. 2-0425

FORM NIS-2 OWNER'S REPORT FOR REPAIRS OR REPLACEMENTS
As Required by the Provisions of the ASME Code Section XI

1. Owner (Name) Washington Public Power Supply System — Date 7/21/88
   Owner (Address) 3000 George Washington Way, Richland, WA — Sheet 1 of 1
2. Plant (Name) WPPSS Nuclear Power Plant (WNP) — Unit WNP-2
   Plant (Address) Hanford, Benton County, WA — WPPSS Repair Organization P.O. No., Job No., etc.
3. Work Performed by (Name) WPPSS
   Work Performed by (Address) 3000 George Washington Way, Richland, WA.
4. Identification of System Containment Instrument Air (CIA) System.
5. (a) Applicable Construction Code ASME Section III 19 74 Edition, W74 Addenda, None Code Case
   (b) Applicable Edition of ASME Section XI Utilized for Repairs or Replacements 19 80 Edition, W80 Addenda, N308 Code Case
6. Identification of Components Repaired or Replaced and Replacement Components

Name of Component	Name of Manufacturer	Manufacturer Serial No.	National Board No.	Other I.D.	Year Built	Repaired, Replaced, or Replacement	ASME Code Stamped (Yes or No) Code Class
CIA-RV-6A	JEL	*	N/A	N/A	1982	Replacement	Yes, Class 2

7. Description of Work:

Converted relief valve CIA-RV-6A from hard seat to soft seat. The replacement work was performed as follows:

1. Removed existing parts/material.
2. Installed new replacement parts/material received from JE Lonergan, the original valve manufacturer.
3. Made required socket weld for existing nipple to the new valve base.
4. Performed PT examination on the final socket weld. PT examination results acceptable.

Notes:
JEL - JE Lonergan Co.
* S/N 509258-103-1

WASHINGTON PUBLIC POWER SUPPLY SYSTEM

PLAN NO. 2-0425

FORM NIS-2 (Back)

8. Tests Conducted: Hydrostatic ☐ Pneumatic ☐ Nominal Operating Pressure ☐ Other ☒ None
Test Pressure _____ psig, Test Temp. _____ °F
Component Design Pressure _____ psig, Temp. _____ °F

9. Remarks:

None

CERTIFICATE OF COMPLIANCE

We certify that the statements made in the report are correct and this replacement (repair or replacement) conforms to the rules of the ASME Code, Section XI.

Type Code Symbol Stamp Not applicable

Certificate Authorization No. Not applicable Expiration Date Not applicable

Signed [signature] Owner or Owner's Designee, Title Plant Technical Manager

K Bugh 7/21/88

Date 7/21/ 19 88

CERTIFICATE OF INSERVICE INSPECTION

I, the undersigned, holding a valid commission issued by the National Board of Boiler and Pressure Vessel Inspectors and the State of Washington and employed by Lumbermen's Mutual Casualty Co. of Illinois have inspected the components described in this Owner's Report during the period 5/2/88 to 6/30/88, and state that to the best of my knowledge and belief, the Owner has performed examinations and taken corrective measures described in this Owner's Report in accordance with the requirements of the ASME Code, Section XI.

By signing this certificate neither the Inspector nor his employer makes any warranty, expressed or implied, concerning the examinations and corrective measures described in this Owner's Report. Furthermore, neither the Inspector nor his employer shall be liable in any manner for any personal injury or property damage or a loss of any kind arising from or connected with this inspection.

[signature] Inspector's Signature Commissions 5470W National Board, State, and Endorsements

Date 7/22 19 88

WASHINGTON PUBLIC POWER SUPPLY SYSTEM

PLAN NO. 2-0426

FORM NIS-2 OWNER'S REPORT FOR REPAIRS OR REPLACEMENTS
As Required by the Provisions of the ASME Code Section XI

1. Owner (Name) Washington Public Power Supply System — Date 7/21/88.
   Owner (Address) 3000 George Washington Way, Richland, WA — Sheet 1 of 1
2. Plant (Name) WPPSS Nuclear Power Plant (WNP) — Unit WNP-2
   Plant (Address) Hanford, Benton County, WA — WPPSS Repair Organization P.O. No., Job No., etc.
3. Work Performed by (Name) WPPSS
   Work Performed by (Address) 3000 George Washington Way, Richland, WA.
4. Identification of System Standby Liquid Control (SLC) System
5. (a) Applicable Construction Code ASME Section III 19 71 Edition, W72 Addenda, None Code Case
   (b) Applicable Edition of ASME Section XI Utilized for Repairs or Replacements 19 80 Edition, W80 Addenda, N308 Code Case
6. Identification of Components Repaired or Replaced and Replacement Components

Name of Component	Name of Manufacturer	Manufacturer Serial No.	National Board No.	Other I.D.	Year Built	Repaired, Replaced, or Replacement	ASME Code Stamped (Yes or No) Code Class
SLC-V-4B	CC	N/A	90	N/A	1975	Replacement	Yes, Class 1

7. Description of Work:

Replaced parts for explosive actuated valve for Standby Liquid Control system valve SLC-V-4B. The replacement work was performed as follows:

1. Removed trigger assembly and inlet fitting from the valve.
2. Installed replacement trigger assembly and inlet fitting in the valve.
3. Performed pressure test to confirm pressure boundary integrity. No evidence of leakage during pressure test.

Notes:
CC - Conax Corporation

WASHINGTON PUBLIC POWER SUPPLY SYSTEM

PLAN NO. 2-0426

FORM NIS-2 (Back)

8. Tests Conducted: Hydrostatic ☐ Pneumatic ☐ Nominal Operating Pressure ☐ Other ☐ _____
Test Pressure * psig, Test Temp. Ambient °F
Component Design Pressure 1400 psig, Temp. 150 °F

9. Remarks:
See attached N-2 Code Data Reports for replacement trigger assembly and inlet fitting.

Valve EPN No.	Trigger Assembly S/N	Inlet Fitting S/N
SLC-V-4B	2706	2725

*1235 psig pump side (inlet) flanged connection
*1150 psig RPV side (outlet) flanged connection.

CERTIFICATE OF COMPLIANCE

We certify that the statements made in the report are correct and this replacement (repair or replacement) conforms to the rules of the ASME Code, Section XI.

Type Code Symbol Stamp Not applicable

Certificate Authorization No. Not applicable Expiration Date Not applicable

Signed R Llewellyn (Owner or Owner's Designee.) Title Plant Technical Manager

R Llewellyn 7/21/88

Date 7/21 19 88

CERTIFICATE OF INSERVICE INSPECTION

I, the undersigned, holding a valid commission issued by the National Board of Boiler and Pressure Vessel Inspectors and the State of Washington and employed by Lumbermen's Mutual Casualty Co. of Illinois have inspected the components described in this Owner's Report during the period 4/26/88 to 6/30/88, and state that to the best of my knowledge and belief, the Owner has performed examinations and taken corrective measures described in this Owner's Report in accordance with the requirements of the ASME Code, Section XI.

By signing this certificate neither the Inspector nor his employer makes any warranty, expressed or implied, concerning the examinations and corrective measures described in this Owner's Report. Furthermore, neither the Inspector nor his employer shall be liable in any manner for any personal injury or property damage or a loss of any kind arising from or connected with this inspection.

C. D. Robertson (Inspector's Signature) Commissions 5470 W (National Board, State, and Endorsements)

Date 7/22 19 88

FORM N-2 N OR NPT CERTIFICATE HOLDERS' DATA REPORT FOR IDENTICAL NUCLEAR PARTS AND APPURTENANCES*

As Required by the Provisions of the ASME Code, Section III, Division 1
Not To Exceed One Day's Production

PLAN No. 2-0426
Culdip Singh 6/26/88.

Pg 1 of 1

1. Manufactured and certified by Conax Buffalo Corporation, 2300 Walden Ave. Cheektowaga, N.Y. 14225
(name and address of certificate holder)

2. Manufactured for Washington Public Power System Station, P.O. Box 968, Richland, WA 99352
(name and address of purchaser)

3. Location of installation Washington Public Power Supply Sys. North Power Plant Loop, Richland, WA
(name and address)

4. Type N-20000 (drawing no.) 304SS SA479 (nat'l. spec. no.) 75KSI (tensile strength) NA (CRN) 1986 (year built)

5. ASME Code, Section III: 77 (edition) S77 (addenda) 1 (class) NA (Code Case no.)

6. Fabricated in accordance with Const. Spec. (Div. 2 only) NA (No.) Revision _____ Date _____

7. Remarks: Trigger body sub-assembly for explosive actuated valve replacement kit for standby liquid control system. Pressure tested at 2800 psi for 10 minutes Para. NB-2121(b) is applicable to ram.

8. Nom. thickness (in.) *See Remarks Min. design thickness (in.) _____ Dia. ID (ft. & in.) _____ Length overall (ft. & in.) _____

9. When applicable, Certificate Holders' data reports are attached for each item of this report:

Part or Appurtenance Serial Number	National Board No. In Numerical Order	Part or Appurtenance Serial Number	National Board Number In Numerical Order
(1) 2699	2699	(26)	
(2) 2700	2700	(27)	
(3) 2701	2701	(28)	
(4) 2702	2702	(29)	
(5) 2703	2703	(30)	
(6) 2704	2704	(31)	
(7) 2705	2705	(32)	
(8) 2706	2706	(33)	
(9) 2707	2707	(34)	
(10) 2708	2708	(35)	
(11)		(36)	
(12)		(37)	
(13)		(38)	
(14)		(39)	
(15)		(40)	
(16)		(41)	
(17)		(42)	
(18)		(43)	
(19)		(44)	
(20)		(45)	
(21)		(46)	
(22)		(47)	
(23)		(48)	
(24)		(49)	
(25)		(50)	

10. Design pressure 1400 psi Temp. 150 °F. Hydro. test pressure *See Remarks (when applicable) at temp. °F.

*Supplemental information in form of lists, sketches or drawings may be used provided (1) size is 8½ X 11, (2) information in items 2 and 3 on this data report is included on each sheet, (3) each sheet is numbered and number of sheets is recorded at top of this form, and (4) each additional sheet shall be signed by the Certificate Holder and the ANI.

(6/83) This form (E00040) may be obtained from the Order Dept., ASME, 345 E. 47th St., New York, N.Y. 10017

FORM N-2 (back)

CERTIFICATE OF DESIGN

Design specifications certified by Clyde T. Nieh P. E. state CA Reg. no. 15587

Design report* certified by Francis J. Domino P. E. state NY Reg. no. 36832
(when applicable)

CERTIFICATE OF SHOP COMPLIANCE

We certify that the statements made in this report are correct and that this (these) Trigger Body Sub-assembly conform to the rules of construction of the ASME Code, Section III.

ASME Certificate of Authorization no. N-1850 Expires September 2, 1986

Date 5/23/86 Name Conax Buffalo Corporation (NPT Certificate Holder) Signed [illegible] (authorized representative)

CERTIFICATE OF SHOP INSPECTION

I, the undersigned, holding a valid commission issued by the National Board of Boiler and Pressure Vessel Inspectors and the state or province of New York and employed by Lumbermens Mutual Casualty Co. of Long Grove, IL have inspected these items described in this data report on 5/23/86, and state that to the best of my knowledge and belief, the Certificate Holder has fabricated these parts or appurtenances in accordance with the ASME Code, Section III. Each part listed has been authorized for stamping on the date shown above.

By signing this certificate, neither the inspector nor his employer makes any warranty, expressed or implied, concerning the equipment described in this data report. Furthermore, neither the inspector nor his employer shall be liable in any manner for any personal injury or property damage or loss of any kind arising from or connected with this inspection.

Date 5/23/86 Signed J. A. Thomas (Authorized Inspector) Commissions OHIO COMMISSIONED NB7710 PA2534 NY2705 (Nat'l. Bd. (incl. endorsements) state or prov. and no.)

FORM N-2 N OR NPT CERTIFICATE HOLDERS' DATA REPORT FOR IDENTICAL NUCLEAR PARTS AND APPURTENANCES*

As Required by the Provisions of the ASME Code, Section III, Division 1
Not To Exceed One Day's Production

PLAN No. 2-0426
Buildup Supts
6/26/88.

1. Manufactured and certified by Conax Buffalo Corporation, 2300 Walden Avenue, Cheektowaga, N.Y.14225
(name and address of certificate holder)

2. Manufactured for Washington Public Power Supply Station, P.O. Box 968, Richmond,WA. 99352
(name and address of purchaser)

3. Location of installation Washington Public Power Supply Sys. North Power Loop, Richmond, WA.
(name and address)

4. Type N-38017 (drawing no.) 304SS SA479 (nat'l. spec. no.) 75KSI (tensile strength) NA (CRN) 1986 (year built)

5. ASME Code, Section III: 77 (edition) S77 (addenda) 1 (class) NA (Code Case no.)

6. Fabricated in accordance with Const. Spec. (Div. 2 only) NA (No.) Revision _____ Date _____

7. Remarks: ~~Inlet fitting~~ for explosive actuated valve replacement kit
Standby liquid control system
Pressure tested at 2800 psi for 10 minutes

8. Nom. thickness (in.) .040 Min. design thickness (in.) .031 Dia. ID (ft. & in.) NA Length overall (ft. & in.) NA

9. When applicable, Certificate Holders' data reports are attached for each item of this report:

Part or Appurtenance Serial Number	National Board No. In Numerical Order	Part or Appurtenance Serial Number	National Board Number In Numerical Order
(1) 2723	2723	(26)	
(2) 2724	2724	(27)	
(3) 2725	2725	(28)	
(4) 2726	2726	(29)	
(5) 2727	2727	(30)	
(6) 2728	2728	(31)	
(7) 2729	2729	(32)	
(8) 2730	2730	(33)	
(9) 2731 JAT 8.8	2731	(34)	
(10) 2732	2732	(35)	
(11) JAT 8.8.		(36)	
(12)		(37)	
(13)		(38)	
(14)		(39)	
(15)		(40)	
(16)		(41)	
(17)		(42)	
(18)		(43)	
(19)		(44)	
(20)		(45)	
(21)		(46)	
(22)		(47)	
(23)		(48)	
(24)		(49)	
(25)		(50)	

10. Design pressure 1400 psi Temp. 150 °F. Hydro. test pressure *See Remarks (when applicable) at temp. °F.

*Supplemental information in form of lists, sketches or drawings may be used provided (1) size is 8½ X 11, (2) information in items 2 and 3 on this data report is included on each sheet, (3) each sheet is numbered and number of sheets is recorded at top of this form, and (4) each additional sheet shall be signed by the Certificate Holder and the ANI.

(6/83) This form (E00040) may be obtained from the Order Dept., ASME, 345 E. 47th St., New York, N.Y. 10017

FORM N-2 (back)

CERTIFICATE OF DESIGN

Design specifications certified by Clyde T. Nieh P. E. state CA Reg. no. 15587

Design report* certified by Francis J. Domino P. E. state NY Reg. no. 36832
(when applicable)

CERTIFICATE OF SHOP COMPLIANCE

We certify that the statements made in this report are correct and that this (these) Inlet Fitting conform to the rules of construction of the ASME Code, Section III.

ASME Certificate of Authorization no. N-1850 Expires Sept 2, 1980

Date 5/23/86 Name Conax Buffalo Corporation (NPT Certificate Holder) Signed [illegible] (authorized representative)

CERTIFICATE OF SHOP INSPECTION

I, the undersigned, holding a valid commission issued by the National Board of Boiler and Pressure Vessel Inspectors and the state or province of New York and employed by Lumbermens Mutual Casualty Co. of Long Grove, IL. have inspected these items described in this data report on 5/23/86, and state that to the best of my knowledge and belief, the Certificate Holder has fabricated these parts or appurtenances in accordance with the ASME Code, Section III. Each part listed has been authorized for stamping on the date shown above.

By signing this certificate, neither the inspector nor his employer makes any warranty, expressed or implied, concerning the equipment described in this data report. Furthermore, neither the inspector nor his employer shall be liable in any manner for any personal injury or property damage or loss of any kind arising from or connected with this inspection.

Date 5/23/86 Signed J. A. Thomas (Authorized Inspector) Commissions OHIO COMMISSIONED NB7710 PA2534 NY2705 (Nat'l. Bd. (incl. endorsements) state or prov. and no.)

WASHINGTON PUBLIC POWER SUPPLY SYSTEM

PLAN NO. 2-0427

FORM NIS-2 OWNER'S REPORT FOR REPAIRS OR REPLACEMENTS
As Required by the Provisions of the ASME Code Section XI

1. Owner (Name) Washington Public Power Supply System — Date 7/24/88
   Owner (Address) 3000 George Washington Way, Richland, WA — Sheet 1 of 1
2. Plant (Name) WPPSS Nuclear Power Plant (WNP) — Unit WNP-2
   Plant (Address) Hanford, Benton County, WA — WPPSS (Repair Organization P.O. No., Job No., etc.)
3. Work Performed by (Name) WPPSS
   Work Performed by (Address) 3000 George Washington Way, Richland, WA
4. Identification of System Main Steam (MS) System
5. (a) Applicable Construction Code ASME Section III 19 71 Edition, W73 Addenda, None Code Case
   (b) Applicable Edition of ASME Section XI Utilized for Repairs or Replacements 19 80 Edition, W80 Addenda, N308 Code Case
6. Identification of Components Repaired or Replaced and Replacement Components

Name of Component	Name of Manufacturer	Manufacturer Serial No.	National Board No.	Other I.D.	Year Built	Repaired, Replaced, or Replacement	ASME Code Stamped (Yes or No) Code Class
MS-V-177A	BW	16677	N/A	N/A	1977	Repair	Yes, Class 2

7. Description of Work:

Repaired main steam valve MS-V-177A. The repair work was performed as follows:

1) Cut body to bonnet seal weld.
2) Removed valve internals for trouble shooting.
3) Reinstalled valve internals.
4) Installed bonnet into valve body and torqued it to the required torque value.
5) Made body to bonnet seal weld.
6) Performed PT examination on final seal weld. PT examination results acceptable.

Notes:
BW - Borg Warner

WASHINGTON PUBLIC POWER SUPPLY SYSTEM

PLAN NO. 2-0427

FORM NIS-2 (Back)

8. Tests Conducted: Hydrostatic ☐ Pneumatic ☐ Nominal Operating Pressure ☐ Other ☒ None
Test Pressure _____ psig, Test Temp. _____ °F
Component Design Pressure _____ psig, Temp. _____ °F

9. Remarks:

None

CERTIFICATE OF COMPLIANCE

We certify that the statements made in the report are correct and this repair (repair or replacement) conforms to the rules of the ASME Code, Section XI.

Type Code Symbol Stamp Not applicable

Certificate Authorization No. Not applicable Expiration Date Not applicable

Signed [signature] (Owner or Owner's Designee.) Title Plant Technical Manager

7/26/88

Date 7/26 19 88

CERTIFICATE OF INSERVICE INSPECTION

I, the undersigned, holding a valid commission issued by the National Board of Boiler and Pressure Vessel Inspectors and the State of Washington and employed by Lumbermen's Mutual Casualty Co. of Illinois have inspected the components described in this Owner's Report during the period 4/28/88 to 7/27/88, and state that to the best of my knowledge and belief, the Owner has performed examinations and taken corrective measures described in this Owner's Report in accordance with the requirements of the ASME Code, Section XI.

By signing this certificate neither the Inspector nor his employer makes any warranty, expressed or implied, concerning the examinations and corrective measures described in this Owner's Report. Furthermore, neither the Inspector nor his employer shall be liable in any manner for any personal injury or property damage or a loss of any kind arising from or connected with this inspection.

[signature] (Inspector's Signature) Commissions 7447-W (National Board, State, and Endorsements)

Date 27 July 19 88

WASHINGTON PUBLIC POWER SUPPLY SYSTEM

PLAN NO. 2-0428

FORM NIS-2 OWNER'S REPORT FOR REPAIRS OR REPLACEMENTS
As Required by the Provisions of the ASME Code Section XI

1. Owner (Name) Washington Public Power Supply System — Date 8/3/88
   Owner (Address) 3000 George Washington Way, Richland, WA — Sheet 1 of 1
2. Plant (Name) WPPSS Nuclear Power Plant (WNP) — Unit WNP-2
   Plant (Address) Hanford, Benton County, WA — WPPSS (Repair Organization P.O. No., Job No., etc.)
3. Work Performed by (Name) WPPSS
   Work Performed by (Address) 3000 George Washington Way, Richland, WA
4. Identification of System Main Steam (MS) System
5. (a) Applicable Construction Code ASME Section III 19 71 Edition, None Addenda, None Code Case
   (b) Applicable Edition of ASME Section XI Utilized for Repairs or Replacements 19 80 Edition, W80 Addenda, N308 Code Case
6. Identification of Components Repaired or Replaced and Replacement Components

Name of Component	Name of Manufacturer	Manufacturer Serial No.	National Board No.	Other I.D.	Year Built	Repaired, Replaced, or Replacement	ASME Code Stamped (Yes or No) Code Class
MS-RV-2C	Crosby	*	N/A	N/A	1981	Replacement	Yes, Class 1

7. Description of Work:

Replaced disc insert for main steam relief valve MS-RV-2C.

Notes:

*Serial No. N63790-00-0047

968-22684 (9/87)

WASHINGTON PUBLIC POWER SUPPLY SYSTEM

PLAN NO. 2-0428

FORM NIS-2 (Back)

8. Tests Conducted: Hydrostatic ☐ Pneumatic ☐ Nominal Operating Pressure ☐ Other ☒ None
Test Pressure _____ psig, Test Temp. _____ °F
Component Design Pressure _____ psig, Temp. _____ °F

9. Remarks:

None

CERTIFICATE OF COMPLIANCE

We certify that the statements made in the report are correct and this replacement (repair or replacement) conforms to the rules of the ASME Code, Section XI.

Type Code Symbol Stamp Not applicable

Certificate Authorization No. Not applicable Expiration Date Not applicable

Signed [signature] (Owner or Owner's Designee) Title Plant Technical Manager

K Lewis 8/3/88

Date 8/3 1988

CERTIFICATE OF INSERVICE INSPECTION

I, the undersigned, holding a valid commission issued by the National Board of Boiler and Pressure Vessel Inspectors and the State of Washington and employed by Lumbermen's Mutual Casualty Co. of Illinois have inspected the components described in this Owner's Report during the period 5/9/88 to 8/3/88, and state that to the best of my knowledge and belief, the Owner has performed examinations and taken corrective measures described in this Owner's Report in accordance with the requirements of the ASME Code, Section XI.

By signing this certificate neither the Inspector nor his employer makes any warranty, expressed or implied, concerning the examinations and corrective measures described in this Owner's Report. Furthermore, neither the Inspector nor his employer shall be liable in any manner for any personal injury or property damage or a loss of any kind arising from or connected with this inspection.

[signature] (Inspector's Signature) Commissions 7447-W (National Board, State, and Endorsements)

Date AUGUST 3 1988

WASHINGTON PUBLIC POWER SUPPLY SYSTEM

PLAN NO. 2-0429

FORM NIS-2 OWNER'S REPORT FOR REPAIRS OR REPLACEMENTS
As Required by the Provisions of the ASME Code Section XI

1. Owner (Name) Washington Public Power Supply System — Date 8/3/88
   Owner (Address) 3000 George Washington Way, Richland, WA — Sheet 1 of 1
2. Plant (Name) WPPSS Nuclear Power Plant (WNP) — Unit WNP-2
   Plant (Address) Hanford, Benton County, WA — WPPSS (Repair Organization P.O. No., Job No., etc.)
3. Work Performed by (Name) WPPSS
   Work Performed by (Address) 3000 George Washington Way, Richland, WA
4. Identification of System Main Steam (MS) System
5. (a) Applicable Construction Code ASME Section III 19 71 Edition, None Addenda, None Code Case
   (b) Applicable Edition of ASME Section XI Utilized for Repairs or Replacements 19 80 Edition, W80 Addenda, N308 Code Case
6. Identification of Components Repaired or Replaced and Replacement Components

Name of Component	Name of Manufacturer	Manufacturer Serial No.	National Board No.	Other I.D.	Year Built	Repaired, Replaced, or Replacement	ASME Code Stamped (Yes or No) Code Class
MS-RV-4B	Crosby	*	N/A	N/A	1980	Replacement	Yes, Class 1

7. Description of Work:

Replaced disc insert for main steam relief valve MS-RV-4B.

Notes:

*Serial No. N63790-00-0057

968-22684 (9/87)

WASHINGTON PUBLIC POWER SUPPLY SYSTEM

PLAN NO. 2-0429

FORM NIS-2 (Back)

8. Tests Conducted: Hydrostatic ☐ Pneumatic ☐ Nominal Operating Pressure ☐ Other ☒ None
Test Pressure _____ psig, Test Temp. _____ °F
Component Design Pressure _____ psig, Temp. _____ °F

9. Remarks:

None

CERTIFICATE OF COMPLIANCE

We certify that the statements made in the report are correct and this replaced (repair or replacement) conforms to the rules of the ASME Code, Section XI.

Type Code Symbol Stamp Not applicable

Certificate Authorization No. Not applicable Expiration Date Not applicable

Signed R L Wilson (Owner or Owner's Designee.) Title Plant Technical Manager

8/3/88

Date 8/3 19 88

CERTIFICATE OF INSERVICE INSPECTION

I, the undersigned, holding a valid commission issued by the National Board of Boiler and Pressure Vessel Inspectors and the State of Washington and employed by Lumbermen's Mutual Casualty Co. of Illinois have inspected the components described in this Owner's Report during the period 5/9/88 to 8/3/88, and state that to the best of my knowledge and belief, the Owner has performed examinations and taken corrective measures described in this Owner's Report in accordance with the requirements of the ASME Code, Section XI.

By signing this certificate neither the Inspector nor his employer makes any warranty, expressed or implied, concerning the examinations and corrective measures described in this Owner's Report. Furthermore, neither the Inspector nor his employer shall be liable in any manner for any personal injury or property damage or a loss of any kind arising from or connected with this inspection.

David L. Vance (Inspector's Signature) Commissions 7447-W (National Board, State, and Endorsements)

Date AUGUST 3 19 88

WASHINGTON PUBLIC POWER SUPPLY SYSTEM

PLAN NO. 2-0430

FORM NIS-2 OWNER'S REPORT FOR REPAIRS OR REPLACEMENTS
As Required by the Provisions of the ASME Code Section XI

1. Owner (Name) Washington Public Power Supply System — Date 7/21/88
   Owner (Address) 3000 George Washington Way, Richland, WA — Sheet 1 of 1
2. Plant (Name) WPPSS Nuclear Power Plant (WNP) — Unit WNP-2
   Plant (Address) Hanford, Benton County, WA — C20069 Repair Organization P.O. No., Job No., etc.
3. Work Performed by (Name) Bechtel Construction, Inc.
   Work Performed by (Address) P.O. Box 600, Richland, WA.
4. Identification of System Containment Vessel - TIP Purge Line
5. (a) Applicable Construction Code ASME Section III 19 71 Edition, S72 Addenda, None Code Case
   (b) Applicable Edition of ASME Section XI Utilized for Repairs or Replacements 19 80 Edition, W80 Addenda, N308 Code Case
6. Identification of Components Repaired or Replaced and Replacement Components

Name of Component	Name of Manufacturer	Manufacturer Serial No.	National Board No.	Other I.D.	Year Built	Repaired, Replaced, or Replacement	ASME Code Stamped (Yes or No) Code Class
Cont. Vessel Penet. X27F TIP Purge Line	PDM	12764	790	N/A	1976	Replacement	Yes, Class 2

7. Description of Work:

Replaced valve TIP-V-15. The replacement work was performed as follows:

1. Cut and removed existing valve.
2. Installed new replacement valve and made required socket welds.
3. Performed PT examination on ASME socket weld. PT examination results acceptable.

Notes:

968-22684 (9/87)

WASHINGTON PUBLIC POWER SUPPLY SYSTEM

PLAN NO. 2-0430

FORM NIS-2 (Back)

8. Tests Conducted: Hydrostatic ☐ Pneumatic ☐ Nominal Operating Pressure ☐ Other ☒ None
Test Pressure _____ psig, Test Temp. _____ °F
Component Design Pressure _____ psig, Temp. _____ °F

9. Remarks:

See attached NPV-1 Code Data Report for the following:

Valve EPN No.	Valve Serial No.
TIP-V-15	6

CERTIFICATE OF COMPLIANCE

We certify that the statements made in the report are correct and this replacement (repair or replacement) conforms to the rules of the ASME Code, Section XI.

Type Code Symbol Stamp Not applicable

Certificate Authorization No. Not applicable Expiration Date Not applicable

Signed R L Lirbe (Owner or Owner's Designee.) Title Plant Technical Manager

K Swob 7/21/88

Date 7/21 19 88

CERTIFICATE OF INSERVICE INSPECTION

I, the undersigned, holding a valid commission issued by the National Board of Boiler and Pressure Vessel Inspectors and the State of Washington and employed by Lumbermen's Mutual Casualty Co. of Illinois have inspected the components described in this Owner's Report during the period 5/16/88 to 6/30/88, and state that to the best of my knowledge and belief, the Owner has performed examinations and taken corrective measures described in this Owner's Report in accordance with the requirements of the ASME Code, Section XI.

By signing this certificate neither the Inspector nor his employer makes any warranty, expressed or implied, concerning the examinations and corrective measures described in this Owner's Report. Furthermore, neither the Inspector nor his employer shall be liable in any manner for any personal injury or property damage or a loss of any kind arising from or connected with this inspection.

C D Fulwood (Inspector's Signature) Commissions 5470U (National Board, State, and Endorsements)

Date 7/22 19 88

PLAN NO. 2-0430

TIP-V-15, S/N 6

Rudolph Gupta 6/26/88

FORM NPV-1 CERTIFICATE HOLDERS' DATA REPORT FOR NUCLEAR PUMPS OR VALVES*

As Required by the Provisions of the ASME Code, Section III, Div. 1

1. Manufactured and certified by Target Rock Corporation, 1966E Broadhollow Rd., Farmingdale NY 11735
(name and address of N Certificate Holder)

2. Manufactured for Washington Public Supply System, Richland, Washington
(name and address of Purchaser or Owner)

3. Location of installation Plant 2 Richland, Washington
(name and address)

4. Model No., Series No., or Type 86Q-001 Drawing 1032110-7 Rev. C CRN N/A

5. ASME Code Section III: 1980 (Edition) W81 (Addenda date) 1 (Class) N/A (Code Case no.)

6. Pump or valve Valve Nominal inlet size 1 (in.) Outlet size 1 (in.)

7. Material: Body SA 182 F316L Bonnet SA479 316 Disk SA564 630 Bolting N/A

(a) Cert. Holder's Serial No.	(b) Nat'l Board No.	(c) Body Serial No.	(d) Bonnet Serial No.	(e) Disk Serial No.
1	N/A	4816A	3013	1348
2	N/A	4799A	3003	1399
3	N/A	4839A	3010	1391
4	N/A	4841A	3004	1397
5	N/A	4851A	2984	1394
6	N/A	4815A	3009	1365

*Supplemental information in the form of lists, sketches, or drawings may be used provided (1) size is 8½ × 11, (2) information in items 1 through 4 on this Data Report is included on each sheet, (3) each sheet is numbered and the number of sheets is recorded at the top of this form.

FORM NPV-1 (back)

Mfr. Serial No. See Front

8. Remarks Indicator Tube- SA-479 316, S/N's- 3138,3140,3165,3168,3210,3164 Respectively

9. Design conditions 45 (pressure) psi 340 (temperature) °F or valve pressure class 900 (1)

10. Cold working pressure 1800 psi at 100°F

11. Hydrostatic test 2700 psi Temp. N/A °F Disk differential test pressure 1980 psi

CERTIFICATION OF DESIGN

Design Specification certified by David M. Bosi Prof. Eng. state Washington Reg. No. 20941

Design Report certified by Martin Goldstone Prof. Eng. state New York Reg. No. 31940

CERTIFICATE OF SHOP COMPLIANCE

We certify that the statements made in this report are correct and that this pump or valve conforms to the rules for construction of the ASME Code, Section III.

N Certificate of Authorization No. 1947 Expires 12-9-86

Date 4-30-86 Name Target Rock Corporation (N Certificate Holder) Signed (representative) G. Abruzzo, Q.A. Manager

CERTIFICATE OF SHOP INSPECTION

I, the undersigned, holding a valid commission issued by the National Board of Boiler and Pressure Vessel Inspectors and the State or Province of New York and employed by Commercial Union Ins. Co. of Boston, Mass. have inspected the pump, or valve, described in this Data Report on 4/30 19 86, and state that to the best of my knowledge and belief, the N Certificate Holder has constructed this pump, or valve, in accordance with the ASME Code, Section III.

By signing this certificate, neither the Inspector nor his employer makes any warranty, expressed or implied, concerning the equipment described in this Data Report. Furthermore, neither the Inspector nor his employer shall be liable in any manner for any personal injury or property damage or a loss of any kind arising from or connected with this inspection.

Date 4/30 19 86.

William A. Kelland (Inspector)

NEW YORK STATE COMMISSION NO. 2288

Commissions ALSO COMMISSIONED IN Penn., Ohio & Conn. (Nat'l Bd., (incl. endorsements) State, Prov. and No.)

(1) For manually operated valves only.

WASHINGTON PUBLIC POWER SUPPLY SYSTEM

PLAN NO. 2-0436

FORM NIS-2 OWNER'S REPORT FOR REPAIRS OR REPLACEMENTS
As Required by the Provisions of the ASME Code Section XI

1. Owner (Name) Washington Public Power Supply System — Date 7/21/88
   Owner (Address) 3000 George Washington Way, Richland, WA — Sheet 1 of 1
2. Plant (Name) WPPSS Nuclear Power Plant (WNP) — Unit WNP-2
   Plant (Address) Hanford, Benton County, WA — WPPSS Repair Organization P.O. No., Job No., etc.
3. Work Performed by (Name) WPPSS
   Work Performed by (Address) 3000 George Washington Way, Richland, WA.
4. Identification of System Main Steam (MS) System
5. (a) Applicable Construction Code ASME Section III 19 71 Edition, W71 Addenda, None Code Case
   (b) Applicable Edition of ASME Section XI Utilized for Repairs or Replacements 19 80 Edition, W80 Addenda, N308 Code Case
6. Identification of Components Repaired or Replaced and Replacement Components

Name of Component	Name of Manufacturer	Manufacturer Serial No.	National Board No.	Other I.D.	Year Built	Repaired, Replaced, or Replacement	ASME Code Stamped (Yes or No) Code Class
MS-V-28C	RM Co.	JU-17	77	N/A	1973	Replacement	Yes, Class 1

7. Description of Work:

Replaced existing internal valve parts with new improved replacement parts for MS-V-28C. The replacement work was performed as follows:

1. Removed existing stem disc assembly and disc assembly.
2. Installed new replacement stem disc and disc assembly.
3. Reassembled valve and torqued body to bonnet joint bolting material to the required torque value.
4. Performed pressure test to confirm pressure boundary integrity. No evidence of leakage during pressure test.

Notes:

RM Co. - Rockwell Manufacturing Co.

WASHINGTON PUBLIC POWER SUPPLY SYSTEM

PLAN NO. 2-0436

FORM NIS-2 (Back)

8. Tests Conducted: Hydrostatic ☐ Pneumatic ☐ Nominal Operating Pressure ☒ Other ☐ _____
Test Pressure 953 psig, Test Temp. * °F
Component Design Pressure 1250 psig, Temp. 575 °F

9. Remarks:

See attached N-2 Code Data Reports for the following:

Part	Serial No.
Stem Disc Assembly	9
Disc Assembly	15

*Corresponds to saturated steam at 953 psig.

CERTIFICATE OF COMPLIANCE

We certify that the statements made in the report are correct and this replacement (repair or replacement) conforms to the rules of the ASME Code, Section XI.

Type Code Symbol Stamp Not applicable

Certificate Authorization No. Not applicable Expiration Date Not applicable

Signed R L Cushing (Owner or Owner's Designee.) Title Plant Technical Manager

K Smith 7/21/88

Date 7/21 19 88

CERTIFICATE OF INSERVICE INSPECTION

I, the undersigned, holding a valid commission issued by the National Board of Boiler and Pressure Vessel Inspectors and the State of Washington and employed by Lumbermen's Mutual Casualty Co. of Illinois have inspected the components described in this Owner's Report during the period 5/13/88 to 7/8/88, and state that to the best of my knowledge and belief, the Owner has performed examinations and taken corrective measures described in this Owner's Report in accordance with the requirements of the ASME Code, Section XI.

By signing this certificate neither the Inspector nor his employer makes any warranty, expressed or implied, concerning the examinations and corrective measures described in this Owner's Report. Furthermore, neither the Inspector nor his employer shall be liable in any manner for any personal injury or property damage or a loss of any kind arising from or connected with this inspection.

[signature] (Inspector's Signature) Commissions 5470 W (National Board, State, and Endorsements)

Date 7/22 19 88

PLAN NO. 2-0436
Rulaip Gupta
7/8/88

FORM N-2 N OR NPT CERTIFICATE HOLDERS' DATA REPORT FOR IDENTICAL NUCLEAR PARTS AND APPURTENANCES*

As Required by the Provisions of the ASME Code, Section III, Division 1
Not To Exceed One Day's Production

1. Manufactured and certified by Rockwell International Corp., 1900 S. Saunders St., Raleigh, NC 27603 (name and address of certificate holder)
2. Manufactured for Washington Public Power Supply System, Richland, WA, 99352-0968 (name and address of purchaser)
3. Location of installation Hanford II, Richland, WA 99352 (name and address)
4. Type PD-422885 Rev. N (drawing no.) See Below (mat'l. spec. no.) N/A (tensile strength) N/A (CRN) 1987 (year built)
5. ASME Code, Section III: 1971 (edition) Winter '71 (addenda) 1 (class) N/A (Code Case no.)
6. Fabricated in accordance with Const. Spec. (Div. 2 only) N/A (No.) Revision N/A Date N/A
7. Remarks: Three (3) Stem Disk (SA-105) for 26" 1612 JMMNTY Main Steam Isolation Valve.

Rockwell S. O. # 36-35834

FOR INFORMATION ONLY

8. Nom. thickness (in.) N/A Min. design thickness (in.) Per#4 Dia. ID (ft. & in.) N/A Length overall (ft. & in.) N/A
9. When applicable, Certificate Holders' data reports are attached for each item of this report:

Part or Appurtenance Serial Number	National Board No. in Numerical Order	Part or Appurtenance Serial Number	National Board Number in Numerical Order
(1) 6033641 SRL 7	N/A	(26)	
(2) 6033641 SRL 8	N/A	(27)	
(3) 6033641 SRL 9	N/A	(28)	
(4)		(29)	
(5)		(30)	
(6)		(31)	
(7)		(32)	
(8)		(33)	
(9)		(34)	
(10)		(35)	
(11)		(36)	
(12)		(37)	
(13)		(38)	
(14)		(39)	
(15)		(40)	
(16)		(41)	
(17)		(42)	
(18)		(43)	
(19)		(44)	
(20)		(45)	
(21)		(46)	
(22)		(47)	
(23)		(48)	
(24)		(49)	
(25)		(50)	

10. Design pressure 1250 psi Temp. 575 °F. Hydro. test pressure N/A (when applicable) at temp. °F.

E 3-26-87

*Supplemental information in form of lists, sketches or drawings may be used provided (1) size is 8½ x 11, (2) information in items 2 and 3 on this data report is included on each sheet, (3) each sheet is numbered and number of sheets is recorded at top of this form, and (4) each additional sheet shall be signed by the Certificate Holder and the Inspector.

FORM N-2 (back)

FOR INFORMATION ONLY

CERTIFICATE OF DESIGN

Design specifications certified by Boyd Brooks P. E. state CA Reg. no. 13655

Design report* certified by Salathiel Liell Adams, III P. E. state NC Reg. no. 4187
(when applicable)

CERTIFICATE OF SHOP COMPLIANCE

We certify that the statements made in this report are correct and that this (these) Parts conform to the rules of construction of the ASME Code, Section III.

ASME Certificate of Authorization no. N-1563 Expires 11/26/88

Date 3/26/87 Name Rockwell International Corp. (NPT Certificate Holder) Signed [signature] (authorized representative)

CERTIFICATE OF SHOP INSPECTION

I, the undersigned, holding a valid commission issued by the National Board of Boiler and Pressure Vessel Inspectors and the state or province of North Carolina and employed by HSBI & I Co. of Hartford, CT have inspected these items described in this data report on 3-27-87, and state that to the best of my knowledge and belief, the Certificate Holder has fabricated these parts or appurtenances in accordance with the ASME Code, Section III. Each part listed has been authorized for stamping on the date shown above.

By signing this certificate, neither the inspector nor his employer makes any warranty, expressed or implied, concerning the equipment described in this data report. Furthermore, neither the inspector nor his employer shall be liable in any manner for any personal injury or property damage or loss of any kind arising from or connected with this inspection.

Date 3-27-87 Signed [signature] (Authorized Inspector) Commissions NC 1013 (Nat'l. Bd. (incl. endorsements) state or prov. and no.)

PLAN NO. 2-0436
Rudolf Swift
7/8/88

FORM N-2 N OR NPT CERTIFICATE HOLDERS' DATA REPORT FOR IDENTICAL NUCLEAR PARTS AND APPURTENANCES*

As Required by the Provisions of the ASME Code, Section III, Division 1
Not To Exceed One Day's Production

Pg 1 of 1

1. Manufactured and certified by Rockwell International Corp., 1900 S. Saunders St., Raleigh, NC 27603 (name and address of certificate holder)
2. Manufactured for Washington Public Power Supply System, Richland, WA, 99352-0968 (name and address of purchaser)
3. Location of installation Hanford II, Richland, WA 99352 (name and address)
4. Type PD-422885 REV. N (drawing no.) See Below (nat'l. spec. no.) N/A (tensile strength) N/A (CRN) 1987 (year built)
5. ASME Code, Section III: 1971 (edition) Winter '71 (addenda) 1 (class) N/A (Code Case no.)
6. Fabricated in accordance with Const. Spec. (Div. 2 only) N/A (No.) Revision N/A Date N/A
7. Remarks: Three (3) Disk (SA-105) for 26" 1612 JMMNTY Main Steam Isolation Valve.

Rockwell S. O. #36-35834

FOR INFORMATION ONLY

8. Nom. thickness (in.) N/A Min. design thickness (in.) Per#4 Dia. ID (ft. & in.) N/A Length overall (ft. & in.) N/A
9. When applicable, Certificate Holders' data reports are attached for each item of this report:

Part or Appurtenance Serial Number	National Board No. In Numerical Order	Part or Appurtenance Serial Number	National Board Number In Numerical Order
(1) 6033641 SRL 13	N/A	(26)	
(2) 6033641 SRL 14	N/A	(27)	
(3) 6033641 SRL 15	N/A	(28)	
(4)		(29)	
(5)		(30)	
(6)		(31)	
(7)		(32)	
(8)		(33)	
(9)		(34)	
(10)		(35)	
(11)		(36)	
(12)		(37)	
(13)		(38)	
(14)		(39)	
(15)		(40)	
(16)		(41)	
(17)		(42)	
(18)		(43)	
(19)		(44)	
(20)		(45)	
(21)		(46)	
(22)		(47)	
(23)		(48)	
(24)		(49)	
(25)		(50)	

10. Design pressure 1250 psi Temp. 575 °F. Hydro. test pressure N/A (when applicable) at temp. °F.

*Supplemental information in form of lists, sketches or drawings may be used provided (1) size is 8½ x 11, (2) information in items 2 and 3 on this data report is included on each sheet, (3) each sheet is numbered and number of sheets is recorded at top of this form, and (4) each additional sheet shall be signed by the Certificate Holder and the AHI.

FORM N-2 (back)

CERTIFICATE OF DESIGN

Design specifications certified by Boyd Brooks P. E. state CA Reg. no. 13655

Design report* certified by Salathiel Liell Adams, III P. E. state NC Reg. no. 4187
(when applicable)

CERTIFICATE OF SHOP COMPLIANCE

We certify that the statements made in this report are correct and that this (these) Parts conform to the rules of construction of the ASME Code, Section III.

ASME Certificate of Authorization no. N-1563 Expires 11/26/88

Date 3/26/87 Name Rockwell International Corp. (NPT Certificate Holder) Signed [signature] (authorized representative)

CERTIFICATE OF SHOP INSPECTION

I, the undersigned, holding a valid commission issued by the National Board of Boiler and Pressure Vessel Inspectors and the state or province of North Carolina and employed by HSBI & I Co. of Hartford, CT have inspected these items described in this data report on 3-27-87, and state that to the best of my knowledge and belief, the Certificate Holder has fabricated these parts or appurtenances in accordance with the ASME Code, Section III. Each part listed has been authorized for stamping on the date shown above.

By signing this certificate, neither the inspector nor his employer makes any warranty, expressed or implied, concerning the equipment described in this data report. Furthermore, neither the inspector nor his employer shall be liable in any manner for any personal injury or property damage or loss of any kind arising from or connected with this inspection.

Date 3-27-87 Signed [signature] (Authorized Inspector) Commissions NC 1083 (Nat'l. Bd. (incl. endorsements) state or prov. and no.)

FOR INFORMATION ONLY

WASHINGTON PUBLIC POWER SUPPLY SYSTEM

PLAN NO. 2-0446

FORM NIS-2 OWNER'S REPORT FOR REPAIRS OR REPLACEMENTS
As Required by the Provisions of the ASME Code Section XI

1. Owner (Name) Washington Public Power Supply System — Date 7/26/88
   Owner (Address) 3000 George Washington Way, Richland, WA — Sheet 1 of 1
2. Plant (Name) WPPSS Nuclear Power Plant (WNP) — Unit WNP-2
   Plant (Address) Hanford, Benton County, WA — WPPSS (Repair Organization P.O. No., Job No., etc.)
3. Work Performed by (Name) WPPSS
   Work Performed by (Address) 3000 George Washington Way, Richland, WA
4. Identification of System Off Gas (OG) System
5. (a) Applicable Construction Code ASME Section III 1974 Edition, S75 Addenda, None Code Case
   (b) Applicable Edition of ASME Section XI Utilized for Repairs or Replacements 19 80 Edition, W80 Addenda, N308 Code Case
6. Identification of Components Repaired or Replaced and Replacement Components

Name of Component	Name of Manufacturer	Manufacturer Serial No.	National Board No.	Other I.D.	Year Built	Repaired, Replaced, or Replacement	ASME Code Stamped (Yes or No) Code Class
OG-V-124	BW	77499	N/A	N/A	1982	Repaired	Yes, Class 3

7. Description of Work:

Repaired Off Gas valve OG-V-124. The repair work was performed as follows:

1) Cut body to bonnet seal weld.
2) Removed valve internals for trouble shooting.
3) Reinstalled valve internals.
4) Installed bonnet into valve body and torqued it to the required torque value.
5) Made body to bonnet seal weld.
6) Performed PT examination on final seal weld. PT examination results acceptable.

Notes:

BW - Borg Warner

WASHINGTON PUBLIC POWER SUPPLY SYSTEM

PLAN NO. 2-0446

FORM NIS-2 (Back)

8. Tests Conducted: Hydrostatic ☐ Pneumatic ☐ Nominal Operating Pressure ☐ Other ☒ None
Test Pressure _____ psig, Test Temp. _____ °F
Component Design Pressure _____ psig, Temp. _____ °F

9. Remarks:

None

CERTIFICATE OF COMPLIANCE

We certify that the statements made in the report are correct and this repair (repair or replacement) conforms to the rules of the ASME Code, Section XI.

Type Code Symbol Stamp Not applicable

Certificate Authorization No. Not applicable Expiration Date Not applicable

Signed R. Uelin (Owner or Owner's Designee.) Title Plant Technical Manager

K Eng's 7/26/88

Date 7/26 19 88

CERTIFICATE OF INSERVICE INSPECTION

I, the undersigned, holding a valid commission issued by the National Board of Boiler and Pressure Vessel Inspectors and the State of Washington and employed by Lumbermen's Mutual Casualty Co. of Illinois have inspected the components described in this Owner's Report during the period 6/14/88 to 7/27/88, and state that to the best of my knowledge and belief, the Owner has performed examinations and taken corrective measures described in this Owner's Report in accordance with the requirements of the ASME Code, Section XI.

By signing this certificate neither the Inspector nor his employer makes any warranty, expressed or implied, concerning the examinations and corrective measures described in this Owner's Report. Furthermore, neither the Inspector nor his employer shall be liable in any manner for any personal injury or property damage or a loss of any kind arising from or connected with this inspection.

N. L. Vance (Inspector's Signature) Commissions 7447-W (National Board, State, and Endorsements)

Date 27 July 19 88

WASHINGTON PUBLIC POWER SUPPLY SYSTEM

PLAN NO. 2-0447

FORM NIS-2 OWNER'S REPORT FOR REPAIRS OR REPLACEMENTS
As Required by the Provisions of the ASME Code Section XI

1. Owner (Name) Washington Public Power Supply System — Date 7/21/88
   Owner (Address) 3000 George Washington Way, Richland, WA — Sheet 1 of 1
2. Plant (Name) WPPSS Nuclear Power Plant (WNP) — Unit WNP-2
   Plant (Address) Hanford, Benton County, WA — WPPSS Repair Organization P.O. No., Job No., etc.
3. Work Performed by (Name) WPPSS
   Work Performed by (Address) 3000 George Washington Way, Richland, WA.
4. Identification of System Instrument Line
5. (a) Applicable Construction Code ASME Section III 19 74 Edition, W75 Addenda, None Code Case
   (b) Applicable Edition of ASME Section XI Utilized for Repairs or Replacements 19 80 Edition, W80 Addenda, N308 Code Case
6. Identification of Components Repaired or Replaced and Replacement Components

Name of Component	Name of Manufacturer	Manufacturer Serial No.	National Board No.	Other I. D.	Year Built	Repaired, Replaced, or Replacement	ASME Code Stamped (Yes or No) Code Class
*	JCI	*	N/A	N/A	1983	Replacement	Yes, Class NF(1)

7. Description of Work:

Installed missing U-bolt and associated nuts for support for valve PSR-V-X77A/4 in instrument line PI(1)-4S-X77Ad.

Notes:
*PI(1)-4S-X77Ad

968-22684 (9/87)

WASHINGTON PUBLIC POWER SUPPLY SYSTEM

PLAN NO. 2-0447

FORM NIS-2 (Back)

8. Tests Conducted: Hydrostatic ☐ Pneumatic ☐ Nominal Operating Pressure ☐ Other ☒ None
Test Pressure _____ psig, Test Temp. _____ °F
Component Design Pressure _____ psig, Temp. _____ °F

9. Remarks:

None

CERTIFICATE OF COMPLIANCE

We certify that the statements made in the report are correct and this replacement (repair or replacement) conforms to the rules of the ASME Code, Section XI.

Type Code Symbol Stamp Not applicable

Certificate Authorization No. Not applicable Expiration Date Not applicable

Signed [signature] Owner or Owner's Designee, Title Plant Technical Manager

KSmith 7/21/88

Date 7/21 19 88

CERTIFICATE OF INSERVICE INSPECTION

I, the undersigned, holding a valid commission issued by the National Board of Boiler and Pressure Vessel Inspectors and the State of Washington and employed by Lumbermen's Mutual Casualty Co. of Illinois have inspected the components described in this Owner's Report during the period 6/8/88 to 7/1/88, and state that to the best of my knowledge and belief, the Owner has performed examinations and taken corrective measures described in this Owner's Report in accordance with the requirements of the ASME Code, Section XI.

By signing this certificate neither the Inspector nor his employer makes any warranty, expressed or implied, concerning the examinations and corrective measures described in this Owner's Report. Furthermore, neither the Inspector nor his employer shall be liable in any manner for any personal injury or property damage or a loss of any kind arising from or connected with this inspection.

[signature] Inspector's Signature Commissions 5470W National Board, State, and Endorsements

Date 7/22 19 88

WASHINGTON PUBLIC POWER SUPPLY SYSTEM

PLAN NO. MWR AT2722

FORM NIS-2 OWNER'S REPORT FOR REPAIRS OR REPLACEMENTS
As Required by the Provisions of the ASME Code Section XI

1. Owner (Name) Washington Public Power Supply System — Date 2/3/33
   Owner (Address) 3000 George Washington Way, Richland, WA — Sheet 1 of 1
2. Plant (Name) WPPSS Nuclear Power Plant (WNP) — Unit WNP-2
   Plant (Address) Hanford, Benton County, WA — WPPSS (Repair Organization P.O. No., Job No., etc.)
3. Work Performed by (Name) WPPSS
   Work Performed by (Address) 3000 George Wash. Way, Richland, WA
4. Identification of System Control Rod Drive (CRD)
5. (a) Applicable Construction Code ASME Section III 19 71 Edition, None Addenda, None Code Case
   (b) Applicable Edition of ASME Section XI Utilized for Repairs or Replacements 19 80 Edition, W80 Addenda, N308 Code Case
6. Identification of Components Repaired or Replaced and Replacement Components

Name of Component	Name of Manufacturer	Manufacturer Serial No.	National Board No.	Other I.D.	Year Built	Repaired, Replaced, or Replacement	ASME Code Stamped (Yes or No) Code Class
CRD	GE	6243	N/A	N/A	1974	Replacement	Yes,Class 1

7. Description of Work:

- Existing CRD, S/N 6243-ASME Section III, Code Class 1, 1971 Edition with no Addenda.
- New Piston Tube Assembly, S/N 3219-ASME Section III, Code Class 1, 1971 Edition with Summer 73 Addenda.

Disassembled CRD, S/N 6243 for overhaul. Performed PT examination on the cylinder tube and flange assembly, S/N 6243. PT examination results acceptable. Performed visual examination on the piston tube assembly, S/N 5536. Visual examination results were evaluated to be unacceptable. Reassembled CRD parts and installed new piston tube assembly, S/N 3219.

The overhauled CRD, S/N 6243 placed in spare CRD pool.

Notes:

WASHINGTON PUBLIC POWER SUPPLY SYSTEM

PLAN NO. MWR AT2722

FORM NIS-2 (Back)

8. Tests Conducted: Hydrostatic ☐ Pneumatic ☐ Nominal Operating Pressure ☐ Other ☒ None
Test Pressure _____ psig, Test Temp. _____ °F
Component Design Pressure _____ psig, Temp. _____ °F

9. Remarks:

See attached N-2 code data report for new piston tube assembly, S/N 3219.

CERTIFICATE OF COMPLIANCE

We certify that the statements made in the report are correct and this replacement (repair or replacement) conforms to the rules of the ASME Code, Section XI.

Type Code Symbol Stamp Not applicable

Certificate Authorization No. Not applicable Expiration Date Not applicable

Signed [signature] (Owner or Owner's Designee) Title Plant Technical Manager

Date 2/3/88 2/8 19 88

CERTIFICATE OF INSERVICE INSPECTION

I, the undersigned, holding a valid commission issued by the National Board of Boiler and Pressure Vessel Inspectors and the State of Washington and employed by Lumbermen's Mutual Casualty Co. of Illinois have inspected the components described in this Owner's Report during the period 2/5/88 to 2/8/88, and state that to the best of my knowledge and belief, the Owner has performed examinations and taken corrective measures described in this Owner's Report in accordance with the requirements of the ASME Code, Section XI.

By signing this certificate neither the Inspector nor his employer makes any warranty, expressed or implied, concerning the examinations and corrective measures described in this Owner's Report. Furthermore, neither the Inspector nor his employer shall be liable in any manner for any personal injury or property damage or a loss of any kind arising from or connected with this inspection.

[signature] (Inspector's Signature) Commissions 9556 W (National Board, State, and Endorsements)

Date 2/8 19 88

DATA REPORT FOR NUCLEAR PART AND APPURTENANCES*

As required by the Provision of the ASME Code Rules, Section III, Div. 1

(a) Manufactured by General Electric Co., Castle Hayne Rd., Wilmington, N.C.
(Name and address of NPT Certificate Holder)

(b) Manufactured for ~~STOCK~~ WNP-2 MWR AT2722 Buildup Grp 2/3/88
(Name and address of N Certificate Holder for completed nuclear component)

2. Identification-Certificate Holder's Serial No. of Part 3219 Nat'l Bd. No. N/A

(a) Constructed According to Drawing No. 798D228G010 Drawing Prepared by D. L. Peterson

(b) Description of Part Inspected Piston Tube Assembly

(c) Applicable ASME Code: Section III, Edition 1971, Addenda date S'73, Case No. — Class 1

3. Remarks: Standard part for use with reactor.
(Brief description of service for which component was designed)

Hydrostatically tested at 1825 psi.

New piston tube assembly, S/N 3219 installed in CRD, S/N 6243

* Number of Sheets - 2 Buildup Grp 2/3/88

We certify that the statements made in this report are correct and this vessel part or appurtenance as defined in the Code conforms to the rules of construction of the ASME Code Section III.
(The applicable Design Specification and Stress Report are not the responsibility of the NPT Certificate Holder for parts. An NPT Certificate Holder for appurtenances is responsible for furnishing a separate Design Specification and Stress Report if the appurtenance is not included in the component Design Specification and Stress Report.)

Date 5/31/ 19 35 Signed GE-NEPD-WMD By J. E. Strudemann
(NPT Certificate Holder)

Certificate of Authorization Expires June 16, 1987 Certificate of Authorization No. NPT N-1151

CERTIFICATION OF DESIGN FOR APPURTENANCE (when applicable)

Design information on file at GENERAL ELECTRIC CO., SAN JOSE, CALIF.

Stress analysis report on file at GENERAL ELECTRIC CO., SAN JOSE, CALIF.

Design specifications certified by Vernon W. Pence Prof. Eng. State Calif. Reg. No. 14488

Stress analysis report certified by Vernon W. Pence Prof. Eng. State Calif. Reg. No. 14488

CERTIFICATE OF SHOP INSPECTION

I, the undersigned, holding a valid commission issued by the National Board of Boiler and Pressure Vessel Inspectors and/or the State or Province of North Carolina and employed by Department of Labor of State of North Carolina have inspected the part of a pressure vessel described in this Partial Data Report on 6/6 19 85, and state that to the best of my knowledge and belief, the NPT Certificate Holder has constructed this part in accordance with the ASME Code Section III.

By signing this certificate, neither the Inspector nor his employer makes any warranty, expressed or implied, concerning the part described in this Partial Data Report. Furthermore, neither the Inspector nor his employer shall be liable in any manner for any personal injury or property damage or a loss of any kind arising from or connected with this inspection.

Date 6/6 19 85

E. B. Sherrill
Inspector's Signature

Commissions N.C. 723, PA.WC1766, OHIO
National Board, State, Province and No.

*Supplemental sheets in form of lists, sketches or drawings may be used provided (1) size is 8½" x 11", (2) information in Items 1-2 on this Data Report is included on each sheet, and (3) each sheet is numbered and number of sheets is recorded in Item 3, "Remarks".

(10/77) This form (E00040) may be obtained from the Order Dept., ASME, 345 E. 47th St., New York, N.Y. 10017

Items 4–8 incl. to be completed for single wall vessels, jackets of jacketed vessels, or shells of heat exchangers.

4. Shell: Material _____ T.S. _____ Nominal Thickness ____ in. Corrosion Allowance ____ in. Dia. ____ ft. ____ in. Length ____ ft. ____ in.
(Kind & Spec. No.) (Min. of Range Specified)

5. Seams: Long _____ H.T.[1] _____ R.T. _____ Efficiency _____ %

S/N 3219

Girth _____ H.T.[1] _____ R.T. _____ No. of Courses _____

6. Heads: (a) Material _____ T.S. _____ (b) Material _____ T.S. _____

Location (Top, bottom, ends)	Thickness	Crown Radius	Knuckle Radius	Elliptical Ratio	Conical Apex Angle	Hemispherical Radius	Flat Diameter	Side to Press. (Conv. or Conc.)
(a)								
(b)								

If removable, bolts used _____ Other fastening _____
(Material, Spec. No., T.S., Size, Number) (Describe or attach sketch)

7. Jacket Closure: _____
(Describe as edge weld, bar, etc. If bar give dimensions, if bolted, describe or sketch)

8. Design pressure[2] 1250 psi at 575 °F

Drop Weight _____
Charpy Impact _____ ft-lb
at temp. of _____ °F

Items 9 and 10 to be completed for tube sections

9. Tube Sheets: Stationary. Material _____ Dia. _____ Thickness ____ in. Attachment _____
(Kind & Spec. No.) (Subject to pressure) (Welded, Bolted)

Floating. Material _____ Dia. _____ Thickness ____ in. Attachment _____

10. Tubes: Material _____ O.D. ____ in. Thickness _____ inches or gage. Number _____ Type _____
(Str. or U)

Items 11–14 incl. to be completed for inner chambers of jacketed vessels, or channels of heat exchangers.

11. Shell: Material _____ T.S. _____ Nominal Thickness ____ in. Corrosion Allowance ____ in. Dia. ____ ft. ____ in. Length ____ ft. ____ in.
(Kind & Spec. No.) (Min. of Range Specified)

12. Seams: Long _____ H.T.[1] _____ R.T. _____ Efficiency _____ %

Girth _____ H.T.[1] _____ R.T. _____ No. of Courses _____

13. Heads (a) Material _____ T.S. _____ (b) Material _____ T.S. _____

Location	Thickness	Crown Radius	Knuckle Radius	Elliptical Ratio	Conical Apex Angle	Hemispherical Radius	Flat Diameter	Side to Press. (Conv. or Conc.
(a) Top, bottom, ends								
(b) Channel								

If removable, bolts used (a) _____ (b) _____ (c) _____ Other fastening _____
(Describe or attach sketch)

14. Design pressure[2] _____ psi at _____ °F

Drop Weight _____
Charpy Impact _____ ft-lb
at temp. of _____ °F

Items below to be completed for all vessels where applicable.

15. Safety Valve Outlets: Number _____ Size _____ Location _____

16. Nozzles:

Purpose (Inlet, Outlet, Drain)	Number	Dia. or Size	Type	Material	Thickness	Reinforcement Material	How Attached

17. Inspection Openings: Manholes, No. _____ Size _____ Location _____
Handholes, No. _____ Size _____ Location _____
Threaded, No. _____ Size _____ Location _____

18. Supports: Skirt _____ (Yes or No) Lugs _____ (Number) Legs _____ (Number) Other _____ (Describe) Attached _____ (Where & How)

[1] If Postweld Heat-Treated.
[2] List other internal or external pressure with coincident temperature when applicable.

WASHINGTON PUBLIC POWER SUPPLY SYSTEM

PLAN NO. MWR AT2723

FORM NIS-2 OWNER'S REPORT FOR REPAIRS OR REPLACEMENTS
As Required by the Provisions of the ASME Code Section XI

1. Owner (Name) Washington Public Power Supply System — Date 2/3/88
   Owner (Address) 3000 George Washington Way, Richland, WA — Sheet 1 of 1
2. Plant (Name) WPPSS Nuclear Power Plant (WNP) — Unit WNP-2
   Plant (Address) Hanford, Benton County, WA — WPPSS (Repair Organization P.O. No., Job No., etc.)
3. Work Performed by (Name) WPPSS
   Work Performed by (Address) 3000 George Wash. Way, Richland, WA
4. Identification of System Control Rod Drive (CRD)
5. (a) Applicable Construction Code ASME Section III 19 71 Edition, None Addenda, None Code Case
   (b) Applicable Edition of ASME Section XI Utilized for Repairs or Replacements 19 80 Edition, W80 Addenda, N308 Code Case
6. Identification of Components Repaired or Replaced and Replacement Components

Name of Component	Name of Manufacturer	See Note Manufacturer Serial No.	National Board No.	Other I.D.	Year Built	Repaired, Replaced, or Replacement	ASME Code Stamped (Yes or No) Code Class
CRD	GE	7210/ A8503	N//A	N/A	1975	Replacement	Yes,Class 1

7. Description of Work:

- Existing CRD, S/N 7210-ASME Section III, Code Class 1, 1971 Edition with no Addenda.
- New Piston Tube Assembly, S/N 3143-ASME Section III, Code Class 1, 1971 Edition with Summer 73 Addenda.
- New Cylinder Tube and Flange, S/N A8503-ASME Section III, Code Class 1, 1974 Edition with Winter 75 Addenda.

Disassembled CRD, S/N 7210 for overhaul. Performed PT examination on the cylinder tube and flange assembly, S/N 7210. PT examination results were evaluated to be unacceptable. Performed visual examination on the piston tube assembly, S/N 3143. Visual examination results were evaluated to be unacceptable. Reassembled CRD parts and installed new piston tube assembly, S/N 3143 and new cylinder tube and flange, S/N A8503.

The overhauled CRD S/N A8503 (old S/N 7210) placed in CRD spare pool (see note).

Notes:
Cylinder tube and flange serial number is the manufacturer's serial number for identifying the entire CRD assembly.

WASHINGTON PUBLIC POWER SUPPLY SYSTEM

PLAN NO. MWR AT2723

FORM NIS-2 (Back)

8. Tests Conducted: Hydrostatic ☐ Pneumatic ☐ Nominal Operating Pressure ☐ Other ☒ None
Test Pressure _____ psig, Test Temp. _____ °F
Component Design Pressure _____ psig, Temp. _____ °F

9. Remarks:

See attached N-2 code data report for new piston tube assembly, S/N 3143.

See attached N-2 code data report for new cylinder tube and flange, S/N A8503.

CERTIFICATE OF COMPLIANCE

We certify that the statements made in the report are correct and this replacement (repair or replacement) conforms to the rules of the ASME Code, Section XI.

Type Code Symbol Stamp Not applicable

Certificate Authorization No. Not applicable Expiration Date Not applicable

Signed [signature] Owner or Owner's Designee, Title Plant Technical Manager

Date 3/21 19 88

CERTIFICATE OF INSERVICE INSPECTION

I, the undersigned, holding a valid commission issued by the National Board of Boiler and Pressure Vessel Inspectors and the State of Washington and employed by Lumbermen's Mutual Casualty Co. of Illinois have inspected the components described in this Owner's Report during the period 2/5/88 to 2/3/88, and state that to the best of my knowledge and belief, the Owner has performed examinations and taken corrective measures described in this Owner's Report in accordance with the requirements of the ASME Code, Section XI.

By signing this certificate neither the Inspector nor his employer makes any warranty, expressed or implied, concerning the examinations and corrective measures described in this Owner's Report. Furthermore, neither the Inspector nor his employer shall be liable in any manner for any personal injury or property damage or a loss of any kind arising from or connected with this inspection.

[signature] Inspector's Signature Commissions 9556 W National Board, State, and Endorsements

Date 2/3 19 88

...ion of the ASME Code Rules, Section III, Div. 1

1. Manufactured & Certified by: GE Company, 2117 Castle Hayne Rd., Wilmington, N.C. 28402
(Name and Address of NPT Certificate Holder)

(b) Manufactured for: WNP-2.
(Name and Address of N Certificate Holder for completed nuclear component)

2. Identification-Certificate Holders's S/N of Part: A8503 Nat'l Bd. No. N/A

(a) Constructed According to Drawing No: 919D258G003 Dwg. Prepared by D. L. Peterson

(b) Description of Part Inspected: CYLINDER TUBE & FLANGE

(c) Applicable ASME Code: Section III, Edition 1974, Addenda Date W'75, Case No. 1361-2 Class 1

3. REMARKS: Sub-assembly of Control Rod Drive for use with reactor.
(Brief description of service for which component was designed)
Hydrostatically tested at 1825 psi. min. MWR A7 2723

*Sheet 1 of 2 Quality Supp's 2/3/88

We certify that the statements in this report are correct and this vessel part or appurtenance as defined in the code conforms to the rules of construction of the ASME Code Section III. (The applicable Designed Specification and Stress Report are not the responsibility of the NPT Certificate Holder for parts. An NPT Certification Holder for appurtenances is responsible for furnishing a separate Design Specification and Stress Report if the appurtenance is not included in the component Design Specification and Stress Report).

DATE: 11/10, 19 87 Signed GE-NEBG-NF&CH-QA By J. Ettrudemmie
(NPT Certificate Holder)

Certificate Of Authorization Expires: 6/16/90 Certification of Authorization No.: NPT N-1151

CERTIFICATION OF DESIGN FOR APPURTENANCE

Design information on file at GE COMPANY, SAN JOSE, CALIFORNIA

Stress analysis report on file at GE COMPANY, SAN JOSE, CALIFORNIA
DC22A6253 Rev. 0
Design specification certified by BJORN HAABERG Prof. Eng. State CALIF. Reg. No. 15570
DC22A6254 Rev. 0.
Stress analysis report certified by EDWARD YOSHIO Prof. Eng. State CALIF. Reg. No. M018646

CERTIFICATION OF SHOP INSPECTION

I, the undersigned, holding a valid commission by the National Board of Boiler and Pressure Inspectors and/or the State or Province of NORTH CAROLINA and employed by DEPARTMENT OF LABOR of STATE OF NORTH CAROLINA have inspected the part of a pressure vessel described in this Partial Data Report on 11-10 1987, and state that to the best of my knowledge and belief, the NPT Certificate Holder has constructed this part in accordance with the ASME Code Section III.

By signing this certificate, neither the Inspector nor his employer makes any warranty, expressed or implied, concerning the part described in the Partial Data Report. Furthermore, neither the Inspector nor his employer shall be liable in any manner for any personal injury or property damages or a loss of any kind arising from or connected with this inspection.

11-10, 1987 J. F. Shandler NC.779-PAWC 2LCO-0410
DATE Inspector's Signature National Board, State, Province and No.

Supplemental sheets in form of lists, sketches or drawing may be used provided (1) size is 8-1/2" X 11", (2) information in 1-2 on this Data Report is included on each sheet, and (3) each sheet is numbered and number of sheets is recorded in Item 3. "REMARKS"

1/77

VERIFIED & ACCEPTED D. Miller 1-5-88
R.I. Inspector Date

Completed for single wall vessels, jackets vessels, or shells of heat exchanger

4. Shell: Material_____ T.S._____ Nominal Thickness___in. Corrosion Allowance___in Dia.___ft.___in. Length___ft.___
(Kind & Spec.No) (Min.ofRange Specified)

5. Seams: Long_____ H.T.[1]_____ R.T._____ Efficiency_____%

Girth_____ H.T.[1]_____ R.T._____ No. of Courses S/N A8503

6. Heads: (a) Material_____ T.S._____ (b)Material_____ T.S._____ Wind up 1/15/88

Location (Top Bottom,Ends)	Thickness	Crown Radius	Knuckle Radius	Elliptical Ratio	Concial Apex Angle	Hemispherical Radius	Flat Diameter	Side to Press. (conv.or conc.)
(a)								
(b)								

If removable, bolts used_____ Other fastening_____
(Material,Spec.No., T.S. Size Number) (Describe or attach sketch)

7. Jacket Closure:_____
(Describe as ogee and weld,bar,etc. If bar give dimensions, if bolts, describe or sketch)

8. Design Pressure[2] 1250 psi at 575 °F Drop Weight_____ Charpy Impact_____ ft-lb at temp. of_____ °F

Items 9 and 10 to be completed for tube sections.

9. Tube Sheets: Stationary Mat'l._____ Dia._____ Thickness___in. Attachment_____
(Kind of Spec. No.) (Subj.to Press.) (Welded, Bolted)
Floating. Material_____ Dia._____ Thickness___in. Attachment_____

10. Tubes: Material_____ O.D.___in. Thickness_____ inches or gage. Number___ Type_____
(Str. or U)

Items 11-14 incl. to be completed for inner chambers of jacketed vessels, or channels of heat exchangers

11. Shell: Material_____ T.S._____ Nominal Thickness___in. Corrosion Allowance___in. Dia.___ft.___in Length___ft.___in.
(Kind&Spec.No.) (Min.ofRange Specified)

12. Seams: Long_____ H.T.[1]_____ R.T._____ Efficiency_____%
Girth_____ H.T.[1]_____ R.T._____ No. of Courses_____

13. Heads (a) Material_____ T.S._____ (b)Material_____ T.S._____

Location	Ticnkess	Crown Radius	Knucle Radius	Elliptical Ratio	Concial Apex Angle	Hemispherical Radius	Fat Diameter	Side to Press (Conv.or Conc.)
(a)Top, Bottom, End								
(b)Channel								

If removable, bolts used (a)_____ (b)_____ (c)_____ Other Fastening_____
(Describe or attach sketch
Drop Weight_____
Charpy Impact_____ ft-lb
at temp. of_____ °F

14. Design pressure[2]_____ psi at_____ °F

Items below to be completed for all vessels where applicable.

15. Safety Valve Outlets: Number_____ Size_____ Location_____

16. Nozzles:

Purpose (Inlet Outlet, Drain)	Number	Dia or Size	Type	Material	Thickness	Reinforcement Material	Attached

17. Inspection Openings: Manholes, No._____ Size_____ Location_____
Handles, No._____ Size_____ Location_____
Threaded, No._____ Size_____ Location_____

18. Supports: Shirt_____ Lugs_____ Legs_____ Other_____ Attached_____
(Yes or No) (Number) (Number) (Describe). (Where & How)

[1] If Postweld Heat-Treated.
[2] List other internal or external pressure with conincident temperature when applicalbe.

FORM N-2 NPT CERTIFICATE HOLDERS' DATA REPORT FOR NUCLEAR PART AND APPURTENANCES*

As required by the Provision of the ASME Code Rules, Section III, Div. 1

1. (a) Manufactured by General Electric Co., Castle Hayne Rd., Wilmington, N.C.
(Name and address of NPT Certificate Holder)

(b) Manufactured for ~~STOCK~~ WNP-2
(Name and address of N Certificate Holder for completed nuclear component)

2. Identification-Certificate Holder's Serial No. of Part 3143 Nat'l Bd. No. N/A

(a) Constructed According to Drawing No. 798D228G010 Drawing Prepared by D. L. Peterson

(b) Description of Part Inspected Piston Tube Assembly

(c) Applicable ASME Code: Section III, Edition 1971, Addenda date S'73, Case No. — Class 1

3. Remarks: Standard part for use with reactor.
(Brief description of service for which component was designed)

Hydrostatically tested at 1825 psi. MWL AT 2723

Rudolph Gupta 7/8/88

* Number of Sheets - 2

We certify that the statements made in this report are correct and this vessel part or appurtenance as defined in the Code conforms to the rules of construction of the ASME Code Section III.
(The applicable Design Specification and Stress Report are not the responsibility of the NPT Certificate Holder for parts. An NPT Certificate Holder for appurtenances is responsible for furnishing a separate Design Specification and Stress Report if the appurtenance is not included in the component Design Specification and Stress Report.)

Date 4-29 19 85 Signed GE-NEPD-WMD By J. Ettrudemini
(NPT Certificate Holder)

Certificate of Authorization Expires June 16, 1987 Certificate of Authorization No. NPT N-1151

CERTIFICATION OF DESIGN FOR APPURTENANCE (when applicable)

Design information on file at GENERAL ELECTRIC CO., SAN JOSE, CALIF.

Stress analysis report on file at GENERAL ELECTRIC CO., SAN JOSE, CALIF.

Design specifications certified by Vernon W. Pence Prof. Eng. State Calif. Reg. No. 14488

Stress analysis report certified by Vernon W. Pence Prof. Eng. State Calif. Reg. No. 14488

CERTIFICATE OF SHOP INSPECTION

I, the undersigned, holding a valid commission issued by the National Board of Boiler and Pressure Vessel Inspectors and/or the State or Province of North Carolina and employed by Department of Labor of State of North Carolina have inspected the part of a pressure vessel described in this Partial Data Report on 5/8 19 85 and state that to the best of my knowledge and belief, the NPT Certificate Holder has constructed this part in accordance with the ASME Code Section III.

By signing this certificate, neither the Inspector nor his employer makes any warranty, expressed or implied, concerning the part described in this Partial Data Report. Furthermore, neither the Inspector nor his employer shall be liable in any manner for any personal injury or property damage or a loss of any kind arising from or connected with this inspection.

Date 5/8 19 85

E. L. Sherrill
Inspector's Signature

Commissions N.C. 723, PA.WC1766, OHIO
National Board, State, Province and No.

* Supplemental sheets in form of lists, sketches or drawings may be used provided (1) size is 8½" x 11", (2) information in items 1-2 on this Data Report is included on each sheet, and (3) each sheet is numbered and number of sheets is recorded in Item 3, "Remarks".

(10/77) This form (E00040) may be obtained from the Order Dept., ASME, 345 E. 47th St., New York, N.Y. 10017

FORM N-2 (back)

Items 4–8 incl. to be completed for single wall vessels, jackets of jacketed vessels, or shells of heat exchangers.

4. Shell: Material _____ (Kind & Spec. No.) T.S. _____ (Min. of Range Specified) Nominal Thickness ____ in. Corrosion Allowance ____ in. Dia. ____ ft. ____ in. Length ____ ft. ____

5. Seams: Long _____ H.T.[1] _____ R.T. _____ Efficiency _____ %

S/N 3143

Girth _____ H.T.[1] _____ R.T. _____ No. of Courses _____

Kuldip 1/15/88

6. Heads: (a) Material _____ T.S. _____ (b) Material _____ T.S. _____

Location (Top, bottom, ends)	Thickness	Crown Radius	Knuckle Radius	Elliptical Ratio	Conical Apex Angle	Hemispherical Radius	Flat Diameter	Side to Press. (Conv. or Conc.)
(a)								
(b)								

If removable, bolts used _____ (Material, Spec. No., T.S., Size, Number) Other fastening _____ (Describe or attach sketch)

7. Jacket Closure: _____ (Describe as edge weld, bar, etc. If bar give dimensions, if bolted, describe or sketch)

8. Design pressure[2] 1250 psi at 575 °F

Drop Weight _____
Charpy Impact _____ ft-lb
at temp. of _____ °F

Items 9 and 10 to be completed for tube sections

9. Tube Sheets: Stationary. Material _____ (Kind & Spec. No.) Dia. _____ (Subject to pressure) Thickness ____ in. Attachment _____ (Welded, Bolted)

Floating. Material _____ Dia. _____ Thickness ____ in. Attachment _____

10. Tubes: Material _____ O.D. ____ in. Thickness _____ inches or gage. Number _____ Type _____ (Str. or U)

Items 11–14 incl. to be completed for inner chambers of jacketed vessels, or channels of heat exchangers.

11. Shell: Material _____ (Kind & Spec. No.) T.S. _____ (Min. of Range Specified) Nominal Thickness ____ in. Corrosion Allowance ____ in. Dia. ____ ft. ____ in. Length ____ ft. ____

12. Seams: Long _____ H.T.[1] _____ R.T. _____ Efficiency _____ %

Girth _____ H.T.[1] _____ R.T. _____ No. of Courses _____

13. Heads (a) Material _____ T.S. _____ (b) Material _____ T.S. _____

Location	Thickness	Crown Radius	Knuckle Radius	Elliptical Ratio	Conical Apex Angle	Hemispherical Radius	Flat Diameter	Side to Press. (Conv. or Conc.)
(a) Top, bottom, ends								
(b) Channel								

If removable, bolts used (a) _____ (b) _____ (c) _____ Other fastening _____ (Describe or attach sketch)

14. Design pressure[2] _____ psi at _____ °F

Drop Weight _____
Charpy Impact _____ ft-lb
at temp. of _____ °F

Items below to be completed for all vessels where applicable.

15. Safety Valve Outlets: Number _____ Size _____ Location _____

16. Nozzles:

Purpose (Inlet, Outlet, Drain)	Number	Dia. or Size	Type	Material	Thickness	Reinforcement Material	How Attached

17. Inspection Openings: Manholes, No. _____ Size _____ Location _____
Handholes, No. _____ Size _____ Location _____
Threaded, No. _____ Size _____ Location _____

18. Supports: Skirt _____ (Yes or No) Lugs _____ (Number) Legs _____ (Number) Other _____ (Describe) Attached _____ (Where & How)

[1] If Postweld Heat-Treated.
[2] List other internal or external pressure with coincident temperature when applicable.

WASHINGTON PUBLIC POWER SUPPLY SYSTEM

PLAN NO. MWR AT2724

FORM NIS-2 OWNER'S REPORT FOR REPAIRS OR REPLACEMENTS
As Required by the Provisions of the ASME Code Section XI

1. Owner (Name) Washington Public Power Supply System — Date 2/3/88
   Owner (Address) 3000 George Washington Way, Richland, WA — Sheet 1 of 1
2. Plant (Name) WPPSS Nuclear Power Plant (WNP) — Unit WNP-2
   Plant (Address) Hanford, Benton County, WA — WPPSS (Repair Organization P.O. No., Job No., etc.)
3. Work Performed by (Name) WPPSS
   Work Performed by (Address) 3000 George Wash. Way, Richland, WA
4. Identification of System Control Rod Drive (CRD)
5. (a) Applicable Construction Code ASME Section III 19 71 Edition, None Addenda, None Code Case
   (b) Applicable Edition of ASME Section XI Utilized for Repairs or Replacements 19 80 Edition, W80 Addenda, N308 Code Case
6. Identification of Components Repaired or Replaced and Replacement Components

Name of Component	Name of Manufacturer	See Note Manufacturer Serial No.	National Board No.	Other I.D.	Year Built	Repaired, Replaced, or Replacement	ASME Code Stamped (Yes or No) Code Class
CRD	GE	6680/ A8548	N/A	N/A	1975	Replacement	Yes, Class 1

7. Description of Work:

- Existing CRD, S/N 6680-ASME Section III, Code Class 1, 1971 Edition with no Addenda.
- New Piston Tube Assembly, S/N 3237-ASME Section III, Code Class 1, 1971 Edition with Summer 73 Addenda.
- New Cylinder Tube and Flange, S/N A8548-ASME Section III, Code Class 1, 1974 Edition with Winter 75 Addenda.

Disassembled CRD, S/N 6680 for overhaul. Performed PT examination on the cylinder tube and flange assembly, S/N 6680. PT examination results were evaluated to be unacceptable. Performed visual examination on the piston tube assembly, S/N 3237. Visual examination results were evaluated to be unacceptable. Reassembled CRD parts and installed new piston tube assembly, S/N 3237 and new cylinder tube and flange S/N A8548.

The overhauled CRD, S/N A8548 (old S/N 6680) placed in CRD spare pool (see note).

Notes:

Cylinder tube and flange serial number is the manufacturer's serial number for identifying the entire CRD assembly.

WASHINGTON PUBLIC POWER SUPPLY SYSTEM

PLAN NO. MWR AT2724

FORM NIS-2 (Back)

8. Tests Conducted: Hydrostatic ☐ Pneumatic ☐ Nominal Operating Pressure ☐ Other ☒ None
Test Pressure _____ psig, Test Temp. _____ °F
Component Design Pressure _____ psig, Temp. _____ °F

9. Remarks:

See attached N-2 code data report for new piston tube assembly, S/N 3237. See attached N-2 code data report for new cylinder tube and flange, S/N A8548.

CERTIFICATE OF COMPLIANCE

We certify that the statements made in the report are correct and this replacement (repair or replacement) conforms to the rules of the ASME Code, Section XI.

Type Code Symbol Stamp Not applicable

Certificate Authorization No. Not applicable Expiration Date Not applicable

Signed [signature] (Owner or Owner's Designee) Title Plant Technical Manager

5/18/88

Date 2/8/ 19 88

CERTIFICATE OF INSERVICE INSPECTION

I, the undersigned, holding a valid commission issued by the National Board of Boiler and Pressure Vessel Inspectors and the State of Washington and employed by Lumbermen's Mutual Casualty Co. of Illinois have inspected the components described in this Owner's Report during the period 2/5/88 to 2/8/88, and state that to the best of my knowledge and belief, the Owner has performed examinations and taken corrective measures described in this Owner's Report in accordance with the requirements of the ASME Code, Section XI.

By signing this certificate neither the Inspector nor his employer makes any warranty, expressed or implied, concerning the examinations and corrective measures described in this Owner's Report. Furthermore, neither the Inspector nor his employer shall be liable in any manner for any personal injury or property damage or a loss of any kind arising from or connected with this inspection.

[signature] (Inspector's Signature) Commissions 9556-W (National Board, State, and Endorsements)

Date 2/8 19 88

... Section of the ASME Code Rules, Section III, Div. 1

1. Manufactured & Certified by: GE Company, 2117 Castle Hayne Rd., Wilmington, N.C. 28402
(Name and Address of NPT Certificate Holder)

(b) Manufactured for: WNP-2
(Name and Address of N Certificate Holder for completed nuclear component

Identification-Certificate Holders's S/N of Part: A8548 Nat'l Bd. No. N/A

(a) Constructed According to Drawing No: 919D258G003 Dwg. Prepared by D. L. Peterson

(b) Description of Part Inspected: CYLINDER TUBE & FLANGE

(c) Applicable ASME Code: Section III, Edition 1974, Addenda Date W'75, Case No. 1361-2 Class 1

3. REMARKS: Sub-assembly of Control Rod Drive for use with reactor.
(Brief description of service for which component was designed)
Hydrostatically tested at 1825 psi. min.

*Sheet 1 of 2 MWR AT2724 Rudip Singh 2/3/88

We certify that the statements in this report are correct and this vessel part or appurtenance as defined in the code conforms to the rules of construction of the ASME Code Section III. (The applicable Designed Specification and Stress Report are not the responsibility of the NPT Certificate Holder for parts. An NPT Certification Holder for appurtenances is responsible for furnishing a separate Design Specification and Stress Report if the appurtenance is not included in the component Design Specification and Stress Report).

DATE: 11/10, 19 87 Signed GE-NEBG-NF&CM-QA By J. E. Strudemann
(NPT Certificate Holder)

Certificate Of Authorization Expires: 6/16/90 Certification of Authorization No.: NPT N-1151

CERTIFICATION OF DESIGN FOR APPURTENANCE

Design information on file at GE COMPANY, SAN JOSE, CALIFORNIA

Stress analysis report on file at GE COMPANY; SAN JOSE, CALIFORNIA
OC22A6253 Rev. 0
Design specification certified by BJORN HAABERG Prof. Eng. State CALIF. Reg. No. 15570
OC22A6254 Rev. 0.
Stress analysis report certified by EDWARD YOSHIO Prof. Eng. State CALIF. Reg. No. M018646

CERTIFICATION OF SHOP INSPECTION

I, the undersigned, holding a valid commission by the National Board of Boiler and Pressure Inspectors and/or the State or Province of NORTH CAROLINA and employed by DEPARTMENT OF LABOR of STATE OF NORTH CAROLINA have inspected the part of a pressure vessel described in this Partial Data Report on 11-10 1987, and state that to the best of my knowledge and belief, the NPT Certificate Holder has constructed this part in accordance with the ASME Code Section III.

By signing this certificate, neither the Inspector nor his employer makes any warranty, expressed or implied, concerning the part described in the Partial Data Report. Furthermore, neither the Inspector nor his employer shall be liable in any manner for any personal injury or property damages or a loss of any kind arising from or connected with this inspection.

11-10, 1987 J. F. Thomas NC. 779. PA. WC2860 OHIO
DATE Inspector's Signature National Board, State, Province and No.

*Supplemental sheets in form of lists, sketches or drawing may be used provided (1) size is 8-1/2" X 11", (2) information in 1-2 on this Data Report is included on each sheet, and (3) each sheet is numbered and number of sheets is recorded in Item 3. "REMARKSs"

10/

VERIFIED BY: D. L. Weller 1-5-88
B.I. Inspector Date

Items 4-8 Incl. to be completed for single wall vessels, jackets vessels, or shells of heat exchangers:

4. Shell: Material_____ T.S._____ Nominal Thickness___ in. Corrosion Allowance____ in Dia.___ ft.___ in. Length___ ft.___ in.
(Kind & Spec.No) (Min.ofRange Specified)

5. Seams: Long_____ H.T.[1]_____ R.T._____ Efficiency_____ %

Girth_____ H.T.[1]_____ R.T._____ No. of Courses_____ S/N 8548

6. Heads: (a) Material_____ T.S._____ (b)Material_____ T.S._____ Kuldip 1/15/88

Location (Top Bottom,Ends)	Thickness	Crown Radius	Knuckle Radius	Elliptical Ratio	Concial Apex Angle	Hemispherical Radius	Flat Diameter	Side to Press. (conv.or conc.)
(a)_____	_____	_____	_____	_____	_____	_____	_____	_____
(b)_____	_____	_____	_____	_____	_____	_____	_____	_____

If removable, bolts used_____ Other fastening_____
(Material,Spec.No., T.S. Size Number) (Describe or attach sketch)

7. Jacket Closure:_____
(Describe as ogee and weld,bar,etc. If bar give dimensions, if bolts, describe or sketch)

8. Design Pressure[2] 1250 psi at 575 °F Drop Weight_____ Charpy Impact_____ ft-lb at temp. of_____ °F

Items 9 and 10 to be completed for tube sections.

9. Tube Sheets: Stationary Mat'l._____ Dia._____ Thickness__ in. Attachment_____
(Kind of Spec. No.) (Subj.to Press.) (Welded, Bolted)
Floating. Material _____ Dia._____ Thickness___ in. Attachment_____

10. Tubes: Material_____ O.D.____ in. Thickness____ inches or gage. Number____ Type_____
(Str. or U)

Items 11-14 incl. to be completed for inner chambers of jacketed vessels, or channels of heat exchangers

11. Shell: Material____ T.S.____ Nominal Thickness___ in. Corrosion Allowance___ in. Dia.___ ft.___ in___ Length___ ft.___ in.
(Kind&Spec.No.) (Min.ofRange Specified)

12. Seams: Long_____ H.T.[1]_____ R.T._____ Efficiency_____ %
Girth_____ H.T.[1]_____ R.T._____ No. of Courses_____

13. Heads (a) Material_____ T.S._____ (b)Material_____ T.S._____

Location	Ticnkess	Crown Radius	Knucle Radius	Elliptical Ratio	Concial Apex Angle	Hemispherical Radius	Fat Diameter	Side to Press (Conv.or Conc.)
(a)Top, Bottom, End	_____	_____	_____	_____	_____	_____	_____	_____
(b)Channel	_____	_____	_____	_____	_____	_____	_____	_____

If removable, bolts used (a)____ (b)____ (c)____ Other Fastening_____
(Describe or attach sketch

14. Design pressure[2]_____ psi at_____ °F Drop Weight_____ Charpy Impact_____ ft-lb at temp. of _____ °F

Items below to be completed for all vessels where applicable.

15. Safety Valve Outlets: Number_____ Size_____ Location_____

16. Nozzles:

Purpose (Inlet Outlet, Drain)	Number	Dia or Size	Type	Material	Thickness	Reinforcement Material	Attached
_____	_____	_____	_____	_____	_____	_____	_____
_____	_____	_____	_____	_____	_____	_____	_____

17. Inspection Openings: Manholes, No._____ Size_____ Location_____
Handles, No._____ Size_____ Location_____
Threaded, No._____ Size_____ Location_____

18. Supports: Shirt_____ Lugs_____ Legs_____ Other_____ Attached_____
(Yes or No) (Number) (Number) (Describe) (Where & How)

[1] If Postweld Heat-Treated.
[2] List other internal or external pressure with conincident temperature when applicalbe.

FORM N-2 NPT CERTIFICATE HOLDERS' DATA REPORT FOR NUCLEAR PART AND APPURTENANCES*

As required by the Provision of the ASME Code Rules, Section III, Div. 1

1. (a) Manufactured by General Electric Co., Castle Hayne Rd., Wilmington, N.C.
(Name and address of NPT Certificate Holder)

(b) Manufactured for ~~STOCK~~ WNP-2
(Name and address of N Certificate Holder for completed nuclear component)

2. Identification-Certificate Holder's Serial No. of Part 3237 Nat'l Bd. No. N/A

(a) Constructed According to Drawing No. 798D228G010 Drawing Prepared by D. L. Peterson

(b) Description of Part Inspected Piston Tube Assembly

(c) Applicable ASME Code: Section III, Edition 1971, Addenda date S'73, Case No. — Class 1

3. Remarks: Standard part for use with reactor. MWL A-1 2724
(Brief description of service for which component was designed)
Hydrostatically tested at 1825 psi. Quality Supply 2/3/88

* Number of Sheets - 2

We certify that the statements made in this report are correct and this vessel part or appurtenance as defined in the Code conforms to the rules of construction of the ASME Code Section III.
(The applicable Design Specification and Stress Report are not the responsibility of the NPT Certificate Holder for parts. An NPT Certificate Holder for appurtenances is responsible for furnishing a separate Design Specification and Stress Report if the appurtenance is not included in the component Design Specification and Stress Report.)

Date 7/18/ 19 85 Signed GE-NEPD-WMD By J. E. Stroudemire
(NPT Certificate Holder)

Certificate of Authorization Expires June 16, 1987 Certificate of Authorization No. NPT N-1151

CERTIFICATION OF DESIGN FOR APPURTENANCE (when applicable)

Design information on file at GENERAL ELECTRIC CO., SAN JOSE, CALIF.

Stress analysis report on file at GENERAL ELECTRIC CO., SAN JOSE, CALIF.

Design specifications certified by Vernon W. Pence Prof. Eng. State Calif. Reg. No. 14488

Stress analysis report certified by Vernon W. Pence Prof. Eng. State Calif. Reg. No. 14488

CERTIFICATE OF SHOP INSPECTION

I, the undersigned, holding a valid commission issued by the National Board of Boiler and Pressure Vessel Inspectors and/or the State or Province of North Carolina and employed by Department of Labor of State of North Carolina have inspected the part of a pressure vessel described in this Partial Data Report on 8/7 19 85 and state that to the best of my knowledge and belief, the NPT Certificate Holder has constructed this part in accordance with the ASME Code Section III.

By signing this certificate, neither the Inspector nor his employer makes any warranty, expressed or implied, concerning the part described in this Partial Data Report. Furthermore, neither the Inspector nor his employer shall be liable in any manner for any personal injury or property damage or a loss of any kind arising from or connected with this inspection.

Date 8/7 19 85

E. R. Sherrill
Inspector's Signature

Commissions N.C. 723, PA.WC1766, OHIO
National Board, State, Province and No.

*Supplemental sheets in form of lists, sketches or drawings may be used provided (1) size is 8½" x 11", (2) information in items 1-2 on this Data Report is included on each sheet, and (3) each sheet is numbered and number of sheets is recorded in Item 3, "Remarks".

(10/77) This form (E00040) may be obtained from the Order Dept., ASME, 345 E. 47th St., New York, N.Y. 10017

FORM N-2 (back)

Items 4–8 incl. to be completed for single wall vessels, jackets of jacketed vessels, or shells of heat exchangers.

4. Shell: Material _____ (Kind & Spec. No.) T.S. _____ (Min. of Range Specified) Nominal Thickness ____ in. Corrosion Allowance ____ in. Dia. ____ ft. ____ in. Length ____ ft. ____

5. Seams: Long _____ H.T.[1] _____ R.T. _____ Efficiency _____ %

S/N 3237

Buildup 7/15/88

Girth _____ H.T.[1] _____ R.T. _____ No. of Courses _____

6. Heads: (a) Material _____ T.S. _____ (b) Material _____ T.S. _____

Location (Top, bottom, ends)	Thickness	Crown Radius	Knuckle Radius	Elliptical Ratio	Conical Apex Angle	Hemispherical Radius	Flat Diameter	Side to Press. (Conv. or Conc.)
(a)								
(b)								

If removable, bolts used _____ (Material, Spec. No., T.S., Size, Number) Other fastening _____ (Describe or attach sketch)

7. Jacket Closure: _____ (Describe as edge end weld, bar, etc. If bar give dimensions, if bolted, describe or sketch)

8. Design pressure[2] 1250 psi at 575 °F

Drop Weight _____
Charpy Impact _____ ft-lb
at temp. of _____ °F

Items 9 and 10 to be completed for tube sections

9. Tube Sheets: Stationary. Material _____ (Kind & Spec. No.) Dia. _____ (Subject to pressure) Thickness ____ in. Attachment _____ (Welded, Bolted)

Floating. Material _____ Dia. _____ Thickness ____ in. Attachment _____

10. Tubes: Material _____ O.D. ____ in. Thickness _____ inches or gage. Number _____ Type _____ (Str. or U)

Items 11–14 incl. to be completed for inner chambers of jacketed vessels, or channels of heat exchangers.

11. Shell: Material _____ (Kind & Spec. No.) T.S. _____ (Min. of Range Specified) Nominal Thickness ____ in. Corrosion Allowance ____ in. Dia. ____ ft. ____ in. Length ____ ft. ____

12. Seams: Long _____ H.T.[1] _____ R.T. _____ Efficiency _____ %

Girth _____ H.T.[1] _____ R.T. _____ No. of Courses _____

13. Heads (a) Material _____ T.S. _____ (b) Material _____ T.S. _____

Location	Thickness	Crown Radius	Knuckle Radius	Elliptical Ratio	Conical Apex Angle	Hemispherical Radius	Flat Diameter	Side to Press. (Conv. or Conc.)
(a) Top, bottom, ends								
(b) Channel								

If removable, bolts used (a) _____ (b) _____ (c) _____ Other fastening _____ (Describe or attach sketch)

14. Design pressure[2] _____ psi at _____ °F

Drop Weight _____
Charpy Impact _____ ft-lb
at temp. of _____ °F

Items below to be completed for all vessels where applicable.

15. Safety Valve Outlets: Number _____ Size _____ Location _____

16. Nozzles:

Purpose (Inlet, Outlet, Drain)	Number	Dia. or Size	Type	Material	Thickness	Reinforcement Material	How Attached

17. Inspection Openings: Manholes, No. _____ Size _____ Location _____
Handholes, No. _____ Size _____ Location _____
Threaded, No. _____ Size _____ Location _____

18. Supports: Skirt _____ (Yes or No) Lugs _____ (Number) Legs _____ (Number) Other _____ (Describe) Attached _____ (Where & How)

[1] If Postweld Heat-Treated.
[2] List other internal or external pressure with coincident temperature when applicable.

WASHINGTON PUBLIC POWER SUPPLY SYSTEM

PLAN NO. MWR AT2725

FORM NIS-2 OWNER'S REPORT FOR REPAIRS OR REPLACEMENTS
As Required by the Provisions of the ASME Code Section XI

1. Owner (Name) Washington Public Power Supply System — Date 7/21/88
   Owner (Address) 3000 George Washington Way, Richland, WA — Sheet 1 of 1
2. Plant (Name) WPPSS Nuclear Power Plant (WNP) — Unit WNP-2
   Plant (Address) Hanford, Benton County, WA — WPPSS (Repair Organization P.O. No., Job No., etc.)
3. Work Performed by (Name) WPPSS
   Work Performed by (Address) 3000 George Washington Way, Richland, WA.
4. Identification of System Control Rod Drive (CRD)
5. (a) Applicable Construction Code ASME Section III 19 71 Edition, None Addenda, None Code Case
   (b) Applicable Edition of ASME Section XI Utilized for Repairs or Replacements 19 80 Edition, W80 Addenda, N308 Code Case
6. Identification of Components Repaired or Replaced and Replacement Components

Name of Component	Name of Manufacturer	Manufacturer Serial No.	National Board No.	Other I.D.	Year Built	Repaired, Replaced, or Replacement	ASME Code Stamped (Yes or No) Code Class
CRD	GE	7001	N/A	N/A	1975	Replacement	Yes, Class 1
CT&F	GE	A8517	N/A	N/A	1987	Replacement	Yes, Class 1

7. Description of Work:

- Existing CRD, S/N 7001, ASME Section III, Code Class 1, 1971 Edition with no Addenda.
- New cylinder tube and flange assembly, S/N A8517, ASME Section III, Code Class I, 1974 Edition with Winter 75 Addenda.

Disassembled CRD, S/N 7001, for overhaul. Performed PT examination on the cylinder tube and flange assembly. PT examination results were evaluated to be unacceptable. Performed visual examination on piston tube assembly. Visual examination results acceptable. Reassembled CRD parts and installed new cylinder tube and flange assembly, S/N A8517.

The overhauled CRD, S/N A8517 (old S/N 7001), was installed on the reactor pressure vessel (see note).

Notes:
Cylinder tube and flange serial number is the manufacturer's serial number for identifying the entire CRD assembly.

WASHINGTON PUBLIC POWER SUPPLY SYSTEM

PLAN NO. MWR AT2725

FORM NIS-2 (Back)

8. Tests Conducted: Hydrostatic ☐ Pneumatic ☐ Nominal Operating Pressure ☐ Other ☒ None
Test Pressure _____ psig, Test Temp. _____ °F
Component Design Pressure _____ psig, Temp. _____ °F

9. Remarks:

See attached N-2 Code Data Report for new cylinder tube and flange assembly, S/N A8517.

CERTIFICATE OF COMPLIANCE

We certify that the statements made in the report are correct and this replacement (repair or replacement) conforms to the rules of the ASME Code, Section XI.

Type Code Symbol Stamp Not applicable

Certificate Authorization No. Not applicable Expiration Date Not applicable

Signed [signature] (Owner or Owner's Designee.) Title Plant Technical Manager

R Sumpo 7/21/88

Date 7/21/88 19

CERTIFICATE OF INSERVICE INSPECTION

I, the undersigned, holding a valid commission issued by the National Board of Boiler and Pressure Vessel Inspectors and the State of Washington and employed by Lumbermen's Mutual Casualty Co. of Illinois have inspected the components described in this Owner's Report during the period 12/30/87 to 7/25/88, and state that to the best of my knowledge and belief, the Owner has performed examinations and taken corrective measures described in this Owner's Report in accordance with the requirements of the ASME Code, Section XI.

By signing this certificate neither the Inspector nor his employer makes any warranty, expressed or implied, concerning the examinations and corrective measures described in this Owner's Report. Furthermore, neither the Inspector nor his employer shall be liable in any manner for any personal injury or property damage or a loss of any kind arising from or connected with this inspection.

[signature] (Inspector's Signature) Commissions 7447 W (National Board, State, and Endorsements)

Date July 25 19 88

... AND APPURTENANCES*
... Provision of the ASME Code Rules, Section III, Div. 1

1. Manufactured & Certified by: GE Company, 2117 Castle Hayne Rd., Wilmington, N.C. 28402
(Name and Address of NPT Certificate Holder)

(b) Manufactured for: WNP-2
(Name and Address of N Certificate Holder for completed nuclear component

2. Identification-Certificate Holders's S/N of Part: A8517 Nat'l Bd. No. N/A

(a) Constructed According to Drawing No: 919D258G003 Dwg. Prepared by D. L. Peterson

(b) Description of Part Inspected: CYLINDER TUBE & FLANGE

(c) Applicable ASME Code: Section III, Edition 1974, Addenda Date W'75, Case No. 1361-2 Class 1

3. REMARKS: Sub-assembly of Control Rod Drive for use with reactor.
(Brief description of service for which component was designed)
Hydrostatically tested at 1825 psi. min.

*Sheet 1 of 2 MWR AT2725 Cuddie Supt 7/22/88.

We certify that the statements in this report are correct and this vessel part or appurtenance as defined in the code conforms to the rules of construction of the ASME Code Section III. (The applicable Designed Specification and Stress Report are not the responsibility of the NPT Certificate Holder for parts. An NPT Certification Holder for appurtenances is responsible for furnishing a separate Design Specification and Stress Report if the appurtenance is not included in the component Design Specification and Stress Report).

DATE: 11/10, 19 87 Signed GE-NEBG-NF&CH-OA By J. Stroudemann
(NPT Certificate Holder)

Certificate Of Authorization Expires: 6/16/90 Certification of Authorization No.: NPT N-1151

CERTIFICATION OF DESIGN FOR APPURTENANCE

Design information on file at GE COMPANY, SAN JOSE, CALIFORNIA

Stress analysis report on file at GE COMPANY, SAN JOSE, CALIFORNIA
DC22A6253 Rev. 0
Design specification certified by BJORN HAABERG Prof. Eng. State CALIF. Reg. No. 15570
DC22A6254 Rev. 0.
Stress analysis report certified by EDWARD YOSHIO Prof. Eng. State CALIF. Reg. No. M018646

CERTIFICATION OF SHOP INSPECTION

I, the undersigned, holding a valid commission by the National Board of Boiler and Pressure Inspectors and/or the State or Province of NORTH CAROLINA and employed by DEPARTMENT OF LABOR of STATE OF NORTH CAROLINA have inspected the part of a pressure vessel described in this Partial Data Report on 11-10 1987, and state that to the best of my knowledge and belief, the NPT Certificate Holder has constructed this part in accordance with the ASME Code Section III.

By signing this certificate, neither the Inspector nor his employer makes any warranty, expressed or implied, concerning the part described in the Partial Data Report. Furthermore, neither the Inspector nor his employer shall be liable in any manner for any personal injury or property damages or a loss of any kind arising from or connected with this inspection.

11-10, 1987 J. L. Shoemaker NC 779. PAWC2L60 OHIO
DATE Inspector's Signature National Board, State, Province and No.

Supplemental sheets in form of lists, sketches or drawing may be used provided (1) size is 8-1/2" X 11", (2) information in 1-2 on this Data Report is included on each sheet, and (3) each sheet is numbered and number of sheets is recorded in Item 3. "REMARKS"

1/77)

VERIFIED & ACCEPTED R. Miller 1-5-88.
R.I. Inspector Date

Items 4-9 incl. to be completed for single wall vessels, jackets vessels, or shells of heat exchangers

4. Shell: Material_____ T.S._____ Nominal Thickness___in. Corrosion Allowance___in Dia.___ft.___in. Length___ft.___in.
(Kind & Spec.No) (Min.of Range Specified)

MWRAT 2725

5. Seams: Long_____ H.T.[1]_____ R.T._____ Efficiency_____%

S/N A 8517

Girth_____ H.T.[1]_____ R.T._____ No. of Courses_____

6. Heads: (a) Material_____ T.S._____ (b) Material_____ T.S._____

Tuldup 1/16/88

Location (Top Bottom, Ends)	Thickness	Crown Radius	Knuckle Radius	Elliptical Ratio	Concial Apex Angle	Hemispherical Radius	Flat Diameter	Side to Press. (conv. or conc.)
(a)								
(b)								

If removable, bolts used_____ (Material, Spec.No., T.S. Size Number) Other fastening_____ (Describe or attach sketch)

7. Jacket Closure:_____
(Describe as ogee and weld, bar, etc. If bar give dimensions, if bolts, describe or sketch)

8. Design Pressure[2] 1250 psi at 575 °F

Drop Weight_____
Charpy Impact_____ ft-lb
at temp. of_____ °F

Items 9 and 10 to be completed for tube sections.

9. Tube Sheets: Stationary Mat'l._____ Dia._____ Thickness___in. Attachment_____
(Kind of Spec. No.) (Subj. to Press.) (Welded, Bolted)
Floating. Material_____ Dia._____ Thickness___in. Attachment_____

10. Tubes: Material_____ O.D.___in. Thickness___ inches or gage. Number___ Type_____ (Str. or U)

Items 11-14 incl. to be completed for inner chambers of jacketed vessels, or channels of heat exchangers

11. Shell: Material_____ T.S._____ Nominal Thickness___in. Corrosion Allowance___in. Dia.___ft.___in Length___ft.___in.
(Kind&Spec.No.) (Min.of Range Specified).

12. Seams: Long_____ H.T.[1]_____ R.T._____ Efficiency_____%
Girth_____ H.T.[1]_____ R.T._____ No. of Courses_____

13. Heads (a) Material_____ T.S._____ (b) Material_____ T.S._____

Location	Tienkess	Crown Radius	Knucle Radius	Elliptical Ratio	Concial Apex Angle	Hemispherical Radius	Fat Diameter	Side to Press (Conv. or Conc.)
(a) Top, Bottom, End								
(b) Channel								

If removable, bolts used (a)_____ (b)_____ (c)_____ Other Fastening_____ (Describe or attach sketch

14. Design pressure[2]_____ psi at_____ °F

Drop Weight_____
Charpy Impact_____ ft-lb
at temp. of_____ °F

Items below to be completed for all vessels where applicable.

15. Safety Valve Outlets: Number_____ Size_____ Location_____

16. Nozzles:

Purpose (Inlet Outlet, Drain)	Number	Dia or Size	Type	Material	Thickness	Reinforcement Material	Attached

17. Inspection Openings: Manholes, No._____ Size_____ Location_____
Handles, No._____ Size_____ Location_____
Threaded, No._____ Size_____ Location_____

18. Supports: Shirt_____ (Yes or No) Lugs_____ (Number) Legs_____ (Number) Other_____ (Describe) Attached_____ (Where & How)

[1] If Postweld Heat-Treated.
[2] List other internal or external pressure with conincident temperature when applicalbe.

WASHINGTON PUBLIC POWER SUPPLY SYSTEM

PLAN NO. MWR AT2726

FORM NIS-2 OWNER'S REPORT FOR REPAIRS OR REPLACEMENTS
As Required by the Provisions of the ASME Code Section XI

1. Owner (Name) Washington Public Power Supply System — Date 7/21/88
   Owner (Address) 3000 George Washington Way, Richland, WA — Sheet 1 of 1
2. Plant (Name) WPPSS Nuclear Power Plant (WNP) — Unit WNP-2
   Plant (Address) Hanford, Benton County, WA — WPPSS Repair Organization P.O. No., Job No., etc.
3. Work Performed by (Name) WPPSS
   Work Performed by (Address) 3000 George Washington Way, Richland, WA.
4. Identification of System Control Rod Drive (CRD)
5. (a) Applicable Construction Code ASME Section III 19 71 Edition, None Addenda, None Code Case
   (b) Applicable Edition of ASME Section XI Utilized for Repairs or Replacements 19 80 Edition, W80 Addenda, N308 Code Case
6. Identification of Components Repaired or Replaced and Replacement Components

Name of Component	Name of Manufacturer	Manufacturer Serial No.	National Board No.	Other I.D.	Year Built	Repaired, Replaced, or Replacement	ASME Code Stamped (Yes or No) Code Class
CRD	GE	6511	N/A	N/A	1975	Replacement	Yes, Class 1
CT&F	GE	A8534	N/A	N/A	1987	Replacement	Yes, Class 1

7. Description of Work:

- Existing CRD, S/N 6511; ASME Section III, Code Class 1, 1971 Edition with no Addenda.
- New cylinder tube and flange assembly, S/N A8534, ASME Section III, Code Class I, 1974 Edition with Winter 75 Addenda.

Disassembled CRD, S/N 6511, for overhaul. Performed PT examination on the cylinder tube and flange assembly. PT examination results were evaluated to be unacceptable. Performed visual examination on piston tube assembly. Visual examination results acceptable. Reassembled CRD parts and installed new cylinder tube and flange assembly, S/N A8534.

The overhauled CRD, S/N A8534 (old S/N 6511), was installed on the reactor pressure vessel (see note).

Notes:
Cylinder tube and flange serial number is the manufacturer's serial number for identifying the entire CRD assembly.

WASHINGTON PUBLIC POWER SUPPLY SYSTEM

PLAN NO. MWR AT2726

FORM NIS-2 (Back)

8. Tests Conducted: Hydrostatic ☐ Pneumatic ☐ Nominal Operating Pressure ☐ Other ☒ None
Test Pressure _____ psig, Test Temp. _____ °F
Component Design Pressure _____ psig, Temp. _____ °F

9. Remarks:

See attached N-2 Code Data Report for new cylinder tube and flange assembly, S/N A8534.

CERTIFICATE OF COMPLIANCE

We certify that the statements made in the report are correct and this replacement (repair or replacement) conforms to the rules of the ASME Code, Section XI.

Type Code Symbol Stamp Not applicable

Certificate Authorization No. Not applicable Expiration Date Not applicable

Signed [signature] Owner or Owner's Designee. Title Plant Technical Manager

R. Ruggs 7/21/88

Date 7/21/88 19____

CERTIFICATE OF INSERVICE INSPECTION

I, the undersigned, holding a valid commission issued by the National Board of Boiler and Pressure Vessel Inspectors and the State of Washington and employed by Lumbermen's Mutual Casualty Co. of Illinois have inspected the components described in this Owner's Report during the period 12/30/87 to 7/25/88, and state that to the best of my knowledge and belief, the Owner has performed examinations and taken corrective measures described in this Owner's Report in accordance with the requirements of the ASME Code, Section XI.

By signing this certificate neither the Inspector nor his employer makes any warranty, expressed or implied, concerning the examinations and corrective measures described in this Owner's Report. Furthermore, neither the Inspector nor his employer shall be liable in any manner for any personal injury or property damage or a loss of any kind arising from or connected with this inspection.

[signature] Inspector's Signature Commissions 7447-W National Board, State, and Endorsements

Date July 25 19 88

-s required by the Provision of the ASME Code Rules, Section III, Div. 1

& Certified by: GE Company, 2117 Castle Hayne Rd., Wilmington, N.C. 28402
(Name and Address of NPT Certificate Holder)

.factured for: WNP-2
(Name and Address of N Certificate Holder for completed nuclear component)

.fication-Certificate Holders's S/N of Part: A8534 Nat'l Bd. No. N/A

(a) onstructed According to Drawing No: 919D258G003 Dwg. Prepared by D. L. Peterson

(b) Description of Part Inspected: CYLINDER TUBE & FLANGE

(c) Applicable ASME Code: Section III, Edition 1974, Addenda Date W'75, Case No. 1361-2 Class 1

REMARKS: Sub-assembly of Control Rod Drive for use with reactor.
(Brief description of service for which component was designed)
Hydrostatically tested at 1825 psi. min.

heet 1 of 2 MWR AT 2726 Quality Supt 7/22/88

certify that the statements in this report are correct and this vessel part or appurtenance defined in the code conforms to the rules of construction of the ASME Code Section III. he applicable Designed Specification and Stress Report are not the responsibility of the NPT rtificate Holder for parts. An NPT Certification Holder for appurtenances is responsible r furnishing a separate Design Specification and Stress Report if the appurtenance is not cluded in the component Design Specification and Stress Report).

TE: 11/10, 19 87 Signed GE-NEBG-NF&CM-OA By J. Ettrudemmie
(NPT Certificate Holder)

rtificate Of Authorization Expires: 6/16/90 Certification of Authorization No.: NPT N-1151

CERTIFICATION OF DESIGN FOR APPURTENANCE

ign information on file at GE COMPANY, SAN JOSE, CALIFORNIA

nalysis report on file at GE COMPANY, SAN JOSE, CALIFORNIA
2A6253 Rev. 0
gn specification certified by BJORN HAABERG Prof. Eng. State CALIF. Reg. No. 15570
2A6254 Rev. 0.
ess analysis report certified by EDWARD YOSHIO Prof. Eng. State CALIF. Reg. No. M018646

CERTIFICATION OF SHOP INSPECTION

, the undersigned, holding a valid commission by the National Board of Boiler and Pressure pectors and/or the State or Province of NORTH CAROLINA and employed by DEPARTMENT OF LABOR STATE OF NORTH CAROLINA have inspected the part of a pressure vessel described in this tial Data Report on 11-10 1987, and state that to the best of my knowledge belief, the NPT Certificate Holder has constructed this part in accordance with the ASME de Section III.

By signing this certificate, neither the Inspector nor his employer makes any warranty, pressed or implied, concerning the part described in the Partial Data Report. Furthermore, ither the Inspector nor his employer shall be liable in any manner for any personal injury property damages or a loss of any kind arising from or connected with this inspection.

11-10, 1987 J. F. Thomas NC.779 PPWE 2260 - OHIO
TE. Inspector's Signature National Board, State, Province and No.

upplemental sheets in form of lists, sketches or drawing may be used provided (1) size is -1/2" X 11", (2) information in 1-2 on this Data Report is included on each sheet, and (3) ch sheet is numbered and number of sheets is recorded in Item 3. "REMARKSs"

/7

VERIFIED & ACCEPTED R.J. Miller 1-5-88
R.I. Inspector Date

Items 4-8 Incl. to be completed for single wall vessels, jackets vessels, or shells of heat exchanger

4. Shell: Material_____ T.S._____ Nominal Thickness___in. Corrosion Allowance____in Dia.____ft.___in. Length___ft.___in.
(Kind & Spec.No) (Min.ofRange Specified)

MWR AT2726

5. Seams: Long_____ H.T.[1]_____ R.T._____ Efficiency_____%

Girth_____ H.T.[1]_____ R.T._____ No. of Courses_____

S/N A8534

6. Heads: (a) Material_____ T.S._____ (b)Material_____ T.S._____

Weldup 1/15/88

Location (Top Bottom,Ends)	Thickness	Crown Radius	Knuckle Radius	Elliptical Ratio	Concial Apex Angle	Hemispherical Radius	Flat Diameter	Side to Press. (conv.or conc.)
(a)_____	_____	_____	_____	_____	_____	_____	_____	_____
(b)_____	_____	_____	_____	_____	_____	_____	_____	_____

If removable, bolts used_____ Other fastening_____
(Material,Spec.No., T.S. Size Number) (Describe or attach sketch)

7. Jacket Closure:_____
(Describe as ogee and weld,bar,etc. If bar give dimensions, if bolts, describe or sketch)

8. Design Pressure[2] 1250 psi at 575 °F

Drop Weight_____
Charpy Impact_____ ft-lb
at temp. of_____ °F

Items 9 and 10 to be completed for tube sections.

9. Tube Sheets: Stationary Mat'l._____ Dia._____ Thickness___in. Attachment_____
(Kind of Spec. No.) (Subj.to Press.) (Welded, Bolted)

Floating. Material _____ Dia._____ Thickness___in. Attachment_____

10. Tubes: Material_____ O.D.____in. Thickness_____ inches or gage. Number____ Type_____
(Str. or U)

Items 11-14 incl. to be completed for inner chambers of jacketed vessels. or channels of heat exchangers

11. Shell: Material____ T.S.____ Nominal Thickness___in. Corrosion Allowance___in. Dia.___ft.___in___Length___ft.___in.
(Kind&Spec.No.) (Min.ofRange Specified)

12. Seams: Long_____ H.T.[1]_____ R.T._____ Efficiency_____%

Girth_____ H.T.[1]_____ R.T._____ No. of Courses_____

13. Heads (a) Material_____ T.S._____ (b)Material_____ T.S._____

Location	Ticnkess	Crown Radius	Knucle Radius	Elliptical Ratio	Concial Apex Angle	Hemispherical Radius	Fat Diameter	Side to Press (Conv.or Conc.)
(a)Top, Bottom, End	_____	_____	_____	_____	_____	_____	_____	_____
(b)Channel	_____	_____	_____	_____	_____	_____	_____	_____

If removable, bolts used (a)_____ (b)_____ (c)_____ Other Fastening_____
(Describe or attach sketch

Drop Weight_____
Charpy Impact_____ ft-lb
at temp. of _____ °F

14. Design pressure[2]_____ psi at_____ °F

Items below to be completed for all vessels where applicable.

15. Safety Valve Outlets: Number_____ Size_____ Location_____

16. Nozzles:

Purpose (Inlet Outlet, Drain)	Number	Dia or Size	Type	Material	Thickness	Reinforcement Material	Attached
_____	_____	_____	_____	_____	_____	_____	_____
_____	_____	_____	_____	_____	_____	_____	_____

17. Inspection Openings: Manholes, No._____ Size_____ Location_____
Handles, No._____ Size_____ Location_____
Threaded, No._____ Size_____ Location_____

18. Supports: Shirt_____ Lugs_____ Legs_____ Other_____ Attached_____
(Yes or No) (Number) (Number) (Describe) (Where & How)

[1] If Postweld Heat-Treated.
[2] List other internal or external pressure with conincident temperature when applicalbe.

WASHINGTON PUBLIC POWER SUPPLY SYSTEM

PLAN NO. MWR AT2727

FORM NIS-2 OWNER'S REPORT FOR REPAIRS OR REPLACEMENTS
As Required by the Provisions of the ASME Code Section XI

1. Owner (Name) Washington Public Power Supply System — Date 2/3/88
   Owner (Address) 3000 George Washington Way, Richland, WA — Sheet 1 of 1
2. Plant (Name) WPPSS Nuclear Power Plant (WNP) — Unit WNP-2
   Plant (Address) Hanford, Benton County, WA — WPPSS (Repair Organization P.O. No., Job No., etc.)
3. Work Performed by (Name) WPPSS
   Work Performed by (Address) 3000 George Wash. Way, Richland, WA
4. Identification of System Control Rod Drive (CRD)
5. (a) Applicable Construction Code ASME Section III 19 71 Edition, None Addenda, None Code Case
   (b) Applicable Edition of ASME Section XI Utilized for Repairs or Replacements 19 80 Edition, W80 Addenda, N308 Code Case
6. Identification of Components Repaired or Replaced and Replacement Components

Name of Component	Name of Manufacturer	Manufacturer Serial No.	National Board No.	Other I.D.	Year Built	Repaired, Replaced, or Replacement	ASME Code Stamped (Yes or No) Code Class
CRD	GE	6727	N/A	N/A	1975	Replacement	Yes,Class 1

7. Description of Work:

- Existing CRD, S/N 6727-ASME Section III, Code Class 1, 1971 Edition with no Addenda.
- New Piston Tube Assembly, S/N 2172-ASME Section III, Code Class 1, 1971 Edition with Winter 72 Addenda.

Disassembled CRD, S/N 6727 for overhaul. Performed PT examination on the cylinder tube and flange assembly, S/N 6727. PT examination results acceptable. Performed visual examination on the piston tube assembly, S/N 8094. Visual examination results were evaluated to be unacceptable. Reassembled CRD parts and installed new piston tube assembly, S/N 2172.

The overhauled CRD, S/N 6727 placed in spare CRD pool.

Notes:

WASHINGTON PUBLIC POWER SUPPLY SYSTEM

PLAN NO. MWR AT2727

FORM NIS-2 (Back)

8. Tests Conducted: Hydrostatic ☐ Pneumatic ☐ Nominal Operating Pressure ☐ Other ☒ None
Test Pressure _____ psig, Test Temp. _____ °F
Component Design Pressure _____ psig, Temp. _____ °F

9. Remarks:

See attached N-2 Code Data report for new piston tube assembly, S/N 2172.

CERTIFICATE OF COMPLIANCE

We certify that the statements made in the report are correct and this replacement (repair or replacement) conforms to the rules of the ASME Code, Section XI.

Type Code Symbol Stamp Not applicable

Certificate Authorization No. Not applicable Expiration Date Not applicable

Signed [illegible] (Owner or Owner's Designee,) Title Plant Technical Manager

Date 2/8/88 19 88

CERTIFICATE OF INSERVICE INSPECTION

I, the undersigned, holding a valid commission issued by the National Board of Boiler and Pressure Vessel Inspectors and the State of Washington and employed by Lumbermen's Mutual Casualty Co. of Illinois have inspected the components described in this Owner's Report during the period 2/5/88 to 2/8/88, and state that to the best of my knowledge and belief, the Owner has performed examinations and taken corrective measures described in this Owner's Report in accordance with the requirements of the ASME Code, Section XI.

By signing this certificate neither the Inspector nor his employer makes any warranty, expressed or implied, concerning the examinations and corrective measures described in this Owner's Report. Furthermore, neither the Inspector nor his employer shall be liable in any manner for any personal injury or property damage or a loss of any kind arising from or connected with this inspection.

[illegible] (Inspector's Signature) Commissions 9556 W (National Board, State, and Endorsements)

Date 2/8 19 88

FORM N-2 NPT CERTIFICATE HOLDERS' DATA REPORT FOR NUCLEAR PART AND APPURTENANCES*

As required by the Provision of the ASME Code Rules, Section III, Div. 1

CORRECTED COPY

1. (a) Manufactured by General Electric Co., Castle Hayne Rd., Wilmington, N.C.
(Name and address of NPT Certificate Holder)

MWR AT2727

(b) Manufactured for General Electric Co., San Jose, California (NEBG)
(Name and address of N Certificate Holder for completed nuclear component)

Culdip Singh 2/3/88

2. Identification-Certificate Holder's Serial No. of Part 2172 Nat'l Bd. No. _____

(a) Constructed According to Drawing No. 798D228G 010 Drawing Prepared by D. L. Peterson

(b) Description of Part Inspected Piston Tube Assembly

(c) Applicable ASME Code: Section III, Edition 1971, Addenda date W'72, Case No. _____ Class 1

3. Remarks: Standard part for use with Reactor. Hydrostatically tested at 1820 psi.
(Brief description of service for which component was designed)

New piston tube S/N 2172 installed in CRD S/N 6727

Culdip Singh 7/23/87.

CORRECTED COPY: CHANGED #2c from 1977, NONE to 1971, W'72

We certify that the statements made in this report are correct and this vessel part or appurtenance as defined in the Code conforms to the rules of construction of the ASME Code Section III.
(The applicable Design Specification and Stress Report are not the responsibility of the NPT Certificate Holder for parts. An NPT Certificate Holder for appurtenances is responsible for furnishing a separate Design Specification and Stress Report if the appurtenance is not included in the component Design Specification and Stress Report.)

Date 9/4 19 81 Signed GE, NEPD-WMD-QA (NPT Certificate Holder) By J. Ottendorfer

Certificate of Authorization Expires June 16, 1981 Certificate of Authorization No. NPT-N-1151

CERTIFICATION OF DESIGN FOR APPURTENANCE (when applicable)

Design information on file at General Electric Co., NEPD-WMD-QA, Castle Hayne Rd., Wilmington

Stress analysis report on file at General Electric Co., NEPD-WMD-QA, Castle Hayne Rd., Wilmington

Design specifications certified by Vernon W. Pence Prof. Eng. State Calif. Reg. No. 14488

Stress analysis report certified by Vernon W. Pence Prof. Eng. State Calif. Reg. No. 14488

CERTIFICATE OF SHOP INSPECTION

I, the undersigned, holding a valid commission issued by the National Board of Boiler and Pressure Vessel Inspectors and/or the State or Province of North Carolina and employed by Department of Labor of State of North Carolina have inspected the part of a pressure vessel described in this Partial Data Report on 6/29 1979, and state that to the best of my knowledge and belief, the NPT Certificate Holder has constructed this part in accordance with the ASME Code Section III.

By signing this certificate, neither the Inspector nor his employer makes any warranty, expressed or implied, concerning the part described in this Partial Data Report. Furthermore, neither the Inspector nor his employer shall be liable in any manner for any personal injury or property damage or a loss of any kind arising from or connected with this inspection.

Date 9/4 19 81

E. Sherrill
Inspector's Signature

Commissions N.C. 723, PA.WC1766, OHIO
National Board, State, Province and No.

*Supplemental sheets in form of lists, sketches or drawings may be used provided (1) size is 8½" x 11", (2) information in items 1-2 on this Data Report is included on each sheet, and (3) each sheet is numbered and number of sheets is recorded in Item 3, "Remarks".

(10/77) *Form (E00040) may be obtained from the Order Dept., ASME, 345 E. 47th St., New York, N.Y. 10017

FORM N-2 (back) S/N: 2172

Items 4–8 incl. to be completed for single wall vessels, jackets of jacketed vessels, or shells of heat exchangers.

4. Shell: Material _____ (Kind & Spec. No.) T.S. _____ (Min. of Range Specified) Nominal Thickness ____ in. Corrosion Allowance ____ in. Dia. ____ ft. ____ in. Length ____ ft. ____ in.

5. Seams: Long _____ H.T.[1] _____ R.T. _____ Efficiency _____ %

Girth _____ H.T.[1] _____ R.T. _____ No. of Courses _____

6. Heads: (a) Material _____ T.S. _____ (b) Material _____ T.S. _____

Location (Top, bottom, ends)	Thickness	Crown Radius	Knuckle Radius	Elliptical Ratio	Conical Apex Angle	Hemispherical Radius	Flat Diameter	Side to Press. (Conv. or Conc.)
(a)								
(b)								

If removable, bolts used _____ (Material, Spec. No., T.S., Size, Number) Other fastening _____ (Describe or attach sketch)

7. Jacket Closure: _____ (Describe as ogee and weld, bar, etc. If bar give dimensions, if bolted, describe or sketch)

8. Design pressure[2] 1250 psi at 575 °F Drop Weight _____ Charpy Impact _____ ft-lb at temp. of _____ °F

Items 9 and 10 to be completed for tube sections

9. Tube Sheets: Stationary. Material _____ (Kind & Spec. No.) Dia. _____ (Subject to pressure) Thickness ____ in. Attachment _____ (Welded, Bolted)

Floating. Material _____ Dia. _____ Thickness ____ in. Attachment _____

10. Tubes: Material _____ O.D. ____ in. Thickness _____ inches or gage. Number _____ Type _____ (Str. or U)

Items 11–14 incl. to be completed for inner chambers of jacketed vessels, or channels of heat exchangers.

11. Shell: Material _____ (Kind & Spec. No.) T.S. _____ (Min. of Range Specified) Nominal Thickness ____ in. Corrosion Allowance ____ in. Dia. ____ ft. ____ in. Length ____ ft. ____ in.

12. Seams: Long _____ H.T.[1] _____ R.T. _____ Efficiency _____ %

Girth _____ H.T.[1] _____ R.T. _____ No. of Courses _____

13. Heads (a) Material _____ T.S. _____ (b) Material _____ T.S. _____

Location	Thickness	Crown Radius	Knuckle Radius	Elliptical Ratio	Conical Apex Angle	Hemispherical Radius	Flat Diameter	Side to Press. (Conv. or Conc.)
(a) Top, bottom, ends								
(b) Channel								

If removable, bolts used (a) _____ (b) _____ (c) _____ Other fastening _____ (Describe or attach sketch)

14. Design pressure[2] _____ psi at _____ °F Drop Weight _____ Charpy Impact _____ ft-lb at temp. of _____ °F

Items below to be completed for all vessels where applicable.

15. Safety Valve Outlets: Number _____ Size _____ Location _____

16. Nozzles:

Purpose (Inlet, Outlet, Drain)	Number	Dia. or Size	Type	Material	Thickness	Reinforcement Material	How Attached

17. Inspection Openings: Manholes, No. _____ Size _____ Location _____
Handholes, No. _____ Size _____ Location _____
Threaded, No. _____ Size _____ Location _____

18. Supports: Skirt _____ (Yes or No) Lugs _____ (Number) Legs _____ (Number) Other _____ (Describe) Attached _____ (Where & How)

[1] If Postweld Heat-Treated.
[2] List other internal or external pressure with coincident temperature when applicable.

WASHINGTON PUBLIC POWER SUPPLY SYSTEM

PLAN NO. MWR AT2728

FORM NIS-2 OWNER'S REPORT FOR REPAIRS OR REPLACEMENTS
As Required by the Provisions of the ASME Code Section XI

1. Owner (Name) Washington Public Power Supply System — Date 2/3/93
   Owner (Address) 3000 George Washington Way, Richland, WA — Sheet 1 of 1
2. Plant (Name) WPPSS Nuclear Power Plant (WNP) — Unit WNP-2
   Plant (Address) Hanford, Benton County, WA — WPPSS (Repair Organization P.O. No., Job No., etc.)
3. Work Performed by (Name) WPPSS
   Work Performed by (Address) 3000 George Wash. Way, Richland, WA
4. Identification of System Control Rod Drive (CRD)
5. (a) Applicable Construction Code ASME Section III 19 71 Edition, None Addenda, None Code Case
   (b) Applicable Edition of ASME Section XI Utilized for Repairs or Replacements 19 80 Edition, W80 Addenda, N308 Code Case
6. Identification of Components Repaired or Replaced and Replacement Components

Name of Component	Name of Manufacturer	Manufacturer Serial No.	National Board No.	Other I.D.	Year Built	Repaired, Replaced, or Replacement	ASME Code Stamped (Yes or No) Code Class
CRD	GE	6343	N/A	N/A	1974	Replacement	Yes,Class 1

7. Description of Work:

- Existing CRD, S/N 6343-ASME Section III, Code Class 1, 1971 Edition with no Addenda.
- New Piston Tube Assembly, S/N 2015-ASME Section III, Code Class 1, 1971 Edition with Winter 72 Addenda.

Disassembled CRD, S/N 6343 for overhaul. Performed PT examination on the cylinder tube and flange assembly, S/N 6343. PT examination results acceptable. Performed visual examination on the piston tube assembly, S/N 5471. Visual examination results were evaluated to be unacceptable. Reassembled CRD parts and installed new piston tube assembly, S/N 2015.

The overhauled CRD, S/N 6343 placed in spare CRD pool.

Notes:

WASHINGTON PUBLIC POWER SUPPLY SYSTEM

PLAN NO. MWR AT2728

FORM NIS-2 (Back)

8. Tests Conducted: Hydrostatic ☐ Pneumatic ☐ Nominal Operating Pressure ☐ Other ☒ None
Test Pressure _____ psig, Test Temp. _____ °F
Component Design Pressure _____ psig, Temp. _____ °F

9. Remarks:

See attached N-2 code data report for new piston tube assembly, S/N 2015.

CERTIFICATE OF COMPLIANCE

We certify that the statements made in the report are correct and this replacement (repair or replacement) conforms to the rules of the ASME Code, Section XI.

Type Code Symbol Stamp Not applicable

Certificate Authorization No. Not applicable Expiration Date Not applicable

Signed [signature] Owner or Owner's Designee, Title Plant Technical Manager

Date 2/8 19 88

CERTIFICATE OF INSERVICE INSPECTION

I, the undersigned, holding a valid commission issued by the National Board of Boiler and Pressure Vessel Inspectors and the State of Washington and employed by Lumbermen's Mutual Casualty Co. of Illinois have inspected the components described in this Owner's Report during the period 2/5/88 to 2/8/88, and state that to the best of my knowledge and belief, the Owner has performed examinations and taken corrective measures described in this Owner's Report in accordance with the requirements of the ASME Code, Section XI.

By signing this certificate neither the Inspector nor his employer makes any warranty, expressed or implied, concerning the examinations and corrective measures described in this Owner's Report. Furthermore, neither the Inspector nor his employer shall be liable in any manner for any personal injury or property damage or a loss of any kind arising from or connected with this inspection.

[signature] Inspector's Signature Commissions 9556 W National Board, State, and Endorsements

Date 2/8 19 88

FORM N-2 NPT CERTIFICATE HOLDERS' DATA REPORT FOR NUCLEAR PART AND APPURTENANCES*

As required by the Provision of the ASME Code Rules, Section III, Div. 1

CORRECTED COPY

1. (a) Manufactured by General Electric Co., Castle Hayne Rd., Wilmington, N.C.
(Name and address of NPT Certificate Holder)

MWR AT2728
Rudolph Eurich
2/3/88

(b) Manufactured for General Electric Co., San Jose, California (NEBG)
(Name and address of N Certificate Holder for completed nuclear component)

2. Identification-Certificate Holder's Serial No. of Part 2015 Nat'l Bd. No.

(a) Constructed According to Drawing No. 798D229G 010 Drawing Prepared by D. L. Peterson

(b) Description of Part Inspected Piston Tube Assembly

(c) Applicable ASME Code: Section III, Edition 1971, Addenda date W'72, Case No. Class 1

3. Remarks: Standard part for use with Reactor, Hydrostatically tested at 1820 psi.
(Brief description of service for which component was designed)

New piston tube S/N 2015 installed in CRD S/N 6343

Rudolph Eurich
7/23/87.

CORRECTED COPY: CHANGED #2c from 1977, NONE to 1971, W'72

We certify that the statements made in this report are correct and this vessel part or appurtenance as defined in the Code conforms to the rules of construction of the ASME Code Section III.
(The applicable Design Specification and Stress Report are not the responsibility of the NPT Certificate Holder for parts. An NPT Certificate Holder for appurtenances is responsible for furnishing a separate Design Specification and Stress Report if the appurtenance is not included in the component Design Specification and Stress Report.)

Date 9/4 19 81 Signed GE, NEPD-WMD-QA By J. Ottenhausen
(NPT Certificate Holder)

Certificate of Authorization Expires June 16, 1981 Certificate of Authorization No. NPT-N-1151

CERTIFICATION OF DESIGN FOR APPURTENANCE (when applicable)

Design information on file at General Electric Co., NEPD-WMD-QA, Castle Hayne Rd., Wilmington

Stress analysis report on file at General Electric Co., NEPD-WMD-QA, Castle Hayne Rd., Wilmington

Design specifications certified by Vernon W. Pence Prof. Eng. State Calif. Reg. No. 14488

Stress analysis report certified by Vernon W. Pence Prof. Eng. State Calif. Reg. No. 14488

CERTIFICATE OF SHOP INSPECTION

I, the undersigned, holding a valid commission issued by the National Board of Boiler and Pressure Vessel Inspectors and/or the State or Province of North Carolina and employed by Department of Labor of State of North Carolina have inspected the part of a pressure vessel described in this Partial Data Report on 6/29 19 79, and state that to the best of my knowledge and belief, the NPT Certificate Holder has constructed this part in accordance with the ASME Code Section III.

By signing this certificate, neither the Inspector nor his employer makes any warranty, expressed or implied, concerning the part described in this Partial Data Report. Furthermore, neither the Inspector nor his employer shall be liable in any manner for any personal injury or property damage or a loss of any kind arising from or connected with this inspection.

Date 9/4 19 81

E. L. Skerrill
Inspector's Signature

Commissions N.C. 723, PA.WC1766, OHIO
National Board, State, Province and No.

*Supplemental sheets in form of lists, sketches or drawings may be used provided (1) size is 8½" x 11", (2) information on items 1-3 on this form is included on each sheet, and (3) each sheet is referenced, signed and dated.

FORM N-2 (L-2) S/N: 2015

Items 4–8 incl. to be completed for single wall vessels, jackets of jacketed vessels, or shells of heat exchangers.

4. Shell: Material _____ (Kind & Spec. No.) T.S. _____ (Min. of Range Specified) Nominal Thickness ____ in. Corrosion Allowance ____ in. Dia. ____ ft. ____ in. Length ____ ft. ____ in.

5. Seams: Long _____ H.T.[1] _____ R.T. _____ Efficiency _____ %

Girth _____ H.T.[1] _____ R.T. _____ No. of Courses _____

6. Heads: (a) Material _____ T.S. _____ (b) Material _____ T.S. _____

Location (Top, bottom, ends)	Thickness	Crown Radius	Knuckle Radius	Elliptical Ratio	Conical Apex Angle	Hemispherical Radius	Flat Diameter	Side to Press. (Conv. or Conc.)
(a)								
(b)								

If removable, bolts used _____ (Material, Spec. No., T.S., Size, Number) Other fastening _____ (Describe or attach sketch)

7. Jacket Closure: _____ (Describe as edge and weld, bar, etc. If bar give dimensions, if bolted, describe or sketch)

8. Design pressure[2] 1250 psi at 575 °F

Drop Weight _____
Charpy Impact _____ ft-lb
at temp. of _____ °F

Items 9 and 10 to be completed for tube sections

9. Tube Sheets: Stationary. Material _____ (Kind & Spec. No.) Dia. _____ (Subject to pressure) Thickness ____ in. Attachment _____ (Welded, Bolted)

Floating. Material _____ Dia. _____ Thickness ____ in. Attachment _____

10. Tubes: Material _____ O.D. ____ in. Thickness _____ inches or gage. Number _____ Type _____ (Str. or U)

Items 11–14 incl. to be completed for inner chambers of jacketed vessels, or channels of heat exchangers.

11. Shell: Material _____ (Kind & Spec. No.) T.S. _____ (Min. of Range Specified) Nominal Thickness ____ in. Corrosion Allowance ____ in. Dia. ____ ft. ____ in. Length ____ ft. ____ in.

12. Seams: Long _____ H.T.[1] _____ R.T. _____ Efficiency _____ %

Girth _____ H.T.[1] _____ R.T. _____ No. of Courses _____

13. Heads (a) Material _____ T.S. _____ (b) Material _____ T.S. _____

Location	Thickness	Crown Radius	Knuckle Radius	Elliptical Ratio	Conical Apex Angle	Hemispherical Radius	Flat Diameter	Side to Press. (Conv. or Conc.)
(a) Top, bottom, ends								
(b) Channel								

If removable, bolts used (a) _____ (b) _____ (c) _____ Other fastening _____ (Describe or attach sketch)

14. Design pressure[2] _____ psi at _____ °F

Drop Weight _____
Charpy Impact _____ ft-lb
at temp. of _____ °F

Items below to be completed for all vessels where applicable.

15. Safety Valve Outlets: Number _____ Size _____ Location _____

16. Nozzles:

Purpose (Inlet, Outlet, Drain)	Number	Dia. or Size	Type	Material	Thickness	Reinforcement Material	How Attached

17. Inspection Openings: Manholes, No. _____ Size _____ Location _____
Handholes, No. _____ Size _____ Location _____
Threaded, No. _____ Size _____ Location _____

18. Supports: Skirt _____ (Yes or No) Lugs _____ (Number) Legs _____ (Number) Other _____ (Describe) Attached _____ (Where & How)

[1] If Postweld Heat-Treated
[2] List other internal or external pressure with coincident temperature when applicable.

WASHINGTON PUBLIC POWER SUPPLY SYSTEM

PLAN NO. MWR AT2729

FORM NIS-2 OWNER'S REPORT FOR REPAIRS OR REPLACEMENTS
As Required by the Provisions of the ASME Code Section XI

1. Owner (Name) Washington Public Power Supply System — Date 2/8/88
   Owner (Address) 3000 George Washington Way, Richland, WA — Sheet 1 of 1
2. Plant (Name) WPPSS Nuclear Power Plant (WNP) — Unit WNP-2
   Plant (Address) Hanford, Benton County, WA — WPPSS (Repair Organization P.O. No., Job No., etc.)
3. Work Performed by (Name) WPPSS
   Work Performed by (Address) 3000 George Wash. Way, Richland, WA
4. Identification of System Control Rod Drive (CRD)
5. (a) Applicable Construction Code ASME Section III 1971 Edition, None Addenda, None Code Case
   (b) Applicable Edition of ASME Section XI Utilized for Repairs or Replacements 1980 Edition, W80 Addenda, N308 Code Case
6. Identification of Components Repaired or Replaced and Replacement Components

Name of Component	Name of Manufacturer	See Note Manufacturer Serial No.	National Board No.	Other I.D.	Year Built	Repaired, Replaced, or Replacement	ASME Code Stamped (Yes or No) Code Class
CRD	GE	7079/ A5697	N/A	N/A	1975	Replacement	Yes,Class 1

7. Description of Work:

- Existing CRD, S/N 7079-ASME Section III, Code Class 1, 1971 Edition with no Addenda.
- New Cylinder Tube and Flange assembly, S/N A5697-ASME Section III, Code Class 1, 1974 Edition with Winter 75 Addenda.

Disassembled CRD, S/N 7079 for overhaul. Performed PT examination on the cylinder tube and flange assembly. PT examination results were evaluated to be unacceptable. Performed visual examination on piston tube assembly. Visual examination results acceptable. Reassembled CRD parts and installed new cylinder tube and flange assembly, S/N A5697.

The overhauled CRD, S/N A5697 (old S/N 7079) placed in CRD spare pool.(see note)

Notes:

Cylinder tube and flange serial number is the manufacturer's serial number for identifying the entire CRD assembly.

WASHINGTON PUBLIC POWER SUPPLY SYSTEM

PLAN NO. MWR AT2729

FORM NIS-2 (Back)

8. Tests Conducted: Hydrostatic ☐ Pneumatic ☐ Nominal Operating Pressure ☐ Other ☒ None
Test Pressure _____ psig, Test Temp. _____ °F
Component Design Pressure _____ psig, Temp. _____ °F

9. Remarks:

See attached N-2 code data report for new cylinder tube and flange assembly, S/N A5697.

CERTIFICATE OF COMPLIANCE

We certify that the statements made in the report are correct and this replacement (repair or replacement) conforms to the rules of the ASME Code, Section XI.

Type Code Symbol Stamp Not applicable

Certificate Authorization No. Not applicable Expiration Date Not applicable

Signed [signature] (Owner or Owner's Designee, Title) Title Plant Technical Manager

Date 2/8 19 88

CERTIFICATE OF INSERVICE INSPECTION

I, the undersigned, holding a valid commission issued by the National Board of Boiler and Pressure Vessel Inspectors and the State of Washington and employed by Lumbermen's Mutual Casualty Co. of Illinois have inspected the components described in this Owner's Report during the period 2/5/88 to 2/8/88, and state that to the best of my knowledge and belief, the Owner has performed examinations and taken corrective measures described in this Owner's Report in accordance with the requirements of the ASME Code, Section XI.

By signing this certificate neither the Inspector nor his employer makes any warranty, expressed or implied, concerning the examinations and corrective measures described in this Owner's Report. Furthermore, neither the Inspector nor his employer shall be liable in any manner for any personal injury or property damage or a loss of any kind arising from or connected with this inspection.

[signature] (Inspector's Signature) Commissions 9556 W (National Board, State, and Endorsements)

Date 2/8 19 88

FORM N-2 NPT CERTIFICATE HOLDERS' DATA REPORT FOR NUCLEAR PART AND APPURTENANCES*

As required by the Provision of the ASME Code Rules, Section III, Div. 1

CORRECTED COPY

1. (a) Manufactured by General Electric Co., Castle Bayne Rd., Wilmington, N.C.
(Name and address of NPT Certificate Holder)

(b) Manufactured for ~~GROCE~~ HANFORD
(Name and address of N Certificate Holder for completed nuclear component)

MWR AT 2729
Building Supt
2/3/88

2. Identification-Certificate Holder's Serial No. of Part A5697 Nat'l Bd. No.

(a) Constructed According to Drawing No. 919D258G003 Drawing Prepared by D. L. Paterson

(b) Description of Part Inspected Cylinder Tube and Flange

(c) Applicable ASME Code: Section III, Edition 1974, Addenda date W'75, Code No. 1361-2 Class 1

3. Remarks: Standard part for use with reactor
(Brief description of service for which component was designed)

Hydrostatically tested at 1825 psi.

CORRECTED COPY: ITEM 1. (b) ADDED SITE LOCATION

* Number of sheets - 2

We certify that the statements made in this report are correct and this vessel part or appurtenance as defined in the Code conforms to the rules of construction of the ASME Code Section III.
(The applicable Design Specification and Stress Report are not the responsibility of the NPT Certificate Holder for parts. An NPT Certificate Holder for appurtenances is responsible for furnishing a separate Design Specification and Stress Report if the appurtenance is not included in the component Design Specification and Stress Report.)

Date 6/13 19 84 Signed GE-NEPD-WMD-EM By J. E. Strodemann
(NPT Certificate Holder)

Certificate of Authorization Expires June 16, 1984 Certificate of Authorization No. N-1151

CERTIFICATION OF DESIGN FOR APPURTENANCE (when applicable)

Design information on file at GENERAL ELECTRIC CO., SAN JOSE, CALIF.

Stress analysis report on file at GENERAL ELECTRIC CO., SAN JOSE, CALIF.

Design specifications certified by Vernon W. Pence Prof. Eng. State Calif. Reg. No. 14488

Stress analysis report certified by Vernon W. Pence Prof. Eng. State Calif. Reg. No. 14488

CERTIFICATE OF SHOP INSPECTION

I, the undersigned, holding a valid commission issued by the National Board of Boiler and Pressure Vessel Inspectors and/or the State or Province of North Carolina and employed by Dept of Labor of State of North Carolina have inspected the part of a pressure vessel described in this Partial Data Report on 6/18 1981, and state that to the best of my knowledge and belief, the NPT Certificate Holder has constructed this part in accordance with the ASME Code Section III.

By signing this certificate, neither the Inspector nor his employer makes any warranty, expressed or implied, concerning the part described in this Partial Data Report. Furthermore, neither the Inspector nor his employer shall be liable in any manner for any personal injury or property damage or loss of any kind arising from or connected with this inspection.

Date 6/13 19 84

E. L. Sherrill
Inspector's Signature

Commissions NC 723, PA. WC1766, OHIO
National Board, State, Province and No.

*Supplemental sheets in form of lists, sketches or drawings may be used provided (1) size is 8½" x 11", (2) information in items 1-3 on this Data Report is included on each sheet, and (3) each sheet is numbered and number of sheets is recorded in item 3 "Remarks".

This form (E00040) may be obtained from the Order Dept., ASME, 345 E. 47th St., New York, N.Y. 100

FORM N-2 (back)

Items 4—8 incl. to be completed for single wall vessels, jackets of jacketed vessels, or shells of heat exchangers.

4. Shell: Material _____ (Kind & Spec. No.) T.S. _____ (Min. of Range Specified) Nominal Thickness ____ in. Corrosion Allowance ____ in. Dia. ____ ft. ____ in. Length ____ ft. ____

5. Seams: Long _____ H.T.[1] _____ R.T. _____ Efficiency _____ %

Girth _____ H.T.[1] _____ R.T. _____ No. of Courses _____

6. Heads: (a) Material _____ T.S. _____ (b) Material _____ T.S. _____

Location (Top, bottom, ends)	Thickness	Crown Radius	Knuckle Radius	Elliptical Ratio	Conical Apex Angle	Hemispherical Radius	Flat Diameter	Side to Press. (Conv. or Conc.)
(a)								
(b)								

If removable, bolts used _____ (Material, Spec. No., T.S., Size, Number) Other fastening _____ (Describe or attach sketch)

7. Jacket Closure: _____ (Describe as edge and weld, bar, etc. If bar give dimensions, if bolted, describe or sketch)

8. Design pressure[2] 1250 psi at 575 °F

Drop Weight _____
Charpy Impact _____ ft-lb
at temp. of _____ °F

Items 9 and 10 to be completed for tube sections

9. Tube Sheets: Stationary. Material _____ (Kind & Spec. No.) Dia. _____ (Subject to pressure) Thickness ____ in. Attachment _____ (Welded, Bolted)

Floating. Material _____ Dia. _____ Thickness ____ in. Attachment _____

10. Tubes: Material _____ O.D. ____ in. Thickness _____ inches or gage. Number _____ Type _____ (Str. or U)

Items 11—14 incl. to be completed for inner chambers of jacketed vessels, or channels of heat exchangers.

11. Shell: Material _____ (Kind & Spec. No.) T.S. _____ (Min. of Range Specified) Nominal Thickness ____ in. Corrosion Allowance ____ in. Dia. ____ ft. ____ in. Length ____ ft. ____

12. Seams: Long _____ H.T.[1] _____ R.T. _____ Efficiency _____ %

Girth _____ H.T.[1] _____ R.T. _____ No. of Courses _____

13. Heads: (a) Material _____ T.S. _____ (b) Material _____ T.S. _____

Location	Thickness	Crown Radius	Knuckle Radius	Elliptical Ratio	Conical Apex Angle	Hemispherical Radius	Flat Diameter	Side to Press. (Conv. or Conc.)
(a) Top, bottom, ends								
(b) Channel								

If removable, bolts used (a) _____ (b) _____ (c) _____ Other fastening _____ (Describe or attach sketch)

14. Design pressure[2] _____ psi at _____ °F

Drop Weight _____
Charpy Impact _____ ft-lb
at temp. of _____ °F

Items below to be completed for all vessels where applicable.

15. Safety Valve Outlets: Number _____ Size _____ Location _____

16. Nozzles:

Purpose (Inlet, Outlet, Drain)	Number	Dia. or Size	Type	Material	Thickness	Reinforcement Material	How Attached

17. Inspection Openings: Manholes, No. _____ Size _____ Location _____
Handholes, No. _____ Size _____ Location _____
Threaded, No. _____ Size _____ Location _____

18. Supports: Skirt _____ (Yes or No) Lugs _____ (Number) Legs _____ (Number) Other _____ (Describe) Attached _____ (Where & How)

[1] If Postweld Heat-Treated.
[2] List other internal or external pressure with coincident temperature when applicable.

2 2 2 2 0 5 1 4

WASHINGTON PUBLIC POWER SUPPLY SYSTEM

PLAN NO. MWR AT2731

FORM NIS-2 OWNER'S REPORT FOR REPAIRS OR REPLACEMENTS
As Required by the Provisions of the ASME Code Section XI

1. Owner (Name) Washington Public Power Supply System — Date 7/21/88
   Owner (Address) 3000 George Washington Way, Richland, WA — Sheet 1 of 1
2. Plant (Name) WPPSS Nuclear Power Plant (WNP) — Unit WNP-2
   Plant (Address) Hanford, Benton County, WA — WPPSS (Repair Organization P.O. No., Job No., etc.)
3. Work Performed by (Name) WPPSS
   Work Performed by (Address) 3000 George Washington Way, Richland, WA.
4. Identification of System Control Rod Drive (CRD)
5. (a) Applicable Construction Code ASME Section III 19 71 Edition, None Addenda, None Code Case
   (b) Applicable Edition of ASME Section XI Utilized for Repairs or Replacements 19 80 Edition, W80 Addenda, N308 Code Case
6. Identification of Components Repaired or Replaced and Replacement Components

Name of Component	Name of Manufacturer	Manufacturer Serial No.	National Board No.	Other I. D.	Year Built	Repaired, Replaced, or Replacement	ASME Code Stamped (Yes or No) Code Class
CRD	GE	6535	N/A	N/A	1974	Replacement	Yes, Class 1

7. Description of Work:

- Existing CRD, S/N 6535, ASME Section III, Code Class 1, 1971 Edition with no Addenda.
- New piston tube assembly, S/N 3149, ASME Section III, Code Class I, 1971 Edition with Summer 73 Addenda.

Disassembled CRD, S/N 6535, for overhaul. Performed PT examination on the cylinder tube and flange assembly, S/N 6535. PT examination results acceptable. Performed visual examination on piston tube assembly, S/N 5516. Visual examination results were evaluated to be unacceptable. Reassembled CRD parts and installed new piston tube and flange assembly, S/N 3149.

The overhauled CRD, S/N 6535, was installed on the reactor pressure vessel.

Notes:

WASHINGTON PUBLIC POWER SUPPLY·SYSTEM

PLAN NO. MWR AT2731

FORM NIS-2 (Back)

8. Tests Conducted: Hydrostatic ☐ Pneumatic ☐ Nominal Operating Pressure ☐ Other ☒ None
Test Pressure _____ psig, Test Temp. _____ °F
Component Design Pressure _____ psig, Temp. _____ °F

9. Remarks:

See attached N-2 Code Data Report for new piston tube assembly, S/N 3149

CERTIFICATE OF COMPLIANCE

We certify that the statements made in the report are correct and this replacement (repair or replacement) conforms to the rules of the ASME Code, Section XI.

Type Code Symbol Stamp Not applicable

Certificate Authorization No. Not applicable Expiration Date Not applicable

Signed [signature] Owner or Owner's Designee. Title Plant Technical Manager

7/21/88

Date 7/21 19 88

CERTIFICATE OF INSERVICE INSPECTION

I, the undersigned, holding a valid commission issued by the National Board of Boiler and Pressure Vessel Inspectors and the State of Washington and employed by Lumbermen's Mutual Casualty Co. of Illinois Dar have inspected the components described in this Owner's Report during the period 12/30/88 87 to 7/26/88, and state that to the best of my knowledge and belief, the Owner has performed examinations and taken corrective measures described in this Owner's Report in accordance with the requirements of the ASME Code, Section XI.

By signing this certificate neither the Inspector nor his employer makes any warranty, expressed or implied, concerning the examinations and corrective measures described in this Owner's Report. Furthermore, neither the Inspector nor his employer shall be liable in any manner for any personal injury or property damage or a loss of any kind arising from or connected with this inspection.

[signature] Inspector's Signature Commissions 7447-W National Board, State, and Endorsements

Date 26 July 19 88

-2 NPT CERTIFICATE HOLDERS' DATA REPORT FOR NUCLEAR PART AND APPURTENANCES*

As required by the Provision of the ASME Code Rules, Section III, Div. 1

MWR A1 2731
Kuldip Gupta
7/22/88

1. (a) Manufactured by General Electric Co., Castle Hayne Rd., Wilmington, N.C.
(Name and address of NPT Certificate Holder)

(b) Manufactured for ~~STOCK~~ WNP-2
(Name and address of N Certificate Holder for completed nuclear component)

2. Identification-Certificate Holder's Serial No. of Part 3149 Nat'l Bd. No. N/A

(a) Constructed According to Drawing No. 798D228G010 Drawing Prepared by D. L. Peterson

(b) Description of Part Inspected Piston Tube Assembly

(c) Applicable ASME Code: Section III, Edition 1971, Addenda date S'73, Case No. — Class 1

3. Remarks: Standard part for use with reactor.
(Brief description of service for which component was designed)
Hydrostatically tested at 1825 psi.

* Number of Sheets - 2

We certify that the statements made in this report are correct and this vessel part or appurtenance as defined in the Code conforms to the rules of construction of the ASME Code Section III.
(The applicable Design Specification and Stress Report are not the responsibility of the NPT Certificate Holder for parts. An NPT Certificate Holder for appurtenances is responsible for furnishing a separate Design Specification and Stress Report if the appurtenance is not included in the component Design Specification and Stress Report.)

Date 4-29 19 85 Signed GE-NEPD-WMD (NPT Certificate Holder) By J. Estrudemmi

Certificate of Authorization Expires June 16, 1987 Certificate of Authorization No. NPT N-1151

CERTIFICATION OF DESIGN FOR APPURTENANCE (when applicable)

Design information on file at GENERAL ELECTRIC CO., SAN JOSE, CALIF.

Stress analysis report on file at GENERAL ELECTRIC CO., SAN JOSE, CALIF.

Design specifications certified by Vernon W. Pence Prof. Eng. State Calif. Reg. No. 14488

Stress analysis report certified by Vernon W. Pence Prof. Eng. State Calif. Reg. No. 14488

CERTIFICATE OF SHOP INSPECTION

I, the undersigned, holding a valid commission issued by the National Board of Boiler and Pressure Vessel Inspectors and/or the State or Province of North Carolina and employed by Department of Labor of State of North Carolina have inspected the part of a pressure vessel described in this Partial Data Report on 5/8 19 85, and state that to the best of my knowledge and belief, the NPT Certificate Holder has constructed this part in accordance with the ASME Code Section III.

By signing this certificate, neither the Inspector nor his employer makes any warranty, expressed or implied, concerning the part described in this Partial Data Report. Furthermore, neither the Inspector nor his employer shall be liable in any manner for any personal injury or property damage or a loss of any kind arising from or connected with this inspection.

Date 5/8 19 85

E. L. Sherrill
(Inspector's Signature)

Commissions N.C. 723, PA.WC1766, OHIO
(National Board, State, Province and No.)

*Supplemental sheets in form of lists, sketches or drawings may be used provided (1) size is 8½" x 11", (2) information in Items 1-2 on this Data Report is included on each sheet, and (3) each sheet is numbered and number of sheets is recorded in Item 3, "Remarks".

(10/77) This form (E00040) may be obtained from the Order Dept., ASME, 345 E. 47 St., N.Y., N.Y. 10017

FORM N-2 (back)

4–8 incl. to be completed for single wall vessels, jackets of jacketed vessels, or shells of heat exchangers.

MWRA1 2731

S/N 3149

1/15/88

3. Shell: Material _____ (Kind & Spec. No.) T.S. _____ Nominal Thickness _____ (Min. of Range Specified) in. Corrosion Allowance ____ in. Dia. ____ ft. ____ in. Length ____ ft. ____ in.

4. Seams: Long _____ H.T.[1] _____ R.T. _____ Efficiency _____ %

Girth _____ H.T.[1] _____ R.T. _____ No. of Courses _____

6. Heads: (a) Material _____ T.S. _____ (b) Material _____ T.S. _____

Location (Top, bottom, ends)	Thickness	Crown Radius	Knuckle Radius	Elliptical Ratio	Conical Apex Angle	Hemispherical Radius	Flat Diameter	Side to Press. (Conv. or Conc.)
(a)								
(b)								

If removable, bolts used _____ (Material, Spec. No., T.S., Size, Number) Other fastening _____ (Describe or attach sketch)

7. Jacket Closure: _____ (Describe as ogee sealweld, bar, etc. If bar give dimensions, if bolted, describe or sketch)

8. Design pressure[2] 1250 psi at 575 °F

Drop Weight _____
Charpy Impact _____ ft-lb
at temp. of _____ °F

Items 9 and 10 to be completed for tube sections

9. Tube Sheets: Stationary. Material _____ (Kind & Spec. No.) Dia. _____ (Subject to pressure) Thickness ____ in. Attachment _____ (Welded, Bolted)

Floating. Material _____ Dia. _____ Thickness ____ in. Attachment _____

10. Tubes: Material _____ O.D. ____ in. Thickness _____ inches or gage. Number _____ Type _____ (Str. or U)

Items 11–14 incl. to be completed for inner chambers of jacketed vessels, or channels of heat exchangers.

11. Shell: Material _____ (Kind & Spec. No.) T.S. _____ Nominal Thickness ____ in. (Min. of Range Specified) Corrosion Allowance ____ in. Dia. ____ ft. ____ in. Length ____ ft. ____ in.

12. Seams: Long _____ H.T.[1] _____ R.T. _____ Efficiency _____ %

Girth _____ H.T.[1] _____ R.T. _____ No. of Courses _____

13. Heads (a) Material _____ T.S. _____ (b) Material _____ T.S. _____

Location	Thickness	Crown Radius	Knuckle Radius	Elliptical Ratio	Conical Apex Angle	Hemispherical Radius	Flat Diameter	Side to Press. (Conv. or Conc.)
(a) Top, bottom, ends								
(b) Channel								

If removable, bolts used (a) _____ (b) _____ (c) _____ Other fastening _____ (Describe or attach sketch)

14. Design pressure[2] _____ psi at _____ °F

Drop Weight _____
Charpy Impact _____ ft-lb
at temp. of _____ °F

Items below to be completed for all vessels where applicable.

15. Safety Valve Outlets: Number _____ Size _____ Location _____

16. Nozzles:

Purpose (Inlet, Outlet, Drain)	Number	Dia. or Size	Type	Material	Thickness	Reinforcement Material	How Attached

17. Inspection Openings: Manholes, No. _____ Size _____ Location _____
Handholes, No. _____ Size _____ Location _____
Threaded, No. _____ Size _____ Location _____

18. Supports: Skirt _____ (Yes or No) Lugs _____ (Number) Legs _____ (Number) Other _____ (Describe) Attached _____ (Where & How)

[1] If Postweld Heat-Treated.

WASHINGTON PUBLIC POWER SUPPLY SYSTEM

PLAN NO. MWR AT2732

FORM NIS-2 OWNER'S REPORT FOR REPAIRS OR REPLACEMENTS
As Required by the Provisions of the ASME Code Section XI

1. Owner (Name) Washington Public Power Supply System — Date 7/21/88
   Owner (Address) 3000 George Washington Way, Richland, WA — Sheet 1 of 1
2. Plant (Name) WPPSS Nuclear Power Plant (WNP) — Unit WNP-2
   Plant (Address) Hanford, Benton County, WA — WPPSS
   Repair Organization P.O. No., Job No., etc.
3. Work Performed by (Name) WPPSS
   Work Performed by (Address) 3000 George Washington Way, Richland, WA.
4. Identification of System Control Rod Drive (CRD)
5. (a) Applicable Construction Code ASME Section III 19 71 Edition, None Addenda, None Code Case
   (b) Applicable Edition of ASME Section XI Utilized for Repairs or Replacements 19 80 Edition, W80 Addenda, N308 Code Case
6. Identification of Components Repaired or Replaced and Replacement Components

Name of Component	Name of Manufacturer	Manufacturer Serial No.	National Board No.	Other I.D.	Year Built	Repaired, Replaced, or Replacement	ASME Code Stamped (Yes or No) Code Class
CRD	GE	7359	N/A	N/A	1975	Replacement	Yes, Class 1
CT&F	GE	A6704	N/A	N/A	1987	Replacement	Yes, Class 1

7. Description of Work:

- Existing CRD, S/N 7359, ASME Section III, Code Class 1, 1971 Edition with no Addenda.
- New cylinder tube and flange assembly, S/N A6704, ASME Section III, Code Class I, 1974 Edition with Winter 75 Addenda.

Disassembled CRD, S/N 7359, for overhaul. Performed PT examination on the cylinder tube and flange assembly. PT examination results were evaluated to be unacceptable. Performed visual examination on piston tube assembly. Visual examination results acceptable. Reassembled CRD parts and installed new cylinder tube and flange assembly, S/N A6704.

The overhauled CRD, S/N A6704 (old S/N 7359), was installed on the reactor pressure vessel (see note).

Notes:
Cylinder tube and flange serial number is the manufacturer's serial number for identifying the entire CRD assembly.

WASHINGTON PUBLIC POWER SUPPLY SYSTEM

PLAN NO. MWR AT2732

FORM NIS-2 (Back)

8. Tests Conducted: Hydrostatic ☐ Pneumatic ☐ Nominal Operating Pressure ☐ Other ☒ None
Test Pressure _____ psig, Test Temp. _____ °F
Component Design Pressure _____ psig, Temp. _____ °F

9. Remarks:

See attached N-2 Code Data Report for new cylinder tube and flange assembly, S/N A6704.

CERTIFICATE OF COMPLIANCE

We certify that the statements made in the report are correct and this replacement (repair or replacement) conforms to the rules of the ASME Code, Section XI.

Type Code Symbol Stamp Not applicable

Certificate Authorization No. Not applicable Expiration Date Not applicable

Signed [signature] (Owner or Owner's Designee) Title Plant Technical Manager

7/21/88

Date 7/21 19 88

CERTIFICATE OF INSERVICE INSPECTION

I, the undersigned, holding a valid commission issued by the National Board of Boiler and Pressure Vessel Inspectors and the State of Washington and employed by Lumbermen's Mutual Casualty Co. of Illinois have inspected the components described in this Owner's Report during the period 12/30/87 to 7/25/88, and state that to the best of my knowledge and belief, the Owner has performed examinations and taken corrective measures described in this Owner's Report in accordance with the requirements of the ASME Code, Section XI.

By signing this certificate neither the Inspector nor his employer makes any warranty, expressed or implied, concerning the examinations and corrective measures described in this Owner's Report. Furthermore, neither the Inspector nor his employer shall be liable in any manner for any personal injury or property damage or a loss of any kind arising from or connected with this inspection.

[signature] (Inspector's Signature) Commissions 7447-W (National Board, State, and Endorsements)

Date July 25 19 88

... NUCLEAR PART AND APPURTENANCES*
... by the Provision of the ASME Code Rules, Section III, Div. 1

1. Manufactured & Certified by: GE Company, 2117 Castle Hayne Rd., Wilmington, N.C. 28402
(Name and Address of NPT Certificate Holder)

(b) Manufactured for: WNP-2
(Name and Address of N Certificate Holder for completed nuclear component.

2. Identification-Certificate Holders's S/N of Part: A6704 Nat'l Bd. No. N/A

(a) Constructed According to Drawing No: 919D258G003 Dwg. Prepared by D. L. Peterson

(b) Description of Part Inspected: CYLINDER TUBE & FLANGE

(c) Applicable ASME Code: Section III, Edition 1974, Addenda Date W'75, Case No. 1361-2 Class 1

3. REMARKS: Sub-assembly of Control Rod Drive for use with reactor.
(Brief description of service for which component was designed)
Hydrostatically tested at 1825 psi. min.

*Sheet 1 of 2 MWR A7 2732 Kuldip Rupal 7/22/88

We certify that the statements in this report are correct and this vessel part or appurtenance as defined in the code conforms to the rules of construction of the ASME Code Section III. (The applicable Designed Specification and Stress Report are not the responsibility of the NPT Certificate Holder for parts. An NPT Certification Holder for appurtenances is responsible for furnishing a separate Design Specification and Stress Report if the appurtenance is not included in the component Design Specification and Stress Report).

DATE: 11/10, 19 87 Signed GE-NEBG-NF&CH-QA By J. Ettredemmie
(NPT Certificate Holder)

Certificate Of Authorization Expires: 6/16/90 Certification of Authorization No.: NPT N-1151

CERTIFICATION OF DESIGN FOR APPURTENANCE

Design information on file at GE COMPANY, SAN JOSE, CALIFORNIA

S[illegible] analysis report on file at GE COMPANY, SAN JOSE, CALIFORNIA
D[illegible]6253 Rev. 0
Design specification certified by BJORN HAABERG Prof. Eng. State CALIF. Reg. No. 15570
DCZZA6254 Rev. 0.
Stress analysis report certified by EDWARD YOSHIO Prof. Eng. State CALIF. Reg. No. M018646

CERTIFICATION OF SHOP INSPECTION

I, the undersigned, holding a valid commission by the National Board of Boiler and Pressure nspectors and/or the State or Province of NORTH CAROLINA and employed by DEPARTMENT OF LABOR f STATE OF NORTH CAROLINA have inspected the part of a pressure vessel described in this artial Data Report on 11-10 1987, and state that to the best of my knowledge nd belief, the NPT Certificate Holder has constructed this part in accordance with the ASME ode Section III.

By signing this certificate, neither the Inspector nor his employer makes any warranty, xpressed or implied, concerning the part described in the Partial Data Report. Furthermore, either the Inspector nor his employer shall be liable in any manner for any personal injury r property damages or a loss of any kind arising from or connected with this inspection.

11-10, 1987 J. F. Shondike NC 779-PA-WC2L60-0H10
TE Inspector's Signature National Board, State, Province and No.

upplemental sheets in form of lists, sketches or drawing may be used provided (1) size is -1/2" X 11", (2) information in 1-2 on this Data Report is included on each sheet, and (3) ach sheet is numbered and number of sheets is recorded in Item 3. "REMARKSs"

/77)

VERIFIED & ACCEPTED J. J. Miller 1-5-88
R.I. Inspector Date

Items 4-8 incl. to be completed for single wall vessels, jackets vessels, or shells of heat exchange

4. Shell: Material_____ T.S._____ Nominal Thickness___in. Corrosion Allowance___in Dia.___ft.___in. Length___ft.___in.
(Kind & Spec.No) (Min.ofRange Specified)

MWR A1 2732

5. Seams: Long_____ H.T.[1]_____ R.T._____ Efficiency_____%

Girth_____ H.T.[1]_____ R.T._____ No. of Courses_____

S/N A6704

6. Heads: (a) Material_____ T.S._____ (b)Material_____ T.S._____

Ludlow 1/15/88

Location (Top Bottom, Ends)	Thickness	Crown Radius	Knuckle Radius	Elliptical Ratio	Concial Apex Angle	Hemispherical Radius	Flat Diameter	Side to Press. (conv.or conc.)
(a)_____	_____	_____	_____	_____	_____	_____	_____	_____
(b)_____	_____	_____	_____	_____	_____	_____	_____	_____

If removable, bolts used_____ Other fastening_____
(Material, Spec.No., T.S. Size Number) (Describe or attach sketch)

7. Jacket Closure:_____
(Describe as ogee and weld, bar, etc. If bar give dimensions, if bolts, describe or sketch)

8. Design Pressure[2] 1250 psi at 575 °F

Drop Weight_____
Charpy Impact_____ ft-lb
at temp. of_____ °f

Items 9 and 10 to be completed for tube sections.

9. Tube Sheets: Stationary Mat'l._____ Dia._____ Thickness___in. Attachment_____
(Kind of Spec. No.) (Subj.to Press.) (Welded, Bolted)

Floating. Material_____ Dia._____ Thickness___in. Attachment_____

10. Tubes: Material_____ O.D.___in: Thickness_____ inches or gage. Number_____ Type_____
(Str. or U)

Items 11-14 incl. to be completed for inner chambers of jacketed vessels, or channels of heat exchangers

11. Shell: Material_____ T.S._____ Nominal Thickness___in. Corrosion Allowance___in. Dia.___ft.___in___Length___ft.___in.
(Kind&Spec.No.) (Min.ofRange Specified)

12. Seams: Long_____ H.T.[1]_____ R.T._____ Efficiency_____%

Girth_____ H.T.[1]_____ R.T._____ No. of Courses_____

13. Heads (a) Material_____ T.S._____ (b)Material_____ T.S._____

Location	Ticnkess	Crown Radius	Knucle Radius	Elliptical Ratio	Concial Apex Angle	Hemispherical Radius	Fat Diameter	Side to Press (Conv.or Conc.)
(a)Top, Bottom, End	_____	_____	_____	_____	_____	_____	_____	_____
(b)Channel	_____	_____	_____	_____	_____	_____	_____	_____

If removable, bolts used (a)_____ (b)_____ (c)_____ Other Fastening_____
(Describe or attach sketch

Drop Weight_____
Charpy Impact_____ ft-lb
at temp. of_____ °F

14. Design pressure[2]_____ psi at_____ °F

Items below to be completed for all vessels where applicable.

15. Safety Valve Outlets: Number_____ Size_____ Location_____

16. Nozzles:

Purpose (Inlet Outlet, Drain)	Number	Dia or Size	Type	Material	Thickness	Reinforcement Material	Attached
_____	_____	_____	_____	_____	_____	_____	_____
_____	_____	_____	_____	_____	_____	_____	_____

17. Inspection Openings: Manholes, No._____ Size_____ Location_____
Handles, No._____ Size_____ Location_____
Threaded, No._____ Size_____ Location_____

18. Supports: Shirt_____ Lugs_____ Legs_____ Other_____ Attached_____
(Yes or No) (Number) (Number) (Describe) (Where & How)

[1] If Postweld Heat-Treated.
[2] List other internal or external pressure with coninicident temperature when applicalbe.

WASHINGTON PUBLIC POWER SUPPLY SYSTEM

PLAN NO. N/A

MWR AT-4071

FORM NIS-2 OWNER'S REPORT FOR REPAIRS OR REPLACEMENTS
As Required by the Provisions of the ASME Code Section XI

1. Owner (Name) Washington Public Power Supply System — Date 6/6/88
   Owner (Address) 3000 George Washington Way, Richland, WA — Sheet 1 of 1
2. Plant (Name) WPPSS Nuclear Power Plant (WNP) — Unit WNP-2
   Plant (Address) Hanford, Benton County, WA — N/A Repair Organization P.O. No., Job No., etc.
3. Work Performed by (Name) WPPSS
   Work Performed by (Address) 3000 George Wash. Way, Richland, WA
4. Identification of System Reactor Recirculation Cooling
5. (a) Applicable Construction Code ASME Section III 19 71 Edition, W73 Addenda, None Code Case
   (b) Applicable Edition of ASME Section XI Utilized for Repairs or Replacements 19 80 Edition, W80. Addenda, None Code Case
6. Identification of Components Repaired or Replaced and Replacement Components

Name of Component	Name of Manufacturer	Manufacturer Serial No.	National Board No.	Other I.D.	Year Built	Repaired, Replaced, or Replacement	ASME Code Stamped (Yes or No) Code Class
RRC(51)-4	WPPSS	N/A	N/A	N/A	1983	Replaced	Yes, Class 1

7. Description of Work:

Replaced RRC-1C-14 snubbers.

Replaced top PSA-1 S/N 646 with PSA-1 S/N 336

Replaced bottom PSA-1 S/N 112 with PSA-1 340

Notes:

These snubbers were replaced due to high drag > 2%, < 5%. These snubbers were acceptable as is but were replaced with snubbers with < 2% drag.

WASHINGTON PUBLIC POWER SUPPLY SYSTEM

PLAN NO. N/A

FORM NIS-2 (Back)

8. Tests Conducted: Hydrostatic ☐ Pneumatic ☐ Nominal Operating Pressure ☐ Other ☒ Operability Test
Test Pressure _____ psig, Test Temp. _____ °F
Component Design Pressure _____ psig, Temp. _____ °F

9. Remarks:

Reference document MWR AT 4071

CERTIFICATE OF COMPLIANCE

We certify that the statements made in the report are correct and this replacement (repair or replacement) conforms to the rules of the ASME Code, Section XI.

Type Code Symbol Stamp Not applicable

Certificate Authorization No. Not applicable Expiration Date Not applicable

Signed [signature] (Owner or Owner's Designee) Title Plant Technical Manager

Date 6/21/88 19____

CERTIFICATE OF INSERVICE INSPECTION

I, the undersigned, holding a valid commission issued by the National Board of Boiler and Pressure Vessel Inspectors and the State of Washington and employed by Lumbermen's Mutual Casualty Co. of Illinois have inspected the components described in this Owner's Report during the period 5/2/88 to 6/21/88, and state that to the best of my knowledge and belief, the Owner has performed examinations and taken corrective measures described in this Owner's Report in accordance with the requirements of the ASME Code, Section XI.

By signing this certificate neither the Inspector nor his employer makes any warranty, expressed or implied, concerning the examinations and corrective measures described in this Owner's Report. Furthermore, neither the Inspector nor his employer shall be liable in any manner for any personal injury or property damage or a loss of any kind arising from or connected with this inspection.

[signature] (Inspector's Signature) Commissions 9556 W (National Board, State, and Endorsements)

Date 6/21 19 88

WASHINGTON PUBLIC POWER SUPPLY SYSTEM

PLAN NO. N/A
MWR AT-4067

FORM NIS-2 OWNER'S REPORT FOR REPAIRS OR REPLACEMENTS
As Required by the Provisions of the ASME Code Section XI

1. Owner (Name) Washington Public Power Supply System — Date 6/6/88
   Owner (Address) 3000 George Washington Way, Richland, WA — Sheet 1 of 1
2. Plant (Name) WPPSS Nuclear Power Plant (WNP) — Unit WNP-2
   Plant (Address) Hanford, Benton County, WA — N/A (Repair Organization P.O. No., Job No., etc.)
3. Work Performed by (Name) WPPSS
   Work Performed by (Address) 3000 George Wash. Way, Richland, WA
4. Identification of System Service Water
5. (a) Applicable Construction Code ASME Section III 19 71 Edition, W73 Addenda, None Code Case
   (b) Applicable Edition of ASME Section XI Utilized for Repairs or Replacements 19 80 Edition, W80 Addenda, None Code Case
6. Identification of Components Repaired or Replaced and Replacement Components

Name of Component	Name of Manufacturer	Manufacturer Serial No.	National Board No.	Other I.D.	Year Built	Repaired, Replaced, or Replacement	ASME Code Stamped (Yes or No) Code Class
SW(22)-2	WPPSS	N/A	N/A	N/A	1983	Modification	Yes, Class 3

7. Description of Work:

Snubbers SW-915N were deleted S/N North 304
South 1488

Notes:

WASHINGTON PUBLIC POWER SUPPLY SYSTEM

PLAN NO. N/A

FORM NIS-2 (Back)

8. Tests Conducted: Hydrostatic ☐ Pneumatic ☐ Nominal Operating Pressure ☐ Other ☐ _____
Test Pressure _____ psig, Test Temp. _____ °F
Component Design Pressure _____ psig, Temp. _____ °F

9. Remarks:

Reference MWR AT-4067

CERTIFICATE OF COMPLIANCE

We certify that the statements made in the report are correct and this modification (repair or replacement) conforms to the rules of the ASME Code, Section XI.

Type Code Symbol Stamp Not applicable

Certificate Authorization No. Not applicable Expiration Date Not applicable

Signed [signature] (Owner or Owner's Designee,) Title Plant Technical Manager

Date 6/21/88 19____

CERTIFICATE OF INSERVICE INSPECTION

I, the undersigned, holding a valid commission issued by the National Board of Boiler and Pressure Vessel Inspectors and the State of Washington and employed by Lumbermen's Mutual Casualty Co. of Illinois have inspected the components described in this Owner's Report during the period 5/2/88 to 6/21/88, and state that to the best of my knowledge and belief, the Owner has performed examinations and taken corrective measures described in this Owner's Report in accordance with the requirements of the ASME Code, Section XI.

By signing this certificate neither the Inspector nor his employer makes any warranty, expressed or implied, concerning the examinations and corrective measures described in this Owner's Report. Furthermore, neither the Inspector nor his employer shall be liable in any manner for any personal injury or property damage or a loss of any kind arising from or connected with this inspection.

[signature] (Inspector's Signature) Commissions 9556 W (National Board, State, and Endorsements)

Date 6/21 19 88

WASHINGTON PUBLIC POWER SUPPLY SYSTEM

PLAN NO. N/A
MWR AT-4067

FORM NIS-2 OWNER'S REPORT FOR REPAIRS OR REPLACEMENTS
As Required by the Provisions of the ASME Code Section XI

1. Owner (Name) Washington Public Power Supply System — Date 6/6/88
   Owner (Address) 3000 George Washington Way, Richland, WA — Sheet 1 of 1
2. Plant (Name) WPPSS Nuclear Power Plant (WNP) — Unit WNP-2
   Plant (Address) Hanford, Benton County, WA — N/A Repair Organization P.O. No., Job No., etc.
3. Work Performed by (Name) WPPSS
   Work Performed by (Address) 3000 George Wash. Way, Richland, WA
4. Identification of System Service Water
5. (a) Applicable Construction Code ASME Section III 19 71 Edition, W73 Addenda, None Code Case
   (b) Applicable Edition of ASME Section XI Utilized for Repairs or Replacements 19 80 Edition, W80 Addenda, None Code Case
6. Identification of Components Repaired or Replaced and Replacement Components

Name of Component	Name of Manufacturer	Manufacturer Serial No.	National Board No.	Other I.D.	Year Built	Repaired, Replaced, or Replacement	ASME Code Stamped (Yes or No) Code Class
SW(1)-2	WPPSS	N/A	N/A	N/A	1983	Modification	Yes, Class 3

7. Description of Work:

Deleted snubbers SW-987N PSA-3 North S/N 3968
South S/N 3897

Notes:

WASHINGTON PUBLIC POWER SUPPLY SYSTEM

PLAN NO. N/A

FORM NIS-2 (Back)

8. Tests Conducted: Hydrostatic ☐ Pneumatic ☐ Nominal Operating Pressure ☐ Other ☐ _____
Test Pressure _____ psig, Test Temp. _____ °F
Component Design Pressure _____ psig, Temp. _____ °F

9. Remarks:

Reference Documents MWR AT-4067

CERTIFICATE OF COMPLIANCE

We certify that the statements made in the report are correct and this modification (repair or replacement) conforms to the rules of the ASME Code, Section XI.

Type Code Symbol Stamp Not applicable

Certificate Authorization No. Not applicable – Expiration Date Not applicable

Signed [signature] (Owner or Owner's Designee,) Title Plant Technical Manager

Date 6/21/88 19____

CERTIFICATE OF INSERVICE INSPECTION

I, the undersigned, holding a valid commission issued by the National Board of Boiler and Pressure Vessel Inspectors and the State of Washington and employed by Lumbermen's Mutual Casualty Co. of Illinois have inspected the components described in this Owner's Report during the period 5/2/88 to 6/21/88, and state that to the best of my knowledge and belief, the Owner has performed examinations and taken corrective measures described in this Owner's Report in accordance with the requirements of the ASME Code, Section XI.

By signing this certificate neither the Inspector nor his employer makes any warranty, expressed or implied, concerning the examinations and corrective measures described in this Owner's Report. Furthermore, neither the Inspector nor his employer shall be liable in any manner for any personal injury or property damage or a loss of any kind arising from or connected with this inspection.

[signature] (Inspector's Signature) Commissions 9556 WI (National Board, State, and Endorsements)

Date 6/21 19 88

WASHINGTON PUBLIC POWER SUPPLY SYSTEM

PLAN NO. N/A
MWR AT-4067

FORM NIS-2 OWNER'S REPORT FOR REPAIRS OR REPLACEMENTS
As Required by the Provisions of the ASME Code Section XI

1. Owner (Name) Washington Public Power Supply System — Date 6/6/88
   Owner (Address) 3000 George Washington Way, Richland, WA — Sheet 1 of 1
2. Plant (Name) WPPSS Nuclear Power Plant (WNP) — Unit WNP-2
   Plant (Address) Hanford, Benton County, WA — N/A (Repair Organization P.O. No., Job No., etc.)
3. Work Performed by (Name) WPPSS
   Work Performed by (Address) 3000 George Wash. Way, Richland, WA
4. Identification of System Service Water
5. (a) Applicable Construction Code ASME Section III 19 71 Edition, W73 Addenda, None Code Case
   (b) Applicable Edition of ASME Section XI Utilized for Repairs or Replacements 19 80 Edition, W80 Addenda, None Code Case
6. Identification of Components Repaired or Replaced and Replacement Components

Name of Component	Name of Manufacturer	Manufacturer Serial No.	National Board No.	Other I.D.	Year Built	Repaired, Replaced, or Replacement	ASME Code Stamped (Yes or No) Code Class
SW(2)-2	WPPSS	N/A	N/A	N/A	1983	Modification	Yes, Class 3

7. Description of Work:

Snubber SW-21 PSA-10 S/N 11864 was deleted.

Notes:

WASHINGTON PUBLIC POWER SUPPLY SYSTEM

PLAN NO. N/A

FORM NIS-2 (Back)

8. Tests Conducted: Hydrostatic ☐ Pneumatic ☐ Nominal Operating Pressure ☐ Other ☐ _____
Test Pressure _____ psig, Test Temp. _____ °F
Component Design Pressure _____ psig, Temp. _____ °F

9. Remarks:

Reference MWr AT-4067

CERTIFICATE OF COMPLIANCE

We certify that the statements made in the report are correct and this modification (repair or replacement) conforms to the rules of the ASME Code, Section XI.

Type Code Symbol Stamp Not applicable

Certificate Authorization No. Not applicable Expiration Date Not applicable

Signed [signature] (Owner or Owner's Designee) Title Plant Technical Manager

Date 6/21/88 19____

CERTIFICATE OF INSERVICE INSPECTION

I, the undersigned, holding a valid commission issued by the National Board of Boiler and Pressure Vessel Inspectors and the State of Washington and employed by Lumbermen's Mutual Casualty Co. of Illinois have inspected the components described in this Owner's Report during the period 5/2/88 to 6/21/88, and state that to the best of my knowledge and belief, the Owner has performed examinations and taken corrective measures described in this Owner's Report in accordance with the requirements of the ASME Code, Section XI.

By signing this certificate neither the Inspector nor his employer makes any warranty, expressed or implied, concerning the examinations and corrective measures described in this Owner's Report. Furthermore, neither the Inspector nor his employer shall be liable in any manner for any personal injury or property damage or a loss of any kind arising from or connected with this inspection.

[signature] (Inspector's Signature) Commissions 9556 W (National Board, State, and Endorsements)

Date 6/21 19 88

WASHINGTON PUBLIC POWER SUPPLY SYSTEM

WNP-2
CALCULATION COVER SHEET

..8807270179

DCP Page: ____ ____ ____ ____

WNP-2	3. DISCIPLINE: NUCLEAR	PAGE 1.000
		1. CALCULATION NO. NE-02-88-10
		2. QUALITY CLASS 1

4. EQUIPMENT PIECE NO. SEE SHEET 1.001	5. SUPERSEDED BY

6. SUBJECT

Appendix R Analysis — Vital Instrument Sensing Line Supports

7. REMARKS

CALCULATION PERFORMANCE RECORD

8. REVISION	9. STATUS PRELIMINARY	9. STATUS FINAL	10. REVISION DESCRIPTION	11. PERFORMED BY / DATE
0		▨	NEW ISSUE	JULY 88 — LAVID ORIEG — 29 MAR 88

VERIFICATION / APPROVAL RECORD

8. REVISION NO.	12. VERIFIED BY / DATE	13. APPROVED BY / DATE	14. TRANSMITTAL NO.
0	SR Kukendall 7/8/88	D.L. Whitcomb 7/13/88	

938-18045 (7-84)

CONTINUATION PAGE

PAGE	1.001
CALCULATION NO.	NE-02-88-10
REVISION	0

EQUIPMENT PIECE NO.

RHR-FT-15B

Hanger numbers (ref 16)

130-10-012
320-2-035
340-3-009
130-10-005
320-3-029
250-4-002
320-3-018
320-3-027
320-2-069
320-1-264
320-1-253
320-1-248
130-4-017
320-1-315
320-1-327
320-1-312
320-1-319
220-5-017
121-1-033
121-1-055
121-1-029
121-1-018
121-1-043
121-1-041
320-1-326
320-1-339
320-1-331
130-5-002
320-1-324
320-1-329
320-1-333
220-2-017
220-2-036
301-1-135
301-1-137
120-4-004
120-4-002
120-4-003
120-4-005
120-4-001
180-1-022
180-1-094
121-1-035
180-2-070
100-3-143
220-1-34
220-1-56
301-1-108
301-1-124
301-1, S:24*
301-1-149
301-1-119
200-3-017
180-2-056
180-2-060
180-2-052
220-6-020

CMS-LT-2

Hanger numbers (ref 14)

100-1-185
220-6-36

MS-LT-26D & PT-51B

Hanger numbers (ref 13)

301-1, A:118
301-1, A:478
301-1, A:482
301-1, A:486
220-1-005
~~301-1, A:471~~ Div. 2 Area 12X
~~301-1, A:472~~
~~301-1, A:473~~
~~301-1, A:475~~
~~301-1, A:476~~
~~301-1, S:10*, 1:14*~~
} Div. 2 Area 12X

MS-LT-44B

Hanger numbers (ref 59)

301-1, A:843
116-1-087
301-1, A:1275
301-1, A:5338
301-1, A:580
301-1, A:1559
100-2-20
180-1-046
180-1-047
101-2, A:1572
301-1, A:1918
301-1, A:1917
301-1, A:1916
180-1-102
180-1-049
220-6-004
220-6-006
100-1-104
100-1-31
301-1, A:1919
301-1, A:1920
301-1, A:1921
301-1, A:1922
301-1, A:1923
301-1, A:1924
301-1, A:1925
301-1, A:5837
220-6-005

CONTINUATION PAGE

PAGE	1.002
CALCULATION NO.	NE-02-88-10
REVISION	0

301-1-032
301-1-027
301-1-041
301-1-022
301-1, A:2896
301-1-013
301-1-048
301-1-043
301-1-006
301-1-040
301-1-046
301-1-020
301-1-030
301-1-085
301-1-039
301-1-011
301-1-088
301-1-044
301-1-034

MS-PS-8

Hanger numbers (ref 60)
301-1, A:200
301-1, A:210
301-1, A:211
301-1, A:212
301-1, A:213
301-1, between A:213 & A:214
301-1, A:214
301-1-724
301-1, A:215
301-1, A:216
301-1, A:217
301-1, A:218
301-1, A:219
130-9-007
130-9-009
130-3-007
160-5-001
160-2-001
116-8-009
205-1-001
220-1-093
220-1-059
301-1, A: 3073
301-1, A: 2930
301-1, A: 2529
301-1, A: 2528
301-1, A: 3074
301-1, A: 3076
301-1, A: 3077
301-1, A: 3078
301-1, A: 3079
301-1, A: 3080
301-1, A: 3101
301-1-076
301-1-004
301-1-055
301-1-051
301-1-077
301-1-074
301-1-064
301-1, A: 3119
301-1, A: 3102
301-1, A: 3103
301-1, A: 3116

CALCULATION CROSS-INDEX

Subject Calculation No. NE-02-88-10

Subject Calculation Revision No.	Superseded By Calc. No.	These interfacing calculation and/or documents provide input to the subject calculation, and if revised may require revision of the subject calculation.		Results and conclusions of the subject calculation are used in these interfacing calculations and/or documents.		Does the output interface calc require revision? Yes/No	Has the output interface calc been revised? Yes/No	Manager Signature/Date
		Calc/Doc No.	Rev. No.	Calc/Doc No.	Rev. No.			
Ø		NE-02-85-19	Ø	NE-02-85-19	Ø	YES	in process. when rev.0 is issued the results of this calculation will be incorporated RFTS-88-07-063	D&W 7/13/88
		NE-02-86-23	Ø					
		7.10.12	Ø					

Verification Checklist For Calculations and CMR's

Calculation/CMR NE-02-88-10 Revision 0 was checked and verified using the following methods

[X] Checklist below

[ ] Alternate Calculations

Checklist Item	Initial
Clear Statement of Purpose of Analysis	SRK
Logical Consistency of Analysis	SRK
Completeness in Documenting References	SRK
Completeness of Input	SRK
Accuracy of Input Data	SRK
Consistency of Input Data with Approved Criteria	SRK
Completeness in Stating Assumptions and Input Data	SRK
Validity of Assumptions	SRK
Sufficiently Detailed and Appropriate Method	SRK
Arithmetical Accuracy	SRK
Physical Units Specified in Mathematical Operations	SRK
Correct Use of Units	SRK
Reasonableness of Output Conclusion	SRK

If a computer program was used:

o is the program name, revision number and date of run inscribed on the output?	SRK	
o is the program identified on the input summary sheet? If so, is it listed in Chapter 10 of the Engineering Standards Manual?	SRK	SRK

Other Elements Considered	

Based on the foregoing, the calculation is adequate for the purpose intended.

SR Kukendall 7/8/88 — Verifier Signature/Date

SRK — Verifier Initial

Calculation Index

Page 1.100
Calculation No. NE-02-88-10
Revision No. 0

SUPPLY SYSTEM

WNP-2

CALCULATION INPUT SUMMARY

1. PURPOSE / SCOPE OF ANALYSIS	2. PREPARED BY	PAGE
The purpose of this calculation is to analyze the tubing supports for the Division 2 vital sensing lines which are routed through multidivision areas to determine whether they can survive a fire in these areas.	DAVID KRIEG	2.000
		3. CALCULATION NO. NE-02-88-10
	DATE 11 MAR 88	4. REVISION 0

5. REFERENCES

REF. NO.	DOCUMENT NO.	ISSUE DATE OR REVISION	TITLE	AUTHOR
1.	NE-02-85-19	Preliminary	Appendix R Analysis (Instrument sensing line Evaluation Portion)	J. Civay
2.	WNP-2 FSAR	Rev 38 Aug '87	Appendix F, Fire Protection Evaluation	Supply System
3.	SECY-85-306	17 SEP 85	Staff Recomendations Regarding the Implementation of Appendix R to 10 CFR 50	NRC
4.	0379-7112	1984	Engineering Relations for Fire Plumes, Fire Safety Journal, 7 (1984) 25-32	Gunnar Heskestad
5.		1985	American Society of Heating Refrigeration and Air Conditioning Engineers (ASHRAE), 1985 Fundamentals. Chapter 15, Combustion and Fuels.	ASHRAE
		1986 16th Edition	Fire Protection Handbook	National Fire Protection Association
7.	EPRI NP-1881	Aug 1982	Categorization of Cable Flammability, Intermediate-Scale Fire Tests of Cable Tray Installations	Factory Mutual Research
8.	ASTM, E119	1982	Fire Tests of Building Construction & Materials	
9.	EPRI NP-2660	Dec 1982	Fire Tests in Ventilated Rooms, Extinguishment of fire in grouped cable trays	Factory Mutual Research
10.		8th Edition	Steel Construction Manual, page 6-4	AISC
11.	CVI 220-01,623,1 220-01,623,2 220-01,623,4 220-01,623,5 220-01,623,8 220-01,623,10 220-01,623,11 220-01,623,12	6 3 3 4 2 2 3 2	Tubing Identification and Isometric drawings for rack no. H22-P018 (RHR-FT-15A tubing)	Johnson Controls, Inc and Supply System
	220-01,666,2 220-01,666,4	7 9	Tubing Identification and Installation Isometrics for CMS-LT-1	JCI & Supply System

USE ADDITIONAL PAGES IF NECESSARY

968-18631 R1 (3/87)

SUPPLY SYSTEM

WNP-2

CALCULATION INPUT SUMMARY

CONTINUATION

2. PREPARED BY	PAGE
DAVID GRIEG	2.001
DATE 11 MAR 88	1. CALCULATION NO. NE-02-88-10
	4. REVISION 0

5. REFERENCES

REF NO.	DOCUMENT NO.	ISSUE DATE OR REVISION	TITLE	AUTHOR
13	220-01,367, 1 220-01,367, 2 220-01,367, 3 220-01,367, 4	5 5 3 3	Tubing Identification and Isometrics for Rack H22-P027 (MS-LT-26D, MS-PT-51B)	JCI & Supply System
14	220-01, 801, 2 220-01, 801, 4 220-01, 801, 5	10 6 6	Tubing Identification and Isometrics for CMS-LT-2	JCI & Supply System
15	220-01,1206, 2 220-01,1206, 4	1 1	Tubing Identification and Installation Isometrics for SW-FT-8B	JCI & Supply System
16	220-01,193, 1 220-01, 193, 3 220-01, 193, 5 220-01, 193, 6 220-01, 193, 7 220-01, 193, 8 220-01, 193, 20 220-01, 193, 21 220-01, 193, 21A 220-01, 193, 23 220-01, 193, 23A 220-01, 193, 23B 220-01, 193, 23C	6 3 3 2 3 2 2 2 1 2 1 1 1	Tubing Identification and Isometrics for Rack H22-P021 (RHR-FT-15B)	JCI & Supply System
17	220-01, 641, 1 220-01, 641, 2 220-01, 641, 4 220-01, 641, 5 220-01, 641, 6	2 3 4 2 2	Tubing Identification and Isometrics for Rack H22-P004 (MS-LITS-26A & MS-PT-51A)	JCI & Supply System
18	NE-02-86-23	0	Temperature Response of Structural Components to Appendix R fire	S.R. Kirkendall
19	220-01,892,1	3	Hanger Type 250-4	JCI
20	220-01,650,1	4	Hanger Type 301-1	JCI
[illegible]	220-01,434,1	5	Hanger Type 320-1	JCI
22	220-01,435,1	5	Hanger Type 320-2	JCI

USE ADDITIONAL PAGES IF NECESSARY

968-18631 R1 (3/87)

WASHINGTON PUBLIC POWER SUPPLY SYSTEM

WNP-2

CALCULATION INPUT SUMMARY

CONTINUATION

2. PREPARED BY: [illegible] Krieg

DATE: 11 MAR 88

PAGE: 2.002

1. CALCULATION NO.: NE-02-88-10

4. REVISION: 0

5. REFERENCES

REF NO.	DOCUMENT NO.	ISSUE DATE OR REVISION	TITLE	AUTHOR
23	220-01,436,1	5	Hanger Type 320-3	JCI
24	220-01,439,1	6	Hanger Type 340-3	JCI
25	220-01,913,1	4	Hanger Type 220-5	JCI
26	220-01,827,1	4	Hanger Type 121-1	JCI
27	220-01,655,1	7	Hanger Type 100-1	JCI
28	220-01,692,1	7	Hanger Type 100-2	JCI
29	220-01,693,1	6	Hanger Type 100-3	JCI
30	220-01,698,1	2	Hanger Type 116-1	JCI
31	220-01,971,1	3	Hanger Type 101-2	JCI
32	220-01,895,1	1	Hanger Type 130-9	JCI
[illegible]	220-01,915,1	1	Hanger Type 160-5	JCI
34	220-01,731,1	0	Hanger Type 130-3	JCI
35	220-01,647,1	2	Hanger Type 130-4	JCI
36	220-01,859,1	3	Hanger Type 116-8	JCI
37	220-01,732,1	1	Hanger Type 130-5	JCI
38	220-01,796,1	1	Hanger Type 130-10	JCI
39	220-01,531,1	3	Hanger Type 120-4	JCI
40	220-01,399,1	7	Hanger Type 180-1	JCI
41	220-01,400,1	7	Hanger Type 180-2	JCI
42	220-01,423,1	6	Hanger Type 200-3	JCI
43	220-01,638,1	4	Hanger Type 220-1	JCI
44	220-01,718,1	4	Hanger Type 220-2	JCI
45	220-01,838,1	1	Hanger Type 205-1	JCI
46	220-01,970,1	4	Hanger Type 220-6	JCI
47	220-01,405,1	5	Hanger Type 160-2	JCI
48		8th Edition	Mark's Standard Handbook for Mechanical Engineers	Baumeister & Avallone

USE ADDITIONAL PAGES IF NECESSARY

968-18631 R1 (3/87)

WASHINGTON PUBLIC POWER SUPPLY SYSTEM

WNP-2

CALCULATION INPUT SUMMARY

1. REFERENCE CONTINUATION	2. PREPARED BY [signature] DATE 28 JUNE 88	PAGE 2.003
		1. CALCULATION NO. NE-02-88-10
		4. REVISION Ø

5. REFERENCES

REF NO	DOCUMENT NO.	ISSUE DATE OR REVISION	TITLE	AUTHOR
49		3rd Edition	Principles of Heat Transfer	Kreith
50		14th Edition	Fire Protection Handbook	NFPA
51	7.10.12	Sep 84	Fire Protection of Instrument Tubing	A. Friberg
52	10 CFR Part 50		App R - Fire Protection Program	NRC
53		2nd Edition	Factory Mutual Handbook	
54	PSR-199		HEATINGG Instruction Manual	Oak Ridge
55	E551	rev 47	Cable Schedule	SS
56	QID Ø36003		Rockbestos Cable Environ Qual File	SS
57		1973	Handbook of Heat Transfer	Rosenow
58		1972	Thermal Radiation Heat Transfer	Siegel
59	220-01, 203, 1 220-01, 203, 4 220-01, 203, 13 220-01, 203, 14	7 4 4 4	Tubing Identification and Isometrics for Rack H22-P009 (MS-LT-44B)	JCI & Supply System
60	220-01, 637, 1 220-01, 637, 3 220-01, 637, 4 220-01, 637, 5	3 1 4 2	Tubing Identification and Isometrics for IR-73 (MS-PS-8A thru D)	JCI & Supply System
61	220-01, 413, 4	1	Tubing Identification and Isometric for local instrument RHR-FT-1	JCI & S.S.
62		5th edition	Piping Handbook, McGRAW HILL	Crocker & King
63	SS2-PE-88-0599	5 July 88	Supports for Appendix R Instrument Sensing Lines	NS Porter

USE ADDITIONAL PAGES IF NECESSARY

968-18631 R1 (3/87)

WASHINGTON PUBLIC POWER SUPPLY SYSTEM

WNP-2

CALCULATION INPUT SUMMARY

CONTINUATION

2. PREPARED BY	PAGE
I. RUID / DRIEG	2.004
DATE: 24 MAR 88	3. CALCULATION NO.: NE-02-88-10
	4. REVISION: 0

5. REFERENCES

REF NO.	DOCUMENT NO.	ISSUE DATE OR REVISION	TITLE	AUTHOR
49		3rd Edition	Principles of Heat Transfer	Kreith
50		14th Edition	Fire Protection Handb	NFPA
51	7.10.12	Sep 84	Fire Protection [illegible] ment Tubing	A. Friberg
52	10 CFR Part 50		App R - Fi[illegible]ction Program	NRC
53		2nd Edition	Factor[illegible] Handbook	
54	PSR-199		HEA[illegible] Instruction Manual	Oak Ridge
55	E551	rev 47	[illegible] schedule	SS
56	QID 036003		[illegible]rbestos Cable Environ. Qual. File	SS
57			Handbook of Heat Transfer	Rosenow
58		[illegible]	Thermal Radiation Heat Transfer	Siegel

REFERENCES ON PAGES 2.000-2.003

6. ANALYSIS METHOD (CHECK APPROPRIATE BOXES)

☒ MANUAL (List source of equations in reference section above or document equations on page 5.000)

☒ COMPUTER ☒ MAIN-FRAME ☐ PERSONAL

☐ IN-HOUSE PROGRAM

☒ COMPUTER SERVICE BUREAU PROGRAM

☒ BCS ☐ CDC ☐ PCC ☐ OTHER _____ (NAME)

☒ VERIFIED PROGRAM: CODE NAME / REVISION: HEATING6 / VERSION 1.03

☐ UNVERIFIED PROGRAM: DOCUMENT IN APPENDIX B

7. INPUT DATA AND ASSUMPTION SUMMARY

SOURCE OR REF.	PAGE OR SECTION	DATA / ASSUMPTION DESCRIPTION
10	6-4	Structural steel is assumed to fail when the average steel temp exceeds 1100F or the hottest point exceeds 1200 F.
6	7-111	The NBS concept of equivalent fire severity is used to convert temp-time fire histories to the standard fire test time-temperature curve.
1, 63		Only division 2 lines which are routed through Div 1 or multidivisional areas need to be analyzed.

All assumptions are referenced as they are encountered in the text of the calculation. The three listed above are major over-all assumptions which affect the entire calculation.

USE ADDITIONAL PAGES IF NECESSARY

968-18631 R1 (3/87)

WASHINGTON PUBLIC POWER SUPPLY SYSTEM

WNP-2
CALCULATION OUTPUT SUMMARY

1. INTERFACING CALCULATIONS

Calc. No.	Rev	How Affected

2. PREPARED BY DAVID KRIEG

DATE 5 JULY 88

PAGE 3.000

3. CALC. NO. NE-02-88-10

4. REVISION 0

5. DOCUMENTS / DRAWINGS AFFECTED

Document No.	Rev.	Page or Section	Title	EPN

6. RESULTS AND CONCLUSIONS

The following Hangers will require protection during a fire in the R-I fire area of the reactor building. The protecting substance (thermolag, 3-M wrap, etc) must cover all support steel up to the base plate and including the block clamp which connects the tubing to the hanger.

on ref. 16 drawings
130-10-012
130-10-005
250-4-002
130-4-017
220-5-017
121-1-033
121-1-055
121-1-029
121-1-018
121-1-043
121-1-041
130-5-002
220-2-017
220-2-036
120-4-004
120-4-002
120-4-003
120-4-005
120-4-001
180-1-022
180-1-094
121-1-035
180-2-070
100-3-143
220-1-034
220-1-056
200-3-017
180-2-056
180-2-060
180-2-052
220-6-020

on ref. 14 drawings
100-1-185
220-6-036

on ref. 13 drawings
220-1-005

on ref. 59 drawings
116-1-087
100-2-20
180-1-046
180-1-047
101-2, A: 1572
180-1-102
180-1-049
220-6-004
220-6-006
100-1-104
100-1-031
220-6-005

on ref. 60 drawings
130-9-007
130-9-009
130-3-007
160-5-001
160-2-001
116-8-009
205-1-001
220-1-093
220-1-059

USE ADDITIONAL PAGES IF NECESSARY

968-18652 (7-84)

RESULTS AND CONCLUSIONS

The following hangers require no protective covering but the carbon steel bolt which connects the tubing block clamp to the hanger should be changed to stainless steel (type 304 or equal — "equal" meaning ~18% Cr and ~8% Ni). In all computer runs the average temperature of the block exceeded 1100°F. Stainless steel performs satisfactorily at the temperatures seen, but carbon steel does not.

on ref. 16 drawings

320-2-035
340-3-009
320-3-029
320-3-018
320-3-027
320-2-069
320-1-264
320-1-253
320-1-248
320-1-315
320-1-327
320-1-312
320-1-319
320-1-326
320-1-339
320-1-331
320-1-324
320-1-329
320-1-333
301-1-135
301-1-137
301-1-108
301-1-124
301-1, between SN numbers 124 & 149
301-1-149
301-1-119

on ref 13 drawings

301-1, A: 118
301-1, A: 478
301-1, A: 482
301-1, A: 486
~~301-1, A: 471~~
~~301-1, A: 472~~
~~301-1, A: 473~~
~~301-1, A: 475~~
~~301-1, A: 476~~
~~301-1, next to A: 476~~

Div. 2 Area JRK

on ref 59. drawings

301-1, A: 843
301-1, A: 1275
301-1, A: 5338
301-1, A: 580
301-1, A: 1559
301-1, A: 1918
301-1, A: 1917
301-1, A: 1916
301-1, A: 1919
301-1, A: 1920
301-1, A: 1921
301-1, A: 1922
301-1, A: 1923
301-1, A: 1924
301-1, A: 1925
301-1, A: 5837

301-1-032
301-1-027
301-1-041
301-1-022
301-1, A: 2896
301-1-013
301-1-048
301-1-043
301-1-006
301-1-040
301-1-046
301-1-020
301-1-030
301-1-085
301-1-039
301-1-011
301-1-088
301-1-044
301-1-034

on ref. 60 drawings

301-1, A: 200
301-1, A: 210
301-1, A: 211
301-1, A: 212
301-1, A: 213
301-1, between A: 213 & 214
301-1, A: 214
301-1, A: 724

301-1, A: 215
301-1, A: 216
301-1, A: 217
301-1, A: 218
301-1, A: 219
301-1, A: 3073
301-1, A: 2930
301-1, A: 2529
301-1, A: 2528
301-1, A: 3074
301-1, A: 3076
301-1, A: 3077
301-1, A: 3078
301-1, A: 3079
301-1, A: 3080
301-1, A: 3101
301-1-076
301-1-004
301-1-055
301-1-051
301-1-077
301-1-074
301-1-064
301-1, A: 3119
301-1, A: 3102
301-1, A: 3103
301-1, A: 3116

WASHINGTON PUBLIC POWER SUPPLY SYSTEM

MANUAL CALCULATION

PAGE 4.00D

CALCULATION NO. NE-02-88-10

REVISION ∅

SUBJECT Appendix R Analysis — Vital Instrument Line Support Steel

PREPARED BY David Rieg — DATE 4 MAR 88

VERIFIED BY S.R. Kirkendall — DATE 7/8/88

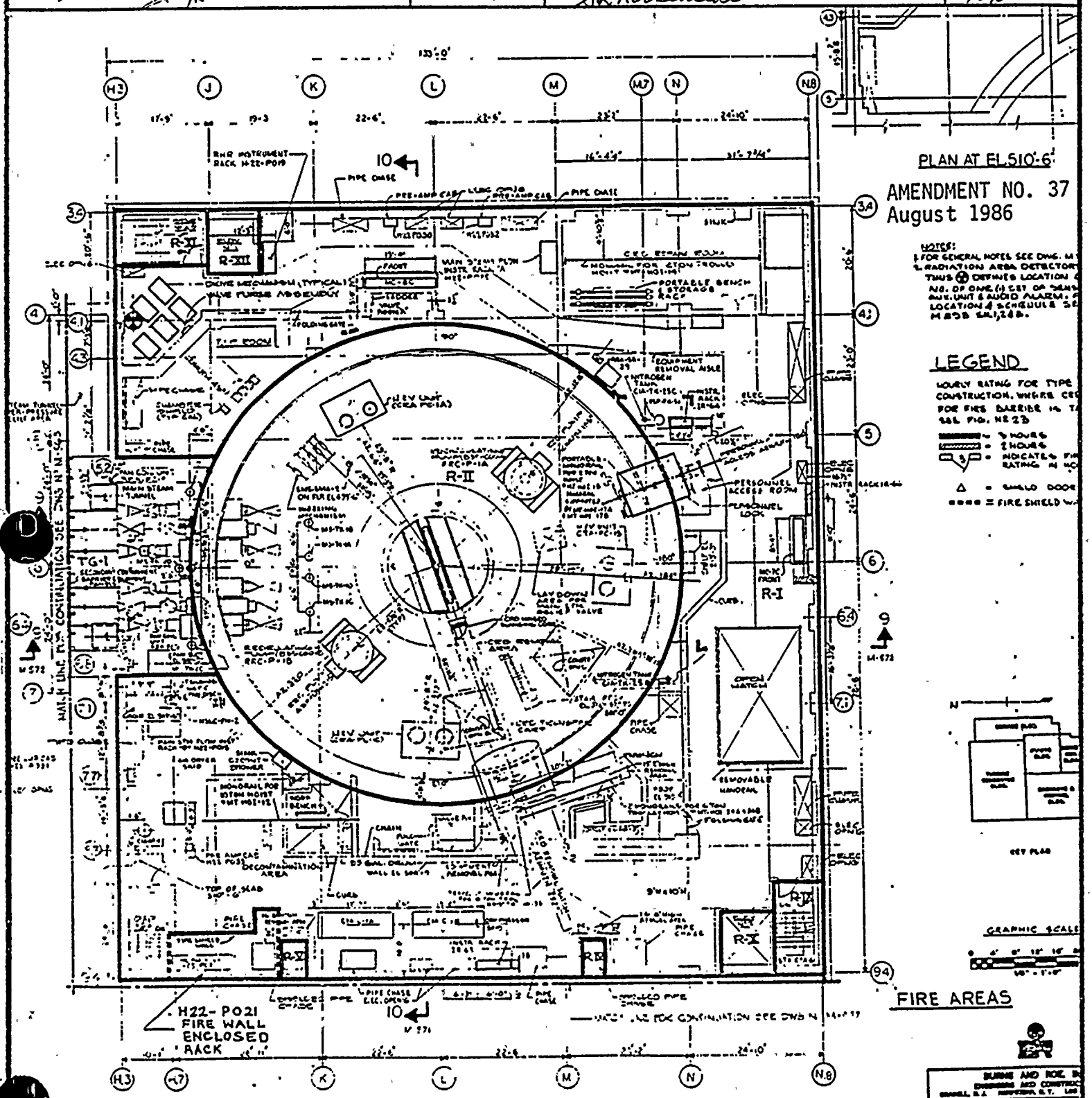

968-18694 (7-84)

WASHINGTON PUBLIC POWER SUPPLY SYSTEM

MANUAL CALCULATION

PAGE 4.001

CALCULATION NO. NE-02-88-10

REVISION ∅

SUBJECT Appendix R Analysis — Vital Instrument Line Support Steel

PREPARED BY: [illegible] DATE 4 MAR 88

VERIFIED BY: JR Kikendall DATE 7/8/88

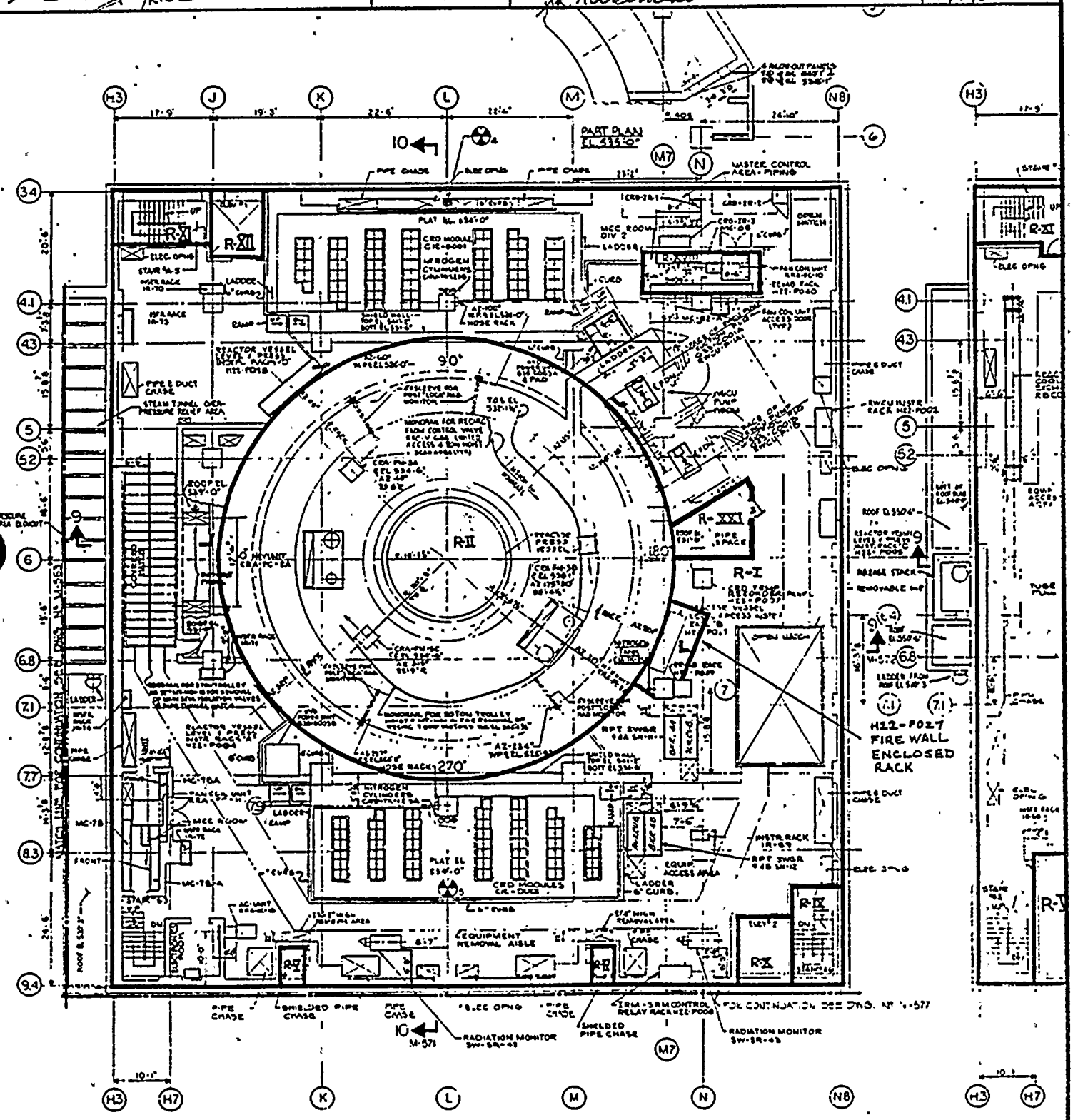

EL. 522'-0"

FIRE AREAS

968-18694 (7-84)

WASHINGTON PUBLIC POWER SUPPLY SYSTEM

MANUAL CALCULATION

PAGE 4.002

CALCULATION NO. NE-02-88-10

REVISION Ø

SUBJECT Appendix R Analysis — Vital Instrument Line Support Steel

PREPARED BY David Riegg DATE 4 MAR 88

VERIFIED BY SL Kirkendall DATE 7/7/88

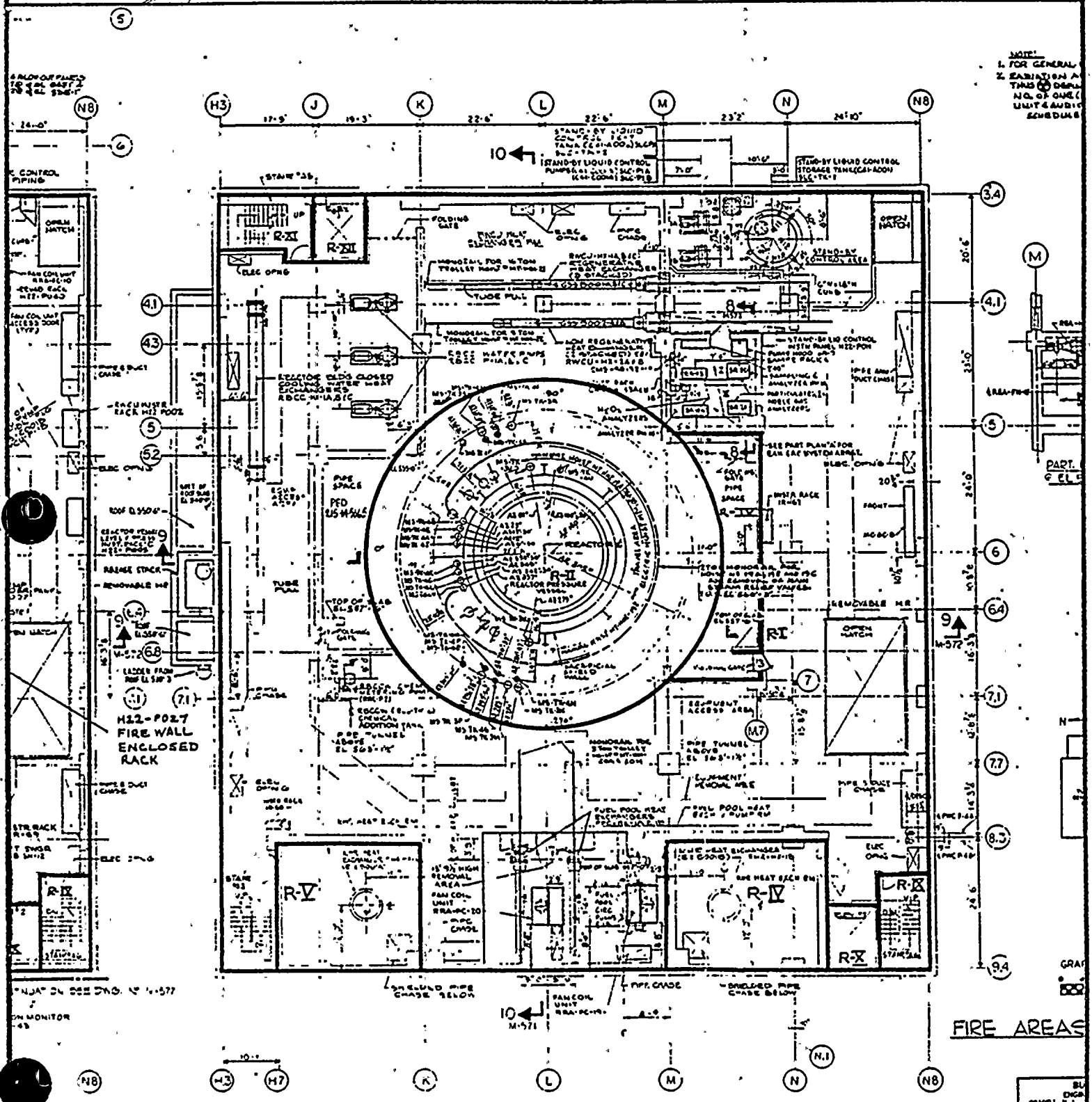

968-18694 (7-84)

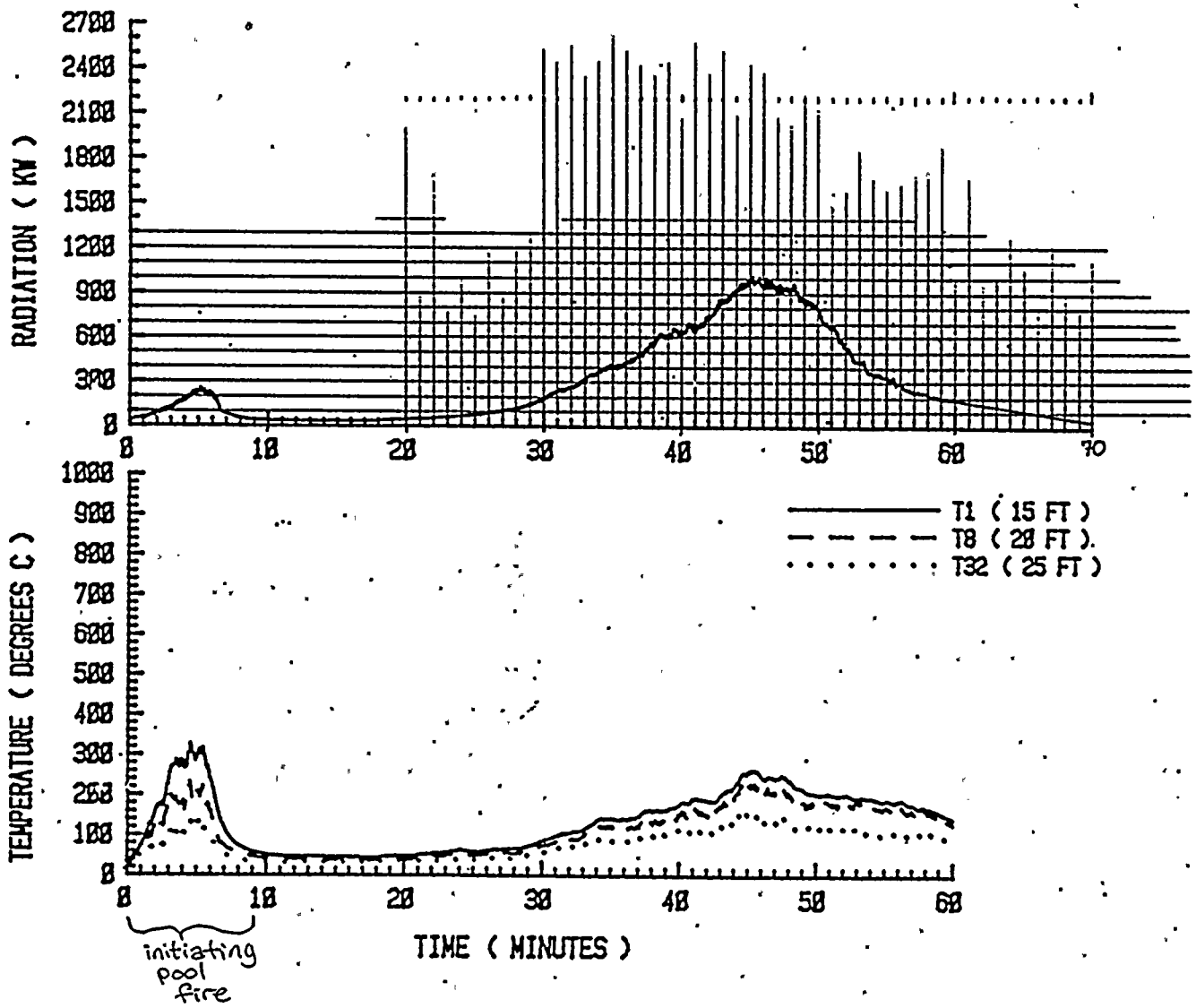

Figure D-18 Weight, Radiation, And Temperature Histories - Test 12

CABLE TRAY FIRE, RADIATIVE ENERGY & TEMP PROFILES (REF 7)

CALCULATION NO. NE-02-88-10 | REVISION Ø

SUBJECT: Appendix R Analysis — Vital Instrument Line Support Steel

PREPARED BY: David Fries | DATE 8 MAR 88 | VERIFIED BY: SR Kukendall | DATE 7/7/88

BACKGROUND

This calculation is being performed in support of the Appendix R analysis for WNP-2. 10 CFR Part 50, Appendix R extends the concept of defense-in-depth to fire protection in fire areas which contain safety related equipment. The objectives set forth in appendix R are 3-fold: to prevent a fire from starting; to detect and rapidly mitigate those fires that do occur; and to provide protection for equipment that is important to safety - so that a fire which is not promptly extinguished by fire suppression activities will not prevent the safe shutdown of the plant. As part of this third objective, calculation NE-02-88-10 is being performed to evaluate the instrument sensing lines at WNP-2 (ref 1). Memo SS2-PE-88-0599 (ref 63) identifies all vital instrument sensing lines which are routed through "wrong division" fire areas. That is Division I sensing lines routed through Division II fire areas and vice-versa. Calc NE-02-85-19 evaluates which instrument lines required for the Appendix R safe shutdown systems are either contained in independent fire areas or are in fire areas where the fire loading is not sufficient to negate the ability to achieve safe shutdown.* Per BRI calculation 7.10.12 (ref 51) it has been shown that the instrument sensing lines themselves can survive a fire in the areas of concern. However, the question has been raised whether the support structures, which are carbon steel (rather than stainless steel like the sensing lines), can also ~~support~~ continue to perform ~~under fire conditions~~ their function under fire conditions.

In general, for the design basis, all equipment within a fire area

* this is only a small part of the scope of NE-02-85-19 which is the Appendix R safe shutdown analysis.

is assumed to be lost when a design basis fire occurs in that area. However the sensing lines for CMS-LT-2, MS-LT-26D, MS-PT-51B, and RHR-FT-15B are routed through multi division fire areas (Refs 13, 14 & 16) while the instruments themselves are division 2. Per section F.4.4.2 of the WNP-2 FSAR (Ref 2) division 2 safe shutdown systems will be used if a fire develops in a division 1 or a multidivision fire area. Thus, it must be shown that these four sensing lines will survive a maximum credible fire in the multidivision fire areas they cross. If this cannot be shown they must be upgraded until they can survive the fire.

These four sensing lines with connecting branch lines utilize 29 different kinds of hangers, and vary substantially in the amount of combustibles they are exposed to. The hangers vary from a type 301-1 (ref 21) which consists of a tubing clamp bolted to a flat plate which is bolted directly to concrete, to a type 250-4 (ref 19) which consists of a 17 foot long section of 4x4 tube steel mounted to a plate at each end. The fire area of concern in all four cases is the reactor building general floor area, R-I. The average combustible loading in area R-I is 25,875 Btu/ft² (Ref 2, page F.2-133) which corresponds to a standard fire of substantially less than ½ hour in duration (ref 6, page 7-111). However point loadings vary considerably throughout the area. Approximately 87% of the combustible loading is due to fire retardant electrical cable insulation in cable trays (10% to 15% of which are protected by a thermolag fire barrier). All other contributions to the combustible load are small by comparison but the largest of these are listed on the next page for elevations 471, 501, 522 & 548 where the sensing lines are routed.

Hydraulic fluid reservoir	29.7×10^6 Btu	(page F.2-167)
Cabinets of protective clothing	10.3×10^6 Btu	(page F.2-154a)
Health Physics supplies in counting room	10.0×10^6 Btu	(page F.2-167)
Transient combustibles	8.4×10^6 Btu	(page F.2-167)

The hydraulic fluid reservoir is located on the opposite side of containment from sensing lines. Even if the tank were ruptured the fluid would not threaten the sensing lines because it would be contained within a floor curb.

None of the protective clothing cabinets are located in close proximity to the sensing lines. The same is true of the Health Physics counting room.

The "transient combustible" load consists of a full 55 gallon drum of lube oil which may be anywhere within the plant. This load must, therefore, be assumed to be in an area which will threaten the sensing lines.

All the other transient loads on any given floor* are bounded by the transient lube oil drum which will be used in this analysis. As discussed before, the cable trays are far and away the largest contributers to the fire loading. Hangers in close proximity to cable trays, particularly those above the cable trays will be considered to have the highest fire loading. The transient combustible load will be considered to be a threat to all hangers except those located in controlled storage areas with fire barrier walls.

* see not page 5.004

ACCEPTANCE CRITERIA

Per ref 10, the Steel Construction Manual, structural steel is assumed to fail if analysis shows that any point exceeds 1200 °F or the average temperature exceeds 1100 °F

THE FOUR SENSING LINES

The instruments MS-LT-26D and MS-PT-51B are connected to the same instrument tubing. Both instruments are located in a fire wall enclosed instrument rack, rack H22-P027 (ref 13). The fire wall enclosed area is a div 2 fire area and therefore hangers within this area below the elevation of the top of the walls are not threatened by a fire in the multidivisional general reactor building area R-1. The instrument runs from the rack on the 522 elevation up through multidivisional R-I then through the ceiling into the div 2 RHR pipe chase area, R-IV. The run of tubing in the R-1 area is of concern in this calculation. In, addition, the tubing to these instruments has two branch lines. One branch tees off the instrument line in the multidivisional area above the rack and runs continuously through multidivisional R-I until it reaches the fire wall enclosed rack, H22-P009, on the 471 elevation (ref 59). This branch is connected to MS-LT-44B. The second branch tees off of the instrument line in the div 2 RHR pipe chase area very close to the point where the tubing enters the inerted containment. The branch line exits the div 2 area and runs through multidivisional R-I until it terminates at MS-PS-8 A through D in fire wall enclosed instrument rack IR-73 (ref 60). All the tubing hangers on these three lines which are in multidivisional areas are part of this calculation.

The instrument CMS-LT-2 resides in the RHR B pump room which is a div 2 fire area, R-IV. The instrument line runs up to multidivisional R-I on the 471 elevation and then into containment. The two hangers in the R-I area are part of this calculation (ref 14).

The last instrument of concern is RHR-FT-15B. RHR-FT-15B is located in the div 2, fire wall enclosed rack H22-P021 on the 501 elevation. Before the tubing leaves the fire wall enclosed area it branches off to RHR-FT-1 (ref 61). RHR-FT-1 and all the hangers on this branch line remain within the fire wall enclosed, div-2 area. Thus, they are not considered in this calculation. After branching, the line from RHR-FF15B exits to multidivisional area R-I. The line runs along the west side of the reactor building up to the 522 elevation. On the 522 elevation, the line runs through the RHR-B pipe chase which is fire area R-IV. Since this area is a div 2 fire area the tubing hangers within the pipe chase are not considered in this calculation. After exiting the pipe chase, the instrument line runs once again through multidivisional R-I. The tubing runs up to the 548 elevation and into the RHR B valve room and pipe chase, area R-IV, and then into containment. As stated before area R-IV is a div 2 fire area. All the hangers on this tube run which are in multidivisional R-I are part of this calculation.

* note (from page 5.002)

There are several other point combustible loads in the reactor building on the floors of concern. These loads are small compared to the loads discussed on page 5.002. The Btu loading assumed for the cable tray combustible load bounds any combination of these remaining point loads in proximity to the hangers in question. That is, none of the supports that this calculation is concerned with is directly exposed to a combination of point loads which exceeds the cable insulation load as modeled beginning on page 5.012. The model set of cable trays by itself is the worst combination of point loads experienced by the hangers in question.

will be assumed that the oil begins to burn at steady state immediately after it is ignited.

At ~~25~~ 500 square ft the amount of oil per square foot is

$$\frac{(55 \text{ gallons})(7.39 \text{ lbs/gal})}{500 \text{ ft}^2} = 0.813 \text{ lbs/ft}^2$$

Since the mass burn rate at steady state is 0.43 lbs/ft²-min the length of time the fire will burn is

$$\frac{0.813 \text{ lbs/ft}^2}{0.43 \text{ lbs/ft}^2\text{-min}} = 1.89 \text{ minutes}$$

Thus, assume the fire burns at 2020°F for 2 minutes. In reality, the ~~120-A/type~~ hangers of concern in this case would be shielded from an oil spill fire ~~to~~ by the cable trays beneath them — at least to a large extent. For the purpose of this analysis, however, it will be assumed that the flames envelop the hanger.

CONVECTIVE HEAT TRANSFER FROM THE OIL FIRE

HEATING6 calculates the heat transfer across a surface using the following equation

$$q = A\left\{h_c + h_r\left[T_g^2 + T_s^2\right]\left[T_g + T_s\right]\right\}(T_g - T_s)^*$$

or

$$q = A\left\{h_c(T_g - T_s) + h_r(T_g^4 - T_s^4)\right\}$$

where: q = energy transfered across boundary (Btu/min)
h_c = forced convection coefficient (Btu/min-in²-°R)
h_r = radiative heat transfer coef. (Btu/min-in²-°R)
T_g = gas temp (°R)
T_s = surface temp (°R)
A = surface area (in²)

* THE CODE ALLOWS THE USE OF ANY UNITS AS LONG AS THEY ARE CONSISTANT.

DEFINE THE WORST CASE HANGER

The hanger geometry varies considerably from hanger to hanger among the 29 types. But, it is undesirable and expensive both in labor and computer time to analyze each individually. So, a method to sort out the most vulnerable hangers must be devised. The three geometry variables which most affect the peak steel temperature in a fire are the surface area, the conductive path cross-section area, and the length of the conduction path from the farthest point to the hanger base plate. The larger the surface area exposed to the fire, the more heat is transfered to the hanger. Similarly, the longer the conduction path is from the tip of the hanger engulfed in flame to the base plate to ambient temperature concrete the less energy can be dumped. Thus long conduction paths & large exposure areas both lead to higher steel temperatures. Conversly, the larger the area of the minimum conduction path the more energy that can be transfered out of the hanger. An index can therefore be developed which will serve to order the vulnerability of the hangers.

$$I = \frac{AL}{C}$$

where I = index
A = exposure area
L = length from tip to base plate
C = average area of conduction path.

This method is not meant to be a rigorous proof of hanger heat transfer performance — (many second order variables are not used, ie variation of conduction area, orientation of the exposure ~~areas~~ areas, etc) but, rather, ~~a~~ simply a means to define the problem hangers.

CALCULATION NO. NE-02-88-10

REVISION ∅

SUBJECT Appendix R Analysis — Vital Instrument Line Support Steel

PREPARED BY David Grieg DATE 30 JUN 88

VERIFIED BY SR Kukendall DATE 7/7/88

The table below includes all the hanger types used on the div 2 instrument lines ennumerated in this calculation in multidivisional fire areas.

HANGER TYPE	REF	EXPOSURE AREA	COND. PATH LENGTH		MINIMUM COND. AREA		INDEX
100-1	27	4(3×12) = 144 in²		12 in	(3+3).25	1.5 in²	1,152
100-2	28	4(3×18) = 216		18	(3+3).25	1.5	2,592
100-3	29	4(3×24) = 288		24	(3+3).25	1.5	4,608
101-2	31	4(3×18) = 216		18	(3+3).25	1.5	2,592
116-1	30	2(2×1.58+4)×4 + 4(3×12) = 344	7+12 =	19		1.59 *	4,116
116-8	36	4×14.3 + 4(3×48) = 276	7+48 =	55		1.59*	26,850
120-4	39	4(4×60) = 960		60		3.59*	16,045
121-1	26	4(3×42) = 504		42		2.59*	8,173
130-3	34	2(14.3)×4 + 4(4×44) - (4×12) = 1056	7+42 =	49		1.59*	32,556
130-4	35	(22×14.3) + 4(4×28) - (4×12) = 715	11+22 =	33		1.59*	14,831
130-5	37	(22×14.3) + 4(4×36) - (4×12) = 843	11+30 =	41		1.59*	21,727
130-9	32	4(4×48) - (12×4) = 720		42		3.59*	8,423
130-10	38	4(4×24) - (4×12) = 336		18		3.59*	1,685
160-2	47	4(4×72) + 4(3×66) = 1944		66	(3+3).25	1.5 +	85,536
160-5	33	4(4×72) + 4(3×60) = 1872		60	(3+3).25	1.5 +	74,880
180-1	40	4(3×12) = 144		12	(3+3).25	1.5	1,152
180-2	41	4(3×24) = 288		24	(3+3).25	1.5	4,608
200-3	42	4(4×48) = 768		48		3.59*	10,269
205-1	45	4(3×94) = 1,128	39+51 =	90		2.59*	39,197
220-1	43	3(3×26) = 234	3.5+4.75 =	8.25	(3+3).25	1.5	1,287
220-2	44	3(3×32) = 288	6.5+4.75 =	11.25	(3+3).25	1.5	2,160
220-5	25	Connected to another hanger type →					large
220-6	46	Connected to another hanger type →					large
250-4	19	5(20×14.5) + 4(4×210) = 4790	10+(105-6)	109		1.59*	328,371
301-1	20	Plate bolted directly to concrete →					very small
320-1	21	(11×14.3) - (11×1.58) = 140	4+1.58 =	5.6	11×.184* -	2.02	386
320-2	22	(17×14.3) - (17×1.58) = 216	4+1.58 =	5.6	17×.184*	3.13	386
320-3	23	(24×14.3) - (24×1.58) = 305	4+1.58 =	5.6	24×.184*	4.42	386
340-3	24	3(4.06×27) + 2(2.75×27) = 477	4.16+2.03 =	6.2	27×.289*	7.80	379

* ref 10 for dimensions of structural members

\+ though the path through the angle is shorter it produces a higher index due to smaller cond. area.

Of all the hanger types, type 250-4 is clearly the most vulnerable and type 301-1 clearly the least vulnerable.

After a thorough plant inspection of the sensing lines it was found that four 120-4 type hangers all reside directly above a pair of cable tray stacks. The hangers are 120-4-002, 120-4-003, 120-4-004, and 120-4-005 (ref 16). Since cable trays constitute the heaviest fire loading and since the 120-4 type hanger has a fairly simple geometry; this type hanger will be analyzed first. The results of this first analysis will then be used to guide the direction of the rest of the calculation.

If hanger type 120-4 passes the fire test model then a larger more bounding type hanger will be chosen. If the 120-4 hanger does not survive then a less vulnerable hanger will be chosen in an effort to find which hangers must be protected and which do not.

MODEL THE FIRE EXPOSURE

The combustible loading for the 120-4 type hangers consists of the transient 55 gallon barrel of lube oil plus the fire retardant cable insulation which resides in the cable trays directly below the hangers. First, the barrel of oil.

from ref 2 page F.2-6 The oil has a heating value of 20,000 Btu/lb

from ref 53 page 46-1 A 55 gallon oil spill will spread over an area of 1100 ft².

from ref 6 page 21-37 Heavy fuel oils (which have the same viscosity & heating value as lube oil, and are also hydrocarbon compounds) have a steady state mass burn rate of 0.035 Kg/m²-s in large pools. This is equal to 0.43 lb/ft²-min

from ref 6 page 21-38 Pool fires generally require 10 minutes or more to come up to steady-state, however some researchers have reported times as short as one minute.

from ref 18 page 5.021 The flame temperature of a large lube oil fire is 2020 °F. This number is consistent with the values given in ref 6 for petroleum product pool fires which range from 1770 °F to 2220 °F.

from ref 48 page 1-42 The density of 20/20, 28 °API oil is 7.39 lbs/gal

There is no area within the multidivision fire area which the sensing lines are routed which would contain a 55 gallon lube oil spill in less than 1100 ft² and still reach any of the sensing lines. However, for conservatism assume that the oil spreads over only half this area and resides directly beneath the hangers of concern. Because a fire which comes to steady state quickly exposes the equipment to the highest number of degree hours above 700 °F (the temperature at which steel begins to be affected, ref 10), it

and h_c & h_r are user supplied variables

from ref 5, page 3.16, eqn (18) & (19)

$$h_c = 0.99 + 0.21V \quad \text{for } V < 16\ ft/s$$

or

$$h_c = 0.5(V)^{0.78} \quad \text{for } 16 \le V \le 100\ ft/s$$

To define the velocity of the gasses in the flame the quantity of air required to burn oil is needed.

from ref 5, page 15.7 the ratio of the mass of dry air to the mass of fuel is given by

$$\frac{\dot{M}_a}{\dot{M}_f} = 0.0144\,(8C + 24H)$$

where: C = the mass persentage of carbon in the fuel
H = the mass percentage of hydrogen

From page 15.5,

fuel oils consist of approximately 85% C and 15% H

thus,

$$\frac{\dot{M}_a}{\dot{M}_f} \cong 15$$

and the total mass of combustion gasses is

$$\dot{M}_g = \dot{M}_a + \dot{M}_f$$

or $\dot{M}_g = 16\,\dot{M}_f$

The total mass burn rate of fuel is 0.43 $lb/ft^2\text{-}min$ so the mass flow rate of combustion gasses is $16(0.43) = 6.88\ lb/ft^2\text{-}min$

From ref 49, table A.3 the density of Air at 2000°F is .016 lb/ft^3

the density of CO_2 at 2000°F is .025 lb/ft^3

Per ref 5 page 15.9, a fuel oil burn produces flue gas which is 15% CO_2. The average density is thus

$$\rho = .85(.016) + .15(.025) = .0175\ lb/ft^3$$

the average gas velocity is therefore

$$V = \frac{6.88\ lb/ft^2\text{-}min}{0.0175\ lb/ft^3}$$

$$V = 393.1\ ft/min \text{ or } 6.55\ ft/sec$$

since $V < 16\ ft/s$

$$h_c = 0.99 + 0.21(6.55)$$

$$\boxed{h_c = 2.37\ Btu/hr\text{-}ft^2\text{-}°F \quad \text{or} \quad 2.74 \times 10^{-4}\ Btu/min\text{-}in^2\text{-}°F}$$

RADIATIVE HEAT TRANSFER FROM THE OIL FIRE

Assuming that both the flame and the steel act as black body radiators (slightly conservative since the emmisivity of steel is less than 1 - meaning that some of the energy from the hotter flame would be reflected), the equation describing radiative heat transfer is

$$q_r = A\mathcal{F}\sigma(T_{fire}^4 - T_{steel}^4)$$

where: A = steel surface area
$\mathcal{F}$ = shape factor
σ = Stephan-Boltzman constant

Since it is assumed that the steel is engulfed in the flame, the shape factor, $\mathcal{F}$, is 1.0. Thus, the HEATING G radiative heat transfer coefficient, h_r, is equal to the Stephan-Boltzman constant

$$h_r = \sigma$$

$$h_r = 1.714 \times 10^{-9}\ Btu/hr\text{-}ft^2\text{-}°R^4$$

or

$$\boxed{h_r = 1.984 \times 10^{-13}\ Btu/min\text{-}in^2\text{-}°R^4}$$

CALCULATION NO. NE-02-88-10 | REVISION Ø

SUBJECT: Appendix R Analysis — Vital Instrument Line Support Steel

PREPARED BY: DAVID GRIEG | DATE 14MAR88 | VERIFIED BY: SQ Kirkendall | DATE 7/8/88

CABLE TRAY FIRE CHARACTERISTICS

Most of the data used to define the characteristics of a cable tray fire comes from ref. 7, "Intermediate-scale Fire Tests of Cable Tray Installations." The hangers of interest on the 522' elevation of the reactor building are installed above 2 stacks of cable trays. One stack has six trays, two of which are empty, and the other stack has four trays, two of which are thermolagged. Below is a tabulation of the trays by node numbers, their current combustible loading, and the maximum loading allowed. The maximum permissible load is calculated assuming that only G1-1C-12 cables are used (G1-1C-12 cables have the highest percent cross-sectional area of cable insulation of all the cables used at WNP-2).

CABLE TRAY TYPE.	FROM NODE	TO NODE	TRAY SIZE	% FULL* AT PRESENT	WT. OF INSULATION	MAXIMUM % OF FULL	MAX WT. OF INSULATION
S2	4030	4031	24x6 in	13.1 %	8.91 lb/ft	50%	34.00 lb/ft
C5	4253	4254	6x6	1.5	0.26	50	8.50
C2	4380	4381	24x6	44.3	THERMOLAGGED		
P2	4588	4594	24x4	13.2	THERMOLAGGED		
C6	4205	4206	6x6	Ø	Ø	50%	8.50
C4	4305	4306	6x6	Ø	Ø	50	8.50
P1	4684	4685	24x4	12.7	5.76	40%	18.13
C1	4482	4483	24x6	35.4	24.08	50	34.00
S1	4092	4093	24x6	17.3	11.77	50	34.00
S1	4080	4081	12x6	16.6	5.64	50	17.00
				Total =	56.41 lb/ft	TOTAL =	162.65 lb/ft

* REF 55

The present tray loading in this portion of the plant is 56.4 pounds per linear foot total for all ten trays. The maximum permissible load is 162.65 pounds per linear foot.

The test set up in reference 7 consists of 12 trays in two stacks of six. The total weight of insulation for the E/H cable type was 743 kg (1636 lb) and the test tray length was 8 ft. This gives a loading of 205 pounds per linear foot. Thus the test loading was substantially greater than the maximum permissible loading below the instrument tubing. The cables tested in ref 7 were of 3 types. The type denoted "E/H" is IEEE 383 qualified and is representative of the cable used at WNP-2. The tests of interest involve only the E/H type cable, burning with no fire suppression activity; test numbers 10, 11, & 12. Of these three tests, they were unable to produce a self-sustaining fire in 10 or 11. In test no. 12 they succeeded in getting the fire retardant cables to burn - and burn to completion. Because of the heavier combustible loading of the test trays, the results of test no. 12 will conservatively bound the WNP-2 configuration both in Heat output and length of burn. The figure on sheet 4.000 of this calculation is a copy of the uncorrected radiant heat measured from the cable tray test fire no. 12 as well as 3 measured temperature curves.

None of the 3 measured temperatures were in the flames themselves. The closest of the three being about 6½ feet above the top tray. Thus, the peak flame temperature will be calculated using the radiant heat measurements. The radiant heat was measured by a radiometer 10 feet above

the center of the fire and 65.6 feet to one side (ref 7, page 2-3). The peak measurement shown on the graph is 1015 KW (3.41×10^6 Btu/hr) However, a corrected value of 1211 KW (4.13×10^6 Btu/hr) is given in table 5-1, as well as the transmittance correction coefficient used to correct for absorption by water, soot, CO_2, etc in the air between the test fire and the radiometer. The transmittance coefficient for test 12 was 0.837.

The heat released by the fire can be written as follows:

$$q_a^* = \frac{q_m}{c} = A\sigma(T_{fire}^4 - T_{amb}^4)$$

*assumes blackbody radiation
q_a = actual heat release rate (Btu/hr)
q_m = measured heat release rate (Btu/hr)
c = transmittance coefficient
A = surface area of fire (ft^2)
σ = stephan-Boltzman constant
T_{fire} = fire temperature (R)
T_{amb} = ambient temp = 62F (520R) (ref 7 page E-7)

The surface area of the fire is difficult to establish. From the pictures in ref 7 the flames engulfed and danced above the cable trays — also much of the radiant heat will have come from the plume rizing above the fire. However, when solving for flame temperature it is conservative to assume a small area. Therefore, assume that the flame area is equal to the area of a box which just encloses the test tray set up.

$$A = (88in)(44in)2 + (88in)(96in)2 + (96in)(44in)2$$

$A = 33088.\ in^2$

$A = 230\ ft^2$

Rearranging the radiant heat equation

$$T_{fire} = \left\{ \frac{q_m}{C A \sigma} + T_{amb}^4 \right\}^{1/4}$$

substituting:

$$T_{fire} = \left\{ \frac{(1015\ KW)(3412\ BTU/Hr \cdot KW)}{(0.837)(230\ ft^2)(1.714 \times 10^{-9}\ BTU/Hr \cdot ft^2 \cdot °R^4)} + (520°R)^4 \right\}^{1/4}$$

$$T_{fire} = 1803\ °R$$

Thus the peak fire temperature was ~1345 °F

this corresponds to a time of about 12 minutes on the ASTM E119 time temperature curve (ref 8). However, from the radiant heat graph on sheet 4.003 it can be seen that a substantial amount of heat was given off for more than 30 minutes. Per reference 6, page 7-111, the concept of equivalent fire severity can be used to convert the test fire temperature profile to an equivalent time under the standard time temperature curve. This concept states that the area above a base line under the time-temperature curve of a test fire, which is expressed in degree hours, is an approximate representation of the severity of a fire under the standard time-temperature curve when the area above the same base line temperature is equivalent. The base line used represents the temperature the materials involved can be exposed to without impairment. From the steel construction manual (ref 10) this temperature is 700 °F for structural steel.

CALCULATION NO. NE-02-88-10 | REVISION 0

SUBJECT: Appendix R Analysis — Vital Instrument Line Support Steel

PREPARED BY: David Rieg | DATE: 14 MAR 88 | VERIFIED BY: SR Kirkendall | DATE: 7/8/88

By digitizing the radiant heat curve (sheet 4.003, this calc), and using the radiant heat transfer equation, the following table was developed for test no. 12, ref 7.

$$T_{fire} = \left\{ \frac{(q_m)(3412\ Btu/Hr\cdot KW)}{(0.837)(230\ ft^2)(1.714\times10^{-9}\ Btu/Hr\cdot ft^2 R^4)} + (520R)^4 \right\}^{1/4}$$

$$T_{fire} = \left\{ (1.03\times10^{10}\ R^4/KW)\, q_m + (520R)^4 \right\}^{1/4}$$

TIME (MIN)	RADIANT HEAT, q_m (KW)	TEMP (°F)	TIME-TEMP CURVE AREA (°F·MIN)	TIME (MIN)	RADIANT HEAT, q_m (KW)	TEMP (°F)	TIME-TEMP CURVE AREA (°F·MIN)
29	150	670	—	46	1015	1343	6325
30	190	736	36	47	940	1309	6934
31	240	805	141	48	940	1309	7544
32	270	842	283	49	860	1271	8114
33	310	886	469	50	800	1240	8654
34	380	955	724	51	700	1185	9139
35	410	982	1006	52	530	1076	9515
36	420	990	1296	53	440	1007	9822
37	480	1039	1634	54	370	946	10,067
38	570	1103	2038	55	320	897	10,264
39	600	1123	2461	56	290	865	10,429
40	630	1143	2904	57	230	792	10,521
41	670	1167	3371	58	220	779	10,600
42	730	1202	3873	59	200	751	10,650
43	850	1266	4438	60	200	751	10,701
44	920	1300	5038	61	185	728	10,729
45	1015	1343	5682	62	170	704	10,733

CALCULATION NO. NE-02-88-10 | REVISION 0

SUBJECT: Appendix R Analysis — Vital Instrument Line Support Steel

PREPARED BY: [illegible] Price | DATE: 7 JULY 88 | VERIFIED BY: SR Kirkendall | DATE: 7/8/88

For the oil fire the exposure above 700°F is

2 minutes × (2020°F − 700°F)

or an additional 2640 °F-minutes which brings the total exposure to 13,373 °F-minutes.

The following table is a numerical integration of the standard time-temperature curve above 700°F (time-temp curve from ref 8)

TIME (MIN)	TEMP (°F)	CURVE AREA ABOVE 700	TIME (MIN)	TEMP (°F)	CURVE AREA ABOVE 700
1	254	—	14	1379	5411
2	440	—	15	1399	6110
3	627	—	16	1412	6822
4	813	113	17	1424	7546
5	1000	413	18	1437	8283
6	1060	773	19	1449	9032
7	1120	1193	20	1462	9794
8	1180	1673	21	1472	10566
9	1240	2213	22	1481	11347
10	1300	2813	23	1491	12138
11	1320	3433	24	1500	12938
12	1340	4073	25	1510	13748
13	1359	4732			

Thus the combination of an oil fire followed by a cable fire is equivalent, to a little less than a 25 minute fire when steel is the material of concern.

TEMPERATURE INPUT FORMAT

HEATING6 accepts the boundary temperature in the following format

$$T_b = T_i \cdot f(x, y, z, t, T)$$

In this case the boundary temperature is a function of time, t, only and will be entered in tabular form. Initial temperature will be assumed to be 80F. Therefore, the temperature function, $f(t)$, will be equal to the flame temp divided by 80F at any given time.

TIME (MIN)	TEMP (°F)	$f(t)$
0	80	1.0
5	1000	12.5
10	1300	16.25
15	1399	17.49
20	1462	18.28
25	1510	18.88
30	1550	19.38

MODEL THE HANGER GEOMETRY

To reduce the cost of the HEATING 6 computer runs it is desirable to make the model as simple as possible. As stated at the beginning of the calculation the most crucial aspects of this heat transfer problem are: 1, the area of material exposed to the fire; 2, the length of the conduction paths; and 3, the cross-sectional area of the conduction paths. The hangers consist of a 4"x4"x¼" tube steel section welded to a 12"x12"x½" steel plate. The maximum distance between the four hangers in question is 4'8" between 120-4-003 and 120-4-005. (ref 16) Thus, 2'4" of SS tubing will be modeled on each side of the hanger to account for heat input

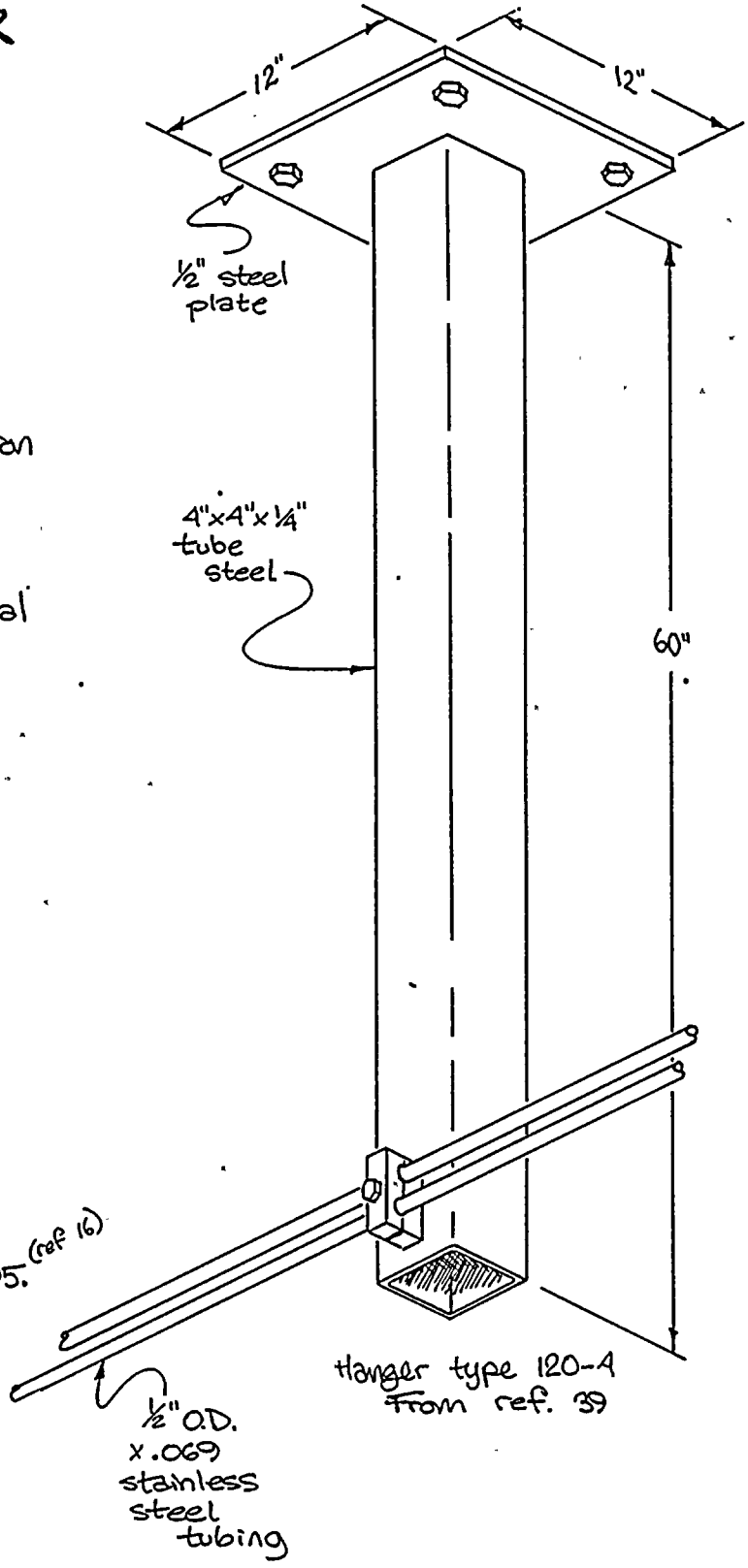

from the tubing itself.

The 4"x4"x¼" tube steel will be modelled as a flat plate 16" wide and ¼" thick and 5' long with one flat surface exposed to flame temperatures. The tube steel is ~~connect~~ welded to the baseplate along its entire end surface. Thus the base plate will be modelled as being 16" wide. ~~Ts~~ The tube steel is connected to the center of the plate. However, to reduce the number of nodes it will be modeled as being connected to one edge of the plate. So the length of the plate model will be $\frac{144 in^2}{16 in}$ or 9.0". The plate is ½" thick. Beneath the plate is 12" of concrete.

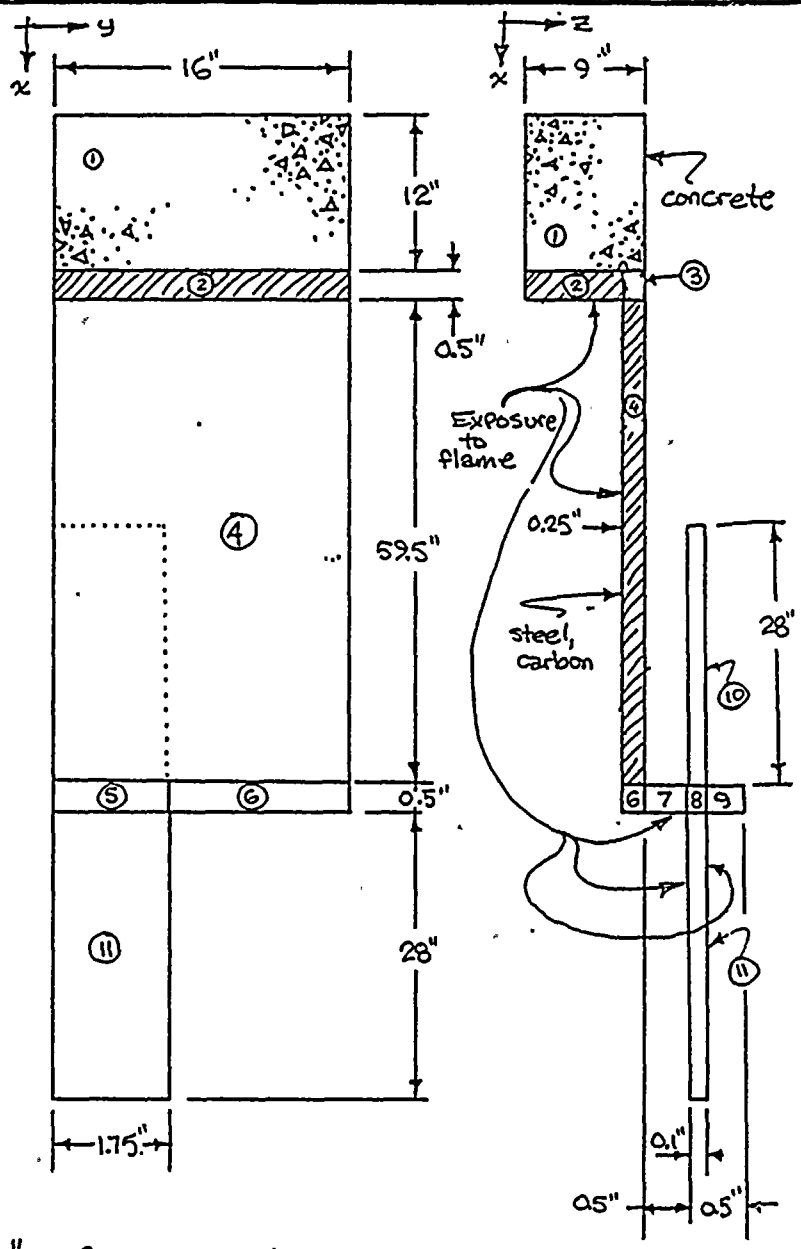

The stainless steel tubing is attached to the hanger with a stainless steel block clamp 1.75" long, 1.0" high and 0.5" thick. Two ½" SS. tubes are connected to the clamp. The surface area of a ½" SS tube is: $0.5\pi l$ or 1.57 in² per inch of length. The SS tubes will be modeled as a flat plate of SSteel 1.75" wide. Thus the surface area in the model is 1.75 in² per inch or

approximately 11% larger than real life. The thickness of the plate is set to correspond to the cross-sectional area of two SS tubes:

$$2\left((.25)^2\pi - (.25-.065)^2\pi\right) = .178 \text{ in}^2$$

$$.178 \text{ in}^2 \div 1.75 \text{ in} = 0.1 \text{ in thickness.}$$

The top surface and outside edges of the base plate will be modeled as exposed to flame. Only one flat side of the square tube steel model will have a surface condition of flame exposure. The end will also be modeled as flame exposed and all other surfaces will be modeled as insulated. This infers that the temperature of the air inside the square tube steel exactly matches the inside surface temperature. All surfaces of the block clamp will be exposed to flame, except the surfaces where the SS tubing model is connected. The 1.75" wide surfaces of the SS tubing will be modeled as flame exposed. This provides approximately 11% more exposure area than the actual tubing. This is conservative for this analysis and the conduction path area is accurate. As with the square structural steel tubing, the S.S. tubing model infers that the medium within the tube matches the temperature of the inside surface without extracting or depositing energy. This is also slightly conservative since the medium will actually require energy to heat up.

The surfaces of the concrete which are not in contact with the hanger will be modeled as insulated. This implies that the room above the fire matches the temperature of the concrete surface without extracting energy. It also implies that no energy is transfered through the concrete to cooler areas outside the fire.

CALCULATION NO. NE-02-88-10 | REVISION ∅

SUBJECT: Appendix R Analysis — Vital Instrument Line Support Steel

PREPARED BY: [illegible] | DATE: 5 JUL 88 | VERIFIED BY: SR Kirkendall | DATE: 7/8/88

REGION NO	MATERIAL TYPE	X,Y,Z Coordinates						Boundary Conditions					
		Begin X	End X	Begin Y	End Y	Begin Z	End Z	Begin X	End X	Begin Y	End Y	Begin Z	End Z
1	Concrete	0	12	0	16	0	9	0	0	0	0	0	0
2	Steel	12	12.5	0	16	0	8.75	0	1	1	1	1	0
3	Steel	12	12.5	0	16	8.75	9	0	0	1	1	0	1
4	Steel	12.5	72	0	16	8.75	9	0	0	0	0	1	0
5	Steel	72	72.5	0	1.75	8.75	9	0	1	0	0	1	0
6	Steel	72	72.5	1.75	16	8.75	9	0	1	0	0	1	0
7	Stainless	72	72.5	0	1.75	9	9.5	1	1	1	1	0	0
8	Stainless	72	72.5	0	1.75	9.5	9.6	0	0	1	1	0	0
9	Stainless	72	72.5	0	1.75	9.6	10	1	1	1	1	0	1
10	Stainless	44	72	0	1.75	9.5	9.6	0	0	0	0	1	1
11	Stainless	72.5	100.5	0	1.75	9.5	9.6	0	0	0	0	1	1

MATERIAL PROPERTIES

1. CONCRETE

Conductivity $k = 0.54\ \mathrm{Btu/hr \cdot ft \cdot {}^\circ F} = 7.50 \times 10^{-4}\ \mathrm{Btu/min \cdot in \cdot {}^\circ F}$ (ref 49, pg 635)

Specific Heat $c = 0.20\ \mathrm{Btu/lb \cdot {}^\circ F}$ "

Density $\rho = 144\ \mathrm{lb/ft^3} = 0.0833\ \mathrm{lb/in^3}$ "

2. STEEL

Conductivity for A-36 steel, % carbon ≈ 0.5 (Ref 57, pg 2-66)

TEMP (°F)	k (Btu/Hr-ft-°F)	k (Btu/min-in-°F)
32	32	.044
212	30	.042
392	28	.039
572	26	.036
752	24	.033
1112	20	.028
1472	18	.025

Specific Heat $c = 0.111$ Btu/lb·°F (Ref 57, pg 2-66)

Density $\rho = 489$ lb/ft³ $= 0.283$ lb/in³ (Ref 57, pg 2-66)

3. STAINLESS STEEL

Conductivity for SA 304 steel, % Cr = 18 to 20, % Ni = 8 to 10.5 (Ref 57, pg 2-66)

TEMP (°F)	k (Btu/Hr-ft-°F)	k (Btu/min-in-°F)
32	9.4	.013
212	10	.014
392	10	.014
572	11	.015
752	11	.015
1112	13	.018
1472	15	.021

Specific Heat $c = 0.11$ Btu/lb·°F (Ref 57, pg 2-66)

Density $\rho = 488$ lb/ft³ $= 0.282$ lb/in³ (Ref 57, pg 2-66)

The HEATING6 run for the case of the 120-4 hanger is the first run in Appendix A. The steel hanger exceeds 1200F less than 15 minutes after the fire starts. The highest hanger steel temperature occurs at the point where the S.S. tubing clamp is connected and at 15 minutes is 1371.8°F.

This type of hanger will not survive the postulated fires in this area without protection. Several things can be learned from looking at the results, though. First, there is essentially no change in hanger temperature once the point of interest is farther than 10 inches from the base plate. In other words, conduction of energy out of the hanger to the base plate and concrete plays a negligible role in lowering the temperature of a hanger of this type longer than 10 inches. The distance may be shorter than 10 inches, however the distance from the base plate to the first grid line in the model was 10 inches.

For the same reason it is unnecessary to model more than 10 inches of the sensing line tubing — probably a lot less since the cross-sectional area is smaller and the conductivity is lower than that of carbon steel.

Since it is not possible to prove all the hangers are able to endure a worst case fire, the strategy will be changed. Starting from the smallest hangers the tubing supports will be analyzed to find which supports require protection and which do not.

From the table on sheet 5.006, hanger type 301-1 should be the least vulnerable to high temperature exposure.

301-1 HANGER

The hanger consists of a 4" x 14" section of ½" carbon steel plate bolted flat to the concrete. The tubing is attached to the plate via a ½" x 1" x 1¾" stainless steel block clamp. The hanger is symetric about 2 axis and therefore only a quarter of it needs to be modeled. The concrete and carbon steel are modeled using the actual dimensions of the steel plate. The block clamp also will be modeled using actual dimensions. The tubing must be modeled with a rectangular cross-section. Fewer regions have to be modeled if the tubing is modeled as the same width as the block clamp. Thus the thickness of the tube model is the cross-sectional area of one tube divided by half the width of the clamp, or $\frac{0.087\ in^2}{1.75\ in/2} = 0.10"$

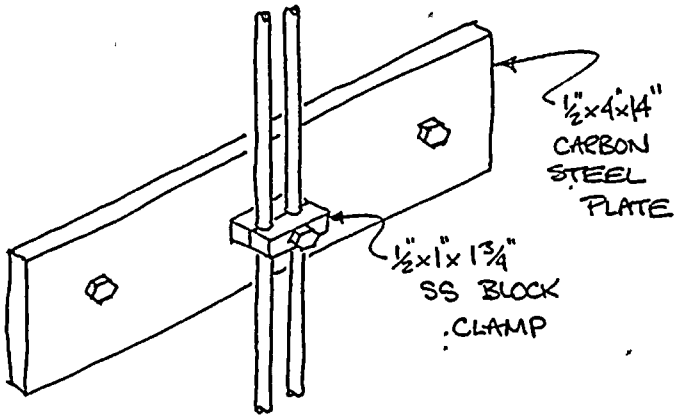

TYPE 301-1 HANGER (REF 20)

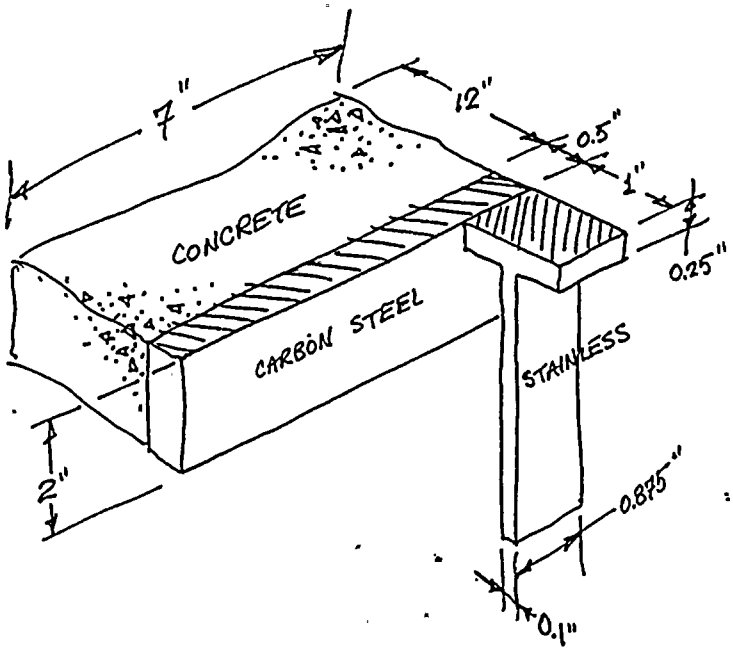

The material properties are the same as as in the previous computer run. The convective heat transfer coefficient is also unchanged.

For the radiative heat transfer coefficient, two types of boundaries will be defined. Those faces on the hanger which are parallel to the concrete wall experience the same conditions as the previous problem, ie the shape factor or view factor, $\mathcal{F}$, is unity — the fire is seen at all angles from the surface. For those surfaces perpendicular to the wall the shape factor is smaller. From ref 58 the view factor of a perpendicular wall as seen from a plane element dA is given by

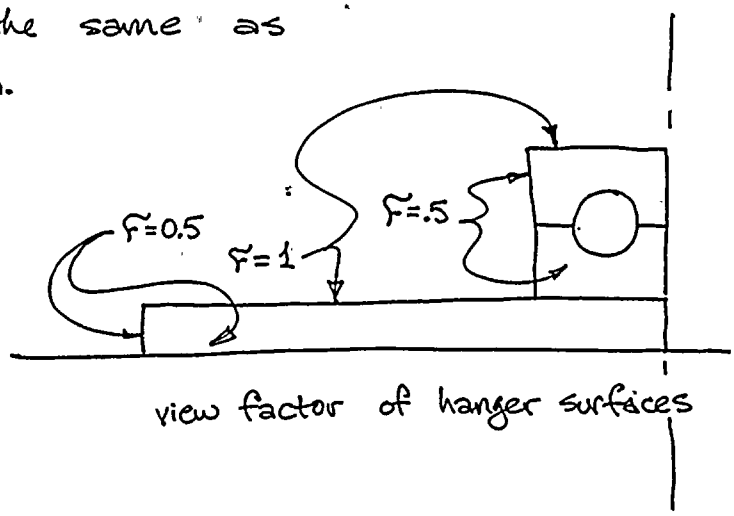

view factor of hanger surfaces

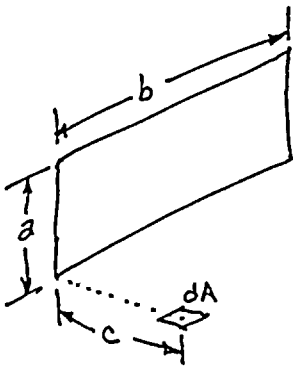

$$X = \frac{a}{b}$$

$$Y = \frac{c}{b}$$

$$\mathcal{F} = \frac{1}{2\pi}\left[\tan^{-1}\left(\frac{1}{Y}\right) - \frac{Y}{\sqrt{X^2+Y^2}}\tan^{-1}\left(\frac{1}{\sqrt{X^2+Y^2}}\right)\right]$$

When a & b are large compared to c then $\mathcal{F} = 0.25$. Thus, the view factor of the wall is 0.5 which leaves the view factor of the fire to be 0.5 also since $\sum \mathcal{F} = 1.0$. The radiative coefficient is thus equal to 0.5σ or 9.92×10^{-14}. Btu/min-in²-R

CALCULATION NO. NE-02-88-10 | REVISION ∅

SUBJECT: Appendix R Analysis — Vital Instrument Line Support Steel

PREPARED BY: [illegible] | DATE: 18 MAR 88 | VERIFIED BY: S.B. Kirkendall | DATE: 7/8/88

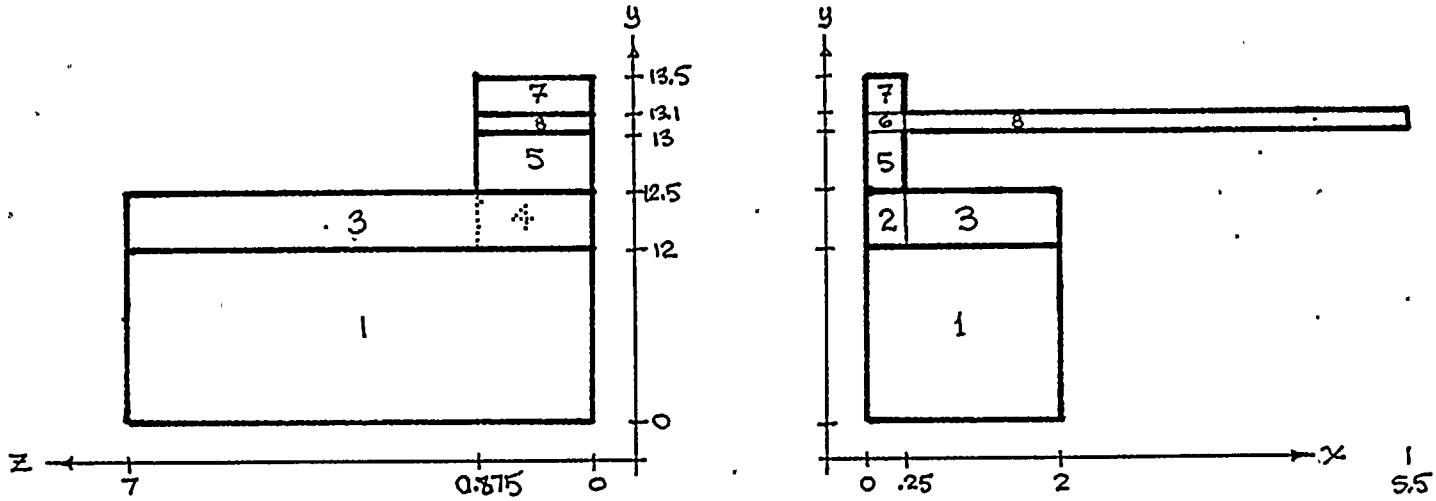

REGION NO	MATERIAL TYPE	X,Y,Z COORDINATES						BOUNDARY CONDITIONS					
		BEGIN X	END X	BEGIN Y	END Y	BEGIN Z	END Z	BEGIN X	END X	BEGIN Y	END Y	BEGIN Z	END Z
1	CONCRETE	0	2.0	0	12.0	0	7.0	0	0	0	0	0	0
2	C STEEL	0	0.25	12.0	12.5	0.875	7.0	0	0	0	1	0	2
3	C STEEL	0.25	2.0	12.0	12.5	0	7.0	0	2	0	1	0	2
4	C STEEL	0	0.25	12.0	12.5	0	.875	0	0	0	0	0	0
5	STAINLESS	0	0.25	12.5	13.0	0	.875	0	2	0	0	0	2
6	STAINLESS	0	0.25	13.0	13.1	0	.875	0	0	0	0	0	2
7	STAINLESS	0	0.25	13.1	13.5	0	.875	0	2	0	1	0	2
8	STAINLESS	0.25	5.5	13.0	13.1	0	.875	0	0	2	2	0	0

Because the tubing itself runs next to the wall with these hangers its average view factor is also 0.5 approximately. The surface area of the model is 1.75 in² per linear inch. This is conservative, being 11% too large but it is believed that accurately representing the conductive area is more important.

The second computer run in Appendix A is the HEATING6 run for the 301-1 type hanger. At the end of 25 minutes (corresponding to the worst case loading of any hanger among the vital sensing lines in this study), the ~~hottest of all~~ carbon steel average temperature stays below 1100°F and the hotest point stays below 1200°F. The Stainless Steel block clamp reaches a peak temperature of ~1350°F but the ultimate strength of Stainless Steel at 1350°F is more than twice that of carbon steel at 1200°F (ref 62, pg 2-48). At present the block clamps are attached with carbon steel bolts — these should be changed to stainless steel (~~grade~~ type 304 or better). With that small change the type 301-1 hangers require no modification in any of the 16 current locations.

340-3 HANGER

The next more vulnerable hanger type is a 340-3. There are 2 hangers of this type installed on the sensing lines in question. 340-3-009 is located within a fire wall enclosure which has restricted storage requirements. The only fire danger to this hanger would be radiative heat transfer from a stack of cable trays above and about 8 feet away. Hanger 340-3-020 is not within a fire wall enclosure and is threatened by both the oil fire and radiative heat transfer from a stack of 3 cable trays 5 feet above and 8 feet to the side of the hanger.

From sheet 5.017 the oil fire produces an exposure of 2640 °F-minutes which corresponds to less than a 10 minute standard fire. After 10 minutes the conditions need to be redefined. The convective heat transfer will change from a forced convection to natural convection, and the temperature of the surrounding air will drop dramatically. After 10 minutes, the temperature of the exposed hanger plate was just under 350°F. Though the air temperature would probably drop much lower than this because fresh air would be drawn from other floors to fuel the cable tray fire, it will be assumed for this calculation that the air temperature drops to 350°F after the oil fire and stays there.

HEATINGG will not calculate radiative and convective heat transfer for two different boundary temperatures simultaneously. Therefore, the radiative heat transfer will be converted to a temperature dependent heat flux, for the cable trays which burn for the remainder of the 25 minute time-temperature curve.

To simplify the problem, assume that the cable tray fire burns at the 25 minute equivalent temperature of 1510 °F for the entire time after the oil fire dies out.

From ref 58, page 784, the view factor, $\mathcal{F}$, for a flat plate is:

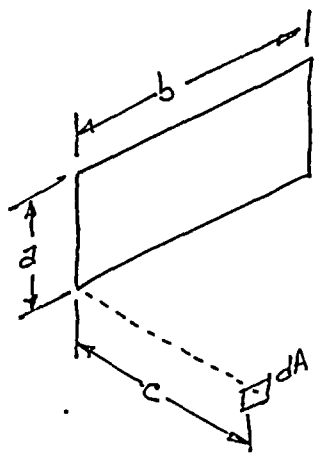

$$\mathcal{F} = \frac{1}{2\pi}\left[\frac{X}{\sqrt{1+X^2}}\tan^{-1}\frac{Y}{\sqrt{1+X^2}} + \frac{Y}{\sqrt{1+Y^2}}\tan^{-1}\frac{X}{\sqrt{1+Y^2}}\right]$$

where:

$$X = \frac{a}{c}$$

$$Y = \frac{b}{c}$$

if b is very large compared to a & c then

$$\mathcal{F} \approx \frac{1}{2\pi}\left[\frac{X}{\sqrt{1+X^2}}\left(\frac{\pi}{2}\right)\right]$$

or

$$\mathcal{F} = \frac{X}{4\left(\sqrt{1+X^2}\right)}$$

The stack of cable trays is approximately 5 feet tall and centered 5 feet above the elevation of the hanger. The view factor is thus that of a long plane 7.5 feet high minus that of a long plane 2.5 feet tall. ($X = \frac{7.5}{8}$ & $\frac{2.5}{8}$ respectively)

$$\mathcal{F} = \frac{.938}{4\left(\sqrt{1+.938^2}\right)} - \frac{.313}{4\left(\sqrt{1+.313^2}\right)} = .096$$

Since the cable tray extends in both directions the total view factor is $2\mathcal{F}$ or 0.193

The radiative coefficient is therefore

$$h_r = \varepsilon \cdot \sigma$$

$$h_r = .193\left(1.98\times10^{-13}\ \text{Btu/min-in}^2\text{-R}^4\right)$$

$$h_r = 3.82\times10^{-14}\ \text{Btu/min-in}^2\text{-R}^4$$

The heat flux or energy per unit area due to radiative heat transfer is given by

$$q/A = h_r\left[T^4_{fire} - T^4_{hanger}\right]$$

substituting

$$q/A = 3.82\times10^{-14}\left[(460+1510)^4 - (460+T_{hanger})^4\right]$$

HANGER TEMP °F	q/A (Btu/min-in²)
80	.572
400	.554
720	.501
1040	.382
1200	.285
1360	.156

From ref 35, page 3.13 the natural convection coefficient for vertical plates is

$$h = 0.19\ \text{Btu/hr-ft}^2\text{-F}\ (\Delta T)^{0.33}$$

$$\text{or}\ 2.2\times10^{-5}\ \text{Btu/min-in}^2\text{-F}\ (\Delta T)^{0.33}$$

Thus for HEATING6 input $h_n = 2.2\times10^{-5}$, $h_{exp} = 0.33$

CALCULATION NO. NE-02-88-10 | REVISION 0

SUBJECT: Appendix R Analysis — Vital Instrument Line Support Steel

PREPARED BY: DAVID GRIEG | DATE: 22 MAR 88 | VERIFIED BY: SR Kirkendall | DATE: 7/2/88

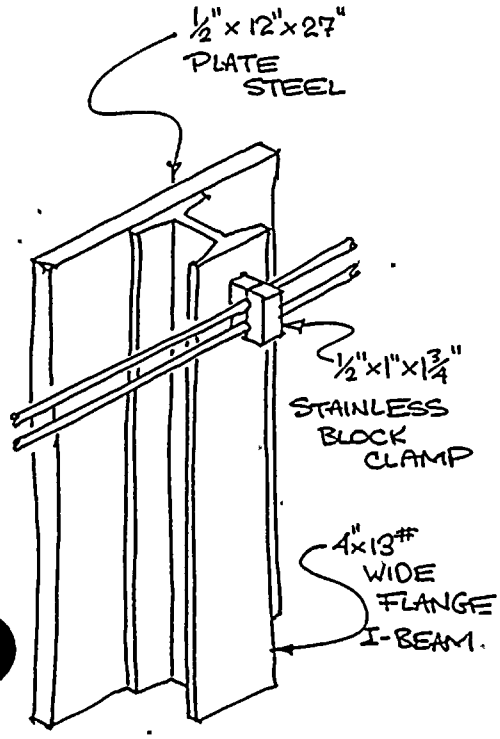

TYPE 340-3 HANGER (REF 6)

The type 340-3 hanger consists of a 4"×13# wide flange I-beam welded to a ½" thick steel plate. A 2-dimensional model will be used for this hanger.. taking a section through the middle of the block clamp.

The model is shown below and the "regions" input tabulated on the following page. The sensing lines will be modeled in the same manner as the type 301-1 hanger model — 0.1 inches thick with heat transfer across the top and bottom surfaces.

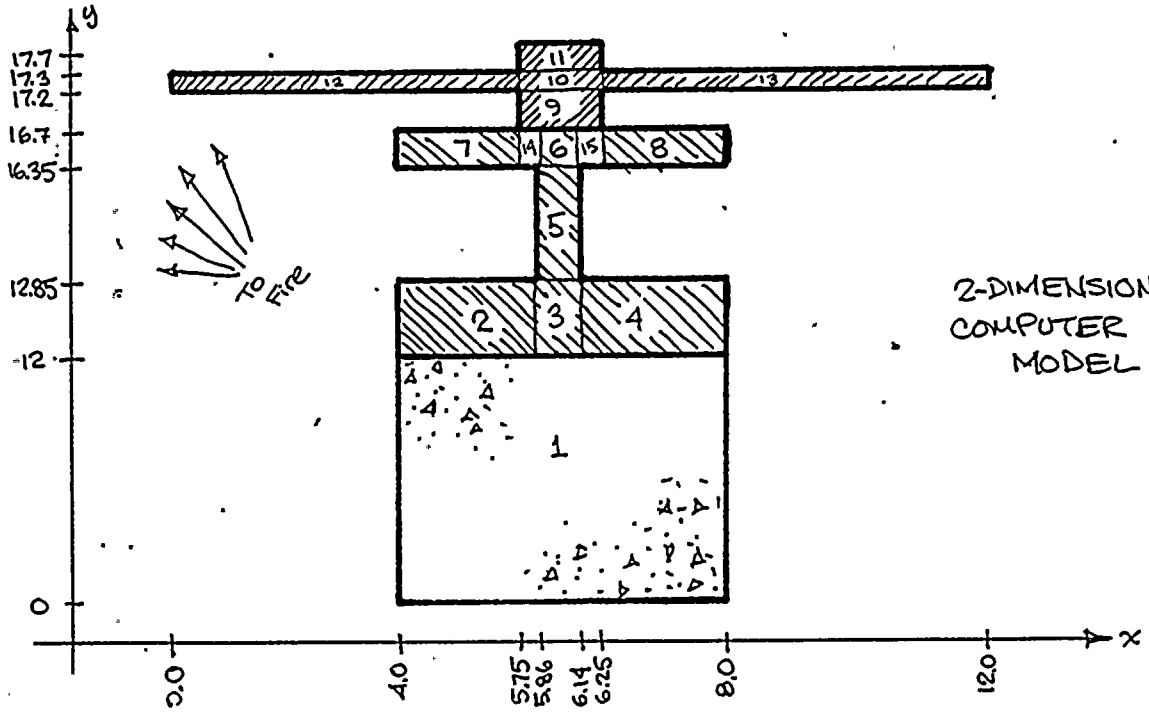

2-DIMENSIONAL COMPUTER MODEL

CALCULATION NO. NE-02-88-10 | REVISION Ø

SUBJECT: Appendix R Analysis — Vital Instrument Line Support Steel

PREPARED BY: DAVID PRICE | DATE: 7 JULY 88 | VERIFIED BY: SR Kukendall | DATE: 7/8/88

REGION NO	MATERIAL TYPE	X,Y,Z COORDINATES						BOUNDARY CONDITIONS (oil fire / cable fire)					
		BEGIN X	END X	BEGIN Y	END Y	BEGIN Z	END Z	BEGIN X	END X	BEGIN Y	END Y	BEGIN Z	END Z
1	CONCRETE	4.0	8.0	0.0	12.0	0	0	0/0	0/0	0/0	0/0	0/0	0/0
2	STEEL	4.0	5.86	12.0	12.85	0	0	2/1	0/0	0/0	2/1	0/0	0/0
3	STEEL	5.86	6.14	12.0	12.85	0	0	0/0	0/0	0/0	0/0	0/0	0/0
4	STEEL	6.14	8.0	12.0	12.85	0	0	0/0	2/2	0/0	2/2	0/0	0/0
5	STEEL	5.86	6.14	12.85	16.35	0	0	2/1	2/2	0/0	0/0	0/0	0/0
6	STEEL	5.86	6.14	16.35	16.7	0	0	0/0	0/0	0/0	0/0	0/0	0/0
7	STEEL	4.0	5.75	16.35	16.7	0	0	2/1	0/0	2/1	1/1	0/0	0/0
8	STEEL	6.25	8.0	16.35	16.7	0	0	0/0	2/2	2/2	1/1	0/0	0/0
9	STAINLESS	5.75	6.25	16.7	17.2	0	0	2/1	2/2	0/0	0/0	0/0	0/0
10	STAINLESS	5.75	6.25	17.2	17.3	0	0	0/0	0/0	0/0	0/0	0/0	0/0
11	STAINLESS	5.75	6.25	17.3	17.7	0	0	2/1	2/2	0/0	1/1	0/0	0/0
12	STAINLESS	0	5.75	17.2	17.3	0	0	0/0	0/0	1/1	1/1	0/0	0/0
13	STAINLESS	6.25	12.0	17.2	17.3	0	0	0/0	0/0	1/1	1/1	0/0	0/0
14	STEEL	5.75	5.86	16.35	16.7	0	0	0/0	0/0	2/1	0/0	0/0	0/0
15	STEEL	6.14	6.25	16.35	16.7	0	0	0/0	0/0	2/2	0/0	0/0	0/0

During the oil fire (first 10 minutes of the standard curve) the boundary conditions are as follows

Temperature = standard time-temp curve

BOUNDARY COND 1; $h_c = 2.74 \times 10^{-4}$ $h_r = 1.98 \times 10^{-15}$

BOUNDARY COND 2; $h_c = 2.74 \times 10^{-4}$ $h_r = 9.92 \times 10^{-14}$

DURING the remaining 15 minutes while the cable trays are burning

Temperature = 350°F

BOUNDARY COND 1; $h_n = 2.2 \times 10^{-5}$ $h_{exp} = 0.33$ flux = table shown pg. 5.0

BOUNDARY COND 2; $h_n = 2.2 \times 10^{-5}$ $h_{exp} = 0.33$ flux = Ø

CALCULATION NO. NE-02-88-10 | REVISION 0

SUBJECT: Appendix R Analysis — Vital Instrument Line Support Steel

PREPARED BY: DAVID GRIEG | DATE: 22 MAR 88 | VERIFIED BY: SR Kukendall | DATE: 7/8/88

The third computer run in appendix A is the HEATING6 analysis of hanger 340-3. After 25 minutes the carbon steel average temperature is below 1100°F and the peak temperature is well below 1200°F. ~~As with the 301-1 hangers, the mounting bolt for the stainless steel clamp should be changed to a stainless steel bolt. The temperature of the block clamp exceeds 1200°F.~~ As with the 301-1 hangers, the average temperature of the stainless steel block clamp exceeds 1100°F. Therefore, the carbon steel block clamp bolt should be changed to stainless steel.

CALCULATION NO. NE-02-88-10 | REVISION 0

SUBJECT: Appendix R Analysis — Vital Instrument Line Support Steel

PREPARED BY: DAVID FRIEG | DATE 22 MAR 88 | VERIFIED BY: SR Kirkendall | DATE 7/8/88

TYPE 320 HANGERS

The next more vulnerable hanger type are the 320 type hangers. There are 18 320 type hangers on the RHR-FT-15B sensing line. The 320-1, 320-2, and 320-3 hangers all consist of a 4"x 5.4# channel section welded to a ½". steel plate. The only difference between the three is the length of the channel. In order to lump all three lengths into one effort the hanger will be analyzed in two-dimensional space like the 340-3 hanger was.

A walkdown was done of all the type 320 hangers to determine which hangers would have the greatest exposure to combustibles. Three hangers were identified which could define the worst exposure:

Hanger 320-1-333 is 6 feet away from a stack of 5 cable trays approximately 7 feet high. As viewed from the hanger the cable trays run only to the left into the distance. Any view of the cable trays to the south is blocked by a concrete wall. The view factor is thus $\mathcal{F}$ where

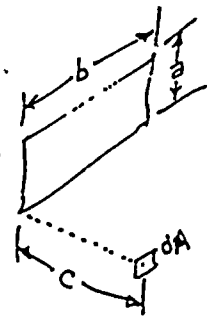

$$\mathcal{F} = \frac{1}{2\pi}\left[\frac{X}{\sqrt{1+X^2}}\tan^{-1}\frac{Y}{\sqrt{1+X^2}} + \frac{Y}{\sqrt{1+Y^2}}\tan^{-1}\frac{X}{\sqrt{1+Y^2}}\right]$$ (ref 58, page 784)

where $X = \frac{a}{c}$ & $Y = \frac{b}{c}$

since b is >> a and c then

$$\mathcal{F} = \frac{x}{4\sqrt{1+x^2}}$$

$$x = \frac{7.0}{6.0} = 1.167$$

$$\mathcal{F} = \frac{1.167}{4(\sqrt{1+1.167^2})}$$

Therefore, the view factor from 320-1-333 is 0.190

Hanger 320-1-326 is 3 feet away from a vertical cable tray with a 12" width facing the hanger. The view factor for this hanger is 4F where

$$X = \frac{a}{c} = \frac{6}{36} = .167$$

$$Y = \frac{b}{c}$$ again, assumed very large

$$F = \frac{1}{4}\left(\frac{.167}{\sqrt{1+(.167)^2}}\right)$$

$$F = .041$$

therefore, the view factor for hanger 320-1-326 is 0.164

Hanger 320-3-018 is 5 feet away from a stack of 3 trays approximately 5 feet high. The view of the cable tray is blocked to the North by a concrete wall and the hanger is located slightly lower than the bottom elevation of the cable trays. The view factor is, thus, equal to F

$$X = \frac{a}{c} = \frac{5}{5} = 1$$

$$Y = \frac{b}{c}$$ assumed very large

$$F = \frac{1}{4}\left(\frac{1}{12}\right) = 0.177$$

Hanger 320-1-333 is therefore the controlling hanger for this group and has a view factor which is essentially equal to that used for the 340-3 hanger. The same heat flux table will be used for this run. As with the 340-3 hanger type, the air temperature will be assumed to be a constant 350 °F after the oil fire burns out at 10 minutes.

CALCULATION NO. NE-02-88-10 | REVISION ∅

SUBJECT: Appendix R Analysis — Vital Instrument Line Support Steel

PREPARED BY: DAVID GRIEG | DATE 23 MAR 88 | VERIFIED BY: S.L. Kuhendall | DATE 7/8/88

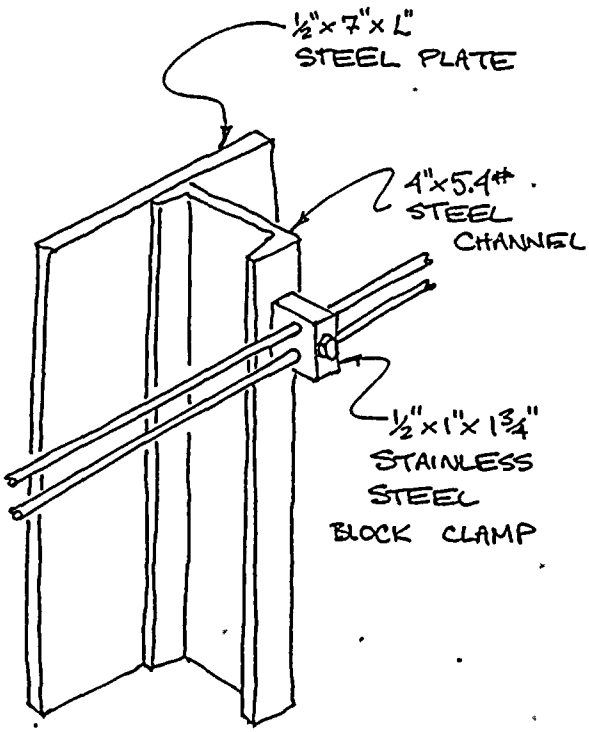

TYPE 320 HANGER
(refs 21, 22 & 23)

The sketch at right shows the actual configuration of the 320 type hangers. Below the two-dimensional model that will be used is shown. The "REGIONS" input is tabulated on the following page.
The sensing lines are modelled only 3½" long in each direction. The type 340-3 run showed the Temperature at 3½" to be within 1% of the temp farther out.

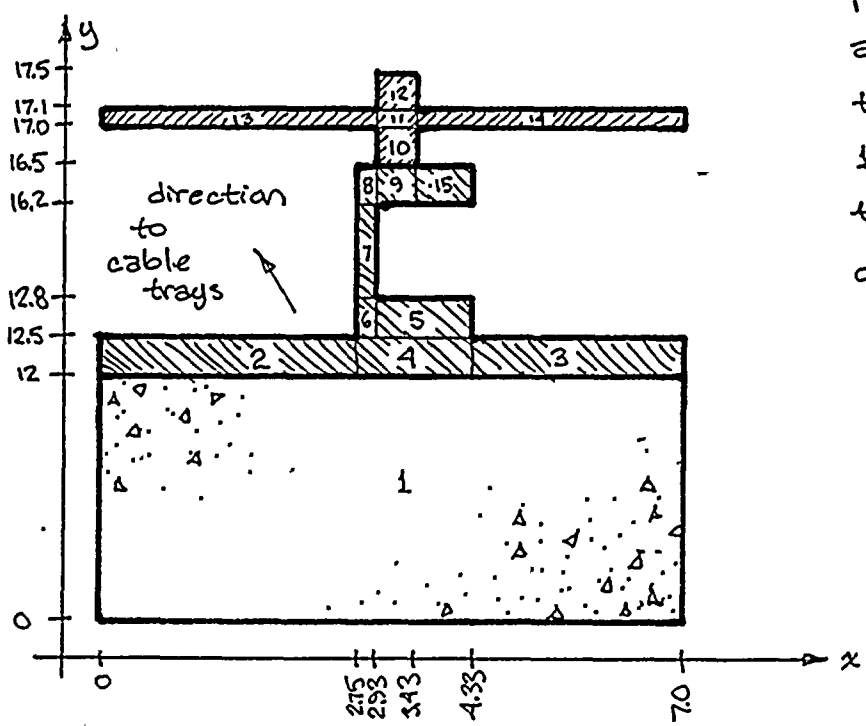

WASHINGTON PUBLIC POWER SUPPLY SYSTEM

MANUAL CALCULATION

CALCULATION NO. NE-02-88-10

REVISION 0

SUBJECT Appendix R Analysis — Vital Instrument Line Support Steel

PREPARED BY David Grigg DATE 23 MAR 88

VERIFIED BY SR Kirkendall DATE 7/8/88

REGION NO.	MATERIAL TYPE	X,Y,Z COORDINATES						BOUNDARY CONDITIONS (oil fire / cable fire)					
		BEGIN X	END X	BEGIN Y	END Y	BEGIN Z	END Z	BEGIN X	END X	BEGIN Y	END Y	BEGIN Z	END Z
1	CONCRETE	0.0	7.0	0.0	12.0			0/0	0/0	0/0	0/0	0/0	0/0
2	STEEL	0.0	2.75	12.0	12.5			2/1	0/0	0/0	1/1	0/0	0/0
3		4.33	7.0	12.0	12.5			0/0	2/2	0/0	1/1	0/0	0/0
4		2.75	4.33	12.0	12.5			0/0	0/0	0/0	0/0	0/0	0/0
5		2.93	4.33	12.5	12.8			0/0	2/2	0/0	2/2	0/0	0/0
6		2.75	2.93	12.5	12.8			2/1	0/0	0/0	0/0	0/0	0/0
7		2.75	2.93	12.8	16.2			2/1	2/2	0/0	0/0	0/0	0/0
8		2.75	2.93	16.2	16.5			2/1	0/0	0/0	2/1	0/0	0/0
9	STEEL	2.93	3.43	16.2	16.5			0/0	0/0	2/2	0/0	0/0	0/0
10	STAINLESS	2.93	3.43	16.5	17.0			2/1	2/2	0/0	0/0	0/0	0/0
11		2.93	3.43	17.0	17.1			0/0	0/0	0/0	0/0	0/0	0/0
12		2.93	3.43	17.1	17.5			2/1	2/2	0/0	1/1	0/0	0/0
13		0.0	2.93	17.0	17.1			0/0	0/0	1/1	1/1	0/0	0/0
14	STAINLESS	3.43	7.0	17.0	17.1			0/0	0/0	1/1	1/1	0/0	0/0
15	STEEL	3.43	4.33	16.2	16.5			0/0	2/2	2/2	2/2	0/0	0/0

CALCULATION NO. NE-02-88-10 | REVISION ∅

SUBJECT Appendix R Analysis — Vital Instrument Line Support Steel

PREPARED BY: DAVID FRICK | DATE 23MAR88 | VERIFIED BY SR Kirkendall | DATE 7/8/88

The fourth computer run in Appendix A is the HEATING6 analysis of the 320 type hangers. After 25 minutes, the average temperature of the carbon steel is below 1100°F and the peak temperature is below 1200°F. The block clamp bolt must be changed to stainless steel since the average temp of the stainless steel block clamp exceeds 1100 °F.

HANGERS 100-1 THROUGH 250-4

the remainder of the hangers consist of structural steel sections which extend 10 inches or more from the base. It was seen from the first computer run, on the 120-4 hangers, that conduction of energy out of the hanger to the concrete plays a negligible role beyond 10 inches in 4"x4"x¼" tube steel. Thus for the remaining hangers the ratio of exposed surface area to mass (or cross-sectional area) defines the vulnerability. There are 3 types of structural steel sections used in the remaining 13 hanger types. they are 4"x4"x¼" square section tubing, 3"x3"x¼" angle, and 4"x5.4# channel section structural steel. Of these the 4"x5.4# channel section has the greatest exposed area to mass ratio.

It has been shown that a hanger engulfed in a cable tray fire will not survive per the acceptance criteria of staying below 1200F peak. the question is now how much radiant exposure to a cable tray fire is survivable by a "long" hanger. This will be found using a trial and error method by varying the radiant view factor and using a two dimensional model of the channel section with the sensing line attached.

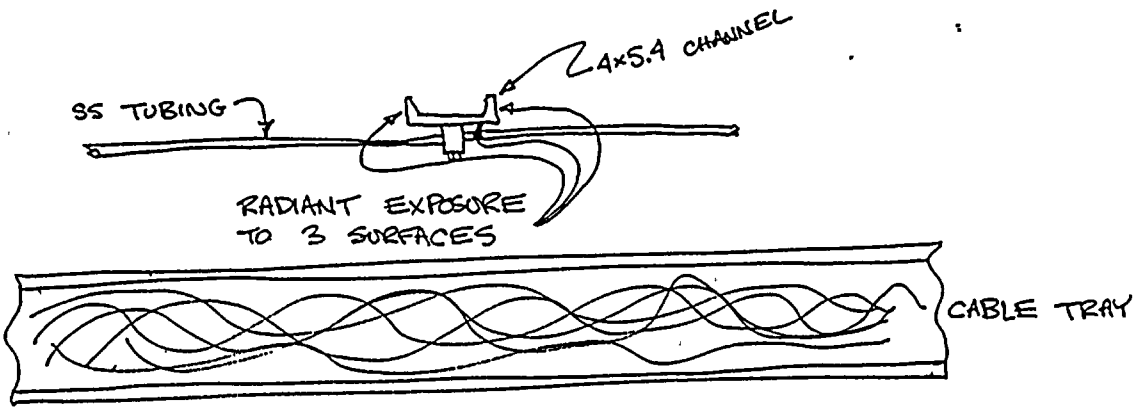

CALCULATION NO. NE-02-88-10 | REVISION 0

SUBJECT: Appendix R Analysis — Vital Instrument Line Support Steel

PREPARED BY: D. Rigg | DATE: 23 MAR 88 | VERIFIED BY: SR Kirkendall | DATE: 7/8/88

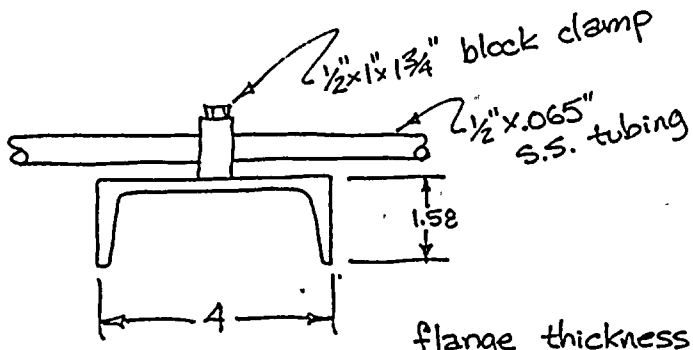

ACTUAL CONFIGURATION

flange thickness =.296
web thickness =.184

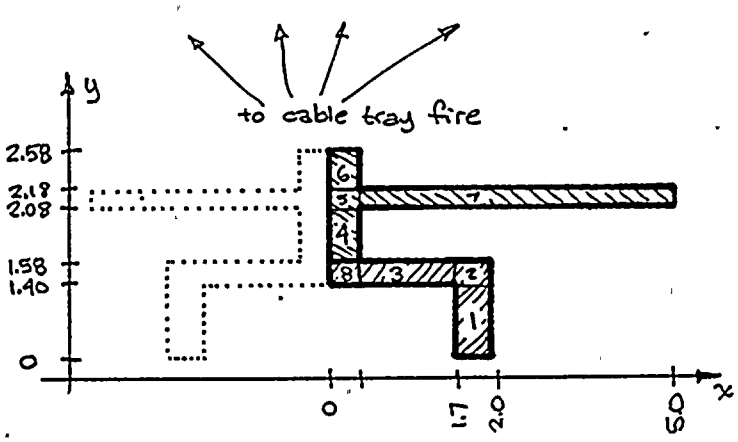

The same fire description values will be used for this case as have been on the previous two. The only difference being that the view factor will be varied. As a first guess a view factor of 0.15 will be used. HEATING6 calculates the heat flux due to radiative heat transfer as

$$q/A = P_o f(T)$$

where $f(T)$ is taken from the heat flux table developed for hanger type 340-3. For

REGION NO.	MATERIAL TYPE	X,Y,Z COORDINATES						BOUNDARY CONDITIONS oil fire/cable fire					
		BEGIN X	END X	BEGIN Y	END Y	BEGIN Z	END Z	BEGIN X	END X	BEGIN Y	END Y	BEGIN Z	END Z
1	STEEL	1.7	2.0	0.0	1.4			2/2	1/1	1/2	0/0		
2	STEEL	1.7	2.0	1.4	1.58			0/0	1/1	0/0	1/1		
3	STEEL	0.25	1.7	1.4	1.58			0/0	0/0	2/2	1/1		
4	STAINLESS	0.0	0.25	1.58	2.08			0/0	2/1	0/0	0/0		
5	STAINLESS	0.0	0.25	2.08	2.18			0/0	0/0	0/0	0/0		
6	STAINLESS	0.0	0.25	2.18	2.58			0/0	1/1	0/0	1/1		
7	STAINLESS	0.25	5.0	2.08	2.18			0/0	0/0	1/1	1/1		
8	STEEL	0.0	0.25	1.4	1.58			0/0	0/0	2/2	0/0		

hanger types 340-3 and 320, P_o was set equal to 1.0. To change the view factor from 0.193 to 0.15, P_o will be set equal to 0.15/0.193 or 0.777.*

The fifth computer run in Appendix A is the HEATING6 analysis of the steel channel with the tubing attached. At the end of 10 minutes, which corresponds to the oil fire, the acceptance criteria of "1100°F average temperature" has been exceeded in the carbon steel. Since ~~this is not possible~~ the possibility of exposure to an oil spill fire cannot be ruled out for any of the remaining hangers, the rest of the hangers must be protected.

* Because the hanger fails to meet the temperature requirements at the end of the transient combustible fire, the radiant view factor during the cable fire is a moot point.