FIELD TESTS
MODIFICATIONS

SOFTWARE
PROBLEMS

HARDWARE PROBLEMS

SEL 810A COMPUTER REPAIR TIPS

A. CHECK POWER SUPPLY VOLTAGES

(1) There are (6) six power supplies that provide (22) twenty two separate voltages to the computer and interface. (Refer to the (2) two page listing under power supplies in your diagnostic (3) three ring binder).

(2) If voltage is low - disconnect load leads to supply - Did voltage return to normal? If not, check power supply. Instructions for testing power supply load regulation, line regulation and ripple are provided in the Technical Manual, General Purpose Computer, Pages 5-3 to 5-9. If voltage returned to normal, check each load for low resistance.

(3) Check AC ripple with flat meter. (Refer to specifications under power supply in your diagnostic (3) three ring binder).

B. CHECK ALL MUFFIN FANS FOR OPERATION

C. INTERMITTANT MAINFRAME AND MEMORY PROBLEMS

(1) Check for spread card pins and appliance connector loose pins.

(A) Start mainframe exerciser program - with insulated tool, rake pins on rear of mainframe while someone is watching control panel for program halt. If program halts, remove card and <u>very</u> <u>carefully</u> close all pins on card.

(B) While running mainframe diagnostic vary 3.6 volts on Model 221 power supply from 3 to 4 volts. Vary voltage slowly. Let program run 5-10 minutes at 3 and 4 volts.

(C) Tap all appliance connectors while running mainframe diagnostic and observing control panel for a halt condition. Repair appliance connector or remove connector and solder leads.

(D) Memory problems - Refer to my memo of April 4, 1977 listing procedures for isolating memory problems. Read instructions carefully when using CLT # 10 Memory Diagnostic.

D. I/O HOLD CONDITION

Determine the interface to computer causing problem.

(1) Teletype
(2) Input-Outputs
(3) Analog-Digital Converter
(4) Modem Interface

(a). Check voltages to interface and hand shaking signals.

(b). One common problem to teletype is low voltage due to appliance connectors. Check voltage at teletype interface.

E. FIELD DC OFF

(1) Check 12 volt power supply in computer interface cabinet.

F. TAPE READER PROBLEMS

(1) If smoke from some source set off Halon in computer room, always clean smut from tape reader lamp.

(2) Check low speed (teletype reader) reader on quarterly basis for proper operation.

CLT/rml
cc: D. J. Noerrlinger
M. B. Roker
V. E. Dake

NGPL

INTER-OFFICE CORRESPONDENCE

DATE March 13, 1973

SUBJECT Computer & Interface Spare Parts Revision.

TO R. D. Kelly, E. L. Bergeson, J. R. Saar, J. J. Sneddeker, V. E. Dake, R. D. Pilcher, Ed Skanes, R. E. Praeuner, L. G. Gillis, F. E. Bailey, T. C. Losh, C. T. Lowman

FROM Mr. M. J. Findling

Attached is a copy of the Computer and Interface spare parts with the newly revised Page 3 and a copy of the Computer and Interface semi-conductor substitute List with the newly revised Page 2. Due to the actual circuits utilized in the Computer systems as received being of later design than indicated by the early Computer Manuals on which the original parts List was based, 2 I.C.'s were not included in the original Computer and Interface spare parts listing. Each District Technician will be receiving two each of the newly listed integrated circuits for addition to his Computer and Interface spare parts kit.

MJF/gr

cc: Mr. V. K. Patrick
Mr. C. L. Thompson
Mr. R. L. Jepsen
Mr. M. G. Strasen
Mr. M. B. Roker
Mr. C. J. Langdale

Attach:

COMPUTER AND INTERFACE
SPARE PARTS

Quantity	Diode	Substitutes	Equipment
1	1N192		C
1	1N482A		C
1	1N718		C
1	1N747		H
1	1N749A		C
1	1N752A		C
1	1N753A		C
1	1N754A		C
1	1N759A		C
1	1N825		C
3	1N914		C-P
1	1N958		H
1	1N966B		C
1	1N1183A		C
1	1N2069A		H
1	1N2977B		C
1	1N3022B	2A12B	P
1	1N3666		H
1	1N4001		C
1	1N4003	D142	M
4	1N4004	HC-70/SD-2	C-P-M
1	1N4009		C
1	1N4720A		C
1	1N4734		P
1	1N4740A		C
1	1N4744A		C
1	1N4747A		C
1	1N4750		C
1	FD333	RCA #SK3030	C
1	FD6666		C
2	MR1120		C
1	1D12A (12V Zenar)		M

Quantity	Transistors	Substitutes	Equipment
1	2N404		C
1	2N598		H
1	2N706A		M
1	2N718		M
1	2N930		C
1	2N1305		H
1	2N1309		H
1	2N1375		M
1	2N1499A		C
1	2N1539		P
1	2N1545		H
1	2N1808	2N3947	C
1	2N2063A		M
1	2N2102		C
1	2N2160		C
2	2N2369A		C

C = Computer and Interface
H = High Speed Tape Reader
P = Parabam Digital Clock
M = RFL Data Modem

COMPUTER AND INTERFACE
SPARE PARTS

Quantity	Transistors	Substitutes	Equipment
1	2N2405	NS2129 (National)	C
1	2N2665		C
1	2N2714		C
1	2N3134		C
1	2N3251	Motorola No. SS678	C
1	2N3503	2N2905A	C
1	2N3566		P
1	2N3638		C-P
1	2N3641		P
1	2N3642		P
1	2N3643		P
1	2N3644		P
1	2N3645		C
1	2N3725	S18415/2N2846	C
1	2N3771		C
1	2N3772		C
1	2N3903		M
1	2N3904		C
1	2N3905		M
1	2N3906		C
2	2N3947	Motorola No. SS677	C
1	2N3958		C
1	2N4044		C
1	2N4168	MCR2305-2	C
1	2N5036		C
1	2N5458	MPF104	C
1	3N166	FS19385	C
1	MCR2918-1	MCR1308-1/MCR3918-1	C
1	MJ3701		C
1	40346 (RCA)		P
1	40250 (RCA)		C
1	40251 (RCA)		P
1	TA2651 (RCA)	2N4036/2N2904A	C
1	F1226 (Union Carbide)		C
1	BD1129 (Union Carbide)		C
1	F1465 (Union Carbide)		C
1	SDT9232 (Solitron)	2N3772	C
1	SDT9724 (Solitron)	2N3771	C
1	S18858 (Fairchild)	2N2405	C

C = Computer and Interface
H = High Speed Tape Reader
P = Parabam Digital Clock
M = RFL Data Modem

COMPUTER AND INTERFACE
SPARE PARTS

Quantity	Integrated Circuits	Substitutes	Equipment
2	U5B990029 (Fairchild)	MC700G (Motorola)	C
2	U5B990729 (Fairchild)	MC707G (Motorola)	C
2	U5B991429 (Fairchild)	MC714G (Motorola)	C
2	U5F991529 (Fairchild)	MC715G (Motorola)	C
2	U5F992629 (Fairchild)	MC726G (Motorola)	C
2	U5F992729 (Fairchild)	MC727G (Motorola)	C
2	U5B771039 (Fairchild)	MC1710CG (Motorola)	C
2	U5F771139 (Fairchild)		C
3	MC724P (Motorola)		C
3	MC725P (Motorola)		C
2	MC726P (Motorola)		C
2	MC785P (Motorola)		C
2	MC786P (Motorola)		C
2	MC789P (Motorola)		C
2	MC790P (Motorola)		C
2	MC792P (Motorola)		C
2	MC799P (Motorola)		C
2	SF113-03 (Sylvania)	RF113D (Ray)/MC474L (Motorola)	C
2	SG223-03 (Sylvania)	RG223D (Ray)/MC2051L (Motorola)	C
2	SG243-03 (Sylvania)	RG243D (Ray)/MC2053L (Motorola)	C
2	SM23-03 (Sylvania)	RM23-03 (Ray)/MC4029L (Motorola)	C
2	SM33-03 (Sylvania)	RM33-03 (Ray)/MC4031L (Motorola)	C
2	SM43-03 (Sylvania)	RM43-03 (Ray)/MC4032L (Motorola)	C
2	UC4001C (Union Carbide)		C
2	SG222 (Sylvania)	MC2001L (Motorola)	C
2	SG263 (Sylvania)	MC2055L (Motorola)	C

Quantity	Special Modules	Substitutes	Equipment
1	Flip-Flop Module-Parabam #23264		P

Quantity	Relays	Substitutes	Equipment
1	HGJ2MT51211501 (C.P. Clare)	HGQ2MT5104	C
1	HGJM51111501 (C.P. Clare)	HGQM5104	C
1	Clareed No. CRTN-1010		C
1	Adams & Westlake No. AWDA-15351		C

C = Computer and Interface
H = High Speed Tape Reader
P = Parabam Digital Clock
M = RFL Data Modem

COMPUTER AND INTERFACE
SEMI CONDUCTOR
SUBSTITUTE LIST

1. DIODES

NUMBER	SUBSTITUTE
2A12B	1N3022B
HC-70	1N4004
D142	1N4003
SD-2	1N4003/1N4004
1D12A	1N4406/1N4742

2. TRANSISTORS

NUMBER	SUBSTITUTE
2N1808	2N3947
2N3503	2N2905A
MCR2305-2	2N4168
MCR1308-1	MCR2918-1/MCR3918-1
MPF104	2N5458
NS2129	2N2405
S18415	2N3725/2N2846
S18858	2N2405
FS19385	3N166
SDT9232	2N3772
SDT9724	2N3771
SS677	2N3947
SS678	2N3251
TA2651	2N4036/2N2904A

COMPUTER AND INTERFACE
SEMI CONDUCTOR
SUBSTITUTE LIST Cont'd.

3. INTEGRATED CIRCUITS

NUMBER	SUBSTITUTE
U5B990029 (Fairchild)	MC700G (Motorola)
U5B990729 (Fairchild)	MC707G (Motorola)
U5B991429 (Fairchild)	MC714G (Motorola)
U5B991529 (Fairchild)	MC715G (Motorola)
U5B992629 (Fairchild)	MC726G (Motorola)
U5B992729 (Fairchild)	MC727G (Motorola)
U5B771039 (Fairchild)	MC1710CG (Motorola)
SF113-03 (Sylvania)	MC474L,P (Motorola)/RF113D (Raytheon)
SG223-03 (Sylvania)	MC2051L,P (Motorola)/RG223D (Raytheon)
SG243-03 (Sylvania)	MC2053L,P (Motorola)/RG243D (Raytheon)
SM23-03 (Sylvania)	MC4029L (Motorola)/RM23-03 (Raytheon)
SM33-03 (Sylvania)	MC4031L (Motorola)/RM33-03 (Raytheon)
SM43-03 (Sylvania)	MC4032L (Motorola)/RM43-03 (Raytheon)
SG222-03 (Sylvania)	MC2001L (Motorola)
SG263-03 (Sylvania)	MC2055L (Motorola)

POWER SUPPLIES

WATCHDOG
DATA

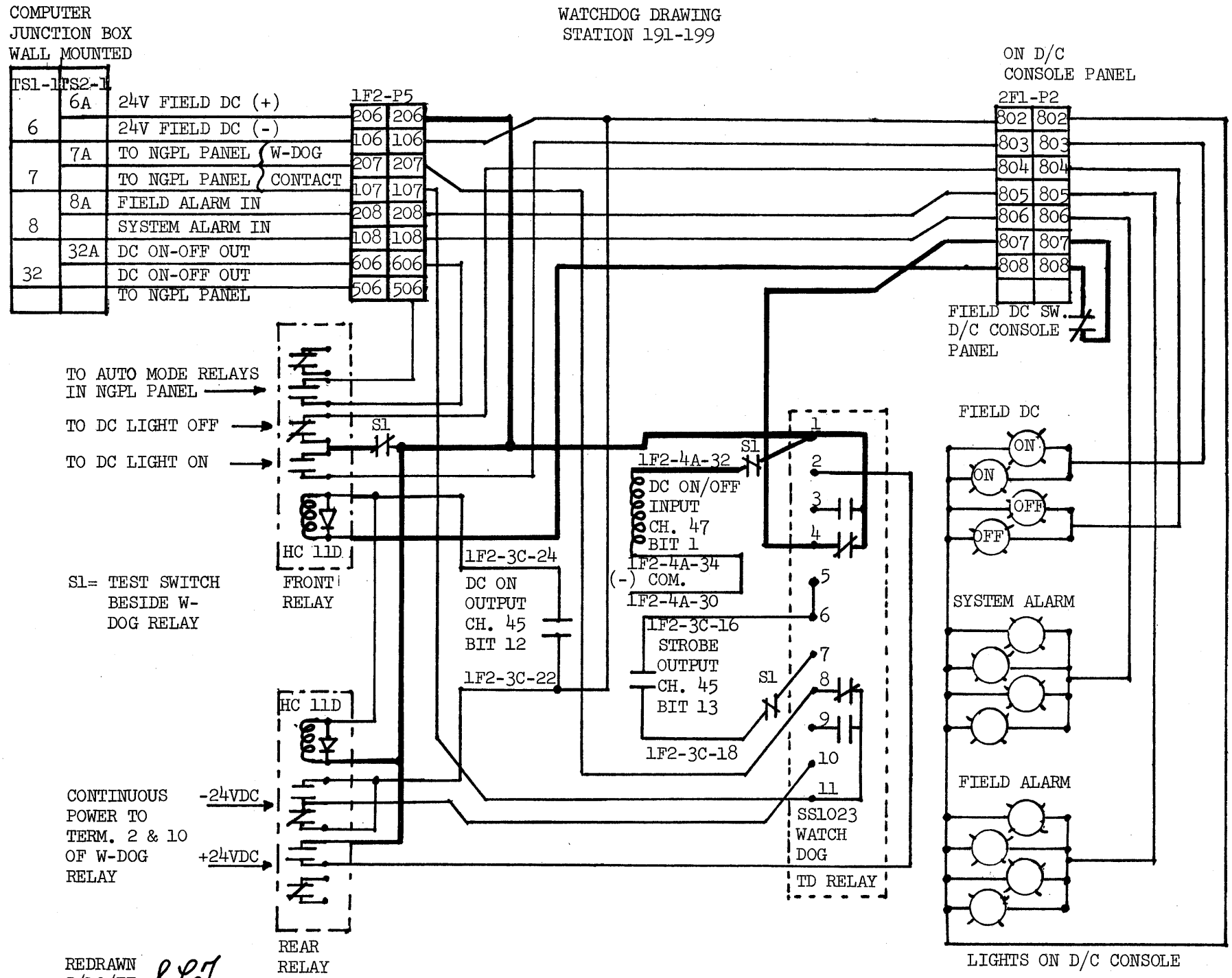

REDRAWN
5/13/77 EJL

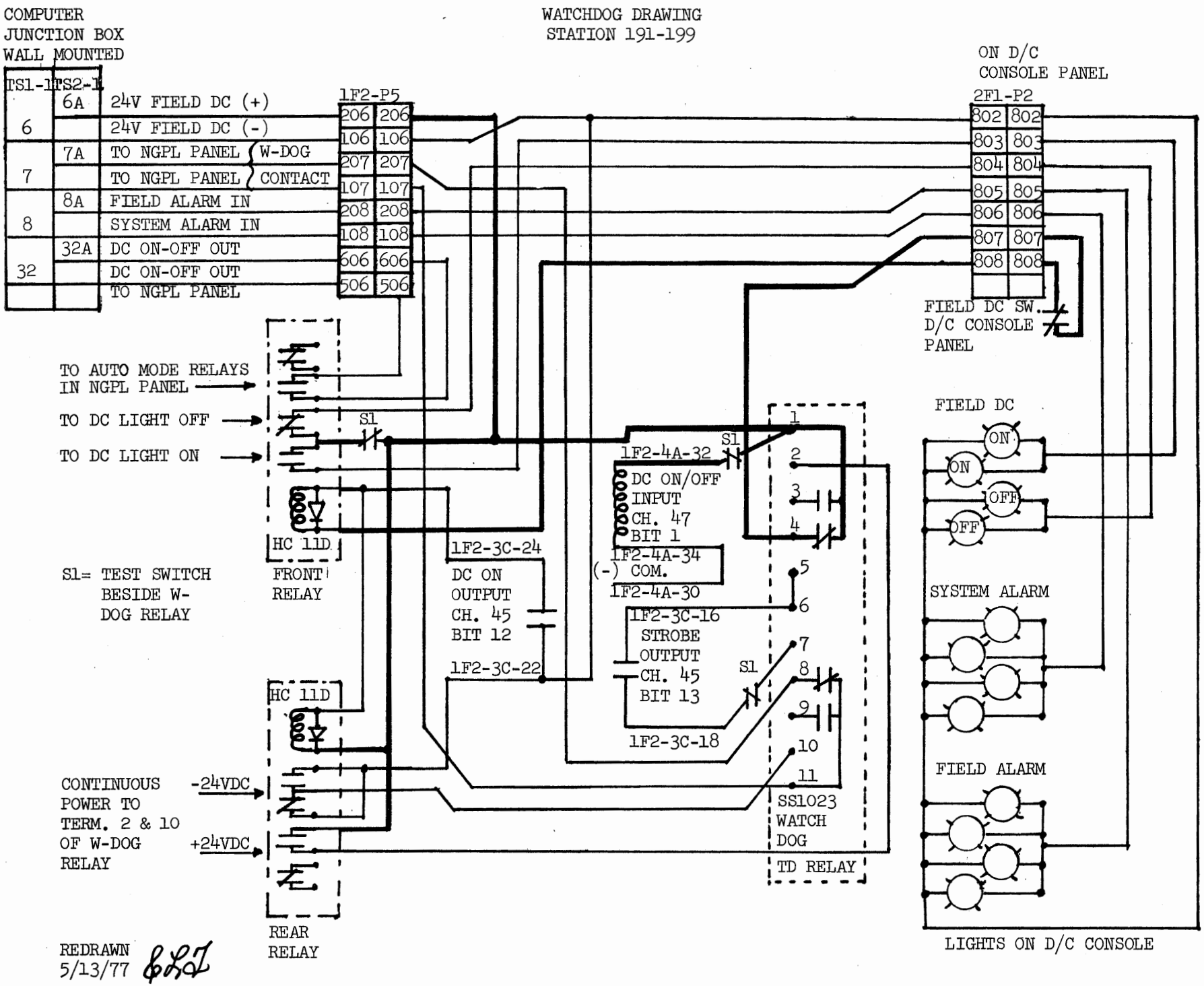

REDRAWN
5/13/77 EJL

THUMB IN
DIAGNOSTICS

G-1-7/63

NGPL

INTER – OFFICE CORRESPONDENCE

DATE June 29, 1973

SUBJECT SEL 810A Computer, Short Loop, Test Programs.

TO R. D. Kelly, J. R. Saar, V. E. Dake, Ed Skanes, T. C. Losh, E. L. Bergeson, J. J. Sneddeker, R. D. Pilcher, R. E. Praeuner, F. E. Bailey, C. T. Lowman, P. C. Luce, G. L. Brannan, W. J. Allen, L. G. Gillis

FROM Martin J. Findling

The following short loop "thumb-in" test programs and test procedures may be of assistance when trouble shooting the Computer.

1. Test all lights - light the Transfer Register and transfer to the Program Counter and "A", "B", and Instruction Registers.

2. Interchange "A" and "B".

Memory Location	Instruction Machine	Instruction Assembler
0	000006	(IAB)
1	111000	(BRU*-1)

"A" Accumulator = 0's
"B" Accumulator = 1's
Single cycle and run to make sure 1's and 0's alternate in the accumulators.

3. Load Control Switches, Store "A", and Load "B".

Memory Location	Instruction Machine	Instruction Assembler
0	000031	LCS
1	030004	STA 4
2	020004	LBA 4
3	110000	BRU 0

Start program and make sure all bits, 1's & 0's, will load into "B" accumulator using the Load Control Switches.

4. Output to the TTY Console.

Memory Location	Instruction Machine	Instruction Assembler
0	000031	LCS
1	001016	LSL 8
2	170101	AOP 1,W
3	110000	BRU *-3

Set Load Control Switches for octal 000207 (TTY bell) and start program. The teletype console bell should sound.

5. Memory Test - Test Prog. Step #1 loads memory and test Prog. Step #2 checks memory.

Step #1.

Memory Location	Instruction Machine	Instruction Assembler
0	034004	STA 4,1
1	000026	IBS
2	110000	BRU *-2
3	110000	BRU *-3

Set desired test pattern in "A" accumulator and start program. The program will store the test pattern in all memory locations except 1 through 4.

Step #2.

Memory Location	Instruction Machine	Instruction Assembler
0	014010	LAA 10,1
1	150010	CMA 10
2	000000	HLT
3	110005	BRU *+2
4	000000	HLT
5	000026	IBS
6	000000	HLT
7	110000	BRU *-7
10	Same test pattern as "A" accumulator in STEP #1.	

Start the program, when the program stops, the "B" accumulator should contain octal 037770 for successful test. If a memory error occurs, the address of the memory location which failed will be the contents of the "B" accumulator plus octal 10.

6. Check Parity Light on Control Panel.
   1. Remove card 14F.
   2. Enter octal 000002 in memory location 0.
   3. Replace card 14F.
   4. Display memory location 0.
   5. Parity light should illuminate.

7. Check Overflow Light on Control Panel.

Memory Location	Instruction Machine	Instruction Assembler
0	010003	LAA 3
1	050003	AMA 3
2	000000	HLT
3	100000	DATA

Start program and overflow light should illuminate.

8. Test External Unit Test Loop.

Memory Location	Instruction Machine	Instruction Assembler
0	000031	LCS
1	030003	STA 3
2	130240	TEU 40
3	000000	DATA
4	110006	BRU *+2
5	110000	BRU 0
6	170501	MØP 1
7	103400	TTY BELL (207)
10	110000	BRU 0

Start program. Raising each sense switch should cause the teletype bell to ring with the exception of sense switches 0, 1, & 3. To check sense switches 0, 1, & 3 use the following procedure.

1. Set sense switch "0" and push the Set Point Execute switch, the TTY bell should ring.
2. Set sense switch 1 and tap or otherwise trip the high room temperature alarm on the wall mounted alarm thermostat, the TTY bell should ring.
3. Set sense switch 3 and push the Active Alarm Recall switch, the TTY bell should ring.

The foregoing test loops with the exception of the TEU Test #8 were suggested by Mr. Tom McGovern of SEL. These tests check many of the gates and data links in the Computer and is especially useful for testing if the diagnostic tapes will not load properly.

If you have any questions please call me.

MJF/gr
cc: Mr. V. K. Patrick
Mr. C. L. Thompson
Mr. M. G. Strasen
Mr. R. L. Jepsen
Mr. W. H. Smith
Mr. M. B. Roker
Mr. C. J. Langdale

G-1 1/72

Look

NGPL

INTER-OFFICE CORRESPONDENCE

DATE September 4, 1975

SUBJECT Computer Test Program

TO All Communications "Computer" Technicians

FROM Mr. C. L. Thompson

Due to various problems occuring on the I/O bus and with teletype print out, the following thumb in program may be helpful in isolating the problem.

The program connects the teletype interrupts (input and output) to the standard priority interrupts in the computer. The program will input from any key on the teletype and print the character or number utilizing both interrupts.

After entering program, operate single cycle switch twice to turn off teletype motor.

Press start once and program should turn on teletype motor and advance to location '12-'13 and wait for an input from the teletype key board. Typing the character "0" and the number "0" will test data input bit lines 0-7 and output bits 8-15 on the I/O bus. If these characters do not print correctly, determine the data bit that is faulting. Following the print out of a character or a number, the octal representation will be displayed in the "A" accumulator.

If the program halts at a location other than '12 or '13 review the instruction causing the halt. The program will always return to this location unless a fault in hardware occurs.

Call me if you have trouble diagnosing a fault.

Place this information in the program binder under the tab labeled, Power Fail, A/D and TTy.

CLT/plb

cc: M. E. Nider
M. J. Findling
D. J. Noerrlinger
C. J. Langdale
M. B. Roker
File

PROGRAM COUNTER	LOCATION	OPERATION	ADDRESS INDEX	OCTAL INSTRUCTION	COMMENTS
0		CEU	1,W	130101	
1		DATA	'400	000400	Turn Off TTy Motor
2		LAA	INPT	010032	
3		STA*	A1	032033	
4		LAA	OTPT	010034	
5		STA*	B1	032035	
6		CEU	1,W	130101	Enable TTy Interrupts,
7		DATA	'72200	072200	Key Board and Motor
10		PIE		130600	Enable Computer Inpt
11		DATA	'10001	010001	Interrupt (Loc 8A)
12		NOP		000033	
13		BRU	*-1	110012	Wait for Interrupt
14	TYPE	DAC	**	000000	
15		AIP	1,W	170301	
16		LSL	8	001016	
17		PIE		130600	Enable Computer OTPT
20		DATA	'10002	010002	Interrupt (Loc 8A)
21		TOI		000035	Turn Off Interrupt
22		BRU*	TYPE	112014	BRU to Loc 12-13
23	PRNT	DAC	**	000000	
24		AOP	1,W	170101	
25		RSL	8	001015	
26		PID		130601	Disable OTPT Interrupt
27		DATA		010002	(Loc 8A)
30		TOI		000035	Turn Off Interrupt
31		BRU*	PRNT	112023	BRU to Loc 12-13
32	INPT	DAC	TYPE	000014	
33	A1	DATA	'1016	001016	
34	OTPT	DAC	PRNT	000023	
35	B1	DATA	'1017	001017	

MEMORY REFERENCE
TESTS

IDENTIFICATION: Memory Test Diagnostic Program OCT #10

AUTHOR: Carl L. Thompson
Natural Gas Pipeline Company of America
Communications Division

COMPLETED: March 18, 1977

PURPOSE: To assist the Communication Technicians with maintenance and repair of the computer memory section.

COMPUTER: 810A

STORAGE: 331 Octal Locations

This program should be loaded in the good memory section (lower 8K or upper 8K) to check the failing or defective section. Load as follows.

Locations '20000-'37777 Failing (Upper 8K)
Enter '36060 in Program Counter
'6000 in "A" Accumulator

Insert tape in reader and press start switch twice.

With upper 8K failing it may be necessary to enter manual bootstrap and load the 8K loader tape in the lower 8K of memory.

The bootstrap for the 8K loader is the same as for 16K except for instruction '16 and '17 as follows.

Octal Location	8K Coding	16K Coding
16	117671	137671
17	017673	037673

To load the diagnostic tape,
Enter '16060 in Program Counter
'6000 in "A" Accumulator

Insert tape in reader and press start switch twice.

Start program at '6000 location and select the bit pattern for test using control panel switches.

Location 0-'17777 Failing (Lower 8K)
Enter '36060 in Program Counter
'20000 in "A" Accumulator

Insert tape in reader and press start switch twice.

Start program at '20000 location and select the bit pattern for test using control panel switches.

To commence test for either memory you should place all 16 switches in the raised position.

The program writes data into one memory location at a time then reads (extracts) the data to compare with the data that was written. If a bit was added or dropped, the program will initiate the printing.

1. Memory location of failure
2. Data as read from memory (errors)
3. Data as written into memory (good data)
   (See sample printout attached)

Let the program print errors, 100 locations or more, then study printed data closely for:

1. Locations that are failing
2. Data - is same bit or bits failing each time?

Refer to the memory trouble shooting guide for the most common memory problems. The trouble shooting guide is attached.

A parity error will cause the program to halt without printing information. You may jumper 13F24 to ground to inhibit parity halt signal and permit printing of information to analyze.

Testing of the upper 8K of memory will destroy the 16K loader program. After tests are complete the manual bootstrap will be automatically loaded by pressing teletype key "B". After teletype prints; "Bootstrap Loaded, Enter 16K Loader" you may insert the 16K loader tape, master clear and then press start switch twice to load.

Memory Troubleshooting Guide

A. Dropping all bits in all addresses
   1. Possible Cause: Missing +3.6 Volts
   2. Missing +28 Volts or +18.4 Volts. Check +28v and +18.4v outputs on card 8269 at 5K16 and 5K22 respectively.
   3. Missing or low read or write currents from current driver card (8959)

B. Dropping one bit in all addresses
   1. Possible Cause: Memory Data Register circuit faulty. Check data register circuit (8272-1), cycle memory with ONE's. The output to inhibit driver or inhibit driver selector should be 0 volts.
   2. Inhibit driver circuit faulty. Check inhibit driver circuits on (8269-1) and (8272).
   3. Sense amplifier circuit faulty. Check sense amplifier (8962) outputs.

C. Dropping one bit in all addresses of either the upper or lower 4K of an 8K memory
   1. Possible Cause: Inhibit driver circuit faulty. Check as prescribed in B1 above.
   2. Inhibit selector circuit faulty. Check inhibit selector circuit (8275)

D. Picking up all bits in all addresses
   1. Possible Cause: Missing -6 volts

E. Picking up one bit in all addresses
   1. Possible Cause: Data register faulty. Check data register circuit (8272) by depressing console clear switch. Output of circuit should be +V.
   2. Inhibit driver faulty.
      (a) Check inhibit driver by cycling ZERO's throughout memory. The inhibit current should be sufficient to cancel the write current.
   3. Sense Amplifier faulty. Check sense amp (8962) output.

F. Picks up one bit in all addresses of either the upper or lower 4K of an 8K Memory.
   1. Possible Cause: Inhibit driver faulty. Check inhibit driver circuit (8269-1) and (8272-1)
   2. Inhibit selector faulty. Check inhibit selector (8275) and (8272-1)

G. Picks up or drops random bits at random addresses
   1. Possible Cause: Core stack line currents are too high or low. Check the core stack common line currents from the current driver circuits when loading all ones during consecutive addressing. The waveforms should appear as shown in Figure 4.

2. Threshold voltage high or low. Refer to the adjustment procedures for card 8277. Unload strobe monostable may require adjustment. Refer to the adjustment procedure for card 8270.

H. Dropping bits in one address of every eighth address
   1. Possible Cause: The XWR line driver switch (8273) corresponding to the addresses that are dropping bits is faulty.
   2. Read/Write matrix corresponding to the XWR line driver circuits is faulty.

I. Dropping bits in eight addresses of every 64 addresses.
   1. The XC line driver switch (8273) corresponding to the addresses that are dropping bits is faulty. Example: Addresses $(0010)_8$ through $(0017)_8$ or $(0110)_8$ through $(0117)_8$ etc. Line driver switch XC1. Replace or repair card.
   2. Read/Write matrix corresponding to the XC line driver circuits is faulty. Replace or repair card.

J. Dropping bits in 64 addresses of every 512 addresses.
   1. The YWR line driver switch corresponding to the addresses that are dropping bits is faulty. Example: Addresses $(0000)_8$ - $(0077)_8$ - $(1000)_8$ - $(1077)_8$, etc. Line driver switch YWR 0. Replace or repair card.
   2. Read/Write matrix corresponding to the YWR line driver circuits is faulty. Replace or repair card.

K. Droppings bits in 512 addresses of every 4K or 8K of memory.
   1. The YC line driver switch corresponding to the addresses that are dropping bits is faulty. Example: Addresses $(5000)_8$ through $(5777)_8$. Line driver switch YC 5 in the 4K. Addresses $(15,000)_8$ through $(15,777)_8$. Line driver switch YC 13 in the 8K. Replace or repair card.
   2. Read/Write matrix corresponding to the YC line driver circuits is faulty. Replace or repair card.

L. Droppings all bits in one address of every 64, or 64 addresses in every 4K or 8K of memory.
   1. Diode in core stack bad. With all bits in one address of 64 being dropped, the common line (XC) which has a bad diode, will not appear as normal when the address is selected. Normal read/write common line currents are shown in Figure 4.

      With bits in 64 addresses, of a 4K memory unit or an 8K memory unit being dropped, the common line (YC) will not appear as normal.

SAMPLE PROGRAM PRINTOUT

```
21204 0000000000100000
      0000000011111111

20764 0000000000100001
      0000000011111111

25504 0000000000011000
      0000000011111111

30675 0000000000000001
      0000000011111111

25617 0000000000100000   DATA W/ERRORS
      0000000011111111   GOOD DATA

                         MEMORY LOCATION
```

BOOTSTRAP LOADED, ENTER 16K LOADER

MEMORY VOLTAGES - ADJUSTABLE

The common or ground lead to all voltages in memory are tied to a common ground block (copper bar) located between memory H and K card location, rear side.

The following voltages originate from Model 222 power supply.

8269 Line Driver, Current and Inhibit Driver Regulator, Location 6K

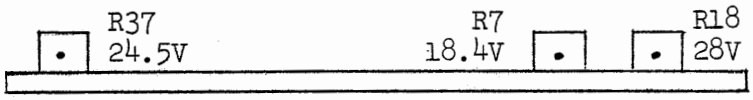

6K2 = 24.5V Adjust R37

6K10 = 28V Adjust R18

6K 18 = 18.4V Adjust R7

Other Cards that voltages affect

15H20	=	24.5V	8H8	=	28V	5K22	=	18.4V
16H20	=	24.5V	9H8	=	28V			
17H20	=	24.5V	10H8	=	28V			
18H20	=	24.5V	11H8	=	28V			
19H20	=	24.5V	12H8	=	28V			
19H24	=	24.5V	5K16	=	28V			

8277, 12 Volt and Threshold Regulator, Location 6L

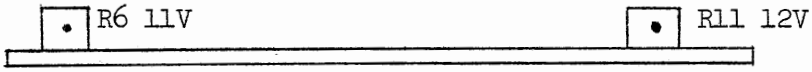

6L28	=	12V	Adjust R11	6L6	=	11V	Adjust R6
4K22	=	12V		1L15	=	11V	
1L1	=	12V		2L15	=	11V	
2L1	=	12V		4L15	=	11V	
4L1	=	12V					
6H24	=	12V					
7H24	=	12V					
20H14	=	12V					

MEMORY VOLTAGES - NON ADJUSTABLE

MODEL 222 POWER SUPPLY

Use the common ground block (copper bar) between memory H and K card plane, rear side.

4K19 = (-)6V

4K20 = 16V

6K40 = 35V

Collector Case of Q1 (Inside Memory Cover) = 35V

A. 8270 Memory Timing Adjustment

Cycle memory with all ones as follows
1. Place all ones in T Register
2. Raise memory enter switch
3. Ground 3C18 to 3C2 in computer mainframe
4. Depress memory step switch
5. Connect Chan. 1 scope probe to 6H30 and sync the scope (-). Connect Chan. 2 to 6H38.
6. Adjust R19 until a delay of approx. 520 nanoseconds occurs between the leading edge of negative going pulse at 6H30 and the leading edge of positive going pulse at 6H38.

Oscilloscope settings
V/D = .1V
T/D = .1 microsec.
Mode Trigger: Red = Ch 1 only
Black = Alternate

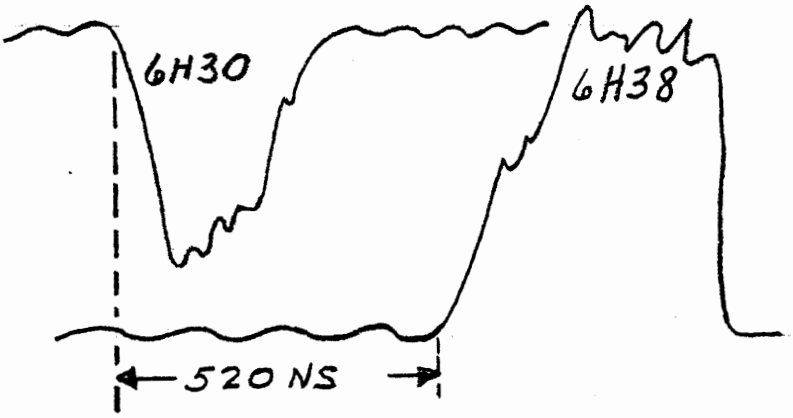

FIGURE 1

B. 8962 Sense Amplifier

The adjustment of the 8270 card controls the strobing of the sense amplifiers during the read portion of a memory cycle. Check the output pulse of all sense amplifiers for a clean leading edge at the following terminals.

Terminal	Oscilloscope Settings
1L4, 1L6, 1L8, 1L10, 1L12	V/D = .1V
2L4, 2L6, 2L8, 2L10, 2L12	T/D = .1 microsecond
3L4, 3L6, 3L8, 3L10, 3L12	Mode trigger:
4L4, 4L6	Red = Ch 1 only
	Black = Ch 1

Terminal 1L4-1L12 = Bit 0-4
2L4-2L12 = Bit 5-9
3L4-3L12 = Bit 10-14
414 = Bit 15
4L6 = Parity Bit

Sense Amp Pulse Clean Leading Edge

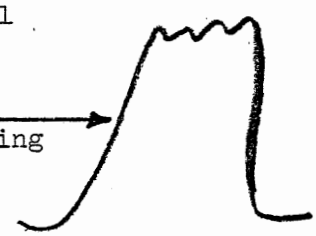

FIGURE 2

C. 8959 Dual Current Driver X and Y Read and Write Currents

Voltages on card 8269 must be adjusted before making adjustments on this card.

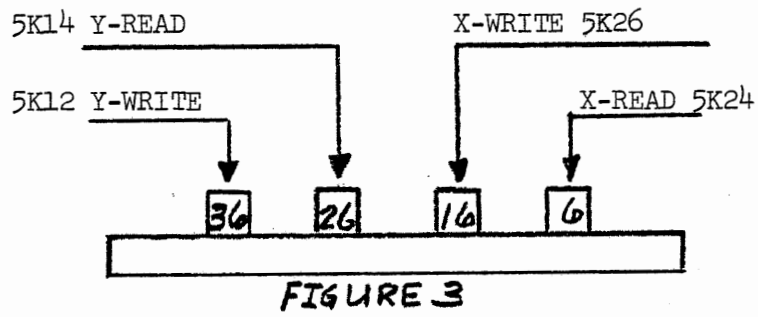

FIGURE 3

Oscilloscope Settings
V/D = .1V
T/D = .2 microseconds

Mode Trigger: Red = Ch 1 only
Black = Ch 1

With current probe adjust amplitude for 360 ma while loading ones in memory. Refer to A for cycling ones.

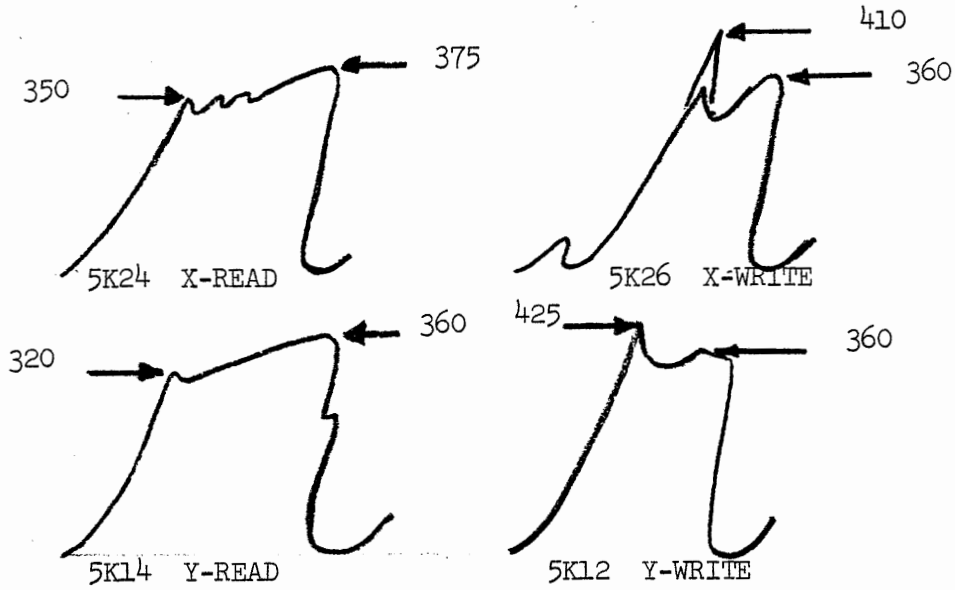

The write and read currents at 106 are adjusted per the above sketch.

```
EJ
 14064 00665
EJ
 14655 00665
EJ
 14655 00665
                          * * * * * * * * * * * * * * * * * * * * * * * * **
                          *    MEMORY TEST DIAGNOSTIC PROGRAM  CLT 10      *
                          *                                                *
                          *    PRESS LETTER B TO AUTOMATICALLY LOAD        *
                          *    MANUAL BOOT STRAP IF TESTING UPPER 8K.      *
                          *                                                *
                          *    PREPARED BY CARL L THOMPSON 3/18/77         *
                          * * * * * * * * * * * * * * * * * * * * * * * * **
00000 00000000                REL
00000 01100257                LAA  CNTQ          DAC STRT
00001 15100260                CMA  CNTR          INH INTRUP IN UPPER 8K
00002 11100005                BRU  *+3
00003 11100004                BRU  *+1
00004 11100020                BRU  UPER
00005 01100276                LAA  INPT          DAC TYPE
00006 03300275                STA* IRUP          '1016
00007 00130101                CEU  1,W
00010 00062000                DATA '62000
00011 00130600                PIE
00012 00010001                DATA '10001
00013 01100260                LAA  CNTR          '20000
00014 03100243                STA  CNTC          LOWEST LOC TO TST
00015 01100262                LAA  CNTU          '37777
00016 03100244                STA  CNTE          HIGHEST LOC TO TST
00017 11100024                BRU  STRT
00020 01100263 UPER           LAA  CNTV          1
00021 03100243                STA  CNTC          LOWEST LOC TO TST
00022 01100264                LAA  CNTW          '17777
00023 03100244                STA  CNTE          HIGHEST LOC TO TST
00024 00000033 STRT           NOP
00025 02100243                LBA  CNTC
00026 00000033 BEGN           NOP
00027 01100267                LAA  NEG2
00030 03100241                STA  CNTA
00031 00000031 LCS            LCS
00032 03100252                STA  CNTK
00033 03400000                STA  0,1
00034 15400000                CMA  0,1
00035 11100052                BRU  ADRS
00036 11100040                BRU  *+2
00037 11100052                BRU  ADRS
00040 00000033                NOP
00041 00000026                IBS
00042 00000033                NOP
00043 00000004                TBA
00044 15100244                CMA  CNTE
00045 11100050                BRU  *+3           TST NXT LOC
```

```
00046 11100024       BRU  STRT          TST 8K AGAIN
00047 00000000       HLT
00050 00000033       NOP
00051 11100031       BRU  LCS           TST NXT LOC
00052 12100140 ADRS  SPB  CRLF          PRNT ADRS OF FAILURE
00053 04100274       STB  SAVE
00054 01100272       LAA  NEG5
00055 03100246       STA  CNTG
00056 00000003       CLA
00057 00000413       FLL  4
00060 11100063       BRU  *+3
00061 00000003 CLA   CLA
00062 00000313       FLL  3
00063 05100251       AMA  CNTJ          '260
00064 00001016       LSL  8
00065 00170001       AOP  1
00066 11100065       BRU  *-1
00067 14100246       IMS  CNTG          -5 CNTR
00070 11100061       BRU  CLA
00071 12100133       SPB  SPCE
00072 01300274       LAA* SAVE
00073 02100242       LBA  CNTB          =-16
00074 00000021 SAS   SAS                ARANG-PRNT DATA
00075 11100100       BRU  ONE           A1 IS NEG=1
00076 11100107       BRU  ZERO          A1 AND A=0
00077 11100107       BRU  ZERO          A1 IS 0 AND A GREATER/0
00100 00170401 ONE   MOP  1
00101 00130400       DATA '130400
00102 11100100       BRU  *-2
00103 00000116 SHFT  LSL  1
00104 00000026       IBS
00105 11100074       BRU  SAS
00106 11100113       BRU  TEST          TYPE GOOD-BAD DATA
00107 00170401 ZERO  MOP  1
00110 00130000       DATA '130000       ZERO
00111 11100107       BRU  *-2
00112 11100103       BRU  SHFT
00113 12100140 TEST  SPB  CRLF
00114 14100241       IMS  CNTA
00115 11100117       BRU  *+2
00116 11100126       BRU  REPT
00117 02100273       LBA  NEG6
00120 12100133       SPB  SPCE
00121 00000026       IBS
00122 11100120       BRU  *-2
00123 00000033       NOP
00124 00000031       LCS
00125 11100073       BRU  SAS-1
```

```
00126 00000033 REPT NOP
00127 02100274      LBA  SAVE
00130 00000026      IBS
00131 00000033      NOP
00132 11100026      BRU  BEGN
00133 00000000 SPCE HLT
00134 00170401      MOP  1
00135 00120000      DATA '120000
00136 11100134      BRU  *-2
00137 11300133      BRU* SPCE
00140 00000000 CRLF HLT
00141 00170401      MOP  1
00142 00106400      DATA '106400
00143 11100141      BRU  *-2
00144 00170401      MOP  1
00145 00105000      DATA '105000
00146 11100144      BRU  *-2
00147 11300140      BRU* CRLF
00150 00000000 TYPE HLT
00151 00170301      AIP  1,W
00152 15100255      CMA  CNTN
00153 11100204      BRU  RONG
00154 11100156      BRU  *+2
00155 11100204      BRU  RONG
00156 01100247      LAA  CNTH          -17
00157 03100250      STA  CNTI          INDEX CNTR
00160 02100254      LBA  CNTM          0
00161 01500221      LAA  BOOT,1        BOOTSTRAP
00162 03400000      STA  0,1
00163 00000026      IBS
00164 00000033      NOP
00165 14100250      IMS  CNTI          INDEX CNTR
00166 11100161      BRU  *-5
00167 02100247      LBA  CNTH          =-17
00170 12100140      SPB  CRLF
00171 01500320      LAA  TBLA+17,1     ENTER 16K LOADER
00172 12100214      SPB  TTY
00173 00000026      IBS
00174 11100171      BRU  *-3
00175 12100140      SPB  CRLF
00176 00130101      CEU  1,W
00177 00001000      DATA '1000
00200 00130601      PID
00201 00010001      DATA '10001
00202 00000035      TOI
00203 11300265      BRU* CNTX
00204 02100256 RONG LBA  CNTP          -9
00205 12100140      SPB  CRLF
```

```
00206 01500331        LAA  TBLB+9,1       WRONG KEY
00207 12100214        SPB  TTY
00210 00000026        IBS
00211 11100206        BRU  *-3
00212 00000035        TOI
00213 11300261        BRU* CNTS
00214 00000000 TTY    HLT
00215 00170101        AOP  1,W
00216 00001016        LSL  8
00217 00170101        AOP  1,W
00220 11300214        BRU* TTY
00221 00130101 BOOT   CEU  1,W            BOOTSTRAP
00222 00004000        DATA '4000
00223 00170301        AIP  1,W
00224 00000022        SAZ
00225 00111006        DATA '111006
00226 00111002        DATA '111002
00227 00170301 READ   AIP  1,W
00230 00001016        LSL  8
00231 00174301        AIP  1,W,R
00232 00033016        DATA '033016
00233 00000022        SAZ
00234 00000026        IBS
00235 00113017        DATA '113017
00236 00111006        DATA '111006
00237 00137671        DATA '137671
00240 00037673        DATA '037673
00241 00000000 CNTA   DATA 0              -2 CNTR
00242 00177760 CNTB   DATA -16
00243 00020000 CNTC   DATA '20000         LOWEST MEM LOC F/TST
00244 00037777 CNTE   DATA '037777        HIGHEST MEM LOC F/TST
00245 35400274 CNTF   DAC  SAVE
00246 00000000 CNTG   DATA 0              -5 CNTR
00247 00177757 CNTH   DATA -17
00250 00000000 CNTI   DATA 0
00251 00000260 CNTJ   DATA '260
00252 00000000 CNTK   DATA 0
00253 00000000 CNTL   DATA 0
00254 00000000 CNTM   DATA 0
00255 00000302 CNTN   DATA '000302        B
00256 00177767 CNTP   DATA -9
00257 35400024 CNTQ   DAC  STRT
00260 00020000 CNTR   DATA '20000
00261 35400024 CNTS   DAC  STRT
00262 00037777 CNTU   DATA '37777
00263 00000001 CNTV   DATA 1
00264 00017777 CNTW   DATA '17777
00265 35400266 CNTX   DAC  CNTY
```

```
0192  00266 00000000 CNTY HLT
0193  00267 00177776 NEG2 DATA -2            TYPE 2 BINARY NOS
0194  00270 00177775 NEG3 DATA -3
0195  00271 00177774 NEG4 DATA -4
0196  00272 00177773 NEG5 DATA -5
0197  00273 00177772 NEG6 DATA -6
0198  00274 00000000 SAVE DATA 0             ADRS OF ERROR
0199  00275 00001016 IRUP DATA '1016
0200  00276 35400150 INPT DAC  TYPE
0201  00277 00141317 TBLA DATA ''BOOTSTRAP LOADED, ENTER 16K LOADER''
0201  00300 00147724
0201  00301 00151724
0201  00302 00151301
0201  00303 00150240
0201  00304 00146317
0201  00305 00140704
0201  00306 00142704
0201  00307 00126240
0201  00310 00142716
0201  00311 00152305
0201  00312 00151240
0201  00313 00130666
0201  00314 00145640
0201  00315 00146317
0201  00316 00140704
0201  00317 00142722
0202  00320 00153722 TBLB DATA ''WRONG KEY, PRESS B''
0202  00321 00147716
0202  00322 00143640
0202  00323 00145705
0202  00324 00154654
0202  00325 00120320
0202  00326 00151305
0202  00327 00151723
0202  00330 00120302
0203  00331 70400000      END
       UPER    00020
       STRT    00024
       BEGN    00026
       LCS     00031
       ADRS    00052
       CLA     00061
       SAS     00074
       ONE     00100
       SHFT    00103
       ZERO    00107
       TEST    00113
       REPT    00126
```

```
        SPCE    00133
        CRLF    00140
        TYPE    00150
        RONG    00204
        TTY     00214
        BOOT    00221
        READ    00227
        CNTA    00241
        CNTB    00242
        CNTC    00243
        CNTE    00244
        CNTF    00245
        CNTG    00246
        CNTH    00247
        CNTI    00250
        CNTJ    00251
        CNTK    00252
        CNTL    00253
        CNTM    00254
        CNTN    00255
        CNTP    00256
        CNTQ    00257
        CNTR    00260
        CNTS    00261
        CNTU    00262
        CNTV    00263
        CNTW    00264
        CNTX    00265
        CNTY    00266
        NEG2    00267
        NEG3    00270
        NEG4    00271
        NEG5    00272
        NEG6    00273
        SAVE    00274
        IRUP    00275
        INPT    00276
        TBLA    00277
        TBLB    00320
ERRORS  0000    00000
```

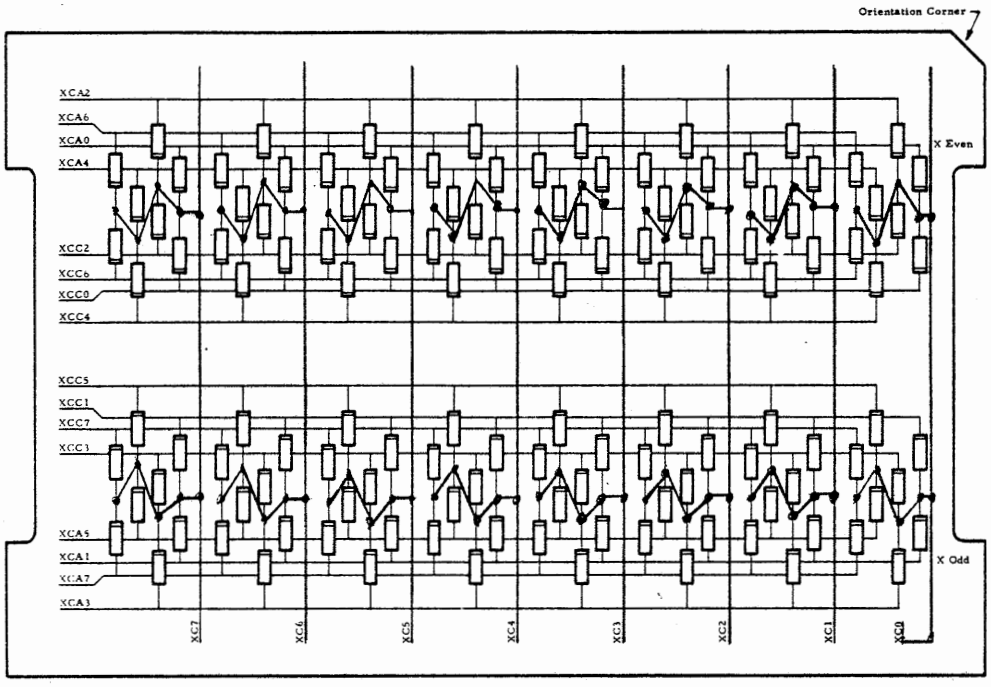

X DIODE MATRIX DECODE BOARD ASSEMBLY

When locating diodes note orientation corner.

XCA = READ
XCC = WRITE

All diodes are Ampex 013-715

BOTTOM BOARD

X Diode Board Layout

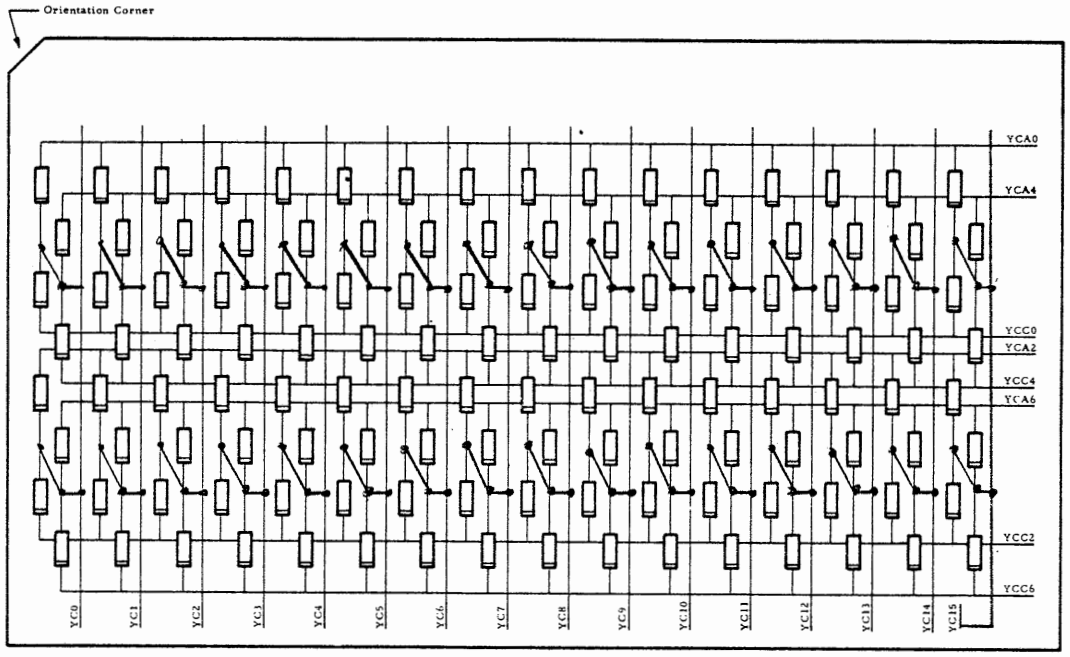

Y EVEN DIODE MATRIX DECODE BOARD ASSEMBLY

When locating diodes
note orientation corner.

YCA = READ

YCC = WRITE

All diodes are Ampex 013-715

TOP BOARD

Y Even Diode Board Layout

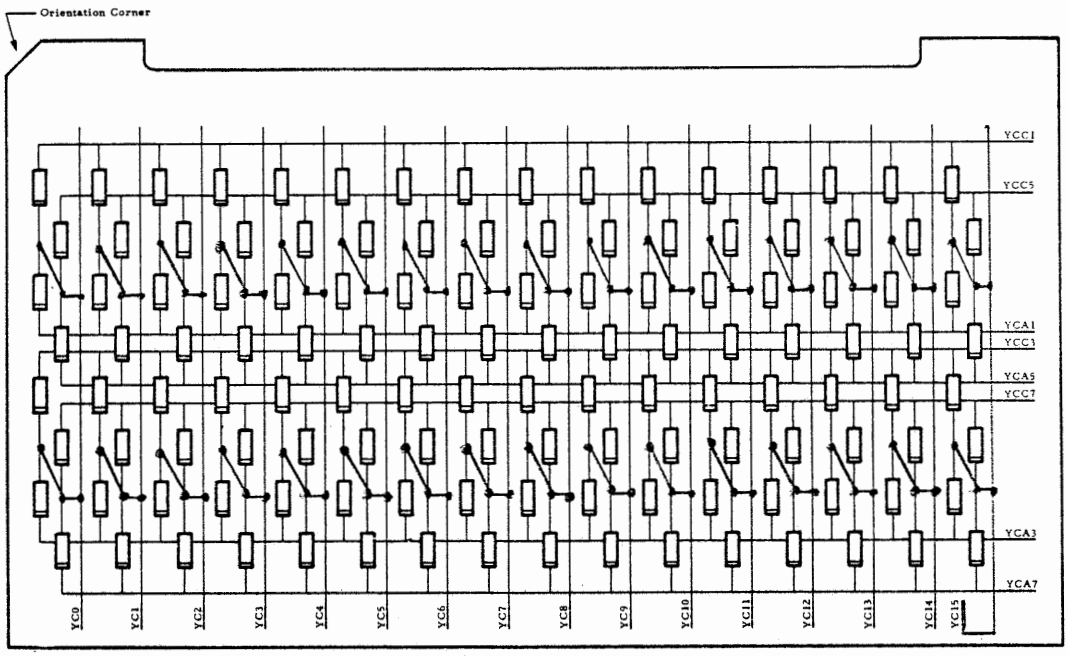

Y ODD DIODE MATRIX DECODE BOARD ASSEMBLY

When locating diodes
note orientation corner.

YCA = READ

YCC = WRITE

All diodes are Ampex 013-715

MIDDLE BOARD

Y Odd Diode Board Layout

NOTES:
1. CARD 8H NOT USED IN 4K MEMORY.

REV	DESCRIPTION	DATE	APP'D
D	53103		A
	SEE SHEET 1		

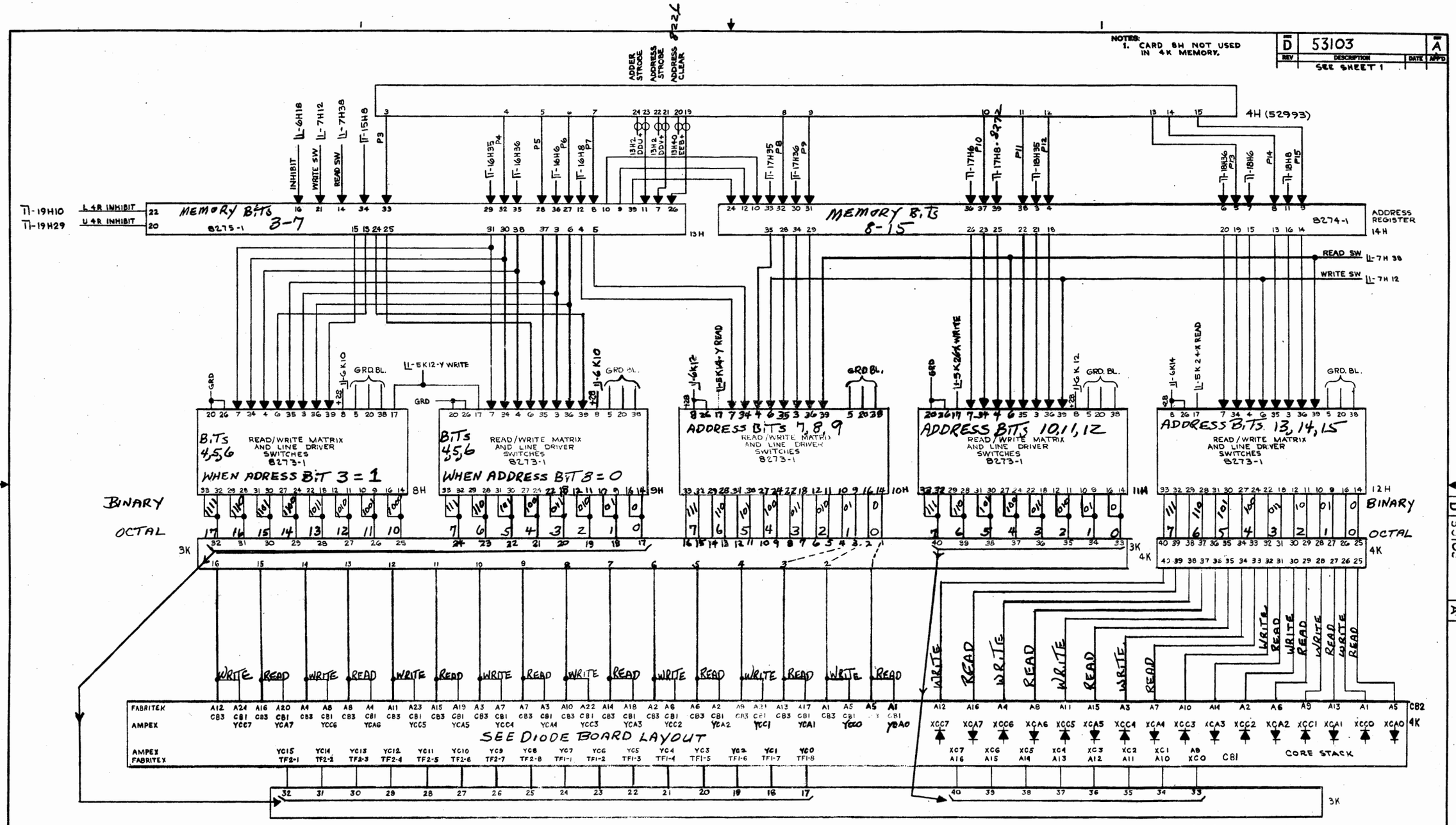

ITEM	DWG. OR PART NO.	DESCRIPTION
		SYSTEMS ENGINEERING LABORATORIES INCORPORATED, FORT LAUDERDALE, FLORIDA
DR. AL SCHECKLER	4-11-67	LOGIC DIAGRAM 8K x 18 MEMORY & ADDRESSING
CK. C. Williams	10-31-67	
ENG.	9/20/67	
PROJ. ENG.	9/20/67	
APP.	9-25-	
USED ON		SIZE D 53103 REV A

SHEET 2 OF 5

MAINFRAME VOLTAGES

MODEL 221 POWER SUPPLY

3.6V Bus = 3.6V

17E1 = 5V
17E2 gnd

MODEL 222 POWER SUPPLY

9G26 = 40V
9G2 gnd

15G4 = 40V
9G2 gnd

9G20 = 16V
9G2 gnd

CONTROL PANEL

156 = 21V
157 gnd

CHECK AND ADJUST VOLTAGE AT POWER SUPPLY

I/O BUS SIGNALS

COMPUTER														COMM. SYN. MODEM				
LOGIC CARD INFORMATION												P1-P2 I/O Cable	I/O BUS SIGNALS	P1-P2 I/O Cable	CARD			
Location	Signal Pin	Number	Signal Pin	Location	Signal Pin	Number	Signal Pin	Location	Signal Pin	Number	Signal Pin				Signal Pin	Number	Signal Pin	Location
				9E	11	Prog. Reg. 8217	3	9C	12	CD 8705	10	310	Data Trans Instr. MIP MOP AIP AOP ►	310	23	CT 100069	24	30A
											9	410		410				
				12C		I-O Instr. Dec. 8216	7	9C	13	CD 8705	14	311	Test Instr. TEU ►	311	25	CT 100069	26	30A
											11	411		411				
12C		I-O Instr. Dec. 8216	4	7C	8	Inverter 8545	6	9C	18	CD 8705	15	312	Command Instr. CEU ►	312	29	CT 100069	30	30A
											17	412		412				
				11C		I-O Instr. Dec. 8225	21	9C	26	CD 8705	27	313	Command Inst. Sync ►	313	35	CT 100069	36	30A
											25	413		413				
								2A		8242	3	503	◄ Unit Input Interrupt	503	72	CD 83278	67	28A
											2	603		603				
								2A		8242	27	504	◄ Unit Output Interrupt	504	64	CD 83278	63	28A
											28	604		604				
				12C		I-O Instr. Dec. 8216	15	9C	6	CD 8705	8	509	Input Instruction ►	509	37	CT 100069	38	30A
											7	609		609				
13D		Shift Cntr. 8209	18	24D	25	Dig. Buffer 8749	22	10C	24	CD 8705	22	510	Wait Flag ►	510	39	CT 100069	40	30A
											23	610		610				
				12C		I-O Instr. Dec. 8216	18	10C	26	CD 8705	27	511	CL8-CL16Timing ►	511	41	CT 100069	42	30A
											25	611		611				
				11C		I-O Instr. Timing 8225	20	9C	24	CD 8705	22	512	Computer Data Here + CDH ►	512	43	CT 100069	44	30A
											23	612		612				
				11C		I-O Instr. Timing 8225	12	9C	18	CD 8705	20	513	Computer Data Accepted + CDA ►	513	45	100069	46	30A
											19	613		613				
				19D	4	A Zero Detect 8232	8	9C	4	CD 8705	3	709	Master Clear ICB + ►	709	47	100069	48	30A
											5	809		809				
				11C		I-O Instr. Timing 8225	7	6C	21	CT 8615	22	710	◄ Unit Test Return UTR +	710	22	CD 83278	21	28A
											26	810		810				
				11C		I-O Instr. Timing 8225	8	6C	23	CT 8615	24	711	◄ Unit Sync Return USR +	711	26	83278	23	28A
											28	811		811				
				11C		I-O Instr. Timing 8225	9	6C	19	CT 8615	20	712	◄ Unit Data Accepted UDA +	712	32	83278	31	28A
											25	812		812				

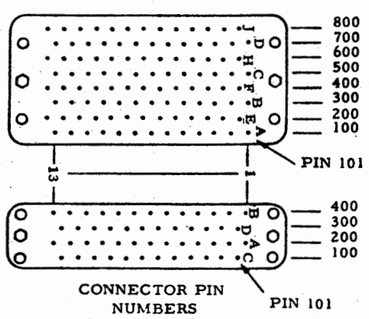

I/O BUS SIGNALS
COMPUTER TO
MODEM CLT

Sheet 1 of 2

I/O BUS SIGNALS

COMPUTER					COMM SYN MODEM				
CARD			P1-P2 I/O Cable		P1-P2 I/O Cable	CARD			
Location	Number	Signal Pin Out				Signal Pin	Number	Signal Pin	Location
15F	8201	27	101	Data Bit 0 In-Out	101	7	100069	8	29A
			201						
15F	8201	3	102	Data Bit 1 In-Out	102	9	100069	10	29A
			202						
16F	8201	27	103	Data Bit 2 In-Out	103	11	100069	12	29A
			203						
16F	8201	3	104	Data Bit 3 In-Out	104	13	100069	14	29A
			204						
17F	8201	27	105	Data Bit 4 In-Out	105	15	100069	16	29A
			205						
17F	8201	3	106	Data Bit 5 In-Out	106	21	100069	22	29A
			206						
18F	8201	27	107	Data Bit 6 In-Out	107	23	100069	24	29A
			207						
18F	8201	3	108	Data Bit 7 In-Out	108	25	100069	26	29A
			208						
10C	8705	3	109	Unit Mach Bit 15	109	7	100069	8	30A
		5	209						
10C	8705	8	110	Unit Mach Bit 14	110	9	100069	10	30A
		7	210						
10C	8705	10	111	Unit Mach Bit 13	111	11	100069	12	30A
		9	211						
10C	8705	14	112	Unit Mach Bit 12	112	13	100069	14	30A
		11	212						
10C	8705	15	113	Unit Mach Bit 11	113	15	100069	16	30A
		17	213						
19F	8201	27	301	Data Bit 8 In-Out	301	29	100069	30	29A
			401						
19F	8201	3	302	Data Bit 9 In-Out	302	35	100069	36	29A
			402						
20F	8201	27	303	Data Bit 10 In-Out	303	37	100069	38	29A
			403						
20F	8201	3	304	Data Bit 11 In-Out	304	39	100069	40	29A
			404						
21F	8201	27	305	Data Bit 12 In-Out	305	41	100069	42	29A
			405						
21F	8201	3	306	Data Bit 13 In-Out	306	43	100069	44	29A
			406						
22F	8201	27	307	Data Bit 14 In-Out	307	45	100069	46	29A
			407						
22F	8201	3	308	Data Bit 15 In-Out	308	47	100069	48	29A
			408						
10C	8705	20	309	Unit Mach Bit 10	309	21	100069	22	30A
		19	409						

I/O BUS SIGNALS

COMPUTER														A/D CONVERTER				
LOGIC CARD INFORMATION												P1-P2 I/O Cable	I/O BUS SIGNALS	P1-P2 I/O Cable	CARD			
Location	Signal Pin	Number	Signal Pin	Location	Signal Pin	Number	Signal Pin	Location	Signal Pin	Number	Signal Pin				Signal Pin	Number	Signal Pin	Location
				9E	11	Prog. Reg. 8217	3	9C	12	CD 8705	10	310	Data Trans Instr. MIP MOP AIP AOP	310	19	83270	22	11A
											9	410		410				
				12C		I-O Instr. Dec. 8216	7	9C	13	CD 8705	14	311	Test Instr. TEU	311	Not	Used		
											11	411		411				
12C		I-O Instr. Dec. 8216	4	7C	8	Inverter 8545	6	9C	18	CD 8705	15	312	Command Instr. CEU	312	17	83270	24	11A
											17	412		412				
				11C		I-O Instr. Dec. 8225	21	9C	26	CD 8705	27	313	Command Inst. Sync	313	16	83270	37	11A
											25	413		413				
								8A		8242	3	503	Unit Input Interrupt	503	24	83271	20	12A
											2	603		603				
								8A		8242	27	504	Unit Output Interrupt	504	21	83271	18	12A
											28	604		604				
				12C		I-O Instr. Dec. 8216	15	9C	6	CD 8705	8	509	Input Instruction	509	14	83270	28	11A
											7	609		609				
13D		Shift Cntr. 8209	18	24D	25	Dig. Buffer 8749	22	10C	24	CD 8705	22	510	Wait Flag	510	13	83270	33	11A
											23	610		610				
				12C		I-O Instr. Dec. 8216	18	10C	26	CD 8705	27	511	CL8-CL16Timing	511	12	83270	30	11A
											25	611		611				
				11C		I-O Instr. Timing 8225	20	9C	24	CD 8705	22	512	Computer Data Here + CDH	512	11	83270	31	11A
											23	612		612				
				11C		I-O Instr. Timing 8225	12	9C	18	CD 8705	20	513	Computer Data Accepted + CDA	513	10	83270	32	11A
											19	613		613				
				19D	4	A Zero Detect 8232	8	9C	4	CD 8705	3	709	Master Clear ICB +	709	9	83270	29	11A
											5	809		809				
				11C		I-O Instr. Timing 8225	7	6C	21	CT 8615	22	710	Unit Test Return UTR +	710	19	83270	37	11A
											26	810		810				
				11C		I-O Instr. Timing 8225	8	6C	23	CT 8615	24	711	Unit Sync Return USR +	711	38	83270	20	11A
											28	811		811				
				11C		I-O Instr. Timing 8225	9	6C	19	CT 8615	20	712	Unit Data Accepted UDA +	712	39	83270	21	11A
											25	812		812				

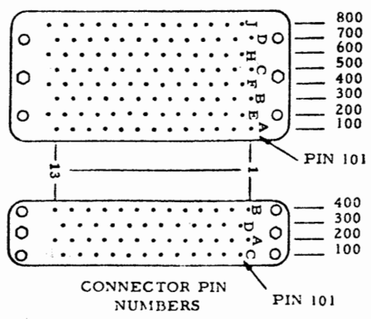

I/O BUS SIGNALS
COMPUTER TO
A/D CONV. CLT

Sheet 1 of 2

I/O BUS SIGNALS

COMPUTER					A/D CONVERTER				
CARD			P1-P2 I/O Cable		P1-P2 I/O Cable	CARD			
Location	Number	Signal Pin Out				Signal Pin	Number	Signal Pin	Location
15F	8201	27	101	Data Bit 0 In-Out	101	Not	Used		
			201						
15F	8201	3	102	Data Bit 1 In-Out	102	Not	Used		
			202						
16F	8201	27	103	Data Bit 2 In-Out	103	Not	Used		
			203						
16F	8201	3	104	Data Bit 3 In-Out	104	Not	Used		
			204						
17F	8201	27	105	Data Bit 4 In-Out	105	28	83271	9	12A
			205						
17F	8201	3	106	Data Bit 5 In-Out	106	26	83271	22	12A
			206						
18F	8201	27	107	Data Bit 6 In-Out	107	10	83271	35	12A
			207						
18F	8201	3	108	Data Bit 7 In-Out	108	12	83271	23	12A
			208						
10C	8705	3	109	Unit Mach Bit 15	109	8	83270	34	11A
		5	209						
10C	8705	8	110	Unit Mach Bit 14	110	7	83270	27	11A
		7	210						
10C	8705	10	111	Unit Mach Bit 13	111	6	83270	36	11A
		9	211						
10C	8705	14	112	Unit Mach Bit 12	112	5	83270	25	11A
		11	212						
10C	8705	15	113	Unit Mach Bit 11	113	4	83270	38	11A
		17	213						
19F	8201	27	301	Data Bit 8 In-Out	301	14	83271	32	12A
			401						
19F	8201	3	302	Data Bit 9 In-Out	302	16	83271	30	12A
			402						
20F	8201	27	303	Data Bit 10 In-Out	303	39	83271	5	12A
			403						
20F	8201	3	304	Data Bit 11 In-Out	304	38	83271	6	12A
			404						
21F	8201	27	305	Data Bit 12 In-Out	305	8	83271	26	12A
			405						
21F	8201	3	306	Data Bit 13 In-Out	306	6	83271	36	12A
			406						
22F	8201	27	307	Data Bit 14 In-Out	307	4	83271	37	12A
			407						
22F	8201	3	308	Data Bit 15 In-Out	308	3	83271	38	12A
			408						
10C	8705	20	309	Unit Mach Bit 10	309	3	83270	23	11A
		19	409						

I/O BUS SIGNALS

COMPUTER														TTY AND READER				
LOGIC CARD INFORMATION												P1-P2 I/O Cable	I/O BUS SIGNALS	P1-P2 I/O Cable	CARD			
Location	Signal Pin	Number	Signal Pin	Location	Signal Pin	Number	Signal Pin	Location	Signal Pin	Number	Signal Pin				Signal Pin	Number	Signal Pin	Location
				9E	11	Prog. Reg. 8217	3	9C	12	CD 8705	10	310	Data Trans Instr. MIP MOP AIP AOP ►	310	16	CT 8615	15	5A
											9	410		410	25			
				12C		I-O Instr. Dec. 8216	7	9C	13	CD 8705	14	311	Test Instr. TEU ►	311	Not	Used		
											11	411		411				
12C		I-O Instr. Dec. 8216	4	7C	8	Inverter 8545	6	9C	18	CD 8705	15	312	Command Instr. CEU ►	312	8	CT 8615	7	5A
											17	412		412	3			
				11C		I-O Instr. Dec. 8225	21	9C	26	CD 8705	27	313	Command Inst. Sync ►	313	14	CT 8615	13	5A
											25	413		413	25			
								8A		8242	3	503	◄ Unit Input Interrupt	503	15	CD 8614	16	18A
											2	603		603	17			
								8A		8242	27	504	◄ Unit Output Interrupt	504	14	CD 8614	13	18A
											28	604		604	11			
				12C		I-O Instr. Dec. 8216	15	9C	6	CD 8705	8	509	Input Instruction ►	509	24	CT 8615	23	5A
											7	609		609	27			
13D		Shift Cntr. 8209	18	24D	25	Dig. Buffer 8749	22	10C	24	CD 8705	22	510	Wait Flag ►	510	20	CT 8615	19	5A
											23	610		610	26			
				12C		I-O Instr. Dec. 8216	18	10C	26	CD 8705	27	511	CL8-CL16Timing ►	511	18	CT 8615	17	5A
											25	611		611	26			
				11C		I-O Instr. Timing 8225	20.	9C	24	CD 8705	22	512	Computer Data Here + CDH ►	512	10	CT 8615	9	5A
											23	612		612	5			
				11C		I-O Instr. Timing 8225	12	9C	18	CD 8705	20	513	Computer Data Accepted + CDA ►	513	22	CT 8615	21	5A
											19	613		613	27			
				19D	4	A Zero Detect 8232	8	9C	4	CD 8705	3	709	Master Clear ICB + ►	709	12	CT 8615	11	5A
											5	809		809	5			
				11C		I-O Instr. Timing 8225	7	6C	21	CT 8615	22	710	◄ Unit Test Return UTR +	710	27	CD 8614	26	18A
											26	810		810	25			
				11C		I-O Instr. Timing 8225	8	6C	23	CT 8615	24	711	◄ Unit Sync Return USR +	711	22	CD 8614	24	18A
											28	811		811	23			
				11C		I-O Instr. Timing 8225	9	6C	19	CT 8615	20	712	◄ Unit Data Accepted UDA +	712	20	CD 8614	18	18A
											25	812		812	19			

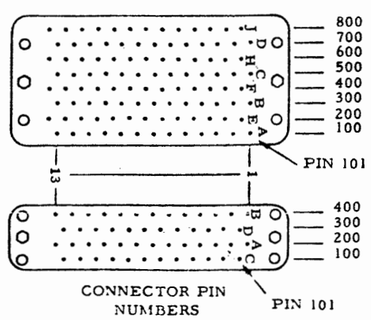

I/O BUS SIGNALS
COMPUTER TO
TELETYPE CLT

Sheet 1 of 2

I/O BUS SIGNALS

COMPUTER					TTY AND READER				
CARD			P1-P2 I/O Cable		P1-P2 I/O Cable	CARD			
Location	Number	Signal Pin Out				Signal Pin	Number	Signal Pin	Location
15F	8201	27	101	Data Bit 0 In-Out	101	10	CT 8615	9	7A
			201			5			
15F	8201	3	102	Data Bit 1 In-Out	102	12	CT 8615	11	7A
			202			5			
16F	8201	27	103	Data Bit 2 In-Out	103	14	CT 8615	13	7A
			203						
16F	8201	3	104	Data Bit 3 In-Out	104	16	CT 8615	15	7A
			204						
17F	8201	27	105	Data Bit 4 In-Out	105	8	CT 8615	17	7A
			205						
17F	8201	3	106	Data Bit 5 In-Out	106	20	CT 8615	19	7A
			206						
18F	8201	27	107	Data Bit 6 In-Out	107	22	CT 8615	21	7A
			207						
18F	8201	3	108	Data Bit 7 In-Out	108	24	CT 8615	23	7A
			208						
10C	8705	3	109	Unit Mach Bit 15	109	22	U. DEC 8711	TP3 27	4A
		5	209						
10C	8705	8	110	Unit Mach Bit 14	110	20	U. DEC 8711		4A
		7	210						
10C	8705	10	111	Unit Mach Bit 13	111	17	U. DEC 8711		4A
		9	211						
10C	8705	14	112	Unit Mach Bit 12	112	15	U. DEC 8711		4A
		11	212						
10C	8705	15	113	Unit Mach Bit 11	113	12	U. DEC 8711		4A
		17	213						
19F	8201	27	301	Data Bit 8 In-Out	301	27	CD 8705	26	3A
			401			25			
19F	8201	3	302	Data Bit 9 In-Out	302	22	CD 8705	24	3A
			402			23			
20F	8201	27	303	Data Bit 10 In-Out	303	20	CD 8705	18	3A
			403			19			
20F	8201	3	304	Data Bit 11 In-Out	304	15	CD 8705	16	3A
			404			17			
21F	8201	27	305	Data Bit 12 In-Out	305	14	CD 8705	13	3A
			405			11			
21F	8201	3	306	Data Bit 13 In-Out	306	10	CD 8705	12	3A
			406			9			
22F	8201	27	307	Data Bit 14 In-Out	307	8	CD 8705	6	3A
			407			7			
22F	8201	3	308	Data Bit 15 In-Out	308	3	CD 8705	4	3A
			408			5			
10C	8705	20	309	Unit Mach Bit 10	309	9	U. DEC 8711		4A
		19	409						

I/O BUS SIGNALS

COMPUTER														TEU AND DISPLAY CONTROL				
LOGIC CARD INFORMATION												P1-P2 I/O Cable	I/O BUS SIGNALS	P1-P2 I/O Cable	CARD			
Location	Signal Pin	Number	Signal Pin	Location	Signal Pin	Number	Signal Pin	Location	Signal Pin	Number	Signal Pin				Signal Pin	Number	Signal Pin	Location
				9E	11	Prog. Reg. 8217	3	9C	12	CD 8705	10	310	Data Trans Instr. MIP MOP AIP AOP ►	310	24	CT 8615	23	10B
											9	410		410	28			
				12C		I-O Instr. Dec. 8216	7	9C	13	CD 8705	14	311	Test Instr. TEU ►	311	10	CT 8615	9	12B
											11	411		411	3			
12C		I-O Instr. Dec. 8216	4	7C	8	Inverter 8545	6	9C	18	CD 8705	15	312	Command Instr. CEU ►	312	Not	Used		
											17	412		412				
				11C		I-O Instr. Dec. 8225	21	9C	26	CD 8705	27	313	Command Inst. Sync ►	313	8	CT 8615	7	12B
											25	413		413	2			
											3	503	◄ Unit Input Interrupt	503	Not	Used		
											2	603		603				
											27	504	◄ Unit Output Interrupt	504	Not	Used		
											28	604		604				
				12C		I-O Instr. Dec. 8216	15	9C	6	CD 8705	8	509	Input Instruction ►	509	Not	Used		
											7	609		609				
13D		Shift Cntr. 8209	18	24D	25	Dig. Buffer 8749	22	10C	24	CD 8705	22	510	Wait Flag ►	510	Not	Used		
											23	610		610				
				12C		I-O Instr. Dec. 8216	18	10C	26	CD 8705	27	511	CL8-CL16Timing ►	511	12	CT 8615	11	12B
											25	611		611	3			
				11C		I-O Instr. Timing 8225	20	9C	24	CD 8705	22	512	Computer Data Here + CDH ►	512	6	CT 8615	4	12B
											23	612		612	2			
				11C		I-O Instr. Timing 8225	12	9C	18	CD 8705	20	513	Computer Data Accepted + CDA ►	513	Not	Used		
											19	613		613				
				19D	4	A Zero Detect 8232	8	9C	4	CD 8705	3	709	Master Clear ICB + ►	709	22	CT 8615	21	10B
											5	809		809	27			
				11C		I-O Instr. Timing 8225	7	6C	21	CT 8615	22	710	Unit Test Return UTR +	710	20	CD ~~8705~~	18	14B
											26	810		810	23			
				11C		I-O Instr. Timing 8225	8	6C	23	CT 8615	24	711	◄ Unit Sync Return USR +	711	27	CD ~~8705~~	26	14B
											28	811		811	28			
				11C		I-O Instr. Timing 8225	9	6C	19	CT 8615	20	712	◄ Unit Data Accepted UDA +	712	22	CD ~~8705~~ 8614	24	14B
											25	812		812	25			

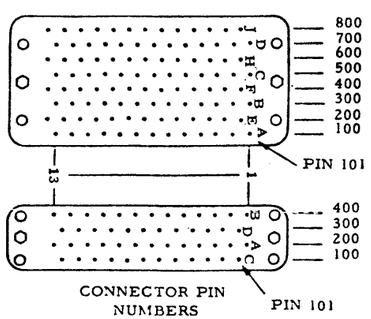

I/O BUS SIGNALS
COMPUTER TO
TEU & DISPLAY
CONTROL

Sheet 1 of 2

I/O BUS SIGNALS

COMPUTER					TEU & DISPLAY CONTROL				
CARD			P1-P2 I/O Cable		P1-P2 I/O Cable	CARD			
Location	Number	Signal Pin Out				Signal Pin	Number	Signal Pin	Location
15F	8201	27	101	Data Bit 0 In-Out	101	24	CT 8615	23	11B
			201			28			
15F	8201	3	102	Data Bit 1 In-Out	102	22	CT 8615	21	11B
			202			27			
16F	8201	27	103	Data Bit 2 In-Out	103	20	CT 8615	19	11B
			203			26			
16F	8201	3	104	Data Bit 3 In-Out	104	18	CT 8615	17	11B
			204			25			
17F	8201	27	105	Data Bit 4 In-Out	105	16	CT 8615	15	11B
			205			25			
17F	8201	3	106	Data Bit 5 In-Out	106	14	CT 8615	13	11B
			206			5			
18F	8201	27	107	Data Bit 6 In-Out	107	12	CT 8615	11	11B
			207			3			
18F	8201	3	108	Data Bit 7 In-Out	108	10	CT 8615	9	11B
			208			3			
10C	8705	3	109	Unit Mach Bit 15	109	22	U. DEC 8711		13B
		5	209			19			
10C	8705	8	110	Unit Mach Bit 14	110	20	U. DEC 8711		13B
		7	210			19			
10C	8705	10	111	Unit Mach Bit 13	111	17	U. DEC 8711		13B
		9	211			14			
10C	8705	14	112	Unit Mach Bit 12	112	15	U. DEC 8711		13B
		11	212			14			
10C	8705	15	113	Unit Mach Bit 11	113	12	U. DEC 8711		13B
		17	213			11			
19F	8201	27	301	Data Bit 8 In-Out	301	8	CT 8615	7	11B
			401			2			
19F	8201	3	302	Data Bit 9 In-Out	302	6	CT 8615	4	11B
			402			2			
20F	8201	27	303	Data Bit 10 In-Out	303	24	CT 8615	23	12B
			403			28			
20F	8201	3	304	Data Bit 11 In-Out	304	22	CT 8615	21	12B
			404			27			
21F	8201	27	305	Data Bit 12 In-Out	305	20	CT 8615	19	12B
			405			27			
21F	8201	3	306	Data Bit 13 In-Out	306	18	CT 8615	17	12B
			406			26			
22F	8201	27	307	Data Bit 14 In-Out	307	16	CT 8615	15	12B
			407			26			
22F	8201	3	308	Data Bit 15 In-Out	308	14	CT 8615	13	12B
			408			25			
10C	8705	20	309	Unit Mach Bit 10	309	9	U. DEC 8711		13B
		19	409			11			

I/O BUS SIGNALS

COMPUTER														DIGITAL INPUT – OUTPUT				
LOGIC CARD INFORMATION												P1-P2 I/O Cable	I/O BUS SIGNALS	P1-P2 I/O Cable	CARD			
Location	Signal Pin	Number	Signal Pin	Location	Signal Pin	Number	Signal Pin	Location	Signal Pin	Number	Signal Pin				Signal Pin	Number	Signal Pin	Location
				9E	11	Prog. Reg. 8217	3	9C	12	CD 8705	10	310	Data Trans Instr. MIP MOP AIP AOP ►	310	22	83161		2B
											9	410		410	19			
				12C		I-O Instr. Dec. 8216	7	9C	13	CD 8705	14	311	Test Instr. TEU ►	311	Not	Used		
											11	411		411				
12C		I-O Instr. Dec. 8216	4	7C	8	Inverter 8545	6	9C	18	CD 8705	15	312	Command Instr. CEU ►	312	34	83161		2B
											17	412		412	37			
				11C		I-O Instr. Dec. 8225	21	9C	26	CD 8705	27	313	Command Inst. Sync ►	313	32	83161		2B
											25	413		413	37			
												503	◄ Unit Input Interrupt	503	Not	Used		
												603		603				
												504	◄ Unit Output Interrupt	504	Not	Used		
												604		604				
				12C		I-O Instr. Dec. 8216	15	9C	6	CD 8705	8	509	Input Instruction ►	509	24	83161		2B
											7	609		609	23			
13D		Shift Cntr. 8209	18	24D	25	Dig. Buffer 8749	22	10C	24	CD 8705	22	510	Wait Flag ►	510	28	83161		2B
											23	610		610	29			
				12C		I-O Instr. Dec. 8216	18	10C	26	CD 8705	27	511	CL8-CL16Timing ►	511	20	83161		2B
											25	611		611	19			
				11C		I-O Instr. Timing 8225	20	9C	24	CD 8705	22	512	Computer Data Here + CDH ►	512	30	83161		2B
											23	612		612	29			
				11C		I-O Instr. Timing 8225	12	9C	18	CD 8705	20	513	Computer Data Accepted + CDA ►	513	36	83161		2B
											19	613		613	39			
				19D	4	A Zero Detect 8232	8	9C	4	CD 8705	3	709	Master Clear ICB + ►	709	38	83161		2B
											5	809		809	39			
				11C		I-O Instr. Timing 8225	7	6C	21	CT 8615	22	710	◄ Unit Test Return UTR +	710	4	83161		2B
											26	810		810	5			
				11C		I-O Instr. Timing 8225	8	6C	23	CT 8615	24	711	◄ Unit Sync Return USR +	711	6	83161		2B
											28	811		811	7			
				11C		I-O Instr. Timing 8225	9	6C	19	CT 8615	20	712	◄ Unit Data Accepted UDA +	712	8	83161		2B
											25	812		812				

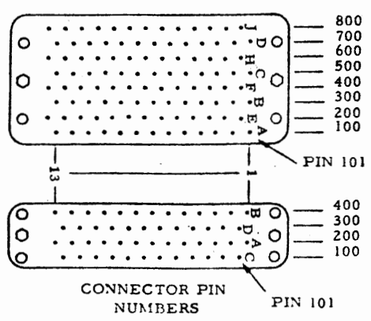

I/O BUS SIGNALS
COMPUTER TO
DIGITAL I/O

Sheet 1 of 3

I/O BUS SIGNALS

COMPUTER					DIGITAL INPUT-OUTPUT				
CARD			P1-P2 I/O Cable		P1-P2 I/O Cable	CARD			
Location	Number	Signal Pin Out				Signal Pin	Number	Signal Pin	Location
15F	8201	27	101	Data Bit 0 In	101	30	83160	32	1F1 4B
			201			31			
15F	8201	3	102	Data Bit 1 In	102	26	83160	33	4B
			202			27			
16F	8201	27	103	Data Bit 2 In	103	24	83160	34	4B
			203			25			
16F	8201	3	104	Data Bit 3 In	104	20	83160	35	4B
			204			21			
17F	8201	27	105	Data Bit 4 In	105	18	83160	5	4B
			205			16			
17F	8201	3	106	Data Bit 5 In	106	14	83160	4	4B
			206			15			
18F	8201	27	107	Data Bit 6 In	107	12	83160	7	4B
			207			13			
18F	8201	3	108	Data Bit 7 In	108	8	83160	6	4B
			208			9			
10C	8705	3	109	Unit Mach Bit 15	109	32	83137		1B
		5	209			33			
10C	8705	8	110	Unit Mach Bit 14	110	30	83137		1B
		7	210			31			
10C	8705	10	111	Unit Mach Bit 13	111	28	83137		1B
		9	211			29			
10C	8705	14	112	Unit Mach Bit 12	112	34	83137		1B
		11	212			35			
10C	8705	15	113	Unit Mach Bit 11	113	38	83137		1B
		17	213			39			
19F	8201	27	301	Data Bit 8 In	301	30	83160	32	3B
			401			31			
19F	8201	3	302	Data Bit 9 In	302	26	83160	33	3B
			402			27			
20F	8201	27	303	Data Bit 10 In	303	24	83160	34	3B
			403			25			
20F	8201	3	304	Data Bit 11 In	304	20	83160	35	3B
			404			21			
21F	8201	27	305	Data Bit 12 In	305	18	83160	5	3B
			405			16			
21F	8201	3	306	Data Bit 13 In	306	16	83160	4	3B
			406			15			
22F	8201	27	307	Data Bit 14 In	307	12	83160	7	3B
			407			13			
22F	8201	3	308	Data Bit 15 In	308	8	83160	6	3B
			408			9			
10C	8705	20	309	Unit Mach Bit 10	309	36	83137		1B
		19	409			37			

I/O BUS SIGNALS

COMPUTER					DIGITAL INPUT-OUTPUT				
CARD			P1-P2 I/O Cable		P1-P2 I/O Cable	CARD			
Location	Number	Signal Pin Out				Signal Pin	Number	Signal Pin	Location
15F	8201	27	101	Data Bit 0 Out	101	30	83160	28	4B
			201			31			
15F	8201	3	102	Data Bit 1 Out	102	26	83160	29	4B
			202			27			
16F	8201	27	103	Data Bit 2 Out	103	24	83160	22	4B
			203			25			
16F	8201	3	104	Data Bit 3 Out	104	20	83160	23	4B
			204			21			
17F	8201	27	105	Data Bit 4 Out	105	18	83160	16	4B
			205			16			
17F	8201	3	106	Data Bit 5 Out	106	14	83160	17	4B
			206			15			
18F	8201	27	107	Data Bit 6 Out	107	12	83160	10	4B
			207			13			
18F	8201	3	108	Data Bit 7 Out	108	8	83160	11	4B
			208			9			
10C	8705	3	109	Unit Mach Bit 15	109	32	83137		1B
		5	209			33			
10C	8705	8	110	Unit Mach Bit 14	110	30	83137		1B
		7	210			31			
10C	8705	10	111	Unit Mach Bit 13	111	28	83137		1B
		9	211			29			
10C	8705	14	112	Unit Mach Bit 12	112	34	83137		1B
		11	212			35			
10C	8705	15	113	Unit Mach Bit 11	113	38	83137		1B
		17	213			39			
19F	8201	27	301	Data Bit 8 Out	301	30	83160	28	3B
			401			31			
19F	8201	3	302	Data Bit 9 Out	302	26	83160	29	3B
			402			27			
20F	8201	27	303	Data Bit 10 Out	303	24	83160	22	3B
			403			25			
20F	8201	3	304	Data Bit 11 Out	304	20	83160	23	3B
			404			21			
21F	8201	27	305	Data Bit 12 Out	305	18	83160	16	3B
			405			16			
21F	8201	3	306	Data Bit 13 Out	306	16	83160	17	3B
			406			15			
22F	8201	27	307	Data Bit 14 Out	307	12	83160	10	3B
			407			13			
22F	8201	3	308	Data Bit 15 Out	308	8	83160	11	3B
			408			9			
10C	8705	20	309	Unit Mach Bit 10	309	36	83137		1B
		19	409			37			

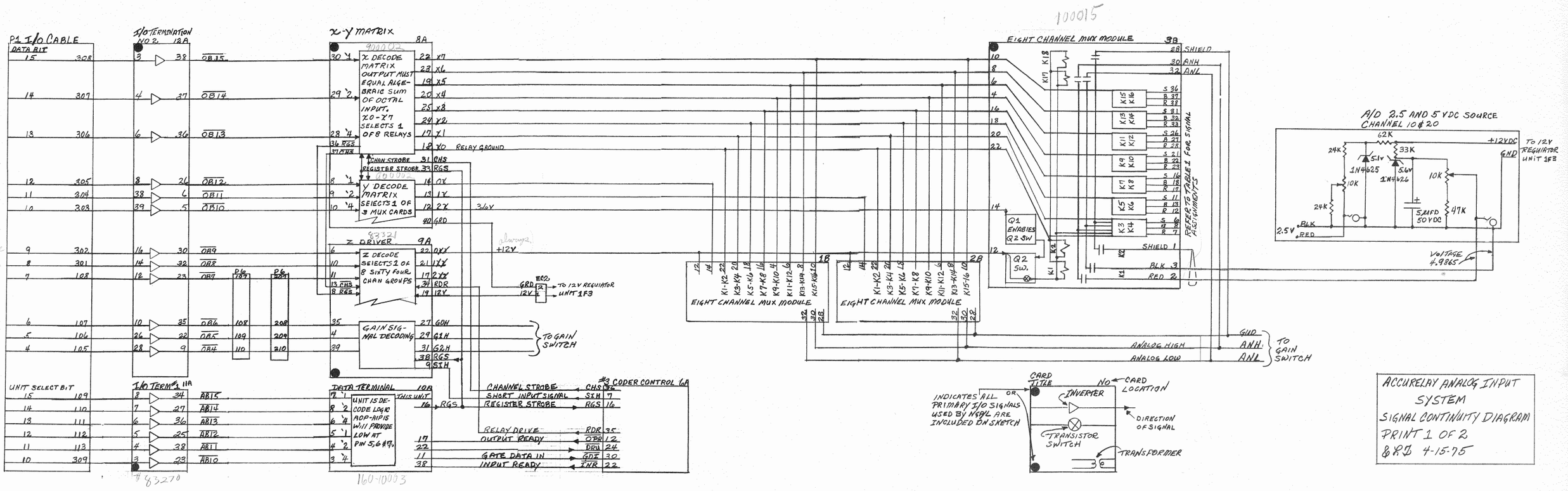
P1 I/O CABLE
DATA BIT
I/O TERMINATION NO 2. 12A
X-Y MATRIX
8A
X DECODE MATRIX OUTPUT MUST EQUAL ALGEBRAIC SUM OF OCTAL INPUT. X0-X7 SELECTS 1 OF 8 RELAYS
CHAN STROBE
REGISTER STROBE
Y DECODE MATRIX SELECTS 1 OF 3 MUX CARDS
Z DRIVER
9A
Z DECODE SELECTS 1 OF 8 SIXTY FOUR CHAN GROUPS
GAIN SIGNAL DECODING
RELAY GROUND
3.6V
+12V
GRD
12V
TO 12V REGULATOR UNIT 1F3
TO GAIN SWITCH
UNIT SELECT BIT
I/O TERM #1 11A
DATA TERMINAL 10A
UNIT IS DECODE LOGIC AOP-AIP15 WILL PROVIDE LOW AT PIN 5,6 & 9.
THIS UNIT
CHANNEL STROBE
SHORT INPUT SIGNAL
REGISTER STROBE
RELAY DRIVE
OUTPUT READY
GATE DATA IN
INPUT READY
#3 CODER CONTROL 6A
EIGHT CHANNEL MUX MODULE
1B
2B
3B
Q1 ENABLES Q2 SW
Q2 SW.
REFER TO TABLE 1 FOR SIGNAL ASSIGNMENTS
SHIELD
ANH
ANL
BLK
RED
ANALOG HIGH
ANALOG LOW
GND
A/D 2.5 AND 5 VDC SOURCE CHANNEL 10 & 20
62K
33K
24K
10K
5.1V
1N4625
1N4626
5.6V
5 µFD 50 VDC
47K
+12VDC
GND
TO 12V REGULATOR UNIT 1F3
2.5V
VOLTAGE 4.9865
INDICATES ALL OR PRIMARY I/O SIGNALS USED BY NSGL ARE INCLUDED ON SKETCH
CARD TITLE
NO CARD LOCATION
INVERTER
DIRECTION OF SIGNAL
TRANSISTOR SWITCH
TRANSFORMER
ACCURELAY ANALOG INPUT SYSTEM
SIGNAL CONTINUITY DIAGRAM
PRINT 1 OF 2
&RD 4-15-75

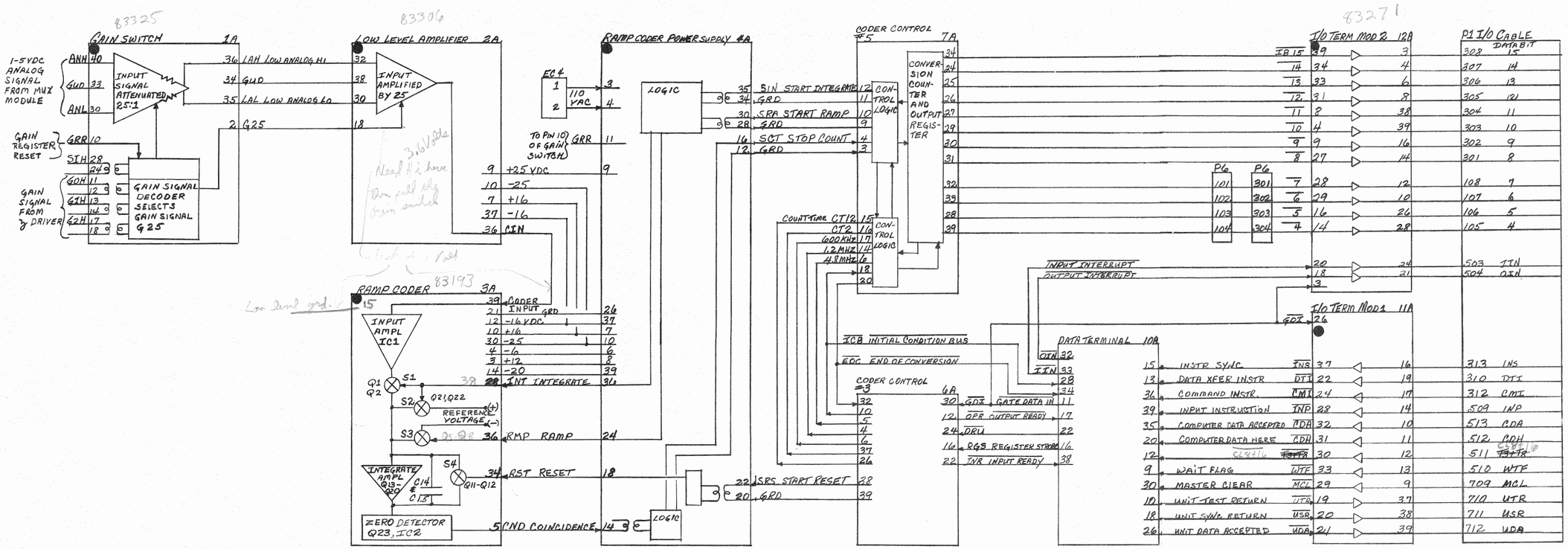

ACCURELAY ANALOG INPUT SYSTEM
SIGNAL CONTINUITY DIAGRAM
PRINT 2 OF 2
6&2 4-15-75

NO PRESS SETPOINT - ALRM CLR
*** LOCAL SETPT ***
DISCH PRESS 0712

12 11
11 13 32

STA ON -REMOTE MODE
LOC/STDBY CONTROL - ALRM CLR

12 11
11 14 00

RESUME ALM TO MSTR

12 11
13 38 34

UNAUTHORIZED ENTRY

12 11
13 39 28

UNAUTHORIZED ENTRY- ALRM CLR

12 11
14 12 41

UNAUTHORIZED ENTRY

12 11
14 13 06

UNAUTHORIZED ENTRY- ALRM CLR

LD
EJ
10061 00047

CHANNEL NO	TOTAL TESTS	IN RANGE	OUT OF RANGE
00	00051	00051	00000
01	00051	00000	00051
02	00051	00000	00051
03	00051	00000	00051
04	00051	00000	00051
05	00051	00000	00051
06	00051	00000	00051
07	00051	00000	00051
10	00051	00051	00000
11	00051	00000	00051
12	00051	00000	00051
13	00051	00000	00051
14	00051	00000	00051
15	00051	00000	00051
16	00051	00000	00051
17	00051	00000	00051
20	00051	00051	00000
21	00051	00000	00051
22	00051	00000	00051
23	00051	00000	00051
24	00051	00000	00051
25	00050	00000	00050
26	00050	00000	00050

NGPL

INTER-OFFICE CORRESPONDENCE

DATE March 13, 1973

SUBJECT Operating Instructions SEL 810A
Computer Acceptance Test.

TO R. D. Kelly, J. R. Saar, V. E. Dake, Ed Skanes, L. G. Gillis, T. C. Losh, E. L. Bergeson, J. J. Sneddeker, R. D. Pilcher, R. E. Praeuner, F. E. Bailey, C. T. Lowman

FROM Mr. M. J. Findling

Each data control Station utilizing the SEL 810A Computer system should have a large Computer test program tape titled SEL 810A Acceptance Tests or Main Frame Diagnostic or Composite Diagnostics. This long diagnostic test program, which will be referred to as the Composite Diagnostic Test program, consists of the following individual diagnostic programs interconnected into one composite diagnostic program tape.

1. Main Frame Exerciser.
2. Load/Store/Register Change Test.
3. Arithmetic Test.
4. Multiply Test.
5. Divide Test.
6. Instruction Simulation & Comparison Test.
7. Compare Memory to A, a sign Test.
8. MEMDEX Test (Memory Test).
9. Memory Worst Case Test.

Each of these diagnostic tests as part of the Composite Diagnostic Test program runs for a specified length of time or specified number of cycles before going to the next diagnostic program on the tape resulting in a run time of approximately 3 hours for the entire Composite Diagnostic Program. The Load/Store/Register Change Test program runs for 46 successful cycles and the Instruction Simulation & Comparison Test runs for 15 successful cycles.

The Composite Diagnostic Test program tape is loaded via the standard (not modified) boot-strap listed below.

STANDARD BINARY BOOTSTRAP

Octal Loc.	Coding
0	130101

STANDARD BINARY BOOTSTRAP CONT'D

Octal Loc.	Coding
1	004000
2	170301
3	000022
4	111006
5	111002
6	170301
7	001016
10	174301
11	033016
12	000022
13	000026
14	113017
15	111006
16	107671
17	007673

After loading the Composite Diagnostic program will immediately type out the sense switch setting instructions and the start information. This type out also indicates a run time of approximately 1.5 hours which is in error. As indicated by the type out, sense switch 3 is set to test 8K of memory and sense switches 2 and 3 are set to test 16K of memory. The program is then started by simply depressing the start switch. From then on the program is completely automatic typing out which dianostic test is being loaded and indicating when the test has been completed. After the last diagnostic test on the tape, memory worst case test, the program will type out " ABS loader will now be loaded" ; however, due to a quirk in the program, the loader programs are not loaded into memory.

If you have any questions regarding the operation of the Composite Diagnostic program or do not have a copy of the Composite Diagnostic program tape at the Data Control Stations please call me.

It is suggested that you place this Memo in the back of your program descriptions Manual for easy reference when you desire to run the long Composite Diagnostic program.

MJF/gr
cc: Mr. V. K. Patrick
Mr. C. L. Thompson
Mr. R. L. Jepsen
Mr. M. G. Strasen
Mr. C. J. Langdale
Mr. M. B. Roker

#A CLT #1

PROGRAM DESCRIPTION

IDENTIFICATION: Analog-to-Digital Converter Diagnostic Program

AUTHOR: Carl L. Thompson, Natural Gas Pipeline Company of America, Communications Division

ISSUED: March 30, 1976 -- Revised August 1, 1976

PURPOSE: To assist the Communication Technicians with maintenance and repair of the analog-to-digital converter system.

COMPUTER: 810A

STORAGE: 1620 Octal Locations

LOADING PROCEDURE: Relocatable loader 16K modified
Program counter Enter '36060
"A" Accumulator Enter '6000
"B" Accumulator = 0

This program consists of four (4) diagnostics.

Insert tape in reader and press start twice.

1. Replace analog signal cable (104 pin connector) on rear of output relay panel with A/D jumper connector. Insert connector phone plug into the 2.5 volt test jack.

   The A/D jumper connector parallels all A/D inputs with 2.5 volts for test purposes except for channel 00 and 20. Channel 00 is tested for ground potential and 20 is tested for 4.986 volts.

2. Start program at '7100 to adjust 2.5 and 4.9865 test voltage. Set sense switch 11 and adjust 5 volt pot. until teletype bell rings continuously. The "B" Accumulator should contain '7764. Reset switch 11. Set sense switch 12 and adjust 2.5 volt pot. until teletype bell rings continuously. The "B" Accumulator should contain '4000. Reset switch 12. Recheck 5 volt adjustment.

   This completes the adjustment for the diagnostics. The following diagnostics utilize priority input interrupt.

3. Program Location '6000.

This program automatically tests each of 24 relays once (Card Location 1B, 2B & 3B) each second. The voltage through each relay contact is tested for a range of 7 millivolts with the results stored in a table. To print results of test, momentarily set control panel switch 15. A relay that tests out of range should be replaced. Keep in mind, if several relays on the same card test out of range, inspect the common pair of relays K17 & K18 before replacement.

The program will automatically print the results after 8191 tests; a test period of approximately 2 hours and 15 minutes.

This program will display a value of all A/D channels in the nixie displays except for channel 00. Select an octal channel number 1-7, 10-17, 20-27 with switch under the display. Channel '20 should display a reading of 771 to 773. Channels 1-'27 should display a reading of 500 to 502. A variation from these readings will indicate errors for the channel displayed. The display will read zero if an illegal channel is selected. The displays are updated once per second.

4. Program Location '7200

This program tests individual relays once per second by selecting the channel number using control switches. If the relay tests out of range ($\pm$7 mv) the teletype bell will ring. The "B" Accumulator will display the octal value of test.

5. Program Location '7500

This program will print the octal and volts value of the signal using the control switches for channel selection. After starting the program the table heading will be printed. Select a channel number with control switches and press start. You must re-press start after each line is printed.

NOTE: When completed return A/D signal cable to original connector. Check the 2.500 and 4.986 test voltage with a differential voltmeter. The readings should not vary more than 10-15 millivolts if the A/D system is properly calibrated.

TABLE 1

ANALOG CHANNEL FUNCTION ASSIGNMENT

ANALOG CHANNEL	LOCATION RELAY	LOCATION CARD	FUNCTION NUMBER	A/D RANGE	FUNCTION DESCRIPTION
00	K1-2	1B			Zero Test Voltage
01	K3-4	1B	41	200-400	Fuel Gas Pressure
02	K5-6	1B	21	400-800	Fuel Diff. Pressure - Unit 1
03	K7-8	1B	65	0-150	Suction Temperature - Unit 2
04	K9-10	1B	44	400-800	Suction Pressure - Unit 2
05	K11-12	1B			
06	K13-14	1B	22	400-800	Fuel Diff. Pressure - Unit 2
07	K15-16	1B	63	-20-200	Atmospheric Temperature
10	K1-2	2B			Half Scale Test Voltage (2.505 VDC)
11	K3-4	2B	56	0-150	Mainline Discharge Temperature
12	K5-6	2B	50	0-150	Mainline Suction Temperature
13	K7-8	2B	67	700-1100	Exhaust Temperature - Unit 1
14	K9-10	2B	68	700-1100	Exhaust Temperature - Unit 2
15	K11-12	2B	42	-20-200	Fuel Gas Temperature
16	K13-14	2B	11	0-6000	RPM - Unit 2
17	K15-16	2B	64	-20-200	Suction Temperature - Unit 1
20	K1-2	3B			Full Scale Test Voltage (4.986 VDC)
21	K3-4	3B	43	400-800	Suction Pressure - Unit 1
22	K5-6	3B			
23	K7-8	3B	07	400-800	Mainline Discharge Pressure
24	K9-10	3B	00	400-800	Mainline Suction Pressure
25	K11-12	3B	08	400-800	Station Discharge Pressure
26	K13-14	3B	10	0-6000	RPM - Unit 1
27	K15-16	3B			

Station program samples each function once per second. Test voltages are sampled every 10 seconds. If value is out of range, program will sample value each second for 5 seconds. If still out of range it will print A/D failure.

SAMPLE PRINTOUT OF A/D DIAGNOSTIC

CHANNEL NO	TOTAL TESTS	IN RANGE	OUT OF RANGE
00	00442	00442	00000
01	00442	00442	00000
02	00442	00442	00000
03	00442	00442	00000
04	00442	00442	00000
05	00442	00442	00000
06	00442	00442	00000
07	00442	00442	00000
10	00442	00442	00000
11	00442	00442	00000
12	00442	00442	00000
13	00442	00442	00000
14	00442	00442	00000
15	00442	00442	00000
16	00442	00442	00000
17	00441	00441	00000
20	00441	00441	00000
21	00441	00441	00000
22	00441	00441	00000
23	00441	00441	00000
24	00441	00441	00000
25	00441	00441	00000
26	00441	00441	00000
27	00441	00441	00000

CHAN NO	OCTAL VALUE	VOLTS VALUE	OCTAL VALUE	VOLTS VALUE	OCTAL VALUE	VOLTS VALUE	OCTAL VALUE	VOLTS VALUE
01	4002	2.503	4002	2.503	4002	2.503	4002	2.503
03	4002	2.503	4002	2.503	4002	2.503	4002	2.503
02	4002	2.503	4002	2.503	4002	2.503	4002	2.503
06	4002	2.503	4002	2.503	4002	2.503	4002	2.503
05	4002	2.503	4002	2.503	4002	2.503	4002	2.503
15	4002	2.503	4002	2.503	4002	2.503	4002	2.503
25	4002	2.503	4002	2.503	4002	2.503	4002	2.503
21	4002	2.503	4002	2.503	4002	2.503	4002	2.503
11	4002	2.503	4002	2.503	4002	2.503	4002	2.503
20	7764	4.986	7764	4.986	7764	4.986	7764	4.986
24	4002	2.503	4002	2.503	4002	2.503	4002	2.503

```
0001                    **** **** ************************************
0002                    *    A-D DIAGNOSTIC
0003                    *
0004                    *    LOC '6000 TSTS EA OF 24 RLYS EA SECOND. VOL-
0005                    *    TAGE THRU RLY TESTED F/RANGE OF 7 MV. RESULT
0006                    *    STORED IN TBLE. SET SW 15 TO PRNT TABLE.
0007                    *    PROGRAM WILL AUTOMATICALLY PRINT RESULTS
0008                    *    AFTER 8191 TESTS.
0009                    *    SELECT A-D CHAN FOR NIXIE DISPLAY. VOLTAGE
0010                    *    IS SCALED                AT 7.4 MV PER
0011                    *    UNIT. CH 00 WILL NOT BE DISPLAYED. CH 20
0012                    *    SHOULD READ 771-773, ALL OTHERS TO READ
0013                    *    500-502.
0014                    *    LOC '7100 ADJ 2.5 AND 4.986 TST VOLTAGE. SET
0015                    *    SW 12,ADJ 2.5V POT TILL TTY BELL RINGS.SET
0016                    *    SW 11 ADJ 5V POT TILL TTY BELL RINGS. RE-
0017                    *    CHECK 2.5 VOLTS.
0018                    *    LOC '7200 SELECT CH NO W/CONTROL SW. RELAYS
0019                    *    TESTED ONCE PER SEC. TTY BELL WILL RING IF
0020                    *    OUT OF RANGE.
0021                    *    LOC '7500 WILL PRINT OCTAL-VOLTS VALUE OF
0022                    *    CHAN SELECTED BY CONTROL SW. PRESS START
0023                    *    AFTER EACH LINE.
0024                    *    PREPARED BY CARL L. THOMPSON 3-5-76
0025                    *    REVISED 8-1-76
0026                    ********************************************
0027  00000 00000000         REL
0028  00000 12100210         SPB  CLER          CLR ALL TBLS
0029  00001 01100772         LAA  CNTY          INTR SUBROUTINE ADDR
0030  00002 03300771         STA* CNTX          LOC '1016
0031  00003 00170240   STAR   AIP  '40           INPT SEC
0032  00004 11100003         BRU  *-1
0033  00005 03100770         STA  CNTW          STORE F/COMPARE
0034  00006 00170240   SEC    AIP  '40           INPT SEC
0035  00007 11100006         BRU  *-1
0036  00010 15100770         CMA  CNTW          HAVE SEC CHANGED
0037  00011 11100013         BRU  *+2
0038  00012 11100006         BRU  SEC
0039  00013 03100770         STA  CNTW
0040  00014 14101000   BEGN  ~~IMS  CTYP~~ NOP
0041  00015 14101000         IMS  CTYP
0042  00016 11100020         BRU  *+2
0043  00017 12100142         SPB  PRNT          PRNT AFTER 8192 TSTS
0044  00020 00130417   STRT  SNS  '17
0045  00021 12100142         SPB  PRNT
0046  00022 01100773         LAA  CNT1          CNT OF 1
0047  00023 05500602         AMA  TBLA,1
```

```
0048  00024 03500602        STA  TBLA,1        TOTAL TSTS EA CHANNEL
0049  00025 00130015        CEU  '15
0050  00026 00060000        DATA '60000        INPT INTR
0051  00027 11100025        BRU  *-2
0052  00030 00130600        PIE
0053  00031 00010001        DATA '10001        GRP 1 LEVEL 1
0054  00032 01500551        LAA  CH1,1
0055  00033 00170015        AOP  '15
0056  00034 11100033        BRU  *-1
0057  00035 00000033        NOP
0058  00036 11100035        BRU  *-1           WT FOR INTRUP
0059  00037 25400000 INPT   DAC  **             INTRUP SUBROUTINE CHK
0060  00040 00130015        CEU  '15
0061  00041 00020000        DATA '20000
0062  00042 11100040        BRU  *-2
0063  00043 00170215        AIP  '15
0064  00044 11100043        BRU  *-1
0065  00045 03100762        STA  CNTG          ANALOG VOL
0066  00046 03500451        STA  CH2,1         NIXI DSPLA MODE
0067  00047 01500551        LAA  CH1,1
0068  00050 15000000        CMA  =0            CH 00
0069  00051 11100053        BRU  *+2
0070  00052 11100070        BRU  ZERO
0071  00053 15000020        CMA  ='20          CH 20
0072  00054 11100056        BRU  *+2
0073  00055 11100057        BRU  TWTY
0074  00056 11100101        BRU  UTER          TST OTHER CHS
0075  00057 01100762 TWTY   LAA  CNTG          ANALOG VOL
0076  00060 15007772        CMA  ='7772        4.9938V
0077  00061 11100062        BRU  *+1
0078  00062 11100064        BRU  *+2
0079  00063 11100115        BRU  ERR
0080  00064 15007756        CMA  ='7756        4.9792V
0081  00065 11100115        BRU  ERR
0082  00066 11100067        BRU  *+1
0083  00067 11100111        BRU  GOOD
0084  00070 01100762 ZERO   LAA  CNTG
0085  00071 15077760        CMA  ='177760
0086  00072 11100115        BRU  ERR
0087  00073 11100074        BRU  *+1
0088  00074 11100075        BRU  *+1
0089  00075 15000017        CMA  ='17
0090  00076 11100077        BRU  *+1
0091  00077 11100111        BRU  GOOD
0092  00100 11100115        BRU  ERR
0093  00101 01100762 UTER   LAA  CNTG          ANALOG VOL
0094  00102 15004007        CMA  ='4007        2.509V
0095  00103 00000033        NOP                OK
```

```
0096  00104 11100106        BRU  *+2            OK
0097  00105 11100107        BRU  *+2            OUT OF RANGE
0098  00106 15003771        CMA  ='3771         2.492V
0099  00107 11100115        BRU  ERR
0100  00110 00000033        NOP                 OK
0101  00111 01100773 GOOD   LAA  CNT1           OK CNT OF 1
0102  00112 05500632        AMA  TBLB,1         GOOD TSTS
0103  00113 03500632        STA  TBLB,1         TOTAL GOOD TSTS
0104  00114 11100120        BRU  NUCH           INITIALIZE F/NEW CHAN TST
0105  00115 01100773 ERR    LAA  CNT1           CNT OF 1
0106  00116 05500662        AMA  TBLC,1         TST OUT OF RANGE
0107  00117 03500662        STA  TBLC,1
0108  00120 00000026 NUCH   IBS
0109  00121 00000033        NOP
0110  00122 01500551        LAA  CH1,1          CK FOR CH 24 '30
0111  00123 15100765        CMA  CNTT           CNT OF 24
0112  00124 11100134        BRU  NEXT           TST NEXT CH BRU TO STRT
0113  00125 00000033        NOP                 RESTART TST OF CH 01
0114  00126 12100321        SPB  NIXN           DSPLA DATA IN NIXI
0115  00127 00000003        CLA
0116  00130 00000005        TAB
0117  00131 01100766        LAA  CNTU           GO TO SEC F/RESTRT
0118  00132 03100037        STA  INPT
0119  00133 11100140        BRU  *+5
0120  00134 01100764 NEXT   LAA  CNTS           BRU TO STRT TST NXT CHAN
0121  00135 03100037        STA  INPT
0122  00136 00130601        PID
0123  00137 00010001        DATA '10001
0124  00140 00000035        TOI
0125  00141 11300037        BRU* INPT
0126  00142 25400000 PRNT   DAC  **             PRNT TBLE AND DATA
0127  00143 01060000        LAA  ='160000       = CNT OF 8191
0128  00144 03101000        STA  CTYP
0129  00145 12100303        SPB  CRLF
0130  00146 02077755        LBA  =-19
0131  00147 01500735        LAA  TBLD+19,1      HEADING OF TBL
0132  00150 12100276        SPB  TTYO
0133  00151 00000026        IBS
0134  00152 11100147        BRU  *-3
0135  00153 12100303        SPB  CRLF
0136  00154 02077755        LBA  =-19
0137  00155 01500760        LAA  TBLE+19,1      HEADING OF TBLE
0138  00156 12100276        SPB  TTYO
0139  00157 00000026        IBS
0140  00160 11100155        BRU  *-3
0141  00161 12100303        SPB  CRLF
0142  00162 12100303        SPB  CRLF
0143  00163 01077750        LAA  =-24
```

```
0144  00164 03100761        STA  CNTA
0145  00165 01500551 AGAN   LAA  CH1,1
0146  00166 12100251        SPB  CHNO
0147  00167 01500602        LAA  TBLA,1          NO OF TESTS
0148  00170 12100223        SPB  TSTS            CONV AND PRNT DEC NO
0149  00171 01500632        LAA  TBLB,1          TESTS IN RANGE
0150  00172 12100223        SPB  TSTS            CONV AND PRNT DEC NO
0151  00173 01077777        LAA  =-1
0152  00174 03100777        STA  CNT6            SKIP SPC3 IN TSTS
0153  00175 01500662        LAA  TBLC,1          TESTS OUT OF RANGE
0154  00176 12100223        SPB  TSTS
0155  00177 00000026        IBS
0156  00200 00000033        NOP
0157  00201 12100303        SPB  CRLF
0158  00202 14100761        IMS  CNTA            =-24 ALL CHS
0159  00203 11100165        BRU  AGAN
0160  00204 12100210        SPB  CLER            CLR ALL TBLS
0161  00205 01100763        LAA  CNTR            DAC STAR
0162  00206 03100142        STA  PRNT
0163  00207 11300142        BRU* PRNT
0164  00210 25400000 CLER   DAC  **              CLR ALL TBLS
0165  00211 00000003        CLA
0166  00212 03100760        STA  TEMP            CLR TEMP B INDEX
0167  00213 02077750        LBA  =-24
0168  00214 03500632        STA  TBLA+24,1       CLR TBLE
0169  00215 03500662        STA  TBLB+24,1
0170  00216 03500712        STA  TBLC+24,1
0171  00217 03500501        STA  CH2+24,1
0172  00220 00000026        IBS
0173  00221 11100214        BRU  *-5
0174  00222 11300210        BRU* CLER
0175  00223 25400000 TSTS   DAC  **              CONVERT OCTAL TO DEC
0176  00224 04100760        STB  TEMP
0177  00225 00000005        TAB
0178  00226 01077773        LAA  =-5
0179  00227 03100776        STA  CNT5            PRINT 5 NOS
0180  00230 00000003        CLA
0181  00231 11100234        BRU  *+3
0182  00232 00000003 CNTH   CLA
0183  00233 07000012        MPY  =10             '12
0184  00234 10023420        DIV  =10000          '23420
0185  00235 05000260        AMA  ='260
0186  00236 00001016        LSL  8
0187  00237 00170101        AOP  1,W
0188  00240 14100776        IMS  CNT5
0189  00241 11100232        BRU  CNTH
0190  00242 14100777        IMS  CNT6            -1 F/TBLC ONLY
0191  00243 11100245        BRU  *+2
```

```
00244 11100247        BRU   *+3
00245 12100311        SPB   SPC3
00246 12100311        SPB   SPC3
00247 02100760        LBA   TEMP
00250 11300223        BRU*  TSTS
00251 25400000 CHNO   DAC   **              NEXT 17 STATEMENTS ARRANGE
00252 04100760        STB   TEMP            AND OUTPUT CH NO
00253 00000005        TAB
00254 01020240        LAA   ='120240        2 SPCS
00255 00170101        AOP   1,W
00256 00001016        LSL   8
00257 00170101        AOP   1,W
00260 00000003        CLA
00261 00001513        FLL   13
00262 05000260        AMA   ='260
00263 00001016        LSL   8
00264 00170101        AOP   1,W
00265 00000003        CLA
00266 00000313        FLL   3
00267 05000260        AMA   ='260
00270 00001016        LSL   8
00271 00170101        AOP   1,W
00272 12100311        SPB   SPC3
00273 12100311        SPB   SPC3
00274 02100760        LBA   TEMP
00275 11300251        BRU*  CHNO
00276 25400000 TTYO   DAC   **
00277 00170101        AOP   1,W
00300 00001016        LSL   8
00301 00170101        AOP   1,W
00302 11300276        BRU*  TTYO
00303 25400000 CRLF   DAC   **
00304 00170501        MOP   1,W
00305 00106400        DATA  '106400
00306 00170501        MOP   1,W
00307 00105000        DATA  '105000
00310 11300303        BRU*  CRLF
00311 25400000 SPC3   DAC   **              OUTPUT 3 SPACES
00312 01020240        LAA   ='120240
00313 00170101        AOP   1,W
00314 00001016        LSL   8
00315 00170101        AOP   1,W
00316 00170501        MOP   1,W
00317 00120000        DATA  '120000
00320 11300311        BRU*  SPC3
                    *  NEXT 170 STATEMENTS DSPLA DATA IN NIXES.
00321 00000000 NIXN   HLT
00322 01077776        LAA   =-2
```

```
00323 03100511        STA  NIXJ          CNTR F/AIP44,AOP41
00324 01077775        LAA  ='177775
00325 03100504        STA  NIXD          DSPLA 3 NIX AND EXIT
00326 02077750 NIXZ   LBA  =-24
00327 00170243        AIP  '43           INPT S5,6,7
00330 11100327        BRU  *-1
00331 00001016        LSL  8
00332 00001015        RSL  8
00333 15500551        CMA  CH3+24,1      CK SW F/CH NO
00334 11100336        BRU  *+2
00335 11100342        BRU  *+5
00336 00000026        IBS
00337 11100333        BRU  *-4
00340 00000003        CLA
00341 11100415        BRU  NIXI          INVALID CH NO
00342 01500501        LAA  CH2+24,1      DATA F/CH SELECTED
00343 00000022        SAZ
00344 11100346        BRU  NIXY
00345 11100415        BRU  NIXI          NO DATA, CLR NIXI
00346 00000316 NIXY   LSL  3
00347 00000005        TAB
00350 00000003        CLA
                 *    TO SCALE AND DISPLAY VALUES AT 400-800 PSI
                 *    CHANGE DIV TO '122 AND AMA TO '621. 2.5V
                 *    WILL EQUAL 600 PSI.
00351 10000074        DIV  ='74
00352 05000344        AMA  ='344
00353 03100503        STA  NIXC
00354 01077772        LAA  =-6           CNTR
00355 03100502        STA  NIXB          CONVERT 5 NOS
00356 00000003        CLA
00357 02100503        LBA  NIXC          DATA FOR NIXIE
00360 11100363        BRU  NIXQ
00361 00000003 REPT   CLA
00362 07000012        MPY  ='12
00363 10023420 NIXQ   DIV  ='23420
00364 14100502        IMS  NIXB
00365 00000033        NOP
00366 03100513        STA  NIXL
00367 01100502        LAA  NIXB          CK CNTR F/UTH DIGIT
00370 15100506        CMA  NIXF          177775 HND DIGIT
00371 11100361        BRU  REPT
00372 11100401        BRU  LSL8
00373 15100507        CMA  NIXG          177776 TENS DIGIT
00374 00000000        HLT
00375 11100405        BRU  LSL4
00376 15100510        CMA  NIXH          177777 UNITS DIGIT
00377 00000000        HLT
```

```
0288  00400 11100412        BRU  LSL
0289  00401 01100513 LSL8   LAA  NIXL          ARRANGE H DIGIT F/OPT
0290  00402 00001016        LSL  8
0291  00403 03100512        STA  NIXK
0292  00404 11100361        BRU  REPT
0293  00405 01100513 LSL4   LAA  NIXL          ARRANGE T DIGIT F/OPT
0294  00406 00000416        LSL  4
0295  00407 05100512        AMA  NIXK
0296  00410 03100512        STA  NIXK
0297  00411 11100361        BRU  REPT
0298  00412 01100513 LSL    LAA  NIXL          ARRANGE U DIGIT F/OPT
0299  00413 05100512        AMA  NIXK
0300  00414 03100512        STA  NIXK
0301  00415 00170040 NIXI   AOP  '40            OPT TO LEFT,R AND C NIX
0302  00416 11100415        BRU  *-1
0303  00417 14100504        IMS  NIXD          DSPLA 3 NIX THEN EXIT
0304  00420 11100422        BRU  *+2
0305  00421 11100441        BRU  NIXM          EXIT DSPLA ROUTINE
0306  00422 14100511        IMS  NIXJ          AIP44,AOP41 C NIX
0307  00423 11100425        BRU  *+2
0308  00424 11100434        BRU  NIXP
0309  00425 01000001        LAA  =1
0310  00426 05100327        AMA  NIXZ+1        CHG TO AIP44
0311  00427 03100327        STA  NIXZ+1
0312  00430 01000002        LAA  =2
0313  00431 05100415        AMA  NIXI          CHG TO AOP42
0314  00432 03100415        STA  NIXI
0315  00433 11100326        BRU  NIXZ          CK NXT DSPLA
0316  00434 01100516 NIXP   LAA  NOP
0317  00435 03100331        STA  NIXZ+3
0318  00436 01100515        LAA  AOP1          AOP 41
0319  00437 03100415        STA  NIXI
0320  00440 11100326        BRU  NIXZ          CK NXT DSPLA
0321  00441 00000033 NIXM   NOP
0322  00442 01100514        LAA  LSLA          LSL 8
0323  00443 03100331        STA  NIXZ+3
0324  00444 01100517        LAA  AIP           43
0325  00445 03100327        STA  NIXZ+1
0326  00446 01100520        LAA  AOP           40
0327  00447 03100415        STA  NIXI
0328  00450 11300321        BRU* NIXN
0329  00451 00000030 CH2    BSS  24
0330  00501 00177773 NIXA   DATA '177773
0331  00502 00000000 NIXB   DATA 0
0332  00503 00004000 NIXC   DATA '4000
0333  00504 00000000 NIXD   DATA 0
0334  00505 00000000 NIXE   DATA 0
0335  00506 00177775 NIXF   DATA '177775
```

```
0336  00507 00177776 NIXG DATA '177776
0337  00510 00177777 NIXH DATA '177777
0338  00511 00000000 NIXJ DATA 0
0339  00512 00000000 NIXK DATA 0
0340  00513 00000000 NIXL DATA 0
0341  00514 00001016 LSLA LSL  8
0342  00515 00170041 AOP1 AOP  '41
0343  00516 00000033 NOP  NOP
0344  00517 00170243 AIP  AIP  '43
0345  00520 00170040 AOP  AOP  '40
0346  00521 00000143 CH3  DATA 99,01,02,03,04,05,06,07,16,17,18,19,20
0346  00522 00000001
0346  00523 00000002
0346  00524 00000003
0346  00525 00000004
0346  00526 00000005
0346  00527 00000006
0346  00530 00000007
0346  00531 00000020
0346  00532 00000021
0346  00533 00000022
0346  00534 00000023
0346  00535 00000024
0347  00536 00000025      DATA 21,22,23,32,33,34,35,36,37,38,39
0347  00537 00000026
0347  00540 00000027
0347  00541 00000040
0347  00542 00000041
0347  00543 00000042
0347  00544 00000043
0347  00545 00000044
0347  00546 00000045
0347  00547 00000046
0347  00550 00000047
0348  00551 00000000 CH1  DATA 00,01,02,03,04,05,06,07,08,09,10,11,12
0348  00552 00000001
0348  00553 00000002
0348  00554 00000003
0348  00555 00000004
0348  00556 00000005
0348  00557 00000006
0348  00560 00000007
0348  00561 00000010
0348  00562 00000011
0348  00563 00000012
0348  00564 00000013
0348  00565 00000014
0349  00566 00000015      DATA 13,14,15,16,17,18,19,20,21,22,23,24
```

```
0349  00567 00000016
0349  00570 00000017
0349  00571 00000020
0349  00572 00000021
0349  00573 00000022
0349  00574 00000023
0349  00575 00000024
0349  00576 00000025
0349  00577 00000026
0349  00600 00000027
0349  00601 00000030
0350  00602 00000030 TBLA BSS   '30            TOTAL NO OF TSTS
0351  00632 00000030 TBLB BSS   '30            NO OF GOOD TST
0352  00662 00000030 TBLC BSS   '30            NO OF BAD TST
0353  00712 00141710 TBLD DATA ''CHANNEL   TOTAL        IN        OUT OF'
0353  00713 00140716
0353  00714 00147305
0353  00715 00146240
0353  00716 00120240
0353  00717 00152317
0353  00720 00152301
0353  00721 00146240
0353  00722 00120240
0353  00723 00120240
0353  00724 00120240
0353  00725 00144716
0353  00726 00120240
0353  00727 00120240
0353  00730 00120240
0353  00731 00120317
0353  00732 00152724
0353  00733 00120317
0353  00734 00143240
0354  00735 00120240 TBLE DATA ''  NO       TESTS       RANGE       RANGE'
0354  00736 00147317
0354  00737 00120240
0354  00740 00120240
0354  00741 00120240
0354  00742 00152305
0354  00743 00151724
0354  00744 00151640
0354  00745 00120240
0354  00746 00120240
0354  00747 00120322
0354  00750 00140716
0354  00751 00143705
0354  00752 00120240
0354  00753 00120240
```

```
0354  00754 00120240
0354  00755 00151301
0354  00756 00147307
0354  00757 00142640
0355  00760 00000000 TEMP DATA 0              TEMP STORE OF B ACCUM
0356  00761 00000000 CNTA DATA 0
0357  00762 00000000 CNTG DATA 0
0358  00763 35400003 CNTR DAC  STAR
0359  00764 35400020 CNTS DAC  STRT
0360  00765 00000030 CNTT DATA 24
0361  00766 35400006 CNTU DAC  SEC
0362  00767 00000000 CNTV DATA 0              TEMP CNTR UNIT SEC
0363  00770 00000000 CNTW DATA 0              UNITS OF TIME CNTR
0364  00771 00001016 CNTX DATA '1016          INPT INTRUP
0365  00772 35400037 CNTY DAC  INPT           INTR SUBROUTINE ADDR
0366  00773 00000001 CNT1 DATA 1
0367  00774 00000000 CNT3 DATA 0              NEG 3
0368  00775 00000000 CNT4 DATA 0              NEG 4
0369  00776 00000000 CNT5 DATA 0              TEMP STA F/ -5
0370  00777 00000000 CNT6 DATA 0
0371  01000 00160000 CTYP DATA '160000        CNTR F/AUTO PRNT
0372  01100 70001100      ORG  '1100
0373                 *         FOR ADJUSTMENT OF TEST VOLTAGE SET
0374                 *         SENSE SW 10,20 AND ADJUST POTS UNTIL
0375                 *         TTY BELL RINGS CONTINUOUSLY. B ACCUM
0376                 *         WILL CONTAIN '4000 FOR 2.5V AND '7764
0377                 *         FOR 4.9865V
0378  01100 00000031 LCS  LCS
0379  01101 00170115      AOP  '15,W
0380  01102 00170315      AIP  '15,W
0381  01103 03101135      STA  LOCA
0382  01104 00000005      TAB
0383  01105 00000031      LCS
0384  01106 15101131      CMA  C10
0385  01107 11101111      BRU  *+2
0386  01110 11101115      BRU  CM10
0387  01111 15101132      CMA  C20
0388  01112 11101114      BRU  *+2
0389  01113 11101121      BRU  CM20
0390  01114 11101100      BRU  LCS
0391  01115 01101135 CM10 LAA  LOCA
0392  01116 15101133      CMA  C400
0393  01117 11101121      BRU  *+2
0394  01120 11101126      BRU  BELL
0395  01121 01101135 CM20 LAA  LOCA
0396  01122 15101134      CMA  C776
0397  01123 11101125      BRU  *+2
0398  01124 11101126      BRU  BELL
```

```
01125 11101100        BRU  LCS
01126 01003400 BELL   LAA  ='103400
01127 00170101        AOP  1,W
01130 11101100        BRU  LCS
01131 00000010 C10    DATA '10
01132 00000020 C20    DATA '20
01133 00004000 C400   DATA '4000
01134 00007764 C776   DATA '7764
01135 00000000 LOCA   DATA 0
               *      RELAY TESTED FOR RANGE OF 7MV EA SEC.
               *      SELECT CHAN WITH CONTROL SWITCH. TTY
               *      BELL WILL RING IF RELAY TESTS OUT OF
               *      RANGE.
01200 70001200        ORG  '1200
01200 01101321        LAA  CNTK          INTRUP ROUTINE ADDR
01201 03300771        STA* CNTX          LOC '1016
01202 00170240 STR1   AIP  '40           INPT SEC
01203 11101202        BRU  *-1
01204 03100770        STA  CNTW          STORE F/COMPARE
01205 00170240 SECS   AIP  '40           INPT SEC
01206 11101205        BRU  *-1
01207 15100770        CMA  CNTW          HAVE SEC CHANGED
01210 11101212        BRU  *+2
01211 11101205        BRU  SECS
01212 03100770        STA  CNTW
01213 00000033 BIGN   NOP
01214 00000033        NOP
01215 00000033        NOP
01216 00130015        CEU  '15
01217 00060000        DATA '60000        INPT INTR
01220 11101216        BRU  *-2
01221 00130600        PIE
01222 00010001        DATA '10001        GRP 1 LEVEL 1
01223 00000031        LCS
01224 03101322        STA  CHAN          CHAN NO
01225 00170015        AOP  '15
01226 11101225        BRU  *-1
01227 00000033        NOP
01230 11101227        BRU  *-1           WT FOR INTRUP
01231 00000033        NOP
01232 00000033        NOP
01233 25400000 ENPT   DAC  **            INTRUP SUBROUTINE
01234 00130015        CEU  '15
01235 00020000        DATA '20000
01236 11101234        BRU  *-2
01237 00170215        AIP  '15
01240 11101237        BRU  *-1
01241 03100762        STA  CNTG          ANALOG VOL
```

```
0447  01242 01101322        LAA  CHAN
0448  01243 15000000        CMA  =0            CH 00
0449  01244 11101246        BRU  *+2
0450  01245 11101264        BRU  ZZRO
0451  01246 15000020        CMA  ='20          CH 20
0452  01247 11101251        BRU  *+2
0453  01250 11101252        BRU  TWNY
0454  01251 11101300        BRU  UTTR
0455  01252 01100762 TWNY   LAA  CNTG          ANALOG VOL
0456  01253 00000005        TAB
0457  01254 15007772        CMA  ='7772        4.9938V
0458  01255 11101256        BRU  *+1
0459  01256 11101260        BRU  *+2
0460  01257 11101312        BRU  EROR
0461  01260 15007756        CMA  ='7756        4.9792V
0462  01261 11101312        BRU  EROR
0463  01262 11101263        BRU  *+1
0464  01263 11101314        BRU  OK
0465  01264 01100762 ZZRO   LAA  CNTG
0466  01265 00000005        TAB
0467  01266 15077760        CMA  ='177760
0468  01267 11101312        BRU  EROR
0469  01270 11101271        BRU  *+1
0470  01271 11101272        BRU  *+1
0471  01272 15000017        CMA  ='17
0472  01273 11101274        BRU  *+1
0473  01274 11101314        BRU  OK
0474  01275 11101312        BRU  EROR
0475  01276 00000033        NOP
0476  01277 00000033        NOP
0477  01300 01100762 UTTR   LAA  CNTG          ANALOG VOL
0478  01301 00000005        TAB
0479  01302 15004006        CMA  ='4006        2.5073V
0480  01303 00000033        NOP                OK
0481  01304 11101306        BRU  *+2           OK
0482  01305 11101307        BRU  *+2           OUT OF RANGE
0483  01306 15003772        CMA  ='3772        2.4926V
0484  01307 11101312        BRU  EROR
0485  01310 00000033        NOP                OK
0486  01311 11101314        BRU  OK
0487  01312 01003400 EROR   LAA  ='103400      BELL
0488  01313 00170101        AOP  1,W
0489  01314 01101320 OK     LAA  CNTJ          GO TO SECS F/RESTRT
0490  01315 03101233        STA  ENPT
0491  01316 00000035        TOI
0492  01317 11301233        BRU* ENPT
0493  01320 35401205 CNTJ   DAC  SECS
0494  01321 35401233 CNTK   DAC  ENPT
```

```
01322 00000000 CHAN DATA 0
                *        AFTER TABLE HEADING IS PRINTED SELECT
                *        CHAN USING CONTROL SW AND PRESS START.
                *        CONVERTS ANALOG VOL TO BINARY, PRINTS
                *        OCTAL VALUE, CONVERTS AND PRINTS EQUIV-
                *        ALENT VALUE IN VOLTAGE.
                *    CARL L THOMPSON  APRIL 24,1975
01500 70001500       ORG  '1500
01500 01101752       LAA  CNTB          NPT ADDR
01501 03300771       STA* CNTX          1016
01502 01101760       LAA  DIGT          PRNT HEADING 1 TIME ONLY
01503 00000022       SAZ
01504 11101524       BRU  DEGT
01505 12100303       SPB  CRLF
01506 02077742       LBA  =-30
01507 01501714       LAA  NUMA+30,1     HEADING FOR DATA
01510 12100276       SPB  TTYO
01511 00000026       IBS
01512 11101507       BRU  *-3
01513 12100303       SPB  CRLF          CARRIAGE RETURN LINE FEED
01514 02077742       LBA  =-30
01515 01501752       LAA  NUMB+30,1     HEADING FOR DATA
01516 12100276       SPB  TTYO
01517 00000026       IBS
01520 11101515       BRU  *-3
01521 01000001       LAA  =1
01522 03101760       STA  DIGT          PRNT HEADING 1 TIME ONLY
01523 12100303       SPB  CRLF
01524 00000033 DEGT  NOP
01525 00000000       HLT
01526 00000033       NOP
01527 00000033       NOP
01530 12100303 STR   SPB  CRLF
01531 01077774       LAA  =-4           CNTR FOR OUTPUTTING
01532 03101753       STA  CNTC          DATA 4 TIMES
01533 00000031       LCS                ARRANGE AND OUTPUT
01534 12101621       SPB  CNO
01535 01077775 OUPT  LAA  =-3
01536 03101755       STA  CNTE          CNTR-CONVERT OCTAL NO B/A
01537 00130115       CEU  '15,W
01540 00060000       DATA '60000        ENABLE INPUT INTERRUPT
01541 00130600       PIE
01542 00010001       DATA '10001        ENABLE GRP 1 LEVEL 1
01543 00000031       LCS
01544 00170115       AOP  '15,W
01545 00000033       NOP
01546 11101545       BRU  *-1
01547 14101753 A101  IMS  CNTC          CNTR F/4 SETS OF DATA
```

```
0543  01550 11101535        BRU   OUPT
0544  01551 00000000        HLT
0545  01552 11101530        BRU   STR
0546  01553 00000000 NPT    HLT
0547  01554 00130115        CEU   '15,W
0548  01555 00020000        DATA  '20000          RESET DISABLE INPT INTRUP
0549  01556 00130601        PID
0550  01557 00010001        DATA  '10001          DISABLE GRP 1 LEVEL 1
0551  01560 00170715        MIP   '15,W           INPUT A/D VALUE
0552  01561 00000000 VALU   DATA  0
0553  01562 02101561        LBA   VALU            PUT OCTAL DATA
0554  01563 00000003        CLA
0555  01564 00000713        FLL   7
0556  01565 12101642        SPB   TTY
0557  01566 00000313 MORE   FLL   3
0558  01567 12101642        SPB   TTY
0559  01570 14101755        IMS   CNTE
0560  01571 11101566        BRU   MORE
0561  01572 12101650        SPB   SPC2
0562  01573 01077775        LAA   =-3             NEXT 14 STATEMENTS CON-
0563  01574 03101756        STA   CNTF            VERT OCTAL DATA TO A-
0564  01575 02101561        LBA   VALU            VOLTAGE VALUE AND OUTPUT-
0565  01576 00000003        CLA                   ON TTY
0566  01577 03101561        STA   VALU            CLEAR DATA REGISTER
0567  01600 10001463        DIV   ='1463
0568  01601 12101642        SPB   TTY
0569  01602 01027000        LAA   ='127000        LAA WITH A DECIMAL
0570  01603 00170101        AOP   1,W
0571  01604 00000003        CLA
0572  01605 07000012 AGN    MPY   ='12
0573  01606 10001463        DIV   ='1463
0574  01607 12101642        SPB   TTY
0575  01610 14101756        IMS   CNTF
0576  01611 11101605        BRU   AGN
0577  01612 12101650        SPB   SPC2
0578  01613 00170501        MOP   1,W             OUTPUT 1 SPACE
0579  01614 00120000        DATA  '120000
0580  01615 01101757        LAA   A102
0581  01616 03101553        STA   NPT
0582  01617 00000035        TOI
0583  01620 11301553        BRU*  NPT
0584  01621 00000000 CNO    HLT                   NEXT 16 STATEMENTS
0585  01622 00000005        TAB                   ARRANGE AND OUPT CH NO
0586  01623 12101650        SPB   SPC2            OUTPUT 2 SPACES
0587  01624 00000003        CLA
0588  01625 00001513        FLL   13              LEFT SHIFT 13 SPCS
0589  01626 05000260        AMA   ='260
0590  01627 00001016        LSL   8
```

```
0591  01630 00170101        AOP  1,W
0592  01631 00000003        CLA
0593  01632 00000313        FLL  3              LEFT SHIFT 3 SPCS
0594  01633 05000260        AMA  ='260
0595  01634 00001016        LSL  8
0596  01635 00170101        AOP  1,W
0597  01636 12101650        SPB  SPC2           OUTPUT 2 SPACES
0598  01637 00170501        MOP  1,W            OUTPUT 1 SPACE
0599  01640 00120000        DATA '120000
0600  01641 11301621        BRU* CNO
0601  01642 00000000 TTY    HLT
0602  01643 05000260        AMA  ='260
0603  01644 00001016        LSL  8
0604  01645 00170101        AOP  1,W
0605  01646 00000003        CLA
0606  01647 11301642        BRU* TTY
0607  01650 00000000 SPC2   HLT
0608  01651 01020240        LAA  ='120240
0609  01652 00170101        AOP  1,W
0610  01653 00001016        LSL  8
0611  01654 00170101        AOP  1,W
0612  01655 11301650        BRU* SPC2
0613  01656 00141710 NUMA   DATA ''CHAN  OCTAL  VOLTS  OCTAL  VOLTS  OCTA
0613  01657 00140716
0613  01660 00120240
0613  01661 00147703
0613  01662 00152301
0613  01663 00146240
0613  01664 00120326
0613  01665 00147714
0613  01666 00152323
0613  01667 00120240
0613  01670 00147703
0613  01671 00152301
0613  01672 00146240
0613  01673 00120326
0613  01674 00147714
0613  01675 00152323
0613  01676 00120240
0613  01677 00147703
0613  01700 00152301
0613  01701 00146240
0613  01702 00120326
0613  01703 00147714
0613  01704 00152323
0614  01705 00120240        DATA ''  OCTAL  VOLTS''
0614  01706 00147703
0614  01707 00152301
```

```
0614  01710 00146240
0614  01711 00120326
0614  01712 00147714
0614  01713 00152323
0615  01714 00120240 NUMB DATA ''  NO   VALUE  VALUE  VALUE  VALUE  VALE
0615  01715 00147317
0615  01716 00120240
0615  01717 00153301
0615  01720 00146325
0615  01721 00142640
0615  01722 00120326
0615  01723 00140714
0615  01724 00152705
0615  01725 00120240
0615  01726 00153301
0615  01727 00146325
0615  01730 00142640
0615  01731 00120326
0615  01732 00140714
0615  01733 00152705
0615  01734 00120240
0615  01735 00153301
0615  01736 00146325
0615  01737 00142640
0615  01740 00120326
0615  01741 00140714
0615  01742 00152705
0616  01743 00120240      DATA ''  VALUE  VALUE''
0616  01744 00153301
0616  01745 00146325
0616  01746 00142640
0616  01747 00120326
0616  01750 00140714
0616  01751 00152705
0617  01752 35401553 CNTB DAC  NPT
0618  01753 00177774 CNTC DATA -4            NEG 4 CNTR
0619  01754 00000000 CNTD DATA 0
0620  01755 00000000 CNTE DATA 0             CNTR-CONVERT OCTAL NO B/A
0621  01756 00000000 CNTF DATA 0             CONVERT OCTAL TO VOLTS
0622  01757 35401547 A102 DAC  A101
0623  01760 00000000 DIGT DATA 0
0624  01761 70400000      END
       STAR     00003
       SEC      00006
       BEGN     00014
       STRT     00020
       INPT     00037
       TWTY     00057
```

ZERO	00070
UTER	00101
GOOD	00111
ERR	00115
NUCH	00120
NEXT	00134
PRNT	00142
AGAN	00165
CLER	00210
TSTS	00223
CNTH	00232
CHNO	00251
TTYO	00276
CRLF	00303
SPC3	00311
NIXN	00321
NIXZ	00326
NIXY	00346
REPT	00361
NIXQ	00363
LSL8	00401
LSL4	00405
LSL	00412
NIXI	00415
NIXP	00434
NIXM	00441
CH2	00451
NIXA	00501
NIXB	00502
NIXC	00503
NIXD	00504
NIXE	00505
NIXF	00506
NIXG	00507
NIXH	00510
NIXJ	00511
NIXK	00512
NIXL	00513
LSLA	00514
AOP1	00515
NOP	00516
AIP	00517
AOP	00520
CH3	00521
CH1	00551
TBLA	00602
TBLB	00632
TBLC	00662

TBLD	00712
TBLE	00735
TEMP	00760
CNTA	00761
CNTG	00762
CNTR	00763
CNTS	00764
CNTT	00765
CNTU	00766
CNTV	00767
CNTW	00770
CNTX	00771
CNTY	00772
CNT1	00773
CNT3	00774
CNT4	00775
CNT5	00776
CNT6	00777
CTYP	01000
LCS	01100
CM10	01115
CM20	01121
BELL	01126
C10	01131
C20	01132
C400	01133
C776	01134
LOCA	01135
STR1	01202
SECS	01205
BIGN	01213
ENPT	01233
TWNY	01252
ZZRO	01264
UTTR	01300
EROR	01312
OK	01314
CNTJ	01320
CNTK	01321
CHAN	01322
DEGT	01524
STR	01530
OUPT	01535
A101	01547
NPT	01553
VALU	01561
MORE	01566
AGN	01605

```
        CNO      01621
        TTY      01642
        SPC2     01650
        NUMA     01656
        NUMB     01714
        CNTB     01752
        CNTC     01753
        CNTD     01754
        CNTE     01755
        CNTF     01756
        A102     01757
        DIGT     01760
ERRORS  0000     00000
```

SIGNAL CONTINUITY DIAGRAM
ACCURELAY ANALOG INPUT SYSTEM

The signal continuity diagram connects the input and output signals of all 14 individual logic cards. The brief description of signal flow and module operation will provide the maintenance technician with a working knowledge of system operation and assist in the expedient location of a defective module.

The following theory of operation is based on inputting data from Analog Channel '20 with the following program:

FIGURE 1.

LOCATION	OPERATION	ADDRESS FIELD	16 BIT COMP. INSTRUCTION	DESCRIPTION
0	LCS		000031	LOAD CONTROL SWITCH SET SWITCH NO.11 FOR CH.20
1	AOP	'15,W	170115	ACCUMULATOR WORD OUT PUT TO A/D
2	AIP	'15,W	170315	ACCUMULATOR WORD INPUT FROM A/D
3	TAB		000005	TRANSFER A ACCUMULATOR TO B ACCUMULATOR

Since all control and data signals between the computer and any peripheral device travel via the common I/O Bus, it is necessary to assign a separate address code to each unit (teletype unit, input-output unit, modem, A/D, etc.) to permit the exchange of data between units in a uniform and controlled manner.

A description of decoding the unit address and analog channel number follows:

A. Unit Address Decoding.

Octal 15 is the assigned unit address for the A/D system.

Refer to Signal Continuity Diagram Number 1 for the following theory of operation.

Using the program of Figure 1, addressed to Unit '15, a Logic 1 will appear on Unit Select Bits 12, 13 and 15 at Connector P1, Terminal 112, 111 and 109 as shown in Figure 2.

FIGURE 2.

BIT NUMBER	10	11	12	13	14	15
OCTAL 15 =	0	0	1	1	0	1

I/O TERMINATION MODULE

Each Logic 1 bit is inverted by the I/O Termination Module to a Logic 0. Any signal with a line drawn above it (as $\overline{AB12}$, $\overline{AB13}$, $\overline{AB15}$) is a Logic 0 if true.

DATA TERMINAL

Decoding of Unit '15 by this module connects the unit to the computer and initiates signal (RGS) Register Strobe to Coder Control No. 3 Pin 16, Z Driver Pin 38 and X-Y Matrix Modules Pin 33.

Signals developed in Coder Control No. 3, which are required to decode the analog channel numbers are:

Channel Strobe (CHS) Pin 36
Short Input (SIH) Pin 7
Relay Drive (RDR) Pin 35

These signals will be referred to in the following discussion of decoding the analog channel number.

B. Analog Channel Number Decoding

The analog channel number will not be decoded without the proper decoding of the unit address.

Referring to the four statement program, Figure 1, Sense Switch Number 11 has been set in order to address analog channel '20 as displayed in Figure 3.

FIGURE 3.

BIT NUMBER	7	8	9	10	11	12	13	14	15
OCTAL 20 =	0	0	0	0	1	0	0	0	0

A Logic 1 will appear on Data Bit 11, Terminal 304 of P1 Connector. The bit is inverted in I/O Termination Module 2 and appears at Pin 9 of the Y Decoder Logic in the X, Y Matrix Module.

Note that Figure 3 contains bits 7-15, a total of 9 bits. Each Octal Group (7, 8, 9) (10, 11, 12) (13, 14, 15) is significant and must be decoded to provide the proper signal to operate the relay assigned to Analog Channel '20.

X Decode Matrix
Octal Group, Bits 13, 14, 15

With reference to Figure 3, these bits are not set, therefore when signals CHS, Channel Strobe (Pin 31) and RGS, Register Strobe (Pin 33), strobe the contents of the X Decode Matrix a relay ground signal is applied at Pin 22 (X0). The output of the X Decode Matrix must always equal the sum of the Octal Input. A zero signal in produces a relay ground signal at X0 out. (a true signal at Bits 13, 14 and 15 = '7, would produce a relay ground at Pin 18, X7).

The output signal of the X Decode Matrix selects one of 8 relays on the Eight Channel Mux Module Card.

Y Decode Matrix
Octal Group, Bits 10, 11, 12

With reference to Figure 3, Bit 11 is true, therefore we have a low (0) at Pin 9 of the Y Decode Matrix. Signals CHS and RGS strobe the contents of the Y Decode Matrix, generating a Logic 1 (3.6v) at Pin 12 (2X). The output 2X equals the sum of the Octal 2 Input. The Y Decode Matrix selects one of the 3 Mux Relay Cards.

Z Decode Matrix
Octal Group, Bits 7, 8, 9

These bits are applied to the Z Decode Matrix and since Natural's capacity of analog channels does not exceed 64 channel groups, these bits are always zero (Ref. Figure 3). Signals CHS and RGS strobe the contents of the Z Decode Matrix into AND gates where the RDR, Relay Driver gates a 12 VDC signal to Output Terminal 22 (OXX).

The three signals required to operate the A/D Relay assigned to Channel '20 are now enabled.

1. Relay ground, Pin 18 of X Decode Matrix
2. Logic 1 (3.6v), Pin 12 of Y Decode Matrix
3. +12 VDC, Pin 22 of Z Decode Matrix

Tracing these signals, the Relay Ground is applied to Pin 22 on each Mux Module Card.

The Logic 1 (3.6v) is applied to Pin 14 of Mux Module Card location 3B only.

The +12 VDC is applied to Pin 12 of each Mux Module Card.

8 CHANNEL MUX MODULE

The analog signals are always present at the input of these cards regardless of the state of the computer.

Refer to Table 1 for input signal assignments.

To gate a signal to the A/D converter it is necessary to operate 4 relays on the Mux Module Card, two associated with each analog signal and a set of common relays, K17 and K18.

The three signals enabled above to input data from Channel '20 perform the following functions.

The 3.6v signal input to Pin 14 turns on transistor Q1 permitting Q2 transistor to turn on (close switch) applying 12 VDC from Input Pin 12 to coil of K1, K2, K17 and K18. The relay ground at Input Pin 22 completes continuity to the relay coils for operation.

The analog signal (4.9865 VDC) at Pin 2 and 3 is gated to Output Pins 30 and 32 and applied to the Gain Switch on Print Number 2. In addition, the Gain Signals GOH, G1H and G2H developed in the Z Driver Module are applied to the Gain Switch. The Gain Signals originate from Bits 4, 5 and 6 of the Analog Data instruction word. These bits enter the Z Driver at Pins 35, 4 and 39. Logic in the Gain Signal Decoder is strobed by (RGS) Register Strobe and (SIH) Short Input, initiating an output signal at Pins 27, 29 and 31. This data enters the Gain Switch, Print No. 2, at Pins 11, 13 and 17.

Refer to Print Number 2.

GAIN SWITCH

Decoding the Gain Signals $\overline{GOH}$, $\overline{G1H}$ and $\overline{G2H}$ in the Gain Switch provides a gain factor of 25 to the Low Level Amplifier at Input Pin 18.

The 4.9865V signal (ANL) Analog Low and (ANH) Analog High from the 8 Channel Mux Module is applied to Input Pins 30 and 40. The signal is attenuated 25:1 and appears on Output Pins 35 and 36 labeled as (LAL) Low Analog Lo and (LAH) Low Analog Hi.

LOW LEVEL AMPLIFIER

The Low Level Amplifier receives signal LAL and LAH at Pin 30 and 32 along with the Gain Signal of 25 at Pin 18.

The signal is amplified by a gain of 25 and applied to the input of the Ramp Coder Module at Pin 39.

RAMP CODER AND CODER CONTROL NO. 3

The Coder Control No. 3 will not be directly referred to although it provides timing and various signals as listed for coding and conversion.

The (CIN) Coder Input Signal from the Low Level Amplifier is applied to Input Amplifier IC1 of Ramp Coder.

The (INT) Integrate Signal at Terminal 38 initiated at (CT2) Count Time 2 turns on (closes) Input Switch S1 (Q1 and Q2). In addition INT turns on (closes) the (+) Reference Voltage Switch S2 (Q21 and Q22).

The Integration Capacitors C14 and C15, are charged to a negative voltage by the Integration Amplifier summing the Analog Input and the Positive Reference Voltage.

The (RMP) Ramp Command at Terminal 36 is initiated at end of integration period at (CT12) Count Time 12 and generates two commands.

1. Opens Switch S1 and S2 (removing Analog and Positive Reference Voltage) and closing Switch S3, applying the Negative Reference Voltage to the Integration Amplifier.

2. Commands the Binary Counter in Coder Control #5 to start counting.

The Integration Capacitors C14 and C15 are now discharged (ramped) by the Integration Amplifier until the Zero Detector senses a zero volt potential. The ramp time is directly proportional to the relative amplitude of the Analog Input Voltage.

At zero volt the (CND) Coincidence Signal at Pin 5 in Ramp Coder is initiated through the Isolation Transformer in the Ramp Coder Power Supply generating (SCT) Stop Count Signal to Coder Control No. 5, Pin 4.

The SCT Signal stops the Conversion Counter and causes the initiation of (EOC) End of Conversion which in turn generates (SRS) Start Reset Signal in Coder Control No. 3.

The SRS Signal causes the RMP Signal to Ramp Coder to go low removing the Negative Reference Voltage from the Integration Amplifier.

The (RST) Reset Signal to Ramp Coder turns on (closes) Switch S4 connecting the input of Integration Amplifier to its output and remains in this condition until another (INT) Integrate Signal is received.

At the end of the conversion cycle, the Binary Counter in Coder Control #5 contains the digital representation of the Analog Input Signal within Bits 4 through 15. Referring to Figure 1, the AIP statement inputs the data to the computer and the TAB statement transfers the data to the B Accumulator. The B Accumulator should display an octal value of 7764 within a plus or minus of Octal 10.

Assuming the B Accumulator contains Octal 7764, a true low (0) would appear on output of Coder Control No. 5 at Pins 39, 28, 33, 32, 31, 30, 29, 27 and 25. These signals would be inverted in the I/O Termination Module No. 2 initiating a high (1) on Bits 4 through 11 and 13 to the P1 I/O Cable and then to the computer.

PRIORITY INTERRUPT

The station program utilizes the input interrupt which is generated in the Data Terminal Module at Pin 33, by the (EOC) End of Conversion signal from Coder Control No. 5.

The new A/D maintenance diagnostic program also incorporates this interrupt for test purposes.

DATA TERMINAL

This unit is designed to answer and return standard timing signals to the computer that occur for all Input/Output instructions.

The Terminal Pin locations for each signal are listed on the print for the I/O Cable, I/O Termination Module 1 and the Data Terminal unit.

Definition of each signal follows:

1. DTI, Data Transfer Instruction

This signal indicates an AIP, AOP, MIP, MOP instruction is being executed and is present for the duration of the instruction.

2. CMI, Command Instruction

This signal indicates that a CEU instruction is being executed and is present for the duration of the instruction.

3. INS, Instruction Sync

This signal permits the unit to interrogate its unit code lines and in turn answer via the USR line. The signal is present until the unit answers.

4. USR, Unit Sync Return

This signal indicates the unit has recognized the INS and remains until the computer removes the INS signal.

5. INP, Input Instruction

This signal identifies the direction of data transfer and is present for the duration of the DTI signal.

6. WTF, Wait Flag

This signal indicates the instruction being executed contains the wait flag. This flag inhibits the unit from answering via the USR signal until the unit is ready to perform the desired instruction. The signal is present for the duration of the instruction.

7. CDH, Computer Data Here

This signal indicates that the computer has recognized the USR and the UTR signals. The CDH signal notifies the unit that the data bits are present on the I/O Bus and can be interrogated or loaded into the output register. The CDH signal remains until the unit answers on its UDA line.

8. UTR, Unit Test Return

This signal indicates the status of the unit after receipt of the INS signal from computer. If the unit is capable of performing the required instruction, the UTR line is enabled permitting the computer program a "skip" on the next instruction. The UTR signal is present until the INS signal is removed.

9. UDA, Unit Data Accepted

This signal indicates the unit has accepted the data word present on the I/O Bus, and notifies the computer that the UTR is valid and can be interrogated. The signal is present until the CDH signal is removed.

10. CDA, Computer Data Accepted

This signal indicates the computer has accepted data from the unit as the result of an AIP or MIP instruction. The signal remains until the unit removes the UDA signal which caused it.

11. MCL, Master Clear

This signal is activated by the CLEAR switch on the computer control panel and also by the ICB (Initial Condition Bus) when power is turned on. In the case of the CLEAR switch, the line is a DC level and remains activated as long as the switch is depressed. The ICB condition enables the master clear line for approximately 1 second.

TABLE 1

ANALOG CHANNEL FUNCTION ASSIGNMENT

ANALOG CHANNEL	LOCATION RELAY	LOCATION CARD	FUNCTION NUMBER	A/D RANGE	FUNCTION DESCRIPTION
00	K1-2	1B			Zero Test Voltage
01	K3-4	1B	41	200-400	Fuel Gas Pressure
02	K5-6	1B	21	400-800	Fuel Diff. Pressure - Unit 1
03	K7-8	1B	65	0-150	Suction Temperature - Unit 2
04	K9-10	1B	44	400-800	Suction Pressure - Unit 2
05	K11-12	1B			
06	K13-14	1B	22	400-800	Fuel Diff. Pressure - Unit 2
07	K15-16	1B	63	-20-200	Atmospheric Temperature
10	K1-2	2B			Half Scale Test Voltage (2.505 VDC)
11	K3-4	2B	56	0-150	Mainline Discharge Temperature
12	K5-6	2B	50	0-150	Mainline Suction Temperature
13	K7-8	2B	67	700-1100	Exhaust Temperature - Unit 1
14	K9-10	2B	68	700-1100	Exhaust Temperature - Unit 2
15	K11-12	2B	42	-20-200	Fuel Gas Temperature
16	K13-14	2B	11	0-6000	RPM - Unit 2
17	K15-16	2B	64	-20-200	Suction Temperature - Unit 1
20	K1-2	3B			Full Scale Test Voltage (4.986 VDC)
21	K3-4	3B	43	400-800	Suction Pressure - Unit 1
22	K5-6	3B			
23	K7-8	3B	07	400-800	Mainline Discharge Pressure
24	K9-10	3B	00	400-800	Mainline Suction Pressure
25	K11-12	3B	08	400-800	Station Discharge Pressure
26	K13-14	3B	10	0-6000	RPM - Unit 1
27	K15-16	3B			

Station program samples each function once per second. Test voltages are sampled every 10 seconds. If value is out of range, program will sample value each second for 5 seconds. If still out of range it will print A/D failure.

INDEX AND CARD LOCATION	DESCRIPTION	PART NUMBER
2R4 -1	Gain Switch	160-083325-001
2R4 -2	Low Level Amplifier	160-083306-001
2R4 -3	Ramp Coder	160-083193-003
2R4 -4	Ramp Coder, Power Supply	160-083194-001
2R4 -5	Not Used	

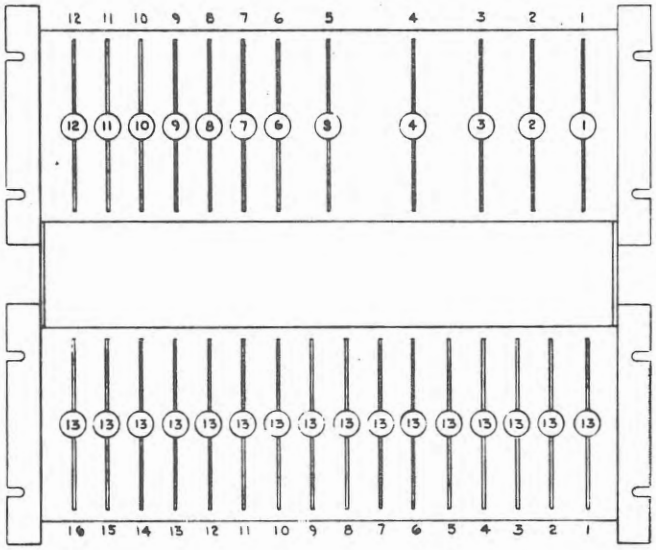

2R4 -6	Coder Control Number 3	160-083326-001
2R4 -7	Coder Control Number 5	160-100009-003
2R4 -8	X, Y Matrix	160-900002-001
2R4 -9	Z Driver	160-083321-001
2R4 -10	Data Terminal	160-100003-048
2R4 -11	I/O Terminal Module 1	160-083270-001
2R4 -12	I/O Terminal Module 2	160-083271-001
2R4 -13	Mercury Relay Multiplexer	160-100015

Analog Input System Card Location (Unit 2R4)

Table 6-10. Three-Input NOR

Fig. & Index No.	Description	Reference Designator	Manufacturer	Part No.	Qty.
6-10	Schematic & Assembly Three NOR		SEL	8504-1	1
-1	• PCB (For Rev. See 149-051860-000)		SEL	704	1
-2	• Wire-Solid Copper, Tinned		SEL	AWG 24	AR
-3	• Terminal		CTC	2043B	7
-4	• Unipad		SEL	C11925	3
	• Capacitor-0.1μf +80-20%, 10V	C1	CRL	UK10-104	1
	• Integrated Circuit	IC1, IC2 IC3	Fairchild	91529	3
	• Integrated Circuit (Note 4)	IC1, IC2 IC3	SEL	A52040-65	X

#2 CONTROL PANEL
TEU

CLT #2

IDENTIFICATION: Control Panel, TEU and Inhibit Alarm to Chicago, Diagnostic

AUTHOR: Carl L. Thompson
Communications Division
Natural Gas Pipeline Company of America

COMPLETED: ~~February 16, 1977~~ 1-21-77

COMPUTER: SEL 810A or 810B

STORAGE: 742 Octal Locations

LOADING PROCEDURE: Relocatable Loader, Program Counter = '36060
"A" Accumulator = '6000 "B" Accumulator = 0

This diagnostic consists of four programs as follows.

Test External Unit, TEU Channel
'40 Bits 0-3
'6000 Starting Location

The program continuously monitors for a "not ready" (abnormal) condition.

Pressing the set point execute switch will initiate the printing of "S" until released.

Pressing the recall switch will initiate the printing of "R" until released.

Pressing the warn switch (Hi Temp) beside watchdog relay will initiate the printing of "W" until released.

Pressing the OFF switch (Hi Temp Shutdown) beside watchdog relay will initiate the printing of "O".

Check Switch Contacts and Associated Logic for Nixie Switches S5, 6, 7 and S8
'6200 Starting Location

The program will display the switch position of S5, 6 and 7 in their associated nixie and update once per second.

To display one switch only, set sense switch corresponding to nixie switch number.

To display set point switch S8, set sense switch number 8. The units, tens and hundreds digit will appear in the right nixie and the thousand digit will appear in the center nixie.

Check Nixie Tubes
'6400 Starting Location

The program will display seconds from the clock at one second intervals.

Inhibit Alarm Transmission to Chicago
'6430 Starting Location
'6430

After starting program enter function 72 under the right nixie and enter a count up to a maximum of 120 in the set point switch, SW8.

Press set point execute switch. The program will test for function 72 and a valid time (maximum of 120) in set point switch. If both are valid the program will turn on the alarm inhibit light and display the delay time in any nixie with a function of 72.

The time displayed in the nixie is tested in seconds rather than minutes. At the end of delay time the program will turn off the alarm inhibit light and initiate printing of;

"Alarms Will Be Transmitted To Chicago"

If a function other than 72 is selected under right nixie before start of the program, the program will initiate printing of;

"Select Function 72, Execute Set Point"

If a count more than 120 is displayed in the set point switch before start of the program, the program will initiate the printing of;

"Reduce Count In SW8 to 120, Execute Set Point"

```
0001                    ***********************************************
0002                    *      TEST EXTERNAL UNIT, TEU.CH '40 BITS 0-3 *
0003                    *   LOCATION '6000                             *
0004                    *   PRESS SETPOINT EXECUTE SW AND PROGRAM      *
0005                    *   WILL PRINT S UNTIL RELEASED.               *
0006                    *   PRESS RECALL SW AND PROGRAM WILL PRINT R   *
0007                    *   UNTIL RELEASED.                            *
0008                    *   PRESS WARN SW (HI TEMP) BESIDE WATCH DOG   *
0009                    *   RELAY AND PROGRAM WILL PRINT W.            *
0010                    *   PRESS OFF SW (HI TEMP SHUTDOWN) BESIDE WATCH
0011                    *   DOG RELAY AND PROGRAM WILL PRINT O.        *
0012                    *                                              *
0013                    *   LOCATION '6200                             *
0014                    *      CHECK SWITCH CONTACTS AND ASSOC. LOGIC  *
0015                    *      FOR NIXIE SWITCHES S5,6,7 AND S8.       *
0016                    *   PROGRAM WILL DISPLAY SW POSITION OF S5,6   *
0017                    *   AND S7 IN ASSOC. NIXIE ONCE EACH SECOND.   *
0018                    *   TO DISPLAY ONE SWITCH ONLY, SET SENSE SW   *
0019                    *   CORRESPONDING TO NIXIE SWITCH NO.          *
0020                    *   TO DISPLAY SETPOINT SW S8, SET SENSE SW NO 8,
0021                    *   THE UNITS TENS AND HNDS WILL APPEAR IN RIGHT
0022                    *   NIXIE AND THOUS DIGIT WILL APPEAR IN CENTER*
0023                    *   NIXIE.                                     *
0024                    *                                              *
0025                    *   LOCATION '6400                             *
0026                    *      CHECK NIXIE TUBES                       *
0027                    *   PROGRAM WILL DISPLAY SECONDS FROM CLOCK IN *
0028                    *   NIXIES AT ONE SECOND INTERVALS.            *
0029                    *    LOCATION '6430                            *
0030                    *    INHIBIT ALARM TRANSMISSION TO CHICAGO     *
0031                    *                                              *
0032                    *    PROG WILL TST FOR FUNCT 72 AND VALID TIME *
0033                    *    (MAX 120) IN SW8. IF BOTH VALID IT WILL   *
0034                    *    TURN ON ALARM INHIBIT LIGHT AND DISPLAY   *
0035                    *    DELAY TIME IN NIX WITH FUNCT 72. TIME IS  *
0036                    *    TESTED IN SEC RATHER THAN MINUTES.        *
0037                    *                                              *
0038                    *    PREPARED BY CARL L THOMPSON  1-21-77      *
0039                    ***********************************************
0040  00000 00000000         REL
0041  00000 12100054         SPB  CRLF
0042  00001 01077717         LAA  ='177717      PRINT 60 CHAR PER LINE
0043  00002 03100062         STA  CNTR
0044  00003 00000033 STRT NOP
0045  00004 00130240         TEU  '40
0046  00005 00100000         DATA '100000       SET POINT EXEC
0047  00006 11100022         BRU  SETP
```

```
00007 00130240        TEU  '40
00010 00040000        DATA '40000        HI TEMP SHUT DOWN
00011 11100027        BRU  OFF
00012 00130240        TEU  '40
00013 00020000        DATA '20000        HI TEMP WARNING
00014 11100016        BRU  *+2
00015 11100032        BRU  WARN
00016 00130240        TEU  '40
00017 00010000        DATA '10000        ALARM RECALL
00020 11100035        BRU  RECL
00021 11100003        BRU  STRT
00022 01051400 SETP   LAA  ='151400      PRINT S
00023 12100042        SPB  AOP
00024 00170543        MOP  '43,W
00025 00100000        DATA '100000       RESET ST PT EXEC
00026 11100003        BRU  STRT
00027 01047400 OFF    LAA  ='147400      PRINT O
00030 12100042        SPB  AOP
00031 11100003        BRU  STRT
00032 01053400 WARN   LAA  ='153400      PRINT W
00033 12100042        SPB  AOP
00034 11100003        BRU  STRT
00035 01051000 RECL   LAA  ='151000      PRINT R
00036 12100042        SPB  AOP
00037 00170543        MOP  '43,W
00040 00004000        DATA '4000         RESET ALARM RECALL
00041 11100003        BRU  STRT
00042 00000000 AOP    HLT
00043 14100063        IMS  CNTA          COUNTER F/DLY
00044 11100045        BRU  *+1           CHANGE TO BRU -1 F/DLY
00045 00170101        AOP  1,W
00046 14100062        IMS  CNTR
00047 11300042        BRU* AOP
00050 01077717        LAA  ='177717
00051 03100062        STA  CNTR
00052 12100054        SPB  CRLF
00053 11300042        BRU* AOP
00054 00000000 CRLF   HLT
00055 00170501        MOP  1,W
00056 00106400        DATA '106400
00057 00170501        MOP  1,W
00060 00105000        DATA '105000
00061 11300054        BRU* CRLF
00062 00000000 CNTR   DATA 0
00063 00000000 CNTA   DATA 0
                      ***********************************************
00200 70000200        ORG  '200
00200 00170340        AIP  '40,W         INPT SEC
```

```
0096  00201 03100271        STA  CMPR          STORE F/COMPARE
0097  00202 00170340 BEGN   AIP  '40,W         INPT SEC
0098  00203 15100271        CMA  CMPR
0099  00204 11100206        BRU  *+2
0100  00205 11100202        BRU  BEGN
0101  00206 03100271        STA  CMPR
0102  00207 00130410        SNS  8             SETPOINT SW S8
0103  00210 11100233        BRU  STPT
0104  00211 00130405        SNS  5             LEFT SW S5
0105  00212 11100242        BRU  LEFT
0106  00213 00130406        SNS  6             CNTR SW S6
0107  00214 11100252        BRU  CNIX
0108  00215 00130407        SNS  7             RIGHT SW S7
0109  00216 11100261        BRU  RITE
0110  00217 00170343        AIP  '43,W         INPT S5 LEFT SW
0111  00220 00000416        LSL  4
0112  00221 00000415        RSL  4
0113  00222 00170140        AOP  '40,W         DSPLA S5 IN L NIX
0114  00223 00170344        AIP  '44,W         INPT S6 CNTR SW
0115  00224 00001015        RSL  8
0116  00225 00170141        AOP  '41,W         DSPLA S6 IN C NIX
0117  00226 00170344        AIP  '44,W         INPT S7 RIGHT SW
0118  00227 00001016        LSL  8
0119  00230 00001015        RSL  8
0120  00231 00170142        AOP  '42,W         DISPLA S7 IN R NIX
0121  00232 11100202        BRU  BEGN
0122  00233 00000003 STPT   CLA
0123  00234 00170140        AOP  '40,W         CLR LEFT NIX
0124  00235 00170345        AIP  '45,W         INPT S8 SETPT SW
0125  00236 00170142        AOP  '42,W         DSPLA UTH S8 IN R NIX
0126  00237 00001415        RSL  12
0127  00240 00170141        AOP  '41,W         DSPLA THOU OF S8 IN C NIX
0128  00241 11100202        BRU  BEGN
0129  00242 00000003 LEFT   CLA
0130  00243 00170141        AOP  '41,W         CLR C NIX
0131  00244 00170142        AOP  '42,W         CLR R NIX
0132  00245 00170343        AIP  '43,W         INPT S5
0133  00246 00000416        LSL  4
0134  00247 00000415        RSL  4
0135  00250 00170140        AOP  '40,W         OUPT TO L NIX
0136  00251 11100202        BRU  BEGN
0137  00252 00000003 CNIX   CLA
0138  00253 00170140        AOP  '40,W         CLR L NIX
0139  00254 00170142        AOP  '42,W         CLR R NIX
0140  00255 00170344        AIP  '44,W         INPT S6
0141  00256 00001015        RSL  8
0142  00257 00170141        AOP  '41,W         OUPT TO C NIX
0143  00260 11100202        BRU  BEGN
```

```
0144  00261 00000003 RITE CLA
0145  00262 00170140      AOP  '40,W          CLR L NIX
0146  00263 00170141      AOP  '41,W          CLR C NIX
0147  00264 00170344      AIP  '44,W          INPT S7
0148  00265 00001016      LSL  8
0149  00266 00001015      RSL  8
0150  00267 00170142      AOP  '42,W          OUPT TO R NIX
0151  00270 11100202      BRU  BEGN
0152  00271 00000000 CMPR DATA 0
0153                 ***********************************************
0154  00400 70000400      ORG  '400
0155  00400 00170340      AIP  '40,W          INPUT SEC
0156  00401 00001416      LSL  12             SAVE UNITS ONLY
0157  00402 03100424      STA  DATA           STA F/COMPARE
0158  00403 00170340 BIGN AIP  '40,W
0159  00404 00001416      LSL  12
0160  00405 15100424      CMA  DATA           CK F/1 SEC CHNG
0161  00406 11100410      BRU  *+2
0162  00407 11100403      BRU  BIGN           WAIT F/NXT SEC
0163  00410 03100424      STA  DATA
0164  00411 00000415      RSL  4
0165  00412 03100423      STA  TEMP
0166  00413 00000415      RSL  4
0167  00414 05100423      AMA  TEMP
0168  00415 00000415      RSL  4
0169  00416 05100423      AMA  TEMP
0170  00417 00170140      AOP  '40,W
0171  00420 00170141      AOP  '41,W
0172  00421 00170142      AOP  '42,W
0173  00422 11100403      BRU  BIGN
0174  00423 00000000 TEMP DATA 0
0175  00424 00000000 DATA DATA 0
0176                 ***********************************************
0177  00430 70000430      ORG  '430
0178  00430 00000003      CLA
0179  00431 03100650      STA  LOCA
0180  00432 11100447      BRU  RSET
0181  00433 14100652 HOME IMS  LOCC
0182  00434 11100433      BRU  *-1
0183  00435 00130240      TEU  '40
0184  00436 00100000      DATA '100000        SET PT EXEC
0185  00437 11100441      BRU  *+2
0186  00440 11100435      BRU  HOME+2
0187  00441 00170344      AIP  '44,W          SW 7
0188  00442 00001016      LSL  8              SHIFT SW6 OFF
0189  00443 15071000      CMA  ='71000        SW7=FUNCT 72
0190  00444 11100446      BRU  *+2
0191  00445 11100456      BRU  *+9
```

```
00446 12100623        SPB  FNCT          WRONG FNCT NO
00447 01000000 RSET   LAA  ='100000
00450 00170143        AOP  '43,W         RESET SET PT
00451 00000003        CLA
00452 00170140        AOP  '40,W
00453 00170141        AOP  '41,W         CLR NIX
00454 00170142        AOP  '42,W         CLR NIX
00455 11100433        BRU  HOME
00456 00170345        AIP  '45,W         SW8 F/INHIBIT TIME
00457 03100651        STA  LOCB
00460 00000021        SAS                ADD F/INQUISITIVE TECHN
00461 11100467        BRU  EROR
00462 11100463        BRU  *+1
00463 11100464        BRU  *+1
00464 15000440        CMA  ='440         TIME MORE THAN 120
00465 11100466        BRU  *+1
00466 11100471        BRU  *+3           ='440 OR 120
00467 12100613 EROR   SPB  SORY
00470 11100447        BRU  RSET
00471 01001000        LAA  ='101000
00472 00170143        AOP  '43,W         RSET ST PT-TRN ON LIGHT
00473 01100651        LAA  LOCB
00474 11100477        BRU  *+3
00475 01100651 AGAN   LAA  LOCB
00476 06000001        SMA  =1            SUBT 1 F/CNT
00477 03100651        STA  LOCB
00500 00000022        SAZ
00501 11100503        BRU  *+2
00502 11100604        BRU  OFFF          TRN OFF LIGHT
00503 00001016        LSL  8
00504 15077400        CMA  ='177400      CK F/INVALID BCD
00505 11100507        BRU  *+2
00506 11100574        BRU  SUBX          SUBT '146
00507 00000416        LSL  4
00510 15070000        CMA  ='170000      CK F/INVALID BCD
00511 11100513        BRU  *+2
00512 11100600        BRU  SUB6          SUBT 6
00513 00000033 AOPP   NOP
00514 00170343        AIP  '43,W         LFT NIX
00515 00001016        LSL  8
00516 06071000        SMA  ='071000
00517 00000022        SAZ
00520 11100522        BRU  *+2
00521 11100525        BRU  A40
00522 00000003        CLA
00523 00170140        AOP  '40,W         CLR NIX
00524 11100527        BRU  *+3
00525 01100651 A40    LAA  LOCB
```

```
0240  00526 00170140        AOP  '40,W
0241  00527 00170344        AIP  '44,W          CNTR NIX
0242  00530 00001015        RSL  8
0243  00531 06000162        SMA  ='162
0244  00532 00000022        SAZ
0245  00533 11100535        BRU  *+2
0246  00534 11100540        BRU  A41
0247  00535 00000003        CLA
0248  00536 00170141        AOP  '41,W          CLR NIX
0249  00537 11100542        BRU  *+3
0250  00540 01100651 A41    LAA  LOCB
0251  00541 00170141        AOP  '41,W
0252  00542 00170344        AIP  '44,W          RT NIX
0253  00543 00001016        LSL  8
0254  00544 06071000        SMA  ='071000
0255  00545 00000022        SAZ
0256  00546 11100550        BRU  *+2
0257  00547 11100553        BRU  A42
0258  00550 00000003        CLA
0259  00551 00170142        AOP  '42,W          CLR NIX
0260  00552 11100555        BRU  *+3
0261  00553 01100651 A42    LAA  LOCB
0262  00554 00170142        AOP  '42,W
0263  00555 01100650        LAA  LOCA
0264  00556 00000022        SAZ
0265  00557 11100563        BRU  TIME
0266  00560 00170340        AIP  '40,W          INPT SEC
0267  00561 03100653        STA  LOCD
0268  00562 14100650        IMS  LOCA
0269  00563 00130240 TIME   TEU  '40
0270  00564 00100000        DATA '100000
0271  00565 11100441        BRU  HOME+6
0272  00566 00170340        AIP  '40,W
0273  00567 15100653        CMA  LOCD
0274  00570 11100572        BRU  *+2
0275  00571 11100563        BRU  TIME
0276  00572 03100653        STA  LOCD
0277  00573 11100475        BRU  AGAN
0278  00574 01100651 SUBX   LAA  LOCB           SUBT '146
0279  00575 06000146        SMA  ='146
0280  00576 03100651        STA  LOCB
0281  00577 11100513        BRU  AOPP
0282  00600 01100651 SUB6   LAA  LOCB           SUBT 6
0283  00601 06000006        SMA  =6
0284  00602 03100651        STA  LOCB
0285  00603 11100513        BRU  AOPP
0286  00604 00000003 OFFF   CLA                 TRN OFF LITE, CLR NIX
0287  00605 00170140        AOP  '40,W
```

```
00606 00170141        AOP   '41,W
00607 00170142        AOP   '42,W
00610 00170143        AOP   '43,W
00611 12100633        SPB   RESM
00612 11100447        BRU   RSET
00613 00000000 SORY   HLT                    CNT IN SW 8 OVER 120
00614 12100054        SPB   CRLF
00615 02077756        LBA   =-18
00616 01500676        LAA   TBLA+18,1
00617 12100643        SPB   TTY
00620 00000026        IBS
00621 11100616        BRU   *-3
00622 11300613        BRU*  SORY
00623 00000000 FNCT   HLT                    SW 7 NOT 72
00624 12100054        SPB   CRLF
00625 02077757        LBA   =-17
00626 01500717        LAA   TBLB+17,1
00627 12100643        SPB   TTY
00630 00000026        IBS
00631 11100626        BRU   *-3
00632 11300623        BRU*  FNCT
00633 00000000 RESM   HLT
00634 12100054        SPB   CRLF
00635 02077755        LBA   =-19
00636 01500742        LAA   TBLC+19,1
00637 12100643        SPB   TTY
00640 00000026        IBS
00641 11100636        BRU   *-3
00642 11300633        BRU*  RESM
00643 00000000 TTY    HLT
00644 00170101        AOP   1,W
00645 00001016        LSL   8
00646 00170101        AOP   1,W
00647 11300643        BRU*  TTY
00650 00000000 LOCA   DATA  0
00651 00000000 LOCB   DATA  0
00652 00000000 LOCC   DATA  0
00653 00000000 LOCD   DATA  0
00654 00151305 TBLA   DATA  ''REDUCE CNT IN SW8 TO 120,EXEC SET-PT''
00655 00142325
00656 00141705
00657 00120303
00660 00147324
00661 00120311
00662 00147240
00663 00151727
00664 00134240
00665 00152317
```

```
0326  00666 00120261
0326  00667 00131260
0326  00670 00126305
0326  00671 00154305
0326  00672 00141640
0326  00673 00151705
0326  00674 00152255
0326  00675 00150324
0327  00676 00151705 TBLB DATA ''SELECT FUNCT 72, EXECUTE SET POINT''
0327  00677 00146305
0327  00700 00141724
0327  00701 00120306
0327  00702 00152716
0327  00703 00141724
0327  00704 00120267
0327  00705 00131254
0327  00706 00120305
0327  00707 00154305
0327  00710 00141725
0327  00711 00152305
0327  00712 00120323
0327  00713 00142724
0327  00714 00120320
0327  00715 00147711
0327  00716 00147324
0328  00717 00140714 TBLC DATA ''ALARMS WILL BE TRANSMITTED TO CHICAGO'
0328  00720 00140722
0328  00721 00146723
0328  00722 00120327
0328  00723 00144714
0328  00724 00146240
0328  00725 00141305
0328  00726 00120324
0328  00727 00151301
0328  00730 00147323
0328  00731 00146711
0328  00732 00152324
0328  00733 00142704
0328  00734 00120324
0328  00735 00147640
0328  00736 00141710
0328  00737 00144703
0328  00740 00140707
0328  00741 00147640
0329  00742 70400000       END
       STRT     00003
       SETP     00022
       OFF      00027
```

```
        WARN     00032
        RECL     00035
        AOP      00042
        CRLF     00054
        CNTR     00062
        CNTA     00063
        BEGN     00202
        STPT     00233
        LEFT     00242
        CNIX     00252
        RITE     00261
        CMPR     00271
        BIGN     00403
        TEMP     00423
        DATA     00424
        HOME     00433
        RSET     00447
        EROR     00467
        AGAN     00475
        AOPP     00513
        A40      00525
        A41      00540
        A42      00553
        TIME     00563
        SUBX     00574
        SUB6     00600
        OFFF     00604
        SORY     00613
        FNCT     00623
        RESM     00633
        TTY      00643
        LOCA     00650
        LOCB     00651
        LOCC     00652
        LOCD     00653
        TBLA     00654
        TBLB     00676
        TBLC     00717
ERRORS  0000     00000
```

#2

IDENTIFICATION: Inhibit Alarm Transmission To Chicago Diagnostic Program

AUTHOR: Carl L. Thompson
Natural Gas Pipeline Company of America
Communications Division

ACCEPTED: January 21, 1977

COMPUTER: SEL 810A or 810B

STORAGE: 305 Octal Locations

LOADING PROCEDURE: Relocatable Loader, Program Counter = '36060
"A" Accumulator = "6000 "B" Accumulator = 0

Enter '6000 in the program counter and press start switch twice.

After starting program enter function 72 under the right nixie and enter a count up to a maximum of 120 in the set point switch, SW8.

Press set point execute switch. The program will test for function 72 and a valid time (maximum of 120) in set point switch. If both are valid the program will turn on the alarm inhibit light and display the delay time in any nixie with a function of ~~25~~.72

The time displayed in the nixie is tested in seconds rather than minutes. At the end of delay time the program will turn off the alarm inhibit light and initiate printing of;

"Alarms Will Be Transmitted To Chicago"

If a function other than 72 is selected under right nixie before start of the program, the program will initiate printing of;

"Select Function 72, Execute Set Point"

If a count more than 120 is displayed in the set point switch before start of the program, the program will initiate the printing of;

"Reduce Count In SW8 to 120, Execute Set Point"

```
0001                    ***********************************************
0002                    *    INHIBIT ALARM TRANSMISSION TO CHICAGO     *
0003                    *                                              *
0004                    *    PROG WILL TST FOR FUNCT 72 AND VALID TIME *
0005                    *    (MAX 120) IN SW8. IF BOTH VALID IT WILL   *
0006                    *    TURN ON ALARM INHIBIT LIGHT AND DISPLAY   *
0007                    *    DELAY TIME IN NIX WITH FUNCT 25. TIME IS  *
0008                    *    TESTED IN SEC RATHER THAN MINUTES.        *
0009                    *                                              *
0010                    *    PREPARED BY. CARL L THOMPSON  1-21-77     *
0011                    ***********************************************
0012  00000 00000000        REL
0013  00000 00000003        CLA
0014  00001 03100213        STA  LOCA
0015  00002 11100017        BRU  RSET
0016  00003 14100215 HOME   IMS  LOCC
0017  00004 11100003        BRU  *-1
0018  00005 00130240        TEU  '40
0019  00006 00100000        DATA '100000        SET PT EXEC
0020  00007 11100011        BRU  *+2
0021  00010 11100005        BRU  HOME+2
0022  00011 00170344        AIP  '44,W          SW 7
0023  00012 00001016        LSL  8              SHIFT SW6 OFF
0024  00013 15071000        CMA  ='71000        SW7=FUNCT 72
0025  00014 11100016        BRU  *+2
0026  00015 11100022        BRU  *+5
0027  00016 12100160        SPB  FNCT           WRONG FNCT NO
0028  00017 01000000 RSET   LAA  ='100000
0029  00020 00170143        AOP  '43,W          RESET SET PT
0030  00021 11100003        BRU  HOME
0031  00022 00170345        AIP  '45,W          SW8 F/INHIBIT TIME
0032  00023 03100214        STA  LOCB
0033  00024 15000440        CMA  ='440          TIME MORE THAN 120
0034  00025 11100026        BRU  *+1
0035  00026 11100031        BRU  *+3            ='440 OR 120
0036  00027 12100150        SPB  SORY
0037  00030 11100017        BRU  RSET
0038  00031 01001000        LAA  ='101000
0039  00032 00170143        AOP  '43,W          RSET ST PT-TRN ON LIGHT
0040  00033 01100214        LAA  LOCB
0041  00034 11100037        BRU  *+3
0042  00035 01100214 AGAN   LAA  LOCB
0043  00036 06000001        SMA  =1             SUBT 1 F/CNT
0044  00037 03100214        STA  LOCB
0045  00040 00000022        SAZ
0046  00041 11100043        BRU  *+2
0047  00042 11100141        BRU  OFFF           TRN OFF LIGHT
```

```
0048  00043 00001016        LSL  8
0049  00044 15077400        CMA  ='177400        CK F/INVALID BCD
0050  00045 11100047        BRU  *+2
0051  00046 11100131        BRU  SUBX            SUBT '146
0052  00047 00000416        LSL  4
0053  00050 15070000        CMA  ='170000        CK F/INVALID BCD
0054  00051 11100053        BRU  *+2
0055  00052 11100135        BRU  SUB6            SUBT 6
0056  00053 00000033 AOP    NOP
0057  00054 00170343        AIP  '43,W           LFT NIX
0058  00055 00001016        LSL  8
0059  00056 06022400        SMA  ='022400
0060  00057 00000022        SAZ
0061  00060 11100062        BRU  *+2
0062  00061 11100065        BRU  A40
0063  00062 00000003        CLA
0064  00063 00170140        AOP  '40,W           CLR NIX
0065  00064 11100067        BRU  *+3
0066  00065 01100214 A40    LAA  LOCB
0067  00066 00170140        AOP  '40,W
0068  00067 00170344        AIP  '44,W           CNTR NIX
0069  00070 00001015        RSL  8
0070  00071 06000045        SMA  ='45
0071  00072 00000022        SAZ
0072  00073 11100075        BRU  *+2
0073  00074 11100100        BRU  A41
0074  00075 00000003        CLA
0075  00076 00170141        AOP  '41,W           CLR NIX
0076  00077 11100102        BRU  *+3
0077  00100 01100214 A41    LAA  LOCB
0078  00101 00170141        AOP  '41,W
0079  00102 00170344        AIP  '44,W           RT NIX
0080  00103 00001016        LSL  8
0081  00104 06022400        SMA  ='022400
0082  00105 00000022        SAZ
0083  00106 11100110        BRU  *+2
0084  00107 11100113        BRU  A42
0085  00110 00000003        CLA
0086  00111 00170142        AOP  '42,W           CLR NIX
0087  00112 11100115        BRU  *+3
0088  00113 01100214 A42    LAA  LOCB
0089  00114 00170142        AOP  '42,W
0090  00115 01100213        LAA  LOCA
0091  00116 00000022        SAZ
0092  00117 11100123        BRU  TIME
0093  00120 00170340        AIP  '40,W           INPT SEC
0094  00121 03100216        STA  LOCD
0095  00122 14100213        IMS  LOCA
```

```
0096  00123 00170340 TIME AIP   '40,W          INPT SEC
0097  00124 15100216      CMA   LOCD
0098  00125 11100127      BRU   *+2
0099  00126 11100123      BRU   TIME
0100  00127 03100216      STA   LOCD
0101  00130 11100035      BRU   AGAN
0102  00131 01100214 SUBX LAA   LOCB           SUBT '146
0103  00132 06000146      SMA   ='146
0104  00133 03100214      STA   LOCB
0105  00134 11100053      BRU   AOP
0106  00135 01100214 SUB6 LAA   LOCB           SUBT 6
0107  00136 06000006      SMA   =6
0108  00137 03100214      STA   LOCB
0109  00140 11100053      BRU   AOP
0110  00141 00000003 OFFF CLA                  TRN OFF LITE, CLR NIX
0111  00142 00170140      AOP   '40,W
0112  00143 00170141      AOP   '41,W
0113  00144 00170142      AOP   '42,W
0114  00145 00170143      AOP   '43,W
0115  00146 12100170      SPB   RESM
0116  00147 11100003      BRU   HOME
0117  00150 00000000 SORY HLT                  CNT IN SW 8 OVER 120
0118  00151 12100205      SPB   CRLF
0119  00152 02077756      LBA   =-18
0120  00153 01500241      LAA   TBLA+18,1
0121  00154 12100200      SPB   TTY
0122  00155 00000026      IBS
0123  00156 11100153      BRU   *-3
0124  00157 11300150      BRU*  SORY
0125  00160 00000000 FNCT HLT                  SW 7 NOT 72
0126  00161 12100205      SPB   CRLF
0127  00162 02077757      LBA   =-17
0128  00163 01500262      LAA   TBLB+17,1
0129  00164 12100200      SPB   TTY
0130  00165 00000026      IBS
0131  00166 11100163      BRU   *-3
0132  00167 11300160      BRU*  FNCT
0133  00170 00000000 RESM HLT
0134  00171 12100205      SPB   CRLF
0135  00172 02077755      LBA   =-19
0136  00173 01500305      LAA   TBLC+19,1
0137  00174 12100200      SPB   TTY
0138  00175 00000026      IBS
0139  00176 11100173      BRU   *-3
0140  00177 11300170      BRU*  RESM
0141  00200 00000000 TTY  HLT
0142  00201 00170101      AOP   1,W
0143  00202 00001016      LSL   8
```

```
0144  00203 00170101        AOP  1,W
0145  00204 11300200        BRU* TTY
0146  00205 00000000 CRLF HLT
0147  00206 00170501        MOP  1,W
0148  00207 00106400        DATA '106400
0149  00210 00170501        MOP  1,W
0150  00211 00105000        DATA '105000
0151  00212 11300205        BRU* CRLF
0152  00213 00000000 LOCA DATA 0
0153  00214 00000000 LOCB DATA 0
0154  00215 00000000 LOCC DATA 0
0155  00216 00000000 LOCD DATA 0
0156  00217 00151305 TBLA DATA ''REDUCE CNT IN SW8 TO 120,EXEC SET-PT''
0156  00220 00142325
0156  00221 00141705
0156  00222 00120303
0156  00223 00147324
0156  00224 00120311
0156  00225 00147240
0156  00226 00151727
0156  00227 00134240
0156  00230 00152317
0156  00231 00120261
0156  00232 00131260
0156  00233 00126305
0156  00234 00154305
0156  00235 00141640
0156  00236 00151705
0156  00237 00152255
0156  00240 00150324
0157  00241 00151705 TBLB DATA ''SELECT FUNCT 72, EXECUTE SET POINT''
0157  00242 00146305
0157  00243 00141724
0157  00244 00120306
0157  00245 00152716
0157  00246 00141724
0157  00247 00120267
0157  00250 00131254
0157  00251 00120305
0157  00252 00154305
0157  00253 00141725
0157  00254 00152305
0157  00255 00120323
0157  00256 00142724
0157  00257 00120320
0157  00260 00147711
0157  00261 00147324
0158  00262 00140714 TBLC DATA ''ALARMS WILL BE TRANSMITTED TO CHICAGO''
```

```
0158  00263 00140722
0158  00264 00146723
0158  00265 00120327
0158  00266 00144714
0158  00267 00146240
0158  00270 00141305
0158  00271 00120324
0158  00272 00151301
0158  00273 00147323
0158  00274 00146711
0158  00275 00152324
0158  00276 00142704
0158  00277 00120324
0158  00300 00147640
0158  00301 00141710
0158  00302 00144703
0158  00303 00140707
0158  00304 00147640
0159  00305 70400000        END
        HOME     00003
        RSET     00017
        AGAN     00035
        AOP      00053
        A40      00065
        A41      00100
        A42      00113
        TIME     00123
        SUBX     00131
        SUB6     00135
        OFFF     00141
        SORY     00150
        FNCT     00160
        RESM     00170
        TTY      00200
        CRLF     00205
        LOCA     00213
        LOCB     00214
        LOCC     00215
        LOCD     00216
        TBLA     00217
        TBLB     00241
        TBLC     00262
ERRORS  0000     00000
```

SELECT FUNCT 72, EXECUTE SET POINT

REDUCE CNT IN SW8 TO 120, EXEC SET-PT

ALARMS WILL BE TRANSMITTED TO CHICAGO

#3 PRIORITY INTERRUPT

CLT #3

PROGRAM DESCRIPTION

IDENTIFICATION: Interrupt Diagnostics
- A. Teletype Input-Output Interrupts
- B. A/D Input Interrupt
- C. Modem Receive-Transmit Interrupts
- D. Power Fail-Auto Restart Interrupt

AUTHOR: Carl L. Thompson
Natural Gas Pipeline Company of America
Communications Division

ISSUED: September 9, 1976

PURPOSE: To Assist the Communication Technicians with Maintenance and Repair of Peripheral and Mainframe Interrupt Problems. This Program Tests the Interrupt Logic of each Peripheral Device as well as the Interrupt Logic in the Computer Mainframe.

COMPUTER: 810A

STORAGE: 656 Octal Locations

LOADING PROCEDURE: Relocatable Loader 16K, Modified
Program Counter --- Enter '36060
"A" Accumulator --- Enter '6000
"B" Accumulator --- Enter 0

Insert tape in reader and press start twice.

PROGRAM LOCATION '6000

This program consists of three diagnostics. Each diagnostic is called up through the teletype keyboard as follows.

After starting program at location '6000, type the following characters for the interrupt to be tested.

A. Type "T" for the teletype input and output interrupts. If both interrupts are operational the following data will be printed by the teletype each time the "T" is typed.
T------Input Interrupt Group 1, Level 1
T-----Output Interrupt Group 1, Level 2

Typing the letter "T" generates the input interrupt and induces the program to branch to the input interrupt subroutine which initiates the printing of "T------Input Interrupt Group 1, Level 1". This subroutine enables the output interrupt. The output interrupt induces the program to branch to the output interrupt subroutine which initiates the printing of "T------ Output Interrupt Group 1, Level 2". The program then returns to location '14, '15 and waits for another input from the teletype keyboard.

B. Type "A" for the A/D Interrupt

Typing the letter "A" induces the program to branch to the A/D subroutine. This routine enables the input interrupt, outputs channel '10 to the A/D (unit 15) and waits for an interrupt to be generated. Each time the interrupt is generated the program will print "A------Input Interrupt Group 1, Level 1". The program permits the interrupt to be generated ten (10) times then branches back to location '14, '15 and waits for another input from the teletype keyboard.

C. Type "M" for the Modem Interrupt

The modem and interface equipment must be operational and receiving messages from the master station in Chicago to operate this program.

Typing the letter "M" permits the program to enable the modem receive interrupt. When a message, from the master station, is received and addressed to your station, the receive interrupt will be generated inducing the program to branch to the receive (input) interrupt subroutine which initiates the printing of "M------ Receive Interrupt Group 0, Level 1". After printing this information the program enables the transmit (output) interrupt. This interrupt is generated almost immediately, inducing the program to branch to the transmit subroutine which initiates the printing of "M------***xmit Interrupt Group 0, Level 2". The program permits the interrupt to be generated ten (10) times, then branches back to location '14, '15 and waits for another input from the teletype keyboard. The transmit program <u>will not</u> transmit data to Chicago.

This program will print the "Receive and "Transmit" interrupt ten (10) times.

PROGRAM LOCATION '6500

Power Fail-Auto Restart Adjustment Program.

1. Using an iron vane voltmeter, Weston Model 433 or equivalent, connected to the outlet in bottom of computer mainframe, adjust the solatron voltage regulator for a reading of 117 to 118 volts.

2. Turn power off to computer and install the powerstat variable transformer in series with the computer mainframe AC cord. Remove card 8296, location 9G, and re-install on an extender board. Turn power on and adjust potentiometer R2 and R14 as follows.

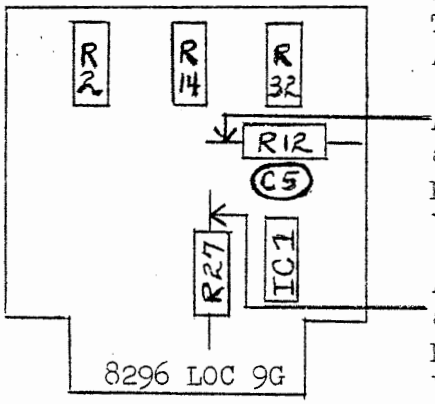

Set scope volts/Div to 50mv and Time Div & delay time to 1ms, Auto trigger.

Adj. R2 for a positive going pulse at this point with 110VAC to computer mainframe using powerstat variable transformer.

Adj. R14 for a positive going pulse at this point with 105VAC to computer mainframe using powerstat variable transformer.

R32 is not used by NGPL.

Start program at '6500 and slowly raise and lower AC voltage to computer with powerstat variable transformer to confirm that program halts at 105VAC input and starts or attempts to start at 110VAC.

3. Turn off AC power, disconnect powerstat variable transformer, turn on AC power and re-check for 117 to 118VAC.

4. Make adjustments on card 8245, location 10G as follows. Restart program at location '6500. Turn power off from computer and after 2-5 seconds turn power on. Check the "B" Accumulator for a reading of '100 to '105.

   If the "B" Accumulator is less than '100 the teletype will print;

   Increase R2 on 8245 at location G10.

If the "B" Accumulator is greater than '105 the teletype will print;

Decrease R2 on 8245 at location G10.

If the "B" Accumulator is equal to or between '100 to '105 the teletype will print;

R2 adjustment on 8245 is OK.

Turn power off and on a number of times (at least 10) after this adjustment is complete. If adjustments are correct and the power fail-auto restart logic is operational, the program should come up running without a failure.

Return system to normal operation.

```
0001                    ***********************************************
0002                    *    INTERRUPT DIAGNOSTIC
0003                    *
0004                    *    LOCATION '6000
0005                    *    TYPE T FOR TELETYPE IN-OUTPUT INTERRUPTS
0006                    *    PROGRAM SHOULD PRINT THE FOLLOWING EACH
0007                    *    TIME T IS TYPED
0008                    *    T------ INPUT INTERRUPT GROUP 1, LEVEL 1
0009                    *    T------OUTPUT INTERRUPT GROUP 1, LEVEL 2
0010                    *    TYPE A FOR A/D INTERRUPT, PROGRAM SHOULD
0011                    *    PRINT THE FOLLOWING TEN TIMES.
0012                    *    A------INPUT INTERRUPT GROUP 1, LEVEL 1
0013                    *    TYPE M FOR MODEM INTERRUPT, PROGRAM
0014                    *    SHOULD PRINT THE FOLLOWING TEN TIMES.
0015                    *    M------RECEIVE INTERRUPT GROUP 0, LEVEL 1
0016                    *    M------***XMIT INTERRUPT GROUP 0, LEVEL 2
0017                    *
0018                    *    LOCATION '6500
0019                    *    POWER FAIL-AUTO RESTART
0020                    *    AFTER ADJUSTMENT OF 8296 START PROG. TURN
0021                    *    PWR OFF TO COMP, WT 1-5 SEC TURN PWR ON.
0022                    *    IF B ACCUM = (1) LESS THAN '100 (2) '100-
0023                    *    '105 (3) MORE THAN '105, THE TTY WILL PRINT
0024                    *    (1) INCREASE R2 ON 8245, LOC G10
0025                    *    (2) R2 ADJUSTMENT ON 8245 IS OK.
0026                    *    (3) DECREASE R2 ON 8245, LOC G10
0027                    *
0028                    *    PREPARED BY CARL L THOMPSON 8-26-76
0029                    ***********************************************
0030  00000 00000000         REL
0031  00000 01100200 BEGN LAA  INPT          DAC TYPE
0032  00001 03300201         STA* IRUP       '1016
0033  00002 01100202         LAA  OTP1       DAC PRNT
0034  00003 03300203         STA* ORUP       '1017
0035  00004 00130001         CEU  1
0036  00005 00072000         DATA '72000
0037  00006 11100004         BRU  *-2
0038  00007 00000033 WATE NOP
0039  00010 01100215         LAA  CNT4       TBLA
0040  00011 03100110         STA  CHNG
0041  00012 00130600         PIE
0042  00013 00010001         DATA '10001     INPT INTRUP GRP 1 LEV 1
0043  00014 00000033         NOP
0044  00015 11100014         BRU  *-1        WT F/INTR F/TTY KEY BD
0045  00016 00000033 WAIT NOP
0046  00017 00130600         PIE
0047  00020 00010002         DATA '10002     OTPT INTRUP GRP 1 LEV 2
```

```
0048  00021 00000033        NOP
0049  00022 11100021        BRU  *-1            WT F/OTPT INTRUP
0050  00023 00000000 TYPE   HLT
0051  00024 00170201        AIP  1
0052  00025 11100024        BRU  *-1
0053  00026 03100221        STA  CNT8
0054  00027 15100207        CMA  TMP1           '324 T F/TTY
0055  00030 11100032        BRU  *+2
0056  00031 11100043        BRU  A3
0057  00032 11100033        BRU  *+1
0058  00033 15100211        CMA  TMP3           '315 M F/MODEM
0059  00034 11100036        BRU  *+2
0060  00035 11100050        BRU  A4             INIT F/MODEM SUB
0061  00036 11100037        BRU  *+1
0062  00037 15100210        CMA  TMP2           '301 ALPHA A F/A-D
0063  00040 11100042        BRU  *+2
0064  00041 11100053        BRU  A2             INIT F/A-D SUBROUTINE
0065  00042 11100055        BRU  A1
0066  00043 00000033 A3     NOP
0067  00044 12100074        SPB  ITYP
0068  00045 01100212        LAA  CNT1           DAC WAIT
0069  00046 03100023        STA  TYPE
0070  00047 11100055        BRU  A1
0071  00050 01100412 A4     LAA  CNTJ           DAC MODEM
0072  00051 03100023        STA  TYPE
0073  00052 11100055        BRU  A1
0074  00053 01100217 A2     LAA  CNT6           DAC ALOG
0075  00054 03100023        STA  TYPE
0076  00055 00000035 A1     TOI
0077  00056 11300023        BRU* TYPE
0078  00057 00000000 PRNT   HLT
0079  00060 00130601        PID
0080  00061 00010002        DATA '10002
0081  00062 00170401        MOP  1
0082  00063 00120000        DATA '120000        SPC
0083  00064 11100062        BRU  *-2
0084  00065 01100214        LAA  CNT3           TBLB
0085  00066 03100110        STA  CHNG           CHNG TBLA TO TBLB
0086  00067 12100074        SPB  ITYP
0087  00070 01100213        LAA  CNT2           DAC WATE
0088  00071 03100057        STA  PRNT
0089  00072 00000035        TOI
0090  00073 11300057        BRU* PRNT
0091  00074 00000000 ITYP   HLT
0092  00075 12100170        SPB  CRLF
0093  00076 01100221        LAA  CNT8
0094  00077 00001016        LSL  8
0095  00100 00170001        AOP  1
```

```
0096  00101 11100100        BRU   *-1
0097  00102 02077775        LBA   =-3
0098  00103 01500207        LAA   DASH+3,1        6 DASHES
0099  00104 12100161        SPB   TTYO
0100  00105 00000026        IBS
0101  00106 11100103        BRU   *-3
0102  00107 02077757        LBA   =-17
0103  00110 01500244 CHNG   LAA   TBLA+17,1       TBLA, TBLB, TBLC, TBLD
0104  00111 12100161        SPB   TTYO
0105  00112 00000026        IBS
0106  00113 11100110        BRU   *-3
0107  00114 11300074        BRU*  ITYP
0108  00115 00000033 ALOG   NOP
0109  00116 00130015        CEU   '15
0110  00117 00060000        DATA  '60000
0111  00120 11100116        BRU   *-2
0112  00121 01100222        LAA   INP1            DAC B2
0113  00122 03300201        STA*  IRUP            '1016
0114  00123 01077765        LAA   =-11
0115  00124 03100413        STA   CNTK            EXECUTE INTRUP 10 TIMES
0116  00125 00000033 B1     NOP
0117  00126 14100413        IMS   CNTK
0118  00127 11100131        BRU   *+2
0119  00130 11100140        BRU   B3
0120  00131 00130600        PIE
0121  00132 00010001        DATA  '10001          GRP 1 LEV 1
0122  00133 01100216        LAA   CNT5            CH '10
0123  00134 00170015        AOP   '15
0124  00135 11100134        BRU   *-1
0125  00136 00000033        NOP
0126  00137 11100136        BRU   *-1             WT F/INTRUP
0127  00140 00000033 B3     NOP
0128  00141 00130015        CEU   '15
0129  00142 00020000        DATA  '20000          DISCON A/D INTRUP
0130  00143 11100141        BRU   *-2
0131  00144 00130601        PID
0132  00145 00010001        DATA  '10001
0133  00146 11100000        BRU   BEGN
0134  00147 00000000 B2     HLT
0135  00150 00130601        PID
0136  00151 00010001        DATA  '10001
0137  00152 01100215        LAA   CNT4            TBLA
0138  00153 03100110        STA   CHNG
0139  00154 12100074        SPB   ITYP
0140  00155 01100220        LAA   CNT7            DAC B1
0141  00156 03100147        STA   B2
0142  00157 00000035        TOI
0143  00160 11300147        BRU*  B2
```

```
0144  00161 00000000 TTYO HLT
0145  00162 00170001      AOP  1
0146  00163 11100162      BRU  *-1
0147  00164 00001016      LSL  8
0148  00165 00170001      AOP  1
0149  00166 11100165      BRU  *-1
0150  00167 11300161      BRU* TTYO
0151  00170 00000000 CRLF HLT
0152  00171 00170401      MOP  1
0153  00172 00106400      DATA '106400
0154  00173 11100171      BRU  *-2
0155  00174 00170401      MOP  1
0156  00175 00105000      DATA '105000
0157  00176 11100174      BRU  *-2
0158  00177 11300170      BRU* CRLF
0159  00200 35400023 INPT DAC  TYPE
0160  00201 00001016 IRUP DATA '1016
0161  00202 35400057 OTP1 DAC  PRNT
0162  00203 00001017 ORUP DATA '1017
0163  00204 00126655 DASH DATA ''------''
0163  00205 00126655
0163  00206 00126655
0164  00207 00000324 TMP1 DATA '324          T F/TTY
0165  00210 00000301 TMP2 DATA '301
0166  00211 00000315 TMP3 DATA '315          M F/MODEM
0167  00212 35400016 CNT1 DAC  WAIT
0168  00213 35400007 CNT2 DAC  WATE
0169  00214 01500265 CNT3 LAA  TBLB+17,1
0170  00215 01500244 CNT4 LAA  TBLA+17,1
0171  00216 00000010 CNT5 DATA '10
0172  00217 35400115 CNT6 DAC  ALOG
0173  00220 35400125 CNT7 DAC  B1
0174  00221 00000000 CNT8 DATA 0              TEMP F/TYPED CHAR
0175  00222 35400147 INP1 DAC  B2
0176  00223 00120311 TBLA DATA '' INPUT INTERRUPT GROUP 1, LEVEL 1''
0176  00224 00147320
0176  00225 00152724
0176  00226 00120311
0176  00227 00147324
0176  00230 00142722
0176  00231 00151325
0176  00232 00150324
0176  00233 00120307
0176  00234 00151317
0176  00235 00152720
0176  00236 00120261
0176  00237 00126240
0176  00240 00146305
```

```
0176  00241 00153305
0176  00242 00146240
0176  00243 00130640
0177  00244 00147725 TBLB DATA ''OUTPUT INTERRUPT GROUP 1, LEVEL 2''
0177  00245 00152320
0177  00246 00152724
0177  00247 00120311
0177  00250 00147324
0177  00251 00142722
0177  00252 00151325
0177  00253 00150324
0177  00254 00120307
0177  00255 00151317
0177  00256 00152720
0177  00257 00120261
0177  00260 00126240
0177  00261 00146305
0177  00262 00153305
0177  00263 00146240
0177  00264 00131240
0178  00265 00151305 TBLC DATA ''RECEIVE INTERRUPT GROUP 0, LEVEL 1''
0178  00266 00141705
0178  00267 00144726
0178  00270 00142640
0178  00271 00144716
0178  00272 00152305
0178  00273 00151322
0178  00274 00152720
0178  00275 00152240
0178  00276 00143722
0178  00277 00147725
0178  00300 00150240
0178  00301 00130254
0178  00302 00120314
0178  00303 00142726
0178  00304 00142714
0178  00305 00120261
0179  00306 00125252 TBLD DATA ''***XMIT INTERRUPT GROUP 0, LEVEL 2''
0179  00307 00125330
0179  00310 00146711
0179  00311 00152240
0179  00312 00144716
0179  00313 00152305
0179  00314 00151322
0179  00315 00152720
0179  00316 00152240
0179  00317 00143722
0179  00320 00147725
```

```
0179  00321 00150240
0179  00322 00130254
0179  00323 00120314
0179  00324 00142726
0179  00325 00142714
0179  00326 00120262
0180  00327 00000033 MODM NOP
0181  00330 01100402      LAA  CBTA          DAC REC
0182  00331 03300403      STA* CBTB          '1002
0183  00332 01100404      LAA  CBTC          DAC XMIT
0184  00333 03300405      STA* CBTD          '1003
0185  00334 01077765      LAA  =-11
0186  00335 03100413      STA  CNTK          EXECUTE INTRUP 10 TIMES
0187  00336 00130014 STRT CEU  '14
0188  00337 00001000      DATA '1000
0189  00340 11100336      BRU  *-2
0190  00341 14100413      IMS  CNTK
0191  00342 11100344      BRU  *+2
0192  00343 11100000      BRU  BEGN
0193  00344 00130600      PIE
0194  00345 00000001      DATA 1
0195  00346 00000033      NOP
0196  00347 11100346      BRU  *-1           WT F/REC INTRUP
0197  00350 00000033      NOP
0198  00351 00000033 C1   NOP
0199  00352 00130600      PIE
0200  00353 00000002      DATA 2
0201  00354 00000033      NOP
0202  00355 11100354      BRU  *-1           WT F/XMT INTRUP
0203  00356 00000000 RECV HLT
0204  00357 00130601      PID
0205  00360 00000001      DATA 1
0206  00361 01100406      LAA  CBTF          TBLC
0207  00362 03100110      STA  CHNG
0208  00363 12100074      SPB  ITYP
0209  00364 01100407      LAA  CNTG          DAC C1
0210  00365 03100356      STA  RECV
0211  00366 00000035      TOI
0212  00367 11300356      BRU* RECV
0213  00370 00000000 XMIT HLT
0214  00371 00130601      PID
0215  00372 00000002      DATA 2
0216  00373 01100410      LAA  CNTH          TBLD
0217  00374 03100110      STA  CHNG
0218  00375 12100074      SPB  ITYP
0219  00376 01100411      LAA  CNTI          DAC STRT
0220  00377 03100370      STA  XMIT
0221  00400 00000035      TOI
```

```
00401 11300370        BRU* XMIT
00402 35400356 CBTA   DAC  RECV
00403 00001002 CBTB   DATA '1002
00404 35400370 CBTC   DAC  XMIT
00405 00001003 CBTD   DATA '1003
00406 01500306 CBTF   LAA  TBLC+17,1
00407 35400351 CNTG   DAC  C1
00410 01500327 CNTH   LAA  TBLD+17,1
00411 35400336 CNTI   DAC  STRT
00412 35400327 CNTJ   DAC  MODM
00413 00000000 CNTK   DATA 0              -10 CNTR
00414 35400000 CNTL   DAC  BEGN
               ***********************************************
               *    POWER FAIL DIAGNOSTIC
               ***********************************************
00500 70000500        ORG  '500
00500 01100564 BIGN   LAA  PDN            PWR DN SUBROUTINE
00501 03300566        STA* INTR           LOC '1000
00502 00000003        CLA
00503 03100570        STA  CNTA           TIMER F/PWR DN
00504 00000033        NOP
00505 11100504        BRU  *-1            WT F/105V OR LESS
00506 00000000 PRDN   HLT                 105V OR LESS
00507 01100565        LAA  PUP            PWR UP SUBROUTINE
00510 03300566        STA* INTR           LOC '1000
00511 14100570        IMS  CNTA           TIMER F/PWR DN
00512 11100511        BRU  *-1
00513 00000000        HLT
00514 00000000 PRUP   HLT                 110V OR MORE
00515 01100564        LAA  PDN
00516 03300566        STA* INTR
00517 01100567        LAA  DAC            DAC CHEK
00520 03100514        STA  PRUP
00521 00000035        TOI
00522 11300514        BRU* PRUP
00523 00000033 CHEK   NOP
00524 01100570        LAA  CNTA           PWR DN TIMER
00525 15100572        CMA  CNTC           '100
00526 11100536        BRU  INCR           INCR CNT
00527 11100530        BRU  *+1            OK
00530 15100571        CMA  CNTB,          '105
00531 11100532        BRU  *+1            OK
00532 11100541        BRU  OKAY           OK
00533 01100574        LAA  CNTE           DECREASE CNT
00534 03100546        STA  MSGE+3
00535 11100543        BRU  MSGE
00536 01100573 INCR   LAA  CNTD           INCR CNT
00537 03100546        STA  MSGE+3
```

```
0270  00540 11100543        BRU  MSGE
0271  00541 01100575 OKAY   LAA  CNTF          CNT OK
0272  00542 03100546        STA  MSGE+3
0273  00543 00000033 MSGE   NOP
0274  00544 12100170        SPB  CRLF
0275  00545 02077762        LBA  =-14
0276  00546 00000000        HLT                INCR-DECR OR CNT OK
0277  00547 12100555        SPB  TTYO
0278  00550 00000026        IBS
0279  00551 11100546        BRU  *-3
0280  00552 02100570        LBA  CNTA          PWR DN TIMER
0281  00553 12100170        SPB  CRLF
0282  00554 11100500        BRU  BIGN
0283  00555 00000000 TTYO   HLT
0284  00556 00170001        AOP  1
0285  00557 11100556        BRU  *-1
0286  00560 00001016        LSL  8
0287  00561 00170001        AOP  1
0288  00562 11100561        BRU  *-1
0289  00563 11300555        BRU* TTYO
0290  00564 35400506 PDN    DAC  PRDN
0291  00565 35400514 PUP    DAC  PRUP
0292  00566 00001000 INTR   DATA '1000
0293  00567 35400523 DAC    DAC  CHEK
0294  00570 00000000 CNTA   DATA 0
0295  00571 00000105 CNTB   DATA '105
0296  00572 00000100 CNTC   DATA '100
0297  00573 01500614 CNTD   LAA  TBL1+14,1      INCR CNT
0298  00574 01500632 CNTE   LAA  TBL2+14,1      DECR CNT
0299  00575 01500650 CNTF   LAA  TBL3+14,1      CNT OK
0300  00576 00144716 TBL1   DATA ''INCREASE R2 ON 8245, LOC G10''
0300  00577 00141722
0300  00600 00142701
0300  00601 00151705
0300  00602 00120322
0300  00603 00131240
0300  00604 00147716
0300  00605 00120270
0300  00606 00131264
0300  00607 00132654
0300  00610 00120314
0300  00611 00147703
0300  00612 00120307
0300  00613 00130660
0301  00614 00142305 TBL2   DATA ''DECREASE R2 ON 8245, LOC G10''
0301  00615 00141722
0301  00616 00142701
0301  00617 00151705
```

```
0301  00620 00120322
0301  00621 00131240
0301  00622 00147716
0301  00623 00120270
0301  00624 00131264
0301  00625 00132654
0301  00626 00120314
0301  00627 00147703
0301  00630 00120307
0301  00631 00130660
0302  00632 00151262 TBL3 DATA ''R2 ADJUSTMENT ON 8245 IS OK.''
0302  00633 00120301
0302  00634 00142312
0302  00635 00152723
0302  00636 00152315
0302  00637 00142716
0302  00640 00152240
0302  00641 00147716
0302  00642 00120270
0302  00643 00131264
0302  00644 00132640
0302  00645 00144723
0302  00646 00120317
0302  00647 00145656
0303  00650 70400000       END
       BEGN    00000
       WATE    00007
       WAIT    00016
       TYPE    00023
       A3      00043
       A4      00050
       A2      00053
       A1      00055
       PRNT    00057
       ITYP    00074
       CHNG    00110
       ALOG    00115
       B1      00125
       B3      00140
       B2      00147
       TTYO    00161
       CRLF    00170
       INPT    00200
       IRUP    00201
       OTP1    00202
       ORUP    00203
       DASH    00204
       TMP1    00207
```

	TMP2	00210
	TMP3	00211
	CNT1	00212
	CNT2	00213
	CNT3	00214
	CNT4	00215
	CNT5	00216
	CNT6	00217
	CNT7	00220
	CNT8	00221
	INP1	00222
	TBLA	00223
	TBLB	00244
	TBLC	00265
	TBLD	00306
	MODM	00327
	STRT	00336
	C1	00351
	RECV	00356
	XMIT	00370
	CBTA	00402
	CBTB	00403
	CBTC	00404
	CBTD	00405
	CBTF	00406
	CNTG	00407
	CNTH	00410
	CNTI	00411
	CNTJ	00412
	CNTK	00413
	CNTL	00414
	BIGN	00500
	PRDN	00506
	PRUP	00514
	CHEK	00523
	INCR	00536
	OKAY	00541
	MSGE	00543
	TTYO	00555
	PDN	00564
	PUP	00565
	INTR	00566
	DAC	00567
	CNTA	00570
	CNTB	00571
	CNTC	00572
	CNTD	00573
	CNTE	00574
	CNTF	00575
	TBL1	00576
	TBL2	00614
	TBL3	00632
ERRORS	0000	00000

PROGRAM DESCRIPTION

IDENTIFICATION: Input-Output Controller Diagnostic

AUTHOR: Carl L. Thompson
Natural Gas Pipeline Company of America
Communications Division

ISSUED: April 21, 1976

PURPOSE: To assist the Communication Technician with maintenance and repair of the I/O controller

COMPUTER: SEL 810A

STORAGE: 1156 Octal Locations

LOADING PROCEDURE: Relocatable Loader, 16K Modified
Program Counter, Enter '36060
"A" Accumulator, Enter '6000
"B" Accumulator = 0

Insert program tape in reader and press start twice.

Review the following operating procedures before starting program at location '6000.

I/O CONTROLLER PROGRAM

Program permits testing I/O controller logic, input and output relays without danger of upsetting station operation.

The I/O controller is located in interface cabinet number one (1) and contains logic and relay cards per the attached Exhibit Number 3. The input and output channel numbers vary at some stations, therefore your station may not contain the full complement of logic cards on the exhibit.

The program energizes each output relay, one relay at a time, in the auto mode. Utilizing a special test jumper cable, the contacts of the output relay energize an input relay coil. The program records the closed or open contact of the input relay. A defective relay or logic circuit can be easily identified and repaired.

The program is modified through the teletype keyboard as follows:

As each number is typed, the program will print the channels under test.

TABLE 1

STATION APPLICABLE	TYPE CHARACTER	PROGRAM MODIFIED FOR TESTING AS FOLLOWS
All	1	Test input chan. 46 with output chan. 44.
All	2	Test input chan. 47 with output chan. 45.
All	3	Test input chan. 50 with output chan. 46, Bits 8-15.
All	4	Test input chan. 50 with output chan. 46, Bits 0-7.
Sta. 191-199 & 113	5	Test input chan. 51 with output chan. 44.
Sta. 167, 168, 169 & Chicago	6	Test input chan. 51 with output chan. 47.
Station 169 & Chicago	7	Test input chan. 52 with output chan. 50.
Station 169 & Chicago	8	Test input chan. 53 with output chan. 51.
All	L	Convert from auto mode to LCS mode. Select bit number by setting corresponding control switch.
All	C	Convert from LCS to auto mode.
All	H	Program will halt on detecting an error and display the bit under test in the "A" Accumulator and the error in the "B" Accumulator.
All	G	Inhibit halt on error.
All	P	Print test results.

To commence testing, proceed as follows:

1. Remove 6, I/O cables connected to P1, P2, P3, P5, P6 and P7, from the rear of input and output relay panel. The cable connectors are labeled as follows:

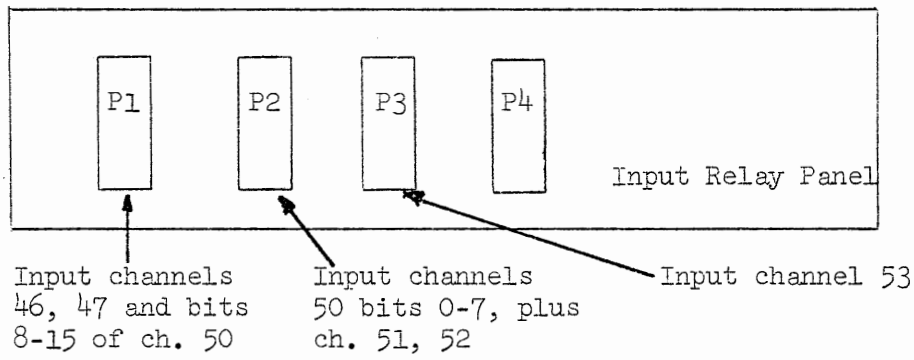

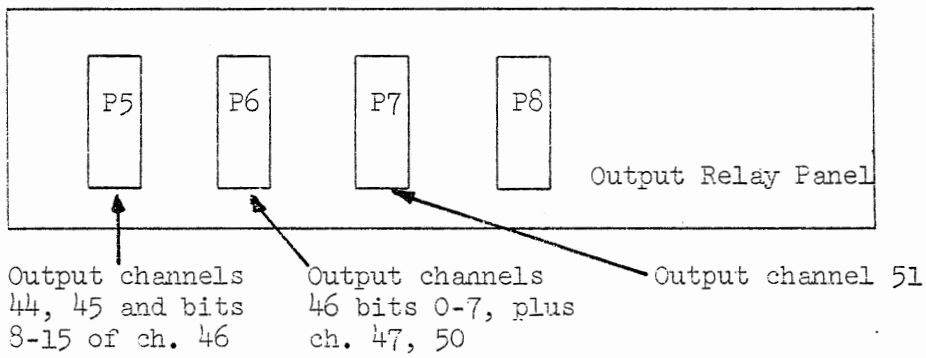

2. Connect the special jumper cable as follows:

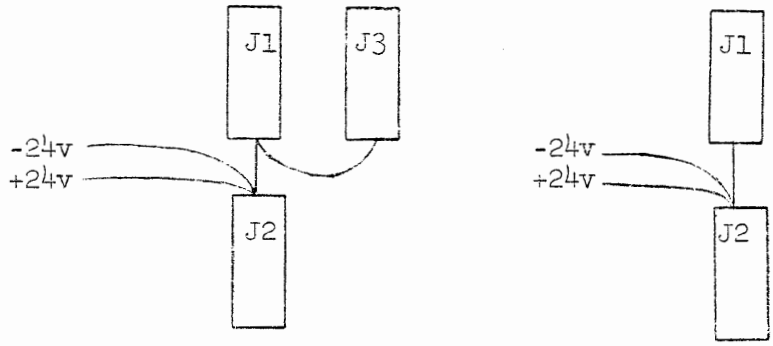

For Station 191-199 & 113

For Station 167, 168, 169 & Chicago

The jumper cable connectors are labeled J1-J3 as shown above.

a. Connect J1 to P1 and J2 to P5 for first sequence of tests.

b. Connect the DC leads to 24 volts as labeled.

c. Start program at location '6000.

3. Press Number 1 on teletype keyboard. The following message will be typed.

Test Input Ch. 46, Output Ch. 44.

The program will test the 16 I/O relays associated with these channels until a program change is made through the teletype keyboard.

To print log of tests press the letter "P" on teletype.

By typing the number 2 on the teletype keyboard (refer to Table 1) tests can be made for input channel 47, with output channel 45.

By typing the number 3, tests can be made for input channel 50 with output channel 46, bits 8-15. The test jumper cable must be changed to test remaining channels as follows:

4. For Station 191-199 and 113

a. Remove J1 from P1.

b. Connect J3 to P2.

c. Press number 5 on teletype keyboard to test input channel 51 with output channel 44. Following the completion of this test;

d. Remove J3 from P2.

e. Connect J1 to P2.

f. Move J2 to P6.

g. Press number 4 on teletype keyboard to test input channel 50 with output channel 46, bits 0-7.

5. For Station 167, 168, 169 & Chicago

a. Remove J1 from P1.

b. Connect J1 to P2.

c. Remove J2 from P5.

d. Connect J2 to P6.

Test remaining channels as listed in Table 1.

Please note that Station 169 utilizes input channel 53 and output channel 51. To test these channels the jumper cable must be moved to P3 and P7 respectively.

DETAIL OF PROGRAM MODIFICATION THROUGH TELETYPE KEYBOARD

L = Load Control Switch Mode

In this mode, one or more relays may be tested at one time. The "A" Accumulator will always display the bit position (relay) under test and the "B" Accumulator will display the results of the test. This mode is very useful in diagnosing a problem or testing a suspected faulty input or output operation.

Important Note: An output relay, once energized, will remain energized until you reset the bit for that relay or master clear the computer.

C = Auto Mode

This mode automatically tests each relay of the channel selected from Table 1. Each relay is tested individually at approximately ½ second intervals for an open or closed condition. The results of each relay test is stored in a table.

H = Halt

By typing the letter "H" the program will halt on detecting an error and will display the bit under test in the "A" Accumulator and the error in the "B" Accumulator.

G = Inhibit Halt on Error

Typing the letter "G" will inhibit the program from halting on an error.

P = Print

By typing the letter "P" the program will print the results of the test from the auto mode only. A sample of print-out is attached.

If a character is printed other than those listed in Table 1, the program will print "Invalid Request".

The program will normally operate in the auto mode and will not halt on an error after the initial loading of program. To change this mode of operation, type the characters described above.

INPUT-OUTPUT CONTROLLER INTERFACE UNIT

EXHIBIT NO. 3

1F1 A

15	14	13	12	11	10	9	8	7	6	5	4	3	2	1
83142 -005	83142 -005	83142 -005	83142 -005	83142 -005	83142 -005	83142 -006	83142 -006	83142 -006	83142 -006					
0-7	8-15	0-7	8-15	0-7	8-15	0-7	8-15	0-7	8-15					
Ch50 51	Ch50 51	Ch46 47	Ch46 47	Ch44 45	Ch44 45	Ch42 43	Ch42	Ch40 41	Ch40 41					
		Word Output Unit												

1F1 B

15	14	13	12	11	10	9	8	7	6	5	4	3	2	1
83150 -11D	83150 -11D	83150 -11D	83150 -11D	83150 -3D	83150 -3D	83150 -3D	83150 -3D	83150 -3D	83150 -3D		83160 8 Bit Term	83160 8 Bit Term	83161 Sync Logic	83137 Unit Decode
0-7	8-15	0-7	8-15	0-7	8-15	0-7	8-15	0-7	8-15		0-7	8-15		
50-51	50-51	46-47	46-47	44-45	44-45	43	42-43	40-41	40-41					
		Word Input Unit												

1F2 A

12	11	10	9	8	7	6	5	4	3	2	1
100011	100011	100011	100011	100011	100011	100011	100011	100011	100011	100011	100011
Input Relay											
0-7	8-15	0-7	8-15	0-7	8-15	0-7	8-15	0-7	8-15	0-7	8-15
53	53	52	52	51	51	50	50	47	47	46	46

1F2 C

12	11	10	9	8	7	6	5	4	3	2	1
100012	100012	100012	100012	100012	100012	100012	100012	100012	100012	100012	100012
Output Relay											
0-7	8-15	0-7	8-15	0-7	8-15	0-7	8-15	0-7	8-15	0-7	8-15
51	51	50	50	47	47	46	46	45	45	44	44

```
LC
EJ
 07156 00107

TURN OFF SWITCH S1 NEXT TO WATCH DOG RELAY.
UNPLUG DISPLAY RELAY CARDS ABOVE WATCH DOG RELAY.
PRESS THE NUMBER ON TTY ASSIGNED TO THE CHANNEL FOR TEST.

1
TEST INPUT CH 46, OUTPUT CH 44


2
TEST INPUT CH 47, OUTPUT CH 45

3
 TEST IN CH 50 OUT CH 46 BITS 8-15

4
 TEST IN CH 50 OUT CH 46 BITS 0-7

5
TEST INPUT CH 51, OUTPUT CH 44

6
TEST INPUT CH 51, OUTPUT CH 47

7
TEST INPUT CH 52, OUTPUT CH 50

8
TEST INPUT CH 53, OUTPUT CH 51

9

INVALID REQUEST

1
TEST INPUT CH 46, OUTPUT CH 44

P

TOTAL TESTS = 00009

BIT    GOOD TESTS
0       00009
1       00009
2       00009
3       00009
4       00009
5       00009
6       00009
7       00009
8       00009
9       00008
10      00008
11      00008
12      00008
13      00008
14      00008
15      00008
```

INPUT AND OUTPUT RELAY CARD LOCATIONS

FIGURE I

INPUT RELAY UNIT

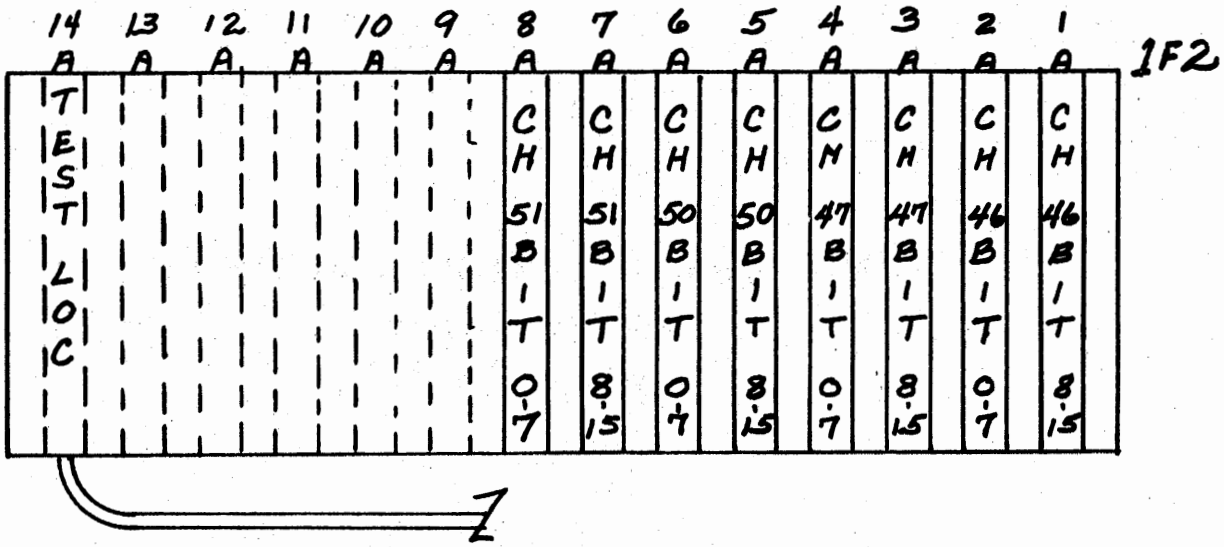

OUTPUT RELAY UNIT

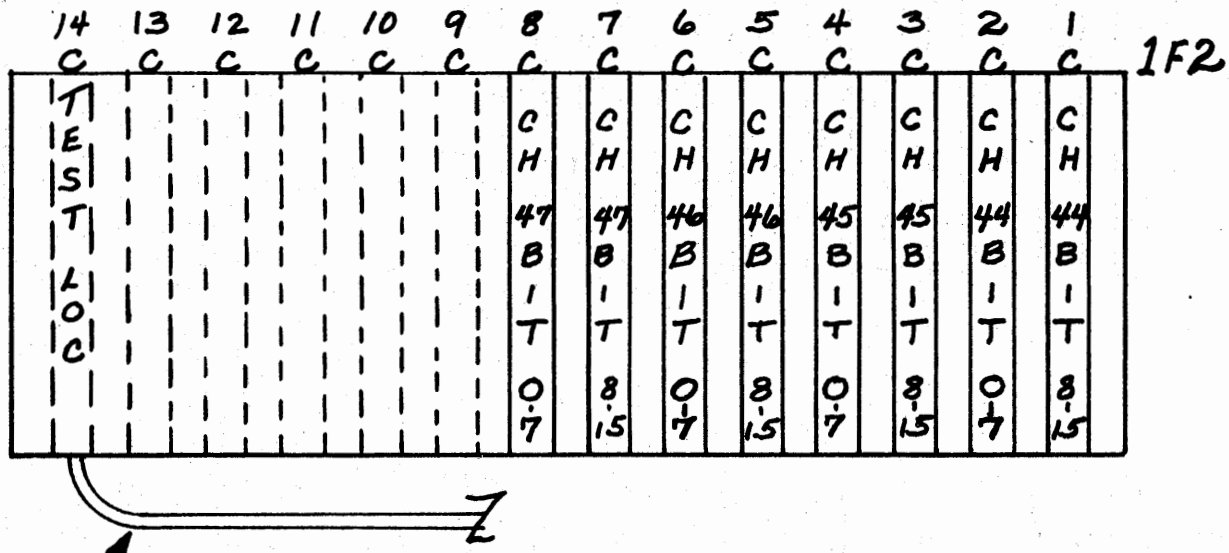

CONNECT JUMPER CABLE BETWEEN CARD AT LOCATION 14 AND CONNECTER CABLE FROM CHANNEL NO. AND SWITCH POSITION UNDER TEST.

6/17/74

WIRING DIAGRAM OF INPUT AND OUTPUT RELAY CARD INCLUDING JUMPER CABLE

FIGURE II

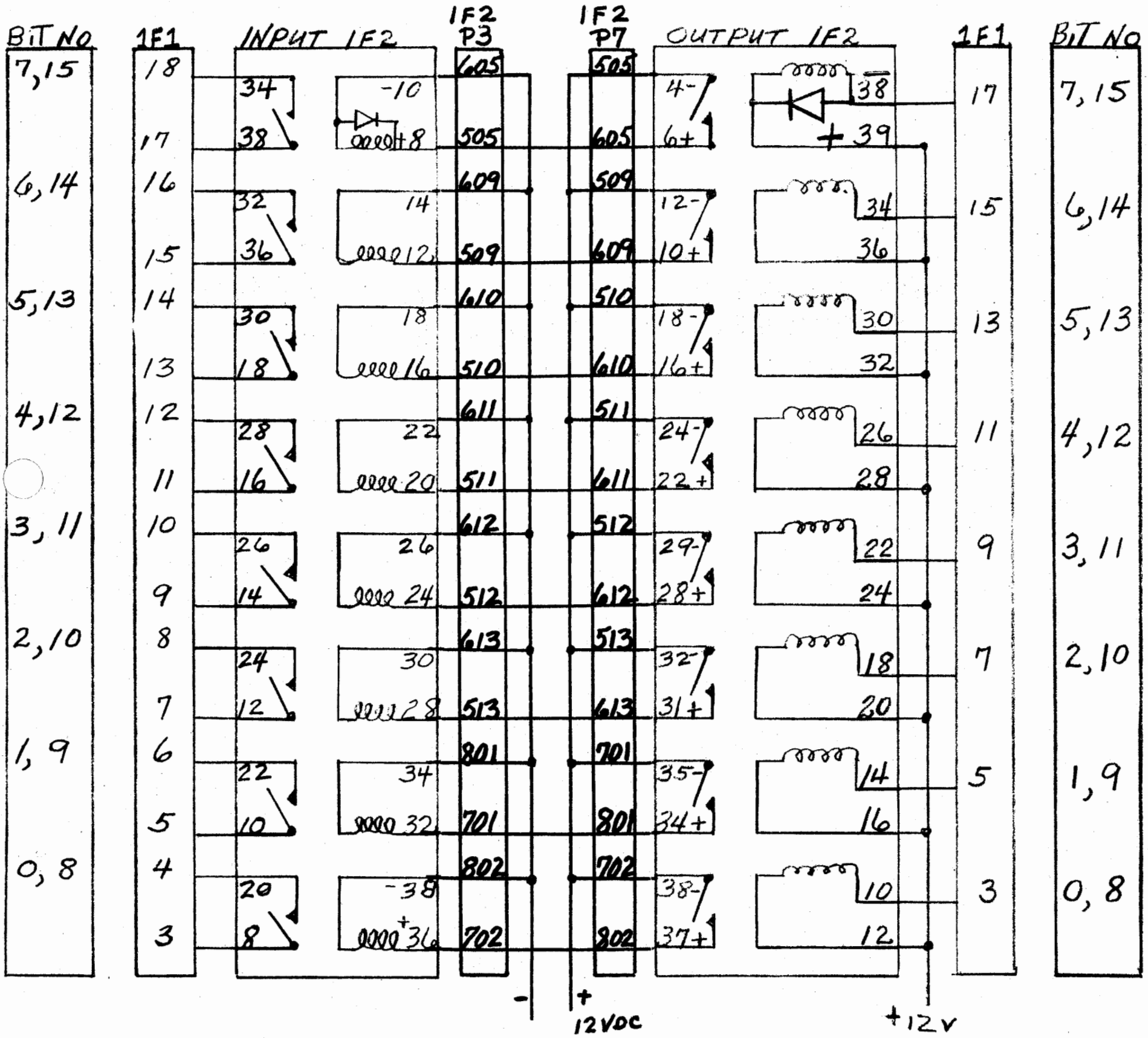

JUMPER CABLE FOR TEST LOCATION 14A AND 14C

SLJ 6/17/74

```
0001                    ****************************************
0002                    *  CARL L THOMPSON                     *
0003                    *  COMMUNICATIONS DIVISION             *
0004                    *  NATURAL GAS PIPELINE COMPANY OF AMERICA *
0005                    *  BEATRICE,NEBRASKA 68310             *
0006                    *                                      *
0007                    *  TEST OUTPUT AND INPUT LOGIC         *
0008                    *  JUNE 6,1974                         *
0009                    ****************************************
0010  00000 00000000       REL
0011  00000A00000000  24                          IDENTIFY # 24 CARD PUNCH
0012  00001 01040000 STRT LAA   ='040000          TURN SYSTEM ON
0013  00002 00170143      AOP   '43,W
0014  00003 01077774      LAA   =-4
0015  00004 03100364      STA   CNT6
0016  00005 01077770      LAA   =-8
0017  00006 03100366      STA   CNT8              CNT FOR FINAL TEST
0018  00007 01100367      LAA   T1
0019  00010 03100356      STA   CNTA
0020  00011 01100370      LAA   T2
0021  00012 03100357      STA   CNTB
0022  00013 12100276      SPB   CRLF
0023  00014 02077736      LBA   =-34
0024  00015 01500443 A1   LAA   MSGA+34,1         SUBR F/TEST SPECIFIC CH
0025  00016 12100335      SPB   TTY
0026  00017 00000026      IBS
0027  00020 11100015      BRU   A1
0028  00021 02100662      LBA   STRZ              START ADDR SUBROUTINE
0029  00022 12100330      SPB   MASK              CLEAR START ADDRESS
0030  00023 12100342      SPB   SUB               CONV 3 DIGIT ADDRESS B/D
0031  00024 12100276      SPB   CRLF
0032  00025 02077771      LBA   =-7
0033  00026 01500451 A3   LAA   MSGC+7,1          AOP 46,W AT 15XXX
0034  00027 12100335      SPB   TTY
0035  00030 00000026      IBS
0036  00031 11100026      BRU   A3
0037  00032 02100705      LBA   AO                LOCATION AOP 46,W
0038  00033 12100330      SPB   MASK              CLR ADDRESS OF AOP 46,W
0039  00034 12100342      SPB   SUB               CONV 3 DIGIT ADDRESS B/D
0040  00035 12100276      SPB   CRLF
0041  00036 02077771      LBA   =-7
0042  00037 01500460 A4   LAA   MSGD+7,1          AIP 51,W AT 15XXX
0043  00040 12100335      SPB   TTY
0044  00041 00000026      IBS
0045  00042 11100037      BRU   A4
0046  00043 02100716      LBA   AI                LOCATION OF AIP 51,W
0047  00044 12100330      SPB   MASK              CLEAR ADDRESS OF AIP 51

0048  00045 12100342      SPB   SUB               CONV 3 DIGIT ADDRESS B/D
0049  00046 12100276      SPB   CRLF
0050  00047 02077771      LBA   =-7
0051  00050 01500467 A5   LAA   MSGE+7,1          SWITCH TEST AT 15XXX
0052  00051 12100335      SPB   TTY
0053  00052 00000026      IBS
0054  00053 11100050      BRU   A5
0055  00054 02100740      LBA   SW                LOCATION OF SWITCH TEST
0056  00055 12100330      SPB   MASK              CLEAR ADDR OF SW TEST
```

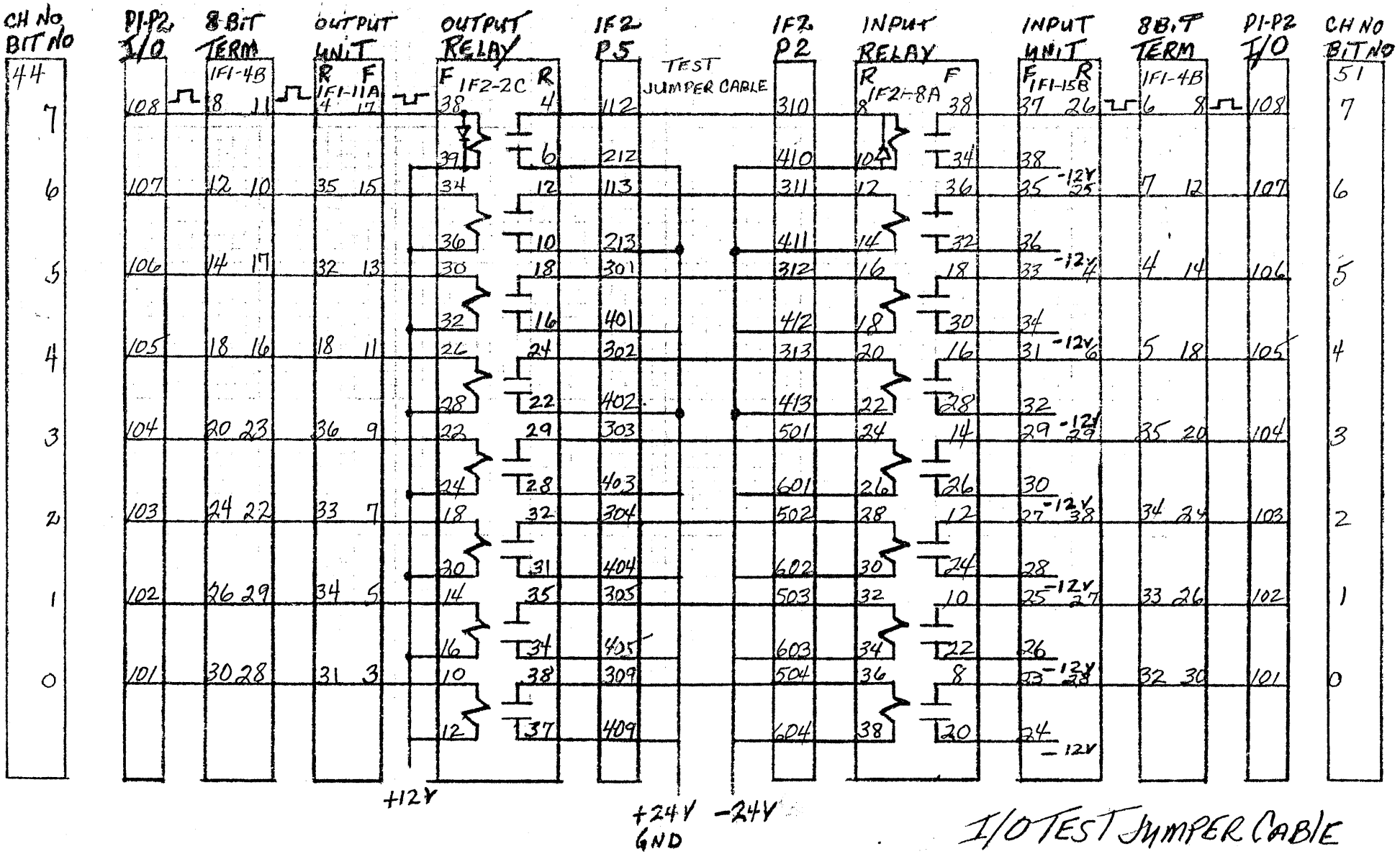

F = FRONT CONNECTOR
R = REAR CONNECTOR
⎍ = HIGH WHEN TRUE
⎌ = LOW WHEN TRUE

I/O TEST JUMPER CABLE FOR TESTING OUTPUT CHANNEL 44 AND INPUT CHANNEL 51.

8h2 9-23-

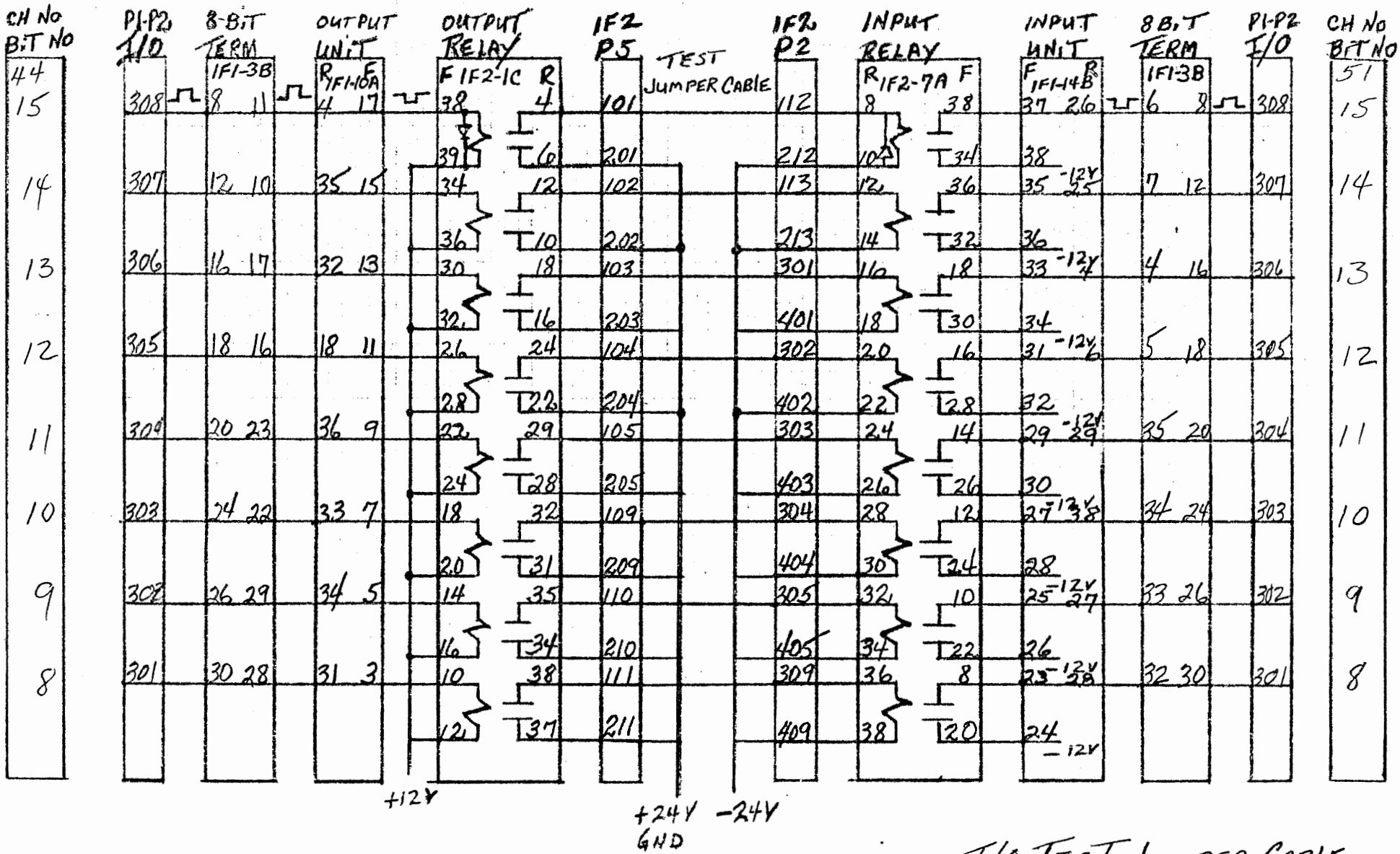

F = FRONT CONNECTOR
R = REAR CONNECTOR
⎍ = HIGH WHEN TRUE
⎌ = LOW WHEN TRUE

I/O TEST JUMPER CABLE FOR TESTING OUTPUT CH. 44 AND INPUT CHANNEL 51.

SK2 9-23-76

```
0001                    ***********************************************
0002                    *    I/O CONTROLLER DIAGNOSTIC
0003                    *
0004                    *    1= AOP 44, AIP 46                P1-P5
0005                    *    2= AOP 45, AIP 47                P1-P5
0006                    *    3= AOP 46, AIP 50 BITS 8-15      P1-P5
0007                    *    4= AOP 46, AIP 50 BITS 0-7       P2-P6
0008                    *    5= AOP 44, AIP 51                P2-P5
0009                    *    6= AOP 47, AIP 51                P2-P6
0010                    *    7= AOP 50, AIP 52                P2-P6
0011                    *    8= AOP 51, AIP 53                P3-P7
0012                    *    C=CLEAR LCS MODE
0013                    *    G=INHIBIT HALT ON ERROR
0014                    *    H=HALT PROGRAM ON EROR ''A''=OK ''B''=EROR
0015                    *    L=LCS, TEST BIT WITH CONTROL PANEL SWITCH
0016                    *    P=PRINT TEST RESULTS
0017                    *    PREPARED BY CARL L THOMPSON  4-15-76   7-15
0018                    ***********************************************
0019  00000 00000000         REL
0020  00000 00130600         PIE
0021  00001 00010001         DATA '10001
0022  00002 00130101         CEU  1,W
0023  00003 00062000         DATA '62000
0024  00004 01100576         LAA  TTYI
0025  00005 03300617         STA* I016
0026  00006 01040000         LAA  ='40000        TRN SYS ON
0027  00007 00170143         AOP  '43,W
0028  00010 12100557         SPB  CLIR
0029  00011 01101111         LAA  ZERO
0030  00012 00000022         SAZ
0031  00013 11100042         BRU  BEGN
0032  00014 12100433         SPB  CRLF
0033  00015 12100433         SPB  CRLF
0034  00016 02077752         LBA  =-22           NXT 18 PRNT PRELIMINARY
0035  00017 01501023         LAA  TBLH+22,1      INSTRUCTIONS
0036  00020 12100426         SPB  TTYO
0037  00021 00000026         IBS
0038  00022 11100017         BRU  *-3
0039  00023 12100433         SPB  CRLF
0040  00024 02077747         LBA  =-25
0041  00025 01501054         LAA  TBLH+47,1
0042  00026 12100426         SPB  TTYO
0043  00027 00000026         IBS
0044  00030 11100025         BRU  *-3
0045  00031 12100433         SPB  CRLF
0046  00032 02077743         LBA  =-29
0047  00033 01501111         LAA  TBLH+76,1
```

```
0048  00034 12100426        SPB   TTYO
0049  00035 00000026        IBS
0050  00036 11100033        BRU   *-3
0051  00037 12100433        SPB   CRLF
0052  00040 01000001        LAA   =1              TYPE INSTR 1 TIME ONLY
0053  00041 03101111        STA   ZERO
0054  00042 00000033 BEGN   NOP
0055  00043 00000033        NOP
0056  00044 11100043        BRU   *-1
0057  00045 00000033        NOP
0058  00046 00000033 STRT   NOP
0059  00047 00130001        CEU   1
0060  00050 00062000        DATA  '62000
0061  00051 00000033        NOP
0062  00052 01040000        LAA   ='40000
0063  00053 00170143        AOP   '43,W
0064  00054 02077760 LBA    LBA   =-16            OR LBA=-8
0065  00055 01000001        LAA   =1
0066  00056 05100621        AMA   TBLA            NO OF TESTS
0067  00057 03100621        STA   TBLA
0068  00060 01500666 LAA    LAA   BITS+16,1
0069  00061 00000033 AGAN   NOP                   OR LCS
0070  00062 03101155        STA   CHEK
0071  00063 00170144 AOP    AOP   '44,W
0072  00064 00000033        NOP
0073  00065 14101114        IMS   NEG1
0074  00066 11100065        BRU   *-1
0075  00067 00000033        NOP
0076  00070 00170346 AIP    AIP   '46,W
0077  00071 03101113        STA   TEMP
0078  00072 00000033        NOP                   OR BRU LOCS F/LGS
0079  00073 01101155        LAA   CHEK
0080  00074 15101113        CMA   TEMP
0081  00075 11100077        BRU   *+2
0082  00076 11100100        BRU   *+2
0083  00077 11100104        BRU   EROR
0084  00100 01000001        LAA   =1
0085  00101 05500642 AMA    AMA   TBLB+16,1
0086  00102 03500642 STA    STA   TBLB+16,1       STORE GOOD TSTS
0087  00103 11100112        BRU   DLY
0088  00104 04100615 EROR   STB   CNTO
0089  00105 02101113        LBA   TEMP            EROR
0090  00106 00000033 HALT   NOP                   OR HALT F/H
0091  00107 02100615        LBA   CNTO
0092  00110 00000033        NOP
0093  00111 00000033        NOP
0094  00112 00000033 DLY    NOP
```

```
0096  00114 00000026        IBS
0097  00115 11100060        BRU  LAA
0098  00116 11100046        BRU  STRT          RE-STRT TST
0099  00117 00000033 LOCS  NOP                 USED F/LCS ONLY
0100  00120 01040000        LAA  ='40000
0101  00121 00170143        AOP  '43,W
0102  00122 02101113        LBA  TEMP
0103  00123 01101155        LAA  CHEK
0104  00124 15101113        CMA  TEMP
0105  00125 11100127        BRU  *+2
0106  00126 11100132        BRU  *+4
0107  00127 00000033        NOP
0108  00130 00000033 HOLT  NOP                 OR HALT F/H
0109  00131 00000033        NOP
0110  00132 14101112        IMS  NTHO
0111  00133 11100132        BRU  *-1
0112  00134 11100060        BRU  LAA
0113  00135 25400000 TTYR  DAC  **
0114  00136 12100433        SPB  CRLF
0115  00137 00170301        AIP  1,W
0116  00140 03100577        STA  CNTA
0117  00141 00001016        LSL  8
0118  00142 00170101        AOP  1,W
0119  00143 12100433        SPB  CRLF
0120  00144 01100577        LAA  CNTA
0121  00145 15000314        CMA  ='314         L=LCS
0122  00146 11100150        BRU  *+2
0123  00147 11100220        BRU  LCSS
0124  00150 15000303        CMA  ='303         C=CLEAR LCS MODE
0125  00151 11100153        BRU  *+2
0126  00152 11100225        BRU  CLER
0127  00153 15000320        CMA  ='320         P=PRINT TSTS
0128  00154 11100156        BRU  *+2
0129  00155 11100215        BRU  PRNT
0130  00156 15000307        CMA  ='307         G=GO
0131  00157 11100161        BRU  *+2
0132  00160 11100231        BRU  GO
0133  00161 15000310        CMA  ='310         H=HALT
0134  00162 11100164        BRU  *+2
0135  00163 11100235        BRU  STOP
0136  00164 15000261        CMA  ='261         =1 AOP 44, AIP 46
0137  00165 11100167        BRU  *+2
0138  00166 11100241        BRU  ONE
0139  00167 15000262        CMA  ='262         =2 AOP 45, AIP 47
0140  00170 11100172        BRU  *+2
0141  00171 11100252        BRU  TOO
0142  00172 15000263        CMA  ='263         =3 AOP 46, AIP 50 0-7
0143  00173 11100175        BRU  *+2
```

```
0144  00174 11100263        BRU  THRE
0145  00175 15000264        CMA  ='264          =4 AOP 46, AIP 50 8-15
0146  00176 11100200        BRU  *+2
0147  00177 11100276        BRU  FOUR
0148  00200 15000265        CMA  ='265          =5 AOP 44, AIP 51
0149  00201 11100203        BRU  *+2
0150  00202 11100315        BRU  FIVE
0151  00203 15000266        CMA  ='266          =6 AOP 47, AIP 51
0152  00204 11100206        BRU  *+2
0153  00205 11100326        BRU  SIX
0154  00206 15000267        CMA  ='267          =7 AOP 50, AIP 52
0155  00207 11100211        BRU  *+2
0156  00210 11100337        BRU  SEVN
0157  00211 15000270        CMA  ='270          =8 AOP 51, AIP 53
0158  00212 11100214        BRU  *+2
0159  00213 11100350        BRU  EGHT
0160  00214 11100411        BRU  INVL           INVALID REQUEST
0161  00215 01101122 PRNT   LAA  CNTS           DAC PRIT
0162  00216 03100135        STA  TTYR
0163  00217 11100423        BRU  TOI+3
0164  00220 01101115 LCSS   LAA  LCS
0165  00221 03100061        STA  AGAN
0166  00222 01101116        LAA  BRU
0167  00223 03100072        STA  AIP+2
0168  00224 11100420        BRU  TOI
0169  00225 01100616 CLER   LAA  NOP
0170  00226 03100072        STA  AIP+2
0171  00227 03100061        STA  AGAN
0172  00230 11100420        BRU  TOI
0173  00231 01100616 GO     LAA  NOP
0174  00232 03100106        STA  HALT
0175  00233 03100130        STA  HOLT
0176  00234 11100420        BRU  TOI
0177  00235 00000003 STOP   CLA
0178  00236 03100130        STA  HOLT
0179  00237 03100106        STA  HALT
0180  00240 11100420        BRU  TOI
0181  00241 01100607 ONE    LAA  CNTI           AOP 44
0182  00242 03100063        STA  AOP
0183  00243 01100610        LAA  CNTJ           AIP '46,W
0184  00244 03100070        STA  AIP
0185  00245 01101133        LAA  OU4            OUT CH 44
0186  00246 03100735        STA  TBLE+14
0187  00247 01101144        LAA  IN6            IN CH 46
0188  00250 03100726        STA  TBLE+7
0189  00251 11100372        BRU  ALL            TST 16 BITS
0190  00252 01100600 TOO    LAA  CNTB           AOP 45
0191  00253 03100063        STA  AOP
```

```
0192  00254 01100601        LAA  CNTC        AIP '47,W
0193  00255 03100070        STA  AIP
0194  00256 01101134        LAA  OU5         OUT CH 45
0195  00257 03100735        STA  TBLE+14
0196  00260 01101145        LAA  IN7         IN CH 47
0197  00261 03100726        STA  TBLE+7
0198  00262 11100372        BRU  ALL         TST 16 BITS
0199  00263 01100602 THRE   LAA  CNTD        AOP 46 8-15
0200  00264 03100063        STA  AOP
0201  00265 01100603        LAA  CNTE        AIP 50 8-15
0202  00266 03100070        STA  AIP
0203  00267 01101146        LAA  CNT2        8- F/BIT
0204  00270 03100715        STA  TBLD+15     TST IN CH OUT CH BIT 0-0
0205  00271 01101147        LAA  CNT3        15 F/BIT
0206  00272 03100716        STA  TBLD+16
0207  00273 01101117        LAA  CNTP        LAA BITS+16,1
0208  00274 03100060        STA  LAA
0209  00275 11100361        BRU  PART
0210  00276 01101150 FOUR   LAA  CNT4        AOP 46 0-7
0211  00277 03100063        STA  AOP
0212  00300 01101151        LAA  CNT5        AIP 50 0-7
0213  00301 03100070        STA  AIP
0214  00302 01101152        LAA  CNT6        0- F/BIT
0215  00303 03100715        STA  TBLD+15     TST IN CH OUT CH BIT 0-0
0216  00304 01101153        LAA  CNT7        7 SPC F/BIT
0217  00305 03100716        STA  TBLD+16
0218  00306 01101154        LAA  CNT8        LAA BITS+8,1
0219  00307 03100060        STA  LAA
0220  00310 01100605        LAA  CNTG        AMA TBLB +8,1
0221  00311 03100101        STA  AMA
0222  00312 01100606        LAA  CNTH        STA TBLB+8,1
0223  00313 03100102        STA  STA
0224  00314 11100361        BRU  PART
0225  00315 01101124 FIVE   LAA  CNTU        AOP 44
0226  00316 03100063        STA  AOP
0227  00317 01101125        LAA  CNTV        AIP 51
0228  00320 03100070        STA  AIP
0229  00321 01101133        LAA  OU4         OUT CH 44
0230  00322 03100735        STA  TBLE+14
0231  00323 01101141        LAA  IN1         IN CH 51
0232  00324 03100726        STA  TBLE+7
0233  00325 11100372        BRU  ALL         TST 16 BITS
0234  00326 01101126 SIX    LAA  CNTW        AOP 47
0235  00327 03100063        STA  AOP
0236  00330 01101125        LAA  CNTV        AIP 51
0237  00331 03100070        STA  AIP
0238  00332 01101136        LAA  OU7         OUT CH 43
0239  00333 03100735        STA  TBLE+14
```

```
0240  00334 01101141        LAA  IN1          IN CH 51
0241  00335 03100726        STA  TBLE+7
0242  00336 11100372        BRU  ALL          TST 16 BITS
0243  00337 01101127 SEVN   LAA  CNTX         AOP 50
0244  00340 03100063        STA  AOP
0245  00341 01101130        LAA  CNTY         AIP 52
0246  00342 03100070        STA  AIP
0247  00343 01101137        LAA  OU8          OUT CH 50
0248  00344 03100735        STA  TBLE+14
0249  00345 01101142        LAA  IN2          IN CH 52
0250  00346 03100726        STA  TBLE+7
0251  00347 11100372        BRU  ALL          TST 16 BITS
0252  00350 01101131 EGHT   LAA  CNTZ         AOP 51
0253  00351 03100063        STA  AOP
0254  00352 01101132        LAA  CNT1         AIP 53
0255  00353 03100070        STA  AIP
0256  00354 01101140        LAA  OU9          OUT CH 51
0257  00355 03100735        STA  TBLE+14
0258  00356 01101143        LAA  IN3          IN CH 53
0259  00357 03100726        STA  TBLE+7
0260  00360 11100372        BRU  ALL          TST 16 BITS
0261  00361 00000033 PART   NOP
0262  00362 01100604        LAA  CNTF         LBA=-8
0263  00363 03100054        STA  LBA          LBA=-8
0264  00364 02077757        LBA  =-17
0265  00365 01500717        LAA  TBLD+17,1
0266  00366 12100426        SPB  TTYO
0267  00367 00000026        IBS
0268  00370 11100365        BRU  *-3
0269  00371 11100420        BRU  TOI
0270  00372 00000033 ALL    NOP
0271  00373 01100612        LAA  CNTL         STA TBLB+16,1
0272  00374 03100102        STA  STA
0273  00375 01100611        LAA  CNTK         AMA TBLB+16,1
0274  00376 03100101        STA  AMA
0275  00377 01100614        LAA  CNTN         LBA=-16
0276  00400 03100054        STA  LBA
0277  00401 01101117        LAA  CNTP         LAA BITS+16,1
0278  00402 03100060        STA  LAA
0279  00403 02077761        LBA  =-15
0280  00404 01500736        LAA  TBLE+15,1    TST IN CH XX OUT CH XX
0281  00405 12100426        SPB  TTYO
0282  00406 00000026        IBS
0283  00407 11100404        BRU  *-3
0284  00410 11100420        BRU  TOI
0285  00411 12100433 INVL   SPB  CRLF
0286  00412 02077770        LBA  =-8
0287  00413 01500676        LAA  TBLC+8,1     INVALID REQ
```

```
00414 12100426        SPB   TTYO
00415 00000026        IBS
00416 11100413        BRU   *-3
00417 11100423        BRU   TOI+3
00420 12100557 TOI    SPB   CLIR
00421 01100613        LAA   CNTM          BRU TO STRT
00422 03100135        STA   TTYR
00423 12100433        SPB   CRLF
00424 00000035        TOI
00425 11300135        BRU*  TTYR
00426 00000000 TTYO   HLT
00427 00170101        AOP   1,W
00430 00001016        LSL   8
00431 00170101        AOP   1,W
00432 11300426        BRU*  TTYO
00433 00000000 CRLF   HLT
00434 00170501        MOP   1,W
00435 00106400        DATA  '106400
00436 00170501        MOP   1,W
00437 00105000        DATA  '105000
00440 11300433        BRU*  CRLF
00441 00000000 TSTS   HLT                 CONV OCTAL TO DEC
00442 04101113        STB   TEMP
00443 00000005        TAB
00444 01077773        LAA   =-5
00445 03100615        STA   CNTO
00446 00000003        CLA
00447 11100452        BRU   *+3
00450 00000003 CLA    CLA
00451 07000012        MPY   =10
00452 10023420        DIV   =10000
00453 05000260        AMA   ='260
00454 00001016        LSL   8
00455 00170101        AOP   1,W
00456 14100615        IMS   CNTO
00457 11100450        BRU   CLA
00460 02101113        LBA   TEMP
00461 11300441        BRU*  TSTS
00462 00000000 BINO   HLT                 ARRANGE AND OPT BIT NO
00463 04101113        STB   TEMP
00464 00000005        TAB
00465 00000003        CLA
00466 01101120        LAA   CNTQ          F/PRNT 0-9 BITS
00467 00000022        SAZ
00470 11100472        BRU   *+2
00471 11100505        BRU   TWO           F/PRINT 10-15 BITS
00472 00000003        CLA
00473 00001513        FLL   13
```

```
00474 05000260        AMA   ='260
00475 00001016        LSL   8
00476 00170101        AOP   1,W
00477 00170501        MOP   1,W
00500 00120000        DATA  '120000
00501 14101120        IMS   CNTQ
00502 00000033        NOP
00503 02101113        LBA   TEMP
00504 11300462        BRU*  BINO
00505 00001513  TWO   FLL   13              PRNT BITS 10-15
00506 05000260        AMA   ='260
00507 00001016        LSL   8
00510 00170101        AOP   1,W
00511 00000313        FLL   3
00512 05000260        AMA   ='260
00513 00001016        LSL   8
00514 00170101        AOP   1,W
00515 02101113        LBA   TEMP
00516 11300462        BRU*  BINO
00517 00000033  PRIT  NOP
00520 02077771        LBA   =-7
00521 01500745        LAA   TBLF+7,1        PRNT HEADING OF TBLF
00522 12100426        SPB   TTYO
00523 00000026        IBS
00524 11100521        BRU   *-3
00525 01100621        LAA   TBLA            TOTAL TSTS
00526 12100441        SPB   TSTS
00527 12100433        SPB   CRLF
00530 12100433        SPB   CRLF
00531 02077770        LBA   =-8
00532 01500755        LAA   TBLG+8,1        BIT GOOD TST
00533 12100426        SPB   TTYO
00534 00000026        IBS
00535 11100532        BRU   *-3
00536 12100433        SPB   CRLF
00537 01077766        LAA   =-10
00540 03101120        STA   CNTQ            =-10 F/BITS 0-9
00541 01077760        LAA   =-16
00542 03101121        STA   CNTR
00543 01500755  MORE  LAA   TBLI,1          CHAN NO
00544 12100462        SPB   BINO
00545 12100566        SPB   SPCS
00546 01500622        LAA   TBLB,1          GOOD TSTS
00547 12100441        SPB   TSTS
00550 12100433        SPB   CRLF
00551 00000026        IBS
00552 00000033        NOP
00553 14101121        IMS   CNTR
```

```
0384  00554 11100543        BRU   MORE
0385  00555 12100557        SPB   CLIR
0386  00556 11100046        BRU   STRT
0387  00557 00000000 CLIR   HLT
0388  00560 02077757        LBA   =-17
0389  00561 00000003        CLA
0390  00562 03500642        STA   TBLA+17,1      CLR TST TBLE
0391  00563 00000026        IBS
0392  00564 11100562        BRU   *-2
0393  00565 11300557        BRU*  CLIR
0394  00566 00000000 SPCS   HLT                  5 SPACES
0395  00567 01077773        LAA   =-5
0396  00570 03101123        STA   CNTT
0397  00571 01020000        LAA   ='120000
0398  00572 00170101        AOP   1,W
0399  00573 14101123        IMS   CNTT
0400  00574 11100571        BRU   *-3
0401  00575 11300566        BRU*  SPCS
0402  00576 35400135 TTYI   DAC   TTYR
0403  00577 00000000 CNTA   DATA  0
0404  00600 00170145 CNTB   DATA  '170145
0405  00601 00170347 CNTC   DATA  '170347
0406  00602 00170146 CNTD   DATA  '170146
0407  00603 00170350 CNTE   DATA  '170350         AIP CH 50
0408  00604 02077770 CNTF   LBA   =-8
0409  00605 05500632 CNTG   AMA   TBLB+8,1
0410  00606 03500632 CNTH   STA   TBLB+8,1
0411  00607 00170144 CNTI   DATA  '170144
0412  00610 00170346 CNTJ   DATA  '170346
0413  00611 05500642 CNTK   AMA   TBLB+16,1
0414  00612 03500642 CNTL   STA   TBLB+16,1
0415  00613 35400046 CNTM   DAC   STRT
0416  00614 02077760 CNTN   LBA   =-16
0417  00615 00000000 CNTO   DATA  0
0418  00616 00000033 NOP    NOP
0419  00617 00001016 I016   DATA  '1016
0420  00620 00000000 HLT    HLT
0421  00621 00000000 TBLA   DATA  0                NO OF TSTS
0422  00622 00000024 TBLB   BSS   20               STORE GOOD TSTS
0423  00646 00100000 BITS   DATA  '100000,'40000,'20000,'10000,'4000
0423  00647 00040000
0423  00650 00020000
0423  00651 00010000
0423  00652 00004000
0424  00653 00002000        DATA  '2000,'1000,'400,'200,'100,'40,'20,'10
0424  00654 00001000
0424  00655 00000400
0424  00656 00000200
```

```
0424  00657 00000100
0424  00660 00000040
0424  00661 00000020
0424  00662 00000010
0425  00663 00000004        DATA 4,2,1
0425  00664 00000002
0425  00665 00000001
0426  00666 00144716 TBLC DATA ''INVALID REQUEST''
0426  00667 00153301
0426  00670 00146311
0426  00671 00142240
0426  00672 00151305
0426  00673 00150725
0426  00674 00142723
0426  00675 00152240
0427  00676 00120324 TBLD DATA '' TEST IN CH 50 OUT CH 46 BITS 0-7''
0427  00677 00142723
0427  00700 00152240
0427  00701 00144716
0427  00702 00120303
0427  00703 00144240
0427  00704 00132660
0427  00705 00120317
0427  00706 00152724
0427  00707 00120303
0427  00710 00144240
0427  00711 00132266
0427  00712 00120302
0427  00713 00144724
0427  00714 00151640
0427  00715 00130255
0427  00716 00133640
0428  00717 00152305 TBLE DATA ''TEST INPUT CH 46, OUTPUT CH 44''
0428  00720 00151724
0428  00721 00120311
0428  00722 00147320
0428  00723 00152724
0428  00724 00120303
0428  00725 00144240
0428  00726 00132266
0428  00727 00126240
0428  00730 00147725
0428  00731 00152320
0428  00732 00152724
0428  00733 00120303
0428  00734 00144240
0428  00735 00132264
      [illegible] TBLF DATA ''TOTAL TESTS = ''
```

```
0429  00737 00152301
0429  00740 00146240
0429  00741 00152305
0429  00742 00151724
0429  00743 00151640
0429  00744 00136640
0430  00745 00141311 TBLG DATA ''BIT   GOOD TESTS''
0430  00746 00152240
0430  00747 00120240
0430  00750 00143717
0430  00751 00147704
0430  00752 00120324
0430  00753 00142723
0430  00754 00152323
0431  00755 00000000 TBLI DATA 0,'10,'20,'30,'40,'50,'60,'70,'100
0431  00756 00000010
0431  00757 00000020
0431  00760 00000030
0431  00761 00000040
0431  00762 00000050
0431  00763 00000060
0431  00764 00000070
0431  00765 00000100
0432  00766 00000110      DATA '110,'10,'11,'12,'13,'14,'15
0432  00767 00000010
0432  00770 00000011
0432  00771 00000012
0432  00772 00000013
0432  00773 00000014
0432  00774 00000015
0433  00775 00152325 TBLH DATA ''TURN OFF SWITCH S1 NEXT TO WATCH''
0433  00776 00151316
0433  00777 00120317
0433  01000 00143306
0433  01001 00120323
0433  01002 00153711
0433  01003 00152303
0433  01004 00144240
0433  01005 00151661
0433  01006 00120316
0433  01007 00142730
0433  01010 00152240
0433  01011 00152317
0433  01012 00120327
0433  01013 00140724
0433  01014 00141710
0434  01015 00120304      DATA '' DOG RELAY. ''
0434  01016 00147707
```

```
0434  01017 00120322
0434  01020 00142714
0434  01021 00140731
0434  01022 00127240
0435  01023 00152716      DATA ''UNPLUG DISPLAY RELAY CARDS ABOVE''
0435  01024 00150314
0435  01025 00152707
0435  01026 00120304
0435  01027 00144723
0435  01030 00150314
0435  01031 00140731
0435  01032 00120322
0435  01033 00142714
0435  01034 00140731
0435  01035 00120303
0435  01036 00140722
0435  01037 00142323
0435  01040 00120301
0435  01041 00141317
0435  01042 00153305
0436  01043 00120327      DATA '' WATCH DOG RELAY. ''
0436  01044 00140724
0436  01045 00141710
0436  01046 00120304
0436  01047 00147707
0436  01050 00120322
0436  01051 00142714
0436  01052 00140731
0436  01053 00127240
0437  01054 00150322      DATA ''PRESS THE NUMBER ON TTY ASSIGNED''
0437  01055 00142723
0437  01056 00151640
0437  01057 00152310
0437  01060 00142640
0437  01061 00147325
0437  01062 00146702
0437  01063 00142722
0437  01064 00120317
0437  01065 00147240
0437  01066 00152324
0437  01067 00154640
0437  01070 00140723
0437  01071 00151711
0437  01072 00143716
0437  01073 00142704
0438  01074 00120324      DATA '' TO THE CHANNEL FOR TEST. ''
0438  01075 00147640
0438  01076 00152310
```

```
0438  01077 00142640
0438  01100 00141710
0438  01101 00140716
0438  01102 00147305
0438  01103 00146240
0438  01104 00143317
0438  01105 00151240
0438  01106 00152305
0438  01107 00151724
0438  01110 00127240
0439  01111 00000000 ZERO DATA 0
0440  01112 00000000 NTHO DATA 0              DLY CNTR
0441  01113 00000000 TEMP DATA 0              TEMP STORAGE
0442  01114 00000000 NEG1 DATA 0
0443  01115 00000031 LCS  LCS
0444  01116 11100117 BRU  BRU  LOCS
0445  01117 01500666 CNTP LAA  BITS+16,1
0446  01120 00000000 CNTQ DATA 0              PRNT
0447  01121 00000000 CNTR DATA 0
0448  01122 35400517 CNTS DAC  PRIT
0449  01123 00000000 CNTT DATA 0
0450  01124 00170144 CNTU AOP  '44,W
0451  01125 00170351 CNTV AIP  '51,W
0452  01126 00170147 CNTW AOP  '47,W
0453  01127 00170150 CNTX AOP  '50,W
0454  01130 00170352 CNTY AIP  '52,W
0455  01131 00170151 CNTZ AOP  '51,W
0456  01132 00170353 CNT1 AIP  '53,W
0457  01133 00132264 OU4  DATA '132264        CH 44
0458  01134 00132265 OU5  DATA ''45''         CH 45
0459  01135 00132266 OU6  DATA ''46''         CH 46
0460  01136 00132267 OU7  DATA ''47''         CH 47
0461  01137 00132660 OU8  DATA ''50''         CH 50
0462  01140 00132661 OU9  DATA ''51''         CH 51
0463  01141 00132661 IN1  DATA '132661        CH 51
0464  01142 00132662 IN2  DATA ''52''         CH 52
0465  01143 00132663 IN3  DATA ''53''         CH 53
0466  01144 00132266 IN6  DATA ''46''         CH 46
0467  01145 00132267 IN7  DATA ''47''         CH 47
0468  01146 00134255 CNT2 DATA '134255        8-
0469  01147 00130665 CNT3 DATA '130665        15 F/BIT
0470  01150 00170146 CNT4 AOP  '46,W
0471  01151 00170350 CNT5 AIP  '50,W
0472  01152 00130255 CNT6 DATA '130255        0-
0473  01153 00133640 CNT7 DATA '133640        7 SPC F/BIT
0474  01154 01500656 CNT8 LAA  BITS+8,1
0475  01155 00000000 CHEK DATA 0
0476  01156 70400000      END
```

BEGN	00042
STRT	00046
LBA	00054
LAA	00060
AGAN	00061
AOP	00063
AIP	00070
AMA	00101
STA	00102
EROR	00104
HALT	00106
DLY	00112
LOCS	00117
HOLT	00130
TTYR	00135
PRNT	00215
LCSS	00220
CLER	00225
GO	00231
STOP	00235
ONE	00241
TOO	00252
THRE	00263
FOUR	00276
FIVE	00315
SIX	00326
SEVN	00337
EGHT	00350
PART	00361
ALL	00372
INVL	00411
TOI	00420
TTYO	00426
CRLF	00433
TSTS	00441
CLA	00450
BINO	00462
TWO	00505
PRIT	00517
MORE	00543
CLIR	00557
SPCS	00566
TTYI	00576
CNTA	00577
CNTB	00600
CNTC	00601
CNTD	00602
CNTE	00603

CNTF	00604
CNTG	00605
CNTH	00606
CNTI	00607
CNTJ	00610
CNTK	00611
CNTL	00612
CNTM	00613
CNTN	00614
CNTO	00615
NOP	00616
IO16	00617
HLT	00620
TBLA	00621
TBLB	00622
BITS	00646
TBLC	00666
TBLD	00676
TBLE	00717
TBLF	00736
TBLG	00745
TBLI	00755
TBLH	00775
ZERO	01111
NTHO	01112
TEMP	01113
NEG1	01114
LCS	01115
BRU	01116
CNTP	01117
CNTQ	01120
CNTR	01121
CNTS	01122
CNTT	01123
CNTU	01124
CNTV	01125
CNTW	01126
CNTX	01127
CNTY	01130
CNTZ	01131
CNT1	01132
OU4	01133
OU5	01134
OU6	01135
OU7	01136
OU8	01137
OU9	01140
IN1	01141

```
        IN2      01142
        IN3      01143
        IN6      01144
        IN7      01145
        CNT2     01146
        CNT3     01147
        CNT4     01150
        CNT5     01151
        CNT6     01152
        CNT7     01153
        CNT8     01154
        CHEK     01155
ERRORS  0000     00000
```

#5 MODEM

PROGRAM DESCRIPTION

IDENTIFICATION: Synchronous Modem and Modem Interface Diagnostic Program

AUTHOR: Carl L. Thompson
Natural Gas Pipeline Compnay of America
Communications Division

ACCEPTED: June 30, 1975, Revised December 1, 1976

PURPOSE: To assist the Communications Technician with maintenance and repair of the Modem and Modem Interface equipment.

COMPUTER CONFIGURATION: Standard SEL 810A Computer

STORAGE: 1677 Octal Locations

LOADING PROCEDURE: Relocatable Loader, Program Counter = '36060
A Accumulator = '6000 B Accumulator = 0

Revisions to this program include the capability to test the modem with the sentry card in service. If the sentry card appears defective, remove card and re-install jumper "CC" in the RTS position to operate or test modem.

The transmission rate of speed can also be changed through the teletype keyboard. Follow instructions on Page 3.

Before starting program place the "ANALOG" switch on the rear of the Rixon Modem in the "LOOP BACK" position.

Enter '6000 in the program counter and press start switch twice. The program will then wait at location 6022-6023 for the stations sync word to be added through the teletype keyboard as follows.

Press the number or letter assigned this station below.

Letter or Number	Station Number	Letter or Number	Station Number
1	191	9	199
2	192	T	113
3	193	U	167
4	194	V	168
5	195	W	169
6	196	X	342
7	197	Y	343
8	198		

NOTE: Each time the program is re-started at location '6000, enter the station sync code or one of the following teletype keyboard functions in order to enable program.

The diagnostic consists of two programs.

1. COUNTING MODE

The sync word with one 16 bit data word is transmitted utilizing the transmit interrupt. Each data word is received utilizing the receive interrupt, then compared with the transmitted word and incremented before re-transmission. The program stores the number of transmissions, good received messages and errors for print-out by the operator. Following a print-out the memory location for each count is cleared.

The modem carrier sentry which monitors the carrier signal for approximately 32 seconds before removing carrier from circuit, is reset at 30 second intervals by program.

2. LCS, LOAD CONTROL SWITCH MODE

The sync word with one 16 bit data word is transmitted utilizing the transmit interrupt. Each data word is received utilizing the receive interrupt then compared with the transmitted word. Upon detection of an error the teletype bell will ring. No data is stored in this mode.

The transmitted word is formed by the panel control switches with the received word being displayed in the B Accumulator.

The teletype keyboard is utilized in changing the mode of the program including the print-out of data and control of the teletype motor. If an incorrect key is struck the program will print "INVALID KEY".

COUNTING MODE - KEY "C"

The program, on initial loading will operate in the counting mode. To return to the counting mode from LCS mode, press the letter "C".

LCS MODE - KEY "L"

To change the program from counting mode to LCS mode, press the letter "L".

DATA PRINT-OUT - KEY "D"

To print the number of transmissions, good messages and errors press the letter "D".

HALT PROGRAM ON ERROR - KEY "H"

To compare error with data word, press the letter "H". When the program detects an error it will halt and display the incorrect received word in the "A" Accumulator and the transmitted word in the "B" Accumulator. Press start to re-start program after a halt on error.

To remove the halt statement from the program press the "C" for counting mode or "L" if testing in the LCS mode.

INTERFACE TEST ONLY - KEY "I"

To test the interface equipment back-to-back, remove EIA modem cable from J1 and connect jumper plug. To utilize the modem clock, connect external leads of jumper plug to transmit (red wire to 104) and ground lead (white wire to 204).

TURN TELETYPE MOTOR OFF - KEY "O"

This is to be utilized in the counting mode only. Press the letter "O".

TURN TELETYPE MOTOR ON

Following turn off of motor, you must set panel control switch number 15 to turn motor on. The program will print data as under key "D" and disable the motor control function from switch 15.

NOTE: Upon completion of tests return "ANALOG" switch on the Rixon Modem to the operate position. Check with Gas Control to confirm that data is being received in Chicago.

PROGRAM TRANSMISSION RATE

To change the transmission rate of speed press the following keys.

Key "S" Slow Rate, 475 transmissions per minute.

Key "M" Medium Rate, 1900 transmissions per minute.

Key "F" Fast Rate, 3600 transmissions per minute.

DESCRIPTION OF POSSIBLE PROGRAM HALTS

1. Location '6022 - '6023. Program is waiting for the sync word or a program change via the teletype keyboard.

2. Location '6071 - '6073, '6074 - '6076. The TEU, "Test External Unit" statement tests if data modem is clear to send or if data carrier line is true. If these conditions are not true, the program will not advance. First check AC power to modem; analog test switch for loop back position; then review SEL manual, Volume 1, Paragraph 3-152 to 3-157 and 3-102 and 3-144.

3. Location '6101 - '6102. Transmit interrupt was not generated. Restart program at '6000. In order to enable program to continue testing for a transmit interrupt, change instruction at location '6101 from a NOP to an IMS as follows.

   NOP = '000033

   IMS = '141626 (Increment mem. at loc. '626 and skip). Restart program at '6000 and enter sync. code or an operation code via teletype. The program will continuously test for a transmit interrupt.

4. Location '6104 - '6105. Receive interrupt was not generated. Restart program at '6000. If a transmit interrupt is being generated but not a receive interrupt, change instruction at location '6104 from a NOP to an IMS using the same IMS instruction as noted for transmit interrupt under Item 3, and follow same instructions.

```
0001                    ***********************************************
0002                    *    SYNCHRONOUS MODEM INTERFACE DIAGNOSTIC
0003                    *    PREPARED BY CARL L THOMPSON 6-2-75
0004                    *    COMMUNICATION DIVISION
0005                    *    NATURAL GAS PIPELINE COMPANY OF AMERICA
0006                    *    REVISED 12-1-76
0007                    ***********************************************
0008  00000 00000000        REL
0009  00000 00130600        PIE
0010  00001 00010001        DATA '10001
0011  00002 00130101        CEU  1,W
0012  00003 00062000        DATA '62000        CON INPT INTRUP-KEY BRD
0013  00004 01100662        LAA  TTYI          ADDR OF TTYR SUBROUTINE
0014  00005 03301675        STA* I016
0015  00006 01101667        LAA  PWR1          ADDR PWR FL SUB-RUTNE
0016  00007 03301670        STA* PWR2          LOC '1000
0017  00010 01100561        LAA  CNTU          ADDRESS XMT SUBROUTINE
0018  00011 03300562        STA* CNTV          LOCATION '1003
0019  00012 01100545        LAA  CNTA
0020  00013 03300544        STA* CNT9          LOC '1002
0021  00014 01100664        LAA  PIE
0022  00015 03100214        STA  A301
0023  00016 01100642        LAA  A302          '10001
0024  00017 03100215        STA  A301+1
0025  00020 00000003        CLA
0026  00021 03100666        STA  ZERO          MOTR CONTROL TTY
0027  00022 00000033        NOP
0028  00023 11100022        BRU  *-1
0029  00024 00000033 A243   NOP
0030  00025 12101172        SPB  CLR           CLR TIME-XMISSION REG
0031  00026 00170642 BEGN   MIP  '42
0032  00027 00000000 MNTH   DATA 0              STORE MONTH
0033  00030 11100026        BRU  *-2
0034  00031 00170641        MIP  '41
0035  00032 00000000 DAY    DATA 0              STORE DAY
0036  00033 11100031        BRU  *-2
0037  00034 00170641        MIP  '41
0038  00035 00000000 HOUR   DATA 0              STORE HOUR
0039  00036 11100034        BRU  *-2
0040  00037 00170640        MIP  '40
0041  00040 00000000 MISE   DATA 0              STORE MIN AND SEC
0042  00041 11100037        BRU  *-2
0043  00042 00000033        NOP
0044  00043 00000033 STRT   NOP                 OR SNS 15
0045  00044 00000033        NOP                 OR BRU TO MOTR
0046  00045 12100120        SPB  CARR          RESET SENTRY
0047  00046 01100534        LAA  CNT1          CNTR XMT DELAY
```

```
0048  00047 03100535        STA  CNT2
0049  00050 00000003        CLA
0050  00051 03100560        STA  CNTQ          CNTR SYNC WORD
0051  00052 01100552        LAA  CNTF
0052  00053 03100626        STA  A136
0053  00054 00000033        NOP
0054  00055 00000033        NOP
0055  00056 00000033        NOP
0056  00057 00000033        NOP
0057  00060 00000033        NOP
0058  00061 00000033        NOP
0059  00062 00000033        NOP
0060  00063 00000033        NOP
0061  00064 00000033        NOP
0062  00065 00000033        NOP
0063  00066 00130014        CEU  '14
0064  00067 00005400        DATA '5400
0065  00070 11100066        BRU  *-2
0066  00071 00130214 A123   TEU  '14           OR BRU +6
0067  00072 00040000        DATA '40000        DATA SET CLR TO SND
0068  00073 11100071        BRU  *-2
0069  00074 00130214        TEU  '14
0070  00075 00020000        DATA '20000
0071  00076 11100074        BRU  *-2
0072  00077 00130600 A124   PIE
0073  00100 00000002        DATA 2
0074  00101 00000033        NOP                WT F/XMT INTR IMS A136
0075  00102 11100101        BRU  *-1
0076  00103 11100107        BRU  A241
0077  00104 00000033 A135   NOP                WT F/REC INTR
0078  00105 11100104        BRU  *-1
0079  00106 00000033        NOP
0080  00107 00000033 A241   NOP
0081  00110 14100537        IMS  CNT4          CHNG XMIT WORD
0082  00111 00000033        NOP
0083  00112 14100557        IMS  CNTL
0084  00113 00000033        NOP
0085  00114 14100535        IMS  CNT2
0086  00115 11100114        BRU  *-1
0087  00116 00000033        NOP
0088  00117 11100043        BRU  STRT
0089  00120 00000000 CARR   HLT                RESET SENTRY
0090  00121 01070000        LAA  ='170000
0091  00122 03100645        STA  A511
0092  00123 01100601        LAA  A3
0093  00124 00000022        SAZ
0094  00125 11100150        BRU  A4            INH CARR TRN OFF
0095  00126 00170240        AIP  '40           MIN-SEC
```

```
00127 11100126        BRU  *-1
00130 00001116        LSL  9              REMOVE MIN
00131 00001115        RSL  9
00132 15000051        CMA  ='51
00133 11100152        BRU  A1
00134 11100141        BRU  A2
00135 15000131        CMA  ='131
00136 11100152        BRU  A1
00137 11100141        BRU  A2
00140 11100152        BRU  A1
00141 00130014 A2     CEU  '14
00142 00002000        DATA '2000          CARRIER OFF
00143 11100141        BRU  *-2
00144 14100645        IMS  A511
00145 11100144        BRU  *-1
00146 01077700        LAA  ='177700
00147 03100601        STA  A3             INH CARR TRN OFF
00150 14100601 A4     IMS  A3
00151 00000033        NOP
00152 00000033 A1     NOP
00153 11300120        BRU* CARR
                     ***********************************************
00154 00000000 XMIT   HLT
00155 03100656        STA  ASAV
00156 04100655        STB  BSAV
00157 00130601        PID
00160 00010001        DATA '10001
00161 01100560        LAA  CNTQ           EQUAL 0 FIRST ENTRY
00162 00000022        SAZ
00163 11100172        BRU  LCS1
00164 01100633        LAA  A151           SYNC 46114
00165 00170014        AOP  '14
00166 11100165        BRU  *-1
00167 01100632        LAA  A150           =-1
00170 03100560        STA  CNTQ
00171 11100216        BRU  A104
00172 01100537 LCS1   LAA  CNT4           DATA WORD OR LCS
00173 03100557        STA  CNTL           CK DATA WORD
00174 00170014        AOP  '14
00175 11100174        BRU  *-1
00176 00130601        PID
00177 00000002        DATA 2
00200 00130600        PIE
00201 00000001        DATA 1
00202 01100631        LAA  A147           GO TO A135
00203 03100154        STA  XMIT
00204 00000033 A103   NOP                 OR BRU TO A104 F/LCS ***
00205 01100554        LAA  CNTH           DBLE PRECESSION
```

```
00206 02100555        LBA  CNTI          TRANSMISSIONS
00207 16100543        AMB  CNT8          DATA 1
00210 00000007        CSB
00211 05100536        AMA  CNT3          DATA 0
00212 03100554        STA  CNTH
00213 04100555        STB  CNTI
00214 00130600 A301   PIE                OR NOP F/MTR OFF
00215 00010001        DATA '10001        OR NOP
00216 00000033 A104   NOP
00217 01100656        LAA  ASAV
00220 02100655        LBA  BSAV
00221 00000035        TOI
00222 11300154        BRU* XMIT
                 ***********************************************
00223 00000000 RECV   HLT
00224 03100654        STA  SAVA
00225 04100653        STB  SAVB
00226 01100640 A303   LAA  A242          OR NOP F/TTY INTR
00227 03100223        STA  RECV
00230 00130601        PID
00231 00000001        DATA 1
00232 00170214        AIP  '14
00233 11100232        BRU  *-1
00234 03100637        STA  A181
00235 01100637        LAA  A181
00236 00000033 A114   NOP                OR TAB F-LCS
00237 15100557        CMA  CNTL
00240 11100242        BRU  *+2
00241 11100251        BRU  A106
00242 02100557        LBA  CNTL
00243 00000033 A141   NOP                OR HALT
00244 00000033 ERR    NOP                OR LAA W/BELL F/LCS
00245 00000033        NOP                O AOP 1,W F/LCS
00246 14100540        IMS  CNT5
00247 00000033        NOP
00250 11100262        BRU  A116
00251 00000033 A106   NOP                OR BRU A116 F/LCS
00252 01100541        LAA  CNT6          DBL PREC GOOD REPLY
00253 02100542        LBA  CNT7
00254 16100543        AMB  CNT8
00255 00000007        CSB
00256 05100536        AMA  CNT3
00257 03100541        STA  CNT6
00260 04100542        STB  CNT7
00261 01100654        LAA  SAVA
00262 00000033 A116   NOP
00263 00130014        CEU  '14
00264 00001000        DATA '1000
```

```
00265 11100263        BRU  *-2
00266 00000033        NOP
00267 00000033        NOP
00270 00000035        TOI                    TRN OFF INTRUP
00271 11300223        BRU* RECV
                  ***********************************************
                  *     SUBROUTINE TO CHANGE OPR MODE VIA TTY KEBRD
00272 00000000 TTYR HLT
00273 00130601        PID
00274 00000001        DATA 1
00275 03100651        STA  KEPA
00276 04100652        STB  KEPB
00277 01100663        LAA  NOP
00300 03100226        STA  A303
00301 03100227        STA  A303+1
00302 00130600        PIE
00303 00000001        DATA 1
00304 00000033        NOP
00305 00000033        NOP
00306 00130014        CEU  '14
00307 00003000        DATA '3000
00310 11100306        BRU  *-2
00311 01100537        LAA  CNT4              DATA
00312 03100557        STA  CNTL              TEST LOC
00313 00170201 A105 AIP  1
00314 11100313        BRU  *-1
00315 03100547        STA  CNTC
00316 00001016        LSL  8
00317 00170001        AOP  1
00320 11100317        BRU  *-1
00321 12101214        SPB  CRLF
00322 01100547        LAA  CNTC
00323 15100532        CMA  N271
00324 11100461        BRU  SNK
00325 11100461        BRU  SNK
00326 15100533        CMA  N323
00327 00000033        NOP
00330 11100332        BRU  *+2
00331 11100461        BRU  SNK
00332 15100567        CMA  I                 INTERFACE ONLY
00333 11100335        BRU  *+2
00334 11100336        BRU  *+2
00335 11100341        BRU  *+4
00336 01100623        LAA  A125
00337 03100071        STA  A123
00340 11100473        BRU  A122
00341 15100566        CMA  H                 HLT FOR REC ERR
00342 11100344        BRU  *+2
```

```
0240  00343 11100345        BRU  *+2
0241  00344 11100350        BRU  *+4
0242  00345 00000003        CLA
0243  00346 03100243        STA  A141
0244  00347 11100473        BRU  A122
0245  00350 15100572        CMA  S              SLO XMT RATE
0246  00351 11100353        BRU  *+2
0247  00352 11100354        BRU  *+2
0248  00353 11100357        BRU  *+4
0249  00354 01040000        LAA  ='140000
0250  00355 03100534        STA  CNT1
0251  00356 11100473        BRU  A122
0252  00357 15100571        CMA  M              MED XMT RATE
0253  00360 11100362        BRU  *+2
0254  00361 11100363        BRU  *+2
0255  00362 11100366        BRU  *+4
0256  00363 01070000        LAA  ='170000
0257  00364 03100534        STA  CNT1
0258  00365 11100473        BRU  A122
0259  00366 15100565        CMA  F              FAST XMT RATE
0260  00367 11100371        BRU  *+2
0261  00370 11100372        BRU  *+2
0262  00371 11100375        BRU  *+4
0263  00372 01077000        LAA  ='177000
0264  00373 03100534        STA  CNT1
0265  00374 11100473        BRU  A122
0266  00375 15100563        CMA  C              CNT MODE
0267  00376 11100400        BRU  *+2
0268  00377 11100404        BRU  A117
0269  00400 15100570        CMA  L              LCS
0270  00401 11100443        BRU  A113
0271  00402 11100422        BRU  A108
0272  00403 11100443        BRU  A113
0273  00404 01100663 A117 LAA  NOP
0274  00405 03100243        STA  A141
0275  00406 03100251        STA  A106
0276  00407 03100204        STA  A103
0277  00410 03100244        STA  ERR
0278  00411 03100245        STA  ERR+1
0279  00412 03100236        STA  A114
0280  00413 01100650        LAA  TEU
0281  00414 03100071        STA  A123
0282  00415 01100621        LAA  A119           LAA CNT4
0283  00416 03100172        STA  LCS1
0284  00417 01100641        LAA  A244           DAC A243
0285  00420 03100272        STA  TTYR
0286  00421 11100475        BRU  A126
0287  00422 01100614 A108 LAA  A109           BRU A104
```

```
0288  00423 03100204        STA  A103
0289  00424 01100650        LAA  TEU
0290  00425 03100071        STA  A123
0291  00426 01100663        LAA  NOP
0292  00427 03100243        STA  A141
0293  00430 01100636        LAA  A167          BRU A116
0294  00431 03100251        STA  A106
0295  00432 01100620        LAA  A118          LCS
0296  00433 03100172        STA  LCS1
0297  00434 01100615        LAA  A111          LAA ='103400
0298  00435 03100244        STA  ERR
0299  00436 01100616        LAA  A112          AOP 1,W
0300  00437 03100245        STA  ERR+1
0301  00440 01100617        LAA  A115          TAB
0302  00441 03100236        STA  A114
0303  00442 11100473        BRU  A122
0304  00443 15100564 A113   CMA  D             TYPE DATA
0305  00444 11100452        BRU  A134
0306  00445 11100447        BRU  *+2
0307  00446 11100452        BRU  A134
0308  00447 01100622        LAA  A121          DAC ABC
0309  00450 03100272        STA  TTYR
0310  00451 11100475        BRU  A126
0311  00452 15100647 A134   CMA  OFF           TTY OFF
0312  00453 11100455        BRU  *+2
0313  00454 11100456        BRU  *+2
0314  00455 11100465        BRU  A515
0315  00456 01100625        LAA  A133          DAC MOTR
0316  00457 03100272        STA  TTYR
0317  00460 11100475        BRU  A126
0318  00461 12101015 SNK    SPB  SINK
0319  00462 01100641        LAA  A244          DAC A243
0320  00463 03100272        STA  TTYR
0321  00464 11100475        BRU  A126
0322  00465 02077772 A515   LBA  =-6
0323  00466 01500675        LAA  INVA+6,1
0324  00467 12101224        SPB  TTYO
0325  00470 00000026        IBS
0326  00471 11100466        BRU  *-3
0327  00472 11100473        BRU  A122
0328  00473 01100640 A122   LAA  A242          DAC A241
0329  00474 03100272        STA  TTYR
0330  00475 00000033 A126   NOP
0331  00476 00000033        NOP
0332  00477 00130601        PID
0333  00500 00000001        DATA 1
0334  00501 01100643        LAA  A304
0335  00502 03100226        STA  A303
```

```
0336  00503 01100644        LAA  A305
0337  00504 03100227        STA  A303+1
0338  00505 01100651        LAA  KEPA
0339  00506 02100652        LBA  KEPB
0340  00507 00130600        PIE
0341  00510 00000001        DATA 1
0342  00511 00000035        TOI
0343  00512 11300272        BRU* TTYR
0344  00513 00170621 S191  DATA '170621
0345  00514 00170622 S192  DATA '170622
0346  00515 00170623 S193  DATA '170623
0347  00516 00170624 S194  DATA '170624
0348  00517 00170625 S195  DATA '170625
0349  00520 00170626 S196  DATA '170626
0350  00521 00170627 S197  DATA '170627
0351  00522 00170630 S198  DATA '170630
0352  00523 00170631 S199  DATA '170631
0353  00524 00170547 S167  DATA '170547
0354  00525 00170550 S168  DATA '170550
0355  00526 00170551 S169  DATA '170551
0356  00527 00171502 S342  DATA '171502
0357  00530 00171503 S343  DATA '171503
0358  00531 00170423 S113  DATA '170423
0359  00532 00000271 N271  DATA '271
0360  00533 00000323 N323  DATA '323
0361  00534 00177000 CNT1  DATA '177000
0362  00535 00000000 CNT2  DATA 0
0363  00536 00000000 CNT3  DATA 0
0364  00537 00000000 CNT4  DATA 0              DATA XMISSION WORD
0365  00540 00000000 CNT5  DATA 0              ERRORS
0366  00541 00000000 CNT6  DATA 0              GOOD REPLIES
0367  00542 00000000 CNT7  DATA 0              GOOD REPLIES
0368  00543 00000001 CNT8  DATA 1
0369  00544 00001002 CNT9  DATA '1002          REC INTRUP LOC
0370  00545 35400223 CNTA  DAC  RECV
0371  00546 00177777 CNTB  DATA '177777        RECEIVE CNTR
0372  00547 00000000 CNTC  DATA 0
0373  00550 00000000 CNTD  DATA 0
0374  00551 00000000 CNTE  DATA 0              XMT INTR FAIL
0375  00552 00140000 CNTF  DATA '140000        AIP RECV CNTR
0376  00553 00000000 CNTG  DATA 0
0377  00554 00000000 CNTH  DATA 0              NO OF XMISSIONS
0378  00555 00000000 CNTI  DATA 0              NO OF XMISSIONS
0379  00556 00000000 CNTJ  DATA 0              CNTR PRINT TESTS STRT-STP
0380  00557 00000000 CNTL  DATA 0
0381  00560 00000000 CNTQ  DATA 0
0382  00561 35400154 CNTU  DAC  XMIT
0383  00562 00001003 CNTV  DATA '1003          XMT INTERRUPT
```

```
0384  00563 00000303 C     DATA '303
0385  00564 00000304 D     DATA '304
0386  00565 00000306 F     DATA '306
0387  00566 00000310 H     DATA '310
0388  00567 00000311 I     DATA '311
0389  00570 00000314 L     DATA '314
0390  00571 00000315 M     DATA '315
0391  00572 00000323 S     DATA '323
0392  00573 00000324 T     DATA '324
0393  00574 00000325 U     DATA '325
0394  00575 00000326 V     DATA '326
0395  00576 00000327 W     DATA '327
0396  00577 00000330 X     DATA '330
0397  00600 00000331 Y     DATA '331
0398  00601 00000000 A3    DATA 0
0399  00602 00000261 A11   DATA '261
0400  00603 00000262 A12   DATA '262
0401  00604 00000263 A13   DATA '263
0402  00605 00000264 A14   DATA '264
0403  00606 00000265 A15   DATA '265
0404  00607 00000266 A16   DATA '266
0405  00610 00000267 A17   DATA '267
0406  00611 00000270 A18   DATA '270
0407  00612 00000271 A19   DATA '271
0408  00613 00000000 A101  DATA 0
0409  00614 11100214 A109  BRU  A301
0410  00615 01003400 A111  LAA  ='103400
0411  00616 00170101 A112  AOP  1,W
0412  00617 00000005 A115  TAB
0413  00620 00000031 A118  LCS
0414  00621 01100537 A119  LAA  CNT4
0415  00622 35401423 A121  DAC  ABC
0416  00623 11100077 A125  BRU  A124
0417  00624 11101365 A132  BRU  MOTR
0418  00625 35401365 A133  DAC  MOTR
0419  00626 00000000 A136  DATA 0              WT FOR REC INTR
0420  00627 00000000 A137  DATA 0              REC INTR FAIL
0421  00630 00000000 A142  DATA 0              NO AIP FAULTS
0422  00631 35400104 A147  DAC  A135
0423  00632 00177777 A150  DATA '177777
0424  00633 00046114 A151  DATA '46114
0425  00634 35400043 A161  DAC  STRT
0426  00635 00000000 A165  DATA 0
0427  00636 11100262 A167  BRU  A116
0428  00637 00000000 A181  DATA 0
0429  00640 35400107 A242  DAC  A241
0430  00641 35400024 A244  DAC  A243
0431  00642 00010001 A302  DATA '10001
```

```
0432  00643 01100640 A304 LAA  A242
0433  00644 03100223 A305 STA  RECV
0434  00645 00000000 A511 DATA 0
0435  00646 00000000 SPAC DATA 0
0436  00647 00000317 OFF  DATA '317          TTY OFF
0437  00650 00130214 TEU  TEU  '14
0438  00651 00000001 KEPA BSS  1
0439  00652 00000001 KEPB BSS  1
0440  00653 00000001 SAVB BSS  1
0441  00654 00000001 SAVA BSS  1
0442  00655 00000001 BSAV BSS  1
0443  00656 00000001 ASAV BSS  1
0444  00657 00000000 NEG4 DATA 0
0445  00660 00000000 NEG5 DATA 0
0446  00661 00000000 SPC6 DATA 0
0447  00662 35400272 TTYI DAC  TTYR
0448  00663 00000033 NOP  NOP
0449  00664 00130600 PIE  PIE
0450  00665 00130417 SNS  SNS  '17
0451  00666 00000000 ZERO DATA 0
0452  00667 00144716 INVA DATA ''INVALID KEY''
0452  00670 00153301
0452  00671 00146311
0452  00672 00142240
0452  00673 00145705
0452  00674 00154640
0453  00675 00000120 MEMO BSS  80
0454  01015 00000000 SINK HLT
0455  01016 15100602      CMA  A11
0456  01017 11101021      BRU  *+2
0457  01020 11101022      BRU  *+2
0458  01021 11101025      BRU  *+4
0459  01022 01100513      LAA  S191
0460  01023 03100633      STA  A151
0461  01024 11101166      BRU  OUT
0462  01025 15100603      CMA  A12
0463  01026 11101030      BRU  *+2
0464  01027 11101031      BRU  *+2
0465  01030 11101034      BRU  *+4
0466  01031 01100514      LAA  S192
0467  01032 03100633      STA  A151
0468  01033 11101166      BRU  OUT
0469  01034 15100604      CMA  A13
0470  01035 11101037      BRU  *+2
0471  01036 11101040      BRU  *+2
0472  01037 11101043      BRU  *+4
0473  01040 01100515      LAA  S193
0474  01041 03100633      STA  A151
```

```
0475  01042 11101166      BRU  OUT
0476  01043 15100605      CMA  A14
0477  01044 11101046      BRU  *+2
0478  01045 11101047      BRU  *+2
0479  01046 11101052      BRU  *+4
0480  01047 01100516      LAA  S194
0481  01050 03100633      STA  A151
0482  01051 11101166      BRU  OUT
0483  01052 15100606      CMA  A15
0484  01053 11101055      BRU  *+2
0485  01054 11101056      BRU  *+2
0486  01055 11101061      BRU  *+4
0487  01056 01100517      LAA  S195
0488  01057 03100633      STA  A151
0489  01060 11101166      BRU  OUT
0490  01061 15100607      CMA  A16
0491  01062 11101064      BRU  *+2
0492  01063 11101065      BRU  *+2
0493  01064 11101070      BRU  *+4
0494  01065 01100520      LAA  S196
0495  01066 03100633      STA  A151
0496  01067 11101166      BRU  OUT
0497  01070 15100610      CMA  A17
0498  01071 11101073      BRU  *+2
0499  01072 11101074      BRU  *+2
0500  01073 11101077      BRU  *+4
0501  01074 01100521      LAA  S197
0502  01075 03100633      STA  A151
0503  01076 11101166      BRU  OUT
0504  01077 15100611      CMA  A18
0505  01100 11101102      BRU  *+2
0506  01101 11101103      BRU  *+2
0507  01102 11101106      BRU  *+4
0508  01103 01100522      LAA  S198
0509  01104 03100633      STA  A151
0510  01105 11101166      BRU  OUT
0511  01106 15100612      CMA  A19
0512  01107 11101111      BRU  *+2
0513  01110 11101112      BRU  *+2
0514  01111 11101115      BRU  *+4
0515  01112 01100523      LAA  S199
0516  01113 03100633      STA  A151
0517  01114 11101166      BRU  OUT
0518  01115 15100573      CMA  T
0519  01116 11101120      BRU  *+2
0520  01117 11101121      BRU  *+2
0521  01120 11101124      BRU  *+4
0522  01121 01100531      LAA  S113
```

```
0523  01122 03100633        STA  A151
0524  01123 11101166        BRU  OUT
0525  01124 15100574        CMA  U
0526  01125 11101127        BRU  *+2
0527  01126 11101130        BRU  *+2
0528  01127 11101133        BRU  *+4
0529  01130 01100524        LAA  S167
0530  01131 03100633        STA  A151
0531  01132 11101166        BRU  OUT
0532  01133 15100575        CMA  V
0533  01134 11101136        BRU  *+2
0534  01135 11101137        BRU  *+2
0535  01136 11101142        BRU  *+4
0536  01137 01100525        LAA  S168
0537  01140 03100633        STA  A151
0538  01141 11101166        BRU  OUT
0539  01142 15100576        CMA  W
0540  01143 11101145        BRU  *+2
0541  01144 11101146        BRU  *+2
0542  01145 11101151        BRU  *+4
0543  01146 01100526        LAA  S169
0544  01147 03100633        STA  A151
0545  01150 11101166        BRU  OUT
0546  01151 15100577        CMA  X
0547  01152 11101154        BRU  *+2
0548  01153 11101155        BRU  *+2
0549  01154 11101160        BRU  *+4
0550  01155 01100527        LAA  S342
0551  01156 03100633        STA  A151
0552  01157 11101166        BRU  OUT
0553  01160 15100600        CMA  Y
0554  01161 11101163        BRU  *+2
0555  01162 11101164        BRU  *+2
0556  01163 11100313        BRU  A105
0557  01164 01100530        LAA  S343
0558  01165 03100633        STA  A151
0559  01166 00000033 OUT    NOP
0560  01167 00000033        NOP
0561  01170 00000033        NOP
0562  01171 11301015        BRU* SINK
0563  01172 00000000 CLR    HLT                 CLEAR DATA REGISTERS
0564  01173 01100536        LAA  CNT3           ZERO DATA
0565  01174 03100540        STA  CNT5           CLEAR ERRORS
0566  01175 03100541        STA  CNT6           GOOD REPLY
0567  01176 03100542        STA  CNT7           GOOD REPLY
0568  01177 03100554        STA  CNTH           CLR XMISSIONS
0569  01200 03100555        STA  CNTI           CLR XMISSIONS
0570  01201 03100027        STA  MNTH           CLR MONTH
```

```
01202 03100032        STA  DAY          CLR DAY
01203 03100035        STA  HOUR         CLA HOUR
01204 03100040        STA  MISE         CLR MIN/SEC
01205 03100627        STA  A137         RI FAIL
01206 03100551        STA  CNTE         TI FAIL
01207 11301172        BRU* CLR
01210 12101172 A139   SPB  CLR
01211 00000033        NOP
01212 00000033        NOP
01213 11100026        BRU  BEGN
01214 00000000 CRLF   HLT               CARRIAGE RET LINE FEED
01215 00170401        MOP  1
01216 00106400        DATA '106400
01217 11101215        BRU  *-2
01220 00170401        MOP  1
01221 00105000        DATA '105000
01222 11101220        BRU  *-2
01223 11301214        BRU* CRLF
01224 00000000 TTYO   HLT               TYPE DATA
01225 00170001        AOP  1
01226 11101225        BRU  *-1
01227 00001016        LSL  8
01230 00170001        AOP  1
01231 11101230        BRU  *-1
01232 11301224        BRU* TTYO
01233 00000000 TTY    HLT               CONV BINARY TO ASCII
01234 05000260        AMA  ='260
01235 00001016        LSL  8
01236 00170001        AOP  1
01237 11101236        BRU  *-1
01240 00000003        CLA
01241 11301233        BRU* TTY
01242 00000000 SPC    HLT               1 SPACE
01243 00170401        MOP  1
01244 00120000        DATA '120000
01245 11101243        BRU  *-2
01246 00000003        CLA
01247 11301242        BRU* SPC
01250 00000000 FLL    HLT               ARRANGE TYPE CLK DATA
01251 00000413        FLL  4
01252 12101233        SPB  TTY
01253 00000413        FLL  4
01254 12101233        SPB  TTY
01255 12101242        SPB  SPC
01256 11301250        BRU* FLL
01257 00000000 SUB1   HLT               PRINT DATE
01260 12101214        SPB  CRLF
01261 02077776        LBA  =-2
```

```
0619  01262 01501641        LAA   DATE+2,1
0620  01263 12101224        SPB   TTYO
0621  01264 00000026        IBS
0622  01265 11101262        BRU   *-3
0623  01266 12101242        SPB   SPC
0624  01267 11301257        BRU*  SUB1
0625  01270 00000000  SUB2  HLT                 PRINT MONTHS
0626  01271 00001413        FLL   12
0627  01272 12101233        SPB   TTY
0628  01273 00000413        FLL   4
0629  01274 12101233        SPB   TTY
0630  01275 12101242        SPB   SPC
0631  01276 11301270        BRU*  SUB2
0632  01277 00000000  SUB3  HLT                 PRINT DAY-YEAR
0633  01300 12101250        SPB   FLL
0634  01301 02101676        LBA   YEAR
0635  01302 12101250        SPB   FLL
0636  01303 12101214        SPB   CRLF
0637  01304 11301277        BRU*  SUB3
0638  01305 00000000  SUB4  HLT                 PRINT TIME
0639  01306 02077776        LBA   =-2
0640  01307 01501643        LAA   TIME+2,1
0641  01310 12101224        SPB   TTYO
0642  01311 00000026        IBS
0643  01312 11101307        BRU   *-3
0644  01313 12101242        SPB   SPC
0645  01314 11301305        BRU*  SUB4
0646  01315 00000000  SUB5  HLT                 PRINT HOURS
0647  01316 00001013        FLL   8
0648  01317 00000003        CLA
0649  01320 12101250        SPB   FLL
0650  01321 11301315        BRU*  SUB5
0651  01322 00000000  SUB6  HLT                 PRINT MIN.-SEC.
0652  01323 12101250        SPB   FLL
0653  01324 12101250        SPB   FLL
0654  01325 12101214        SPB   CRLF
0655  01326 11301322        BRU*  SUB6
0656  01327 00000000  PWRF  HLT                 PWR FAIL SUBROUTINE
0657  01330 03101671        STA   PWR3          SAVE A REG
0658  01331 04101672        STB   PWR4          SAVE B REG
0659  01332 14101673        IMS   PWR5
0660  01333 00000033        NOP
0661  01334 01101674        LAA   PWR6          ADDR PWR UP SUB RUTNE
0662  01335 03301670        STA*  PWR2          STORE AT '1000
0663  01336 00000000        HLT
0664  01337 00000000  PWRU  HLT                 PWR UP SUB RUTNE
0665  01340 01101667        LAA   PWR1          ADDR PWR FAIL SUB RUTNE
0666  01341 03301670        STA*  PWR2          STORE AT '1000
```

```
01342 01100534        LAA  CNT1          CNTR F/STABALIZE
01343 03100550        STA  CNTD
01344 14100550        IMS  CNTD
01345 11101344        BRU  *-1
01346 01100640        LAA  A242          DAC A241
01347 03101327        STA  PWRF
01350 00000033        NOP
01351 00000033        NOP
01352 00000033        NOP
01353 00130114        CEU  '14,W
01354 00005440        DATA '5440
01355 00130600        PIE
01356 00010001        DATA '10001
01357 00130101        CEU  1,W
01360 00062200        DATA '62200
01361 01101671        LAA  PWR3          RELOAD A REG
01362 02101672        LBA  PWR4          RELOAD B REG
01363 00000035        TOI                TURN OFF INTRUP
01364 11301327        BRU* PWRF
                  *   NEXT 20 STATEMENTS CONTROL TTY MOTOR
01365 00130601 MOTR   PID
01366 00010001        DATA '10001
01367 01100666        LAA  ZERO
01370 00000022        SAZ
01371 11101407        BRU  A131
01372 00130001        CEU  1
01373 00001400        DATA '1400         TTY OFF-MODE CLR
01374 11101372        BRU  *-2
01375 01100665        LAA  SNS           SNS17
01376 03100043        STA  STRT
01377 01100624        LAA  A132          BRU MOTR
01400 03100044        STA  STRT+1
01401 01100663        LAA  NOP
01402 03100214        STA  A301
01403 03100215        STA  A301+1
01404 01077777        LAA  =-1
01405 03100666        STA  ZERO
01406 11100025        BRU  BEGN-1
01407 00130001 A131   CEU  1
01410 00000200        DATA '200
01411 11101407        BRU  *-2
01412 01100664        LAA  PIE
01413 03100214        STA  A301
01414 01100642        LAA  A302          '10001
01415 03100215        STA  A301+1
01416 01100663        LAA  NOP
01417 03100043        STA  STRT
01420 03100044        STA  STRT+1
```

```
01421 14100666        IMS  ZERO
01422 00000033        NOP
01423 00130601 ABC    PID
01424 00010001        DATA '10001
01425 00130001        CEU  1
01426 00001000        DATA '1000          MODE CLR
01427 11101425        BRU  *-2
01430 12101214        SPB  CRLF
01431 00130014        CEU  '14
01432 00002000        DATA '2000          TURN CARRIER OFF
01433 11101431        BRU  *-2
01434 01077776        LAA  =-2
01435 03100556        STA  CNTJ
01436 02077772        LBA  =-6
01437 01501631        LAA  STAR+6,1       TEST STARTED
01440 12101224        SPB  TTYO
01441 00000026        IBS
01442 11101437        BRU  *-3
                    *  NEXT 58 STATEMENTS FETCH AND PRINT TIME AND
                    *  TRANSMISSION DATA
01443 12101257 SUBS   SPB  SUB1           FETCH-PRINT DATA
01444 02100027        LBA  MNTH           FETCH-PRINT MONTH
01445 12101270        SPB  SUB2
01446 02100032        LBA  DAY            FETCH-PRINT DAY-YEAR
01447 12101277        SPB  SUB3
01450 12101305        SPB  SUB4           FETCH-PRINT TIME
01451 02100035        LBA  HOUR           FETCH-PRINT HOUR
01452 12101315        SPB  SUB5
01453 02100040        LBA  MISE           FETCH-PRINT MIN-SEC
01454 12101322        SPB  SUB6
01455 12101214        SPB  CRLF
01456 14100556        IMS  CNTJ           PRINTED TEST STOPPED
01457 11101464        BRU  A306
01460 00130001        CEU  1
01461 00062000        DATA '62000
01462 11101460        BRU  *-2
01463 11101210        BRU  A139
01464 02077754 A306   LBA  =-20
01465 01501667        LAA  HDNG+20,1
01466 12101224        SPB  TTYO
01467 00000026        IBS
01470 11101465        BRU  *-3
01471 12101214        SPB  CRLF
01472 00170401        MOP  1
01473 00120000        DATA '120000
01474 11101472        BRU  *-2
01475 01100554        LAA  CNTH           DBL PREC XMISSIONS
01476 02100555        LBA  CNTI
```

```
01477 10023420        DIV  =10000        STRT CONV BIN TO ASCII
01500 04100555        STB  CNTI
01501 00000005        TAB
01502 12101567        SPB  CONV
01503 02100555        LBA  CNTI
01504 12101606        SPB  CONU
01505 12101545        SPB  SPCS
01506 01100541        LAA  CNT6          DBL PREC GOOD REPLY
01507 02100542        LBA  CNT7
01510 10023420        DIV  =10000        STRT CONV BIN TO ASCII
01511 04100542        STB  CNT7
01512 00000005        TAB
01513 12101567        SPB  CONV
01514 02100542        LBA  CNT7
01515 12101606        SPB  CONU
01516 12101545        SPB  SPCS
01517 02100540        LBA  CNT5          ERRORS
01520 12101567        SPB  CONV
01521 12101214        SPB  CRLF
01522 12101214        SPB  CRLF
                    *  NEXT 8 STATEMEBTS FETCH AND PRINT TIME AND
                    *  DATE TESTS STOPPED
01523 00170242        AIP  '42
01524 11101523        BRU  *-1
01525 03100027        STA  MNTH
01526 00170241        AIP  '41
01527 11101526        BRU  *-1
01530 03100032        STA  DAY
01531 00170241        AIP  '41
01532 11101531        BRU  *-1
01533 03100035        STA  HOUR
01534 00170240        AIP  '40
01535 11101534        BRU  *-1
01536 03100040        STA  MISE
01537 02077772        LBA  =-6
01540 01501637        LAA  STOP+6,1      TEST STOPPED
01541 12101224        SPB  TTYO
01542 00000026        IBS
01543 11101540        BRU  *-3
01544 11101443        BRU  SUBS
01545 00000000 SPCS   HLT                8 SPACE SUB RUTNE
01546 01077771        LAA  =-7
01547 03100661        STA  SPC6
01550 00170401        MOP  1
01551 00120000        DATA '120000       SPACE
01552 11101550        BRU  *-2
01553 14100661        IMS  SPC6
01554 11101550        BRU  SPCS+3
```

```
0811  01555 11301545       BRU* SPCS
0812  01556 00000000 SPC4 HLT                    4 SPACES
0813  01557 01077774       LAA  =-4
0814  01560 03100646       STA  SPAC
0815  01561 00170401       MOP  1
0816  01562 00120000       DATA '120000
0817  01563 11101561       BRU  *-2
0818  01564 14100646       IMS  SPAC
0819  01565 11101561       BRU  SPC4+3
0820  01566 11301556       BRU* SPC4
0821  01567 00000000 CONV HLT                    CONVERT BINARY TO ASCII
0822  01570 01077773       LAA  =-5
0823  01571 03100660       STA  NEG5
0824  01572 00000003       CLA
0825  01573 11101576       BRU  *+3
0826  01574 00000003       CLA
0827  01575 07000012       MPY  =10
0828  01576 10023420       DIV  =10000
0829  01577 05000260       AMA  ='260
0830  01600 00001016       LSL  8
0831  01601 00170001       AOP  1
0832  01602 11101601       BRU  *-1
0833  01603 14100660       IMS  NEG5
0834  01604 11101574       BRU  CONV+5
0835  01605 11301567       BRU* CONV
0836  01606 00000000 CONU HLT                    CONVERT BIN TO ASCII
0837  01607 01077774       LAA  =-4
0838  01610 03100657       STA  NEG4
0839  01611 00000003       CLA
0840  01612 07000012       MPY  =10
0841  01613 10023420       DIV  =10000
0842  01614 05000260       AMA  ='260
0843  01615 00001016       LSL  8
0844  01616 00170001       AOP  1
0845  01617 11101616       BRU  *-1
0846  01620 14100657       IMS  NEG4
0847  01621 11101611       BRU  CONU+3
0848  01622 11301606       BRU* CONU
0849  01623 00152305 STAR DATA ''TEST STARTED''
0849  01624 00151724
0849  01625 00120323
0849  01626 00152301
0849  01627 00151324
0849  01630 00142704
0850  01631 00152305 STOP DATA ''TEST STOPPED''
0850  01632 00151724
0850  01633 00120323
0850  01634 00152317
```

```
0850  01635 00150320
0850  01636 00142704
0851  01637 00142301 DATE DATA ''DATE''
0851  01640 00152305
0852  01641 00152311 TIME DATA ''TIME''
0852  01642 00146705
0853  01643 00152322 HDNG DATA ''TRANSMISSIONS    GOOD REPLY''
0853  01644 00140716
0853  01645 00151715
0853  01646 00144723
0853  01647 00151711
0853  01650 00147716
0853  01651 00151640
0853  01652 00120240
0853  01653 00120307
0853  01654 00147717
0853  01655 00142240
0853  01656 00151305
0853  01657 00150314
0853  01660 00154640
0854  01661 00120240      DATA ''     ERRORS''
0854  01662 00120240
0854  01663 00120305
0854  01664 00151322
0854  01665 00147722
0854  01666 00151640
0855  01667 35401327 PWR1 DAC  PWRF
0856  01670 00001000 PWR2 DATA '1000          PI ADDR
0857  01671 00000001 PWR3 BSS  1              ASAV
0858  01672 00000001 PWR4 BSS  1              BSAV
0859  01673 00000000 PWR5 DATA 0              NO OF PWR FAILURES
0860  01674 35401337 PWR6 DAC  PWRU
0861  01675 00001016 I016 DATA '1016
0862  01676 00073400 YEAR DATA '73400
0863  01677 70400000      END
       A243     00024
       BEGN     00026
       MNTH     00027
       DAY      00032
       HOUR     00035
       MISE     00040
       STRT     00043

       A123     00071
       A124     00077
       A135     00104
       A241     00107
       CARR     00120
       A2       00141
```

#6 TELETYPE

PROGRAM DESCRIPTION

IDENTIFICATION: Teletype, I/O Bus, Mainframe Interface and Receive Interrupt Diagnostic

AUTHOR: Carl L. Thompson, Natural Gas Pipeline Company of America, Communications Division

ISSUED: May 16, 1976

PURPOSE: To assist the Communication Technicians with maintenance and repair of the teletype logic, I/O cable continuity, and the modem input interrupt logic. Program utilizes the input and output standard interrupts as well as the special modem receive input interrupt.

COMPUTER: 810A

STORAGE: 375 Octal Locations

LOADING PROCEDURE:

Relocatable Loader, 16K modified
Program counter, Enter '36060
"A" Accumulator, Enter '6000
"B" Accumulator = 0

Insert tape in reader and press start twice

This diagnostic consists of 2 programs

Program A

Start program at '6000

Program will print numbers continuously, 60 per line, until halted. An interrupt is generated for printing each number. After each line is printed the output interrupt is disabled and the teletype motor is turned off for approximately one second before re-initializing to print next line.

To print one character continuously, type the letter L. This will enable the load control switch mode permitting the selection of a character with control switches (0-7).

Example; to print the letter "A", set switches 0, 1, 7, which = '140400. All characters must be left justified as the "A" above for the load control switch mode. (Refer to table on Sheet 4).

To return to the auto mode of printing numbers, press the letter "A" on teletype.

To enable the modem receive interrupt, press the letter "R" on teletype. This function will permit testing the teletype output interrupt and the modem receive input interrupt together. Upon receipt of a valid addressed message, the receive interrupt will ge generated. Since the receive interrupt has priority over the teletype interrupt, the following program change will be initiated.

1. The interrupt logic will initiate a hardware store place and branch through the memory interface cards (8201).

2. Service to the teletype interrupt will be discontinued.

3. The modem receive interrupt will be serviced. Each time the receive interrupt subroutine is serviced, the teletype bell will ring. After completion of the receive interrupt routine the program will branch back to the teletype program location at the address of interruption and continue processing until completed.

The program <u>should never halt</u> until halted manually and there <u>should never</u> be a misprinted character if operating properly.

To disable the receive interrupt press the letter "S".

<u>Program B</u>

Start program at '6500

This program prints a character that is typed from the teletype keyboard.

Both the input and output standard interrupt is generated to print a character. By printing the letter "O" and the number "O" all 16 data bit lines will be utilized on the I/O bus.

Program Modifications Via Teletype Keyboard

TYPE CHARACTER	DESCRIPTION OF PROGRAM CHANGE
A = Auto Mode	Program will type numbers 1-9 continuously, 60 per line, until halted.
L = LCS Mode	Program will print one character continuously. The character must be selected by setting control switches 0-7. See attached list labeled LCS Mode for proper switch setting.
R = Rec. Interrupt	The receive interrupt will be enabled permitting the program to service the standard teletype output interrupt and the special receive input interrupt.
S = Rec. Interrupt	The receive interrupt will be disabled. The program will continue to operate in the "Auto" or "LCS" mode, whichever is selected.

The program will initiate a print-out of "invalid request" if a character is typed other than the 4 characters above.

LCS Mode Control Panel Switch Setting

A = '140400
B = '141000
C = '141400
D = '142000
E = '142400
F = '143000
G = '143400
H = '144000
I = '144400
J = '145000
K = '145400
L = '146000
M = '146400
N = '147000
O = '147400
P = '150000
Q = '150400
R = '151000
S = '151400
T = '152000
U = '152400
V = '153000
W = '153400
X = '154000
Y = '154400
Z = '155000

0 = '130000
1 = '130400
2 = '131000
3 = '131400
4 = '132000
5 = '132400
6 = '133000
7 = '133400
8 = '134000
9 = '134400

Space 120000
Bell 103400
Carriage Return 106400
Line Feed 105000

SAMPLE PRINTOUT OF TELETYPE DIAGNOSTIC

```
12345678912345678912345678912345678912345678912345678912345
12345678912345678912345678912345678912345678912345678912345
12345678912345678912345678912345678912345678912345678912345
12345678912345678912345678912345678912345678912345678912345
12345678912345678912345678912345678912345678912345678912345
1234567891234567891234567891234567891234L
88888888888888888888888888888888888888888888888888888888888
88888888888888888888888888888888888888888888888888888888888
00000000000000000000000000000000000000000000000000000000000
PPPPPPPPPPPPPPPPPPPPPPPPPPPPPPPPPPPPPPPPPPPPPPPPPPPPPPPPPPP
PPPPPPPPPPPPPPPPPPPPPPPPPPPPPPPPPPPPPPPPPPPPPPPPPPPPPPPPPPP
PPPPPPPPPPPPPPPPPPPPPPPPPPPPPPPB
INVALID REQUEST
PPPPPPPPPPPPPPPPPPPPPPPPPPPPPPPPPPPPPPPPPPPPPPPPPPPPPPPPPPP
PPPPPPPPPPPPPPPPPPPPPPPPPPPPPPPPPPPPPPPPPPPPPPPPPPPPPPPPPPP
PPPPPPPPPPPPPPPPPPPPPPPPPPPPPPPPPPPPPPPPA
12345678912345678912345678912345678912345678912345678912345
12345678912345678912345678912345678912345678912345678912345
12345678912345678912345678912345678912345678912345678912345
12345678912345678912345678912345678912345678912345678912345
12345678912345678912345678912345678912345678912345678912345
12345678912345678912345678912345678912345678912345678912345
12345678912345678912345678912345678912345678912345678912345
12345678912345678912345678912345678912345678912345678912345
12345678912345678912345678912345678912345678912345678912345
12345678912345678912345678912345678912345678912345678912345
123456789123456R
12345678912345678912345678912345678912345678912345678912345
12345678912345678912345678912345678912345678912345678912345
12345678912345678912345678912345678912345678912345678912345
12345678912345678912345678912345678912345678912345678912345
12345678912345678912345678912345678912345678912345678912345
123456789123456789123456789S
12345678912345678912345678912345678912345678912345678912345
12345678912345678912345678912345678912345678912345678912345
```

```
0001                    ***********************************************
0002                    *          TELETYPE PROGRAM
0003                    *          PROGRAM WILL TYPE CONTINUOUSLY UNTIL
0004                    *          HALTED. AN INTERRUPT IS GENERATED
0005                    *          AFTER EACH CHARACTER IS PRINTED. TYPE
0006                    *          LETTER L TO CHANGE PROG TO LCS MODE.
0007                    *          TYPE LETTER A TO RETURN TO AUTO MODE.
0008                    *          TYPE LETTER R TO ENABLE REC INTERRUPT
0009                    *          TYPE LETTER S TO DISABLE REC INTERRUPT
0010                    *          PREPARED BY CARL L THOMPSON  5-15-76
0011                    ***********************************************
0012  00000 00000000       REL
0013  00000 01100241       LAA  CNTD
0014  00001 03300257       STA* IO17
0015  00002 01100242       LAA  CNTE
0016  00003 03300256       STA* IO16
0017  00004 01100252       LAA  RECI
0018  00005 03300253       STA* RECL
0019  00006 00130600       PIE
0020  00007 00010001       DATA '10001
0021  00010 00000033       NOP
0022  00011 00000033       NOP
0023  00012 00000033 STRT  NOP
0024  00013 00000033       NOP                 OR PIE F/REC INTRUP
0025  00014 00000033       NOP                 OR DATA 1 REC INTRUP
0026  00015 00130014       CEU  '14
0027  00016 00001000       DATA '1000
0028  00017 11100015       BRU  *-2
0029  00020 14100236       IMS  CNTA
0030  00021 11100020       BRU  *-1
0031  00022 14100237       IMS  CNTB
0032  00023 11100022       BRU  *-1
0033  00024 00130001       CEU  1
0034  00025 00072200       DATA '72200
0035  00026 11100024       BRU  *-2
0036  00027 12100071       SPB  CRLF
0037  00030 02077705       LBA  =-59
0038  00031 01500353 LAO   LAA  TBLA+59,1
0039  00032 00130600       PIE
0040  00033 00010002       DATA '10002
0041  00034 00000033       NOP
0042  00035 11100034       BRU  *-1
0043  00036 00000000 PRNT  HLT
0044  00037 00130601       PID
0045  00040 00010001       DATA '10001
0046  00041 05000260       AMA  ='260
0047  00042 00001016       LSL  8
```

```
0048  00043 00170001        AOP  1
0049  00044 11100043        BRU  *-1
0050  00045 00000026        IBS
0051  00046 11100062        BRU  LAA
0052  00047 00130601        PID
0053  00050 00000001        DATA 1
0054  00051 00130601        PID
0055  00052 00010002        DATA '10002
0056  00053 01100240        LAA  CNTC            DAC STRT
0057  00054 03100036        STA  PRNT
0058  00055 14100251        IMS  CNTL
0059  00056 11100055        BRU  *-1
0060  00057 00130001        CEU  1
0061  00060 00072400        DATA '72400
0062  00061 11100057        BRU  *-2
0063  00062 01500353 LAA    LAA  TBLA+59,1
0064  00063 00000033        NOP
0065  00064 00000033        NOP
0066  00065 00130600        PIE
0067  00066 00010001        DATA '10001
0068  00067 00000035        TOI
0069  00070 11300036        BRU* PRNT
0070  00071 00000000 CRLF   HLT
0071  00072 00170401        MOP  1
0072  00073 00106400        DATA '106400
0073  00074 11100072        BRU  *-2
0074  00075 00170401        MOP  1
0075  00076 00105000        DATA '105000
0076  00077 11100075        BRU  *-2
0077  00100 11300071        BRU* CRLF
0078  00101 00000000 TYPE   HLT                   INPT INTERRUPT ROUTINE
0079  00102 00130601        PID
0080  00103 00010002        DATA '10002
0081  00104 00000033        NOP
0082  00105 00000033        NOP
0083  00106 00130001        CEU  1
0084  00107 00062200        DATA '62200          CON INPT-TTY ON
0085  00110 11100106        BRU  *-2
0086  00111 00170201        AIP  1
0087  00112 11100111        BRU  *-1
0088  00113 00001016        LSL  8
0089  00114 00170001        AOP  1
0090  00115 11100114        BRU  *-1
0091  00116 15046000        CMA  ='146000
0092  00117 11100121        BRU  *+2
0093  00120 11100133        BRU  LCSS
0094  00121 15051000        CMA  ='151000
0095  00122 11100124        BRU  *+2
```

```
0096  00123 11100142        BRU  REC
0097  00124 15051400        CMA  ='151400
0098  00125 11100127        BRU  *+2
0099  00126 11100150        BRU  INHR
0100  00127 15040400        CMA  ='140400
0101  00130 11100132        BRU  *+2
0102  00131 11100156        BRU  AUTO
0103  00132 11100166        BRU  INVL          INVALID REQUEST
0104  00133 01100235 LCSS   LAA  LCS           CHG TO LCS MODE
0105  00134 03100031        STA  LAO
0106  00135 03100062        STA  LAA
0107  00136 01100234        LAA  NOP
0108  00137 03100041        STA  PRNT+3
0109  00140 03100042        STA  PRNT+4
0110  00141 11100174        BRU  TOI
0111  00142 00000033 REC    NOP
0112  00143 01100250        LAA  CNTK          PIE
0113  00144 03100013        STA  STRT+1
0114  00145 01000001        LAA  =1
0115  00146 03100014        STA  STRT+2
0116  00147 11100174        BRU  TOI
0117  00150 00130601 INHR   PID
0118  00151 00000001        DATA 1
0119  00152 01100234        LAA  NOP
0120  00153 03100013        STA  STRT+1
0121  00154 03100014        STA  STRT+2
0122  00155 11100174        BRU  TOI
0123  00156 01100243 AUTO   LAA  CNTF          CHG TO AUTO MODE
0124  00157 03100031        STA  LAO           LAA TBLA+59,I
0125  00160 03100062        STA  LAA
0126  00161 01100244        LAA  CNTG          AMA='260
0127  00162 03100041        STA  PRNT+3
0128  00163 01100245        LAA  CNTH          LSL 8
0129  00164 03100042        STA  PRNT+4
0130  00165 11100174        BRU  TOI
0131  00166 12100071 INVL   SPB  CRLF
0132  00167 02077770        LBA  =-8
0133  00170 01500371        LAA  TBLC+8,I      INVALID REQ
0134  00171 12100227        SPB  TTYO
0135  00172 00000026        IBS
0136  00173 11100170        BRU  *-3
0137  00174 00000033 TOI    NOP
0138  00175 01100240        LAA  CNTC          DAC STRT
0139  00176 03100101        STA  TYPE
0140  00177 00000033        NOP
0141  00200 00000033        NOP
0142  00201 00000033        NOP
0143  00202 00000035        TOI
```

```
00203 11300101        BRU* TYPE
00204 00000000 RECV   HLT
00205 03100254        STA  SAVA
00206 04100255        STB  SAVB
00207 00130101        CEU  1,W
00210 00072200        DATA '72200
00211 00000033        NOP
00212 00000033        NOP
00213 00170214        AIP  '14
00214 00000033        NOP
00215 14100246        IMS  CNTI
00216 00000033        NOP
00217 01003400        LAA  ='103400
00220 00170101        AOP  1,W
00221 01100254        LAA  SAVA
00222 02100255        LBA  SAVB
00223 00000033        NOP
00224 00000033        NOP
00225 00000035        TOI
00226 11300204        BRU* RECV
00227 00000000 TTYO   HLT
00230 00170101        AOP  1,W
00231 00001016        LSL  8
00232 00170101        AOP  1,W
00233 11300227        BRU* TTYO
00234 00000033 NOP    NOP
00235 00000031 LCS    LCS
00236 00000000 CNTA   DATA 0
00237 00000000 CNTB   DATA 0
00240 35400012 CNTC   DAC  STRT
00241 35400036 CNTD   DAC  PRNT
00242 35400101 CNTE   DAC  TYPE
00243 01500353 CNTF   LAA  TBLA+59,1
00244 05000260 CNTG   AMA  ='260
00245 00001016 CNTH   LSL  8
00246 00000000 CNTI   DATA 0
00247 35400010 CNTJ   DAC  STRT-2
00250 00130600 CNTK   PIE
00251 00000000 CNTL   DATA 0
00252 35400204 RECI   DAC  RECV
00253 00001002 RECL   DATA '1002
00254 00000000 SAVA   DATA 0
00255 00000000 SAVB   DATA 0
00256 00001016 I016   DATA '1016
00257 00001017 I017   DATA '1017
00260 00000001 TBLA   DATA 1,2,3,4,5,6,7,8,9,1,2,3,4,5,6,7,8,9
00261 00000002
00262 00000003
```

```
0189  00263 00000004
0189  00264 00000005
0189  00265 00000006
0189  00266 00000007
0189  00267 00000010
0189  00270 00000011
0189  00271 00000001
0189  00272 00000002
0189  00273 00000003
0189  00274 00000004
0189  00275 00000005
0189  00276 00000006
0189  00277 00000007
0189  00300 00000010
0189  00301 00000011
0190  00302 00000001        DATA 1,2,3,4,5,6,7,8,9,1,2,3,4,5,6,7,8,9
0190  00303 00000002
0190  00304 00000003
0190  00305 00000004
0190  00306 00000005
0190  00307 00000006
0190  00310 00000007
0190  00311 00000010
0190  00312 00000011
0190  00313 00000001
0190  00314 00000002
0190  00315 00000003
0190  00316 00000004
0190  00317 00000005
0190  00320 00000006
0190  00321 00000007
0190  00322 00000010
0190  00323 00000011
0191  00324 00000001        DATA 1,2,3,4,5,6,7,8,9,1,2,3,4,5,6,7,8,9
0191  00325 00000002
0191  00326 00000003
0191  00327 00000004
0191  00330 00000005
0191  00331 00000006
0191  00332 00000007
0191  00333 00000010
0191  00334 00000011
0191  00335 00000001
0191  00336 00000002
0191  00337 00000003
0191  00340 00000004
0191  00341 00000005
0191  00342 00000006
```

```
0191  00343 00000007
0191  00344 00000010
0191  00345 00000011
0192  00346 00000001        DATA 1,2,3,4,5,6,7,8,9,1,2
0192  00347 00000002
0192  00350 00000003
0192  00351 00000004
0192  00352 00000005
0192  00353 00000006
0192  00354 00000007
0192  00355 00000010
0192  00356 00000011
0192  00357 00000001
0192  00360 00000002
0193  00361 00144716 TBLC DATA ''INVALID REQUEST''
0193  00362 00153301
0193  00363 00146311
0193  00364 00142240
0193  00365 00151305
0193  00366 00150725
0193  00367 00142723
0193  00370 00152240
0194                 *          PROGRAM WILL INPUT FROM ANY KEY ON THE
0195                 *          TELETYPE KEY BOARD AND PRINT THE
0196                 *          CHARACTER OR NUMBER UTILIZING BOTH
0197                 *          STANDARD INTERRUPTS.
0198  00500 70000500       ORG  '500
0199  00500 01100530       LAA  INPT
0200  00501 03300256       STA* I016
0201  00502 01100531       LAA  OUPT
0202  00503 03300257       STA* I017
0203  00504 00130101       CEU  1,W
0204  00505 00072000       DATA '72000
0205  00506 00130600       PIE                 ENABLE INPT INTERRUPT
0206  00507 00010001       DATA '10001
0207  00510 00000033       NOP                 WAIT FOR OUPT INTERRUPT
0208  00511 11100510       BRU  *-1
0209  00512 00000000 TIPE HLT
0210  00513 00170301       AIP  1,W            TYPE CHARACTER
0211  00514 00001016       LSL  8
0212  00515 00130600       PIE                 ENABLE OUPT INTERRUPT
0213  00516 00010002       DATA '10002
0214  00517 00000035       TOI
0215  00520 11300512       BRU* TIPE
0216  00521 00000000 PRNN HLT
0217  00522 00170101       AOP  1,W            PRINT CHARACTER
0218  00523 00001015       RSL  8
0219  00524 00130601       PID                 DISABLE OUPT INTERRUPT
```

```
0220  00525 00010002        DATA '10002
0221  00526 00000035        TOI
0222  00527 11300521        BRU* PRNN
0223  00530 35400512 INPT   DAC  TIPE
0224  00531 35400521 OUPT   DAC  PRNN
0225  00532 70400000        END
       STRT     00012
       LAO      00031
       PRNT     00036
       LAA      00062
       CRLF     00071
       TYPE     00101
       LCSS     00133
       REC      00142
       INHR     00150
       AUTO     00156
       INVL     00166
       TOI      00174
       RECV     00204
       TTYO     00227
       NOP      00234
       LCS      00235
       CNTA     00236
       CNTB     00237
       CNTC     00240
       CNTD     00241
       CNTE     00242
       CNTF     00243
       CNTG     00244
       CNTH     00245
       CNTI     00246
       CNTJ     00247
       CNTK     00250
       CNTL     00251
       RECI     00252
       RECL     00253
       SAVA     00254
       SAVB     00255
       IO16     00256
       IO17     00257
       TBLA     00260
       TBLC     00361
       TIPE     00512
       PRNN     00521
       INPT     00530
       OUPT     00531
ERRORS 0000     00000
```

HIGH SPEED READER MODEL 2500
MAINTENANCE AND ADJUSTMENT PROCEDURES

POWER SUPPLY OUTPUT VOLTAGES

+ 15 Volts ± 1.0 Volt
- 15 Volts ± 1.0 Volt
+ 8.6 Volts ± 0.5 Volt
Refer to Figure 2 for checking the 15 Volts.
DC ground is not tied to chassis therefore connect ground 0v on Figure 2 or pin 19 of the test jumper plug.
The 8.6 Volts must be measured at the exciter lamp.
The slide wire adjusting resistor for lamp voltage is located on the right side of the drive motor. Adjust with an accurate meter.

LUBRICATION

Drive Motor - Add 2-3 drops of non detergent oil in front and rear holes semi-annually.

Clean pinch roller and capstan with lint free brush and N-AMYL alcohol.

PHOTO AMPLIFIER ADJUSTMENTS

Neutral Density Filter Method

1a. Remove cable connector 25A from teletype and connect high speed reader jumper plug to the cable.
1b. Remove cover from reader.
1c. Jumper S2, ready/load switch contacts under cover.
1d. Apply AC power to reader.
1e. Check lamp voltage (8.6v) and 15 volts as listed under power supply voltages then replace reader cover.
1f. Cover all nine photo diodes with neutral density filter.
1g. Adjust oscilloscope or DC volt meter for -15 volts, connect ground lead to jumper plug, pin 19 and probe to pin 9, sprocket signal.
1h. Adjust potentiometer R23 of sprocket channel circuit (see Figure 1 for R23) for an output of -15 volts.
1i. Slowly readjust R23 to point where sprocket output goes to 0 volts. Seek this point as accurate as possible.
1j. Repeat steps g, h and i for each data channel output located at pins 20 - 27 (Chan. 1 - 8).
1k. Perform output signal coincidence check, refer to 21.

DUTY CYCLE METHOD (FULLY PUNCHED CIRCULAR TAPE)

2a. Remove cable connector 25A from teletype and connect high speed reader jumper plug to the cable.
2b. Remove cover from high speed reader.

2c. Apply AC power to reader.

2d. Check lamp voltage (8.6v) and 15 volts as listed under power supply voltages, then replace reader cover.

2e. Insert circular fully punched test tape* in reader. Tape should run when you enable ready load switch.

2f. Connect scope ground lead to jumper plug pin 19 and probe to pin 9, sprocket channel. Adjust scope for one full cycle of signal equal to 10 divisions of oscilloscope scale.

2g. Adjust potentiometer R23, sprocket channel for -15 volts 40% of cycle and zero 0 volts for 60% of cycle. (See Figure 3a.)

2h. Move scope probe to data channel 1, output signal at pin 27 of H.S. reader jumper plug.

2i. Adjust scope for one full cycle of signal equal to 10 divisions of scope scale.

2j. Adjust potentiometer R23 of data channel 1. (See Figure 1) so that signal is -15 volts 70% of cycle and 0 volts for 30% of cycle as displayed in Figure 3b.

2k. Repeat steps h, i and j for the seven remaining data channels on test plug.

2l. Output Signal Coincidence Check
This check verifies that the relative coincidence between the sprocket channel and data channel outputs is within the specified tolerance. Perform this test following any amplifier adjustments.

Connect the B channel of scope to the sprocket channel and move the A channel from data channel 1 through 8, observing the sprocket and data channel waveforms and compare the relative coincidence between the two while the reader is slewing a fully punched tape. See Figure 3c for allowable variations. If unable to meet these tolerances you may not be able to load the station program. Repair or return the reader to Station 106. Use the slow speed teletype reader for loading programs in the computer.

*NOTE: Test tape should be checked with tape gauge for correct hole spacing. If spacing is off, readjust tape punch and punch another tape by pressing Rept key then rub out (in this order). To adjust tape punch (Mod. 33 TTY) remove cover from punch and move spring, attached to on-off assembly, forward or backward on the knotched arm.

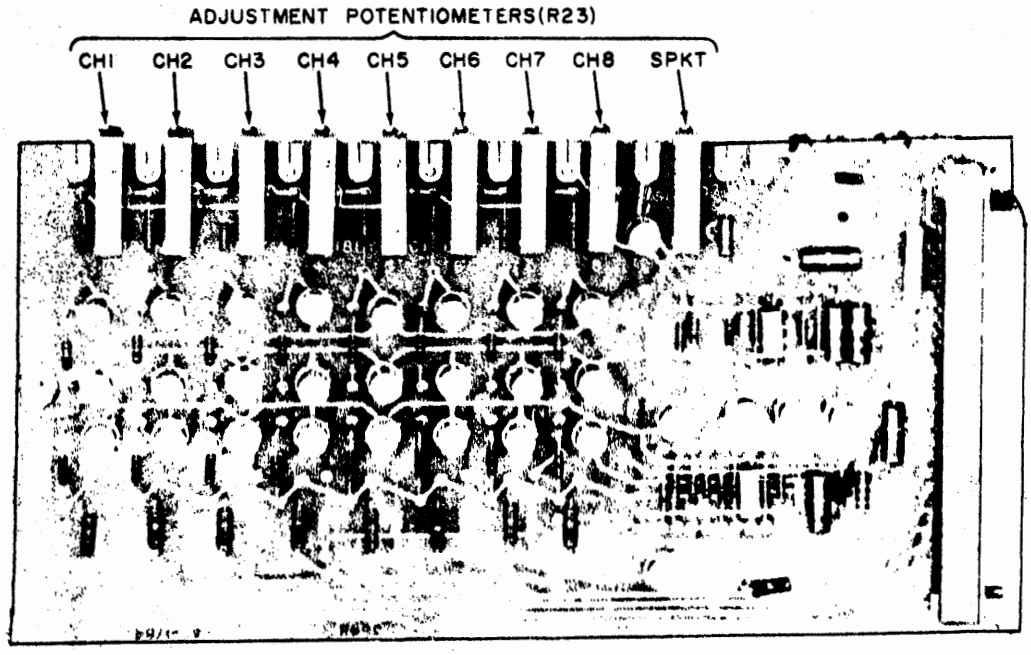

Figure 1. Amplifier Adjustment Locations

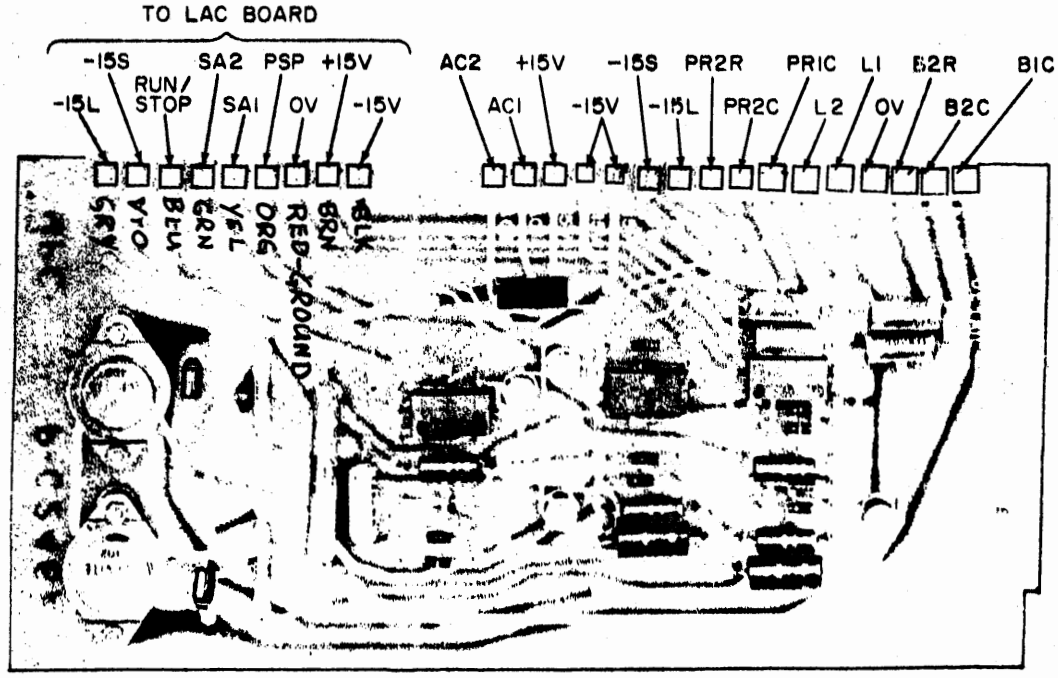

Figure 2. MPC Board Edgeboard Connections

FIGURE 3a.

Adjust the Oscilloscope to trigger on negative slope.
Uncalibrate the "Time Div., Delay Time" in order to display one full cycle on 10 divisions of scope scale.

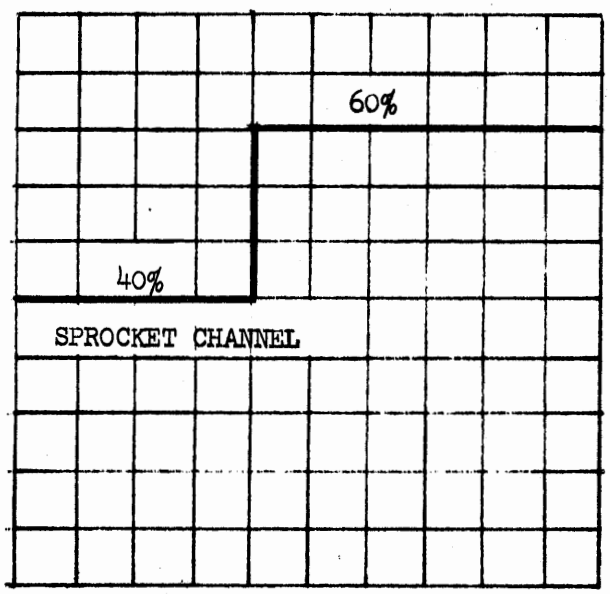

FIGURE 3b.

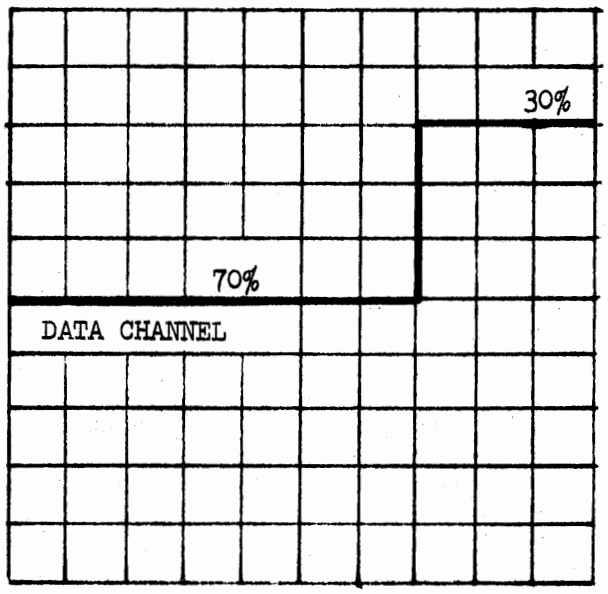

FIGURE 3c.

Relative coincidence of sprocket and data channel outputs.

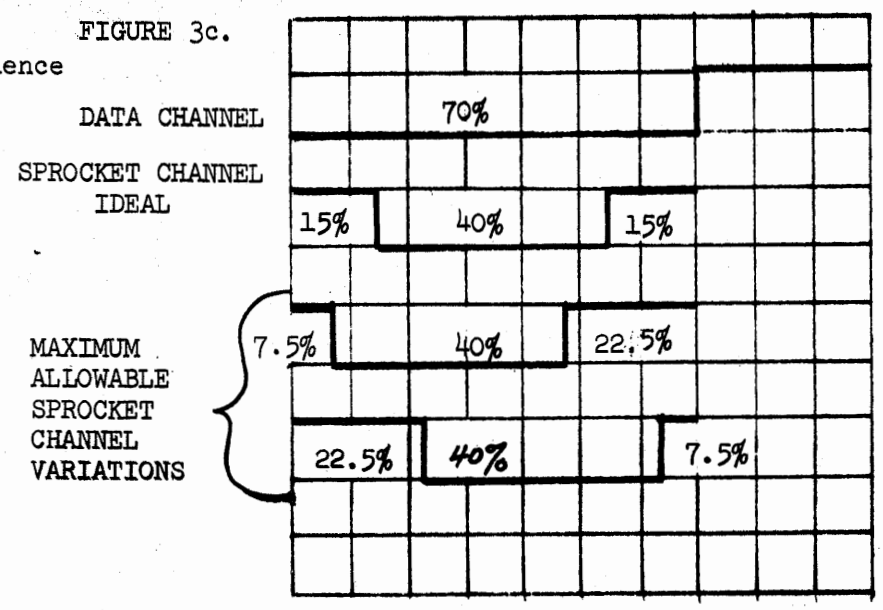

#7 TRANSMISSION
MONITOR

106

2F2 2K3 1F1 EXH1011 5

MODIFICATION TO INHIBIT INPUTTING CLOCK TRANSITIONS

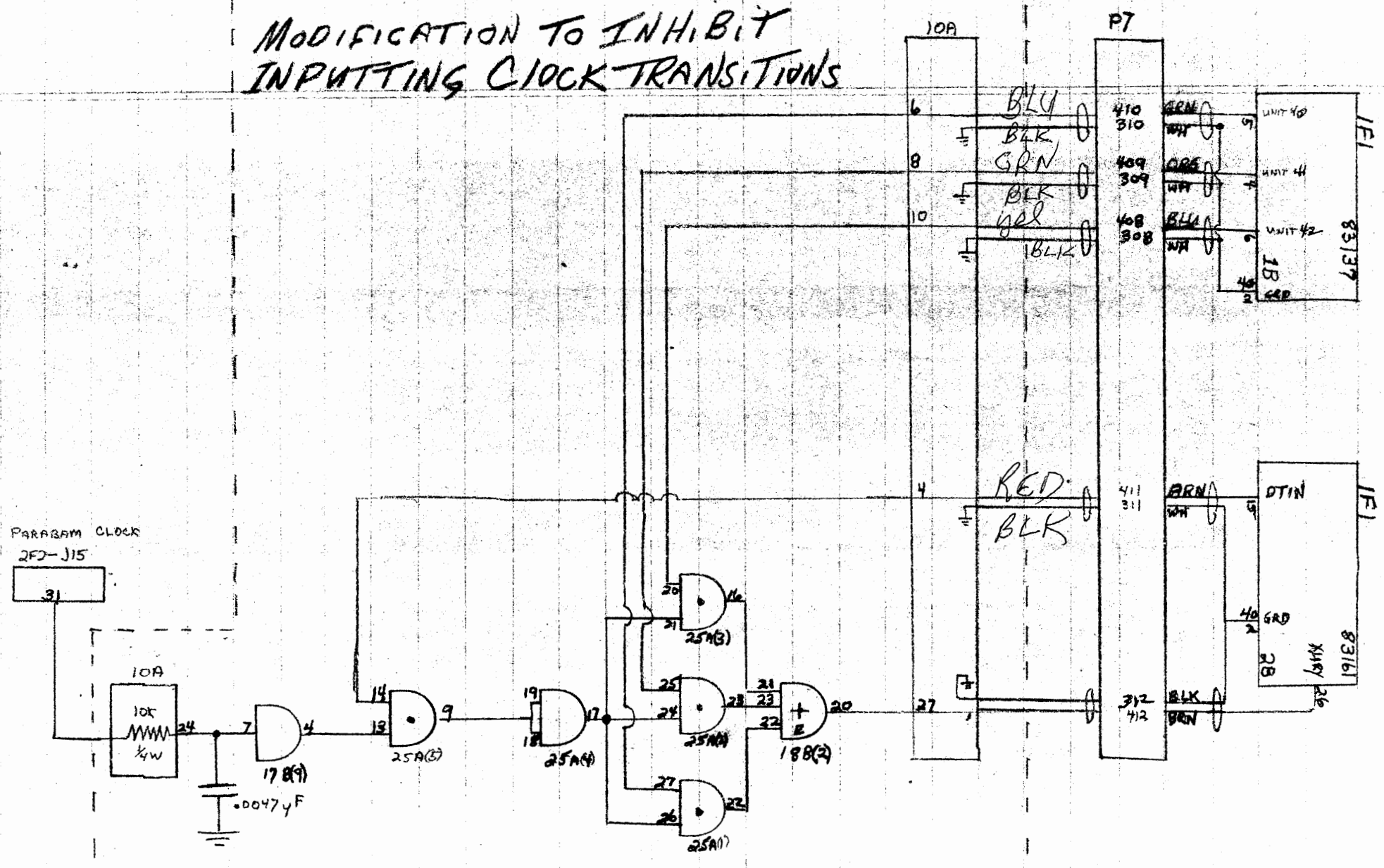

25A = 8522-1

R.J.K.
R.L.P.
C.L.T.

NGPL 8-13-76

CTT #9

PROGRAM DESCRIPTION

IDENTIFICATION: Input Status Monitor Program

AUTHOR: Carl L. Thompson
Natural Gas Pipeline Company of America
Communications Division

ISSUED: December 15, 1976

PURPOSE: To monitor and identify the status of fifty nine (59) inputs to the computer.

COMPUTER: SEL 810A

STORAGE: 3240 Octal Locations

LOADING PROCEDURE: Relocatable Loader, 16K Modified
Program Counter, Enter '36060
"A" Accumulator, Enter '6000
"B" Accumulator = 0

Insert program tape in reader and press start switch twice.

START PROGRAM AT LOCATION '6000

The program will identify and cause the teletype to print all true input signals associated with channel 46-51. Following the printing of input data, the program will then continuously monitor each true input for a change. If a change occurs, the program will print the channel and bit number that changed. EXAMPLE, "CHANNEL 46-14 INPUT MISSING".

This program will be useful in trouble shooting intermittant computer input signals, but will only check true inputs. For example, unauthorized entry. The program will not check this input unless you initiate the alarm to create a true input to the computer.

Following the initial print out of alarms gently tap and rake your finger across the input relay and logic cable connectors at location 1F2A and 1F1B. If an active input signal connector pin is loose or spread, the program will identify and print the channel and bit number of the signal. Remove card from cabinet and gently close the connector pin with a pair of long nose pliers. Be very careful with the fragile connector pins.

SAMPLE PRINT OUT OF PROGRAM

24 D OPEN	46-14
26 D OPEN	46-12
36 D OPEN	46-10
4-36 D OPEN	46-8
4-36 S OPEN	46-6
24 S OPEN	46-4
26 S OPEN	46-2
36 S OPEN	46-0
4-36 B OPEN	47-14
FUEL NO 2 ON	47-4
RECY VAL CLSE	47-3
DC PWR ON	47-1
SURGE V OPEN	47-0
MODE SELECT 2	50-15
V SHUT DN POS	50-12
INC STR SEQ 2	50-11
IN STRT SEQ 2	50-10
PERMIS STRT 2	50-9
MALF SHT DN 2	50-6
FUEL NO 1 OFF	50-5
MODE SELECT 1	51-15
BLK SIG RETRN	51-14
26 B CLOSED	51-3
36 BLOCK OPEN	51-0

-14 INPT MISSING

```
0001                    * * * * * * * * * * * * * * * * * * * * * * * *
0002                    *    INPUT SIGNAL MONITOR DIAGNOSTIC          *
0003                    *                                             *
0004                    *    PROGRAM IDENTIFIES AND PRINTS ALL        *
0005                    *    TRUE INPUT SIGNALS FOR CHANNEL 46-51'    *
0006                    *    THEN MONITORS EACH INPUT FOR A CHANGE.   *
0007                    *    IF A CHANGE OCCURS PROGRAM WILL IDEN-    *
0008                    *    TIFY AND PRINT CHANNEL WITH BIT NO OF    *
0009                    *    INPUT SIGNAL.                            *
0010                    *                                             *
0011                    *    PREPARED BY CARL L THOMPSON 12-15-76     *
0012                    * * * * * * * * * * * * * * * * * * * * * * * *
0013  00000 00000000        REL
0014  00000 01077760 BEGN LAA  =-16
0015  00001 03100226        STA  CT16
0016  00002 00000003        CLA
0017  00003 03500715        STA  BB1,1
0018  00004 03500735        STA  CC1,1
0019  00005 03500755        STA  DD1,1
0020  00006 03501007        STA  EE1,1
0021  00007 00000026        IBS
0022  00010 00000033        NOP
0023  00011 14100226        IMS  CT16
0024  00012 11100003        BRU  *-7
0025  00013 11100162        BRU  C46
0026  00014 00000003 STRT CLA
0027  00015 03100225        STA  CT15
0028  00016 01077760        LAA  =-16
0029  00017 03100226        STA  CT16          16 BIT CNTR
0030  00020 01000001        LAA  =1
0031  00021 03100224        STA  A2            BIT TST
0032  00022 00170246 AIP  AIP  '46
0033  00023 11100022        BRU  *-1
0034  00024 03100223        STA  A1
0035  00025 01100223 MORE LAA  A1
0036  00026 02100224        LBA  A2
0037  00027 00000027        ABA
0038  00030 00000022        SAZ                NO PRNT IF 0
0039  00031 11100046        BRU  B1A
0040  00032 02100225        LBA  CT15          INDEX CNTR
0041  00033 12100065        SPB  TEST          TST F/MISSING INPT
0042  00034 03500715        STA  BB1,1         PRNT NXT CHNG
0043  00035 01100224 HERE LAA  A2
0044  00036 00000116        LSL  1             CK NXT BIT
0045  00037 03100224        STA  A2
0046  00040 14100225        IMS  CT15
0047  00041 14100226        IMS  CT16
```

```
0048  00042 11100025        BRU  MORE
0049  00043 14100234        IMS  CT4
0050  00044 11100076        BRU  CHNG
0051  00045 11100162        BRU  C46
0052  00046 02100225 B1A    LBA  CT15          INDEX CNTR
0053  00047 01500715        LAA  BB1,1         FLAG F/PRNT
0054  00050 00000022        SAZ                PRNT IF 0
0055  00051 11100035        BRU  HERE          ARRANGE-TST NXT BIT
0056  00052 14500715        IMS  BB1,1
0057  00053 01500255 THE    LAA  B1,1          ALRM MSGE PRNT OUT
0058  00054 03100057 PRNT   STA  TABL
0059  00055 12100212        SPB  CRLF
0060  00056 02077766        LBA  =-10
0061  00057 01500715 TABL   LAA  TBLA+10,1
0062  00060 12100203        SPB  TTYO
0063  00061 00000026        IBS
0064  00062 11100057        BRU  *-3
0065  00063 12100212        SPB  CRLF
0066  00064 11100035        BRU  HERE          ARRANGE-TST NXT BIT
0067  00065 00000000 TEST   HLT                TST F/ MISSING INPT
0068  00066 01500715        LAA  BB1,1
0069  00067 00000022        SAZ                NO PRNT IF 0
0070  00070 11100072        BRU  *+2
0071  00071 11300065        BRU* TEST
0072  00072 00000003        CLA
0073  00073 03500715 TESS   STA  BB1,1
0074  00074 01500355        LAA  B1B,1         INPT MISSING,PRNT MSGE
0075  00075 11100054        BRU  PRNT
0076  00076 01000001 CHNG   LAA  ='1
0077  00077 05100022        AMA  AIP
0078  00100 03100022        STA  AIP
0079  00101 15070247        CMA  ='170247
0080  00102 11100104        BRU  *+2
0081  00103 11100113        BRU  C47
0082  00104 15070250        CMA  ='170250
0083  00105 11100107        BRU  *+2
0084  00106 11100130        BRU  C50
0085  00107 15070251        CMA  ='170251
0086  00110 00000000        HLT
0087  00111 11100145        BRU  C51
0088  00112 00000000        HLT
0089  00113 01100252 C47    LAA  CCCC
0090  00114 03100074        STA  TESS+1
0091  00115 01100230        LAA  C1A           CH47 DATA
0092  00116 03100053        STA  THE           STA ALRM TO PRNT
0093  00117 01100240        LAA  CCC1          LAA CC1,1
0094  00120 03100047        STA  B1A+1
0095  00121 03100066        STA  TEST+1
```

```
0096  00122 01100241        LAA  CCC2          IMS CC1,1
0097  00123 03100052        STA  B1A+4
0098  00124 01100242        LAA  CCC3          STA CC1,1
0099  00125 03100034        STA  HERE-1
0100  00126 03100073        STA  TESS
0101  00127 11100014        BRU  STRT
0102  00130 01100253 C50    LAA  DDDD
0103  00131 03100074        STA  TESS+1
0104  00132 01100231        LAA  D1A           CH50 DATA
0105  00133 03100053        STA  THE           STA ALRM TO PRNT
0106  00134 01100243        LAA  DDD1          LAA DD1,1
0107  00135 03100047        STA  B1A+1
0108  00136 03100066        STA  TEST+1
0109  00137 01100244        LAA  DDD2          IMS DD1,1
0110  00140 03100052        STA  B1A+4
0111  00141 01100245        LAA  DDD3          STA DD1,1
0112  00142 03100034        STA  HERE-1
0113  00143 03100073        STA  TESS
0114  00144 11100014        BRU  STRT
0115  00145 01100254 C51    LAA  EEEE
0116  00146 03100074        STA  TESS+1
0117  00147 01100232        LAA  E1A           CH51 DATA
0118  00150 03100053        STA  THE           STA ALRM TO PRNT
0119  00151 01100246        LAA  EEE1          LAA EE1,1
0120  00152 03100047        STA  B1A+1
0121  00153 03100066        STA  TEST+1
0122  00154 01100247        LAA  EEE2          IMS EE1,1
0123  00155 03100052        STA  B1A+4
0124  00156 01100250        LAA  EEE3          STA EE1,1
0125  00157 03100034        STA  HERE-1
0126  00160 03100073        STA  TESS
0127  00161 11100014        BRU  STRT
0128  00162 01100251 C46    LAA  BBBB
0129  00163 03100074        STA  TESS+1
0130  00164 01100227        LAA  A1A
0131  00165 03100053        STA  THE           STA ALRM TO PRNT
0132  00166 01100233        LAA  AIP1          CH46
0133  00167 03100022        STA  AIP
0134  00170 01100235        LAA  BBB1          LAA BB1,1
0135  00171 03100047        STA  B1A+1
0136  00172 03100066        STA  TEST+1
0137  00173 01100236        LAA  BBB2          IMS BB1,1
0138  00174 03100052        STA  B1A+4
0139  00175 01100237        LAA  BBB3          STA BB1,1
0140  00176 03100034        STA  HERE-1
0141  00177 03100073        STA  TESS
0142  00200 01077774        LAA  =-4
0143  00201 03100234        STA  CT4
```

```
0144  00202 11100014       BRU   STRT
0145  00203 00000000 TTYO  HLT
0146  00204 00170001       AOP   1
0147  00205 11100204       BRU   *-1
0148  00206 00001016       LSL   8
0149  00207 00170001       AOP   1
0150  00210 11100207       BRU   *-1
0151  00211 11300203       BRU*  TTYO
0152  00212 00000000 CRLF  HLT
0153  00213 00170401       MOP   1
0154  00214 00106400       DATA  '106400
0155  00215 11100213       BRU   *-2
0156  00216 00170401       MOP   1
0157  00217 00105000       DATA  '105000
0158  00220 11100216       BRU   *-2
0159  00221 11300212       BRU*  CRLF
0160  00222 11100255 BRU   BRU   B1
0161  00223 00000000 A1    DATA  0
0162  00224 00000000 A2    DATA  0
0163  00225 00000000 CT15  DATA  0
0164  00226 00000000 CT16  DATA  0
0165  00227 01500255 A1A   LAA   B1,1
0166  00230 01500275 C1A   LAA   C1,1
0167  00231 01500315 D1A   LAA   D1,1
0168  00232 01500335 E1A   LAA   E1,1
0169  00233 00170246 AIP1  AIP   '46
0170  00234 00177774 CT4   DATA  -4
0171  00235 01500715 BBB1  LAA   BB1,1
0172  00236 14500715 BBB2  IMS   BB1,1
0173  00237 03500715 BBB3  STA   BB1,1
0174  00240 01500735 CCC1  LAA   CC1,1
0175  00241 14500735 CCC2  IMS   CC1,1
0176  00242 03500735 CCC3  STA   CC1,1
0177  00243 01500755 DDD1  LAA   DD1,1
0178  00244 14500755 DDD2  IMS   DD1,1
0179  00245 03500755 DDD3  STA   DD1,1
0180  00246 01501007 EEE1  LAA   EE1,1
0181  00247 14501007 EEE2  IMS   EE1,1
0182  00250 03501007 EEE3  STA   EE1,1
0183  00251 01500355 BBBB  LAA   B1B,1
0184  00252 01500375 CCCC  LAA   C1C,1
0185  00253 01500415 DDDD  LAA   D1D,1
0186  00254 01500435 EEEE  LAA   E1E,1
0187  00255 01500715 B1    LAA   TBLA+10,1
0188  00256 01500703 B2    LAA   TBLB+10,1
0189  00257 01500671 B3    LAA   TBLC+10,1
0190  00260 01500657 B4    LAA   TBLD+10,1
0191  00261 01500645 B5    LAA   TBLE+10,1
```

```
0192  00262 01500633 B6   LAA  TBLF+10,1
0193  00263 01500621 B7   LAA  TBLG+10,1
0194  00264 01500607 B8   LAA  TBLH+10,1
0195  00265 01500575 B9   LAA  TBLI+10,1
0196  00266 01500563 B10  LAA  TBLJ+10,1
0197  00267 01500551 B11  LAA  TBLK+10,1
0198  00270 01500537 B12  LAA  TBLL+10,1
0199  00271 01500525 B13  LAA  TBLM+10,1
0200  00272 01500513 B14  LAA  TBLN+10,1
0201  00273 01500501 B15  LAA  TBLO+10,1
0202  00274 01500467      LAA  TBLP+10,1
0203  00275 01501267 C1   LAA  TBA+10,1
0204  00276 01501255 C2   LAA  TBB+10,1
0205  00277 01501243 C3   LAA  TBC+10,1
0206  00300 01501231 C4   LAA  TBD+10,1
0207  00301 01501217 C5   LAA  TBE+10,1
0208  00302 01501205 C6   LAA  TBF+10,1
0209  00303 01501173 C7   LAA  TBG+10,1
0210  00304 01501161 C8   LAA  TBH+10,1
0211  00305 01501147 C9   LAA  TBI+10,1
0212  00306 01501135 C10  LAA  TBJ+10,1
0213  00307 01501123 C11  LAA  TBK+10,1
0214  00310 01501111 C12  LAA  TBL+10,1
0215  00311 01501077 C13  LAA  TBM+10,1
0216  00312 01501065 C14  LAA  TBN+10,1
0217  00313 01501053 C15  LAA  TBO+10,1
0218  00314 01501041      LAA  TBP+10,1
0219  00315 01501527 D1   LAA  TAA+10,1
0220  00316 01501515 D2   LAA  TAB+10,1
0221  00317 01501503 D3   LAA  TAC+10,1
0222  00320 01501471 D4   LAA  TAD+10,1
0223  00321 01501457 D5   LAA  TAE+10,1
0224  00322 01501445 D6   LAA  TAF+10,1
0225  00323 01501433 D7   LAA  TAG+10,1
0226  00324 01501421 D8   LAA  TAH+10,1
0227  00325 01501407 D9   LAA  TAI+10,1
0228  00326 01501375 D10  LAA  TAJ+10,1
0229  00327 01501363 D11  LAA  TAK+10,1
0230  00330 01501351 D12  LAA  TAL+10,1
0231  00331 01501337 D13  LAA  TAM+10,1
0232  00332 01501325 D14  LAA  TAN+10,1
0233  00333 01501313 D15  LAA  TAO+10,1
0234  00334 01501301      LAA  TAP+10,1
0235  00335 01501766 E1   LAA  TA+10,1
0236  00336 01501754 E2   LAA  TB+10,1
0237  00337 01501742 E3   LAA  TC+10,1
0238  00340 01501730 E4   LAA  TD+10,1
0239  00341 01501716 E5   LAA  TE+10,1
```

```
0240  00342 01501704 E6   LAA  TF+10,1
0241  00343 01501672 E7   LAA  TG+10,1
0242  00344 01501660 E8   LAA  TH+10,1
0243  00345 01501647 E9   LAA  TI+10,1
0244  00346 01501635 E10  LAA  TJ+10,1
0245  00347 01501623 E11  LAA  TK+10,1
0246  00350 01501611 E12  LAA  TL+10,1
0247  00351 01501577 E13  LAA  TM+10,1
0248  00352 01501565 E14  LAA  TN+10,1
0249  00353 01501553 E15  LAA  TO+10,1
0250  00354 01501541      LAA  TP+10,1
0251  00355 01502012 B1B  LAA  UBLA+10,1
0252  00356 01502024      LAA  UBLB+10,1
0253  00357 01502036      LAA  UBLC+10,1
0254  00360 01502050      LAA  UBLD+10,1
0255  00361 01502062      LAA  UBLE+10,1
0256  00362 01502074      LAA  UBLF+10,1
0257  00363 01502106      LAA  UBLG+10,1
0258  00364 01502120      LAA  UBLH+10,1
0259  00365 01502132      LAA  UBLI+10,1
0260  00366 01502144      LAA  UBLJ+10,1
0261  00367 01502156      LAA  UBLK+10,1
0262  00370 01502170      LAA  UBLL+10,1
0263  00371 01502202      LAA  UBLM+10,1
0264  00372 01502214      LAA  UBLN+10,1
0265  00373 01502226      LAA  UBLO+10,1
0266  00374 01502240      LAA  UBLP+10,1
0267  00375 01502252 C1C  LAA  UBA+10,1
0268  00376 01502264      LAA  UBB+10,1
0269  00377 01502276      LAA  UBC+10,1
0270  00400 01502310      LAA  UBD+10,1
0271  00401 01502322      LAA  UBE+10,1
0272  00402 01502334      LAA  UBF+10,1
0273  00403 01502346      LAA  UBG+10,1
0274  00404 01502360      LAA  UBH+10,1
0275  00405 01502372      LAA  UBI+10,1
0276  00406 01502404      LAA  UBJ+10,1
0277  00407 01502416      LAA  UBK+10,1
0278  00410 01502430      LAA  UBL+10,1
0279  00411 01502442      LAA  UBM+10,1
0280  00412 01502454      LAA  UBN+10,1
0281  00413 01502466      LAA  UBO+10,1
0282  00414 01502500      LAA  UBP+10,1
0283  00415 01502512 D1D  LAA  UAA+10,1
0284  00416 01502524      LAA  UAB+10,1
0285  00417 01502536      LAA  UAC+10,1
0286  00420 01502550      LAA  UAD+10,1
0287  00421 01502562      LAA  UAE+10,1
```

```
0288  00422 01502574        LAA  UAF+10,1
0289  00423 01502606        LAA  UAG+10,1
0290  00424 01502620        LAA  UAH+10,1
0291  00425 01502632        LAA  UAI+10,1
0292  00426 01502644        LAA  UAJ+10,1
0293  00427 01502656        LAA  UAK+10,1
0294  00430 01502670        LAA  UAL+10,1
0295  00431 01502702        LAA  UAM+10,1
0296  00432 01502714        LAA  UAN+10,1
0297  00433 01502726        LAA  UAO+10,1
0298  00434 01502740        LAA  UAP+10,1
0299  00435 01503012 E1E    LAA  UA+10,1
0300  00436 01503024        LAA  UB+10,1
0301  00437 01503036        LAA  UC+10,1
0302  00440 01503050        LAA  UD+10,1
0303  00441 01503062        LAA  UE+10,1
0304  00442 01503074        LAA  UF+10,1
0305  00443 01503106        LAA  UG+10,1
0306  00444 01503120        LAA  UH+10,1
0307  00445 01503132        LAA  UI+10,1
0308  00446 01503144        LAA  UJ+10,1
0309  00447 01503156        LAA  UK+10,1
0310  00450 01503170        LAA  UL+10,1
0311  00451 01503202        LAA  UM+10,1
0312  00452 01503214        LAA  UN+10,1
0313  00453 01503226        LAA  UO+10,1
0314  00454 01503240        LAA  UP+10,1
0315  00455 00131666 TBLP DATA ''36 S OPEN      46-0 ''
0315  00456 00120323
0315  00457 00120317
0315  00460 00150305
0315  00461 00147240
0315  00462 00120240
0315  00463 00120240
0315  00464 00132266
0315  00465 00126660
0315  00466 00120240
0316  00467 00131666 TBLO DATA ''36 S CLOSED    46-1 ''
0316  00470 00120323
0316  00471 00120303
0316  00472 00146317
0316  00473 00151705
0316  00474 00142240
0316  00475 00120240
0316  00476 00132266
0316  00477 00126661
0316  00500 00120240
0317  00501 00131266 TBLN DATA ''26 S OPEN      46-2 ''
```

```
0317  00502 00120323
0317  00503 00120317
0317  00504 00150305
0317  00505 00147240
0317  00506 00120240
0317  00507 00120240
0317  00510 00132266
0317  00511 00126662
0317  00512 00120240
0318  00513 00131266 TBLM DATA ''26 S CLOSED   46-3 ''
0318  00514 00120323
0318  00515 00120303
0318  00516 00146317
0318  00517 00151705
0318  00520 00142240
0318  00521 00120240
0318  00522 00132266
0318  00523 00126663
0318  00524 00120240
0319  00525 00131264 TBLL DATA ''24 S OPEN     46-4 ''
0319  00526 00120323
0319  00527 00120317
0319  00530 00150305
0319  00531 00147240
0319  00532 00120240
0319  00533 00120240
0319  00534 00132266
0319  00535 00126664
0319  00536 00120240
0320  00537 00131264 TBLK DATA ''24 S CLOSED   46-5 ''
0320  00540 00120323
0320  00541 00120303
0320  00542 00146317
0320  00543 00151705
0320  00544 00142240
0320  00545 00120240
0320  00546 00132266
0320  00547 00126665
0320  00550 00120240
0321  00551 00132255 TBLJ DATA ''4-36 S OPEN   46-6 ''
0321  00552 00131666
0321  00553 00120323
0321  00554 00120317
0321  00555 00150305
0321  00556 00147240
0321  00557 00120240
0321  00560 00132266
0321  00561 00126666
```

```
0321  00562 00120240
0322  00563 00132255 TBLI DATA ''4-36 S CLOSED 46-7 ''
0322  00564 00131666
0322  00565 00120323
0322  00566 00120303
0322  00567 00146317
0322  00570 00151705
0322  00571 00142240
0322  00572 00132266
0322  00573 00126667
0322  00574 00120240
0323  00575 00132255 TBLH DATA ''4-36 D OPEN   46-8 ''
0323  00576 00131666
0323  00577 00120304
0323  00600 00120317
0323  00601 00150305
0323  00602 00147240
0323  00603 00120240
0323  00604 00132266
0323  00605 00126670
0323  00606 00120240
0324  00607 00132255 TBLG DATA ''4-36 D CLOSED 46-9 ''
0324  00610 00131666
0324  00611 00120304
0324  00612 00120303
0324  00613 00146317
0324  00614 00151705
0324  00615 00142240
0324  00616 00132266
0324  00617 00126671
0324  00620 00120240
0325  00621 00131666 TBLF DATA ''36 D OPEN     46-10''
0325  00622 00120304
0325  00623 00120317
0325  00624 00150305
0325  00625 00147240
0325  00626 00120240
0325  00627 00120240
0325  00630 00132266
0325  00631 00126661
0325  00632 00130240
0326  00633 00131666 TBLE DATA ''36 D CLOSED   46-11''
0326  00634 00120304
0326  00635 00120303
0326  00636 00146317
0326  00637 00151705
0326  00640 00142240
0326  00641 00120240
```

```
0326  00642 00132266
0326  00643 00126661
0326  00644 00130640
0327  00645 00131266 TBLD DATA ''26 D OPEN     46-12''
0327  00646 00120304
0327  00647 00120317
0327  00650 00150305
0327  00651 00147240
0327  00652 00120240
0327  00653 00120240
0327  00654 00132266
0327  00655 00126661
0327  00656 00131240
0328  00657 00131266 TBLC DATA ''26 D CLOSED   46-13''
0328  00660 00120304
0328  00661 00120303
0328  00662 00146317
0328  00663 00151705
0328  00664 00142240
0328  00665 00120240
0328  00666 00132266
0328  00667 00126661
0328  00670 00131640
0329  00671 00131264 TBLB DATA ''24 D OPEN     46-14''
0329  00672 00120304
0329  00673 00120317
0329  00674 00150305
0329  00675 00147240
0329  00676 00120240
0329  00677 00120240
0329  00700 00132266
0329  00701 00126661
0329  00702 00132240
0330  00703 00131264 TBLA DATA ''24 D CLOSED   46-15''
0330  00704 00120304
0330  00705 00120303
0330  00706 00146317
0330  00707 00151705
0330  00710 00142240
0330  00711 00120240
0330  00712 00132266
0330  00713 00126661
0330  00714 00132640
0331  00715 00000020 BB1  BSS  16
0332  00735 00000020 CC1  BSS  16
0333  00755 00000020 DD1  BSS  16
0334  00775 00000012 DATA BSS  10
0335  01007 00000020 EE1  BSS  16
```

```
0336  01027 00151725 TBP   DATA ''SURGE V OPEN  47-0 ''
0336  01030 00151307
0336  01031 00142640
0336  01032 00153240
0336  01033 00147720
0336  01034 00142716
0336  01035 00120240
0336  01036 00132267
0336  01037 00126660
0336  01040 00120240
0337  01041 00142303 TBO   DATA ''DC PWR ON     47-1 ''
0337  01042 00120320
0337  01043 00153722
0337  01044 00120317
0337  01045 00147240
0337  01046 00120240
0337  01047 00120240
0337  01050 00132267
0337  01051 00126661
0337  01052 00120240
0338  01053 00151305 TBN   DATA ''RECY VAL OPEN 47-2 ''
0338  01054 00141731
0338  01055 00120326
0338  01056 00140714
0338  01057 00120317
0338  01060 00150305
0338  01061 00147240
0338  01062 00132267
0338  01063 00126662
0338  01064 00120240
0339  01065 00151305 TBM   DATA ''RECY VAL CLSE 47-3 ''
0339  01066 00141731
0339  01067 00120326
0339  01070 00140714
0339  01071 00120303
0339  01072 00146323
0339  01073 00142640
0339  01074 00132267
0339  01075 00126663
0339  01076 00120240
0340  01077 00143325 TBL   DATA ''FUEL NO 2 ON  47-4 ''
0340  01100 00142714
0340  01101 00120316
0340  01102 00147640
0340  01103 00131240
0340  01104 00147716
0340  01105 00120240
0340  01106 00132267
```

```
0340  01107 00126664
0340  01110 00120240
0341  01111 00143325 TBK  DATA ''FUEL NO 2 OFF 47-5 ''
0341  01112 00142714
0341  01113 00120316
0341  01114 00147640
0341  01115 00131240
0341  01116 00147706
0341  01117 00143240
0341  01120 00132267
0341  01121 00126665
0341  01122 00120240
0342  01123 00141317 TBJ  DATA ''BOILER ALARM  47-6 ''
0342  01124 00144714
0342  01125 00142722
0342  01126 00120301
0342  01127 00146301
0342  01130 00151315
0342  01131 00120240
0342  01132 00132267
0342  01133 00126666
0342  01134 00120240
0343  01135 00144311 TBI  DATA ''HI D GAS PRES 47-7 ''
0343  01136 00120304
0343  01137 00120307
0343  01140 00140723
0343  01141 00120320
0343  01142 00151305
0343  01143 00151640
0343  01144 00132267
0343  01145 00126667
0343  01146 00120240
0344  01147 00144716 TBH  DATA ''INVALID       47-8 ''
0344  01150 00153301
0344  01151 00146311
0344  01152 00142240
0344  01153 00120240
0344  01154 00120240
0344  01155 00120240
0344  01156 00132267
0344  01157 00126670
0344  01160 00120240
0345  01161 00144716 TBG  DATA ''INVALID       47-9 ''
0345  01162 00153301
0345  01163 00146311
0345  01164 00142240
0345  01165 00120240
0345  01166 00120240
```

```
0345  01167 00120240
0345  01170 00132267
0345  01171 00126671
0345  01172 00120240
0346  01173 00144716 TBF  DATA ''INVALID       47-10''
0346  01174 00153301
0346  01175 00146311
0346  01176 00142240
0346  01177 00120240
0346  01200 00120240
0346  01201 00120240
0346  01202 00132267
0346  01203 00126661
0346  01204 00130240
0347  01205 00144716 TBE  DATA ''INVALID       47-11''
0347  01206 00153301
0347  01207 00146311
0347  01210 00142240
0347  01211 00120240
0347  01212 00120240
0347  01213 00120240
0347  01214 00132267
0347  01215 00126661
0347  01216 00130640
0348  01217 00146317 TBD  DATA ''LO STROKE GAS 47-12''
0348  01220 00120323
0348  01221 00152322
0348  01222 00147713
0348  01223 00142640
0348  01224 00143701
0348  01225 00151640
0348  01226 00132267
0348  01227 00126661
0348  01230 00131240
0349  01231 00146317 TBC  DATA ''LO CONTR GAS  47-13''
0349  01232 00120303
0349  01233 00147716
0349  01234 00152322
0349  01235 00120307
0349  01236 00140723
0349  01237 00120240
0349  01240 00132267
0349  01241 00126661
0349  01242 00131640
0350  01243 00132255 TBB  DATA ''4-36 B OPEN   47-14''
0350  01244 00131666
0350  01245 00120302
0350  01246 00120317
```

```
0350  01247 00150305
0350  01250 00147240
0350  01251 00120240
0350  01252 00132267
0350  01253 00126661
0350  01254 00132240
0351  01255 00132255 TBA   DATA ''4-36 B CLOSED 47-15''
0351  01256 00131666
0351  01257 00120302
0351  01260 00120303
0351  01261 00146317
0351  01262 00151705
0351  01263 00142240
0351  01264 00132267
0351  01265 00126661
0351  01266 00132640
0352  01267 00141325 TAP   DATA ''BURGLAR ALARM 50-0 ''
0352  01270 00151307
0352  01271 00146301
0352  01272 00151240
0352  01273 00140714
0352  01274 00140722
0352  01275 00146640
0352  01276 00132660
0352  01277 00126660
0352  01300 00120240
0353  01301 00143311 TAO   DATA ''FIRE MAIN BLD 50-1 ''
0353  01302 00151305
0353  01303 00120315
0353  01304 00140711
0353  01305 00147240
0353  01306 00141314
0353  01307 00142240
0353  01310 00132660
0353  01311 00126661
0353  01312 00120240
0354  01313 00143701 TAN   DATA ''GAS DETECTION 50-2 ''
0354  01314 00151640
0354  01315 00142305
0354  01316 00152305
0354  01317 00141724
0354  01320 00144717
0354  01321 00147240
0354  01322 00132660
0354  01323 00126662
0354  01324 00120240
0355  01325 00144716 TAM   DATA ''INVALID       50-3 ''
0355  01326 00153301
```

```
0355  01327 00146311
0355  01330 00142240
0355  01331 00120240
0355  01332 00120240
0355  01333 00120240
0355  01334 00132660
0355  01335 00126663
0355  01336 00120240
0356  01337 00143325 TAL   DATA ''FUEL NO 1 ON  50-4 ''
0356  01340 00142714
0356  01341 00120316
0356  01342 00147640
0356  01343 00130640
0356  01344 00147716
0356  01345 00120240
0356  01346 00132660
0356  01347 00126664
0356  01350 00120240
0357  01351 00143325 TAK   DATA ''FUEL NO 1 OFF 50-5 ''
0357  01352 00142714
0357  01353 00120316
0357  01354 00147640
0357  01355 00130640
0357  01356 00147706
0357  01357 00143240
0357  01360 00132660
0357  01361 00126665
0357  01362 00120240
0358  01363 00146701 TAJ   DATA ''MALF SHT DN 2 50-6 ''
0358  01364 00146306
0358  01365 00120323
0358  01366 00144324
0358  01367 00120304
0358  01370 00147240
0358  01371 00131240
0358  01372 00132660
0358  01373 00126666
0358  01374 00120240
0359  01375 00146701 TAI   DATA ''MALF WARN   2 50-7 ''
0359  01376 00146306
0359  01377 00120327
0359  01400 00140722
0359  01401 00147240
0359  01402 00120240
0359  01403 00131240
0359  01404 00132660
0359  01405 00126667
0359  01406 00120240
```

```
0360  01407 00147317 TAH  DATA ''NO 2 LOADED   50-8 ''
0360  01410 00120262
0360  01411 00120314
0360  01412 00147701
0360  01413 00142305
0360  01414 00142240
0360  01415 00120240
0360  01416 00132660
0360  01417 00126670
0360  01420 00120240
0361  01421 00150305 TAG  DATA ''PERMIS STRT 2 50-9 ''
0361  01422 00151315
0361  01423 00144723
0361  01424 00120323
0361  01425 00152322
0361  01426 00152240
0361  01427 00131240
0361  01430 00132660
0361  01431 00126671
0361  01432 00120240
0362  01433 00144716 TAF  DATA ''IN STRT SEQ 2 50-10''
0362  01434 00120323
0362  01435 00152322
0362  01436 00152240
0362  01437 00151705
0362  01440 00150640
0362  01441 00131240
0362  01442 00132660
0362  01443 00126661
0362  01444 00130240
0363  01445 00144716 TAE  DATA ''INC STR SEQ 2 50-11''
0363  01446 00141640
0363  01447 00151724
0363  01450 00151240
0363  01451 00151705
0363  01452 00150640
0363  01453 00131240
0363  01454 00132660
0363  01455 00126661
0363  01456 00130640
0364  01457 00153240 TAD  DATA ''V SHUT DN POS 50-12''
0364  01460 00151710
0364  01461 00152724
0364  01462 00120304
0364  01463 00147240
0364  01464 00150317
0364  01465 00151640
0364  01466 00132660
```

```
0364  01467 00126661
0364  01470 00131240
0365  01471 00143311 TAC  DATA ''FIRE AUX BLDG 50-13''
0365  01472 00151305
0365  01473 00120301
0365  01474 00152730
0365  01475 00120302
0365  01476 00146304
0365  01477 00143640
0365  01500 00132660
0365  01501 00126661
0365  01502 00131640
0366  01503 00151724 TAB  DATA ''ST PAN C MODE 50-14''
0366  01504 00120320
0366  01505 00140716
0366  01506 00120303
0366  01507 00120315
0366  01510 00147704
0366  01511 00142640
0366  01512 00132660
0366  01513 00126661
0366  01514 00132240
0367  01515 00146717 TAA  DATA ''MODE SELECT 2 50-15''
0367  01516 00142305
0367  01517 00120323
0367  01520 00142714
0367  01521 00142703
0367  01522 00152240
0367  01523 00131240
0367  01524 00132660
0367  01525 00126661
0367  01526 00132640
0368  01527 00131666 TP   DATA ''36 BLOCK OPEN 51-0 ''
0368  01530 00120302
0368  01531 00146317
0368  01532 00141713
0368  01533 00120317
0368  01534 00150305
0368  01535 00147240
0368  01536 00132661
0368  01537 00126660
0368  01540 00120240
0369  01541 00131666 TO   DATA ''36 B CLOSED   51-1 ''
0369  01542 00120302
0369  01543 00120303
0369  01544 00146317
0369  01545 00151705
0369  01546 00142240
```

```
0369  01547 00120240
0369  01550 00132661
0369  01551 00126661
0369  01552 00120240
0370  01553 00131266 TN    DATA ''26 BLOCK OPEN 51-2 ''
0370  01554 00120302
0370  01555 00146317
0370  01556 00141713
0370  01557 00120317
0370  01560 00150305
0370  01561 00147240
0370  01562 00132661
0370  01563 00126662
0370  01564 00120240
0371  01565 00131266 TM    DATA ''26 B CLOSED   51-3 ''
0371  01566 00120302
0371  01567 00120303
0371  01570 00146317
0371  01571 00151705
0371  01572 00142240
0371  01573 00120240
0371  01574 00132661
0371  01575 00126663
0371  01576 00120240
0372  01577 00131264 TL    DATA ''24 BLOCK OPEN 51-4 ''
0372  01600 00120302
0372  01601 00146317
0372  01602 00141713
0372  01603 00120317
0372  01604 00150305
0372  01605 00147240
0372  01606 00132661
0372  01607 00126664
0372  01610 00120240
0373  01611 00131264 TK    DATA ''24 B CLOSED   51-5 ''
0373  01612 00120302
0373  01613 00120303
0373  01614 00146317
0373  01615 00151705
0373  01616 00142240
0373  01617 00120240
0373  01620 00132661
0373  01621 00126665
0373  01622 00120240
0374  01623 00146701 TJ    DATA ''MALF SHT DN 1 51-6 ''
0374  01624 00146306
0374  01625 00120323
0374  01626 00144324
```

```
0374  01627 00120304
0374  01630 00147240
0374  01631 00130640
0374  01632 00132661
0374  01633 00126666
0374  01634 00120240
0375  01635 00146701 TI    DATA ''MALF WARN  1 51-7 ''
0375  01636 00146306
0375  01637 00120327
0375  01640 00140722
0375  01641 00147240
0375  01642 00120261
0375  01643 00120265
0375  01644 00130655
0375  01645 00133640
0376  01646 00147317 TH    DATA ''NO 1 LOADED   51-8 ''
0376  01647 00120261
0376  01650 00120314
0376  01651 00147701
0376  01652 00142305
0376  01653 00142240
0376  01654 00120240
0376  01655 00132661
0376  01656 00126670
0376  01657 00120240
0377  01660 00150305 TG    DATA ''PERMIS STRT 1 51-9 ''
0377  01661 00151315
0377  01662 00144723
0377  01663 00120323
0377  01664 00152322
0377  01665 00152240
0377  01666 00130640
0377  01667 00132661
0377  01670 00126671
0377  01671 00120240
0378  01672 00144716 TF    DATA ''IN STRT SEQ 1 51-10''
0378  01673 00120323
0378  01674 00152322
0378  01675 00152240
0378  01676 00151705
0378  01677 00150640
0378  01700 00130640
0378  01701 00132661
0378  01702 00126661
0378  01703 00130240
0379  01704 00144716 TE    DATA ''INC STR SEQ 1 51-11''
0379  01705 00141640
0379  01706 00151724
```

```
0379  01707 00151240
0379  01710 00151705
0379  01711 00150640
0379  01712 00130640
0379  01713 00132661
0379  01714 00126661
0379  01715 00130640
0380  01716 00153240 TD    DATA ''V SHUT DN POS 51-12''
0380  01717 00151710
0380  01720 00152724
0380  01721 00120304
0380  01722 00147240
0380  01723 00150317
0380  01724 00151640
0380  01725 00132661
0380  01726 00126661
0380  01727 00131240
0381  01730 00151724 TC    DATA ''STA BLOW DN   51-13''
0381  01731 00140640
0381  01732 00141314
0381  01733 00147727
0381  01734 00120304
0381  01735 00147240
0381  01736 00120240
0381  01737 00132661
0381  01740 00126661
0381  01741 00131640
0382  01742 00141314 TB    DATA ''BLK SIG RETRN 51-14''
0382  01743 00145640
0382  01744 00151711
0382  01745 00143640
0382  01746 00151305
0382  01747 00152322
0382  01750 00147240
0382  01751 00132661
0382  01752 00126661
0382  01753 00132240
0383  01754 00146717 TA    DATA ''MODE SELECT 1 51-15''
0383  01755 00142305
0383  01756 00120323
0383  01757 00142714
0383  01760 00142703
0383  01761 00152240
0383  01762 00130640
0383  01763 00132661
0383  01764 00126661
0383  01765 00132640
0384  01766 00000012 DOTA BSS  10
```

```
0385  02000 00141710 UBLA DATA ''CH46-15 INPT MISSING''
0385  02001 00132266
0385  02002 00126661
0385  02003 00132640
0385  02004 00144716
0385  02005 00150324
0385  02006 00120315
0385  02007 00144723
0385  02010 00151711
0385  02011 00147307
0386  02012 00141710 UBLB DATA ''CH46-14 INPT MISSING''
0386  02013 00132266
0386  02014 00126661
0386  02015 00132240
0386  02016 00144716
0386  02017 00150324
0386  02020 00120315
0386  02021 00144723
0386  02022 00151711
0386  02023 00147307
0387  02024 00141710 UBLC DATA ''CH46-13 INPT MISSING''
0387  02025 00132266
0387  02026 00126661
0387  02027.00131640
0387  02030 00144716
0387  02031 00150324
0387  02032 00120315
0387  02033 00144723
0387  02034 00151711
0387  02035 00147307
0388  02036 00141710 UBLD DATA ''CH46-12 INPT MISSING''
0388  02037 00132266
0388  02040 00126661
0388  02041 00131240
0388  02042 00144716
0388  02043 00150324
0388  02044 00120315
0388  02045 00144723
0388  02046 00151711
0388  02047 00147307
0389  02050 00141710 UBLE DATA ''CH46-11 INPT MISSING''
0389  02051 00132266
0389  02052 00126661
0389  02053 00130640
0389  02054 00144716
0389  02055 00150324
0389  02056 00120315
0389  02057 00144723
```

```
0389  02060 00151711
0389  02061 00147307
0390  02062 00141710 UBLF DATA ''CH46-10 INPT MISSING''
0390  02063 00132266
0390  02064 00126661
0390  02065 00130240
0390  02066 00144716
0390  02067 00150324
0390  02070 00120315
0390  02071 00144723
0390  02072 00151711
0390  02073 00147307
0391  02074 00141710 UBLG DATA ''CH46-9  INPT MISSING''
0391  02075 00132266
0391  02076 00126671
0391  02077 00120240
0391  02100 00144716
0391  02101 00150324
0391  02102 00120315
0391  02103 00144723
0391  02104 00151711
0391  02105 00147307
0392  02106 00141710 UBLH DATA ''CH46-8  INPT MISSING''
0392  02107 00132266
0392  02110 00126670
0392  02111 00120240
0392  02112 00144716
0392  02113 00150324
0392  02114 00120315
0392  02115 00144723
0392  02116 00151711
0392  02117 00147307
0393  02120 00141710 UBLI DATA ''CH46-7  INPT MISSING''
0393  02121 00132266
0393  02122 00126667
0393  02123 00120240
0393  02124 00144716
0393  02125 00150324
0393  02126 00120315
0393  02127 00144723
0393  02130 00151711
0393  02131 00147307
0394  02132 00141710 UBLJ DATA ''CH46-6  INPT MISSING''
0394  02133 00132266
0394  02134 00126666
0394  02135 00120240
0394  02136 00144716
0394  02137 00150324
```

```
0394  02140 00120315
0394  02141 00144723
0394  02142 00151711
0394  02143 00147307
0395  02144 00141710 UBLK DATA ''CH46-5  INPT MISSING''
0395  02145 00132266
0395  02146 00126665
0395  02147 00120240
0395  02150 00144716
0395  02151 00150324
0395  02152 00120315
0395  02153 00144723
0395  02154 00151711
0395  02155 00147307
0396  02156 00141710 UBLL DATA ''CH46-4  INPT MISSING''
0396  02157 00132266
0396  02160 00126664
0396  02161 00120240
0396  02162 00144716
0396  02163 00150324
0396  02164 00120315
0396  02165 00144723
0396  02166 00151711
0396  02167 00147307
0397  02170 00141710 UBLM DATA ''CH46-3  INPT MISSING''
0397  02171 00132266
0397  02172 00126663
0397  02173 00120240
0397  02174 00144716
0397  02175 00150324
0397  02176 00120315
0397  02177 00144723
0397  02200 00151711
0397  02201 00147307
0398  02202 00141710 UBLN DATA ''CH46-2  INPT MISSING''
0398  02203 00132266
0398  02204 00126662
0398  02205 00120240
0398  02206 00144716
0398  02207 00150324
0398  02210 00120315
0398  02211 00144723
0398  02212 00151711
0398  02213 00147307
0399  02214 00141710 UBLO DATA ''CH46-1  INPT MISSING''
0399  02215 00132266
0399  02216 00126661
0399  02217 00120240
```

```
0399  02220 00144716
0399  02221 00150324
0399  02222 00120315
0399  02223 00144723
0399  02224 00151711
0399  02225 00147307
0400  02226 00141710 UBLP DATA ''CH46-0  INPT MISSING''
0400  02227 00132266
0400  02230 00126660
0400  02231 00120240
0400  02232 00144716
0400  02233 00150324
0400  02234 00120315
0400  02235 00144723
0400  02236 00151711
0400  02237 00147307
0401  02240 00141710 UBA  DATA ''CH47-15 INPT MISSING''
0401  02241 00132267
0401  02242 00126661
0401  02243 00132640
0401  02244 00144716
0401  02245 00150324
0401  02246 00120315
0401  02247 00144723
0401  02250 00151711
0401  02251 00147307
0402  02252 00141710 UBB  DATA ''CH47-14 INPT MISSING''
0402  02253 00132267
0402  02254 00126661
0402  02255 00132240
0402  02256 00144716
0402  02257 00150324
0402  02260 00120315
0402  02261 00144723
0402  02262 00151711
0402  02263 00147307
0403  02264 00141710 UBC  DATA ''CH47-13 INPT MISSING''
0403  02265 00132267
0403  02266 00126661
0403  02267 00131640
0403  02270 00144716
0403  02271 00150324
0403  02272 00120315
0403  02273 00144723
0403  02274 00151711
0403  02275 00147307
0404  02276 00141710 UBD  DATA ''CH47-12 INPT MISSING''
0404  02277 00132267
```

```
0404  02300 00126661
0404  02301 00131240
0404  02302 00144716
0404  02303 00150324
0404  02304 00120315
0404  02305 00144723
0404  02306 00151711
0404  02307 00147307
0405  02310 00141710 UBE  DATA ''CH47-11 INPT MISSING''
0405  02311 00132267
0405  02312 00126661
0405  02313 00130640
0405  02314 00144716
0405  02315 00150324
0405  02316 00120315
0405  02317 00144723
0405  02320 00151711
0405  02321 00147307
0406  02322 00141710 UBF  DATA ''CH47-10 INPT MISSING''
0406  02323 00132267
0406  02324 00126661
0406  02325 00130240
0406  02326 00144716
0406  02327 00150324
0406  02330 00120315
0406  02331 00144723
0406  02332 00151711
0406  02333 00147307
0407  02334 00141710 UBG  DATA ''CH47-9  INPT MISSING''
0407  02335 00132267
0407  02336 00126671
0407  02337 00120240
0407  02340 00144716
0407  02341 00150324
0407  02342 00120315
0407  02343 00144723
0407  02344 00151711
0407  02345 00147307
0408  02346 00141710 UBH  DATA ''CH47-8  INPT MISSING''
0408  02347 00132267
0408  02350 00126670
0408  02351 00120240
0408  02352 00144716
0408  02353 00150324
0408  02354 00120315
0408  02355 00144723
0408  02356 00151711
0408  02357 00147307
```

```
0409  02360 00141710 UBI   DATA ''CH47-7  INPT MISSING''
0409  02361 00132267
0409  02362 00126667
0409  02363 00120240
0409  02364 00144716
0409  02365 00150324
0409  02366 00120315
0409  02367 00144723
0409  02370 00151711
0409  02371 00147307
0410  02372 00141710 UBJ   DATA ''CH47-6  INPT MISSING''
0410  02373 00132267
0410  02374 00126666
0410  02375 00120240
0410  02376 00144716
0410  02377 00150324
0410  02400 00120315
0410  02401 00144723
0410  02402 00151711
0410  02403 00147307
0411  02404 00141710 UBK   DATA ''CH47-5  INPT MISSING''
0411  02405 00132267
0411  02406 00126665
0411  02407 00120240
0411  02410 00144716
0411  02411 00150324
0411  02412 00120315
0411  02413 00144723
0411  02414 00151711
0411  02415 00147307
0412  02416 00141710 UBL   DATA ''CH47-4  INPT MISSING''
0412  02417 00132267
0412  02420 00126664
0412  02421 00120240
0412  02422 00144716
0412  02423 00150324
0412  02424 00120315
0412  02425 00144723
0412  02426 00151711
0412  02427 00147307
0413  02430 00141710 UBM   DATA ''CH47-3  INPT MISSING''
0413  02431 00132267
0413  02432 00126663
0413  02433 00120240
0413  02434 00144716
0413  02435 00150324
0413  02436 00120315
0413  02437 00144723
```

```
0413  02440 00151711
0413  02441 00147307
0414  02442 00141710 UBN   DATA ''CH47-2  INPT MISSING''
0414  02443 00132267
0414  02444 00126662
0414  02445 00120240
0414  02446 00144716
0414  02447 00150324
0414  02450 00120315
0414  02451 00144723
0414  02452 00151711
0414  02453 00147307
0415  02454 00141710 UBO   DATA ''CH47-1  INPT MISSING''
0415  02455 00132267
0415  02456 00126661
0415  02457 00120240
0415  02460 00144716
0415  02461 00150324
0415  02462 00120315
0415  02463 00144723
0415  02464 00151711
0415  02465 00147307
0416  02466 00141710 UBP   DATA ''CH47-0  INPT MISSING''
0416  02467 00132267
0416  02470 00126660
0416  02471 00120240
0416  02472 00144716
0416  02473 00150324
0416  02474 00120315
0416  02475 00144723
0416  02476 00151711
0416  02477 00147307
0417  02500 00141710 UAA   DATA ''CH50-15 INPT MISSING''
0417  02501 00132660
0417  02502 00126661
0417  02503 00132640
0417  02504 00144716
0417  02505 00150324
0417  02506 00120315
0417  02507 00144723
0417  02510 00151711
0417  02511 00147307
0418  02512 00141710 UAB   DATA ''CH50-14 INPT MISSING''
0418  02513 00132660
0418  02514 00126661
0418  02515 00132240
0418  02516 00144716
0418  02517 00150324
```

```
0418  02520 00120315
0418  02521 00144723
0418  02522 00151711
0418  02523 00147307
0419  02524 00141710 UAC  DATA ''CH50-13 INPT MISSING''
0419  02525 00132660
0419  02526 00126661
0419  02527 00131640
0419  02530 00144716
0419  02531 00150324
0419  02532 00120315
0419  02533 00144723
0419  02534 00151711
0419  02535 00147307
0420  02536 00141710 UAD  DATA ''CH50-12 INPT MISSING''
0420  02537 00132660
0420  02540 00126661
0420  02541 00131240
0420  02542 00144716
0420  02543 00150324
0420  02544 00120315
0420  02545 00144723
0420  02546 00151711
0420  02547 00147307
0421  02550 00141710 UAE  DATA ''CH50-11 INPT MISSING''
0421  02551 00132660
0421  02552 00126661
0421  02553 00130640
0421  02554 00144716
0421  02555 00150324
0421  02556 00120315
0421  02557 00144723
0421  02560 00151711
0421  02561 00147307
0422  02562 00141710 UAF  DATA ''CH50-10 INPT MISSING''
0422  02563 00132660
0422  02564 00126661
0422  02565 00130240
0422  02566 00144716
0422  02567 00150324
0422  02570 00120315
0422  02571 00144723
0422  02572 00151711
0422  02573 00147307
0423  02574 00141710 UAG  DATA ''CH50-9  INPT MISSING''
0423  02575 00132660
0423  02576 00126671
0423  02577 00120240
```

```
0423  02600 00144716
0423  02601 00150324
0423  02602 00120315
0423  02603 00144723
0423  02604 00151711
0423  02605 00147307
0424  02606 00141710 UAH   DATA ''CH50-8  INPT MISSING''
0424  02607 00132660
0424  02610 00126670
0424  02611 00120240
0424  02612 00144716
0424  02613 00150324
0424  02614 00120315
0424  02615 00144723
0424  02616 00151711
0424  02617 00147307
0425  02620 00141710 UAI   DATA ''CH50-7  INPT MISSING''
0425  02621 00132660
0425  02622 00126667
0425  02623 00120240
0425  02624 00144716
0425  02625 00150324
0425  02626 00120315
0425  02627 00144723
0425  02630 00151711
0425  02631 00147307
0426  02632 00141710 UAJ   DATA ''CH50-6  INPT MISSING''
0426  02633 00132660
0426  02634 00126666
0426  02635 00120240
0426  02636 00144716
0426  02637 00150324
0426  02640 00120315
0426  02641 00144723
0426  02642 00151711
0426  02643 00147307
0427  02644 00141710 UAK   DATA ''CH50-5  INPT MISSING''
0427  02645 00132660
0427  02646 00126665
0427  02647 00120240
0427  02650 00144716
0427  02651 00150324
0427  02652 00120315
0427  02653 00144723
0427  02654 00151711
0427  02655 00147307
0428  02656 00141710 UAL   DATA ''CH50-4  INPT MISSING''
0428  02657 00132660
```

```
0428  02660 00126664
0428  02661 00120240
0428  02662 00144716
0428  02663 00150324
0428  02664 00120315
0428  02665 00144723
0428  02666 00151711
0428  02667 00147307
0429  02670 00141710 UAM   DATA ''CH50-3   INPT MISSING''
0429  02671 00132660
0429  02672 00126663
0429  02673 00120240
0429  02674 00144716
0429  02675 00150324
0429  02676 00120315
0429  02677 00144723
0429  02700 00151711
0429  02701 00147307
0430  02702 00141710 UAN   DATA ''CH50-2   INPT MISSING''
0430  02703 00132660
0430  02704 00126662
0430  02705 00120240
0430  02706 00144716
0430  02707 00150324
0430  02710 00120315
0430  02711 00144723
0430  02712 00151711
0430  02713 00147307
0431  02714 00141710 UAO   DATA ''CH50-1   INPT MISSING''
0431  02715 00132660
0431  02716 00126661
0431  02717 00120240
0431  02720 00144716
0431  02721 00150324
0431  02722 00120315
0431  02723 00144723
0431  02724 00151711
0431  02725 00147307
0432  02726 00141710 UAP   DATA ''CH50-0   INPT MISSING''
0432  02727 00132660
0432  02730 00126660
0432  02731 00120240
0432  02732 00144716
0432  02733 00150324
0432  02734 00120315
0432  02735 00144723
0432  02736 00151711
0432  02737 00147307
```

```
0433  02740 00000040 DETA BSS  32
0434  03000 00141710 UA   DATA ''CH51-15 INPT MISSING''
0434  03001 00132661
0434  03002 00126661
0434  03003 00132640
0434  03004 00144716
0434  03005 00150324
0434  03006 00120315
0434  03007 00144723
0434  03010 00151711
0434  03011 00147307
0435  03012 00141710 UB   DATA ''CH51-14 INPT MISSING''
0435  03013 00132661
0435  03014 00126661
0435  03015 00132240
0435  03016 00144716
0435  03017 00150324
0435  03020 00120315
0435  03021 00144723
0435  03022 00151711
0435  03023 00147307
0436  03024 00141710 UC   DATA ''CH51-13 INPT MISSING''
0436  03025 00132661
0436  03026 00126661
0436  03027 00131640
0436  03030 00144716
0436  03031 00150324
0436  03032 00120315
0436  03033 00144723
0436  03034 00151711
0436  03035 00147307
0437  03036 00141710 UD   DATA ''CH51-12 INPT MISSING''
0437  03037 00132661
0437  03040 00126661
0437  03041 00131240
0437  03042 00144716
0437  03043 00150324
0437  03044 00120315
0437  03045 00144723
0437  03046 00151711
0437  03047 00147307
0438  03050 00141710 UE   DATA ''CH51-11 INPT MISSING''
0438  03051 00132661
0438  03052 00126661
0438  03053 00130640
0438  03054 00144716
0438  03055 00150324
0438  03056 00120315
```

```
0438  03057 00144723
0438  03060 00151711
0438  03061 00147307
0439  03062 00141710 UF    DATA ''CH51-10 INPT MISSING''
0439  03063 00132661
0439  03064 00126661
0439  03065 00130240
0439  03066 00144716
0439  03067 00150324
0439  03070 00120315
0439  03071 00144723
0439  03072 00151711
0439  03073 00147307
0440  03074 00141710 UG    DATA ''CH51-9  INPT MISSING''
0440  03075 00132661
0440  03076 00126671
0440  03077 00120240
0440  03100 00144716
0440  03101 00150324
0440  03102 00120315
0440  03103 00144723
0440  03104 00151711
0440  03105 00147307
0441  03106 00141710 UH    DATA ''CH51-8  INPT MISSING''
0441  03107 00132661
0441  03110 00126670
0441  03111 00120240
0441  03112 00144716
0441  03113 00150324
0441  03114 00120315
0441  03115 00144723
0441  03116 00151711
0441  03117 00147307
0442  03120 00141710 UI    DATA ''CH51-7  INPT MISSING''
0442  03121 00132661
0442  03122 00126667
0442  03123 00120240
0442  03124 00144716
0442  03125 00150324
0442  03126 00120315
0442  03127 00144723
0442  03130 00151711
0442  03131 00147307
0443  03132 00141710 UJ    DATA ''CH51-6  INPT MISSING''
0443  03133 00132661
0443  03134 00126666
0443  03135 00120240
0443  03136 00144716
```

```
0443  03137 00150324
0443  03140 00120315
0443  03141 00144723
0443  03142 00151711
0443  03143 00147307
0444  03144 00141710 UK    DATA ''CH51-5  INPT MISSING''
0444  03145 00132661
0444  03146 00126665
0444  03147 00120240
0444  03150 00144716
0444  03151 00150324
0444  03152 00120315
0444  03153 00144723
0444  03154 00151711
0444  03155 00147307
0445  03156 00141710 UL    DATA ''CH51-4  INPT MISSING''
0445  03157 00132661
0445  03160 00126664
0445  03161 00120240
0445  03162 00144716
0445  03163 00150324
0445  03164 00120315
0445  03165 00144723
0445  03166 00151711
0445  03167 00147307
0446  03170 00141710 UM    DATA ''CH51-3  INPT MISSING''
0446  03171 00132661
0446  03172 00126663
0446  03173 00120240
0446  03174 00144716
0446  03175 00150324
0446  03176 00120315
0446  03177 00144723
0446  03200 00151711
0446  03201 00147307
0447  03202 00141710 UN    DATA ''CH51-2  INPT MISSING''
0447  03203 00132661
0447  03204 00126662
0447  03205 00120240
0447  03206 00144716
0447  03207 00150324
0447  03210 00120315
0447  03211 00144723
0447  03212 00151711
0447  03213 00147307
0448  03214 00141710 UO    DATA ''CH51-1  INPT MISSING''
0448  03215 00132661
0448  03216 00126661
```

```
0448  03217 00120240
0448  03220 00144716
0448  03221 00150324
0448  03222 00120315
0448  03223 00144723
0448  03224 00151711
0448  03225 00147307
0449  03226 00141710 UP    DATA ''CH51-0  INPT MISSING''
0449  03227 00132661
0449  03230 00126660
0449  03231 00120240
0449  03232 00144716
0449  03233 00150324
0449  03234 00120315
0449  03235 00144723
0449  03236 00151711
0449  03237 00147307
0450  03240 70400000       END
       BEGN     00000
       STRT     00014
       AIP      00022
       MORE     00025
       HERE     00035
       B1A      00046
       THE      00053
       PRNT     00054
       TABL     00057
       TEST     00065
       TESS     00073
       CHNG     00076
       C47      00113
       C50      00130
       C51      00145
       C46      00162
       TTYO     00203
       CRLF     00212
       BRU      00222
       A1       00223
       A2       00224
       CT15     00225
       CT16     00226
       A1A      00227
       C1A      00230
       D1A      00231
       E1A      00232
       AIP1     00233
       CT4      00234
       BBB1     00235
```

BBB2	00236
BBB3	00237
CCC1	00240
CCC2	00241
CCC3	00242
DDD1	00243
DDD2	00244
DDD3	00245
EEE1	00246
EEE2	00247
EEE3	00250
BBBB	00251
CCCC	00252
DDDD	00253
EEEE	00254
B1	00255
B2	00256
B3	00257
B4	00260
B5	00261
B6	00262
B7	00263
B8	00264
B9	00265
B10	00266
B11	00267
B12	00270
B13	00271
B14	00272
B15	00273
C1	00275
C2	00276
C3	00277
C4	00300
C5	00301
C6	00302
C7	00303
C8	00304
C9	00305
C10	00306
C11	00307
C12	00310
C13	00311
C14	00312
C15	00313
D1	00315
D2	00316
D3	00317

D4	00320
D5	00321
D6	00322
D7	00323
D8	00324
D9	00325
D10	00326
D11	00327
D12	00330
D13	00331
D14	00332
D15	00333
E1	00335
E2	00336
E3	00337
E4	00340
E5	00341
E6	00342
E7	00343
E8	00344
E9	00345
E10	00346
E11	00347
E12	00350
E13	00351
E14	00352
E15	00353
B1B	00355
C1C	00375
D1D	00415
E1E	00435
TBLP	00455
TBLO	00467
TBLN	00501
TBLM	00513
TBLL	00525
TBLK	00537
TBLJ	00551
TBLI	00563
TBLH	00575
TBLG	00607
TBLF	00621
TBLE	00633
TBLD	00645
TBLC	00657
TBLB	00671
TBLA	00703
BB1	00715

CC1	00735
DD1	00755
DATA	00775
EE1	01007
TBP	01027
TBO	01041
TBN	01053
TBM	01065
TBL	01077
TBK	01111
TBJ	01123
TBI	01135
TBH	01147
TBG	01161
TBF	01173
TBE	01205
TBD	01217
TBC	01231
TBB	01243
TBA	01255
TAP	01267
TAO	01301
TAN	01313
TAM	01325
TAL	01337
TAK	01351
TAJ	01363
TAI	01375
TAH	01407
TAG	01421
TAF	01433
TAE	01445
TAD	01457
TAC	01471
TAB	01503
TAA	01515
TP	01527
TO	01541
TN	01553
TM	01565
TL	01577
TK	01611
TJ	01623
TI	01635
TH	01646
TG	01660
TF	01672
TE	01704

TD	01716
TC	01730
TB	01742
TA	01754
DOTA	01766
UBLA	02000
UBLB	02012
UBLC	02024
UBLD	02036
UBLE	02050
UBLF	02062
UBLG	02074
UBLH	02106
UBLI	02120
UBLJ	02132
UBLK	02144
UBLL	02156
UBLM	02170
UBLN	02202
UBLO	02214
UBLP	02226
UBA	02240
UBB	02252
UBC	02264
UBD	02276
UBE	02310
UBF	02322
UBG	02334
UBH	02346
UBI	02360
UBJ	02372
UBK	02404
UBL	02416
UBM	02430
UBN	02442
UBO	02454
UBP	02466
UAA	02500
UAB	02512
UAC	02524
UAD	02536
UAE	02550
UAF	02562
UAG	02574
UAH	02606
UAI	02620
UAJ	02632
UAK	02644

```
        UAL      02656
        UAM      02670
        UAN      02702
        UAO      02714
        UAP      02726
        DETA     02740
        UA       03000
        UB       03012
        UC       03024
        UD       03036
        UE       03050
        UF       03062
        UG       03074
        UH       03106
        UI       03120
        UJ       03132
        UK       03144
        UL       03156
        UM       03170
        UN       03202
        UO       03214
        UP       03226
ERRORS  0000     00000
```

#300001E/F
LOAD-DUMP

PROGRAM DESCRIPTION

CATALOG NO. 300001E Modified

DATE 1 September 1970

REVISED 17 May 1972

PROGRAM TITLE: SYSTEMS 810A/B STANDARD LOAD/DUMP PACKAGE MODIFIED 8K OR 16K MEMORY

PURPOSE: To provide capability for:
(1) loading relocatable object programs generated by the SYSTEMS 810A/B Macro-Assembler or SYSTEMS 810A/B FORTRAN IV Compiler;
(2) dumping selected areas of memory in absolute binary format;
(3) loading object modules generated by the absolute dump function.

CONFIGURATION: SYSTEMS 810A/B with ASR-33 and High Speed Paper Tape Reader.

PROGRAM LANGUAGE: SYSTEMS 810A/B Assembly Language

SIZE: 2000_8

LOADING PROCEDURE:

The 300001E Modified Standard Load/Dump program is loaded directly into upper 8K or upper 16K of memory via the modified bootstrap program. The modified 300001E Load/Dump program made for upper 8K will not function or load in upper 16K and the 300001E Load/Dump program modified for upper 16K will not function or load in upper 8K memory.

The procedure required to load this package includes:

(1) MASTER CLEAR the computer;

(2) Manually enter the modified Binary Bootstrap Loader (below) at locations $0-17_8$:

OCTAL LOCATION	8K OCTAL CODING	16K OCTAL CODING
0	130101	130101
1	004000	004000
2	170301	170301
3	000022	000022
4	111006	111006
5	111002	111002
6	170301	170301
7	001016	001016
10	174301	174301
11	033016	033016
12	000022	000022
13	000026	000026
14	113017	113017
15	111006	111006
16	117671	137671
17	017673	037673

(3) Position the appropriate 8K or 16K Modified Standard Load/Dump program (300001E Modified) on the high speed tape reader

(4) Master Clear and depress "START" twice

The 300001E Standard Load/Dump Package (program) is in the upper portion of the 8K or 16K memory at the following addresses:

	8K	16K
Relocatable Loader	016060_8	036060_8
Absolute Dump	017561_8	037561_8
Absolute Loader	017673_8	037673_8

USE:

The SYSTEMS 810A/B STANDARD LOAD/DUMP PACKAGE may be used to load object programs in relocatable binary format; to dump selected areas of memory in absolute binary format; and to load object modules in absolute binary format.

I - RELOCATABLE LOADER

The procedure required to use the relocatable loader portion of the STANDARD LOAD/DUMP PACKAGE includes:

(1) Position the relocatable binary object program to be loaded in the desired input device (High Speed Tape Reader):

(2) Make the following manual entries:

- A - Accumulator = Relocation Base for program (Starting location of program)
- B - Accumulator = Map Zero Starting Location
- P - Counter = Relocatable Loader Starting Location

8K	016060
16K	036060

(3) Depress START twice - the program will be loaded;

(4) If "EJ" only is printed on the ASR-33 teletypewriter, the relocatable loader is awaiting further input to satisfy external subroutines referenced by the loaded program. In this instance, position the unloaded external program (s) in the proper input device and repeat step (3) above;

NOTE

Do not MASTER CLEAR the computer prior to loading external subroutines.

(5) When loading is complete, the following will be printed on the ASR-33 teletypewriter:

LC = LOAD COMPLETE

EJ = END OF JOB

XXXXX YYYYY, where

XXXXX - indicates the highest memory location used by the program;

YYYYY - indicates the next available map zero location

(6) To execute the loaded program:

(a) MASTER CLEAR the computer;

(b) Enter the starting location of the program into the P-Counter;

(c) Depress START twice to begin program execution.

II - ABSOLUTE DUMP

The procedure required to use the Absolute Dump portion of the STANDARD LOAD/DUMP PACKAGE includes:

(1) Set the appropriate control switches as follows:

- Control Switches Reset (Normal)
- Control Switch 1 Set = Dump Intermap References after dumping program

(2) Make the following manual entries:

8K Location	16K Location	Entry
017776_8	037776_8	End of Dump Address
017777_8	037777_8	Start of Dump Address

(3) Enter 017561_8 for 8K or 037561_8 for 16K into the P-Counter. This is the start address for the Absolute Dump portion of the STANDARD LOAD/DUMP PACKAGE:

(4) Depress START once - a dump of the specified memory locations will be generated in absolute binary format acceptable to the Absolute Loader portion of this package (below)

III - ABSOLUTE LOADER

The procedure required to use the Absolute Loader portion of the STANDARD LOAD/DUMP PACKAGE includes:

(1) Position the absolute binary object module to be loaded in the desired input device (High Speed Tape Reader).

(2) Set the appropriate control switches as follows:

- Control Switch 1 Set = Load intermap references after loading program

(3) Enter 017673_8 for 8K or 037673_8 for 16K into the P-Counter. This is the start address for the Absolute Loader portion of the STANDARD LOAD/DUMP PACKAGE;

(4) Depress START twice - the core-image contents of the absolute binary input module will be loaded into the same portion of memory from which originally dumped.

METHOD:

(1) RELOCATABLE LOADER

(a) Tape format consists of blocks of 111 frames. Each block contains a start code, thirty-six 24-bit words, and a 16-bit check sum. A complete block is read by the loader before the first word in the block is processed;

If a parity error occurs during input, five attempts are made to read the record before the loader message "R" is printed on the ASR-33 teletypewriter, and the computer HALTS. Clearing the HALT will cause the record to be accepted.

(b) The following messages are output by the relocatable loader:

- CK - Check Sum Error
- MO - Memory Overflow into Area of Core Used by Loader
- CM - Common Request prior to Common Definition
- LC - Loading Process Complete
- EJ - End of Job

(2) ABSOLUTE DUMP

Tape format consists of a start code, a 16-bit starting address, and a 16-bit negative word count followed by blocks of 66 frames each. The last block may have less than 66 frames. Each block is terminated with a 16-bit check sum.

(3) ABSOLUTE LOADER

(a) Tape format consists of a start code, a 16-bit starting address, and a 16-bit negative word count followed by blocks of 66 frames each. The last block may have less than 66 frames. Each block is terminated with a 16-bit check sum. Words are stored into core as they are read.

(b) If a check sum error is encountered during the loading process, the loader message "K" will be printed on the ASR-33 teletypewriter, and the computer will HALT. Clearing the HALT will cause the record to be accepted.

#303001B
MAINFRAME EXERCISER

#303001C 1-23-78

PROGRAM DESCRIPTION

IDENTIFICATION: 810A/B Mainframe Exerciser Number 303001C

ISSUED: Modified January 23, 1978 to eliminate the Keytran option and to include indexing and testing of IMS, SAP and DIV instructions. Changed starting address to keep program resident in computer.
Carl L. Thompson

PURPOSE: A fast no-loop program designed to use each of the mainframe instructions in such a way that if a halt occurs, the Technician can determine from the program listing the instruction that is failing.

STORAGE: 462 Octal Locations

LOADING PROCEDURE:

Relocatable Loader
Program Counter, Enter '36060
"A" Accumulator, Enter 0
"B" Accumulator, Enter 0

Insert tape in reader and press start switch twice.

To start program, enter '34000 in program counter and press start switch twice.

The program will continue to run until manually halted or until an instruction fails. If the program halts due to an instruction failure, the program counter will point to the second instruction following the last halt. Place a programmers halt at approximately 10 instructions preceeding the halt location. Restart program and following the programmers halt, single cycle the computer, carefully noting the execution of each instruction in the control panel until you find the instruction that failed to execute properly.

Continue the program to determine if other instructions fail. The relationship of several instruction failures may provide a clue to the area of failure.

To trouble shoot a failure, thumb in the shortest program loop possible with the failing instruction to permit tracing the failure with the oscilloscope.

To test the divide instruction place a NOP ('000033) instruction at location '34374.

```
0001                    * * * * * * * * * * * * * * * * * * * * * * * *
0002                    *    810A/B MAINFRAME EXERCISER NO 303001C     *
0003                    *    PROGRAM MODIFIED TO TEST INDEXING, IMS,   *
0004                    *    SAP, DIV. REMOVED KEYTRAN OPTION, MOVED   *
0005                    *    STARTING ADDRESS TO '34000 TO MAINTAIN    *
0006                    *    PERMANENT RESIDENCE IN COMPUTER.          *
0007                    *    CARL L THOMPSON JANUARY 23, 1978          *
0008                    * * * * * * * * * * * * * * * * * * * * * * * *
0009  00000 00000000        REL
0010  34000 70034000        ORG  '34000        START LOCATION OF PROG
0011  34000 01134422 STAR   LAA  TES6          LOAD A W/077777
0012  34001 05134424        AMA  TE10          ADD 1 TO A
0013  34002 00000025        SOF                OVERFLOW
0014  34003 11134005        BRU  *+2           YES, GO ON
0015  34004 00000000        HLT                NO, HALT
0016  34005 00000020        ASC                CHANGE SIGN OF A
0017  34006 00000022        SAZ                IS A ZERO
0018  34007 00000000        HLT                NO, HALT
0019  34010 01134416        LAA  TES2          LOAD ALL ONES IN A
0020  34011 02134422        LBA  TES6          LOAD SEVENS IN B = 077777
0021  34012 16134424        AMB  TE10          ADD 1 TO B
0022  34013 00000004        TBA                TRANSFER B TO A
0023  34014 00000025        SOF                OVERFLOW
0024  34015 11134017        BRU  *+2           YES, GO ON
0025  34016 00000000        HLT                NO HALT
0026  34017 00000020        ASC                CHANGE SIGN OF A
0027  34020 00000022        SAZ                IS A ZERO
0028  34021 00000000        HLT                NO
0029  34022 01134424        LAA  TE10          ONE IN A
0030  34023 00001716        LSL  15            ←[S|  A  ]←0's
0031  34024 00000023        SAN                SHIFT OK
0032  34025 00000000        HLT                NO, HALT
0033  34026 00001710        FSA  15            [S|→ A ]→
0034  34027 06134416        SMA  TES2          SUBTRACT ALL ONES
0035  34030 00000022        SAZ                IS A ZERO
0036  34031 00000000        HLT                NO, HALT
0037  34032 01134424        LAA  TE10          YES, ONE IN A
0038  34033 02134424        LBA  TE10          ONE IN B
0039  34034 00001713        FLL  15            ←[S| A ]←[S| B ]←0's
0040  34035 00000023        SAN                SHIFT OK
0041  34036 00000000        HLT                NO, HALT
0042  34037 00000006        IAB                YES, CHECK B
0043  34040 00000023        SAN                IS A NEGATIVE
0044  34041 00000000        HLT                NO
0045  34042 00001712        FRA  15            [S|→ A ]  [S|  B ]→
0046  34043 00000007        CSB                COPY (REMOVE) SIGN OF B
0047  34044 05134415        AMA  TES1          ADD ZERO TO A
```

```
0048  34045 00000022   SAZ          IS A ZERO
0049  34046 00000000   HLT          NO, HALT
0050  34047 00000006   IAB          YES
0051  34050 00000022   SAZ          IS B ZERO
0052  34051 00000000   HLT          NO, HALT
0053  34052 01134424   LAA   TE10   YES, ONE IN A
0054  34053 00000111   LSA   1      [S|A] <- 0's
0055  34054 00000022   SAZ          IS A ZERO
0056  34055 11134057   BRU   *+2    NO
0057  34056 00000000   HLT          YES HLT
0058  34057 00001611   LSA   14     [S|A] <- 0's
0059  34060 00000022   SAZ          IS A ZERO
0060  34061 00000000   HLT          NO
0061  34062 01134422   LAA   TES6   SEVENS IN A
0062  34063 00000111   LSA   1      [S|A] <- 0's
0063  34064 00000022   SAZ          IS A ZERO
0064  34065 11134067   BRU   *+2    NO
0065  34066 00000000   HLT          YES HLT
0066  34067 00001611   LSA   14     [S|A] <- 0's
0067  34070 00000022   SAZ          IS A ZERO
0068  34071 00000000   HLT          NO
0069  34072 01134416   LAA   TES2   ALL ONES IN A
0070  34073 00000003   CLA          DOES CLEAR A WORK
0071  34074 00000022   SAZ          IS A ZERO
0072  34075 00000000   HLT          NO
0073  34076 00000033   NOP
0074  34077 00000033   NOP
0075  34100 01134416   LAA   TES2   ALL ONES 177777
0076  34101 02134420   LBA   TES4   ALT BITS 52525
0077  34102 00001714   FRL   15     [S|A] <- [S|B]
0078  34103 06134417   SMA   TES3   SUBT 125252 F/A
0079  34104 00000022   SAZ          IS A ZERO
0080  34105 00000000   HLT          NO HLT
0081  34106 00000004   TBA          TRANSFER B TO A
0082  34107 06134416   SMA   TES2   SUBT ALL ONES FROM A
0083  34110 00000022   SAZ          IS A ZERO
0084  34111 00000000   HLT          NO
0085  34112 01134415   LAA   TES1   ZERO IN A
0086  34113 15134424   CMA   TE10   COMPARE ZERO TO ONE
0087  34114 11134117   BRU   *+3    A LESS THAN M, OK.
0088  34115 00000000   HLT          NO
0089  34116 00000000   HLT          NO
0090  34117 01134424   LAA   TE10   ONE IN A
0091  34120 15134424   CMA   TE10   COMPARE ONE TO ONE
0092  34121 00000000   HLT          NO
0093  34122 11134124   BRU   *+2    A = M, OK.
0094  34123 00000000   HLT          NO
0095  34124 05134424   AMA   TE10   2 IN A
```

```
0096  34125 15134424   CMA  TE10    COMPARE 2 TO 1
0097  34126 00000000   HLT
0098  34127 00000000   HLT
0099  34130 02134416   LBA  TES2    A IS MORE THAN M
0100  34131 04134432   STB  LOC1
0101  34132 00000006   IAB
0102  34133 15134432   CMA  LOC1    WAS B STORED PROPERLY
0103  34134 00000000   HLT          NO
0104  34135 11134137   BRU  *+2     YES
0105  34136 00000000   HLT          NO
0106  34137 01134417   LAA  TES3    ALT. BITS IN A
0107  34140 02134420   LBA  TES4    ALT. BITS IN B
0108  34141 00000027   ABA          AND A AND B
0109  34142 00000022   SAZ          ANDED CORRECTLY
0110  34143 00000000   HLT          NO
0111  34144 01134417   LAA  TES3    YES
0112  34145 00000030   OBA          OR A + B
0113  34146 06134416   SMA  TES2    SUBTRACT ALL ONES
0114  34147 00000022   SAZ          A ZERO
0115  34150 00000000   HLT          NO
0116  34151 01134422   LAA  TES6    ALL SEVENS 077777
0117  34152 03134432   STA  LOC1    CK STORE A
0118  34153 01134432   LAA  LOC1
0119  34154 06134422   SMA  TES6    SUBT 077777 F/A
0120  34155 00000022   SAZ          IS A ZERO
0121  34156 00000000   HLT          NO HLT
0122  34157 01134415   LAA  TES1    ZERO IN A
0123  34160 03134433   STA  LOC2    STORE A
0124  34161 14134433   IMS  LOC2    MAKE ZERO A ONE
0125  34162 01134433   LAA  LOC2    A=1
0126  34163 00000022   SAZ          IS A ZERO
0127  34164 11134166   BRU  *+2     NO
0128  34165 00000000   HLT          YES HLT
0129  34166 00000002   NEG          CHNG A TO 177777
0130  34167 06134416   SMA  TES2    SUBT 177777 F/A
0131  34170 00000022   SAZ          IS A ZERO
0132  34171 00000000   HLT          NO HLT
0133  34172 01134416   LAA  TES2    ALL ONES 177777
0134  34173 00000034   CNS          CHNG A TO 100000
0135  34174 06134424   SMA  TE10    SUBTRACT ONE
0136  34175 00000023   SAN          NEGATIVE SIGN LEFT
0137  34176 00000000   HLT          NO
0138  34177 01134416   LAA  TES2    ONES IN A
0139  34200 00000021   SAS          IS A -, 0, +
0140  34201 11134204   BRU  *+3     A IS -
0141  34202 00000000   HLT          0, HALT
0142  34203 00000000   HLT          +, HALT
0143  34204 05134424   AMA  TE10    ZERO IN A
```

```
0144  34205 00000021   SAS                IS A -, 0, +
0145  34206 00000000   HLT
0146  34207 11134211   BRU   *+2         A IS ZERO
0147  34210 00000000   HLT
0148  34211 05134422   AMA   TES6        SEVENS IN A
0149  34212 00000021   SAS                IS A -, 0, +
0150  34213 00000000   HLT
0151  34214 00000000   HLT
0152  34215 00000033   NOP                A IS +
0153  34216 02134422   LBA   TES6        SEVENS IN B
0154  34217 00000003   CLA                CLEAR A
0155  34220 00001717   FLA   15           S | A | S | B | 0's
0156  34221 06134422   SMA   TES6        SUBTRACT SEVENS
0157  34222 00000022   SAZ                IS A ZERO
0158  34223 00000000   HLT                NO
0159  34224 01134421   LAA   TES5        MINUS ZERO IN A
0160  34225 00001715   RSL   15           0's -> S | A ->
0161  34226 00000022   SAZ                IS A ZERO
0162  34227 11134231   BRU   *+2         NO
0163  34230 00000000   HLT                YES HLT
0164  34231 00000112   FRA   1            S -> A | S | B ->
0165  34232 00000022   SAZ                IS A ZERO
0166  34233 00000000   HLT                NO HLT
0167  34234 00000001   RNA                INCR A BY 1 IF B1 IS 1
0168  34235 00000022   SAZ                IS A ZERO
0169  34236 11134240   BRU   *+2         NO
0170  34237 00000000   HLT                YES HLT
0171  34240 00000005   TAB                TRANSFER A TO B
0172  34241 00000003   CLA                CLEAR A
0173  34242 00000006   IAB                INTERCHANGE A AND B
0174  34243 00000022   SAZ                IS A ZERO
0175  34244 11134246   BRU   *+2         NO
0176  34245 00000000   HLT                YES HLT
0177  34246 00000033   NOP
0178  34247 00000020   ASC                COMPLEMENT SIGN BIT OF A
0179  34250 00000001   RNA                INCREASE A BY 1 IF B1 IS 1
0180  34251 06134424   SMA   TE10        SUBTRACT 1 FROM A
0181  34252 00000021   SAS                IS A -,0,+
0182  34253 11134256   BRU   *+3         (-)
0183  34254 00000000   HLT
0184  34255 00000000   HLT
0185  34256 00000020   ASC                COMPLEMENT SIGN BIT OF A
0186  34257 00000022   SAZ                IS A ZERO
0187  34260 00000000   HLT                NO
0188  34261 01134423   LAA   TES7        '146314 IN A
0189  34262 00000032   SNO                DOES BIT A1 EQUAL A0
0190  34263 11134265   BRU   *+2         YES
0191  34264 00000000   HLT                NO
```

```
0192  34265 00000116        LSL   1              SHIFT LEFT
0193  34266 00000032        SNO                  DOES BIT A1 EQUAL A0
0194  34267 00000000        HLT                  YES
0195  34270 01134416        LAA   TES2           ALL ONES 177777
0196  34271 02134416        LBA   TES2           LOAD B WITH ALL ONES
0197  34272 00000036        LOB                  BRU TO LOC 35000
0198  34273 35435000        DAC   CATO           SECOND WORD OF LOB
0199  34274 00000000        HLT
0200  34275 12334436 RTN    SPB*  CHAR           GO TO CHAR FOR ADDRESS
0201  34276 06134424        SMA   TE10           SUBTRACT 1 FROM A
0202  34277 00000022        SAZ                  IS A ZERO
0203  34300 00000000        HLT                  NO
0204  34301 00000005        TAB                  TRANS A TO B
0205  34302 00000026        IBS                  INCR B, SKIP IF 0 OR +
0206  34303 00000000        HLT
0207  34304 00000004        TBA                  TRANSFER B TO A
0208  34305 06134426        SMA   TE12           SUBTRACT '400 FROM A
0209  34306 00000022        SAZ                  IS A ZERO
0210  34307 02134425        LBA   TE11           200 IN B
0211  34310 07134426        MPY   TE12           MULTIPLY BY 400
0212  34311 06134424        SMA   TE10           SUBTRACT ONE
0213  34312 00000022        SAZ                  IS A ZERO
0214  34313 00000000        HLT                  NO
0215  34314 00000004        TBA                  TRANSFER B TO A
0216  34315 00000022        SAZ                  IS A ZERO
0217  34316 00000000        HLT                  NO
0218  34317 02134424        LBA   TE10           ONE IN B
0219  34320 00000117        FLA   1              TWO IN A
0220  34321 07134422        MPY   TES6           MULTIPLY BY SEVENS
0221  34322 06134424        SMA   TE10           SUBTRACT ONE
0222  34323 00000022        SAZ                  IS A ZERO
0223  34324 00000000        HLT
0224  34325 00000004        TBA                  TRANSFER B TO A
0225  34326 05134424        AMA   TE10           ADD 1 TO A
0226  34327 06134422        SMA   TES6           SUBT 077777 FROM A
0227  34330 00000022        SAZ                  IS A ZERO
0228  34331 00000000        HLT                  NO
0229                     * * * * * * * * * * * * * * * * * * * * * * * * *
0230                     *    MODIFICATIONS MADE BY CLT TO INCLUDE
0231                     *    TEST FOR INDEXING, IMS, SAP AND DOUBLE
0232                     *    DIVIDEND DIVIDE INSTRUCTIONS.
0233                     * * * * * * * * * * * * * * * * * * * * * * * * *
0234  34332 02134427        LBA   TE13           '177775 IN B
0235  34333 01534433        LAA   TE14+3,1       ADD ONE TO A
0236  34334 00000022        SAZ                  IS A ZERO
0237  34335 11134337        BRU   *+2            NO
0238  34336 00000000        HLT                  A IS ZERO
0239  34337 00000026        IBS                  INCREMENT B
```

```
34340 11134342      BRU  *+2          B STILL NEGATIVE
34341 00000000      HLT               B IS / OR +
34342 01534433      LAA  TE14+3,1     A = 0
34343 00000022      SAZ               IS A ZERO
34344 00000000      HLT               A IS NOT ZERO
34345 01334434      LAA* LOC3         ADD ONE TO A
34346 00000022      SAZ               IS A ZERO
34347 11134351      BRU  *+2          NO
34350 00000000      HLT               A IS ZERO
34351 00000026      IBS               INCREMENT B SKIP IF 0/+
34352 00000026      IBS
34353 00000000      HLT               B NOT 0 OR +
34354 01134416      LAA  TES2         ALL ONES 177777
34355 00000024      SAP               IS A POS
34356 11134360      BRU  *+2          NO
34357 00000000      HLT               YES HLT
34360 00000003      CLA               CLEAR A
34361 00000024      SAP               IS A POS
34362 00000000      HLT               NO HLT
34363 01134427      LAA  TE13         A = 177775
34364 03134435      STA  LOC5         STORE A
34365 14134435      IMS  LOC5         INCREMENT-ADD 1 TO LOC5
34366 01134435      LAA  LOC5         A=177776
34367 14134435      IMS  LOC5         INCREMENT-ADD 1 TO LOC5
34370 11134372      BRU  *+2          LOC5 STILL NO ZERO
34371 00000000      HLT
34372 14134435      IMS  LOC5         INCREMENT-ADD 1 TO LOC5
34373 00000000      HLT               HLT IF LOC5 NOT ZERO
                 * *  * * * * * * * * * * * * * * * * * * * * *
                 * TO TEST DIVIDE CHANGE NEXT LOCATION TO NOP '33
                 * *  * * * * * * * * * * * * * * * * * * * * *
34374 11134000      BRU  STAR         RETEST INSTRUCTIONS
34375 01134410      LAA  DIV          DIVIDEND '72345
34376 02134411      LBA  DIVB         DIVIDEND '54321
34377 10134412      DIV  DIVC         DIVISOR '74074
34400 06134413      SMA  DIVD         SUBT QUO F/'76162
34401 00000022      SAZ               IS A ZERO
34402 00000000      HLT               NO HLT
34403 00000004      TBA               XFER REMAINDER TO A
34404 06134414      SMA  DIVE         SUBT REM F/'37031
34405 00000022      SAZ               IS A ZERO
34406 00000000      HLT               NO HLT
34407 11134000      BRU  STAR         REPEAT COMPLETE PROGRAM
34410 00072345 DIV  DATA '72345
34411 00054321 DIVB DATA '54321
34412 00074074 DIVC DATA '74074
34413 00076162 DIVD DATA '76162
34414 00037031 DIVE DATA '37031
```

```
0288  34415 00000000 TES1 DATA 0
0289  34416 00177777 TES2 DATA -1
0290  34417 00125252 TES3 DATA '125252
0291  34420 00052525 TES4 DATA '52525
0292  34421 00100000 TES5 DATA '100000
0293  34422 00077777 TES6 DATA '77777
0294  34423 00146314 TES7 DATA '146314
0295  34424 00000001 TE10 DATA 1
0296  34425 00000200 TE11 DATA '200
0297  34426 00000400 TE12 DATA '400
0298  34427 00177775 TE13 DATA -3
0299  34430 00000001 TE14 DATA 1,0
0299  34431 00000000
0300  34432 00000000 LOC1 ZZZ  **
0301  34433 00000000 LOC2 ZZZ  **
0302  34434 35635023 LOC3 DAC  LOC4,1        ADDR OF LOC4 + B INDX
0303  34435 00000000 LOC5 ZZZ  **
0304  34436 35435003 CHAR DAC  RED           SUBROUTINE 'RED'
0305  35000 70035000      ORG  '35000        STORE BAL IN MAP '35000
0306  35000 11335001 CATO BRU* *+1           BRU INDIR + 1 TO RTN
0307  35001 35434275      DAC  RTN           ADDR OF BRU
0308  35002 00000000      HLT
0309  35003 00000000 RED  ZZZ  **            STORE ADDR OF RTN+1
0310  35004 00000025      SOF                IF OVERFLOW GO TO NOP
0311  35005 00000033      NOP
0312  35006 00000003      CLA                CLEAR A
0313  35007 00000005      TAB                TRANSFER A TO B
0314  35010 05135020      AMA  PSEV          ADD '77777 TO A
0315  35011 00000025      SOF                IF OVERFLOW GO TO HLT
0316  35012 00000000      HLT
0317  35013 16135020      AMB  PSEV          ADD '77777 TO B
0318  35014 00000025      SOF                IF OVERFLOW GO TO HLT
0319  35015 00000000      HLT
0320  35016 01135021      LAA  ONE           LOAD A WITH 1
0321  35017 11335003      BRU* RED           BRU INDIRECT TO RED
0322  35020 00077777 PSEV DATA '77777
0323  35021 00000001 ONE  DATA 1
0324  35022 00000001      DATA 1             ADD TO A F/LAA* LOC3
0325  35023 00000000 LOC4 DATA 0
0326  35024 70400000      END
       STAR     34000
       RTN      34275
       DIV      34410
       DIVB     34411
       DIVC     34412
       DIVD     34413
       DIVE     34414
       TES1     34415
```

```
        TES2     34416
        TES3     34417
        TES4     34420
        TES5     34421
        TES6     34422
        TES7     34423
        TE10     34424
        TE11     34425
        TE12     34426
        TE13     34427
        TE14     34430
        LOC1     34432
        LOC2     34433
        LOC3     34434
        LOC5     34435
        CHAR     34436
        CAT0     35000
        RED      35003
        PSEV     35020
        ONE      35021
        LOC4     35023
ERRORS  0000     00000
```

SYSTEMS ENGINEERING LATORATORIES PROGRAM LIBRARY

SOFTWARE DESCRIPTION

CATALOG NO. 303002B

DOCUMENTATION REV*

DATE June 15, 1970

PROGRAM TITLE	810A/B Instruction Simulation and Comparison (IS&C)
PURPOSE:	Executes mainframe instructions and simulates them if possible by software. The results are compared and an error condition occurs on an error. Some instructions cannot be simulated easily so they are executed and the results compared to a constant.
CONFIGURATION:	Basic SYSTEMS 810A/B Computer
SOFTWARE ENVIRONMENT:	Stand-Alone
PROGRAM LANGUAGE:	SYSTEMS 810A/B Assembly Language

SIZE: 2000_8 - 4163_8

TIMING: Approx 20 Seconds/Cycle

Note:
When using the upper 16K load/dump program the relocatable loader, program counter 36060 should be utilized to load the program rather than the 16060

Relocatable Loader
Prog. Counter 16060
A-Accum 0 B-Accum 0
After Load Start At '2000

REASON FOR CHANGE:

Changes were made to allow this program to run with the Keytran System and output all messages to the selectric typewriter by setting Sense Switch 13.

USE:

Start at location 2000_8, the program will run until manually halted.

When running under the Keytran System, the Diagnostic Number for this program is four (4). The program will automatically be started at location 2000_8 and will run continuously until the Index Key is depressed on the selectric typewriter at which time control will be returned to the Keytran Diagnostic Loader.

If an error occurs, consult the routine description to find what instruction failed.

Sense Switch Settings:

SSW 0 up - A successful cycle type-out will occur approximately every 25 seconds only if there have been no errors during that cycle.

SSW 1 up - Errors will be ignored.

SSW 2 up - No error type-out will occur, the machine will halt and the A-Accumulator may be displayed for the error location.

SSW 3 up - A halt will occur after the error type-out.

SSW 13 up - Indicates program is being run with the Keytran System and that all output will be via the selectric typewriter.

Type-Out Formats

Successful Cycles - NNNN
NNNN = Decimal number of cycles in which no errors occurred.

Machine error preceeding location XXXXX
XXXXX = Octal location from which a SPB occurred after an error condition found by the program.

METHOD:

Clear A-Accumulator (CLAT)

The A-Accumulator is loaded with the counter and cleared. A is then checked for zero. The counter is then incremented.

The test is repreated for every case. An error at location 2053_8 indicates a CLA error.

Skip if A-Accumulator is Zero (SAZT)

The B-Accumulator is incremented and transferred to A. A is checked for zero by the SAZ and then A is checked for zero by the CMA. An error will occur at location 2071_8 if a skip occurs when A is not zero and at location 2074_8 if there is not a skip when A is zero. An error can also occur at 2100_8 if a skip does not occur when A is zero, and if a skip occurs but A is not zero there will be an error indication at 2102_8 or 2104_8.

Skip if A-Accumulator is Positive (SAPT)

B is incremented in the same manner as the zero test. An error at location 2114_8 means a skip should have occurred. An error at location 2125_8 indicates a skip occurred when A was not positive. A counter is used to test every case.

Skip A-Accumulator is Negative (SANT)

Operates in the same manner as the A positive Test. An error at location 2140_8 indicates an illegal skip and an error at 2150_8 indicates no skip occurred.

Skip on A-Accumulator Sign (SAST)

Runs similar to the previous tests except that there are three possibilities instead of two. An error at 2164_8 or 2166_8 indicates A was zero and the SAS did not detect this condition. An error at 2173_8 will occur when the SAS did not detect a positive sign. If a negative sign if not sensed, an error will occur at 2200_8.

Compare Memory to A-Accumulator (CMAT)

The A-Accumulator is loaded with the counter, a CMA to zero is executed and according to the skip after the CMA, the A-Accumulator is tested for more, less, or equal to zero.

An illegal skip to n+1 will cause an error at location 2214_8. An illegal skip to n+2 will cause an error at location 2217_8. An illegal skip to n+3 will cause an error at location 2226_8.

Load and Store Instructions (LASA, LBSB)

The Accumulator is loaded with the counter and then stored in the location tagged STOP. A comparison between the stored data and the accumulator is then executed. The data is then compared with the counter. Errors at 2237_8 or 2241_8 indicate a bad STA, errors at 2243_8 or 2245_8 indicate a bad LAA. If an error occurs at location 2257_8 or 2261_8 the STB instruction failed, errors at 2264_8 or 2266_8 indicate LBA failed.

Transfer and Interchange A & B (TATB)

A is loaded with the counter and transferred to B, B is then stored and compared to A. An error at 2301_8 or 2303_8 indicates this phase failed.

B is loaded with the counter and is then transferred to A. A is compared to the counter and an error will occur at location 2310_8 or 2312_8 if TBA fails.

IAB is tested by loaded A with the counter and B with minus one. After an IAB, A is compared to minus one, B is stored and A is loaded with STOR. A comparison then takes place. Errors at location 2317_8 or 2321_8 indicate a bad LAA. If an error occurs at location 2257_8 the STB instruction failed, errors at 2264_8 or 2266_8 indicate LBA failed.

Transfer and Interchange A & B (TATB)

A is loaded with the counter and transferred to B, B is then stored and compared to A. An error at 2301_8 or 2303_8 indicates this phase failed.

B is loaded with the counter and is then transferred to A. A is compared to the counter and an error will occur at location 2310_8 or 2312_8 if TBA fails.

IAB is tested by loading A with the counter and B with minus one. After an IAB, A is compared to minus one, B is stored and A is loaded with STOR. A comparison then takes place. Errors at location 2317_8 or 2321_8 indicate A did not contain a minus one. If B did not contain the proper information errors will occur at 2325_8 or 2327_8.

Negate A-Accumulator (NEGT)

The counter is subtracted from zero in A and stored. A is then loaded with the counter and negated. The results are compared and an error will occur at location 2343_8 or 2345_8 if they are not equal.

Shift Instructions (BEG1)

The RSA is tested extensively by loading A with a constant and shifting zero positions the first time. A comparison through an indirect address (DAT1, location 2412_8), checks the proper constant. The shift is incremented along with the indirect address. After all tests are completed, the shift and indirect address are returned to their original quantities. An error at 2355_8 or 2357_8 indicate an RSA error.

The rest of the shift instructions (SHTE) are tested two to six times, each shifting one position at a time. The results are compared to the proper constants.

Errors will occur at the following locations:

2421_8	LSA	2520_8	RSL	2472_8	RSA
2423_8		2522_8		2474_8	
2426_8		2525_8		2477_8	
2430_8		2527_8		2501_8	
2434_8				2505_8	
2436_8		2455_8	LSL	2507_8	
2441_8		2460_8		2512_8	
2443_8		2463_8		2514_8	
2447_8		2466_8			
2451_8					

2534_8		2720_8		2642_8	
2536_8		2722_8		2644_8	
2541_8		2725_8		2647_8	
2543_8		2727_8	FRL	2651_8	
2547_8		2733_8		2655_8	
2551_8		2735_8		2657_8	
2554_8		2740_8		2662_8	
2556_8	FLA	2742_8		2664_8	FRA
2563_8				2671_8	
2565_8		2607_8		2673_8	
2570_8		2611_8		2676_8	
2572_8		2614_8		2700_8	
2600_8		2616_8	FLL	2704_8	
2602_8		2623_8		2706_8	
		2630_8		2711_8	
		2635_8		2713_8	

Add (ADD1, ADD3)

ADD1 - A is cleared, one is added to A and the counter is incremented, the results are compared and an error will occur at location 3006_8 or 3011_8 if there is a failure. This test is repeated in the B-Accumulator. A failure in B is indicated by an error at location 3023_8 or 3025_8.

ADD3 - The next test adds the counter to itself in A and B, the registers are then loaded with the counter and shifted left one position. The sums are compared and errors will occur at location 3040_8 or 3042_8 for an error in A and 3057_8 or 3061_8 for an error in B.

Subtract (SUB1, SUB2, SUB3)

SUB1 - A is loaded with the counter, it is then subtracted, the A-Accumulator is then checked for zero, a typeout at location 3072_8 indicates an error.

SUB2 - Zero is subtracted from the counter, A is then compared to the counter, if there is an error, a typeout will occur at location 3102_8 or 3104_8.

SUB3 - The counter is multiplied by two, it is then subtracted. A should then be equal to the counter, a halt at location 3115_8 or 3117_8 indicates A is not equal to the counter.

And A & B Or A & B (ANOR)

Constants are and'ed and or'ed, the results are compared to constants. Error indications at locations 3144_8, 3146_8, 3162_8, 3164_8, and 3200_8 or 3202_8 are errors in the ABA instruction. Error indications at locations 3134_8, 3136_8, 3152_8, 3154_8, 3170_8, 3172_8, and 3206_8 or 3208_8 are errors in the OBA instruction. All worst cases are tested.

Increment B and Skip (IBST)

B is loaded with minus one and incremented, the counter is operated in the same fashion. The B-Accumulator and the counter are compared. If no skip occurs while B is positive, an error will occur at location 3244_8. If B skips when it is negative, an error will occur at location 3257_8. An unequal comparison between B and the counter will cause an error at location 3247_8 or 3251_8 when B is positive and at location 3262_8 or 3264_8 when B is negative.

Copy Sign of B - (CSBN, CSBP)

The CSB instruction is tested with the B sign bit on and off. With the bit on a CSB, NEG gets the bit into A, the counter is then negated and one is subtracted from it. The two answers are then compared. Error indications on this test are at locations 3303_8 and 3305_8.

With the B sign bit off a CSB, NEG is used again but the counter is only negated. After the comparison the error indications are at locations 3320_8 and 3322_8.

Complement Sign of A (ASCT)

The counter is loaded in A, the sign is changed by adding a minus sign. The counter's sign is then complemented. The two results are compared and if they are not equal, an error will occur at location 3336_8 or 3340_8.

Change Number Systems (CNST)

If the counter is negative, the data is checked, if the data is zero, nothing is done. All other cases the counter is changed by a CNS and a ASC, the counter is then negated. The results are compared and if they are not equal, an error will occur at location 3362_8 or 3364_8.

The remaining part of memory contains the cycle counter, error routine, and typeout routines.

#303003B
COMPARE MEM. TO"A"

SYSTEMS ENGINEERING LABORATORIES PROGRAM LIBRARY

SOFTWARE DESCRIPTION

CATALOG NO. 303003B

DOCUMENTATION REV*

DATE June 15, 1970

PROGRAM TITLE: 810A/B Compare Memory to A, A Sign Test (CMASAS)

PURPOSE: CMASAS tests every memory location with a CMA and SAS for every type of condition, except the first 1014_8 locations.

CONFIGURATION: Basic SYSTEMS 810A/B Computer

SOFTWARE ENVIRONMENT: Stand-Alone

PROGRAM LANGUAGE: SYSTEMS 810A/B Assembly Language

SIZE: 0 - 1014_8 plus every other memory location

Not Relocatable

TIMING: Dependent on Memory Size

Relocatable Loader
Prog. Counter 16060
A-Accum 0 B-Accum 0
After Load Enter Bit 3
In Memory Location '753
Start At '0 Prog. Cntr.

When using the upper 16K loader program, after load enter bits 2 + 3 in memory location '753

Note:
When using the upper 16K load/dump program the relocatable loader program counter 36060 should be utilized to load the program rather than the 16060.

SYSTEMS 303003B

REASON FOR CHANGE:

Changes were made to allow this program to run on the KEYTRAN System and output all messages to the selectric typewriter by setting Sense Switch 13.

USE:

After loading, set location 753_8 (TOP) with bits 2-3 dependent on memory size.*

Start at location zero, the program will run until manually halted.

When running under the KEYTRAN System the Diagnostic Number for this program is five (5). The program will automatically be started at location zero and will continuously run until the Index Key is depressed on the selectric typewriter at which time a halt will occur. At this time the operator must mount the KEYTRAN disc pack and depress start. The program will then seek home and halt. The operator must depress start to load the KEYTRAN System back into memory. The program will then halt at location 407_8. At this time the operator must enter 2000_8 in the program counter and depress Start.

Sense Switch Setting:

SSW 13 up - Indicates Program being run with the KEYTRAN System and that all output will be via the selectric typewriter.

*Note

For a 4K memory -- set no bits in location 753_8.
8K - bit 3
12K - bit 2
16K - bits 2 & 3

Type-Out Formats

L xxxxxx n

where:

L = Letter C for CMA error
Letter S for SAS error

xxxxxx = The location of the erroneous instruction

n = A number, if a CMA error the number indicates the operand in memory, A is always zero. If an SAS error the number is what was contained in A. There are three possible numbers: 1, 0, -1.

Note

This program will clear every memory location above $(1014)_8$.

SEL PROGRAM LIBRARY

PROGRAM DESCRIPTION

 Catalog No. 303004A

IDENTIFICATION: MEMDEX

AUTHOR: Systems Engineering Laboratories, Incorporated

ACCEPTED: 13 January 1967

PURPOSE: Under sense switch control, the program will load into all memory locations; all zeros and ones, indirect and indirect indexed; alternate bits, indirect and indirect indexed; walking one, indirect; walking zero, indirect indexed. Each location is checked for the proper information stored.

Absolute Loader
Prog. Counter '17673
A-Accum 0 B-Accum 0
After Load Enter Bit 3
In Memory Location '227
Start At 0 Prog. Cntr.

SOURCE PROGRAM LANGUAGE: MNEMBLER 810A

COMPUTER CONFIGURATION: Standard SEL 810A

STORAGE: 0000 to 0502_8, plus every other memory location. Not relocatable.

SUBROUTINES REQUIRED: 810A Mainframe Diagnostic Loading Procedure

TIMING: Dependent on memory size.

USE: After loading, set the location tagged FIN (227_8) with the most significant four bits of the highest memory address (see note). Start at location zero. The program will run continuously until halted manually.

NOTE: For a 4K memory, no bits should be set in FIN.
8K - set bit 3
12K - set bit 2
16K - set bits 2 and 3

Absolute Loader
Prog. Counter '17673
A-Accum 0 B-Accum 0
After Load Enter Bit 3
In Memory Location '227
Start At '0 Prog. Cntr.

Snese Switches:

SSW 0 up - the al ones, all zeros test will run.
SSW 1 up - the alternate bit pattern test will be run.

Prog. Cntr. 37673
when using the upper 16K loader program

Note: When using the upper 16K loader program:
- After load enter bits 2 + 3 in memory location '227

SSW 2 up - the walking one and walking zero test will run.
SSW 3 up - a halt will occur after an error type-out.

Any combination of sense switches may be used.

Type-Out Format:

12345 WORD aaaaaa
Memory Error
12345 - location at which the error occurred.

WORD - what the location should contain.
ZERO - if the location should contain a zero.
ONES - if the location should contain a zero.

1010 or 0101 - the sequence of binary bits for the alternate bit patterns.

1 or Z and XX - a walking one or zero error where XX = the left shift count from the farthest right position.

aaaaaa - the octal contents of the memory location in error.

NOTE: This program will destroy the contents of every memory location.

To restart this program, start at location 15_8.

METHOD:

Setup Routine

Sets the various addresses used to correspond with the highest memory address which is loaded into the location tagged FIN (227_8). FIN does not have to be changed if the machine in which the program is to be run has a 4096 location memory.

Sense Switch Routine (EXEC):

Checks the sense switches that are up and branches to the routine indicated by the sense switch settings.

All Ones, All Zeros Test (ALL1)

The zeros are obtained by clearing the A-Register. The

zeros are then stored and checked indirectly through the location tagged STAR (225_8). Ones are stored and checked indirectly through the location tagged FIN (227_8) which has its index bit set.

Alternate Bits Test (WORS)

The constant tagged ONEO (234_8) is stored and checked indirectly through STAR. The constant OH1 (235_8) is stored and checked indirectly through FIN.

Walking One and Zero Test (WALK)

The Walk One routine is executed first. A one is loaded in A and shifted zero times. The A-Register is then stored and checked indirectly through STAR. After all of memory is tested, the shift instruction is incremented and the test is repeated. When all bit positions are tested, the Walk Zero routine will be executed.

The Walk Zero routine is executed in the same manner as the Walk One routine except that FIN is used as an indirect address.

Ping Pong Routine (PIPO)

The starting addresses are changed to include the map not exercised previously. The routine then moves the entire program to either the top or bottom map and modifies itself to return the program to the map from which it was moved.

Address Reset Routine (REST)

This routine is executed after every test to reset STAR and the index count contained in the B-Register.

```
0001  00000 00000000 *                                                    00100
0002  00000 00000000 *          MEMDEX          REV-1                   00000100
0003  00000 00000000 *          MEMØRY TEST - USES INDEXED AND INDIRECT 00000200
0004  00000 00000000 *          ALL LØADERS MUST BE RELØADED AFTER      00000300
0005  00000 00000000 *          RUNNING THIS PRØGRAM                    00000400
0006  00000 00000000 *                                                  00000500
0007  00000 00000000 *                                                  00000800
0008  00000 00000000        REL
0009  01000 70001000        ØRG  '1000
0010  01000 01101247        LAA  TØP        SET UP RØUTINE              00000900
0011  01001 05101227        AMA  FIN        FIN CØNTAINS HIGH BIT FØR MØRE THAN 4K  00001000
0012  01002 03101247        STA  TØP        TØP IS THE HIGH LØCATIØN FØR PING-PØNG  00001100
0013  01003 01101227        LAA  FIN        FIN BECØMES AN INDIRECT ADDRESS         00001200
0014  01004 05101224        AMA  END        FØR USE IN THE INDIRECT-INDEXED         00001300
0015  01005 03101224        STA  END        ØPERATIØNS,MINZ SETS THE INDEX BIT      00001400
0016  01006 05101244        AMA  MINZ       ØN IN FIN                               00001500
0017  01007 03101227        STA  FIN                                                00001600
0018  01010 01101224        LAA  END        END BECØMES THE INDEX CØUNT             00001700
0019  01011 06101225        SMA  STAR                                               00001800
0020  01012 00000002        NEG             FØR ALL ØPERATIØNS                      00001900
0021  01013 03101224        STA  END                                                00002000
0022  01014 00000005        TAB                                                     00002100
0023  01015 00000000 *                                                              00002200
0024  01015 00000000 *          EXECUTIVE RØUTINE                                   00002300
0025  01015 00000000 *                                                              00002400
0026  01015 00130400 EXEC SNS   0           SENSE SWITCH ZERØ                       00002500
0027  01016 12101026        SPB  ALL1       ALL ØNES, ALL ZERØS                     00002600
0028  01017 00130401        SNS  1          SENSE SWITCH ØNE                        00002700
0029  01020 12101050        SPB  WØRS       WØRST BIT PATTERN                       00002800
0030  01021 00130402        SNS  2          SENSE SWITCH TWØ                        00002900
0031  01022 12101072        SPB  WALK       WALKING ØNE AND ZERØ                    00003000
0032  01023 12101151        SPB  PIPØ-1     PING-PØNG                               00003200
0033  01024 12101144        SPB  REST                                               00003250
0034  01025 11101015        BRU  EXEC                                               00003300
0035  01026 00000000 *                                                              00003400
0036  01026 00000000 ALL1 ZZZ   **          ALL ØNES, ALL ZERØS TEST                00003500
0037  01027 00000003        CLA                                                     00003600
0038  01030 03301225        STA* STAR       STØRE ZERØS INDIRECT                    00003700
```

```
0039  01031 15301225        CMA* STAR        ZERØS STØRED                00003800
0040  01032 12101254        SPB  ERRZ                                    00003900
0041  01033 11101035        BRU  *+2         YES                         00004000
0042  01034 12101254        SPB  ERRZ                                    00004100
0043  01035 01101243        LAA  ØNES                                    00004200
0044  01036 03301227        STA* FIN                                     00004300
0045  01037 15301227        CMA* FIN                                     00004400
0046  01040 12101265        SPB  ERR1                                    00004500
0047  01041 11101043        BRU  *+2         YES                         00004600
0048  01042 12101265        SPB  ERR1                                    00004700
0049  01043 14101225        IMS  STAR        INCREMENT INDIRECT ADDRES   00004800
0050  01044 00000026        IBS                                          00004900
0051  01045 11101027        BRU  ALL1+1      NØ, REPEAT TEST             00005000
0052  01046 12101144        SPB  REST                                    00005100
0053  01047 11301026        BRU* ALL1                                    00005400
0054  01050 00000000 *                                                   00005450
0055  01050 00000000 WØRS ZZZ  **            ALTERNATE BITS TEST         00005500
0056  01051 01101234        LAA  ØNEØ                                    00005600
0057  01052 03301225        STA* STAR        STØRE INDIRECT              00005700
0058  01053 15301225        CMA* STAR        STØRED PRØPERLY             00005800
0059  01054 12101276        SPB  ER1Ø                                    00005900
0060  01055 11101057        BRU  *+2         YES                         00006000
0061  01056 12101276        SPB  ER1Ø                                    00006100
0062  01057 01101235        LAA  ØH1                                     00006200
0063  01060 03301227        STA* FIN                                     00006300
0064  01061 15301227        CMA* FIN                                     00006400
0065  01062 12101307        SPB  ER01                                    00006500
0066  01063 11101065        BRU  *+2         YES                         00006600
0067  01064 12101307        SPB  ER01                                    00006700
0068  01065 14101225        IMS  STAR        INCREMENT INDIRECT ADDRES   00006800
0069  01066 00000026        IBS              INDEX = ZERØ                00006900
0070  01067 11101051        BRU  WØRS+1      NØ, RETURN TØ REPEAT        00007000
0071  01070 12101144        SPB  REST                                    00007100
0072  01071 11301020        BRU* WØRS        EXIT                        00007400
0073  01072 00000000 *                                                   00007450
0074  01072 00000000 WALK ZZZ  **                                        00007500
0075  01073 01101230        LAA  ØNE         WALK ØNE RØUTINE            00007600
0076  01074 00000016        LSL  0           SHIFT ØNE                   00007700
0077  01075 03301225        STA* STAR        STØRE INDIRECT              00007800
```

```
0078  01076 15301225      CMA* STAR      STØRED PRØPERLY                00007900
0079  01077 12101320      SPB  ERWA                                     00008000
0080  01100 11101102      BRU  *+2       YES                            00008100
0081  01101 12101320      SPB  ERWA                                     00008200
0082  01102 14101225      IMS  STAR      INCREMENT INDIRECT ADDRES      00008300
0083  01103 00000026      IBS                                           00008400
0084  01104 11101073      BRU  WALK+1    AND RETURN                     00008500
0085  01105 00000000 *                                                  00008600
0086  01105 01101074      LAA  WALK+2    CHANGE SHIFT INSTRUCTIØN       00009000
0087  01106 05101231      AMA  ØNEH                                     00009100
0088  01107 03101074      STA  WALK+2                                   00009200
0089  01110 12101144      SPB  REST                                     00009200
0090  01111 14101236      IMS  SHCN                                     00009300
0091  01112 11101073      BRU  WALK+1                                   00009600
0092  01113 00000000 *                                                  00009700
0093  01113 01101233 WA1  LAA  Ø01       WALK ZERØ RØUTINE              00009800
0094  01114 03301227      STA* FIN                                      00009900
0095  01115 15301227      CMA* FIN                                      00010000
0096  01116 12101330      SPB  EWA1                                     00010100
0097  01117 11101121      BRU  *+2                                      00010200
0098  01120 12101330      SPB  EWA1                                     00010300
0099  01121 14101225      IMS  STAR                                     00010350
0100  01122 00000026      IBS                                           00010400
0101  01123 11101113      BRU  WA1                                      00010500
0102  01124 01101233      LAA  Ø01                                      00010600
0103  01125 02101243      LBA  ØNES                                     00010700
0104  01126 00000113      FLL  1                                        00010800
0105  01127 03101233      STA  Ø01                                      00010900
0106  01130 12101144      SPB  REST                                     00011000
0107  01131 14101240      IMS  RSCN                                     00011100
0108  01132 11101113      BRU  WA1                                      00011200
0109  01133 01101253      LAA  LSL                                      00011500
0110  01134 03101074      STA  WALK+2                                   00011600
0111  01135 01101237      LAA  NEW                                      00011700
0112  01136 03101236      STA  SHCN                                     00011800
0113  01137 01101241      LAA  NECN                                     00011900
0114  01140 03101240      STA  RSCN                                     00012000
0115  01141 01101242      LAA  NEWK                                     00012100
0116  01142 03101253      STA  Ø01                                      00012200
```

```
0117  01143 11301072        BRU* WALK                                          00012400
0118  01144 00000000 *                                                         00012446
0119  01144 00000000 REST ***  **          RESET INDIRECT AND INDEX            00012447
0120  01145 01101226        LAA  BEG                                           00012450
0121  01146 03101225        STA  STAR                                          00012451
0122  01147 02101224        LBA  END                                           00012452
0123  01150 11301144        BRU* REST                                          00012453
0124  01151 00000000 *                                                         00012500
0125  01151 00000000 *          PING PØNG RØUTINE                              00012600
0126  01151 00000000 *                                                         00012700
0127  01151 00000000        ZZZ  **        EXIT ADDRESS                        00012800
0128  01152 01101225 PIPØ LAA  STAR        RESET ALL ADDRESSES SØ PRØGRAM CAN  00012900
0129  01153 03101245        STA  SAVE      BE MØVED TØ TØP MAP TØ EXERCISE     00013000
0130  01154 01101227        LAA  FIN       LØWER PØRTIØN ØF MEMØRY             00013100
0131  01155 03101246        STA  STØR                                          00013200
0132  01156 06101245        SMA  SAVE                                          00013300
0133  01157 03101227        STA  FIN                                           00013400
0134  01160 00000003        CLA                                                00013500
0135  01161 03101226        STA  BEG                                           00013600
0136  01162 03101225        STA  STAR                                          00013700
0137  01163 01101251        LAA  BRU                                           00013800
0138  01164 03101152        STA  PIPØ                                          00013900
0139  01165 01101224        LAA  END                                           00014000
0140  01166 00000002        NEG            SET EXIT ADDRESS TØ GØ TØ TØP MAP   00014100
0141  01167 05101230        AMA  ØNE                                           00014200
0142  01170 05101151        AMA  PIPØ-1    AFTER MØVE IS CØMPLETE              00014300
0143  01171 03101151        STA  PIPØ-1                                        00014400
0144  01172 02101232        LBA  IDX                                           00014500
0145  01173 01301250        LAA* BØT       MØVE PRØGRAM TØ TØP MAP             00014600
0146  01174 03301247        STA* TØP       TØ  EXERCISE LØWER PART ØF          00014700
0147  01175 00000026        IBS            MEMØRY                              00014800
0148  01176 11101173        BRU  *-3                                           00014900
0149  01177 11301151        BRU* PIPØ-1    EXIT TØ TØP MAP                     00015000
0150  01200 01101245 PØNG LAA  SAVE        RESET ALL ADDRESSES SØ PRØGRAM CAN  00015100
0151  01201 03101225        STA  STAR      BE MØVED BACK TØ THE BØTTØM MAP     00015200
0152  01202 03101226        STA  BEG                                           00015300
0153  01203 01101246        LAA  STØR                                          00015400
0154  01204 03101227        STA  FIN                                           00015500
0155  01205 01101252        LAA  LAA                                           00015600
```

```
0156  01206 03101152        STA   PIPØ                                          00015700
0157  01207 01101224        LAA   END                                           00015800
0158  01210 00000002        NEG                                                 00015900
0159  01211 05101230        AMA   ØNE                                           00016000
0160  01212 03101246        STA   STØR                                          00016100
0161  01213 01101151        LAA   PIPØ-1                                        00016200
0162  01214 06101246        SMA   STØR                                          00016300
0163  01215 03101151        STA   PIPØ-1                                        00016400
0164  01216 02101232        LBA   IDX                                           00016500
0165  01217 01301247        LAA*  TØP          MØVE PRØGRAM BACK TØ BØTTØM MAP  00016600
0166  01220 03301250        STA*  BØT          AND CØNTINUE                     00016700
0167  01221 00000026        IBS                                                 00016800
0168  01222 11101217        BRU   *-3                                           00016900
0169  01223 11301151        BRU*  PIPØ-1       EXIT TØ BØTTØM MAP               00017000
0170  01224 00000000 *                                                          00017100
0171  01224 25407777 END    DAC   '7777                                         00017200
0172  01225 25401000 STAR   DAC   '1000                                         00017300
0173  01226 25401000 BEG    DAC   '1000                                         00017400
0174  01227 00000000 FIN    ZZZ   **                                            00017500
0175  01230 00000001 ØNE    DATA  1                                             00017600
0176  01231 00000100 ØNEH   DATA  '100                                          00017700
0177  01232 00177275 IDX    DATA  -323                                          00017800
0178  01233 00177776 Ø01    DATA  -2                                            00017900
0179  01234 00125252 ØNEØ   DATA  '125252                                       00018000
0180  01235 00052525 ØH1    DATA  '52525                                        00018100
0181  01236 00177760 SHCN   DATA  -16                                           00018200
0182  01237 00177760 NEW    DATA  -16                                           00018300
0183  01240 00177760 RSCN   DATA  -16                                           00018400
0184  01241 00177760 NECN   DATA  -16                                           00018500
0185  01242 00177776 NEWK   DATA  -2                                            00018600
0186  01243 00177777 ØNES   DATA  -1                                            00018700
0187  01244 00100000 MINZ   DATA  '100000                                       00018800
0188  01245 00000000 SAVE   ZZZ   **                                            00018900
0189  01246 00000000 STØR   ZZZ   **                                            00019000
0190  01247 25607503 TØP    DAC   3907,1                                        00019100
0191  01250 25600503 BØT    DAC   323,1                                         00019200
0192  01251 11101200 BRU    BRU   PØNG                                          00019300
0193  01252 01101225 LAA    LAA   STAR                                          00019400
0194  01253 00000016 LSL    LSL   0                                             00019500
```

```
0195  01254 00000000 *                                                    00019600
0196  01254 00000000 ERRZ ***  **        ZERØS STØRED ERRØR               0019700
0197  01255 12101355      SPB  SAB                                        0019800
0198  01256 01101456      LAA  LETØ       SET UP TYPE ØUT MESSAGE         0019900
0199  01257 03101470      STA  MESS                                       0020000
0200  01260 01101457      LAA  LETØ+1                                     0020100
0201  01261 03101471      STA  MESS+1                                     0020200
0202  01262 12101365      SPB  TPØ                                        0020300
0203  01263 12101361      SPB  LAB                                        0020400
0204  01264 11301254      BRU* ERRZ                                       0020500
0205  01265 00000000 *                                                    0020600
0206  01265 00000000 ERR1 ***  **        ØNES STØRED ERRØR                0020700
0207  01266 12101355      SPB  SAB                                        0020800
0208  01267 01101460      LAA  LET1       SET UP TYPE ØUT MESSAGE         0020900
0209  01270 03101470      STA  MESS                                       0021000
0210  01271 01101461      LAA  LET1+1                                     0021100
0211  01272 03101471      STA  MESS+1                                     0021200
0212  01273 12101365      SPB  TPØ                                        0021300
0213  01274 12101361      SPB  LAB                                        0021400
0214  01275 11301265      BRU* ERR1                                       0021500
0215  01276 00000000 *                                                    0021600
0216  01276 00000000 ERR1Ø ***  **        ØNE-ZERØ STØRED ERRØR            0021700
0217  01277 12101355      SPB  SAB                                        0021800
0218  01300 01101462      LAA  LE1Ø       SET UP TYPE ØUT MESSAGE         0021900
0219  01301 03101470      STA  MESS                                       0022000
0220  01302 01101463      LAA  LE1Ø+1                                     0022100
0221  01303 03101471      STA  MESS+1                                     0022200
0222  01304 12101365      SPB  TPØ                                        0022300
0223  01305 12101361      SPB  LAB                                        0022400
0224  01306 11301276      BRU* ERR1Ø                                      0022500
0225  01307 00000000 *                                                    0022600
0226  01307 00000000 ERØ1 ***  **        ZERØ-ØNE STØRED ERRØR            0022700
0227  01310 12101355      SPB  SAB                                        0022800
0228  01311 01101464      LAA  LEØ1       SET UP TYPE ØUT MESSAGE         0022900
0229  01312 03101470      STA  MESS                                       0023000
0230  01313 01101465      LAA  LEØ1+1                                     0023100
0231  01314 03101471      STA  MESS+1                                     0023200
0232  01315 12101365      SPB  TPØ                                        0023300
0233  01316 12101361      SPB  LAB                                        0023400
```

```
0234  01317 11301307        BRU* ER01                                    0023500
0235  01320 00000000 *                                                   0023550
0236  01320 00000000 ERWA ***   **        WALKING ØNE STØRED ERRØR       0023600
0237  01321 12101355        SPB  SAB                                     0023700
0238  01322 01101466        LAA  W1       SET UP TYPE ØUT MESSAGE        0023800
0239  01323 03101470        STA  MESS                                    0023900
0240  01324 01101237        LAA  NEW                                     0024000
0241  01325 06101236        SMA  SHCN                                    0024100
0242  01326 12101340        SPB  GSCN                                    0024200
0243  01327 11301320        BRU* ERWA                                    0024300
0244  01330 00000000 *                                                   0024400
0245  01330 00000000 EWA1 ***   **        WALKING ZERØ STØRED ERRØR      0024500
0246  01331 12101355        SPB  SAB                                     0024600
0247  01332 01101467        LAA  WZ       SET UP TYPE ØUT MESSAGE        0024700
0248  01333 03101470        STA  MESS                                    0024800
0249  01334 01101241        LAA  NECN                                    0024900
0250  01335 06101240        SMA  RSCN                                    0025000
0251  01336 12101340        SPB  GSCN                                    0025100
0252  01337 11301330        BRU* EWA1                                    0025200
0253  01340 00000000 *                                                   0025300
0254  01340 00000000 GSCN ***   **        GET SHIFT CØUNT FØR WALK-      0025400
0255  01341 00000002        NEG           ING ØNE AND ZERØ ERRØRS        0025500
0256  01342 00000312        FRA  3                                       0025600
0257  01343 03101472        AMA  TWØ6                                    0025700
0258  01344 00000113        FLL  1                                       0025800
0259  01345 00000115        RSL  1                                       0025900
0260  01346 00000516        LSL  5                                       0026000
0261  01347 00000313        FLL  3                                       0026100
0262  01350 03101472        AMA  TWØ6                                    0026200
0263  01351 03101471        STA  MESS+1   FINISH TYPE ØUT MESSAGE        0026300
0264  01352 12101365        SPB  TPØ                                     0026400
0265  01353 12101361        SPB  LAB                                     0026500
0266  01354 11301340        BRU* GSCN                                    0026600
0267  01355 00000000 *                                                   0026700
0268  01355 00000000 SAB  ***   **        SAVE A AND B REG.              0026800
0269  01356 03101473        STA  SAVA                                    0026900
0270  01357 04101474        STB  SAVB                                    0027000
0271  01360 11301355        BRU* SAB                                     0027100
0272  01361 00000000 *                                                   0027200
```

```
0273  01361 00000000 LAB   ***   **          LØAD A AND B REG.          0027300
0274  01362 01101473       LAA   SAVA                                   0027400
0275  01363 02101474       LBA   SAVB                                   0027500
0276  01364 11301361       BRU*  LAB                                    0027600
0277  01365 00000000 *                                                  0027700
0278  01365 00000000 TPØ    ***   **          TYPE ØUT MESSAGE           0027800
0279  01366 02101225       LBA   STAR                                   0027900
0280  01367 12101422       SPB   SHFT        LØCATIØN                   0028000
0281  01370 12101452       SPB   SPAC                                   0028100
0282  01371 12101452       SPB   SPAC                                   0028200
0283  01372 02101470       LBA   MESS        ERRØR MESSAGE              0028300
0284  01373 12101414       SPB   BØUT                                   0028400
0285  01374 02101471       LBA   MESS+1                                 0028500
0286  01375 12101414       SPB   BØUT                                   0028600
0287  01376 12101452       SPB   SPAC                                   0028700
0288  01377 02301225       LBA*  STAR        ØUTPUT CØNTENT ØF LØC.     0028800
0289  01400 00000003       CLA                                          0028900
0290  01401 00000113       FLL   1                                      0029000
0291  01402 12101437       SPB   TYPE                                   0029100
0292  01403 00000007       CSB                                          0029200
0293  01404 00000002       NEG                                          0029300
0294  01405 00000002       NEG                                          0029400
0295  01406 00000112       FRA   1                                      0029500
0296  01407 12101422       SPB   SHFT                                   0029600
0297  01410 12101446       SPB   CRLF                                   0029700
0298  01411 00130403       SNS   3           SWITCH 3 UP, HALT          0029800
0299  01412 00000000       HLT                                          0029900
0300  01413 11301365       BRU*  TPØ                                    0030000
0301  01414 00000000 *                                                  0030100
0302  01414 00000000 BØUT  ***   **          B REG. ØUTPUT              0030200
0303  01415 00001013       FLL   8                                      0030300
0304  01416 12101437       SPB   TYPE                                   00030400
0305  01417 00001013       FLL   8                                      0030500
0306  01420 12101437       SPB   TYPE                                   00030600
0307  01421 11301414       BRU*  BØUT                                   0030700
0308  01422 00000000 *                                                  0030800
0309  01422 00000000 SHFT  ***   **          ØUTPUT 5 ØCTAL DIGITS      0030900
0310  01423 00000003       CLA                                          0031000
0311  01424 12101452       SPB   SHFS                                   0031100
```

```
0312  01425 12101432        SPB  SHF3                                          0031200
0313  01426 12101432        SPB  SHF3                                          0031300
0314  01427 12101432        SPB  SHF3                                          0031400
0315  01430 12101432        SPB  SHF3                                          0031500
0316  01431 11301422        BRU* SHFT                                          0031600
0317  01432 00000000 *                                                         0031700
0318  01432 00000000 SHF3 ***  **          ØUTPUT ØNE ØCTAL DIGIT             0031800
0319  01433 00000317        FLA  3                                             0031900
0320  01434 05101472        AMA  TWØ6                                          0032000
0321  01435 12101437        SPB  TYPE                                          0032100
0322  01436 11301432        BRU* SHF3                                          0032200
0323  01437 00000000 *                                                         0032300
0324  01437 00000000 TYPE ***  **          ØUTPUT A REG.                      0032400
0325  01440 00130101        DATA '130101   CEU   1,W
0326  01441 00001000        DATA '1000
0327  01442 00001016        LSL  8
0328  01443 00170101        DATA '170101   AØP   1,W
0329  01444 00000003        CLA                                                0033000
0330  01445 11301437        BRU* TYPE                                          0033400
0331  01446 00000000 *                                                         0033500
0332  01446 00000000 CRLF ***  **          ØUTPUT CAR. RTN.,LN. FD.           0033600
0333  01447 02101475        LBA  LFCR                                          0033700
0334  01450 12101414        SPB  BØUT                                          0033800
0335  01451 11301446        BRU* CRLF                                          0033900
0336  01452 00000000 *                                                         0034000
0337  01452 00000000 SPAC ***  **          ØUTPUT A SPACE                     0034100
0338  01453 01101476        LAA  SPCE                                          0034200
0339  01454 12101437        SPB  TYPE                                          0034300
0340  01455 11301452        BRU* SPAC                                          0034400
0341  01456 00000000 *                                                         0034500
0342  01456 00000000 *                                                         0034600
0343  01456 00155305 LETØ DATA ''ZERØ''                                        0034700
0343  01457 00151317
0344  01460 00147716 LET1 DATA ''ØNES''                                        0034800
0344  01461 00142723
0345  01462 00130660 LE10 DATA ''1010''                                        0034900
0345  01463 00130660
0346  01464 00130261 LE01 DATA ''0101''                                        0035000
0346  01465 00130261
```

```
0347  01466 00130640 W1   DATA ''1 ''                                  0035100
0348  01467 00155240 WZ   DATA ''7 ''                                  0035200
0349  01470 00000000 MESS DATA 0,0                                     0035300
0349  01471 00000000
0350  01472 00000260 TwØ6 DATA 176                                     0035400
0351  01473 00000000 SAVA DATA 0                                       0035500
0352  01474 00000000 SAVB DATA 0                                       0035600
0353  01475 00106612 LFCR DATA -29302                                  00035700
0354  01476 00000240 SPCE DATA 160                                     0035800
0355  01477 00000000 *                                                 0035900
0356  01477 70400000      END
        EXEC    01015
        ALL1    01026
        WØRS    01050
        WALK    01072
        WA1     01113
        REST    01144
        PIPØ    01152
        PØNG    01200
        END     01224
        STAR    01225
        BEG     01226
        FIN     01227
        ØNE     01230
        ØNEH    01231
        IDX     01232
        Ø01     01233
        ØNEØ    01234
        ØH1     01235
        SHCN    01236
        NEW     01237
        RSCN    01240
        NECN    01241
        NEWK    01242
        ØNES    01243
        MINZ    01244
        SAVE    01245
        STØR    01246
        TØP     01247
```

BØT	01250
BRU	01251
LAA	01252
LSL	01253
ERRZ	01254
ERR1	01265
ER1Ø	01276
ER01	01307
ERWA	01320
EWA1	01330
GSCN	01340
SAB	01355
LAB	01361
TPØ	01365
BØUT	01414
SHFT	01422
SHF3	01432
TYPE	01437
CRLF	01446
SPAC	01452
LETØ	01456
LET1	01460
LE1Ø	01462
LE01	01464
W1	01466
WZ	01467
MESS	01470
TWØ6	01472
SAVA	01473
SAVB	01474
LFCR	01475
SPCE	01476

SYSTEMS ENGINEERING LABORATORIES PROGRAM LIBRARY

SOFTWARE DESCRIPTION

CATALOG NO. 303005B

DOCUMENTATION REV* _____

DATE June 15, 1970

PROGRAM TITLE: 810A/B Load/Store/Register Change Test (LSRCT)

PURPOSE: LSRCT uses each of the load, store and register change instructions except the LCS and CSB instruction. The data used is a counter, so all bit combinations are used. Errors are indicated by a type-out, as are successful cycles.

CONFIGURATION: Basic SYSTEMS 810A/B Computer

SOFTWARE ENVIRONMENT: Stand-Alone

PROGRAM LANGUAGE: SYSTEMS 810A/B Assembly Language

SIZE: 2000_8 - 2710_8

TIMING: Approx. 2.5MS/Cycle

Note!

When using the upper 16K load/dump program the relocatable loader program counter 36060 should be utilized to load the program rather than the 16060.

Relocatable Loader
Prog. Counter 16060
A-Accum 0 B-Accum 0
After Load Start At '2000

REASON FOR CHANGE:

Changes were made to allow this program to run with the KeyTran System and output all messages to the selectric typewriter by setting sense switch 13.

USE:

Start at location 2000_8, the program will run until manually halted.

When running under the KeyTran System the diagnostic number for this program is six (6). The program will automatically be started at location 2000_8 and will continuously run until the Index key is depressed on the selectric typewriter at which time control will be returned to the KeyTran Diagnostic Loader.

If a halt occurs, consult the listing or halt log using the P-Counter location to find the instruction that failed.

Sense Switchs Settings:

SSW 0 up - The cycle count will not be typed.

SSW 1 up - Errors are ignored.

SSW 2 up - No error type-out will occur, the machine will halt. The A-Accumulator will contain the error location and locations 2603_8, 2604_8 and 2576_8 will contain the A&B Accumulators and the counter respectively.

SSW 13 up - Indicates program being run with the KeyTran System and that all output will be via the selectric typewriter.

Type-Out Formats:

Successful Cycles - NNNN
NNNN = The number of cycles completed without error.

Machine Error Preceeding Loc XXXXX
AAAAAA BBBBBB CCCCCC

XXXXX = The location plus one form which an SPB occurred following an error condition.
AAAAAA = The contents of the A-Accumulator.
BBBBBB = The contents of the B-Accumulator.
CCCCCC = The contents of the counter.

HALT LOG:

P-Counter	Instruction In Error
2041	CLA
2045, 2047	LBA, TBA
2052, 2054	IAB
2057, 2061	LAA
2065, 2067	TAB, STB
2072, 2074	STA

#303006B
ARITHMETIC TEST

SYSTEMS ENGINEERING LABORATORIES PROGRAM LIBRARY

SOFTWARE DESCRIPTION

CATALOG NO. 303006B

DOCUMENTATION REV

DATE June 15, 1970

PROGRAM TITLE: 810A/B Arithmetic Test (ADDO)

PURPOSE: This program exercises the adder using the AMA, AMB and SMA instructions, RNA is also tested. A random bit pattern generator is used to generate operands. Memory is added to A and B, the results are compared. Memory is subtracted from A using the same operands, one in A, one in memory, then vice-versa. The differences are compared ignoring the signs. RNA is tested by a software round A simulation. Overflow is checked and an error condition will be generated if the overflow latch is not set at the proper time.

CONFIGURATION: Basic SYSTEMS 810A/B Computer

SOFTWARE: ENVIRONMENT: N/A

PROGRAM LANGUAGE: SYSTEMS 810A/B Assembly Language

SIZE: 2000_8 - 2751_8

TIMING: Approx. 400 microseconds/cycle

Note:
When using the upper 16K load/dump program the relocatable loader program counter 36060 should be utilized to load the program rather than the 16060.

Relocatable Loader
Prog. Counter 16060
A-Accum 0 B-Accum 0
After Load Start At '2000

REASON FOR CHANGE:

Changes were made to allow this program to run with the KEYTRAN System and output all messages to the selectric typewriter by setting Sense Switch 13.

USE:

Start at location 2000_8, the program will run until manually halted.

When running under the KEYTRAN System the Diagnostic Number for this program is seven (7). The program will automatically be started at location 2000_8 and will continuously run until the Index Key is depressed on the selectric typewriter at which time control will be returned to the KEYTRAN Diagnostic Loader.

Sense Switch Settings:

SSW 0 up - Errors are ignored.

SSW 1 up - A halt will occur after an error type-out.

SSW 2 up - No error type-out, a halt will occur.

SSW 13 up - Indicates program being run with the KEYTRAN System and that all output will be via the selectric typewriter.

Note

With SSW 2 up a halt at location 2167_8 indicates an RNA error. An add error will cause a halt at 2251_8 and a subtract error halts at 2321_8.

Type-Out Formats:

```
aaaaaa     bbbbbb
A  nnnnnn OVFL
B  mmmmmm  OVFL
```

Indicates add error:

aaaaaa = operand in A for AMA, in memory for AMB
bbbbbb = operand in memory for AMA, in B for AMB
nnnnnn = the AMA sum
mmmmmm = the AMB sum

Note

If both sums are the same and the letters OVFL (indicating overflow) are not typed next to both sums this indicates an overflow error. The letters will not always be typed, only if an overflow occurred.

```
aaaaaa  bbbbbb
S  A  nnnnnn  OVFL
   B  mmmmmm  OVFL
```

Indicates an SMA error:

nnnnnn = difference of a-b
mmmmmm = difference of b-a

Note

Only the signs should be unlike. As in the add test overflow should occur on both subtracts.

```
aaaaaa  bbbbbb
  R  nnnnnn  mmmmmm
```

Indicates an RNA error:

a's = A-Accumulator
b's = B-Accumulator
nnnnnn = software RNA
mmmmmm = hardware RNA

#303007C
MULTIPLY TEST

SYSTEMS ENGINEERING LABORATORIES PROGRAM LIBRARY

SOFTWARE DESCRIPTION

CATALOG NO. 303007C

DOCUMENTATION REV

DATE June 15, 1970

PROGRAM TITLE: 810A/B Multiply Test (MTPY)

PURPOSE: MTPY uses a random operand generator to generate two operands. The two operands are multiplied by the hardware, the product is then compared to the product of a software multiply. An inequality causes a typeout. The software multiply arrives at a product by adding and shifting.

CONFIGURATION: Basic SYSTEMS 810A/B Computer

SOFTWARE ENVIRONMENT: Stand-Alone

PROGRAM LANGUAGE: SYSTEMS 810A/B Assembly Language

SIZE: 2000_8 - 3351_8

TIMING: Approx. 0.75 microseconds/product

Note!
When using the upper 16K load/dump program the relocatable loader, program counter 36060 should be utilized to load the program rather than the 16060.

Relocatable Loader
Prog. Counter 16060
A-Accum 0 B-Accum 0
After Load Start At '2000

SYSTEMS 303007C

REASON FOR CHANGE:

Changes were made to allow this program to run with the Keytran System and output all messages to the selectric typewriter by setting Sense Switch 13.

USE:

Start at location 2000_8, the program will run until manually halted.

When running under the Keytran System the Diagnostic Number for this program is eight (8). The program will automatically be started at location 2000_8 and will continuously run until the Index Key is depressed on the selectric typewriter at which time control will be returned to the Keytran Diagnostic Loader.

Sense Switch Settings:

SSW 0 up - Errors are ignored.

SSW 1 up - No error typeout, a halt will occur.

SSW 2 up - The same operands will be used continuously.

SSW 3 up - A halt will occur after an error typeout.

SSW 4 up - A bit pattern will be typed out.

SSW 13 up - Indicates program being run with the Keytran System and that all output will be via the selectric typewriter.

Typeout Format:

Multiply Error

```
aaaaaa      bbbbbb
 nnnnnn      mmmmmm
 xxxxxx      yyyyyy
```

aaaaaa = Multiplier (In Memory)

bbbbbb = Multiplicand (In B-Accumulator)

nnnnnn = Software Product in A

mmmmmm = Software Product in B

xxxxxx = Product in A

yyyyyy = Product in B

Example of a Bit Typeout

```
TTTTTT  BBBBBB
T x xxx xxx xxx xxx xxx - T y yyy yyy yyy yyy yyy
S z zzz zzz zzz zzz zzz - S w www www www www www atc 123 t
a a aaa aaa aaa aaa aaa b b bbb bbb bbb bbb bbb         atc def g
```

where:

TTTTTT	= T-Register
BBBBBB	= B-Register
x xxx xxx ...	= Bit Pattern of T-Register
y yyy yyy ...	= Bit Pattern of -T
z zzz zzz ...	= Bit Pattern of T Shifted
w www www..	= Bit Pattern of -T Shifted
a aaa aaa ...	= Bit Pattern of A-Register
b bbb bbb ...	= Bit Pattern of B-Register
a	= Sign of A
t	= Sign of T
c	= Carry
d	= 1X
e	= 2X
f	= -1X
g	= Toggle

Note

If it is desired to find two operands that fail continuously set sense switch three up, after the typeout and halt set sense switches zero up and two up and three down. The program will run continuously using the operands that failed and the error condition will be ignored allowing easier troubleshooting. To get a bit pattern, after the halt, set sense switches two up and four up. When it starts typing out, lower four to discontinue typeout.

SEL #303007C
810A MULTIPLY TEST
SPECIAL OPERATION DESCRIPTION
TESTING SPECIFIC NUMBERS

1. After loading the program enter the desired multiplicand in memory location '2126 and the desired multiplyer in memory location '2127.

2. Set Sense Switch (SSW) #2 and start the program (Program Counter '2000).

3. The program will continue to test multiply the specific numbers entered in the two memory locations until manually halted, Sense Switch (SSW) #2 is reset, or a program halt occures (Sense Switch #1 or #3 program options).

NOTE: The multiplyer corresponds to the number located in the "B" accumulator and the multiplicand to the number in memory ("T" register during the multiply).

SYSTEMS ENGINEERING LABORATORIES PROGRAM LIBRARY

SOFTWARE DESCRIPTION

CATALOG NO. 303008C

DOCUMENTATION REV* _____

DATE June 15, 1970

PROGRAM TITLE: 810A/B Divide Test

PURPOSE: Divide uses a software divide which simulates the hardware exactly. Both hardware and software divide operands in single and double precision forms, the quotients and remainder are compared for accuracy

CONFIGURATION: Basic SYSTEMS 810A/B Computer

SOFTWARE ENVIRONMENT: Stand-Alone

PROGRAM LANGUAGE: SYSTEMS 810A/B Assembly Language

SIZE: 2000_8 - 3327_8

TIMING: Approx. 1050 microseconds/cycle

Note!
When using the upper 16K load/dump program the relocatable loader program counter 36060 should be utilized to load the program rather than the 16060

Relocatable Loader
Prog. Counter 16060
A-Accum 0 B-Accum 0
After Load Start At '2000

SYSTEMS 303008C

REASON FOR CHANGE:

Changes were made to allow this program to run with the KEYTRAN System and output all messages to the selectric typewriter by setting Sense Switch 13.

USE:

Start at location 2000_8, the program will run until manually halted.

When running under the KEYTRAN System the Diagnostic Number for this program is nine (9). The program will automatically be started at location 2000_8 and will continuously run until the Index Key is depressed on the selectric typewriter at which time control will be returned to the KEYTRAN Diagnostic Loader.

Sense Switch Settings:

SSW 0 up - Errors are ignored.

SSW 1 up - No error typeout, a halt will occur.

SSW 2 up - The same operands will be used continuously.

SSW 3 up - A halt will occur after an error typeout.

SSW 4 up - A bit pattern will be typed out.

SSW 13 up - Indicates program being run with the KEYTRAN System and that all output will be via the selectric typewriter.

Typeout Format:

Divide Error

xxxxxx	yyyyyy
aaaaaa	bbbbbb
cccccc	dddddd

Line 18 is the answer.

Single Precision Divide Error

xxxxxx = B-Accumulator Operand
yyyyyy = Memory Operand
aaaaaa = Quotient, Software
bbbbbb - Remainder, Software
cccccc = Quotient, Hardware
dddddd = Remainder, Hardware

```
mmmmmm  nnnnnn  xxxxxx
 aaaaaa  bbbbbb
 cccccc  dddddd
```

Double Precision Divide Error

mmmmmm = A-Accumulator Operand
nnnnnn = B-Accumulator Operand
xxxxxx = Memory Operand
a's, b's, c's, d's = Same as Single Precision

Note

If the letters "OVFL" are typed out on a double precision divide error in place of a quotient and remainder, this indicates that operation causes a divide overflow. The hardware should get overflow when the software does and the hardware should not get overflow when the software does not.

Example of Bit Pattern Type Out

```
AAAAAA  BBBBBB  MMMMMM
01 X XXX XXX XXX XXX XXX  Y YYY YYY YYY YYY YYY (C)
```

where AAAAAA = A-Register
BBBBBB = B-Register
MMMMMM = Memory
X XXX XXX= Bit-Pattern of A
Y YYY YYY= Bit-Pattern of B
C= Optional Typeout if Correction Has Been Made

Note

To find operands that fail, set sense switch three. After the halt, set sense switches zero and two. This will repeat the operands and errors will be ignored which will aid troubleshooting. To get a bit pattern, after the halt, set sense switches two and four. When typeout begins, lower four to discontinue typeout.

SEL #303008C
810A DIVIDE TEST
SPECIAL OPERATION DESCRIPTION
TESTING SPECIFIC NUMBERS

1. After loading the program enter the desired dividend (double length-A & B accumutators) in memory locations '3312 ("A" accum.) and '3313 ("B" accum.) and the desired divisor in memory location '3314.

2. Set Sense Switch (SSW) #2 and start the program (Program Counter '2000).

3. The program will continue to test divide the specific numbers entered in Step #1 until manually halted, Sense Switch (SSW) #2 is reset, or a program halt occures (Sense Switch #1 or 3 program options).

NOTE: The dividend corresponds to the number located in the A & B accumulator and the divisor to the number in memory ("T" register during the divide.)

SEL PROGRAM LIBRARY

PROGRAM DESCRIPTION

 Catalog No. 303010A

IDENTIFICATION: Memory Worst Case Test (MEMTES)

AUTHOR: SEL

ACCEPTED: 13 January 1967

PURPOSE: MEMTES analyzes the program counter bits in conjunction with a Boolean expression to find which locations should be loaded with ones or zeros. After all memory is loaded, each location is unloaded sequentially. While unloading memory, the worst case pattern will cause additive noise in the sense windings possibly causing bits to be dropped or picked up.

All of memory is tested through the use of a ping-pong routine. After the upper portion of memory has been exercised (location 1000_8 and up), the program is modified to exercise the lower portion of memory (location 0 up to, but not including the highest map) and transferred to the highest map in memory. Once the lower portion is exercised, the program is reset to exercise upper memory and moved back to the lowest map.

Note: Sense switch No. 2 must be set before the program is started.

Absolute Loader
Prog. Counter '17673
A-Accum 0 B-Accum 0
After Load Enter Bit 3
In Memory Location '420
Start At '0 Prog. Cntr.

SOURCE PROGRAM LANGUAGE: MNEMBLER 810A

COMPUTER CONFIGURATIONS: Standard SEL 810A

STORAGE: 0000 to 0467_8, plus every other location - Not relocatable

SUBROUTINES REQUIRED: 810A Mainframe Diagnostic Loading Procedure

TIMING: Dependent on memory size.

Absolute Loader
Prog. Counter '17673
A-Accum 0 B-Accum 0
After Load Enter Bit 3
In Memory Location '420
Start At 0 Prog. Cntr.

Prog. Cntr. 37673 when using the upper 16K loader program

Note: When using the upper 16K loader program; - after load enter bits 2 + 3 in memory location '420.

USE:

After loading, set the location tagged FIN (420_8) with the four (4) most significant bits of the highest memory address (see note).

Set the sense switches to the desired combination before starting.

Start at location zero. The program will run continuously until halted manually.

NOTE: For a 4K memory, no bits should be set in FIN
8K - set bit 3
12K - set bit 2
16K - set bit 2 and 3

Sense Switches:

~~Set - No switches for: Ferroxcube, 4K Memory~~
~~SSW 0 up for: Ferroxcube, 8K Memory~~
~~SSW 0 and 1 up for: Ampex Mod 1, 8K Memory~~
~~SSW 1 up for: Ampex Mod 1, 4K Memory~~
SSW 2 up for: Ampex Mod 2, All Memories — Use this one.

don't use these.

NOTE: Be sure the proper sense switches are set before the program is started, otherwise the wrong worst case will be used.

Type-Out Format:

aaaaa b cccccccccccccccc

Memory Unload Error

a's = octal memory location in error.
b = a one or a zero, what every bit position of the error location should contain.
c's = sixteen binary bits which were unloaded from the error location.

NOTE: A parity error may also be caused when unloading a location. If a parity error occurs, there may not be an error type-out. The A-Register may be displayed and if it does not contain either all ones or all zeros, the parity error may be cleared and the program started where it has stopped, the error type-out will follow. If, however, the A register does contain all ones or all zeros, the B Register may be displayed to find the location that caused the parity error.

Pin 24 on 13F to gen. will give you a type out.

```
0001  00000 00000000 *          MEMTES          REV-0                                  00000200
0002  00000 00000000 *          WØRST CASE MEMØRY TEST                                 00000300
0003  00000 00000000 *          ALL LØADERS AND ØTHER PRØGRAMS MUST BE                 00000500
0004  00000 00000000 *           RELØADED AFTER RUNNING THIS PRØGRAM                   00000600
0005  00000 00000000 *                                                                 00000700
0006  00000 00000000 *          SENSE SWITCH SETTINGS                                  00000800
0007  00000 00000000 *               NØ SWITCHES UP - FERRØXCUBE 4K CØRE STACK         00000900
0008  00000 00000000 *                                  WØRST CASE IS USED             00001000
0009  00000 00000000 *               SWITCH ZERØ UP - FERRØXCUBE 8K CØRE STACK         00001100
0010  00000 00000000 *                                  WØRST CASE IS USED             00001200
0011  00000 00000000 *               SWITCHES ZERØ                                     00001300
0012  00000 00000000 *                   AND ØNE UP - AMPEX MØD-1,8K CØRE STACK        00001400
0013  00000 00000000 *                                  WØRST CASE IS USED             00001500
0014  00000 00000000 *               SWITCH ØNE  UP - AMPEX MØD-1,4K CØRE STACK        00001600
0015  00000 00000000 *                                  WØRST CASE IS USED             00001700
0016  00000 00000000 *               SWITCH TWØ  UP - AMPEX MØD-2, ALL STACKS          00001800
0017  00000 00000000 *                                  WØRST CASE IS USED             00001900
0018  00000 00000000 *                                                                 00002000
0019  00000 00000000 *                                                                 00002100
0020  00000 00000000 *          ADDRESS SET UP RØUTINE FØR ALL CØRE STACKS             00002200
0021  00000 00000000 *                                                                 00002300
0022  00000 00000000      REL
0023  01000 70001000      ØRG   '1000
0024  01000 01101455      LAA   TØP                                                    00002400
0025  01001 05101420      AMA   FIN           FIN HAS HIGH BIT FØR MØRE THAN 4K        00002500
0026  01002 03101455      STA   TØP           TØP IS THE HIGH LØC. FØR PING-PØNG       00002600
0027  01003 01101420      LAA   FIN           FIN AND INDX ARE CØMBINED WITH           00002700
0028  01004 05101421      AMA   INDX          STAR TØ ØBTAIN A NEGATIVE                00002800
0029  01005 06101422      SMA   STAR          CØUNT FØR MEMØRY ADDRESSING              00002900
0030  01006 00000002      NEG                                                          00003000
0031  01007 03101420      STA   FIN           THE ABØVE IS EXECUTED ØNCE               00003100
0032  01010 03101421      STA   INDX                                                   00003200
0033  01011 00000000 *                                                                 00003300
0034  01011 00000000 *          SENSE SWITCH TEST FØR CØRE STACK TYPE                  00003400
0035  01011 00000000 *                                                                 00003500
0036  01011 00130402      SNS   2             TWØ                                      00003600
0037  01012 11101243      BRU   MØD2          AMPEX MØD-2            UP                00003700
0038  01013 00130401      SNS   1             ØNE                  DØWN                00003800
```

```
0039  01014 11101020        BRU  *+4                                UP        00003900
0040  01015 00130400        SNS  0          ZERØ W/ ØNE DØWN                  00004000
0041  01016 11101236        BRU  FRB8       FERRØXCUBE 8K           UP        00004100
0042  01017 11101231        BRU  FRB4       FERRØXCUBE 4K           DØWN      00004200
0043  01020 00130400        SNS  0          ZERØ W/ ØNE UP                    00004300
0044  01021 11101252        BRU  MD18       AMPEX MØD 1-8K          UP        00004400
0045  01022 11101261        BRU  MD14       AMPEX MØD 1-4K          DØWN      00004500
0046  01023 00000000 *                                                        00004600
0047  01023 00000000 *        FERRØXCUBE TEST, EARLY MØDEL 810                00004700
0048  01023 00000000 *                  MØDIFIED FØR ØTHER CØRE STACKS        00004800
0049  01023 00000000 *                                                        00004900
0050  01023 12101173 FRCB SPB  REST     RESET CNTRS. AND INDIRECT ADDR.       00005000
0051  01024 12101061        SPB  FML1   LØGICAL FØRMULA FØR WØRST CASE        00005100
0052  01025 00000000 *                                                        00005200
0053  01025 12101205        SPB  LØD1   STØRE ØNES AS WØRST CASE              00005300
0054  01026 11101030        BRU  *+2                                          00005400
0055  01027 00000000 *                                                        00005500
0056  01027 12101201        SPB  LØD0   STØRE ZERØS AS WØRST CASE             00005600
0057  01030 00000000 *                                                        00005700
0058  01030 14101422        IMS  STAR   NEXT CØRE LØCATIØN                    00005800
0059  01031 14101421        IMS  INDX                                         00005900
0060  01032 11101024        BRU  FRCB+1 NEGATIVE CØUNT NØT ZERØ               00006000
0061  01033 12101173        SPB  REST   RESET                                 00006100
0062  01034 00000000 *                                                        00006200
0063  01034 12101061 ULØD SPB  FML1     FØRMULA                               00006300
0064  01035 00000000 *                                                        00006400
0065  01035 12101221        SPB  UL1    UNLØAD ØNES                           00006500
0066  01036 11101040        BRU  *+2                                          00006600
0067  01037 00000000 *                                                        00006700
0068  01037 12101211        SPB  UL0    UNLØAD ZERØS                          00006800
0069  01040 00000000 *                                                        00006900
0070  01040 14101422        IMS  STAR   NEXT LØC.                             00007000
0071  01041 14101421        IMS  INDX                                         00007100
0072  01042 11101034        BRU  ULØD   NEG. CNT. NØT ZERØ                    00007200
0073  01043 00000000 *                                                        00007300
0074  01043 01101025        LAA  FRCB+2 INTERCHANGE LØAD AND                  00007400
0075  01044 02101027        LBA  FRCB+4  UNLØAD INSTRUCTIØNS                  00007500
0076  01045 03101027        STA  FRCB+4                                       00007600
0077  01046 04101025        STB  FRCB+2                                       00007700
```

```
0078  01047 01101035        LAA  ULØD+1                                          00007800
0079  01050 02101037        LBA  ULØD+3                                          00007900
0080  01051 03101037        STA  ULØD+3                                          00008000
0081  01052 04101035        STB  ULØD+1                                          00008100
0082  01053 14101423        IMS  TWØ                                             00008200
0083  01054 11101023        BRU  FRCB          MEMØRY NØT EXERCISED TWICE        00008300
0084  01055 01101424        LAA  NTWØ                                            00008400
0085  01056 03101423        STA  TWØ                                             00008500
0086  01057 12101273        SPB  PIPØ          MØVE PRØGRAM TØ TØP MAP           00008600
0087  01060 11101023        BRU  FRCB          REPEAT TEST                       00008700
0088  01061 00000000 *                                                           00008800
0089  01061 00000000 *           LØGICAL FØRMULA FØR WØRST CASE FERRØXCUBE CØRE STACKS 00008900
0090  01061 00000000 *                           WC = (A+B) AND NØT (A AND B)     00009000
0091  01061 00000000 *                                                           00009300
0092  01061 00000000 FML1 ***     **                                             00009400
0093  01062 02101422        LBA  STAR                                            00009500
0094  01063 01101461        LAA  A                                               00009600
0095  01064 00000027        ABA                                                  00009700
0096  01065 00000022        SAZ                                                  00009800
0097  01066 11101074        BRU  AASS                                            00009900
0098  01067 01101462        LAA  B             NØT A                             00010000
0099  01070 00000027        ABA                                                  00010200
0100  01071 00000022        SAZ                                                  00010300
0101  01072 11101103        BRU  ANBA          AND B, STØRE ØNES                 00010400
0102  01073 11101101        BRU  AABA                                            00010500
0103  01074 00000000 *                                                           00010600
0104  01074 01101462 AASS LAA  B               A                                 00010700
0105  01075 00000027        ABA                                                  00010900
0106  01076 00000002        NEG                                                  00011000
0107  01077 00000023        SAN                                                  00011100
0108  01100 11101103        BRU  ANBA          AND NØT B, STØRE ØNES             00011200
0109  01101 00000000 *                                                           00011300
0110  01101 14101061 AABA IMS  FML1            AND B, STØRE ZERØS                00011400
0111  01102 14101061        IMS  FML1                                            00011500
0112  01103 11101061 ANBA BRU* FML1                                              00011600
0113  01104 00000000 *                                                           00011700
0114  01104 00000000 *                                                           00011800
0115  01104 00000000 *                                                           00011900
0116  01104 00000000 *           LØGICAL FØRMULA FØR WØRST CASE AMPEX CØRE STACKS 00012000
```

```
0117  01104 00000000 *                          NC = A AND NØT B AND NØT C                00012100
0118  01104 00000000 *                            ØR NØT A AND B AND NØT C                00012200
0119  01104 00000000 *                            ØR NØT A AND NØT B AND C                00012300
0120  01104 00000000 *                            ØR A AND B AND C                        00012400
0121  01104 00000000 *                                                                    00012500
0122  01104 00000000 FØRM ***  **                                                         00012600
0123  01105 02101422      LBA  STAR                                                       00012700
0124  01106 01101463      LAA  C                                                          00012800
0125  01107 00000027      ABA                                                             00012900
0126  01110 00000022      SAZ                                                             00013000
0127  01111 11101122      BRU  PRT2                                                       00013100
0128  01112 01101462      LAA  B                  NØT C                                   00013200
0129  01113 00000027      ABA                                                             00013400
0130  01114 00000022      SAZ                                                             00013500
0131  01115 11101122      BRU  PRT2                                                       00013600
0132  01116 01101461      LAA  A                  AND NØT B                               00013700
0133  01117 00000027      ABA                                                             00013900
0134  01120 00000022      SAZ                                                             00014000
0135  01121 11301104      BRU* FØRM               AND A, STØRE ØNES                       00014100
0136  01122 00000000 *                                                                    00014200
0137  01122 01101461 PRT2 LAA  A                  ØR                                      00014300
0138  01123 00000027      ABA                                                             00014500
0139  01124 00000022      SAZ                                                             00014600
0140  01125 11101136      BRU  PRT3                                                       00014700
0141  01126 01101463      LAA  C                  NØT A                                   00014800
0142  01127 00000027      ABA                                                             00015000
0143  01130 00000022      SAZ                                                             00015100
0144  01131 11101136      BRU  PRT3                                                       00015200
0145  01132 01101462      LAA  B                  AND NØT C                               00015300
0146  01133 00000027      ABA                                                             00015500
0147  01134 00000022      SAZ                                                             00015600
0148  01135 11301104      BRU* FØRM               AND B, STØRE ØNES                       00015700
0149  01136 00000000 *                                                                    00015800
0150  01136 01101461 PRT3 LAA  A                  ØR                                      00015900
0151  01137 00000027      ABA                                                             00016100
0152  01140 00000022      SAZ                                                             00016200
0153  01141 11101152      BRU  PRT4                                                       00016300
0154  01142 01101462      LAA  B                  NØT A                                   00016400
0155  01143 00000027      ABA                                                             00016600
```

```
0156  01144 00000022        SAZ                                          00016700
0157  01145 11101152        BRU   PRT4                                   00016800
0158  01146 01101463        LAA   C              AND NØT B               00016900
0159  01147 00000027        ABA                                          00017100
0160  01150 00000022        SAZ                                          00017200
0161  01151 11301104        BRU*  FØRM           AND C, STØRE ØNES       00017300
0162  01152 00000000  *                                                  00017400
0163  01152 01101461  PRT4  LAA   A              ØR                      00017500
0164  01153 00000027        ABA                                          00017700
0165  01154 00000002        NEG                                          00017800
0166  01155 00000023        SAN                                          00017900
0167  01156 11101170        BRU   EXIT                                   00018000
0168  01157 01101462        LAA   B              A                       00018100
0169  01160 00000027        ABA                                          00018300
0170  01161 00000002        NEG                                          00018400
0171  01162 00000023        SAN                                          00018500
0172  01163 11101170        BRU   EXIT                                   00018600
0173  01164 01101463        LAA   C              AND B                   00018700
0174  01165 00000027        ABA                                          00018900
0175  01166 00000022        SAZ                                          00019000
0176  01167 11301104        BRU*  FØRM           AND C, STØRE ØNES       00019100
0177  01170 00000000  *                                                  00019200
0178  01170 14101104  EXIT  IMS   FØRM           ØTHERWISE STØRE ZERØS   00019300
0179  01171 14101104        IMS   FØRM                                   00019400
0180  01172 11301104        BRU*  FØRM                                   00019500
0181  01173 00000000  *                                                  00019600
0182  01173 00000000  *                                                  00019700
0183  01173 00000000  *                                                  00019800
0184  01173 00000000  *           RESET INDIRECT ADDRESS AND NEGATIVE CØUNT 00019900
0185  01173 00000000  *                                                  00020000
0186  01173 00000000  REST  ***   **                                     00020100
0187  01174 01101427        LAA   BEG                                    00020200
0188  01175 03101422        STA   STAR                                   00020300
0189  01176 01101420        LAA   FIN                                    00020400
0190  01177 03101421        STA   INDX                                   00020500
0191  01200 11301173        BRU*  REST                                   00020600
0192  01201 00000000  *                                                  00020700
0193  01201 00000000  *           LØAD ZERØS INDIRECTLY THRU STAR        00020800
0194  01201 00000000  *                                                  00020900
```

```
0195  01201 00000000 LØDØ ***  **                                    00021000
0196  01202 00000003      CLA                                        00021100
0197  01203 03301422      STA* STAR                                  00021200
0198  01204 11301201      BRU* LØDØ                                  00021300
0199  01205 00000000 *                                               00021400
0200  01205 00000000 *         LØAD ØNES INDIRECTLY THRU STAR        00021500
0201  01205 00000000 *                                               00021600
0202  01205 00000000 LØD1 ***  **                                    00021700
0203  01206 01101425      LAA  ØNES                                  00021800
0204  01207 03301422      STA* STAR                                  00021900
0205  01210 11301205      BRU* LØD1                                  00022000
0206  01211 00000000 *                                               00022100
0207  01211 00000000 *         UNLØAD ZERØS INDIRECTLY THRU STAR     00022200
0208  01211 00000000 *                                               00022300
0209  01211 00000000 ULO  ***  **                                    00022400
0210  01212 00000003      CLA                                        00022500
0211  01213 01301422      LAA* STAR                                  00022600
0212  01214 15101426      CMA  ZERØ                                  00022700
0213  01215 12101334      SPB  ERØØ                                  00022800
0214  01216 11301211      BRU* ULO                                   00022900
0215  01217 12101334      SPB  ERØØ                                  00023000
0216  01220 11301211      BRU* ULO                                   00023100
0217  01221 00000000 *                                               00023200
0218  01221 00000000 *         ULØAD ØNES INDIRECTLY THRU STAR       00023300
0219  01221 00000000 *                                               00023400
0220  01221 00000000 UL1  ***  **                                    00023500
0221  01222 00000003      CLA                                        00023600
0222  01223 01301422      LAA* STAR                                  00023700
0223  01224 15101425      CMA  ØNES                                  00023800
0224  01225 12101342      SPB  ERØ1                                  00023900
0225  01226 11301221      BRU* UL1                                   00024000
0226  01227 12101342      SPB  ERØ1                                  00024100
0227  01230 11301221      BRU* UL1                                   00024200
0228  01231 00000000 *                                               00024300
0229  01231 00000000 *                                               00024400
0230  01231 00000000 *                                               00024400
0231  01231 00000000 *         FERRØXCUBE 4K CØRE STACK TEST         00024450
0232  01231 00000000 *                                               00024500
0233  01231 01101433 FRB4 LAA  B11          SET CØNSTANT FØR WØRST   00024550
```

```
0234  01232 03101461       STA  A              CASE EQUATIØN                00024600
0235  01233 01101436       LAA  B5                                          00024650
0236  01234 03101462       STA  B                                           00024700
0237  01235 11101023       BRU  FRCB                                        00024750
0238  01236 00000000 *                                                      00024800
0239  01236 00000000 *          FERRØXCUBE 8K CØRE STACK TEST               00024850
0240  01236 00000000 *                                                      00024900
0241  01236 01101434 FRB8  LAA  B10             SET CØNSTANTS FØR W.C.      00025000
0242  01237 03101461       STA  A                                           00025100
0243  01240 01101437       LAA  B4                                          00025200
0244  01241 03101462       STA  B                                           00025300
0245  01242 11101023       BRU  FRCB                                        00025400
0246  01243 00000000 *                                                      00025500
0247  01243 00000000 *          AMPEX MØD-2, ALL CØRE STACKS TEST           00025600
0248  01243 00000000 *                                                      00025700
0249  01243 01101430 MØD2  LAA  B15             SET CØNSTANTS FØR W.C.      00025800
0250  01244 03101461       STA  A                                           00025900
0251  01245 01101431       LAA  B14                                         00026000
0252  01246 03101462       STA  B                                           00026100
0253  01247 01101435       LAA  B8                                          00026200
0254  01250 03101463       STA  C                                           00026300
0255  01251 11101267       BRU  STA                                         00026400
0256  01252 00000000 *                                                      00026500
0257  01252 00000000 *          AMPEX MØD 1 - 8K CØRE STACK TEST            00026600
0258  01252 00000000 *                                                      00026700
0259  01252 01101436 MD18  LAA  B5              SET CØNSTANTS FØR W.C.      00026800
0260  01253 03101461       STA  A                                           00026900
0261  01254 01101437       LAA  B4                                          00027000
0262  01255 03101462       STA  B                                           00027100
0263  01256 01101434       LAA  B10                                         00027200
0264  01257 03101463       STA  C                                           00027300
0265  01260 11101267       BRU  STA                                         00027400
0266  01261 00000000 *                                                      00027500
0267  01261 00000000 *          AMPEX MØD 1 - 4K CØRE STACK TEST            00027600
0268  01261 00000000 *                                                      00027700
0269  01261 01101432 MD14  LAA  B12             SET CØNSTANTS FØR W.C.      00027800
0270  01262 03101461       STA  A                                           00027900
0271  01263 01101433       LAA  B11                                         00028000
0272  01264 03101462       STA  B                                           00028100
```

```
0273  01265 01101456        LAA   B5                                          00028200
0274  01266 03101463        STA   C                                           00028300
0275  01267 00000000 *                                                        00028400
0276  01267 01101456 STA    LAA   BFØR        MØDIFY FRCB TØ USE AMPEX        00028500
0277  01270 03101024        STA   FRCB+1       WØRST CASE FØRMULA             00028600
0278  01271 03101034        STA   ULØD                                        00028700
0279  01272 11101023        BRU   FRCB                                        00028800
0280  01273 00000000 *                                                        00028900
0281  01273 00000000 *                                                        00029000
0282  01273 00000000 *                                                        00029100
0283  01273 00000000 *            PING-PØNG RØUTINE                           00029200
0284  01273 00000000 *                                                        00029300
0285  01273 00000000 PIPØ ***     **                                          00029400
0286  01274 01101427        LAA   BEG         SAVE ADDRESSES                  00029500
0287  01275 03101440        STA   SAVE                                        00029600
0288  01276 01101420        LAA   FIN                                         00029700
0289  01277 00000002        NEG                                               00029800
0290  01300 05101273        AMA   PIPØ                                        00030000
0291  01301 03101273        STA   PIPØ                                        00030100
0292  01302 00000003        CLA                                               00030200
0293  01303 03101427        STA   BEG                                         00030300
0294  01304 01101457        LAA   BRU         SET ENTRANCE TØ RESET ABØVE ØN RETURN 00030800
0295  01305 03101274        STA   PIPØ+1                                      00030900
0296  01306 00000000 *                                                        00031000
0297  01306 02101417        LBA   IDX                                         00031100
0298  01307 01301454        LAA*  BØT         MØVE PRØGRAM TØ TØP MAP         00031200
0299  01310 03301455        STA*  TØP                                         00031300
0300  01311 00000026        IBS                                               00031400
0301  01312 11101307        BRU   *-3                                         00031500
0302  01313 11301273        BRU*  PIPØ        EXIT TØ UPPER MEMØRY            00031600
0303  01314 00000000 *                                                        00031700
0304  01314 00000000 *                                                        00031800
0305  01314 01101440 PØNG   LAA   SAVE         RE-SET ADDRESSES                00031900
0306  01315 03101427        STA   BEG                                         00032000
0307  01316 01101420        LAA   FIN                                         00032100
0308  01317 00000002        NEG                                               00032200
0309  01320 03101441        STA   STØR                                        00032400
0310  01321 01101273        LAA   PIPØ                                        00032500
0311  01322 06101441        SMA   STØR                                        00032600
```

```
0312  01623 03101273        STA  PIPØ                                    00032700
0313  01624 01101460        LAA  LAA          RESET ENTRANCE             00033000
0314  01625 03101274        STA  PIPØ+1                                  00033100
0315  01626 00000000 *                                                   00033200
0316  01626 02101417        LBA  IDX                                     00033300
0317  01627 01301455        LAA* TØP          MØVE PRØGRAM TØ LØWEST MAP 00033400
0318  01630 03301454        STA* BØT                                     00033500
0319  01631 00000026        IBS                                          00033600
0320  01632 11101627        BRU  *-3                                     00033700
0321  01633 11301273        BRU* PIPØ         EXIT TØ LØWER MEMØRY       00033800
0322  01634 00000000 *                                                   00033900
0323  01634 00000000 *                                                   00034000
0324  01634 00000000 *                                                   00034100
0325  01634 00000000 *          ZERØS UNLØADED ERRØR                     00034200
0326  01634 00000000 *                                                   00034300
0327  01634 00000000 ERØ0 ***  **                                        00034400
0328  01635 03101447        STA  NUM2         STØRE MEMØRY CØNTENTS      00034500
0329  01636 01101442        LAA  TWØ6         SET-UP TYPE ØUT            00034600
0330  01637 03101443        STA  NUM1                                    00034700
0331  01640 12101650        SPB  TPØ                                     00034800
0332  01641 11301634        BRU* ERØ0         RETURN                     00034900
0333  01642 00000000 *                                                   00035000
0334  01642 00000000 *          ØNES UNLØADED ERRØR                      00035100
0335  01642 00000000 *                                                   00035200
0336  01642 00000000 ERØ1 ***  **                                        00035300
0337  01643 03101447        STA  NUM2         STØRE MEMØRY CØNTENTS      00035400
0338  01644 01101444        LAA  T61          SET-UP TYPE ØUT            00035500
0339  01645 03101443        STA  NUM1                                    00035600
0340  01646 12101650        SPB  TPØ                                     00035700
0341  01647 11301642        BRU* ERØ1         RETURN                     00035800
0342  01650 00000000 *                                                   00035900
0343  01650 00000000 *                                                   00036000
0344  01650 00000000 *                                                   00036100
0345  01650 00000000 *          TYPE-ØUT SUBR                            00036200
0346  01650 00000000 *                                                   00036300
0347  01650 00000000 TPØ  ***  **                                        00036400
0348  01651 00000003        CLA                                          00036500
0349  01652 00000317        FLA  3                                       00036700
0350  01653 05101442        AMA  TWØ6                                    00036750
```

```
0351  01354 12101410        SPB   TYPE                                          00036800
0352  01355 14101450        IMS   M5                                            00036900
0353  01356 11101352        BRU   *-4                                           00037000
0354  01357 01101451        LAA   NM5                                           00037100
0355  01360 03101450        STA   M5                                            00037200
0356  01361 01101452        LAA   SPAC                                          00037300
0357  01362 12101410        SPB   TYPE                                          00037400
0358  01363 12101410        SPB   TYPE                                          00037500
0359  01364 12101410        SPB   TYPE                                          00037600
0360  01365 01101443        LAA   NUM1          ØUTPUT WHAT LØCATIØN SHØULD CØNTAIN  00037700
0361  01366 12101410        SPB   TYPE                                          00037800
0362  01367 01101452        LAA   SPAC                                          00037900
0363  01370 12101410        SPB   TYPE                                          00038000
0364  01371 12101410        SPB   TYPE                                          00038100
0365  01372 02101447        LBA   NUM2          ØUTPUT CØNTENTS IN BINARY       00038200
0366  01373 00000113        FLL   1                                             00038300
0367  01374 05101442        AMA   TW06                                          00038350
0368  01375 12101410        SPB   TYPE                                          00038400
0369  01376 14101445        IMS   WCNT                                          00038500
0370  01377 11101373        BRU   *-4                                           00038600
0371  01400 01101446        LAA   NCNT                                          00038700
0372  01401 03101445        STA   WCNT                                          00038800
0373  01402 02101453        LBA   CRLF          CAR. RTN., LN. FD.              00038900
0374  01403 00001013        FLL   8                                             00038950
0375  01404 12101410        SPB   TYPE                                          00039000
0376  01405 00001013        FLL   8                                             00039100
0377  01406 12101410        SPB   TYPE                                          00039200
0378  01407 11301350        BRU*  TPØ           EXIT                            00039300
0379  01410 00000000 *                                                          00039400
0380  01410 00000000 *           TYPE A REG. SUBR.                              00039500
0381  01410 00000000 *                                                          00039600
0382  01410 00000000 TYPE ***   **                                              00039700
0383  01411 00130101        DATA  '130101       CEU   1,W
0384  01412 00001000        DATA  '1000
0385  01413 00001016        LSL   8
0386  01414 00170101        DATA  '170101       AØP   1,W
0387  01415 00000003        CLA                                                 00040300
0388  01416 11301410        BRU*  TYPE                                          00040700
0389  01417 00000000 *                                                          00040800
```

```
0390  01417 00000000 *                                  00040900
0391  01417 00000000 *                                  00041000
0392  01417 00000000 *                                  00041100
0393  01417 00177001 IDX   DATA -511                    00041200
0394  01420 00000000 FIN   DATA 0                       00041300
0395  01421 00010000 INDX  DATA 4096                    00041400
0396  01422 00001000 STAR  DATA 512                     00041500
0397  01423 00177776 TWØ   DATA -2                      00041600
0398  01424 00177776 NTWØ  DATA -2                      00041700
0399  01425 00177777 ØNES  DATA -1                      00041800
0400  01426 00000000 ZERØ  DATA 0                       00041900
0401  01427 00001000 BEG   DATA 512                     00042000
0402  01430 00000001 B15   DATA 1                       00042100
0403  01431 00000002 B14   DATA 2                       00042200
0404  01432 00000010 B12   DATA 8                       00042300
0405  01433 00000020 B11   DATA 16                      00042400
0406  01434 00000040 B10   DATA 32                      00042500
0407  01435 00000200 B8    DATA 128                     00042600
0408  01436 00002000 B5    DATA 1024                    00042800
0409  01437 00004000 B4    DATA 2048                    00042900
0410  01440 00000000 SAVE  DATA 0                       00043000
0411  01441 00000000 STØR  DATA 0                       00043100
0412  01442 00000260 TWØ6  DATA 176                     00043200
0413  01443 00000000 NUM1  DATA 0                       00043300
0414  01444 00000261 T61   DATA 177                     00043400
0415  01445 00177760 WCNT  DATA -16                     00043500
0416  01446 00177760 NCNT  DATA -16                     00043600
0417  01447 00000000 NUM2  DATA 0                       00043700
0418  01450 00177773 M5    DATA -5                      00043800
0419  01451 00177773 NM5   DATA -5                      00043900
0420  01452 00000240 SPAC  DATA 160                     00044000
0421  01453 00106612 CRLF  DATA '106612                 00044100
0422  01454 25600777 BØT   DAC  511,1                   00044200
0423  01455 25607777 TØP   DAC  4095,1                  00044300
0424  01456 12101104 BFØR  SPB  FØRM                    00044400
0425  01457 11101314 BRU   BRU  PØNG                    00044500
0426  01460 01101427 LAA   LAA  BEG                     00044600
0427  01461 00000000 A     DATA 0                       00044649
0428  01462 00000000 B     DATA 0                       00044650
```

```
0429  01463 00000000 C     DATA 0                                  00044651
0430  01464 00000000 *                                             00044700
0431  01464 00000000 *                                             00044800
0432  01464 70400000       END
```

FRCB	01023
UL0D	01034
FML1	01061
AASS	01074
AABA	01101
ANBA	01103
F0RM	01104
PRT2	01122
PRT3	01136
PRT4	01152
EXIT	01170
REST	01173
L0D0	01201
L0D1	01205
UL0	01211
UL1	01221
FRB4	01231
FRB8	01236
M0D2	01243
MD16	01252
MD14	01261
STA	01267
PIP0	01273
P0NG	01314
ER00	01334
ER01	01342
TP0	01350
TYPE	01410
IDX	01417
FIN	01420
INDX	01421
STAR	01422
TW0	01423
NTW0	01424
0NES	01425

```
ZERØ     01426
BEG      01427
B13      01430
B14      01431
B12      01432
B11      01433
B10      01434
B8       01435
B5       01436
B4       01437
SAVE     01440
STØR     01441
TWØ6     01442
NUM1     01443
T61      01444
WCNT     01445
NCNT     01446
NUM2     01447
M5       01450
NM5      01451
SPAC     01452
CRLF     01453
BØT      01454
TØP      01455
BFØR     01456
BRU      01457
LAA      01460
A        01461
B        01462
C        01463
00000 00000000 *
00000 00000000 *          SELF-LØADER
14000 60014000       ØRG  '14000
14000 00130401 LØAD  SNS  1
14001 11014006       BRU  *+5
14002 00130101       CEU  1,W                                  CKA
14003 00004000       DATA '004000
14004 00170301       AIP  1,W                                  CKA
14005 11014011       BRU  *+4
```

#303012B
TELETYPE TEST

SYSTEMS ENGINEERING LABORATORIES PROGRAM LIBRARY

PROGRAM DESCRIPTION

IDENTIFICATION: SEL 810A Teletypewriter Test

AUTHOR: Systems Engineering Laboratories

ACCEPTED: July 19, 1968

PURPOSE: To provide a diagnostic program for the ASR-33 and ASR-35 Teletypewriters

COMPUTER CONFIGURATION: Basic SEL 810A Computer

Relocatable Loader
Prog. Counter 16060
A-Accum 0 B-Accum 0
After Load Start At '2000
Prog. Cntr.

SUBROUTINES REQUIRED: None

STORAGE: Relocatable with a bias of 2000_8; 454_8 memory locations

TIMING: N/A

LOADING PROCEDURE: Load the relocatable object tape by means of the SEL 810A Relocatable Loader (Catalog No. 300001B)

USE:

1. Set program counter to 2000.
2. Turn on punch.
3. Set sense switch 0 (Test 1).
4. Depress start twice (Test 1a).
5. A halt will occur at location 2056 to load punched tape into reader.
6. Depress start (Test 1b).
7. A halt will occur at location 2145 to load duplicated tape into reader.

Relocatable Loader
Prog. Counter 16060
A-Accum 0 B-Accum 0
After Load Start At '2000
Prog. Cntr.

Note!
When using the upper 16K load/dump program the relocatable loader, program counter 36060 should be utilized to load the program rather than the 16060.

USE: (Cont'd)

8. Turn off punch.

9. Depress start (Test 1c).

10. A halt will occur at location 2223 to indicate end of Test 1.

NOTE

Test 1b can be restarted at 2057. Test 1c can be restarted at 2146.

11. Reset sense switch 0 and set sense switch 1 (Test 2).

12. Depress start.

13. Reset sense switch 1 and enter one more character to end turn-around test.

14. Load tape punched in Test 1 into reader and turn on punch.

15. Set sense switch 2 (Test 3).

16. A halt will occur at location 2315 to indicate end of Test 3.

ERROR INDICATIONS

A program halt at location 2354 indicates a data comparison error has occurred. The A-Register contains the input character, and the B-Register contains the expected character.

NOTE

Sense switch 3 up - all errors will be ignored, and a continuous loop will be executed during test 1b and test 1c.

METHOD:

Test 1 (Sense switch 0 Up)

Test 1a - A binary progression will be punched and printed.

Test 1b - The tape just punched will be read, compared, and duplicated.

Test 1c - The tape just punched will be read and compared.

Test 2 (Sense switch 1 Up)

Keyboard turn-around test. Input from keyboard is typed out on the console printer.

Test 3 (Sense switch 2 Up)

The tape punched in Test 1 will be read and duplicated on an interrupt basis.

```
1     PAGE  0001          TELETYPEWRITER TEST (303012B) 19JUL68
0002  00000 00000000 *          START AT '2000
0003  00000 00000000 *          SNS 0 UP   TEST 1 WILL BE EXCUTED
0004  00000 00000000 *          SNS 1 UP   TEST 2 WILL BE EXCUTED
0005  00000 00000000 *          SNS 2 UP   TEST 3 WILL BE EXCUTED
0006  00000 00000000 *          SNS 3 UP   CØNTINUØUS LØØP WITH ERRØRS IGNØRED
0007  00000 00000000 *          TEST 1    '2000-PUNCH BINARY PRØGRESSIØN
0008  00000 00000000 *                    '2057-READ(SLAVED TØ ØUTPUT), CØMPARE AND PUNCH    *B
0009  00000 00000000 *                    '2146-READ(HIGH SPEED)CØPIED TAPE AND CØMPARE      *B
0010  00000 00000000 *          TEST 2    '2000-KEYBØARD TURNARØUND
0011  00000 00000000 *          TEST 3    '2000-INPUT AND ØUTPUT WITH INTERRUPT
0012  00000 00000000       REL
0013  00000 00000001 UNIT EQU  1
0014  02000 70002000       ØRG  '2000
0015  02000 01102441       LAA  ADD3                                                    JPB
0016  02001 03302437       STA* ADD1          STØRE INTERRUPT ADDRESS IN  '10,6         JPB
0017  02002 01102442       LAA  ADD4                                                    JPB
0018  02003 03302440       STA* ADD2          STØRE INTERRUPT ADDRESS IN  '10,7         JPB
0019  02004 00130400       SNS  0
0020  02005 12102013       SPB  TES1
0021  02006 00130401       SNS  1
0022  02007 12102227       SPB  TES2
0023  02010 00130402       SNS  2
0024  02011 12102240       SPB  TES3
0025  02012 11102004       BRU  *-6
0026  02013 00000000 TES1 ZZZ  **
0027  02014 12102430       SPB  LEDR
0028  02015 01102443       LAA  K1                                                      JPB
0029  02016 03102225       STA  NUMØ          STØRE FIRST NØ. IN CELL
0030  02017 02102444       LBA  N64           LØAD INDEX WITH CHAR. CØUNT               JPB
0031  02020 01102225 ADD   LAA  NUMØ          LØAD NEW NØ. IN A
0032  02021 00001016       LSL  8
0033  02022 00170101       AØP  UNIT,W
0034  02023 00000026       IBS                64 CHARACTERS TYPED
0035  02024 11102027       BRU  *+3           NØ, CØNTINUE
0036  02025 12102414       SPB  CRØ           YES, CARRIAGE RETURN
0037  02026 02102444       LBA  N64           RELØAD INDEX                              JPB
0038  02027 14102225       IMS  NUMØ
0039  02030 01102445       LAA  K377          LØAD A WITH BINARY 255                    JPB
```

```
0040  02031 15102225        CMA  NUMØ          CØMPARE CØUNT
0041  02032 11102035        BRU  *+3           A < MEMØRY, BRU TØ DØWNCØUNT
0042  02033 00000033        NØP                A = MEMØRY, ØNE MØRE CYCLE
0043  02034 11102020        BRU  ADD           A > MEMØRY, MØRE CYCLES
0044  02035 12102414        SPB  CRØ
0045  02036 02102444        LBA  N64                                                JPB
0046  02037 01102446 SUBT   LAA  N1            SUBTRACT 1 FRØM MEMØRY                JPB
0047  02040 05102225        AMA  NUMØ
0048  02041 03102225        STA  NUMØ
0049  02042 00001016        LSL  8
0050  02043 00170101        AØP  UNIT,W
0051  02044 00000026        IBS                64 CHARACTERS TYPED
0052  02045 11102050        BRU  *+3           NØ, CØNTINUE
0053  02046 12102414        SPB  CRØ           YES, CARRIAGE RETURN
0054  02047 02102444        LBA  N64           RELØAD INDEX                          JPB
0055  02050 00000003        CLA                LØAD ZERØS FØR CØMPARE
0056  02051 15102225        CMA  NUMØ
0057  02052 11102037        BRU  SUBT          A<MEMØRY CØNTINUE
0058  02053 00000033        NØP                A=M HALT
0059  02054 00000033        NØP                A>M HALT
0060  02055 12102430        SPB  LEDR
0061  02056 00000000        HLT                HALT TØ LØAD PUNCHED TAPE
0062  02057 12102430        SPB  LEDR
0063  02060 00130101        CEU  UNIT,W
0064  02061 25404000        DAC  '4000         READER MØDE
0065  02062 01102443 INLS   LAA  K1                                                  JPB
0066  02063 03102225        STA  NUMØ          STØRE FIRST NØ. IN CELL
0067  02064 02102444        LBA  N64                                                JPB
0068  02065 00170301 INPA   AIP  UNIT,W
0069  02066 00000022        SAZ
0070  02067 11102071        BRU  *+2
0071  02070 11102065        BRU  *-3
0072  02071 00130403        SNS  3             IGNØRE ANY ERRØRS
0073  02072 11102077        BRU  *+5
0074  02073 15102225        CMA  NUMØ          CHECK INPUT
0075  02074 12102351        SPB  CLER
0076  02075 11102077        BRU  *+2           NØ ERRØRS, CØNTINUE
0077  02076 12102351        SPB  CLER
0078  02077 00001016        LSL  8
```

```
0079  02100 00170101        AØP  UNIT,W
0080  02101 00000026        IBS
0081  02102 11102105        BRU  *+3
0082  02103 12102363        SPB  CRLF
0083  02104 12102414        SPB  CRØ
0084  02105 14102225        IMS  NUMØ          ADVANCE MEMØRY
0085  02106 01102445        LAA  K377                                          JPB
0086  02107 15102225        CMA  NUMØ          CØMPARE CØUNT
0087  02110 11102113        BRU  *+3           A < MEMØRY, BRU TØ DØWNCØUNT
0088  02111 00000033        NØP                A = MEMØRY, ØNE MØRE CYCLE
0089  02112 11102065        BRU  INPA          A > MEMØRY, MØRE CYCLES
0090  02113 12102363        SPB  CRLF
0091  02114 12102414        SPB  CRØ
0092  02115 01102446 INPS   LAA  N1                                           JPB
0093  02116 05102225        AMA  NUMØ          SUBTRACT 1 FRØM MEMØRY
0094  02117 03102225        STA  NUMØ
0095  02120 00170301        AIP  UNIT,W
0096  02121 00130403        SNS  3             IGNØRE ANY ERRØRS
0097  02122 11102127        BRU  *+5
0098  02123 15102225        CMA  NUMØ          CHECK INPUT
0099  02124 12102351        SPB  CLER
0100  02125 11102127        BRU  *+2           NØ ERRØR, CØNTINUE
0101  02126 12102351        SPB  CLER
0102  02127 00001016        LSL  8
0103  02130 00170101        AØP  UNIT,W
0104  02131 00000026        IBS
0105  02132 11102135        BRU  *+3
0106  02133 12102363        SPB  CRLF
0107  02134 12102414        SPB  CRØ
0108  02135 00000003        CLA
0109  02136 15102225        CMA  NUMØ          CHECK CØUNT
0110  02137 11102115        BRU  INPS          A L.T. MEM, CØNTINUE
0111  02140 00000033        NØP                A = MEMØRY HALT
0112  02141 00000033        NØP                A > MEMØRY HALT
0113  02142 00130403        SNS  3             GØ INTØ LØØP
0114  02143 11102062        BRU  INLS
0115  02144 12102430        SPB  LEDR
0116  02145 00000000        HLT
0117  02146 01102443 INHS   LAA  K1                                           JPB
```

```
0118  02147 03102225        STA  NUMØ
0119  02150 02102444        LBA  N64                                    JPB
0120  02151 00130101        CEU  UNIT,W
0121  02152 25404000        DAC  '4000          READER MØDE
0122  02153 00170301  IN31  AIP  UNIT,W
0123  02154 00000022        SAZ                 LEADER LØØP
0124  02155 11102157        BRU  *+2
0125  02156 11102153        BRU  *-3
0126  02157 00130403        SNS  3
0127  02160 11102165        BRU  *+5
0128  02161 15102225        CMA  NUMØ
0129  02162 12102351        SPB  CLER           ERRØR
0130  02163 11102165        BRU  *+2
0131  02164 12102351        SPB  CLER           ERRØR
0132  02165 00000026        IBS
0133  02166 11102170        BRU  *+2
0134  02167 12102363        SPB  CRLF
0135  02170 14102225        IMS  NUMØ
0136  02171 01102445        LAA  K377                                   JPB
0137  02172 15102225        CMA  NUMØ
0138  02173 11102176        BRU  *+3            A<NUMØ
0139  02174 00000033        NØP                 A=NUMØ
0140  02175 11102153        BRU  IN31           A>NUMØ
0141  02176 12102363        SPB  CRLF
0142  02177 01102446  IN32  LAA  N1                                     JPB
0143  02200 05102225        AMA  NUMØ
0144  02201 03102225        STA  NUMØ
0145  02202 00170301        AIP  UNIT,W
0146  02203 00130403        SNS  3
0147  02204 11102211        BRU  *+5
0148  02205 15102225        CMA  NUMØ
0149  02206 12102351        SPB  CLER           ERRØR
0150  02207 11102211        BRU  *+2
0151  02210 12102351        SPB  CLER           ERRØR
0152  02211 00000026        IBS
0153  02212 11102214        BRU  *+2
0154  02213 12102363        SPB  CRLF
0155  02214 00000003        CLA                 LØAD ZERØS FØR CØMPARE
0156  02215 15102225        CMA  NUMØ
```

```
0157  02216 11102177        BRU  IN32          A<NUMØ
0158  02217 00000033        NØP                A=NUMØ
0159  02220 00000033        NØP
0160  02221 00130403        SNS  3             GØ INTØ LØØP
0161  02222 11102146        BRU  INHS
0162  02223 00000000        HLT                A>NUMØ
0163  02224 11302013        BRU* TES1
0164  02225 00000000 NUMØ   ZZZ  **
0165  02226 00000000 CHAR   ZZZ  **
0166  02227 00000000 TES2   ZZZ  **
0167  02230 00130101        CEU  UNIT,W
0168  02231 25402000        DAC  '2000         KEYBØARD MØDE
0169  02232 00170301        AIP  UNIT,W
0170  02233 00001016        LSL  8
0171  02234 00170101        AØP  UNIT,W
0172  02235 00130401        SNS  1
0173  02236 11102232        BRU  *-4
0174  02237 11302227        BRU* TES2
0175  02240 00000000 TES3   ZZZ  **
0176  02241 12102430        SPB  LEDR
0177  02242 01102447        LAA  N24                                        JPB
0178  02243 03102226        STA  CHAR
0179  02244 00000003        CLA
0180  02245 00130101        CEU  UNIT,W
0181  02246 25404000        DAC  '4000         READER MØDE
0182  02247 00170301        AIP  UNIT,W
0183  02250 00000022        SAZ                LEADER LØØP
0184  02251 11102253        BRU  *+2
0185  02252 11102247        BRU  *-3
0186  02253 02102450        LBA  N10                                        JPB
0187  02254 03502351        STA  BLØK,1
0188  02255 00000026        IBS
0189  02256 00000033        NØP
0190  02257 11102261        BRU  *+2
0191  02260 02102450 INPU   LBA  N10                                        JPB
0192  02261 00130101        CEU  UNIT,W
0193  02262 00031000        DATA '31000        CLEAR INTERRUPTS AND READER
0194  02263 00130101        CEU  UNIT,W
0195  02264 00064000        DATA '64000        ENABLE INPUT INTERRUPT AND READER   *B
```

```
0196  02265 00130601        PID                 DISABLE GRØUP 1, LEVEL 2                *B
0197  02266 00010002        DATA '10002
0198  02267 00130600        PIE                 ENABLE GRØUP 1, LEVEL 1                 *B
0199  02270 00010001        DATA '10001
0200  02271 11102271        BRU  *
0201  02272 11102271        BRU  *-1
0202  02273 00130101 ØUT    CEU  UNIT,W
0203  02274 00031000        DATA '31000         CLEAR ALL INTERRUPTS
0204  02275 00130101        CEU  UNIT,W
0205  02276 00050000        DATA '50000
0206  02277 00130601        PID                 DISABLE GRØUP 1, LEVEL 1                *B
0207  02300 00010001        DATA '10001
0208  02301 00130600        PIE                 ENABLE GRØUP 1, LEVEL 2                 *B
0209  02302 00010002        DATA '10002
0210  02303 02102450        LBA  NIO                                                    JPB
0211  02304 00000000 * REMØVED LAA  BLØK,1                                              *B
0212  02304 00000000 * REMØVED LSL  8                                                   *B
0213  02304 00000000 * REMØVED AØP  UNIT,W                                              *B
0214  02304 00000000 * REMØVED IBS                                                      *B
0215  02304 00000000 * REMØVED NØP                                                      *B
0216  02304 11102304        BRU  *
0217  02305 11102304        BRU  *-1
0218  02306 14102226 CNT    IMS  CHAR
0219  02307 11102260        BRU  INPU
0220  02310 00000000        HLT
0221  02311 11302240        BRU* TES3
0222  02312 00000000 INT1   ZZZ  **
0223  02313 00170301        AIP  UNIT,W
0224  02314 03502351        STA  BLØK,1         STØRE A INDEXED
0225  02315 00000026        IBS
0226  02316 11102321        BRU  *+3
0227  02317 00000035        TØI
0228  02320 11302335        BRU* CØN1           BRANCH TØ ØUTpUT ENABLE
0229  02321 00000035        TØI
0230  02322 11302312        BRU* INT1           RETURN TØ INPUT LØØP
0231  02323 00000000 INT2   ZZZ  **
0232  02324 01502351        LAA  BLØK,1         LØAD A
0233  02325 00001016        LSL  8
0234  02326 00170101        AØP  UNIT,W
```

```
0235  02327 00000026        IBS
0236  02330 11102333        BRU   *+3
0237  02331 00000035        TØI
0238  02332 11302336        BRU*  CØN2
0239  02333 00000035        TØI
0240  02334 11302323        BRU*  INT2
0241  02335 35402273 CØN1   DAC   ØUT
0242  02336 35402306 CØN2   DAC   CNT
0243  02351 70002351 BLØK   BES   10
0244  02351 00000000 CLER   ZZZ   **
0245  02352 00130101        CEU   UNIT,W
0246  02353 25401000        DAC   '1000          CLEAR MØDE
0247  02354 04102427        STB   SVB                                    *B
0248  02355 02102225        LBA   NUMØ                                   *B
0249  02356 00000000        HLT
0250  02357 02102427        LBA   SVB                                    *B
0251  02360 00130101        CEU   UNIT,W
0252  02361 25404000        DAC   '4000          READER MØDE
0253  02362 11302351        BRU*  CLER
0254  02363 00000000 CRLF   ZZZ   **
0255  02364 01102225        LAA   NUMØ           SAVE LAST FRAME
0256  02365 03102426        STA   SVA
0257  02366 01102451        LAA   K215                                   JPB
0258  02367 03102225        STA   NUMØ
0259  02370 00170301        AIP   UNIT,W
0260  02371 00130403        SNS   3
0261  02372 11102377        BRU   *+5
0262  02373 15102225        CMA   NUMØ
0263  02374 12102351        SPB   CLER
0264  02375 11102377        BRU   *+2
0265  02376 12102351        SPB   CLER
0266  02377 01102452        LAA   K212                                   JPB
0267  02400 03102225        STA   NUMØ
0268  02401 00170301        AIP   UNIT,W
0269  02402 00130403        SNS   3
0270  02403 11102410        BRU   *+5
0271  02404 15102225        CMA   NUMØ
0272  02405 12102351        SPB   CLER
0273  02406 11102410        BRU   *+2
```

```
0274  02407 12102351        SPB  CLER
0275  02410 01102426        LAA  SVA
0276  02411 03102225        STA  NUMØ
0277  02412 02102444        LBA  N64                                                    JPB
0278  02413 11302363        BRU* CRLF
0279  02414 00000000 CRØ    ZZZ  **          ***** CARRIAGE RETURN/LINE FEED SUBRØUTINE *****
0280  02415 03102426        STA  SVA
0281  02416 01102451        LAA  K215                                                   JPB
0282  02417 00001016        LSL  8
0283  02420 00170101        AØP  UNIT,W
0284  02421 01102452        LAA  K212                                                   JPB
0285  02422 00001016        LSL  8
0286  02423 00170101        AØP  UNIT,W
0287  02424 01102426        LAA  SVA
0288  02425 11302414        BRU* CRØ
0289  02426 00000000 SVA    ZZZ  **
0290  02427 00000000 SVB    ZZZ  **                                                     *B
0291  02430 00000000 LEDR   ZZZ  **          LEADER  RØUTINE
0292  02431 02102453        LBA  N50                                                    JPB
0293  02432 00000003        CLA
0294  02433 00170101        AØP  UNIT,W
0295  02434 00000026        IBS
0296  02435 11102432        BRU  *-3
0297  02436 11302430        BRU* LEDR
0298  02437 25401016 ADD1   DAC  '1016                                                  JPB
0299  02440 25401017 ADD2   DAC  '1017                                                  JPB
0300  02441 35402312 ADD3   DAC  INT1                                                   JPB
0301  02442 35402323 ADD4   DAC  INT2                                                   JPB
0302  02443 00000001 K1     DATA 1                                                      JPB
0303  02444 00177700 N64    DATA -64                                                    JPB
0304  02445 00000377 K377   DATA '377                                                   JPB
0305  02446 00177777 N1     DATA -1                                                     JPB
0306  02447 00177712 N54    DATA -54                                                    JPB
0307  02450 00177766 N10    DATA -10                                                    JPB
0308  02451 00000215 K215   DATA '215                                                   JPB
0309  02452 00000212 K212   DATA '212                                                   *B
0310  02453 00177716 N50    DATA -50                                                    JPB
0311  02454 /0400000        END
ERRØRS 0000    00000
```

SEL PROGRAM LIBRARY

PROGRAM DESCRIPTION

 Catalog No. 303013A

IDENTIFICATION: 810A Priority Interrupt Checkout Program

AUTHOR: J. B. Boyer, SEL

ACCEPTED: 29 June 1967

PURPOSE: To verify the proper execution of the PIE PID and TOI hardware instructions. This program is designed to operate with either a "black box" to generate the interrupt or by manually applying the proper voltage to generate the interrupt.

COMPUTER CONFIGURATION: 810A Computer with teletype.

Relocatable Loader
Prog. Counter 16060
A-Accum 0 B-Accum '743
After Load Start At '2
Prog. Cntrl.

SUBROUTINES REQUIRED: None

STORAGE: Locations octal 00000 through 01375

TIMING: N/A

USE:

1. Loading Procedures
Load the program into memory by using the standard relocatable loader. The intermap references must be relocated by octal '0743. This value must be placed in the B accumulator prior to starting the load procedure.

2. Program Starting Location
The starting address of the program is location octal 00002. However, the teletype messages may be checked by starting at location octal 00036. When all messages have been output to the teletype the program will halt. (location octal 63) The program may then be initialized by entering the starting location of the program into the program counter and pressing start.

Relocatable Loader
Prog. Counter 16060
A-Accum 0 B-Accum '743
After Load Start At '2
Prog. Cntrl.

Note:
When using the upper 16K load/dump program the relocatable loader, program counter 36060 should be utilized to load the program rather than the 16060.

3. Console Switches

Control Switch 14
SET - The program will disable the interrupt once it has been serviced. If the interrupt occurs again without program reinitialization the conditions indicate a faulty PID instruction.

RESET - The interrupt will not be disabled after the output of the message to the teletype.

Control Switch 15
SET - The program will suppress the print out of any messages. This control switch may be set to avoid teletype output when trouble shooting a faulty interrupt.

METHOD:

This program is designed to verify that the PIE, PID and TOI instructions are functioning properly. The program is designed to test the interrupt instructions and cannot be operated with any input/output devices, nor is it intended to act as a subroutine for any other program. The power-down interrupt may be verified by turning off the power while the program is active. The program may be restarted by turning the power switch to on and pressing start on the console. The program automatically stores in location zero a branch instruction to the power up subroutine.

Teletype Output
The program will output the group and level of the interrupt which has occurred.

Interrupt Generation
Priority Interrupt Card Type 8634-2 810A
Plus voltage applied to the proper pin connector will cause a disable or no request condition. Zero voltage applied to the proper pin will cause the request latch to be set.

Priority Interrupt Card Type 8634-3 810A, 8242-1 810a
The opposite voltages indicated in the above paragraph must be applied to set the proper condition.

```
1
0001  00000 00000000 *          810A PRIØRITY INTERRUPT CHECKØUT PRØGRAM   CAT. NØ. 303013A
0002  00000 00000000 *          J B BØYER   JUNE 29, 1967
0003  00000 00000000       REL
0004  00000 00000000 ****
0005  00000 00000000 ****PRIØRITY INTERRUPT TEST
0006  00000 00000000 ****
0007  00000 00000000 ****ENTER PRØGRAM AT LØCATIØN '2
0008  00000 00000000 ****
0009  00000 00000000 **** ENTER TEST ØF PRØGRAM AT LØCATIØN '36
0010  00000 00000000 ****
0011  00000 00000000 **** SET CS 15 TØ SUPPRESS PRINT ØUT
0012  00000 00000000 ****
0013  00000 00000000 **** SET CS 14 TØ DISABLE INTERRUPT AFTER
0014  00000 00000000 ****    INTERRUPT SIGNAL IS GENERATED
0015  00000 00000000 ****
0016  00002 70000002       ØRG  '2
0017  00002 12100014       SPØ  PI       ENABLE ALL GRØUPS AND LEVELS
0018  00003 00000000 *                WHEN THE PRØGRAM IS INITIALIZED THIS SUBRØUTINE
0019  00003 00000000 *                IS USED AS A LØØP UNTIL AN INTERRUPT IS GENERATED
0020  00003 02100065 BGN   LBA  DT1            '100000
0021  00004 01100066       LAA  DT2            -10000
0022  00005 03101363       STA  CHCK
0023  00006 00000003       CLA
0024  00007 14101363       IMS  CHCK
0025  00010 11100006       BRU  *-2
0026  00011 00000026       IBS
0027  00012 11100004       BRU  BGN+1
0028  00013 11100003       BRU  BGN
0029  00014 00000000 *          THIS SUBRØUTINE ENABLES ALL GRØUPS AND LEVELS ØF PRIØRITY SYSTEM
0030  00014 00000000 PI    ZZZ  **
0031  00015 00130600       PIE
0032  00016 00007777       DATA '7777          ENABLE
0033  00017 00130600       PIE
0034  00020 00017777       DATA '17777         ALL
0035  00021 00130600       PIE
0036  00022 00027777       DATA '27777         AVAILABLE
0037  00023 00130600       PIE
0038  00024 00037777       DATA '37777         INTERRUPTS
0039  00025 00130600       PIE
```

```
0040  00026 00047777        DATA '47777          TØ
0041  00027 00130600        PIE
0042  00030 00057777        DATA '57777          TEST
0043  00031 00130600        PIE
0044  00032 00067777        DATA '67777          CØMPUTER
0045  00033 00130600        PIE
0046  00034 00077777        DATA '77777
0047  00035 11300014        BRU* PI
0048  00036 00000000 *            THIS SUBRØUTINE IS USED TØ ØUTPUT THE MESSAGES THAT WILL
0049  00036 00000000 *            BE ØUTPUT TØ THE TELETYPE WHEN A PRIØRITY INTERRUPT IS
0050  00036 00000000 *            GENERATED.  THIS IS NØT PART ØF THE MAIN PRØGRAM.
0051  00036 01100067 TEST LAA  DT3            TEST ØF PRØGRAM    '41000
0052  00037 03100046        STA  LØC            DATA
0053  00040 01100070        LAA  DT4            '41100
0054  00041 03100056        STA  LCØ
0055  00042 01100071        LAA  DT5            -60
0056  00043 03100064        STA  TEMP
0057  00044 12300046 TES1   SPB* *+2
0058  00045 11100047        BRU  *+2
0059  00046 00000000 LØC    ZZZ  **
0060  00047 14100046        IMS  LØC
0061  00050 14100064        IMS  TEMP
0062  00051 11100044        BRU  TES1
0063  00052 01100071        LAA  DT5            -60
0064  00053 03100064        STA  TEMP
0065  00054 12300056 TES2   SPB* *+2
0066  00055 11100057        BRU  *+2
0067  00056 00000000 LCØ    ZZZ  **
0068  00057 14100056        IMS  LCØ
0069  00060 14100064        IMS  TEMP
0070  00061 11100054        BRU  TES2
0071  00062 00000000        HLT
0072  00063 11100036        BRU  TEST
0073  00064 00000001 TEMP   BSS  1
0074  00065 00100000 DT1    DATA '100000
0075  00066 00154360 DT2    DATA -10000
0076  00067 00041000 DT3    DATA '41000
0077  00070 00041100 DT4    DATA '41100
0078  00071 00177720 DT5    DATA -'60
0079  00072 00000000 *            PØWER DØWN RØUTINE
```

```
0080  00072 00000000 PDR1 ZZZ  **
0081  00073 01100134      LAA  FLAG
0082  00074 00000022      SAZ
0083  00075 11100102      BRU  *+5
0084  00076 01100072      LAA  PDR1
0085  00077 03100135      STA  RTN
0086  00100 01101371      LAA  BNE
0087  00101 03100134      STA  FLAG
0088  00102 04100104      STB  PDR2
0089  00103 11100105      BRU  *+2
0090  00104 00000000 PDR2 ZZZ  **            B ACC.
0091  00105 00000033      NOP                TVB CHANGE '43
0092  00106 04100110      STB  PDR3
0093  00107 11100111      BRU  *+2
0094  00110 00000000 PDR3 ZZZ  **            VBR
0095  00111 03100113      STA  PDR4
0096  00112 11100114      BRU  *+2
0097  00113 00000000 PDR4 ZZZ  **            A ACC.
0098  00114 01100121      LAA  LOB
0099  00115 03000000      STA  0
0100  00116 01100122      LAA  DAC
0101  00117 03000001      STA  1
0102  00120 00000000 HLT  HLT
0103  00121 00000036 LOB  LOB
0104  00122 35400123 DAC  DAC  PDR5
0105  00123 01100113 PDR5 LAA  PDR4
0106  00124 02100110      LBA  PDR3
0107  00125 00000033      NOP                TBV CHANGE '42
0108  00126 02100104      LBA  PDR2
0109  00127 12100014      SPB  PI
0110  00130 00000003      CLA
0111  00131 03100134      STA  FLAG
0112  00132 00000035      TBI
0113  00133 11300135      BRU* RTN
0114  00134 00000000 FLAG DATA 0
0115  00135 00000001 RTN  BSS  1
0116  00136 00000000 STAL ***  **
0117  00137 04101367      STB  TMPB
0118  00140 00000031      LCS                IF CS 15 IS
0119  00141 00001713      FLL  15            SET
```

```
0120  00142 00000024        SAP                 SUPPRESS
0121  00143 11100152        BRU  ST2            OUTPUT
0122  00144 02077772        LBA  =-6
0123  00145 01501236  ST1   LAA  M5+6,1
0124  00146 12101324        SPB  TYPE
0125  00147 00000026        IBS
0126  00150 11100145        BRU  ST1
0127  00151 12101330        SPB  CRLF
0128  00152 02101367  ST2   LBA  TMPB
0129  00153 00000035        TBI
0130  00154 11300136        BRU* STAL
0131  00155 00000000  ZE1   ***  **             0,1
0132  00156 12101236        SPB  MESS
0133  00157 00000001        DATA '1
0134  00160 11300155        BRU* ZE1
0135  00161 00000000  ZE2   ***  **             0,2
0136  00162 12101236        SPB  MESS
0137  00163 00000002        DATA '2
0138  00164 11300161        BRU* ZE2
0139  00165 00000000  ZE3   ***  **             0,3
0140  00166 12101236        SPB  MESS
0141  00167 00000003        DATA '3
0142  00170 11300165        BRU* ZE3
0143  00171 00000000  ZE4   ***  **             0,4
0144  00172 12101236        SPB  MESS
0145  00173 00000004        DATA '4
0146  00174 11300171        BRU* ZE4
0147  00175 00000000  ZE5   ***  **             0,5
0148  00176 12101236        SPB  MESS
0149  00177 00000005        DATA '5
0150  00200 11300175        BRU* ZE5
0151  00201 00000000  ZE6   ***  **             0,6
0152  00202 12101236        SPB  MESS
0153  00203 00000006        DATA '6
0154  00204 11300201        BRU* ZE6
0155  00205 00000000  ZE7   ***  **             0,7
0156  00206 12101236        SPB  MESS
0157  00207 00000007        DATA '7
0158  00210 11300205        BRU* ZE7
0159  00211 00000000  ZE8   ***  **             0,8
```

```
0160  00212 12101236        SPB  MESS
0161  00213 00000010        DATA '10
0162  00214 11300211        BRU* ZE8
0163  00215 00000000 ZE9    ***  **          0,9
0164  00216 12101236        SPB  MESS
0165  00217 00000011        DATA '11
0166  00220 11300215        BRU* ZE9
0167  00221 00000000 ZE10   ***  **          0,10
0168  00222 12101236        SPB  MESS
0169  00223 00000012        DATA '12
0170  00224 11300221        BRU* ZE10
0171  00225 00000000 ZE11   ***  **          0,11
0172  00226 12101236        SPB  MESS
0173  00227 00000013        DATA '13
0174  00230 11300225        BRU* ZE11
0175  00231 00000000 ZE12   ***  **          0,12
0176  00232 12101236        SPB  MESS
0177  00233 00000014        DATA '14
0178  00234 11300231        BRU* ZE12
0179  00235 00000000 ØN1    ***  **          1,1
0180  00236 12101236        SPB  MESS
0181  00237 00010001        DATA '10001
0182  00240 11300235        BRU* ØN1
0183  00241 00000000 ØN2    ***  **          1,2
0184  00242 12101236        SPB  MESS
0185  00243 00010002        DATA '10002
0186  00244 11300241        BRU* ØN2
0187  00245 00000000 ØN3    ***  **          1,3
0188  00246 12101236        SPB  MESS
0189  00247 00010003        DATA '10003
0190  00250 11300245        BRU* ØN3
0191  00251 00000000 ØN4    ***  **          1,4
0192  00252 12101236        SPB  MESS
0193  00253 00010004        DATA '10004
0194  00254 11300251        BRU* ØN4
0195  00255 00000000 ØN5    ***  **          1,5
0196  00256 12101236        SPB  MESS
0197  00257 00010005        DATA '10005
0198  00260 11300255        BRU* ØN5
0199  00261 00000000 ØN6    ***  **          1,6
```

```
0200  00262 12101236        SPB  MESS
0201  00263 00010006        DATA '10006
0202  00264 11300261        BRU* ØN6
0203  00265 00000000 ØN7    ***  **          1,7
0204  00266 12101236        SPB  MESS
0205  00267 00010007        DATA '10007
0206  00270 11300265        BRU* ØN7
0207  00271 00000000 ØN8    ***  **          1,8
0208  00272 12101236        SPB  MESS
0209  00273 00010010        DATA '10010
0210  00274 11300271        BRU* ØN8
0211  00275 00000000 ØN9    ***  **          1,9
0212  00276 12101236        SPB  MESS
0213  00277 00010011        DATA '10011
0214  00300 11300275        BRU* ØN9
0215  00301 00000000 ØN10   ***  **          1,10
0216  00302 12101236        SPB  MESS
0217  00303 00010012        DATA '10012
0218  00304 11300301        BRU* ØN10
0219  00305 00000000 ØN11   ***  **          1,11
0220  00306 12101236        SPB  MESS
0221  00307 00010013        DATA '10013
0222  00310 11300305        BRU* ØN11
0223  00311 00000000 ØN12   ***  **          1,12
0224  00312 12101236        SPB  MESS
0225  00313 00010014        DATA '10014
0226  00314 11300311        BRU* ØN12
0227  00315 00000000 TW1    ***  **          2,1
0228  00316 12101236        SPB  MESS
0229  00317 00020001        DATA '20001
0230  00320 11300315        BRU* TW1
0231  00321 00000000 TW2    ***  **          2,2
0232  00322 12101236        SPB  MESS
0233  00323 00020002        DATA '20002
0234  00324 11300321        BRU* TW2
0235  00325 00000000 TW3    ***  **          2,3
0236  00326 12101236        SPB  MESS
0237  00327 00020003        DATA '20003
0238  00330 11300325        BRU* TW3
0239  00331 00000000 TW4    ***  **          2,4
```

```
0240  00332 12101236        SPB   MESS
0241  00333 00020004        DATA  '20004
0242  00334 11300331        BRU*  TW4
0243  00335 00000000 TW5    ***   **          2,5
0244  00336 12101236        SPB   MESS
0245  00337 00020005        DATA  '20005
0246  00340 11300335        BRU*  TW5
0247  00341 00000000 TW6    ***   **          2,6
0248  00342 12101236        SPB   MESS
0249  00343 00020006        DATA  '20006
0250  00344 11300341        BRU*  TW6
0251  00345 00000000 TW7    ***   **          2,7
0252  00346 12101236        SPB   MESS
0253  00347 00020007        DATA  '20007
0254  00350 11300345        BRU*  TW7
0255  00351 00000000 TW8    ***   **          2,8
0256  00352 12101236        SPB   MESS
0257  00353 00020010        DATA  '20010
0258  00354 11300351        BRU*  TW8
0259  00355 00000000 TW9    ***   **          2,9
0260  00356 12101236        SPB   MESS
0261  00357 00020011        DATA  '20011
0262  00360 11300355        BRU*  TW9
0263  00361 00000000 TW10   ***   **          2,10
0264  00362 12101236        SPB   MESS
0265  00363 00020012        DATA  '20012
0266  00364 11300361        BRU*  TW10
0267  00365 00000000 TW11   ***   **          2,11
0268  00366 12101236        SPB   MESS
0269  00367 00020013        DATA  '20013
0270  00370 11300365        BRU*  TW11
0271  00371 00000000 TW12   ***   **          2,12
0272  00372 12101236        SPB   MESS
0273  00373 00020014        DATA  '20014
0274  00374 11300371        BRU*  TW12
0275  00375 00000000 TH1    ***   **          3,1
0276  00376 12101236        SPB   MESS
0277  00377 00030001        DATA  '30001
0278  00400 11300375        BRU*  TH1
0279  00401 00000000 TH2    ***   **          3,2
```

```
0280  00402 12101236        SPB   MESS
0281  00403 00030002        DATA  '30002
0282  00404 11300401        BRU*  TH2
0283  00405 00000000 TH3    ***   **          3,3
0284  00406 12101236        SPB   MESS
0285  00407 00030003        DATA  '30003
0286  00410 11300405        BRU*  TH3
0287  00411 00000000 TH4    ***   **          3,4
0288  00412 12101236        SPB   MESS
0289  00413 00030004        DATA  '30004
0290  00414 11300411        BRU*  TH4
0291  00415 00000000 TH5    ***   **          3,5
0292  00416 12101236        SPB   MESS
0293  00417 00030005        DATA  '30005
0294  00420 11300415        BRU*  TH5
0295  00421 00000000 TH6    ***   **          3,6
0296  00422 12101236        SPB   MESS
0297  00423 00030006        DATA  '30006
0298  00424 11300421        BRU*  TH6
0299  00425 00000000 TH7    ***   **          3,7
0300  00426 12101236        SPB   MESS
0301  00427 00030007        DATA  '30007
0302  00430 11300425        BRU*  TH7
0303  00431 00000000 TH8    ***   **          3,8
0304  00432 12101236        SPB   MESS
0305  00433 00030010        DATA  '30010
0306  00434 11300431        BRU*  TH8
0307  00435 00000000 TH9    ***   **          3,9
0308  00436 12101236        SPB   MESS
0309  00437 00030011        DATA  '30011
0310  00440 11300435        BRU*  TH9
0311  00441 00000000 TH10   ***   **          3,10
0312  00442 12101236        SPB   MESS
0313  00443 00030012        DATA  '30012
0314  00444 11300441        BRU*  TH10
0315  00445 00000000 TH11   ***   **          3,11
0316  00446 12101236        SPB   MESS
0317  00447 00030013        DATA  '30013
0318  00450 11300445        BRU*  TH11
0319  00451 00000000 TH12   ***   **          3,12
```

```
0320  00452 12101236        SPB  MESS
0321  00453 00030014        DATA '30014
0322  00454 11300451        BRU* TH12
0323  00455 00000000 F01    ***  **          4.1
0324  00456 12101236        SPB  MESS
0325  00457 00040001        DATA '40001
0326  00460 11300455        BRU* F01
0327  00461 00000000 F02    ***  **          4.2
0328  00462 12101236        SPB  MESS
0329  00463 00040002        DATA '40002
0330  00464 11300461        BRU* F02
0331  00465 00000000 F03    ***  **          4.3
0332  00466 12101236        SPB  MESS
0333  00467 00040003        DATA '40003
0334  00470 11300465        BRU* F03
0335  00471 00000000 F04    ***  **          4.4
0336  00472 12101236        SPB  MESS
0337  00473 00040004        DATA '40004
0338  00474 11300471        BRU* F04
0339  00475 00000000 F05    ***  **          4.5
0340  00476 12101236        SPB  MESS
0341  00477 00040005        DATA '40005
0342  00500 11300475        BRU* F05
0343  00501 00000000 F06    ***  **          4.6
0344  00502 12101236        SPB  MESS
0345  00503 00040006        DATA '40006
0346  00504 11300501        BRU* F06
0347  00505 00000000 F07    ***  **          4.7
0348  00506 12101236        SPB  MESS
0349  00507 00040007        DATA '40007
0350  00510 11300505        BRU* F07
0351  00511 00000000 F08    ***  **          4.8
0352  00512 12101236        SPB  MESS
0353  00513 00040010        DATA '40010
0354  00514 11300511        BRU* F08
0355  00515 00000000 F09    ***  **          4.9
0356  00516 12101236        SPB  MESS
0357  00517 00040011        DATA '40011
0358  00520 11300515        BRU* F09
0359  00521 00000000 F010   ***  **          4.10
```

```
0360  00522 12101236        SPB  MESS
0361  00523 00040012        DATA '40012
0362  00524 11300521        BRU* F010
0363  00525 00000000 F011   ***  **          4,11
0364  00526 12101236        SPB  MESS
0365  00527 00040013        DATA '40013
0366  00530 11300525        BRU* F011
0367  00531 00000000 F012   ***  **          4,12
0368  00532 12101236        SPB  MESS
0369  00533 00040014        DATA '40014
0370  00534 11300531        BRU* F012
0371  00535 00000000 FI1    ***  **          5,1
0372  00536 12101236        SPB  MESS
0373  00537 00050001        DATA '50001
0374  00540 11300535        BRU* FI1
0375  00541 00000000 FI2    ***  **          5,2
0376  00542 12101236        SPB  MESS
0377  00543 00050002        DATA '50002
0378  00544 11300541        BRU* FI2
0379  00545 00000000 FI3    ***  **          5,3
0380  00546 12101236        SPB  MESS
0381  00547 00050003        DATA '50003
0382  00550 11300545        BRU* FI3
0383  00551 00000000 FI4    ***  **          5,4
0384  00552 12101236        SPB  MESS
0385  00553 00050004        DATA '50004
0386  00554 11300551        BRU* FI4
0387  00555 00000000 FI5    ***  **          5,5
0388  00556 12101236        SPB  MESS
0389  00557 00050005        DATA '50005
0390  00560 11300555        BRU* FI5
0391  00561 00000000 FI6    ***  **          5,6
0392  00562 12101236        SPB  MESS
0393  00563 00050006        DATA '50006
0394  00564 11300561        BRU* FI6
0395  00565 00000000 FI7    ***  **          5,7
0396  00566 12101236        SPB  MESS
0397  00567 00050007        DATA '50007
0398  00570 11300565        BRU* FI7
0399  00571 00000000 FI8    ***  **          5,8
```

```
0400  00572 12101236        SPB  MESS
0401  00573 00050010        DATA '50010
0402  00574 11300571        BRU* FI8
0403  00575 00000000 FI9    ***  **          5.9
0404  00576 12101236        SPB  MESS
0405  00577 00050011        DATA '50011
0406  00600 11300575        BRU* FI9
0407  00601 00000000 FI10   ***  **          5.10
0408  00602 12101236        SPB  MESS
0409  00603 00050012        DATA '50012
0410  00604 11300601        BRU* FI10
0411  00605 00000000 FI11   ***  **          5.11
0412  00606 12101236        SPB  MESS
0413  00607 00050013        DATA '50013
0414  00610 11300605        BRU* FI11
0415  00611 00000000 FI12   ***  **          5.12
0416  00612 12101236        SPB  MESS
0417  00613 00050014        DATA '50014
0418  00614 11300611        BRU* FI12
0419  00615 00000000 SI1    ***  **          6.1
0420  00616 12101236        SPB  MESS
0421  00617 00060001        DATA '60001
0422  00620 11300615        BRU* SI1
0423  00621 00000000 SI2    ***  **          6.2
0424  00622 12101236        SPB  MESS
0425  00623 00060002        DATA '60002
0426  00624 11300621        BRU* SI2
0427  00625 00000000 SI3    ***  **          6.3
0428  00626 12101236        SPB  MESS
0429  00627 00060003        DATA '60003
0430  00630 11300625        BRU* SI3
0431  00631 00000000 SI4    ***  **          6.4
0432  00632 12101236        SPB  MESS
0433  00633 00060004        DATA '60004
0434  00634 11300631        BRU* SI4
0435  00635 00000000 SI5    ***  **          6.5
0436  00636 12101236        SPB  MESS
0437  00637 00060005        DATA '60005
0438  00640 11300635        BRU* SI5
0439  00641 00000000 SI6    ***  **          6.6
```

```
0440  00642 12101236        SPB  MESS
0441  00643 00060006        DATA '60006
0442  00644 11300641        BRU* SI6
0443  00645 00000000 SI7    ***  **          6,7
0444  00646 12101236        SPB  MESS
0445  00647 00060007        DATA '60007
0446  00650 11300645        BRU* SI7
0447  00651 00000000 SI8    ***  **          6,8
0448  00652 12101236        SPB  MESS
0449  00653 00060010        DATA '60010
0450  00654 11300651        BRU* SI8
0451  00655 00000000 SI9    ***  **          6,9
0452  00656 12101236        SPB  MESS
0453  00657 00060011        DATA '60011
0454  00660 11300655        BRU* SI9
0455  00661 00000000 SI10   ***  **          6,10
0456  00662 12101236        SPB  MESS
0457  00663 00060012        DATA '60012
0458  00664 11300661        BRU* SI10
0459  00665 00000000 SI11   ***  **          6,11
0460  00666 12101236        SPB  MESS
0461  00667 00060013        DATA '60013
0462  00670 11300665        BRU* SI11
0463  00671 00000000 SI12   ***  **          6,12
0464  00672 12101236        SPB  MESS
0465  00673 00060014        DATA '60014
0466  00674 11300671        BRU* SI12
0467  00675 00000000 SE1    ***  **          7,1
0468  00676 12101236        SPB  MESS
0469  00677 00070001        DATA '70001
0470  00700 11300675        BRU* SE1
0471  00701 00000000 SE2    ***  **          7,2
0472  00702 12101236        SPB  MESS
0473  00703 00070002        DATA '70002
0474  00704 11300701        BRU* SE2
0475  00705 00000000 SE3    ***  **          7,3
0476  00706 12101236        SPB  MESS
0477  00707 00070003        DATA '70003
0478  00710 11300705        BRU* SE3
0479  00711 00000000 SE4    ***  **          7,4
```

```
0480  00712 12101236        SPB  MESS
0481  00713 00070004        DATA '70004
0482  00714 11300711        BRU* SE4
0483  00715 00000000 SE5    ***  **          7,5
0484  00716 12101236        SPB  MESS
0485  00717 00070005        DATA '70005
0486  00720 11300715        BRU* SE5
0487  00721 00000000 SE6    ***  **          7,6
0488  00722 12101236        SPB  MESS
0489  00723 00070006        DATA '70006
0490  00724 11300721        BRU* SE6
0491  00725 00000000 SE7    ***  **          7,7
0492  00726 12101236        SPB  MESS
0493  00727 00070007        DATA '70007
0494  00730 11300725        BRU* SE7
0495  00731 00000000 SE8    ***  **          7,8
0496  00732 12101236        SPB  MESS
0497  00733 00070010        DATA '70010
0498  00734 11300731        BRU* SE8
0499  00735 00000000 SE9    ***  **          7,9
0500  00736 12101236        SPB  MESS
0501  00737 00070011        DATA '70011
0502  00740 11300735        BRU* SE9
0503  00741 00000000 SE10   ***  **          7,10
0504  00742 12101236        SPB  MESS
0505  00743 00070012        DATA '70012
0506  00744 11300741        BRU* SE10
0507  00745 00000000 *      THE FØLLØWING DAC LØCATIØNS SHØW THE SYMBØLIC TAG ASSØCIATED
0508  00745 00000000 *           WITH EACH INTERRUPT LØCATIØN.
0509  00745 00000000 *           WHENEVER AN INTERRUPT IS RECEIVED THE PRØGRAM BRANCHES TØ THE
0510  00745 00000000 *           LØCATIØN SPECIFIED.
0511  01000 70001000        BRG  '1000
0512  01000 35400072        DAC  PDR1          PØWER DØWN
0513  01001 35400136        DAC  STAL          STALL ALARM
0514  01002 35400155        DAC  ZE1           0,1
0515  01003 35400161        DAC  ZE2           0,2
0516  01004 35400165        DAC  ZE3           0,3
0517  01005 35400171        DAC  ZE4           0,4
0518  01006 35400175        DAC  ZE5           0,5
0519  01007 35400201        DAC  ZE6           0,6
```

```
0520  01010 35400205   DAC  ZE7    0,7
0521  01011 35400211   DAC  ZE8    0,8
0522  01012 35400215   DAC  ZE9    0,9
0523  01013 35400221   DAC  ZE10   0,10
0524  01014 35400225   DAC  ZE11   0,11
0525  01015 35400231   DAC  ZE12   0,12
0526  01016 35400235   DAC  ØN1    1,1
0527  01017 35400241   DAC  ØN2    1,2
0528  01020 35400245   DAC  ØN3    1,3
0529  01021 35400251   DAC  ØN4    1,4
0530  01022 35400255   DAC  ØN5    1,5
0531  01023 35400261   DAC  ØN6    1,6
0532  01024 35400265   DAC  ØN7    1,7
0533  01025 35400271   DAC  ØN8    1,8
0534  01026 35400275   DAC  ØN9    1,9
0535  01027 35400301   DAC  ØN10   1,10
0536  01030 35400305   DAC  ØN11   1,11
0537  01031 35400311   DAC  ØN12   1,12
0538  01032 35400315   DAC  TW1    2,1
0539  01033 35400321   DAC  TW2    2,2
0540  01034 35400325   DAC  TW3    2,3
0541  01035 35400331   DAC  TW4    2,4
0542  01036 35400335   DAC  TW5    2,5
0543  01037 35400341   DAC  TW6    2,6
0544  01040 35400345   DAC  TW7    2,7
0545  01041 35400351   DAC  TW8    2,8
0546  01042 35400355   DAC  TW9    2,9
0547  01043 35400361   DAC  TW10   2,10
0548  01044 35400365   DAC  TW11   2,11
0549  01045 35400371   DAC  TW12   2,12
0550  01046 35400375   DAC  TH1    3,1
0551  01047 35400401   DAC  TH2    3,2
0552  01050 35400405   DAC  TH3    3,3
0553  01051 35400411   DAC  TH4    3,4
0554  01052 35400415   DAC  TH5    3,5
0555  01053 35400421   DAC  TH6    3,6
0556  01054 35400425   DAC  TH7    3,7
0557  01055 35400431   DAC  TH8    3,8
0558  01056 35400435   DAC  TH9    3,9
0559  01057 35400441   DAC  TH10   3,10
```

```
0560  01100 70001100   ØRG  '1100
0561  01100 35400445   DAC  TH11     3,11
0562  01101 35400451   DAC  TH12     3,12
0563  01102 35400455   DAC  FØ1      4,1
0564  01103 35400461   DAC  FØ2      4,2
0565  01104 35400465   DAC  FØ3      4,3
0566  01105 35400471   DAC  FØ4      4,4
0567  01106 35400475   DAC  FØ5      4,5
0568  01107 35400501   DAC  FØ6      4,6
0569  01110 35400505   DAC  FØ7      4,7
0570  01111 35400511   DAC  FØ8      4,8
0571  01112 35400515   DAC  FØ9      4,9
0572  01113 35400521   DAC  FØ10     4,10
0573  01114 35400525   DAC  FØ11     4,11
0574  01115 35400531   DAC  FØ12     4,12
0575  01116 35400535   DAC  FI1      5,1
0576  01117 35400541   DAC  FI2      5,2
0577  01120 35400545   DAC  FI3      5,3
0578  01121 35400551   DAC  FI4      5,4
0579  01122 35400555   DAC  FI5      5,5
0580  01123 35400561   DAC  FI6      5,6
0581  01124 35400565   DAC  FI7      5,7
0582  01125 35400571   DAC  FI8      5,8
0583  01126 35400575   DAC  FI9      5,9
0584  01127 35400601   DAC  FI10     5,10
0585  01130 35400605   DAC  FI11     5,11
0586  01131 35400611   DAC  FI12     5,12
0587  01132 35400615   DAC  SI1      6,1
0588  01133 35400621   DAC  SI2      6,2
0589  01134 35400625   DAC  SI3      6,3
0590  01135 35400631   DAC  SI4      6,4
0591  01136 35400635   DAC  SI5      6,5
0592  01137 35400641   DAC  SI6      6,6
0593  01140 35400645   DAC  SI7      6,7
0594  01141 35400651   DAC  SI8      6,8
0595  01142 35400655   DAC  SI9      6,9
0596  01143 35400661   DAC  SI10     6,10
0597  01144 35400665   DAC  SI11     6,11
0598  01145 35400671   DAC  SI12     6,12
0599  01146 35400675   DAC  SE1      7,1
```

```
0600  01147 35400701        DAC  SE2          7,2
0601  01150 35400705        DAC  SE3          7,3
0602  01151 35400711        DAC  SE4          7,4
0603  01152 35400715        DAC  SE5          7,5
0604  01153 35400721        DAC  SE6          7,6
0605  01154 35400725        DAC  SE7          7,7
0606  01155 35400731        DAC  SE8          7,8
0607  01156 35400735        DAC  SE9          7,9
0608  01157 35400741        DAC  SE10         7,10
0609  01200 70001200        ORG  '1200
0610  01200 00000000 ****
0611  01200 00000000 ****        B    R    B    U    P
0612  01200 00000307 M1    DATA '307,'322,'317,'325,'320,'240
0612  01201 00000322
0612  01202 00000317
0612  01203 00000325
0612  01204 00000320
0612  01205 00000240
0613  01206 00000000 ****        L    E    V    E    L
0614  01206 00000314 M2    DATA '314,'305,'326,'305,'314,'240
0614  01207 00000305
0614  01210 00000326
0614  01211 00000305
0614  01212 00000314
0614  01213 00000240
0615  01214 00000000 ****      NUMBERS
0616  01214 00000000 ****        0    1    2    3    4    5    6    7    8    9
0617  01214 00000260 M3    DATA '260,'261,'262,'263,'264,'265,'266,'267,'270,'271
0617  01215 00000261
0617  01216 00000262
0617  01217 00000263
0617  01220 00000264
0617  01221 00000265
0617  01222 00000266
0617  01223 00000267
0617  01224 00000270
0617  01225 00000271
0618  01226 00000215 M4    DATA '215,'212
0618  01227 00000212
0619  01230 00000000 ****        S    T    A    L    L
```

```
0620  01230 00000323 M5    DATA '323,'324,'301,'314,'314,'240
0620  01231 00000324
0620  01232 00000301
0620  01233 00000314
0620  01234 00000314
0620  01235 00000240
0621  01236 00000000 *           TELETYPE MESSAGE ØUTPUT SUBRØUTINE
0622  01236 00000000 MESS ***    **
0623  01237 03101366       STA   TMPA
0624  01240 04101367       STB   TMPB
0625  01241 00000031       LCS
0626  01242 00001613       FLL   14
0627  01243 00000024       SAP
0628  01244 11101336       BRU   DABL
0629  01245 00000031       LCS                   IF CS 15 IS
0630  01246 00001713       FLL   15
0631  01247 00000024       SAP
0632  01250 11101320       BRU   MESS            ØUTPUT
0633  01251 01301236 LA    LAA*  MESS
0634  01252 02101370       LBA   ZERØ
0635  01253 00000414       FRL   4
0636  01254 04101364       STB   S1
0637  01255 01301236       LAA*  MESS
0638  01256 02101372       LBA   MSK1
0639  01257 00000027       ABA
0640  01260 03101365       STA   S2
0641  01261 14101236       IMS   MESS
0642  01262 02077772       LBA   =-6
0643  01263 01501206 MES1 LAA   M1+6,1          PRINT ''GRØUP''
0644  01264 12101324       SPB   TYPE
0645  01265 00000026       IBS
0646  01266 11101263       BRU   MES1
0647  01267 02101364       LBA   S1
0648  01270 01501214 MES2 LAA   M3,1            PRINT NUMBER
0649  01271 12101324       SPB   TYPE
0650  01272 01000240       LAA   ='240
0651  01273 12101324       SPB   TYPE            TYPE TWØ
0652  01274 01000240       LAA   ='240           SPACES
0653  01275 12101324       SPB   TYPE
0654  01276 02077772       LBA   =-6
```

```
0655  01277 01501214 MES3 LAA  M2+6,1      PRINT ''LEVEL''
0656  01300 12101324      SPB  TYPE
0657  01301 00000026      IBS
0658  01302 11101277      BRU  MES3
0659  01303 01101365      LAA  S2
0660  01304 15000012      CMA  =10
0661  01305 11101314      BRU  MES4
0662  01306 00000033      AØP
0663  01307 06000012      SMA  =10
0664  01310 03101365      STA  S2
0665  01311 01101215      LAA  M3+1        PRINT ''1''
0666  01312 12101324      SPB  TYPE
0667  01313 01101365      LAA  S2
0668  01314 00000005 MES4 TAB
0669  01315 01501214      LAA  M3,1        PRINT SECØND DIGIT
0670  01316 12101324      SPB  TYPE
0671  01317 12101330      SPB  CRLF
0672  01320 02101367 MES5 LBA  TMPB
0673  01321 01101366      LAA  TMPA
0674  01322 00000035      TØI
0675  01323 11301236      BRU* MESS
0676  01324 00000000 TYPE ***  **
0677  01325 00001016      LSL  8
0678  01326 00170101      AØP  1,W
0679  01327 11301324      BRU* TYPE
0680  01330 00000000 CRLF ***  **          CARRIAGE RETURN
0681  01331 01101226      LAA  M4             ·AND
0682  01332 12101324      SPB  TYPE        LINE FEED
0683  01333 01101227      LAA  M4+1
0684  01334 12101324      SPB  TYPE
0685  01335 11301330      BRU* CRLF
0686  01336 01301236 DABL LAA* MESS
0687  01337 02101373      LBA  MSK2        '70000
0688  01340 00000027      ABA
0689  01341 03101374      STA  AAA
0690  01342 01301236      LAA* MESS
0691  01343 02101372      LBA  MSK1        '17
0692  01344 00000027      ABA
0693  01345 00000002      NEG
0694  01346 00000005      TAB
```

```
01347 01101371        LAA  ØNE
01350 00000026 IBS    IBS
01351 11101353        BRU  *+2
01352 11101355        BRU  *+3
01353 00000116        LSL  1
01354 11101350        BRU  IBS
01355 02101374        LBA  AAA
01356 00000030        ØBA
01357 03101361        STA  *+2
01360 00130601        PIU  0
01361 00000000        DATA 0
01362 11101251        BRU  LA
01363 00000001 CHCK   BSS  1
01364 00000001 S1     BSS  1
01365 00000001 S2     BSS  1
01366 00000001 TMPA   BSS  1
01367 00000001 TMPB   BSS  1
01370 00000000 ZERØ   DATA 0
01371 00000001 ØNE    DATA 1
01372 00000017 MSK1   DATA '17
01373 00070000 MSK2   DATA '70000
01374 00000001 AAA    BSS  1
01375 70400000        END
```

#303014A
INTER MAP VERIFY

SYSTEMS ENGINEERING LABORATORIES PROGRAM LIBRARY

PROGRAM DESCRIPTION

 Catalog No. 303014A

IDENTIFICATION: Inter-Map Verification Check Program

AUTHOR: Systems Engineering Laboratories

ACCEPTED: August 30, 1967

PURPOSE: This program is designed to verify the proper execution of specific memory reference instructions which are located on the memory boundary between Map 2 and Map 3.

COMPUTER CONFIGURATION: SEL 810A Computer

Relocatable Loader
Prog. Counter 16060
A-Accum 0 B-Accum 0
After Load Start At '5000
Prog. Cntr.

SUBROUTINES REQUIRED: Not applicable.

STORAGE: '02470-'2515, '2773-'3005, '3470-'3505, '4000-'4504, '5000-'5372 locations.

TIMING: Not applicable.

LOADING PROCEDURE:

1. Load the program into memory by using the Standard Relocatable Loader. When loading is complete the computer will halt. The program should not be relocated.

2. Enter the starting address of the program ('05000) into the program counter.

3. Press the START switch on the console twice.

4. The program will remain in a test loop until a program halt is detected or the CPU is manually halted. The program performs all 18 tests listed in the Method section of this document.

USE: The program is designed to check the proper execution of specific memory reference instructions located on the map boundary between Map 2 and Map 3. The program also checks several skip instructions to determine if the CPU has functioned correctly.

Relocatable Loader
Prog. Counter 16060
A-Accum 0 B-Accum 0
After Load Start At '5000
Prog. Cntr.

Note:
When using the upper 16K load/dump program the relocatable loader program counter 36060, should be utilized to load the program rather than the 16060

METHOD:

1. INSTRUCTIONS

The following list shows the instructions used by the program to verify the proper execution of the CPU on the map boundary and the halt locations associated with each test.

Test No.	Halt (PC location)	Instruction
Test 1	'5022	Store B accumulator
" 2	'5040	Store A accumulator
" 3	'5051	Load A accumulator
" 4	'5063	Load B accumulator
" 5	'5076	Add memory to A
" 6	'5111	Add memory to B
" 7	'5122	Subtract memory from A accumulator
" 8	'3002	Skip A zero (A NQ zero)
		B accumulator equal 1
" 9	'3002	Skip A negative (A not negative)
		B accumulator equal 2
" 10	'3002	Skip A positive (A not positive)
		B accumulator equal 3
" 11	'3006	Skip A negative (A not negative)
		B accumulator equal 4
" 12	'3006	Skip A positive (A not positive)
		B accumulator equal 5
" 13	'3006	Skip A zero (A NQ zero)
		B accumulator equal 6
" 14	'5225	Add memory to A accumulator (Indirect)
		B accumulator equal 7
" 15	'5241	Subtract memory from A accumulator (Indirect)
		B accumulator equal 10
" 16	'3003	Increment memory and skip
	'5265	B accumulator equal 11
" 17	'3474	Store place and branch
		B accumulator equal 12
" 18	'3003	Skip no overflow
	'5311	B accumulator equal 13

2. TEST DESCRIPTION

The program is designed to use locations '2774 thru '3004 as test locations. The program will insert the operands that are to be checked into the test locations from the main program starting at location '5000.

The primary purpose of the program is to ensure that memory reference instructions on a map boundary use the memory location within the same map as the

METHOD (CONT'D):

2. TEST DESCRIPTION (CONT'D)

instruction itself. A malfunction will be detected if the memory address accessed is in the next map instead of the map containing the instruction.

Test 1. Store B Accumulator.

The program will execute a Store B Accumulator instruction with the memory reference address in the same map as the instruction. The program location of the Store B Accumulator command is location '02777 and the memory address is '02504. The test locations are as follows:

Location	OP Code	Address	Comment
'02776	NOP		Augmented instruction.
'02777	STB	T5	T5 location is '02504
'03000	BRU*	Test	Return to main program

Halt Location.

If the CPU has functioned properly the program will proceed to Test 2, otherwise a halt will occur at location '05022. This indicates that the memory address of the Store B instruction was in location '03505 of the next map rather than in location '02504 of the map that contained the instruction.

The A accumulator contains the data from location '02504, the B accumulator contains the data from location '03504.

Test 2. Store A Accumulator.

The program will execute a Store A Accumulator instruction with the memory reference address in the same map as the instruction. The program will Store the contents of the A accumulator from location '02777. The memory address is '02504. The test locations are as follows:

Location	OP Code	Address	Comment
'02776	NOP		Augmented instruction
'02777	STA	T5	T5 location is '2504
'03000	BRU*	Test	Return to main program

Halt Condition.

If the CPU has functioned properly the program will proceed to Test 3, otherwise a halt will occur at location '05040. This indicates that the memory address of

METHOD (CONT'D):

Test 2. Store A Accumulator (Cont'd)

the Store A instruction was in location '3504 of the next map rather than in location '2504 of the map that contained the instruction.

The A accumulator contains the contents of location '2504 which should be '177777. The B accumulator contains the contents of location '3504 which should be '000000. If the data in A is '000000 and the B accumulator contains '177777 the CPU has a malfunction.

Test 3. Load A Accumulator.

The program will execute a Load A Accumulator instruction with the memory reference address in the same map as the instruction. The A accumulator should contain 177777. If the memory address was in the next map the A accumulator will contain zero's which indicate a CPU malfunction. The test locations are as follows:

Location	OP Code	Address	Comment
'02776	NOP		Augmented instruction
'02777	LAA	T1	T1 location is '2500
'03000	BRU*	Test	Return to main program

Halt Location.

If the CPU has functioned properly the program will proceed to Test 4, otherwise the program will halt at location '05051.

This indicates that the memory address of the Load A instruction was in location '3500 of the next map rather than in location '02500 of the map that contained the instruction. The A accumulator has the incorrect data.

Test 4. Load B Accumulator.

The program will execute a Load B Accumulator instruction with the memory reference address in the same map as the instruction. The B accumulator should contain '177777. If the memory address was in the next map the B accumulator will contain zeros which indicate a CPU malfunction. The test locations are as follows:

Location	OP Code	Address	Comment
'02776	NOP		Augmented instruction
'02777	LBA	T1	T1 location is '3500
'03000	BRU*	Test	Return to main program

METHOD (CONT'D):

Test 4. Load B Accumulator (Cont'd)

Halt Location.

If the CPU has functioned properly the program will proceed to Test 5, otherwise the program will halt at location '05063.

This indicates that the memory address of the Load B Accumulator instruction was in location '3500 of the next map rather than in location '2500 of the map that contained the instruction. The A accumulator has the incorrect data.

Test 5. Add Memory to A Accumulator.

The program will execute an Add Memory to A Accumulator instruction with the memory reference address in the same map as the instruction.. The A accumulator should contain '177777. If the memory address was from the next map the A accumulator will contain '077777.

Halt Location.

If the CPU has functioned properly the program will proceed to Test 6, otherwise the program will halt at location '05076. This indicates that the memory address of the Add Memory to A accumulator was in location '03502 of the next map rather than in location '02502 of the map that contained the instruction. The test locations are as follows:

Location	OP Code	Address	Comment
'02776 '02777 '03000	NOP AMA BRU*	 T3 Test	Augmented instruction T3 EQ T1 000001

Test 6. Add Memory to B Accumulator.

The program will execute an Add Memory to B Accumulator instruction with the memory address in the same map as the instruction. The B accumulator after execution of the instruction should contain '177777. If the memory address was in the next map, the B accumulator will contain '077777 indicating a malfunction in the CPU. The test locations are as follows:

Location	OP Code	Address	Comment
02776 02777 03000	NOP AMB BRU*	 T3 Test	Augmented instruction T3 EQ 000001 Return

METHOD (CONT'D):

Test 6. Add Memory to B Accumulator (cont'd).

Halt Location.

If the CPU has functioned properly, the program will proceed to Test 7, otherwise a halt will occur at location '05111. The A accumulator will contain the incorrect data.

Test 7. Subtract Memory from A Accumulator.

The program will execute Subtract Memory from A Accumulator instruction with the memory address in the same map as the instruction. The test locations are as follows:

Location	OP Code	Address	Comment
'02776	NOP		A contains 177777
'02777	SMA	T4	T4 EQ to '100000
'03000	BRU*	Test	Return

Halt Location.

If the CPU has functioned properly the program will proceed to Test 8, otherwise a halt will occur at location '05122. The A accumulator will display the incorrect data value of '177777. The correct data value is '077777.

Test 8. Skip A Zero.

The augmented instruction SAZ will be executed from location '02776. The data in the A accumulator is not equal to zero, therefore the program should not cross the map boundary.

Halt Locations.

If the CPU has functioned peoperly the program will proceed to Test 9, otherwise a halt will occur at location '03002. This indicates that the CPU has crossed the map boundary which is an error. The B accumulator will contain '000001 indicating the error number.

Test 9. Skip A Negative.

The augmented instruction SAN will be executed from location '02776. The data in the A accumulator is not negative, therefore the program should not cross the map boundary.

METHOD (CONT'D):

Test 9. Skip A Negative (cont'd).

Halt Locations.

If the CPU has functioned properly the program will proceed to Test 10, otherwise a halt will occur at location '03002. This indicates that the CPU has crossed the map boundary which is an error. The B accumulator will contain '000002 indicating the error number.

Test 10. Skip A Positive.

The augmented instruction SAP will be executed from location '02776. The data in the A accumulator is not positive, therefore the program should not cross the map boundary.

Halt Location.

If the CPU has functioned properly the program will proceed to Test 11, otherwise a halt will occur at location '03002. This indicates that the CPU has crossed the map boundary which is an error. The B accumulator will contain '000003 indicating the error number.

Test 11. Skip A Negative.

The augmented instruction SAN will be executed from location '02777. The data in the A accumulator will be a positive number, therefore the program will cross the map boundary to the first location of the next map.

Halt Location.

If the CPU has functioned properly the program will proceed to Test 12, otherwise a halt will occur at location '03006. This indicates that the CPU has crossed the map boundary but skipped incorrectly. The B accumulator will contain '000004 indicating the error number.

Test 12. Skip A Positive.

The augmented instruction SAP will be executed from location '02777. The data in the A accumulator will be negative, therefore the program will cross the map boundary and execute the first instruction of the next map.

Halt Location.

If the CPU has functioned properly the program will proceed to Test 13, otherwise a halt will occur at location '03006. This indicates that the CPU has skipped on A positive when the data in A was negative. The B accumulator will contain '000005 indicating the error number.

METHOD (CONT'D):

Test 13. Skip A Zero.

The augmented instruction SAZ will be executed from location '027777. The data in the A accumulator will not be zero, therefore the program will cross the map boundary and execute the first instruction of the next map.

Halt Location.

If the CPU has functioned properly the program will proceed to Test 14, otherwise a halt will occur at location '03006. This indicates that the CPU has skipped on A zero when the data in A was positive. The B accumulator will contain 000006 indicating the error number.

Test 14. Add Memory to A (Indirect)

The program will execute an Add Memory to A Accumulator instruction with the indirect-bit set. The memory address will be indirect thru the map which contains the instruction. When the command has been executed the value in A should be '177777. If the memory address was in the next map the value in A will be '100000. The test locations are as follows:

Location	OP Code	Address	Comment
'02776	NOP		Augmented instruction
'02777	AMA*	T2	A EQ 177777
'03000	BRU*	Test	Return

Halt Location.

If the CPU has functioned properly the program will proceed to Test 15, otherwise a halt will occur at location '05225. The operator may visually observe the contents of A accumulator. The data value should be '177777. Any other value indicates an error. The B accumulator will contain 000007 indicating the error number.

Test 15. Subtract Memory from A (Indirect).

The program will execute a Subtract Memory from A Indirect instruction with the indirect address in the same map as the instruction. When the command has been executed, the data in the A accumulator should be '077777. If the memory address was in the next map the value will be '177777. The test locations are as follows:

Location	OP Code	Address	Comment
'02776	FRA		A EQ 177777
'02777	SMA*	T4	T4 EQ 100000
'03000	BRU*	Test	Return

METHOD (CONT'D):

Test 15. Subtract Memory from A (Indirect) (cont'd)

Halt Location.

If the CPU has functioned properly the program will proceed to Test 16, otherwise a halt will occur at location '05241. The operator may visually observe the contents of the A accumulator. The data should be '077777. Any other data indicates an error. The B accumulator will contain 000010 indicating the error number.

Test 16. Increment Memory and Skip.

The program will execute an Increment Memory and Skip instruction with the memory address in the same map as the instruction. The A accumulator after execution of the instruction should contain 000000. If the memory address was in the next map, the data in A will be 000001. The test locations are as follows:

Location	OP Code	Address	Comment
'02776 '03000 '03001 '03002	NOP IMS HLT BRU*	T6	Augmented Code T6 EQ 177777

Halt Location.

If the CPU has functioned properly the program will proceed to test 17, otherwise a halt will occur at location '03003 or '05265. The B accumulator contains the error number count which is equal to 000011. The halt at '03003 indicates that the IMS instruction didnot skip properly. The halt at '05265 indicates that the incremented memory address was in the next map rather than in the same map as the instruction.

Test 17. Store Place and Branch.

The program will execute a Store Place and Branch instruction with the branch location in the same map as the SPB instruction. The subroutine in the same map will clear the A accumulator indicating that the subroutine was entered. The test locations are as follows:

Location	OP Code	Address	Comment
'02776 '02777 '03000	NOP SPB BRU*	THMP Test	Augmented instruction location is 2470 Return

METHOD (CONT'D):

Test 17. Store Place and Branch (cont'd).

Halt Location.

If the CPU has functioned properly the program will proceed to Test 18, otherwise a halt will occur at location '03474. The operator may visually observe the contents of the A accumulator. The data value should be 177777, which indicates an error. The B accumulator should have a value of 000012. This verifies that the SPB test is the one which caused the failure.

Test 18. Skip No Overflow Test.

The program will execute a Skip No Overflow instruction. The skip instruction crosses an intermap boundary. The overflow latch is not set. The test locations are as follows:

Location	OP Code	Address	Comment
02776	SOF		Overflow not set
02777	HLT		Incorrect skip
03000	BRU*	Test	Return

Halt Location..

If the CPU has functioned properly, the progra will reset all counters and begin with Test 1, otherwise the program will halt at location '3003 or '05311. The B accumulator should contain a value of 000013. The halt at location '03003 indicates that the SOF didnot skip properly to the next map.

```
1
0001  00000 00000000 ***        INTER-MAP VERIFICATIØN CHECK PRØGRAM 810A      303014A
0002  00000 00000000 ***        J.B. BØYER     AUG 30, 1967
0003  02470 60002470       ØRG  '2470
0004  02470A00000000 THMP  ZZZ                   THIS MAP
0005  02471 00000033       NØP
0006  02472 00000003       CLA
0007  02473 11202470       BRU* THMP
0008  02500 60002500       ØRG  '2500
0009  02500 00177777 T1    DATA '177777
0010  02501 00077777 T2    DATA '077777
0011  02502 00000001 T3    DATA '000001
0012  02503 00100000 T4    DATA '100000
0013  02504 00000000 T5    DATA 0
0014  02505 00000000 T6    DATA 0                 SAME MAP
0015  02506 14002505 IMS   IMS  T6
0016  02507 05202510 AMAA  AMA* T6D
0017  02510 25402502 T6D   DAC  T3
0018  02511 06202512 SMAA  SMA* T7D
0019  02512 25402503 T7D   DAC  T4
0020  02513 12002470 SPB   SPB  THMP
0021  02514 11002515 BRUB  BRU  T7
0022  02515 11202773 T7    BRU* TEST
0023  02773 60002773       ØRG  '2773
0024  02773 00000000 TEST  ZZZ  **
0025  02774 00000033       NØP                    LØCATIØN 2774
0026  02775 00000033       NØP                    LØCATIØN 2775
0027  02776 00000033       NØP                    LØCATIØN 2776
0028  02777 00000033       NØP                    LØCATIØN 2777
0029  03000 00000033       NØP                    LØCATIØN 3000
0030  03001 00000033       NØP                    LØCATIØN 3001
0031  03002 00000033       NØP                    LØCATIØN 3002
0032  03003 00000033       NØP                    LØCATIØN 3003
0033  03004 00000033       NØP                    LØCATIØN 3004
0034  03005 00000000 *
0035  03005 11202773       BRU* TEST
0036  03006 11202773 BRUA  BRU* TEST
0037  03007 00002777 TES1  EQU  TEST+4
0038  03470 60003470       ØRG  '3470
0039  03470A00000000 NTMP  ZZZ                   NEXT MAP IF PRØGRAM CØUNTER ADVANCED
```

```
0040  03471 00000033        NØP
0041  03472 00000000        HLT                 INDICATES INCØRRECT BRANCH
0042  03473 11203470        BRU* NTMP
0043  03500 60003500        ØRG  '3500
0044  03500 00000000 TA     DATA 0
0045  03501 00000000 TB     DATA 0
0046  03502 00000000 TC     DATA 0
0047  03503 00000000 TD     DATA 0
0048  03504 00000000 TE     DATA 0
0049  03505E00000000 TF     DATA                NEXT MAP
0050  04000 60004000        ØRG  '4000
0051  04000 01004500 LAA    LAA  T1D            T1D EQ 177777
0052  04001 02004500 LBA    LBA  T1D
0053  04002 05004502 AMA    AMA  T3D            T3D EQ 000001
0054  04003 16004502 AMB    AMB  T3D            T3D EQ 000001
0055  04004 06004503 SMA    SMA  T4D            T4D EQ 100000
0056  04005 04004504 STB    STB  T5D
0057  04006 03004504 STA    STA  T5D            T5D EQ 0
0058  04007 00000022 SAZA   SAZ
0059  04010 00000024 SAP    SAP
0060  04011 00000023 SAN    SAN
0061  04012 00001712 FRA    FRA  15
0062  04013 00001716 LSL    LSL  15
0063  04014 00000025 SØF    SØF
0064  04015 25405372 LC04   DAC  L304+1
0065  04016 25405365 LC00   DAC  L300
0066  04500 60004500        ØRG  '4500
0067  04500 00177777 T1D    DATA '177777
0068  04501 00077777 T2D    DATA '077777
0069  04502 00000001 T3D    DATA '000001
0070  04503 00100000 T4D    DATA '100000
0071  04504 00000000 T5D    DATA '0
0072  05000 60005000        ØRG  '5000
0073  05000 12005335 TAR    SPB  STBS
0074  05001 00000000 ****S                       STØRE B INSTRUCTIØN
0075  05001 00000003        CLA
0076  05002 03005332        STA  CNT              CØUNTER
0077  05003 01004005        LAA  STB            STB INSTRUCTIØN
0078  05004 03002777        STA  TES1           STØRED INTØ TEST LØCATIØN
0079  05005 00000003        CLA
```

```
0080  05006 03002504        STA  T5      LØCATIØN IN SAME MAP AS STB
0081  05007 03003504        STA  TE      LØCATIØN IN NEXT MAP
0082  05010 14005332        IMS  CNT     CØUNTER
0083  05011 02002500        LBA  T1      T1 EQ TØ 177777
0084  05012 12002773        SPB  TEST    TEST SUBRØUTINE
0085  05013 01002504        LAA  T5      T5 IS IN SAME MAP AS STB
0086  05014 15002500        CMA  T1      T1 EQ 177777
0087  05015 11005017        BRU  *+2     NØ
0088  05016 11005021        BRU  ØT      YES GØ TØ NEXT TEST
0089  05017 02003504        LBA  TE      GET VALUE INTØ B
0090  05020 00000000        HLT          A CØNTAINS DATA ØF SAME MAP LØCATIØN
0091  05021 00000000 *                   B CØNTAINS DATA ØF NEXT MAP LØCATIØN
0092  05021 00000000 *                   CØRRECT DATA VALUE SHØULD BE 177777
0093  05021 01004006 ØT   LAA  STA       STØRE A INSTRUCTIØN
0094  05022 03002777        STA  TES1
0095  05023 00000000 *****               CHECK STØRE A INSTRUCTIØN
0096  05023 00000003        CLA
0097  05024 03002504        STA  T5      SAME MAP AS STA
0098  05025 03003504        STA  TE      NEXT MAP
0099  05026 14005332        IMS  CNT     CØUNTER INCREMENTED
0100  05027 01002500        LAA  T1      T1 EQ TØ 177777
0101  05030 12002773        SPB  TEST
0102  05031 01002504        LAA  T5      CHECK SAME MAP FØR DATA
0103  05032 15002500        CMA  T1      T1 EQ 177777
0104  05033 11005035        BRU  *+2
0105  05034 11005037        BRU  ØA
0106  05035 02003504        LBA  TE
0107  05036 00000000        HLT          A CØNTAINS VALUE FRØM SAME MAP AS STA
0108  05037 00000000 ****                B CØNTAINS DATA FRØM NEXT MAP
0109  05037 00000033 ØA   NØP
0110  05040 01004000        LAA  LAA
0111  05041 03002777        STA  TES1    LAA SET TØ LØAD FRØM SAME MAP
0112  05042 14005332        IMS  CNT     CØUNTER
0113  05043 00000003        CLA
0114  05044 03003504        STA  TE
0115  05045 12002773        SPB  TEST    TEST SUBRØUTINE
0116  05046 00000023        SAN
0117  05047 00000000        HLT
0118  05050 14005332        IMS  CNT     CØUNTER INCREMENTED
0119  05051 01004001        LAA  LBA     LBA CHECK
```

```
0120  05052 03002777        STA  TES1     SET TEST LØCATIØN TØ LBA INSTRUCTIØN
0121  05053 00000003        CLA           SET A+B TØ ZERØS
0122  05054 03003504        STA  TE
0123  05055 00000005        TAB
0124  05056 12002773        SPB  TEST     TEST SUBRØUTINE
0125  05057 00000004        TBA
0126  05060 00000023        SAN           CHECK A FØR NEGATIVE VALUE
0127  05061 00000000        HLT
0128  05062 00000000 ****$                CHECK ADD MEMØRY TØ A
0129  05062 01004002        LAA  AMA
0130  05063 03002777        STA  TES1     STØRE AMA INSTRUCTIØN INTØTEST LØCATIØN
0131  05064 14005332        IMS  CNT      CØUNTER FØR INSTRUCTIØN
0132  05065 01002501        LAA  T2       T2 EQUAL TØ 077777
0133  05066 12002773        SPB  TEST     TEST
0134  05067 00000025        SØF
0135  05070 11005071        BRU  *+1      TURN ØFF ØVERFLØW
0136  05071 15002503        CMA  T4       T4 EQ 100000
0137  05072 11005074        BRU  *+2
0138  05073 11005075        BRU  *+2
0139  05074 00000000        HLT           VALUE ØF INCØRRECT DATA IS IN A ACCUMULATØR
0140  05075 00000000 *****                CHECK ADD MEMØRY TØ B
0141  05075 14005332        IMS  CNT      CØUNTER
0142  05076 01004003        LAA  AMB      AMB INSTRUCTIØN USES T3 EQ TØ
0143  05077 03002777        STA  TES1     STØRE AMB INSTRUCTIØN INTØ TEST LØCATIØN
0144  05100 00000003        CLA
0145  05101 02002501        LBA  T2       T2 VALUE IS 077777
0146  05102 12002773        SPB  TEST     TEST RØUTINE
0147  05103 00000004        TBA
0148  05104 15002503        CMA  T4       T4 EQ TØ 100000
0149  05105 11005107        BRU  *+2
0150  05106 11005110        BRU  *+2
0151  05107 00000000        HLT
0152  05110 00000000 *****                CHECK SMA INSTRUCTIØN
0153  05110 01004004        LAA  SMA      SMA USES T4 EQ TØ 100000
0154  05111 03002777        STA  TES1     STØRE SMA INTØ TEST LØCATIØN
0155  05112 14005332        IMS  CNT
0156  05113 01002500        LAA  T1       T1 VALUE IS 177777
0157  05114 12002773        SPB  TEST     TEST SUBRØUTINE
0158  05115 15002501        CMA  T2       T2 VALUE IS 077777
0159  05116 11005120        BRU  *+2
```

```
0160  05117 11005121        BRU   *+2
0161  05120 00000000        HLT                    A CØNTAINS INCØRRECT VALUE SHØULD BE 077777
0162  05121 00000000 ****                          SAZ TEST A ACCUMULATØR NØT EQ ZERØ
0163  05121 00000000 *                             SHØULD NØT CRØSS MAP BØUNDARY LAST LØCATIØN ØF
0164  05121 00000000 *                             TEST MAP HAS A BRU* TEST WHICH SHØULD RETURN TØ
0165  05121 00000000 *                             MAIN PRØGRAM
0166  05121 00000000 *                             B ACC CØNTAINS ERRØR NUMBER
0167  05121 01005334        LAA   HLT
0168  05122 03205365        STA*  L300             TEST LØCATIØN
0169  05123 14005332        IMS   CNT              INCREMENT CØUNTER
0170  05124 00000003        CLA
0171  05125 00000005        TAB
0172  05126 03005333        STA   STBT             STBT WILL BE TEMPØRARY STØRAGE FØR CØUNTER
0173  05127 03005372        STA   L304+1           TEST LØCATIØN
0174  05130 01004007        LAA   SAZA
0175  05131 03205363        STA*  L276             TEST LØCATIØN
0176  05132 01003006        LAA   BRUA
0177  05133 03205364        STA*  L277             TEST LØCATIØN
0178  05134 00000026        IBS                    INCREMENT CØUNTER
0179  05135 00000033        NØP
0180  05136 04005333        STB   STBT             SAVE ERRØR CØUNTER
0181  05137 12002773        SPB   TEST
0182  05140 14005332        IMS   CNT
0183  05141 00000000 ****         SAN TEST A ACCUMULATØR EQ PØSITIVE NUMBER
0184  05141 00000000 *                             WHICH IS THE AUGMENTED INSTRUCTIØN
0185  05141 12005353        SPB   BUPD             INCREMENT B SUBRØUTINE
0186  05142 01004011        LAA   SAN
0187  05143 03205363        STA*  L276             TEST LØCATIØN
0188  05144 12002773        SPB   TEST             TEST SUBRØUTINE
0189  05145 00000000 ****                          SAP TEST A ACCUMULATØR EQ NEGATIVE NUMBER
0190  05145 14005332        IMS   CNT              INCREMENT CØUNTER
0191  05146 12005353        SPB   BUPD             INCREMENT B SUBRØUTINE
0192  05147 01004010        LAA   SAP              SAP SET TØ TEST LØCATIØN
0193  05150 03205363        STA*  L276             TEST LØCATIØN
0194  05151 01004503        LAA   T4D              T4D EQ 100000
0195  05152 12002773        SPB   TEST             TEST SUBRØUTINE
0196  05153 01005331        LAA   SAZ
0197  05154 03205365        STA*  L300
0198  05155 01003006        LAA   BRUA             TEST LØCATIØN
0199  05156 03205372        STA*  L304+1
```

```
0200  05157 12005335        SPB   STBS        RESET CØUNTERS
0201  05160 01004011        LAA   SAN
0202  05161 03205364        STA*  L277        TEST LØCATIØN
0203  05162 01003006        LAA   BRUA
0204  05163 03205365        STA*  L300        NEXT MAP
0205  05164 01005334        LAA   HLT         HALT
0206  05165 03205371        STA*  L304        HALT SHØULD ØCCUR
0207  05166 12005353        SPB   BUPD        INCREMENT CØUNTER SUBRØUTINE
0208  05167 01004011        LAA   SAN         PØSITIVE NUMBER IN A
0209  05170 12002773        SPB   TEST
0210  05171 00000000 *                        SAP TEST ØVER MAP
0211  05171 14005332        IMS   CNT         CØUNTER
0212  05172 12005353        SPB   BUPD        INCREMENT B CØUNTER
0213  05173 01004010        LAA   SAP
0214  05174 03205364        STA*  L277        TEST LØCATIØN
0215  05175 01004503        LAA   T4D         T4D EQ 100000
0216  05176 12002773        SPB   TEST        TEST SUBRØUTINE
0217  05177 00000000 *
0218  05177 14005332        IMS   CNT         CØUNTER
0219  05200 12005353        SPB   BUPD        INCREMENT B CØUNTER
0220  05201 01004007        LAA   SAZA
0221  05202 03205364        STA*  L277        TEST LØCATIØN
0222  05203 01004503        LAA   T4D         T4D EQ 100000
0223  05204 12002773        SPB   TEST        TEST SUBRØUTINE
0224  05205 00000000 *
0225  05205 12005335        SPB   STBS        RESET ALL TEST LØCATIØNS TØ NØP
0226  05206 00000000 ****
0227  05206 00000000 *                        MAP
0228  05206 00000000 *****                    AMA* TEST INSTRUCTIØN IS LØCATED IN LAST
0229  05206 00000000 *                        MEMØRY CELL ØF THE MAP
0230  05206 14005332        IMS   CNT         INCREMENT CØUNTER
0231  05207 12005353        SPB   BUPD
0232  05210 01005331        LAA   SAZ
0233  05211 03205363        STA*  L276        RESET TEST LØCATIØN TØ NØP
0234  05212 01002507        LAA   AMAA
0235  05213 03002777        STA   TES1        TES1 IS THE TEST LØCATIØN
0236  05214 01002501        LAA   T2          T2 EQ 077777
0237  05215 12002773        SPB   TEST        GØ TØ TEST
0238  05216 00000025        SØF
0239  05217 00000033        NØP
```

```
05220 15002503        CMA   T4          T4 EQ 100000
05221 11005223        BRU   *+2
05222 11005224        BRU   *+2
05223 00000000        HLT               A HAS INCORRECT DATA SHOULD BE 100000
05224 00000000 *****                    SMA* TEST
05224 00000000 *                        INSTRUCTION LOCATED IN LAST CELL OF THE MAP
05224 12005353        SPB   BUPD
05225 01004012        LAA   FRA
05226 03002776        STA   TES1-1      SHIFT THRU ALL BITS
05227 01002511        LAA   SMAA
05230 03002777        STA   TES1        TEST LOCATION
05231 14005332        IMS   CNT         COUNTER INCREMENT
05232 01004503        LAA   T4D         T4D EQ 100000
05233 00000000 *                        FRA WILL SET ALL BITS TO N
05233 00000000 *                        FRA WILL SET ALL BITS TO ONES PRIOR TO
05233 00000000 *                        SUBTRACT INDIRECT
05233 12002773        SPB   TEST        TEST SUBROUTINE
05234 02005333        LBA   STBT
05235 15002501        CMA   T2
05236 11005240        BRU   *+2
05237 11005241        BRU   *+2         DATA EQ
05240 00000000        HLT               A EQ TO INCORRECT DATA
05241 01005331        LAA   SAZ
05242 03002776        STA   TES1-1
05243 00000000 ****                     IMS TEST
05243 12005353        SPB   BUPD
05244 01004500        LAA   T1D
05245 03002505        STA   T6          T6 EQ 177777
05246 00000003        CLA
05247 03003505        STA   TF          ZERO IN TF
05250 00000000 *                        INCREMENT B COUNTER
05250 03205365        STA*  L300        HLT WILL OCCUR IF MEMORY NOT ZERO
05251 01002506        LAA   IMS
05252 03205364        STA*  L277
05253 14005332        IMS   CNT         COUNTER
05254 01003006        LAA   BRUA        BRU* SET TO 2ND LOCATION OF MAP
05255 03205366        STA*  L301
05256 12002773        SPB   TEST        TEST SUBROUTINE
05257 01002505        LAA   T6
05260 00000023        SAN
```

```
05261 11005270        BRU  ØPR
05262 01002505        LAA  T6
05263 00000000        HLT
05264 01002505        LAA  T6
05265 02003505        LBA  TF
05266 00000033        NØP
05267 02005333        LBA  STBT
05270 00000003 ØPR    CLA
05271 03002505        STA  T6          RESET TEST LØCATIØN TØ ZERØ
05272 03003505        STA  TF          RESET
05273 00000000 *                       A CØNTAINS SAME MAP LØCATIØN WHICH SHØULD BE
05273 00000000 *                       ZERØ ØRIGINAL DATA WAS 177777
05273 00000000 *                       CHECK FØR VALUE
05273 00000000 *
05273 00000000 ********                SPB TEST RØUTINE
05273 01004013        LAA  LSL         LSL 15 TØ LØCATIØN X776
05274 03205363        STA* L276        NEXT TØ LAST LØCATIØN ØF THE MAP
05275 01002513        LAA  SPB
05276 03205364        STA* L277        SET SPB INSTRUCTIØN TØ TEST LØCATIØN
05277 01005334        LAA  HLT
05300 03205366        STA* L301        SET HALT TØ
05301 12005353        SPB  BUPD        INCREMENT CØUNTER FØR ERRØR DISPLAY
05302 01003006        LAA  BRUA
05303 03205365        STA* L300        RETURN BRU* ØUT ØF TEST PRØGRAM
05304 01002500        LAA  T1          T1 EQ TØ 000001
05305 12002773        SPB  TEST
05306 00000022        SAZ
05307 00000000        HLT              CHECK B ACCUMULATØR FØR ERRØR NUMBER
05310 00000000 *                       IF SPB FUNCTIØNED PRØPERLY A SHØULD BE CLEAR
05310 00000000 *
05310 00000003        CLA
05311 03002470        STA  THMP        CLEAR SUBRØUTINE ENTRANCE LØCATIØN
05312 03003470        STA  NTMP        CLEAR SUBRØUTINE ENTRANCE LØCATIØN
05313 12005335 ØK1A   SPB  STBS
05314 00000000 ********                SØF TEST
05314 12005353        SPB  BUPD        INCREMENT B CØUNT
05315 12005335        SPB  STBS
05316 01004014        LAA  SØF         ØVERFLØW CHECK ØVERFLØW WILL BE SET
05317 03205363        STA* L276        2776 CØNTAINS SØF INSTRUCTIØN
05320 00000003        CLA
```

```
0320  05321 03205364        STA* L277        SET TEST LØCATIØN 2777 TØ HALT
0321  05322 01003006        LAA  BRUA
0322  05323 03205365        STA* L300
0323  05324 14005332        IMS  CNT         INCREMENT CØUNTER
0324  05325 01002502        LAA  T3          T3 EQ 000001
0325  05326 05002502        AMA  T3          NØ ØVERFLØW
0326  05327 12002773        SPØ  TEST
0327  05330 11005000        BRU  TAR
0328  05331 00000033 SAZ    NØP
0329  05332 00000000 CNT    DATA 0
0330  05333 00000000 STBT   DATA 0           TEMP STØRAGE FØR ERRØR CØUNTER
0331  05334 00000000 HLT    HLT
0332  05335 00000000 STBS   ZZZ  **
0333  05336 04005333        STØ  STBT
0334  05337 02077773 STRT   LØA  *-5
0335  05340 01005331        LAA  SAZ
0336  05341 03605372        STA* L304+1,1    SET TEST LØCATIØNS TØ NØP
0337  05342 00000026        IBS
0338  05343 11005340        BRU  *-3
0339  05344 02077774        LØA  *-4
0340  05345 01005331        LAA  SAZ
0341  05346 03605365        STA* L300,1      SET TEST LØCATIØNS TØ NØP
0342  05347 00000026        IBS
0343  05350 11005345        BRU  *-3
0344  05351 02005333        LØA  STBT
0345  05352 11205335        BRU* STBS
0346  05353 00000000 BUPD   ZZZ  **          CØUNTER UPDATE SUBRØUTINE
0347  05354 00000000 *
0348  05354 02005333        LØA  STBT
0349  05355 00000026        IBS              INCREMENT ERRØR CØUNTER
0350  05356 00000033        NØP
0351  05357 04005333        STØ  STBT        SAVE NEW ERRØR NUMBER
0352  05360 11205353        BRU* BUPD
0353  05361 00000000 *
0354  05361 25402774 L274   DAC  '2774        LØCATIØNS TØ BE USED
0355  05362 25402775 L275   DAC  '2775        TØ CHECK INTER MAP
0356  05363 25402776 L276   DAC  '2776
0357  05364 25402777 L277   DAC  '2777
0358  05365 25403000 L300   DAC  '3000
0359  05366 25403001 L301   DAC  '3001
```

```
0360  05367 25403002 L302 DAC  '3002
0361  05370 25403003 L303 DAC  '3003
0362  05371 25403004 L304 DAC  '3004
0363  05372 25403005 L305 DAC  '3005
0364  05373 60400000      END
```

SEL PROGRAM LIBRARY

PROGRAM DESCRIPTION

 Catalog No. 310002B

IDENTIFICATION: Paper Tape Reproducer/Verifier

AUTHOR: S. R. Brandt, SEL

ACCEPTED: 3 March 1967

PURPOSE: To reliably reproduce paper tape of any size, within a minimum amount of core storage.

COMPUTER CONFIGURATION: Any 810A computer; High Speed Paper Tape optional.

SUBROUTINES REQUIRED: None

STORAGE: 1465_{10}

TIMING: N/A

USE:

1. Load with Relocatable Loader

2. Options

SNS 0 - Input Option
a. OFF - read from ASR-33
[redacted]

SNS 1 - Output Option
a. OFF - punch on ASR-33
[redacted].

Above two switches may be used in any combination.

SNS 2 - ON to read source tape through continuously (no stopping) to obtain accurate verification counts.

A REGISTER - clear it and press start to re-verify a tape that did not verify correctly the first time.

Note!
When using the upper 16K load/dump program the relocatable loader, program counter 36060 should be utilized to load the program rather than the 16060

Relocatable Loader
Prog. Counter 16060
A-Accum '2000 B-Accum 0
After Load Start At '2000
Prog. Cntr.

Relocatable Loader
Prog. Counter 16060
A-Accum '2000 B-Accum 0
After Load Start At '2000
Prog. Cntr.

3. It is a requirement of this program that the input or source tape contain a stop code at the very end. Thi stop code consists of three (3) consecutive "colon" characters (full ASCII code 272). This stop code is reproduced into the new tape.

4. Operating Procedure:

   a. Load the Tape Copy/Verify Program with relocatable loader.
   b. Set Sense Switches 0 and 1 as desired.
   c. Set Sense Switch 2 ON to read the original tape through to obtain verification counts.
   d. Ready the original tape on the appropriate device.
   e. Press START; tape will read through continuously until the Stop Code is encountered.
   f. Reset Sense Switch 2 to OFF.
   g. Ready the original tape again.
   h. Press START and new tape will be punched out; ~~when punching is completed, the program compares verification counts taken when reading the original tape in continuously against the same counts taken when alternately reading and punching 1000 frame segments. This verifies, effectively, the origi tape. If the counts agree, the message "READY TO VERIFY" will type out. If the counts disagree the message "INPUT TAPE DOES NOT VERIFY" types out. If this occurs, throw away the newly punched tape and return to step c. Otherwise, continue.~~
   i. Ready the newly punched tape on the reader and press START. The tape will read through continuously until the Stop Code is encountered and counts will be taken. If these counts agree with the counts taken from the original tape, the message "NO ERR" types out.
   j. If tape does not verify, a message as to the kind of error will type out, i.e., FR ERR for frame error or T1 ERR, T2 ERR etc. up to T8 ERR for from one to eight longitudinal track errors, or A1 ERR, A2 ERR etc. up to A8 ERR, or B1 ERR, B2 ERR, etc. up to B8 ERR for from one to sixteen possible diagonal or bias count errors.

      A frame error occurs when the frame count has been reached and the character just read in was

not the Stop Code. The other errors occur when any one of twenty-four different counts taken on the source tape disagrees with its corresponding count taken on the new tape during verification.

k. If the tape did not verify correctly and it is desired to re-verify the tape, clear the A-register to all zeros and return to step f.

l. To make another copy of the same original, return to step g.

m. To copy a different tape return to step c.

METHOD:

The source tape is first read in continuously with no stopping, until the stop code is reached. High Speed Tape Reader errors most commonly occur when the read operation is completed and the tape motion must come to an abrupt halt. If the tape does not stop quickly enough a frame can slip by the read station. Therefore, the tape is read through continuously to avoid this type of error and obtain accurate verification counts. These counts are taken as follows: as each character is read, one is added to an input frame count. Then, the eight character bits are added into eight longitudinal track counts, bit one in track count one, bit two in track count two, etc. The eight character bits are also added into eight arbitrarily defined "A-Bias" counts and eight "B-Bias" counts, so that altogether the eight character bits are added into twenty-four separate counts, any given track bit adding into three different counts. (The A and B Bias counts are explained subsequently.) When the stop code has been read in and counted, this phase is completed.

The source tape is then read back in, a thousand characters at a time; as each character is read, it is shifted to the left and stored in a thousand word buffer. When the buffer is filled, it is then punched out. As each character is punched, one is added to a frame count and eight character bits are counted the same as above. When the Stop Code has been punched out, the two frame counts and the two sets of twenty-four counts are compared and appropriate messages issued.

Once the output tape has been completed, it is verified by reading it back in and keeping a frame count plus another twenty-four counts, the same as above. Then,

when the Stop Code has been reached, the frame counts are compared and, if not equal, a frame error message is issued. This will catch the adding or dropping of all-zero frames. If this check is passed, each of the original twenty-four counts is compared against its corresponding verify count. Each unequal comparison is noted via the typewriter.

The A and B Bias counts are kept as follows: each A-Bias count has all eight track bits added to it every eight frames, one different track bit per frame and the pattern repeating again on every ninth frame. For example, A-Bias counter A1 has successively added to it track bits 8, 7, 6, 5, 4, 3, 2, 1, 8, 7, 6, ... etc. on down the tape. Counter A2 begins with track bit 7, counter A3 with track bit 6, etc. to counter A8 beginning with track bit 1. The B-Bias counters are kept the same, except that the progression of track bit order is reversed, i.e., counter B1 has successively added to it track bits 1, 2, 3, 4, 5, 6, 7, 8, 1, 2, 3, ... etc. By this method, any given bit on the tape is added into three different counts; which three particular counts out of the twenty-four depends upon the frame count. The purpose of these bias counts is to catch the dropping and adding of punches within the same track, which just the track counts alone would not detect.

```
0001  00000 00000000        REL
0002  00000 00000000 *
0003  00000 00000000 *      810-A  TAPE CØPY/VERIFY  PRØGRAM
0004  00000 00000000 *        * * * AUTHØR- S.R. BRANDT   * * *
0005  00000 00000000 *
0006  00000 01100713 STRT LAA  AIP1          * PICK UP INSTRUC-  AIP 1,W
0007  00001 00130400      SNS  0             * INPUT ØPTIØN SWITCH
0008  00002 11100006      BRU  *+4
0009  00003 00130101      CEU  1,W           * SELECT ASR-33 READER MØDE
0010  00004 00004000      DATA '4000
0011  00005 11100011      BRU  *+4
0012  00006 00130102      CEU  2,W           * ENABLE HSPT READER
0013  00007 00001000      DATA '1000
0014  00010 05000001      AMA  =1            * CHANGE TØ   AIP 2,W
0015  00011 03100502      STA  AIP           * STØRE IN READ SUBRTNE.
0016  00012 01100714      LAA  AØP1          * PICK UP INSTRUC-   AØP 1,W
0017  00013 00130401      SNS  1             * ØUTPUT ØPTIØN SWITCH
0018  00014 11100016      BRU  *+2
0019  00015 11100021      BRU  *+4
0020  00016 00130102      CEU  2,W           * TURN ØN HSPT PUNCH
0021  00017 00004000      DATA '4000
0022  00020 05000001      AMA  =1            * CHANGE TØ   AØP 2,W
0023  00021 03100505      STA  AØP           * STØRE IN PUNCH SUBRTNE.
0024  00022 00130402      SNS  2
0025  00023 11100025      BRU  *+2
0026  00024 11100133      BRU  STR2
0027  00025 02077746      LBA  =-26
0028  00026 00000003      CLA
0029  00027 03500563      STA  RF+26,1       * RESET MASTER VERIFIC. CØUNTS
0030  00030 00000026      IBS
0031  00031 11100027      BRU  *-2
0032  00032 01077770      LAA  =-8
0033  00033 03100710      STA  HLD1
0034  00034 03100711      STA  HLD2
0035  00035 12100501      SPB  READ
0036  00036 00000022      SAZ
0037  00037 11100042      BRU  *+3
0038  00040 11100035      BRU  *-3
```

```
0039  00041 12100501 STR1 SPB  READ
0040  00042 00001016      LSL  8
0041  00043 14100531      IMS  RF              * INCRMNT INPUT FRAME CNT
0042  00044 11100046      BRU  *+2
0043  00045 14100532      IMS  RF+1
0044  00046 03100712      STA  TEMP
0045  00047 02077770      LBA  =-8
0046  00050 00000024 ØUT6 SAP
0047  00051 14500543      IMS  RT1+8,1         * ADD INTØ 8 LØNGITUDINAL TRACK CØUNTS
0048  00052 00000033      NØP                  * FØR ØVFLØ
0049  00053 00000116      LSL  1
0050  00054 00000026      IBS
0051  00055 11100050      BRU  ØUT6
0052  00056 01077770      LAA  =-8
0053  00057 03100664      STA  LØØP
0054  00060 01100712      LAA  TEMP
0055  00061 02100710      LBA  HLD1
0056  00062 00000024 ØT1A SAP
0057  00063 14500553      IMS  RA1+8,1         * ADD TØ A-BIAS CNTS
0058  00064 00000033      NØP                  * FØR ØVFLØ
0059  00065 00000116      LSL  1
0060  00066 14100664      IMS  LØØP
0061  00067 11100071      BRU  *+2
0062  00070 11100075      BRU  ØT2A
0063  00071 00000026      IBS
0064  00072 11100062      BRU  ØT1A
0065  00073 02077770      LBA  =-8
0066  00074 11100062      BRU  ØT1A
0067  00075 04100710 ØT2A STB  HLD1
0068  00076 01077770      LAA  =-8
0069  00077 03100664      STA  LØØP
0070  00100 02100711      LBA  HLD2
0071  00101 00000026      IBS
0072  00102 11100104      BRU  *+2
0073  00103 02077770      LBA  =-8
0074  00104 04100711      STB  HLD2
0075  00105 01100712      LAA  TEMP
0076  00106 00000024 ØT1B SAP
0077  00107 14500563      IMS  RB8+8,1         * ADD TØ B-BIAS CNTS
```

```
0078  00110 00000033        NØP                 * FØR ØVFLØ
0079  00111 00000116        LSL   1
0080  00112 14100664        IMS   LØØP
0081  00113 11100115        BRU   *+2
0082  00114 11100121        BRU   *+5
0083  00115 00000026        IBS
0084  00116 11100106        BRU   ØT1B
0085  00117 02077770        LBA   =-8
0086  00120 11100106        BRU   ØT1B
0087  00121 01100712        LAA   TEMP
0088  00122 15100663        CMA   STØP          * CHK FØR CØLØN CHARAC.
0089  00123 11100125        BRU   *+2
0090  00124 11100130        BRU   *+4
0091  00125 01077775        LAA   =-3
0092  00126 03100616        STA   SCNT
0093  00127 11100041        BRU   STR1
0094  00130 14100616        IMS   SCNT
0095  00131 11100041        BRU   STR1
0096  00132 00000000        HLT
0097  00133 02077745 STR2   LBA   =-27
0098  00134 00000003        CLA
0099  00135 03500616        STA   VF+27,1
0100  00136 00000026        IBS
0101  00137 11100135        BRU   *-2
0102  00140 01100707        LAA   BR1
0103  00141 03100212        STA   ØUT3
0104  00142 01077770        LAA   =-8
0105  00143 03100710        STA   HLD1
0106  00144 03100711        STA   HLD2
0107  00145 00000003        CLA
0108  00146 02077160        LBA   =-400
0109  00147 12100504        SPB   PNCH          * RUN ØUT LEADER
0110  00150 00000026        IBS
0111  00151 11100147        BRU   *-2
0112  00152 12100501        SPB   READ          * READ LEADER
0113  00153 00000022        SAZ
0114  00154 11100156        BRU   *+2
0115  00155 11100152        BRU   *-3
0116  00156 02076030        LBA   =-1000
```

```
00157 11100164        BRU  INP2
00160 00000026 INP4   IBS
00161 11100163        BRU  INP1
00162 11100201        BRU  ØUT1
00163 12100501 INP1   SPB  READ          * READ A FRAME
00164 00001016 INP2   LSL  8
00165 03502665        STA  BUF+1000,1
00166 15100663        CMA  STØP          * CHK FØR CØLØN CHARAC.
00167 11100171        BRU  *+2
00170 11100174        BRU  *+4
00171 01077775        LAA  =-3
00172 03100616        STA  SCNT
00173 11100160        BRU  INP4
00174 14100616        IMS  SCNT          * CHK FØR 3 CØNSECUTIVE CØLØN CHARACS.
00175 11100160        BRU  INP4
00176 01102670        LAA  NØP           * SNS 3 ØN-  FIX TØ END CØPYING
00177 03100212        STA  ØUT3
00200 04100705        STB  TMP1          * CØNTRØLS INCØMPLETE BUFFER WHEN PUNCHING
00201 01076030 ØUT1   LAA  =-1000
00202 03102667        STA  IR1
00203 02102667 ØUT2   LBA  IR1
00204 01502665        LAA  BUF+1000,1    * FETCH NEXT CHARACTER
00205 12100504        SPB  PNCH          * PUNCH A FRAME
00206 14100563        IMS  VF
00207 11100211        BRU  *+2
00210 14100564        IMS  VF+1
00211 12100422        SPB  VFCT
00212 11100220 ØUT3   BRU  ØUT4
00213 01102667        LAA  IR1           * SEE IF DØNE PRØCESSING INCØMPLETE BUFFER
00214 06100705        SMA  TMP1
00215 00000022        SAZ
00216 11100220        BRU  *+2
00217 11100224        BRU  ØUT5
00220 14102667 ØUT4   IMS  IR1
00221 11100203        BRU  ØUT2
00222 02076030        LBA  =-1000        * BUFFER EXHAUSTED
00223 11100163        BRU  INP1
00224 02077470 ØUT5   LBA  =-200
00225 00000003        CLA
```

```
0156  00226 12100504        SPB  PNCH          * TRAILER
0157  00227 00000026        IBS
0158  00230 11100226        BRU  *-2
0159  00231 01100563        LAA  VF
0160  00232 15100531        CMA  RF            * VERIFY INPUT TAPE
0161  00233 11100242        BRU  ERR1
0162  00234 11100236        BRU  *+2
0163  00235 11100242        BRU  ERR1
0164  00236 01100564        LAA  VF+1
0165  00237 15100532        CMA  RF+1
0166  00240 11100242        BRU  *+2
0167  00241 11100254        BRU  CHK1
0168  00242 12100523 ERR1   SPB  CRLF
0169  00243 02077763        LBA  =-13
0170  00244 01500661        LAA  MSG2+13,1
0171  00245 00170101        AØP  1,W
0172  00246 00001016        LSL  8
0173  00247 00170101        AØP  1,W
0174  00250 00000026        IBS
0175  00251 11100244        BRU  *-5
0176  00252 12100523        SPB  CRLF
0177  00253 11100351        BRU  HALT-1
0178  00254 12100365 CHK1   SPB  CHK
0179  00255 01100615        LAA  ECNT
0180  00256 00000022        SAZ
0181  00257 11100242        BRU  ERR1
0182  00260 00130401        SNS  1
0183  00261 11100263        BRU  *+2
0184  00262 11100275        BRU  PAWS
0185  00263 12100523        SPB  CRLF
0186  00264 02077770        LBA  =-8
0187  00265 01500644        LAA  HMSG+8,1
0188  00266 00170101        AØP  1,W           * MESSAGE- "READY TØ VERIFY"
0189  00267 00001016        LSL   8
0190  00270 00170101        AØP   1,W
0191  00271 00000026        IBS
0192  00272 11100265        BRU  *-5
0193  00273 00130102        CEU  2,W
0194  00274 00002000        DATA  '2000
```

```
00275 00000000 PAWS HLT
00276 00000000 *
00276 00000000 * VERIFICATIØN SEGMENT
00276 00000000 *
00276 00000003       CLA
00277 02077745 AGAN  LBA   =-27          * RESET ØNLY VERIFY CØUNTS
00300 03500616       STA   VF+27,1
00301 00000026       IBS
00302 11100300       BRU   *-2
00303 01077770 VRFY  LAA   =-8
00304 03100710       STA    HLD1
00305 03100711       STA   HLD2
00306 12100501       SPB   READ          * READ LEADER
00307 00000022       SAZ
00310 11100313       BRU   *+3
00311 11100306       BRU   *-3
00312 12100501 NXT   SPB   READ
00313 00001016 VR1   LSL   8
00314 14100563       IMS   VF
00315 11100317       BRU   *+2
00316 14100564       IMS   VF+1
00317 12100422       SPB   VFCT
00320 01100712       LAA   TEMP
00321 15100663       CMA   STØP
00322 11100324       BRU   *+2
00323 11100327       BRU   *+4
00324 01077775       LAA   =-3
00325 03100616       STA   SCNT
00326 11100312       BRU   NXT
00327 14100616       IMS   SCNT
00330 11100312       BRU   NXT
00331 01100632       LAA   ERRK
00332 03100630       STA   MHLD+1        * STØRE CNSTANT- ERR - IN MSSGE HØLD
00333 01100633       LAA   ERRK+1
00334 03100631       STA   MHLD+2
00335 01100563       LAA   VF
00336 15100531       CMA   RF
00337 11100346       BRU   ERR2
00340 11100342       BRU   *+2
```

```
00341 11100346        BRU  ERR2
00342 01100564        LAA  VF+1
00343 15100532        CMA  RF+1
00344 11100346        BRU  *+2
00345 11100356        BRU  FCØK
00346 01100661 ERR2   LAA  FR
00347 03100627        STA  MHLD
00350 12100507        SPB  MSG
00351 01100277        LAA  AGAN          * MAKE A-REG NØN-ZERØ
00352 00000000 HALT   HLT
00353 00000022        SAZ                * RE-VERIFY ØPTIØN
00354 11100000        BRU  STRT
00355 11100277        BRU  AGAN
00356 12100365 FCØK   SPB  CHK
00357 01100615        LAA  ECNT
00360 00000022        SAZ                * TEST ERRØR FLAG
00361 11100352        BRU  HALT
00362 01100662        LAA  NØ
00363 03100627        STA  MHLD
00364 11100350        BRU  HALT-2
00365 25400000 CHK    DAC  **
00366 02077770 ØK1    LBA  =-8           * CHK LØNGITUDINAL TRACK CNTS
00367 01500543        LAA  RT1+8,1
00370 15500575        CMA  VT1+8,1
00371 11100373        BRU  *+2
00372 11100377        BRU  CHKA
00373 01500627        LAA  MT1+8,1
00374 03100627        STA  MHLD
00375 12100507        SPB  MSG
00376 14100615        IMS  ECNT
00377 01500553 CHKA   LAA  RA1+8,1       * CHK A-BIAS CNTS
00400 15500605        CMA  VA1+8,1
00401 11100403        BRU  *+2
00402 11100407        BRU  CHKB
00403 01500675        LAA  MA1+8,1
00404 03100627        STA  MHLD
00405 12100507        SPB  MSG
00406 14100615        IMS  ECNT
00407 01500563 CHKB   LAA  RB8+8,1       * CHECK B-BIAS CNTS
```

```
0273  00410 15500615        CMA   VBB+8,1
0274  00411 11100413        BRU   *+2
0275  00412 11100417        BRU   ØK2
0276  00413 01500705        LAA   MB1+8,1
0277  00414 03100627        STA   MHLD
0278  00415 12100507        SPB   MSG
0279  00416 14100615        IMS   ECNT
0280  00417 00000026 ØK2    IBS
0281  00420 11100367        BRU   ØK1+1
0282  00421 11300365        BRU*  CHK
0283  00422 25400000 VFCT   DAC   **
0284  00423 03100712        STA   TEMP
0285  00424 04102666        STB   SAVB
0286  00425 02077770 CØNT   LBA   =-8          * ADD TØ LØNGITUDINAL TRACK CNTS
0287  00426 01100712        LAA   TEMP
0288  00427 00000024 VR2    SAP
0289  00430 14500575        IMS   VT1+8,1
0290  00431 00000033        NØP
0291  00432 00000116        LSL   1
0292  00433 00000026        IBS
0293  00434 11100427        BRU   VR2
0294  00435 01077770        LAA   =-8          * ADD TØ A-BIAS CNTS
0295  00436 03100664        STA   LØØP
0296  00437 01100712        LAA   TEMP
0297  00440 02100710        LBA   HLD1
0298  00441 00000024 VR3    SAP
0299  00442 14500605        IMS   VA1+8,1
0300  00443 00000033        NØP                * FØR ØVFLØ
0301  00444 00000116        LSL   1
0302  00445 14100664        IMS   LØØP
0303  00446 11100450        BRU   *+2
0304  00447 11100454        BRU   VAD2
0305  00450 00000026        IBS
0306  00451 11100441        BRU   VR3
0307  00452 02077770        LBA   =-8
0308  00453 11100441        BRU   VR3
0309  00454 04100710 VAD2   STB   HLD1
0310  00455 01077770        LAA   =-8          * ADD TØ B-BIAS CNTS
0311  00456 03100664        STA   LØØP
```

```
0312  00457 02100711        LBA   HLD2
0313  00460 00000026        IBS
0314  00461 11100463        BRU   *+2
0315  00462 02077770        LBA   =-8
0316  00463 04100711        STB   HLD2
0317  00464 01100712        LAA   TEMP
0318  00465 00000024 VR4    SAP
0319  00466 14500615        IMS   VB8+8,1
0320  00467 00000033        NØP                    * FØR ØVFLØ
0321  00470 00000116        LSL   1
0322  00471 14100664        IMS   LØØP
0323  00472 11100475        BRU   *+3
0324  00473 02102666        LBA   SAVB
0325  00474 11300422        BRU*  VFCT
0326  00475 00000026        IBS
0327  00476 11100465        BRU   VR4
0328  00477 02077770        LBA   =-8
0329  00500 11100465        BRU   VR4
0330  00501 25400000 READ   DAC   **
0331  00502 00170302 AIP    AIP   2,N              * INPUT A CHAR
0332  00503 11300501        BRU*  READ             * EXIT
0333  00504 25400000 PNCH   DAC   **
0334  00505 00170102 AØP    AØP   2,N              * ØUTPUT A CHAR
0335  00506 11300504        BRU*  PNCH             * EXIT
0336  00507 25400000 MSG    DAC   **
0337  00510 04102666        STB   SAVB
0338  00511 12100523        SPB   CRLF
0339  00512 02077775        LBA   =-3
0340  00513 01500632 MSG1   LAA   MHLD+3,1
0341  00514 00170101        AØP   1,N
0342  00515 00001016        LSL   8
0343  00516 00170101        AØP   1,N
0344  00517 00000026        IBS
0345  00520 11100513        BRU   MSG1
0346  00521 02102666        LBA   SAVB
0347  00522 11300507        BRU*  MSG              * EXIT
0348  00523 25400000 CRLF   DAC   **
0349  00524 00170501        MØP   1,N
0350  00525 00106400        DATA  '106400
```

```
0351  00526 00170501        MØP  1,W
0352  00527 00105000        DATA '105000
0353  00530 11300523        BRU* CRLF
0354  00531 00000002 RF     BSS  2
0355  00533 00000010 RT1    BSS  8              * 8 INPUT LØNGITUDINAL TRACK CNTS
0356  00543 00000010 RA1    BSS  8              * INPUT A-BIAS CNTS
0357  00553 00000001 RB8    BSS  1              * INPUT B-BIAS CNTS
0358  00554 00000001 RB7    BSS  1              *
0359  00555 00000001 RB6    BSS  1
0360  00556 00000001 RB5    BSS  1
0361  00557 00000001 RB4    BSS  1
0362  00560 00000001 RB3    BSS  1
0363  00561 00000001 RB2    BSS  1
0364  00562 00000001 RB1    BSS  1
0365  00563 00000002 VF     BSS  2
0366  00565 00000010 VT1    BSS  8              * 8 VERIFY LØNGITUDINAL TRACK CNTS
0367  00575 00000010 VA1    BSS  8              * VERIFY A-BIAS CNTS
0368  00605 00000001 VB8    BSS  1              * VERIFY B-BIAS CNTS
0369  00606 00000001 VB7    BSS  1
0370  00607 00000001 VB6    BSS  1
0371  00610 00000001 VB5    BSS  1
0372  00611 00000001 VB4    BSS  1
0373  00612 00000001 VB3    BSS  1
0374  00613 00000001 VB2    BSS  1
0375  00614 00000001 VB1    BSS  1
0376  00615 00000000 ECNT   DATA 0
0377  00616 00000001 SCNT   BSS  1
0378  00617 00152270 MT1    DATA ''T8T7T6T5T4T3T2T1''
0378  00620 00152267
0378  00621 00152266
0378  00622 00152265
0378  00623 00152264
0378  00624 00152263
0378  00625 00152262
0378  00626 00152261
0379  00627 00000003 MHLD   BSS  3
0380  00632 00120305 ERRK   DATA '' ERR''
0380  00633 00151322
0381  00634 00151305 HMSG   DATA ''READY TØ VERIFY''
```

```
0381  00635 00140704
0381  00636 00154640
0381  00637 00152317
0381  00640 00120326
0381  00641 00142722
0381  00642 00144706
0381  00643 00154640
0382  00644 00144716 MSG2 DATA ''INPUT TAPE DØES NØT VERIFY''
0382  00645 00150325
0382  00646 00152240
0382  00647 00152301
0382  00650 00150305
0382  00651 00120304
0382  00652 00147705
0382  00653 00151640
0382  00654 00147317
0382  00655 00152240
0382  00656 00153305
0382  00657 00151311
0382  00660 00143331
0383  00661 00143322 FR   DATA ''FR''
0384  00662 00147317 NØ   DATA ''NØ''
0385  00663 00135000 STØP DATA '135000
0386  00664 00000000 LØØP DATA 0
0387  00665 00140561 MA1  DATA ''A1A2A3A4A5A6A7A8''
0387  00666 00140662
0387  00667 00140663
0387  00670 00140664
0387  00671 00140665
0387  00672 00140666
0387  00673 00140667
0387  00674 00140670
0388  00675 00141270 MB1  DATA ''B8B7B6B5B4B3B2B1''
0388  00676 00141267
0388  00677 00141266
0388  00700 00141265
0388  00701 00141264
0388  00702 00141263
0388  00703 00141262
```

```
0388  00704 00141261
0389  00705 00000000 TMP1 DATA 0
0390  00706 00000000 TMP2 DATA 0
0391  00707 11100220 BR1  BRU  ØUT4
0392  00710 00177770 HLD1 DATA -8
0393  00711 00177770 HLD2 DATA -8
0394  00712 00000000 TEMP DATA 0
0395  00713 00170301 AIP1 AIP  1,N
0396  00714 00170101 AØP1 AØP  1,N
0397  00715 00001751 BUF  BSS  1001
0398  02666 00000001 SAVB BSS  1
0399  02667 00000000 IR1  DATA 0
0400  02670 00000033 NØP  NØP
0401  02671 70400000       END  STRT
```

AGAN	0230	0242	0246						
AIP	0331	0015							
AIP1	0395	0006							
AØP	0334	0023							
AØP1	0396	0016							
BR1	0391	0102							
BUF	0397	0123	0138						
CHKA	0264	0259							
CHKB	0272	0267							
CHK	0254	0178	0247	0282					
CHK1	0178	0167							
CØNT	0286								
CRLF	0348	0168	0176	0185	0338	0353			
ECNT	0376	0179	0248	0263	0271	0279			
ERRK	0380	0226	0228						
ERR1	0168	0161	0163	0181					
ERR2	0239	0232	0234						
FCØK	0247	0238							
FR	0383	0239							
HALT	0243	0177	0250	0253					
HLD1	0392	0033	0055	0067	0105	0297	0309		
HLD2	0393	0034	0070	0074	0106	0206	0312	0316	
HMSG	0381	0187							
INP1	0121	0119	0153						
INP2	0122	0117							
INP4	0118	0129	0131						
IR1	0399	0136	0137	0145	0150				
LØØP	0386	0053	0060	0069	0080	0295	0302	0311	0322
MA1	0387	0268							
MB1	0388	0276							
MHLD	0379	0227	0229	0240	0252	0261	0269	0277	0340
MSG	0336	0241	0262	0270	0278	0347			
MSG1	0340	0345							
MSG2	0382	0170							
MT1	0378	0260							
NØP	0400	0132							
NØ	0384	0251							
NXT	0211	0223	0225						

ØK1	0255	0281								
ØK2	0280	0275								
ØT1A	0056	0064	0086							
ØT1B	0076	0084	0086							
ØT2A	0067	0062								
ØUT1	0135	0120								
ØUT2	0137	0151								
ØUT3	0144	0103	0133							
ØUT4	0150	0144	0391							
ØUT5	0154	0149								
ØUT6	0046	0051								
PAWS	0195	0184								
PNCH	0333	0109	0139	0156	0335					
RA1	0356	0057	0264							
RB1	0364									
RB2	0363									
RB3	0362									
RB4	0361									
RB5	0360									
RB6	0359									
RB7	0358									
RB8	0357	0077	0272							
READ	0330	0035	0039	0112	0121	0207	0211	0332		
RF	0354	0029	0041	0043	0160	0165	0231	0236		
RT1	0355	0047	0256							
SAVB	0398	0285	0324	0337	0346					
SCNT	0377	0092	0094	0128	0130	0222	0224			
STØP	0385	0088	0124	0218						
STRT	0006	0245	0401							
STR1	0039	0093	0095							
STR2	0097	0026								
TEMP	0394	0044	0054	0075	0087	0217	0284	0287	0296	0317
TMP1	0389	0134	0146							
TMP2	0390									
VAD2	0309	0304								
VA1	0367	0265	0299							
VB1	0375									
VB2	0374									
VB3	0373									

VB4	0372										
VB5	0371										
VB6	0370										
VB7	0369										
VB8	0368	0273	0319								
VFCT	0283	0143	0216	0325							
VF	0365	0099	0140	0142	0159	0164	0201	0213	0215	0230	0235
VRFY	0204										
VR1	0212										
VR2	0288	0293									
VR3	0298	0306	0308								
VR4	0318	0327	0329								
VT1	0366	0257	0289								

SYSTEMS ENGINEERING LABORATORIES PROGRAM LIBRARY
SOFTWARE DESCRIPTION

CATALOG NO. 393007B

DATE: 30 March 1972

PROGRAM TITLE: 810A/B Variable Base Register Checkout Program

PURPOSE: To provide a test of the operation of the variable base register with the following instructions: LAA, STA, LBA, STB, AMA, AMB, SMA, CMA, IMS, and Store VBR.

CONFIGURATION: SYSTEMS 810A/B With Variable Base Register

SOFTWARE ENVIRONMENT: Stand-Alone

PROGRAM LANGUAGE: 810A/B Assembly Language

SIZE: 630_8

REASON FOR CHANGE:

(1) To provide a correctly printed error message;

(2) To remove an extraneous branch that occasionally caused program failure.

USE:

(1) Load the program into memory using the Standard Load/Dump Package (Catalog Number 300001)

(2) Enter the starting location of the program ('02005) into the program counter.

(3) Depress START on the console.

(4) The program will output "VBR TEST" to the teletypewriter.

(5) Set the console switches which will determine whether a typeout or tight loop is needed when an error is detected.

(6) Depress Start on the console.

METHOD:

CONSOLE SWITCH SETTINGS

Switch Zero

SET - The program will not output any messages when an error is detected.

RESET - When an error is detected, the program will output the instruction in error and the current bit status of the Variable Base Register.

Switch Two

SET - The program will continue to cycle in the test which generated the error. To eliminate the typeout of errors, sense switch zero should be set. Otherwise, the program will output the error message for the unsuccessful test.

RESET - If an error is detected, the program will not remain in a tight loop executing the instructions which generated the error.

Switch Three

SET - The program will print the number of successful cycles which were completed by the program.

RESET - Upon the completion of a successful cycle, the program will output to the teletype the following message:

SUCCESSFUL CYCLES XXX

where XXX equals the octal number of complete error free cycles.

USAGE:

The program is designed to perform all tests listed below into each map up to the maximum memory map.

Test One

Indirect Test

The program will verify that the indirect instruction will not be modified by the contents of the VBR. The starting and ending test locations are '2073-'2117.

Test Two

Load A-Accumulator

Zero will be stored into location zero modified by the value in the index register. The data in the index register should be equal to the value of the VBR. The program will store '10101 into location zero modified by the index register. The program will then perform a load A-Accumulator from the location specified by the bits in the variable base register appended to the least significant 9 bits of the program counter. The data value of the A-Accumulator should be '010101. The starting and ending locations of the test are '2120-'2136.

Test Three

Store A-Accumulator

The program will store '010101 into the location specified by the contents of the VBR plus the least significant 9 bits of the program counter. The program will then add the contents of the previously stored memory location to the A-Accumulator using the same VBR data in the index register. The contents of the A-Accumulator should equal '020202. The starting and ending locations of the program are '2137-'2155.

Test Four

Load B-Accumulator

The program will perform a Load B-Accumulator from the location specified by the bits in the variable base register appended to the least significant 9 bits of the program counter. The program will then add '010101 to the A-Accumulator. The value in the A-Accumulator should equal '020202. The starting and ending locations of the test are '2156-'2172.

Test Five

Store B-Accumulator

The program will perform a Store B-Accumulator into the location specified by the bits in the variable base register. The constant will then be loaded into the A-Accumulator and the data from the stored location will be added to the accumulator. The value of the A-Accumulator should equal '020202. The starting location of the test is '2173-'2210.

Test Six

Add Memory to A-Accumulator

The data value of '010101 will be stored in location zero modified by the contents of the index register. The index register data and the VBR data should be equal. The program will then add memory to the A-Accumulator using location zero modified by the contents of the VBR. The data value of A should be '020202. The starting and ending locations of the test are '2211-'2227.

Test Seven

Add Memory to B-Accumulator

The data value of '010101 will be stored in location zero modified by the contents of the index register. The data in the index register and the VBR should be equal. The B-Accumulator will then be set to '010101. The program will then add memory to the B-Accumulator using location zero modified by the contents of the VBR. The data in the B-Accumulator should equal '020202. The starting and ending locations of the test are '2230-'2250.

Test Eight

Subtract Memory From A-Accumulator

The data value of '010101 will be stored in location zero modified by the contents of the index register. The data in the index register and the VBR should be equal. The A-Accumulator will then be set to '020202.

The program will Subtract Memory from the A-Accumulator using location zero modified by the contents of the VBR. The data in the A-Accumulator should equal '010101. The starting and ending locations of the test are '2251-'2270.

Test Nine

Compare Memory To A-Accumulator

The data value of '010101 will be stored in location zero modified by the contents of the index register. The data in the index register and the VBR should be equal. The program will then compare memory to the A-Accumulator. The memory location specified in the CMA will be zero modified by the contents of the VBR. The data in the A-Accumulator should equal '010101. The starting and ending locations of the program are '2271-'2306.

Test Ten

Increment Memory and Skip Test

The data value of '010101 will be stored in location zero modified by the contents of the index register. The data in the index register and the VBR should be equal. The data previously stored will be incremented by one using the VBR as a modifier. The contents of the A-Accumulator will be added by one and a comparison made to the data using location zero modified by the contents of the B register. The starting and ending location of the test are '2307-'2326.

Test Eleven

Transfer Variable Base Register To B-Accumulator

The variable base register will be transferred to the B-Accumulator and a comparison will be made to the temporary core storage location or the VBR. The starting and ending locations of the test are '2327-'2341.

VBR Console Display

The VBR register may be displayed during the execution of any test to visually verify that the VBR contents are equal to the B register, as follows:

- HALT the computer.
- Place the PROGRAM HALT switch in the raised position.
- Set a program stop via control switches to '2124.
- Raise the program counter ENTER switch.
- Depress START on the console.

For each program cycle, the contents of the VBR and the index register will be incremented by one. To continuously cycle the program, place the program HALT switch in the center position.

Error Detection

The following messages will be output to the teletypewriter when an error condition is detected. Error output is applicable to all tests:

IND ERROR VBR BIT XXXXXX
LAA ERROR VBR BIT XXXXXX
STA ERROR VBR BIT XXXXXX
LBA ERROR VBR BIT XXXXXX
STB ERROR VBR BIT XXXXXX
AMA ERROR VBR BIT XXXXXX
AMB ERROR VBR BIT XXXXXX
SMA ERROR VBR BIT XXXXXX
CMA ERROR VBR BIT XXXXXX
IMS ERROR VBR BIT XXXXXX
TXB ERROR VER BIT XXXXXX

XXXXXX will represent the expected contents of the variable base register. The program may be placed into a tight loop by setting console switch 2. The contents of the VBR may be visually observed by raising the program counter ENTER switch.

```
00001                 *    VARIABLE BASE REGISTER CHECKØUT PRØGRAM     CATALØG = 393007B
```

```
00003                    *      SEL
00004  00000 00000000 VAR1 ZZZ  **
00005  00001 00000000 VAR2 ZZZ  **
00006  00002 35500003 INDT DAC* INDC
00007  00003 35400001 INDC DAC  VAR2
00008  02005 70002005      ØRG  '2005        BEGIN VBR TEST
00009  02005 12102613      SPB  CRØ
00010  02006 12102535      SPB  DPWD         ØUT  PUT  TEST  NAME
00011  02007 35402444      DAC  LØ1
00012  02010 00000004      DATA 4
00013  02011 02102425      LBA  BIT2
00014  02012 01102426 SRCH LAA  NEG1
00015  02013 03400000      STA  0,1
00016  02014 01400000      LAA  0,1
00017  02015 00000022      SAZ
00018  02016 11102020      BRU  *+2
00019  02017 11102024      BRU  *+5
00020  02020 16102425      AMB  BIT2
00021  02021 00000004      TBA
00022  02022 00000023      SAN
00023  02023 11102012      BRU  SRCH
00024  02024 16102427      AMB  NMAP
00025  02025 04102342      STB  MAX
00026  02026 01102421      LAA  CØN3
00027  02027 03102473      STA  CYCT
00028  02030 01102423 XYQ  LAA  N1K
00029  02031 03102461      STA  LØ3
00030  02032 00000003      CLA                CLEAR ERRØR FLAG
00031  02033 03102434      STA  ERFL
00032  02034 02102424 ØUT  LBA  STRT          LØAD B WITH STARTING MØDIFIER
00033  02035 00000042 TRAN TBV                TBV, TRANSFER MØDIFIER TØ VBR
00034  02036 04102440      STB  SAVB          SAVE MØDIFIER
00035  02037 12102072      SPB  TEST          GØ TØ TEST RØUTINE
00036  02040 02102440      LBA  SAVB
00037  02041 16102343      AMB  ØNTA
00038  02042 04102440      STB  SAVB          INCREMENT TEMP STØRAGE ØF VBR
00039  02043 01102342      LAA  MAX          MAX CØUNT FØR VBR
00040  02044 15102440      CMA  SAVB         CØMPARE TØ PRESENT VBR CØNTENTS
00041  02045 11102051      BRU  ØKK
00042  02046 00000033      NØP
00043  02047 02102440      LBA  SAVB
00044  02050 11102035      BRU  TRAN
00045  02051 01102434 ØKK  LAA  ERFL          ERRØR FLAG CHECK
00046  02052 00000022      SAZ
00047  02053 11102032      BRU  ØUT-2
00048  02054 14102461      IMS  LØ3
00049  02055 11102032      BRU  XYQ+2
00050  02056 00130403      SNS  3
00051  02057 11102061      BRU  *+2
00052  02060 11102067      BRU  *+7
00053  02061 12102613      SPB  CRØ
00054  02062 12102535      SPB  DPWD          ØUTPUT  SUCCESSFUL  CYCLES
00055  02063 35402450      DAC  LØ2
00056  02064 00000011      DATA 9
```

```
00057  02065 12102563       SPB  CYØT          ØUTPUT CYCLE CØUNT
00058  02066 35402473       DAC  CYCT          IN ØCTAL
00059  02067 14102473       IMS  CYCT
00060  02070 00000033       NØP                                                    *B
00061  02071 11102030       BRU  XYQ
00062  02072 00000000 TEST ZZZ  **
00063                     *********** IND
00064  02073 02102440 INDV LBA  SAVB
00065  02074 01102430       LAA  INDX-2
00066  02075 05102440       AMA  SAVB
00067  02076 03400002       STA  2,1
00068  02077 01102431       LAA  INDX-1
00069  02100 05102440       AMA  SAVB
00070  02101 03400003       STA  3,1
00071  02102 01102417       LAA  CØN1
00072  02103 03400001       STA  1,1
00073  02104 00000003       CLA
00074  02105 00000005       TAB
00075  02106 01600002       LAA* 2,1
00076  02107 15102417       CMA  CØN1
00077  02110 11102113       BRU  *+3
00078  02111 11102120       BRU  LAAV          GØ TØ LØAD A TEST
00079  02112 11102113       BRU  *+1
00080  02113 01102474       LAA  IND
00081  02114 03102462       STA  LØ4
00082  02115 12102344       SPB  ERR
00083  02116 00130402       SNS  2             IS SENSE 2 SET IF TIGHT LØØP IS NEEDED RESET SS1
00084  02117 11102073       BRU  INDV          YES REPEAT TEST
00085                     *********** LAA
00086  02120 00000003 LAAV CLA                 LØAD A TEST
00087  02121 03400000       STA  0,1
00088  02122 02102440       LBA  SAVB
00089  02123 01102417       LAA  CØN1
00090  02124 03400000       STA  0,1
00091  02125 01100000       LAA  VAR1          LØAD A FRØM VARIABLE
00092  02126 15102417       CMA  CØN1
00093  02127 11102132       BRU  *+3           ERRØR
00094  02130 11102137       BRU  STAV          STØRE A TEST
00095  02131 11102132       BRU  *+1           ERRØR
00096  02132 01102477       LAA  LAA
00097  02133 03102462       STA  LØ4
00098  02134 12102344       SPB  ERR
00099  02135 00130402       SNS  2             SENSE TWØ SET
00100  02136 11102120       BRU  LAAV          REPEAT LØAD A TEST RESET ØNE FØR TIGHT LØØP
00101                     *********** STA
00102  02137 02102440 STAV LBA  SAVB
00103  02140 00000003       CLA
00104  02141 03400000       STA  0,1
00105  02142 01102417       LAA  CØN1          LØAD A FRØM FIRST CØNSTANT LØCATIØN
00106  02143 03100000       STA  VAR1          STØRE A IN VARIABLE LØCATIØN
00107  02144 05400000       AMA  0,1
00108  02145 15102420       CMA  CØN2          CØMPARE TØ SECØND CØNSTANT LØCATIØN
00109  02146 11102151       BRU  *+3           ERRØR
00110  02147 11102156       BRU  LBAV         CHECK LBA INSTRUCTIØN
00111  02150 11102151       BRU  *+1           ERRØR
```

```
00112  02151 01102502        LAA  STA
00113  02152 03102462        STA  LØ4
00114  02153 12102344        SPB  ERR
00115  02154 00130402        SNS  2              SENSE TWØ SET
00116  02155 11102137        BRU  STAV           YES REPEAT STØRE A TEST RESET ØNE FØR TIGHT LØØP
00117                   *********** LBA
00118  02156 02100000 LBAV LBA  VAR1             VARIABLE LØCATIØN
00119  02157 00000004        TBA
00120  02160 02102440        LBA  SAVB
00121  02161 05400000        AMA  0,1
00122  02162 15102420        CMA  CØN2
00123  02163 11102166        BRU  *+3            ERRØR
00124  02164 11102173        BRU  STBV           GØ TØ STØRE B TEST
00125  02165 11102166        BRU  *+1            ERRØR
00126  02166 01102505        LAA  LBA
00127  02167 03102462        STA  LØ4
00128  02170 12102344        SPB  ERR
00129  02171 00130402        SNS  2
00130  02172 11102156        BRU  LBAV           REPEAT TEST RESET SENSE ØNE FØR TIGHT LØØP
00131                   *********** STB
00132  02173 02102417 STBV LBA  CØN1             STØRE B TEST
00133  02174 04100000        STB  VAR1
00134  02175 02102440        LBA  SAVB
00135  02176 01102417        LAA  CØN1
00136  02177 05400000        AMA  0,1
00137  02200 15102420        CMA  CØN2           CØMPARE VARIABLE TØ CØNSTANT
00138  02201 11102204        BRU  *+3            ERRØR
00139  02202 11102211        BRU  AMAV           ADD MEMØRY TØ A TEST
00140  02203 11102204        BRU  *+1            ERRØR
00141  02204 01102510        LAA  STB
00142  02205 03102462        STA  LØ4
00143  02206 12102344        SPB  ERR
00144  02207 00130402        SNS  2              SENSE TWØ SET
00145  02210 11102173        BRU  STBV           REPEAT STØRE B TEST  RESET ØNE FØR TIGHT LØØP
00146                   *********** AMA
00147  02211 00000003 AMAV CLA                   ADD MEMØRY TØ A TEST
00148  02212 03100000        STA  VAR1
00149  02213 02102440        LBA  SAVB
00150  02214 01102417        LAA  CØN1
00151  02215 03400000        STA  0,1
00152  02216 05100000        AMA  VAR1           DØ A VARIABLE ADD TØ A
00153  02217 15102420        CMA  CØN2
00154  02220 11102223        BRU  *+3            ERRØR
00155  02221 11102230        BRU  AMBV           GØ TØ NEXT TEST ADD MEMØRY TØ B
00156  02222 11102223        BRU  *+1            ERRØR
00157  02223 01102513        LAA  AMA
00158  02224 03102462        STA  LØ4
00159  02225 12102344        SPB  ERR
00160  02226 00130402        SNS  2              IS SENSE TWØ SET
00161  02227 11102211        BRU  AMAV           REPEAT TEST
00162                   *********** AMB
00163  02230 00000003 AMBV CLA                   ADD MEMØRY TØ B TEST
00164  02231 03100000        STA  VAR1
00165  02232 02102440        LBA  SAVB
00166  02233 01102417        LAA  CØN1
```

```
00167  02234 03400000        STA  0,1
00168  02235 02102417        LBA  CØN1
00169  02236 16100000        AMB  VAR1          DØ A VARIABLE ADD TØ B
00170  02237 00000004        TBA
00171  02240 15102420        CMA  CØN2
00172  02241 11102244        BRU  *+3           ERRØR
00173  02242 11102251        BRU  SMAV          GØ TØ SUBTRACT MEMØRY FRØM A TEST
00174  02243 11102244        BRU  *+1           ERRØR
00175  02244 01102516        LAA  AMB
00176  02245 03102462        STA  LØ4
00177  02246 12102344        SPB  ERR
00178  02247 00130402        SNS  2             SENSE TWØ SET
00179  02250 11102230        BRU  AMBV          REPEAT ADD MEMØRY TØ A RESET ØNE FØR TIGHT LØØP
00180                   *********** SMA
00181  02251 00000003 SMAV CLA                  SUBTRACT MEMØRY FRØM A
00182  02252 03100000        STA  VAR1
00183  02253 02102440        LBA  SAVB
00184  02254 01102417        LAA  CØN1
00185  02255 03400000        STA  0,1
00186  02256 01102420        LAA  CØN2
00187  02257 06100000        SMA  VAR1          SUBTRACT MEMØRY
00188  02260 15102417        CMA  CØN1          CØMPARE TØ CØNSTANT
00189  02261 11102264        BRU  *+3           ERRØR
00190  02262 11102271        BRU  CMAV          GØ TØ CØMPARE MEMØRY TØ A TEST
00191  02263 11102264        BRU  *+1           ERRØR
00192  02264 01102521        LAA  SMA
00193  02265 03102462        STA  LØ4
00194  02266 12102344        SPB  ERR
00195  02267 00130402        SNS  2
00196  02270 11102251        BRU  SMAV
00197                   *********** CMA
00198  02271 00000003 CMAV CLA                  CØMPARE MEMØRY TØ A TEST
00199  02272 03100000        STA  VAR1
00200  02273 02102440        LBA  SAVB
00201  02274 01102417        LAA  CØN1
00202  02275 03400000        STA  0,1
00203  02276 15100000        CMA  VAR1
00204  02277 11102302        BRU  *+3           ERRØR
00205  02300 11102307        BRU  IMSV
00206  02301 11102302        BRU  *+1           ERRØR
00207  02302 01102524        LAA  CMA
00208  02303 03102462        STA  LØ4
00209  02304 12102344        SPB  ERR
00210  02305 00130402        SNS  2             SENSE TWØ SET
00211  02306 11102271        BRU  CMAV          REPEAT CØMPARE MEMØRY TØ A TEST  RESET FØR LØØP
00212                   *********** IMS
00213  02307 01102417 IMSV LAA  CØN1
00214  02310 02102440        LBA  SAVB
00215  02311 03400000        STA  0,1
00216  02312 14100000        IMS  VAR1
00217  02313 00000033        NØP
00218  02314 01102417        LAA  CØN1
00219  02315 05102421        AMA  CØN3          ADD ØNE TØ A
00220  02316 15400000        CMA  0,1           CØMPARE VARIABLE TØ A
00221  02317 11102322        BRU  *+3           ERRØR
```

```
00222  02320 11102327        BRU  TVBV
00223  02321 11102322        BRU  *+1          ERRØR
00224  02322 01102527        LAA  IMS
00225  02323 03102462        STA  LØ4
00226  02324 12102344        SPB  ERR
00227  02325 00130402        SNS  2
00228  02326 11102307        BRU  IMSV         IF SET  USE TIGHT LØØP RESET SENSE ØNE
00229                   *********** TVB
00230  02327 00000043 TVBV   TVB               TRANSFER V TØ B
00231  02330 00000004        TBA
00232  02331 15102440        CMA  SAVB
00233  02332 11102334        BRU  *+2
00234  02333 11102341        BRUØ
00235  02334 01102532        LAA  TVB
00236  02335 03102462        STA  LØ4
00237  02336 12102344        SPB  ERR
00238  02337 00130402        SNS  2
00239  02340 11102327        BRU  TVBV
00240  02341 11302072 BRUØ   BRU* TEST
00241  02342 00000000 MAX    DATA 0
00242  02343 00001000 ØNTA   DATA '001000
00243  02344 00000000 ERR    ZZZ  **           ERRØR SUBRØUTINE
00244  02345 14102434        IMS  ERFL         SET ERRØR FLAG
00245  02346 00000033        NØP
00246  02347 00130400        SNS  0            SENSE SWITCH ZERØ SET NØ ERRØR TYPEØUT
00247  02350 11302344        BRU* ERR
00248  02351 12102613        SPB  CRØ
00249  02352 12102374        SPB  INME
00250  02353 35502462        DAC* LØ4
00251  02354 00000002        DATA 2
00252  02355 12102535        SPB  DPHD         ØUTPUT ERRØR VBR BIT
00253  02356 35402463        DAC  LØ5
00254  02357 00000007        DATA 7
00255  02360 02102440        LBA  SAVB         LØAD VBR STATUS
00256  02361 01102433        LAA  NBCT         NEGATIVE BIT CØUNT
00257  02362 03102443        STA  NBC
00258  02363 00000113        FLL  1
00259  02364 00000003 BITØ   CLA
00260  02365 00000113        FLL  1
00261  02366 05102422        AMA  ASC          CØNVERT TØ ASCII
00262  02367 00001016        LSL  8            SHIFT FØR ØUTPUT
00263  02370 00170101        AØP  1,W          ØUTPUT TØ TTY
00264  02371 14102443        IMS  NBC
00265  02372 11102364        BRU  BITØ
00266  02373 11302344        BRU* ERR
00267  02374 00000000 INME   ZZZ  **           RØUTINE TØ DUMP INSTRUCTIØN MESSAGE
00268  02375 03102436        STA  INSA
00269  02376 04102437        STB  INSB
00270  02377 01302374        LAA* INME
00271  02400 03102435        STA  STMS
00272  02401 14102374        IMS  INME
00273  02402 01302374        LAA* INME                                          *B
00274  02403 00000002        NEG
00275  02404 00000005        TAB
00276  02405 14102374        IMS  INME
```

```
00277  02406 01302435       LAA* STMS
00278  02407 12102623       SPB  TCØ
00279  02410 00000026       IBS
00280  02411 11102415       BRU  *+4
00281  02412 01102436       LAA  INSA
00282  02413 02102437       LBA  INSB
00283  02414 11302374       BRU* INME
00284  02415 14102462       IMS  LØ4
00285  02416 11102406       BRU  *-8
00286  02417 00010101 CØN1 DATA '10101
00287  02420 00020202 CØN2 DATA '20202
00288  02421 00000001 CØN3 DATA '1
00289  02422 00000260 ASC  DATA '260
00290  02423 00176030 N1K  DATA '176030
00291  02424 00000000 STRT DATA '0
00292  02425 00020000 BIT2 DATA '020000
00293  02426 00177777 NEG1 DATA '177777
00294  02427 00177000 NMAP DATA '177000
00295  02430 00040003       DATA '040003
00296  02431 00000001 CNT  DATA '1
00297  02432 00177774 INDX DATA '177774        -4
00298  02433 00177772 NBCT DATA '177772        -6
00299  02434 00000000 ERFL ZZZ  **
00300  02435 00000000 STMS ZZZ  **
00301  02436 00000000 INSA ZZZ  **
00302  02437 00000000 INSB ZZZ  **
00303  02440 00000000 SAVB ZZZ  **
00304  02441 00000000 SVB  ZZZ  **
00305  02442 00000000 INSV ZZZ  **
00306  02443 00000000 NBC  ZZZ  **
00307  02444 00153302 LØ1  DATA ''VBR TEST''
00307  02445 00151240
00307  02446 00152305
00307  02447 00151724
00308  02450 00151725 LØ2  DATA ''SUCCESSFUL CYCLES''
00308  02451 00141703
00308  02452 00142723
00308  02453 00151706
00308  02454 00152714
00308  02455 00120303
00308  02456 00154703
00308  02457 00146305
00308  02460 00151640
00309  02461 00000000 LØ3  ZZZ  **
00310  02462 00000000 LØ4  ZZZ  **
00311  02463 00142722 LØ5  DATA ''ERRØR VBR BIT  ''
00311  02464 00151317
00311  02465 00151240
00311  02466 00153302
00311  02467 00151240
00311  02470 00141311
00311  02471 00152240
00311  02472 00120240
00312  02473 00000000 CYCT DATA '0
00313  02474 35402475 IND  DAC  INDD
```

```
00314  02475 00144716 INDD DATA ''IND ''
00314  02476 00142240
00315  02477 35402500 LAA  DAC  LAAD
00316  02500 00146301 LAAD DATA ''LAA ''
00316  02501 00140640
00317  02502 35402503 STA  DAC  STAD
00318  02503 00151724 STAD DATA ''STA ''
00318  02504 00140640
00319  02505 35402506 LBA  DAC  LBAD
00320  02506 00146302 LBAD DATA ''LBA ''
00320  02507 00140640
00321  02510 35402511 STB  DAC  STBD
00322  02511 00151724 STBD DATA ''STB ''
00322  02512 00141240
00323  02513 35402514 AMA  DAC  AMAD
00324  02514 00140715 AMAD DATA ''AMA ''
00324  02515 00140640
00325  02516 35402517 AMB  DAC  AMBD
00326  02517 00140715 AMBD DATA ''AMB ''
00326  02520 00141240
00327  02521 35402522 SMA  DAC  SMAD
00328  02522 00151715 SMAD DATA ''SMA ''
00328  02523 00140640
00329  02524 35402525 CMA  DAC  CMAD
00330  02525 00141715 CMAD DATA ''CMA ''
00330  02526 00140640
00331  02527 35402530 IMS  DAC  IMSD
00332  02530 00144715 IMSD DATA ''IMS ''
00332  02531 00151640
00333  02532 35402533 TVB  DAC  TVBD
00334  02533 00152326 TVBD DATA ''TVB ''
00334  02534 00141240
00335                 *
00336  02535 00000000 DPHD ZZZ  **          DUMP HEADING
00337  02536 03102560      STA  DPSA
00338  02537 04102561      STB  DSVB
00339  02540 02302535      LBA* DPHD       PICK UP CALLING SEQUENCE
00340  02541 04102562      STB  LØC6
00341  02542 14102535      IMS  DPHD
00342  02543 01302535      LAA* DPHD
00343  02544 00000002      NEG
00344  02545 03102557      STA  DNCT       SET UP NEGATIVE WØRD CØUNT
00345  02546 14102535      IMS  DPHD
00346  02547 01302562      LAA* LØC6
00347  02550 12102623      SPB  TCØ        ØUTPUT TWØ CHARACTERS
00348  02551 14102562      IMS  LØC6
00349  02552 14102557      IMS  DNCT
00350  02553 11102547      BRU  *-4
00351  02554 01102560      LAA  DPSA
00352  02555 02102561      LBA  DSVB
00353  02556 11302535      BRU* DPHD       RETURN
00354  02557 00000000 DNCT ZZZ  **
00355  02560 00000000 DPSA ZZZ  **
00356  02561 00000000 DSVB ZZZ  **
00357  02562 00000000 LØC6 ZZZ  **
```

```
                                *
                                *
02563 00000000 CYØT ZZZ  **            TYPE NUMBER ØF CYCLES [3 ØCTAL DIGITS
02564 03102611      STA  CSVA          SAVE ACCUMULATØRS
02565 04102612      STB  CSVB
02566 02302563      LBA* CYØT          PICK UP CALLING SEQUENCE
02567 04102610      STB  CADD
02570 02302610      LBA* CADD
02571 14102563      IMS  CYØT
02572 00000713      FLL  7
02573 00000003      CLA
02574 00000313      FLL  3
02575 00000516      LSL  5
02576 00000313      FLL  3
02577 05102607      AMA  C10
02600 12102623      SPB  TCØ           ØUTPUT FIRST TWØ CHARACTERS
02601 00001313      FLL  11
02602 05102607      AMA  C10
02603 00170101      AØP  1,W
02604 01102611      LAA  CSVA
02605 02102612      LBA  CSVB
02606 11302563      BRU* CYØT
02607 00130260 C10  DATA '130260
02610 00000000 CADD ZZZ  **
02611 00000000 CSVA ZZZ  **
02612 00000000 CSVB ZZZ  **
                                *
                                *
02613 00000000 CRØ  ZZZ  **            CARRIAGE RETURN AND LINE FEED
02614 03102621      STA  CRSA          SAVE A ACCUMULATØR
02615 01102622      LAA  C20
02616 12102623      SPB  TCØ           ØUTPUT TWØ CHARACTERS
02617 01102621      LAA  CRSA          RESTØRE A ACC
02620 11302613      BRU* CRØ           RETURN
02621 00000000 CRSA ZZZ  **
02622 00106612 C20  DATA '106612
                                *
                                *
02623 00000000 TCØ  ZZZ  **            TWØ CHARACTERS ØUT
02624 00170101      AØP  1,W
02625 00001016      LSL  8
02626 00170101      AØP  1,W
02627 11302623      BRU* TCØ           RETURN
02630 70400000      END
```

ERRØRS 0000 00000

...SYMBØLICS...

AMA	157	*	323							
AMAD	323	*	324							
AMAV	139	*	147	161						
AMB	175	*	325							
AMBD	325	*	326							
AMBV	155	*	163	179						
ASC	261	*	289							
BIT2	13		20	* 292						
BITØ	* 259		265							
BRUØ	234	*	240							
C10	372		375	* 380						
C20	388	*	393							
CADD	364		365	* 381						
CMA	207	*	329							
CMAD	329	*	330							
CMAV	190	*	198	211						
CNT	* 296									
CØN1	71		76	89	92	105	132	135	150	166
	168		184	188	201	213	218	* 286		
CØN2	108		122	137	153	171	186	* 287		
CØN3	26		219	* 288						
CRØ	9		53	248	* 386	391				
CRSA	387		390	* 392						
CSVA	361		377	* 382						
CSVB	362		378	* 383						
CYCT	27		58	59	* 312					
CYØT	57	*	360	363	366	379				
DNCT	344		349	* 354						
DPHD	10		54	252	* 336	339	341	342	345	353
DPSA	337		351	* 355						
DSVB	338		352	* 356						
ERFL	31		45	244	* 299					
ERR	82		98	114	128	143	159	177	194	209
	226		237	* 243	247	266				
IMS	224	*	331							
IMSD	331	*	332							
IMSV	205	*	213	228						
IND	80	*	313							
INDC	6	*	7							
INDD	313	*	314							
INDT	* 6									
INDV	* 64		84							
INDX	65		68	* 297						
INME	249	*	267	270	272	273	276	283		
INSA	268		281	* 301						
INSB	269		282	* 302						
INSV	* 305									
LAA	96	*	315							
LAAD	315	*	316							
LAAV	78	*	86	100						
LBA	126	*	319							
LBAD	319	*	320							
LBAV	110	*	118	130						
LØ1	11	*	307							
LØ2	55	*	308							
LØ3	29		48	* 309						
LØ4	81		97	113	127	142	158	176	193	208

...EXTERNALS...

	225	236	250	284	* 310				
LØ5	253	* 311							
LØC6	340	346	348	* 357					
MAX	25	39	* 241						
N1K	28	* 290							
NBC	257	264	* 306						
NBCT	256	* 298							
NEG1	14	* 293							
NMAP	24	* 294							
ØKK	41	* 45							
ØNTA	37	* 242							
ØUT	* 32	47							
SAVB	34	36	38	40	43	64	66	69	88
	102	120	134	149	165	183	200	214	232
	255	* 303							
SMA	192	* 327							
SMAD	327	* 328							
SMAV	173	* 181	196						
SRCH	* 14	23							
STA	112	* 317							
STAD	317	* 318							
STAV	94	* 102	116						
STB	141	* 321							
STBD	321	* 322							
STBV	124	* 132	145						
STMS	271	277	* 300						
STRT	32	* 291							
SVB	* 304								
TCØ	278	347	373	389	* 396	400			
TEST	35	* 62	240						
TRAN	* 38	44							
TVB	235	* 333							
TVBD	333	* 334							
TVBV	222	* 230	239						
VAR1	* 4	91	106	118	133	148	152	164	169
	182	187	199	203	216				
VAR2	* 5	7							
W	263	376	397	399					
XYQ	* 28	49	61						