CT-D-I

DWYER INSTRUMENTS, INC.

www.dwyer-inst.com

pressure

air quality

flow

temperature

level

process control

test equipment

valves

2015

RIGHT CHOICE. RIGHT PRICE. RIGHT NOW.

TETİSAN TESİSAT TİCARET VE SANAYİİ A.Ş.
www.tetisantesisat.com
+90 212 267 08 42

TYPICAL APPLICATIONS
pages 232-233

Thermometers, Dial
pages 234-238

Thermometers, Glass
page 239

Thermometers, Digital Solar
page 240

Thermometers with Switch
page 241

Thermometers with Transmitter
page 242

Temperature/Process Controllers
pages 243-250

Panel Meters/ Indicators
page 251

Temperature Switches, Limit
page 252

Temperature Switches, Digital
pages 253-258

Thermostats
pages 259-260

Temperature Switches, Mechanical
page 261

Temperature Transmitters
pages 262-266

Temperature Sensors
pages 267-285

Temperature Data Loggers
page 286

TETİSAN TESİSAT TİCARET VE SANAYİİ A.Ş.
www.tetisantesisat.com
+90 212 267 08 42

Environmental chamber control simplified with dual zone control.

Environmental chambers have traditionally used separate controls to handle the temperature and relative humidity control tasks. The Love Controls 32DZ dual zone control with Love 5000 Series RTD and Dwyer® RH Humidity transmitter controls both parameters in a single small format (1/32 DIN) control to handle both zones, simplifying wiring and reducing panel costs.
The 32DZ can switch small resistive loads directly or, when used with Dwyer® Series 62 solid state relays (not shown), can switch larger loads.

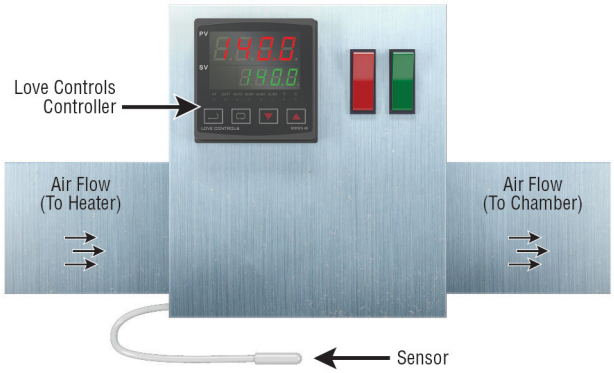

Dwyer® controllers used within heater controllers.

In bioscience laboratories, the preferred methods of temperature control for experiments are heated water baths. There are experiments where water cannot be used, so the next feasible option is to send temperature controlled air to the experiment site. In order to use temperature controlled air, an air heater is needed. Within this product, a Love Controls temperature controller is used for accurate and responsive temperature control. The Love Controls controller can adapt to a different environment through different operating modes such as SELF-TUNE or manual PID adjustments, or preset PID responses.

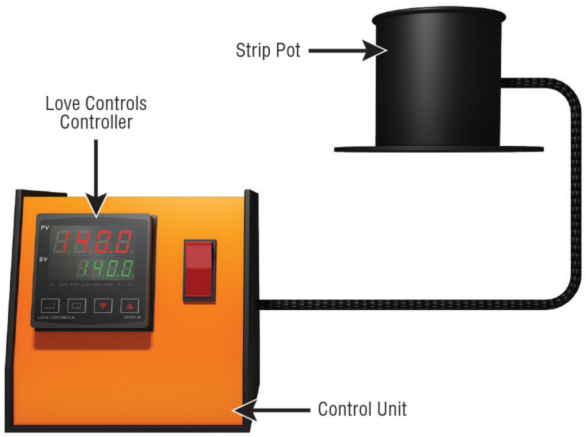

Love Controls controllers involved in insulation removal.

For most wires, removing the insulation is easy, but for magnetic and enamel wires, removing the insulation is very difficult. One way to easily remove the insulation of the magnetic or enamel wire is to dip them in a solution of molten fused salts. The salts are heated to a temperature high enough to melt the salts into a liquid, but not deteriorate them. This process uses a Love Controls feedback temperature controller. The Love Controls controller allows the operator to input a desired temperature and maintain that temperature accurately. The Love Controls controller will also retain the input temperature after the power is disconnected.

Series TS Digital Temperature Switches regulate temperature in refrigerated and display cases.

When storing food or other perishables in chillers or display cases, temperature must be carefully regulated to ensure the products remain fresh. If the storage area rises above the critical preservation temperature, products can have their shelf life dramatically shortened or be spoiled altogether. A Dwyer® Series TSX3 Digital Temperature Switch will prevent these scenarios by monitoring temperature and activating refrigeration and defrost cycles to ensure the storage temperature stays within safe limits.

tetisan
TETİSAN TESİSAT TİCARET VE SANAYİİ A.Ş.
www.tetisantesisat.com
+90 212 267 08 42

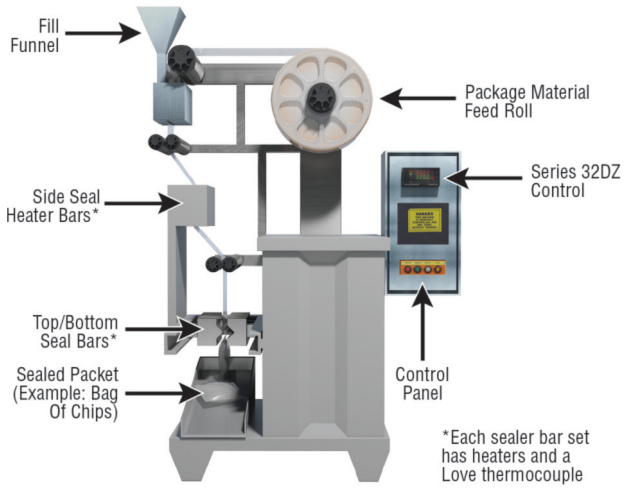

Form, fill and seal machine control simplified with dual zone control.

Form, fill and seal machines traditionally have used separate controls to handle the temperature control requirement for the side and top/bottom seal bars. The Love Controls® 32DZ with Love® 5000 Series thermocouples allows for a single small format (1/32 DIN) control to handle both zones, simplifying wiring and reducing panel costs.
The 32DZ can switch small resistive loads directly or, when used with the Love® 62 Series solid state relays (not shown), can switch larger loads.

Love Controls controllers used in the packaging of condiments.

Packaging of condiments require the sealing bars to be heated to a temperature hot enough to seal the packages, but not destroy the packaging material. The heat on the sealing bars needs to be controlled to ensure the heat does not become excessive. Love Controls controllers are used in this process to accurately control the heat on the sealing bars. The sensors from the Love Controls controllers are placed on the sealing bars to ensure accurate temperature readings. Should the heat become excessive, an alarm light on the controller notifies the operator of the impending conditions.

Resin transfer molding.

Accurate control of temperature and epoxy resin flow is important during resin transfer molding. For the epoxy resin to have an even and thorough flow, the resin must be at a temperature high enough to allow it to flow, yet not burn the resin. With the help of a Love Controls controller, the temperature of the resin is accurately controlled under different conditions through the different PID operating modes. Another Love Controls controller, with a flow transducer, is used in this process to control the flow of the epoxy resin. The Love Controls controller provides information on the temperature and flow rate to the computer through an RS-485 serial communication option.

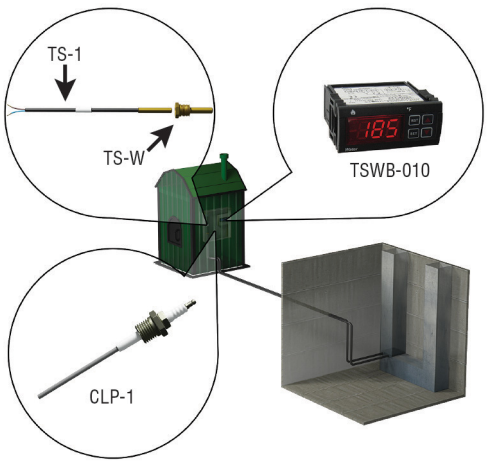

Controlling water temperature in outdoor wood furnace.

The Series TSWB is the ideal control for monitoring water temperature and water level in outdoor wood furnaces. The Series TSWB controls the damper and/or the fan that provides oxygen to the flame in the fire box. Usually an external light will also be controlled by the Series TSWB to inform the user that the furnace is out of wood or that the water level is low. The TSWB accepts thermistor inputs for temperature and conductivity probe, Dwyer CLP-1, inputs for monitoring water level.

TETİSAN TESİSAT TİCARET VE SANAYİİ A.Ş.
www.tetisantesisat.com
+90 212 267 08 42

Series BT

Bimetal Thermometers

2″, 3″ or 5″ Dial, Dual Scale, ±1% FS Accuracy, External Reset

Scan here to watch product video

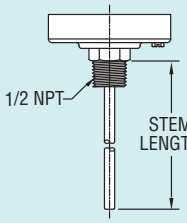

Back Connection

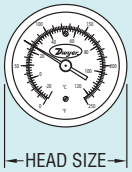

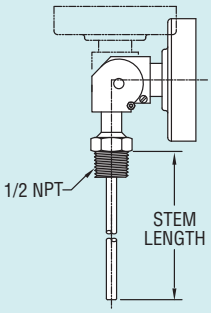

Adjustable Angle Connection

Series BT Bimetal Thermometers offer accurate, reliable service even in the toughest environments. These corrosion resistant units are constructed from stainless steel and are hermetically sealed to prevent crystal fogging. The bimetal element directly drives pointer, eliminating gears and linkage. An external reset screw allows field calibration and easy-to-read aluminum dial minimizes parallax error. Choose back connection, lower connection or adjustable angle for easy viewing and installation. Adjustable models can be rotated a full 360° and tilted over a 180° arc. NOTE: When using in pressurized applications, use a suitable thermowell. Bimetal thermometers are commonly used to measure water temperature on chillers and boilers.

SPECIFICATIONS
Wetted Materials: 304 SS.
Housing Material: Series 300 SS.
Lens: Glass.
Accuracy: ±1% full-scale.
Response Time: ≤ 40 seconds.
Temperature Limits: Head: 200°F (93°C); Stem: Not to exceed 50% over-range or 1000°F (538°C) or 800°F (427°C) continuously.
Process Connection: 1/4″ NPT on 2″ dial size; 1/2″ NPT on 3″ or 5″ dial size.
Stem Diameter: 1/4″ OD.
Immersion Depth: Minimum 2″ in liquids, 4″ in gas.

Model	Dial Size, Stem Length	Temperature Range, °F(°C)	Degree Div., °F(°C)
Back Connection			
BTB22551*	2″, 2-1/2″	0 to 250	2
BTB2405D	2″, 4″	0 to 250 (-20 to 120)	2 (2)
BTB2409D	2″, 4″	200 to 1000 (100 to 550)	10 (5)
BTB32510D	3″, 2-1/2″	0 to 200 (-20 to 100)	2 (2)
BTB3255D	3″, 2-1/2″	0 to 250 (-20 to 120)	2 (2)
BTB3257D	3″, 2-1/2″	50 to 550 (10 to 290)	5 (5)
BTB34010D	3″, 4″	0 to 200 (-20 to100)	2 (2)
BTB3405D	3″, 4″	0 to 250 (-20 to 120)	2 (2)
BTB3407D	3″, 4″	50 to 550 (10 to 290)	5 (5)
BTB3605D	3″, 6″	0 to 250 (-20 to 120)	2 (2)

Model	Dial Size, Stem Length	Temperature Range, °F(°C)	Degree Div., °F(°C)
Adjustable Angle Connection			
BTA54010D	5″, 4″	0/200 (-20/100)	2 (2)
BTA5405D	5″, 4″	0/250 (-20/120)	2 (2)
BTA5407D	5″, 4″	50/550 (10/290)	5 (5)
BTA56010D	5″, 6″	0/200 (-20/100)	2 (2)
BTA5605D	5″, 6″	0/250 (-20/120)	2 (2)
BTA5607D	5″, 6″	50/550 (10/290)	5 (5)
Lower Connection			
BTC3255D	3″, 2.5″	0/250(-20/120)	2 (2)

OPTION
For NIST traceable calibration certificate, use order code NISTCAL-TG.

*Model offered in Fahrenheit scale only.

Series GBT

Glow-in-the-Dark Bimetal Thermometer

Scale Background Glows, Scratch-Resistant Glass Lens

Scan here to watch product video

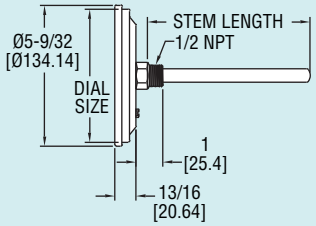

Back Connection

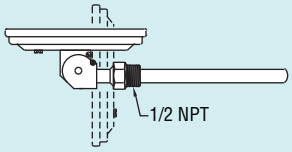

Adjustable Angle Connection

The Series GBT Glow-in-the-Dark Bimetal Thermometer offers accurate and reliable measurements, even in dimly-lit areas. The bimetal element directly drives the pointer, eliminating gears and linkages. The scale background glows brightly when mounted in dark areas for ease of reading. The glass lens can easily be cleaned and resists scratches for better viewing of the scale. Series GBT thermometers can be ordered in various stem lengths, connections, and ranges to fit most applications.

SPECIFICATIONS
Wetted Materials: 304 SS.
Housing Material: Series 300 SS.
Lens: Glass.
Accuracy: ±1%.
Temperature Limits: Ambient: -40 to 392°F (-40 to 200°C).
Dial Size: 5″.
Process Connection: 1/2″ NPT.
Resolution: 2°.
Weight: 12.7 oz (360 g).

Model	Dial Size	Connection	Range*	Stem
GBTB525151	5″	Back	0 to 300°F	2-1/2″
GBTB525161	5″	Back	0 to 500°F	2-1/2″
GBTB52571	5″	Back	50 to 550°F	2-1/2″
GBTB540151	5″	Back	0 to 300°F	4″
GBTB540161	5″	Back	0 to 500°F	4″
GBTB54071	5″	Back	50 to 550°F	4″
GBTB560151	5″	Back	0 to 300°F	6″
GBTB560161	5″	Back	0 to 500°F	6″
GBTB56071	5″	Back	50 to 550°F	6″
		ack	0 to 300°F	9″
		ack	0 to 500°F	9″
		ack	50 to 550°F	9″

Model	Dial Size	Connection	Range*	Stem
GBTA525151	5″	Adjustable	0 to 300°F	2-1/2″
GBTA525161	5″	Adjustable	0 to 500°F	2-1/2″
GBTA52571	5″	Adjustable	50 to 550°F	2-1/2″
GBTA540151	5″	Adjustable	0 to 300°F	4″
GBTA540161	5″	Adjustable	0 to 500°F	4″
GBTA54071	5″	Adjustable	50 to 550°F	4″
GBTA560151	5″	Adjustable	0 to 300°F	6″
GBTA560161	5″	Adjustable	0 to 500°F	6″
GBTA56071	5″	Adjustable	50 to 550°F	6″
GBTA590151	5″	Adjustable	0 to 300°F	9″
GBTA590161	5″	Adjustable	0 to 500°F	9″
GBTA59071	5″	Adjustable	50 to 550°F	9″

OPTION
For NIST traceable calibration certificate, use order code NISTCAL-TG.

y changing last digit to D. (Example: GBTB5255D)

TETİSAN TESİSAT TİCARET VE SANAYİİ A.Ş.
www.tetisantesisat.com
+90 212 267 08 42

Series BTL

Side Reading Bimetal Thermometer

Horizontally Mounts to Tank

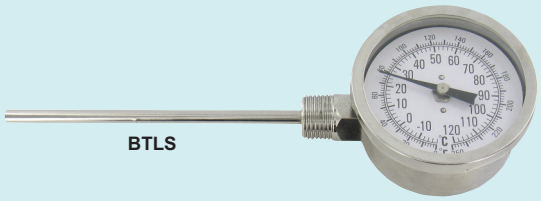

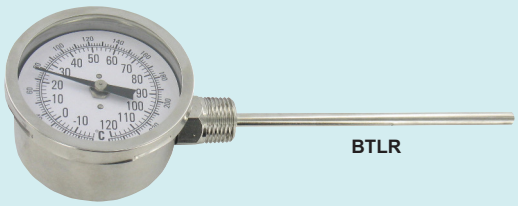

Scan here to watch product video

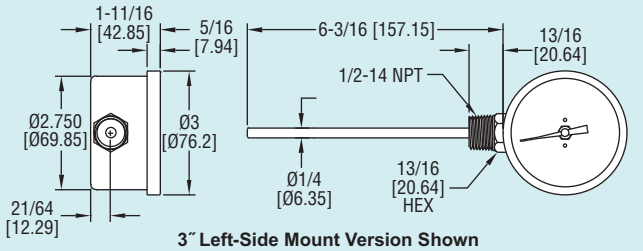

3″ Left-Side Mount Version Shown

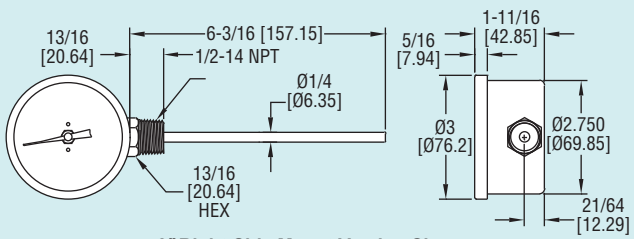

3″ Right-Side Mount Version Shown

Series BTL Side Reading Bimetal Thermometers are a great fit for tight, compact areas. Series BTL thermometers are constructed from 304 SS and have a scratch resistant glass lens for easy viewing. These horizontally mounted thermometers face upright to allow quick and easy measurements. With an accuracy of ±1%, the durable Series BTL thermometers are built to last for many years of great service.

SPECIFICATIONS
Wetted Materials: 304 SS.
Lens: Glass.
Accuracy: ±1% FS.
Temperature Limits: Ambient: -40 to 392°F (-40 to 200°C).

Dial Size: 3″.
Process Connection: 1/2″ NPT.
Resolution: Less than 2% of scale.
Weight: 9.2 oz (260 g).

Model	Connection	Stem	Range*	Model	Connection	Stem	Range*
BTLS32541	Left-side	2-1/2″	-40 to 160°F	**BTLR32541**	Right-side	2-1/2″	-40 to 160°F
BTLS32571	Left-side	2-1/2″	50 to 500°F	**BTLR32571**	Right-side	2-1/2″	50 to 500°F
BTLS3255D	Left-side	2-1/2″	0 to 250°F/-20 to 120°C	**BTLR3255D**	Right-side	2-1/2″	0 to 250°F/-20 to 120°C
BTLS34041	Left-side	4″	-40 to 160°F	**BTLR34041**	Right-side	4″	-40 to 160°F
BTLS34071	Left-side	4″	50 to 500°F	**BTLR34071**	Right-side	4″	50 to 500°F
BTLS3405D	Left-side	4″	0 to 250°F/-20 to 120°C	**BTLR3405D**	Right-side	4″	0 to 250°F/-20 to 120°C
BTLS36041	Left-side	4″	-40 to 160°F	**BTLR36041**	Right-side	6″	-40 to 160°F
BTLS36071	Left-side	6″	50 to 500°F	**BTLR36071**	Right-side	6″	50 to 500°F
BTLS3605D	Left-side	6″	0 to 250°F/-20 to 120°C	**BTLR3605D**	Right-side	6″	0 to 250°F/-20 to 120°C

OPTION
For NIST traceable calibration certificate, use order code NISTCAL-TG.

*Dual scale available by changing last digit to D. (Example: BTLS3254D)

Series CBT

Clip-On Bimetal Thermometer

Fits Any Size Pot, Adjustable Set Point Pointer

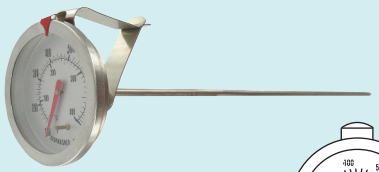

Scan here to watch product video

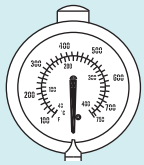

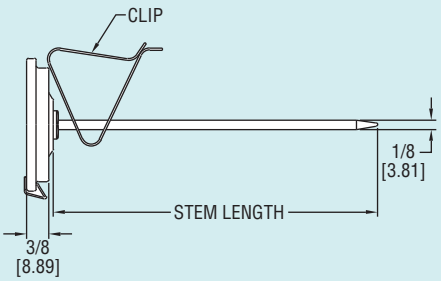

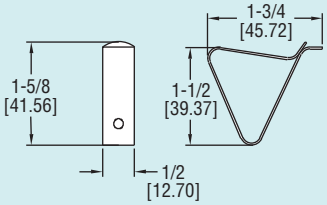

Clip

The Series CBT Clip-on Thermometers are designed to monitor the temperatures of products while they are cooking. The Series CBT thermometers give accurate readings by clipping onto the side of a pot in order to keep the temperature probe away from the bottom and sides. These thermometers are conveniently available in 11 ranges and two stem lengths to fit various sized pots or kettles. The Series CBT Clip-on Thermometers are constructed of durable SS for years of reliable service. The Series CBT can be used when preparing candies, soups, and deep fried foods.

SPECIFICATIONS
Wetted Materials: 304 SS.
Housing Material: Series 300 SS.
Lens: Glass.
Accuracy: ±1%.
Temperature Limits: Ambient: 15 to 300°F (-10 to 150°C).
Dial Size: 1-3/4″, 2″, and 3″.
Resolution: 2°.
Weight: 2.3 oz (65 g).

Model	Dial Size	Range*	Stem	Model	Dial Size	Range*	Stem
CBT175041	1-3/4″	-40 to 160°F	5″	**CBT25061**	2″	50 to 300°F	5″
CBT175051	1-3/4″	0 to 250°F	5″	**CBT25071**	2″	50 to 500°F	5″
CBT175061	1-3/4″	50 to 300°F	5″	**CBT25052**	2″	-10 to 110°C	5″
CBT175071	1-3/4″	50 to 500°F	5″	**CBT28041**	2″	-40 to 160°F	8″
CBT175052	1-3/4″	-10 to 110°C	5″	**CBT28051**	2″	0 to 250°F	8″
CBT178041	1-3/4″	-40 to 160°F	8″	**CBT28061**	2″	50 to 300°F	8″
CBT178051	1-3/4″	0 to 250°F	8″	**CBT28071**	2″	50 to 500°F	8″
		300°F	8″	**CBT28052**	2″	-10 to 110°C	8″
		500°F	8″	**CBT38041**	3″	-40 to 160°F	8″
		110°C	8″	**CBT38051**	3″	0 to 250°F	8″
		160°F	5″	**CBT38071**	3″	50 to 500°F	8″
		250°F	5″	**CBT38052**	3″	-10 to 110°C	8″

*Dual scales available by changing last digit to D. (Example: CBT17504D)

TETİSAN TESİSAT TİCARET VE SANAYİİ A.Ş.
www.tetisantesisat.com
+90 212 267 08 42

Series
BTLRN

Long Reach Bimetal Thermometer

Extra-long Stems Reach Remote Areas, Gripping Handle Available

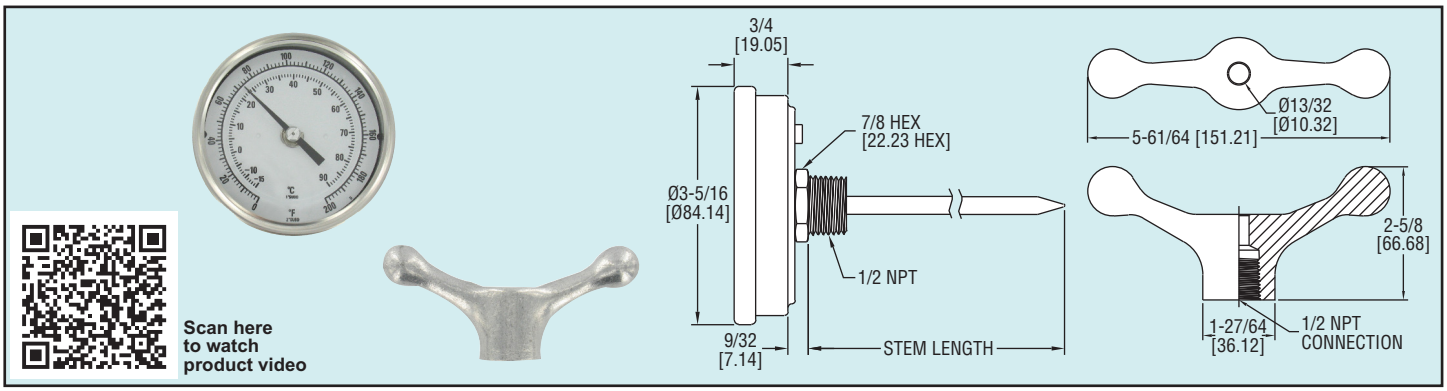

The Series BTLRN Long Reach Bimetal Thermometer reaches areas that other thermometers can't. The long reach thermometers have available stem lengths from 12″ to 72″. The large digits on the 3″ dial are easy to read. A gripping handle is available as an accessory to comfortably hold the thermometer during temporary installations. The Series BTLRN is ideal for large containers and air ducts.

Model	Stem Length	Range*
BTLRN312101	12″	0 to 200°F
BTLRN318101	18″	0 to 200°F
BTLRN324101	24″	0 to 200°F
BTLRN336101	36″	0 to 200°F
BTLRN348101	48″	0 to 200°F
BTLRN360101	60″	0 to 200°F
BTLRN372101	72″	0 to 200°F

*Dual scale units available by changing last digit to D. (Example: BTLRN31210D)

SPECIFICATIONS
Wetted Materials: 304 SS.
Housing Materials: Series 300 SS.
Lens: Glass.
Accuracy: ±1%.
Temperature Limits: Ambient: -40 to 392°F (-40 to 200°C).

ACCESSORY
BTLR-GH, Gripping Handle

OPTION
For NIST traceable calibration certificate, use order code NISTCAL-TG.

Dial Size: 3″.
Process Connection: 1/2″ NPT.
Resolution: 2°F (1°C).
Weight: 1.0 lb (0.45 kg).

Series
BTM3

Maximum/Minimum Bimetal Thermometer

Scratch-Resistant Glass Lens, Max/Min Temperature Pointer

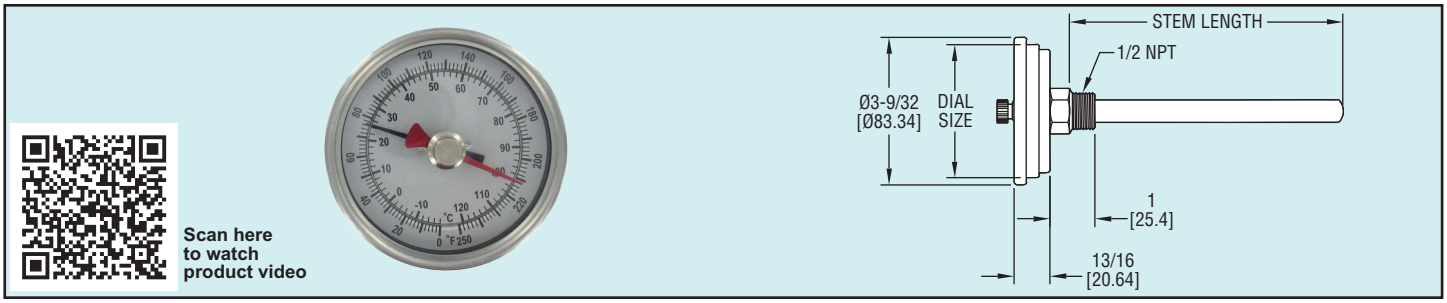

The Series BTM3 Bimetal Thermometer with Maximum/Minimum Temperature Pointer accurately measures the current temperature along with a maximum read or minimum read temperatures. Series BTM3 thermometers are conveniently available in multiple temperature ranges and stem lengths ranging from 2-1/2″ to 12″. These heavy duty back-connected thermometers are ideal for any industrial applications such as boilers, ovens, or refrigerated cabinets.

SPECIFICATIONS
Wetted Materials: 304 SS.
Housing Material: Series 300 SS.
Lens: Scratch resistant glass.
Accuracy: ±1%.
Temperature Limits: Ambient: 15 to 300°F (-10 to 150°C).

Dial Size: 3″.
Process Connection: 1/2″ NPT.
Resolution: 2°.
Weight: 7.4 oz (210 g).

Model	Connection	Range	Stem
BTM3254D	Back	-40 to 160°F (-40 to 71.1°C)	2-1/2″
BTM32511D	Back	0 to 140°F (-17.8 to 60°C)	2-1/2″
BTM32510D	Back	0 to 200°F (-17.8 to 93.3°C)	2-1/2″
BTM3256D	Back	50 to 300°F (10 to 148.9°C)	2-1/2″
BTM3258D	Back	150 to 750°F (65.5 to 398.9°C)	2-1/2″
BTM3404D	Back	-40 to 160°F (-40 to 71.1°C)	4″
BTM34011D	Back	0 to 140°F (-17.8 to 60°C)	4″
BTM34010D	Back	0 to 200°F (-17.8 to 93.3°C)	4″
BTM3406D	Back	50 to 300°F (10 to 148.9°C)	4″
BTM3408D	Back	150 to 750°F (65.5 to 398.9°C)	4″
BTM3604D	Back	-40 to 160°F (-40 to 71.1°C)	6″
BTM36011D	Back	0 to 140°F (-17.8 to 60°C)	6″
[illegible]	Back	[illegible] to 200°F (-17.8 to 93.3°C)	6″

Model	Connection	Range	Stem
BTM3606D	Back	50 to 300°F (10 to 148.9°C)	6″
BTM3608D	Back	150 to 750°F (65.5 to 398.9°C)	6″
BTM3904D	Back	-40 to 160°F (-40 to 71.1°C)	9″
BTM39011D	Back	0 to 140°F (-17.8 to 60°C)	9″
BTM39010D	Back	0 to 200°F (-17.8 to 93.3°C)	9″
BTM3906D	Back	50 to 300°F (10 to 148.9°C)	9″
BTM3908D	Back	150 to 750°F (65.5 to 398.9°C)	9″
BTM3124D	Back	-40 to 160°F (-40 to 71.1°C)	12″
BTM31211D	Back	0 to 140°F (-17.8 to 60°C)	12″
BTM31210D	Back	0 to 200°F (-17.8 to 93.3°C)	12″
BTM3126D	Back	50 to 300°F (10 to 148.9°C)	12″
BTM3128D	Back	150 to 750°F (65.5 to 398.9°C)	12″

tetisan
TETİSAN TESİSAT TİCARET VE SANAYİİ A.Ş.
www.tetisantesisat.com
+90 212 267 08 42

Series BTPM

Panel Mount Bimetal Stem Thermometer

Front Flange with Back Connection for Easy Mounting

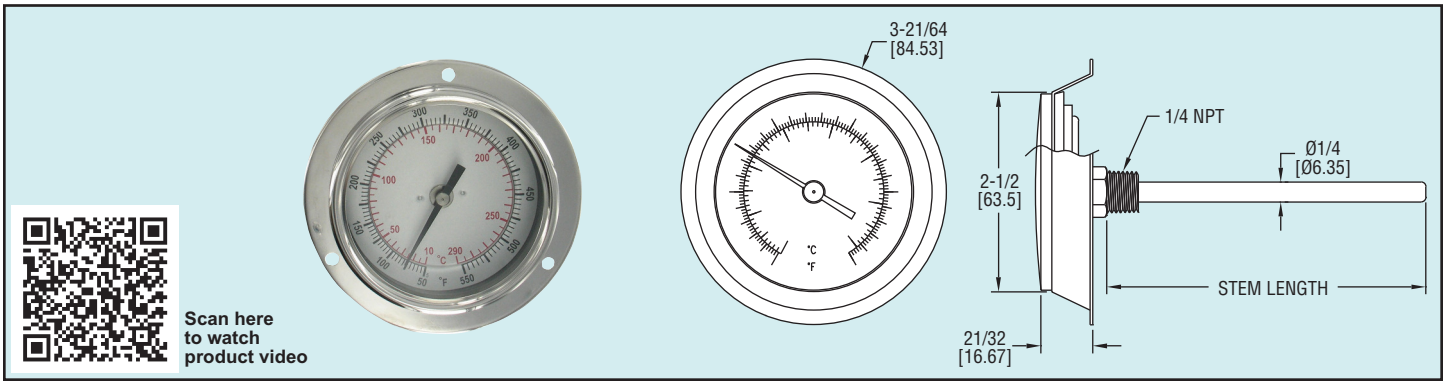

Series BTPM Panel Mount Bimetal Thermometers are designed to easily mount in most instrument panels. The front flange has three 5/32″ diameter holes to quickly attach the thermometer to the panel. The Series BTPM thermometer has a 3″ dial with a scratch resistant glass lens. The Series BTPM Panel Mount thermometers are ideal for HVAC, automotive, and food industry applications, chemical operations, and more.

Model	Range*	Stem Length
BTPM24041	-40 to 160°F	4″
BTPM240101	0 to 200°F	4″
BTPM26041	-40 to 160°F	6″
BTPM260101	0 to 200°F	6″
BTPM29041	-40 to 160°F	9″
BTPM290101	0 to 200°F	9″

*Dual scales available by changing last digit to "D." (Example: BTPM2404D)

SPECIFICATIONS
Wetted Materials: 304 SS.
Housing Material: Series 300 SS.
Lens: Glass.
Accuracy: ±1%.
Temperature Limits: Ambient: -40 to 392°F (-40 to 200°C).
Dial Size: 2-1/2″.
Process Connection: 1/4″ NPT.
Resolution: Less than 2% of scale.
Weight: 9.2 oz (260 g).

Series BTP

Pipe-Mount Bimetal Surface Thermometer

3 Spring Sizes, Fits Pipe Sizes from 3/4″ to 6″

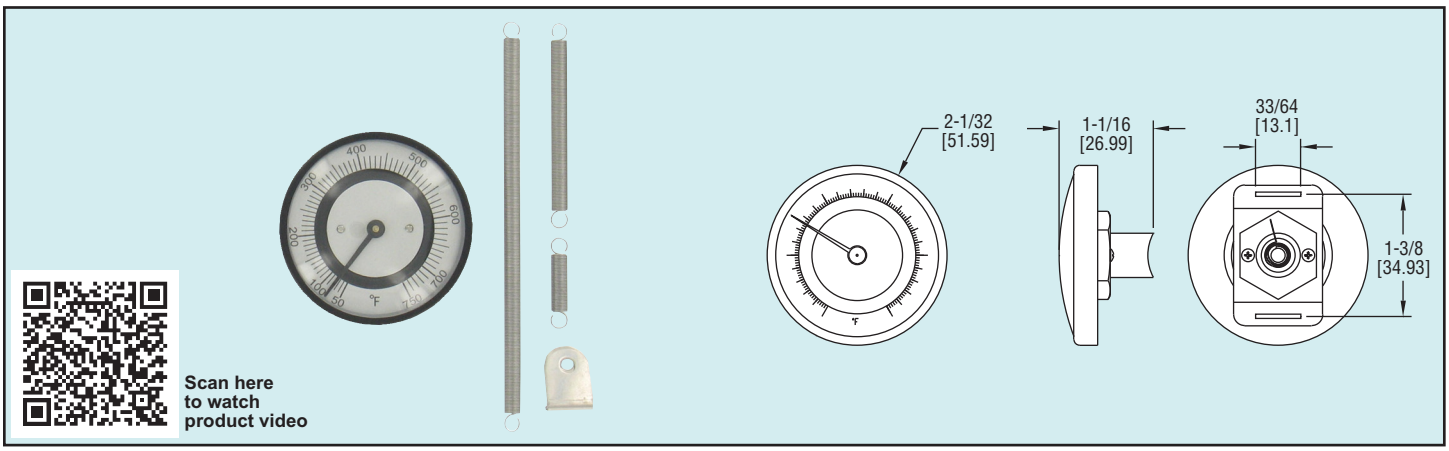

The Series BTP Pipe-Mount Bimetal Surface Thermometers are designed to accurately measure the surface temperature of 3/4″ to 6″ pipe sizes. The BTP series includes three spring sizes to securely mount the pipe's surface. Pipe Mount thermometers are perfect for temporary installation and applications that require non-intrusive temperature measurement.

Model	Range	Spring Size
BTP251	-50 to 250°F	3/4″ to 6″
BTP241	0 to 150°F	3/4″ to 6″
BTP261	70 to 370°F	3/4″ to 6″
BTP271	70 to 500°F	3/4″ to 6″
		3/4″ to 6″
		3/4″ to 6″
		3/4″ to 6″
		3/4″ to 6″

SPECIFICATIONS
Housing Material: Steel.
Lens: Glass.
Accuracy: ±2%.
Temperature Limits: Ambient: 14 to 302°F (-10 to 150°C).
Dial Size: 2″.
Mounting: Spring.
Resolution: Less than 4% of scale.
Weight: 3.4 oz (95 g).

TETİSAN TESİSAT TİCARET VE SANAYİİ A.Ş.
www.tetisantesisat.com
+90 212 267 08 42

Series STC

Pipe-Mount Bimetal Surface Thermometer

Fits Pipe Sizes from 3/4″ to 2-3/8″, Clip-on Mount

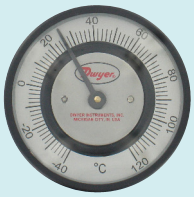

Scan here to watch product video

Clip Size	Dim. A
3/4 to 7/8	1-5/8 [41.28]
1 to 1-5/8	1-7/8 [47.63]
1-5/8 to 2-3/8	2-1/2 [63.5]

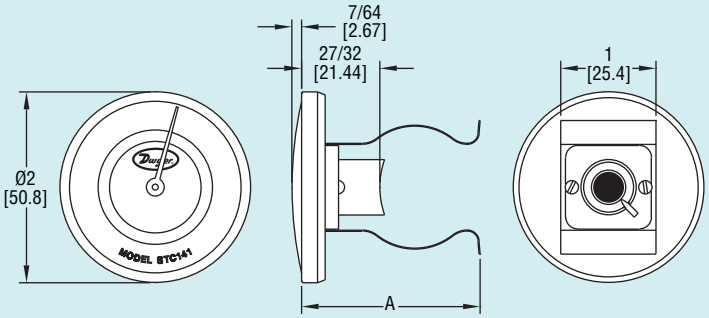

The Series STC Pipe-Mount Bimetal Surface Thermometers are designed to accurately measure the surface temperature of 3/4″ to 2-3/8″ pipe sizes. The STC series is available in three different clip sizes and feature a bimetal spiral spring sensing element that provides quick temperature readings. Pipe mount thermometers are perfect for temporary installations and applications that require non-intrusive temperature measurements.

Model	Range	Pipe Size
STC151	-50 to 250°F	3/4″ to 7/8″
STC141	0 to 150°F	3/4″ to 7/8″
STC161	70 to 370°F	3/4″ to 7/8″
STC152	-40 to 120°C	3/4″ to 7/8″
STC162	20 to 180°C	3/4″ to 7/8″
STC172	20 to 260°C	3/4″ to 7/8″
STC351	-50 to 250°F	1″ to 1-5/8″
STC341	0 to 150°F	1″ to 1-5/8″
STC361	70 to 370°F	1″ to 1-5/8″
STC371	70 to 500°F	1″ to 1-5/8″
STC372	20 to 260°C	1″ to 1-5/8″
STC451	-50 to 250°F	1-5/8″ to 2-3/8″
STC441	0 to 150°F	1-5/8″ to 2-3/8″
STC461	70 to 370°F	1-5/8″ to 2-3/8″
STC462	20 to 180°C	1-5/8″ to 2-3/8″
STC472	20 to 260°C	1-5/8″ to 2-3/8″

SPECIFICATIONS
Housing Material: Steel.
Lens: Glass.
Accuracy: ±2%.
Resolution: Less than 4% of scale.
Temperature Limits: Ambient: 14 to 302°F (-10 to 150°C).
Dial Size: 2″.
Mounting: Clip.
Weight: 3.4 oz (95 g).

Series ST

Surface Mount Thermometer

2″ Dual Scale Dial, ±2% Full Scale Accuracy

Scan here to watch product video

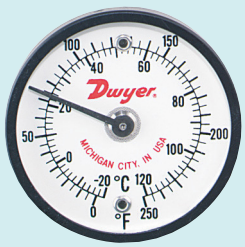

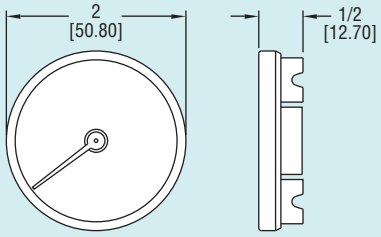

Measure the temperature of boilers, air ducts, motors, bearings, furnaces or other surfaces with Series ST Surface Mount Thermometers. Dual magnet design allows easy mounting on any ferrous surface. Bi-metallic thermal sensing coil provides quick temperature measurement with ±2% full-scale accuracy.

APPLICATIONS
Manifolds, platens, boilers, air ducts, furnaces, engines, motors, bearings, enclosures, cabinets, drums, plumbing, piping, refrigerators, and other ferrous surfaces.

Model	Range
	to 120°C)
	to 260°C)
	to 400°C)

SPECIFICATIONS
Housing Material: Aluminum.
Accuracy: ±2% full-scale.
Sensing Element: Bimetal coil.
Dial Size: 2″ (5.08 cm).
Response Time: Approximately one minute.
Mounting: Two Alnico magnets on back.
Height: 1/2″ (1.27 cm).
Weight: 2 oz (56.7 g).

TETİSAN TESİSAT TİCARET VE SANAYİİ A.Ş.
www.tetisantesisat.com
+90 212 267 08 42

Series
IT

Industrial Thermometer

9″ Scale, Adjustable Angle Stem

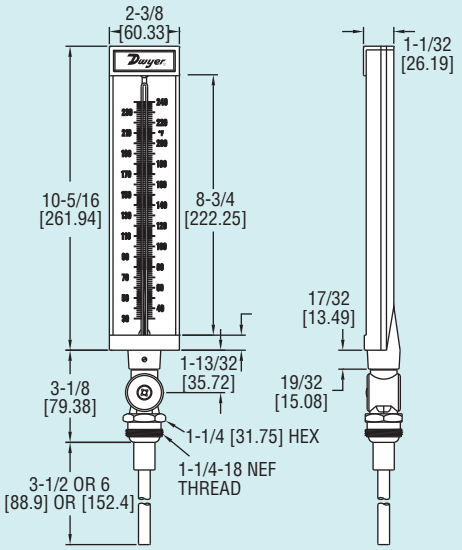

The Series IT Industrial Thermometer allows users to easily take accurate temperature measurements in any environment. The case of the IT series is made of die cast aluminum for extra durability in industrial environments. The glass lens is easily cleaned and resists scratches for better viewing of the scale. The stem can be adjusted 180° in order to achieve the best viewing angle. The blue organic fill is non-toxic and allows users to better see the temperature reading. The scales can be ordered with dual units, °F, or °C.

3-1/2″ Stem		6″ Stem	
Model	**Range**	**Model**	**Range**
ITA9351D	-40 to 110°F (-40 to 40°C)	**ITA9601D**	-40 to 110°F (-40 to 40°C)
ITA9352D	0 to 120°F (-15 to 50°C)	**ITA9602D**	0 to 120°F (-15 to 50°C)
ITA9353D	0 to 160°F (-15 to 70°C)	**ITA9603D**	0 to 160°F (-15 to 70°C)
ITA9354D	30 to 180°F (0 to 80°C)	**ITA9604D**	30 to 180°F (0 to 80°C)
ITA9355D	30 to 240°F (0 to 115°C)	**ITA9605D**	30 to 240°F (0 to 115°C)
ITA9356D	30 to 300°F (0 to 150°C)	**ITA9606D**	30 to 300°F (0 to 150°C)
ITA9357D	50 to 400°F (10 to 205°C)		
ITA9358D	100 to 550°F (40 to 300°C)		

SPECIFICATIONS
Wetted Material: Tapered cast aluminum with graphite fill.
Housing Material: 9″ (228 mm) aluminum.
Lens: Glass.
Accuracy: 1% accuracy.
Scales: Aluminum painted white with black markings.
Process Connection: 1-1/4-18 NEF thread.
Liquid Filling: Organic blue liquid filled tube.
Mounting: Adjustable stem: Vertical plane 180° horizontal plane 360°.
Weight: 1 lb 7 oz (0.65 kg).

OPTION
For NIST traceable calibration certificate, use order code NISTCAL-TG.

Series
IT-W

Industrial Thermometer Thermowells

Fits IT Thermometers with 3-1/2″ and 6″ Stem Lengths

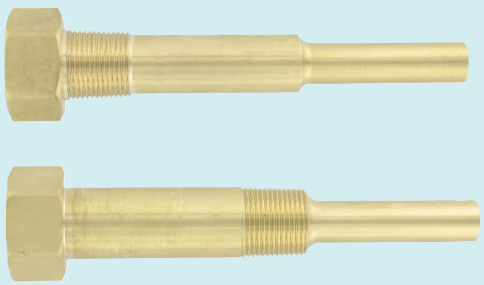

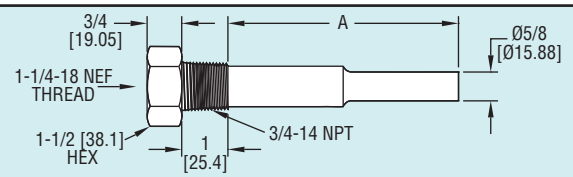

Standard Type Thermowell

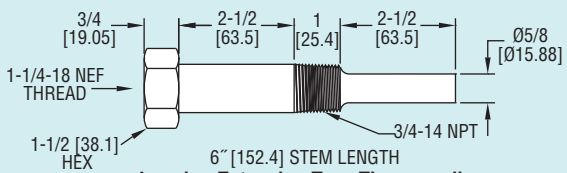

Lagging Extension Type Thermowell

The Series IT-W Thermowells reduce installation cost and time by eliminating the need to drain the system when servicing industrial thermometers. The thermowells protect industrial thermometers from high pressure, flow and corrosive media. Series IT-W Thermowells are available with 2-1/2″ and 5″ insertion lengths and with the option of a 2-1/2″ lagging extension. These cost efficient brass, 304 stainless steel, and 316 stainless steel thermowells with 3/4″ NPT threads are compatible with Series IT for most applications.

Model	Materials	Insertion Length	Lag
IT-W01	Brass	2-1/2″	N/A
IT-W11	304 SS	2-1/2″	N/A
IT-W21	316 SS	2-1/2″	N/A
IT-W04	Brass	5″	N/A
IT-W14	304 SS	5″	N/A
IT-W24	316 SS	5″	N/A
IT-W07	Brass	2-1/2″	2-1/2″
IT-W17	304 SS	2-1/2″	2-1/2″
IT-W27	316 SS	2-1/2″	2-1/2″

TETİSAN TESİSAT TİCARET VE SANAYİİ A.Ş.
www.tetisantesisat.com
+90 212 267 08 42

Series
DBT

Digital Solar-Powered Bimetal Thermometer

LCD Display, Adjustable Angle Stem

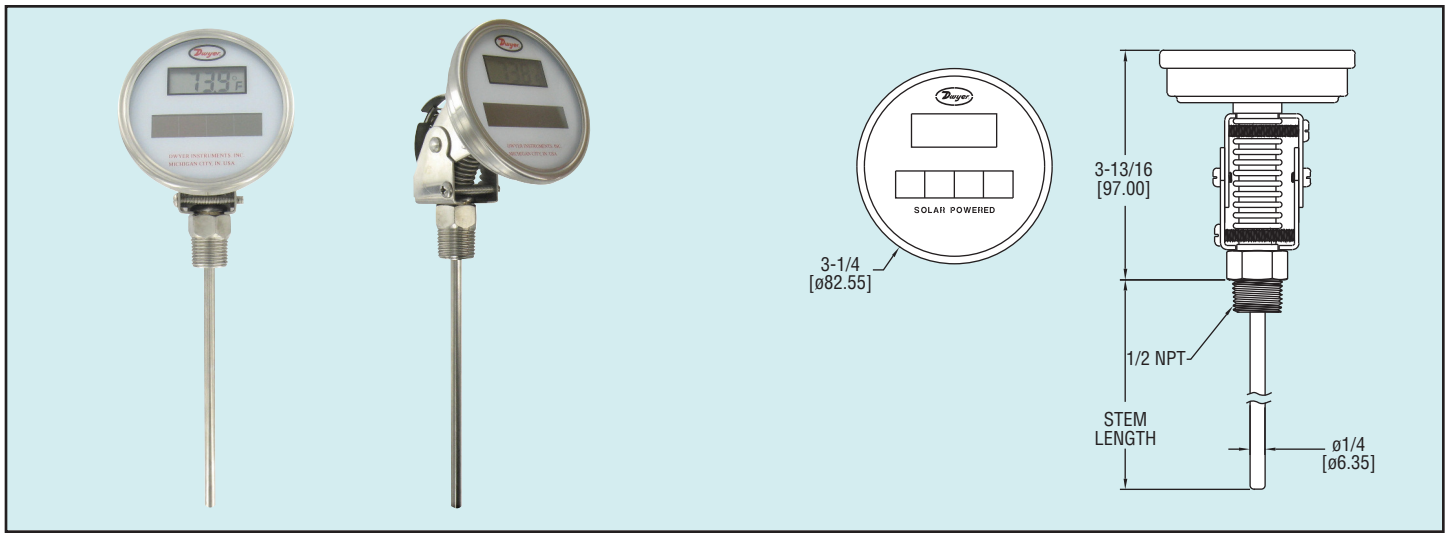

The Series DBT Digital Solar-Powered Bimetal Thermometer takes the guesswork out of temperature measurement. The 3-1/2 digit LED display is easy to read and provides resolution to 0.1°F. The adjustable angle can be mounted in virtually any position. The engineering units can be selected in the field by removing the back cover.

Model	Stem Length	Range
DBTA3251	2.5″	-58 to 302°F (-50 to 150°C)
DBTA3252	2.5″	-58 to 158°F (-50 to 70°C)
DBTA3401	4″	-58 to 302°F (-50 to 150°C)
DBTA3402	4″	-58 to 158°F (-50 to 70°C)
DBTA3601	6″	-58 to 302°F (-50 to 150°C)
DBTA3602	6″	-58 to 158°F (-50 to 70°C)
DBTA3901	9″	-58 to 302°F (-50 to 150°C)
DBTA3902	9″	-58 to 158°F (-50 to 70°C)
DBTA3121	12″	-58 to 302°F (-50 to 150°C)
DBTA3122	12″	-58 to 158°F (-50 to 70°C)
DBTA3151	15″	-58 to 302°F (-50 to 150°C)
DBTA3152	15″	-58 to 158°F (-50 to 70°C)
DBTA3181	18″	-58 to 302°F (-50 to 150°C)
DBTA3182	18″	-58 to 158°F (-50 to 70°C)
DBTA3241	24″	-58 to 302°F (-50 to 150°C)
DBTA3242	24″	-58 to 158°F (-50 to 70°C)

OPTION
For NIST traceable calibration certificate, use order code NISTCAL-TG.

SPECIFICATIONS
Wetted Materials: 304 SS.
Housing Material: Series 300 SS.
Lens: Acrylic.
Accuracy: 32 to 122°F (0 to 50°C): ±1% FS.
Dial Size: 3″.
Process Connection: 1/2″ NPT-adjustable angle.
Display: 3-1/2 digit LCD.
Response Time: 15 seconds.
Power Requirements: 3 V LR44 solar cell (min. 35 LUX required) alkaline battery, installed functional, user replaceable.
Weight: 12 oz (350 g).

TETİSAN TESİSAT TİCARET VE SANAYİİ A.Ş.
www.tetisantesisat.com
+90 212 267 08 42

Series
DRFT

Digital Solar-Powered Thermometer

LCD Display, Remote Probe, Compact Size

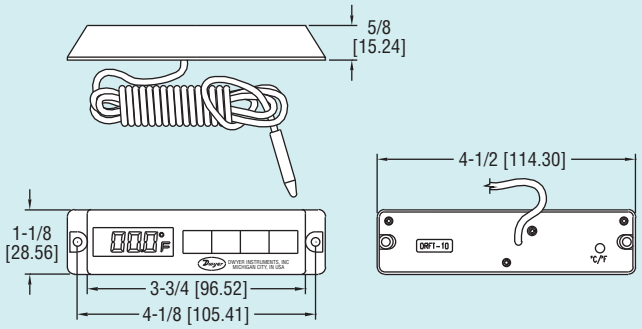

The Series DRFT Solar Digital Refrigerator and Freezer Thermometer makes monitoring cold environments effortless. This thermometer can instantly show exact temperatures of your refrigerator or freezer in °F or °C with the flip of a switch. The Series DRFT digital thermometer helps monitor appliance temperature fluctuations to preserve and prevent spoilage of food, medications, wines, and much more. Series DRFT thermometers are powered by solar panels that make the unit environmentally attractive, efficient and cost-saving.

Model DRFT-10, White Digital Solar-Powered Thermometer
Model DRFT-10-BLACK, Black Digital Solar-Powered Thermometer

SPECIFICATIONS
Temperature Range: -40 to 158°F (-40 to 70°C).
Ambient Temperature Range: 41 to 140°F (5 to 60°C).
Accuracy: 0 to 50°C: ±1C; -40 to 0°C and 51 to 70°C: ±1.5°C.
Display: LCD.
Dimensions: 4.5″ x 1.1″ x 0.6″.
Response Time: 10 s.
Sensor: Thermistor.
Power Requirements: 1.5 V AAA alkaline battery, installed functional, user replaceable.
Case: ABS.
Capillary Length: 3.2′ (1 m).
Weight: 2.8 oz (80 g).

OPTION
For NIST traceable calibration certificate, use order code NISTCAL-TG.

Series
RRT3

Remote Reading Thermometer with Switch

SPDT Relay, Liquid Actuated Bulb and Capillary

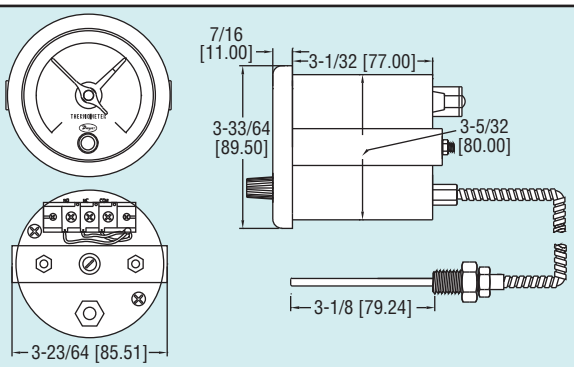

The Series RRT3 Remote Reading Thermometer with Switch combines an easy to read 3-1/4″ dual scale dial thermometer and a SPDT relay. Color coordinated pointers display the current process temperature and set point. In order to change the set point, a front adjustment knob controls the red set point pointer. The design of the internal mechanical switch movement prevents the set point pointer from sticking to the process indicating pointer. A 10.5 ft (3.2 m) stainless steel flex hose capillary prevents kinking and leaking of the measuring fluid when bending the capillary. For quick installation, electrical connections can be made to male quick connects or to the finger-safe screw terminals. Thermometer includes a u-clamp mounting bracket for panel mounting.

Model	Temperature Ranges
	°F (-40 to 50°C)
	°F (0 to 120°C)
	F (-18 to 149°C)

SPECIFICATIONS
Wetted Materials: Brass.
Accuracy: ±3% FS.
Housing Material: 304 SS.
Temperature Limit: -4 to 158°F (-20 to 70°C).
Switch Type: SPDT.
Electrical Ratings: 3 A @ 250 VAC, .2 A @ 250 VDC.
Electrical Connections: Screw terminal.
Process Connection: 1/2″ (12.7 mm) male NPT.
Dial Size: 3-1/2″ (90 mm).
Capillary Length: 10.5′ (3.2 m).
Bulb Length: 3″ (76 mm).
Weight: 2 lb (900 g).

OPTION
For NIST traceable calibration certificate, use order code NISTCAL-TG.

TETİSAN TESİSAT TİCARET VE SANAYİİ A.Ş.
www.tetisantesisat.com
+90 212 267 08 42

Series
BTO

Bimetal Thermometer with Transmitter Output

Bimetal Stem with 4-20 mA Output, 3″ or 5″ Dial

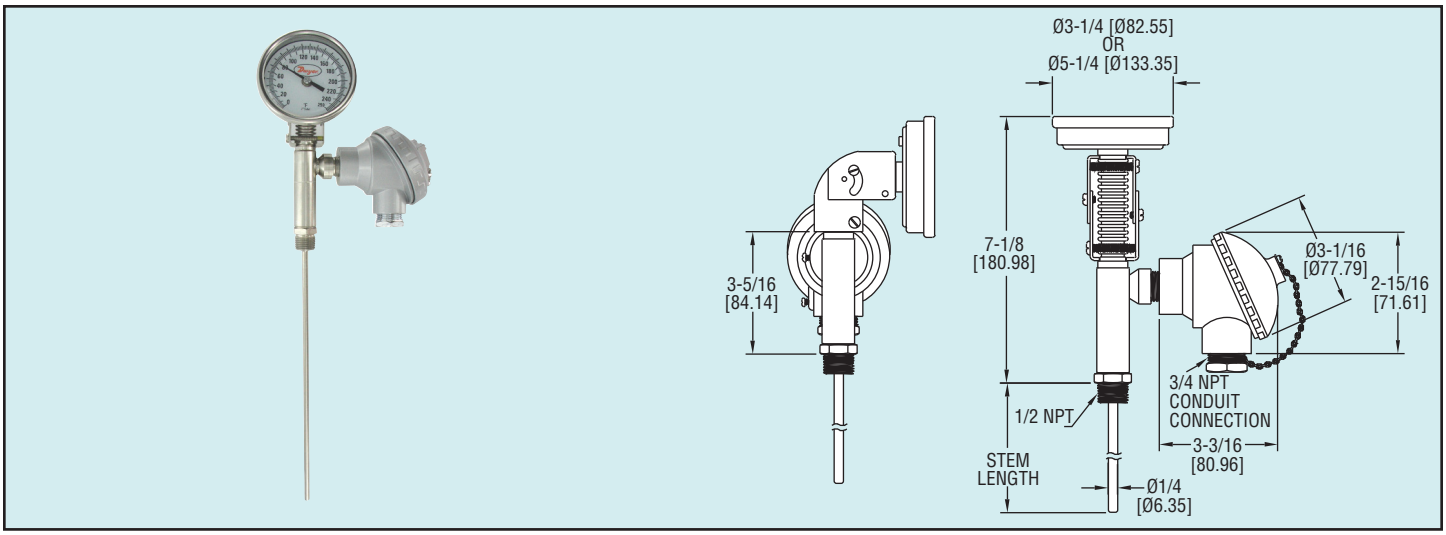

The Series BTO Bimetal Thermometer with Transmitter Output eliminates the need for a separate thermometer and transmitter. By only needing one connection, the BTO series reduces installation cost and saves space. The head-mount transmitter is located in a weatherproof thermal head located on the side of the stem. The BTO series is ideal for use on power generating boilers, skid mounted compressors, and thermal oxidation systems.

SPECIFICATIONS
Thermometer Specifications
Wetted Materials: 304 SS.
Housing Material: 304 SS.
Lens: Glass.
Accuracy: ±1% full-scale.
Temperature Limits: Ambient: -58 to 185°F (-50 to 85°C).
Dial Size: 3″ or 5″.
Process Connection: 1/2″ NPT.
Resolution: 2°F (5°F for 400°F and 550°F models).
Weight: 1.95 lb.
Transmitter Specifications
Temperature Limits: Ambient: -58 to 185°F (-50 to 85°C).
Power Requirement: 10 to 33 VDC.
Output Signal: 4 to 20 mA.
Loop Resistance: 1045Ω.
Power Consumption: 38 mA.
Enclosure Rating: NEMA 4X (IP66).

Model	Dial Size	Stem Length	Range	Model	Dial Size	Stem Length	Range
BTO325101	3″	2.5″	0 to 200°F	**BTO525101**	5″	2.5″	0 to 200°F
BTO32551	3″	2.5″	0 to 250°F	**BTO52551**	5″	2.5″	0 to 250°F
BTO32561	3″	2.5″	50 to 300°F	**BTO52561**	5″	2.5″	50 to 300°F
BTO325121	3″	2.5″	50 to 400°F	**BTO525121**	5″	2.5″	50 to 400°F
BTO32571	3″	2.5″	50 to 550°F	**BTO52571**	5″	2.5″	50 to 550°F
BTO340101	3″	4″	0 to 200°F	**BTO540101**	5″	4″	0 to 200°F
BTO34051	3″	4″	0 to 250°F	**BTO54051**	5″	4″	0 to 250°F
BTO34061	3″	4″	50 to 300°F	**BTO54061**	5″	4″	50 to 300°F
BTO340121	3″	4″	50 to 400°F	**BTO540121**	5″	4″	50 to 400°F
BTO34071	3″	4″	50 to 550°F	**BTO54071**	5″	4″	50 to 550°F
BTO360101	3″	6″	0 to 200°F	**BTO560101**	5″	6″	0 to 200°F
BTO36051	3″	6″	0 to 250°F	**BTO56051**	5″	6″	0 to 250°F
BTO36061	3″	6″	50 to 300°F	**BTO56061**	5″	6″	50 to 300°F
BTO360121	3″	6″	50 to 400°F	**BTO560121**	5″	6″	50 to 400°F
BTO36071	3″	6″	50 to 550°F	**BTO56071**	5″	6″	50 to 550°F
BTO390101	3″	9″	0 to 200°F	**BTO590101**	5″	9″	0 to 200°F
BTO39051	3″	9″	0 to 250°F	**BTO59051**	5″	9″	0 to 250°F
BTO39061	3″	9″	50 to 300°F	**BTO59061**	5″	9″	50 to 300°F
BTO390121	3″	9″	50 to 400°F	**BTO590121**	5″	9″	50 to 400°F
BTO39071	3″	9″	50 to 550°F	**BTO59071**	5″	9″	50 to 550°F
BTO312101	3″	12″	0 to 200°F	**BTO512101**	5″	12″	0 to 200°F
BTO31251	3″	12″	0 to 250°F	**BTO51251**	5″	12″	0 to 250°F
BTO312061	3″	12″	50 to 300°F	**BTO512061**	5″	12″	50 to 300°F
BTO312121	3″	12″	50 to 400°F	**BTO512121**	5″	12″	50 to 400°F
BTO31271	3″	12″	50 to 550°F	**BTO51271**	5″	12″	50 to 550°F

on certificate, use order code NISTCAL-TT1.

TETİSAN TESİSAT TİCARET VE SANAYİİ A.Ş.
www.tetisantesisat.com
+90 212 267 08 42

Series
32B

1/32 DIN Temperature/Process Controller

Universal Input, Dual Temperature Output Control, RS-485 Communication

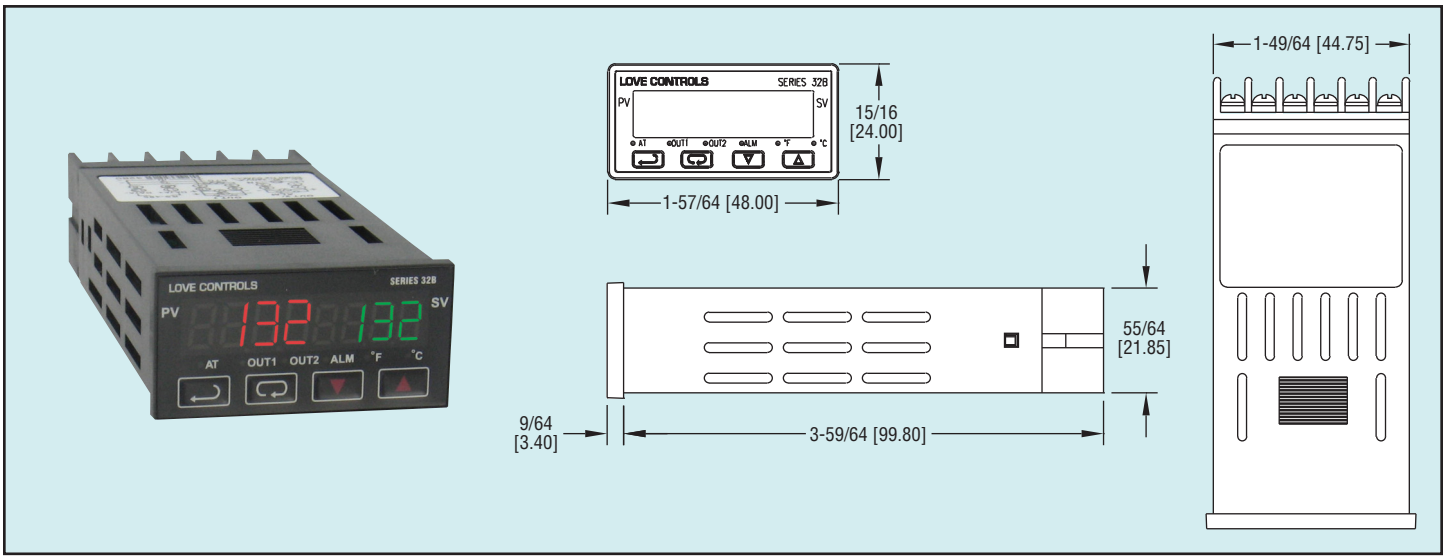

The compact Series 32B Temperature/Process Controller offers advanced control features for the most demanding temperature or process applications. Enclosed in a 1/32 DIN housing, the Series 32B is designed with dual, 4-digit LED displays for local indication of process value and setpoint. Control methods include ON/OFF, PID, self-tune, and manual tune. PID control is supported with 64 temperature and time (ramp/soak) control actions. The dual loop output control allows simultaneous heating and cooling control. The second output can be configured as an alarm mode using one of the thirteen built-in alarm functions.

RS-485 communication is standard on the Series 32B. Up to 247 communication addresses are available with transmission speeds of 2400 to 38,400 bps. The controller also features universal input, selectable temperature units (°F/°C), selectable resolution, quick sampling rate and security protection.

Model	Output 1	Output 2
32B-23	Voltage Pulse	Relay
32B-33	Relay	Relay
32B-53	Current	Relay

Add -LV to end of model number for 24 VDC supply power.

ACCESSORIES

SCD-SW, Configuration Software
A-277, 250 Ω Precision Resistor
MN-1, Mini-Node™ USB/RS-485 converter
A-600, R/C snubber

SPECIFICATIONS

Inputs: Thermocouple, RTD, DC voltages or DC current.
Display: Two 4-digit, 7 segment .25″ H (6.35 mm) LED's. PV: red; SV: green.
Accuracy: ±0.25% span, ±1 least significant digit.
Supply Voltage: 100 to 240 VAC, 50/60 Hz or 24 VDC (depending on model).
Power Consumption: 5 VA max.
Operating Temperature: 32 to 122°F (0 to 50°C).
Memory Backup: Nonvolatile memory.
Control Output Ratings:
Relay: SPST, 3A @ 250 VAC resistive;
Voltage pulse: 14V, 10% to -20% (max. 40 mA);
Current: 4 to 20 mA.
Communication: RS-485 Modbus® A-5-11/RTU communication protocol.
Weight: 4 oz (114 g).
Agency Approvals: CE, RoHS, cUL, UL.
Front Panel Rating: IP56.

Input Types	Range
Type K T/C	-328 to 2372°F (-200 to 1300°C)
Type J T/C	-148 to 2192°F (-100 to 1200°C)
Type T T/C	-328 to 752°F (-200 to 400°C)
Type E T/C	32 to 1112°F (0 to 600°C)
Type W T/C	-328 to 2372°F (-200 to 1300°C)
Type R T/C	32 to 3092°F (0 to 1700°C)
Type S T/C	32 to 3092°F (0 to 1700°C)
Type B T/C	212 to 3272°F (100 to 1800°C)
Type L T/C	-328 to 1562°F (-200 to 850°C)
Type U T/C	-328 to 932°F (-200 to 500°C)
Pt 100 RTD	-328 to 1112°F (-200 to 600°C)
0 to 50 mV	-999 to 9999
0 to 5 V	-999 to 9999
0 to 10 V	-999 to 9999
0 to 20 mA*	-999 to 9999
4 to 20 mA*	-999 to 9999

*Requires 250 Ohm Precision Resistor.

Modbus® is a registered trademark of Schneider Automation, Inc.

TETİSAN TESİSAT TİCARET VE SANAYİİ A.Ş.
www.tetisantesisat.com
+90 212 267 08 42

Series 16B

1/16 DIN Temperature/Process Controller

Dual Control Output, RS-485 Communication, Universal Inputs

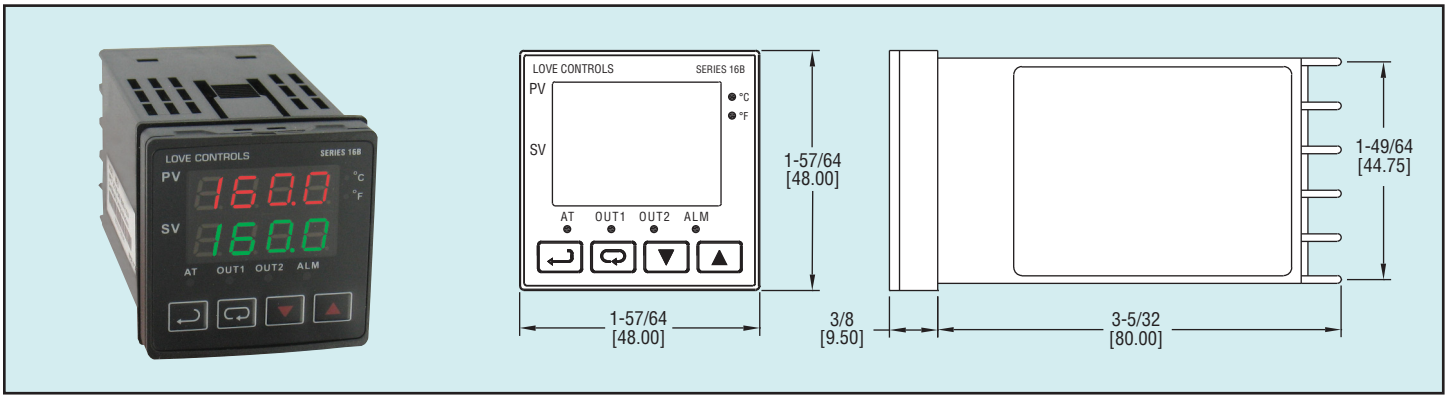

Monitor and control temperature or process applications with precision using the Series 16B controllers. The units offer two separate outputs for dual loop control in direct or reverse acting. Select relay, voltage, or current output combined with a second relay output.

The Series 16B provides dual LED displays for local indication of process value and setpoint value. Output status, engineering scale, auto tuning and alarm status is also indicated on the front panel.

Control methods include ON/OFF, PID, self-tune and manual tune. PID control is supported with 64 ramp/soak control actions. Two additional alarm outputs are standard on the Series 16B. The alarm outputs can be quickly configured by using the thirteen built-in alarm functions.

The controller easily communicates with other external devices such as PC's and PLC's for data search and system integration using the built-in RS-485 interface. Up to 247 communication addresses are available with transmission speeds of 2400 to 38,400 bps. The Series 16B also features universal input, selectable °F/°C, selectable resolution and security functions.

SPECIFICATIONS

Inputs: Thermocouple, RTD, DC voltages or DC current.
Display: Two 4-digit, 7 segment .25˝ H (6.35 mm) LED's. PV: red; SV: green.
Accuracy: ±0.25% span, ±1 least significant digit.
Supply Voltage: 100 to 240 VAC, 50/60 Hz or 24 VDC (depending on model).
Power Consumption: 5 VA max.
Operating Temperature: 32 to 122°F (0 to 50°C).
Memory Backup: Nonvolatile memory.
Control Output Ratings:
Relay: SPST, 5A @ 250 VAC resistive;
Voltage pulse: 14V, 10% to -20% (max. 40 mA);
Current: 4 to 20 mA.
Communication: RS-485 Modbus® A-5-11/RTU communication protocol.
Weight: 4 oz (114 g).
Agency Approvals: CE, RoHS, cUL, UL.
Front Panel Rating: IP56.

Model	Output 1	Output 2
16B-23	Voltage Pulse	Relay
16B-33	Relay	Relay
16B-53	Current	Relay

Add -LV to end of model number for 24 VDC supply power.

ACCESSORIES

SCD-SW, Configuration Software
A-277, 250 Ω Precision Resistor
MN-1, Mini-Node™ USB/RS-485 converter
A-600, R/C snubber

Input Types	Range
Type K T/C	-328 to 2372°F (-200 to 1300°C)
Type J T/C	-148 to 2192°F (-100 to 1200°C)
Type T T/C	-328 to 752°F (-200 to 400°C)
Type E T/C	32 to 1112°F (0 to 600°C)
Type W T/C	-328 to 2372°F (-200 to 1300°C)
Type R T/C	32 to 3092°F (0 to 1700°C)
Type S T/C	32 to 3092°F (0 to 1700°C)
Type B T/C	212 to 3272°F (100 to 1800°C)
Type L T/C	-328 to 1562°F (-200 to 850°C)
Type U T/C	-328 to 932°F (-200 to 500°C)
Pt 100 RTD	-328 to 1112°F (-200 to 600°C)
0 to 50 mV	-999 to 9999
0 to 5 V	-999 to 9999
0 to 10 V	-999 to 9999
0 to 20 mA*	-999 to 9999
4 to 20 mA*	-999 to 9999

*Requires 250 Ohm Precision Resistor

Modbus® is a registered trademark of Schneider Automation, Inc.

TETİSAN TESİSAT TİCARET VE SANAYİİ A.Ş.
www.tetisantesisat.com
+90 212 267 08 42

Series 16C

1/16 DIN Temperature Controller

PID Control, Auto-Tuning, Dual Display, RS-485 Communication

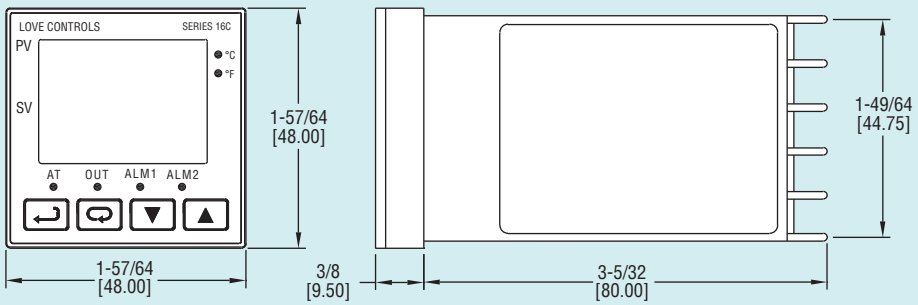

The compact Series 16C Temperature Controller offers accurate temperature measurement and control in a 1/16 DIN package. Designed for direct or reverse acting (cooling or heating) control, the Series 16C can be programmed for simple ON/OFF or more complex PID control functions. PID control is supported with manual or auto-tuning. Select relay, voltage or current output for control methods.

The Series 16C accepts a variety of thermocouple and RTD inputs. Process value and setpoint value are displayed simultaneously on the large dual LED. Auto-tuning, engineering units (°F or °C), and alarm status is also indicated on the faceplate. Two alarm outputs are included on the unit with 12 preprogrammed alarm functions.

Model	Output
16C-2	Voltage Pulse
16C-3	Relay
16C-5	Current

ACCESSORIES

SCD-SW, Configuration Software
MN-1, Mini-Node™ USB/RS-485 converter
A-600, R/C snubber

SPECIFICATIONS

Inputs: Thermocouple, RTD, see chart.
Display: Two 4-digit, 7 segment .25″ H (6.35 mm) LED's. PV: red; SV: green.
Accuracy: ±0.25% span, ±1 least significant digit.
Supply Voltage: 100 to 240 VAC, 50/60 Hz.
Power Consumption: 5 VA max.
Operating Temperature: 32 to 122°F (0 to 50°C).
Memory Backup: Nonvolatile memory.
Control Output Ratings:
Relay: SPST, 5A @ 250 VAC resistive;
Voltage pulse: 14V, 10% to -20% (max 40 mA);
Current: 4 to 20 mA.
Communication: RS-485 Modbus® communication protocol.
Weight: 4 oz (114 g).
Agency Approvals: CE, RoHS, cUL, UL.
Front Panel Rating: NEMA 4X (IP66).

Input Types	Range
Pt100Ω RTD	32 to 212°F (0 to 100°C) -4 to 932°F (-20 to 500°C) -328 to 1112°F (-200 to 600°C)
T/C type B	212 to 3272°F (100 to 1800°C)
T/C type S	32 to 3092°F (0 to 1700°C)
T/C type R	32 to 3092°F (0 to 1700°C)
T/C type N	-328 to 2372°F (-200 to 1300°C)
T/C type E	32 to 1112°F (0 to 600°C)
T/C type T	-4 to 752°F (-20 to 400°C) -328 to 752°F (-200 to 400°C)
T/C type J	-4 to 752°F (-20 to 400°C) -148 to 1562°F (-100 to 850°C)
T/C type K	-328 to 2372°F (-200 to 1300°C) -328 to 932°F (-200 to 500°C)
T/C type L	-328 to 932°F (-200 to 500°C)
T/C type U	-328 to 1472°F (-200 to 800°C)

Modbus® is a registered trademark of Schneider Automation, Inc.

TETİSAN TESİSAT TİCARET VE SANAYİİ A.Ş.
www.tetisantesisat.com
+90 212 267 08 42

Series 4B

1/4 DIN Temperature/Process Controller

Dual Control Output, RS-485 Communication, Auto-Tuning

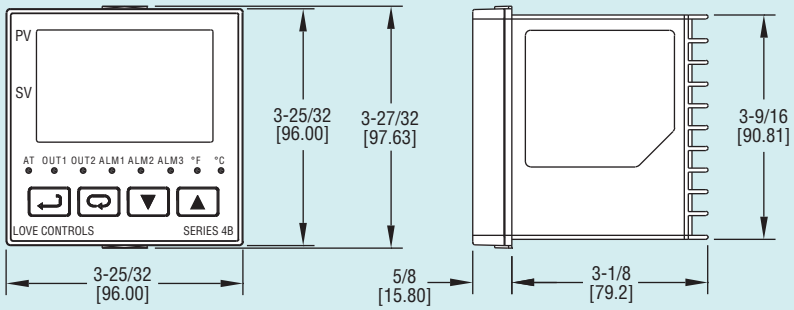

The Series 4B 1/4 DIN Temperature/Process Controller is designed to accept thermocouple, RTD, current or voltage input and provide dual outputs for control. Available outputs include relay/relay, voltage pulse/relay, current/relay, or linear voltage/relay.

The units can be programmed for ON/OFF, PID, auto-tuning, or manual tuning control methods. The PID control is supported by 64 ramp/soak actions. The Series 4B also includes two additional alarm outputs. The second relay output can be reconfigured as a third alarm output. The alarm type can be selected from 13 different preprogrammed alarm functions. The controller features dual LED displays for local indication of process and setpoint values.

Model	Output 1	Output 2
4B-23	Voltage Pulse	Relay
4B-33	Relay	Relay
4B-53	Current	Relay
4B-63	Linear Voltage	Relay
4B-33-986/U	Relay	Relay

Add -LV to end of model number for 24 VDC supply power.

ACCESSORIES

SCD-SW, Configuration Software
A-277, 250 Ohm Precision Resistor
MN-1, Mini-Node™ USB/RS-485 converter
A-600, R/C snubber
A-900, Weatherproof Front Mount Enclosure
A-901, Weatherproof Internal Mount Enclosure with Window

Portable Housing Model 4B-33-986/U

SPECIFICATIONS

Inputs: Thermocouple, RTD, DC voltages or DC current.
Display: Two 4-digit, 7 segment. PV: 3/4″ H (19 mm) red; SV: 1/2″ H (12.7 mm) green.
Accuracy: ±0.25% span, ±1 least significant digit.
Supply Voltage: 100 to 240 VAC, 50/60 Hz or 24 VDC (depending on model).
Power Consumption: 5 VA max.
Operating Temperature: 32 to 122°F (0 to 50°C).
Memory Backup: Nonvolatile memory.
Control Output Ratings:
Relay: SPDT, 5A @ 250 VAC resistive;
Voltage pulse: 14V, 10% to -20% (max. 40 mA);
Current: 4 to 20 mA;
Linear voltage: 0 to 10V.
Communication: RS-485 Modbus® A-5-11/RTU communication protocol.
Weight: 15 oz (425 g).
Agency Approvals: CE, RoHS, cUL, UL.
Front Panel Rating: IP56.

Input Types	Range
Type K T/C	-328 to 2372°F (-200 to 1300°C)
Type J T/C	-148 to 2192°F (-100 to 1200°C)
Type T T/C	-328 to 752°F (-200 to 400°C)
Type E T/C	32 to 1112°F (0 to 600°C)
Type W T/C	-328 to 2372°F (-200 to 1300°C)
Type R T/C	32 to 3092°F (0 to 1700°C)
Type S T/C	32 to 3092°F (0 to 1700°C)
Type B T/C	212 to 3272°F (100 to 1800°C)
Type L T/C	-328 to 1562°F (-200 to 850°C)
Type U T/C	-328 to 932°F (-200 to 500°C)
Pt 100 RTD	-328 to 1112°F (-200 to 600°C)
0 to 50 mV	-999 to 9999
0 to 5 V	-999 to 9999
0 to 10 V	-999 to 9999
0 to 20 mA*	-999 to 9999
4 to 20 mA*	-999 to 9999

*Requires 250 Ohm Precision Resistor.

Modbus® is a registered trademark of Schneider Automation, Inc.

TETİSAN TESİSAT TİCARET VE SANAYİİ A.Ş.
www.tetisantesisat.com
+90 212 267 08 42

Series 4C

1/4 DIN Temperature Controller

PID Control, Auto-Tuning, Large Dual Display, RS 485 Communication

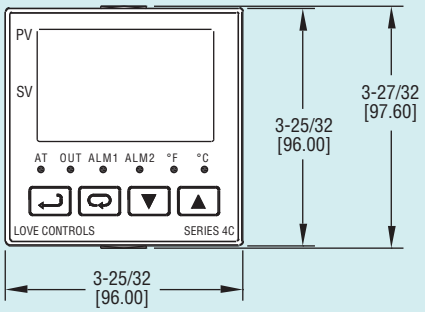

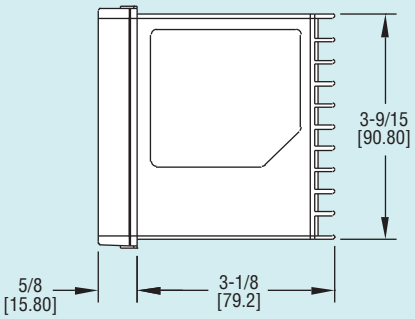

The Series 4C 1/4˝ DIN Temperature Controller offers easy-to-use programming menus designed for quick installation. Control functions include ON/OFF, PID, auto-tuning or manual tuning. The Series 4C is available with relay, voltage or current output with two additional alarm outputs. The alarm outputs can be configured from 12 different preprogrammed settings. The Series 4C accepts a variety of thermocouple and RTD inputs. Process value and setpoint value are simultaneously displayed with the process value in red and setpoint in green.

Model	Output
4C-2	Voltage Pulse
4C-3	Relay
4C-5	Current

ACCESSORIES
SCD-SW, Configuration Software
MN-1, Mini-Node™ USB/RS-485 Converter
A-600, R/C snubber
A-900, Weatherproof Front Mount Enclosure
A-901, Weatherproof Internal Mount Enclosure with Window

A-900

A-901

SPECIFICATIONS
Inputs: Thermocouple or RTD, see chart.
Display: Two 4-digit, 7 segment. LED's. PV: red .75˝ H (19 mm); SV: green .5˝ (12.7 mm).
Accuracy: ±0.25% span, ±1 least significant digit.
Supply Voltage: 100 to 240 VAC, 50/60 Hz.
Power Consumption: 5 VA max.
Operating Temperature: 32 to 122°F (0 to 50°C).
Memory Backup: Nonvolatile memory.
Control Output Ratings:
Relay: SPDT, 5A @ 250 VAC resistive;
Voltage pulse: 14V, 10% to -20% (max 40 mA);
Current: 4 to 20 mA.
Communication: RS-485 Modbus® communication protocol.
Weight: 15 oz (425 g).
Agency Approvals: CE, RoHS, cUL, UL.
Front Panel Rating: NEMA 4X (IP66).

Input Types	Range
Pt100Ω RTD	32 to 212°F (0 to 100°C) -4 to 932°F (-20 to 500°C) -328 to 1112°F (-200 to 600°C)
T/C type B	212 to 3272°F (100 to 1800°C)
T/C type S	32 to 3092°F (0 to 1700°C)
T/C type R	32 to 3092°F (0 to 1700°C)
T/C type N	-328 to 2372°F (-200 to 1300°C)
T/C type E	32 to 1112°F (0 to 600°C)
T/C type T	-4 to 752°F (-20 to 400°C) -328 to 752°F (-200 to 400°C)
T/C type J	-4 to 752°F (-20 to 400°C) -148 to 1562°F (-100 to 850°C)
T/C type K	-328 to 2372°F (-200 to 1300°C) -328 to 932°F (-200 to 500°C)
T/C type L	-328 to 932°F (-200 to 500°C)
T/C type U	-328 to 1472°F (-200 to 800°C)

TETİSAN TESİSAT TİCARET VE SANAYİİ A.Ş.
www.tetisantesisat.com
+90 212 267 08 42

Modbus® is a registered trademark of Schneider Automation, Inc.

Series 8B

1/8 DIN Temperature/Process Controller

Vertical Mount, Dual Control Output, RS-485 Communication

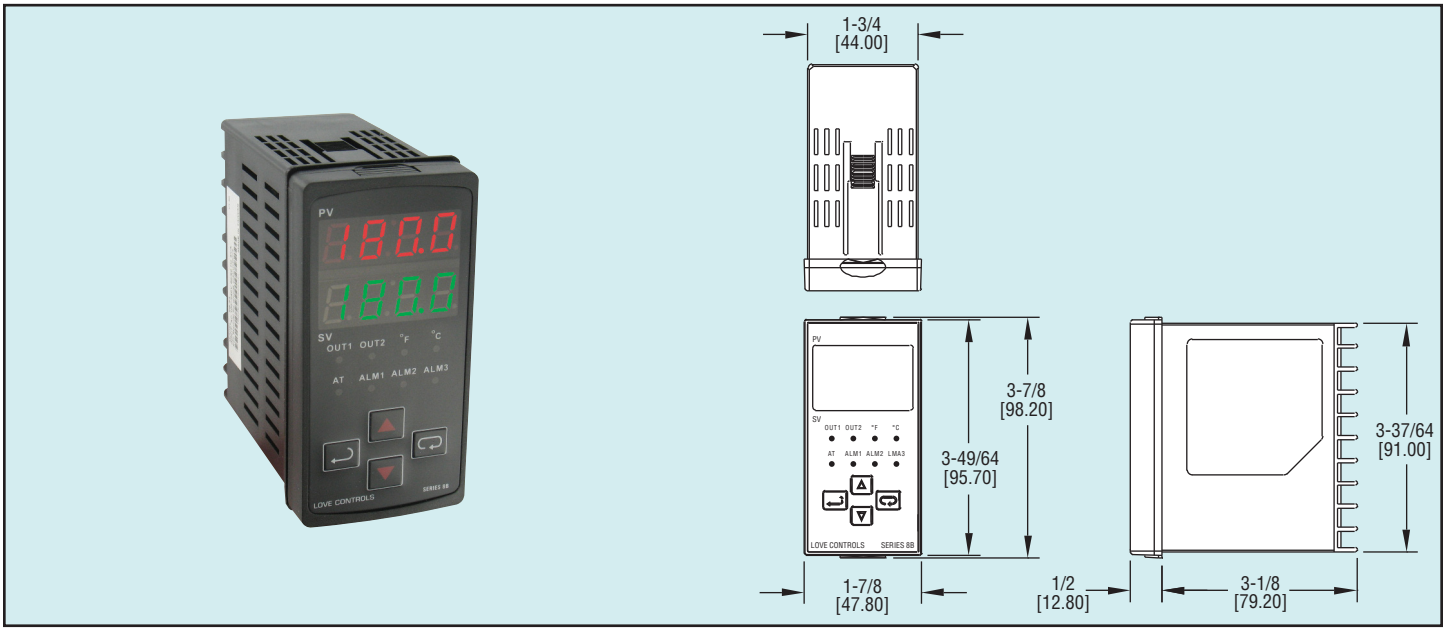

The Series 8B 1/8 DIN Temperature/Process Controller offers versatility and reliability for temperature and process monitoring applications. Designed as a vertical mount 1/8 DIN controller, the Series 8B features dual outputs, universal input, and up to three additional alarm outputs. The second output can be configured as a third alarm output. Select the alarm type from 13 different preprogrammed alarm functions. Control methods include ON/OFF, PID, auto-tune or manual tune. PID control is supported with 64 ramp/soak control actions. RS-485 communication is standard on the Series 8B with up to 247 available addresses.

Model	Output 1	Output 2
8B-23	Voltage Pulse	Relay
8B-33	Relay	Relay
8B-53	Current	Relay
8B-63	Linear Voltage	Relay

Add -LV to end of model number for 24 VDC supply power.

ACCESSORIES

SCD-SW, Configuration Software
A-277, 250 Ohm Precision Resistor
MN-1, Mini-Node™ USB/RS-485 converter
A-600, R/C snubber

SPECIFICATIONS

Inputs: Thermocouple, RTD, DC voltages or DC current.
Display: Two 4-digit, 7 segment .38˝ H (9.53 mm) LED's. PV: red; SV: green.
Accuracy: ±0.25% span, ±1 least significant digit.
Supply Voltage: 100 to 240 VAC, 50/60 Hz or 24 VDC (depending on model).
Power Consumption: 5 VA max.
Operating Temperature: 32 to 122°F (0 to 50°C).
Memory Backup: Nonvolatile memory.
Control Output Ratings:
Relay: SPST, 5A @ 250 VAC resistive;
Voltage pulse: 14V, 10% to -20% (max. 40 mA);
Current: 4 to 20 mA;
Linear voltage: 0 to 10V.
Communication: RS-485 Modbus® communication protocol.
Weight: 15 oz (425 g).
Agency Approvals: CE, RoHS, cUL, UL.
Front Panel Rating: IP56.

Input Types	Range
Type K T/C	-328 to 2372°F (-200 to 1300°C)
Type J T/C	-148 to 2192°F (-100 to 1200°C)
Type T T/C	-328 to 752°F (-200 to 400°C)
Type E T/C	32 to 1112°F (0 to 600°C)
Type W T/C	-328 to 2372°F (-200 to 1300°C)
Type R T/C	32 to 3092°F (0 to 1700°C)
Type S T/C	32 to 3092°F (0 to 1700°C)
Type B T/C	212 to 3272°F (100 to 1800°C)
Type L T/C	-328 to 1562°F (-200 to 850°C)
Type U T/C	-328 to 932°F (-200 to 500°C)
Pt 100 RTD	-328 to 1112°F (-200 to 600°C)
0 to 50 mV	-999 to 9999
0 to 5 V	-999 to 9999
0 to 10 V	-999 to 9999
0 to 20 mA*	-999 to 9999
4 to 20 mA*	-999 to 9999

*Requires 250 Ohm Precision Resistor.

Modbus® is a registered trademark of Schneider Automation, Inc.

TETİSAN TESİSAT TİCARET VE SANAYİİ A.Ş.
www.tetisantesisat.com
+90 212 267 08 42

Series 8C

1/8 DIN Temperature Controller

ON/OFF or PID Control, Auto-Tuning, RS-485 Communication

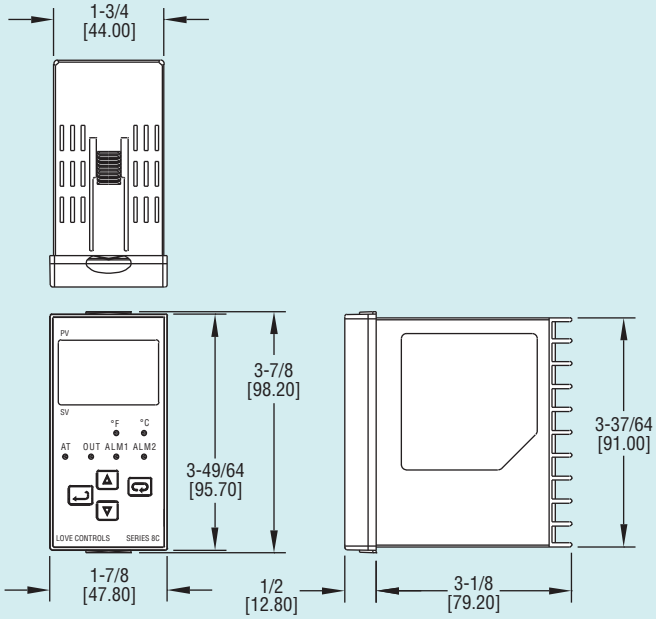

The Series 8C Temperature Controller offers easy-to-use programming menus designed for quick installation. The unit is designed for direct or reverse acting (cooling or heating) control. The Series 8C can be programmed for simple ON/OFF or more complex PID control functions. PID control is supported with manual or auto-tuning. Select relay, voltage pulse, or current output control methods. The controller also includes two additional alarm outputs. The alarm outputs can be configured from 12 different preprogrammed settings.

The temperature controller accepts a variety of thermocouple and RTD inputs. The process value and setpoint value are displayed simultaneously on the large dual LED. Auto-tuning, engineering units (°F or °C) and alarm status is also indicated on the faceplate.

Model	Output
8C-2	Voltage Pulse
8C-3	Relay
8C-5	Current

ACCESSORIES

SCD-SW, Configuration Software
MN-1, Mini-Node™ USB/RS-485 converter
A-600, R/C snubber

SPECIFICATIONS

Inputs: Thermocouple & RTD (see chart).
Display: Two 4-digit, 7 segment .38˝ H (9.53 mm) LED's. PV: red; SV: green.
Accuracy: ±0.25% span, ±1 least significant digit.
Supply Voltage: 100 to 240 VAC, 50/60 Hz.
Power Consumption: 5 VA max.
Operating Temperature: 32 to 122°F (0 to 50°C).
Memory Backup: Nonvolatile memory.
Control Output Ratings:
Relay: SPDT, 5A @ 250 VAC resistive;
Voltage pulse: 14V, 10% to -20% (max 40 mA);
Current: 4 to 20 mA;
Communication: RS-485 Modbus® communication protocol.
Weight: 15 oz (425 g).
Agency Approvals: CE, RoHS, cUL, UL.
Front Panel Rating: NEMA 4X (IP66).

Input Types	Range
Pt100Ω RTD	32 to 212°F (0 to 100°C) -4 to 932°F (-20 to 500°C) -328 to 1112°F (-200 to 600°C)
T/C type B	212 to 3272°F (100 to 1800°C)
T/C type S	32 to 3092°F (0 to 1700°C)
T/C type R	32 to 3092°F (0 to 1700°C)
T/C type N	-328 to 2372°F (-200 to 1300°C)
T/C type E	32 to 1112°F (0 to 600°C)
T/C type T	-4 to 752°F (-20 to 400°C) -328 to 752°F (-200 to 400°C)
T/C type J	-4 to 752°F (-20 to 400°C) -148 to 1562°F (-100 to 850°C)
T/C type K	-328 to 2372°F (-200 to 1300°C) -328 to 932°F (-200 to 500°C)
T/C type L	-328 to 932°F (-200 to 500°C)
T/C type U	-328 to 1472°F (-200 to 800°C)

Modbus® is a registered trademark of Schneider Automation, Inc.

TETİSAN TESİSAT TİCARET VE SANAYİİ A.Ş.
www.tetisantesisat.com
+90 212 267 08 42

Series SCD

DIN Rail Temperature/ Process Controller

Universal Inputs, Up to 8 PID Loops, Modbus® Communications

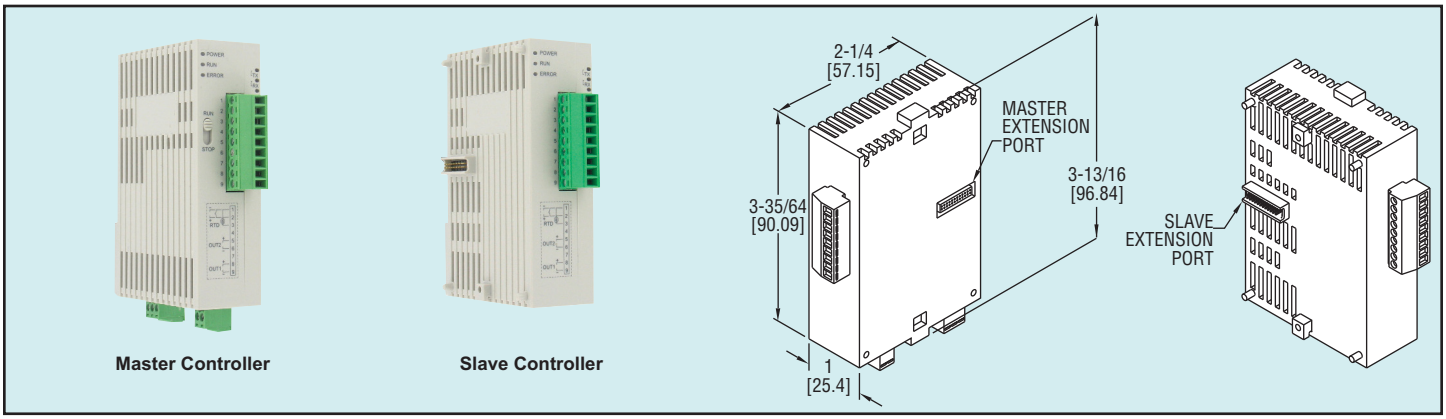

The DIN Rail Mount Series SCD offers multiple PID loops in a compact size. Each SCD-1000 master controller can be combined with up to seven SCD-2000 slave controllers without any wires. Each controller has one universal input, one relay output and one user selected output. The outputs can be used for a dual loop to control heating and cooling or a single loop with an alarm. These controllers support up to 64 ramp/soak actions. The SCD series controllers are programmed using an user-friendly software program via the RS-485 Modbus® communications.

Model	Controller	Output 1	Output 2
SCD-1023	Master	Voltage Pulse	Relay
SCD-1033	Master	Relay	Relay
SCD-1053	Master	Current	Relay
SCD-1063	Master	Linear Voltage	Relay
SCD-2023	Slave	Voltage Pulse	Relay
SCD-2033	Slave	Relay	Relay
SCD-2053	Slave	Current	Relay
SCD-2063	Slave	Linear Voltage	Relay

*DC current input requires 250 Ohm Precision Resistor

SPECIFICATIONS

Inputs: Thermocouple, RTD, DC linear voltage, and DC currents.*
Supply Voltage: 24 VDC.
Power Consumption: 3 W.
Operating Temperature: 32 to 122ºF (0 to 50ºC).
Memory Backup: Non-volatile.
Control Output Ratings: Relay: 3A @ 250 VAC resistive; Voltage pulse: 12 VDC, max. output current: 40 mA; Current: 4 to 20 mA output; Linear voltage: 0 to 10 VDC.
Communication: RS-485 Modbus® A-5-11/RTU communication protocol.
Weight: 2.7 oz (76.5 g).
Agency Approvals: CE, RoHS, cUL, UL.

ACCESSORIES

SCD-PS, 100 to 240 VAC/VDC to 24 VDC Power Supply
SCD-SW, Configuration Software
A-277, 250 Ohm Precision Resistor
MN-1, Mini-Node™ USB/RS-485 converter
A-600, R/C snubber

Modbus® is a registered trademark of Schneider Automation, Inc.

TEMPERATURE

Temperature/Process Controllers

Model LoveLink™III

Configuration Monitoring & Logging Software

Designed for Love Temperature Controls

LoveLink™III Configuration, Monitoring and Logging Software is an easy to use program allowing connection of up to 40 controls on a single computer port. Data logging can be set up by individual control with varying logging parameters. LoveLink™III Software is compatible with all Love 4B, 4C, 2600, 8B, 8C, 8600, 16A, 16B, 16C, 16L, 32A, 32B, 32DZ, SCD and SCZ Series controls.

FEATURES

- Address and store data for up to 40 controls
- Data logging at individually adjustable rates
- On-screen graphing for up to 10 zones
- trol configuration profiles
- configuration profiles
- face

Computer Requirements

The LoveLink™III software application will run on Windows® 2000 and Windows® XP Software. One available RS-232 or RS-485 port is needed to communicate with the temperature control(s). A minimum of 4 MB of hard disk space is needed for the LoveLink™III software application files, and additional hard disk space is needed to store temperature log files. Log file size will vary depending on the Duration and Rate selected for the controls and the number of controls on line.

Control Requirements

The temperature controls supported by LoveLink™III software are the Love 4B, 4C, 2600, 8B, 8C, 8600, 16A, 16B, 16C, 16L, 32A, 32B, 32DZ, SCD and SCZ Series.

Other Requirements

Love temperature control product series can be ordered with either RS-485 or RS-232 communication options. To connect temperature controls using RS-485 communication, one of the following converters can be used:

- Love Model MN-1 Mini-Node™ Communication Signal Converter, USB to RS-485
- Love Model 351-9 Mother Node™ Communication Signal Converter, RS-232 to RS-485

Windows® is a registered trademark of Microsoft Corporation
Windows NT® is a registered trademark of Microsoft Corporation

TETİSAN TESİSAT TİCARET VE SANAYİİ A.Ş.
www.tetisantesisat.com
+90 212 267 08 42

Series TID

Temperature/Process Indicator

Low Cost, 3-Digit Display, 1% Accuracy

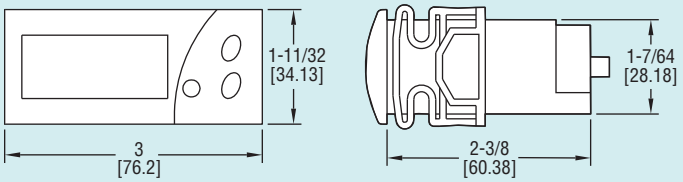

The affordable Series TID allows user to monitor temperature or a process value. Temperature ranges are available from -58 to 302°F using one of our PTC or NTC thermistors. Process values can be displayed from -999 to 999 counts using a 4 to 20 mA from one of our various transmitters. The process indicator has an adjustable span and zero.

Model	Input	Supply Power	Unit
TID-1110	PTC thermistor	115 VAC	°F
TID-1120	PTC thermistor	115 VAC	°C
TID-1410	PTC thermistor	24 VAC/DC	°F
TID-3100	4 to 20 mA	115 VAC	None
TID-3200	4 to 20 mA	230 VAC	None
TID-3400	4 to 20 mA	24 VAC/DC	None

SPECIFICATIONS

Range: -58 to 302°F (thermistor); -999 to 999 counts (4 to 20 mA).
Input: PTC/NTC thermistor or 4 to 20 mA.
Power Requirements: 115 VAC, 230 VAC, 24 VAC/DC.
Accuracy: Better than 1%.
Display: 3-digits; red, green or blue display.
Resolution: 1° or 0.1 count.
Front Panel Rating: IP64 (NEMA 3R).
Weight: 2.3 oz (65 g).
Agency Approvals: CE, cUR, UR.

ACCESSORIES

TS-5, PTC thermistor probe PVC (5´ cable)
TS-51, PTC thermistor probe PVC (10´ cable)
TS-6, PTC thermistor probe metal (5´ cable)
TS-61, PTC thermistor probe metal (10´ cable)

Series LTI

Temperature Panel Meter

1/8 DIN, Large Dual-Line Display

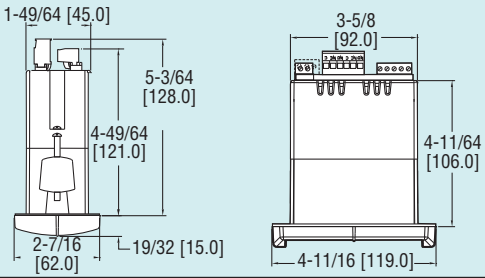

The Series LTI Temperature Panel Meters can be configured in a variety of configurations to provide visual indication and control of a process temperature. Field pluggable modules are available to add additional relay outputs, digital I/O ports, and serial communications. Utilizing an easy-to-read, dual 6-digit display, more descriptive programming parameters are displayed to simplify initial setup. A set of parameters can be copied from one panel meter to another for applications that require multiple panel meters programmed with the same parameters. The industry standard 1/8 DIN housing can be panel mounted or mounted in one of the NEMA 4X panel meter enclosures. All of the Series LTI panel meters come with universal thermocouple and RTD inputs.

Model	Description
LTI-100	85 to 265 VAC, no relays, no transmitter
LTI-101	85 to 265 VAC, no relays, 4 to 20 mA transmitter
LTI-120	85 to 265 VAC, 2 relays, no transmitter
LTI-121	85 to 265 VAC, 2 relays, 4 to 20 mA transmitter
LTI-140	85 to 265 VAC, 4 relays, no transmitter
LTI-141	85 to 265 VAC, 4 relays, 4 to 20 mA transmitter
LTI-200	12 to 24 VDC, no relays, no transmitter
LTI-201	12 to 24 VDC, no relays, 4 to 20 mA transmitter
LTI-220	12 to 24 VDC, 2 relays, no transmitter
LTI-221	12 to 24 VDC, 2 relays, 4 to 20 mA transmitter
LTI-240	12 to 24 VDC, 4 relays, no transmitter
LTI-241	12 to 24 VDC, 4 relays, 4 to 20 mA transmitter

SPECIFICATIONS

Inputs: Thermocouple J, K, T, E, R, S, B, N, C; RTD 100 Ω platinum, 10 Ω copper, 120 Ω nickel, 1000 Ω platinum.
Input Impedance: Greater than 100 kΩ.
Output: 4 to 20 mA.
Power Requirements: 85 to 265 VAC 50/60 Hz, 90 to 265 VDC or jumper selectable 12 to 24 VDC ±10%.
Power Consumption:
90 to 265 VAC models: 20 W max;
12 to 24 VDC models: 15 W max.
Switch Rating: 2 or 4 SPDT (Form C) internal and/or 4 SPST (Form A) external; Rated 3A @ 30 VDC and 125/250 VAC resistive load, 1/14 HP @ 125/250 VAC for inductive loads.
Display: Dual-line, 6-digit display.
Resolution: 1° (up to four digits) or 0.1° (up to five digits).
Temperature Limits:
Operating: -4 to 149°F (-20 to 65°C);
Storage: -40 to 185°F (-40 to 85°C).
Humidity Limits: 0 to 90% (non-condensing).
Front Panel Rating: NEMA 4X, IP65.
Weight: 9.5 oz (269 g).
Agency Approvals: CE, RoHS, cUL, UL.

Input Range and Accuracy

Type	Range (°F)	Range (°C)	Accuracy	Type	Range (°F)	Range (°C)	Accuracy
J	-200 to 2000	-129 to 1093	±1°C	**N**	-100 to 2300	-73 to 1260	±2°C
K	-200 to 2400	-129 to 1316	±1°C	**C**	32 to 4100	0 to 2260	±2°C
T	-200 to 752	-129 to 400	±1°C	**10 Ω**	-328 to 500	-200 to 260	±0.1°C
		o 982	±1°C	**100 Ω**	-328 to 1562	-200 to 850	±0.4°C
		1649	±2°C	**120 Ω**	-110 to 500	-79 to 260	±0.1°C
		1649	±2°C	**1000 Ω**	-328 to 900	-200 to 482	±0.4°C
		o 1816	±2°C				

Accessories: See page 349 (Series PMA)
Enclosures: See page 350 (Series PME)

TETİSAN TESİSAT TİCARET VE SANAYİİ A.Ş.
www.tetisantesisat.com
+90 212 267 08 42

Series
TSF

Thermocouple Limit Control

FM Approved High Limit Switch

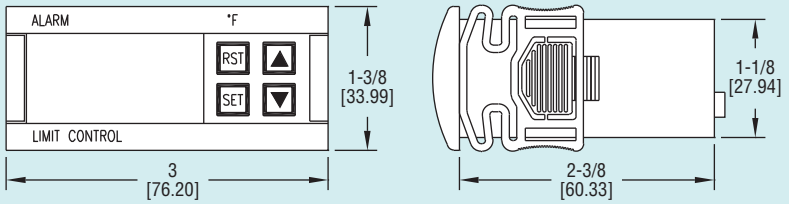

Panel Cutout 2-51/64 x 1-9/64 (71 x 29 mm)

The **Series TSF Thermocouple FM Approved Limit Control** provides audible alarm status along with a robust 16 amp relay output. Unit allows the user to easily select automatic or manual reset along with 10 other parameters. The TSF series has a built in reset button on the front panel or can accept an external reset.

Model	Supply Power	Unit
TSF-4010	115 VAC	°F
TSF-4011	115 VAC	°C
TSF-4021	230 VAC	°C
TSF-4040	24 VAC/VDC	°F

ACCESSORIES

TCS-J, J type thermocouple, 4″ probe, 48″ extension
TCS-K, K type thermocouple, 4″ probe, 48″ extension
TS2-K, Configuration Key

SPECIFICATIONS

Probe Range: 32 to 999°F (0 to 700°C) for Type J thermocouple; 32 to 999°F (0 to 999°C) for type K or S thermocouples.
Input: Type J, K or S thermocouple.
Output: SPDT relay rated 16A @ 240 VAC resistive.
Horsepower Rating (HP): 1 HP.
Control Type: ON/OFF; manual/automatic reset.
Power Requirements: 115 VAC, 230 VAC, 12 VAC/VDC or 24 VAC/VDC (depending on model).
Power Consumption: 4 VA.
Accuracy: ±1% FS.
Display: 3-digit, red, 1/2″ (12.7 mm) digits, plus sign.
Resolution: 1°.
Memory Backup: Nonvolatile memory.
Temperature Limits: Ambient: 32 to 150°F (0 to 65°C); Storage: -4 to 176°F (-20 to 80°C).
Weight: 2.3 oz (65 g).
Front Panel Rating: IP64 (NEMA 3R).
Agency Approvals: CE, FM, cUR, UR.

Series
TSF-DF

Thermocouple Limit Alarm

UL Approved Temperature Limit Control

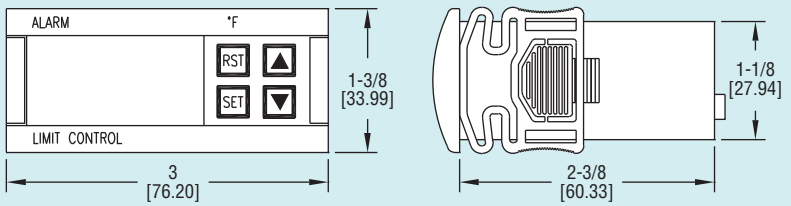

Panel Cutout 2-51/64 x 1-9/64 (71 x 29 mm)

The Series TSF-DF Digital Thermocouple Limit Alarm is a UL approved temperature limit control that provides visual alarm status along with a 16 amp SPST relay output. The Series TSF-DF controls have a built in reset button on the front panel or can accept an external reset signal.
Program settings on model TSF-DF controls cannot be changed through the buttons on the device. It is necessary to purchase a model TSF-MDF and a model TS2-K in addition to the model TSF-DF. Desired program parameters are entered on a TSF-MDF programming control. Using the TS2-K configuration key, the parameters can be easily copied from the TSF-MDF and transferred to the TSF-DF Limit Alarms.

Model	Control	Supply Power	Unit
TSF-4010-DF	Limit Alarm	115 VAC	°F
TSF-4011-DF	Limit Alarm	115 VAC	°F
TSF-4021-DF	Limit Alarm	230 VAC	°C
TSF-4040-DF	Limit Alarm	24 VAC/VDC	°F
TSF-4010-MDF	Programming Control	115 VAC	°F
TSF-4011-MDF	Programming Control	115 VAC	°F
TSF-4021-MDF	Programming Control	230 VAC	°C
TSF-4040-MDF	Programming Control	24 VAC/VDC	°F

ACCESSORIES

le, 4″ Probe, 48″ Extension
ole, 4″ Probe, 48″ Extension

SPECIFICATIONS

Probe Range: 32 to 999°F (0 to 700°C) for thermocouple J type; 32 to 999°F (0 to 999°C) for thermocouple K or S type.
Input: Type J, K, or S thermocouple.
Output: NO SPST relay rated 16A @ 240 VAC resistive.
Horsepower Rating (HP): 1 HP.
Control Type: ON/OFF; manual/automatic reset.
Power Requirements: 115 VAC, 230 VAC, 12 VAC/VDC or 24 VAC/VDC (depending on model).
Power Consumption: 4 VA @ 230 VAC.
Accuracy: ±1% FS.
Display: 3-digit, red, 1/2″ (12.7 mm) digits, plus sign.
Resolution: 1°.
Memory Backup: Nonvolatile memory.
Ambient Operating Temperature: 32 to 140°F (0 to 60°C).
Storage Temperature: -4 to 176°F (-20 to 80°C).
Weight: 2.3 oz (65 g).
Front Panel Rating: IP64.
Agency Approvals:
DF Models: CE, cUR, UR;
MDF Models: None.

TETİSAN TESİSAT TİCARET VE SANAYİİ A.Ş.
www.tetisantesisat.com
+90 212 267 08 42

Series 16L

Limit Controls

FM Approved, Large Dual Display, Universal Input

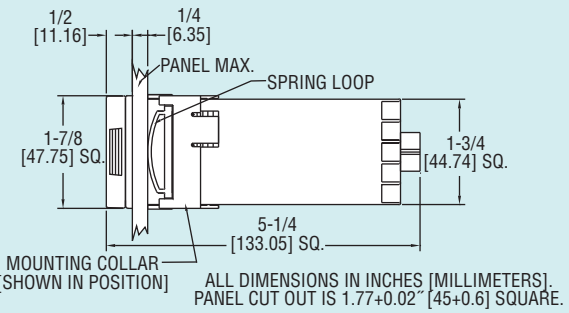

The 16L Series Temperature/Process FM Approved Limit Controls set a new standard in 1/16 DIN limit controls. The 16L offers universal input (10 thermocouple types, 4 RTD types, voltage, and current), single set point or dual set point. Standard features include remote reset capability, peak/valley indication, open sensor protection, input rate of change protection, and much more.

Unit offers 1500 VAC resolution, selectable high or low input, programmable sensor break protection and adjustable differential.

Outputs include normally open (form A) and normally closed (form B) relays. Form A and form B relays can be setup one for each set point output and logically linked to emulate a form C output.

Designed and built in the USA, the 16L family of controls offers the highest levels of features, function, and quality available today.

OPTIONS (Add as a suffix to model number)

-934, Process Signal Output, Isolated 0 to 20 mADC
-936, Process Signal Output, Isolated 0 to 10 VDC
-992, RS-RS-485 Serial Communications
-993, RS-RS-232 Serial Communications

SPECIFICATIONS

Selectable Inputs: 10 thermocouple, 4 RTD, DC voltage, or DC current selectable.
Display: Two 4 digit, 7 segment 0.3" (7.62 mm) high LEDs.
Accuracy: ±0.25% of span, ±1 least significant digit.
Power Requirements: 100 to 240 VAC, nominal, +10 -15%, 50 to 400 Hz. single phase; 132 to 240 VDC, nominal, +10 -20%.
Power Consumption: 5 VA maximum.
Temperature Limits: 14 to 131°F (-10 to 55°C).
Memory Backup: Nonvolatile memory. No batteries required.
Output: Relay: SPST, 3A @ 240 VAC resistive; 1.5A @ 240 VAC inductive.
Weight: 8 oz (227 g).
Front Panel Rating: NEMA 4X (IP66).
Agency Approvals: FM, cUL, UL.

Model	Output A	Output B
16L2030	N.O. Relays	None
16L2034	N.O. Relays	N.C. Relays

ACCESSORY

A-600, R/C snubber

Series TSCC

Digital Dispensing Temperature Control

Controls Product Temperature and Dispensing Flow Rates

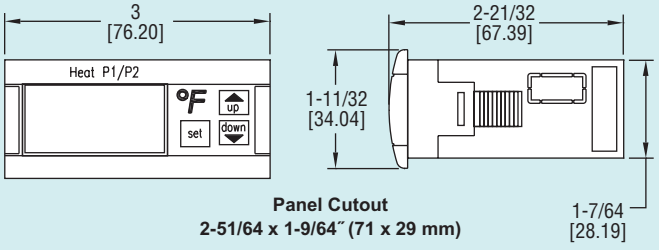

The Series TSCC Digital Dispensing Temperature Control is used to monitor and control product temperature and dispensing rate in the production of melted cheese, chili, or other heated food products. One selectable PTC or NTC thermistor is used to monitor the product temperature while a SPDT relay is used to control the temperature. Two SPST relays are used for controlling two dispensing rates for either different size containers or different products. A three digit, easy-to-read display is included on the controller. The buttons on the face of the controller enable the user to program the desired parameters into the controller itself. Parameters can be copied from one device to another using our TS2-K configuration key. Security protection is offered using a password code. Includes TS-6 temperature probe.

ACCESSORIES

See page reference ❶ below.

Model	Supply Power	Unit
TSCC-010	115 VAC	°F
TSCC-011	115 VAC	°C
TSCC-020	230 VAC	°F
		°C

SPECIFICATIONS

Probe Range:
PTC: -58 to 302°F (-50 to 150°C);
NTC: -58 to 230°F (-50 to 110°C).
Input: 2 free voltage contact input: PTC (1000Ω @ 25°C); NTC (10K Ω @ 25°C).
Output:
1 each relay SPDT 16 A @ 240 VAC resistive, 5 A inductive;
2 each relay SPST 5 A @ 240 VAC resistive.
Control Type: ON/OFF.
Power Requirements: 115 VAC ±10%; 230 VAC ±10% (depending on model).
Power Consumption: 4 VA.
Accuracy: ±1% FS.
Display: 3-digit and sign, 1/2" red LED digits.
Resolution: 1°.
Memory Backup: Nonvolatile memory.
Temperature Limits:
Operating: 32 to 158°F (0 to 70°C);
Storage: -4 to 176°F (-20 to 80°C).
Weight: 8.8 oz (250 g).
Front Panel Rating: IP64.
Agency Approvals: CE, UL.

❶Digital Temperature Switch Probes and Accessories: See page 258 (Series TS-Probes)

TETİSAN TESİSAT TİCARET VE SANAYİİ A.Ş.
www.tetisantesisat.com
+90 212 267 08 42

Series 40T/ 40M

Digital Temperature Switch

3-1/2 Digit Display, Programming Configuration Key

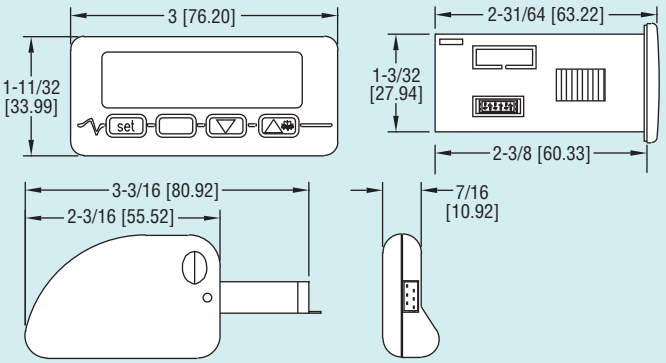

The Series 40 Digital Temperature Switch accepts a variety of inputs to allow temperature measurements and set points up to 1999°F (1300°C). Observing the current status of the control is made easier with the 3-1/2 digit, multi-color LED display that has alarm, defrost and output symbols. For added versatility, the temperature units can be field selected for °F or °C. For cooling applications, manual defrost mode can be initiated by pushing a single button. A flashing alarm informs users when the current temperature exceeds preset limits. When programming multiple units, a programming key is available to reduce set up time.

ACCESSORIES

40X-K, Configuration key
TCS-J, J type thermocouple, 4″ probe, 48″ extension
TCS-K, K type thermocouple, 4″ probe, 48″ extension
TS-1, Brass PTC Thermistor Probe
TS-2, Stainless Steel PTC Thermistor Probe
TS-5, PVC PTC Thermistor Probe
TS-6, Polyamide Resin Coated Brass PTC Thermistor Probe
TS-7, Bead Type NPT Thermistor Probe

SPECIFICATIONS

Probe Range:
K T/C: -140 to 1999°F (-100 to 1300°C);
J T/C: -140 to 1450°F (-100 to 800°C);
RTD: -320 to 1200°F (-200 to 650°C);
PTC: -58 to 300°F (-50 to 150°C);
NTC: -40 to 230°F (-40 to 110°C);
N. RTD: -110 to 570°F (-80 to 300°C).
Output: 16A @ 250 VAC SPDT relay (max current allowed is 10A).
Control Type: On/off.
Power Requirements: 12 to 24 VAC/VDC, 115 VAC or 230 VAC depending on model.
Accuracy: ±1% FS.
Display: 3-1/2 digit red display.
Resolution: 0.1°C.
Memory Backup: Non-volatile memory.
Ambient Temperature: 32 to 131°F (0 to 55°C).
Weight: 2.3 oz (65 g).
Front Panel Rating: IP 65.
Agency Approvals: CE, cUL, UL.

Thermocouple/RTD Input Models		Universal Input Models	
Model	**Supply Power**	**Model**	**Supply Power**
40T-10	115 VAC	**40M-10**	115 VAC
40T-20	230 VAC	**40M-20**	230 VAC
40T-40	12-24 VAC/VDC	**40M-40**	12-24 VAC/VDC

TEMPERATURE

Temperature Switches, Digital

Series TCS

Thermocouple Temperature Switch

Heating and Cooling Control, 16 Amp Rating, Two Alarms

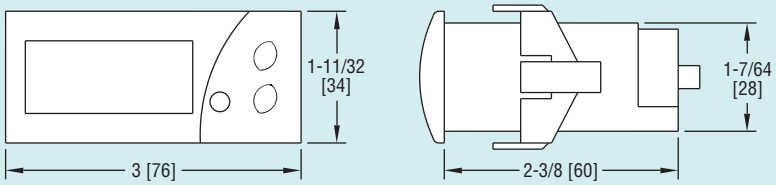

Panel Cutout 2-51/64″ x 1-9/64″ (71 x 29 mm)

Monitor and control temperature in heating and cooling applications with the Series TCS Thermocouple Switch. The Series TCS offers a wide temperature range, two selectable alarm sets, and an internal buzzer indicating alarm condition or error. The user can define set point, heating/cooling regulation, cycle time, alarm configuration, load status, and ambient probe adjustment. The thermocouple switch features password protection and error/alarm messaging. Temperature and output status is indicated on the bright red LED display. Use the configuration key (sold separately) to quickly program multiple units. The Series TCS includes a fitting clip for panel mounting, gasket, rear terminal cover and instruction manual.

Model	Supply Power	Unit
TCS-4010	115 VAC	°F
TCS-4011	115 VAC	°C
TCS-4020	230 VAC	°F
		°C
		°F
		°C
		°F

SPECIFICATIONS

Probe Range: 32 to 999°F (0 to 700°C) for Type J thermocouple; 32 to 999°F (0 to 999°C) for Type K or S thermocouples.
Input: Type J, K or S thermocouple.
Output: SPDT relay rated 16A @ 240 VAC resistive.
Horsepower Rating (HP): 1 HP.
Control Type: ON/OFF.
Power Requirements: 115 VAC, 230 VAC, 12 VAC/VDC or 24 VAC/VDC (depending on model).
Accuracy: ±1% FS.
Display: 3-digit, red, 1/2″ (12.7 mm) digits, plus sign.
Resolution: 1°.
Memory Backup: Nonvolatile memory.
Temperature Limits: Ambient: 32 to 158°F (0 to 70°C); Storage: - 4 to 176°F (-20 to 80°C).
Weight: 2.3 oz (65 g).
Front Panel Rating: IP64.
Agency Approvals: CE, cUR, UR.

ACCESSORIES

TCS-J, J Type Thermocouple, 4″ probe, 48″ extension
TCS-K, K Type Thermocouple, 4″ probe, 48″ extension
TS2-K, Configuration Key

tetisan
TETİSAN TESİSAT TİCARET VE SANAYİİ A.Ş.
www.tetisantesisat.com
+90 212 267 08 42

Series TS3

Digital Temperature Switch

Field Selectable Engineering Units, Real Time Clock

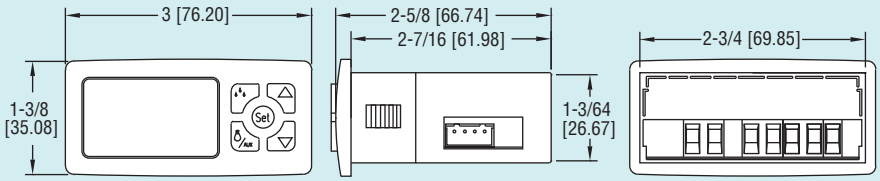

The Series TS3 Digital Temperature Switch is the ideal control for on/off heating or cooling applications. This generation of controls has field-selectable engineering units and temperature probe types in order to reduce the combination of parts that need to be stocked. A built-in real time clock is used for HACCP logging of temperature alarms caused by temperatures outside of their set limits or loss of power. For refrigeration applications, the defrost cycle can be initiated based on time or using the front panel keys. For programming multiple units, the model TS2-K configuration key can be used to quickly download parameter settings.

ACCESSORIES

See page reference ❶ below.

Model	Supply Power
TS3-50010	115 VAC
TS3-50020	230 VAC
TS3-50030	12 VAC/VDC
TS3-50040	24 VAC/VDC

SPECIFICATIONS

Probe Range:
PTC: -58 to 302°F (-50 to 150°C);
NTC: -58 to 230°F (-50 to 110°C).
Input: PTC (1000Ω @ 25°C); NTC (10KΩ @ 25°C).
Output: R1 SPDT relay resistive load 16A, inductive load 10 FLA, 60 LRA @ 240 VAC.
Horsepower Rating: 1HP @ 240 VAC.
Control Type: On/off.
Power Requirement: 115 VAC, 230 VAC, 12 VAC/VDC, 24 VAC/DC (±10%) depending on model.
Power Consumption: 3.6VA (115/230/24 V), 1.5VA (12V).
Accuracy: ±1% FS.
Display: 3 digits plus sign.
Resolution: 0.1°.
Memory Backup: Non-volatile memory.
Ambient Temperature: 32 to 131°F (0 to 55°C).
Weight: 2.3 oz (65 g).
Front Panel Rating: IP65.
Agency Approvals: CE, cUR, UR.

❶Digital Temperature Switch Probes and Accessories: See page 258 (Series TS-Probes)

Series TSX3

Digital Refrigeration Temperature Switch

Intelligent Defrost, HACCP Alarm Logging

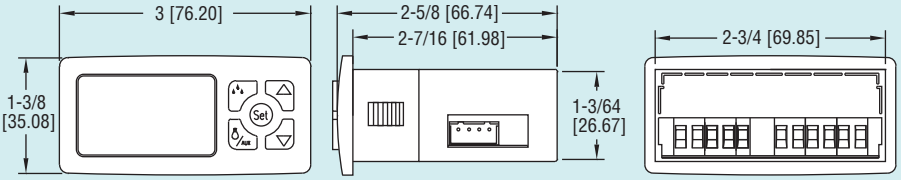

The Series TSX3 Digital Temperature Switch was designed to control the compressor, fan, and defrost in refrigeration applications. This generation of controls has field-selectable engineering units and temperature probe types in order to reduce the combination of parts that need to be stocked. A built-in real time clock is used for HACCP logging of temperature alarms caused by temperatures out of their set limits or loss of power. The Intelligent Defrost parameters manage the defrost cycle in order to save energy cost. The digital input can be used to remotely trigger a defrost cycle, monitor cooler door status, or act as an external alarm. For programming multiple units, the model TS2-K configuration key can be used to quickly download parameter settings.

ACCESSORIES

See page reference ❶ below.

Model	Supply Power	# of Outputs	Display Color
TSX3-520122	115 VAC	2	Blue
TSX3-520222	230 VAC	2	Blue
TSX3-520322	12 VAC/VDC	2	Blue
TSX3-520422	24 VAC/VDC	2	Blue
TSX3-520132	115 VAC	3	Blue
TSX3-520232	230 VAC	3	Blue
TSX3-520332	12 VAC/VDC	3	Blue
		3	Blue

SPECIFICATIONS

Probe Range:
PTC: -58 to 302°F (-50 to 150°C);
NTC: -58 to 230°F (-50 to 110°C).
Input: PTC (1000Ω @ 25°C); NTC (10KΩ @ 25°C); Digital input contact.
Output: All models SPST NO relay resistive load 16A, inductive load 5A, 10 FLA, 60 LRA @ 240 VAC; dual output models also include 8A resistive, 3A inductive SPDT @ 240 VAC; three output models also include 8A resistive SPST NO @ 240 VAC, 5A resistive SPST NO @ 240 VAC.
Horsepower Rating: 1HP @ 240 VAC.
Control Type: On/off.
Power Requirement: 115 VAC, 230 VAC, 12 VAC/VDC, 24 VAC/DC (±10%) depending on model.
Power Consumption: 3.6VA (115/230/24 V), 1.5VA (12V).
Accuracy: ±1% FS.
Display: 3 digits plus sign.
Resolution: 0.1°.
Memory Backup: Non-volatile memory.
Ambient Temperature: 32 to 131°F (0 to 55°C).
Weight: 2.3 oz (65 g).
Front Panel Rating: IP65 (NEMA 4X).
Agency Approvals: CE, cUR, UR.

❶Digital Temperature Switch Probes and Accessories: See page 258 (Series TS-Probes)

TETİSAN TESİSAT TİCARET VE SANAYİİ A.Ş.
www.tetisantesisat.com
+90 212 267 08 42

Series TS2

Digital Temperature Switch

Easy Multi-Unit Programming, 16A SPDT Relay Output

Scan here to watch product video

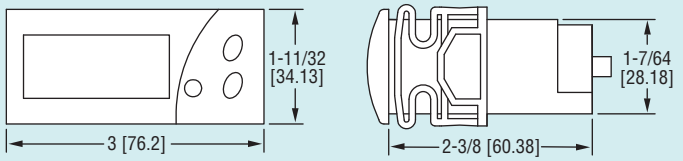

Panel Cutout 2-51/64˝ x 1-9/64˝ (71 x 29 mm)

Monitor and control temperature for heating and cooling applications with the Series TS2 Digital Temperature Switch. The Series TS2 offers twelve programmable functions to customize the unit to fit application requirements. Use the 16 (5) Amp SPDT relay output to drive a motor, compressor, or fan. Designed with the OEM in mind, the TS2 offers the ability to configure multiple units with the touch of a button.

Programming multiple units is quick and easy. Simply program one switch with the desired parameter settings and connect the configuration key (sold separately) to the back of the unit. Press the button on the configuration key and download the parameter settings. Connect the key to the other switches to upload the stored settings with the push of a button.

The TS2 features set point adjustments, static defrost timing, compressor mean time, hysteresis, and ambient probe adjustment. Security protection is offered using a password code. The Series TS2 Digital Temperature Switches are designed to operate with PTC (1000Ω @ 25°C) probes sold separately.

ACCESSORIES

See page reference ❶ below.

Model	Supply Power	Unit
TS2-010	115 VAC	°F
TS2-011	115 VAC	°C
TS2-020	230 VAC	°F
TS2-030	12 VAC/VDC	°F
TS2-040	24 VAC/VDC	°F
TS2-041	24 VAC/VDC	°C

SPECIFICATIONS

Probe Range: -58 to 302°F (-50 to 150°C).
Input: PTC (1000Ω @ 25°C).
Output: 16A SPDT relay @ 250 VAC resistive, 5A inductive.
Horsepower Rating (HP): 1 HP.
Control Type: ON/OFF.
Power Requirements: 115 VAC, 230 VAC, 12 VAC/VDC or 24 VAC/VDC.
Accuracy: ±1% FS.
Display: 3-digit, red, 1/2˝ digits.
Resolution: 1°.
Memory Backup: Nonvolatile memory.
Temperature Limits: Ambient: 32 to 158°F (0 to 70°C).
Storage Temperature: -4 to 176°F (-20 to 80°C).
Weight: 2.3 oz (65 g).
Front Panel Rating: IP64.
Agency Approvals: CE, cUR, UR.

❶Digital Temperature Switch Probes and Accessories: See page 258 (Series TS-Probes)

Series TSS2

Dual Stage Temperature Switch

Two Independent Relay Outputs, Heating or Cooling Control

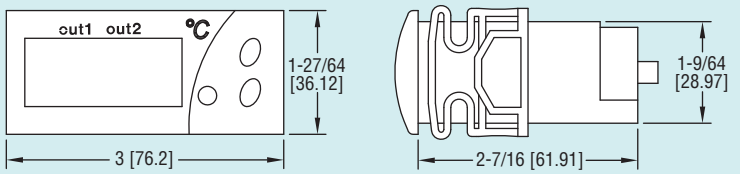

Panel Cutout 2-51/64 x 1-9/64 (71 x 29)

Regulate temperatures for heating or cooling control with the Series TSS2 Dual Stage Temperature Switch. The Series TSS2 is designed to accept two inputs with independent relays output for dual stage temperature control.

The Series TSS2 offers 34 programmable parameters to customize control functions. Access to all parameters, except setpoint, can be secured with a password code.

ACCESSORIES

See page reference ❶ below.

Model	Supply Power	Unit
TSS2-2100	115 VAC	°F
TSS2-2110	115 VAC	°C
TSS2-2210	230 VAC	°C
TSS2-2300	12 VAC/DC	°F
TSS2-2400	24 VAC/DC	°F

SPECIFICATIONS

Probe Range: PTC: - 58 to 302°F (-50 to 150°C); NTC: -58 to 230°F (-50 to 110°C).
Input: PTC (1000Ω @ 25°C); NTC (10KΩ @ 25°C).
Outputs: OUT1=SPDT relay rated 16A @ 240 VAC resistive; OUT2=SPDT relay rated 8A @ 240 VAC resistive.
Horsepower Rating (HP): 1 HP (OUT1).
Power Requirements: 115 VAC, 230 VAC, 12 VAC/VDC or 24 VAC/VDC (depending on model).
Accuracy: ±1% FS.
Display: 3-digit and sign, red LED.
Resolution: 0.1° (< 100°); 1° (≥ 100°).
Memory Backup: Nonvolatile memory.
Temperature Limit: Ambient: 32 to 158°F (0 to 70°C).
Storage Temperature: -4 to 176°F (-20 to 80°C).
Dimensions: 3 x 1-27/64 x 2-7/16 in.
Front Panel Rating: IP64.
Weight: 2.3 oz (65 g).
Agency Approvals: CE, cURus.

❶Digital Temperature Switch Probes and Accessories: See page 258 (Series TS-Probes)

TETİSAN TESİSAT TİCARET VE SANAYİİ A.Ş.
www.tetisantesisat.com
+90 212 267 08 42

Series TSW

Weather Proof Digital Temperature Switch

NEMA 4X Housing, Single or Dual Stage, 20A Contact Rating

Scan here to watch product video

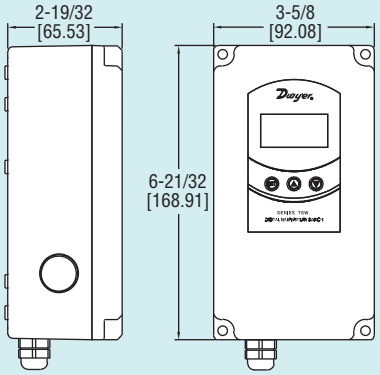

The Series TSW Digital Temperature Switch combines the trusted, reliable TS family of temperature controls and an installation friendly weatherproof enclosure. By using the same programming parameters as our Series TS2 and Series TSS2, set up can be quickly completed using the front keypad or by using the TS2-K configuration key. In order to prevent tampering from unauthorized users, a parameter lock physical jumper and software passcode security are standard in the unit. The bright, easy-to-read LED display shows the current output status and the temperature measurement.

The multiple conduit knockouts on the Series TSW give flexibility to the installer to determine the best location for the conduit entry. Another installation friendly feature of the Series TSW is the ability to quickly jumper the line voltage to the common of the output relay using fast tabs.

In order to reduce time in selecting models, the Series TSW has universal high and low power supply models and field selectable engineering units. The Series TSW includes one TS-1 PTC thermistor probe.

Model	Description	Supply Power
TSW-150	Single Stage	90 to 255 VAC
TSW-160	Single Stage	12 to 24 VAC/VDC
TSW-250	Dual Stage	90 to 255 VAC
TSW-260	Dual Stage	12 to 24 VAC/VDC

SPECIFICATIONS

Probe Range: PTC: -58 to 302°F (-50 to 150°C); NTC: -58 to 230°F (-50 to 110°C).
Input: PTC (1000Ω @ 25°C); NTC (10KΩ @ 25°C).
Output: R1 SPDT relay resistive load: 20A @ 240 VAC; R2 SPDT relay resistive load: 8A @ 240 VAC; Inductive load: 3A @ 240 VAC.
Horsepower Rating: R1 2HP @ 240 VAC.
Control Type: On/off.
Power Requirements: 90 to 255 VAC or 12 to 24 VAC/VDC (±10%) depending on model.
Power Consumption: 3.6VA.
Accuracy: ±1% FS.
Display: 3 digits plus sign.
Resolution: 0.1° < 100°; 1° ≥ 100°.
Memory Backup: Non-volatile memory.
Ambient Temperature: 32 to 104°F (0 to 40°C).
Weight: 1.2 lbs (544 g).
Enclosure Rating: NEMA 4X (IP66).
Agency Approvals: CE, cUR, UR.

ACCESSORIES

CC1-N, Temperature Sensor Clip, Natural
CC1-B, Temperature Sensor Clip, Beige
CC1-GY, Temperature Sensor Clip, Grey

Series TSWB

Digital Temperature/Water Level Switch

Two Temperature Set Points, Low Water Level Alarm

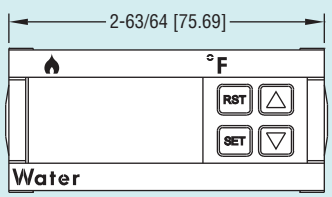

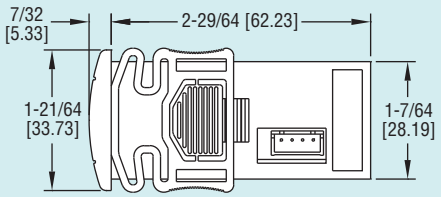

The Series TSWB Digital Temperature Switch has a high and a low set point for controlling the water temperature. The low set point can either be manually or automatically reset. This control also has a conductivity probe input. This input supplies 12 VAC to the conductivity probe to check for low water condition. There are three relay outputs which can be assigned in the field to the high temperature set point, low temperature set point or the low water level input. The Model TS2-K configuration key can make configuring multiple controls quick and easy.

ACCESSORIES

See page reference ❶ below.

Model	Supply Power	Unit
TSWB-010	115 VAC	°F
TSWB-011	115 VAC	°C

SPECIFICATIONS

Probe Range: PTC: -58 to 302°F (-50 to 150°C); NTC: -58 to 230°F (-50 to 110°C).
Probe Temperature Input: PTC (1000Ω @ 25°C); NTC (10KΩ @ 25°C).
Probe Level Input: Conductivity probe: Max voltage 12 VAC. Sensitivity established from factory at 100KΩ.
Output:
R1 SPST NO relay resistive load 5A @ 250 VAC;
R2 SPST NC relay resistive load 5A @ 250 VAC;
R3 SPDT relay resistive load 16A @ 240 VAC.
Horsepower Rating: 1HP -- 10FLA, 60LRA 250 VAC.
Control Type: On/off.
Power Requirements: 115 VAC ± 10%, 230 VAC ± 10%, 24 VAC/DC ± 10%, 12 VAC/DC ± 10%.
Power Consumption: 4VA (230V/115V), 1.5VA (24V/12V).
Accuracy: Better than 1% of full-scale.
Display: 3-digit, red 1/2″ digits.
Resolution: 1° (3 digits).
Memory Backup: Nonvolatile memory.
Ambient Operating Temperature: 32 to 158°F (-30 to 70°C).
Storage Temperature: -4 to 176°F (-30 to 80°C).
Weight: 3.5 oz.
Front Protection: IP64.
Agency Approvals: CE, cUL, UL.

❶Digital Temperature Switch Probes and Accessories: See page 258 (Series TS-Probes)

TETİSAN TESİSAT TİCARET VE SANAYİİ A.Ş.
www.tetisantesisat.com
+90 212 267 08 42

Series
TS-Probes

Digital Temperature Switch Probes & Accessories

Probes to Be Used with TS2, TSS2, TSWB, TSW, TS3, TSX3, and 40M

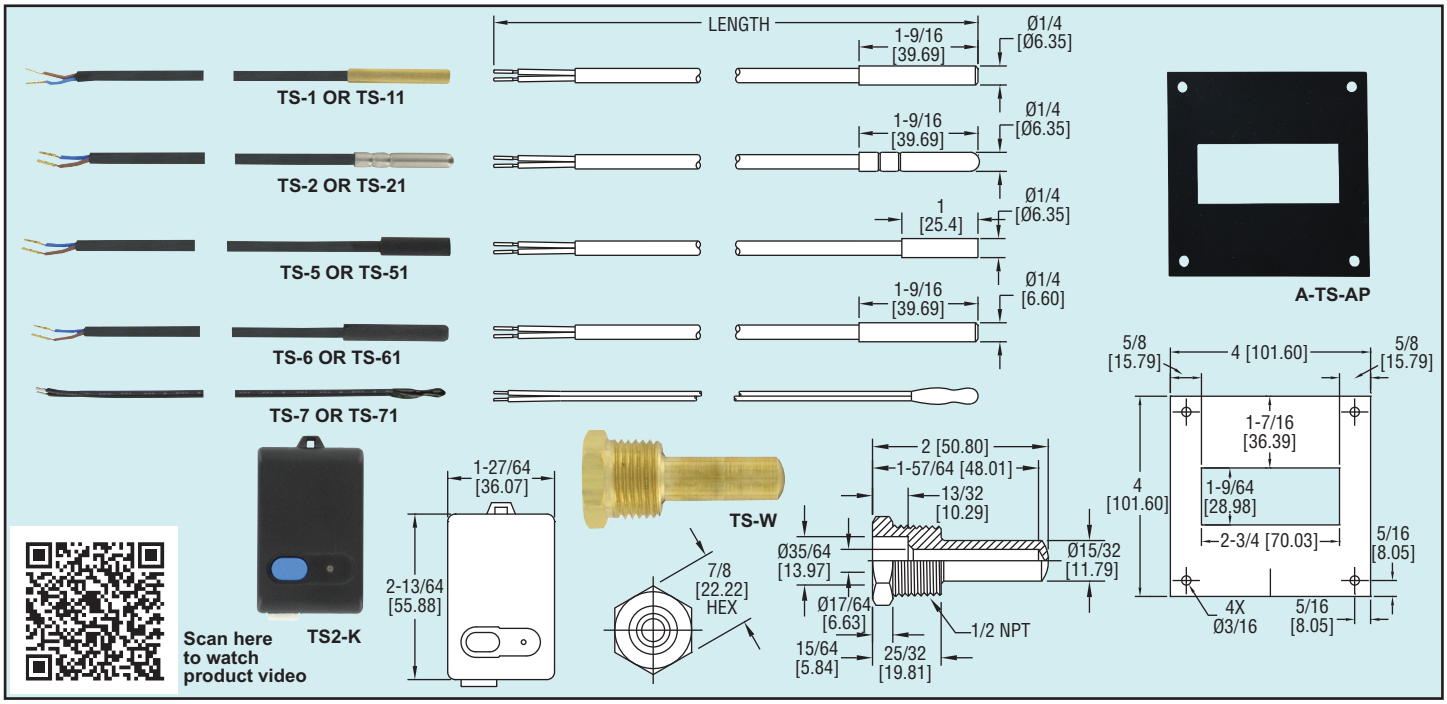

Model	Sensor	Cap Material	Length ft (m)
TS-1	PTC	Brass	5 (1.5)
TS-11	PTC	Brass	10 (3)
TS-2	PTC	Stainless Steel	5 (1.5)
TS-21	PTC	Stainless Steel	10 (3)
TS-5	PTC	PVC	5 (1.5)
TS-51	PTC	PVC	10 (3)
TS-6	PTC	Polyamide Resin Coated Brass	5 (1.5)
TS-61	PTC	Polyamide Resin Coated Brass	10 (3)
TS-7	NTC	None	5 (1.5)
TS-71	NTC	None	10 (3)

SPECIFICATIONS
Sensor: PTC or NTC (depending on model).
Operating Temperature: -58 to 221°F (-50 to 105°C).
Accuracy: ±2°C at 25°C.
Response Time: 15 seconds (in air).
Cable: PVC.
Protection: IP67 (NEMA 6).

ACCESSORIES
A-TS-AP, 1/4 DIN Adapter Plate
TS-W, Brass Thermowell (for use with TS-1, TS-11, TS-2, TS-21)
TS2-K, Configuration Key

TEMPERATURE

Temperature Switches, Digital

Model
TS485

RS-485 Serial Communications Module

Connects to Configuration Key Port

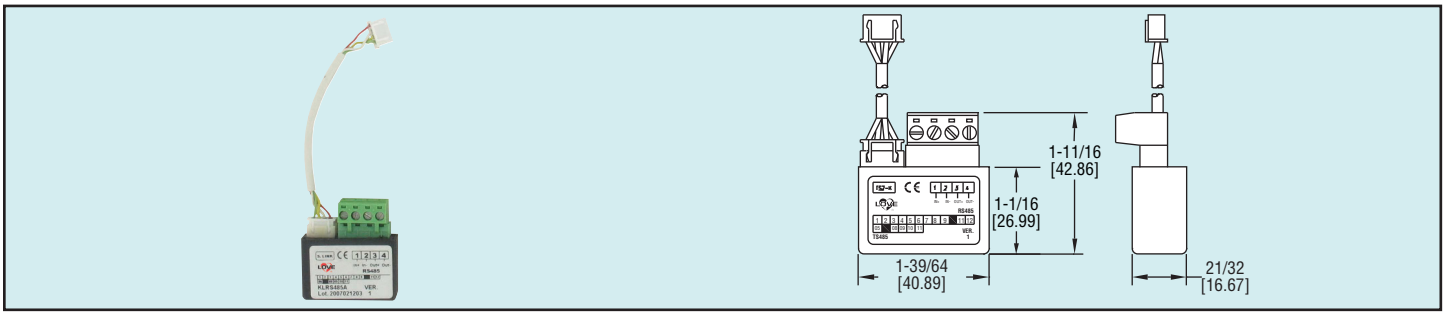

The Model TS485 Serial Communications Module allows users to read the current temperature and parameter settings of the Love Controls family of temperature switches. The configuration key port on the temperature switch provides the data signal and power for the RS-485 module. For applications with multiple temperature switches, the modules · so that only two wires need to be brought to the PC. The th Series TS3, TSX3, TCS, TS2, TSS2 and TSW.

unications Module

SPECIFICATIONS
Compatible Devices: TS3, TSX3, TCS, TS2, TSS2 and TSW.
Communication Type: RS-485 full duplex.
Electrical Isolation: 2500 VAC.
Agency Approvals: CE.

TETİSAN TESİSAT TİCARET VE SANAYİİ A.Ş.
www.tetisantesisat.com
+90 212 267 08 42

Series
LVT

Digital Programmable Indoor Thermostat with Heat Pump Control

4 Event - 2 Day Program Schedule, Filter Use Indicator

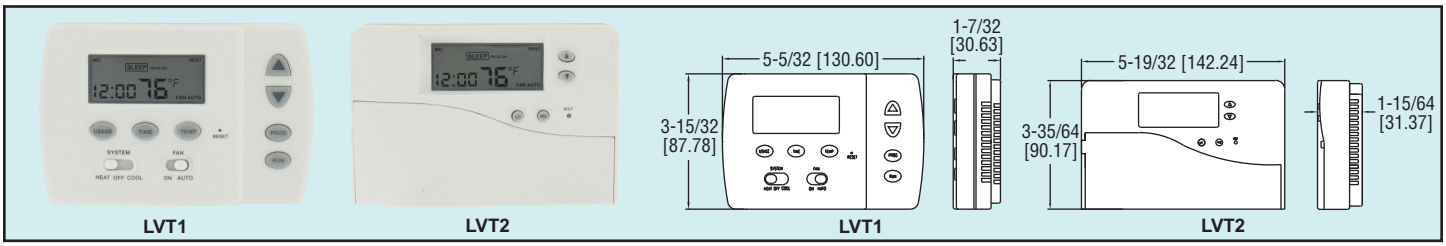

The Series LVT Digital Programmable Indoor Thermostats with Heat Pump controls the ambient temperature inside of commercial and residential buildings. For energy conservation, the thermostats have separate programming for weekdays and weekends, along with four programmable events per day to allow building owners to have different settings for occupied and unoccupied times of the day. Set points are stored for both heating and cooling stages to eliminate the need to reprogram when the seasons change. Internal jumpers allow for the selection of the engineering units, time delay between compressor starts and fan controlled heating type. A system and filter usage timer can be used as a maintenance tool to schedule filter replacement. A filter icon will display when the filter needs to be changed. For protection against frozen pipes, if the temperature falls below 40°F (5°C), the heater will be turned on regardless of the set point.

Model	Front Access Panel
LVT1	No
LVT2	Yes

SPECIFICATIONS
Range: Measurement: 32 to 99°F (0 to 40°C); Adjustable: 40 to 95°F (5 to 35°C).
Accuracy: ±1°F (0.5°C).
Sensor Type: NTC thermistor.
Resolution: 1°F (0.5°C).
Power Requirements: 24 VAC 50/60 Hz or (2) AA alkaline batteries, not included.
Output: 1 A @ 24 VAC (inductive).
Temperature Limits:
Operating: 32 to 104°F (0 to 40°C);
Storage: 32 to 122°F (0 to 50°C).
Humidity Limits: 5 to 95% RH (non-condensing).
Weight: 4.9 oz (138.9 g).
Agency Approval: RoHS.

ACCESSORIES
TG-1, Large Thermostat Cover
TG-2, Small Thermostat Cover

Model
PLVT1

Compact Digital Thermostat with Heat Pump Control

5 Control Modes, Large LCD Display

The Model PLVT1 Compact Digital Thermostat with Heat Pump directly controls the furnace, small boiler, air conditioner, circulator fan, and heat pump in commercial or residential buildings. A large easy to read LCD display shows the current temperature and the operating mode. In case of a power outage, the thermostat can be operated off batteries. In order to reduce the need to switch modes for different seasons, the thermostat can be set to automatically switch between heating and cooling.

Model PLVT1, Compact Digital Thermostat with Heat Pump

ACCESSORIES
TG-1, Large Thermostat Cover
TG-2, Small Thermostat Cover

SPECIFICATIONS
Range:
Measurement: 32 to 99°F (0 to 40°C);
Adjustment:
Heat/Cool Mode:
Heat/Cool Setting: 40 to 95°F (5 to 35°C);
Auto Mode:
Heat Setting: 40 to 85°F (5 to 30°C);
Cool Setting: 50 to 95°F (10 to 35°C).
Accuracy: ±1°F (0.5°C).
Sensor Type: NTC thermistor.
Resolution: 1°F (0.5°C).
Power Requirements: 24 VAC ±10% or (2) AAA alkaline batteries, not included.
Output: 1 A @ 24 VAC @ 50/60 Hz.
Temperature Limits:
Operating: 32 to 122°F (0 to 50°C);
Storage: 23 to 122°F (-5 to 50°C).
Weight: 4.5 oz (127.6 g).
Agency Approval: RoHS.

TETİSAN TESİSAT TİCARET VE SANAYİİ A.Ş.
www.tetisantesisat.com
+90 212 267 08 42

Model TLVT1

Digital Touch Screen Programmable Thermostat with Heat Pump Control

5 Control Modes, Large LCD Display

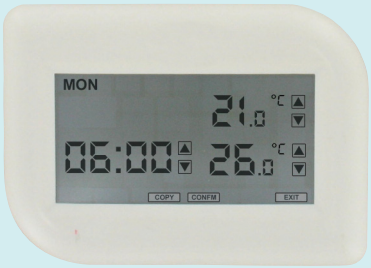

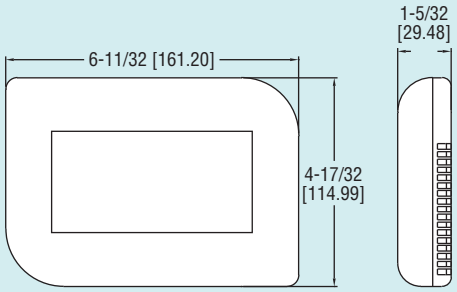

The Model TLVT1 Digital Touch Screen Programmable Thermostat with Heat Pump simplifies controlling indoor temperatures in commercial and residential buildings. A large easy to read LCD display shows the current temperature, set point, as well as time and day of the week. By touching the icons on the display, building occupants can temporarily change the set point, edit the weekly program, or select the control mode. For larger offices or homes, a single thermostat can control up to two heating and two cooling units. For Heat pump applications, the thermostat can control a two stage compressor. To make programming the time easier, there is a daylight savings time function that will automatically change the time based on the US time change dates. To prevent tampering, the Model TLVT1 has a security code feature that can lock out the programming. For additional energy savings, the filter, UV and energy usage timers tracks the number of hours the fan, heater/cooler, and thermostat is powered on. Additional energy savings can be achieved by programming the thermostat for up to 4 temperature events for each day of the week.

Model TLVT1, LCD Touch Screen Programmable Thermostat

SPECIFICATIONS

Range:
Measurement: 32 to 99°F (0 to 40°C);
Adjustment: 41 to 95°F (5 to 35°C).
Accuracy: ±1°F (0.5°C).
Sensor Type: NTC thermistor.
Resolution: 1°F (0.5°C).
Power Requirements: 24 VAC 50/60 Hz or (2) AA alkaline batteries, not included.
Output: 1 A @ 24 VAC 50/60 Hz.
Temperature Limits:
Operating: 32 to 122°F (0 to 50°C);
Storage: 23 to 122°F (-5 to 50°C).
Weight: 10 oz (283.5 g).
Agency Approval: RoHS.

ACCESSORIES

Model TG-1, Large Thermostat Cover
Model TG-2, Small Thermostat Cover

Model 862E

Explosion-Proof, Heavy-Duty Thermostat

Line or Low Voltage, Heating or Cooling

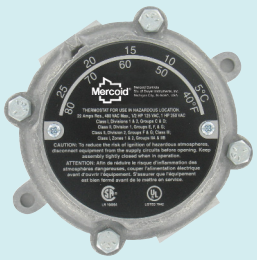

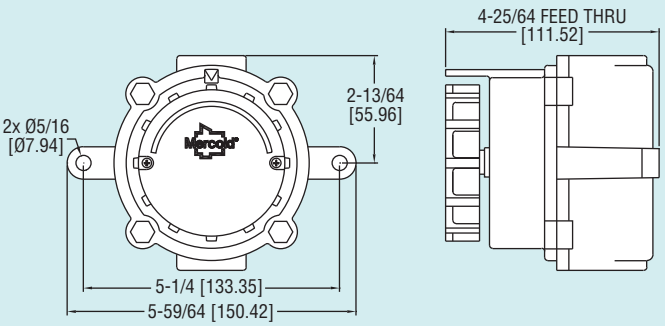

Explosion-proof, heavy duty, the Model 862E Thermostat is designed for hazardous-location temperature control. It is the most dependable, smallest, lightest and most durable thermostat available. The 862E is designed to control heating, cooling, or ventilation systems and features an adjustable set point knob for easy and convenient setpoint adjustment. The thermostat incorporates reliable snap action switch operation in SPDT configuration rated to 480 VAC max.

APPLICATIONS

Oil refineries, petrochemical plants, pulp and paper mills, coal mines, grain elevators, hazardous waste water storage facilities, other hazardous locations where specific
e present.

of, Heavy-Duty Thermostat

SPECIFICATIONS

Service: Compatible gases.
Temperature Limit: -49 to 176°F (-45 to 80°C).
Enclosure Rating: Explosion-proof NEMA 7 & 9, Class I, Divisions 1 & 2, Groups C & D; Class II, Division 1, Groups E, F & G; Class II, Division 2, Groups F & G; Class III; Class I, Zones 1 & 2, Groups IIA & IIB.
Switch Type: SPDT snap action switch.
Electrical Rating: 22 A @ 480 VAC (res.), 1/2 HP @ 125 VAC, 1 HP @ 250 VAC.
Electrical Connection: Screw terminal.
Conduit Connection: 3/4″ female NPT.
Set Point Adjustment: External knob.
Adjustable Range: 36 to 82°F (2 to 28°C).
Deadband: 2.5°F (1.5°C).
Weight: 2.1 lb (0.95 kg).
Approval: CSA, UL.

TETİSAN TESİSAT TİCARET VE SANAYİİ A.Ş.
www.tetisantesisat.com
+90 212 267 08 42

Series DFS

Low Limit Freeze Protection Switch

Manual and Auto Reset, DPDT Output

c UL us LISTED

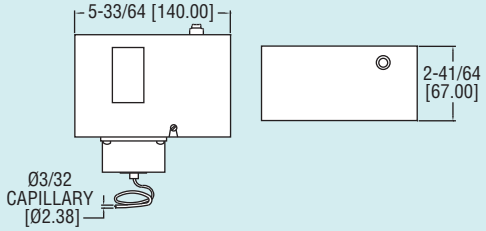

The Series DFS Low Limit Freeze Protection Switch protects cooling coils in air handler systems by preventing frost build up on the coils. By sensing the lowest temperature along any 1´ section of capillary, the DPDT manual or automatic reset relays signal the building management system, as well as cut off the fan. Set points can be adjusted as low as 34°F (1° C) utilizing the visual set point indicator and set point screw. The Series DFS includes mounting clips for easy installation.

Model	Reset Action	Capillary Length
DFS-DM20	Manual	20´ (609 cm)
DFS-DA20	Automatic	20´ (609 cm)
DFS-DM10	Manual	10´ (305 cm)
DFS-DA10	Automatic	10´ (305 cm)

ACCESSORIES
CC1-N, Averaging Temperature Sensor Clip, Natural
CC1-B, Averaging Temperature Sensor Clip, Beige
CC1-GY, Averaging Temperature Sensor Clip, Grey

SPECIFICATIONS
Wetted Material: Vapor-filled copper capillary, tin-plated, 10´ or 20´.
Housing Material: Plated steel case, painted steel cover, plastic set point window.
Temperature Limit:
Operating: -60 to 160°F (-51 to 71°C);
Sensing element: 300°F (149°C) max.
Switch Type: DPDT snap acting.
Electrical Ratings:
Inductive: 14 FLA, 84 LRA, 3/4 hp @ 120VAC; 12 FLA, 72 LRA, 2 hp @ 240 VAC.
Pilot Duty: 720 VA max. @ 120 to 600 VAC; 144 VA max. @ 24 VAC.
Reset Action: Manual or automatic.
Adjustable Range: 34 to 70°F (1 to 21°C).
Deadband: 4.5°F (2.5°C), fixed.
Agency Approvals: cUL, UL.

Series DA-7035N

Temperature Switches

Bulb and Capillary, Inert Gas Fill

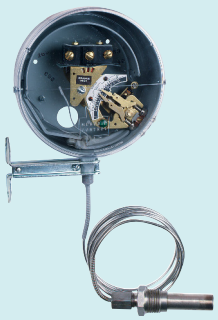

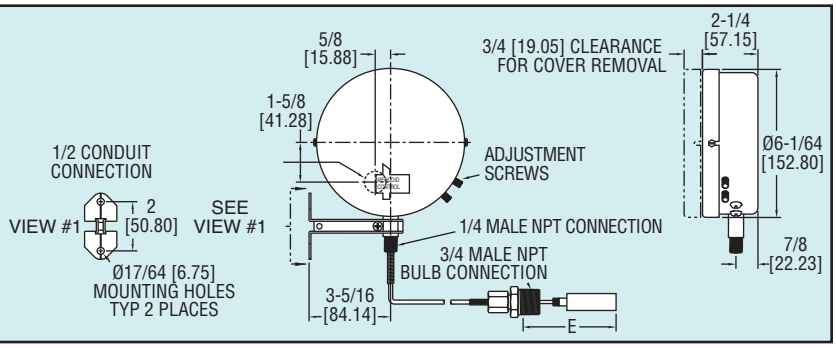

Series DA-7035N temperature switches include the same time-proven switching mechanism used in our Series DA pressure switches. Bourdon tube assures high sensitivity and long life. Fully adjustable deadband makes units suitable for a wide range of control applications. Visible, calibrated dial and external adjustments make changing setpoints simple and fast.

Model	Range °F (°C)	Max. Temp. °F (°C)	Min. Deadband °F (°C)	Min. Insertion Depth "E" in. (mm)
DA-7035-153-1N	-60 to +30 (-50 to 0)	150 (65)	23 (13)	2-7/8 (73)
DA-7035-153-3N	0 to 100 (-18 to 40)	240 (115)	25 (14)	2-7/8 (73)
DA-7035-153-4N	50 to 150 (10 to 65)	250 (120)	25 (14)	2-7/8 (73)
DA-7035-153-5N	100 to 200 (40 to 95)	300 (150)	25 (14)	2-7/8 (73)
DA-7035-153-7N	140 to 300 (60 to 150)	500 (260)	41 (23)	2-7/8 (73)
DA-7035-153-8N	250 to 415 (120 to 215)	550 (290)	42 (23)	2-7/8 (73)
DA-7035-153-9N	350 to 550 (175 to 290)	600 (315)	50 (28)	4-7/8 (124)
DA-7035-153-10N	100 to 300 (50)	500 (260)	50 (28)	2-7/8 (73)
	500 (60)	600 (315)	100 (56)	2-7/8 (73)

…eased through use of bulb supports or wells. Consult factory.

SPECIFICATIONS
Service: Compatible liquids or gases.
Wetted Materials: Bulb and connection: 304 SS.
Temperature Limit: Process: See model chart; Ambient: 180°F (82°C).
Pressure Limit: 300 psi (20.6 bar).
Enclosure Rating: General purpose. Optional weatherproof and explosion-proof.
Repeatability: ±1% of full-scale.
Switch Type: SPDT snap switch. Optional DPDT snap and a variety of mercury switches.
Electrical Rating: 10A @ 120/240/480 VAC.
Electrical Connections: Screw terminal.
Conduit Connection: 7/8″ (22.23 mm) hole for 1/2″ (12.7 mm) conduit hub.

FEATURES
- Adjustable deadband
- Snap action switch standard
- Inert gas activated Bourdon tube
- No cross ambient temperature effects
- No bulb elevation correction required
- Visible dial calibrated in both °F and °C
- Visible on/off indication

Process Connection: 3/4″ male NPT. Other sizes available.
Mounting Orientation: Vertical and level.
Set Point Adjustment: External knobs for set point and reset point.
Weight: 5 lb (2.3 kg).
Deadband: Adjustable from minimum in model chart to full range. Optional low fixed deadband.
Capillary: 6 ft (1.8 m) standard. Ranges 1N to 7N, and 10N: copper. Ranges 8N, 9N, 11N: 304 SS.
Set Point Scale: Indication in °F and °C.
Options: See switch type, see enclosures, fixed deadband, longer or shorter capillary, armored capillary, wells, two stage, 1/2″ or 1″ connection sizes, manual reset, and other bulb styles.

TETİSAN TESİSAT TİCARET VE SANAYİİ A.Ş.
www.tetisantesisat.com
+90 212 267 08 42

Series
BTT

Temperature Transmitter

Current or Voltage Output, NEMA 4X Enclosures

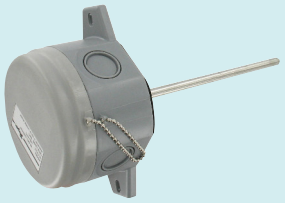

Duct Mount

Outside Air with Radiation Shield

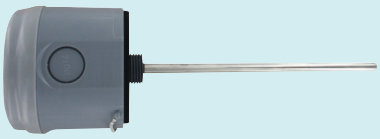

Immersion Mount

Outside Air without Radiation Shield

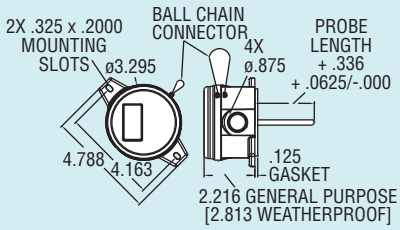

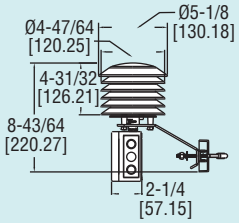

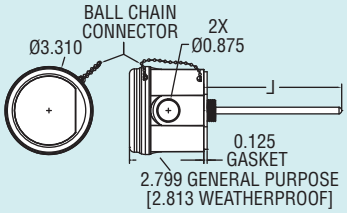

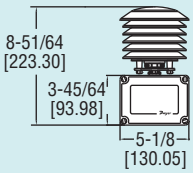

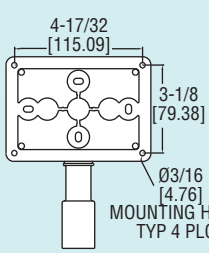

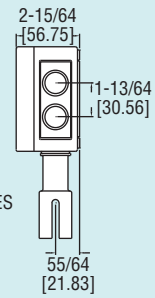

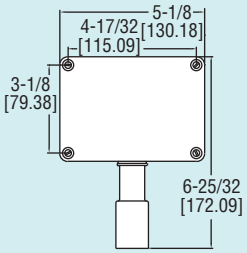

The Series BTT Temperature Transmitter can be used for the following applications: monitoring the temperature inside air ducts for HVAC, transmitting temperature inside water lines for chillers, or measuring the outside air temperature of any new or existing facility. Mounting configurations include duct, immersion, and outside air. For duct and immersion models, probes can be ordered from 2.5″ up to 18″ in length. The OSA models can be ordered with an optional radiation shield that allows the sensor to be mounted in direct sunlight.

Example	BTT	-D	04	-1		BTT-D04-1
Series	BTT					Temperature Transmitter
Mounting Configuration		D I O R				Duct Mount Immersion Mount Outside Air Outside Air with Radiation Shield
Probe Length			00 25 04 06 08 12 18			Outside Air/Probe 2.5″ 4″ 6″ 8″ 12″ 18″
Output				1 2		4 to 20 mA 0 to 10 V
Options					Blank FC NIST	None Factory Calibration Certificate NIST Calibration Certificate

SPECIFICATIONS

Temperature Sensor: Pt1000 RTD.
Range: -40 to 140°F (-40 to 60°C).
Temperature Limits: 32 to 122°F (0 to 50°C).
Accuracy:
Voltage: 0 to 60°C: ±0.5°C; -40 to 0: ±1.0°C;
Current: -20 to 50°C: ±0.5°C; -40 to -20°C and 50 to 60°C: ±0.75°C.
Response Time: 100 msec.
Wetted Materials: 304 SS (probe), polycarbonate (housing), neoprene (gasket).
Process Connection: 1/2″ NPT (immersion models only).
Conduit Connection: 1/2″ NPT.
Probe Lengths: 2.5 to 18″ (depending on configuration).
Power Requirements: 13 to 36 VDC.
Output Signal: 4 to 20 mA or 0 to 10 VDC (depending on model).
Enclosure Rating: NEMA 4X (IP66) (immersions models require thermowell).
Weight: 5.11 oz, 145 g (duct/immersion); 8.4 oz (238 g) (OSA without radiation shield); 1 lb 7.4 oz (663.4 g) (OSA with radiation shield) .
Agency Approvals: CE.

Thermowells

Model	Material	Insertion Length
TE-TNS-N253N-00	304 SS	2.5″
TE-TNS-N043N-00	304 SS	4″
TE-TNS-N063N-00	304 SS	6″
TE-TNS-N083N-00	304 SS	8″
TE-TNS-N123N-00	304 SS	12″
TE-TNS-N183N-00	304 SS	18″

TETİSAN TESİSAT TİCARET VE SANAYİİ A.Ş.
www.tetisantesisat.com
+90 212 267 08 42

Series TTW

Weatherproof Immersion Temperature Transmitter

Pt100 RTD, PC Programmable Transmitter

Scan here to watch product video

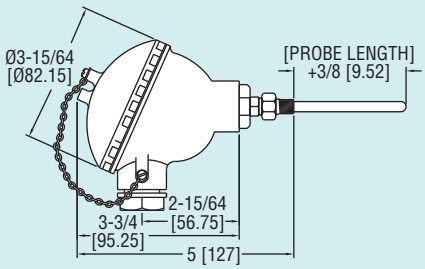

The Series TTW Immersion Temperature Transmitter combines three popular products into a single package. Our TBU series head mounted temperature transmitter is factory mounted into our A-709 enclosure. A Pt100 RTD version of our TE series is wired to the transmitter, giving insertion lengths up to 18″. Each transmitter is factory programmed and calibrated to output a 4 to 20 mA signal proportional to the 32 to 212°F (0 to 100°C) temperature range.

Model	Probe Length
TTW-104	4″
TTW-106	6″
TTW-108	8″
TTW-112	12″
TTW-118	18″

SPECIFICATIONS
Temperature Sensor
Accuracy: ±3°F (±1.7°C).
Temperature Limits: Operating: -40 to 302°F (-40 to 150°C).
Sensor Curves: Pt100 RTD (TE Series Curve D).
Temperature Transmitter
Input Range: -328 to 986°F (-200 to 530°C).
Output: Two-wire 4 to 20 mA.
Output Impedance: 600 Ω @ 24 VDC.
Power Requirements: 12 to 35 VDC.
Accuracy: ±0.2% FS.
Temperature Limits: -40 to 185°F (-40 to 85°C).
Response Time: <100 msec.

Enclosure
Temperature Limits: -40 to 212°F (-40 to 100°C).
Rating: NEMA 4X (IP65).
Material: Painted aluminum housing.

ACCESSORY
TBU-90, Programming Cable and Software

Series 650

Temperature Transmitter

4 to 20 mA Signal, Two Wire Operation, Temperatures from -55 to 180°C

Scan here to watch product video

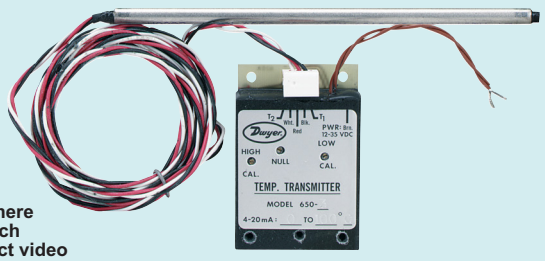

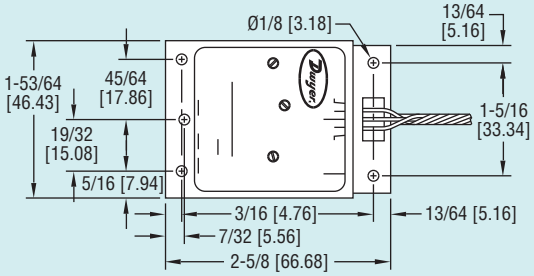

The Series 650 Temperature Transmitter combines low cost with small size making it ideal for a wide variety of HVAC, industrial and commercial multi-point temperature monitoring applications. Non-polarized terminals simplify connection to any 12 to 35 VDC power supply. Capable of operation with long cable runs, Series 650 Transmitters are well suited for monitoring air or water temperatures at remote locations. Three models are stocked in popular ranges factory calibrated within 0.3% of span. All are linear within 0.25% of span and may be recalibrated within low range and span limits shown in chart. Low range is temperature corresponding to 4 mA output. Span is temperature difference between Low and High Ranges corresponding to 4 to 20 mA output signal.

Model	Range As Stocked	Low Range Limits		Span Limits	
		Min.	Max.	Min	Max.
650-1	-23° to +10°C	-32°C	-14°C	24°C	48°C
650-2	-7° to +49°C	-12°C	+6°C	37°C	150°C
650-3	0° to +100°C				

Consult factory for special ranges calibrated within the limits of -55°C and +180°C.

SPECIFICATIONS
Input: Silicone-junction transistor.
Output Signal: 4 to 20 mA DC.
Power Requirements: 12 to 35 volts DC.
Accuracy: ±0.3% FS @ 20°C (68°F).
Linearity: Within 0.25% of span.
Thermal Drift: Less than 0.5% of span over ambient temperature range of 0 to 50°C (32 to 122°F).
Probe Construction: 6″ long, 0.25″ OD Type 304 SS.
Temperature Limits: Ambient: 0 to 70°C (32 to 158°F).
Temperature Limits: (Probe): 204°C (400°F).
Probe Cable Length: 7 ft (2.1 m).
Voltage Stability: Output error less than 0.01% of span over the specified supply voltage range.

on certificate, use order code NISTCAL-TT1.

ACCESSORY
A-325, Duct Mounting Kit with flange, fitting and hardware

tetisan
TETİSAN TESİSAT TİCARET VE SANAYİİ A.Ş.
www.tetisantesisat.com
+90 212 267 08 42

Series 659

Push-Button Temperature Transmitter

Programmable, RTD, Thermistor or Thermocouple Input, In-Head Mounting

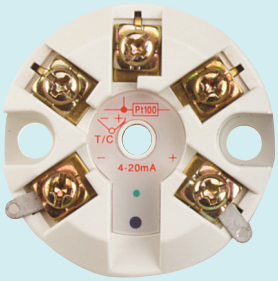

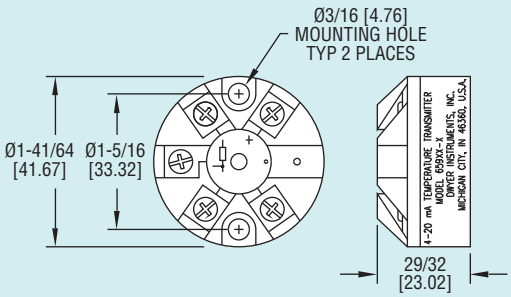

Series 659 Push-Button Temperature Transmitters accept thermocouple (J, K, T), RTD (Pt100Ω) or thermistor input and provide a linearized 4 to 20 mA output. The transmitter is quickly ranged and calibrated by using a single on-board switch. An LED provides visual indication of sensor fault and programming mode. Models feature reverse polarity protection. Thermocouple models are also galvanically isolated and cold junction compensated.

The compact transmitter can be mounted directly within any standard thermal head for connection to the sensor. The Series 659 Transmitters are ideal for temperature measurement in boilers, burners, ducts, furnaces, refrigeration systems, food processing, tanks, chemical processing, steam generators or any other process application.

Model	Input
659TC-1	Thermocouple (Type J, K, T)
659RTD-1	3-wire (RTD Pt100)
659TH-1	Thermistor (2252Ω)

SPECIFICATIONS

Input Range: Type J T/C: -328 to 2192°F (-200 to 1200°C); Type K T/C: -328 to 2498°F (-200 to 1370°C); Type T T/C: -328 to 752°F (-200 to 400°C); Pt100Ω RTD: -328 to 1562°F (-200 to 850°C); Thermistor: -13 to 257°F.
Accuracy: T/C models: ±0.04% FS., ±0.04% of reading or ±0.5°C whichever is greater; RTD: ±0.2°C ±0.1% of rdg; Thermistor: ±0.25°F (±0.1°C).
Output: Linearized 4 to 20 mA, 2-wire loop powered.
Sample Rate: 500 ms.
Loop Resistance: T/C: 700Ω @ 24 VDC; RTD: 800Ω @ 24 VDC; Thermistor: 24 VDC.
Output Thermal Drift: Zero: 0.2µA/°C; Span: 0.5µA/°C.
Temperature Limits: Ambient: -4 to 158°F (-20 to 70°C), 80% RH max.
Ambient Storage Temperature: -40 to 158°F (-40 to 70°C), 95% RH max.
Burnout: Upscale 22 mA.
Weight: 0.92 oz (26 g).
Agency Approvals: CE.

Series 651

Temperature Transmitter

RTD or Thermocouple Input, Zero and Span Adjust, Linearized 4 to 20 mA Signal

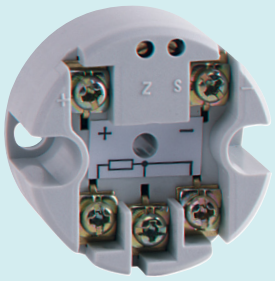

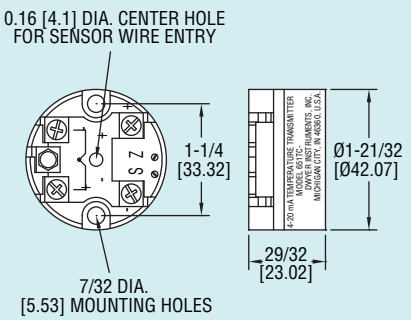

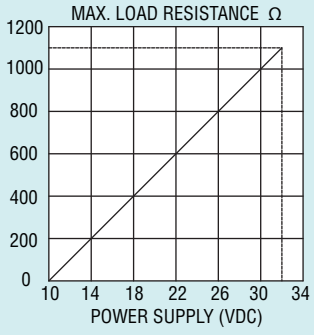

Linearized output for precise temperature monitoring or control is combined with small size and quick, easy mounting. Rugged Series 651 transmitters are designed for use with 2 or 3 wire Pt100 RTDs (to DIN standard 43760 or BS1904) or ungrounded Type K thermocouples. Thermocouple models 651TC are cold junction compensated, automatic 32 to 160°F (0 to 70°C) with upscale burnout. These economical devices provide the accuracy and reliability you need at the lowest possible cost.

Model	Input Type	Range,°F (°C)
651A-10	Pt100 RTD	32-212 (0-100)
651A-20	Pt100 RTD	32-392 (0-200)
651A-40	Pt100 RTD	32-752 (0-400)
651TC-01	Type K Thermocouple	32-212 (0-100)
651TC-02	Type K Thermocouple	32-392 (0-200)
651TC-04	Type K Thermocouple	32-752 (0-400)
651TC-06	Type K Thermocouple	32-1112 (0-600)

SPECIFICATIONS

Input: 2 or 3-wire Pt100 RTD (models 651A), or ungrounded Type K thermocouple (models 651TC).
Output: 4 to 20 mA DC, linearized.
Transmitter Type: 2-wire.
Output Impedance: 700Ω @ 24 VDC.
Power Requirements: 10 to 32 VDC, reverse connection protected.
Accuracy: ±0.2°C plus 0.2% reading (models 651A), ±0.1% FS plus cold junction errors (models 651TC).
Temperature Drift: ZERO drift typical 0.02%/°C (0.09°F); SPAN typical 0.005%/°C (0.0036°F).
Temperature Limits: Ambient: 32 to 122°F (0 to 50°C).
Maximum Storage Temperature: 160°F (70°C).
Response Time: 10 to 90% in 200 ms (models 651A), 70% in 2 ms (models 651TC).
Agency Approvals: CE.

ACCESSORY

or Series 651 Transmitters. NEMA 1 protective housing Supplied with mounting hardware, strain relief fitting and

See page 265 (Model A-709)

TETİSAN TESİSAT TİCARET VE SANAYİİ A.Ş.
www.tetisantesisat.com
+90 212 267 08 42

Model
A-709

Temperature Transmitter Enclosure

Fits Series 651 and 659 Transmitters

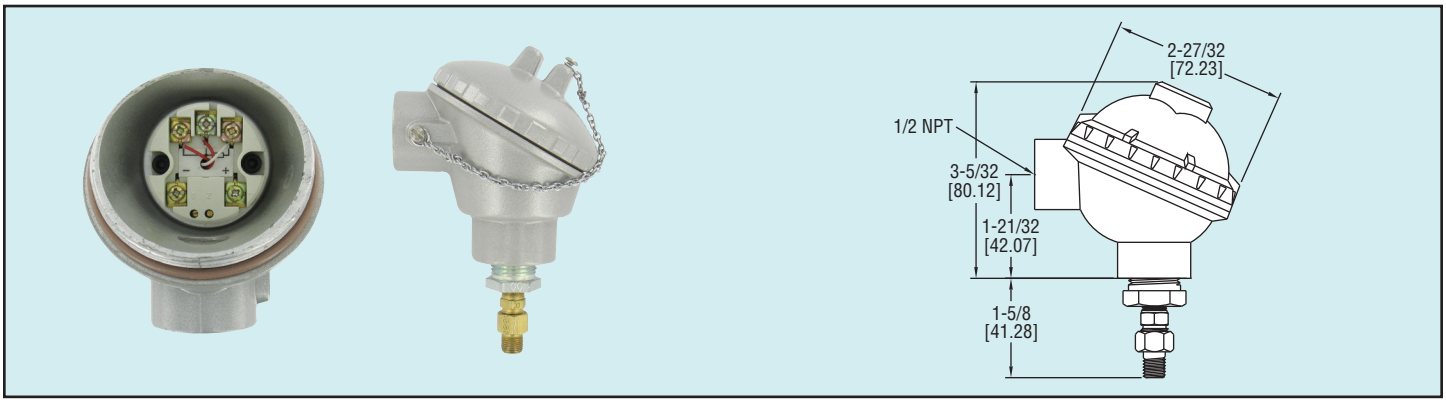

The Model A-709 Temperature Enclosure can be used to mount our Series 651 and 659 transmitters to any of our 1/4˝ diameter temperature sensors. The screw on enclosure core can be quickly removed and has a chain to prevent it from getting lost. The Model A-709 comes with the necessary adapters and fittings for attaching the temperature sensor.

Model A-709, Temperature Transmitter Enclosure

SPECIFICATIONS
Service: Indoor or outdoor.
Temperature Limits: -40 to 212°F (-40 to 100°C).
Rating: NEMA 4X.
Materials: Aluminum housing.

Model
652-0

Programmable Transmitter

RTD, Thermocouple, Voltage or Potentiometer Input, Galvanically Isolated

CE

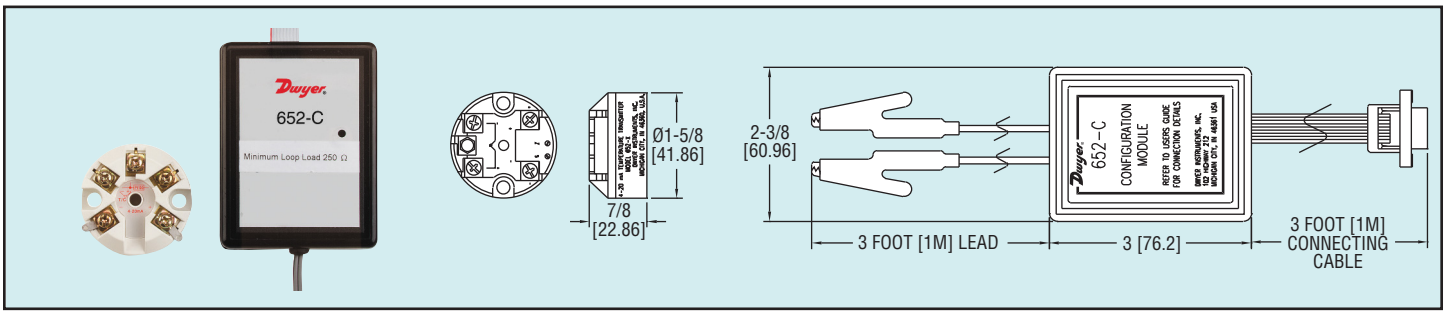

Model 652-0 Programmable Transmitter accepts any commonly used temperature sensor, slidewire transducer or millivolt signal and produces a 4 to 20 mA output signal. Input type and range are easily programmed using a PC and the simple Windows® based software program model 652-C sold separately. The user can completely reconfigure units of measure, high/low range, filtering factor, offset, and transmitter reference details. The model 652-0 features 500V input to output isolation to remove ground loop effects and four filter settings to remove incoming signal noise. Outstanding versatility and compact size make this unit ideal for any temperature application.

Model 652-0, Programmable Transmitter

ACCESSORY
652-C, Configuration Kit (includes power adapter, configuration module, software and carrying case).

SPECIFICATIONS
Input/Output Isolation: 500 VAC RMS.
Thermocouple Input Range:
J: -328 to 2192°F (-200 to 1200°C);
K: -328 to 2498°F(-200 to 1370°C);
T: -328 to 752°F (-200 to 400°C);
R and S: -14 to 3200°F (-10 to 1760°C);
E: -328 to 1832°F (-200 to 1000°C);
F: -148 to 1112°F (-100 to 600°C);
N: -292 to 2372°F (-180 to 1300°C).
RTD Input Range: (Pt100Ω): -328 to 1562°F (-200 to 850°C).
Output: Linearized 4 to 20 mA.
Output Impedance: 700Ω @ 24 VDC.
Power Requirements: 10 to 35V.
Accuracy: T/C: ±0.04% full range input, ±0.04% rdg.; RTD; ±0.01 full range input, ±0.05% of rdg.; Voltage: 10µV, ±0.07% rdg.; Potentiometer: 0.1% full range input.
Thermal Drift: Zero: 0.1µV/°C (RTD zero drift is 0.008°F/°F); Span: 100ppm/°C.
Temperature Limit: Ambient: -40 to 185°F (-40 to 85°C).
Response Time: < 1 second.
Update Time: 250 msec max.
Filtering: Off, 2 seconds, 10 seconds, or adaptive.
Cold Junction Error: ±29°F (±0.5°C).
Computer Interface: RS232 via configurator 652-C, IBM compatible 386 or above with 4mB Ram and serial port.
Housing: PPE & PS.
Weight: 0.92 oz (26 g).
Max. Output Load: 700Ω @ 24 VDC.
Agency Approvals: CE.

TETİSAN TESİSAT TİCARET VE SANAYİİ A.Ş.
www.tetisantesisat.com
+90 212 267 08 42

Series
TTE

Explosion-Proof RTD Temperature Transmitter

User Selectable Ranges, Optional LCD Display

*Shown with optional LCD display

Scan here to watch product video

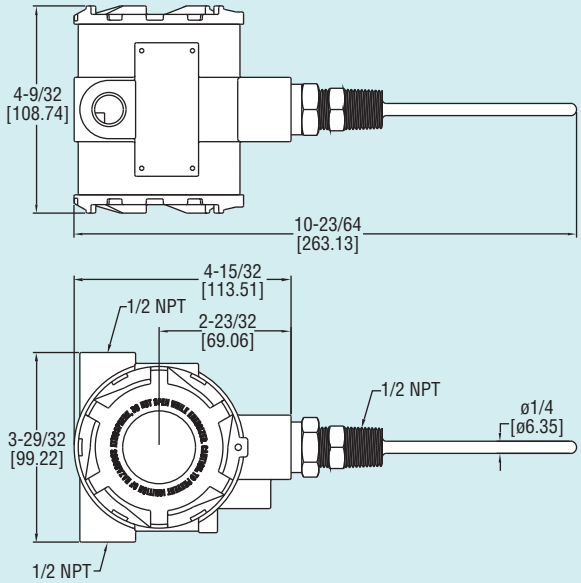

The Series TTE Explosion-Proof RTD Temperature Transmitter is the ideal product for hazardous temperature measurement applications. The TTE series has seven pre-programmed temperature ranges that are selectable via an internal dip switch. For those applications that need a custom range, the transmitter can be easily configured for any range between -30 to 250°F with a minimum span of 40°F. The span and zero can be quickly adjusted with a simple push button design. The compact housing allows for the transmitter to be mounted in virtually any application.

Model	Stem Length	LCD Display
TTE-104-W	4″	No
TTE-106-W	6″	No
TTE-109-W	9″	No
TTE-112-W	12″	No
TTE-115-W	15″	No
TTE-118-W	18″	No
TTE-104-W-LCD	4″	Yes
TTE-106-W-LCD	6″	Yes
TTE-109-W-LCD	9″	Yes
TTE-112-W-LCD	12″	Yes
TTE-115-W-LCD	15″	Yes
TTE-118-W-LCD	18″	Yes

ACCESSORY

A-287, Mounting bracket for pipe or surface mounting (Includes bracket and two 2″ U-bolts)

SPECIFICATIONS

Temperature Sensor: Pt1000, 0.00385 DIN.
Output Temperature Ranges: User selectable – any range between -30 to 250°F with a minimum span of 40°F.
Temperature Limits: Ambient: 0 to 158°F (-18 to 70°C); Process: -30 to 250°F (-34.4 to 121.1°C).
Accuracy: Transmitter ±0.1% FS; Probe ±0.3% FS.
Thermal Drift Effects: ±0.02%/°C max.
Response Time: 250 ms.
Wetted Materials: 316 SS.
Process Connection: 1/2″ male NPT.
Conduit Connection: 1/2″ female NPT.
Probe Length: 2″ to 18″ (depending on model).
Pressure Limits: 2000 psi (137.9 bar).
Power Requirements: 10 to 35 VDC.
Output Signal: 4 to 20 mA (two wire loop powered).
Optional Display: 2 lines X 8 character LCD.
Enclosure Rating: NEMA 4X (IP66) and explosion-proof for Class I, Groups B, C, D; Class II, Groups E, F, G; Class III.
Weight: 2 lb 8 oz (1134 g).
Agency Approvals: CE, FM.

Field-Selectable Ranges
40 to 90°F (4.4 to 32.2°C)
-20 to 140°F (-28.9 to 60°C)
0 to 100°F (-17.8 to 37.8°C)
30 to 240°F (-1.1 to 115.6°C)
32 to 212°F (0 to 100°C)
32 to 122°F (0 to 50°C)
-30 to 65°C (-1.1 to 18.3°C)
Custom range between -30 to 250°F (-34.4 to 121.1°C)

TETİSAN TESİSAT TİCARET VE SANAYİİ A.Ş.
www.tetisantesisat.com
+90 212 267 08 42

Temperature Sensors

Scan here to watch product video

Ordering Sensors

Sensors are constructed with various types of protection/mounting hardware, extensions, and wire terminations. The sensor types and their temperature ranges are shown in the table. See "Temperature Limits" for maximum service temperatures applicable to the protection tube, mounting hardware, wire extensions, etc.

This section shows only a limited selection of the available sensors. The sensors are organized by hardware type. Most hardware can house any type thermocouple or RTD. Terminations are usually either lug type or standard plugs, but many other types are available. Various 'head enclosures' are also available. Dimensions can be custom designed to meet your specifications.

Temperature Limits

Sensor selection depends on two separate temperatures: process temperature and connector temperature. Make sure the local temperature at each component does not exceed the maximum rated service temperature for that component. Note that extension wire must withstand the process temperature.

Service Temperatures

304/316 SS Tubing/Protection/Mounting Hardware	1600°F
Inconel® 600 Tubing/Protection/Mounting Hardware	2100°F
Alumina	3400°F
Mullite	2700°F
Fiberglass insulated extension wire	842°F
FEP insulated extension wire	392°F
Junction Box (BX) connector	400°F
Plug	400°F

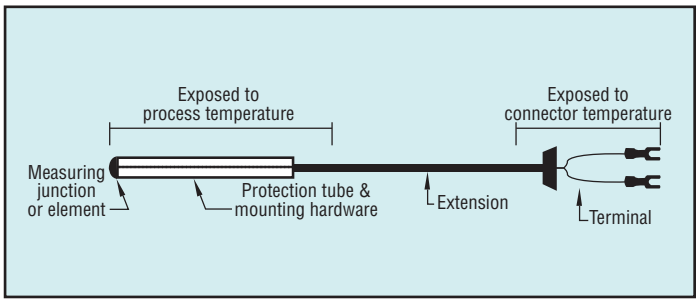

Thermocouple Types	Wire Type	Temperature Range (°F)	Temperature Range (°C)
J	Iron/Constantan	32 to 1400	0 to 760
K	Chromel/Alumel	32 to 2300	0 to 1200
E	Chromel/Constantan	-300 to 1600	-184 to 871
T	Copper/Constantan	-300 to 700	-184 to 371
R	Plat. 13% /Rhod. Plat.	32 to 2700	0 to 1482
S	Plat. 10% Rhod./Plat.	32 to 2700	0 to 1482
RTD Types			
Low Range Thin Film		-50 to 200	-58 to 392
Medium Range Thin Film		-50 to 480	-58 to 896
High Range Wire Wound		-200 to 600	-328 to 1112

Hardware Type

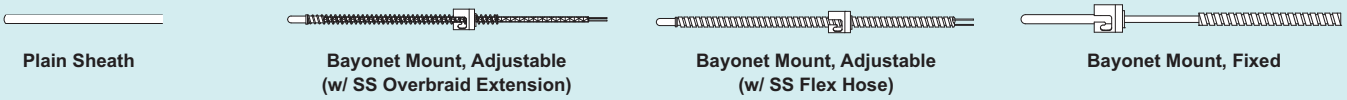

Plain Sheath

Bayonet Mount, Adjustable (w/ SS Overbraid Extension)

Bayonet Mount, Adjustable (w/ SS Flex Hose)

Bayonet Mount, Fixed

Terminals

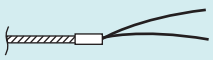

Stripped-Ends – Type 0

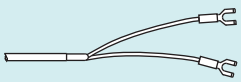

Lugs – Type 1

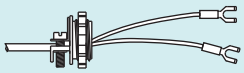

Lugs w/BX Connector – Type 2

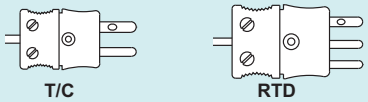

T/C RTD

Standard Plug – Type 3

RTD

ck – Type 4

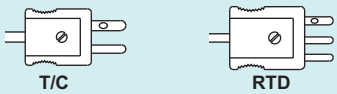

T/C RTD

Mini Plug – Type 6

T/C RTD

Mini Plug – Type 7

Fast Tabs – Type 8

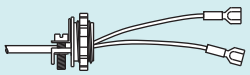

Fast Tabs w/ BX – Type 9

Hex Nipple – Type A, B

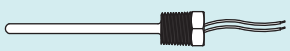

Hex Bushing – Type C, D

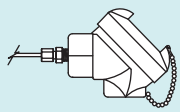

Screw Cover Head – Type E, F, G

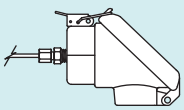

Snap Cover Head – Type H

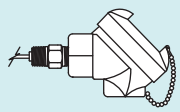

Screw Cover Head – Type I, J, K, M, N, P

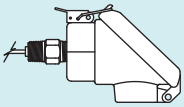

Snap Cover Head – Type L, Q

Inconel® is a registered trademark of Huntington Alloys Corporation.

TETİSAN TESİSAT TİCARET VE SANAYİİ A.Ş.
www.tetisantesisat.com
+90 212 267 08 42

Thermocouples & RTD's

Scan here to watch product video

General Purpose
Basic Model

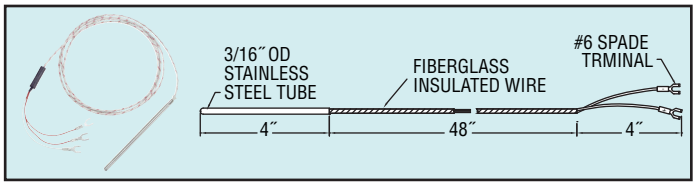

Model	Sensor Type	Terminal
122095-84	J	#6 spade
122095-01	K	#6 spade
122095-04	(3-wire) 100Ω RTD	#6 spade

Rigid Extension Model

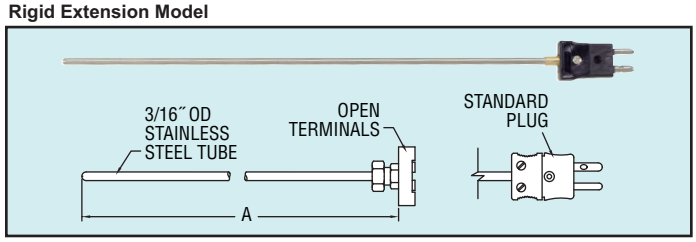

Model	Sensor Type	A Length	Terminal
122095-96	J	12	Open
122095-07	J	18	Open
122095-08	J	24	Open
122095-14	100ΩRTD	24	Open
122095-00	J	12	Plug
122095-10	J	18	Plug

FEP Insulation Extension

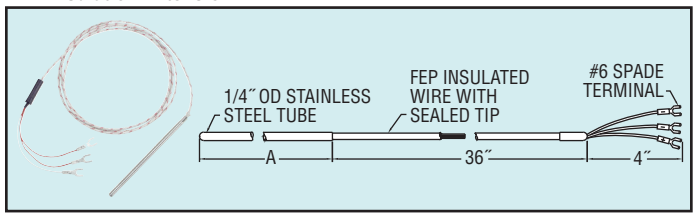

Model	Sensor Type	A Length	Terminal
122087-00	100ΩRTD	6″	#6 spade
122087-01	100ΩRTD	12″	#6 spade
122087-02	100ΩRTD	18″	#6 spade

Flex Hose Extension Model

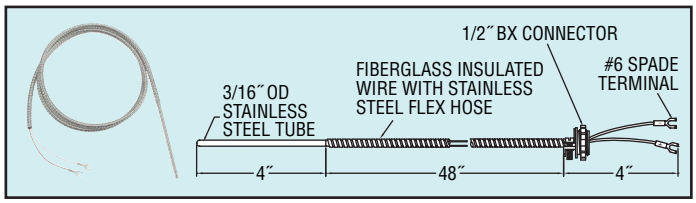

Model	Sensor Type	Bend	Terminal
122095-06	J	0°	#6 spade
122095-15	J	0°	Plug
122095-17	100Ω RTD	0°	#6 spade
122095-16	J	90°	#6 spade
122095-20	100Ω RTD	90°	#6 spade

Stainless Steel Overbraid Extension Model

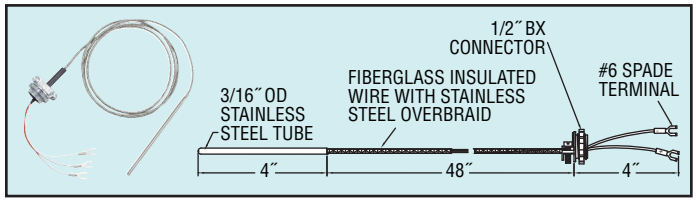

Model	Sensor Type	Bend	Terminal
122095-19	J	0°	#6 spade
122095-21	J	0°	Plug
122095-22	J	90°	#6 spade
122095-25	100Ω RTD	0°	#6 spade

Special Purpose
Surface Thermocouple (900°F Max.)

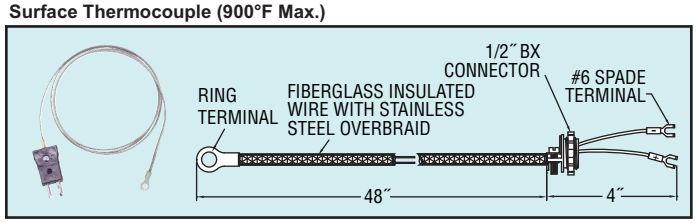

Model	Sensor Type	Ring Terminal ID	Terminal
122095-24	J	13/32″	#6 spade
122095-31	J	13/32″	Plug
122095-32	J	13/64″	#6 spade

Bolt Style

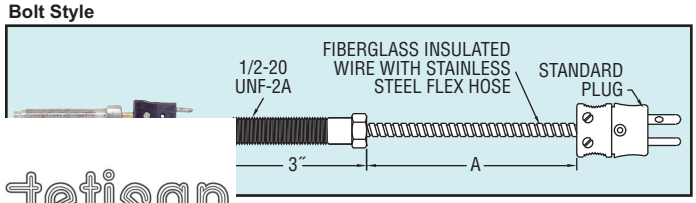

Model	Sensor Type	Tip	A Length	Terminal
122095-58	J	Flush	0	Plug
122095-57	J	Flush	4″	Plug
122095-60	J	1/8″	0	Plug
122095-59	J	1/8″	4″	Plug

TETİSAN TESİSAT TİCARET VE SANAYİİ A.Ş.
www.tetisantesisat.com
+90 212 267 08 42

Thermocouples & RTD's

Special Purpose
Web Style

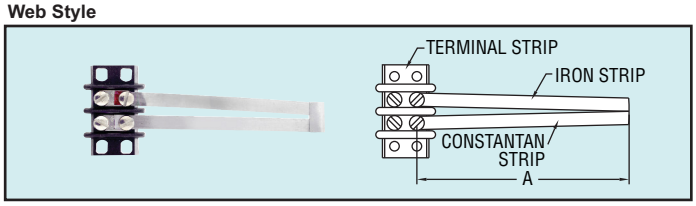

Model	A Length	Terminal
122095-35	4″	No
122095-86	2.75″	No
122095-34	4″	Yes
122095-85	2.75″	Yes

Bayonet Mount
Adjustable Length Spring Type

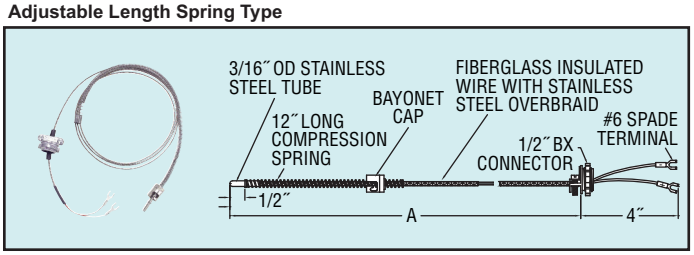

Model	Sensor Type	A Length	Terminal
122095-75	J	36	#6 spade
122095-26	J	48	#6 spade
122095-77	J	60	#6 spade
122095-76	J	36	Plug
122095-27	J	48	Plug
122095-78	J	60	Plug

Adjustable Length Flex Hose Type

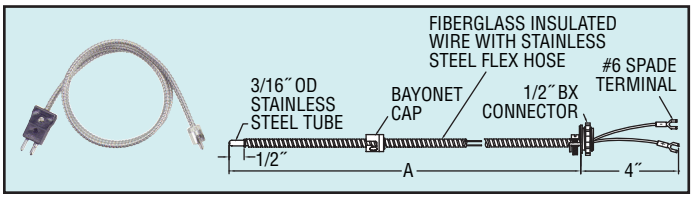

Model	Sensor Type	A Length	Terminal
122095-79	J	36	#6 spade
122095-81	J	48	#6 spade
122095-82	J	60	#6 spade
122095-80	J	36	Plug
122095-29	J	48	Plug
122095-83	J	60	Plug

Mineral Insulated

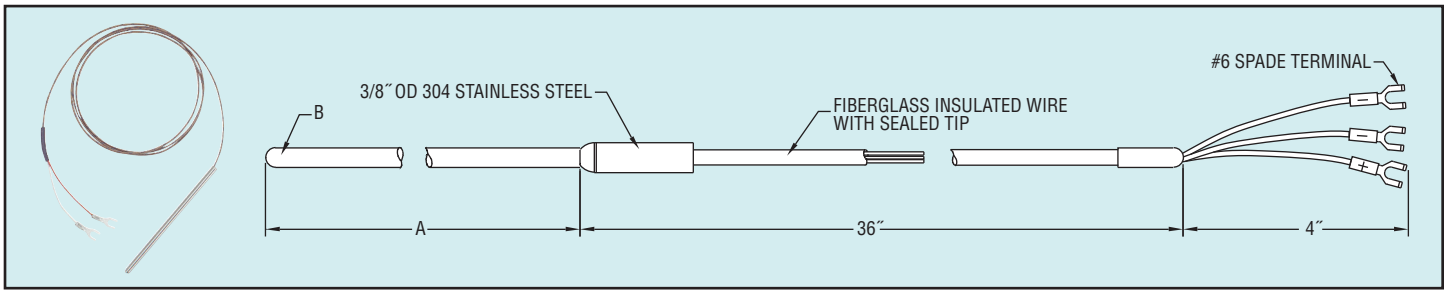

Model	Sensor Type	A Length	B Diameter	Terminal
122088-00	100ΩRTD	6″	1/4	#6 spade
122088-01	100ΩRTD	12″	1/4	#6 spade
122086-00	100ΩRTD	6″	1/8	#6 spade

TETİSAN TESİSAT TİCARET VE SANAYİİ A.Ş.
www.tetisantesisat.com
+90 212 267 08 42

Series R & 8

Mineral Insulated Thermocouples and RTD's

Mineral Insulated Thermocouples and RTDs are known for their excellent mechanical durability and resistance to electrical breakdown. Mineral Insulated Thermocouples can be bent to most any angle without special equipment

Due to the varying size of connection wire and cable, a transition fitting is used between the cold end of the sheath and the connecting wires. This fitting measures 1-1/4˝ long by 1/4˝ OD for 1/8˝ or smaller sheaths, and 1-1/2˝ long by 3/8˝ OD for 3/16˝ and 1/4˝ sheaths. Larger sheaths and sheaths terminating in connectors other than wire or cable do not require transition fittings.

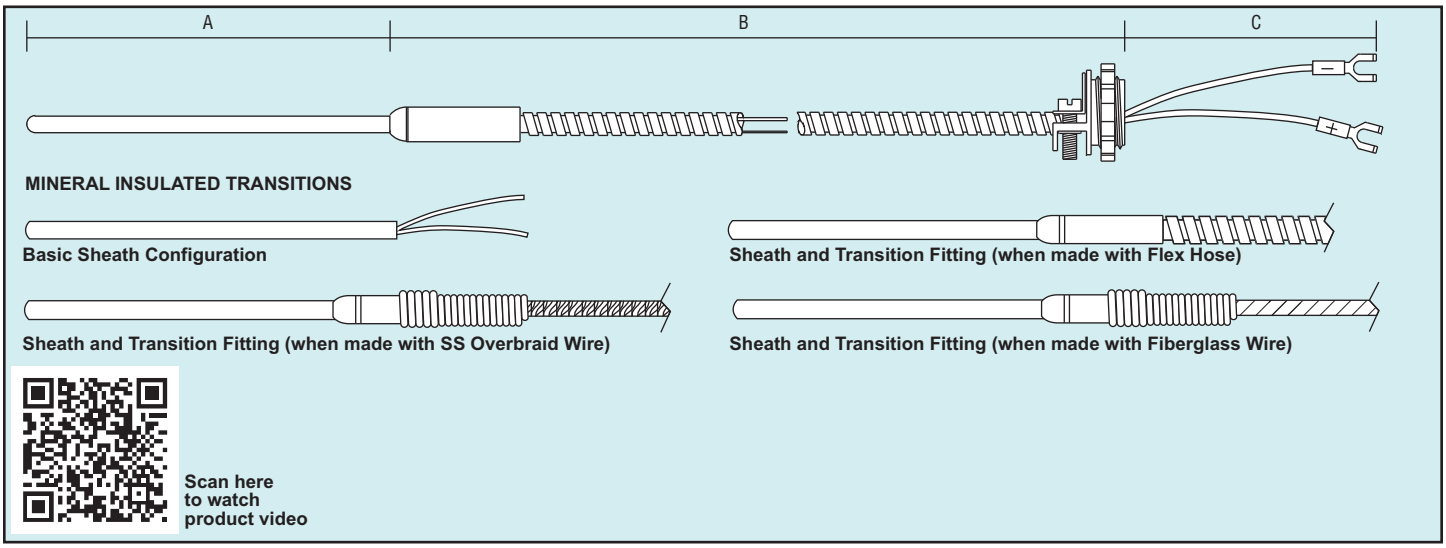

MINERAL INSULATED TRANSITIONS

Basic Sheath Configuration

Sheath and Transition Fitting (when made with Flex Hose)

Sheath and Transition Fitting (when made with SS Overbraid Wire)

Sheath and Transition Fitting (when made with Fiberglass Wire)

Scan here to watch product video

Model Coding

Fill in the appropriate numbers or letters to specify the probe of your choice. Fill in all boxes. If an item or dimension does not apply, fill those boxes with zeros '0'.

SENSOR TYPE
6 – 100Ω RTD: 0.00385Ω/°C
Z – 1000Ω RTD: 0.00385Ω/°C
4 – 100Ω RTD: 0.00392Ω/°C

RTD TYPE
2 – 2-Wire; Class B
3 – 3-Wire; Class B
4 – 4-Wire; Class B
5 – 2-Wire; Class A
6 – 3-Wire; Class A
7 – 4-Wire; Class A

A IN 1/10 INCH | **AA IN 1/10 INCH** | **B IN INCHES** | **C IN INCHES**

R ☐☐☐☐ – ☐☐☐☐ – ☐☐☐ – ☐☐☐ – ☐☐☐ – ☐☐

8 ☐☐☐☐ – ☐☐☐☐ – ☐☐☐ – ☐☐☐ – ☐☐☐ – ☐☐

SENSOR TYPE
J – T/C
K – T/C
E – T/C
T – T/C

HARDWARE TYPE
1 – Plain Sheath (304SS)
2 – Plain Sheath (316SS)
3 – Inconel® 600 Sheath

EXTENSION TYPE
1 – Fiberglass Insulation
2 – Fiberglass Insulation w/ SS Flex Hose
3 – Fiberglass Insulation w/ SS Overbraid

SENSOR TERMINALS
0 – Stripped Ends
1 – Leads With #6 Spade Lugs
2 – Leads With #6 Spade Lugs & 1/2 BX
3 – Standard Plug
4 – Standard Jack
6 – Mini Plug
7 – Mini Jack
8 – Leads With 1/4˝ Fastabs
9 – Leads With 1/4˝ Fastabs 1/2˝ BX
A – 1/2˝ NPT Hex Nipple (316SS)
B – 3/4˝ NPT Hex Nipple (316SS)
C – 1/2˝ NPT Hex Bushing (316SS)
D – 3/4 NPT Hex Bushing (316SS)
See table for **HEAD ASSEMBLY OPTIONS**

ELEMENTS
1 – Single
2 – Dual

JUNCTION TYPE
1 – Grounded
2 – Ungrounded
3 – Exposed Tip

SENSOR O.D.
1 – 1/16˝
2 – 1/8˝
3 – 3/16˝
4 – 1/4˝
5 – 3/8˝

BEND
1 – None
2 – 45°
3 – 90°

HEAD ASSEMBLY OPTIONS (3/4˝ NPT Conduit Connection)
E – Screw Cover Head, AL w/ No Process Connection
F – Screw Cover Head, Plastic w/ No Process Connection
G – Screw Cover Head, SS w/ No Process Connection
H – Snap Cover Head, AL w/ No Process Connection
I – Screw Cover Head, AL w/ 1/2˝ NPT Process Connection
J – Screw Cover Head, Plastic w/ 1/2˝ NPT Process Connection
K – Screw Cover Head, SS w/ 1/2˝ NPT Process Connection
L – Snap Cover Head, AL w/ 1/2˝ NPT Process Connection
M – Screw Cover Head, AL w/ 3/4˝ NPT Process Connection
N – Screw Cover Head, Plastic w/ 3/4˝ Process Connection
…d, SS w/ 3/4˝ Process Connection
…d, AL w/ 3/4˝ Process Connection

Inconel® is a registered trademark of Huntington Alloys Corporation

TEMPERATURE

Temperature Sensors

TETİSAN TESİSAT TİCARET VE SANAYİİ A.Ş.
www.tetisantesisat.com
+90 212 267 08 42

Series
4 & 5

General Purpose and Bayonet Type Thermocouples & RTD's

General Purpose Type RTD and Thermocouple tip temperatures can be as high as 842°F (450°C) for fiberglass insulated wire, and 392°F (200°C) for FEP insulated wire. Models can be specified with lead wires or head assembly construction. For higher temperatures see the Series R & 8 Mineral Insulated Probes. ❶

General Purpose

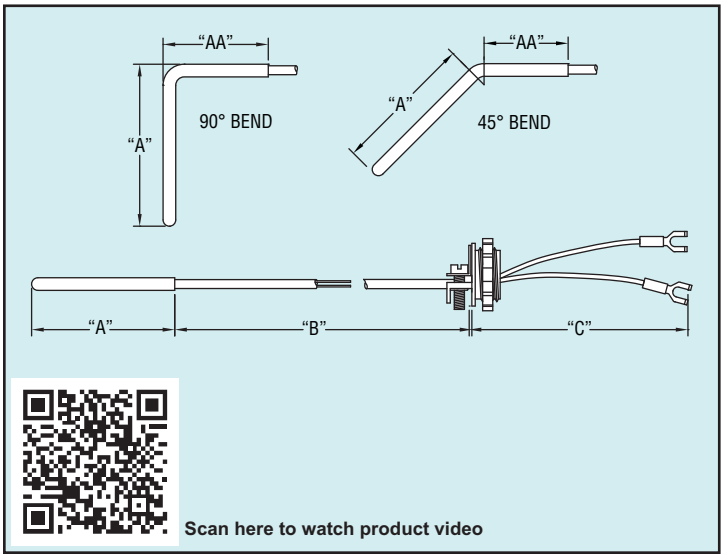

Scan here to watch product video

Bayonet

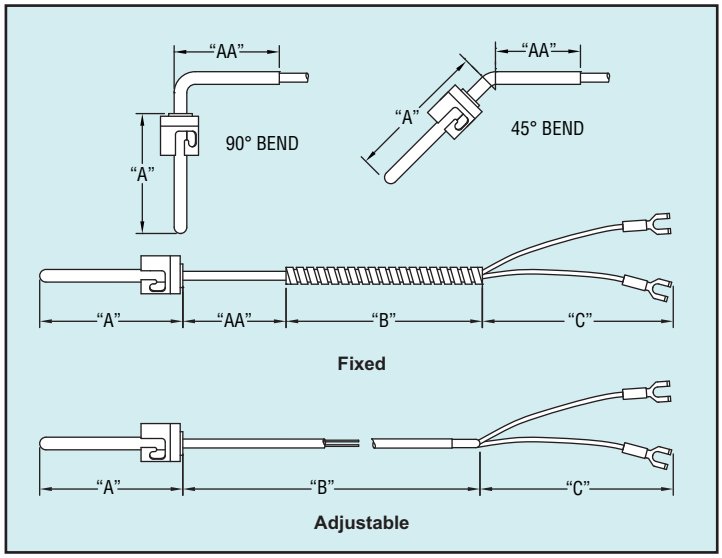

Model Coding

Fill in the appropriate numbers or letters to specify the probe of your choice. Fill in all boxes. If an item or dimension does not apply, fill those boxes with zeros '0'.

SENSOR TYPE
6 – 100Ω RTD: 0.00385Ω/°C
Z – 1000Ω RTD: 0.00385Ω/°C
4 – 100Ω RTD: 0.00392Ω/°C

RTD TYPE
2 – 2-Wire; Class B
3 – 3-Wire; Class B
5 – 2-Wire; Class A
6 – 3-Wire; Class A

									A IN 1/10 INCH			AA IN 1/10 INCH			B IN INCHES			C IN INCHES		
4					–				–				–				–				–		
5					–				–				–				–				–		

SENSOR TYPE
J – T/C
K – T/C
E – T/C
T – T/C

HARDWARE TYPE
1 – Plain Sheath (316SS)
2 – Plain Sheath w/ FEP Coating
4 – Back Filled Sheath*
5 – Back Filled Sheath w/ FEP Coating*
6 – Bayonet Mount Adjustable Length
7 – Bayonet Mount Fixed Length

EXTENSION TYPE
1 – Fiberglass Insulation 842°F/450°C
2 – Fiberglass Insulation w/ SS Flex Hose
3 – Fiberglass Insulation w/ SS Overbraid
4 – FEP Insulation 392°F/200°C
5 – FEP Insulation w/ SS Overbraid
6 – FEP Insulation w/ FEP Coated Flex Hose

SENSOR TERMINALS
0 – Stripped Ends
1 – Leads With #6 Spade Lugs
2 – Leads With #6 Spade Lugs 1/2 BX
3 – Standard Plug
4 – Standard Jack
6 – Mini Plug
7 – Mini Jack
8 – Leads With 1/4" Fastabs
9 – Leads With 1/4" Fastabs 1/2" BX
A – 1/2" NPT Hex Nipple (316SS)*
B – 3/4" NPT Hex Nipple (316SS)*
C – 1/2" NPT Hex Bushing (316SS)*
D – 3/4 NPT Hex Bushing (316SS)*
See list for **HEAD ASSEMBLY OPTIONS***

ELEMENTS
1 – Single
2 – Dual

JUNCTION TYPE
1 – Grounded
2 – Ungrounded
3 – Exposed Tip

SENSOR O.D.
2 – 1/8"
3 – 3/16"
4 – 1/4"
5 – 3/8"

BEND
1 – None
2 – 45°
3 – 90°

HEAD ASSEMBLY OPTIONS* (3/4" NPT Conduit Connection)
E – Screw Cover Head, AL w/ No Process Connection
F – Screw Cover Head, Plastic w/ No Process Connection
G – Screw Cover Head, SS w/ No Process Connection
H – Snap Cover Head, AL w/ No Process Connection
I – Screw Cover Head, AL w/ 1/2" NPT Process Connection
J – Screw Cover Head, Plastic w/ 1/2" NPT Process Connection
K – Screw Cover Head, SS w/ 1/2" NPT Process Connection
L – Snap Cover Head, AL w/ 1/2" NPT Process Connection
M – Screw Cover Head, AL w/ 3/4" NPT Process Connection
N – Screw Cover Head, Plastic w/ 3/4" Process Connection
ver Head, SS w/ 3/4" Process Connection
/er Head, AL w/ 3/4" Process Connection

*Options only available on Series 4 RTD's

❶See page 270 (Series R & 8)

TETİSAN TESİSAT TİCARET VE SANAYİİ A.Ş.
www.tetisantesisat.com
+90 212 267 08 42

Series
9 & P

Special Application Thermocouples and RTD's

Special Application Thermocouples and RTD's cover a wide variety of types and configurations. This section covers FEP covered thermocouples and RTD's, ring type thermocouples and RTD's for surface measurement, web type thermocouples for surface measurement of moving objects such as rollers, and penetration thermocouples and RTD's with sharp tips for measurement of viscous liquids and semisolids such as plastic compounds, rubber and slightly frozen food products.

SERIES 9 SPECIALTY SENSOR STYLES

Flexible FEP Covered Bead Junction

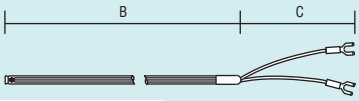

Ring Type Surface Thermocouples and RTD's

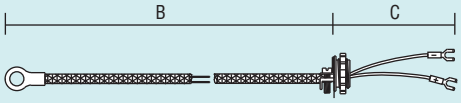

Web Type Surface Thermocouples

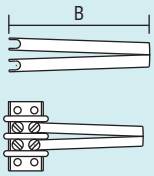

Web Type Surface Thermocouple Replacement Element

Web Type Surface Thermocouple Assembly

Scan here to watch product video

SERIES P PENETRATION PROBE STYLES

1. Transition Fitting

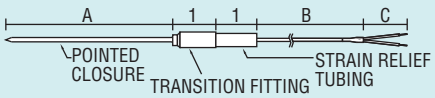

2. Straight Handle

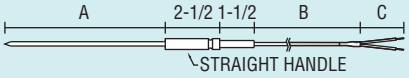

3. Saber Handle

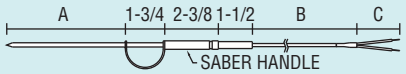

4. Flanged Handle

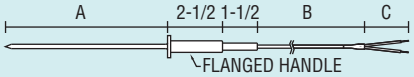

6&7. Euro Style Handle (FEP or SS)

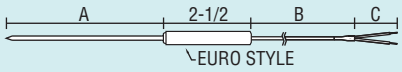

Scan here to watch product video

Model Coding

Fill in the appropriate numbers or letters to specify the probe of your choice. Fill in all boxes. If an item or dimension does not apply, fill those boxes with zeros '0'.

9 □ □ □ □ – 1 □ 0 – (B IN INCHES) □ □ – (C IN INCHES) □ □

SENSOR TYPE
J – T/C
K – T/C
E – T/C
T – T/C
6 – RTD DIN
4 – RTD NIST
Z – RTD DIN 1K

HARDWARE TYPE
5 – Bead Junction w/ FEP Coating
6 – Ring #10 (0.196″ ID)
7 – Ring #8 (0.144″ ID)
8 – Ring 3/8″ (0.390″ ID)
9 – Web

EXTENSION TYPE
0 – None
1 – Fiberglass Insulation 842°F/450°C
2 – Fiberglass Insulation w/ SS Flex Hose
3 – Fiberglass Insulation w/ SS Overbraid
4 – FEP Insulation 392°F/200°C
5 – FEP Insulation w/ SS Overbraid
6 – FEP Insulation w/ FEP Coated Flex Hose

SENSOR TERMINALS
0 – None
1 – Lugs
2 – Lugs With BX
3 – Standard Plug
4 – Standard Jack
6 – Mini Plug
7 – Mini Jack
8 – Fastabs
9 – Fastabs With BX

JUNCTION TYPE
1 – T/C
2 – 2-Wire RTD; Class B
3 – 3-Wire RTD; Class B
6 – 2-Wire RTD; Class A
7 – 3-Wire RTD; Class A

P □ □ □ □ – □ □ – (A* IN 1/10 INCH) □ □ □ – (B IN INCHES) □ □ □ – (C IN INCHES) □ □

SENSOR TYPE
J – T/C
T – T/C
6 – RTD DIN

PROBE STYLE
1 – Transition Fitting, SS
2 – Straight Handle, SS
3 – Saber Handle, SS
langed Handle, SS
uro Style, FEP
uro Style, SS

EXTENSION TYPE
4 – FEP Insulation
6 – FEP Over SS Flex Hose

SENSOR TERMINALS
0 – Stripped Ends
1 – Lugs
2 – Lugs With BX
3 – Standard Plug
4 – Standard Jack
6 – Mini Plug
7 – Mini Jack

JUNCTION TYPE
1 – Grounded
2 – Ungrounded

SENSOR O.D.
7 – 0.134 O.D. Hypodermic
8 – 0.180 O.D. Hypodermic

*"A" Dimension maximum length is 12″ (30 cm)

TETİSAN TESİSAT TİCARET VE SANAYİİ A.Ş.
www.tetisantesisat.com
+90 212 267 08 42

Series D

Sensors for Sanitary Applications

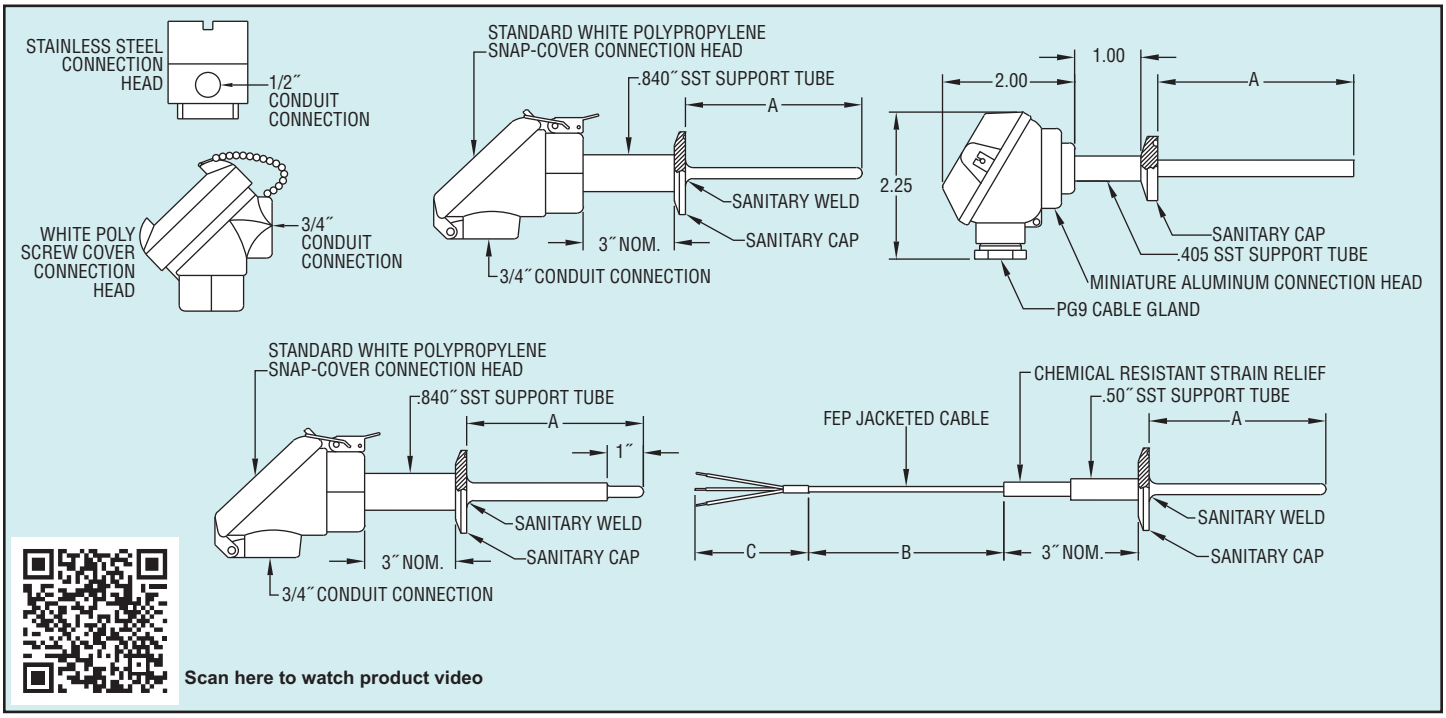

Scan here to watch product video

16 AMP CLAMP CAP

Size Tube O.D.	O.D.	Thickness
1/2 or 3/4	1.00	.188
1	1.98	.25
1-1/2	1.98	.25
2	2.51	.25
2-1/2	3.03	.25
3	3.57	.25

16A BEVEL SEAT

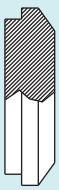

Size Tube O.D.	O.D.	Thickness
1	1.31	.46
1-1/2	1.84	.56
2	2.37	.62
2-1/2	2.90	.66
3	3.43	.71

16APV APC

Size Tube O.D.	O.D.	Thickness
1	1.38	.29
1-1/2	1.88	.42
2	2.38	.46
2-1/2	2.88	.47
3	3.38	.50

16 AI-14I I-LINE

Size Tube O.D.	O.D.	Thickness
1	2	.50
1-1/2	2	.50
2	2.65	.56
2-1/2	3.12	.56
3	3.87	.75

Model Coding:

D □□□□□–□□□–□□□–□□□–□□

A IN 1/10 INCH | B IN INCHES | C IN INCHES

SENSOR TYPE
J – T/C
K – T/C
E – T/C
T – T/C
6 – RTD DIN
4 – RTD NIST

SHEATH
1 – Straight
3 – Stepped Tip

CAP STYLE
2 – 16A Without Nut
3 – 16A With Nut
4 – 16AI-14I
5 – 16 Amp
6 – 16 APV Without Nut
7 – 16 APV With Nut

CAP SIZE
1 – 1/2″
2 – 3/4″
3 – 1-1/2″
4 – 2″
5 – 2-1/2″
6 – 3″

TERMINATION
0 – No Termination
2 – White Screw Cover PP Head (3/4″ Conduit)
3 – Screw Cover 316SS Head (1/2″ Conduit)
4 – Split Leads
5 – Split Leads With Lugs
6 – Split Leads With BX & Lugs
7 – STD Plug
8 – STD Jack
9 – Miniature Aluminum Snap Cover Head

ELEMENTS
1 – Single
2 – Dual

JUNCTION TYPE
1 – Grounded
2 – Ungrounded

SENSOR O.D. NOMINAL / REDUCED
1 – 5/32″ / NA
2 – 1/4″ / 1/8″
3 – 3/8″ / 3/16″
6 – 1/4″ / NA
7 – 1/2″ / NA

TETİSAN TESİSAT TİCARET VE SANAYİİ A.Ş.
www.tetisantesisat.com
+90 212 267 08 42

Series
T

Temperature Sensor Assemblies with Thermowells

Series T Sensor Assemblies are available in a variety of head styles and thermowell materials. All elements are spring loaded to ensure positive contact in the thermowell. Thermowells are non-lagging. The sensor sheath material is constructed of 316 SS regardless of the well material specified.

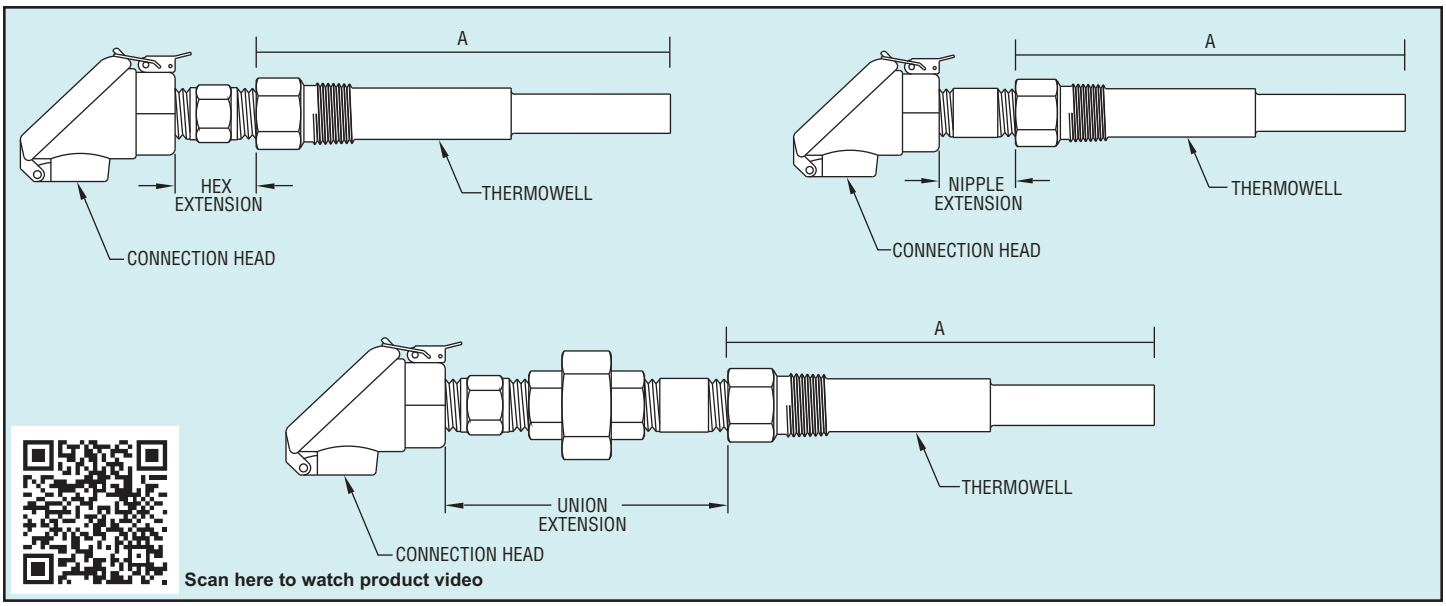

Scan here to watch product video

TEMPERATURE

Temperature Sensors

Model Coding - Sensor Assemblies with Thermowells

Fill in the appropriate numbers or letters to specify the probe of your choice. Fill in all boxes. If an item or dimension does not apply, fill those boxes with zeros '0'.

T □ □ □ □ – □ □ □ – □ □

A
IN INCHES

SENSOR TYPE
J – T/C
K – T/C
E – T/C
T – T/C
6 – 100Ω RTD:
3-Wire 0.00385Ω/°C
Z – 1000Ω RTD:
3-Wire 0.00385Ω/°C
4 – 100Ω RTD:
3-Wire 0.00392Ω/°C

WELL MATERIAL
0 – None
1 – 304 SS
2 – 316 SS
3 – Brass
4 – Carbon Steel

TAPER/BORE
0 – None
1 – Step/0.260
2 – Straight/0.385
3 – Taper/0.260
4 – Taper/0.385
5 – Straight/0.260

EXTENSION
1 – Steel
1/2 NPT 1 in hex
4 – Steel
1/2 NPT 4 in nipple
7 – Steel
1/2 NPT 4 in union
K – 316 SS
1/2 NPT 1 in hex
N – 316 SS
1/2 NPT 4 in nipple
S – 316 SS
1/2 NPT 4 in union

ELEMENTS
1 – Single
(Ungrounded/RTD)
2 – Dual
(Ungrounded/RTD)
3 – Single
(Grounded)
4 – Dual
(Grounded)

HEAD
0 – Aluminum
Screw Cover
1 – Aluminum
Snap Cover
2 – Polypropylene
Snap Cover
3 – Polypropylene
Screw Cover
5 – 304 SS
Screw Cover

PROCESS CONNECTION (NOMINAL/REDUCED O.D.)
0 – None*
1 – 1/2″ NPT (5/8″ to 1/2″ Step)
4 – 3/4″ NPT (3/4″ to 1/2″ Step)
6 – 1″ NPT (7/8″ to 1/2″ Step)
7 – 3/4″ NPT (7/8″ to 5/8″ Taper)
8 – 1″ NPT (1-1/16″ to 5/8″ Taper)
9 – 3/4″ NPT (7/8″ to 49/64″ Taper)
A – 1″ NPT (1-1/16″ to 49/64″ Taper)
B – 1/2″ NPT (5/8″ Straight)
E – 3/4″ NPT (3/4″ Straight)
D – 1″ NPT (7/8″ Straight)

*For replacement sensors, specify "0" for well material, taper and bore, and process connections

TETİSAN TESİSAT TİCARET VE SANAYİİ A.Ş.
www.tetisantesisat.com
+90 212 267 08 42

Select bore as 0.260 for 1/4″ diameter elements and 0.390 for 3/8″ diameter elements. Specify heavy duty mounting for tapered sheaths.

Straight Stem

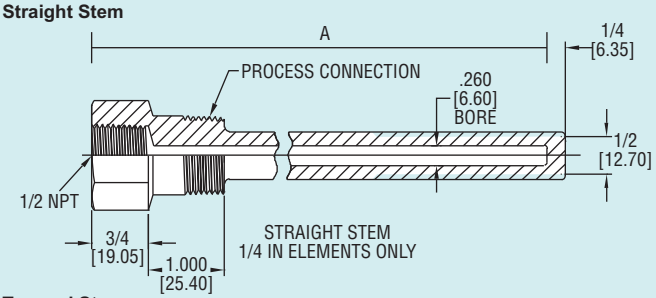

Tapered Stem

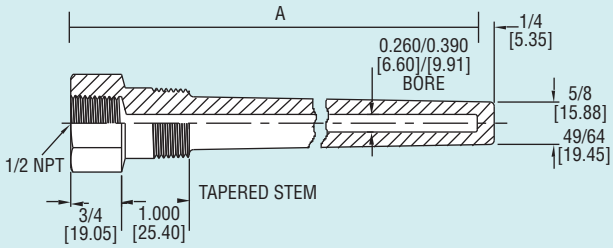

Stepped Stem

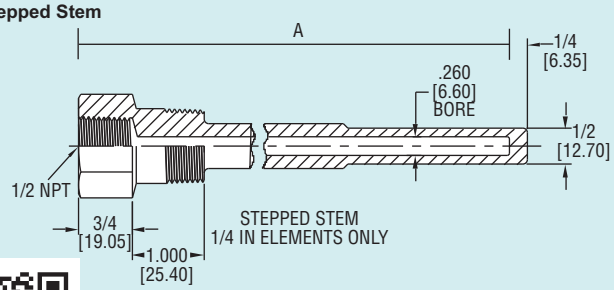

Tapered Flanged

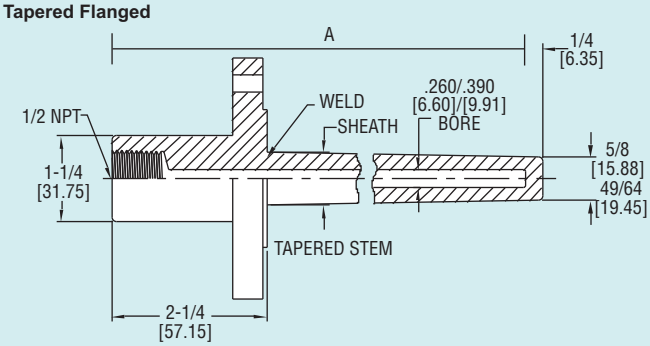

Straight Flanged

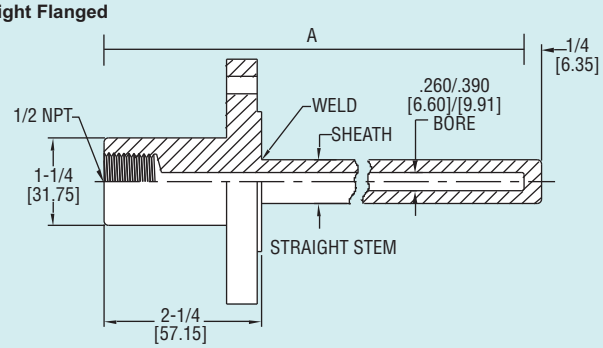

Scan here to watch product video

Model Coding - Thermowells

Fill in the appropriate numbers or letters to specify the thermowell of your choice. Fill in all boxes. If an item or dimension does not apply, fill those boxes with zeros '0'.

A
IN 1/10 INCH

W □ □ □ □ – □ □ □ – □ □

HARDWARE TYPE
1 – 304 SS Sheath
2 – 316 SS Sheath
3 – Brass
4 – Carbon Steel

TAPER/BORE
0 – Straight/0.260
1 – Step/0.260
2 – Straight/0.390
3 – Taper/0.260
4 – Taper/0.390

INSIDE THREAD
1 – 1/2″ Female NPT

PROCESS CONNECTION
1 – 1/2 NPT
2 – 3/4 NPT
3 – 1 NPT
4 – 1″ 150# Flange
5 – 1-1/2″ 150# Flange
6 – 2″ 150# Flange
7 – 1″ 300# Flange
8 – 1-1/2″ 300# Flange
9 – 2″ 300# Flange
A – 1″ 600# Flange
B – 1-1/2″ 600# Flange
C – 2″ 600# Flange

MOUNTING
1 – Threaded
2 – Heavy Duty Threaded
3 – Heavy Duty Flanged
4 – Flanged

LAG
0 – None
2 – 2″
3 – 3″

SHEATH O.D. BASE / TAPER
1 – 5/8″ / 1/2″ Step
4 – 3/4″ / 1/2″ Step
6 – 7/8″ / 1/2″ Step
7 – 7/8″ / 5/8″ Taper
8 – 1-1/16″ / 5/8″ Taper
9 – 7/8″ / 49/64″ Taper
A – 1-1/16″ / 49/64″ Taper
B – 1/2″ Straight
C – 49/64″ Straight
D – 7/8″ Straight
E – 3/4″ Straight

TETİSAN TESİSAT TİCARET VE SANAYİİ A.Ş.
www.tetisantesisat.com
+90 212 267 08 42

Series 7

Protection Tube Assemblies and Replacement Thermocouple Elements

Protection tube assembly type thermocouples are designed for high temperature applications such as ovens, kilns, or other processes. Metal protection tubes can be used in applications ranging from 1200°F to 2100°F. Ceramic tubes can be used in applications from 1200°F to 3400°F.

Metal Tube Assemblies

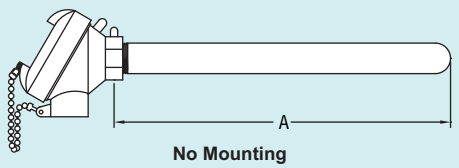

No Mounting

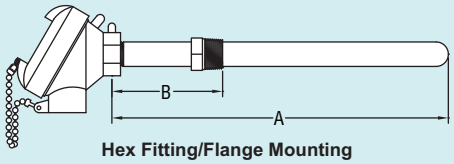

Hex Fitting/Flange Mounting

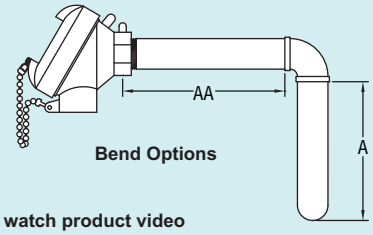

Bend Options

Ceramic Tube Assemblies

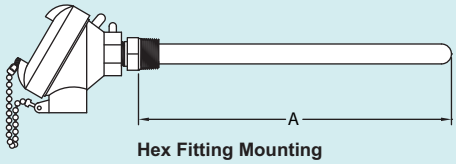

Hex Fitting Mounting

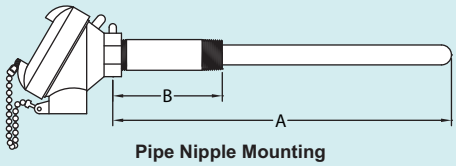

Pipe Nipple Mounting

Scan here to watch product video

Replacement Sensor Elements

Replacement sensor elements are available as separate parts. All rules regarding lengths and fittings apply. Use the standard Order Code, using a '0' for the hardware type, '0' for mounting, '0' for sensor terminals, and '0' for tube O.D. See example below.

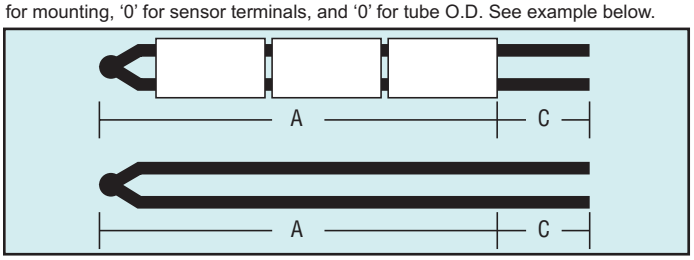

To order use Order Chart below. Specify "0" for Tube Type.
(e.g. - Type K 8 ga. insulated element 12″ long is 7K000-110-121-12-00-15)

To order use Order Chart below. Specify "0" for Tube Type.
(e.g. - Type K 14 ga. bare element 12″ long is 7K000-110-311-12-00-15)

Model Coding

Fill in the appropriate numbers or letters to specify the probe of your choice. Fill in all boxes. If an item or dimension does not apply, fill those boxes with zeros '0'.

7					–				–	*	**	***	–	A IN INCHES		–	AA/B IN INCHES		–	C IN INCHES	

15 – 1.5″
00 – Head Assembly

SENSOR TYPE
0 – None
J – T/C
K – T/C
R – T/C
S – T/C

HARDWARE TYPE
0 – None
1 – 304 SS
2 – 316 SS
4 – Inconel® 601
5 – Mullite+
6 – Alumina+
B – Carbon Steel

MOUNTING TYPE
0 – None
1 – Flange
2 – 1/2″ NPT Hex Fitting (CS)
3 – 3/4″ NPT Hex Fitting (CS)
4 – 1″ NPT Hex Fitting (CS)
5 – 1-1/4″ NPT Hex Fitting (CS)
6 – 1/2″ NPT Hex Fitting (316SS)
7 – 3/4″ NPT Hex Fitting (316SS)
8 – 1″ NPT Hex Fitting (316SS)
9 – 1-1/4″ NPT Hex Fitting (316SS)
A – 1/2″ NPT Pipe Nipple (CS)
B – 3/4″ NPT Pipe Nipple (CS)
C – 1″ NPT Pipe Nipple (CS)
D – 1-1/4″ Pipe Nipple (CS)
E – 1/2″ NPT Pipe Nipple (316SS)
F – 3/4″ NPT Pipe Nipple (316SS)
G – 1″ NPT Pipe Nipple (316SS)
H – 1-1/4″ NPT Pipe Nipple (316SS)

SENSOR TERMINALS
0 – None (Stripped Ends)
H – Snap Cover Head
AL w/ 3/4″ NPT Conduit
E – Screw Cover Head
AL w/ 3/4″ NPT Conduit
G – Screw Cover Head
SS w/ 3/4″ NPT Conduit

ELEMENTS
0 – None
1 – Single
2 – Dual

BEND
1 – Straight
2 – 45°
3 – 90°

TUBE O.D.
0 – None
1 – 1/4″ Pipe
2 – 1/2″ Pipe
3 – 3/4″ Pipe
4 – 1″ Pipe
A – 0.375″ O.D.
B – 0.687″ O.D.
C – 0.750″ O.D.
D – 1.000″ O.D.
E – 1.125″ O.D.

***WIRE GAUGE**
0 – None
1 – 8 AWG
2 – 11 AWG
3 – 14 AWG
4 – 20 AWG
5 – 24 AWG (Type R or S only)
6 – 26 AWG (Type R or S only)

****INSULATORS**
0 – N/A (For Assemblies Only)
1 – None
2 – Oval
3 – Round
4 – Without Collar (Type R or S Only)
5 – With Collar

*****JUNCTION**
1 – Standard/TigWeld
2 – Isolated
3 – Twist Weld

Inconel® is a registered trademark of Huntington Alloys Corporation

TETİSAN TESİSAT TİCARET VE SANAYİİ A.Ş.
www.tetisantesisat.com
+90 212 267 08 42

Thermocouple Accessories

Extension Cables, Plugs, Jacks, Fittings, Adaptors

Scan here to watch product video

Extension Cables

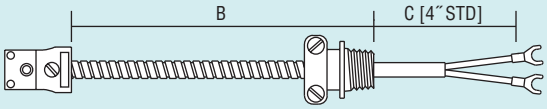

Model Coding

Fill in the appropriate numbers or letters to specify the extension cable of your choice. Fill in all boxes. If an item or dimension does not apply, fill those boxes with zeros '0'.

EC– □ □ □ □ □ – □ □ □ – □ □ – □ □

SENSOR TYPE	EXTENSION TYPE	TERMINAL #1	TERMINAL #2	ELEMENTS
J – T/C	0 – No Extension	0 – Stripped Ends	0 – Stripped Ends	1 – Single
K – T/C	1 – Fiberglass Insulation	1 – Lugs	1 – Lugs	2 – Dual
E – T/C	3 – Stainless Steel Overbraid	2 – Lugs With BX	2 – Lugs With BX	
T – T/C	4 – FEP Insulation	3 – Standard Plug	3 – Standard Plug	
2 – RTD 2-Wire	5 – Stainless Steel Flex Hose	4 – Standard Jack	4 – Standard Jack	
3 – RTD 3-Wire	6 – FEP Over SS Flex Hose	6 – Mini Plug	6 – Mini Plug	
		7 – Mini Jack	7 – Mini Jack	
		9 – Fastabs	9 – Fastabs	
		A – Fastabs With BX	A – Fastabs With BX	

B IN FEET | C (TERM. #1) IN INCHES | C (TERM. #2) IN INCHES

Plugs and Jacks

Standard Size Single Plugs (male)

Model	Type
481-0001	J
481-0002	K
481-0003	T
481-0004	Cu11 (2-Wire)
481-0015	E
481-0022	Cu (2-Wire)
481-0134	Cu (3-Wire)

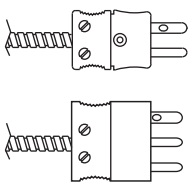

Miniature Size Single Plugs (male)

Model	Type
481-0093	J
481-0095	K
481-0094	T
481-0098	R
481-0097	S
481-0096	E
481-0099	Cu (2-Wire)
481-0175	Cu (3-Wire)

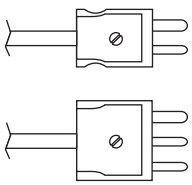

Standard Size Single Jacks (female)

Model	Type
481-0006	J
481-0007	K
481-0008	T
481-0009	Cu11 (2-Wire)
481-0016	E
481-0023	Cu (2-Wire)
481-0135	Cu (3-Wire)

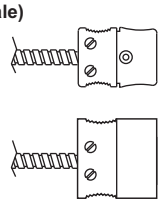

Miniature Size Single Jacks (female)

Model	Type
481-0100	J
481-0102	K
481-0101	T
481-0105	R

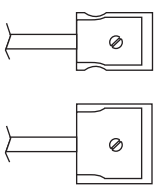

Compression Fittings

Model	Type OD	Thread Size	Material
144-0012	1/8″	1/8-27 NPT	Brass
144-0020	1/8″	1/8-27 NPT	Stainless Steel
144-0009	3/16″	1/8-27 NPT	Brass
144-0022	3/16″	1/8-27 NPT	Stainless Steel
144-0014	1/4″	1/4-18 NPT	Brass
144-0024	1/4″	1/8-27 NPT	Stainless Steel
144-0037	.260 - .275″	1/4-18 NPT	FEP

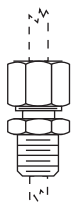

Pipe Adapters

Model	Fits Pipe Diameters	Model	Fits Pipe Diameters
1568-0007	1/2″ to 7/8″	1568-0022	9-3/4″ to 10-1/4″
1568-0008	7/8″ to 1-1/2″	1568-0023	11-3/4″ to 12-1/4″
1568-0009	1-5/16″ to 2-1/4″	1568-0024	15-3/4″ to 16-1/4″
1568-0011	2-1/4″ to 3-5/16″	1568-0025	17-3/4″ to 18-1/4″
1568-0012	3-5/8″ to 4-1/4″	1568-0027	19-3/4″ to 20-1/4″
1568-0013	4-5/16″ to 5-1/4″	1568-0028	23-3/4″ to 24-1/4″
1568-0020	6-1/4″ to 6-3/4″	1568-0029	29-3/4″ to 30-1/4″
1568-0021	7-3/4″ to 8-1/4″		

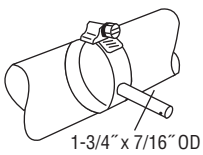

Bayonet Adapters

Model	L	Thread Size
1568-0001	7/8″	1/8-27 UNF
1568-0002	7/8″	3/8-24 UNF
1568-0003	1-3/8″	1/8-27 UNF
1568-0004	1-3/8″	3/8-24 UNF
1568-0005	2-1/2″	1/8-27 UNF
1568-0006	2-1/2″	3/8-24 UNF
1568-0016	2-1/2″	10 x 1.5 mm

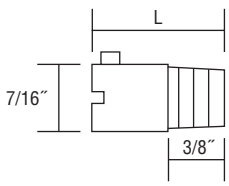

Transition Adapter

These adapters convert the miniature plug on the end of the coiled cable on the Master Probe Handle to a standard lug. Simply plug the cord into the adapter.

Type K, 481-0127
Type J, 481-0126
Type T, 481-0128

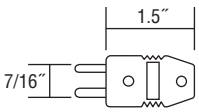

TETİSAN TESİSAT TİCARET VE SANAYİİ A.Ş.
www.tetisantesisat.com
+90 212 267 08 42

Series TE

Duct and Immersion Building Automation Temperature Sensors

Available up to 18″ Probe Length, Thermistor or RTD Outputs

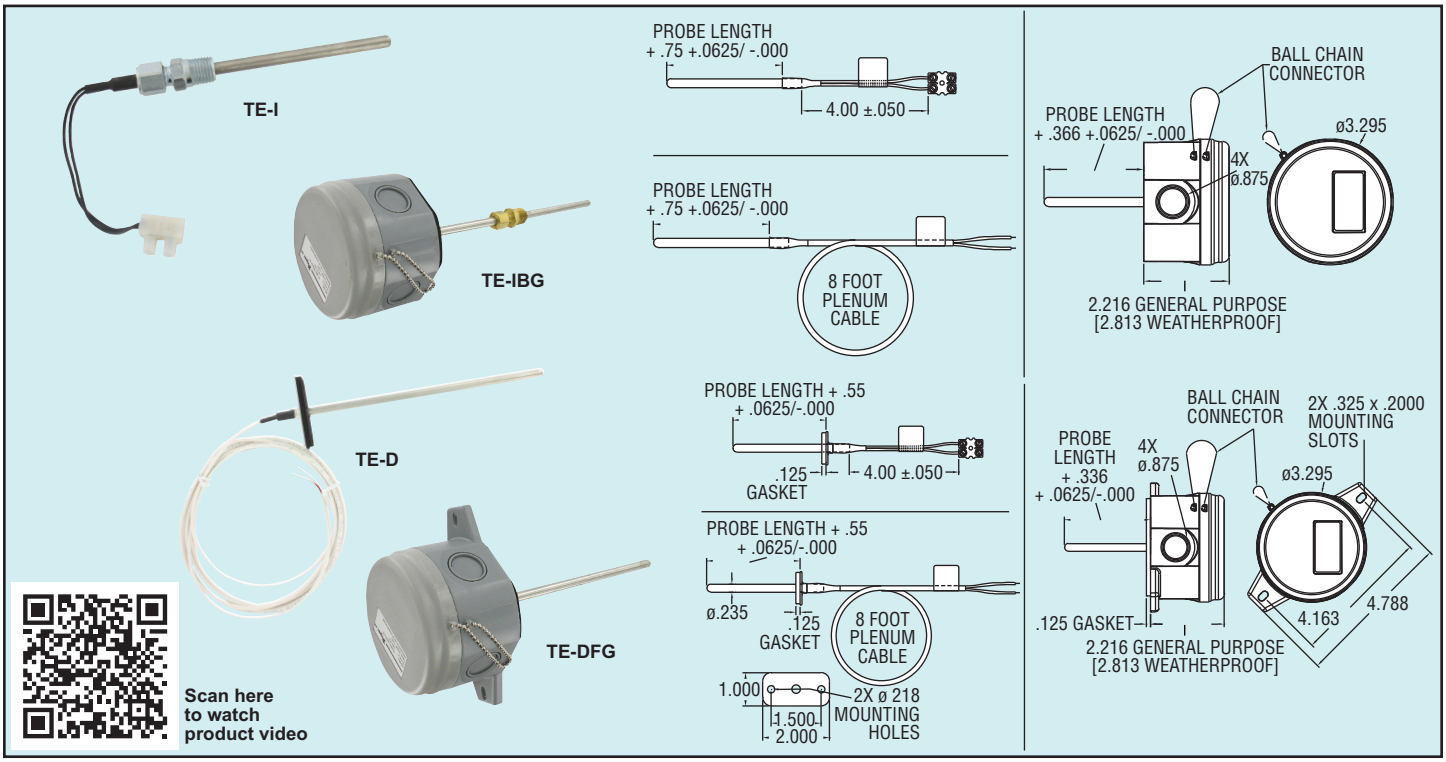

The Series TE Duct and Immersion Temperature Sensor can be used to monitor air or water temperature throughout a building management system or an air handler unit. Flanged duct sensors monitor the supply or return air and provide a thermistor or RTD output to the digital controller. Immersion sensors which are supplied with compression fittings are typically used to monitor the hot or chilled water lines throughout a building. Thermowells are recommended, but not required on the immersion sensors.

For variable air volume applications, the Series TE can be configured to have 8 plenum rated cable with flying leads. Standard units come with 4″ leads with an integral terminal block to eliminate carrying extra wire nuts. For housing models, multiple knockouts provide easy conduit access to any side of the housing. The 1/4 turn lid comes with a chain to prevent it from being lost during installation.

SPECIFICATIONS

Accuracy:
Thermistor temperature sensor: ±0.22°C @ 25°C (±0.4°F @ 77°F);
RTD temperature sensor: DIN class A: ±0.15°C @ 0°C (±0.28°F @ 32°F).
Temperature Limits: Operating: -40 to 302°F (-40 to 150°C).
Sensor Curves: See page reference ❶ below.
Cable Rating: Plenum option includes UL listed plenum cable.
Housing Material: Meets UL, 94 V-O polycarbonate plastic.
Housing Rating: NEMA 4X (IP66) (DFW, IBW only).
Weight: 5.3 oz (150.3 g).

Example	TE	-DFN	-A	04	4	8	-00	TE-DFN-A0448-00
Series	TE							Temperature Sensor
Mounting Configuration		DFN						Duct Mount Probe Only
		DFG						Duct Mount Probe in General Purpose Housing
		DFW						Duct Mount Probe in NEMA 4X Housing
		IBN						Immersion Probe Only
		IBG						Immersion Probe in General Purpose Housing
		IBW						Immersion Probe in NEMA 4X Housing
Sensor Type			A					10K Ohm Type III Thermistor
			B					10K Ohm Type II Thermistor
			C					3K Ohm Thermistor
			D					Pt100 Ohm RTD
			E					Pt1000 Ohm RTD
			F					20K Ohm Thermistor
			Q					10K Ohm Type III with 11K Ohm shunt
Probe Length				25				2.5″
				04				4″
				06				6″
				08				8″
				12				12″
				18				18″ (DFN/DFG Only)
Probe Diameter					4			1/4″
Termination						4		4″ leads
						8		8′ Plenum Rated Cable
							00	None (Probe only)
							12	1/2″ NPT Compression Fitting
							14	1/4″ NPT Compression Fitting

Thermowells (Machined)

Model	Length	Connection (Internal/ External) (NPT)
TE-TNS-N044N-14	4″	1/4″ / 1/2″
TE-TNS-N044N-12	4″	1/2″ / 3/4″
TE-TNS-N064N-14	6″	1/4″ / 1/2″
TE-TNS-N064N-12	6″	1/2″ / 3/4″
TE-TNS-N094N-14	9″	1/4″ / 1/2″
TE-TNS-N094N-12	9″	1/2″ / 3/4″
TE-TNS-N124N-14	12″	1/4″ / 1/2″
TE-TNS-N124N-12	12″	1/2″ / 3/4″

For Straight Thermowell Dimensions: See page 275 (Series W)
❶Resistance vs. Temperature Table: See page 280 (Series TE-OND/RND/OSA)

TETİSAN TESİSAT TİCARET VE SANAYİİ A.Ş.
www.tetisantesisat.com
+90 212 267 08 42

Series
TE-I

Immersion Temperature Sensors

New Integral Mounting Connection, Welded Thermowells

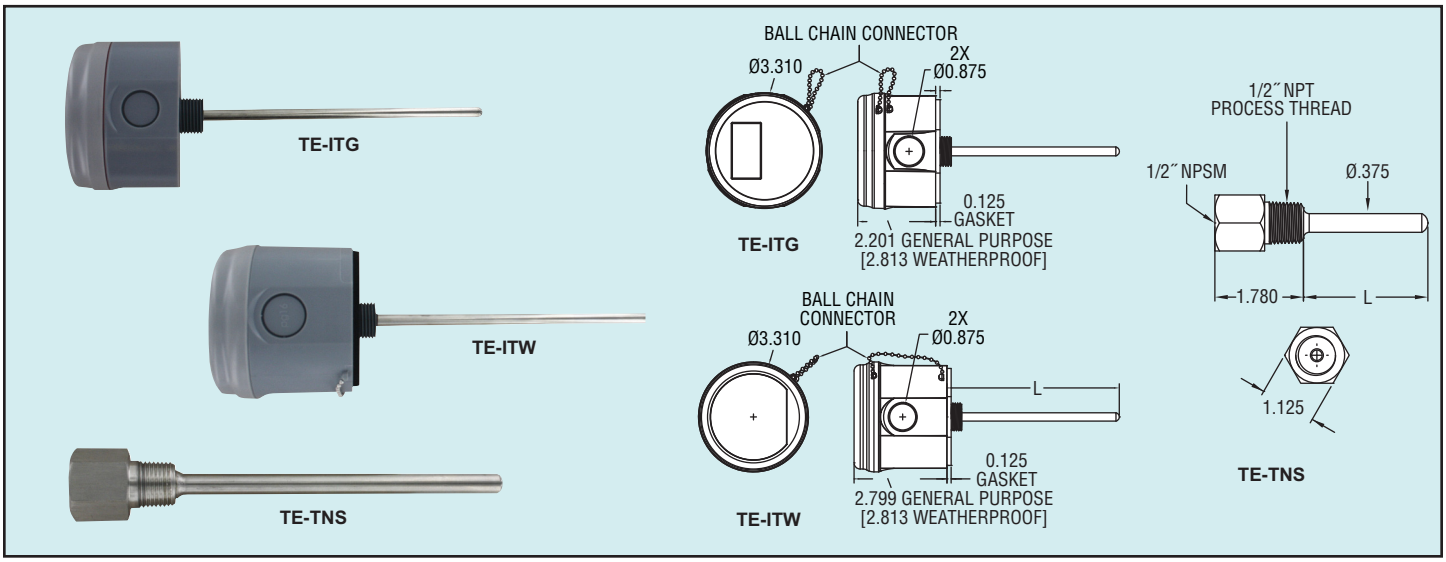

The Series TE-I Immersion Style Temperature Sensors accurately measure water temperature inside chilled and hot water loops in HVAC systems. Sensors can be ordered either with a general purpose or weatherproof enclosure and have an integral 1/2″ NPT threaded connection so that the housing mounts flush against the thermowell. All models come standard with a terminal block that ensure a better electrical connection to the sensor. Both housing configurations include a chain that prevents the lid from being lost during installation. Electrical knockouts on the housing can adapt to either a cable gland or conduit. Thermowells are required to protect the electrical connection from the process water and to allow replacement of the sensors without draining the system.

SPECIFICATIONS

Accuracy:
Thermistor temperature sensor: ±0.22°C @ 25°C (±0.4°F @ 77°F);
RTD temperature sensor DIN Class A: ±0.15°C @ 0°C (±0.28°F @ 32°F).
Temperature Limits: Operating: -40 to 302°F (-40 to 150°C).
Sensor Curves: See page reference ❶ below.
Housing Material: Meets UL, 94 V-O polycarbonate plastic.
Thermowell Material: 304 SS.
Weight: 5.3 oz (150.3 g).

Example	TE	ITG	A	25	4	4	00	Model TE-ITG-A2544-00 Immersion Probe, 10K Type III Thermistor, 2.5″ probe length, 1/4″ probe diameter, 4″ flying leads, with 1/2″ NPT connection
Series	TE							Duct and Immersion Building Automation Temperature Sensor
Mounting Configuration		ITG						Immersion in General Purpose Housing
		ITW						Immersion in NEMA 4X Housing
Sensor Type			A					10K Type III Thermistor
			B					10K Type II Thermistor
			C					3K Ohm Thermistor
			D					PT100 Ohm RTD
			E					PT1000 Ohm RTD
			F					20K Thermistor
			Q					10K Ohm Type III w/ 11 K Ohm shunt
Probe Length				25				2.5″
				04				4″
				06				6″
				08				8″
				12				12″
				18				18″
Probe Diameter					4			1/4″
Termination						4		4″ Flying Leads Terminal Block
Fittings							00	None (Integral)

Thermowells (Welded)

Model	Material	Insertion Length
TE-TNS-N253N-00	304 SS	2.5″
TE-TNS-N043N-00	304 SS	4″
TE-TNS-N063N-00	304 SS	6″
TE-TNS-N083N-00	304 SS	8″
TE-TNS-N123N-00	304 SS	12″
TE-TNS-N183N-00	304 SS	18″

❶Resistance vs. Temperature Table: See page 280 (Series TE-OND/RND/OSA)

TETİSAN TESİSAT TİCARET VE SANAYİİ A.Ş.
www.tetisantesisat.com
+90 212 267 08 42

Series TE-OND/ TE-RND/ TE-OSA

Outdoor Temperature Sensors

Protection Against Radiated Heat, NEMA 4X (IP65) Enclosure

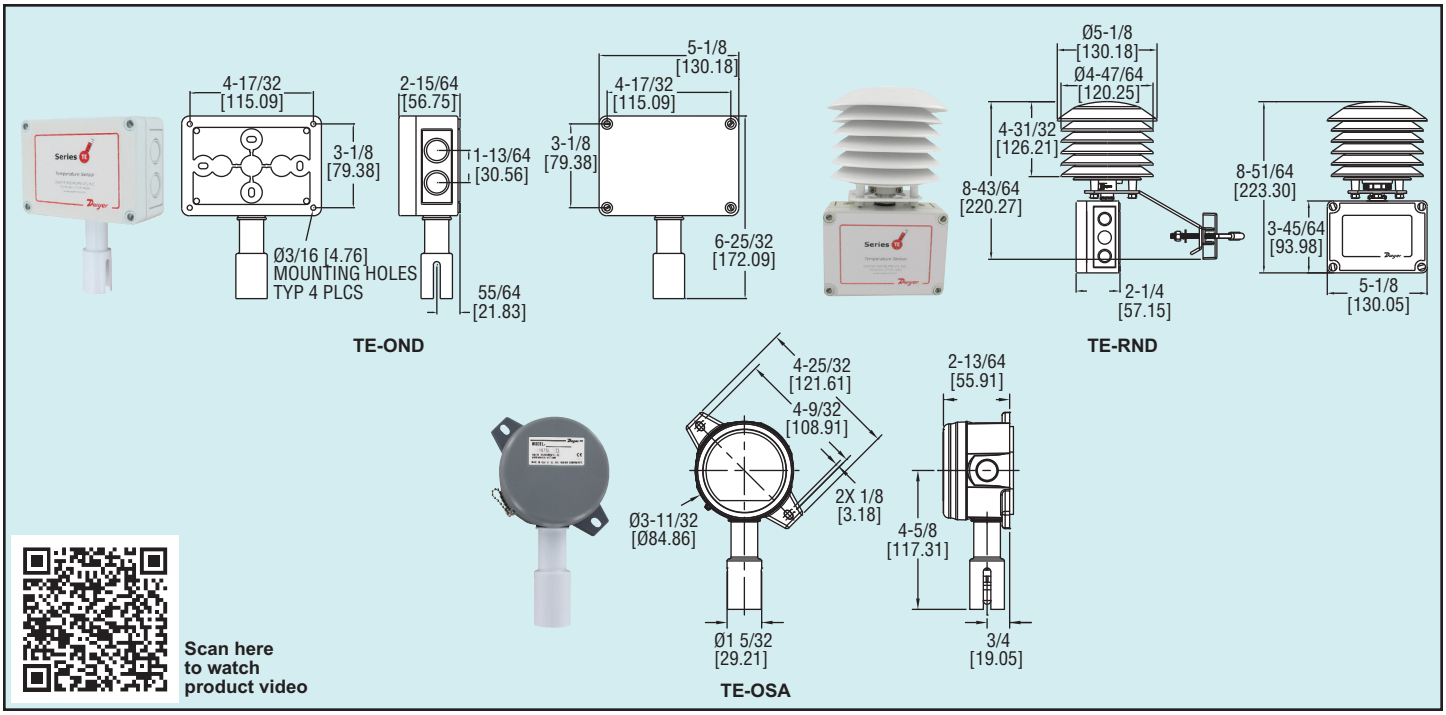

The Series TE-OND/TE-RND Outdoor Air Temperature Sensors are offered in two different configurations to increase measurement accuracy by reducing radiated heat effects. For applications where the north side of the building is accessible, the TE-OND can be used to protect against low levels of radiated heat. If the sensor must be mounted in direct sunlight or a more precise measurement is required, our six plate radiation shield mounts over the temperature probe. The TE-RND radiation shield models can be surface or pipe mounted. All models include removeable terminal blocks to simply wire.

Resistance vs Temperature Table

Temperature		Resistance Curves (Ω)					
		A	B	C	D	E	F
°C	°F	Green/ Green	Red/ Green	Black/ Black	Yellow/ Yellow	Red/ Red	Green/ Blue
-55	-67.0	607800.00	963849.00	289154.70	78.32	783.2	2394000.00
-50	-58.0	441200.00	670166.00	201049.80	80.31	803.1	1646200.00
-45	-49.0	323600.00	471985.00	141595.50	82.29	822.9	1145800.00
-40	-40.0	239700.00	336479.00	100943.70	84.27	842.7	806800.00
-35	-31.0	179200.00	242681.00	72804.30	86.25	862.5	574400.00
-30	-22.0	135200.00	176974.00	53092.20	88.22	882.2	413400.00
-25	-13.0	102900.00	130421.00	39126.30	90.19	901.9	300400.00
-20	-4.0	78910.00	97081.00	29124.30	92.16	921.6	220600.00
-15	5.0	61020.00	72957.00	21887.10	94.12	941.2	163500.00
-10	14.0	47540.00	55329.00	16598.70	96.09	960.9	122280.00
-5	23.0	37310.00	42327.00	12698.10	98.04	980.4	92240.00
0	32.0	29490.00	32650.00	9795.00	100.00	1000.0	70160.00
5	41.0	23460.00	25392.00	7617.60	101.95	1019.5	53780.00
10	50.0	18780.00	19901.00	5970.30	103.90	1039.0	41560.00
15	59.0	15130.00	15712.00	4713.60	105.85	1058.5	32340.00
20	68.0	12260.00	12493.00	3747.90	107.79	1077.9	25360.00
25	77.0	10000.00	10000.00	3000.00	109.74	1097.4	20000.00
30	86.0	8194.00	8057.00	2417.10	111.67	1116.7	15892.00
35	95.0	6752.00	6531.00	1959.30	113.61	1136.1	12704.00
40	104.0	5592.00	5326.00	1597.80	115.54	1155.4	10216.00
45	113.0	4655.00	4368.00	1310.40	117.47	1174.7	8264.00
50	122.0	3893.00	3602.00	1080.60	119.40	1194.0	6722.00
55	131.0	3271.00	2986.00	895.80	121.32	1213.2	5498.00
60	140.0	2760.00	2488.00	746.40	123.24	1232.4	4520.00
65	149.0	2339.00	2083.00	624.90	125.16	1251.6	3734.00
70	158.0	1990.00	1752.00	525.60	127.08	1270.8	3100.00
75	167.0	1700.00	1480.00	444.00	128.99	1289.9	2586.00
80	176.0	1458.00	1255.00	376.50	130.90	1309.0	2166.00
85	185.0	1255.00	1070.00	321.00	132.80	1328.0	1822.60
90	194.0	1084.00	915.50	274.65	134.71	1347.1	1540.00
95	203.0	939.30	786.60	235.98	136.61	1366.1	1306.40
100	212.0	816.80	678.60	203.58	138.51	1385.1	1112.60
105	221.0	712.60	587.60	176.28	140.40	1404.0	951.00
110	230.0	623.60	510.60	153.18	142.29	1422.9	815.80
115	239.0	547.30	445.30	133.59	144.18	1441.8	702.20
120	248.0	481.80	389.60	116.88	146.07	1460.7	606.40
125	257.0	425.30	341.90	102.57	147.95	1479.5	525.60
			301.00	90.30	149.83	1498.3	N/A
			265.80	79.74	151.71	1517.1	N/A
			235.30	70.59	153.58	1535.8	N/A
			208.90	62.67	155.46	1554.6	N/A
			186.10	55.83	157.33	1573.3	N/A

SPECIFICATIONS

Accuracy:
Thermistor temperature sensor: ±0.22°C @ 25°C (±0.4°F @ 77°F);
RTD temperature sensor: DIN class A: ±0.15°C @ 0°C (±0.28°F @ 32°F).
Temperature Limits: Operating: -40 to 302°F (-40 to 150°C).
Sensor Curves: See Resistance vs. Temperature Table.
Housing Material: Polycarbonate.
Enclosure Rating: NEMA 4X (IP65).
Weight: 0.65 lb (295 g).

Model	Sensor Type
TE-OND-A	10K Ω type III thermistor
TE-OND-B	10K Ω type II thermistor
TE-OND-C	3K Ω thermistor
TE-OND-D	PT100 Ω RTD
TE-OND-E	PT1000 Ω RTD
TE-OND-F	20K Ω thermistor
TE-OND-Q	10K Ω type III thermistor with 11K Ω shunt
TE-RND-A	10K Ω type III thermistor
TE-RND-B	10K Ω type II thermistor
TE-RND-C	3K Ω thermistor
TE-RND-D	PT100 Ω RTD
TE-RND-E	PT1000 Ω RTD
TE-RND-F	20K Ω thermistor
TE-RND-Q	10K Ω type III thermistor with 11K Ω shunt
TE-OSA-A	10K Ω type III thermistor
TE-OSA-B	10K Ω type II thermistor
TE-OSA-C	3K Ω thermistor
TE-OSA-D	PT100 Ω RTD
TE-OSA-E	PT1000 Ω RTD
TE-OSA-F	20K Ω thermistor
TE-OSA-Q	10K Ω type III thermistor with 11K Ω shunt

tetisan
TETİSAN TESİSAT TİCARET VE SANAYİİ A.Ş.
www.tetisantesisat.com
+90 212 267 08 42

Series
TE-E/N

Wall Mount Temperature Sensor

Discrete Wall Mount Housing

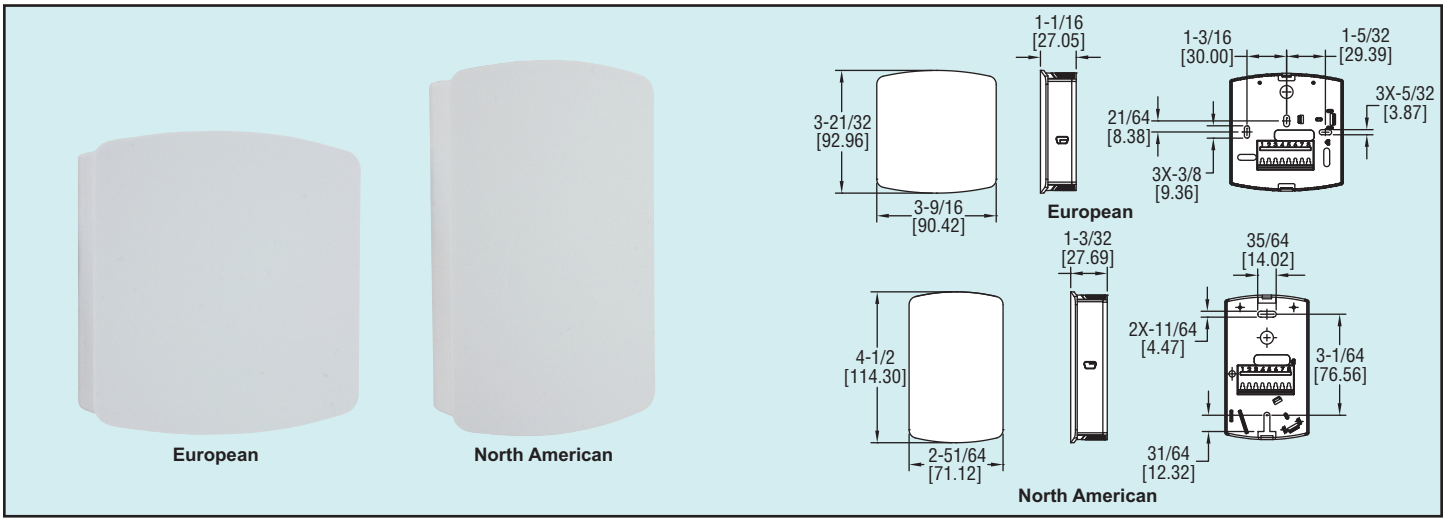

The Series TE-E/N Wall Mount Temperature Sensor provides a low cost temperature input for any building management system. With large vents in the housing for proper air flow, the sensor accurately measures the ambient temperature in hotel rooms or office buildings. Multiple mounting holes on the wall plate allow for mounting to numerous surfaces.

SPECIFICATIONS

Accuracy:
Thermistor temp sensor: ±0.22°C @ 25°C (±0.4°F @ 77°F);
RTD temp sensor: DIN class B; ±0.3°C @ 0°C (±54°F @ 32°F).
Temperature Limits: -40 to 140°F (-40 to 60°C).
Housing Material: ABS plastic.
Weight: 0.3 lb (136 g).

North American		European	
Model	**Sensor Type**	**Model**	**Sensor Type**
TE-NND-A	10K Ω Type III Thermistor	**TE-END-A**	10K Ω Type III Thermistor
TE-NND-B	10K Ω Type II Thermistor	**TE-END-B**	10K Ω Type II Thermistor
TE-NND-C	3K Ω Thermistor	**TE-END-C**	3K Ω Thermistor
TE-NND-D	Pt100 Ω RTD	**TE-END-D**	Pt100 Ω RTD
TE-NND-E	Pt1000 Ω RTD	**TE-END-E**	Pt1000 Ω RTD
TE-NND-F	20K Ω Thermistor	**TE-END-F**	20K Ω Thermistor

Series
TE-WSS

Stainless Steel Wall Plate Temperature Sensor

Screw Terminal Connection, Suitable for Wash Down Applications

Scan here to watch product video

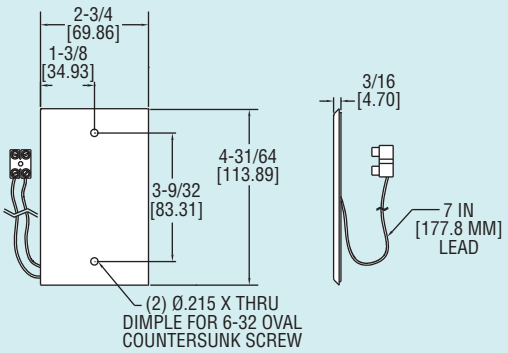

The Series TE-WSS Stainless Steel Wall Plate Temperature Sensor measures the ambient air temperature in classrooms and industrial environments. By having a flush mount design, the temperature sensor can withstand a wash down. A foam gasket prevents ambient temperature from behind the wall plate from skewing the temperature measurements. The discrete stainless steel wall plate sensor also hides the sensor to prevent tampering. Each sensor comes with a terminal block and two mounting screws for quick installation.

Model	Sensor Type
TE-WSS-A	10K Ω Type III Thermistor
TE-WSS-B	10K Ω Type II Thermistor
	istor
	TD
	RTD
	mistor

SPECIFICATIONS

Accuracy:
Thermistor: ±0.22°C @ 25°C (±0.4°F @ 77°F);
RTD: DIN Class B ±0.3°C @ 0°C.
Temperature Limits: Operating -40 to 140°F (-40 to 60°C).
Sensor Curves: See page reference ❶ below.
Housing Material: 304 SS wall plate.
Weight: 2.3 oz (65 g).

❶Resistance vs. Temperature Table: See page 280 (Series TE-OND/RND/OSA)

TETİSAN TESİSAT TİCARET VE SANAYİİ A.Ş.
www.tetisantesisat.com
+90 212 267 08 42

Series
TE-A

Averaging Temperature Sensors

Available in 6´, 12´ and 24´ Lengths

Scan here to watch product video

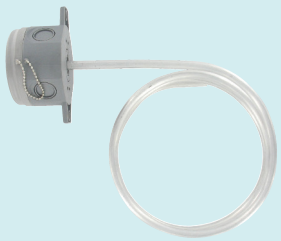

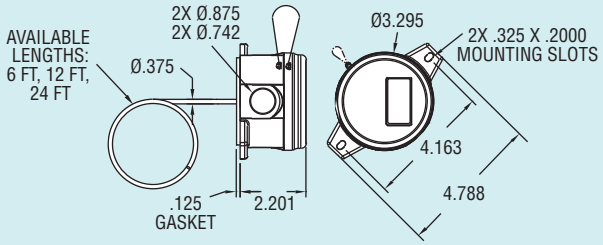

The Series TE-A Averaging Temperature Sensors are used to measure the temperature in large ducts and air handler units. Bendable aluminum capillaries are available in 6´, 12´, and 24´ foot lengths. These capillaries consist of four thermistor or RTD sensors which are internally averaged to give a single output signal. Series CC1 mounting brackets are available to mount the capillary to the wall of the duct or air handler without kinking the sensor wires inside the probe. For faster installation, the enclosure has multiple knockouts, wide mounting ears, and a screw-off captured lid.

SPECIFICATIONS

Accuracy:
Thermistor temperature sensor: ± 0.22°C @ 25°C (±0.4°F @ 77°F);
RTD temperature sensor: DIN class B: ±0.3°C @ 0°C (±0.54°F @ 32°F).
Temperature Limits: -40 to 302°F (-40 to 150°C).
Capillary Lengths: 6, 12 or 24´ (depending on model).
Cable Length: 4″.
Sensor Curves: See page reference ❶ below.
Probe Material: Bendable aluminum probe.
Housing Material: Meets UL, 94 V-0 polycarbonate plastic.
Weight: 14 oz (397 g).

Model	Sensor Type	Capillary Length	Model	Sensor Type	Capillary Length
TE-AAG-A0634-00	10K Type III NTC Thermistor	6´	**TE-AAG-D0634-00**	Pt100 RTD	6´
TE-AAG-A1234-00	10K Type III NTC Thermistor	12´	**TE-AAG-D1234-00**	Pt100 RTD	12´
TE-AAG-A2434-00	10K Type III NTC Thermistor	24´	**TE-AAG-D2434-00**	Pt100 RTD	24´
TE-AAG-B0634-00	10K Type II NTC Thermistor	6´	**TE-AAG-E0634-00**	Pt1000 RTD	6´
TE-AAG-B1234-00	10K Type II NTC Thermistor	12´	**TE-AAG-E1234-00**	Pt1000 RTD	12´
TE-AAG-B2434-00	10K Type II NTC Thermistor	24´	**TE-AAG-E2434-00**	Pt1000 RTD	24´
TE-AAG-C0634-00	3K NTC Thermistor	6´	**TE-AAG-F0634-00**	20K NTC Thermistor	6´
TE-AAG-C1234-00	3K NTC Thermistor	12´	**TE-AAG-F1234-00**	20K NTC Thermistor	12´
TE-AAG-C2434-00	3K NTC Thermistor	24´	**TE-AAG-F2434-00**	20K NTC Thermistor	24´

ACCESSORIES

CC1-N, Averaging Temperature Sensor Clip, Natural
CC1-B, Averaging Temperature Sensor Clip, Beige
CC1-GY, Averaging Temperature Sensor Clip, Grey

❶Resistance vs. Temperature Table: See page 280 (Series TE-OND/RND/OSA)

Series
CC1

Averaging Temperature Sensor Clips

Grey, Natural or Beige

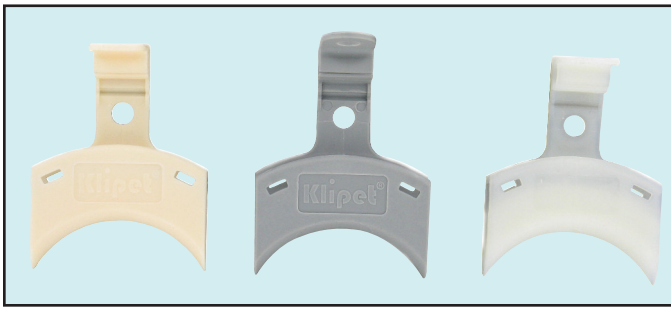

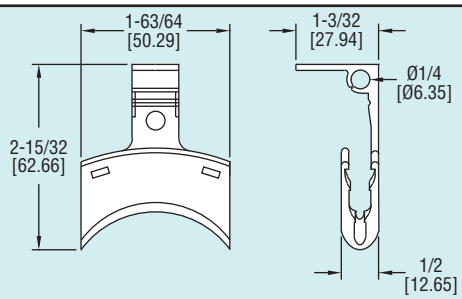

The Series CC1 Averaging Temperature Sensor Clips are used to mount the capillary of the AVG series temperature sensor to the wall of the duct or air handler. The clips are available in grey, beige or a natural color. The clip can hold 1/8″, 1/4″ or 3/8″ capillary diameters. The top of the mounting clip can also be used to hold a single 1/4″ diameter temperature probes in place. Slots are provided for using nylon zip ties to hold the tubing in place, if needed.

Model	Color
CC1-N	Natural
CC1-B	Beige
CC1-GY	Grey

(sold individually)

TETİSAN TESİSAT TİCARET VE SANAYİİ A.Ş.
www.tetisantesisat.com
+90 212 267 08 42

Series
O-4

Outside Air Temperature Sensors

NEMA 4X, Removable Terminal Block

Scan here to watch product video

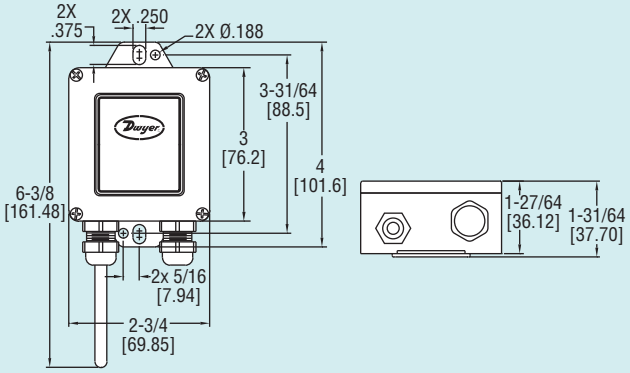

The Series O-4 Outside Air Temperature Sensors are great for monitoring ambient air temperatures in outdoor applications. The temperature sensors are mounted in a NEMA 4X enclosure with integral mounting tabs. The mounting tabs can be used to surface or suspension mount the temperature sensors. The removable terminal block makes installation easy. The Series O-4 can be used to measure outside air temperatures in building automation systems or room temperatures inside agricultural ventilation houses.

Model	Sensor Type
O-4A	10K Ohm Type III Thermistor
O-4B	10K Ohm Type II Thermistor
O-4C	3K Ohm Thermistor
O-4D	Pt100 Ohm RTD
O-4E	Pt1000 Ohm RTD
O-4F	20K Ohm Thermistor

SPECIFICATIONS
Accuracy: Thermistor temperature sensor: ±0.22°C @ 25°C (±0.4°F @ 77°F); RTD temperature sensor: DIN class B: ±0.3°C @ 0°C (±0.54°F @ 32°F).
Operating Temperature: -40 to 250°F.
Probe Diameter: 0.235″ (5.97 mm).
Probe Length: 3.5″.
Probe Material: 304 SS.
Mounting: Suspension or surface.
Enclosure Rating: NEMA 4X (IP66).
Weight: 3 oz (85 g).

Series
S2-1

Surface Mount Temperature Sensor

RTD and Thermistor, 304 SS Probe, Waterproof

Scan here to watch product video

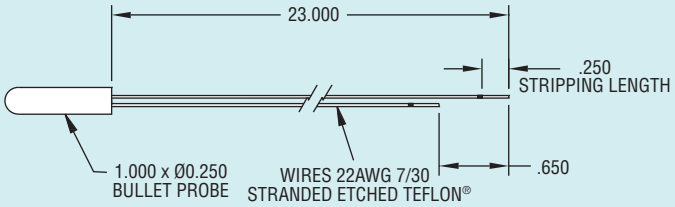

S2-1X No Housing

The Series S2-1 Surface Mount Temperature Sensors provide a cost effective and reliable solution for surface contact temperature measurement of conditioned water pipes, low pressure steam or refrigerant lines. The sensors are ideal for applications where immersion wells are not practical to install. Models are constructed with a 1″ (25 mm) 304 SS probe and a 23″ stranded etched Teflon® leads.

Model	Sensor Type
S2-11	Pt 100Ω RTD
S2-12	Pt 1000Ω RTD
S2-13	Ni 1000Ω RTD
S2-14	1000Ω Balco® RTD
S2-15	10 kΩ Type II Thermistor
S2-16	3 kΩ NTC Thermistor
S2-17	5 kΩ NTC Thermistor
S2-18	100 kΩ NTC Thermistor
	ermistor
	ermistor
	NTC Thermistor

SPECIFICATIONS
Accuracy:
Platinum RTD: ±0.1% @ 32°F (0°C), alpha 385 per DIN 43760;
Nickel RTD: ±0.5°F @ 70°F (21.1°C);
Balco®: ±0.5°F @ 70°F (21.1°C);
Thermistor: ±0.2°C interchangeable @ 77°F (25°C).
Operating Temperature: -40 to 250°F (-40 to 125°C).
Probe Diameter: 1/4″ (6.3 mm).
Probe Length: 1″ (25 mm).
Probe Material: 304 SS.

Balco® is a registered trademark of CRS Holdings, Inc.
Teflon® is a registered trademark of E.I. Dupont De Nemours and Company

TETİSAN TESİSAT TİCARET VE SANAYİİ A.Ş.
www.tetisantesisat.com
+90 212 267 08 42

Series
TE-SNW

Weather Resistant Surface Temperature Sensor

Strap On Design, Twist Off Cover, 2 to 6″ Pipe Sizes

Scan here to watch product video

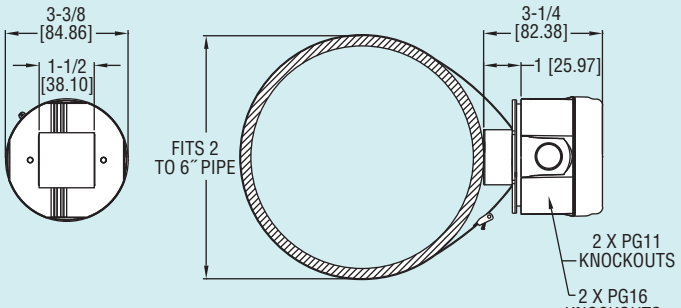

The Series TE-SNW Surface Temperature Sensor non-intrusively measures the process temperature in hot and cold water loops in buildings. An adjustable metal strap can tightly fit around 2 through 6″ pipe sizes, allowing the surface area of the copper plate on the sensor to make good contact with the pipe surface. In order to work with most common building controllers, the output of the sensor can be chosen from 6 different RTD and Thermistor curves. Additional features include a quarter turn twist off cap that is chained to the housing to prevent it from getting lost, and multiple knockout locations and sizes to reduce installation time.

Model	Sensor Type
TE-SNW-A	10KΩ Type III Thermistor
TE-SNW-B	10KΩ Type II Thermistor
TE-SNW-C	3KΩ Thermistor
TE-SNW-D	Pt100Ω RTD
TE-SNW-E	Pt1000Ω RTD
TE-SNW-F	20KΩ Thermistor

SPECIFICATIONS
Accuracy:
Thermistor Temperature Sensor: ±0.22°C @ 25°C (±-0.4°F @ 77°F);
RTD Temperature Sensor: DIN Class A ±0.15°C @ 0°C (±0.28°F @ 32°F).
Temperature Limits: Operating: -32 to 240°F (-35.5 to 115.5°C).
Sensor Curves: See page reference ❶ below.
Housing Material: Meets UL 94 V-0 polycarbonate plastic, NEMA 3R.
Weight: 7 oz (198 g).

❶Resistance vs. Temperature Table: See page 280 (Series TE-OND/RND/OSA)

TEMPERATURE

Temperature Sensors

Series
I2-1

Immersion Temperature Probes

RTD & Thermistor Outputs, 304 SS Probes

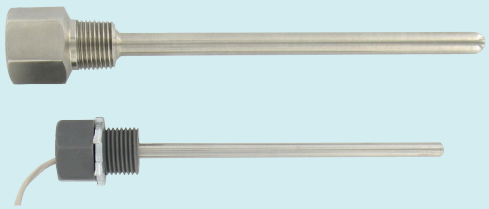

Scan here to watch product video

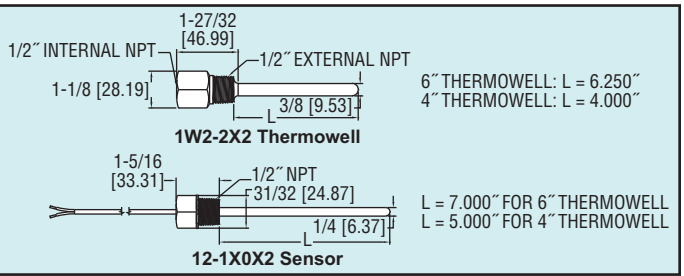

The Series I2-1 Immersion Temperature Probes are designed to monitor the hot and chilled water lines throughout a building's water distribution loop. The multiple temperature sensor outputs allow these sensors to connect to virtually any digital building controller. The Series IW2 SS thermowells allow the temperature sensors to be replaced without draining the water line. The temperature sensors are available in 4″ and 6″ insertion lengths.

Note: A Series IW2 Thermowell must be used on pressurized air and water lines to prevent leakage around the probe.

SPECIFICATIONS
Accuracy: Platinum RTD: ±0.6% @ 32°F (0°C); Nickel RTD: ±0.5°F @ 32°F (0°C); Balco RTD: ±0.1% @ 32°F (0°C); Thermistors: ±0.36°F from 32 to 158°F (0 to 70°C).
Operating Temperature: -32 to 240°F (-35.5 to 115.5°C).
Probe Diameter: 1/4″ (6.3 mm).
Cable Length: 6′ (1.8 m).
Probe Material: 304 SS.
Mounting: 1/2″ threaded connection to fit Series IW2 thermowell.

Model	Sensor Type	Insertion Length	Model	Sensor Type	Insertion Length
I2-11062	Pt 100 Ω RTD	6″	I2-11042	Pt 100 Ω RTD	4″
I2-12062	PT 1000 Ω RTD	6″	I2-12042	PT 1000 Ω RTD	4″
I2-13062	Ni 1000 Ω RTD	6″	I2-13042	Ni 1000 Ω RTD	4″
I2-14062	Balco 1000 Ω RTD	6″	I2-14042	Balco 1000 Ω RTD	4″
I2-15062	10K Ω Type 2 Thermistor	6″	I2-15042	10K Ω Type 2 Thermistor	4″
I2-16062	3K Ω Thermistor	6″	I2-16042	3K Ω Thermistor	4″
I2-17062	5K Ω Thermistor	6″	I2-17042	5K Ω Thermistor	4″
I2-18062	100K Ω Thermistor	6″	I2-18042	100K Ω Thermistor	4″
I2-19062	20K Ω Thermistor	6″	I2-19042	20K Ω Thermistor	4″
I2-1A062	2252 Ω Thermistor	6″	I2-1A042	2252 Ω Thermistor	4″
I2-1B062	10K Ω Type 3 Thermistor	6″	I2-1B042	10K Ω Type 3 Thermistor	4″

tetisan
TETİSAN TESİSAT TİCARET VE SANAYİİ A.Ş.
www.tetisantesisat.com
+90 212 267 08 42

Series
RTD

Resistance Temperature Detector

High Temperature, Mineral Insulated, 316 SS Sheath

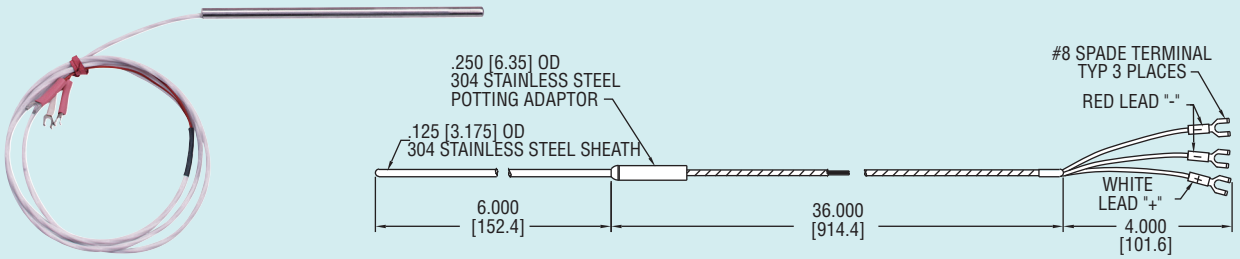

Scan here to watch product video

Precision RTD (Resistance Temperature Detector) offers excellent accuracy and stability over a wide temperature range. Industry standard 3-wire 100 Ω (DIN) probes are available in 6″ (15 cm), 12″ (30.5 cm), or 18″ (46 cm) sheath lengths with 30″ (76 cm) extension cable and spade lug terminals.

Model	Length	Diameter
RTD-686	6″ (15 cm)	1/8″
RTD-6812	12″ (30.5 cm)	1/8″
RTD-6818	18″ (46 cm)	1/8″
RTD-646	6″ (15 cm)	1/4″
RTD-6412	12″ (30.5 cm)	1/4″
RTD-6418	18″ (46 cm)	1/4″

SPECIFICATIONS
Sensor Type: Wire wound, 100 Ω.
Temperature Range: -328 to 1202°F (-200 to 650°C).
Pressure Limits: 250 psig (17.2 bar).
Probe Material: 316 SS.
Extension Length: 30″ (76 cm).
Standard: DIN .00385 (class B, 0.12%).

APPLICATIONS
Typical applications are: air ducts, bearing temperature, oil temperature indicator, soldering equipment, ovens, environmental test chambers, pharmaceutical mfg., food processing, plastic molding, petroleum & chemical processing, electric generating plants, etc.

Series
ILA

In-Line IR Sensor

15:1 Distance-to-Target Ratio, 32 to 932°F

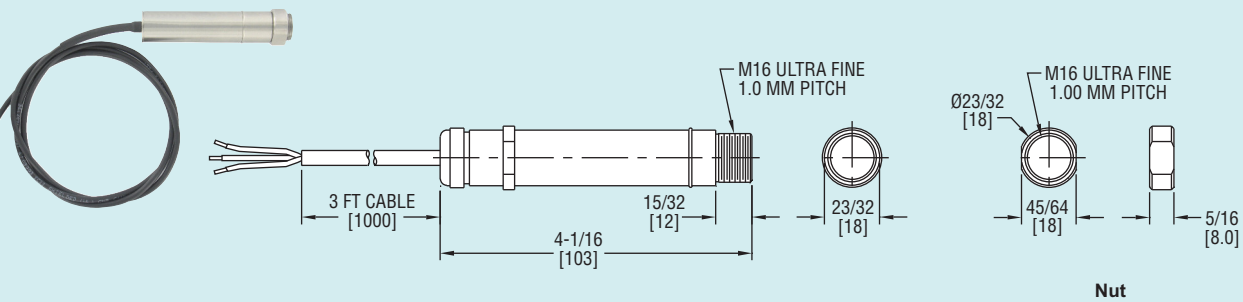

Scan here to watch product video

The Series ILA Non-Contact Sensors, measure temperatures from 32 to 932°F (0 to 500°C) and provide a linear 4 to 20 mA, 0 to 50 mV VDC or thermocouple output. The 2-wire signal is compatible with almost any indicator, controller, recorder, data logger, etc., without the need for special interfacing or signal conditioning. They are suitable for most materials such as food, paper, textiles, plastics, leather, tobacco, pharmaceuticals, chemicals, rubber, coal, and asphalt.

Model	Output
ILA10	J Thermocouple
ILA20	4-20 mA

SPECIFICATIONS
Temperature Range: 32 to 932°F (0 to 500°C).
Accuracy: 1% of reading or 1°C whichever is greater.
Emissivity: 0.95 (fixed).
Distance to Target Size Ratio: 15:1.
Response Time: 240 ms.
Temperature Limits: Ambient: 32 to 158°F (0 to 70°C).
Power Requirement: 24 VDC.
Repeatability: 0.5% of reading or 0.5°C whichever is greater.
Outputs: 4 to 20 mA, 0 to 50 mV, J type thermocouple.
Cable Length: 3.3 ft (1 m).
Spectral Response: 8 to 14 microns.
Housing: SS.
Weight: 3.35 oz (95 g).
Agency Approval: CE.

TETİSAN TESİSAT TİCARET VE SANAYİİ A.Ş.
www.tetisantesisat.com
+90 212 267 08 42

Series
HTDL-20/30

High Temperature Data Logger

Submersible, Continuous Recording, User Replaceable Battery

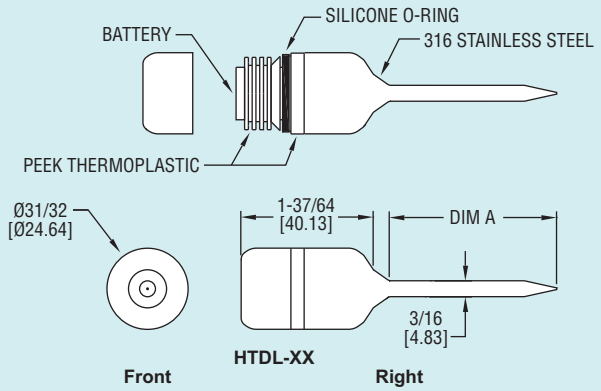

The Model HTDL-20/30 is a high temperature data logger that can measure temperatures up to 500°F (260°C). This submersible and portable data logger can record up to 32,700 measurements and has an external probe to ensure fast and accurate temperature readings. The HTDL-20 contains non-volatile solid state relay memory that will retain data even if the battery becomes discharged. The HTDL-20 can easily be started and stopped from a PC or delayed to start up to 18 months after initialization.

Model HTDL-20, High Temperature Data Logger with 2″ Rigid Probe
Model HTDL-30, High Temperature Data Logger with 24″ Flexible Probe

ACCESSORIES
Model HTDL-DS, Docking Station, Software, Manual and USB Interface
ER1425S-HT, Replacement Battery

SPECIFICATIONS
Range: -328 to 500°F (-200 to 260°C).
Memory Size: 32,700 readings.
Accuracy: 0.18°F (0.1°C) @ 68 to 284°F (20 to 140°C); 0.54°F (0.3°C) @ -4 to 67.98°F (-20 to 19.99°C).
Resolution: 0.02°F (0.01°C).
Temperature Limits: -4 to 284°F (-20 to 140°C).
Sampling Method: Stop on memory full or continuous recording.
Sampling Rate: Selectable from 1 sec to 24 hrs.
Computer Requirements: Windows® Xp Sp3, Windows Vista®, Windows® 7 operating systems.
Power Requirements: 3.6 V 1/2 AA ER14250SM lithium metal battery, installed functional, user replaceable.
Battery Life: 1 year (approx).
Interface: Docking station and USB cable.
Housing Material: 316 SS.
Weight: 4.2 oz (120 g).
Agency Approvals: CE.

Windows® and Windows Vista® are registered trademarks of Microsoft Corporation.

TEMPERATURE

Temperature Data Loggers

Model
DW-USB-1-HT

High Temperature USB Data Logger

316 SS Construction, Up To 32,510 Readings

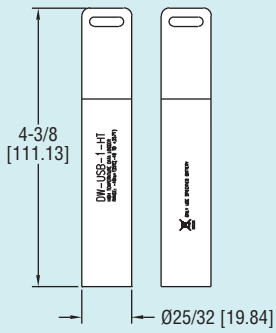

Model DW-USB-1-HT High Temperature USB Data Logger allows users to monitor temperatures up to 257°F (125°C). The rigid, stainless steel enclosure protects the sensor against corrosion, impact, and water ingress. With the easy to install Windows® based software, parameters can be configured to work in many applications. Data can be downloaded by plugging the data logger directly into a PC's USB port, with no cable required. Downloaded data can then be graphed, printed, or exported to other spreadsheet applications.

Model DW-USB-1-HT, High Temperature USB Data Logger

SPECIFICATIONS
Range: -40 to 257°F (-40 to 125°C).
Accuracy: ±1°F (±0.5°C).
Resolution: 0.2°F (0.1°C).
Memory Size: 32,510 readings.
Sampling Mode: Continuous or stop on memory full.
Sampling Rate: Selectable from 1 s. to 12 hours.
Computer Requirements: Windows® 2000, Windows® XP, Windows Vista®, and Windows® 7; 32 or 64-bit operating systems.
Power Requirements: 3.6 V 2/3 AA lithium metal battery, included, user replaceable.
Battery Life: Approximately 1 to 3 years.
Housing: 316 SS.
Enclosure Rating: IP67/NEMA 4X.
Alarms: Programmable high/low.
Interface: USB port.
Weight: 4.6 oz (130.4 g).
Agency Approvals: CE, RoHS.

Windows® and Windows Vista® are registered trademarks of Microsoft Corporation.

tetisan
TETİSAN TESİSAT TİCARET VE SANAYİİ A.Ş.
www.tetisantesisat.com
+90 212 267 08 42