OPERATION AND PARTS MANUAL

INCITE® 5100 SERIES
Universal Tillage®

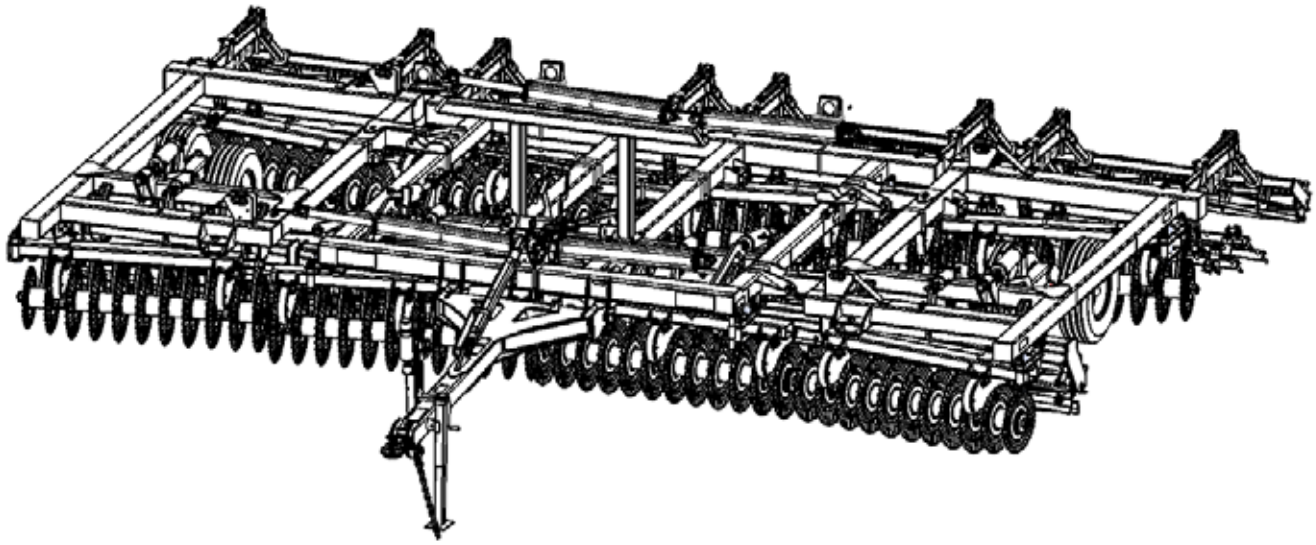

Read and understand the manual. This manual provides information and procedures to safely operate and maintain the INCITE® 5100.

McFARLANE AG MANUFACTURING

PART NUMBER: 15660— Serial Number 22966 and up

Learn more at **www.mcfarlaneag.com**

Contents

Introduction

The Incite® 5100 Series Universal Tillage® tool from McFarlane Ag can run in different field types, spring or fall. The Incite has one-of-a-kind adjustability not found anywhere else on the market. This tool has the flexibility to adjust to different soils and different crop types going from corn to wheat with ease, saving time and money. The Incite is available in 12' and 14' wide rigid frames, as well as 20', 24' 27', 32', 40' and 51' folding frames. The horsepower required to pull the Incite is approximately eight to twelve hp per foot of width. Therefore the 12' Incite requires as little as 96 hp while the 40' requires up to 480 hp.

Contact Information

If you have questions not answered in this manual, require additional copies, or the manual is damaged, please contact your local dealer or:

McFarlane Mfg. Co., Inc.
1330 Dallas Street
P.O. Box 100
Sauk City, WI 53583

Phone: (608) 643-3322

Toll Free: (888) 627-8569

Fax: (608) 643-3976

E-mail: info@mcfarlanemfg.com

Web: www.mcfarlaneag.com

Product Registration:

All McFarlane Ag products need to be registered to the owner prior to use.

The dealer is required to submit the product registration through the McFarlane dealer portal.

Failure to register the product may result in future warranty claims being rejected.

Serial Number Location

Serial No. _____

Disposal of Equipment at End of Useful Life

The McFarlane Incite is designed for the specific purpose of tilling agricultural farm land. When this unit is no longer capable of doing its designed purpose, it should be dismantled and scrapped. Do not use any materials or components from this unit for any other purpose.

Safety

General

Safety of the operator and bystanders is one of the main concerns in designing and developing a new piece of equipment. Designers and manufacturers build in as many safety features as possible. However, every year many accidents occur which could have been avoided by a few seconds of thought and a more careful approach to handling the equipment.

Most work related accidents are caused by failure to observe basic safety rules or precautions. An accident can often be avoided by recognizing potentially hazardous situations before an accident occurs. As you assemble, operate, tow, or maintain the unit, you must be alert to potential hazards. You should also have the necessary training, skills, and tools to perform any assembly or maintenance procedures.

Improper operation and maintenance of this unit could result in a dangerous situation that could cause injury or death.

WARNING

Do not use or tow the unit until you read and understand the information contained in this manual.

Safety precautions and warnings are provided in this manual and on the unit. If these hazard warnings are not heeded, bodily injury or death could occur to you or to other persons.

McFarlane cannot anticipate every possible circumstance that might involve a potential hazard. The warnings in this manual and on the product are, therefore, not all-inclusive. If a method of operation not specifically recommended by us is used, you must satisfy yourself that it is safe for you and for others. You should also ensure that the unit will not be damaged or be made unsafe by the methods that you choose.

The information, specifications, and illustrations in this manual are based on the information that was available at the time this material was written and are subject to change without notice.

Safety Alert Symbols

This is the safety alert symbol. It is used to alert you to potential personal injury hazards. Obey all safety messages that follow this symbol to avoid possible injury or death.

This manual contains DANGERS, SAFETY INSTRUCTIONS, CAUTIONS, IMPORTANT NOTICES, and NOTES which must be followed to prevent the possibility of improper service, damage to the equipment, personal injury, or death. The following key words call the readers attention to potential hazards.

Hazards are identified by the “Safety Alert Symbol” and followed by a signal word such as “DANGER”, “WARNING”, or “CAUTION”.

DANGER

Indicates an imminently hazardous situation which, if not avoided, will result in death or serious injury. This signal word is limited to the most extreme situations.

WARNING

Indicates a potentially hazardous situation which, if not avoided, could result in death or serious injury.

CAUTION

Indicates a potentially hazardous situation which, if not avoided, may result in minor or moderate injury.

NOTICE

Indicates that equipment or property damage can result if instructions are not followed.

SAFETY INSTRUCTIONS

Safety instructions (or equivalent) signs indicate specific safety-related instructions or procedures.

Note: Contains additional information important to a procedure.

Safety Icons Nomenclature

This manual and the equipment has numerous safety icons. These safety icons provide important operating instructions which alert you to potential personal injury hazards.

Personal Protection/Important Information

- Read the manual
- Maintenance procedure
- Crush hazard
- Eye protection
- Hand protection
- Head protection
- Hearing protection
- Inspect equipment
- OEM parts only
- Place in neutral
- Protective shoes
- Remove key
- Damaged hazard label
- Set parking brake
- Slow vehicle placard
- Stop engine
- Support stand usage
- Use proper tools
- Visually inspect
- Use ROPS

Prohibited Actions

- Do not alter or modify
- Do not leave out tools
- Do not weld
- No alcohol
- No children
- No drugs
- No passengers
- No riders
- No bystanders

Hazard Avoidance

- Block wheels
- Crushing hazard (body)
- Crush hazard (foot)
- Crush hazard (rolling over)
- Defective or broken part
- Entanglement hazard
- Explosive separation hazard
- Falling hazard
- High-pressure fluid hazard
- Hose damage
- Maintain safe distance
- Overturn hazard
- Pinch point hazard
- Pressure alert / check pressure
- Safety alert symbol
- Sharp object hazard
- Slipping injury
- Tripping injury
- Zero pressure

General Operating Safety

⚠ WARNING

Read And Understand Manual
To prevent personal injury or even death, be sure you read and understand all of the instructions in this manual and other related OEM equipment manuals! This equipment is dangerous to children and persons unfamiliar with its operation. The operator should be a responsible adult familiar with farm machinery and trained in this equipment's operations. Do not allow persons to operate or assemble this unit until they have read this manual and have developed a thorough understanding of the safety precautions and how it works.

This unit was designed for a specific application; DO NOT modify or use this unit for any application other than which it was designed.

Units operated improperly or by untrained personnel can be dangerous!

Hazard And Information Signs
Replace any missing or hard-to-read safety signs. Safety sign placement and part numbers can be found in the Nomenclature section of this manual.

Damaged Parts Hazard
Do not use this unit if it is in need of repair. If you believe the unit has a defect which could cause damage, injury, or death, you should immediately stop using the unit.

Fall Hazard
Do not use the unit as a work platform. Do not stand on top of the unit at any time. Do not ride on the unit or allow others to ride on it.

Entanglement Hazard
Do not wear loose fitting clothing which may become entangled in moving parts.

Crush Hazard (Rolling Over)
When disconnecting the unit or leaving the operator's seat:

1. **Stop the tractor or towing vehicle.**
2. **Shut off the engine and remove the ignition key.**
3. **Set the brakes.**
4. **Make sure wheel cylinder transport locks are attached.**
5. **Relieve hydraulic fluid pressure.**
6. **If parking the unit, make sure jack stand is lowered and retaining pin is installed.**

⚠ WARNING

Injury Hazard
Do not permit children to play on or around the stored unit.

Impaired Operator Hazard
Do not attempt to operate this unit under the influence of drugs or alcohol. Review the safety instructions with all users annually.

Personal Protection Equipment
When working around or operating this unit, wear appropriate personal protective equipment. This list includes but is not limited to:

- **A hard hat**
- **Protective shoes with slip resistant soles**
- **Protective goggles, glasses, or face shield**
- **Heavy gloves and protective clothing**

Safe Distance
Keep all bystanders, especially children, away from the unit while in operation.

SAFETY INSTRUCTIONS

To prevent injury, use a tractor equipped with a Roll Over Protective System (ROPS).

Visually Inspect
Visually inspect the unit for any loose bolts, worn parts, or cracked welds, and make necessary repairs before using the unit.

Towing Safety

For towing safety information, refer to "Towing" on page 16.

Operation Safety

For operating safety information, refer to "Operation" on page 23.

Assembly Safety

For assembly safety information, refer to the separate Assembly manual.

Maintenance Safety

For maintenance safety information, refer to "Maintenance" on page 33.

Component Nomenclature

Component Locations

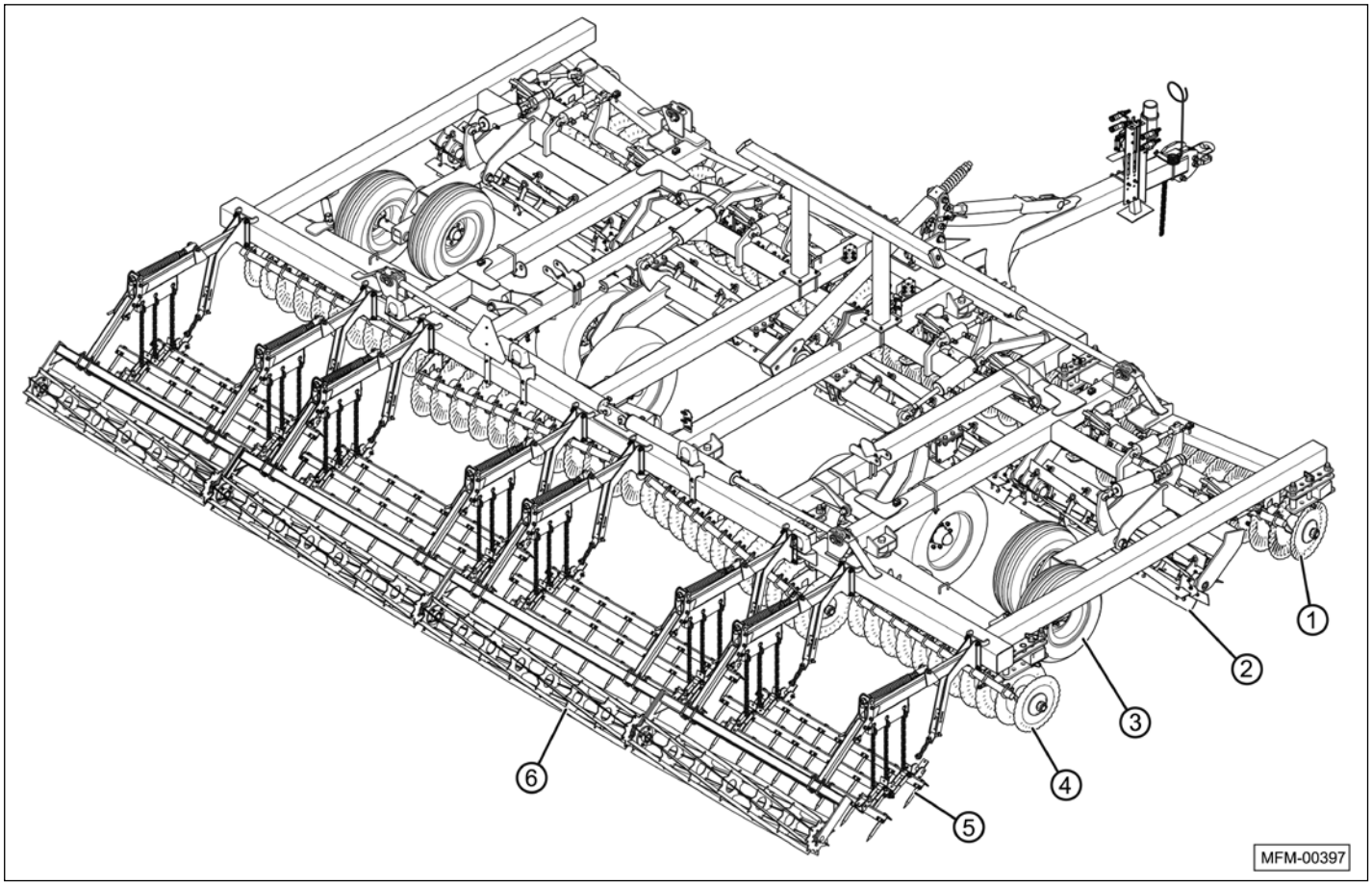

The Incite® is comprised of various components such as: leading disk gangs (1), Dura-Reel® chopping reel (2), dual wing wheels (3) (if equipped), and trailing disk gangs (4). Options include three-bar harrow (5) with single rolling basket (6), and (not shown) five-bar harrow, double rolling basket, Spur-Till with single rolling basket and rear implement hitch.

Component Description

Leading Disk Gangs (1)
The ultra-shallow reverse crimped leading disk blades on 7” centers easily penetrate the soil. The disk gangs cut the residue, open the soil surface, and begin the process of incorporating the residue into the soil up to six inches deep.

Adjusting the angle and depth of the disk gangs is the first step in sizing and incorporating the residue.

The depth of the disk gang is set by the depth stop handle/valve. The depth of the disk is normally determined by the amount of residue and the field conditions. The deeper the setting the more residue is incorporated into the soil.

The angle of the disk gang can be set to 3°, 6°, or 9°. The most aggressive setting (9°) produces more soil movement to bury residue, while the most passive setting (3°) leaves more residue on the surface. To incorporate the maximum amount of residue, set the disk gang angle to the most aggressive setting of 9°.

NOTICE

In high residue situations, maximum down pressure on the disks is required to more completely cut the residue. In creating the maximum down pressure, make sure the C-spring stops do not constantly contact the frame, as this will cause equipment damage.

Scrapers between each disk blade are adjustable to maintain optimum disk blade performance.

Dura-Reel (2)
Following the disk gangs is a bank of seven-blade, 18 inch diameter Dura-Reel that crosscut the residue and further mix it into the soil, aiding in decomposition.

The Dura-Reel have a hydraulic height adjustment. They can be run from even with the bottom of the disk blades up to completely out of the ground.

Walking Dual Wing Wheels (3) (if equipped)

The wing wheels aid in limiting the depth of the wing. They also prevent the wing from diving into the soil when encountering uneven terrain, such as a ditch.

Wing wheels should be adjusted to carry some of the wings weight, but not enough to prevent the wing from reaching the depth of the main frame components. Wing wheels should be adjusted so that the disk gangs on the wing sections cut to

the same depth as the gangs on the main frame.

Trailing Disk Gangs (4)
The ultra-shallow reverse crimped trailing disk blades on 7” centers easily penetrate the soil. The disk gangs cut the residue and continue the process of incorporating the residue into the soil up to six inches deep. Adjusting the angle and depth of the disk gangs controls the sizing and incorporation of the residue.

The depth of the disk gang is set by the depth stop handle/valve. The depth of the disk is normally determined by the amount of residue and the field conditions. The deeper the setting the more residue is incorporated into the soil.

The angle of the disks can be set aggressive (9°) for more soil movement to bury residue, or it can be set passive (3°) to leave more residue on the surface. The angle of the disk gang can be set to any one of three settings. To incorporate the maximum amount of residue, set the disk gang angle to the most aggressive setting of 9°.

Spike Harrow (5)

Three-bar harrow

Five-bar harrow

To produce a firm and level seedbed for optimum seed germination and yields, the spike harrow follows the trailing disk gangs. The heavy-duty harrow follows the ground contour closely and is flexible enough to allow residue to flow through it. It also breaks up large pieces of soil and disperses the residue evenly across the tillage area.

There are three attachment points for the pull chains on the 3-bar harrow section, and five attachment points for the pull chains on the 5-bar harrow section. Moving the attachment point will either cause the section to lay more flat (less aggressive), or will cause the teeth to stand more upright (more aggressive).

In situations that do not require the extra leveling of the harrow section, such as heavy fall residue, the sections can be removed or raised above the ground level.

Rear Rolling Baskets (6)
The final operation of the Incite, for the perfect seedbed, is the 12 inch diameter rolling basket. The rolling basket features eight, high-carbon flat bars with adjustable down pressure to make it aggressive for clod sizing and firming or passive for soil separating and conditioning. A double rolling basket option is also available.

Single rolling basket

Double rolling basket

Three bar harrow with double rolling basket

Spur-Till with Single Rolling Basket

Specifications

Hydraulic Requirements

This unit operates with hydraulic pressures of 2500 to 3000 psi (170 to 205 bars).

Horsepower Range

IC-5112 — 100 to 150
IC-5114 — 120 to 180
IC-5120 — 163 to 245
IC-5124 — 188 to 282
IC-5127 — 212 to 318
IC-5132 — 256 to 384
IC-5140 — 320 to 480

Tillage Depths

Disk gang depth up to 6” (15.2 cm)

Tongue Weight (pounds)

IC-5112 — 458
IC-5114 — 620
IC-5120 — 840
IC-5124 — 1,080
IC-5127 — 1,100
IC-5132 — 1,100
IC-5140 — 1,450

Overall Weight (GVWR) (lb)

IC-5112 — 10,100
IC-5114 — 10,700
IC-5120 — 17,320
IC-5124 — 18,500
IC-5127 — 20,920
IC-5132 — 25,220
IC-5140 — 30,730

Transport Width

IC-5112 — 13’9”
IC-5114 — 14’10”
IC-5120 — 13’8”
IC-5124 — 13’8”
IC-5127 — 15’7”
IC-5132 — 15’7”
IC-5140 — 18’8”

Transport Height

IC-5112 — N/A
IC-5114 — N/A
IC-5120 — 10’6”
IC-5124 — 12’
IC-5127 — 11’5”
IC-5132 — 13’6”
IC-5140 — 11’7”

Working Tillage Width (Cut Width)

IC-5112 — 12’5”
IC-5114 — 13’6”
IC-5120 — 20’5”
IC-5124 — 23’5”
IC-5127 — 26’6”
IC-5132 — 32’1”
IC-5140 — 39’7”

Field Capacity (acre/hr @ 6-9 mph)

IC-5112 — 7-11
IC-5114 — 8-12
IC-5120 — 15-20
IC-5124 — 15-22
IC-5127 — 16-24
IC-5132 — 19-29
IC-5140 — 24-36

Towing Speed

Towing speeds should not exceed 20 mph (32 kph). Field operating speeds should be 7 to 9 mph (11 to 14 kph).

Safety Signs and Decals

- It is the responsibility of the customer to know the lighting and marking requirements of the local highway authorities and to install and maintain the equipment to provide compliance with the appropriate regulations. Add extra lights when transporting at night or during periods of limited visibility, if necessary.
- Keep safety signs clean and legible at all times. Replace safety signs that are missing or have become illegible.
- Do not paint over, remove, or deface any safety signs or instructional decals on your equipment. Observe all safety signs and follow the instructions on them.
- Replacement parts that display a safety sign should display the same sign.
- Make sure the safety signs and other instructional decals are legible and attached to the unit before use.
- Safety signs are available from your Distributor, Dealer Parts Department, or the factory.

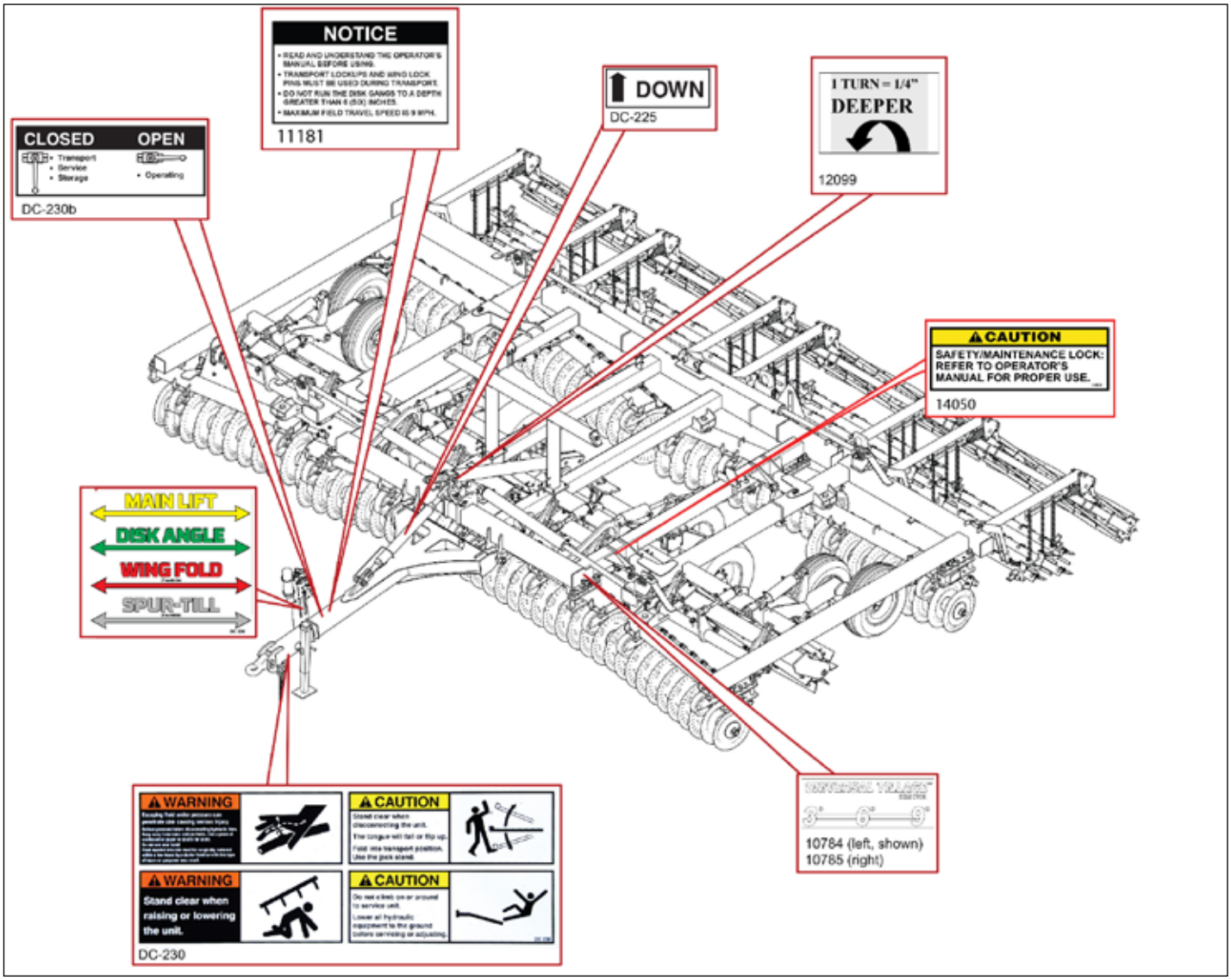

⚠ WARNING

Escaping fluid under pressure can penetrate skin causing serious injury.

Relieve pressure before disconnecting hydraulic lines. Keep away from leaks and pin holes. Use a piece of cardboard or paper to search for leaks. Do not use your hand. Fluid injected into skin must be surgically removed within a few hours by a doctor familiar with this type of injury or gangrene may result.

⚠ WARNING

Stand clear when raising or lowering the unit.

⚠ CAUTION

Stand clear when disconnecting the unit.

The tongue may fall or flip up.

Fold into transport position. Use the jack stand.

⚠ CAUTION

Do not climb on or around to service unit.

Lower all hydraulic equipment to the ground before servicing or adjusting.

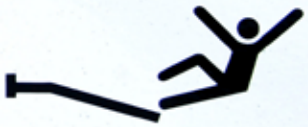

DC 230

⚠ CAUTION

SAFETY/MAINTENANCE LOCK: REFER TO OPERATOR'S MANUAL FOR PROPER USE.

14050

NOTICE

- READ AND UNDERSTAND THE OPERATOR'S MANUAL BEFORE USING.
- TRANSPORT LOCKUPS AND WING LOCK PINS MUST BE USED DURING TRANSPORT.
- DO NOT RUN THE DISK GANGS TO A DEPTH GREATER THAN 6 (SIX) INCHES.
- MAXIMUM FIELD TRAVEL SPEED IS 9MPH

11181

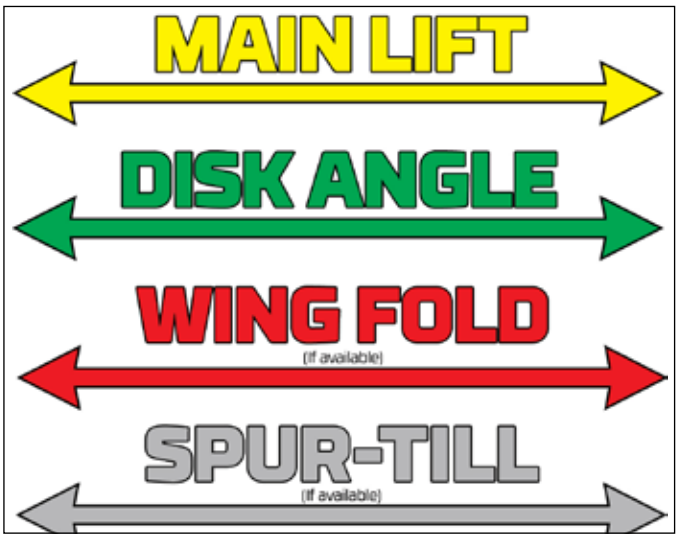

1 TURN = 1/4"

DEEPER

12099

CLOSED	OPEN
• Transport • Service • Storage	• Operating

DC230b

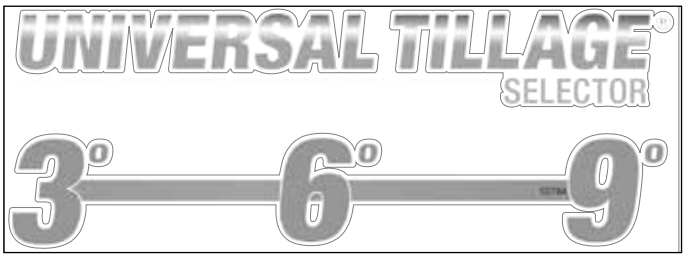

10784 (LH) - 10785 (RH)

Assembly

Refer to the separate assembly manual for complete assembly instructions.

The assembly process consists of attaching the hitch to the main frame and attaching the rear finishing option sub-assemblies to the frame. The approximate time required is 2-4 hours for 12' and 14' models, 4-6 hours for 20'-27' models, and 8-10 hours for 32' and 40'' model.

Towing

General Safety

SAFETY INSTRUCTIONS

Towing the Incite requires care! Both the unit and tow vehicle must be in good working condition. Securely attach the unit to the tow vehicle using a high strength, appropriately sized hitch pin with a mechanical retainer and attach safety chain.

Make sure the hitch and coupling on the towing vehicle are rated equal to, or greater than, the unit's "gross vehicle weight rating" (GVWR). Refer to "Specifications" on page 13.

Make sure the safety chain from the unit is securely fastened to the tow vehicle.

Check the tires for tread wear, inflation pressure, and overall condition before towing the unit.

Inspect the hitch and coupling for wear or damage. DO NOT tow the unit using a defective hitch or coupling!

Make sure directional, brake, and running lights are connected and working properly.

Make sure the lug nuts holding the wheels are tight (torque to specifications) and that none are missing. Refer to "Tire and Lug Torque Specifications" on page 37.

When towing the unit on the highway, make sure the "Slow Moving Vehicle" placard is clearly visible.

Do not allow anyone to stand between the tongue or hitch and the towing vehicle when backing up to the unit.

Make sure that the area is clear of children, animals, and other obstacles before moving the unit.

Safety Chain

SAFETY INSTRUCTIONS

- If the unit will be transported on a public highway, the safety chain must be attached to the tow vehicle.
- Always follow state and local regulations regarding a safety chain when towing farm equipment on a public highway.
- Be sure to check with local law enforcement agencies for any local regulations or restrictions.
- Do not use any device other than the safety chain that was supplied with the unit. Only a safety chain (not an elastic or nylon/plastic tow strap) should be used to retain the connection between the tow vehicle and the unit in the event of separation of the primary attaching system.

Bystanders

SAFETY INSTRUCTIONS

- Beware of physical surroundings and especially bystanders, particularly children, before moving the unit! This is particularly important with higher noise levels and quiet cabs, as you may not hear people shouting.
- NO PASSENGERS ALLOWED - Do not carry passengers anywhere on or in the tractor, except as required for operation.
- Do not allow anyone to ride on the unit while it is moving.

Towing and Maximum Towing Speed

SAFETY INSTRUCTIONS

- Operate the towing vehicle from the operator's seat only.
- Do not exceed a towing speed of more than 20 mph (32 KPH) on a public roadway.
- Remember, tires supplied by the manufacturer are designed to operate NO MORE THAN 20 mph. Do not exceed the maximum speed or tire failure may occur.

Highway and Transport Operations

SAFETY INSTRUCTIONS

- Make sure the wheel lift cylinder transport locks are installed, the wing lock pins are in place, and the jack stand is in its storage position before transporting the unit.

SAFETY INSTRUCTIONS

- Never use independent braking with unit in tow as loss of control and/or upset of unit may result.
- Always drive at a safe speed relative to local conditions, and ensure that your speed is low enough for an emergency stop to be safe and secure. Keep speed to a minimum.
- Reduce speed prior to turns to avoid the risk of overturning.
- Avoid sudden uphill turns on steep slopes.
- Always keep the tractor or towing vehicle in gear to provide engine braking when going downhill. Do not coast.
- Use approved accessory lighting, flags, or other necessary warning devices to protect operators of other vehicles on the highway during daylight and nighttime transport. Various safety lights and devices are available from your dealer.
- When driving the tractor and equipment on the road or highway, use flashing amber warning lights and a slow moving vehicle (SMV) identification emblem.
- Some localities prohibit the use of flashing amber lights. Local laws should be checked for all highway lighting and marking requirements.
- Be a safe and courteous driver. Always yield to oncoming traffic in all situations, including narrow bridges, intersections, etc. Plan your route to avoid heavy traffic.
- Be observant of bridge load restrictions. Do not cross bridges rated lower than the gross weight at which you are operating.
- Watch for overhead obstructions and side clearances while transporting.
- Always operate equipment in a position to provide maximum visibility at all times. Make allowances for increased length and weight of the equipment when making turns, stopping, etc.

Pre-towing Checklist

1. Before towing, make sure the maintenance on the tractor and the unit are current. This is very important because towing puts additional stress on the tow vehicle.

2. Check and correct the tire pressures on the tow vehicle and the unit. Refer to “Tire and Lug Torque Specifications” on page 37.

3. Make sure the hitch, coupler, and any other equipment that connects the unit and the tow vehicle are properly secured and adjusted. Always inspect the hitch and tongue for cracks or abnormal wear when hooking up.

⚠ WARNING

Substandard Parts Hazard
If towing the unit with a draw bar, use only an OEM certified, hardened drawbar pin with a retainer clip. Do not use homemade pins, bolts, or any other type of retaining device. Always install the retainer clip, making sure the hitch and unit are securely fastened to the tow vehicle.

Using a pin not intended for this type of towing can result in unexpected separation of the unit from the tow vehicle, resulting in equipment damage and personal injury.

4. Verify the appropriate Category 3 or Category 4 hitch is securely installed and matches the tow vehicle.

Note: A Category 5 hitch (not shown) is also available.

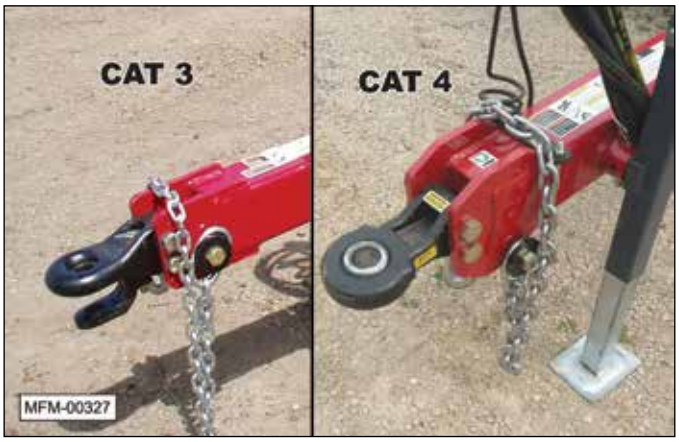

⚠ WARNING

Unexpected Separation Hazard
If the safety chain does not have **a current certification tag, do not use the unit until properly certified chains are installed. Substandard safety chains could allow the unit to separate from the tow vehicle, resulting in equipment damage and personal injury.**

5. Attach the safety chain from the unit to the tow vehicle. The safety chain should be long enough for tight turns. Don’t allow the chain to drag on the pavement because it will wear the chain links, causing an unsafe condition.

6. Make sure the electrical wiring harness for the running lights and taillights is properly connected and not touching the road, but loose enough to make turns without disconnecting or damaging the wires. Refer to Step “6. Disconnect the electrical connection for the rear lights from the storage socket.” on page 21.

7. Prior to towing, have an observer confirm all running lights, brake lights, turn signals, and hazard lights are working on both the tow vehicle and the unit.

8. Verify the brakes on the tow vehicle are operating correctly.

9. Make sure transport locks are securely in place around the cylinder rods. Refer to Step “5. Remove the yellow transport locks from the storage brackets and place over the wheel lift cylinder rods. Insert and lock the retaining pin.” on page 33.

Transport lock secured over cylinder rod.

10. Make sure the jack stand is secured in its storage location on top of the tongue, as shown.

11. Make sure the wing lock pins are in place. Refer to Step “4. Install the wing fold lock pins and bridge pins.” on page 33.

12. Check mirrors of the tow vehicle to make sure you have good visibility.

13. Check routes and restrictions on bridges and tunnels.

14. Make sure the hydraulic hoses are connected. Refer to Step “4. Remove the eight hydraulic hoses from their storage position.” on page 21.

Hook-Up to Tractor

Safety

WARNING

Make sure that anyone who will be operating the unit, or working on or around the unit, reads and understands all the operating, maintenance, and safety information in the operator’s manual and other related OEM equipment manuals before using or towing the unit.

Prior to Connecting Unit

Make sure the unit is resting on the ground or the transport locks are securely installed over the wheel cylinder rods before attaching the unit to the tractor.

Transport lock secured over cylinder rod.

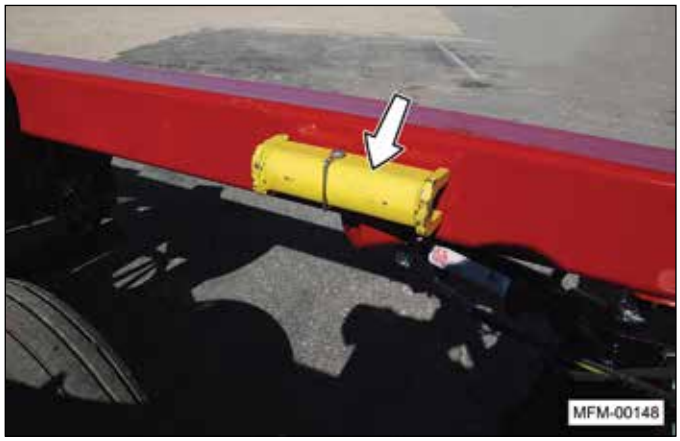

Transport lock secured in storage position.

If the unit is not resting on the ground, make sure wheel chocks are securely fitted on both sides of each wheel.

⚠ WARNING

Crush Hazard
The tongue weight of the unit can be up to 1450 lbs. (658 kg.). Use care when lifting or attaching the unit to the tractor. Never place any part of your body under the tongue or hitch assembly.

Hydraulic Pressure
This unit operates with hydraulic pressures of 2500 to 3000 psi (170 to 205 bars).

High-Pressure Fluids
1. Check or tighten all connections BEFORE pressurizing system.
2. Release all pressure before removing hoses and/or valves by:
a. Stopping engine.
b. Holding hydraulic control levers in float or neutral position.
3. DO NOT use your bare hand to check for potential leaks. Always use a board or cardboard when checking for a leak.

Escaping hydraulic fluid under pressure, even a pinhole size leak, can penetrate body tissue, causing serious injury and possible death. If fluid is injected into your skin, it must be treated immediately by a doctor familiar with this type of injury.

Tow Chain

A certified tow chain is supplied with each unit. This chain must be attached from the unit to the tractor during towing or operation of the unit.

Inspect the chain before each use for wear or damage.

Do not replace the chain with anything other than an OEM certified replacement.

Connecting to the Tractor

1. Raise the jack stand and connect the tongue to the tractor. The tongue weight of the unit ranges from approximately 458 lbs. (208 kg.) for the IC-5112 to 1450 lbs. (658 kg.) for the IC-5140.

Note: If a drawbar pin is used, it should be an OEM certified pin and retainer clip. On Category 3 pintle hitches use a 1-1/2” (38 mm) pin. On Category 3 clevis hitches use a 1-1/4” (32 mm) pin. On Category 4 pintle hitches use a 2” (51 mm) pin.

⚠ WARNING

Unexpected Separation Hazard
If towing the unit with a drawbar, use only a certified, hardened drawbar pin with a retainer clip. Do not use homemade pins, bolts, or any other type of retaining device. Always install the retainer clip, making sure the hitch and unit are securely fastened to the tow vehicle.

Using a pin not intended for this type of towing can result in unexpected separation of the unit from the tow vehicle, resulting in equipment damage and personal injury.

2. Connect the hitch of the unit to the tractor. Attach the safety chain to the tractor's draw bar cage.

Note: When connected, make sure the retaining plate securely locks the chain link in place.

3. Remove the jack stand, and secure it on its storage location on top of the tongue, as shown.

4. Remove the eight hydraulic hoses from their storage position.

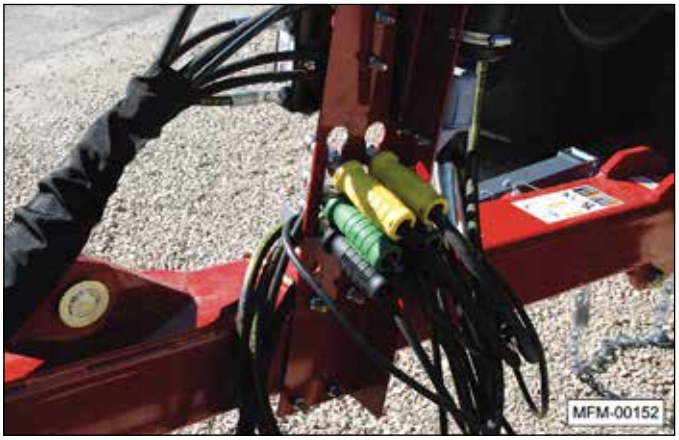

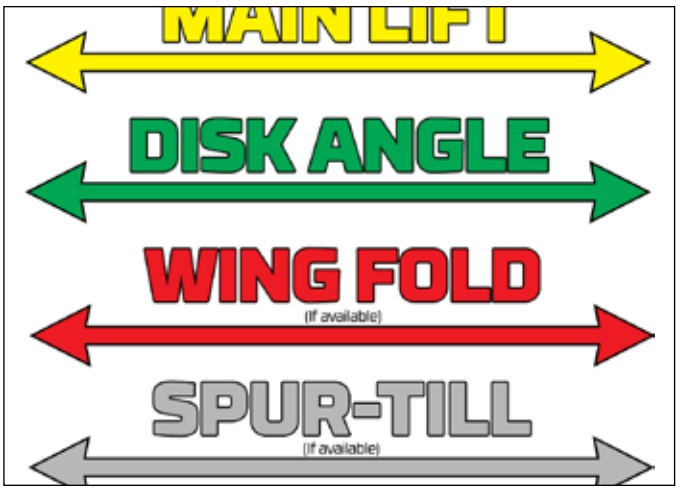

5. Connect the hydraulic hoses to the proper ports on the tractor.

Note: The most commonly used function of the unit is the "main lift" cylinders, which raises and lowers the wheels. Connect the hydraulic hoses for this function into the port (control lever) used most commonly.

6. Disconnect the electrical connection for the rear lights from the storage socket.

a. Rotate the plug.

b. Push the plug upward and slightly rotate it again to release it from the socket.

c. Pull the plug downward.

d. Connect the plug into the tractor's electrical socket.

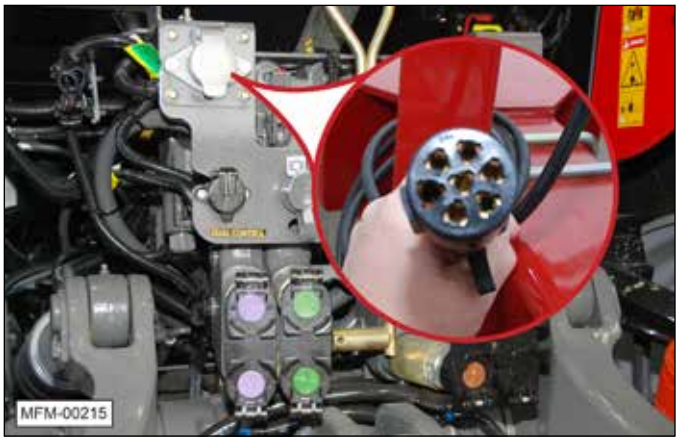

7. Make sure all the hydraulic cylinders are functioning properly.
8. Make sure the amber and red indicator lights are working properly.
9. Move the unit to the desired location and position it for operation following the towing recommendation provided in this manual and/or any other local, State, or Federal regulations that may apply.

Operation

Safety

⚠ WARNING

To prevent serious injury or death, follow these safety instructions

Entanglement Hazard
Keep hands and clothing clear of moving parts.

Crush Hazard (Rolling Over)
Do not clean, lubricate, or make adjustments while the unit is moving.

Crush Hazard (Rolling Over)
When making adjustments to the unit or leaving the operator's seat:

1. **Stop the tractor.**
2. **Shut off the engine and remove the ignition key.**
3. **Set the brakes.**

Overturn Hazard
Pick the most level route possible when transporting across fields. Avoid the edges of ditches, gullies, or steep hillsides.

Safe Distance
Keep all bystanders, pets, and livestock clear of the work area, particularly when raising or lowering the unit.

SAFETY INSTRUCTIONS

Periodically clear the unit of brush, twigs, or other materials to prevent buildup of dry, combustible materials.

NOTICE

DO NOT turn while the unit is in the ground. The side loads generated can cause damage to the ground engaging implements.

DO NOT operate the unit in frozen ground. This can damage the Dura-Reel and rolling baskets.

Initial Setup

The McFarlane Incite Universal Tillage tool is designed to handle a wide variety of field conditions. It has many adjustments that can be made to optimize the efficiency of each component on the unit as well as its overall performance. Achieving the best results over the widest range of circumstances can be accomplished by making adjustments to match the field conditions.

Note: It is important to make one adjustment at a time in order to see the results of each change. If several adjustments are made at the same time, the operation of the machine can change dramatically, creating confusion and frustration.

⚠ WARNING

Pinch Point Hazard
Do not place hands or fingers between moving and/or stationary parts. The weight of the unit will easily cause serious bodily injury.

Sharp Object Hazard
Do not place any part of your body under the disk gang during the adjustment process. Severe injury will occur if a person contacts or falls under the disk gang.

1. If necessary, raise the unit and release the transport locks from both wheel lift cylinders.

2. Place the transport locks on their storage brackets and fasten the retaining pins.

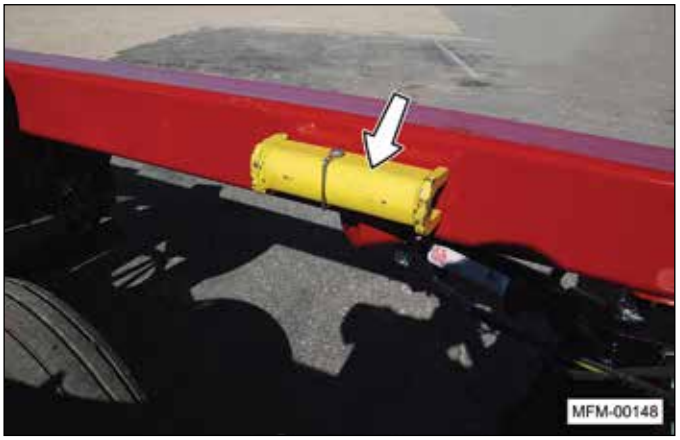

3. If equipped with wings, remove the wing fold lock pins and store them on the hitch storage bracket.

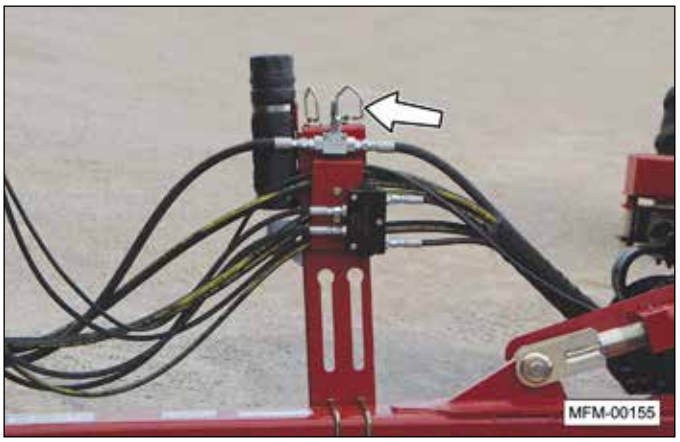

4. Unfold the disk gang wings.

5. Adjust the disk gang angle to one of three available positions. This photo shows the disk gang set in the #3 position.

   a. The #1 position (3°) is the least aggressive setting and is typically used with higher speeds and smaller amounts of residue.

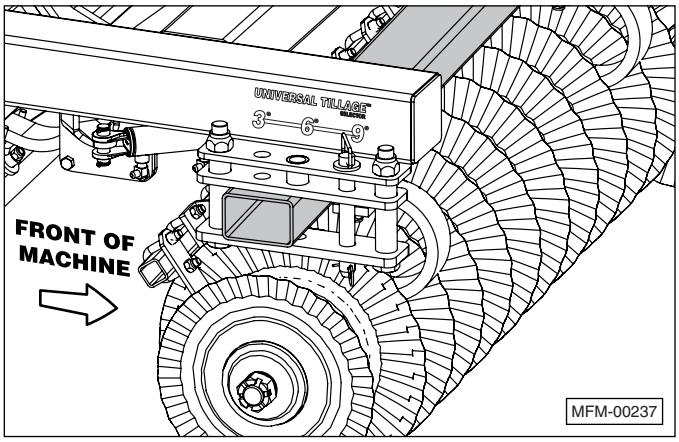

b. The #2 position is more aggressive at a (6°) angle.

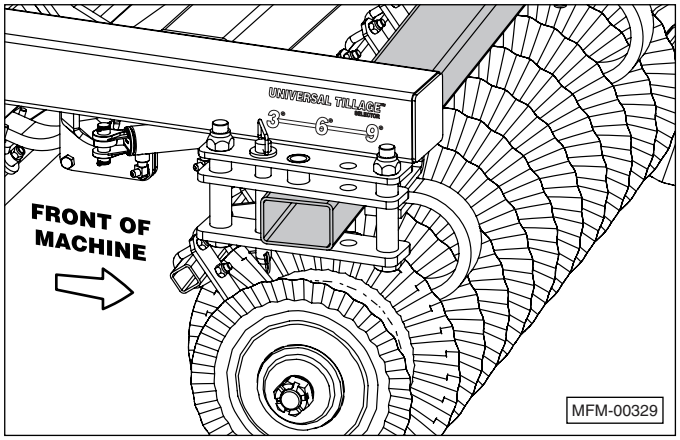

c. The #3 position (9°) is the most aggressive setting and is used for heavy or difficult residue. This setting also requires the most horsepower. It may also be necessary to reduce the speed at this steeper gang angle to prevent ridging.

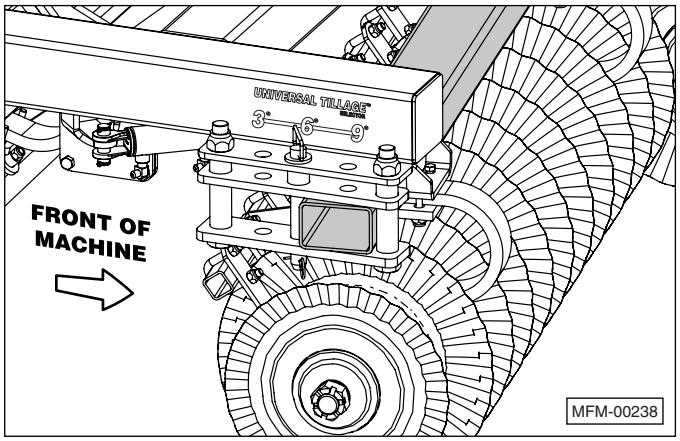

Note: On models with wings, make sure the disk gang wing is unfolded before starting the adjustment procedure.

⚠ WARNING

To prevent serious injury or death from rolling over or crushing during the setup procedure:

Do not place any part of your body under the disk gang.

Set parking brake on tractor.
Block wheels of unit.

6. Lower disk gang close to the ground but not touching.

7. Stop the tractor, and set the parking brake. Block the wheels of the unit to prevent unwanted movement while repositioning the disk gangs.

8. Move the handle of shut-off valve (1) to the closed position, as shown. The shut-off valve helps prevent the wheel lift cylinders from retracting due to bleed off within the hydraulic system, resulting in the disk gang lowering to the ground.

9. Release the wire retainer clips and remove the adjustment pins.

10. Using the tractor's control lever, cycle the hydraulics throughout their range two times to equalize the cylinder positions. Stop with the disk gangs in the most forward position (9°).

11. Place the adjustment pins into one of the rearward holes and replace the wire retainer clips.

12. Using the tractor's control lever, move the disk gangs rearward into contact with the adjustment pins. This sets the disk gang angle to 6° or 9°, depending on pin placement.

Note: Begin tilling with the disk gang angle set in the desired position. If necessary, after operating the unit, increase or decrease the aggressiveness of the disk gangs per the condition of the soil. To prevent ridging, it may be necessary to reduce the travel speed with more aggressive disk angles. It may also be desirable to operate the rear disk gangs less aggressively than the front disk gangs to produce a smooth and level seedbed. For example, change the position of the front gang angle to 9° and the rear to 6° using the adjustment pins.

13. Start the tractor and use the tractor's control lever to lower the wheels (raise the disk gangs) to the maximum height.

14. Begin to pull the unit through the field.

15. Slowly raise the wheels until the disks contact the ground.

16. Continue raising the wheels (lowering the unit) until the disks are cutting into the ground. Once the desired depth is reached (no more than 6 inches), the unit must be leveled by adjusting the frame leveling turnbuckle.

    a. Raise the locking mechanism from the turnbuckle.

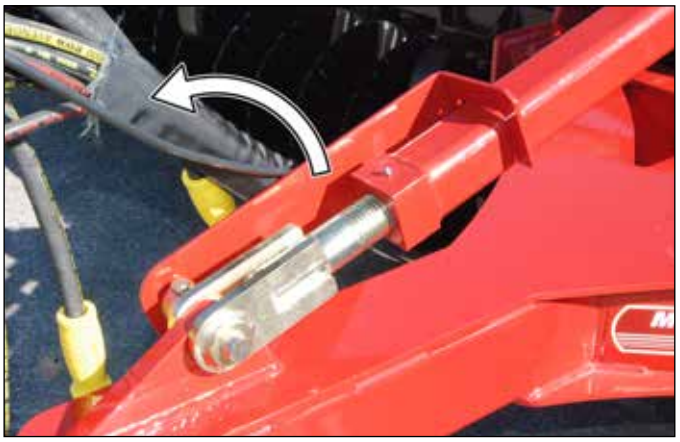

    b. Use the wrench (stored on the main frame) to make the adjustment.

Note: Turning the turnbuckle counterclockwise will raise the front end and lower the rear end.

    c. Check the frame for level. Adjust the turnbuckle as needed.

       – Make sure the hitch is resting on the tractor's drawbar and the level lift spring is not compressed when leveling the machine.

       – Reel height should be all the way up (out of the ground) to set initial disk gang depth. Once disk gang depth is set, lower the reel so it is running at a depth of approximately 2".

    d. Once the unit is level from front to back, place the locking mechanism over the turnbuckle. Recheck the disk cutting depth, and adjust if needed.

Note: When a major change is made to the depth of the front disk gangs or the Dura-Reel, make sure the frame is still level.

17. Stop the tractor with the unit still in the ground.

⚠ WARNING

Before leaving the tractor, shut off the engine, set the parking brake, and remove the ignition key.

18. Level the wing frames. This prevents the disk gangs from gouging and/or ridging. It also ensures a consistent operating depth across the width of the tillage area.

a. Loosen jam nut (1) and turn adjusting nuts (2) to level the wings from side-to-side. When the wings are level, tighten the jam nut.

b. Maximum measurement with the Dura-Reel in the down position is 7 1/2” before tires can contact the Dura-Reel.

c. Maximum measurement with the Dura-Reel in the up position is 6 5/8” before tires can contact the Dura-Reel.

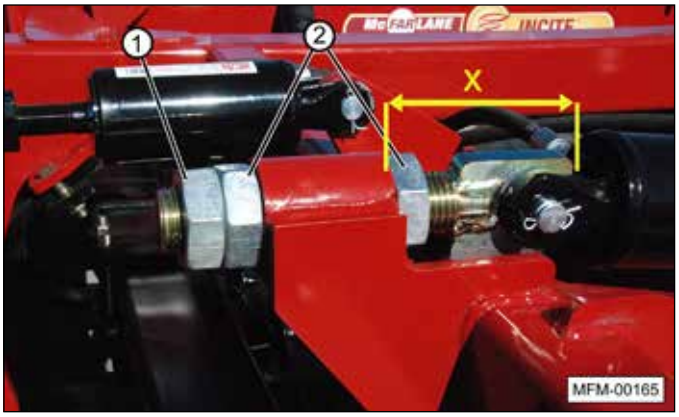

19. Turn the stop crank (depth control) to fully depress the pin on the hydraulic stop valve.

20. Measure the depth the disk is cutting into the ground.

Note: The desired depth (no more than 6 inches) of the disks is controlled by a hydraulic valve. When the wheels of the unit are raised, the stop crank actuates the valve, stopping oil flow. Each time the wheels are raised and lowered, the valve will consistently position the depth of the unit.

21. Adjust the depth of the disk gang with the depth stop valve. Once the depth is set, lower the Dura-Reel so they are only running a maximum of 2” deep. The reel height indicator shows 0 for level with the bottom of the disk blades and 8 for 8” above the disk blades.

Note: If disk blades are running 4” deep set Dura-Reel to 2 on the reel depth gauge.

d. Pull the unit through the field and stop without raising it.

e. Recheck the depth of the disk gangs and adjust the stop crank accordingly.

f. If the disk gangs need to be reset, turn the stop crank accordingly; one full turn of the crank equals 1/4 inch of depth adjustment.

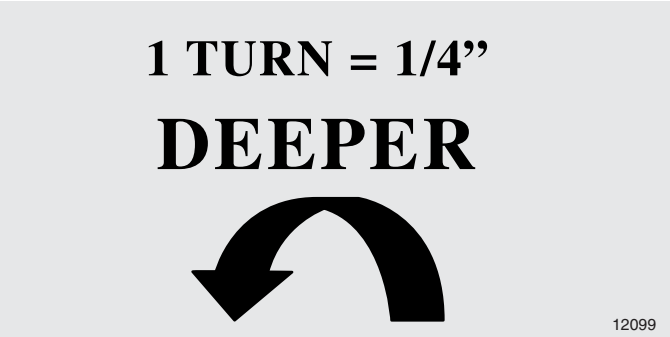

Note: Since the wheels position the height of the entire frame of the unit, the depth setting of the other components also needs to be checked and possibly readjusted any time the disk depth is changed.

22. Continue pulling the unit through the field and raise and lower the wheels to allow the hydraulic control valve to stop the unit at the set depth. Stop the tractor and check the depth of the disks and the reel blades, making sure they are the desired depth. Readjust the depth control device and the hitch frame turnbuckle, if necessary. The disk blades should be cutting approximately 2” deeper than the reels.

Note: The level lift tube cushioning spring tension is set at the factory and should not be adjusted.

23. Adjust the aggressiveness of the harrow sections. There are three attachment points on the first harrow bar to control the aggressiveness of the harrow.

    a. In the least aggressive direction, mounting hole #1 will cause the sections to lay more flat (less aggressive).

    b. In position #2, the teeth are in approximately a 45° position (more aggressive).

    c. In position #3, the teeth are at the most aggressive angle (more upright).

Note: Typically, the angle should be set more aggressive for increased soil leveling and less aggressive in heavy residue conditions. In some situations that do not require the extra leveling of the harrow section, such as heavy fall residue, the sections can be removed or raised above the ground level.

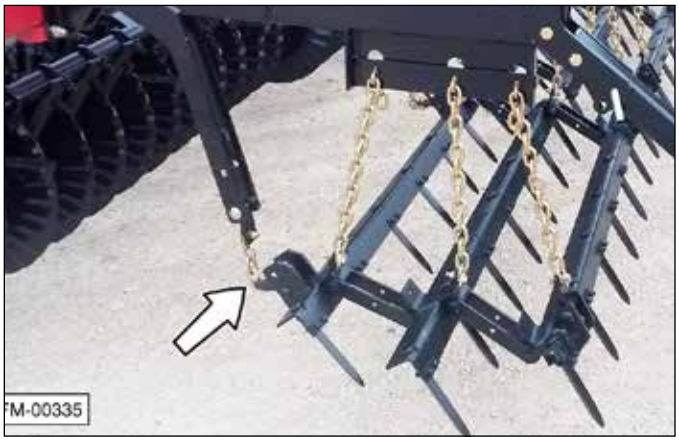

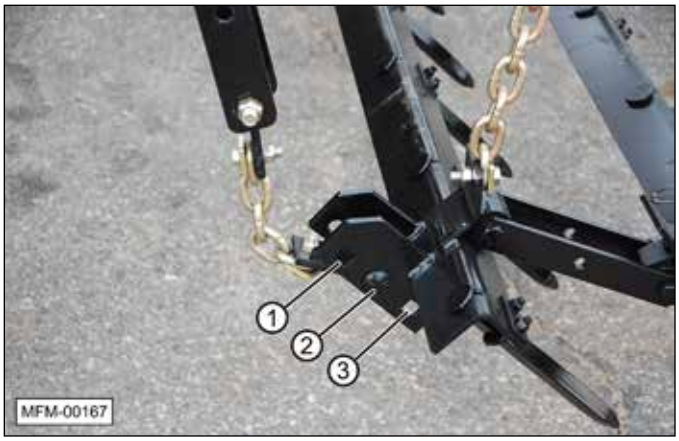

Note: Reversing the harrow sections and pulling them from the opposite end can change the angle

of attack. The steeper the angle of attack, the more aggressive the harrowing will be. It is recommended the least aggressive angle be used with the pull hook in the top position, as shown.

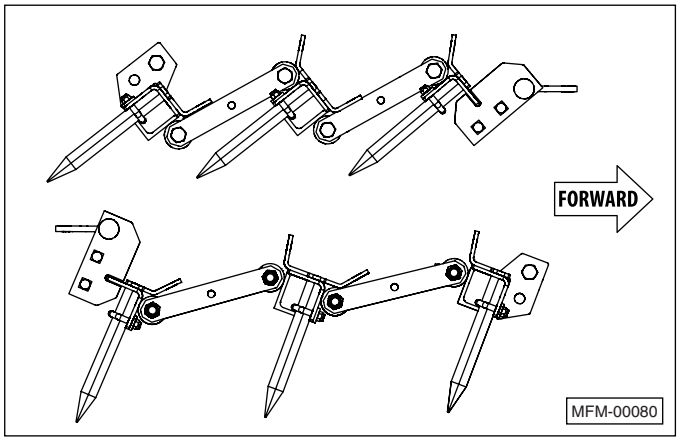

24. Adjust the height of the harrow sections.

a. Remove the locking bar retainer clip.

b. Remove the locking bar.

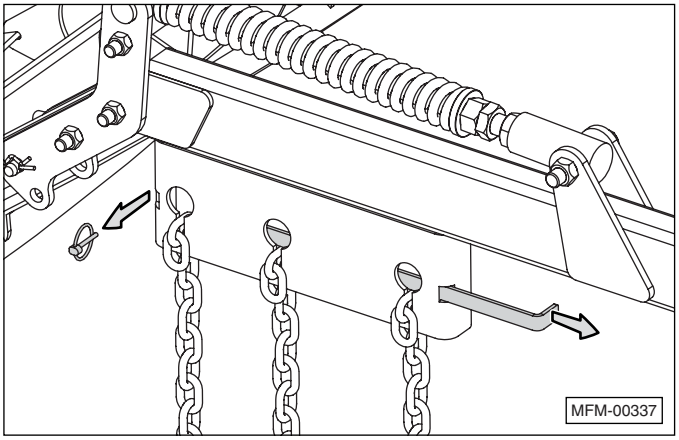

c. Raise or lower each harrow bar to the desired height.

Typical Spring (finishing) settings are all three chains set with three links hanging.

Typical Fall settings in heavy residue are front chain with seven links hanging, middle with six, and rear with five links hanging (front bar higher than rear bar).

Note: Make sure the chains are not twisted when inserting into the slot.

d. Replace the locking bar and clip.

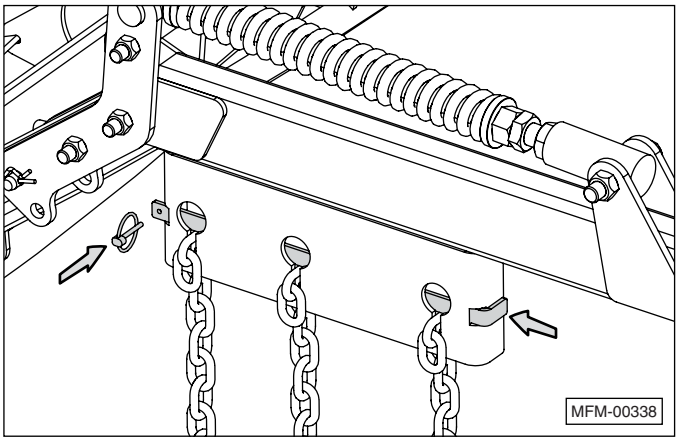

Note: To maximize the unit's performance, it should be operated at speeds ranging from 7 to 9 mph (11 to 14 kph). This keeps the field debris moving through the harrow sections and avoids clogging.

25. Adjust the rolling basket height and tension.

    a. Place the rolling basket on a flat, level surface.

    b. Adjust the turnbuckle to either raise or lower the rolling basket. To adjust the turnbuckle, use the wrench provided on the front of the unit.

    c. Loosen the jam nut on the front of the turnbuckle, and turn the adjusting nut on the rear of the turnbuckle to raise or lower the rolling basket. Set the rolling basket height so it just touches the ground.

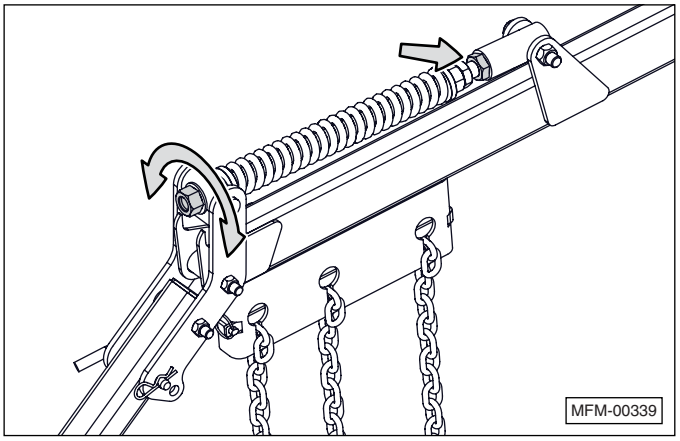

Note: The rolling basket spring tension is set at the factory and should not be adjusted.

    d. Make sure all the rolling baskets are adjusted to the same height. Failure to do so will result in uneven seedbed conditions and could damage the rolling basket arms and/or bearings.

    e. The rolling basket spring tension is set at the factory and should not be adjusted. If the spring or other components are replaced, tighten the adjusting nut to compress the spring1/4". Make sure the jam nut is securely tightened against the adjusting nut.

    f. During operation the spring should only lightly compress. Too much spring tension will cause premature failure, especially when going through waterways or ditches.

Spur-Till Operation and Adjustment

The McFarlane Spur-Till treader is designed to mix soil with residue, pulverize large clods, remove soil from exposed root balls and anchor residue to the soil surface.

Note: The Spur-Till comes assembled at 5 degrees.

The Hydraulic Cylinder Support with constant down pressure is self-adjusting for unit depth and will maintain a uniform pressure over rolling terrain. As the unit is lowered, the Spur-Till treader will find its working position based on the set pressure applied. When the unit is raised the treader will lower to the maximum down position. We recommend hydraulically raising the Spur-Till for transport and going in and out of driveways or waterways.

Operating with Constant Hydraulic Flow

1. The tractor SCV for the treader function must be set to constant hydraulic flow. Refer to your tractor manual to set your tractor hydraulics to this mode. This may also be referred to in your tractor manual as the setting required for hydraulic motors. If your tractor does not have this feature, the tractor SCV for the Spur-Till must be run in the float position. Make the sure SCV that will be running in constant flow is connected to the "+" disconnect grip that is plumbed to the top side of the reducing valve (indicated in the figure below).

2. Lowering the flow rate to 25% of full flow will reduce the heat build up in the hydraulic oil.

Spur-Till Depth Adjustment

3. Check the pressure gauge reading with the unit connected to the tractor and operating in the constant flow mode. It should be set initially at 200 psi. To increase Spur-Till depth, the pressure can be increased by loosening the locking nut and rotating the knob clockwise. Be sure to lock the nut after finishing the adjustment. The pressure should not exceed 250 psi.

Spur-Till Angle Adjustment

The Spur-Till can run at a 0° to 15° angle, and is set at 5° when delivered.

To adjust the angle of the Spur-Till, loosen both ¾” bolts and manually rotate the Spur-Till to the selected angle point.

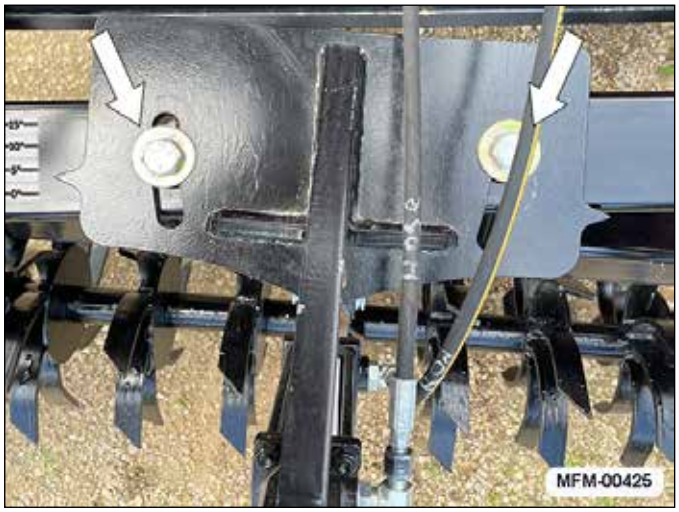

Note: When adjusting the Spur-Till to 0°, it is important to completely remove the bolt and place it the single hole on the pivot plate.

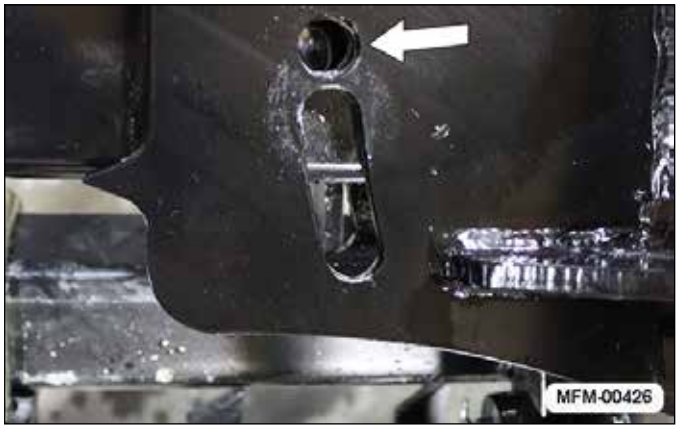

For residue pinning and soil firming, set the Spur-Till to 0°. When adjusting the Spur-Till to 0°, it is important to completely remove the bolt and place it the single hole on the pivot plate.

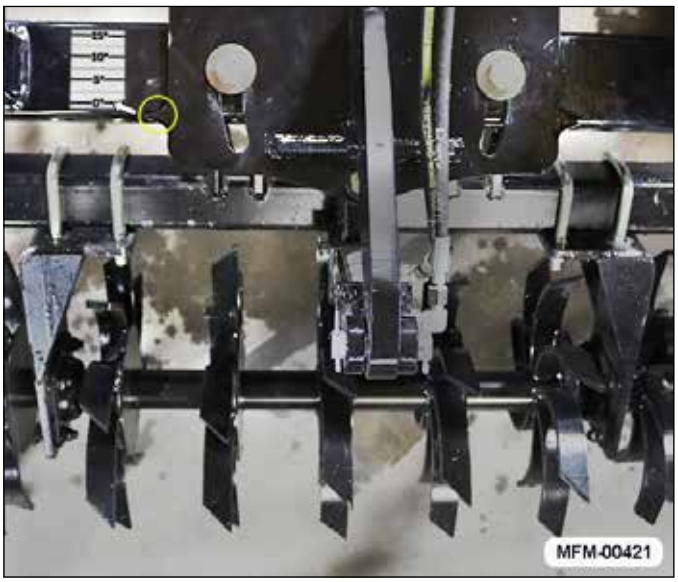

For minimal soil mixing, set the Spur-Till to 5°.

For increased root exposure, residue and soil mixing as well as residue incorporation, set the Spur-Till to roughly 10°.

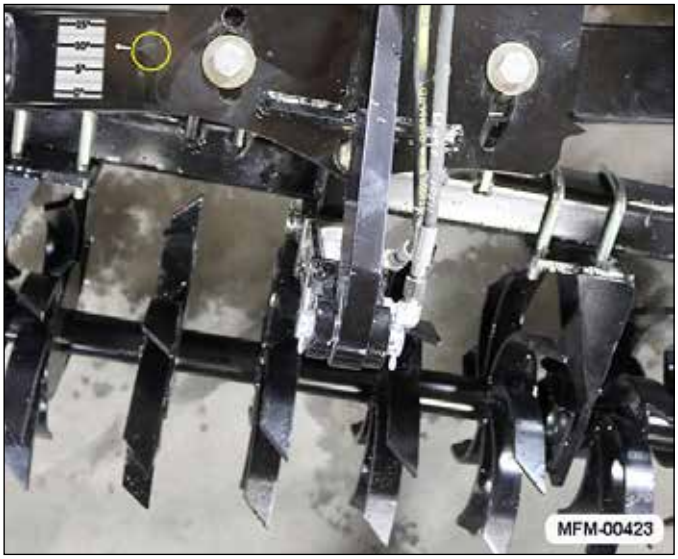

For maximum root exposure and soil mixing, set the Spur-Till to the steepest and most aggressive angle (15°).

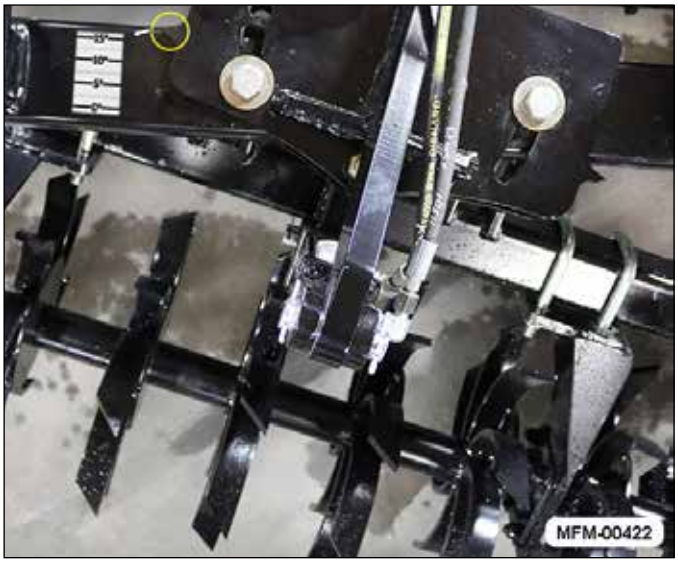

The unit should now be ready.

Preparing for Transport

1. Lower the wheels and lift the unit off of the ground.

2. Move the handle of shut-off valve (1) to the closed position, as shown. The shut off valve helps prevent the wheel lift cylinders from retracting due to bleed off within the hydraulic system, resulting in the disk gang lowering to the ground.

3. If equipped, fold the wings into the wing rests.

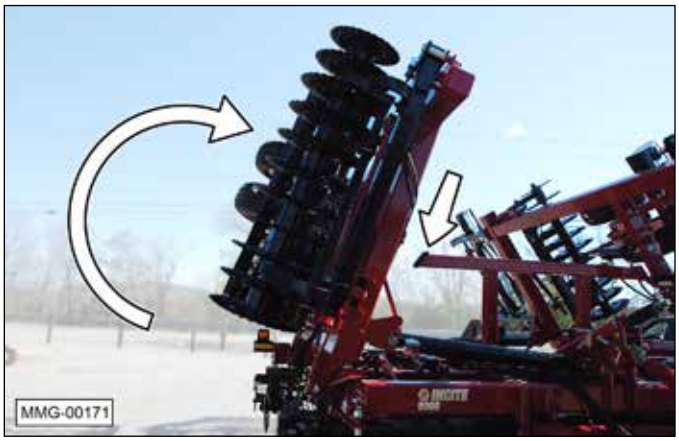

⚠ WARNING

Pinch Point Hazard
Do not place hands or fingers between moving and/or stationary parts. The weight of the unit will easily cause serious bodily injury.

Crush Hazard
When folding the wings, make sure both wings are resting on the pads before releasing hydraulic pressure.

4. Install the wing fold lock pins and bridge pins.

Note: To prevent equipment damage, the wing frame lock is designed to fail in the event the wing is unfolded with the pin still in place.

5. Remove the yellow transport locks from the storage brackets and place over the wheel lift cylinder rods. Insert and lock the retaining pin.

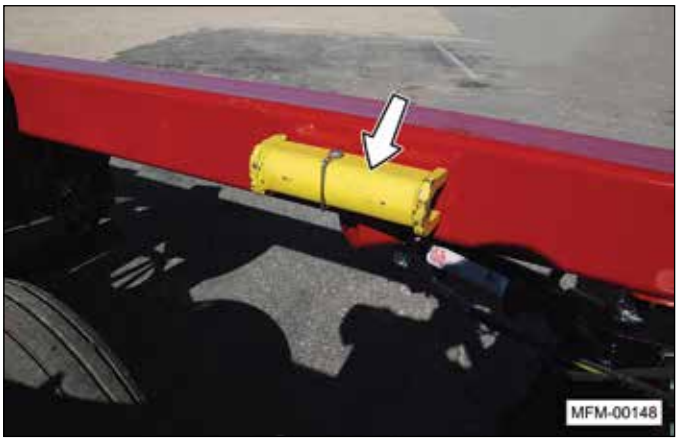

Storage

Safety

SAFETY INSTRUCTIONS

Follow all operating and safety instructions found in this manual when storing this equipment.

Store the unit in an area away from human activity.

Do not permit children to play on or around the stored unit at any time.

Make sure the unit is stored in an area with a firm and level base to prevent it from tipping or sinking into the ground.

Block the wheels to prevent the unit from rolling.

Power wash the unit prior to storage, following this protocol:

1. Washing equipment: It is very important to read the instruction manual and test the machine on a small spot before starting the actual job. The scouring action of a pressure washer is very strong and may damage paint, and other surfaces if not properly used.

2. Nozzle Selection: Wide-fan nozzles are often preferred when pressure washing painted surfaces. Yellow (15-degree) or green (25-degree) fan nozzles are most common, white (40-degree) nozzles can also be used to clean unit.

3. Pressure Adjustment: To wash away dust and dirt, keep the pressure level between 1500 psi and 2000 psi. Pressures exceeding 2000 psi may damage paint depending on nozzle size size and how close nozzle is to the part.

4. Wand angle: To avoid damaging painted surfaces, keep the wand angle/nozzle at a 45-degree angle and spray from a minimum distance of 12 inches. If you increase the pressure, move the nozzle further away from the surface.

5. Scrub away persistent dirt: Use a rotating scrub brush or a sponge along with a mild detergent solution to remove stubborn stains.

Placing Into Storage (Disk Coatings)

Apply a thin layer of grease or rust preventative to all exposed metal surfaces of the disks, reels, and reel blades.

Warranty

Limited Warranty Statement

FULL ONE YEAR WARRANTY

If within one year from the date of purchase, this unit fails due to a defect in material or workmanship, McFarlane Mfg. Co., Inc. will repair it, free of charge.

Warranty service is available at dealer locations by simply contacting the nearest McFarlane dealership throughout the United States or Canada.

This warranty applies only while this product is used in the United States or Canada.

This warranty gives you specific legal rights, and you may have other rights which vary from state-to-state.

Maintenance

Personal Safety

WARNING

To prevent serious injury or death:

Rolling Over / Crush Hazard
To prevent serious injury or death, before servicing, adjusting, repairing, or performing other work on the unit, always make sure the tractor or towing vehicle engine is stopped, the ignition key is removed, the unit is lowered to the ground, all controls are placed in neutral, the parking brake is set, and all hydraulic fluid pressure is relieved (zero pressure).

Rolling Over Hazard
Block the wheels before performing maintenance or repairs.

Use Properly Rated Tools
Use sufficient tools, jacks, and hoists that have the capacity for the job.

Crush Hazard
Use support blocks or safety stands rated to support the load when changing tires or performing maintenance.

High-Pressure Fluids
Wear proper hand and eye protection when searching for a high-pressure hydraulic leak. Use a piece of wood or cardboard as a backstop instead of hands to identify and isolate a leak.

Hydraulic fluid escaping under pressure can penetrate the skin. Openings in the skin and minor cuts are susceptible to infection from hydraulic fluid. If injured by a concentrated high-pressure stream of

hydraulic fluid, seek medical attention immediately. Without immediate medical treatment, serious infection or toxic reaction can develop if hydraulic fluid penetrates the surface of the skin.

Entanglement Hazard
Keep hands, feet, clothing, jewelry, and long hair away from any moving parts to prevent them from getting caught.

Hydraulic Component Safety

WARNING

Trapped Air Hazard
When installing, replacing, or repairing hydraulic system cylinders or parts, make sure that the entire system is charged and free of air before resuming operations. Failure to bleed the system of all air can result in improper machine operation, causing severe injury.

Zero Pressure
Relieve pressure from the hydraulic system before servicing or disconnecting from the tractor.

High-Pressure Fluid Hazard
Keep all hydraulic lines, fittings, and couplers tightly secured and free of leaks.

Explosive Separation Hazard
Replace any worn, cut, abraded, flattened, or crimped hoses.

High-Pressure Hazard
Do not make any temporary repairs to the hydraulic lines, fittings, or hoses using tape, clamps, or cement. The hydraulic system operates under extremely high pressure and temporary repairs may fail suddenly and create a hazardous/dangerous situation.

High-Pressure Fluid Hazard
Before applying pressure to the system, make sure all components are tight and that the hydraulic lines, hoses, and couplings are not damaged.

NOTICE

Make sure components in the hydraulic system are kept clean and in good working condition.

Tire Safety

WARNING

Explosive Separation Hazard
Do not attempt to mount tires unless you have the proper equipment and experience to do the job. Failure to follow proper procedures when mounting a tire on a wheel or rim can produce an explosive separation, which may result in serious injury or death.

Explosive Hazard
Never weld or heat a wheel and tire assembly. The heat can cause an increase in air pressure, resulting in a tire explosion. Welding can structurally weaken or deform the wheel.

Flying Objects Hazard
Inflating or servicing tires can be dangerous. Whenever possible, trained personnel should be called to service and/or mount tires.

When inflating tires, use a clip-on chuck and extension hose. Always stand to the side of the tire when inflating, and NOT in front of or over the tire assembly.

Make sure the tires are inflated evenly.

Crush Hazard
Make sure the unit is completely supported with suitable stands before removing a wheel assembly.

Before leaving the tractor, shut off the engine, set the parking brake, and remove the ignition key.

SAFETY INSTRUCTIONS

Follow all operating, maintenance, and safety instructions found in this manual.

Always maintain the correct tire pressure. Do not inflate the tires above the recommended pressure.

Check tires for low pressure, cuts, bubbles, damaged rims, or missing lug bolts or nuts.

Always install replacement tires and wheels with appropriate capacity to meet or exceed the weight of the unit.

Do not exceed 20 mph.

Keep wheel lug nuts or bolts tightened.

Understand the service procedure before performing the work. Keep area clean and dry.

Replace all worn or damaged safety and instruction decals.

Keep all parts in good condition and properly installed. Fix damage immediately. Replace worn or broken parts.

Do not leave tools lying on the unit.

Do not modify unit or safety devices. Do not weld on the unit. Unauthorized modifications may impair its function and safety.

If equipment has been altered in any way from the original design, the manufacturer does not accept any liability for injury or warranty.

Never replace hex bolts with less than Grade 5 bolts unless otherwise specified. In locations where Grade 8 bolts are used, Grade 8 replacements are required.

Where replacement parts are necessary for periodic maintenance and servicing, genuine factory replacement parts must be used to restore the unit to original specifications. The manufacturer will not accept responsibility for damages as a result of the use of unapproved parts.

Tire and Lug Torque Specifications

Model	Tire Size	Tire Pressure (PSI) (MAX)	Lug Size	Lug Torque (lb.ft.) Min.	Max.	Tire and Wheel Weight (lbs)
MAIN FRAMES						
IC-5112, IC-5114	IF 320/70R15 (4)	70	9/16”	80	90	103
IC-5120, IC-5124	IF 320/70R15 (4)	70	9/16”	80	90	103
IC-5127	VF 285/70R19.5 (4)	75	5/8”	85	100	159
IC-5132	VF 285/70R19.5 (4)	75	5/8”	85	100	159
IC-5140	VF 285/70R19.5 (4)	75	5/8”	85	100	159
WING FRAMES						
ALL MODELS	IF 280/70R15 (4)	64	1/2”	75	85	85

Bolt Torque Chart

Bolt Head Markings	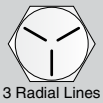 3 Radial Lines		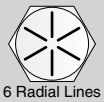 6 Radial Lines	
Bolt Diameter	**SAE Grade 5 ft-lbs (N·m)**		**SAE Grade 8 ft-lbs (N·m)**	
1/4"	9	(12)	12	(17)
5/16"	19	(25)	27	(36)
3/8"	33	(45)	45	(63)
7/16"	53	(72)	75	(100)
1/2"	80	(110)	115	(155)
9/16"	115	(155)	165	(220)
5/8"	160	(215)	220	(305)
3/4"	290	(390)	400	(540)
7/8"	420	(570)	650	(880)
1"	630	(850)	970	(1320)

Maintenance Schedule

1. After the first 12 hours of use:

   a. Make sure all retaining hardware is installed. Check the tightness of all the bolts, especially those on the C-springs. Torque specifications are listed in the “Bolt Torque Chart” on page 37.

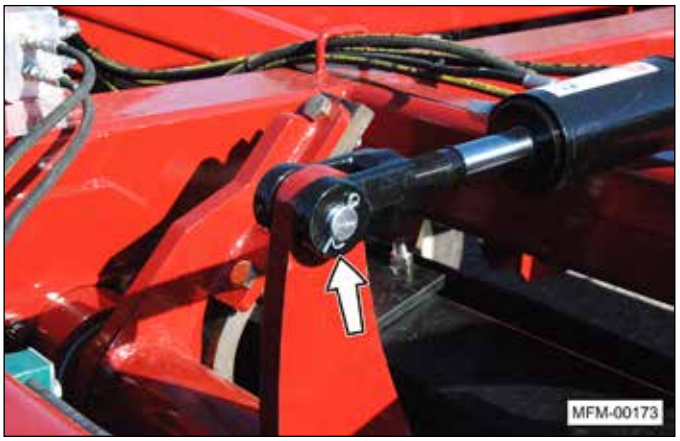

Cotter pin.

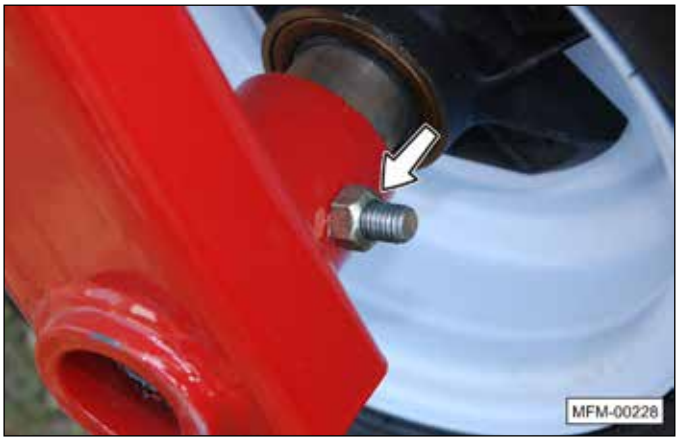

Wheel retainer bolts.

Hinge pin and hitch pin retainer bolts.

Bridge pin.

Wire retainer pin.

   b. Check and re-torque the disk gang arbor nuts as described in ”Disk Gang Disk Blades” on page 42.

c. Check all of the bolts holding the blades onto the Dura-Reel.

2. Prior to each use, visually check for loose or missing bolts and replace lost or worn parts.

3. Grease all hinge pins every day. Refer to “Lubrication Points” on page 41.

4. Grease the tandem pivots every day.

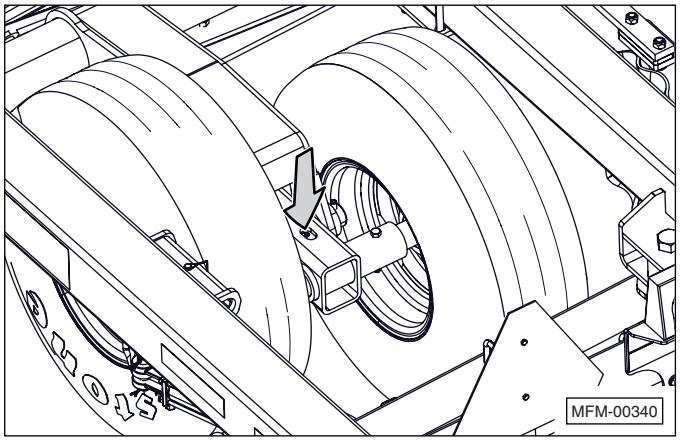

5. Clean, repack, and adjust the wheel bearings annually. Use only wheel bearing grease when repacking these units. Check for excessive end play.

   To adjust wheel bearing, remove dust cap and cotter pin. Lift tire and slowly rotate while tightening the spindle nut. Tighten only until a slight drag is felt on the rotating wheel. Re-install cotter pin and dust cap.

6. Dura reel bearings should be lubricated annually.

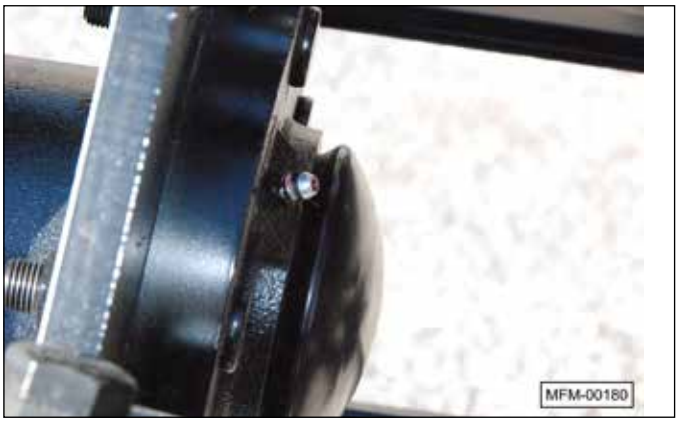

7. Grease the oscillating pintle hitch (if equipped) daily while in service. Remove all vertical load from the hitch before greasing.

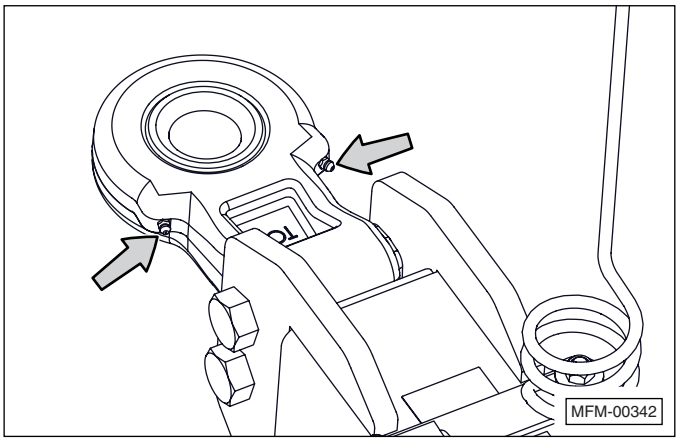

Note: Clean grease fittings and replace those that are broken or missing.

8. Inspect the rubber bumper pads on the wing support arms. Replace the pads if they are worn or missing.

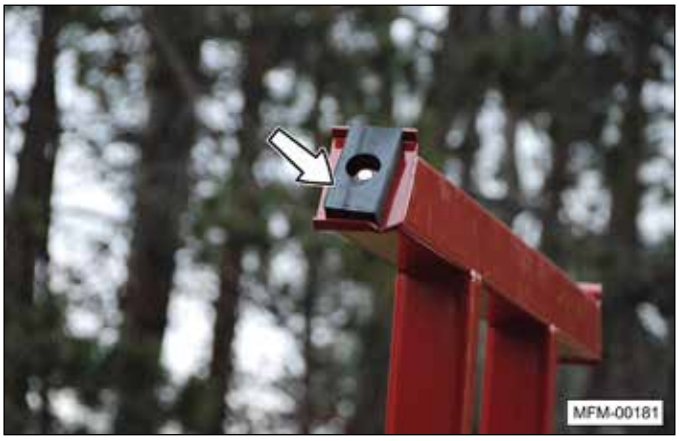

9. Refer to the parts illustrations and listings for service and repair parts.

Note: The level lift tube cushioning spring tension is set at the factory and should not be adjusted. If spring replacement becomes necessary, turn the adjusting nut until the compressed spring length is 8-3/16” and tighten the jam nut.

Lubrication Points

Add grease to the locations shown in the illustration.

When greasing a pin and bushing, add grease until it is visibly forced out of the joint.

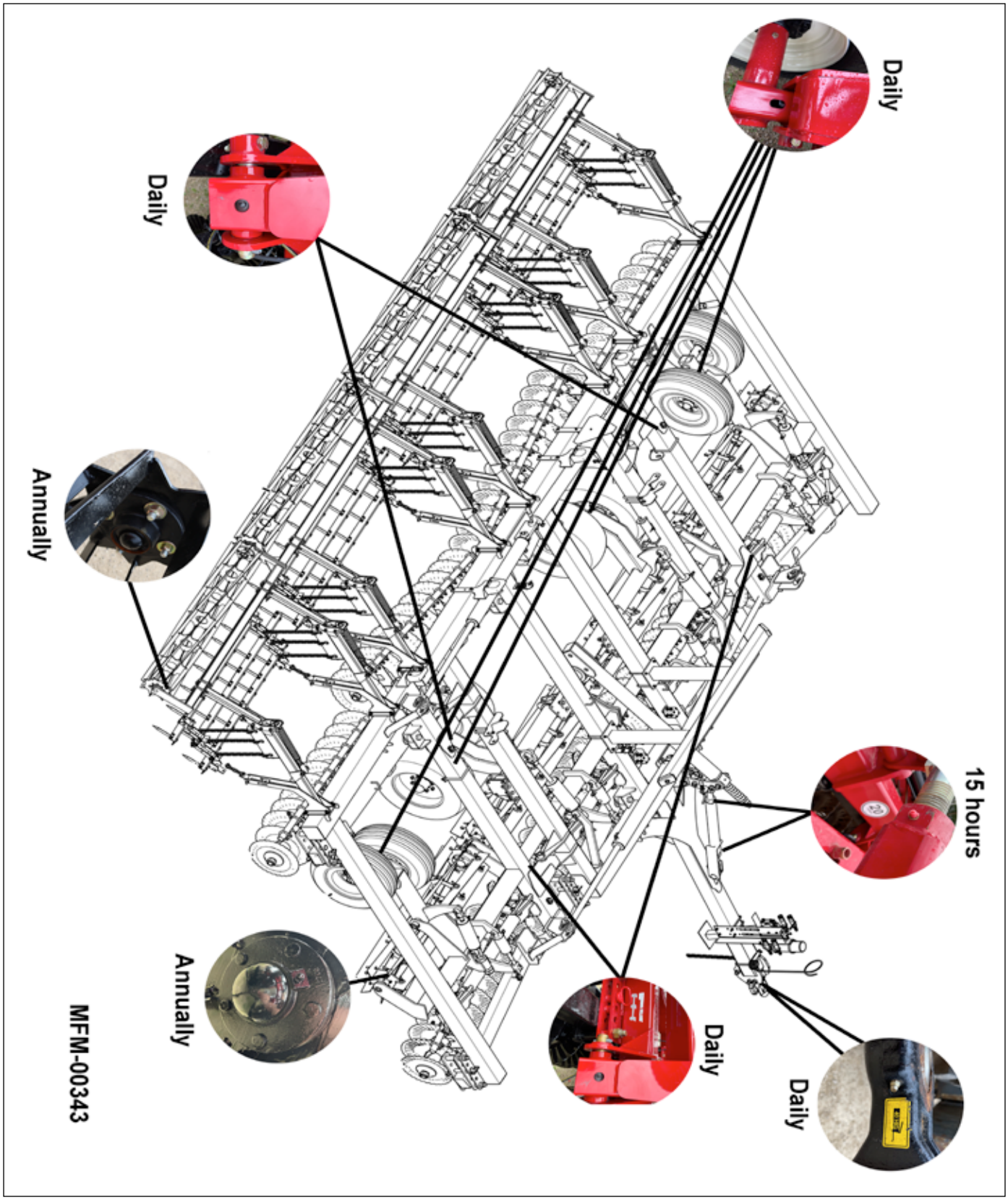

Maintenance Procedures

Wheel Lift Cylinders and Wing Cylinders

There are no setup procedures or maintenance items on these cylinders.

Disk Gang Disk Blades

1. Replace the disk blades when the diameter is 19 inches or less.
2. It will also be necessary to check and tighten the disk gang arbor nuts to prevent excessive wear.
3. After 12 hours initial operation, using a torque-multiplier, tighten the gang arbor nuts to 1200-1600 ft-lb.

Note: A torque of 1200-1600 ft-lb would be equivalent to a 200 pound person using a 6 to 8 foot wrench.

Note: When reassembling the disk gang, it may be necessary to add a 1-3/4" machine washer (10656) in order to align the cross-drilled hole in the shaft with the slots in the castle nut.

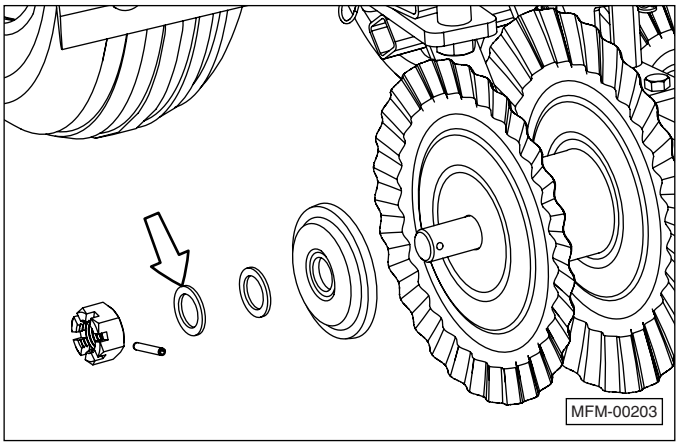

Removal of Dura Reel Hub

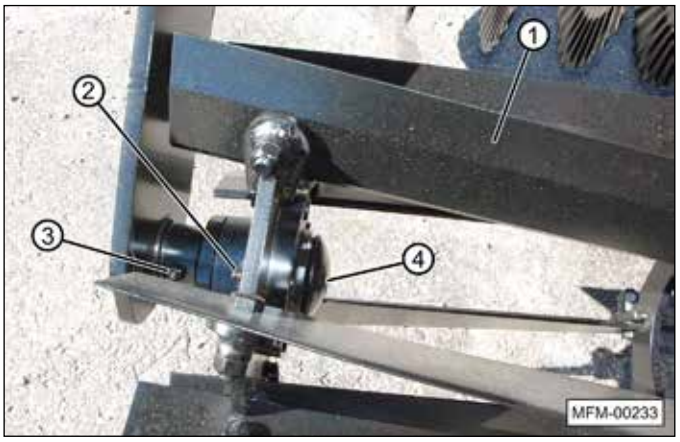

1. Support the reel assembly.
2. Remove one reel blade (1).
3. Remove five hub bolts (2).
4. Remove hub cross bolt (3).
5. Slide hub free from reel (4).

Note: May need to loosen all bolts to reassemble.

Assembly and Lubrication of Dura Reel Hub

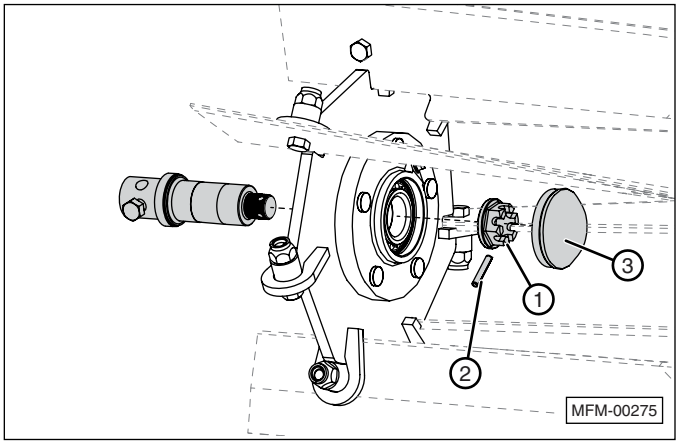

1. Tighten hex slotted nut (1) to 40 ft.-lbs. Loosen nut until first slot in nut aligns with hole in spindle. Rotate hub five revolutions. If rotation is tight, loosen nut an additional slot.
2. Push spring pin (2) through nut and spindle until it is flush with the nut.
3. Apply grease through the zerk until grease emerges through the bearing rollers. Rotate hub five times.
4. Press dust cap onto hub.
5. Check end play.
   a. Hold spindle securely in place.
   b. Place a dial indicator onto the hub to measure upward movement.
   c. Use a bar or lifting device to raise the hub upwards.
   d. The reading should not exceed 0.002" (0.05mm). Repair or replace hubs with excessive end play.

Dura Reel Blades

To replace a Dura-Reel blade:

1. Remove the bolts that secure the blade to the center plate.
2. Install a new blade with 5/8-11 x 2-1/4” bolts and lock nuts. Tighten the nut to 160 ft.lbs. (215 N·m).

Note: Make sure the blades are positioned with the beveled edge of the blade closest to the tab on the center plate, as shown in the photo. Install the bolts from the blade side.

Axle Assembly Wear Sleeves

No maintenance is required on the four axle mounting bearings. Check for excessive wear annually. To replace the bearings:

1. Support the main frame.
2. Support the wheel assembly and wheel lift cylinders to relieve the pressure on the bearings.
3. Remove bearing retainer caps (1) (center bearings) and end caps (2) (outer bearings).
4. Insert four new bearing wear sleeves. Do not replace just one sleeve.
5. Reinstall the retainers and caps.

Troubleshooting

Problem	Cause	Solution
Machine is not working to desired depth or the soil is not fully worked to desired depth.	Disk gang is not set deep enough.	Increase the depth of the machine with the depth stop control.
		Check reel depth, reel should only be in the ground 2” (if disk gangs are 4” deep reel should be at 2” above blade).
	Travel speed is either too slow or too fast.	Change speed to get desired results.
	Disk gang angle is not set properly for the soil conditions.	Increase disk gang angle to loosen more soil.
Unit bounces or leaves surface uneven in loose soil.	Too high of speed for conditions.	Decrease travel speed.
	Disk gang angle is set too aggressive causing machine to “walk”.	Decrease disk gang angle.
	Machine is set too deep that tires are not touching the ground.	Use depth stop to get the tires to touch the ground when working.
The residue is not being turned into the ground.	The front gang disk is not set at an aggressive enough angle.	Increase the angle of the front disk gang.
	The front gang disk is not set deeply enough.	Increase the depth of the disk gang up to a six inch maximum depth. Whenever you are making a change to any setting, make sure the unit remains level as it is pulled through the field.
	Travel speed is too slow.	Increase travel speed to 8 to 9 mph.
The residue is not being sized correctly.	The front disk gang may not be set deep enough.	Increase the depth of the disk gang up to a six inch maximum depth. Whenever you are making a change to any setting, make sure the unit remains level as it is pulled through the field.
Ridging between center section and wing section or between wing sections.	Adjacent wing frame is not level with the next.	Adjust the wing axle depth screw up or down to eliminate the ridge between the sections.
Ridging between passes.	Outside wing not set level with inner/ center frame section.	Level the outer wing frame so it runs level with the rest of the machine.
Depth stop will not work properly.	Plunger not contacting stop valve pin.	When machine is in ground at proper depth check that the level lift spring is not compressed. Extend turnbuckle so hitch contacts drawbar with spring fully extended.
Center frame section not working to desired depth.	Wing frames are set too deep.	Raise the wing frames using the wing lift cylinders to prevent the wings from working deeper than the center section.
Outside disk gang gouges.	Wing frames are not level.	Level the wing frames using the wing lift cylinders to raise the outside of the disk gang.

Problem	Cause	Solution
Dura Reel plugs in wet soil conditions.	Dura Reel is set too deep.	Decrease the depth of the Dura Reel. Use the stop crank to adjust the Dura-Reel depth. Increase speed.
Plugging at disk gang trunnion bearings.	Sticky soil and/or certain residues collecting in the bearing area.	The trunnion scrapers are a two piece system. Remove one or both scrapers. In some soil types, removing only 12559 scraper is effective. Otherwise, remove both 12559 and 12534 scrapers.
Residue buildup on harrow bars.	Front disk gang is not set correctly.	Set the disk gang to a more aggressive angle in order to size the residue into smaller pieces.
	The harrow angle is not set correctly.	Change the angle of the teeth. Using the linkage settings that produce the flattest angle on the harrow is recommended. Setting the harrow to the steepest angle is usually recommended for spring work or light residue.
	The ground speed is too low.	Increase ground speed to 8 to 9 mph.
	The harrow bars are running too low to the ground.	Raise the harrow bars using the lift chains. To dramatically increase residue flow, raise the front chains higher than the rear chains.

Parts Section

Ordering Parts

We manufacture a quality product that requires very little maintenance or repair. However, should a part break or become damaged, our knowledgeable staff can make sure you receive the part(s) to put your unit back into operation.

Dealer Contact Information

For replacement decals, questions, or to order parts, contact your dealer:

Decals

WARNING

Make sure all decals are attached to the unit and are legible at all times. Safety decals and reflective tape provide a vital role in helping to reduce injuries and/or possibly even death.

To ensure the greatest level of safety, all decals must be in place and legible at all times. Remember, it is the users' responsibility to maintain these decals.

Parts Drawings

Hitch Frame for Incite 5100 Series

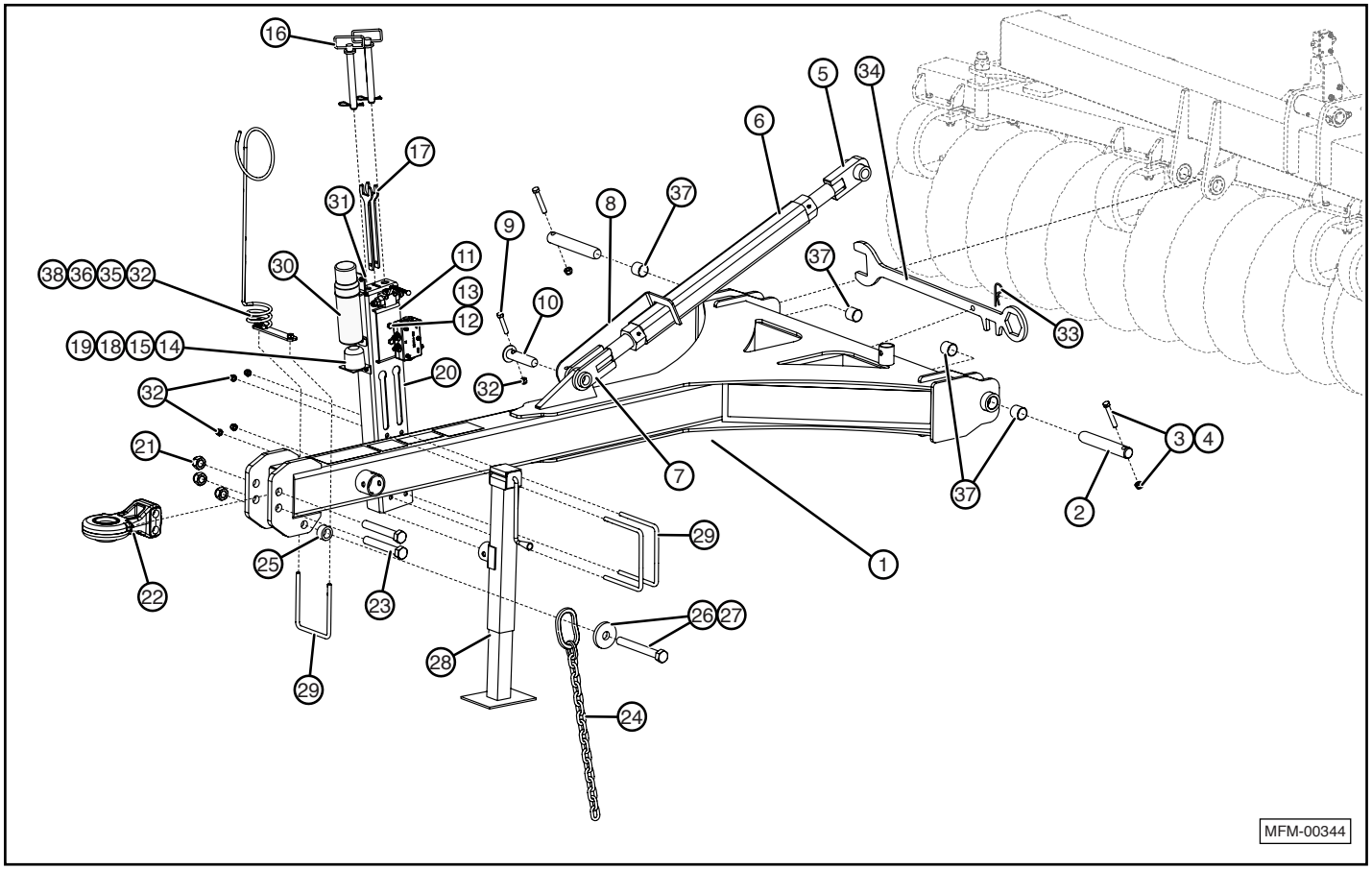

Item	Part Number	Description
1	12675 13869	HITCH,IC-5112 - 5132 HITCH, IC-5140
2	RT-2107	PIN, HINGE, 1-1/2 X 9-5/8
3	BHY-5635	BOLT, HEX, 9/16-12 X 3-1/2 GRADE 8
4	NLT-5612	NUT, TOP LOCK, 9/16-12
5	RT-2112	PIVOT, TURNBUCKLE
6	RT-3145	LINK, TURNBUCKLE
7	RT-2111	YOKE, TURNBUCKLE
8	RT-2114	LOCK, TURNBUCKLE, 3”
9	BH-5028	BOLT, HEX, 1/2 X 2-3/4 GRADE 5
10	RT-2113	PIN, STRAIGHT, HEADED
11	RD-4309	BRACKET, CLAMP
12	BH-2525	BOLT, HEX, 1/4-20 X 2
13	NLT-2520	NUT, TOP LOCK, 1/4-20
14	LW-0025	WASHER, LOCK, 1/4
15	NH-2520	NUT, HEX, 1/4-20
16	PH-8860	PIN, HITCH, 7/8 X 6 w/ #6 BRIDGE PIN
17	11271	WRENCH, TURNBUCKLE, 1-1/2"
18	LB-1110	BRACKET, LIGHT PLUG
19	BH-2510	BOLT, HEX, 1/4-20 X 1
20	14492	BRACKET, STORAGE, HITCH
21	NLT-1008	NUT, TOP LOCK, 1”

Item	Part Number	Description
22	PPI-300 12336	HITCH BASE, CAT III (See separate drawing HITCH BASE, CAT IV for serviceable parts).
23	10720	BOLT, HEX, 1 X 6.5, GRADE 8
24	CH-1816 CH-1830	SAFETY CHAIN, 16,100 lbs (5112, 5114) SAFETY CHAIN, 30,400 lbs (5120, 5124, 5127, 5132, and 5140)
25	RT-2054	BUSHING, 1 7/8" OD X 1-1/4" ID X 1"
26	RT-3103	WASHER, SAFETY CHAIN
27	BHY-1085	BOLT, HEX, 1 X 8-1/2, GRADE 8
28	QT-1243	JACK, SIDEWIND, 15”, 8000#
29	BU-1267	U-BOLT, 1/2 X 6 X 7-1/4
30	14493	MANUAL STORAGE TUBE
31	—	1/4-20 X 1, FLAT WASHER, LOCK WASHER, AND HEX NUT
32	NLT-5013	NUT, TOP LOCK, 1/2-13
33	PB-0009	PIN, BRIDGE, #9
34	10273	WRENCH, TURNBUCKLE
35	12735	SUPPORT, HOSE
36	12054	PLATE, CLAMP
37	RD-4889	BUSHING, NYLON
38	FW-0050	WASHER, FLAT, 1/2

Adjustable Hitch Frame For Incite 5100 Series

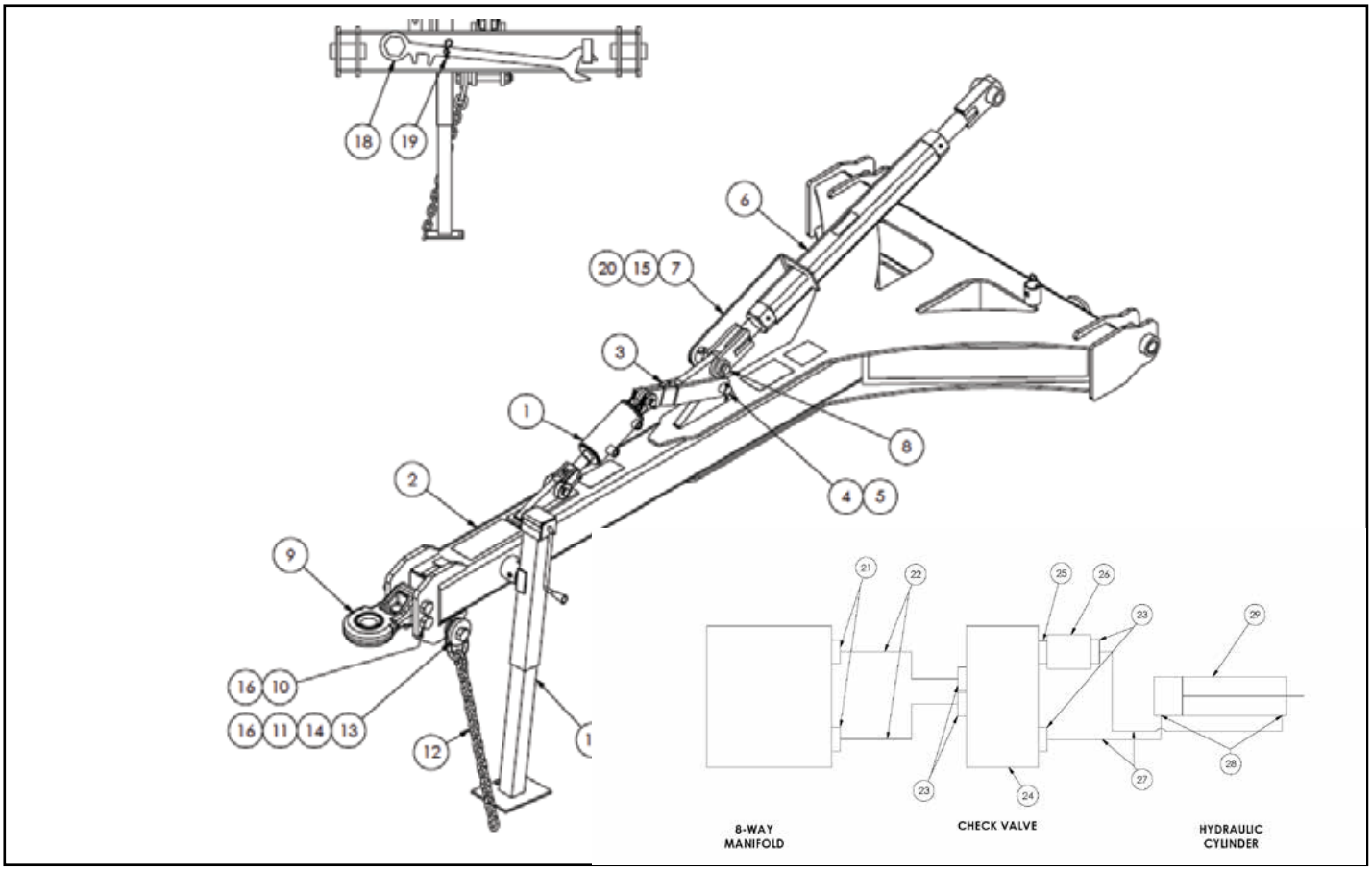

Item	Part Number	Description
1	10327	HYD CYLINDER, 3X4 REPHASING, WELDED
2	14874	FRAME, HITCH
3	14513	HITCH CYLINDER ARM
4	HYO-2123	PIN, CYLINDER CLEVIS, 1-1/4 X 4
5	CP-3620	PIN, COTTER, 3/16 X 2
6	RT-3146	ASM, TURNBUCKLE
7	11952	LOCK, TURNBUCKLE 3”
8	RT-2113	PIN, STRAIGHT, HEADED
9	12336	HITCH, PINTLE, ARTICULATING BALL, CAT 4
10	10720	BOLT, HEX, 1 - 8 X 6.5 GR8 1.12 THREAD

Item	Part Number	Description
11	RT-2054	RUBE, ROUND, 1.88 OD X 1.31 ID - 1
12	CH-1830	SAFETY CHAIN, 30,000LB
13	RT-3103	SAFETY CHAIN WASHER
14	BHY-1085	BOLT, HEX, 1 - 8 X 8.5, GD8
15	BH-5028	BOLT, HEX, 1/2 - 13 X 2.75, GD5
16	NLT-1008	NUT, TOP LOCK, 1
17	QT-1243	JACK, SIDEWIND, 15”, 8000LB
18	10273	ADJUSTMENT WRENCH
19	PB-0009	PIN, BRIDGE, #9
20	NLT-5013	NUT, LOCK, TOP, 1/2 - 13
21	HYF-1188	HYD TEE,9/16F-9/16M-9/16M
22	HYH-8100	HYD HOSE,3/8(9/16F),100
23	HYF-3820	HYD ADAPTER,9/16M-3/4Morb
24	14092	HYD LOCK VALVE, SINGLE (KRAFT)
25	14800	HYD ADAPTER,3/4Morb-3/4Morb
26	QT-1172	HYD VALVE,3/4" BALL
27	HYH-8024	HYD HOSE,3/8(9/16F),24
28	HYF-2821	HYD ELBOW,9/16M-3/4Morb,RST
29	10327	HYD CYLINDER,3X4 REPHASING,WELDED

Hitch for IC-5112, and IC-5114 (CAT. III)

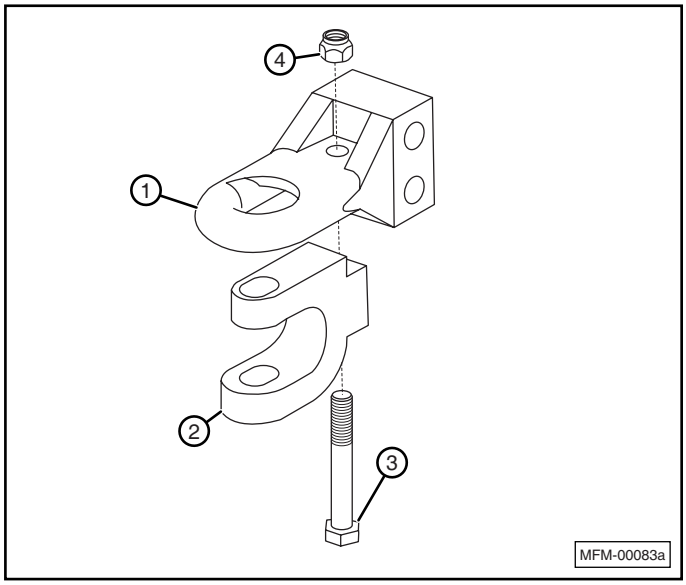

Hitch for IC-5120, IC-5124, IC-5127, IC-5132, and IC-5140 (CAT. IV)

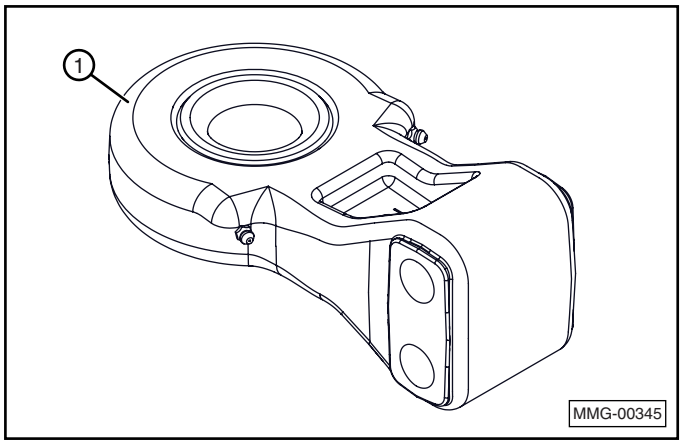

Item	Part Number	Description
1	PPI-300 12336	HITCH BASE, CAT. III HITCH BASE, CAT. IV
2	PPI-208	CLEVIS, HITCH (CAT. III only)
3	BHY-7555	BOLT, HEX 3/4 X 5-1/2 GRADE 8 (CAT. III only)
4	NLT-7510	NUT, TOP LOCK, 3/4 (CAT. III only)

Wing Locks for IC-5120, IC-5124, IC-5127, IC-5132, and IC-5140

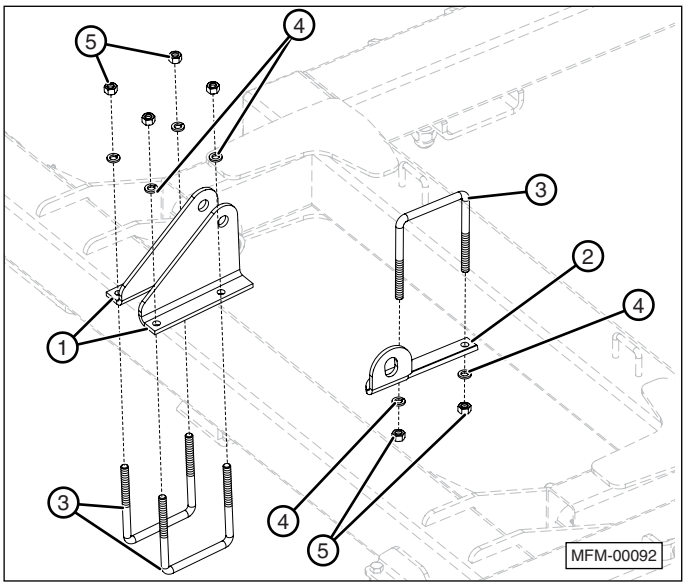

IC-5120, IC-5124

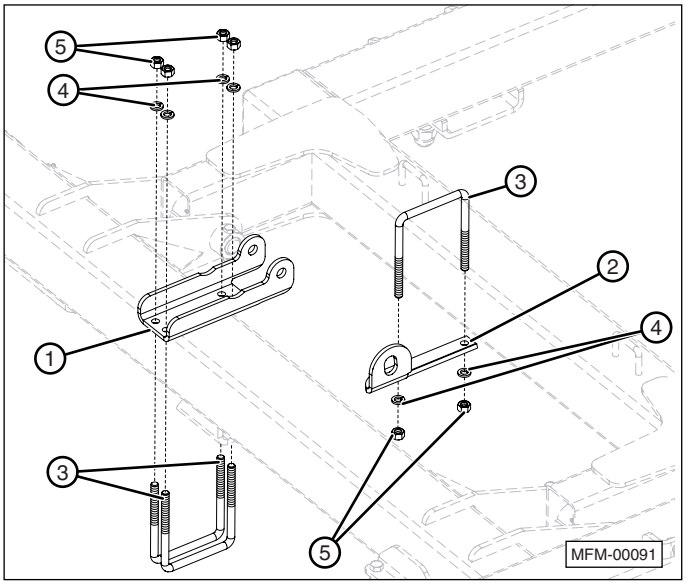

IC-5127, IC-5132, and IC-5140

Item	Part Number	Description
1	RD-4508 RD-4509 10345	BRACKET, WING LOCK, LT (5120 and 5124) BRACKET, WING LOCK, RT (5120 and 5124) BRACKET, WING LOCK (5127, 5132, and 5140)
2	RD-4612	WING FRAME WING LOCK
3	BU-5867	U-BOLT, 5/8 X 6 X 7-1/2
4	LW-0063	WASHER, LOCK, 5/8
5	NH-6311 NLT-6311	NUT, HEX, 5/8-11 NUT, TOP LOCK, 5/8-11 (5124)

Level Lift for Incite 5100 Series

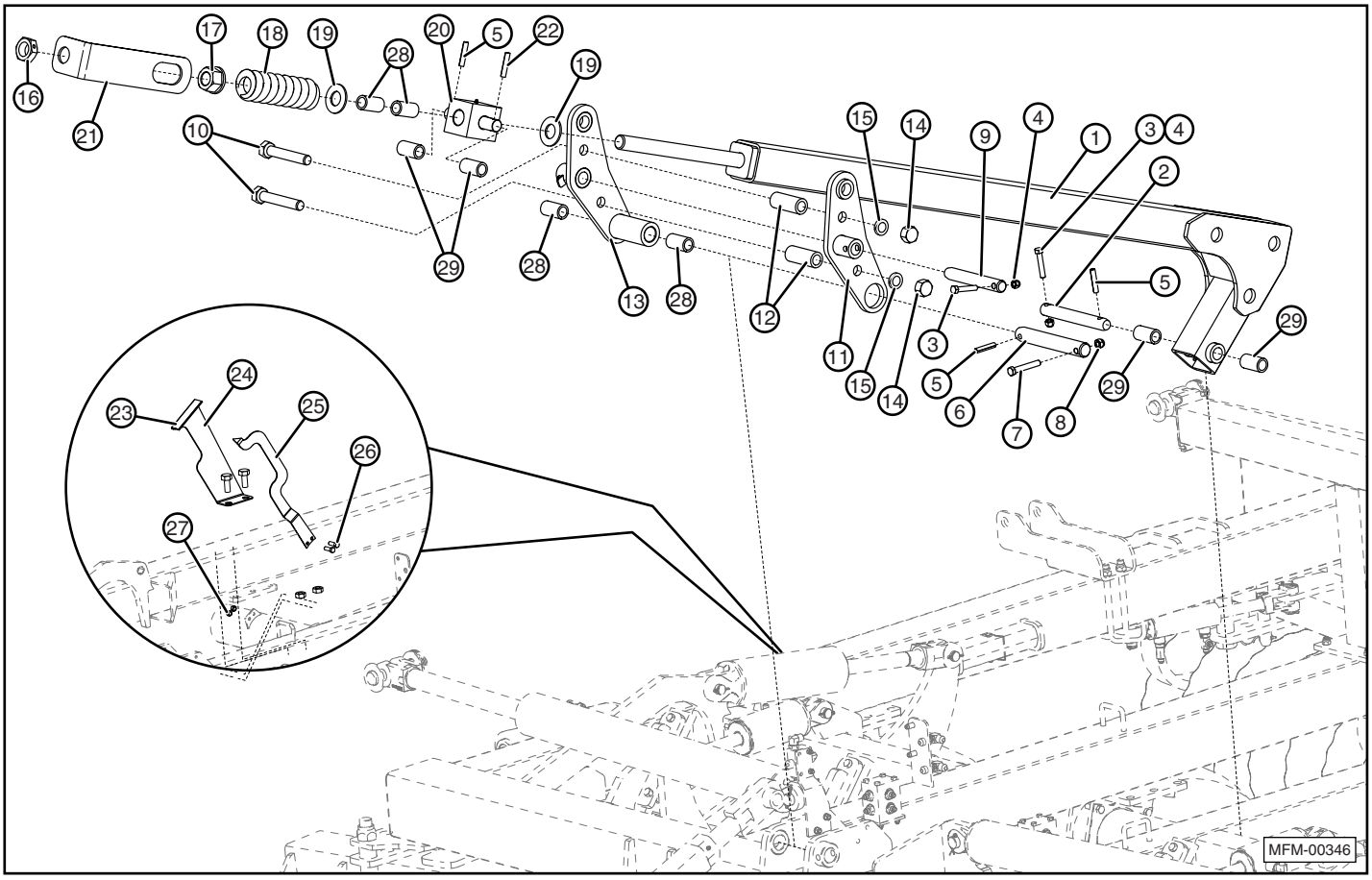

Item	Part Number	Description
1	12685	LINK, LEVEL LIFT
2	10684	PIN, STRAIGHT
3	BH-5028	BOLT, HEX, 1/2-13 X 2-3/4 GRADE 5
4	NLT-5013	NUT, TOP LOCK, 1/2-13
5	RD-5062	PIN, SPRING ROLL, 1/2 X 2-1/2
6	10283	PIN, STRAIGHT, 1-1/2 X 10-5/16
7	BHY-5635	BOLT, HEX, 9/16-12 X 3.5, GRADE 8
8	NLT-5612	NUT, TOP LOCK, 9/16-12
9	QT-1180	PIN, STRAIGHT
10	BHY-1070	BOLT, HEX, 1-8 X 7, GRADE 8
11	10613	PLATE, PIVOT
12	10944	TUBE, ROUND
13	12677	PLATE, PIVOT
14	NH-1008	NUT, HEX, 1-8
15	LW-0100	WASHER, LOCK, 1.0”
16	10501	NUT, JAM, 1-1/2-6, SPECIAL

Item	Part Number	Description
17	NHF-1506	NUT, FLANGE, 1-1/2-6
18	10615	SPRING, COMPRESSION
19	10776	WASHER, FLAT, 1-1/2 SAE
20	12695	PIVOT, CROSS
21	11331	STRAP, SPRING RETAINER
22	QT-1143	PIN, SPRING ROLL, 1/2 X 3-1/2
23	11395	DECAL, DEPTH INDICATOR
24	11373	BRACKET, DEPTH INDICATOR
25	11374	POINTER, DEPTH INDICATOR
26	BH-3810	BOLT, HEX, 3/8-16 x 1
27	NLT-3816	NUT, TOP LOCK, 3/8-16
28	RD-4889	BUSHING, NYLON
29	10691	BUSHING, NYLON

Depth Stop for Incite 5100 Series

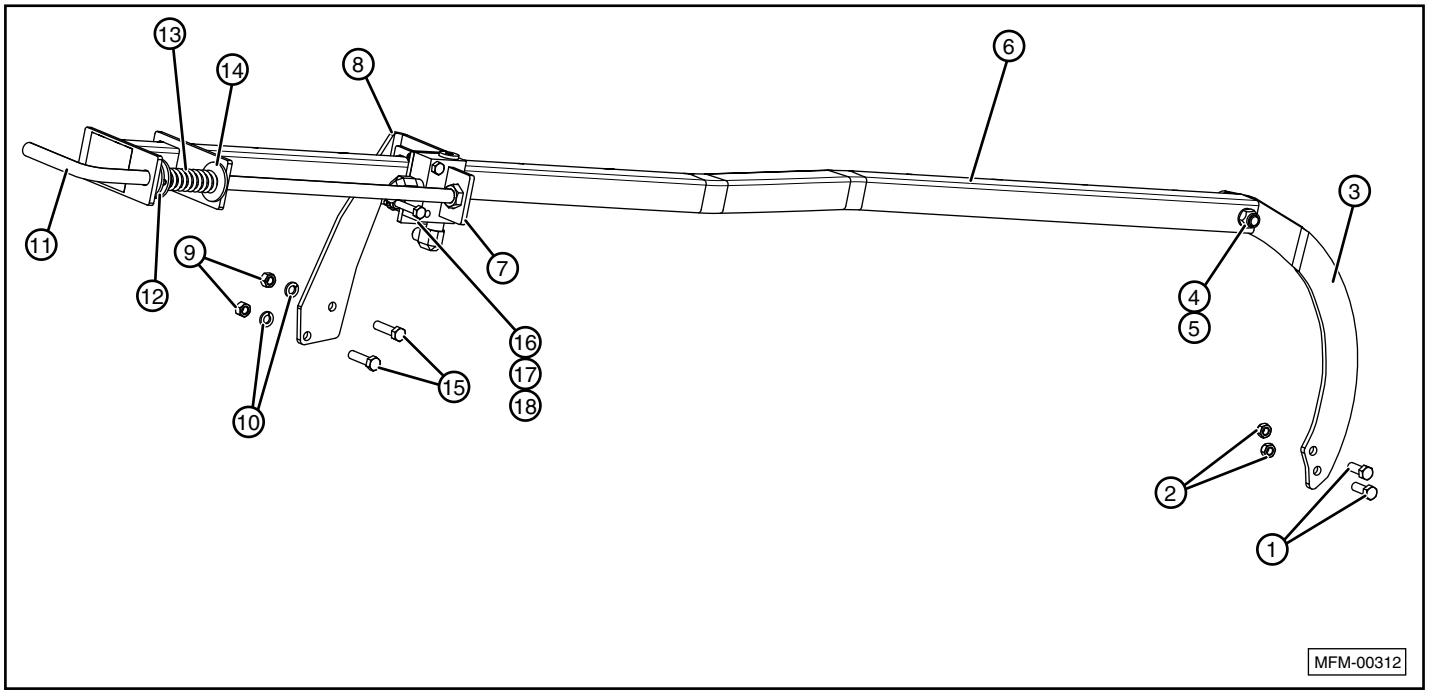

Item	Part Number	Description
1	BH-3810	BOLT, HEX, 3/8-16 x 1
2	NLT-3816	NUT, TOP LOCK, 3/8-16
3	11755	PLATE
4	BH-5025	BOLT, HEX, 1/2-13 X 2-12 GRADE 5
5	NLT-5013	NUT, TOP LOCK, 1/2-13
6	11761	DEPTH STOP TUBE
7	RD-4353	PLATE
8	11753	BRACKET
9	NH-3816	NUT, HEX, 3/8-16
10	LW-0038	WASHER, LOCK, 3/8
11	QT-1158	HYDRAULIC STOP CRANK
12	RD-4357	PIN, SPRING ROLL, 1/4 X 1-1/2
13	RD-4355	SPRING, LEVELER
14	FW-0063	WASHER, FLAT, WIDE, 5/8
15	BH-3815	BOLT, HEX, 3/8-16 x 1-1/2
16	HYO-3021 HYF-0150	HYDRAULIC STOP VALVE HYD PLUG, 1/2 ORB IN HYO-3021 (NOT SHOWN).
17	BH-3120	BOLT, HEX, 5/16-18 x 2
18	NY-3118	NUT, LOCK, NYLON, 5/16-18

Wing Rest for IC-5120, IC-5124, IC-5127, IC-5132, and IC-5140

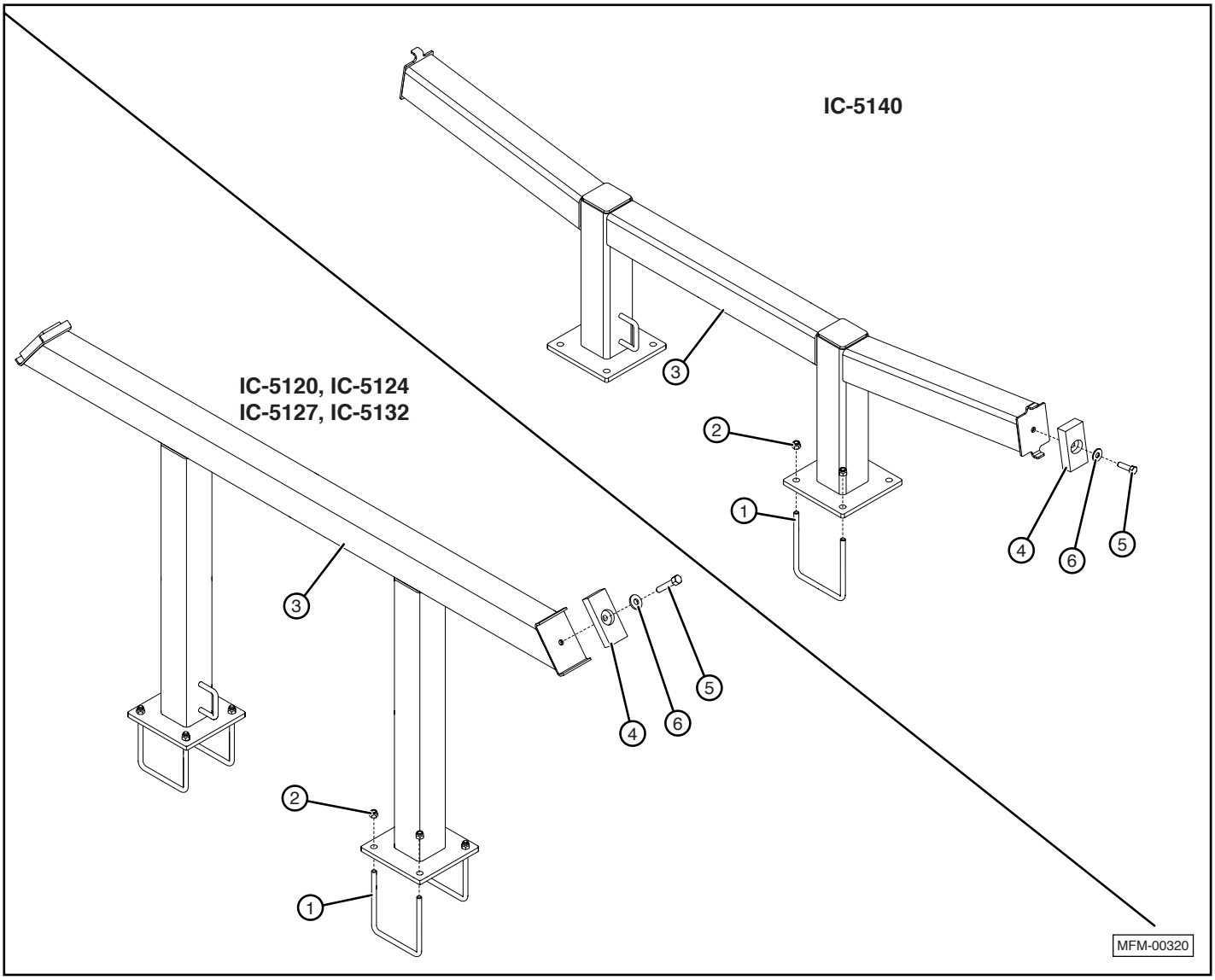

Item	Part Number	Description
1	BU-5848 BU-5867	U-BOLT, 5/8 X 4 X 8 (5120, 5124) U-BOLT, 5/8 X 6 X 7-1/2
2	NLT-6311	NUT, TOP LOCK, 5/8-11
3	11302 11305 10767 10336 10266	BRACKET, WING REST (5120) BRACKET, WING REST (5124) BRACKET, WING REST (5127) BRACKET, WING REST (5132) BRACKET, WING REST (5140)
4	RT-3415	BUMPER, WING REST

Item	Part Number	Description
5	BH-5015	BOLT, HEX, 1/2-13 X 1-1/2 GRADE 5
6	FW-0050	WASHER, FLAT, 1/2

Main Frame and Axle for IC-5112, IC-5114, IC-5127, IC-5132, and IC-5140

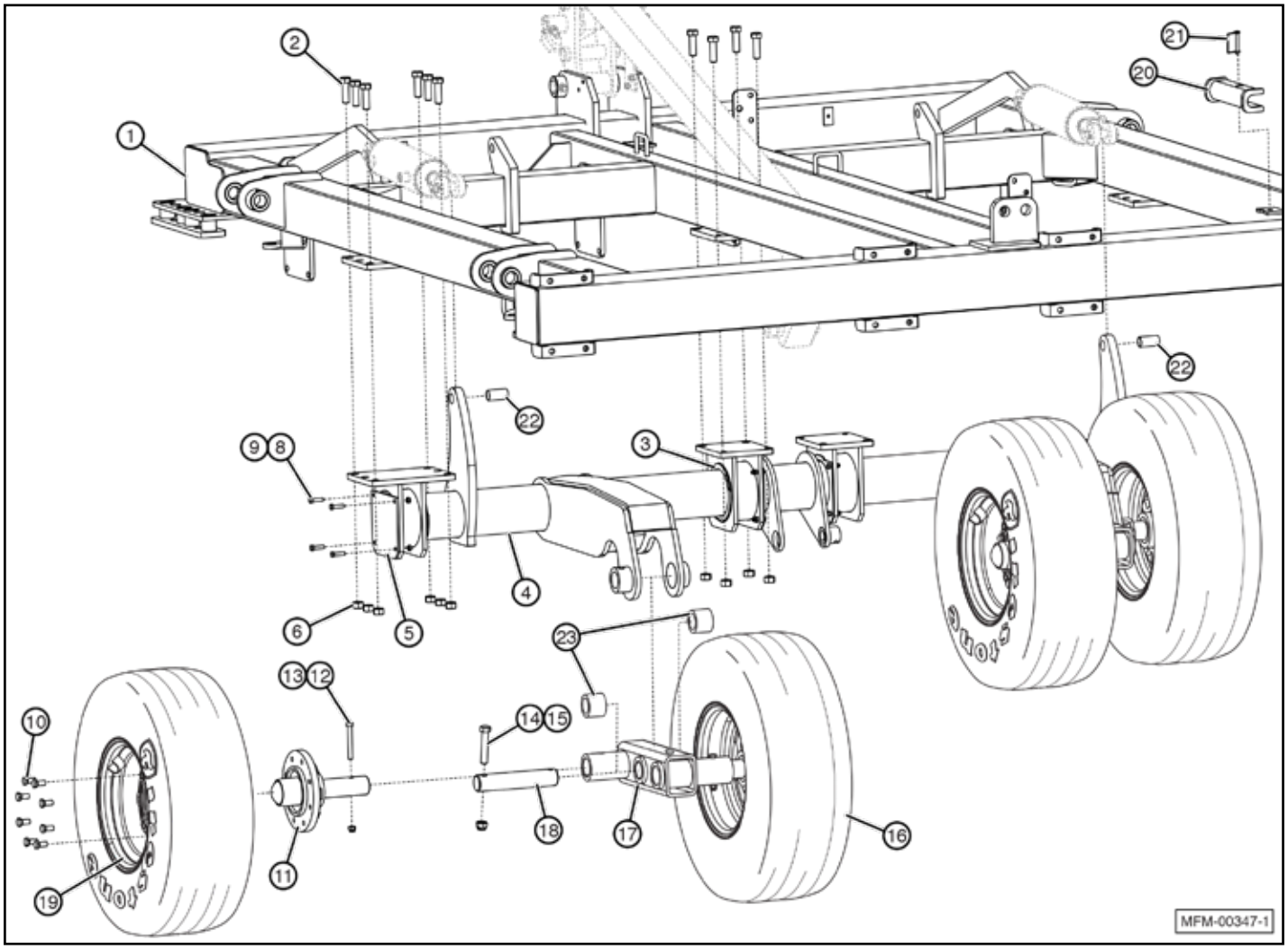

Item	Part Number	Description
1	11148 10455 10275 10108	MAIN FRAME (5112) MAIN FRAME (5114) MAIN FRAME (5127, 5132) MAIN FRAME (5140)
2	BHY-7525	BOLT, HEX, 3/4-10 X 2-1/2 GRADE 8
3	QT-1173	INSERT, AXLE MOUNT, SPLIT
4	10459 10431	MAIN AXLE ASSEMBLY (5112, 5114) MAIN AXLE ASSEMBLY (5127, 5132, 5140)
5	10432 QT-1133 QT-1132	BEARING, PIVOT BUSHING, PLASTIC PLATE, COVER
6	NLT-7510	NUT, LOCK, TOP, 3/4-10
7	—	—
8	BH-3813	BOLT, HEX, 3/8-16 X 1.25
9	NLT-3816	NUT, TOP LOCK, 3/8-16
10	WN-0056 WN-0063	WHEEL NUTS 9/16 WHEEL NUTS 5/8
11	*RT-2175 *RD-4417	HUB ASSEMBLY, 8 BOLT, 4500 LB (5112, 5114) HUB ASSEMBLY, 8 BOLT, 7500 LB (5127, 5132, 5140)
12	BH-5040 BH-5050	BOLT, HEX, 1/2-13 X 4 (5112, 5114) BOLT, HEX, 1/2-13 X 5 (5127, 5132, 5140)

Item	Part Number	Description
13	NLT-5013	NUT, TOP LOCK, 1/2-13
14	BH-7540	BOLT, HEX, 3/4-10 X 4 GRADE 5
15	NLT-7510	NUT, TOP LOCK, 3/4-10
16	12615 12617	TIRE, IF320/70R15 (5112, 5114) TIRE, VF285/70R19.5 (5127, 5132, 5140)
17	10457 11027 10194 10196	AXLE, WALKING BEAM LT (5112, 5114) AXLE, WALKING BEAM RT (5112, 5114) AXLE, WALKING BEAM MAIN LT (5127, 5132, AND 5140) AXLE, WALKING BEAM MAIN RT (5127, 5132, AND 5140)
18	QT-1183	PIN, STRAIGHT
19	RT-2179 12591	RIM, 15 X 10, 8 BOLT, 5000 LB (5112, 5114, 5120, 5124) RIM, 19.5 X 8.25, 8 BOLT, 7400 LB (5127, 5132, 5140)
20	10793	LOCK, CYLINDER, 10”
21	LP-3825	PIN, LYNCH, 3/8” x 2-1/2”
22	QT-1150	BUSHING, SPRING
23	QT-1124	BUSHING, SPRING

*See separate drawing for serviceable parts.

Main Frame and Axle for IC-5120 and IC-5124

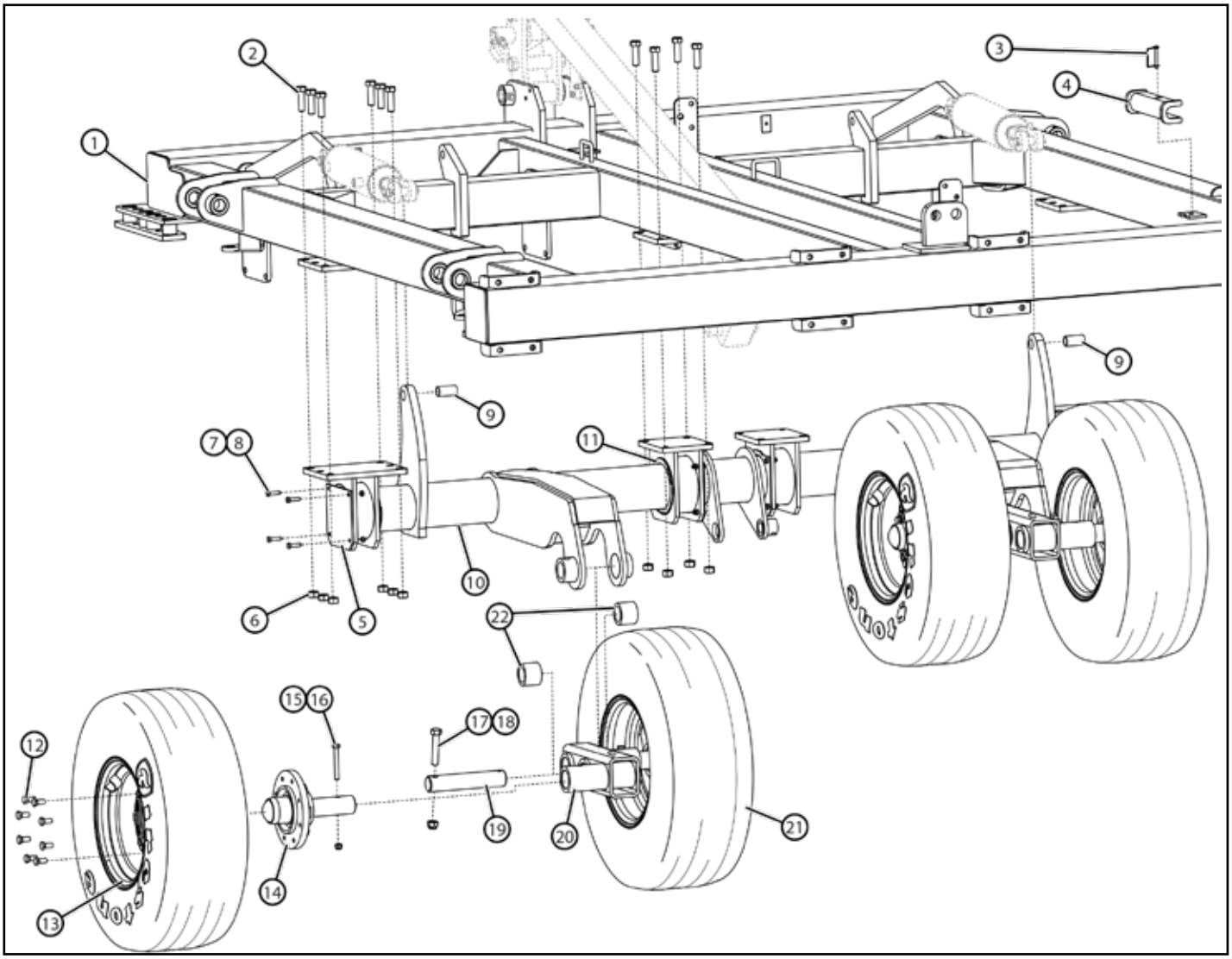

Item	Part Number	Description
1	10818 11121	MAIN FRAME (5120) MAIN FRAME (5124)
2	BHY-7525	BOLT, HEX, 3/4-10 X 2-1/2 GRADE 8
3	LP-3825	PIN, LYNCH, 3/8” X 2-1/2”
4	10793	LOCK, CYLINDER, 10”
5	10432 QT-1133 QT-1132	BEARING, PIVOT BUSHING, PLASTIC PLATE, COVER
6	NH-7510	NUT, HEX, 3/4-10
7	BH-3813	BOLT, HEX, 3/8-16 X 1.25
8	NLT-3816	NUT, TOP LOCK, 3/8-16
9	QT-1150	BUSHING, SPRING
10	10820	MAIN AXLE ASSEMBLY
11	QT-1173	INSERT, AXLE MOUNT, SPLIT

Item	Part Number	Description
12	WN-0063	WHEEL NUTS 5/8
13	RT-2179	RIM, 15 X 10, 8 BOLT, 5000 LB (5112, 5114, 5120, 5124)
14	*RT-3185	HUB ASSEMBLY, 8 BOLT, 6000 LB
15	BH-5050	BOLT, HEX, 1/2-13 X 5
16	NLT-5013	NUT, TOP LOCK, 1/2-13
17	BH-7540	BOLT, HEX, 3/4-10 X 4 GRADE 5
18	NLT-7510	NUT, TOP LOCK, 3/4-10
19	QT-1183	PIN, STRAIGHT
20	11227 11226	AXLE, WALKING BEAM MAIN LT AXLE, WALKING BEAM MAIN RT
21	12615	TIRE, IF320/70R15
22	QT-1124	BUSHING, SPRING

*See separate drawing for serviceable parts.

Wing Frame for IC-5120, IC-5124, IC-5127, and IC-5132

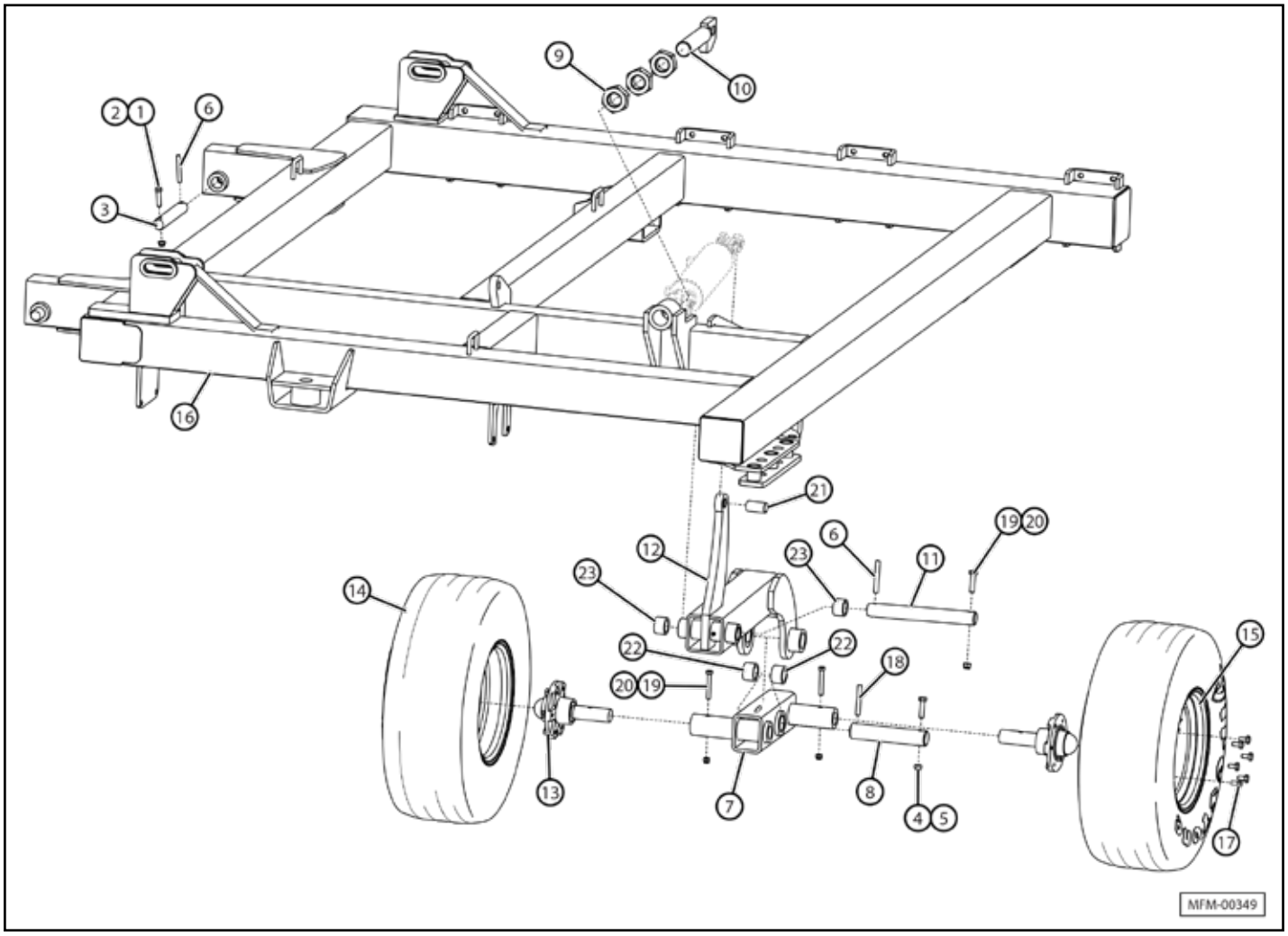

Item	Part Number	Description
1	BHY-5635	BOLT, HEX, 9/16-12 X 3-1/2 GRADE 8
2	NLT-5612	NUT, TOP LOCK, 9/16-12
3	10283	PIN, STRAIGHT, 1-1/2 X 10-5/16
4	BH-7540	BOLT, HEX, 3/4-10 X 4 GRADE 8
5	NLT-7510	NUT, TOP LOCK, 3/4-10
6	RD-5062	PIN, SPRING ROLL, 1/2 X 2-1/2
7	12624 12623	AXLE, WALKING BEAM, LT AXLE, WALKING BEAM, RT
8	QT-1183	PIN, STRAIGHT
9	NHJ-2005	NUT, JAM, HEAVY HEX, 2-5
10	10696	PIVOT POST, ADJUSTABLE
11	RD-5061	PIN, STRAIGHT
12	12625	AXLE, LINK
13	*WDL-2507	HUB ASSEMBLY, 6-HOLE
14	12490	TIRE, IF280/70R15
15	HD-1368	RIM, 15 X 8, 6 BOLT, 2900 LB

Item	Part Number	Description
16	10840 10841 11114 11115 10763 10764 10277 10270	WING FRAME, LEFT (5120) WING FRAME, RIGHT (5120) WING FRAME, LEFT (5124) WING FRAME, RIGHT (5124) WING FRAME, LEFT (5127) WING FRAME, RIGHT (5127) WING FRAME, LEFT (5132) WING FRAME, RIGHT (5132)
17	WB-5010	WHEEL BOLTS, 1/2-20 X 1-1/4
18	QT-1143	PIN, SPRING ROLL, 1/2 X 3-1/2
19	BHY-5635	BOLT, HEX, 9/16 X 3-1/2 GRADE 8
20	NLT-5612	NUT, TOP LOCK, 9/16
21	QT-1150	BUSHING, SPRING
22	QT-1124	BUSHING, SPRING
23	RD-4889	BUSHING

*See separate drawing for serviceable parts.

Wing Frame, Inside, for IC-5140

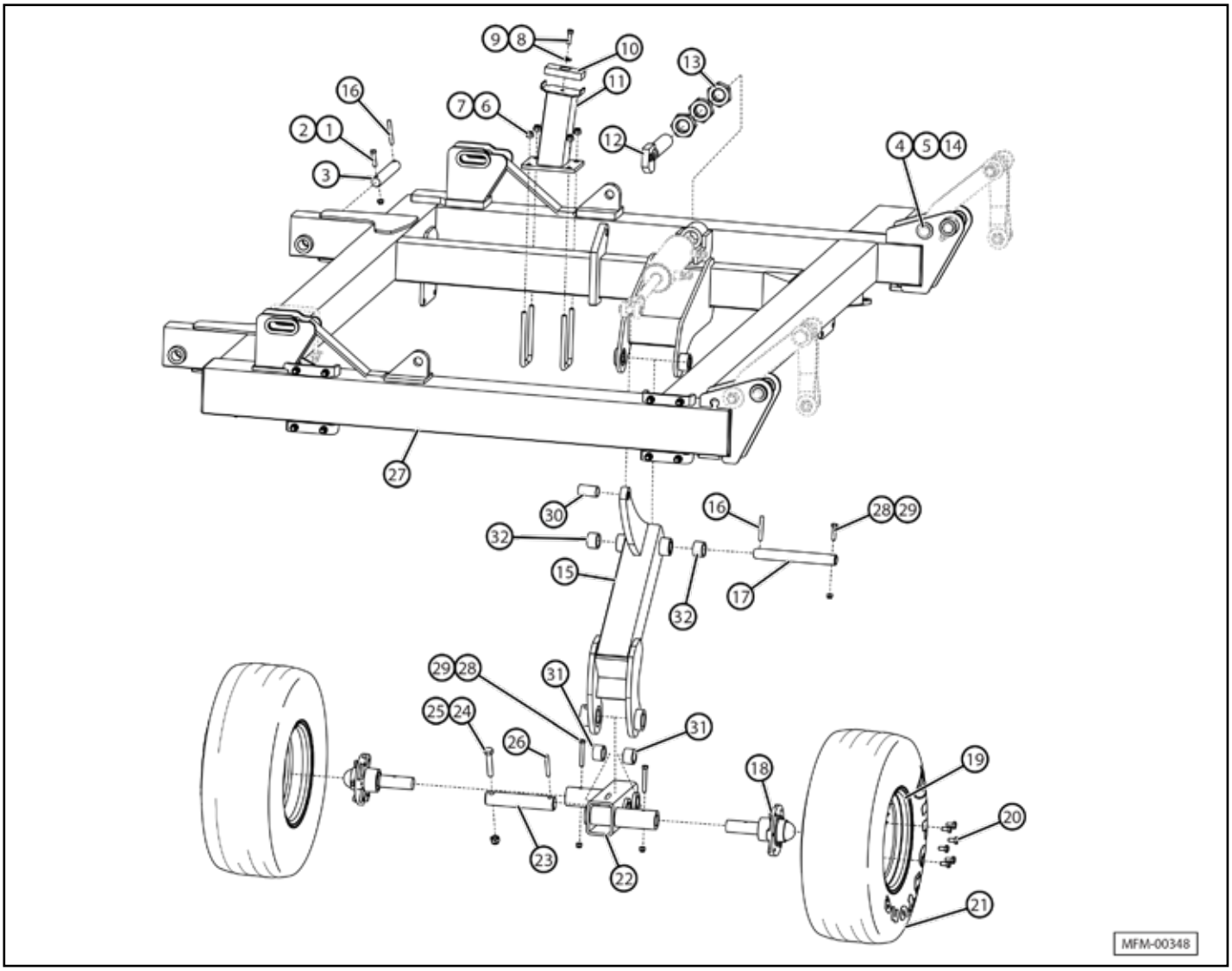

Item	Part Number	Description
1	BHY-5635	BOLT, HEX, 9/16-12 X 3-1/2 GRADE 8
2	NLT-5612	NUT, TOP LOCK, 9/16-12
3	10283	PIN, STRAIGHT 1-1/2 X 10-5/16
4	10720	BOLT, HEX, 1-8 X 8 GRADE 8, SPECIAL
5	NLT-1008	NUT, TOP LOCK, 1-8
6	BU-5848	U-BOLT, 5/8 X 4 X 8.00
7	NLT-6311	NUT, TOP LOCK, 5/8-11
8	BH-5018	BOLT, HEX, 1/2-13 X 1-3/4
9	FW-0050	WASHER, FLAT, 1/2”
10	RT-3415	BUMPER, RUBBER
11	10265	BRACKET, WING REST
12	10696	PIVOT POST, ADJUSTABLE
13	NHJ-2005	NUT, JAM, HEAVY HEX, 2-5
14	FW-0100	1” PLAIN FLAT WASHER
15	12625	AXLE LINK
16	RD-5062	PIN, SPRING ROLL, 1/2 X 2.50
17	RD-5061	PIN, STRAIGHT

Item	Part Number	Description
18	*12485	6-HOLE HUB ASSEMBLY
19	HD-1368	RIM, 15 X 8, 6 BOLT, 2900 LB.
20	WB-5010	WHEEL BOLT, 1/2 X 1-1/4
21	12490	TIRE, IF280/70R15
22	12624 12623	AXLE, WALKING BEAM, LT AXLE, WALKING BEAM, RT
23	QT-1183	PIN, STRAIGHT
24	BH-7540	BOLT, HEX, 3/4-10 X 4 GRADE 8
25	NLT-7510	NUT, TOP LOCK, 3/4-10
26	QT-1143	PIN, SPRING ROLL, 1/2 X 3.50
27	10141 10142	WING FRAME ASSEMBLY, LEFT INSIDE WING FRAME ASSEMBLY, RIGHT INSIDE
28	BHY-5635	BOLT, HEX, 9/16 X 3-1/2 GRADE 8
29	NLT-5612	NUT, TOP LOCK, 9/16-12
30	QT-1150	BUSHING, SPRING
31	QT-1124	BUSHING, SPRING
32	RD-4889	BUSHING

*See separate drawing for serviceable parts.

Wing Frame, Outside, for IC-5140

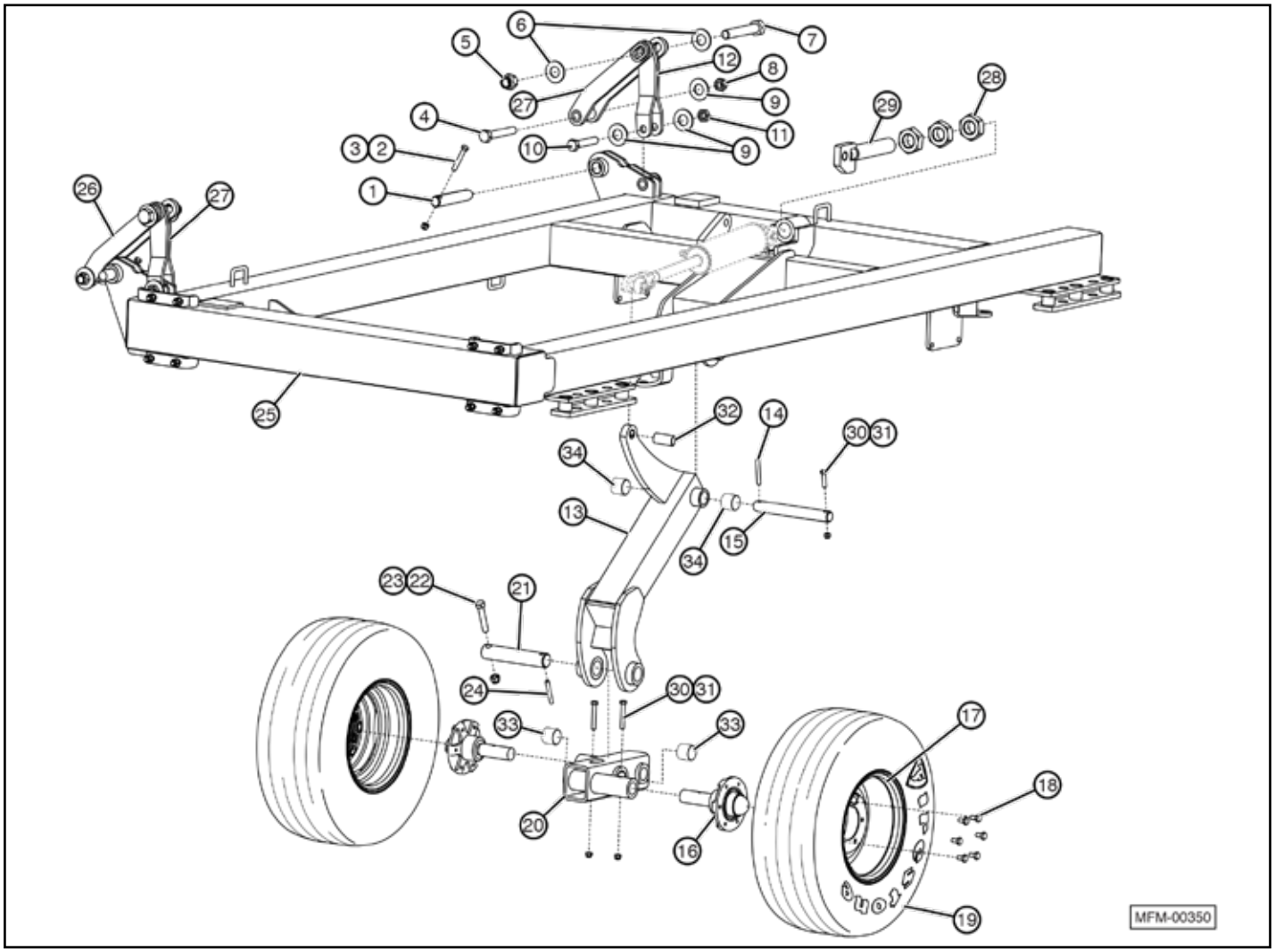

Item	Part Number	Description
1	SPR-2712	HINGE PIN, 1-1/2 X 8-1/4
2	NLT-5612	NUT, TOP LOCK, 9/16-12
3	BHY-5635	BOLT, HEX, 9/16-12 X 3-1/2 GRADE 8
4	10720	BOLT, HEX, 1-8 X 6.5, GRADE 8
5	NY-1307	NUT, LOCK, NYLON, 1-1/4-7
6	FW-0125	WASHER, FLAT, 1-1/4
7	10707	BOLT, HEX, 1-1/4-7 X 7-1/2 GRADE 8
8	NLT-1008	NUT, TOP LOCK, 1-8
9	FW-0100	WASHER, FLAT, 1”
10	10722	BOLT, HEX, 1-8 X 4, GRADE 8, SPECIAL
11	NYJ-1008	NUT, LOCK, NYLON, JAM, 1-8
12	10285	LINK, YOKE (LEFT SIDE) REAR LINK, YOKE (RIGHT SIDE AS SHOWN) FRONT
13	12625	AXLE LINK
14	RD-5062	ROLL PIN, 1/2 X 2-1/2
15	RD-5061	PIN, STRAIGHT
16	*12485	6-HOLE HUB ASSEMBLY
17	HD-1368	RIM, 15 X 8, 6 BOLT, 2900 LB
18	WB-5010	WHEEL BOLTS, 1/2 X 1-1/4

Item	Part Number	Description
19	12490	TIRE, IF280/70R15
20	12623	AXLE, WALKING BEAM (BOTH WINGS)
21	QT-1183	PIN, STRAIGHT
22	BH-7540	BOLT, HEX, 3/4-10 X 4”
23	NLT-7510	NUT, TOP LOCK, 3/4-10
24	QT-1143	PIN, SPRING, ROLL, 1/2 X 3-1/2
25	10148 10166	WING FRAME ASSEMBLY, LEFT OUTSIDE WING FRAME ASSEMBLY, RIGHT OUTSIDE
26	10289	BRACKET, LINK
27	10725	LINK, YOKE (RIGHT SIDE AS SHOWN) REAR LINK, YOKE (LEFT SIDE) FRONT
28	NHJ-2005	NUT, JAM, HEAVY HEX, 2-5
29	10696	PIVOT POST, ADJUSTABLE
30	BHY-5635	BOLT, HEX, 9/16 X 3-1/2 GRADE 8
31	NLT-5612	NUT, TOP LOCK, 9/16
32	QT-1150	BUSHING, SPRING
33	QT-1124	BUSHING, SPRING
34	RD-4889	BUSHING

*See separate drawing for serviceable parts.

Hub Components for WDL-2507

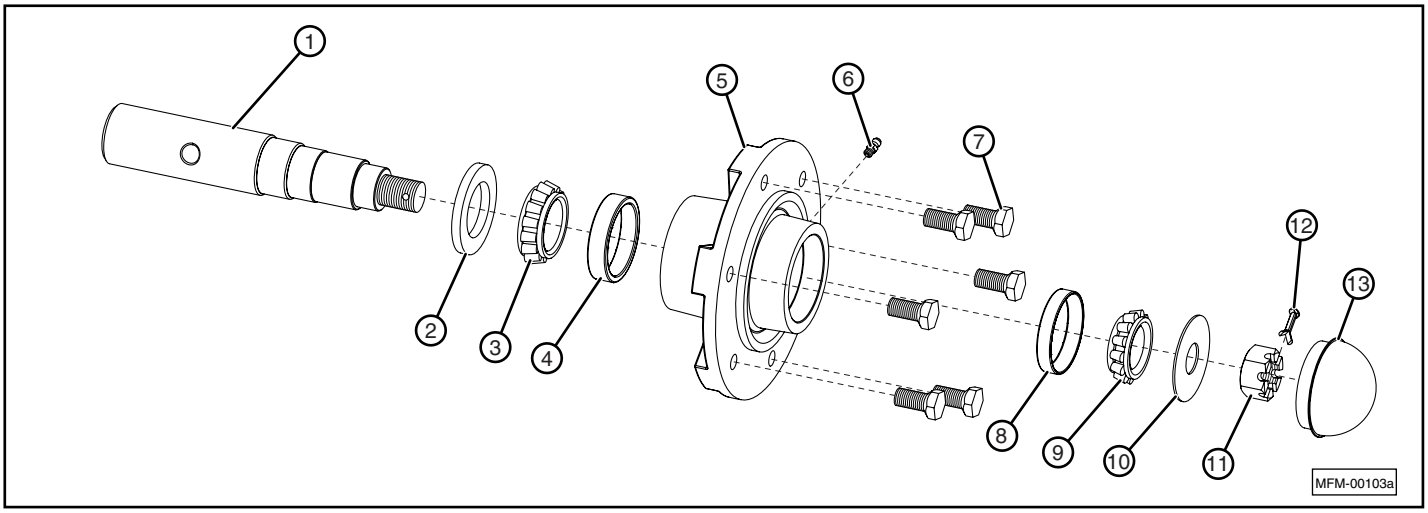

Item	Part Number	Description
6-HOLE HUB, 3560 LB (9.5L/11L – 15 x 6 / 15 x 8 RIM)		
1	WDL-2505	SPINDLE, 1-3/4 X 9-1/2
2	HD-1360	GREASE SEAL, 6 HOLE HUB
3	HD-1362	INNER BEARING
4	HD-1366	INNER RACE
5	HD-1361	HUB WITH RACES, 6 HOLE HUB
6	GZ-0601	GREASE ZERK
7	WB-5010	WHEEL BOLTS, 1/2-20 X 1-1/4

Item	Part Number	Description
8	HD-1171	OUTER RACE
9	HD-1363	OUTER BEARING
10	HD-1364	SPINDLE FLAT WASHER, 15/16
11	HD-1365	SPINDLE HEX CASTLE NUT, 7/8-14
12	CP-1517	COTTER PIN, (0.150 X 1-3/4)
13	HD-1367	DUST CAP
—	HD-1371	6-HOLE HUB ASSEMBLY (Includes items 2, 3, 5, 6, 7, 9, and 13).

Hub Components for 12485

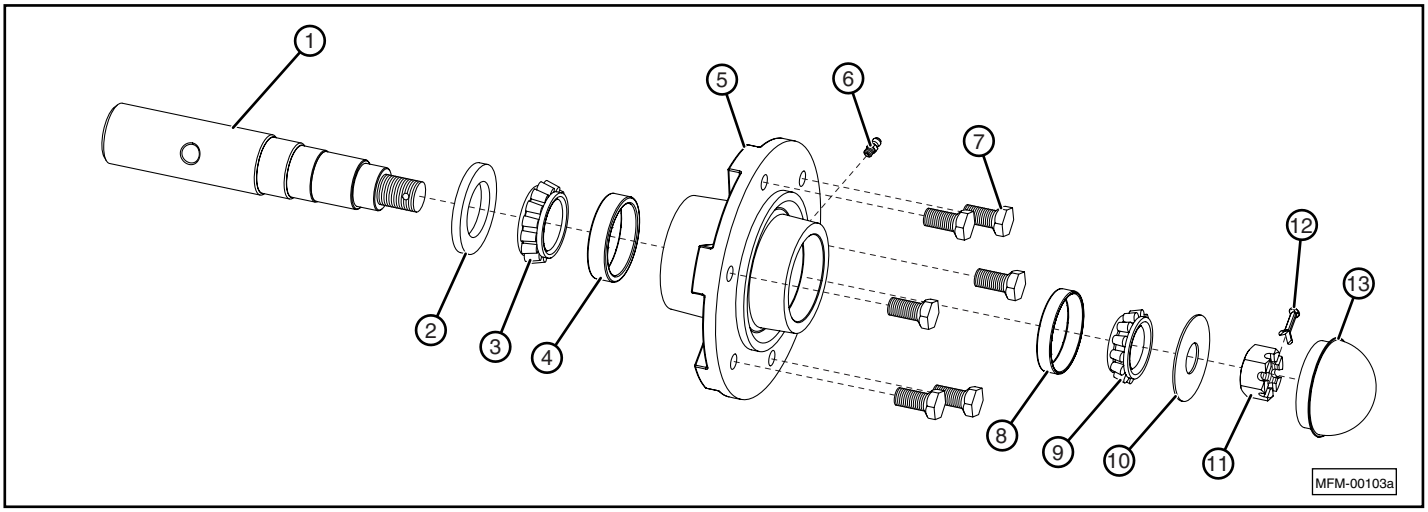

Item	Part Number	Description
6-HOLE HUB, 4570 LB (IF280/70R15 – 15 X 8 RIM)		
1	12492	SPINDLE
2	13507	GREASE SEAL, 6 HOLE HUB
3	RT-3186	INNER BEARING
4	RT-3192	INNER RACE
5	12492	HUB WITH RACES, 6 HOLE HUB
6	GZ-0601	GREASE ZERK
7	WB-5010	WHEEL BOLTS, 1/2-20 X 1-1/4

Item	Part Number	Description
8	HD-1171	OUTER RACE
9	HD-1363	OUTER BEARING
10	HD-1364	SPINDLE FLAT WASHER, 15/16
11	HD-1365	SPINDLE HEX CASTLE NUT, 7/8-14
12	CP-1517	COTTER PIN, (0.150 X 1-3/4)
13	HD-1367	DUST CAP
—	12487	6-HOLE HUB ASSEMBLY (Includes items 2, 3, 5, 6, 7, 9, and 13).

Hub Components for RT-2175

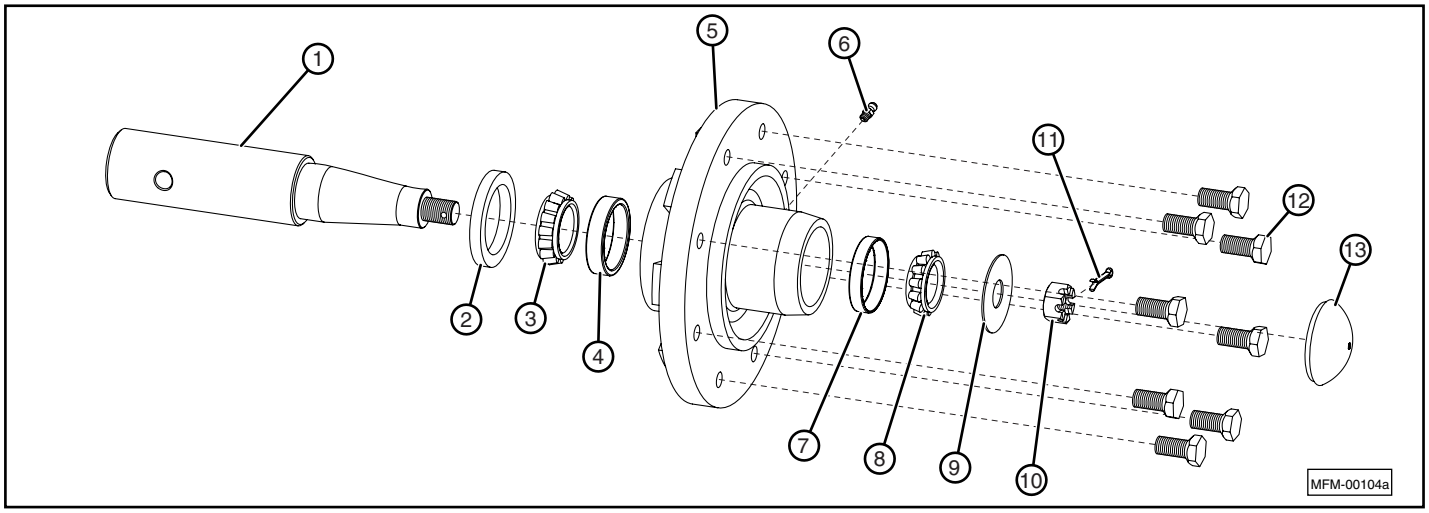

Item	Part Number	Description
8-HOLE HUB, 4500 LB (12.5L/31 X 13.5-15 x 10 RIM)		
1	RT-2170	SPINDLE, 2-1/4 X 11-1/2
2	RT-2172	GREASE SEAL, 8 HOLE HUB
3	RT-2173	INNER BEARING
4	RT-2169	INNER RACE
5	RT-2174	HUB WITH RACES, 8 HOLE HUB
6	GZ-0601	GREASE ZERK
7	HD-1171	OUTER RACE

Item	Part Number	Description
8	HD-1363	OUTER BEARING
9	RT-2176	SPINDLE FLAT WASHER, 13/16
10	RT-2177	SPINDLE HEX CASTLE NUT, 3/4-16
11	CP-5312	COTTER PIN (0.150 X 1-1/4)
12	WB-5610	WHEEL BOLTS, 9/16-18 X 1
13	RT-2178	DUST CAP
—	RT-2171	8-HOLE HUB ASSEMBLY (includes items 2, 3, 5, 6, 8, 12, and 13).

Hub Components for RT-3185

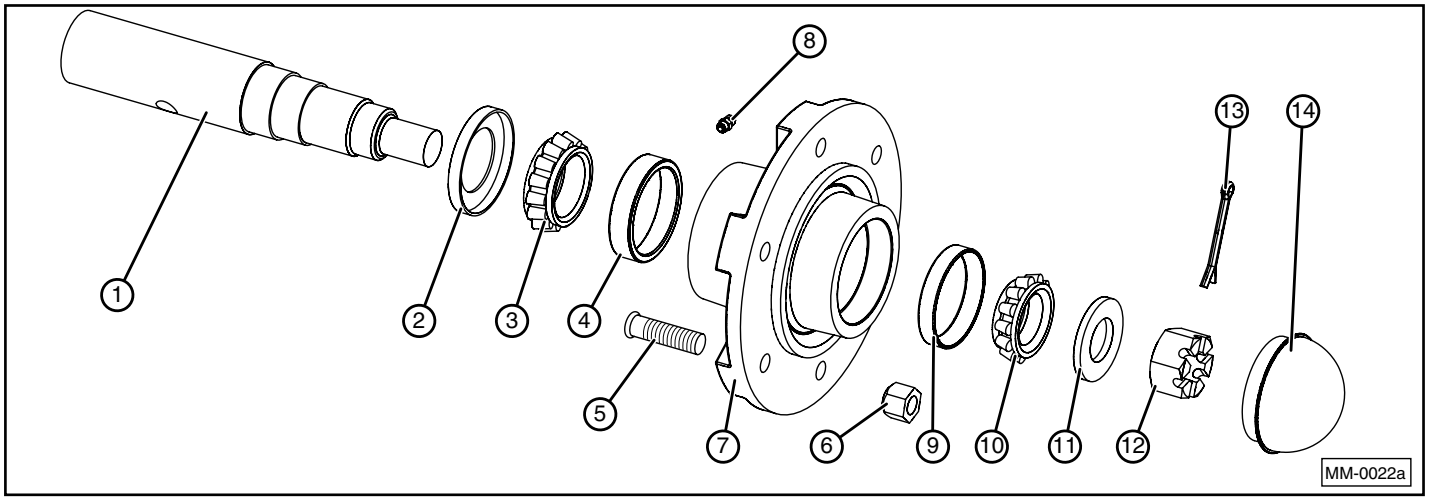

Item	Part Number	Description
1	RT-3180	SPINDLE, 2 3/4 X 12 1/2
2	RT-3182	GREASE SEAL, 8 BOLT HD HUB
3	RT-3183	INNER BEARING
4	RT-3191	INNER RACE
5	RT-3193	WHEEL STUD 5/8-18 X 2 1/2
6	WN-0063	WHEEL NUTS 5/8
7	RT-3184	HUB WITH RACES, 6 HOLE HUB
8	GZ-0601	GREASE ZERK

Item	Part Number	Description
9	RT-3192	OUTER RACE
10	RT-3186	OUTER BEARING
11	RT-3190	SPINDLE FLAT WASHER
12	RT-3187	SPINDLE HEX CASTLE NUT
13	CP-7320	COTTER PIN (0.207 X 2)
14	RT-3188	DUST CAP
—	RT-3181	8-BOLT HUB ASSEMBLY, 6000LB (includes items 2,3,5,6,7,8,10, and 14)

Hub Components for RD-4417

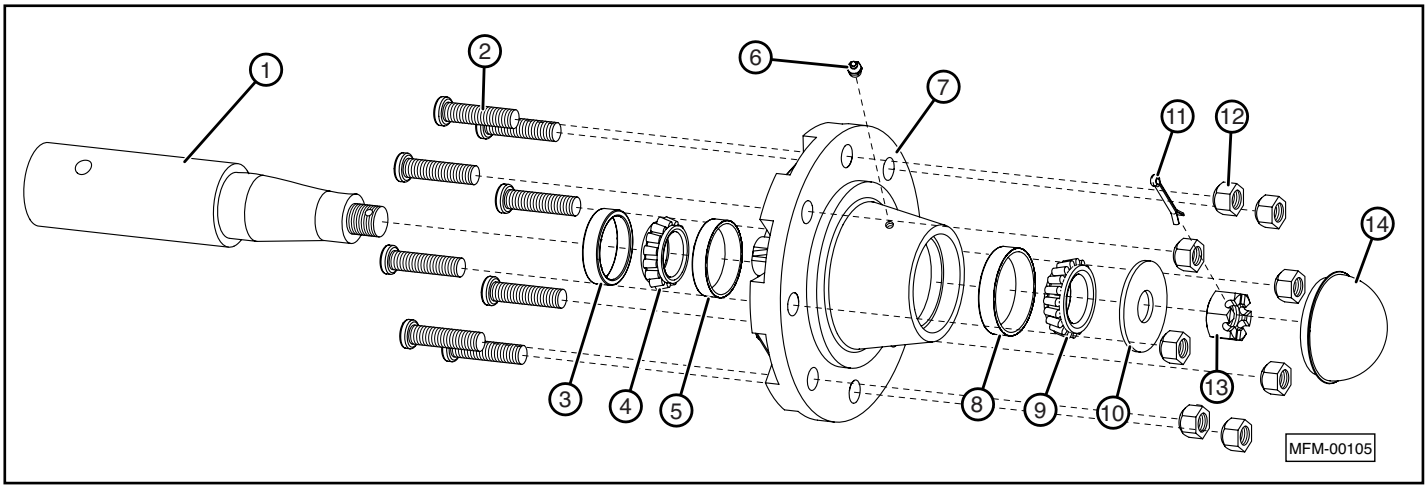

Item	Part Number	Description
8-BOLT HUB, 7500 LB (12.5L-16 HWY - 16.5 x 9.75 RIM)		
1	RD-4416	SPINDLE, 3 X 12-1/2
2	RT-3193	WHEEL STUD, 5/8-18 X 2-1/2
3	RD-4582	GREASE SEAL, 8 BOLT 7500 LB HUB
4	RD-4583	INNER BEARING
5	RD-4584	INNER RACE
6	GZ-0601	GREASE ZERK
7	RD-4581	HUB WITH RACES, 8 BOLT 7500 LB HUB
8	RT-3192	OUTER RACE

Item	Part Number	Description
9	RT-3186	OUTER BEARING
10	RT-3190	SPINDLE FLAT WASHER, 1-5/16
11	CP-7320	COTTER PIN (0.207 X 2)
12	WN-0063	WHEEL NUTS, 5/8
13	RT-3187	SPINDLE HEX CASTLE NUT, 1-14
14	RT-3188	DUST CAP
—	RD-4580	8-BOLT HUB ASSEMBLY, 7500 LB (includes items 2, 3, 4, 6, 7, 9, 12, and 14).

Disk Gang for Incite 5100 Series

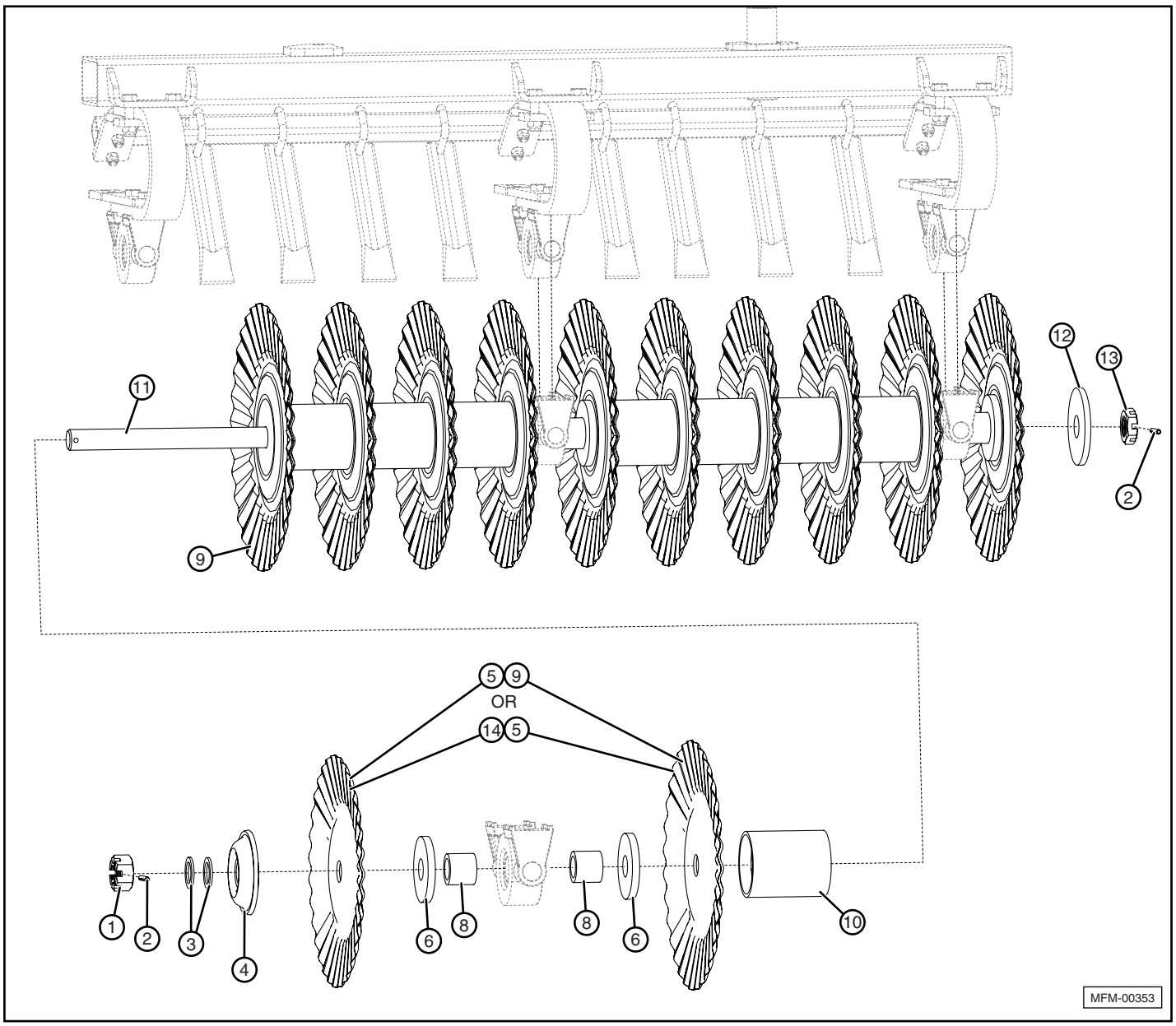

Item	Part Number	Description
1	10657	NUT, CASTLE, 1-3/4-5, PLAIN
2	10655	PIN, SPRING ROLL, 3/8 X 2.5
3	10656	PLATE, WASHER
4	10600	WASHER, TENSION, ROUND HOLE
5	*10598	BLADE, DISK, 28 WAVE, 20” (OUTSIDE OF UNIT ONLY)
6	10729	PLATE, WASHER
7	—	—
8	12218	TUBE, ROUND
9	10597	BLADE, DISK, 28 WAVE, 22”
10	10319	SPOOL, DISK, STRAIGHT

Item	Part Number	Description
11	10746 10829 10635 10634	DISK GANG SHAFT, 8 BLADE (5132) DISK GANG SHAFT, 9 BLADE (5120, 5124) DISK GANG SHAFT, 11 BLADE (5112, 5127, 5140) DISK GANG SHAFT, 12 BLADE (5114, 5124, 5127, 5132, 5140)
12	10654	PLATE, WASHER (INSIDE OF UNIT ONLY)
13	10658	NUT, CASTLE,1-3/4-5, PLAIN (INSIDE OF UNIT ONLY)
14	*10599	BLADE, DISK, 28 WAVE, 18” (OUTSIDE OF UNIT ONLY)

* On outside of unit only. All other disk gangs have all 10597 blades.

Center Wavy Disk for Incite 5100 Series

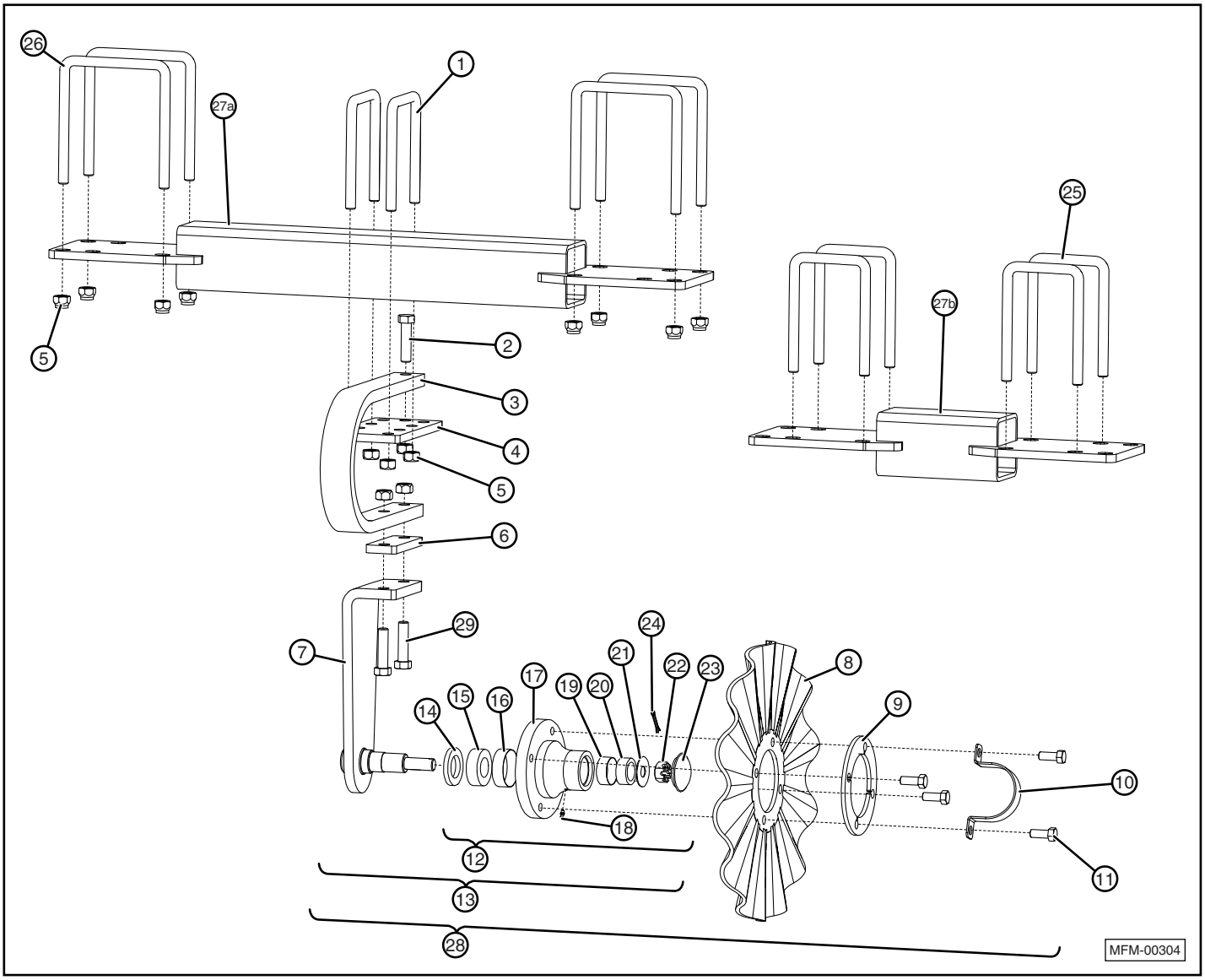

Item	Part Number	Description
1	BU-5846	U-BOLT, 5/8-11 x 4 x 6
2	BH-6325	BOLT, HEX, 5/8-11 X 2-1/2 GRADE 5
3	QT-1027	SPRING, CENTER DISK
4	QT-1028	PLATE, SPRING, CLAMP
5	NLT-6311	NUT, TOP LOCK, 5/8-11
6	RD-4919	PLATE, SPACER
7	RD-4886	DISK MOUNT ASSEMBLY, CENTER
8	RD-4265	CENTER DISK, WAVY
9	QT-1026	PLATE, CENTER DISK HUB
10	RD-5092	RETAINER, HUB
11	BHF-5013	HUB BOLT, 1/2-20 x 1-1/4
12	HD-1170	HUB ASSEMBLY
13	RD-5097	DISK MOUNT ASSEMBLY, CENTER, W/HUB (includes items 7 and 12)
14	HD-1160	GREASE SEAL
15	HD-1162	BEARING, INNER
16	HD-1171	RACE, INNER

Item	Part Number	Description
17	HD-1161	HUB WITH RACES, 4 HOLE
18	GZ-2528	ZERK, GREASE
19	HD-1172	RACE, OUTER
20	HD-1163	BEARING, OUTER
21	HD-1164	WASHER, FLAT
22	HD-1165	NUT, CASTLE
23	HD-1167	CAP, DUST
24	CP-5312	PIN, COTTER, .150 x 1-1/4
25	BU-5848	U-BOLT, 5/8-11 x 4 x 8
26	BU-5867	U-BOLT, 5/8-11 x 6 x 7
27a 27b	11401 11406	TUBE ASSEMBLY (5112, 5114, 5127, 5132) TUBE ASSEMBLY (5120, 5124)
28	RD-5093	DISK ASSEMBLY, CENTER (includes items 13, 8, 9, 10, and 11)
29	BHY-6330	BOLT, HEX, 5/8-11 X 3 GRADE 8

Items 14 - 24 are part of HD-1170 Hub Assembly, Item 12.

Disk Mount and Scrapers for Incite 5100 Series

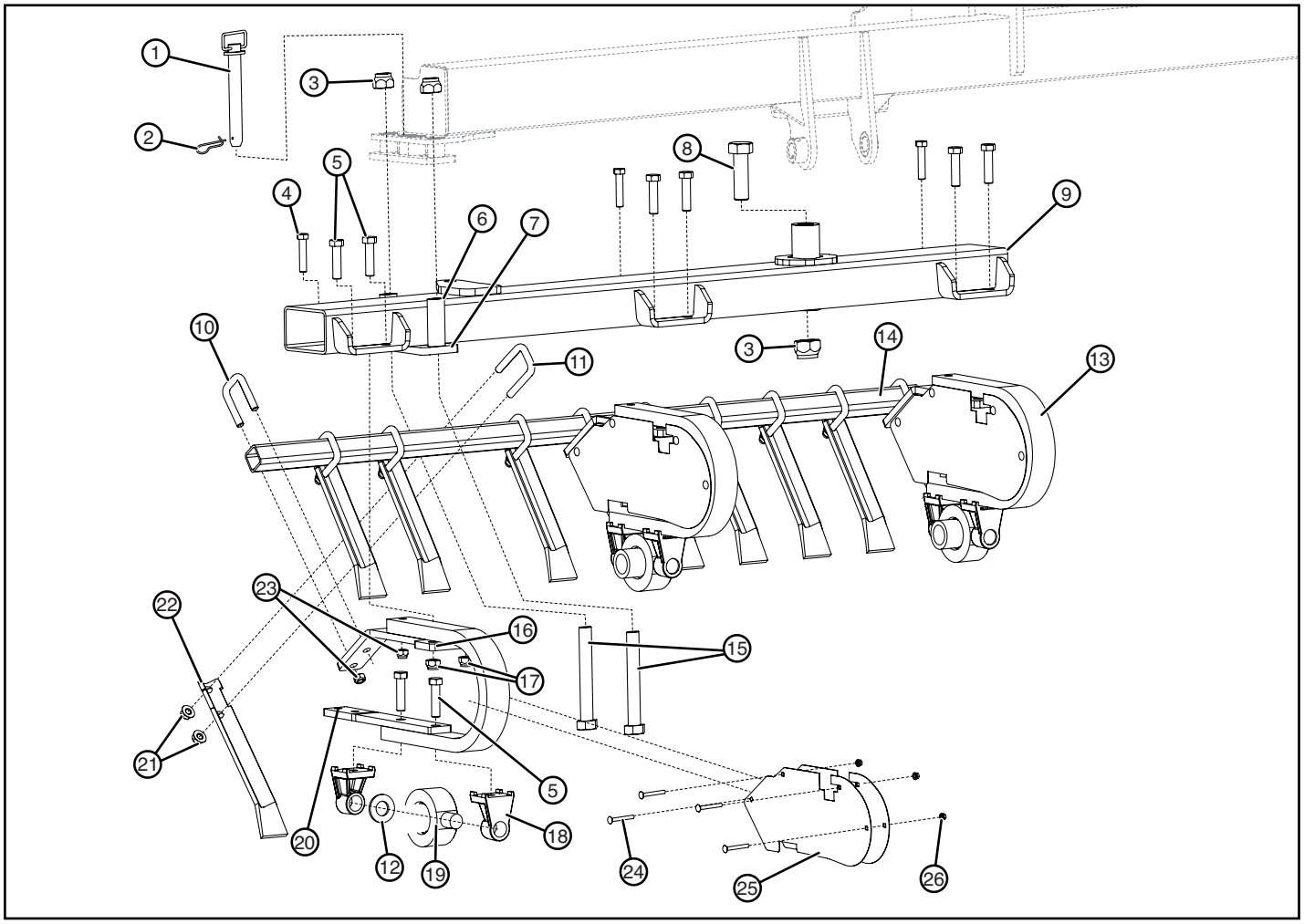

Item	Part Number	Description
1	RD-4900	PIN, HITCH, 1.25
2	RD-5076	CLIP, TWIST, 3/16
3	NY-1307	NUT, LOCK, NYLON, 1-1/4-7
4	12780	BOLT, HEX, 5/8-11 X 3-1/4 GRADE 8
5	BHY-7533	BOLT, HEX, 3/4-10 X 3-1/4 GRADE 8
6	QT-1209	SPACER
7	11101 10619 10666 10669 10676	DISK ADJUST CLAMP, WING REAR (5120) DISK ADJUST CLAMP, (5112, 5114, 5120) ALL; (5124, 5127, 5140) MAIN; (5132) MAIN/WING REAR DISK ADJUST CLAMP, WING FRONT (5124, 5127, 5132, 5140) DISK ADJUST CLAMP, WING REAR (5124, 5127); WING REAR INNER (5140) DISK ADJUST CLAMP, WING REAR OUTER (5140)
8	BHY-1310	BOLT, HEX, 1-1/4-7 x 10 GRADE 8
9[1]	—	DISK MOUNT TUBE
10	BU-5823	U-BOLT, 5/8-11 x 2 x 3
11	BU-5824	U-BOLT, 5/8-11 x 2 x 4
12	12253	SHIM, TRUNNION
13	11147	SPRING, DISK GANG

Item	Part Number	Description
14	10321 10477 10547 RD-4968 RD-4974	SCRAPER TUBE, MAIN (5114, 5127, 5132, 5140); WING (5124) SCRAPER TUBE, WING (5132) SCRAPER TUBE, MAIN (5120, 5124); WING (5120) SCRAPER TUBE, MAIN (5112); WING (5127, 5140) SCRAPER TUBE, WING (5132)
15	BHY-1395	BOLT, HEX,1-1/4-7 x 9-1/2 GRADE 8
16	12237	PLATE, CLAMP
17	NLT-7510	NUT, TOP LOCK, 3/4-10
18	12197	BRACKET, TRUNNION
19	10601	BEARING ASSEMBLY. TRUNNION
20	12252	MOUNT, SCRAPER
21	11454	NUT, LOCK, FLANGED, 5/8-11
22	11367	SCRAPER
23	NLT-6311	NUT, TOP LOCK, 5/8-11
24	13598	BOLT, CARRIAGE, 3/8-16 X 3.25, GD2
25	13490	RESIDUE GUARD
26	NLF-3816	NUT, LOCK, FLANGED, 3/8-16

[1]Refer to the layout diagrams in this manual for part numbers, position, and size for each disk unit.

Dura-Reel for Incite 5100 Series

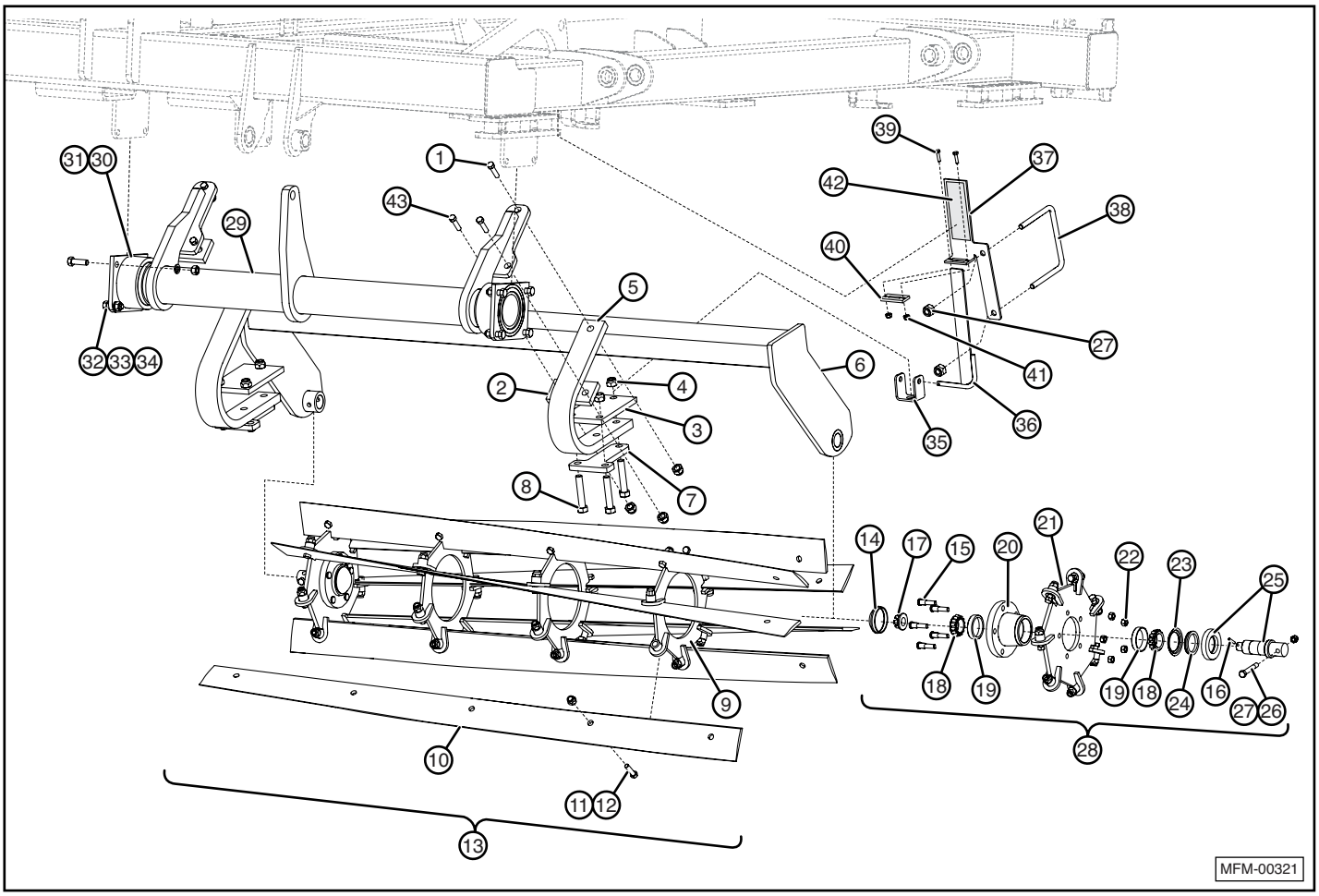

Dura-Reel for Incite 5100 Series (continued)

Item	Part Number	Description
1	BHY-7530	BOLT, HEX, 3/4-10 X 3, GRADE 8
2	RT-2611	PLATE, CLAMP
3	10945	PLATE, CLAMP
4	NLT-7510	NUT, LOCK, TOP, 3/4-10
5	SPR-2079	SPRING, C-SHANK, OPEN
6[1]	10306 10834 10832 10203 10202	51” SPIRAL REEL MOUNT – 52” 58” SPIRAL REEL MOUNT – 59” 66” SPIRAL REEL MOUNT – 67” 72” SPIRAL REEL MOUNT – 73” 80” SPIRAL REEL MOUNT – 81”
7	10964	PLATE, CLAMP
8	BHY-7565	BOLT, HEX, 3/4-10 X 6.5, GRADE 8
9	RD-5002	BRACKET, SPIRAL BLADE, OPEN
10[1]	SPR-5051 SPR-5058 SPR-5066 SPR-5072 SPR-5080	BLADE, SPIRAL REEL, 51” BLADE, SPIRAL REEL, 58” BLADE, SPIRAL REEL, 66” BLADE, SPIRAL REEL, 72” BLADE, SPIRAL REEL, 80”
11	BHP-6323	BOLT, HEX, 5/8-11 X 2.25, GRADE 5, PLAIN
12	NLT-6311	NUT, LOCK, TOP, 5/8-11
13[1]	10307 10833 10831 10201 10152	SPIRAL REEL, 51” SPIRAL REEL, 58” SPIRAL REEL, 66” SPIRAL REEL, 72” SPIRAL REEL, 80”
14	RD-4859	END CAP
15	RD-4861	STUD, 1/2-20 X 2”
16	RD-4863	PIN, ROLL, 1/4 X 1.5”
17	RD-4862	NUT, FLANGE, 1-14
18	RD-4857	BEARING CONE
19	RD-4858	BEARING CUP
20	RD-4855	HUB ASSEMBLY, REEL, 5 BOLT
21	RD-5001	BRACKET,SPIRAL BLADE,HUB
22	NL-5020	NUT, LOCK, CENTER, 1/2-20
23	RD-4856	SEAL, COUNTERFACE
24	RD-4865	SEAL

Item	Part Number	Description
25	RD-4864	SPINDLE, WITH GRASS GUARD AND SEAL
26	RD-5055	BOLT, 1/2-13 X 3-1/4, GRADE 8
27	NLT-5013	NUT, TOP LOCK 1/2-13
28	RD-4854	HUB ASSEMBLY (ITEMS 14-27)
29	10204 10896 10930 10894 10205 10308 10310 10206	PIVOT TUBE, SPIRAL REEL, 80” (5112, 5114, 5127, 5132, 5140) MAIN PIVOT TUBE, SPIRAL REEL, 51” (5120) WING, LH PIVOT TUBE, SPIRAL REEL, 51” (5120) WING, RH PIVOT TUBE, SPIRAL REEL, 58” (5120, 5124) MAIN PIVOT TUBE, SPIRAL REEL, 72” (5124, 5127) WINGS, (5140) INSIDE WING PIVOT TUBE, SPIRAL REEL, 2) 51” 5132 LH WING PIVOT TUBE, SPIRAL REEL, 2) 51” 5132 RH WING PIVOT TUBE, SPIRAL REEL, 72” 5140 OUTSIDE WING
30	10219	BEARING, PIVOT
31	10222	BUSHING, PLASTIC
32	BH-6320	BOLT, HEX, 5/8-11 X 2”
33	NH-6311	NUT, HEX, 5/8-11
34	LW-0063	WASHER, LOCK, 5/8
35	11004	CHANNEL
36	11003	INDICATOR BRACKET
37	10968	PLATE
38	BU-1265	U-BOLT,1/2 X 6 X 5
39	BH-2510	BOLT, HEX, 1/4-20 X 1
40	11097	PLATE
41	NLT-2520	NUT, LOCK, TOP, 1/4-20
42	10965	DECAL, REEL DEPTH
43	BHY-7535	BOLT, HEX, 3/4-10 X 3-1/2” GD 8

[1]Refer to layout diagram for position and size on each unit.

Lift Arm for Incite 5100 Series Finishing Options

3 Bar Harrow Sections With a Single Rolling Basket

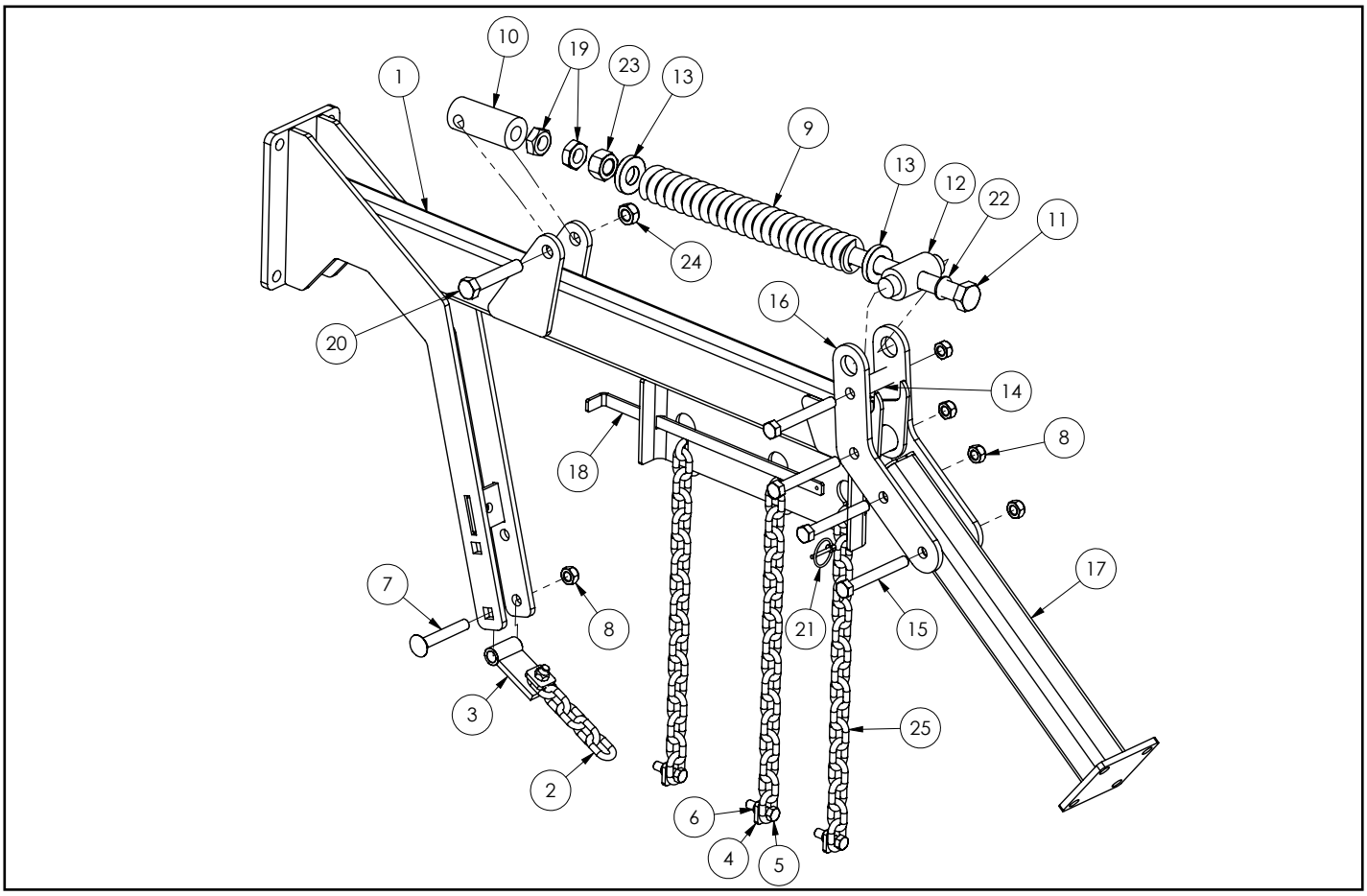

Item	Part Number	Description
1	10962	LIFT ARM,3 BAR
2	CH-0805	CHAIN, 3/8 x 18-LINK
3	FA-4105	PLATE,PIVOT
4	HDD-016	SQUARE WASHER, 1/2"
5	BH-5018	BOLT,HEX,1/2-13X1.75,GD5
6	NLT-5013	NUT,LOCK,TOP,1/2-13
7	BC-6340	BOLT, CARRIAGE, 5/8 X 4
8	NLT-6311	NUT,LOCK,TOP,5/8-11
9	10682	SPRING, COMPRESSION
10	10713	TUBE,ROUND,ADJUSTMENT
11	10959	BOLT,SPECIAL,1-8 x 23.8 GD5
12	10714	BUSHING,TRUNNION
13	10715	WASHER
14	10716	TUBE,ROUND
15	BH-6350	BOLT,HEX,5/8-11X5,GD5

Item	Part Number	Description
16	14676	PLATE,PIVOT
17	14674	PIVOT TUBE
18	10957	FLAT, LIFT CHAIN BRACKET LOCK
19	NHJ-1008	NUT, JAM 1-8
20	BH-7540	BOLT,HEX,3/4-10X4,GD5
21	PC-1913	PIN, CLICK 3/16 X 1 9/16
22	FW-0100	WASHER,FLAT,1,F436
23	NH-1008	NUT,HEX,1-8,GD5
24	NLT-7510	NUT,LOCK,TOP,3/4-10
25	CH-0818	CHAIN, 3/8 x 18-LINK

Lift Arm for Incite 5100 Series Finishing Options

3 Bar Harrow Sections With a Double Rolling Basket

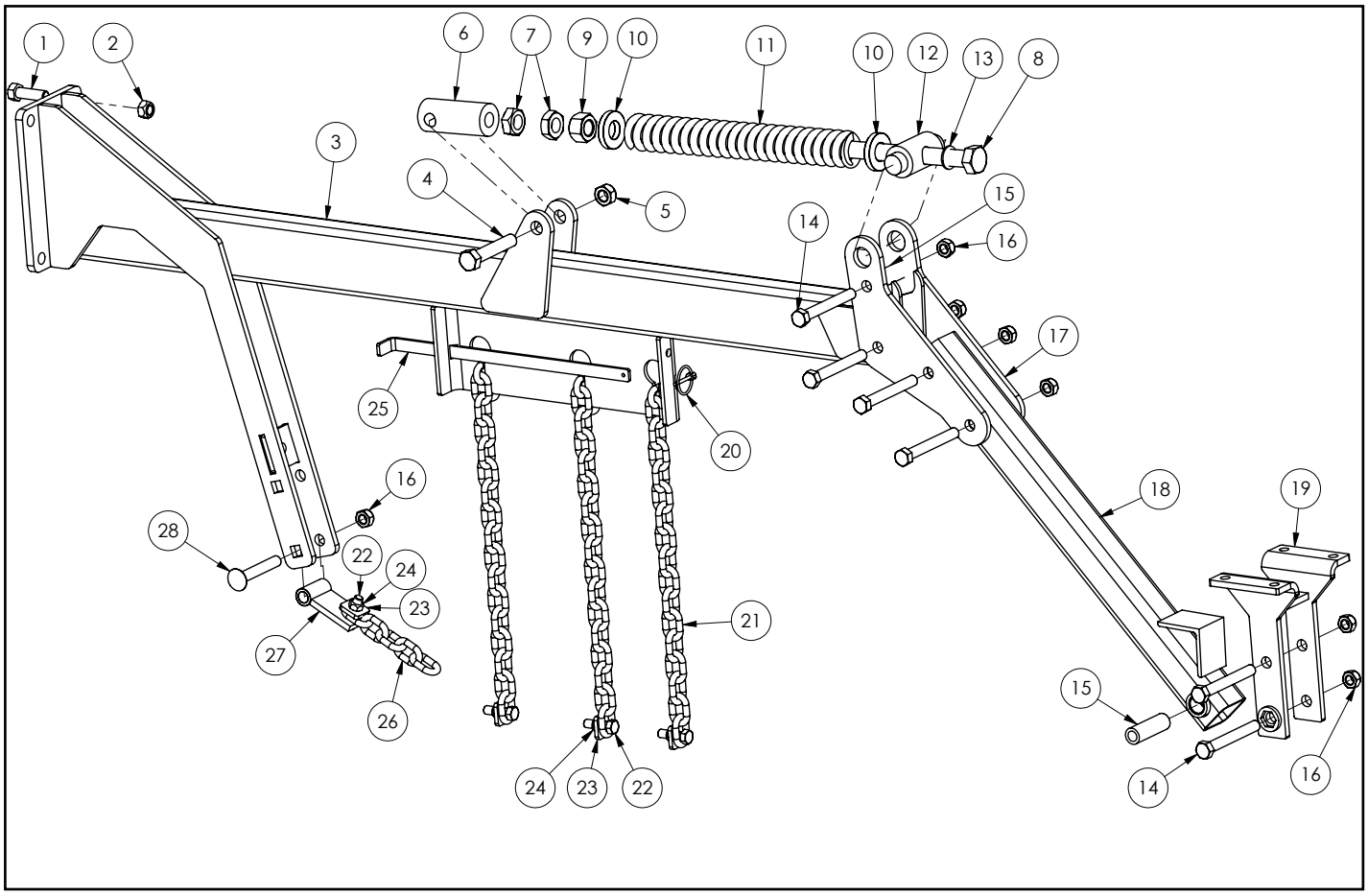

Item	Part Number	Description
1	BH-6320	BOLT, HEX, 5/8-11 X 2, GRADE 5
2	NLT-6311	NUT, TOP LOCK, 5/8-11
3	11678	ARM, LIFT
4	BH-7540	BOLT, HEX, 3/4-10 X 4, GRADE 5
5	NLT-7510	NUT, TOP LOCK, 3/4-10
6	10713	TUBE, ROUND, ADJUSTMENT
7	NHJ-1008	NUT, HEX, JAM, 1-8
8	10959	BOLT, SPECIAL, GRADE 8
9	NH-1008	NUT, HEX, 1-8
10	10715	WASHER
11	10682	SPRING, COMPRESSION
12	10714	BUSHING, TRUNNION
13	FW-0100	WASHER, FLAT
14	BH-6350	BOLT, HEX, 5/8-11 X 5 GRADE 5
15	10716	TUBE, ROUND

Item	Part Number	Description
16	NLT-6311	NUT, TOP LOCK, 5/8-11
17	14852	PLATE, PIVOT
18	14743	ARM, PIVOT
19	13601	DOUBLE PIVOT BRACKET
20	PC-1913	CLICK PIN, 3/16 X 1-9/16
21	CH-0818	LIFT CHAIN, 18 LINK
22	BH-5018	BOLT, HEX, 1/2-13 X 1-3/4 GRADE 5
23	HDD-016	WASHER, SQUARE, 1/2”
24	NLT-5013	NUT, TOP LOCK, 1/2-13
25	10957	BAR, LOCK
26	CH-0805	PULL CHAIN, 5 LINK
27	FA-4105	PULL POINT ASSEMBLY
28	BC-6340	BOLT, CARRIAGE, 5/8 X 4

Lift Arm for Incite 5100 Series Finishing Options

5 Bar Harrow

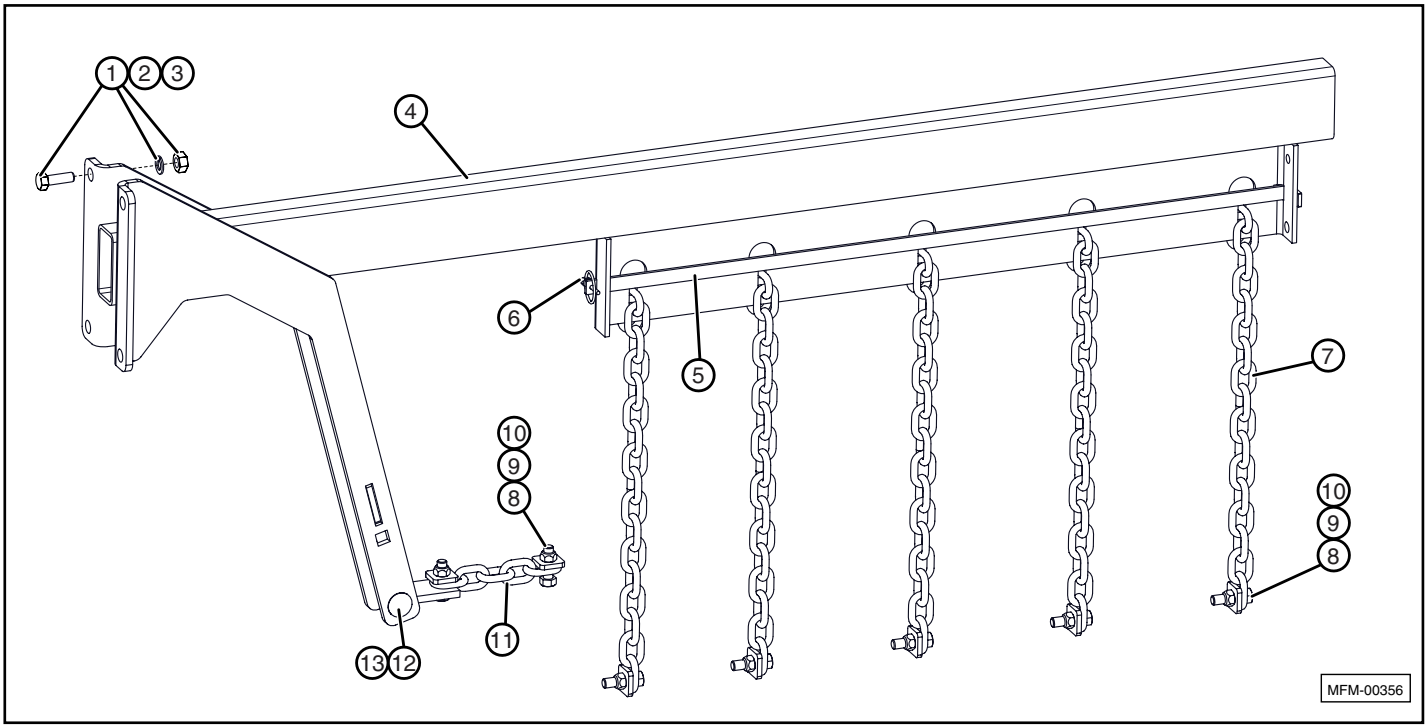

Item	Part Number	Description
1	BH-6320	BOLT, HEX, 5/8-11 X 2, GRADE 5
2	LW-0063	WASHER, LOCK, 5/8
3	NH-6311	NUT, HEX, 5/8-11
4	12706	ARM, LIFT
5	RD-4629	BAR, LOCK
6	PC-1913	CLICK PIN, 3/16 X 1-9/16
7	CH-0816	LIFT CHAIN, 16 LINK
8	BH-5018	BOLT, HEX, 1/2-13 X 1-3/4 GRADE 5
9	HDD-016	WASHER, SQUARE, 1/2”

Item	Part Number	Description
10	NLT-5013	NUT, TOP LOCK, 1/2-13
11	CH-0805	PULL CHAIN, 5 LINK
12	NLT-6311	NUT, TOP LOCK, 5/8-11
13	BC-6340	BOLT, CARRIAGE, 5/8 X 4

Lift Arm for Incite 5100 Series Finishing Options

Double Rolling Baskets

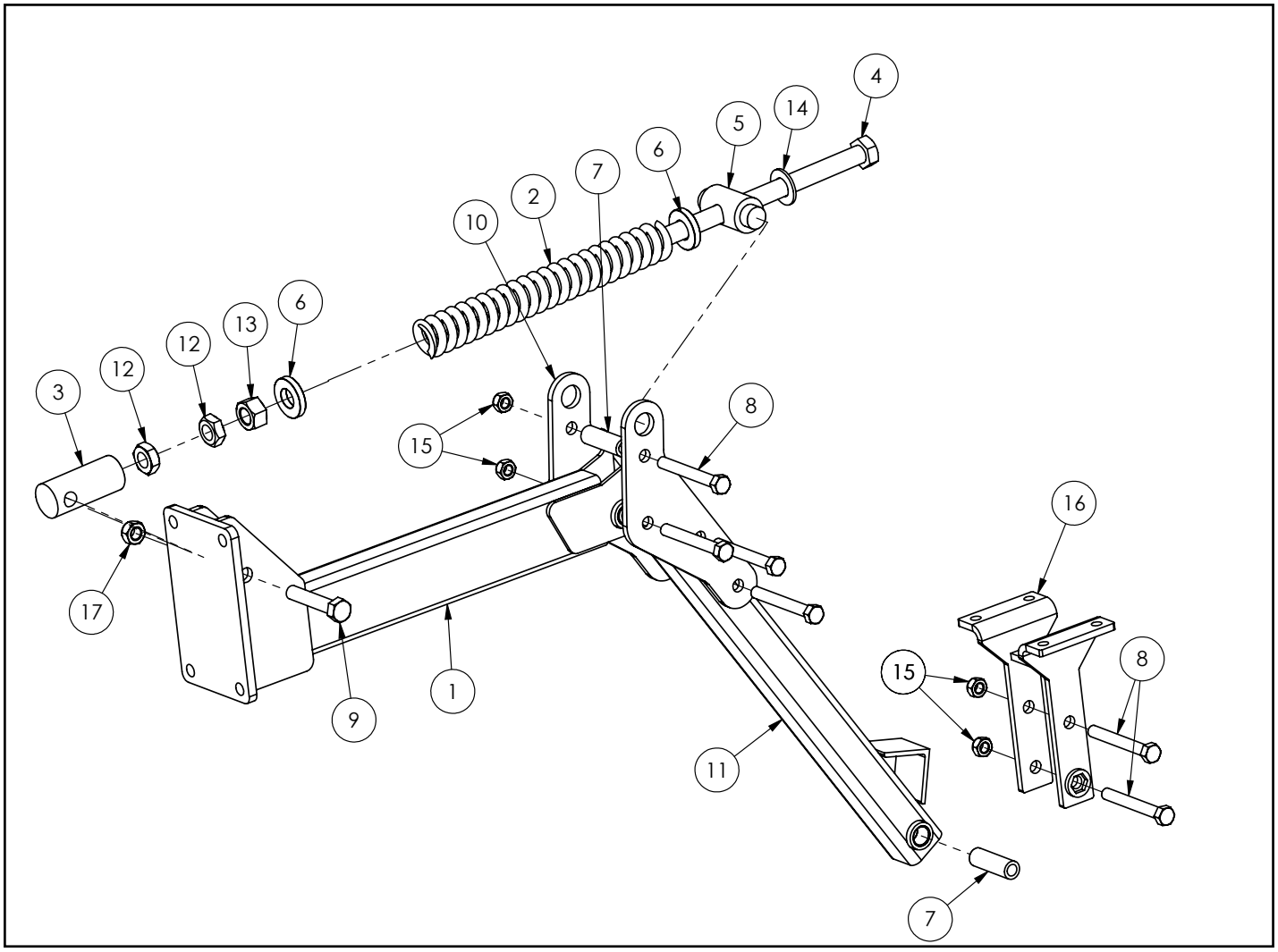

Item	Part Number	Description
1	11436	LIFT ARM
2	10682	SPRING, COMPRESSION
3	10713	TUBE, ROUND, ADJUSTMENT
4	10959	BOLT, SPECIAL, 1 - 8 X 23.8 GD5
5	10714	BUSHING, TRUNNION
6	10715	WASHER
7	10716	TUBE, ROUND
8	BH-6350	BOLT, HEX, 5/8 - 11X5 GD5
9	BH7540	BOLT, HEX, 3/4 - 10 X 4

Item	Part Number	Description
10	14852	PLATE, PIVOT
11	14743	TUBE, PIVOT
12	NHJ-1008	NUT, JAM 1 - 8
13	NH-1008	NUT 1 - 8
14	FW-0100	WASHER, FLAT, 1
15	NLT-6311	NUT, LOCK, TOP, 5/8 - 11
16	13601	DOUBLE PIVOT BRACKET
17	NLT-7510	NUT, LOCK, TOP, 3/4 - 10

3 Bar FA Harrow Section for Incite 5100 Series

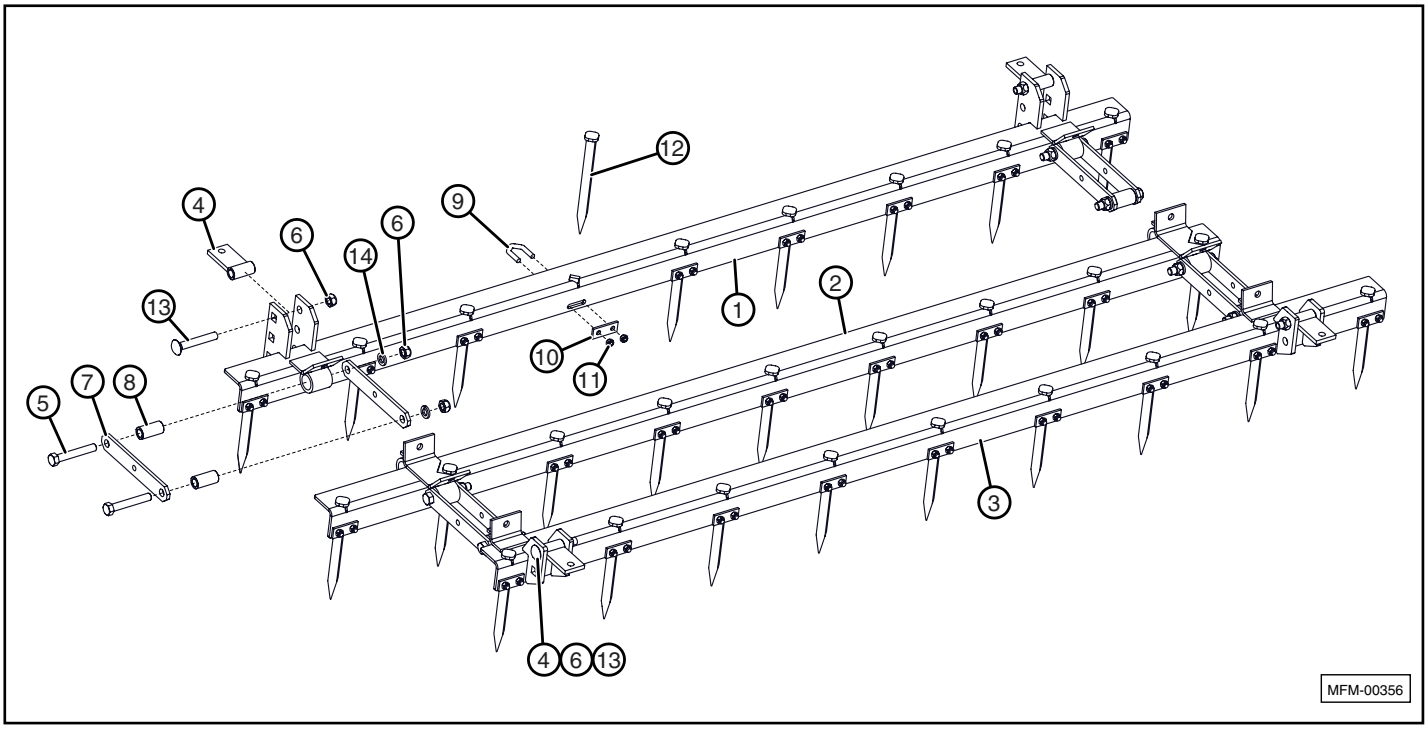

Item	Part Number	Description
1	FA-551 FA-651 FA-751 FA-851 FA-951	NUMBER ONE HARROW BAR (FA-500-3) NUMBER ONE HARROW BAR (FA-600-3) NUMBER ONE HARROW BAR (FA-700-3) NUMBER ONE HARROW BAR (FA-800-3) NUMBER ONE HARROW BAR (FA-900-3)
2	FA-556 FA-656 FA-756 FA-856 FA-956	NUMBER TWO HARROW BAR (FA-500-3) NUMBER TWO HARROW BAR (FA-600-3) NUMBER TWO HARROW BAR (FA-700-3) NUMBER TWO HARROW BAR (FA-800-3) NUMBER TWO HARROW BAR (FA-900-3)
3	FA-557 FA-657 FA-757 FA-857 FA-957	NUMBER THREE HARROW BAR (FA-500-3) NUMBER THREE HARROW BAR (FA-600-3) NUMBER THREE HARROW BAR (FA-700-3) NUMBER THREE HARROW BAR (FA-800-3) NUMBER THREE HARROW BAR (FA-900-3)
4	FA-4105	PLATE, PIVOT
5	BH-6340	BOLT, HEX, 5/8-11 X 4 GRADE 5

Item	Part Number	Description
6	NLT-6311	NUT, TOP LOCK, 5/8-11
7	CT-105	CONNECTOR, FLAT
8	CT-102	BUSHING, INNER
9	BV-3812	3/8” V BOLT
10	FA-4103	PLATE, 3/8” V-BOLT
11	NLT-3816	NUT, TOP LOCK, 3/8-16
12	FA-4110	TOOTH, 3/4” X 10”
13	BC-6340	BOLT, CARRIAGE, 5/8-11 X 4 GRADE 5
14	LW-0063	WASHER, LOCK, 5/8

5 Bar FA Harrow Section for Incite 5100 Series

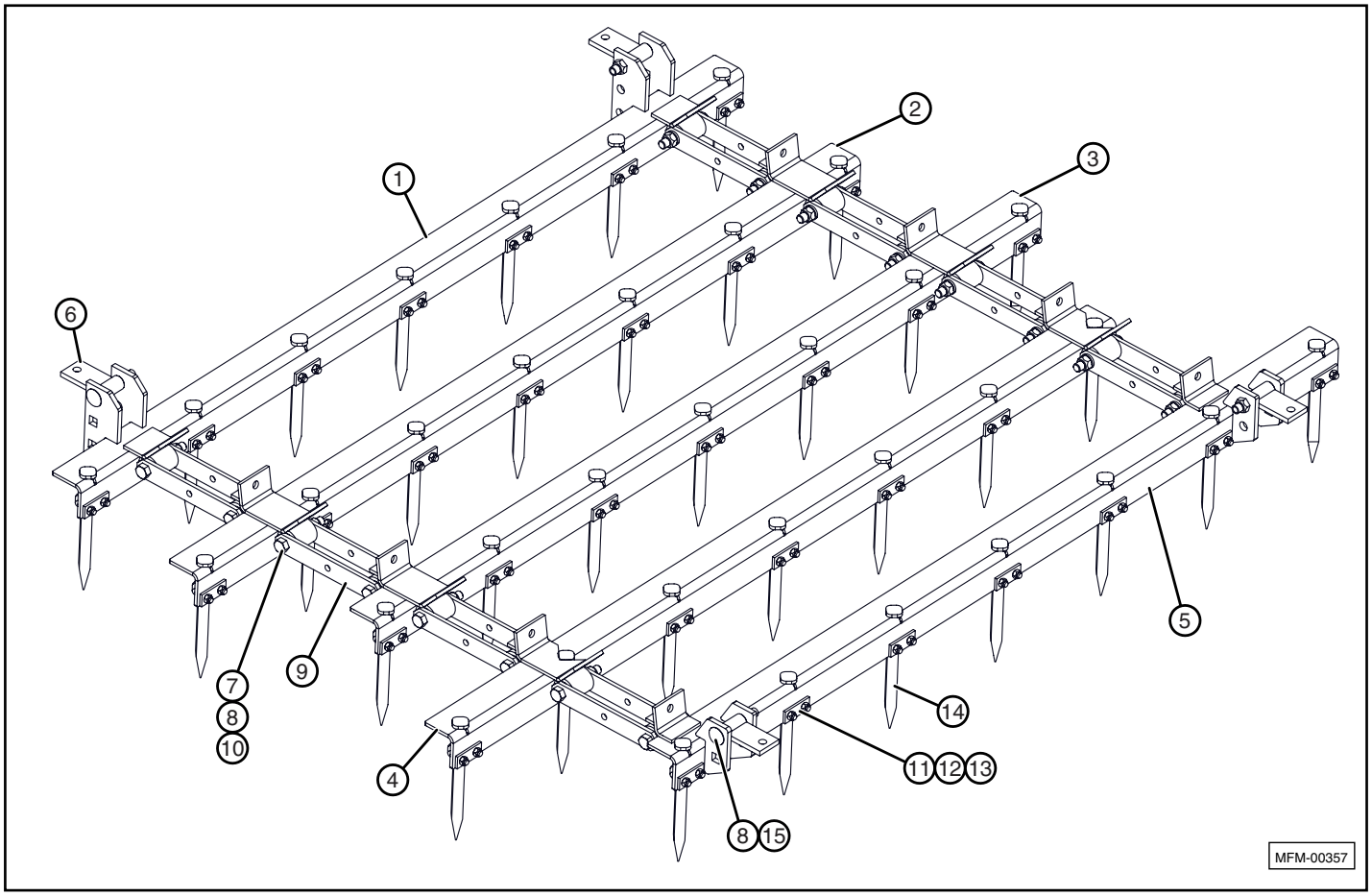

Item	Part Number	Description
1	FA-551 FA-651 FA-751 FA-851	NUMBER ONE HARROW BAR (FA-500-5) NUMBER ONE HARROW BAR (FA-600-5) NUMBER ONE HARROW BAR (FA-700-5) NUMBER ONE HARROW BAR (FA-800-5)
2	FA-552 FA-652 FA-752 FA-852	NUMBER TWO HARROW BAR (FA-500-5) NUMBER TWO HARROW BAR (FA-600-5) NUMBER TWO HARROW BAR (FA-700-5) NUMBER TWO HARROW BAR (FA-800-5)
3	FA-553 FA-653 FA-753 FA-853	NUMBER THREE HARROW BAR (FA-500-5) NUMBER THREE HARROW BAR (FA-600-5) NUMBER THREE HARROW BAR (FA-700-5) NUMBER THREE HARROW BAR (FA-800-5)
4	FA-556 FA-656 FA-756 FA-856	NUMBER FOUR HARROW BAR (FA-500-5) NUMBER FOUR HARROW BAR (FA-600-5) NUMBER FOUR HARROW BAR (FA-700-5) NUMBER FOUR HARROW BAR (FA-800-5)
5	FA-557 FA-657 FA-757 FA-857	NUMBER FIVE HARROW BAR (FA-500-5) NUMBER FIVE HARROW BAR (FA-600-5) NUMBER FIVE HARROW BAR (FA-700-5) NUMBER FIVE HARROW BAR (FA-800-5)
6	FA-4105	PLATE, PIVOT

Item	Part Number	Description
7	BH-6340	BOLT, HEX, 5/8-11 X 4 GRADE 5
8	NLT-6311	NUT, TOP LOCK, 5/8-11
9	CT-105	CONNECTOR, FLAT
10	CT-102	BUSHING, INNER
11	BV-3812	3/8” V BOLT
12	FA-4103	PLATE, 3/8” V-BOLT
13	NLT-3816	NUT, TOP LOCK, 3/8-16
14	FA-4110	TOOTH, 3/4” X 10”
15	BC-6340	BOLT, CARRIAGE, 5/8-11 X 4 GRADE 5

Spur-Till Mount

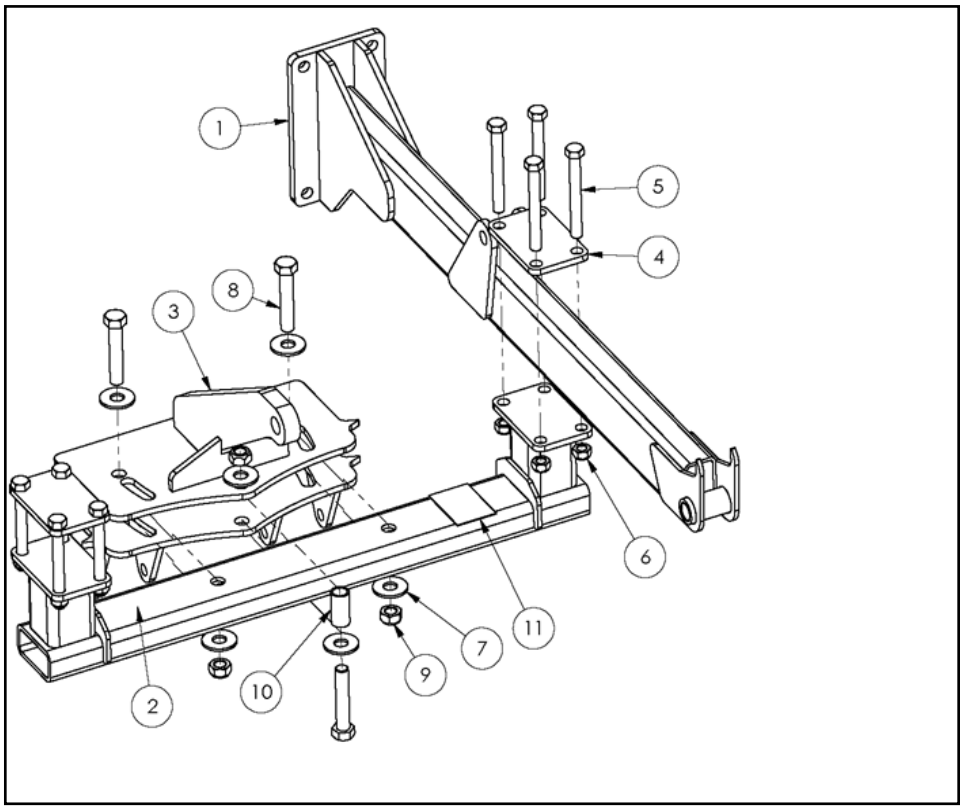

Item	Part Number	Description
1	14404	LIFT ARM, SPURTILL
2(1)	14125	ASSY, MOUNT (IC-5112(WING), 5114, 5127(wing), 5132,5140)
2	14126	ASSY, MOUNT (IC-5112, 5120, 5124, 5127(frame), 5140)
2	14154	ASSY, MOUNT (IC-5120, 5124)
2	14156	ASSY, MOUNT (IC-5120, 5132)
3	14518	ASSY, PIVOT MOUNT
4	14395	PLATE, MOUNT
5	BH-6355	BOLT, HEX, 5/8-11X5.5, GD5
6	NLT-6311	NUT, LOCK, TOP, 5/8-11

Item	Part Number	Description
7	FW-0075	WASHER, FLAT,.75, GD8
8	BH-7540	BOLT, HEX, 3/4-10X4, GD5
9	NLT-7510	NUT, LOCK, TOP, 3/4-10
10	15079	BUSHING
11	15426	DECAL, ST ANGLE

refer to diagrams blah blah

Spur-Till Gang

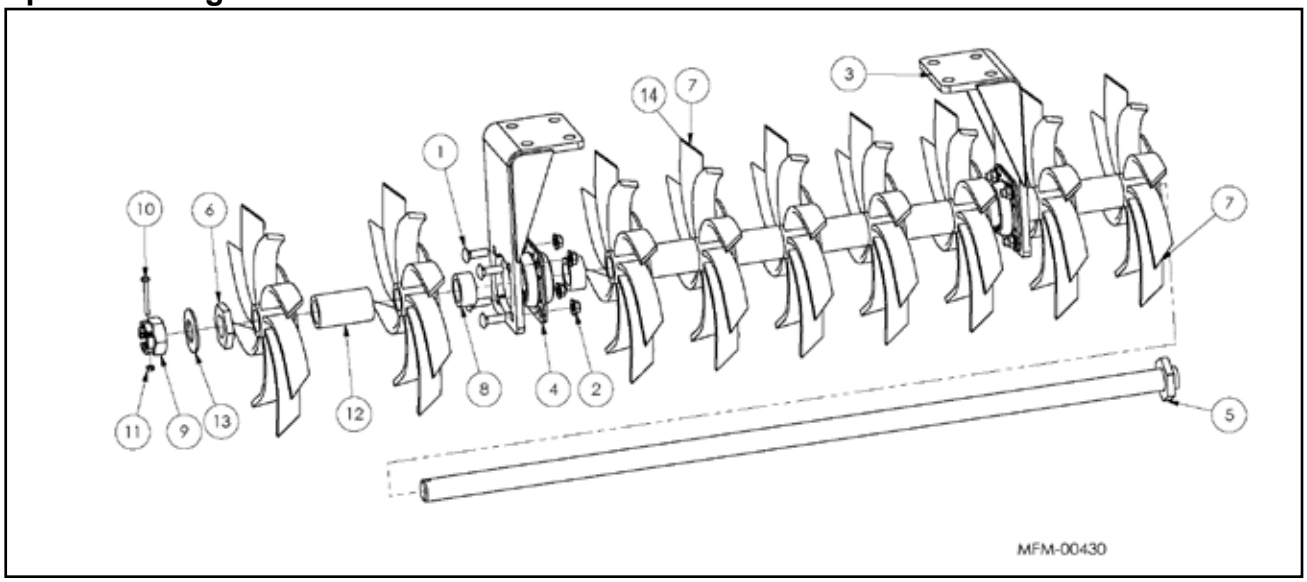

Item	Part Number	Description
1	BC-5015	BOLT, CARRIAGE,1/2-13X1.5, GD5
2	14599	NUT, UNITORQUE LOCK, FLANGED,1/2-13 GRG ZP
3	13785	LEVELER MOUNT
4	14204	BEARING, FLANGED,1.50 RND
5	14420	WELDED SHAFT-71.22
5	14421	WELDED SHAFT-89.18
5	14426	WELDED SHAFT-65.22
5	14431	WELDED SHAFT-77.19
5	14432	WELDED SHAFT53.22
5	14443	WELDED SHAFT-95.19
6	13969	PLATE, WASHER

Item	Part Number	Description
7	13916	SPURTILL WHEEL, LH
8	14137	TUBE
9	14400	1-1/2"-6 SLOTTED NUT
10	BH-2525	BOLT, HEX,1/4-20X2.5, GD5
11	NLT-2520	NUT, TOP LOCK 1/4-20
12	13968	TUBE
13	14694	BELLEVILLE DISC SPRING
14	13960	SPURTILL WHEEL, RH

Rolling Basket for Incite 5100 Series

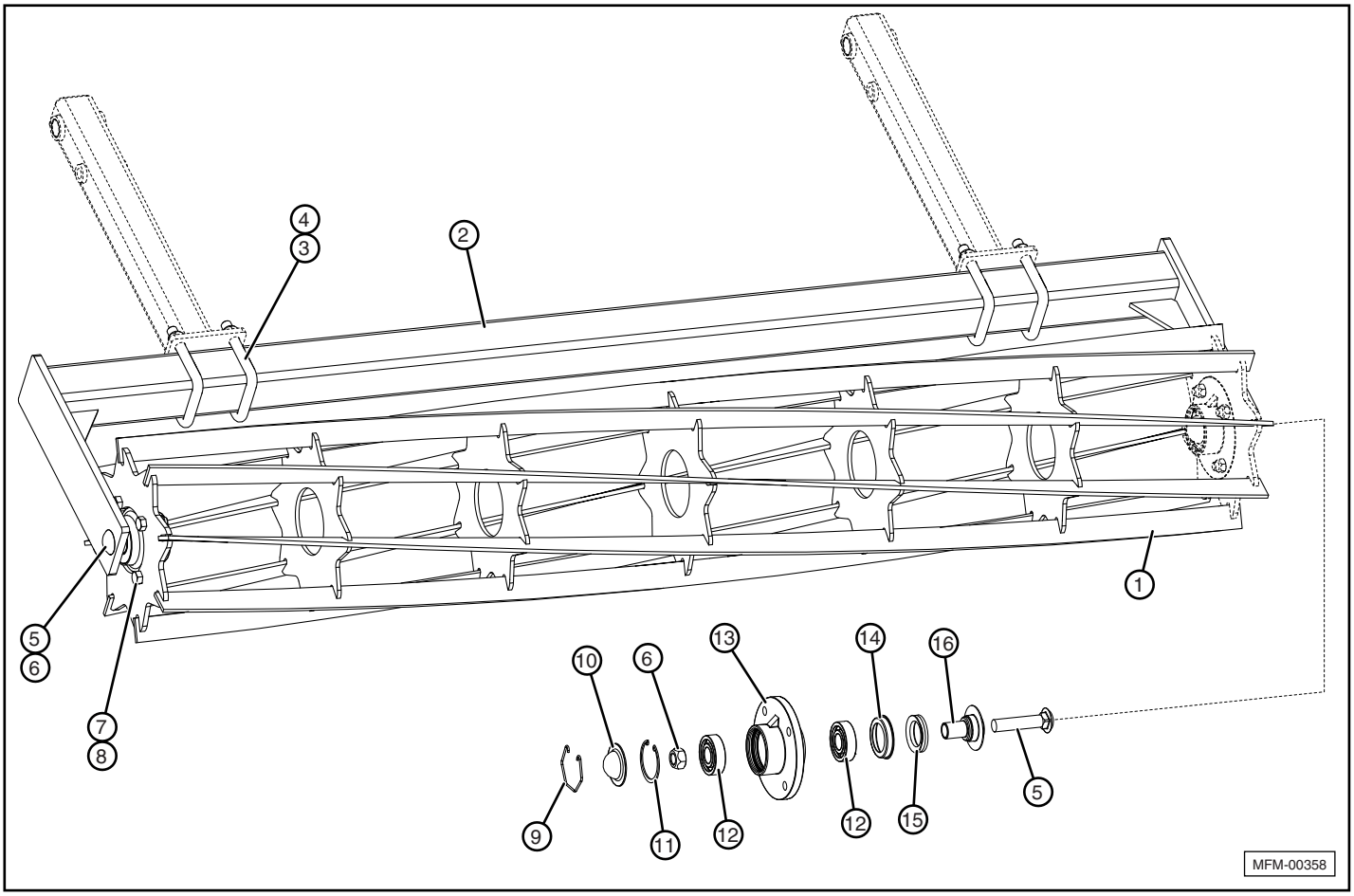

Item	Part Number	Description
1	SRB-1552 SRB-1563 SRB-1574 SRB-1585	ROLLING BASKET – 52” ROLLING BASKET – 63” ROLLING BASKET – 74” ROLLING BASKET – 85”
2	RD-5080 RD-5079 RD-5078 RD-5077	BASKET MOUNT TUBE – 52” BASKET MOUNT TUBE – 63” BASKET MOUNT TUBE – 74” BASKET MOUNT TUBE – 85”
3	NLT-6311	NUT, TOP LOCK 5/8-11
4	BU-5834	5/8” U BOLT
5	BC-7535	BOLT, CARRIAGE, 3/4-10 X 3-1/2, GRADE 5
6	NLT-7510	NUT, TOP LOCK, 3/4-10
7	BH-5018	BOLT, HEX, 1/2-13 X 1-3/4 GRADE 5

Item	Part Number	Description
8	NLT-5013	NUT, TOP LOCK, 1/2-13
9	13081	RETAINING RING
10	13078	DUST CAP
11	13076	SNAP RING
12	13074	BEARING,SEALED,1" ID
13	13080	HUB
14	13079	SEAL COUNTERFACE
15	13075	V-SEAL,1.59" ID
16	13077	BEARING SLEEVE W/GUARD

[1]Refer to layout diagram for position and size on each unit.

Double Rolling Basket for Incite 5100 Series

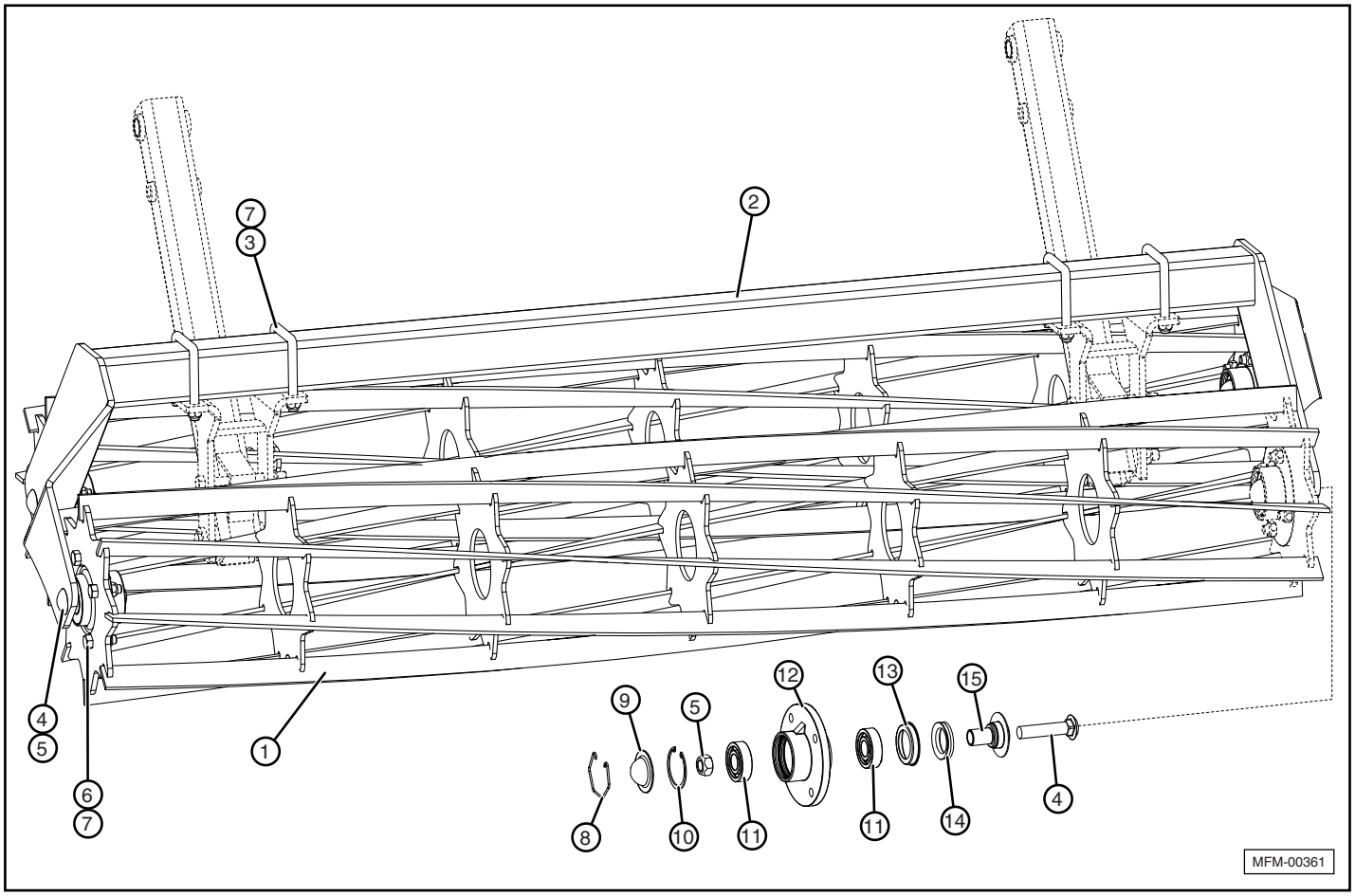

Item	Part Number	Description
1	SRB-1552 SRB-1563 SRB-1574 SRB-1585	ROLLING BASKET – 52” ROLLING BASKET – 63” ROLLING BASKET – 74” ROLLING BASKET – 85”
2	11444 11628 11498 11452	BASKET MOUNT TUBE – 52” BASKET MOUNT TUBE – 63” BASKET MOUNT TUBE – 74” BASKET MOUNT TUBE – 85”
3	BU-1234	1/2” U BOLT
4	BC-7535	BOLT, CARRIAGE, 3/4-10 X 3-1/2, GRADE 5
5	NLT-7510	NUT, TOP LOCK, 3/4-10
6	BH-5018	BOLT, HEX, 1/2-13 X 1-3/4 GRADE 5

Item	Part Number	Description
7	NLT-5013	NUT, TOP LOCK, 1/2-13
8	13081	RETAINING RING
9	13078	DUST CAP
10	13076	SNAP RING
11	13074	BEARING,SEALED,1" ID
12	13080	HUB
13	13079	SEAL COUNTERFACE
14	13075	V-SEAL,1.59" ID
15	13077	BEARING SLEEVE W/GUARD

Gauge Wheel Frame for Incite 5100 Series

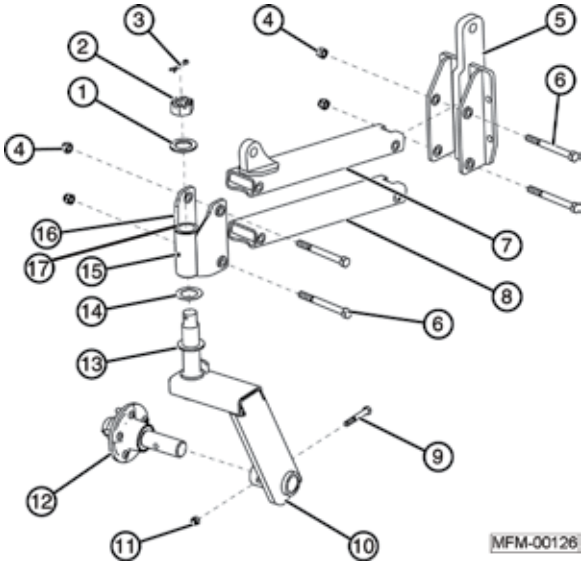

Item	Part Number	Description
1	RD-4876	CASTER WASHER
2	NC-1406	1-3/8 CASTLE NUT
3	CP-3620	COTTER PIN
4	NLT-6311	5/8-11 TOP LOCK NUT
5	RD-4870	CASTER TO GANG MOUNT
6	BHY-6365	5/8-11 x 6-1/2 HHCS GD 8
7	RD-4869	TOP LINK
8	RD-4873	BOTTOM LINK

Item	Part Number	Description
9	BH-5035	1/2-13 x 3-1/2 HHCS GD 5
10	RD-4872	CASTER ARM ASSY
11	NLT-5013	1/2-13 TOP LOCK NUT
12	RD-4877	HUB & SPINDLE
13	RD-4867	CASTER THRUST WASHER
14	RD-4876	CASTER WASHER
15	GZ-2528	GREASE FITTING
16	RD-4871	CASTER VERTICAL PIVOT
17	RD-4868	CASTER BUSHING

Gauge Wheel for Incite 5100 Series

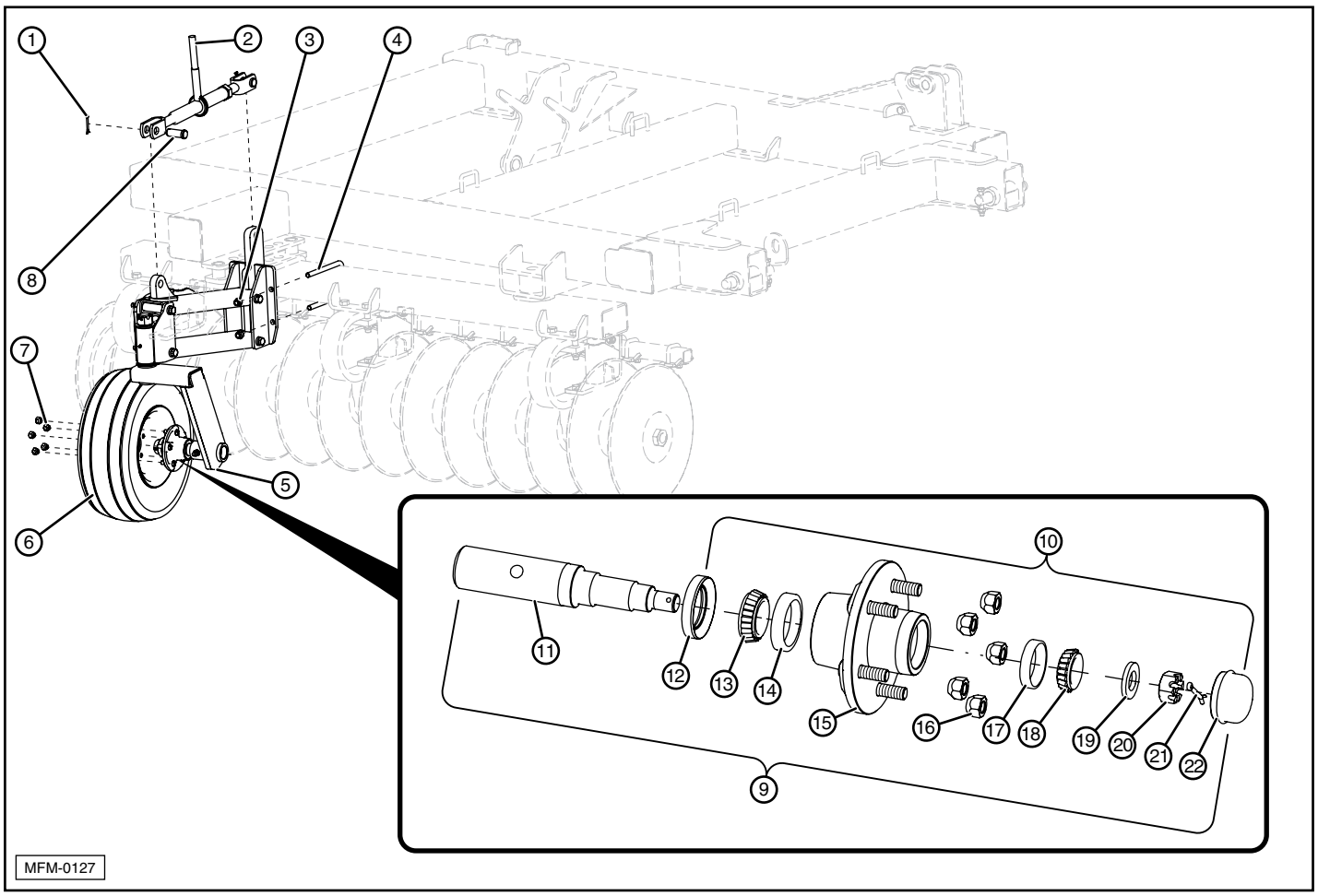

Item	Part Number	Description
1	CP-3620	COTTER PIN
2	HYO-2008	RATCHET
3	NLT-6311	5/8-11 TOP LOCK NUT
4	BU-5848	U-BOLT
5	RD-4906	GAUGE WHEEL ASSY
6	20.5-8 10TR	TIRE WHEEL ASSY
7	WN-0050	LUG NUT
8	HD-1149	CYLINDER PIN
9	RD-4877	HUB & SPINDLE ASSY
10	RD-4881	HUB ASSY
11	RD-4883	SPINDLE

Item	Part Number	Description
12	RD-4880	HUB SEAL
13	RD-4884	INNER BEARING
14	RD-5114	INNER RACE
15	RD-4878	HUB W/ RACES
16	WN-0050	WHEEL NUT
17	HD-1182	OUTER RACE
18	RD-4879	OUTER BEARING
19	HD-1164	WASHER
20	HD-1165	CASTLE NUT
21	CP-3620	COTTER PIN
22	HD-1181	DUST CAP

Lighting Diagram for Incite 5100 Series

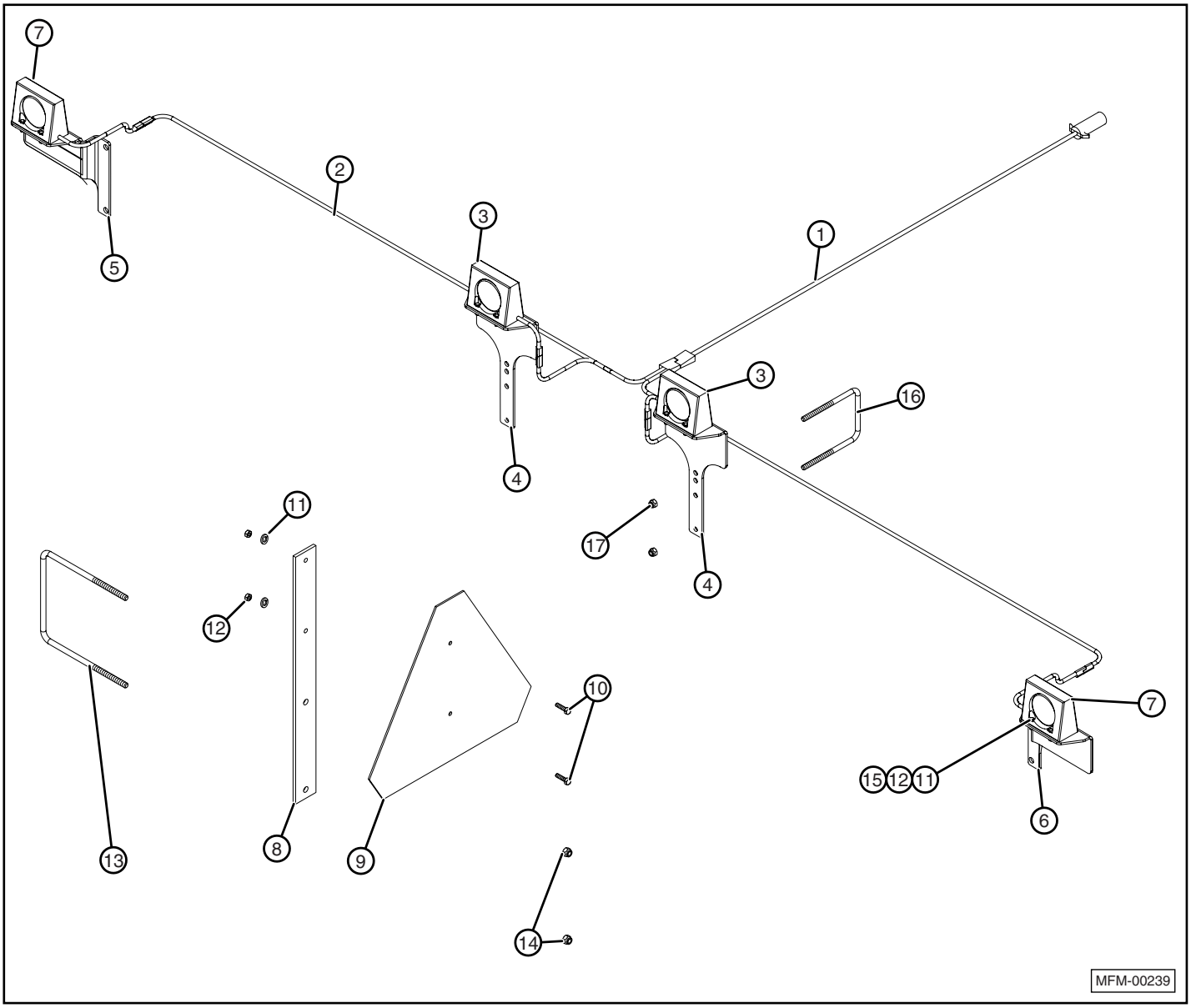

Item	Part Number	Description
1	LB-1325	LIGHT HARNESS, STRAIGHT, 25’
2	LB-1620	LIGHT HARNESS, WISHBONE
3	LB-1107	LIGHT, RED
4	RD-5056	BRACKET, LIGHT, SINGLE
5	RD-5057	BRACKET, LIGHT, SINGLE, LT
6	RD-5058	BRACKET, LIGHT, SINGLE, RT
7	LB-1106	LIGHT, AMBER
8	LB-1203	BRACKET, SMV MOUNT
9	MM-1300	SIGN, SMV

Item	Part Number	Description
10	BH-2510	BOLT, 1/4-20 x 1”
11	LW-0025	WASHER, LOCK, 1/4
12	NH-2520	NUT, 1/4-20
13	BU-3878	U-BOLT, 3/8-16 x 7” x 8”
14	NLT-3816	NUT, TOP LOCK, 3/8-16
15	BH-2513	BOLT, 1/4-20 x 1-1/4”
16	BU-1278	U-BOLT, 1/2-13 x 7” x 8-1/4”
17	NLT-5013	NUT, TOP LOCK, 1/2-13

Axle Hydraulics for IC-5112 and IC-5114

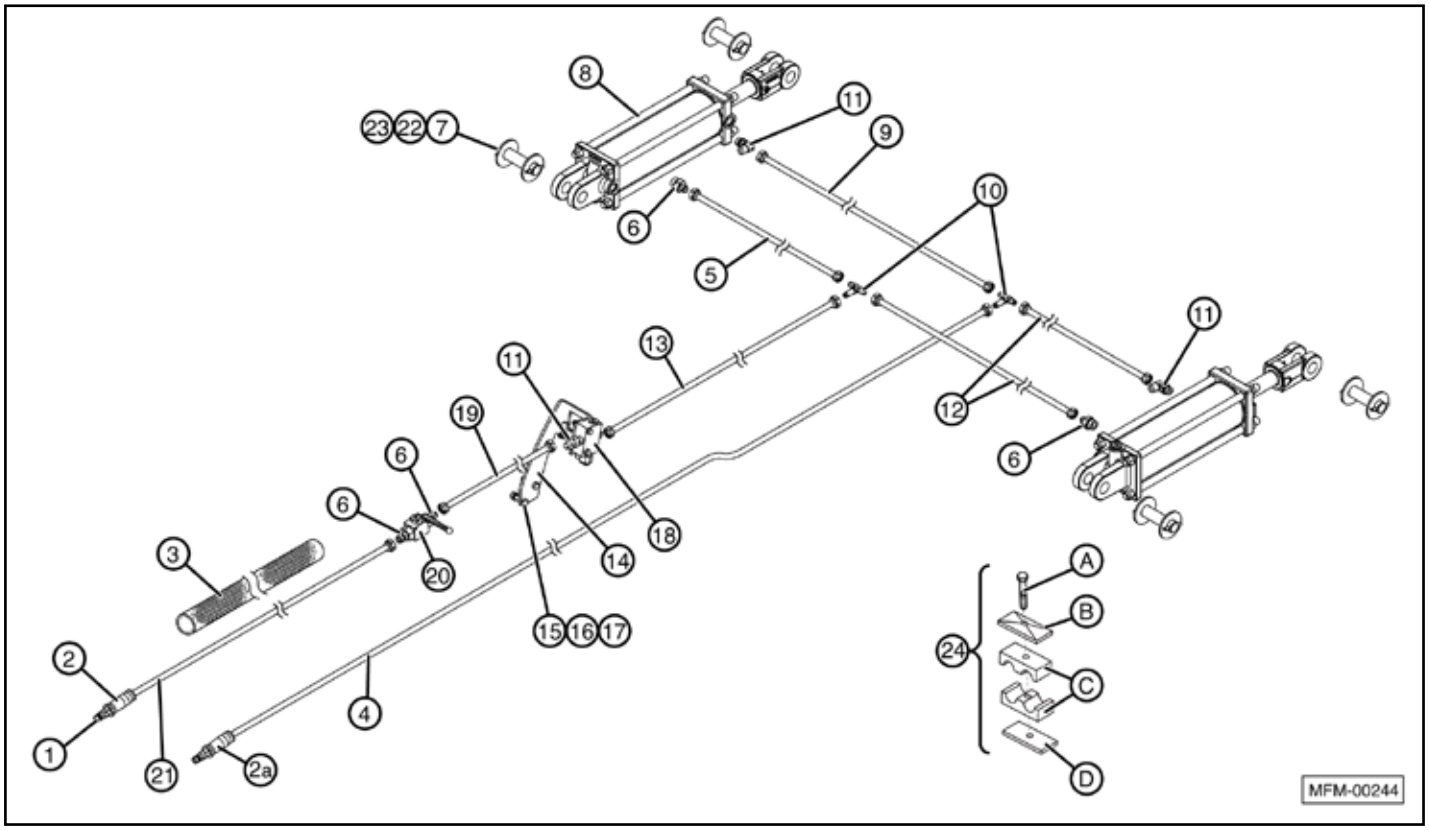

Item	Part Number	Description
1	15641	HYD DISCONNECT, MALE, 3/4 ORB
2	15036	HYDRA GRIP, SUPPLY (+), YELLOW
2a	15037	HYDRA GRIP, RETURN (-), YELLOW
3	HYS-2007	HYD COVER, HOSE, 70”
4	15623	HYD HOSE,3/8(9/16F-3/4ORB),204
5	HYH-8038	HOSE, HYDRAULIC
6	HYF-3820	HYD ADAPTER, 9/16 M - 3/4 MORB
7	12223	PIN, CYLINDER CLEVIS, 1 X 3-12
8	11930	HYDRAULIC CYLINDER, 3.5 X 10
9	HYH-8048	HOSE, HYDRAULIC
10	HYF-1888	HYD TEE,9/16 M - 9/16 M - 9/16 M
11	HYF-2820	HYD ELBOW, 9/16 M - 3/4 MORB
12	HYH-8076	HOSE, HYDRAULIC
13	HYH-8036	HOSE, HYDRAULIC
14	11753	BRACKET
15	BH-3815	BOLT, HEX, 3/8-16 x 1-1/2”

Item	Part Number	Description
16	LW-0038	WASHER, LOCK, 3/8”
17	NH-3816	NUT, HEX, 3/8-16
18	HYO-3021 HYF-0150	HYDRAULIC STOP VALVE HYD PLUG, 1/2 ORB IN HYO-3021 (NOT SHOWN).
19	HYH-8115	HOSE, HYDRAULIC
20	QT-1172	HYD VALVE, BALL
21	15640	HYD HOSE,3/8(9/16F-3/4ORB),96
22	12222	PIN, SPRING
23	FW-0100	WASHER, FLAT, 1”
24	10795	CLAMP ASSEMBLY, HYDRAULIC
A	HYO-1008	BOLT, HEX, 5/16-18 X 1-3/8
B	HYO-1004	COVER, HYD CLAMP
C	10796	BODY, HYD CLAMP
D	HYO-1206	PLATE, HYD CLAMP

Axle Hydraulics for IC-5120, IC-5124, IC-5127, and IC-5132

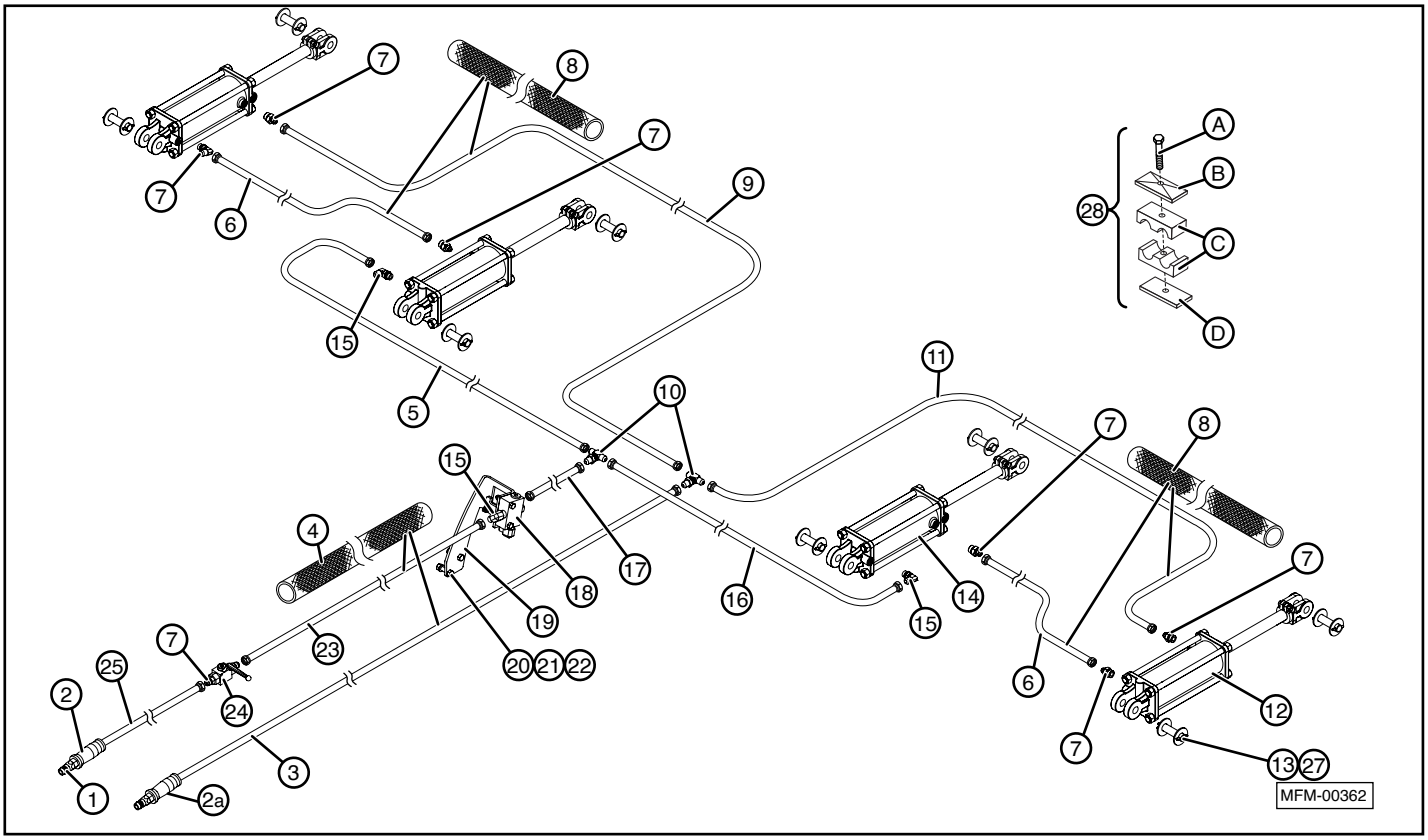

Item	Part Number	Description
1	15641	HYD DISCONNECT, MALE, 3/4 ORB
2	15036	HYDRA GRIP, SUPPLY (+), YELLOW
2a	15037	HYDRA GRIP, RETURN (-), YELLOW
3	15625 15624	HYD HOSE,1/2(3/4F-3/4ORB),226 (5120, 5124) HYD HOSE,1/2(3/4F-3/4ORB),206 (5127,5132)
4	HYS-2007	HYD COVER, HOSE, 70”
5	10976 HYH-2050	HOSE, HYDRAULIC (5120 and 5124) HOSE, HYDRAULIC (5127 and 5132)
6	HYH-2052 HYH-2072 HYH-2076 HYH-2101	HOSE, HYDRAULIC (5120) HOSE, HYDRAULIC (5124) HOSE, HYDRAULIC (5127) HOSE, HYDRAULIC (5132)
7	HYF-3220	ADAPTER (1/2 M – 1/2 O-RING)
8	HYS-2011 HYS-2007	HYD COVER, HOSE, 48” (5120, 5124 and 5127) HYD COVER, HOSE, 70” (5132)
9	HYH-2096 HYH-2112 HYH-2122 HYH-2144	HOSE, HYDRAULIC (5120) HOSE, HYDRAULIC (5124) HOSE, HYDRAULIC (5127) HOSE, HYDRAULIC (5132)
10	HYF-1222	TEE (1/2 M – 1/2 M – 1/2 M)
11	HYH-2115 11328 HYH-2160 HYH-2182	HOSE, HYDRAULIC (5120) HOSE, HYDRAULIC (5124) HOSE, HYDRAULIC (5127) HOSE, HYDRAULIC (5132)
12	10323 12864 10324 12865	HYD CYL, REPHASING, 4.00 X 10 (Welded) HYD CYL, REPHASING, 4.00 X 10 (Tie Rod) (5127 and 5132) HYD CYL, REPHASING, 3.75 X 10 (Welded) HYD CYL, REPHASING, 3.75 X 10 (Tie Rod) (5120 and 5124)
13	12223	PIN, CYLINDER CLEVIS, 1 X 3-1/2

Item	Part Number	Description
14	10322 12863 10323 12864	HYD CYL, REPHASING, 4.25 X 10 (Welded) HYD CYL, REPHASING, 4.25 X 10 (Tie Rod) (5127 and 5132) HYD CYL, REPHASING, 4.00 X 10 (Welded) HYD CYL, REPHASING, 4.00 X 10 (Tie Rod) (5120 and 5124)
15	HYF-2220	ELBOW (1/2” M – 1/2” F)
16	HYH-2065 HYH-2086	HOSE, HYDRAULIC (5120 and 5124) HOSE, HYDRAULIC (5127 and 5132)
17	HYH-2052 HYH-2040	HOSE, HYDRAULIC (5120 and 5124) HOSE, HYDRAULIC (5127 and 5132)
18	HYO-3021 HYF-0150	HYDRAULIC STOP VALVE HYD PLUG, 1/2 ORB IN HYO-3021 (NOT SHOWN).
19	11753	BRACKET
20	BH-3815	BOLT, HEX, 3/8-16 x 1-1/2”
21	LW-0038	WASHER, LOCK, 3/8”
22	NH-3816	NUT, HEX, 3/8-16
23	HYH-2108 HYH-2112	HOSE, HYDRAULIC (5120 and 5124) HOSE, HYDRAULIC (5127 and 5132)
24	QT-1172	HYDRAULIC VALVE, BALL
25	15628	HYD HOSE,1/2(3/4F-3/4ORB),96
26	12222	PIN, SPRING
27	FW-0100	WASHER, FLAT, 1”
28	10795	CLAMP ASSEMBLY, HYDRAULIC
A	HYO-1008	BOLT, HEX, 5/16-18 X 1-3/8
B	HYO-1004	COVER, HYD CLAMP
C	10796	BODY, HYD CLAMP
D	HYO-1206	PLATE, HYD CLAMP

Axle Hydraulics for IC-5140

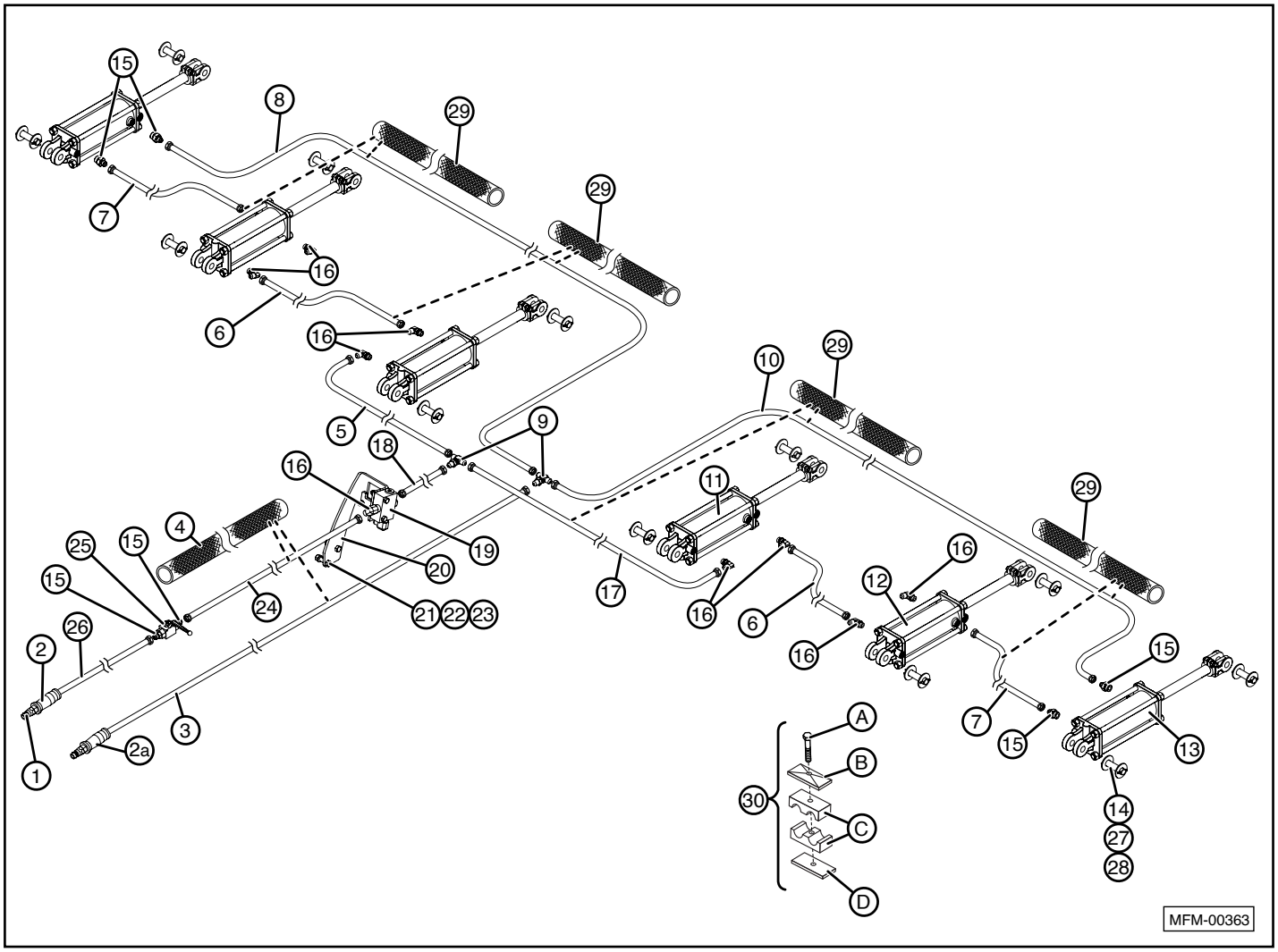

Item	Part Number	Description
1	15641	HYD DISCONNECT, MALE, 3/4 ORB
2	15036	HYDRA GRIP, SUPPLY (+), YELLOW
2a	15037	HYDRA GRIP, RETURN (-), YELLOW
3	15624	HYD HOSE,1/2(3/4F-3/4ORB),206 (5140)
4	HYS-2007	HYD COVER, HOSE, 70”
5	HYH-2050	HOSE, HYDRAULIC
6	HYH-2094	HOSE, HYDRAULIC
7	HYH-2084	HOSE, HYDRAULIC
8	HYH-2216	HOSE, HYDRAULIC
9	HYF-1222	HYD TEE, BULK, 3/4 M - 3/4 M - 3/4 M
10	10848	HOSE, HYDRAULIC
11	10322 12863	HYD CYL, REPHASING, 4.25 X 10 (Welded) HYD CYL, REPHASING, 4.25 X 10 (Tie Rod)
12	10323 12864	HYD CYL, REPHASING, 4.00 X 10 (Welded) HYD CYL, REPHASING, 4.00 X 10 (Tie Rod)
13	10324 12865	HYD CYL, REPHASING, 3.75 X 10 (Welded) HYD CYL, REPHASING, 3.75 X 10 (Tie Rod)
14	12223	PIN, CYLINDER CLEVIS, 1 X 3-1/2
15	HYF-3220	HYD ADAPTER, 3/4 F - 3/4 ORB
16	HYF-2220	HYD ELBOW, 3/4 F - 3/4 ORB

Item	Part Number	Description
17	HYH-2086	HOSE, HYDRAULIC
18	HYH-2040	HOSE, HYDRAULIC
19	HYO-3021 HYF-0150	HYDRAULIC STOP VALVE HYD PLUG, 1/2 ORB IN HYO-3021 (NOT SHOWN).
20	11753	BRACKET
21	BH-3815	BOLT, HEX, 3/8-16 x 1-1/2”
22	LW-0038	WASHER, LOCK, 3/8”
23	NH-3816	NUT, HEX, 3/8-16
24	HYH-2112	HOSE, HYDRAULIC
25	QT-1172	HYDRAULIC VALVE, BALL
26	15628	HYD HOSE,1/2(3/4F-3/4ORB),96
27	12222	PIN, SPRING
28	FW-0100	WASHER, FLAT, 1”
29	HYS-2006	HYD COVER, HOSE, 60”
30	10795	CLAMP ASSEMBLY, HYDRAULIC
A	HYO-1008	BOLT, HEX, 5/16-18 X 1-3/8
B	HYO-1004	COVER, HYD CLAMP
C	10796	BODY, HYD CLAMP
D	HYO-1206	PLATE, HYD CLAMP

Wing Fold Hydraulics for IC-5120

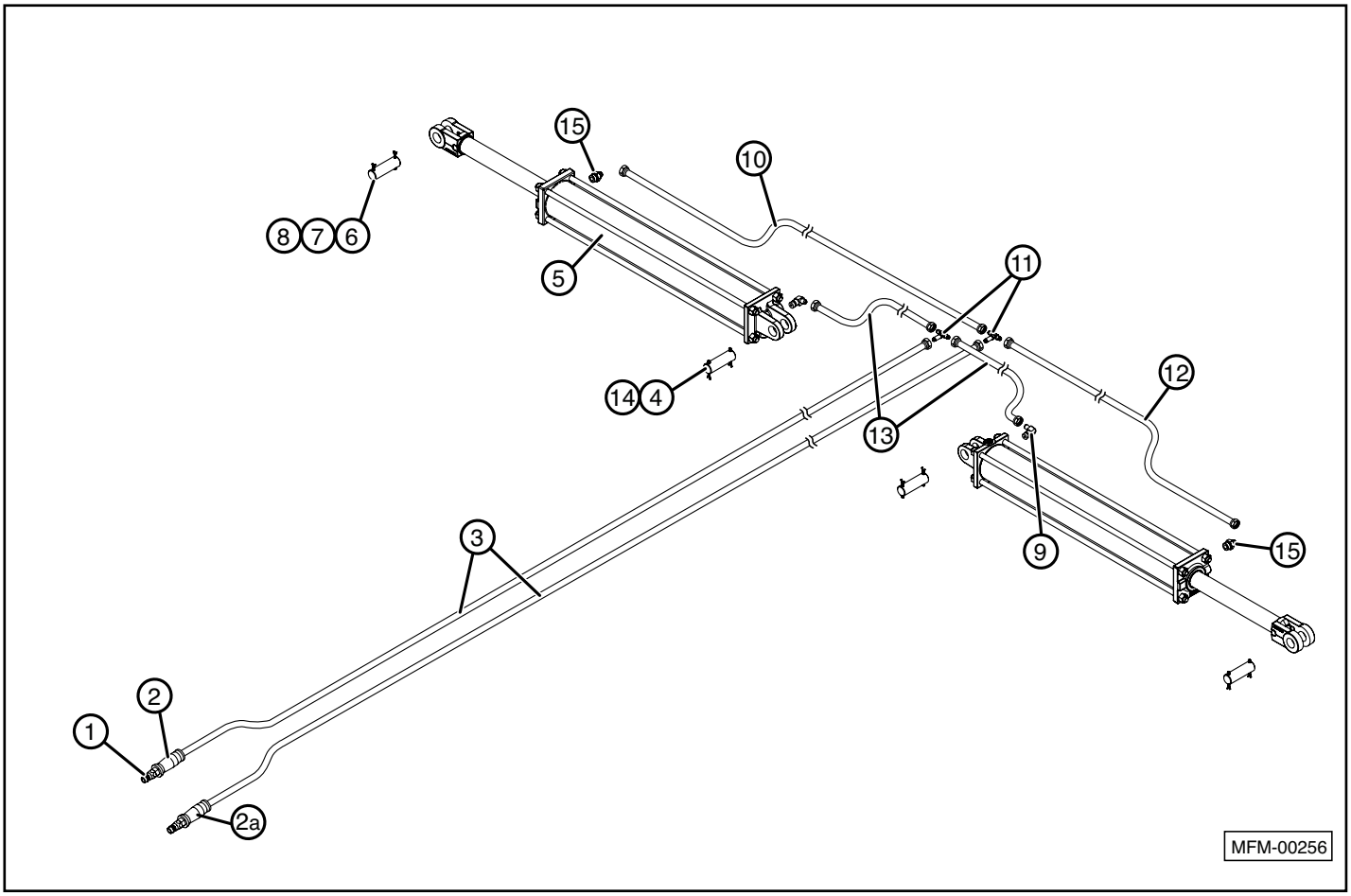

Item	Part Number	Description
1	15641	HYD DISCONNECT, MALE, 3/4 ORB
2	15032	HYDRA GRIP, SUPPLY (+), RED
2a	15033	HYDRA GRIP, RETURN (-), RED
3	15639	HYD HOSE,3/8(9/16F-3/4ORB),292
4	HYO-2123	PIN, CLEVIS, CYLINDER, 1-1/4 X 3-1/2
5	HYC-4030	4” X 30” HYD CYLINDER (TIE ROD STYLE)
6	CL-1307	PIN, CLEVIS, 1-1/4 x 7.0
7	FW-0125	WASHER, FLAT, 1-1/4
8	CP-1420	PIN, COTTER, 1/4 x 2.00
9	HYF-2820	HYD ELBOW, 9/16 M - 3/4 MORB
10	10979	HOSE, HYDRAULIC
11	HYF-1888	HYD TEE, 9/16 M - 9/16 M - 9/16 M
12	10978	HOSE, HYDRAULIC
13	10980	HOSE, HYDRAULIC
14	CP-3620	PIN, COTTER, 3/16 x 2.00
15	10621	HYD RESTRICTOR, 3/4 M - 3/4 MORB, RST

Wing Fold Hydraulics for IC-5124, IC-5127, and IC-5132

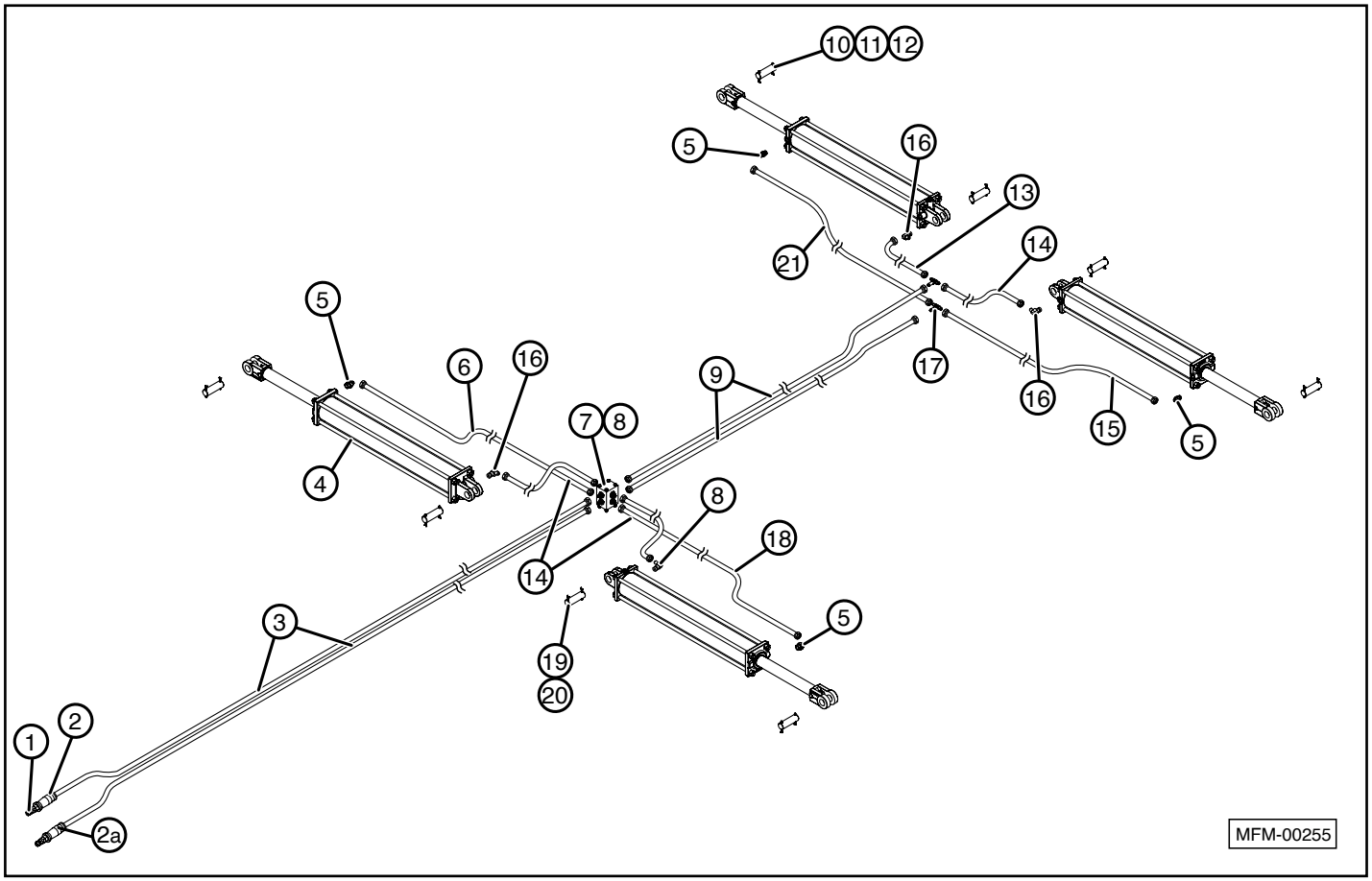

Item	Part Number	Description
1	15641	HYD DISCONNECT, MALE, 3/4 ORB
2	15032	HYDRA GRIP, SUPPLY (+), RED
2a	15033	HYDRA GRIP, RETURN (-), RED
3	15635 15637	HYD HOSE,3/8(9/16F 90°-3/4ORB),194 (5124) HYD HOSE,3/8(9/16F-3/4ORB),194 (5127, 5132)
4	HYC-4030 HYC-4040	4” X 30” HYD CYLINDER (5124) 4” X 40” HYD CYLINDER (5127 and 5132)
5	10621	HYD RESTRICTOR, 3/4 M - 3/4 MORB, RST
6	11298 10874	HOSE, HYDRAULIC (5124) HOSE, HYDRAULIC (5127 and 5132)
7	HYO-3022	HYDRAULIC MANIFOLD, 4-WAY
8	HYF-3820	HYD ADAPTER, 9/16 M-3/4 MORB
9	11299 HYH-8096	HOSE, HYDRAULIC (5124) HOSE, HYDRAULIC (5127 and 5132)
10	CL-1307	PIN, CLEVIS, 1-1/4 x 7.0

Item	Part Number	Description
11	FW-0125	WASHER, FLAT, 1-1/4
12	CP-1420	PIN, COTTER, 1/4 x 2.00
13	10980 11006	HOSE, HYDRAULIC (5124) HOSE, HYDRAULIC (5127 and 5132)
14	10980 HYH-8024	HOSE, HYDRAULIC (5124) HOSE, HYDRAULIC (5127 and 5132)
15	10978 10876	HOSE, HYDRAULIC (5124) HOSE, HYDRAULIC (5127 and 5132)
16	HYF-2820	HYD ELBOW, 9/16 M - 3/4 MORB
17	HYF-1888	HYD TEE, 9/16 M - 9/16 M - 9/16 M
18	11300 10875	HOSE, HYDRAULIC (5124) HOSE, HYDRAULIC (5127 and 5132)
19	HYO-2123	PIN, CLEVIS, CYLINDER, 1-1/4 X 3-1/2
20	CP-3620	PIN, COTTER, 3/16 x 2.00
21	10979 10874	HOSE, HYDRAULIC (5124) HOSE, HYDRAULIC (5127 and 5132)

Wing Fold Hydraulics for IC-5140

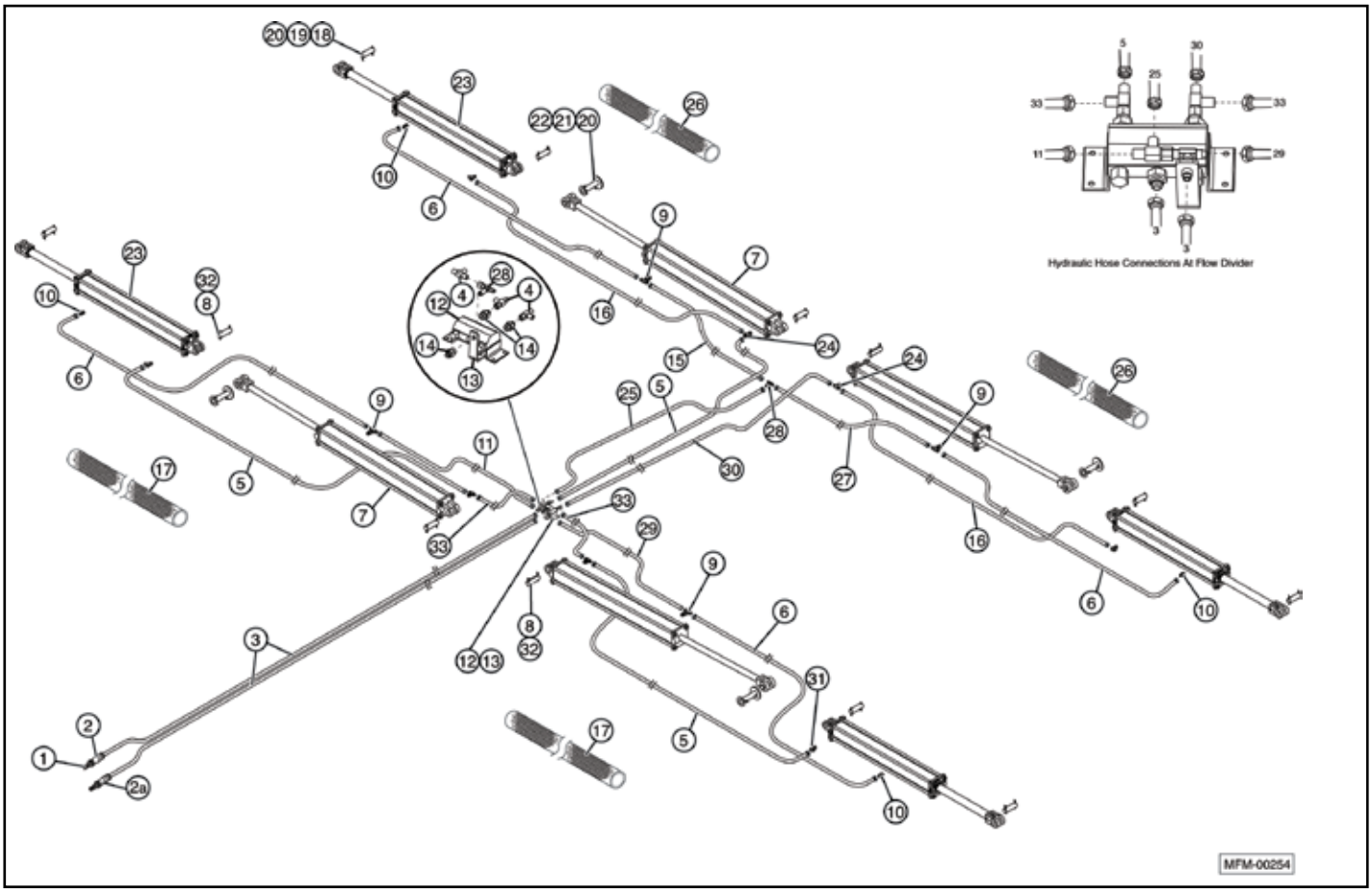

Item	Part Number	Description
1	15641	HYD DISCONNECT, MALE, 3/4 ORB
2	15032	HYDRA GRIP, SUPPLY (+), RED
2a	15033	HYDRA GRIP, RETURN (-), RED
3	15637	HYD HOSE,3/8(9/16F-3/4ORB),194
4	10850	HOSE, HYDRAULIC
5	HYH-8104	HOSE, HYDRAULIC
6	10853	HOSE, HYDRAULIC
7	13651	HYD. CYLINDER, 4.5 X 36 (TIE ROD STYLE)
8	HYO-2123	PIN, CLEVIS, CYLINDER, 1-1/4 X 3-1/2
9	HYF-1232	HYD TEE, 3/4 M - 3/4 F - 3/4 M
10	10621	HYD RESTRICTOR, 3/4 M - 3/4 MORB, RST
11	10852	HOSE, HYDRAULIC
12	14941	FLOW DIVIDER
13	14940	TEE BRACKET
14	HYH-8096	HOSE, HYDRAULIC
15	10856	HOSE, HYDRAULIC
16	HYH-8110	HOSE, HYDRAULIC
17	10857	HOSE, HYDRAULIC
18	10707	BOLT, HEX, 1-1/4-7 X 7.5,GRADE 8, SPECIAL
19	NY-1307	NUT, LOCK, NYLON, 1-1/4-7
20	FW-0125	WASHER, FLAT, 1-1/4

Item	Part Number	Description
21	CL-1307	PIN, CLEVIS, 1-1/4 x 7.0
22	CP-1420	PIN, COTTER, 1/4 x 2.00
23	11997	HYD CYLINDER, 4” X 24” (TIE ROD STYLE)
24	HYF-1089	HYD TEE, 9/16 M - 9/16 M - 3/4 MORB
25	10850	HOSE, HYDRAULIC
26	10857	HOSE, HYDRAULIC
27	10855	HOSE, HYDRAULIC
28	HYF-1888	HYD TEE, 9/16 M - 9/16 M - 9/16 M
29	10851	HOSE, HYDRAULIC
30	10853	HOSE, HYDRAULIC
31	HYF-2820	HYD ELBOW, 9/16 M - 3/4 MORB
32	HYH-8104	HOSE, HYDRAULIC
33	HYH-8030	HOSE, HYDRAULIC
34	CP-3620	PIN, COTTER, 3/16 x 2.00
35	10854	HOSE, HYDRAULIC
36	HYS-2006	HYD COVER, HOSE, 60”
37	HYS-2005	HYD COVER, HOSE, 42”
38	HYF-3220	HYD ADAPTER, 3/4 M - 3/4 MORB

Dura-Reel Lift Hydraulics for IC-5112 and IC-5114

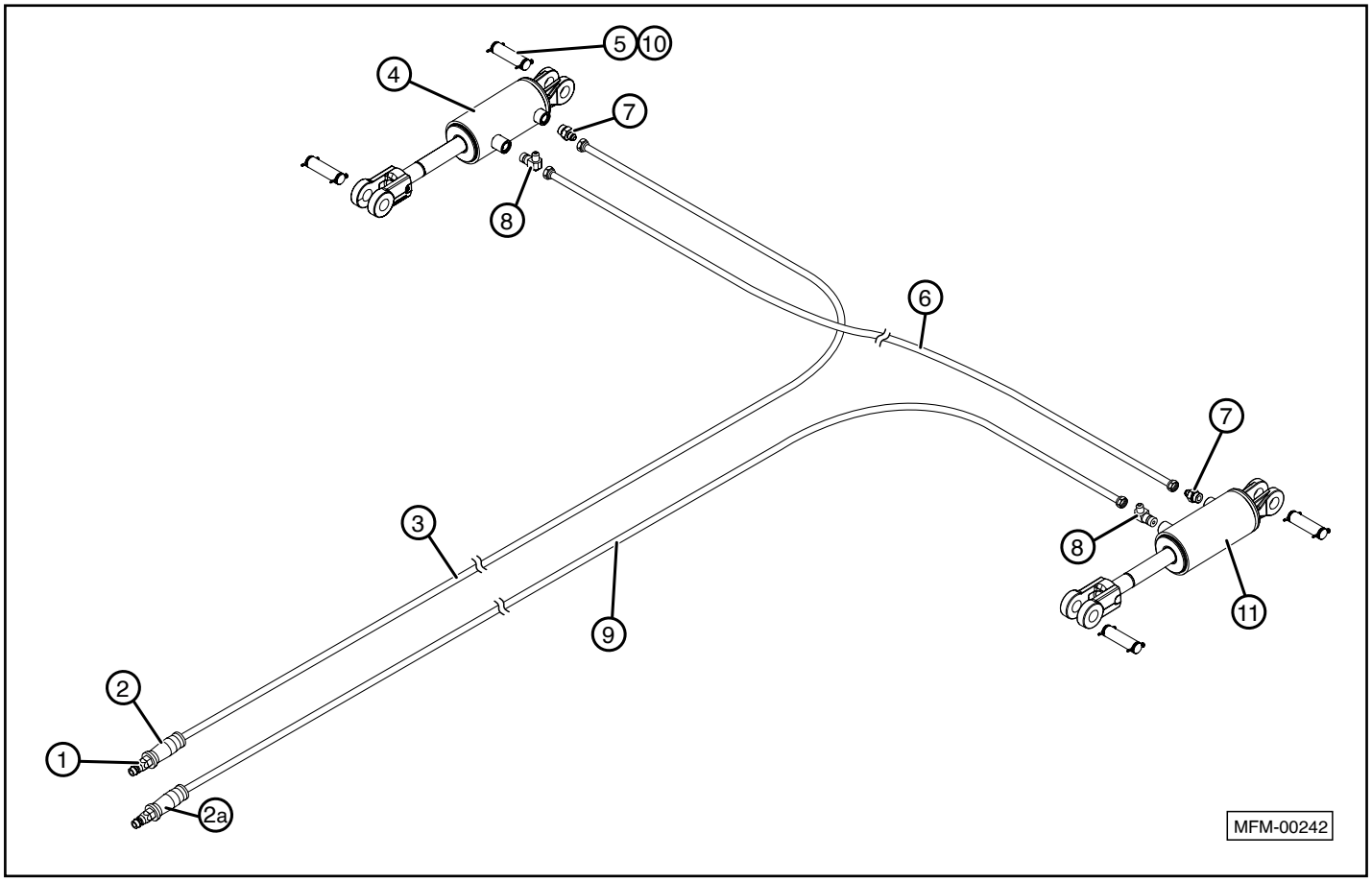

Item	Part Number	Description
1	15641	HYD DISCONNECT, MALE, 3/4 ORB
2	15038	HYDRA GRIP, SUPPLY (+), BLACK
2a	15039	HYDRA GRIP, RETURN (-), BLACK
3	15631	HYD HOSE,1/4(9/16F-3/4ORB),220
4	10326	HYD CYLINDER, REPHASING, 3.25x4 (MONARCH)
	15479	HYD CYLINDER, REPHASING, 3.25x4 (CARLSON)
5	HYO-2103	PIN, CYLINDER CLEVIS, 1 X 3-1/2
6	10809	HOSE, HYDRAULIC
7	HYF-3820	HYD ADAPTER, 9/16 M - 3/4 MORB

Item	Part Number	Description
8	HYF-2820	HYD ELBOW, 3/8 M - 1/2 MORB
9	15633	HYD HOSE,1/4(9/16F-3/4ORB),262
10	135995	PIN, COTTER
11	10327	HYD CYLINDER, REPHASING, 3 X 4 (MONARCH)
	15480	HYD CYLINDER, REPHASING, 3 X 4 (CARLSON)

Dura-Reel Lift Hydraulics for IC-5120, IC-5124, IC-5127, and IC-5132

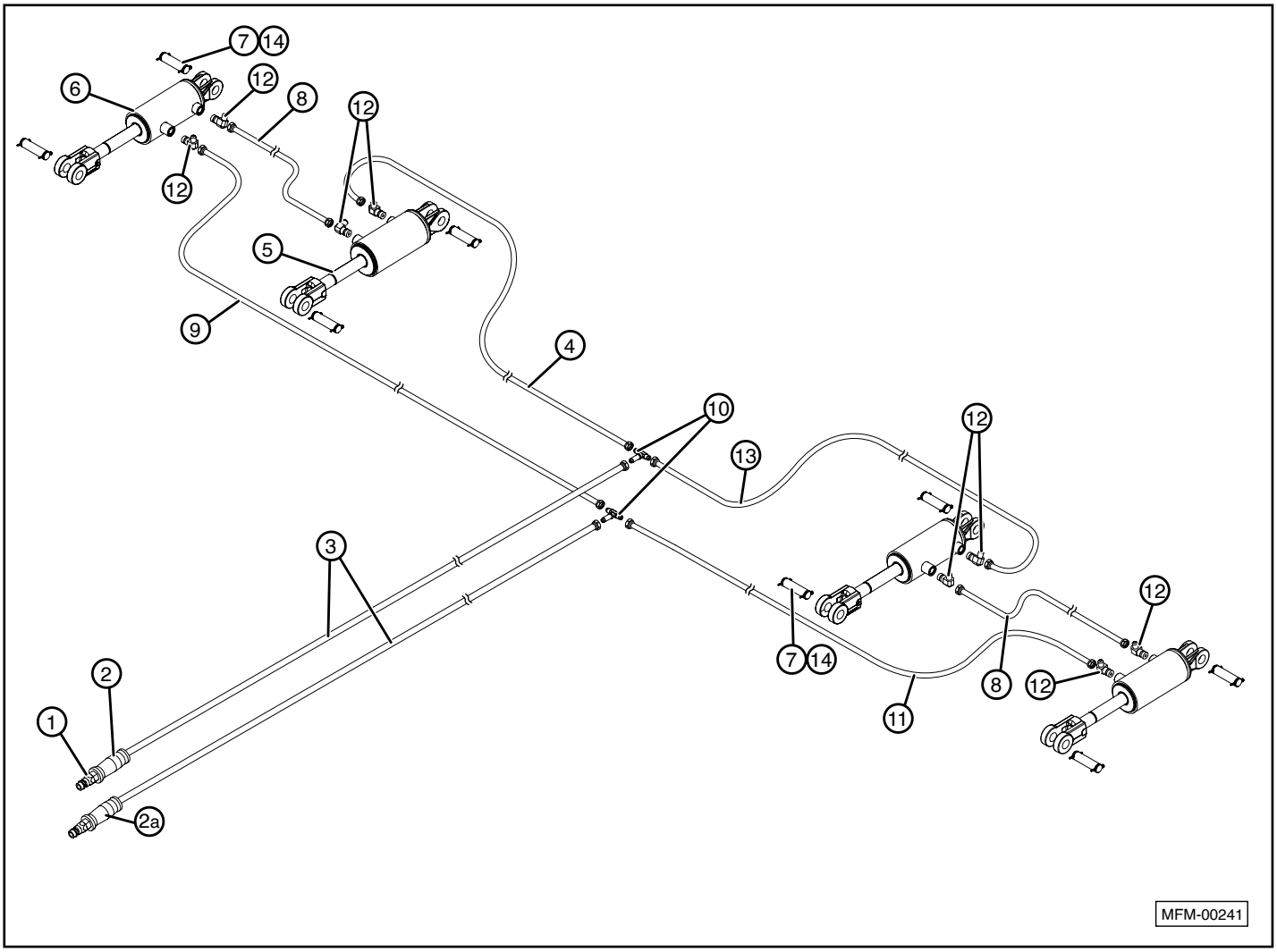

Item	Part Number	Description
1	15641	HYD DISCONNECT, MALE, 3/4 ORB
2	15038	HYDRA GRIP, SUPPLY (+), BLACK
2a	15039	HYDRA GRIP, RETURN (-), BLACK
3	15632 15630	HYD HOSE,1/4(9/16F-3/4ORB),226 (5120, 5124) HYD HOSE,1/4(9/16F-3/4ORB),204 (5127, 5132)
4	10991 10866	HOSE, HYDRAULIC (5120 and 5124) HOSE, HYDRAULIC (5127 and 5132)
5	10325 15478	HYD CYLINDER, REPHASING, 3.5x4 (MONARCH) HYD CYLINDER, REPHASING, 3.5x4 (CARLSON)
6	10326 15479	HYD CYLINDER, REPHASING, 3.25x4 (MONARCH) HYD CYLINDER, REPHASING, 3.25x4 (CARLSON)
7	HYO-2103	PIN, CYLINDER CLEVIS, 1 X 3-1/2
8	10803 10868 10902 10869	HOSE, HYDRAULIC (5120) HOSE, HYDRAULIC (5124) HOSE, HYDRAULIC (5127) HOSE, HYDRAULIC (5132)

Item	Part Number	Description
9	10992 10993 10867 10870	HOSE, HYDRAULIC (5120) HOSE, HYDRAULIC (5124) HOSE, HYDRAULIC (5127) HOSE, HYDRAULIC (5132)
10	HYF-1888	HYD TEE, 9/16 M - 9/16 M - 9/16 M
11	10993 11301 10903 10871	HOSE, HYDRAULIC (5120) HOSE, HYDRAULIC (5124) HOSE, HYDRAULIC (5127) HOSE, HYDRAULIC (5132)
12	HYF-2820	HYD ELBOW, 9/16 M - 3/4 MORB
13	10986 10806	HOSE, HYDRAULIC (5120 and 5124) HOSE, HYDRAULIC (5127 and 5132)
14	135995	PIN, COTTER

Dura-Reel Lift Hydraulics for IC-5140

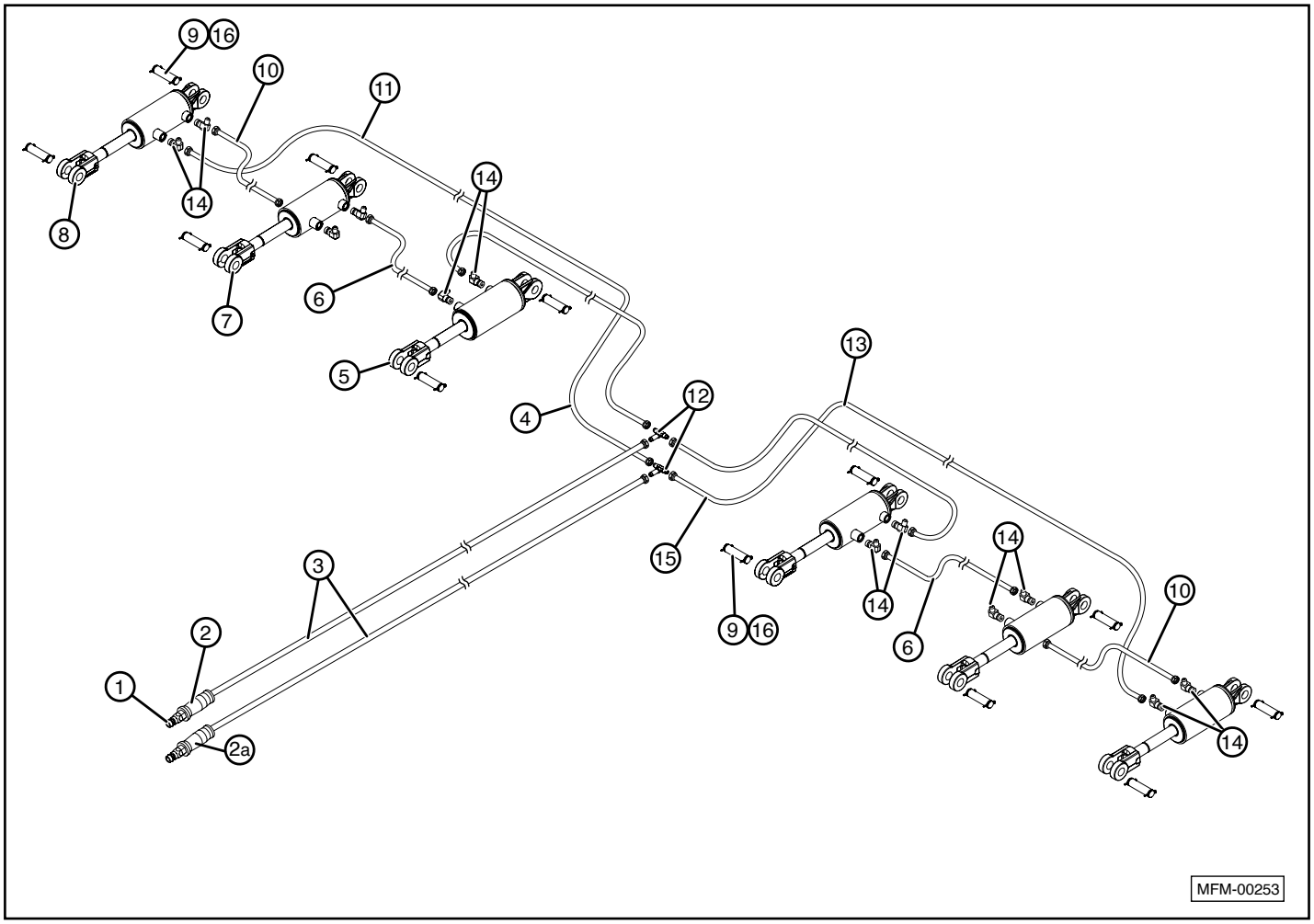

Item	Part Number	Description
1	15641	HYD DISCONNECT, MALE, 3/4 ORB
2	15038	HYDRA GRIP, SUPPLY (+), BLACK
2a	15039	HYDRA GRIP, RETURN (-), BLACK
3	15630	HYD HOSE,1/4(9/16F-3/4ORB),204
4	10866	HOSE, HYDRAULIC
5	10325	HYD CYLINDER, REPHASING, 3.5x4 (MONARCH)
	15478	HYD CYLINDER, REPHASING, 3.5x4 (CARLSON)
6	10867	HOSE, HYDRAULIC
7	10326	HYD CYLINDER, REPHASING, 3.25x4 (MONARCH)
	15479	HYD CYLINDER, REPHASING, 3.25x4 (CARLSON)
8	10327	HYD CYLINDER, REPHASING, 3x4 (MONARCH)
	15480	HYD CYLINDER, REPHASING, 3x4 (CARLSON)

Item	Part Number	Description
9	HYO-2103	PIN, CYLINDER CLEVIS, 1 X 3-1/2
10	10868	HOSE, HYDRAULIC
11	10865	HOSE, HYDRAULIC
12	HYF-1888	HYD TEE, 9/16 M - 9/16 M - 9/16 M
13	10864	HOSE, HYDRAULIC
14	HYF-2820	HYD ELBOW, 9/16 M - 3/4 MORB
15	10806	HOSE, HYDRAULIC
16	135995	PIN, COTTER

Disk Gang Angle Hydraulics for IC-5112 and IC-5114

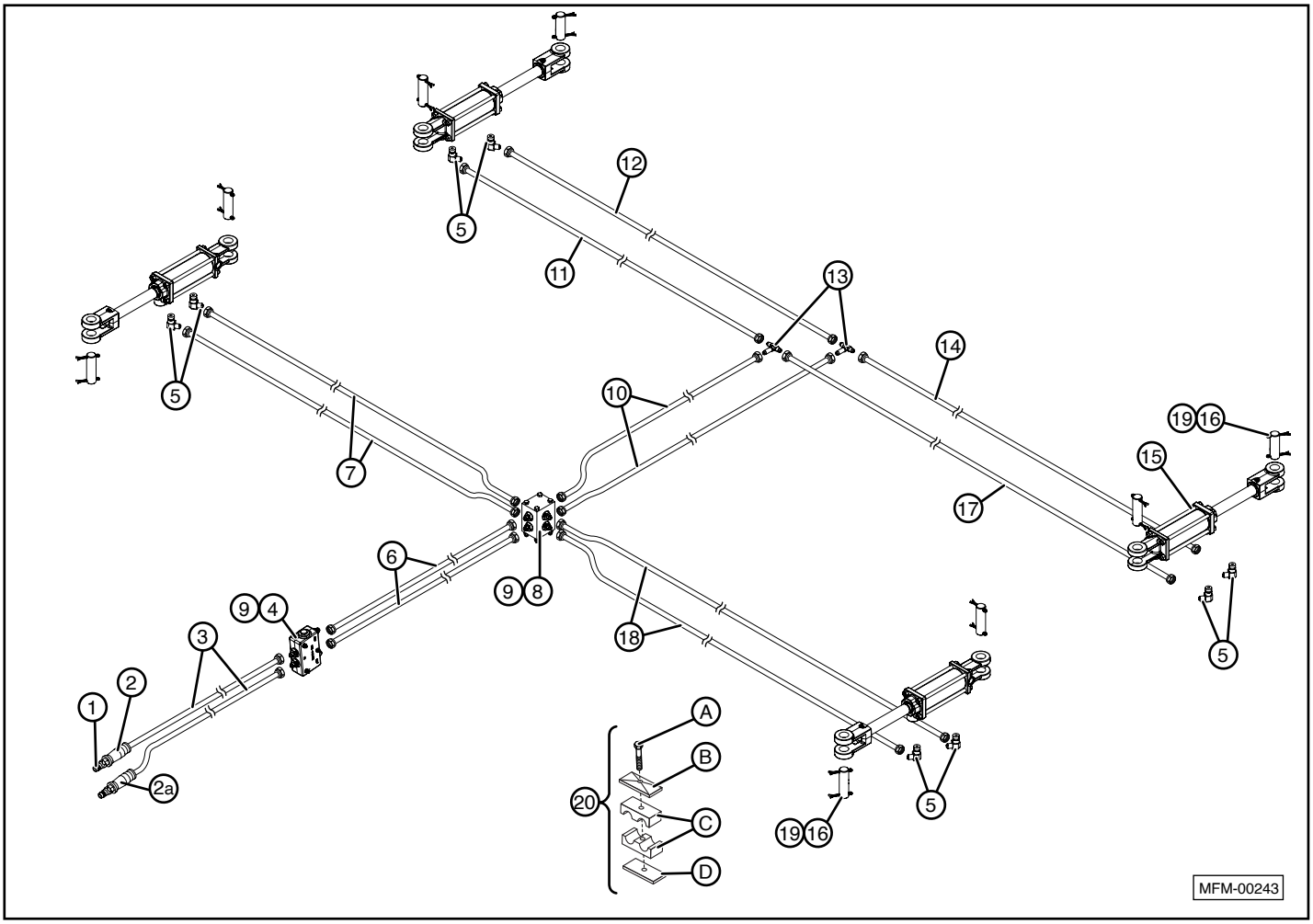

Item	Part Number	Description
1	15641	HYD DISCONNECT, MALE, 3/4 ORB
2	15034	HYDRA GRIP, SUPPLY (+), GREEN
2a	15035	HYDRA GRIP, RETURN (-), GREEN
3	15634	HYD HOSE,1/4(9/16F-3/4ORB),98
4	14092	HYD VALVE, LOCK, 1-CIRCUIT
5	HYF-2820	HYD ELBOW, 9/16 M - 3/4 MORB
6	10805	HOSE, HYDRAULIC
7	10807	HOSE, HYDRAULIC
8	HYO-3022	HYDRAULIC MANIFOLD, 4-WAY
9	HYF-3820	HYD ADAPTER, 9/16 M - 3/4 MORB
10	10804	HOSE, HYDRAULIC
11	10801	HOSE, HYDRAULIC
12	10800	HOSE, HYDRAULIC

Item	Part Number	Description
13	HYF-1888	HYD TEE, 9/1 6M - 9/16 M - 9/16 M
14	10802	HOSE, HYDRAULIC
15	HYC-32004	HYD CYLINDER, 2 x 4 (TIE ROD STYLE)
16	HYO-2103	PIN, CYLINDER CLEVIS, 1 X 3-1/4
17	10803	HOSE, HYDRAULIC
18	10806	HOSE, HYDRAULIC
19	CP-3620	PIN, COTTER
20	10795	CLAMP ASSEMBLY, HYDRAULIC
A	HYO-1008	BOLT, HEX, 5/16-18 X 1-3/8
B	HYO-1004	COVER, HYD CLAMP
C	10796	BODY, HYD CLAMP
D	HYO-1206	PLATE, HYD CLAMP

Disk Gang Angle Hydraulics for IC-5120, IC-5124, IC-5127, and IC-5132

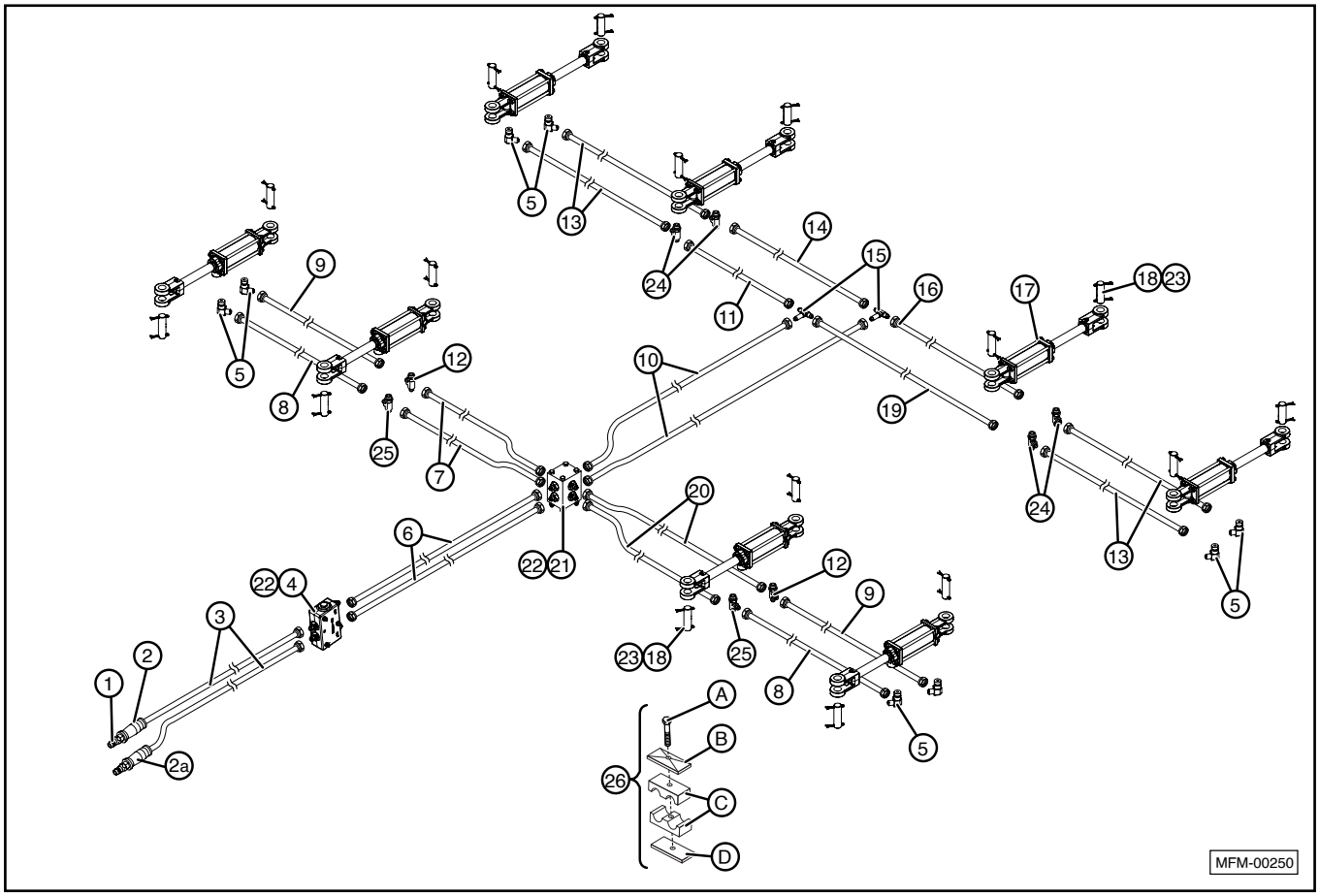

Item	Part Number	Description
1	15641	HYD DISCONNECT, MALE, 3/4 ORB
2	15034	HYDRA GRIP, SUPPLY (+), GREEN
2a	15035	HYDRA GRIP, RETURN (-), GREEN
3	15634	HYD HOSE,1/4(9/16F-3/4ORB),98
4	HYO-3024	HYD VALVE, LOCK, 1-CIRCUIT
5	HYF-2820	HYD ELBOW, 9/16 M - 3/4 MORB
6	10981 10858	HOSE, HYDRAULIC (5120 and 5124) HOSE, HYDRAULIC (5127 and 5132)
7	10809 10807	HOSE, HYDRAULIC (5120 and 5124) HOSE, HYDRAULIC (5127 and 5132)
8	10982 10859 10860 10872	HOSE, HYDRAULIC (5120) HOSE, HYDRAULIC (5124) HOSE, HYDRAULIC (5127) HOSE, HYDRAULIC (5132)
9	10983 11134 11134 10873	HOSE, HYDRAULIC (5120) HOSE, HYDRAULIC (5124) HOSE, HYDRAULIC (5127) HOSE, HYDRAULIC (5132)
10	10984 10858 10804	HOSE, HYDRAULIC (5120 and 5124) HOSE, HYDRAULIC (5127) HOSE, HYDRAULIC (5132)
11	10986 10800	HOSE, HYDRAULIC (5120 and 5124) HOSE, HYDRAULIC (5127 and 5132)
12	HYF-1089	HYD TEE, 9/16 M - 9/16 M - 3/4 MORB
13	10989 10868 10901 10861	HOSE, HYDRAULIC (5120) HOSE, HYDRAULIC (5124) HOSE, HYDRAULIC (5127) HOSE, HYDRAULIC (5132)

Item	Part Number	Description
14	10985 10801	HOSE, HYDRAULIC (5120 and 5124) HOSE, HYDRAULIC (5127 and 5132)
15	HYF-1888	HYD TEE, 9/16 M - 9/16 M - 9/16 M
16	10987 10802	HOSE, HYDRAULIC (5120 and 5124) HOSE, HYDRAULIC (5127 and 5132)
17	HYC-32004	HYD CYLINDER, 2 X 4 (TIE ROD STYLE)
18	HYO-2103	PIN, CYLINDER CLEVIS, 1 X 3-1/2
19	10988 10803	HOSE, HYDRAULIC (5120 and 5124) HOSE, HYDRAULIC (5127 and 5132)
20	10806	HOSE, HYDRAULIC
21	HYO-3022	HYDRAULIC MANIFOLD, 4-WAY
22	HYF-3820	HYD ADAPTER, 9/16 M-3/4 MORB
23	CP-3620	PIN, COTTER
24	HYF-1089 HYF-1809	HYD TEE, 9/16 M - 9/16 M - 3/4 MORB (5127 and 5132) HYD TEE, 9/16M -3/4Morb - 9/16M (5120 and 5124)
25	HYF-1809	HYD TEE, 9/16M -3/4Morb - 9/16M
26	10795	CLAMP ASSEMBLY, HYDRAULIC
A	HYO-1008	BOLT, HEX, 5/16-18 X 1-3/8
B	HYO-1004	COVER, HYD CLAMP
C	10796	BODY, HYD CLAMP
D	HYO-1206	PLATE, HYD CLAMP

Disk Gang Angle Hydraulics for IC-5140

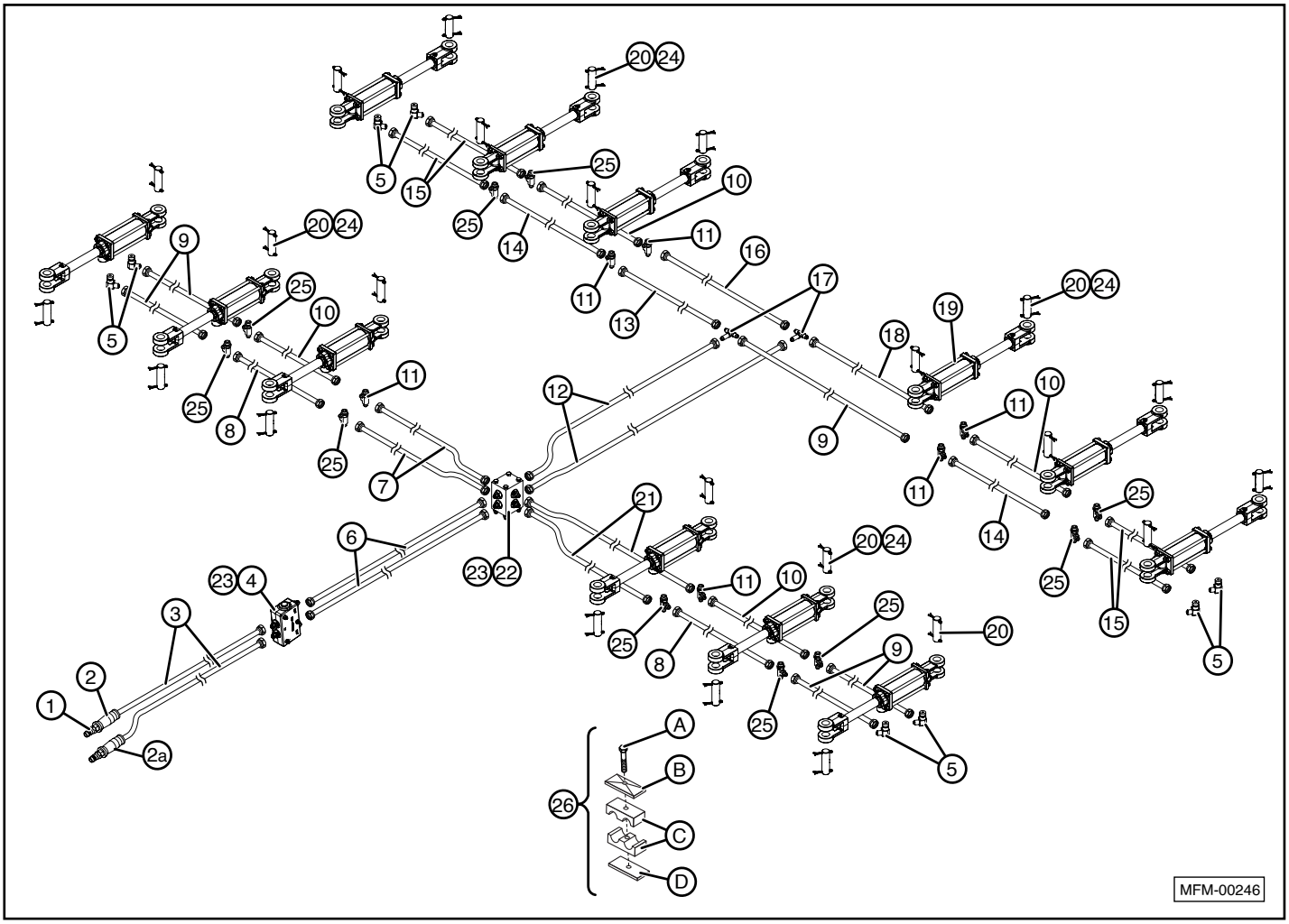

Item	Part Number	Description
1	15641	HYD DISCONNECT, MALE, 3/4 ORB
2	15034	HYDRA GRIP, SUPPLY (+), GREEN
2a	15035	HYDRA GRIP, RETURN (-), GREEN
3	15634	HYD HOSE,1/4(9/16F-3/4ORB),98
4	HYO-3024	HYD VALVE, LOCK, 1-CIRCUIT
5	HYF-2820	HYD ELBOW, 9/16 M - 3/4 MORB
6	10858	HOSE, HYDRAULIC
7	10807	HOSE, HYDRAULIC
8	10859	HOSE, HYDRAULIC
9	10803	HOSE, HYDRAULIC
10	10860	HOSE, HYDRAULIC
11	HYF-1089	HYD TEE, 9/16M - 9/16M - 3/4Morb
12	10804	HOSE, HYDRAULIC
13	10800	HOSE, HYDRAULIC
14	11134	HOSE, HYDRAULIC
15	10862	HOSE, HYDRAULIC

Item	Part Number	Description
16	10801	HOSE, HYDRAULIC
17	HYF-1888	HYD TEE, 9/16 M - 9/16 M - 9/16 M
18	10802	HOSE, HYDRAULIC
19	HYC-32004	HYD CYLINDER, 2 X 4 (TIE ROD STYLE)
20	HYO-2103	PIN, CYLINDER CLEVIS, 1 X 3-1/2
21	10806	HOSE, HYDRAULIC
22	HYO-3022	HYDRAULIC MANIFOLD, 4-WAY
23	HYF-3820	HYD ADAPTER, 9/16 M - 3/4 MORB
24	CP-3620	PIN, COTTER
25	HYF-1809	HYD TEE, 9/16M -3/4Morb - 9/16M
26	10795	CLAMP ASSEMBLY, HYDRAULIC
A	BH-3120	BOLT, HEX, 5/16-18 X 2”
B	HYO-1004	COVER, HYD CLAMP
C	10796	BODY, HYD CLAMP
D	HYO-1206	PLATE, HYD CLAMP

Spur-Till Down Pressure for IC-5112, 5114

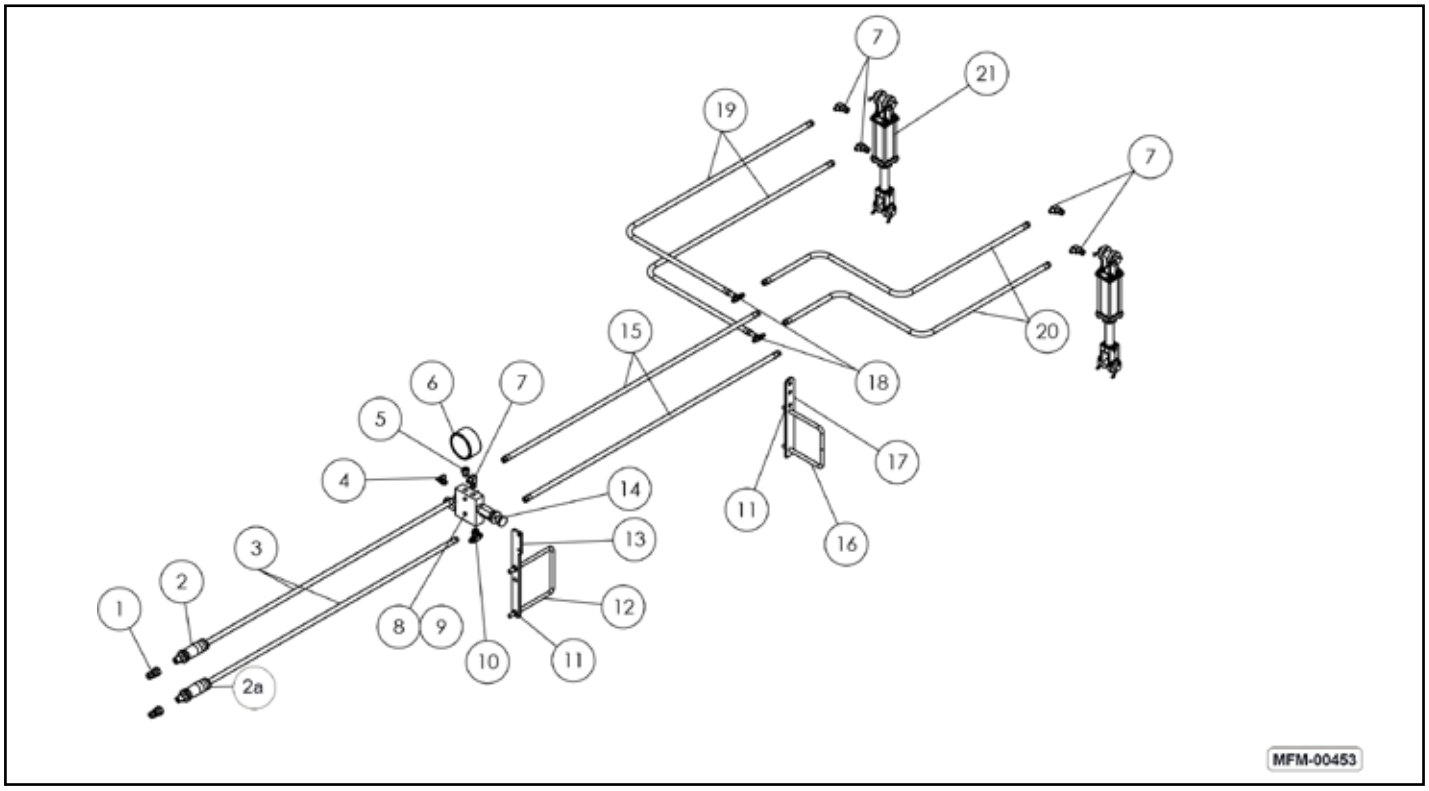

Item	Part Number	Description
1	15641	HYD DISCONNECT, MALE, 3/4 ORB
2	15028	HYDRA GRIP, SUPPLY (+), GRAY
2a	15029	HYDRA GRIP, RETURN (-), GRAY
3	15629	HHYD HOSE,1/4(9/16F-3/4ORB), 186
4	HYF-2880	HYD ELBOW,9/16M-9/16Morb
5	14614	HYD ADAPTER,3/4 Morb-1/4 Fpipe
6	14564	PRESSURE GAUGE
7	HYF-2820	HYD ELBOW, 9/16M - 3/4Morb
8	BH-2525	BOLT,HEX,1/4-20X2.5,GD5
9	NLT-2520	NUT, TOP LOCK 1/4-20
10	HYF-1809	HYD TEE,9/16M-3/4Morb-9/16M
11	NLT-5013	NUT,LOCK,TOP,1/2-13
12	BU-1278	U-BOLT, 1/2 x 7 x 8 1/4
13	14919	BRACKET,VALVE MOUNT
14	14909	VALVE,PRESSURE RED. W/REVERSE RELIEF

Item	Part Number	Description
15	10868	HYD HOSE,1/4(9/16F),110
16	BU-1267	U-BOLT, 1/2 x 6 x 7 1/47
17	WDL-2307	CB HYD TEE BRACKET
18	HYF-1888	HYD TEE,9/16M-9/16M-9/16M
19	10993	HYD HOSE,1/4(9/16F),122
20	10992	HYD HOSE,1/4(9/16F),102
21	HYC-32004	HYDRAULIC CYLINDER, 2X4

Spur-Till Down Pressure IC-5120, 5124, 5127

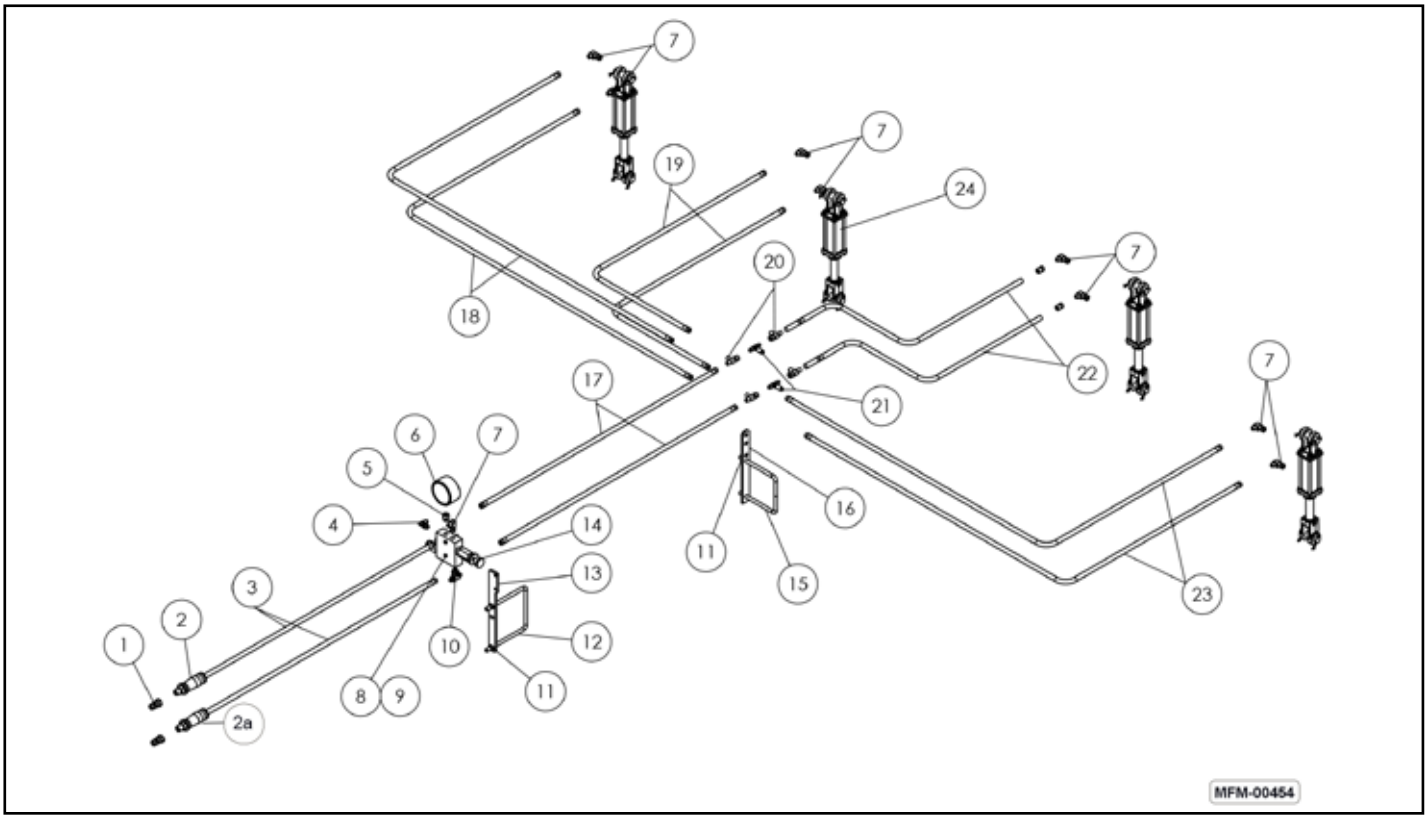

Item	Part Number	Description
1	15641	HYD DISCONNECT, MALE, 3/4 ORB
2	15028	HYDRA GRIP, SUPPLY (+), GRAY
2a	15029	HYDRA GRIP, RETURN (-), GRAY
3	15629	HHYD HOSE,1/4(9/16F-3/4ORB), 186
4	HYF-2880	HYD ELBOW,9/16M-9/16Morb
5	14614	HYD ADAPTER,3/4 Morb-1/4 Fpipe
6	14564	PRESSURE GAUGE
7	HYF-2820	HYD ELBOW, 9/16M - 3/4Morb
8	BH-2525	BOLT,HEX,1/4-20X2.5,GD5
9	NLT-2520	NUT, TOP LOCK 1/4-20
10	HYF-1809	HYD TEE,9/16M-3/4Morb-9/16M
11	NLT-5013	NUT,LOCK,TOP,1/2-13
12	BU-1278	U-BOLT, 1/2 x 7 x 8 1/4
13	14919	BRACKET,VALVE MOUNT
14	14909	VALVE,PRESSURE RED. W/REVERSE RELIEF
15	BU-1267	U-BOLT, 1/2 x 6 x 7 1/4
16	WDL-2307	CB HYD TEE BRACKET
17	10993	HYD HOSE,1/4(9/16F),122 (5120,5124)
	10992	HYD HOSE,1/4(9/16F),102 (5127)

Item	Part Number	Description
18	14482	HYD HOSE,1/4(9/16F),190 (5120)
	15401	HYD HOSE,1/4(9/16F),204 (5124)
	14847	HYD HOSE,1/4(9/16F),223 (5127)
19	10989	HYD HOSE,1/4(9/16F),84 (5120,5124)
	10993	HYD HOSE,1/4(9/16F),122 (5127)
20	HYF-1188	HYD TEE,9/16F-9/16M-9/16M
21	HYF-1888	HYD TEE,9/16M-9/16M-9/16M
22	14209	HYD HOSE,1/4(9/16F),72 (5120,5124)
	10992	HYD HOSE,1/4(9/16F),102 (5127)
23	14748	HYD HOSE,1/4(9/16F),180 (5120)
	14482	HYD HOSE,1/4(9/16F),190 (5124,5127)
24	HYC-32004	HYDRAULIC CYLINDER, 2X4

Spur-Till Down Pressure for IC-5132, 5140

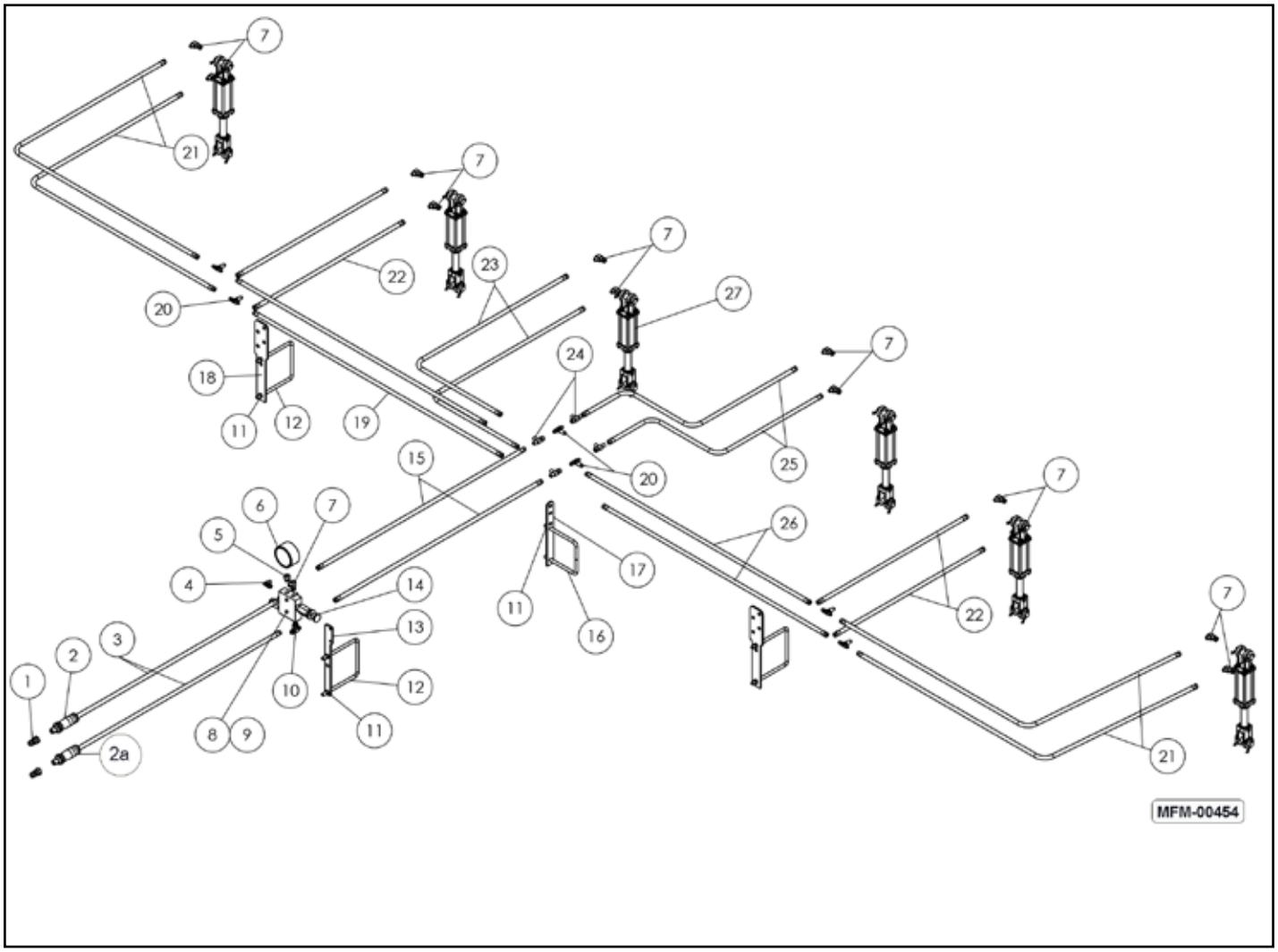

Item	Part Number	Description
1	15641	HYD DISCONNECT, MALE, 3/4 ORB
2	15028	HYDRA GRIP, SUPPLY (+), GRAY
2a	15029	HYDRA GRIP, RETURN (-), GRAY
3	15629	HHYD HOSE,1/4(9/16F-3/4ORB), 186
4	HYF-2880	HYD ELBOW,9/16M-9/16Morb
5	14614	HYD ADAPTER,3/4 Morb-1/4 Fpipe
6	14564	PRESSURE GAUGE
7	HYF-2820	HYD ELBOW, 9/16M - 3/4Morb
8	BH-2525	BOLT,HEX,1/4-20X2.5,GD5
9	NLT-2520	NUT, TOP LOCK 1/4-20
10	HYF-1809	HYD TEE,9/16M-3/4Morb-9/16M
11	NLT-5013	NUT,LOCK,TOP,1/2-13
12	BU-1278	U-BOLT, 1/2 x 7 x 8 1/4
13	14919	BRACKET,VALVE MOUNT
14	14909	VALVE,PRESSURE RED. W/REVERSE RELIEF

Item	Part Number	Description
15	10868	HYD HOSE,1/4(9/16F),110
16	BU-1267	U-BOLT, 1/2 x 6 x 7 1/4
17	WDL-2307	CB HYD TEE BRACKET
18	14970	HYDRAULIC TEE HOSE POST
19	10903	HYD HOSE,1/4(9/16F),156
20	HYF-1888	HYD TEE,9/16M-9/16M-9/16M
21	10992	HYD HOSE,1/4(9/16F),102 (5132)
	11301	HYD HOSE,1/4(9/16F),141 (5140)
22	10985	HYD HOSE,1/4(9/16F),48
23	10993	HYD HOSE,1/4(9/16F),122
24	HYF-1188	HYD TEE,9/16F-9/16M-9/16M
25	10992	HYD HOSE,1/4(9/16F),102
26	10992	HYD HOSE,1/4(9/16F),102
27	HYC-32004	HYDRAULIC CYLINDER, 2X4

Layout Diagram for IC-5112 with 3 Bar Harrow and Single Rolling Basket

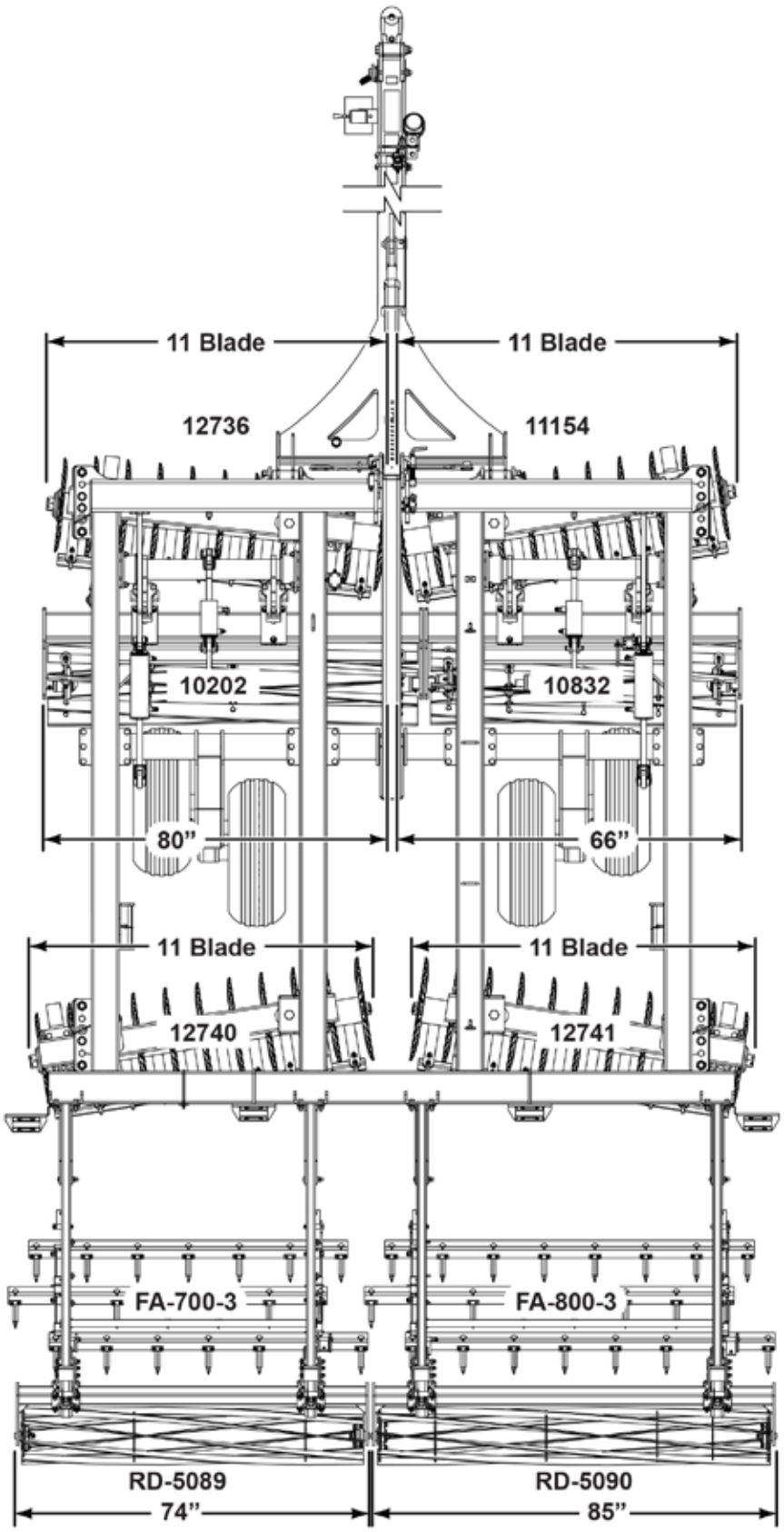

MFM-00399

Layout Diagram for IC-5112 with 5 Bar Harrow

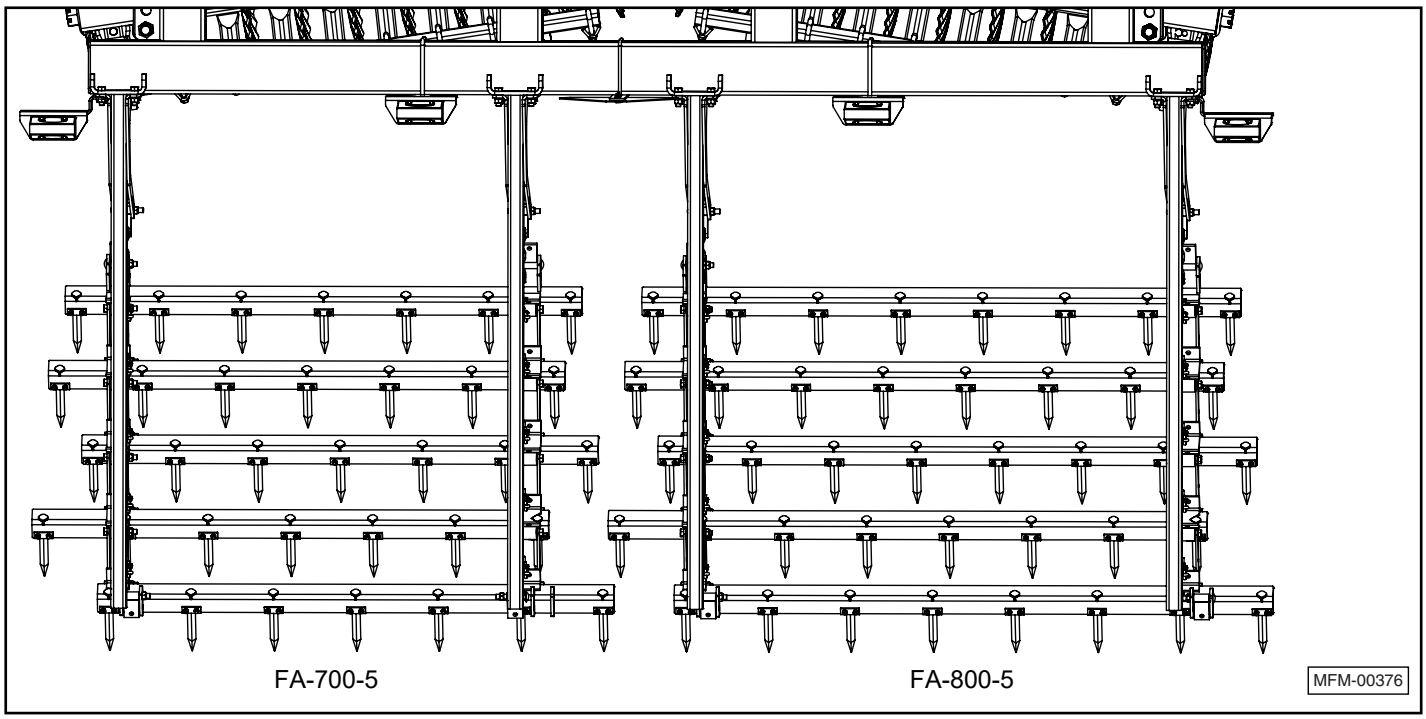

Layout Diagram for IC-5112 with Double Rolling Baskets

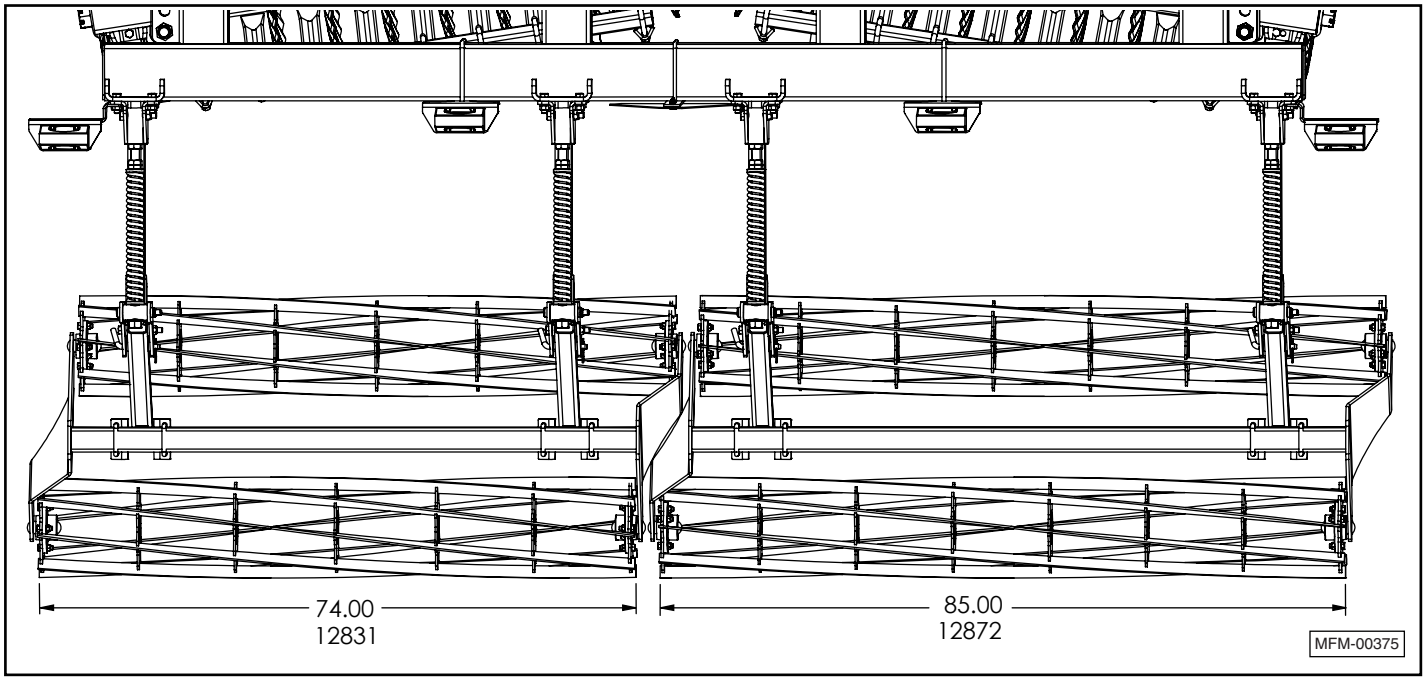

Layout Diagram for IC-5112 with Spur-Till and Single Rolling Basket

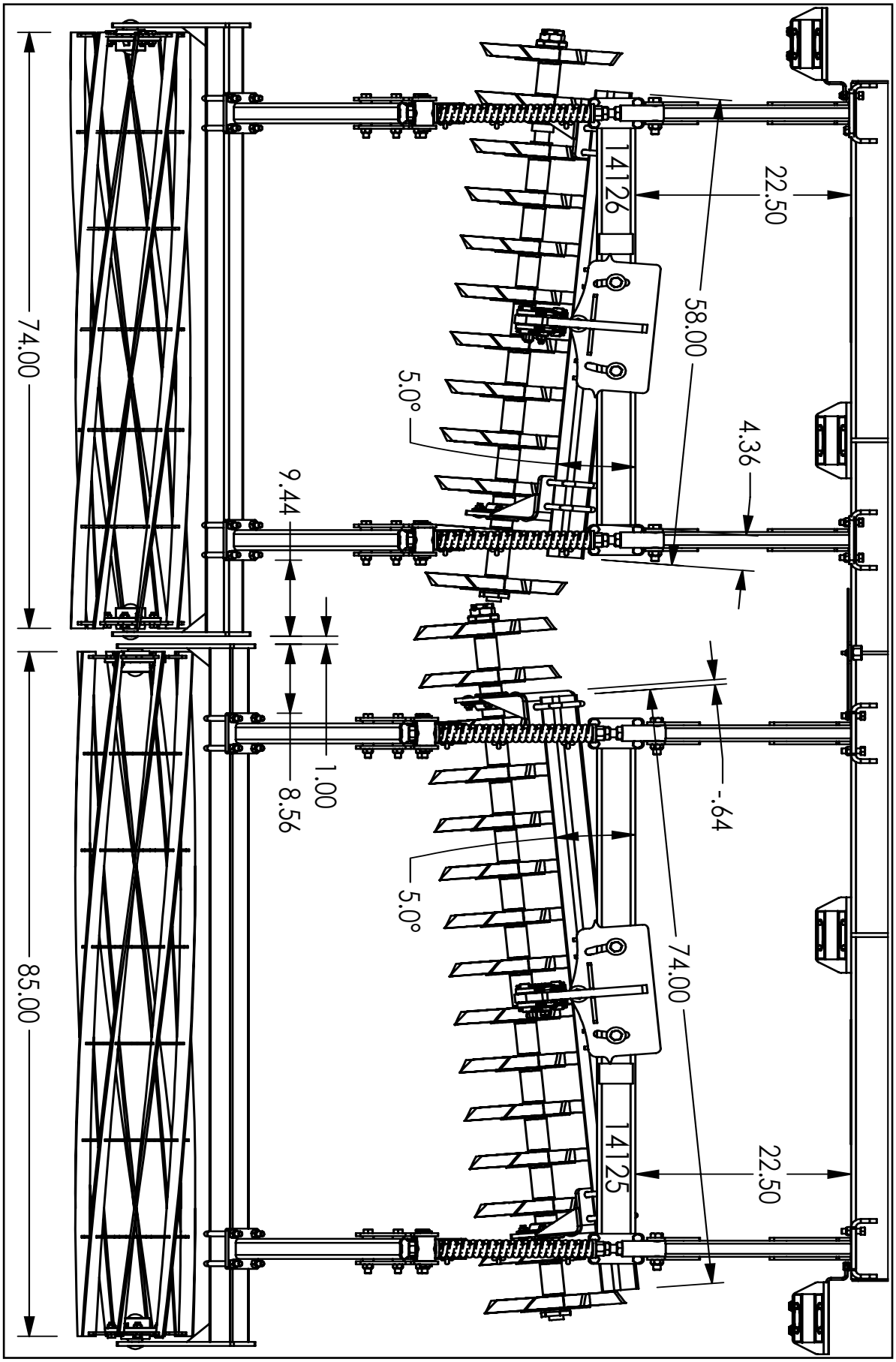

Layout Diagram for IC-5114 with 3 Bar Harrow and Single Rolling Basket

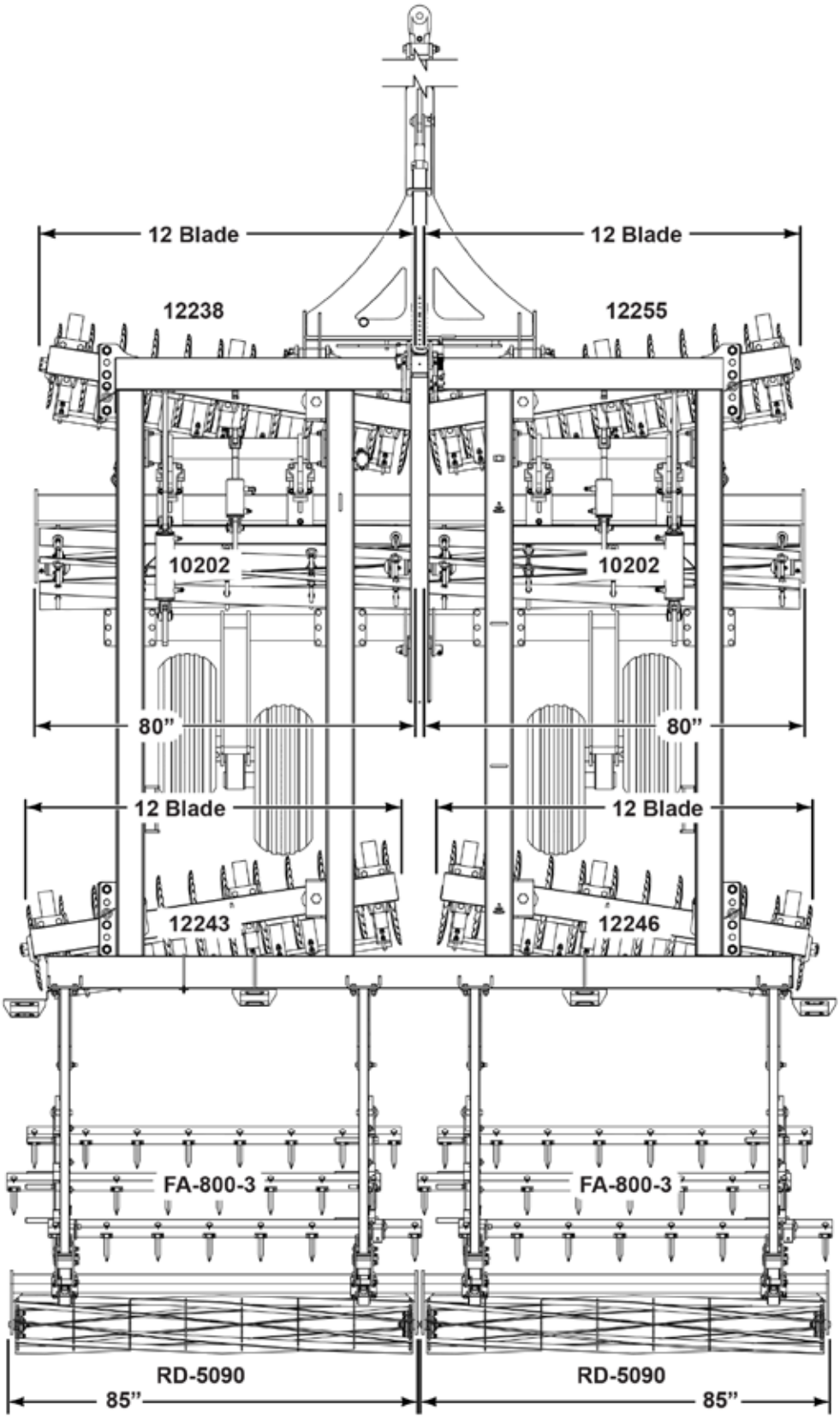

MFM-00400

Layout Diagram for IC-5114 with 5 Bar Harrow

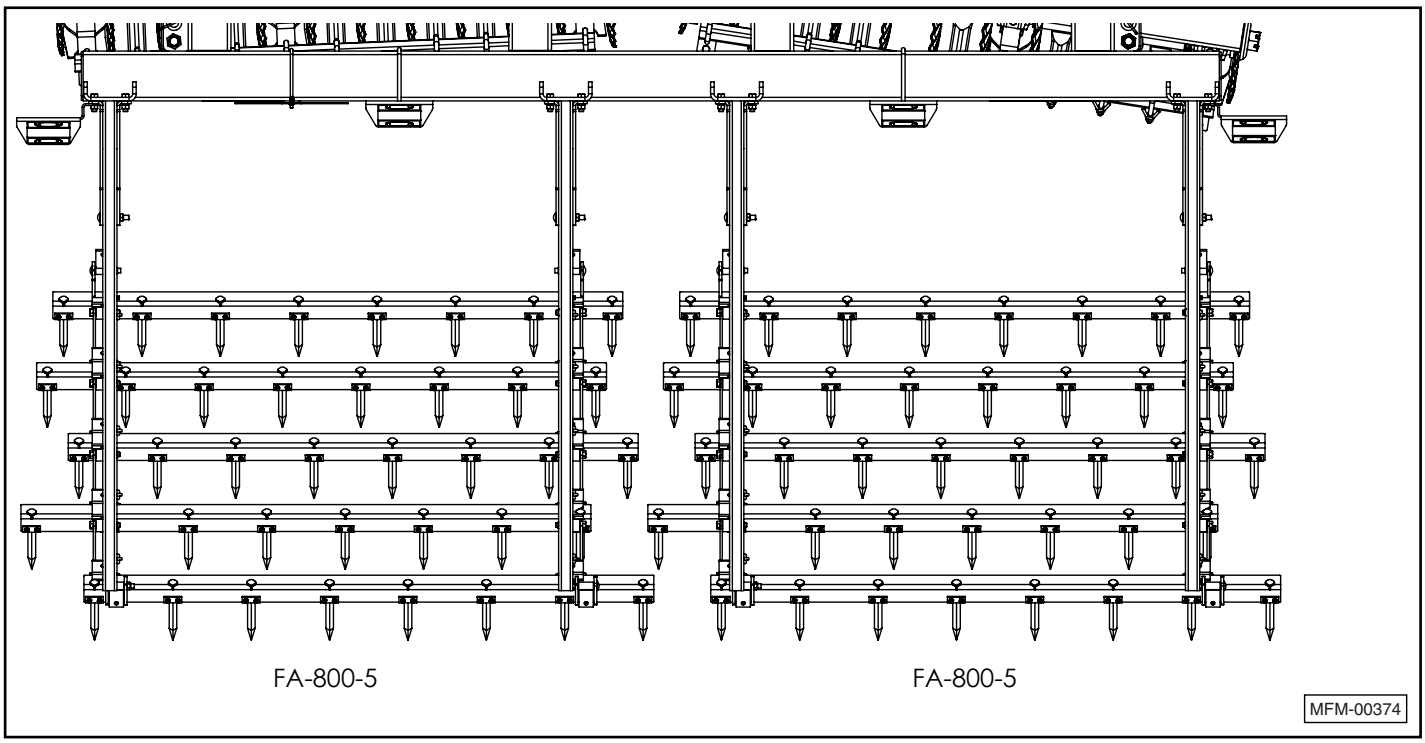

Layout Diagram for IC-5114 with Double Rolling Baskets

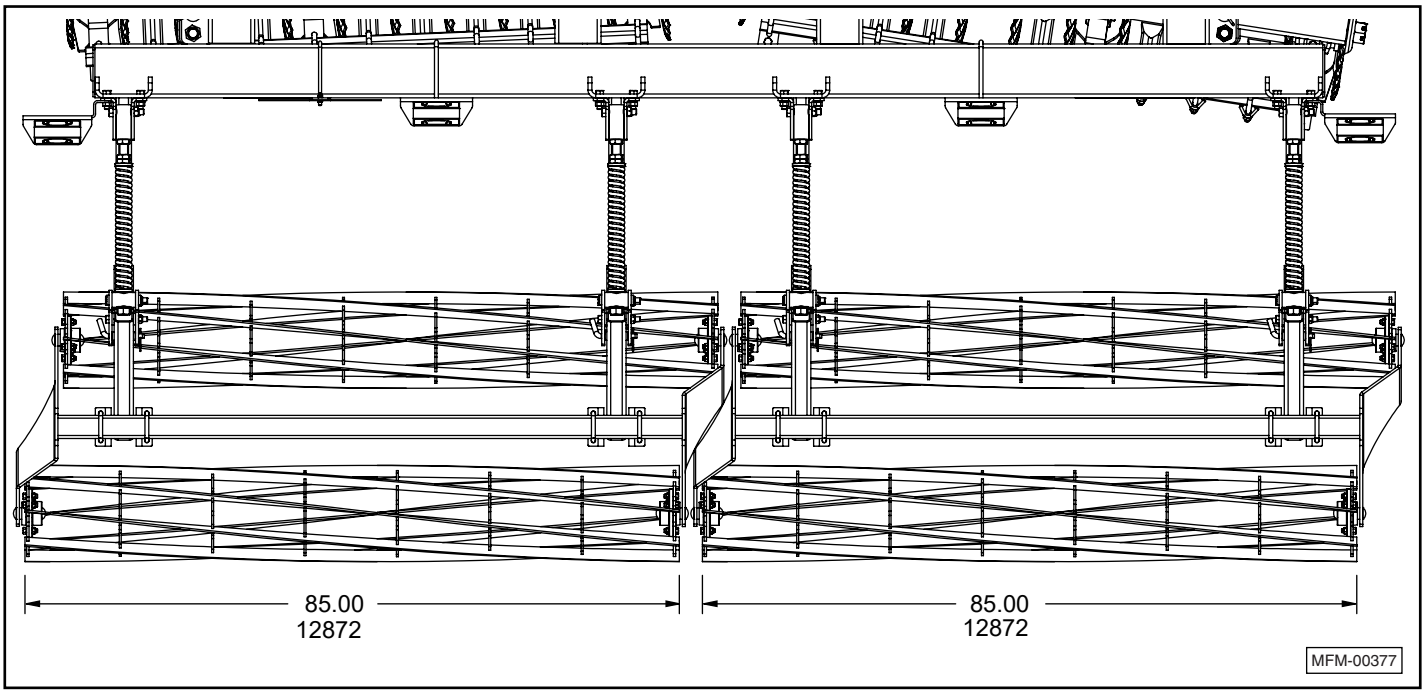

Layout Diagram for IC-5114 with Spur-Till and Single Rolling Basket

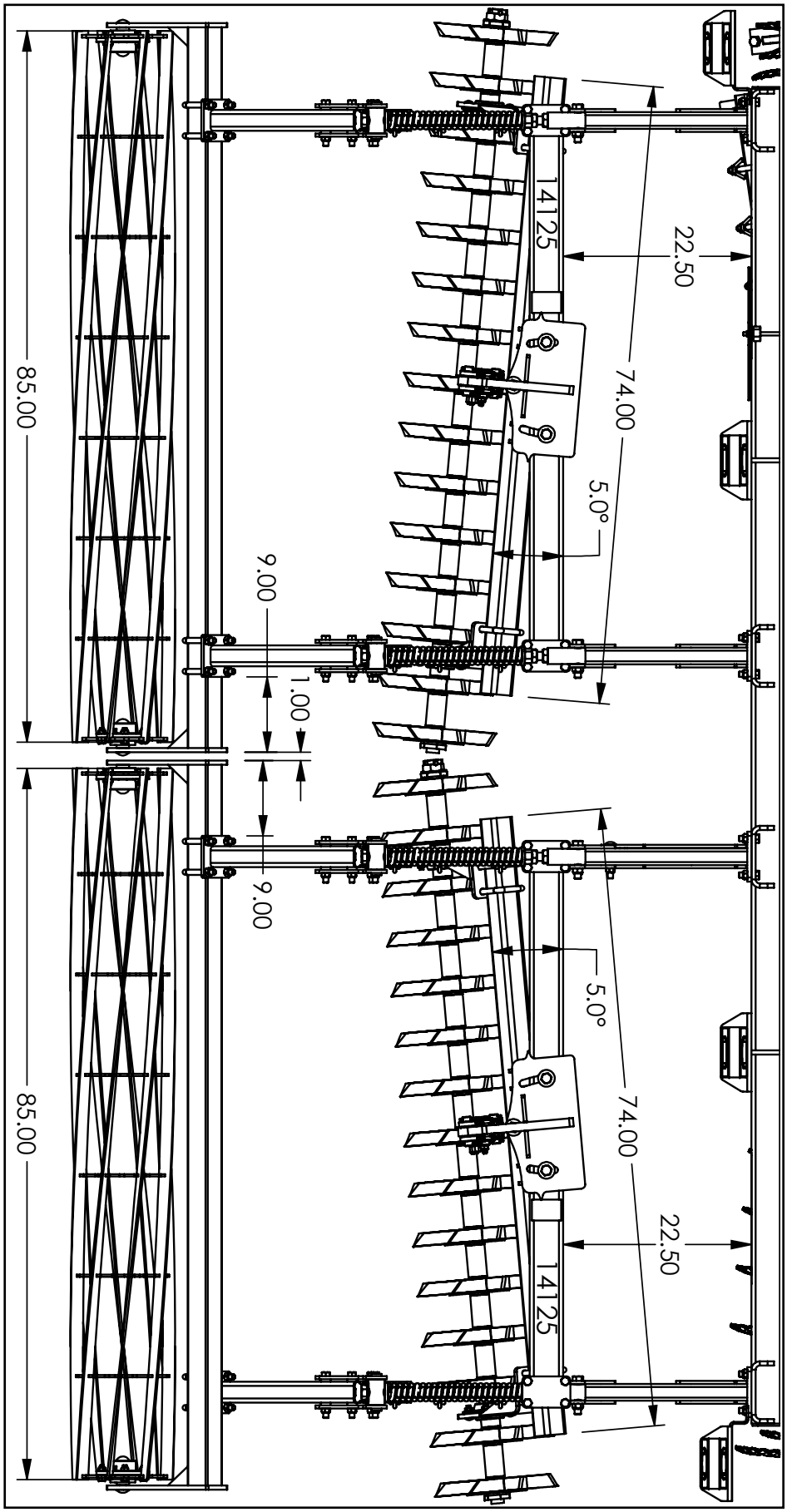

Layout Diagram for IC-5120 with 3 Bar Harrow and Single Rolling Basket

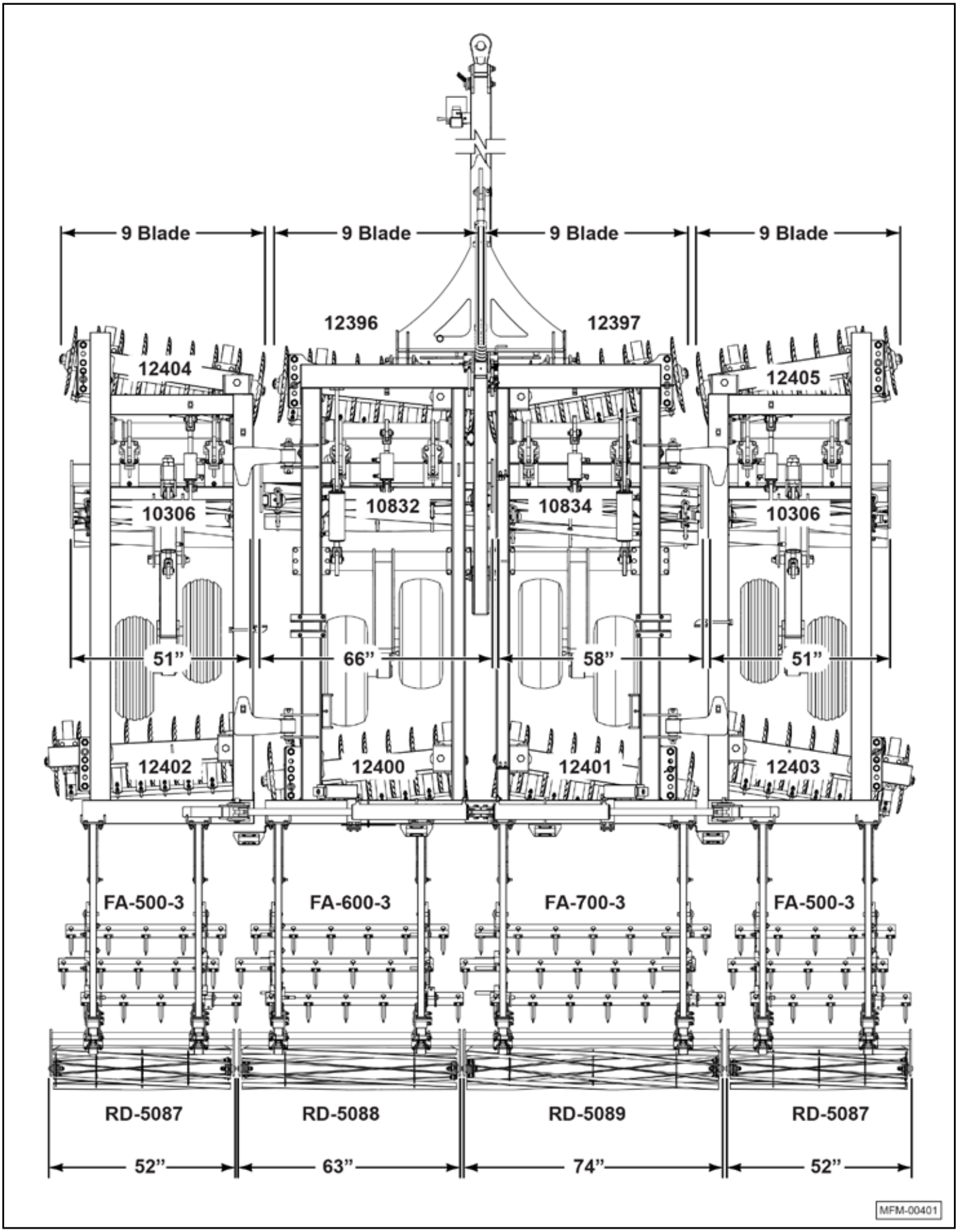

Layout Diagram for IC-5120 with 5 Bar Harrow

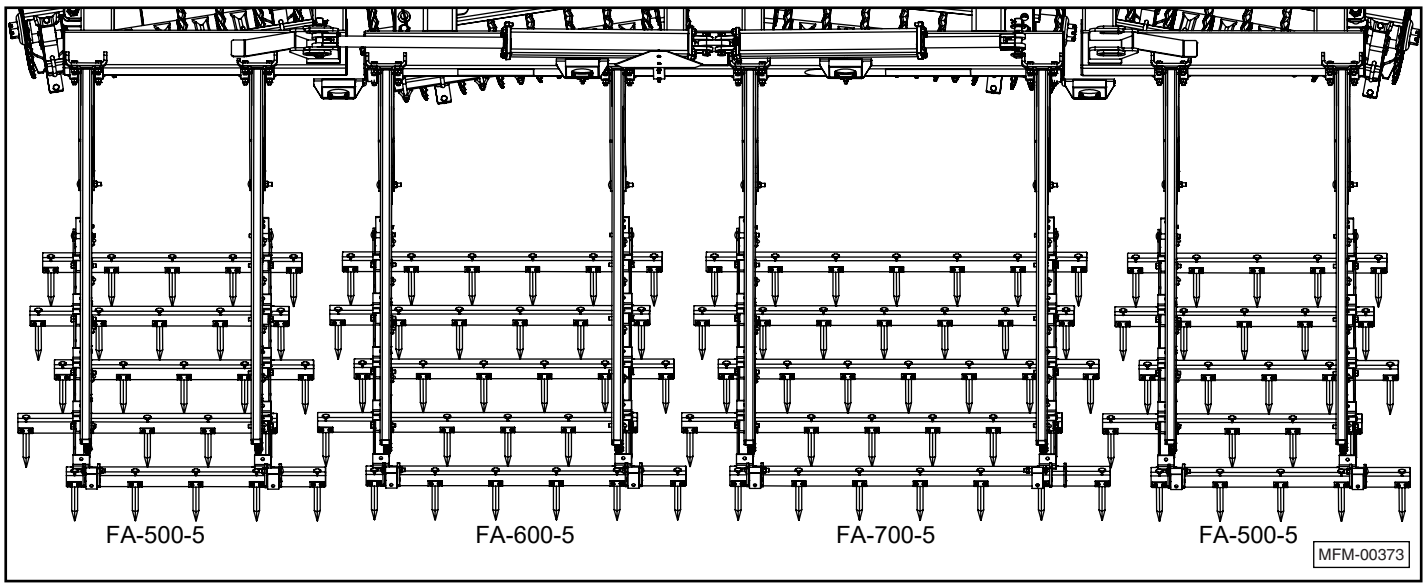

Layout Diagram for IC-5120 with Double Rolling Baskets

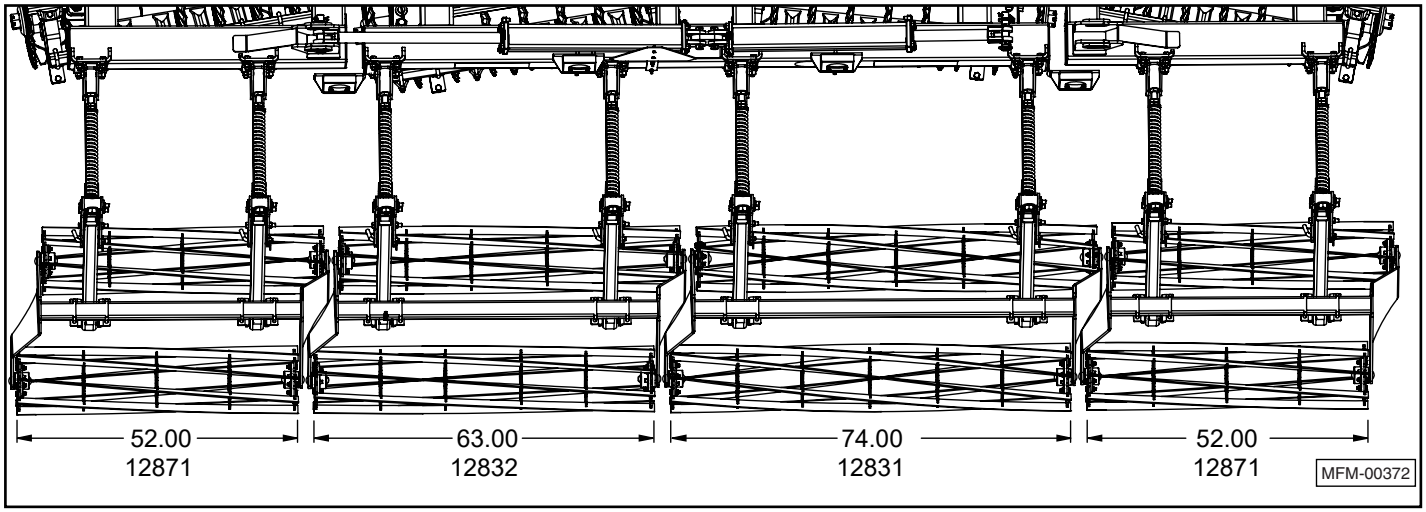

Layout Diagram for IC-5120 with Spur-Till and Single Rolling Basket

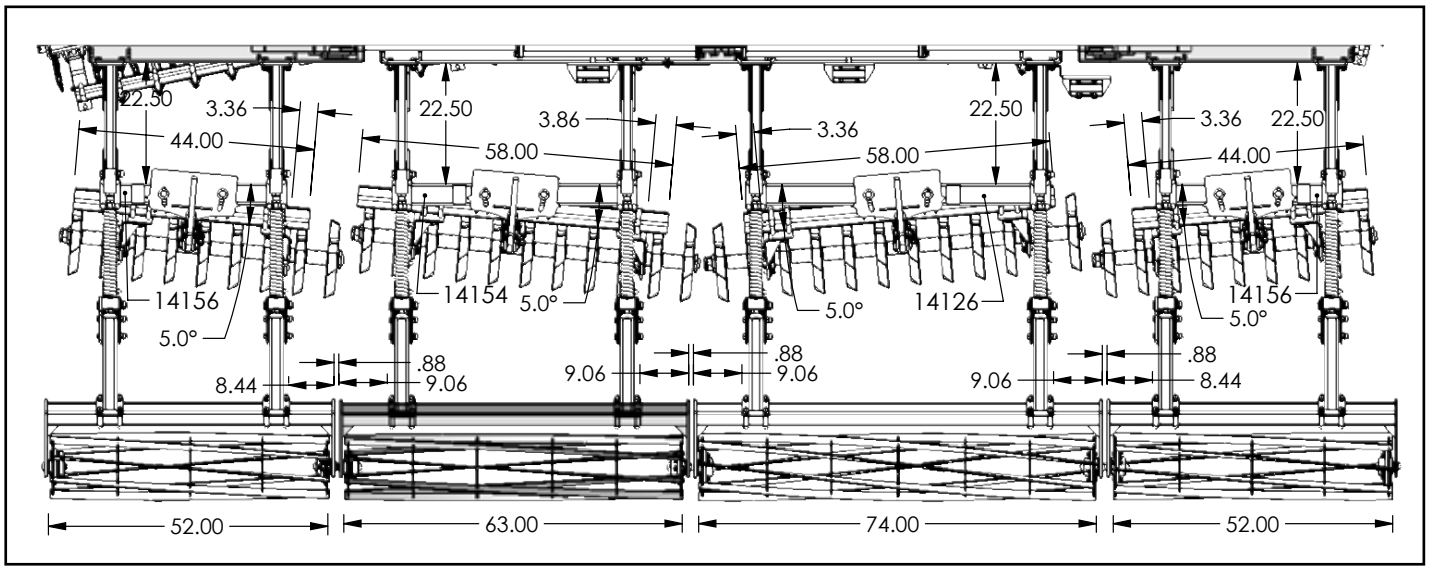

Layout Diagram for IC-5124 with 3 Bar Harrow and Single Rolling Basket

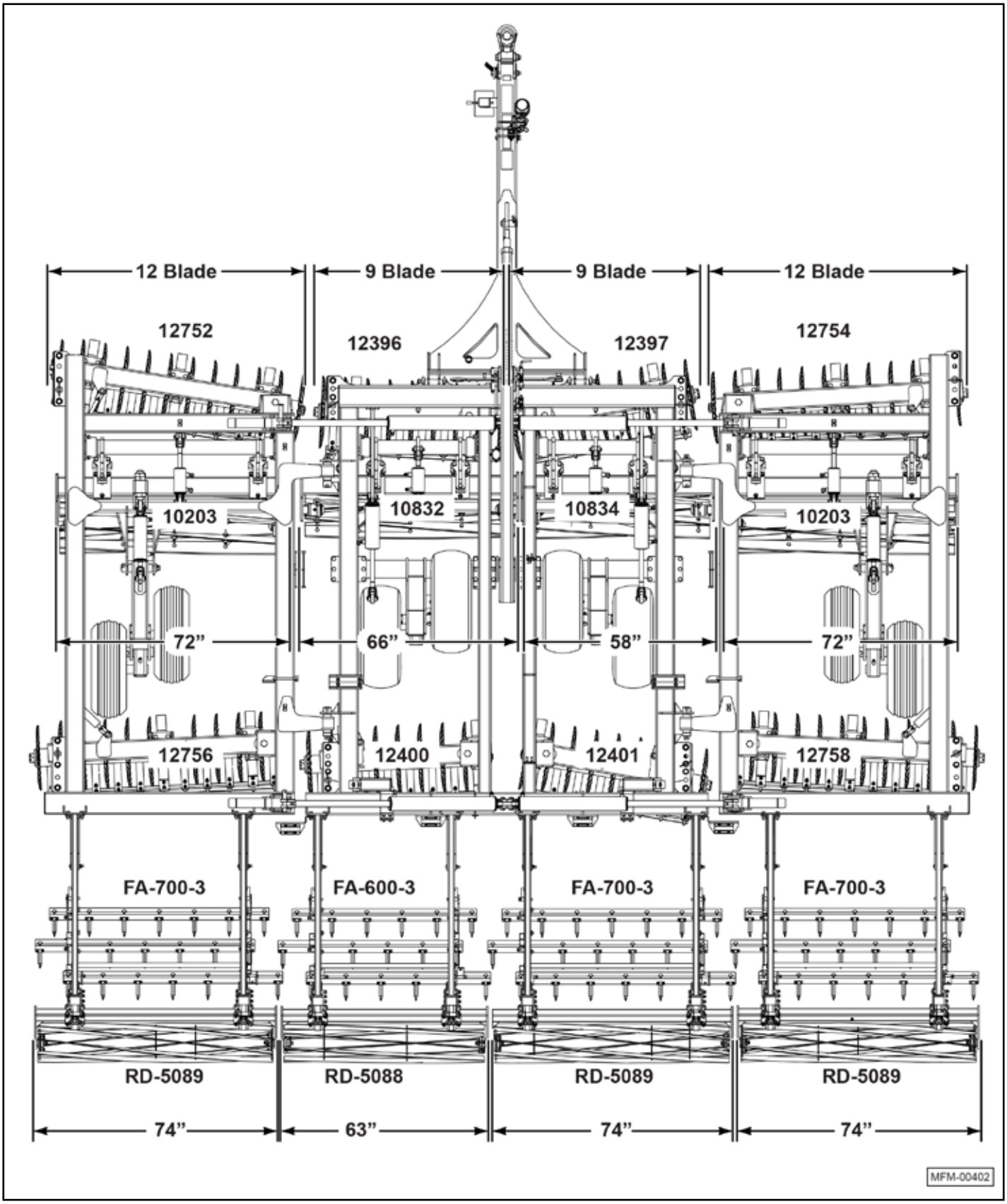

Layout Diagram for IC-5124 with 5 Bar Harrow

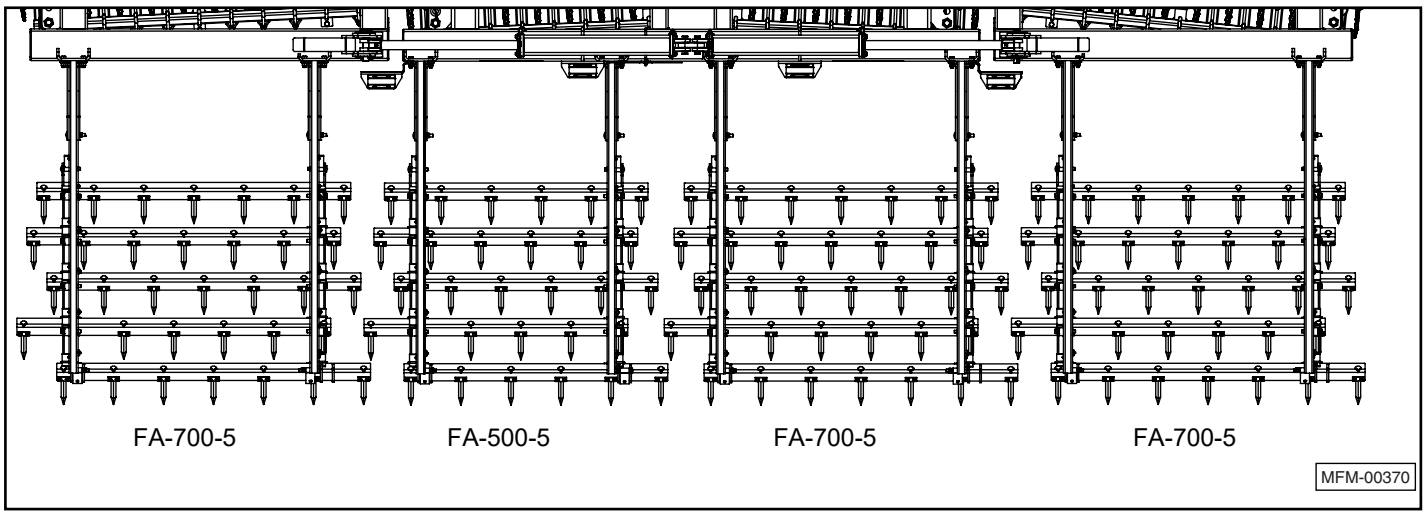

Layout Diagram for IC-5124 with Double Rolling Baskets

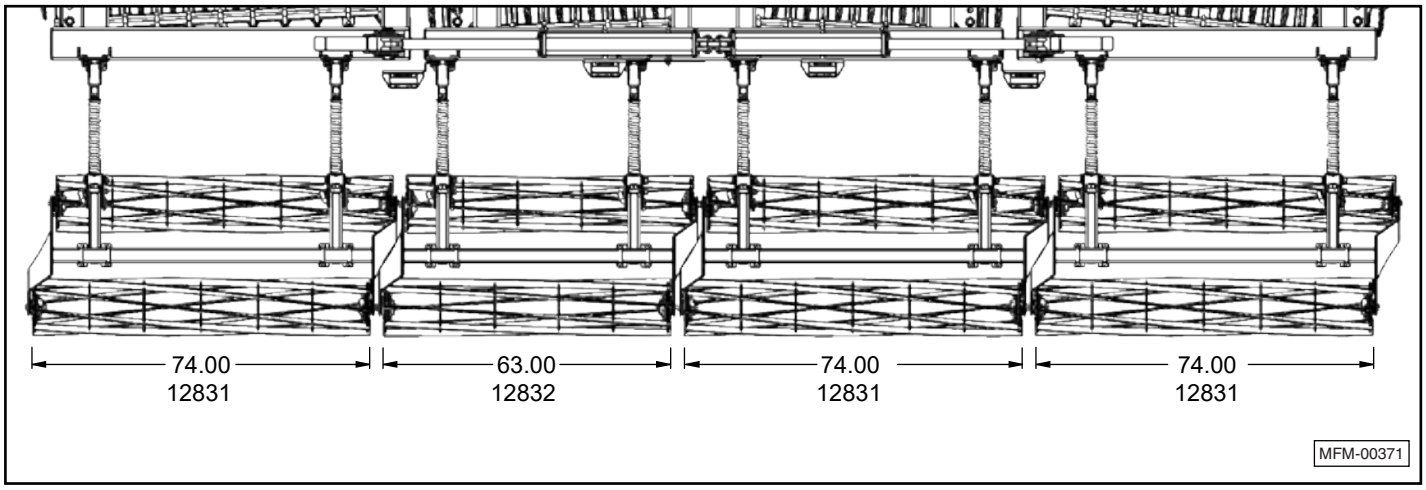

Layout Diagram for IC-5124 with Spur-Till and Single Rolling Basket

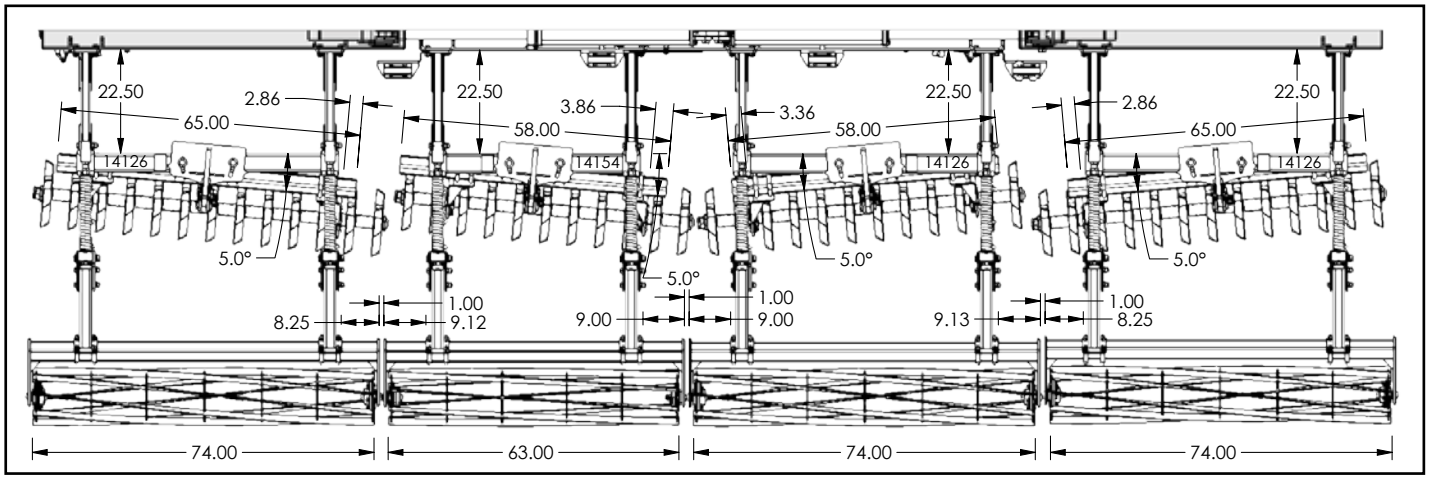

Layout Diagram for IC-5127 with 3 Bar Harrow and Single Rolling Basket

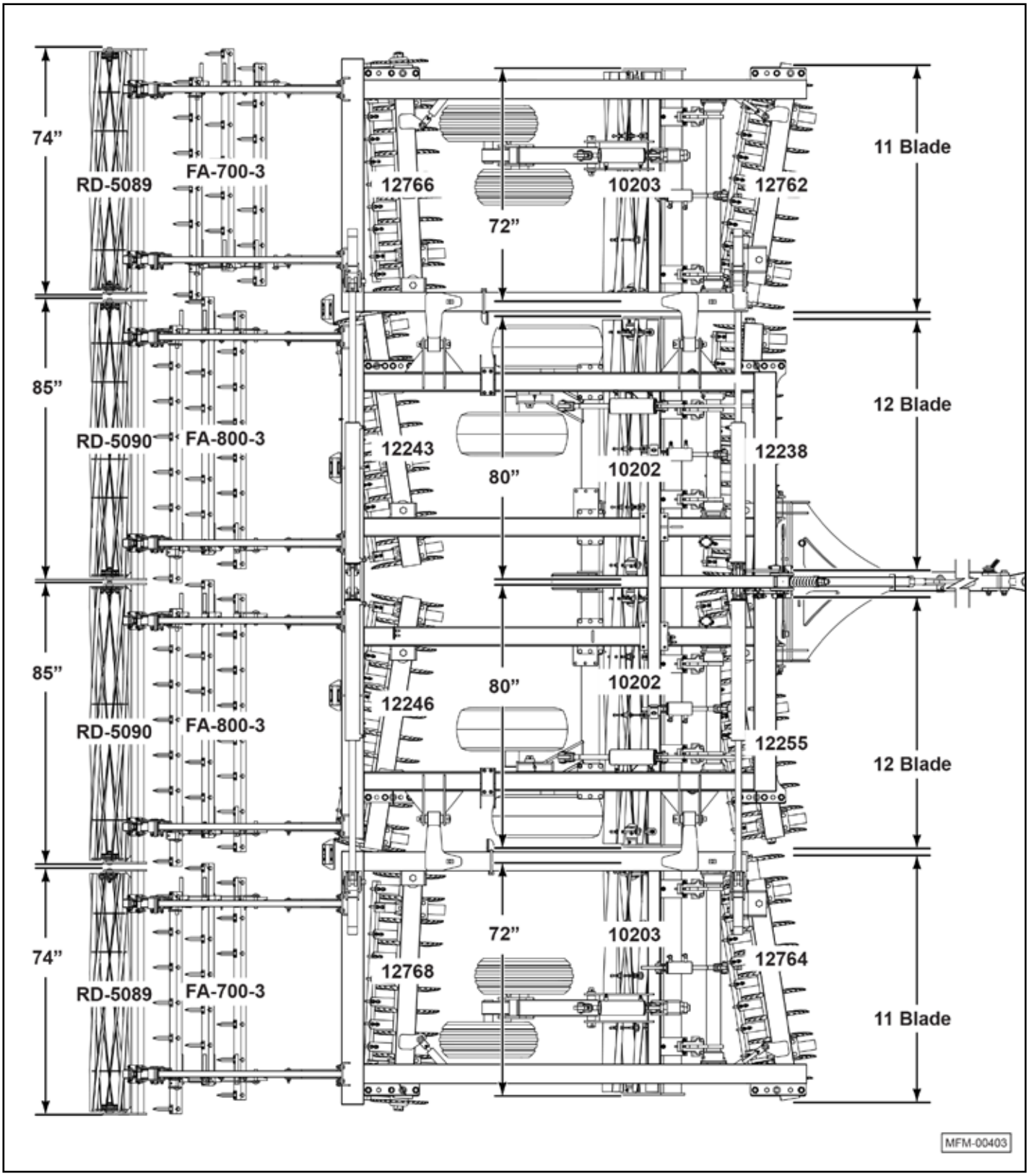

Layout Diagram for IC-5127 with 5 Bar Harrow

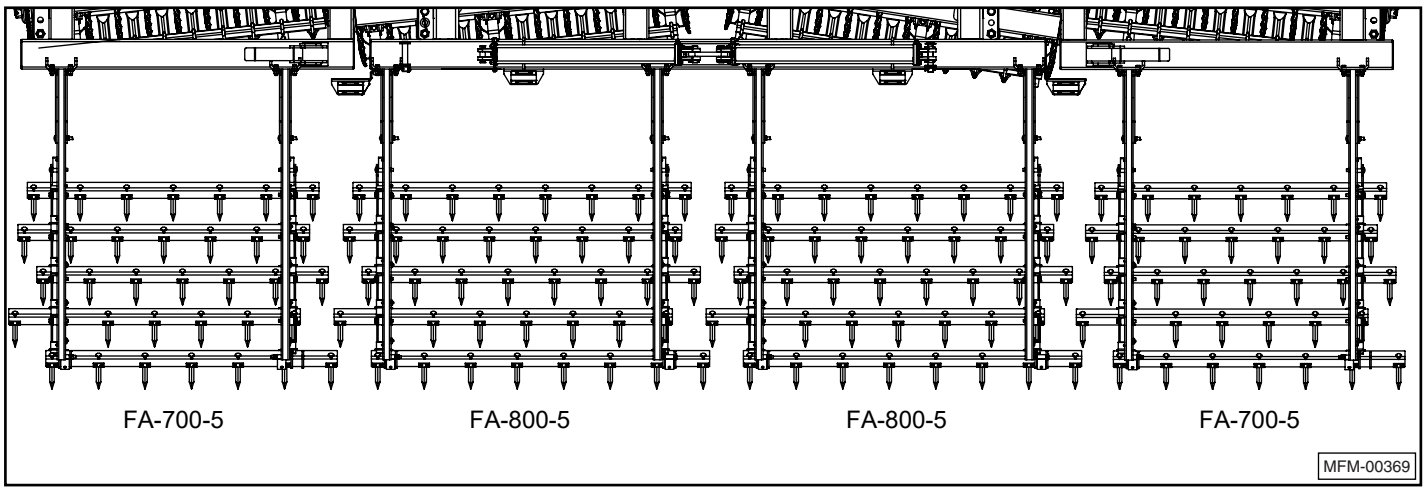

Layout Diagram for IC-5127 with Double Rolling Baskets

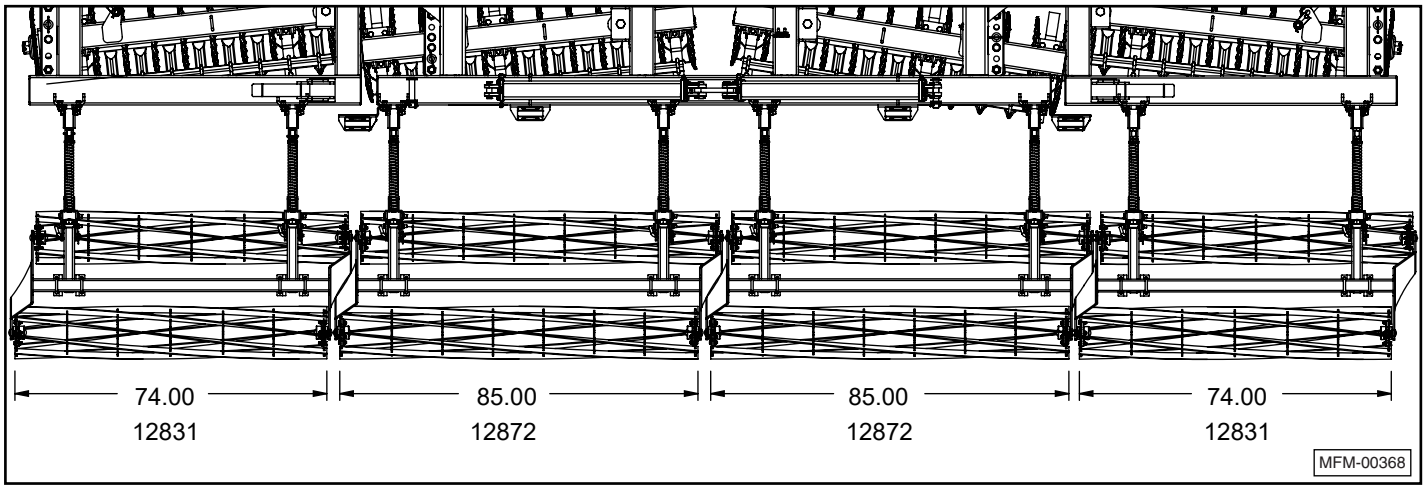

Layout Diagram for IC-5127 with Spur-Till and Single Rolling Basket

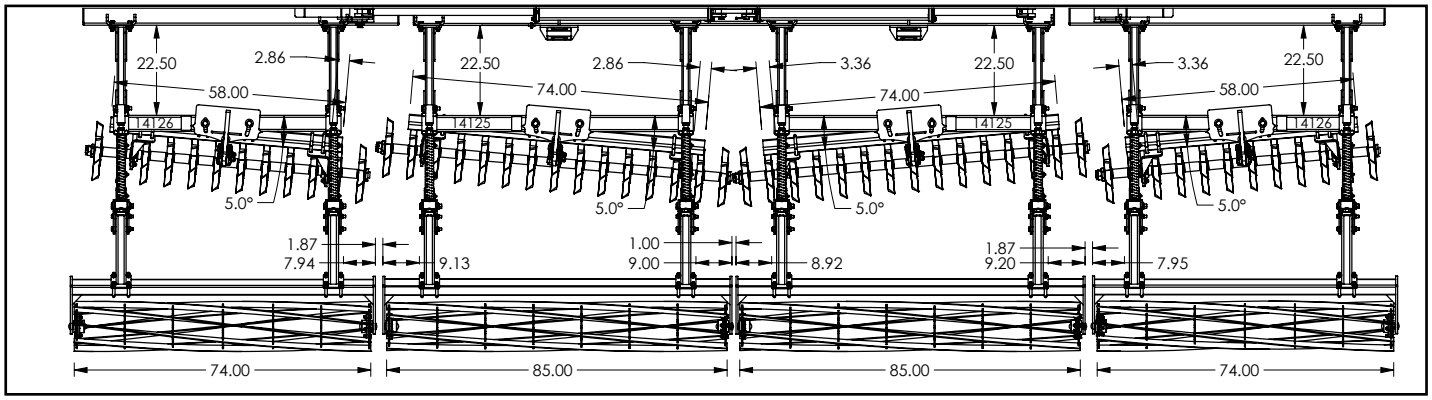

Layout Diagram for IC-5132 with 3 Bar Harrow and Single Rolling Basket

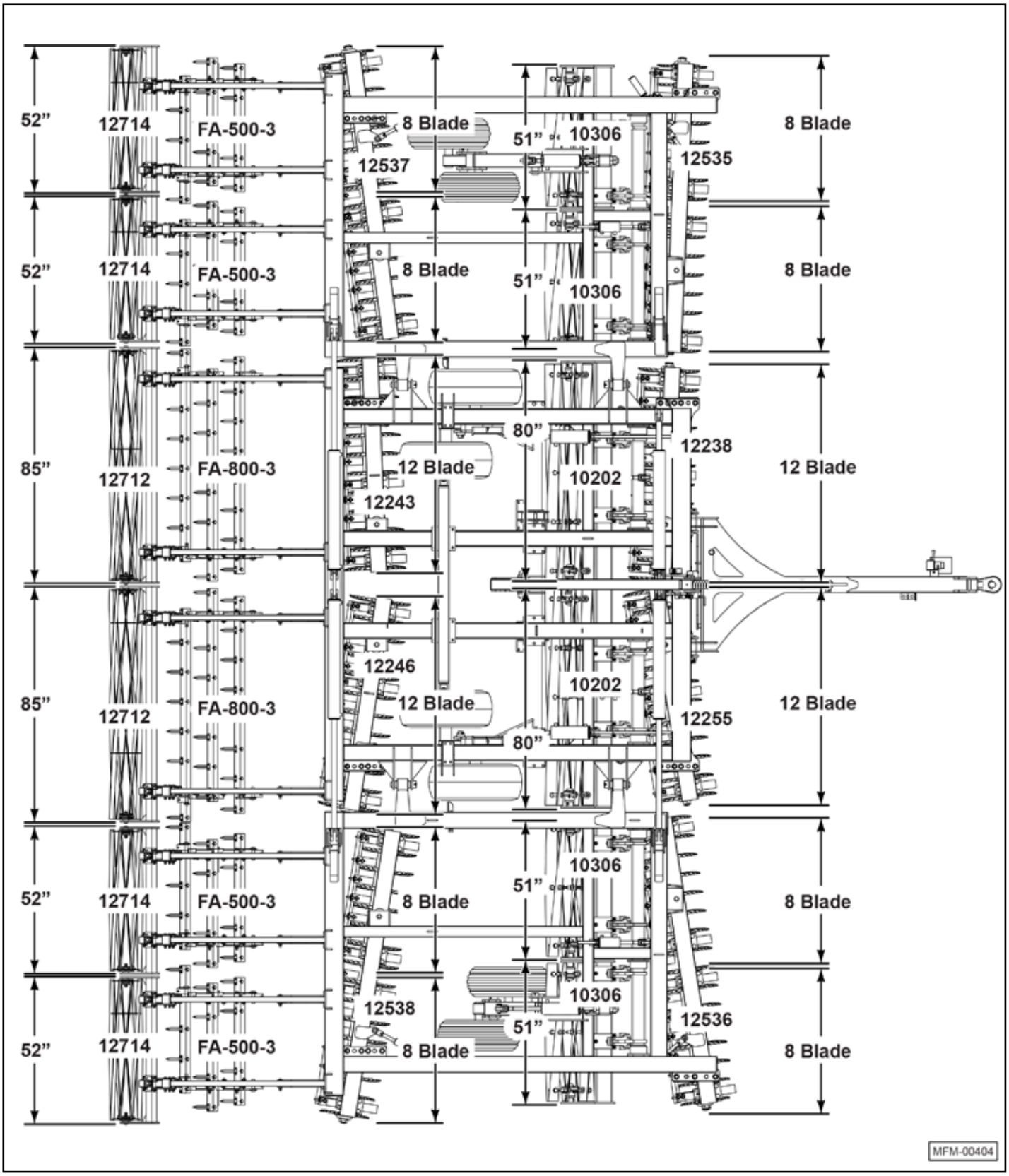

Layout Diagram for IC-5132 with 5 Bar Harrow

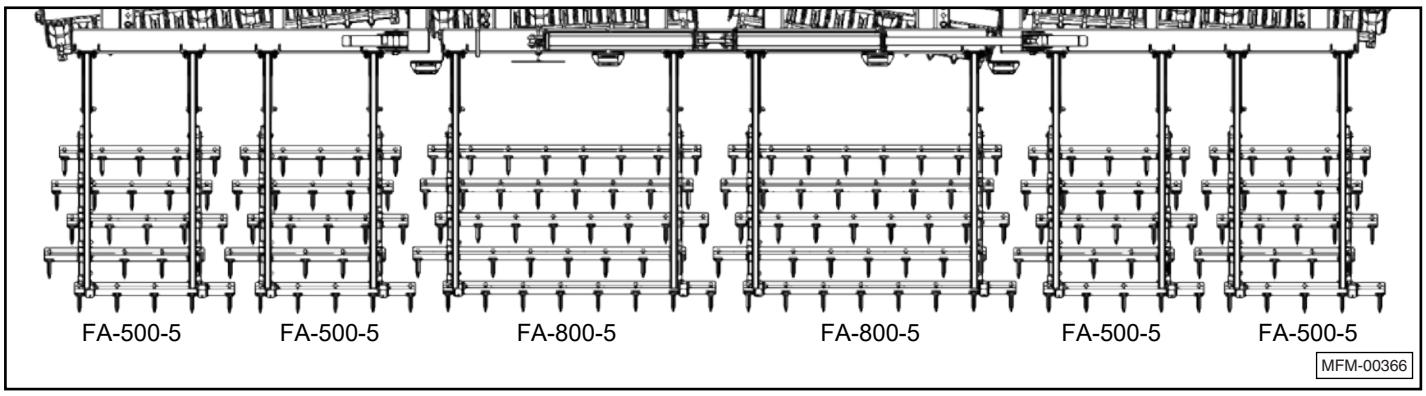

Layout Diagram for IC-5132 with Double Rolling Baskets

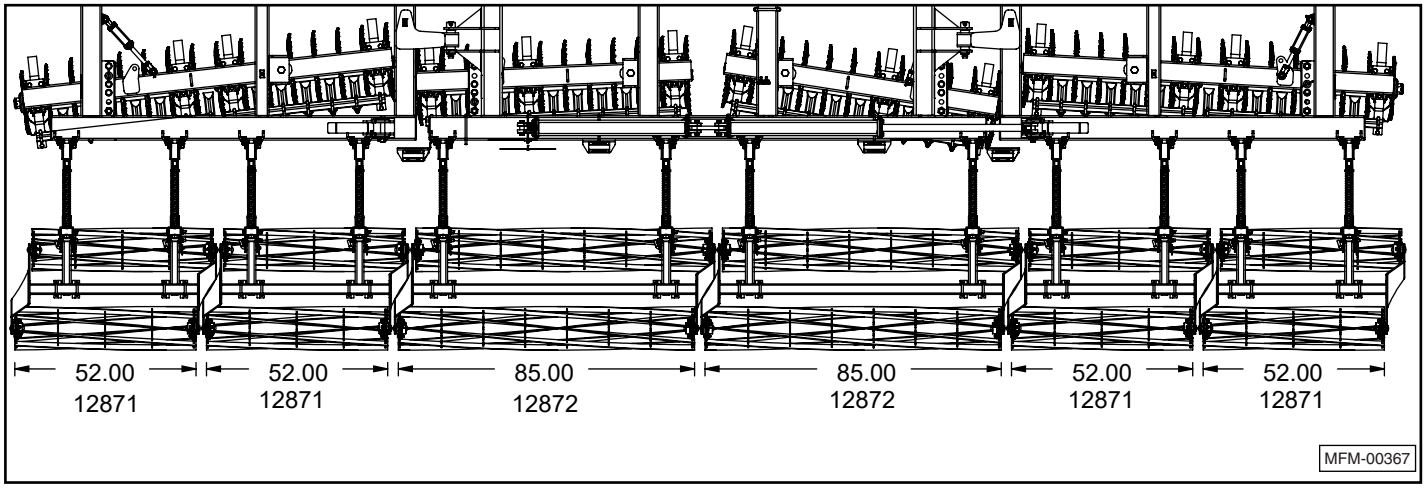

Layout Diagram for IC-5132 with a Spur-Till and Single Rolling Basket

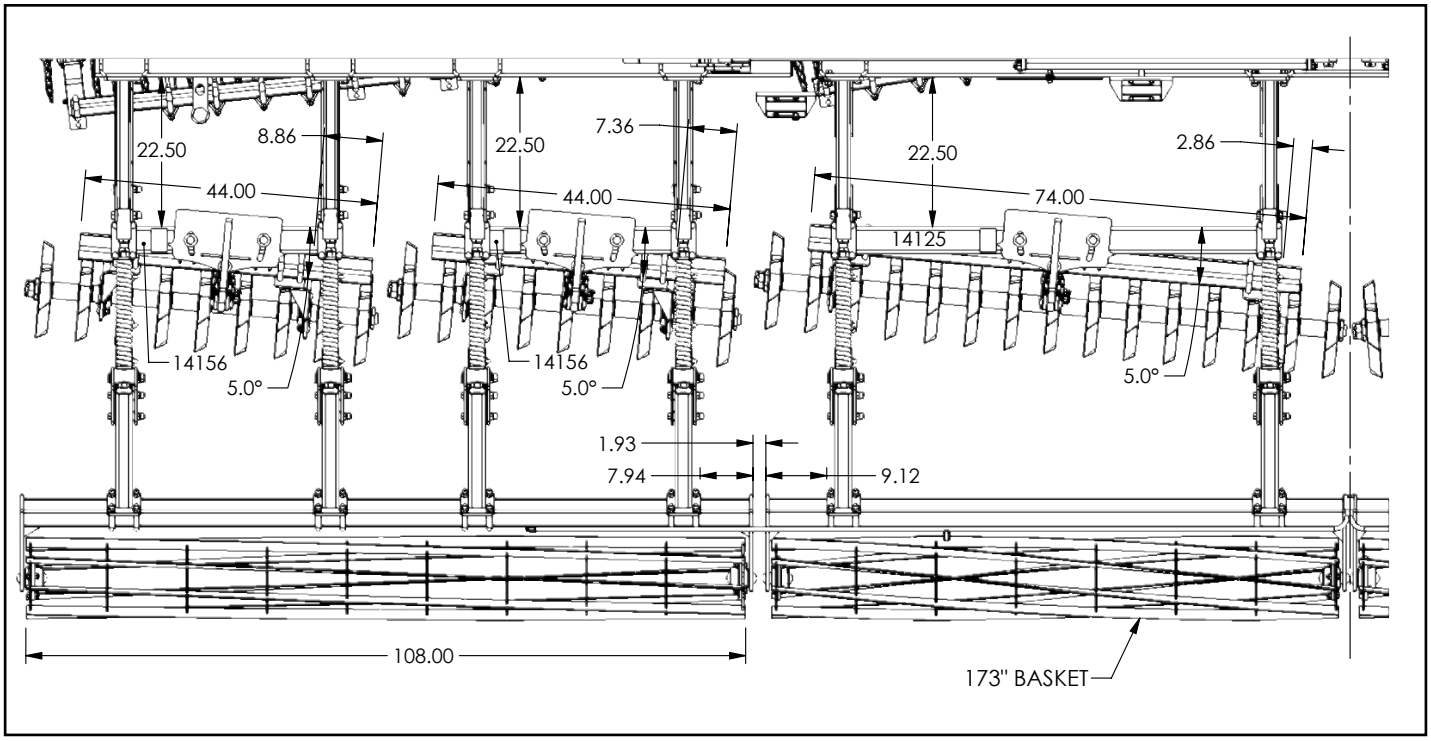

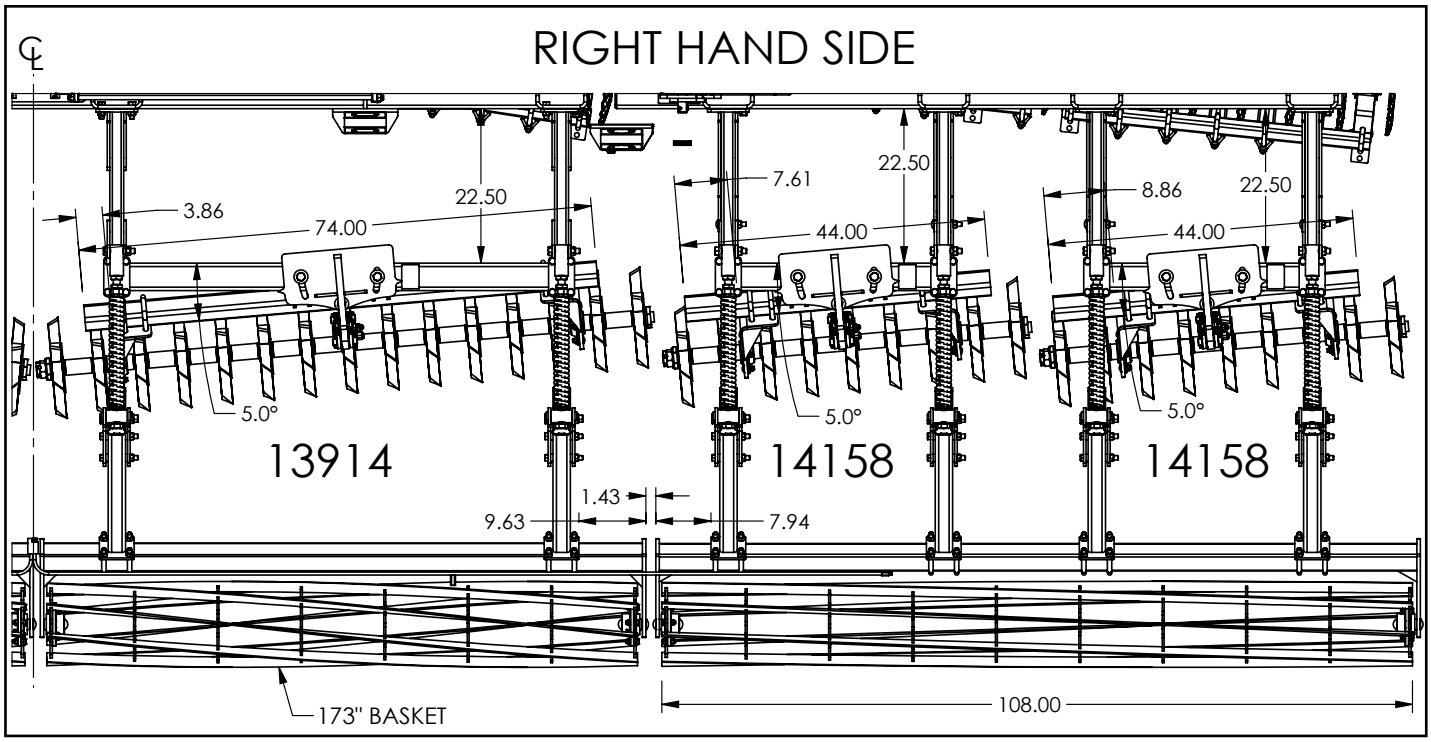

Layout Diagram for IC-5140 with 3 Bar Harrow and Single Rolling Basket

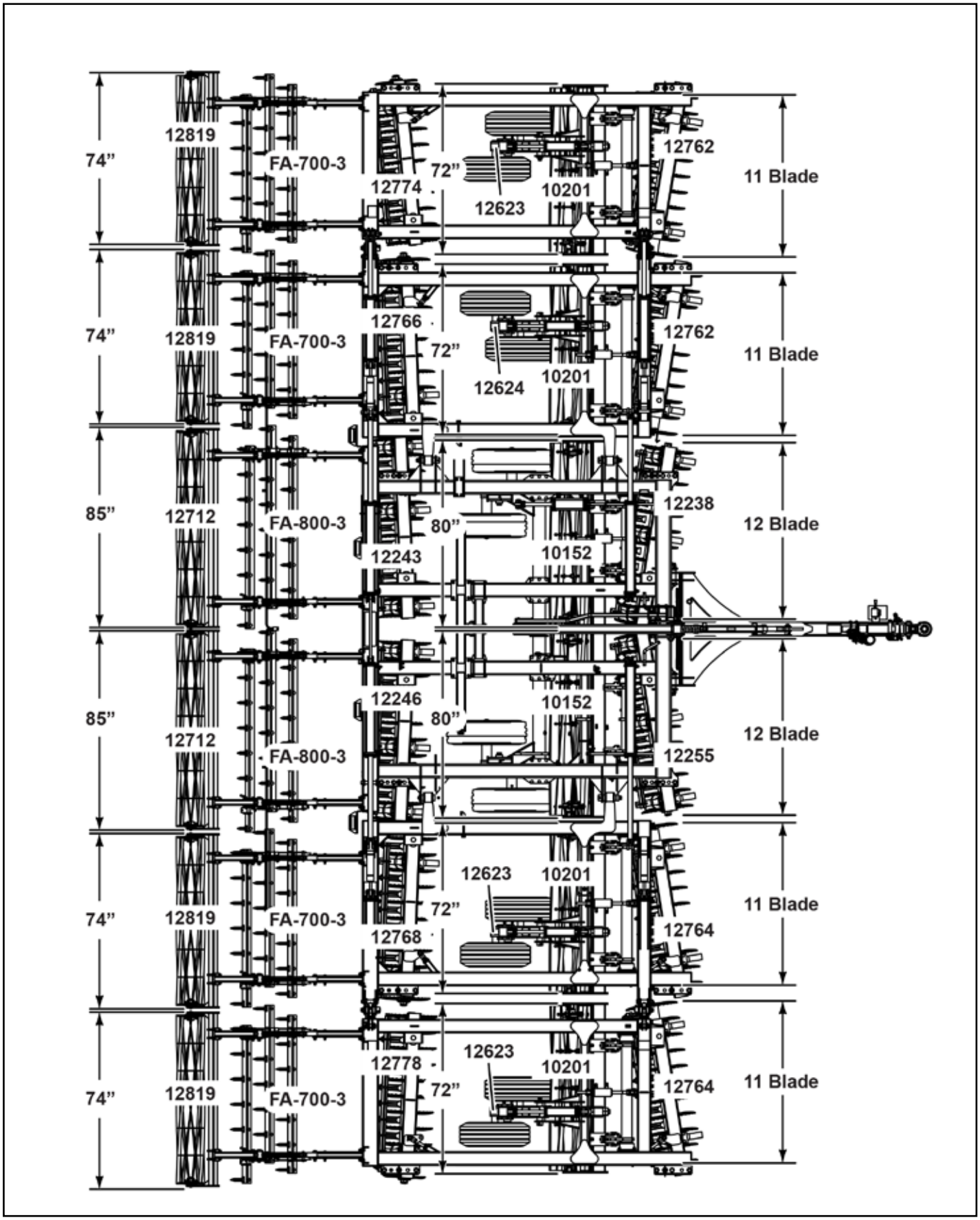

Layout Diagram for IC-5140 with 5 Bar Harrow

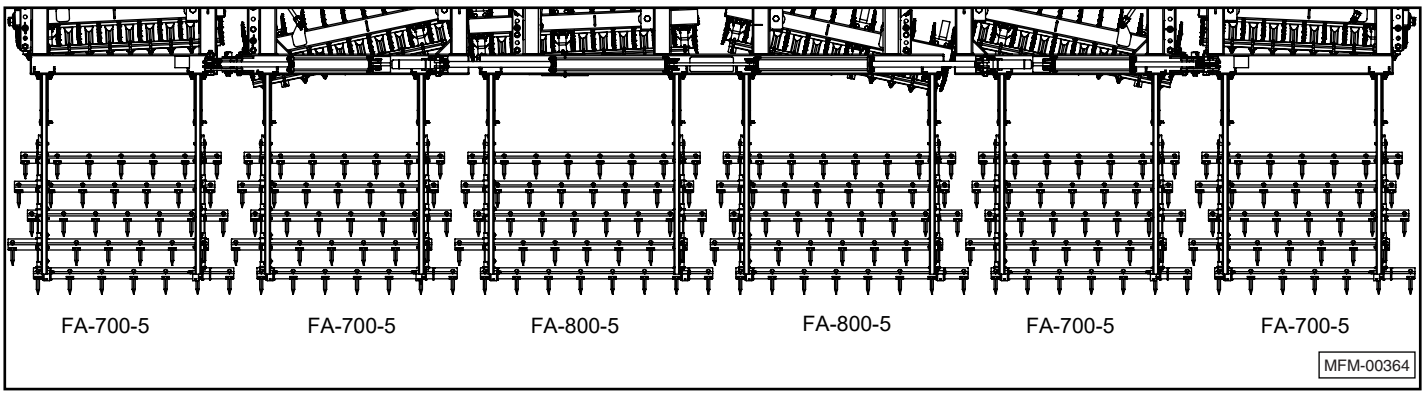

Layout Diagram for IC-5140 with Double Rolling Baskets

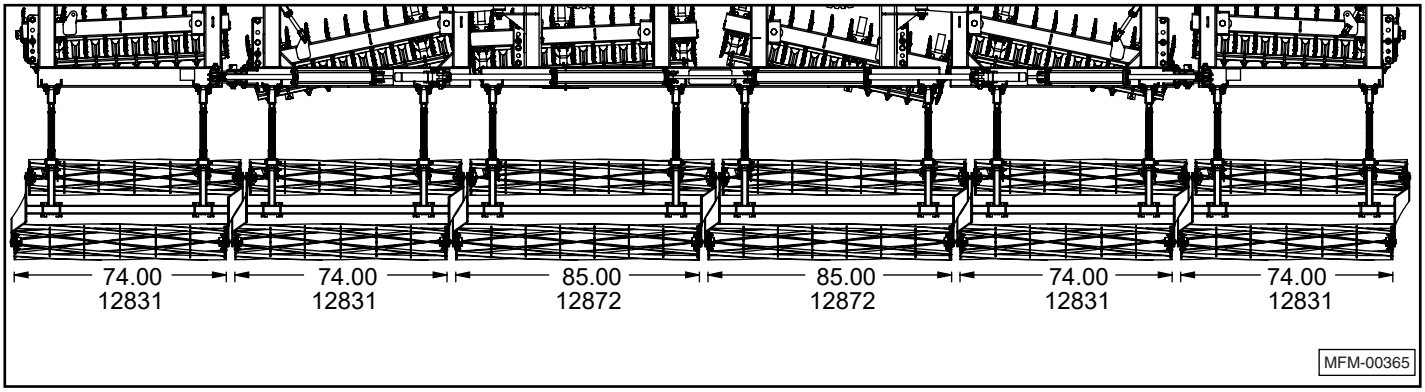

Layout Diagram for IC-5140 with Spur-Till and Single Rolling Basket

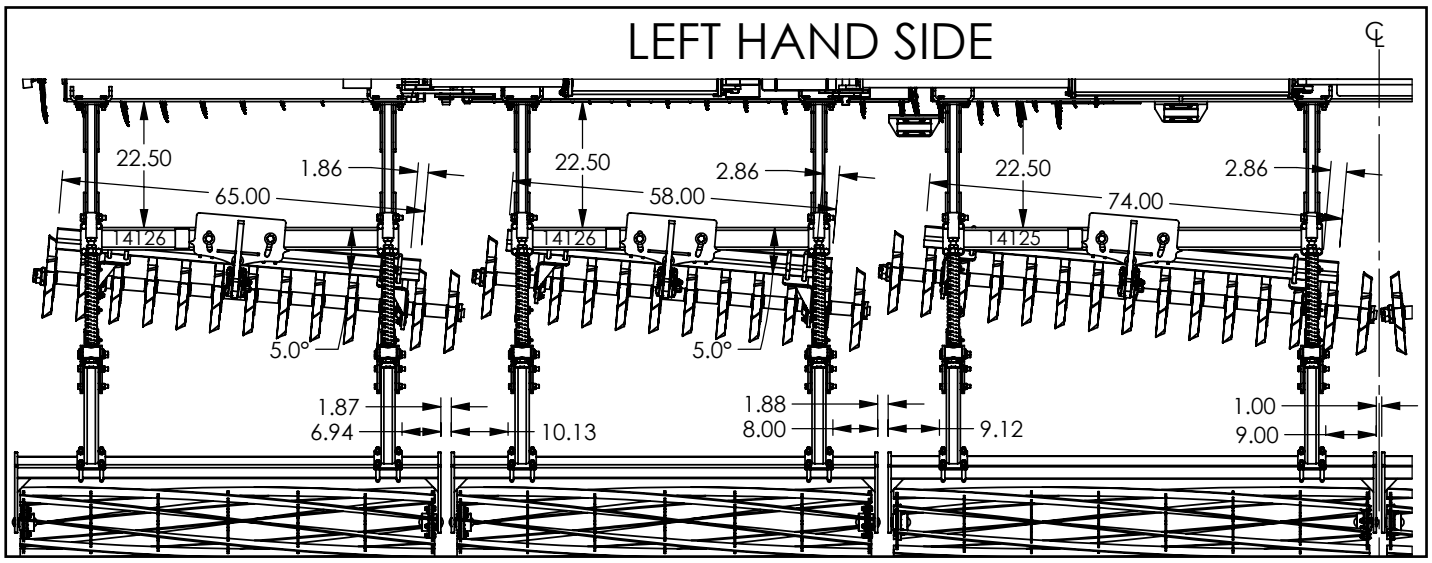

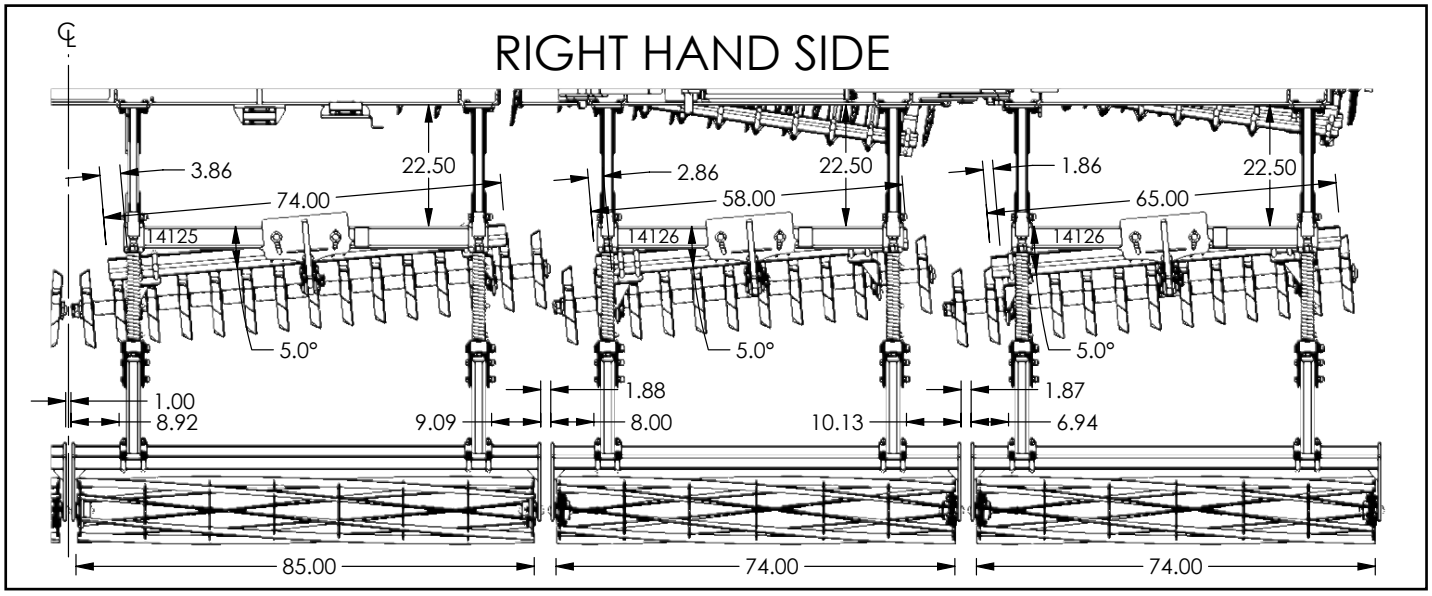

This page intentionally left blank.

Scan the QR code for a digital version of this manual

1330 Dallas St
PO box 100
Sauk City, WI 53583

Phone: (608) 643.3322
Toll Free: (888) 627.8569

mcfarlaneag.com

For more information email:
info@mcfarlanemfg.com

Member of:

FEMA FARM EQUIPMENT MANUFACTURERS ASSOCIATION

Last revised: 10/10/2023

McFARLANE AG MANUFACTURING