marantz®

Service Manual

Ver. 1

AV Surround Receiver

SR5012

Click here!

On-line service parts list

http://dmedia.dmglobal.com/Document/DocumentDetails/23187

Online Parts List (P5 to P7)

WEB owner's manual (Release schedule)

http://manuals.marantz.com/SR5012/NA/EN/index.php (May 2017)

http://manuals.marantz.com/SR5012/EU/EN/index.php (June 2017)

http://manuals.marantz.com/SR5012/AP/ZH/index.php (August 2017)

CAUTION IN SERVICING

ELECTRICAL

MECHANICAL

REPAIR INFORMATION

UPDATING

- For purposes of improvement, specifications and design are subject to change without notice.
- Please use this service manual with referring to the operating instructions without fail.
- Some illustrations using in this service manual are slightly different from the actual set.

Confidential

CAUTION IN SERVICING

SAFETY PRECAUTIONS

NOTE FOR SCHEMATIC DIAGRAM

NOTE FOR PARTS LIST

INSTRUCTIONS FOR HANDLING SEMICONDUCTORS AND OPTICAL UNIT

Online Parts List

Accessing the Parts List
Logging in to New SDI and Accessing the Parts List
Accessing the Part List from the Model Asset Screen
PRINTED CIRCUIT BOARDS Parts Table
Downloading the Parts List as an Excel File
Revision History
Searching Part Numbers or Ref. Numbers

CAUTION IN SERVICING.

Initializing This Unit
JIG FOR SERVICING

SAFETY PRECAUTIONS

The following items should be checked for continued protection of the customer and the service technician.

Leakage current check

Before returning the set to the customer, be sure to carry out either (1) a leakage current check or (2) a line to chassis resistance check. If the leakage current exceeds 0.5 milliamps, or if the resistance from chassis to either side of the power cord is less than 460 kohms, the set is defective.
Be sure to test for leakage current with the AC plug in both polarities, in addition, when the set's power is in each state (on, off and standby mode), if applicable.

CAUTION **Please heed the following cautions and instructions during servicing and inspection.**

◎ Heed the cautions!

Cautions which are delicate in particular for servicing are labeled on the cabinets, the parts and the chassis, etc. Be sure to heed these cautions and the cautions described in the handling instructions.

◎ Cautions concerning electric shock!

(1) An AC voltage is impressed on this set, so if you touch internal metal parts when the set is energized, you may get an electric shock. Avoid getting an electric shock, by using an isolating transformer and wearing gloves when servicing while the set is energized, or by unplugging the power cord when replacing parts, for example.
(2) There are high voltage parts inside. Handle with extra care when the set is energized.

◎ Caution concerning disassembly and assembly!

Through great care is taken when parts were manufactured from sheet metal, there may be burrs on the edges of parts. The burrs could cause injury if fingers are moved across them in some rare cases. Wear gloves to protect your hands.

◎ Use only designated parts!

The set's parts have specific safety properties (fire resistance, voltage resistance, etc.). Be sure to use parts which have the same properties for replacement. The burrs have the same properties. In particular, for the important safety parts that are indicated by the ⚠ mark on schematic diagrams and parts lists, be sure to use the designated parts.

◎ Be sure to mount parts and arrange the wires as they were originally placed!

For safety seasons, some parts use tapes, tubes or other insulating materials, and some parts are mounted away from the surface of printed circuit boards. Care is also taken with the positions of the wires by arranging them and using clamps to keep them away from heating and high voltage parts, so be sure to set everything back as it was originally placed.

◎ Make a safety check after servicing!

Check that all screws, parts and wires removed or disconnected when servicing have been put back in their original positions, check that no serviced parts have deteriorate the area around. Then make an insulation check on the external metal connectors and between the blades of the power plug, and otherwise check that safety is ensured.
(Insulation check procedure)
Unplug the power cord from the power outlet, disconnect the antenna, plugs, etc., and on the power. Using a 500V insulation resistance tester, check that the insulation resistance value between the inplug and the externally exposed metal parts (antenna terminal, headphones terminal, input terminal, etc.) is 1M Ω or greater. If it is less, the set must be inspected and repaired.

CAUTION **Concerning important safety parts**

Many of the electric and the structural parts used in the set have special safety properties. In most cases these properties are difficult to distinguish by sight, and the use of replacement parts with higher ratings (rated power and withstand voltage) does not necessarily guarantee that safety performance will be preserved. Parts with safety properties are indicated as shown below on the wiring diagrams and the parts list in this service manual. Be sure to replace them with the parts which have the designated part number.

(1) Schematic diagrams Indicated by the ⚠ mark.
(2) Parts lists Indicated by the ⚠ mark.
The use of parts other than the designated parts could cause electric shocks, fires or other dangerous situations.

NOTE FOR SCHEMATIC DIAGRAM

WARNING:

Parts indicated by the ⚠ mark have critical characteristics. Use ONLY replacement parts recommended by the manufacturer.

CAUTION:

Before returning the set to the customer, be sure to carry out either (1) a leakage current check or (2) a line to chassis resistance check. If the leakage current exceeds 0.5 milliamps, or if the resistance from chassis to either side of the power cord is less than 460 kohms, the set is defective.

WARNING:

DO NOT return the set to the customer unless the problem is identified and remedied.

NOTICE:

ALL RESISTANCE VALUES IN OHM. k=1,000 OHM / M=1,000,000 OHM
ALL CAPACITANCE VALUES ARE EXPRESSED IN MICRO FARAD, UNLESS OTHERWISE INDICATED. P INDICATES MICRO-MICRO FARAD. N INDICATES NANO FARAD. EACH VOLTAGE AND CURRENT ARE MEASURED AT NO SIGNAL INPUT CONDITION. CIRCUIT AND PARTS ARE SUBJECT TO CHANGE WITHOUT PRIOR NOTICE.

NOTE FOR PARTS LIST

1. Parts indicated by "**nsp**" on this table cannot be supplied.
2. When ordering a part, make a clear distinction between "1" and "I" (i) to avoid mis-supplying.
3. A part ordered without specifying its part number can not be supplied.
4. Part indicated by "**@**" mark is not illustrated in the exploded view.

WARNING: Parts indicated by the ⚠ mark have critical characteristics. Use ONLY replacement parts recommended by the manufacturer.

INSTRUCTIONS FOR HANDLING SEMICONDUCTORS AND OPTICAL UNIT

Electrostatic breakdown of the semi-conductors or optical pickup may occur due to a potential difference caused by electrostatic charge during unpacking or repair work.

1. Ground for Human Body

Be sure to wear a grounding band (1 M ohm) that is properly grounded to remove any static electricity that may be charged on the body.

2. Ground for Workbench

Be sure to place a conductive sheet or copper plate with proper grounding (1 M ohm) on the workbench or other surface, where the semi-conductors are to be placed. Because the static electricity charge on clothing will not escape through the body grounding band, be careful to avoid contacting semi-conductors with your clothing

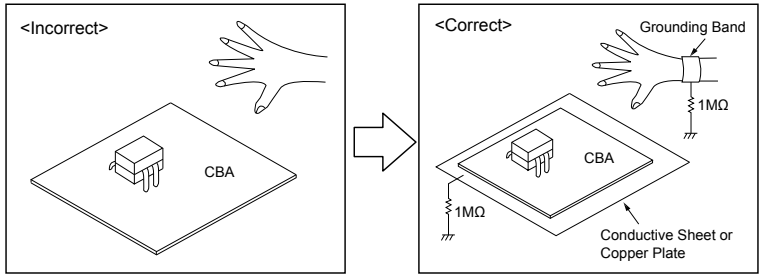

Online Parts List

Accessing the Parts List

(1) Click the URL link on the cover of the service manual.
Examples of display

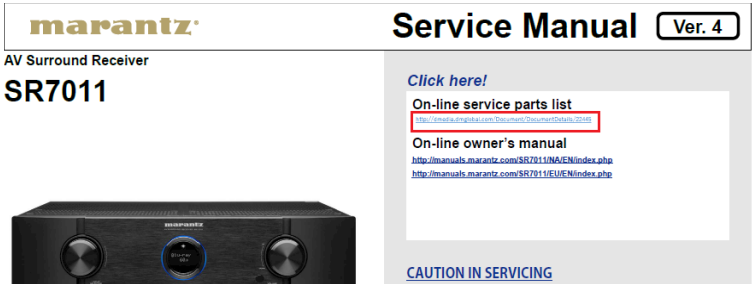

NOTE : If the web browser does not open automatically, copy the URL and paste it into the address bar of the web browser and then press Enter.

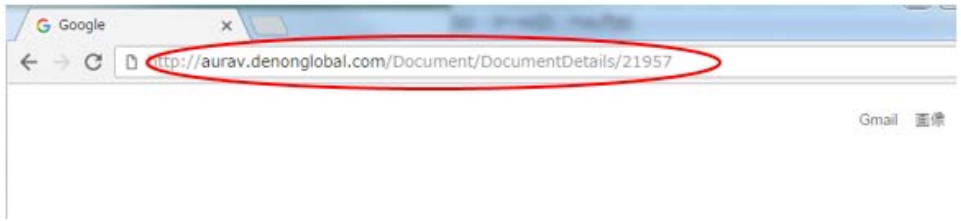

(2) When the login screen is displayed, enter your username and password.
(3) Enter the 5 letters shown as the blue CAPTCHA code as single-byte characters.
If the text is unclear, click "**Refresh**" to change the CAPTCHA code, and enter it again.

(4) Press the "**Login**" button.

Logging in to New SDI and Accessing the Parts List

(1) Access New SDI from the URL below.
<http://dmedia.dmglobal.com>

(2) When the login screen is displayed, enter your username and password.
(3) Enter the 5 letters shown as the blue CAPTCHA code as single-byte characters.
If the text is unclear, click "**Refresh**" to change the CAPTCHA code, and enter it again.

(4) Press the "**Login**" button.
(5) When the Home screen is displayed, click "**Advanced Search**".

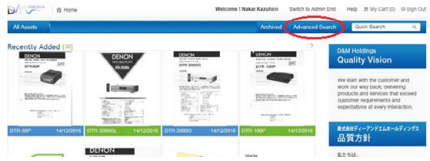

(6) Enter the following search conditions and click "**Search**".
Keyword : Model name Brand : brand name Asset Type : Part list

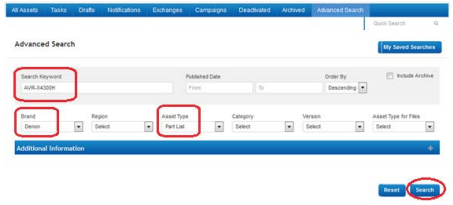

(7) Click the model name when the search results are displayed.

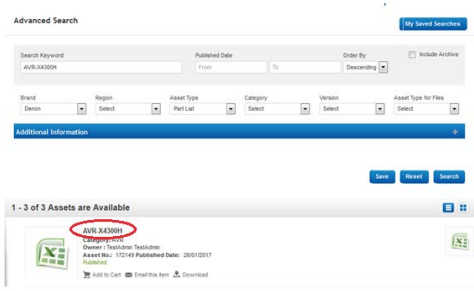

Accessing the Part List from the Model Asset Screen

(1) Display Model Asset from New SDI.
(2) Click the section displayed as ▼ Link to Part Lists under the model name.

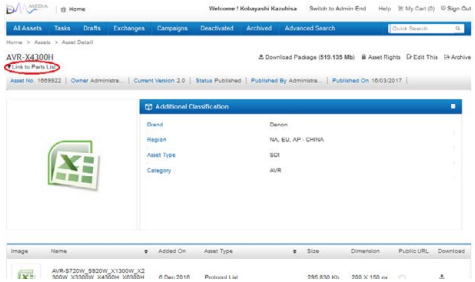

NOTE : If the ▼ Link to Parts List section is not displayed, download the parts table from the Asset list.

PRINTED CIRCUIT BOARDS Parts Table

(1) Display the Parts List. Click the PCB name in the blue bar to display the parts list for the board.

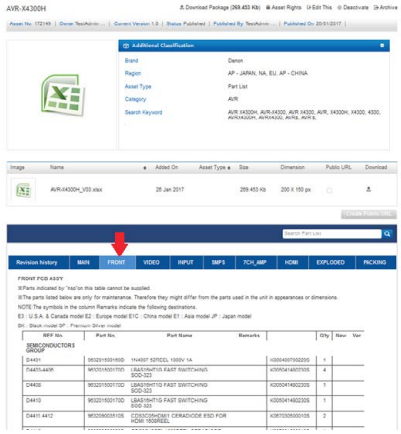

Left and right arrow icons are displayed if the circuit board name does not fit in the blue bar.
Click these icons to display a different part of the name when necessary.

← Icons to move the circuit board name left and right in the blue bar

Downloading the Parts List as an Excel File

(1) Displays the Parts List. Click the Download icon.

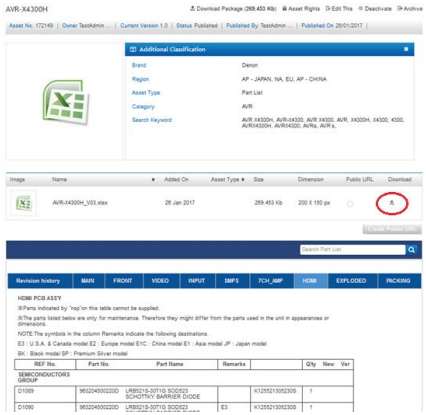

Revision History

(1) Click "**Revision history**" in the blue bar.

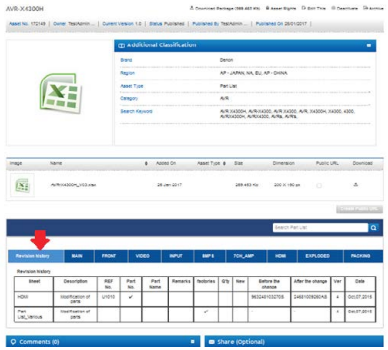

The following details are displayed.

Sheet : Name of the changed sheet
Description : Description of the changes
Remarks : Destination, color information
Factories : Factory number
Ver : Version number after revision if changes were made to the parts list
Date : Date of changes

Searching Part Numbers or Ref. Numbers

You can search a Parts List for part numbers or Ref. numbers.

(1) Enter the part number or Ref. number in the search window of the Parts List, and press the search button.

(2) The search results are displayed.
The name of the sheet in which the search part is used and the part's line are displayed.

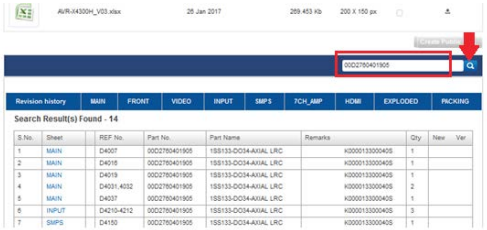

(3) Next, click the "**Sheet**" section of the search results.

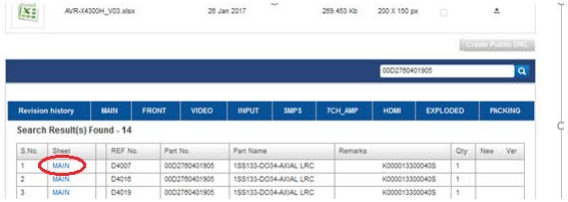

(4) The Board Part Table opens and the line on which the searched part number appears is highlighted.

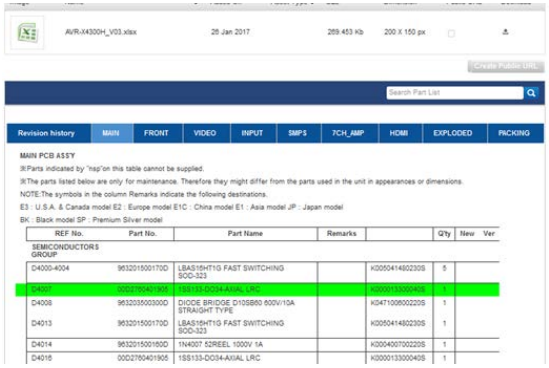

CAUTION IN SERVICING.

Initializing This Unit

Make sure to initialize this unit after replacing the microcomputer or any peripheral equipment, or the digital PCB.

1. Press the power button to turn off the power.
2. While holding down buttons "**TUNER PRESET CH -**" and "**TUNER PRESET CH +**" simultaneously, press the power button to turn on the power.
3. Release the buttons after confirming that the display flashes at 1-second intervals.
   ＊ The unit is initialized.
   Use network initialization mode to initialize the network related settings.

NOTE：
- If the unit fails to enter the service mode in step 3, repeat the procedure from step 1.
- Initializing the device restores the customized settings to the factory settings. Write down your settings in advance and reconfigure the settings after initialization.

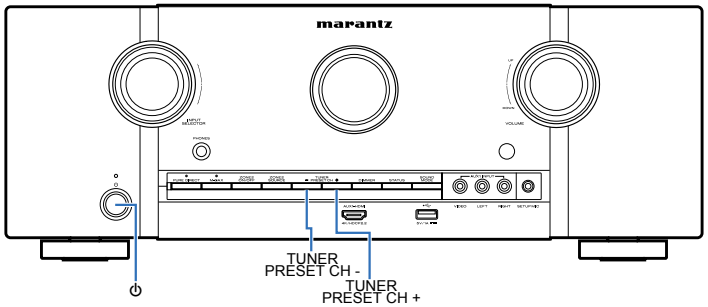

JIG FOR SERVICING

Use the following jigs (extension cable kit) when repairing the PCBs.
Order with your dealer for the jigs your dealer if necessary.

8U-110084S ： EXTENSION UNIT KIT ： 1 Set
(See JIG FOR SERVICING)

ELECTRICAL

SCHEMATIC DIAGRAMS

SCH01_TMDS SW
SCH02_ADV7180
SCH03_VIDEO PLD
SCH04_HDMI SW1
SCH05_HDMI SW2
SCH06_NET PHY
SCH07_DIGITAL CNT
SCH08_CPU LEVEL CHG
SCH09_CPU
SCH10_ADV8003
SCH11_ADV8003 DDR
SCH12_D.SUPPLY
SCH13_HDMI TX
SCH14_DIR A.PLD
SCH15_DSP
SCH16_MAIN DAC
SCH17_INPUT1
SCH18_INPUT2
SCH19_VIDEO
SCH20_FRONT_CNT
SCH21_RC5
SCH22_AMP1
SCH23_AMP2
SCH24_SPK
SCH25_TUNER REG
SCH26_RS_CNT
SCH27_FRONT
SCH28_RS232
SCH29_SMPS
SCH30_HDAM
SCH31_PREOUT
SCH32_F-HDMI

PRINTED CIRCUIT BOARDS

DIGITAL, F HDMI
INPUT, VIDEO, FRONT CNT
AMP
MAIN, AUDIO IN, RS CNT, GUIDE L, HS TOP GUIDE,
FRONT, USB, RS232C, HP, TOP GUIDE
PREOU, HDAM CNT, SMPS, HDAM

LEVEL DIAGRAM

FRONT ch
CENTER, SURROUND, SURR.BCK ch
SUBWOOFER ch
ZONE2 ch
ZONE2(LEGO) ch

BLOCK DIAGRAM

ANALOG AUDIO DIAGRAM
DIGITAL AUDIO DIAGRAM
VIDEO DIAGRAM

POWER DIAGRAM

WIRING DIAGRAM

SEMICONDUCTORS

1. IC's
2. FL DISPLAY
3. Remote Code Table

SCH01_TMDS SW

HDMI SW
TMDS261B

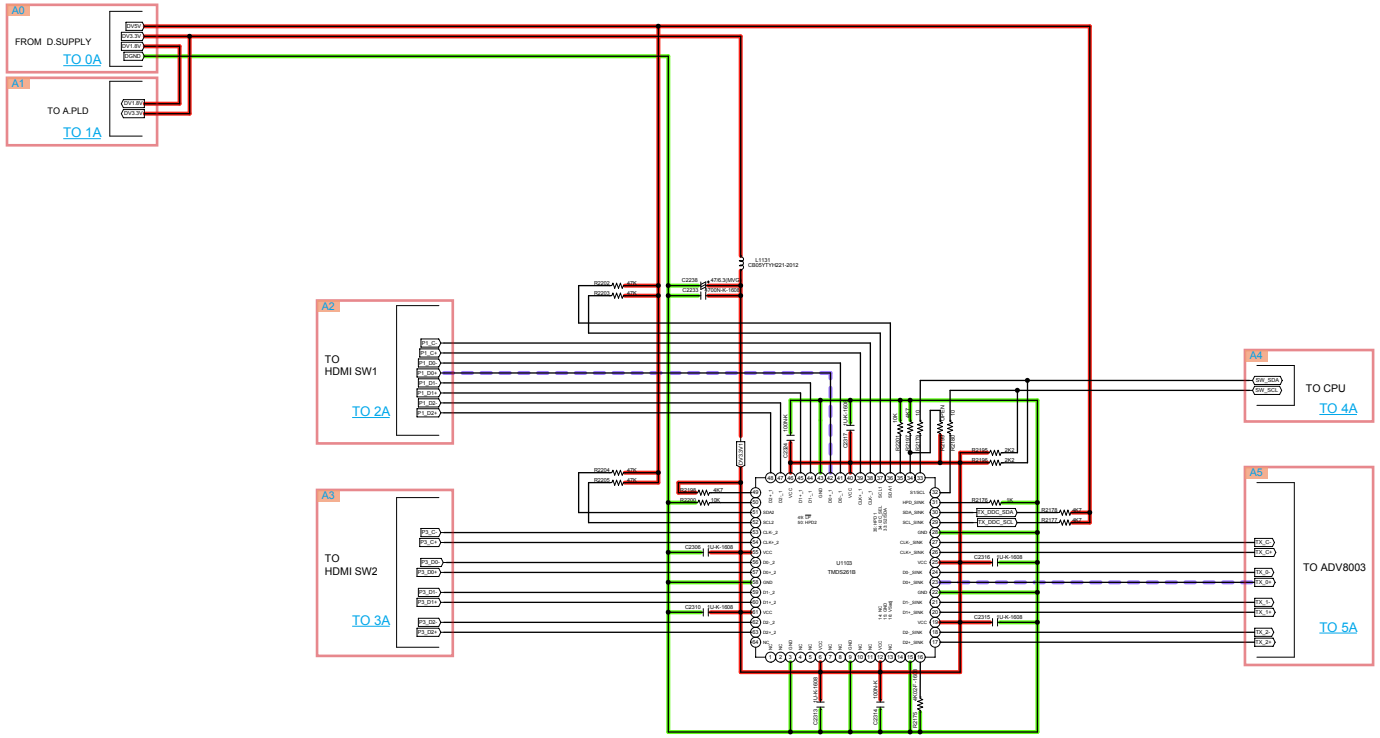

GND LINE | POWER+ LINE | POWER- LINE | ANALOG AUDIO | DIGITAL AUDIO | TMDS SIGNAL | VIDEO SIGNAL | COMPONENT (Y)

ADV7180

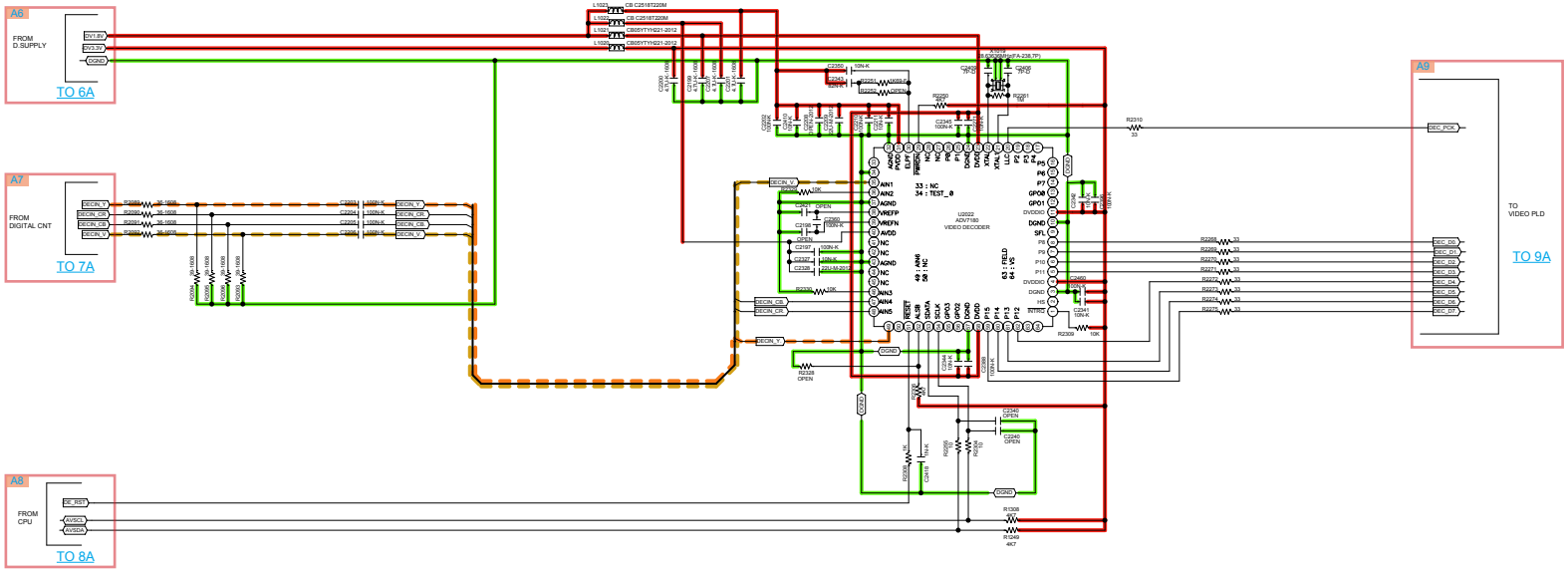

GND LINE POWER+ LINE POWER- LINE ANALOG AUDIO DIGITAL AUDIO TMDS SIGNAL VIDEO SIGNAL COMPONENT (Y)

SCH03_VIDEO PLD

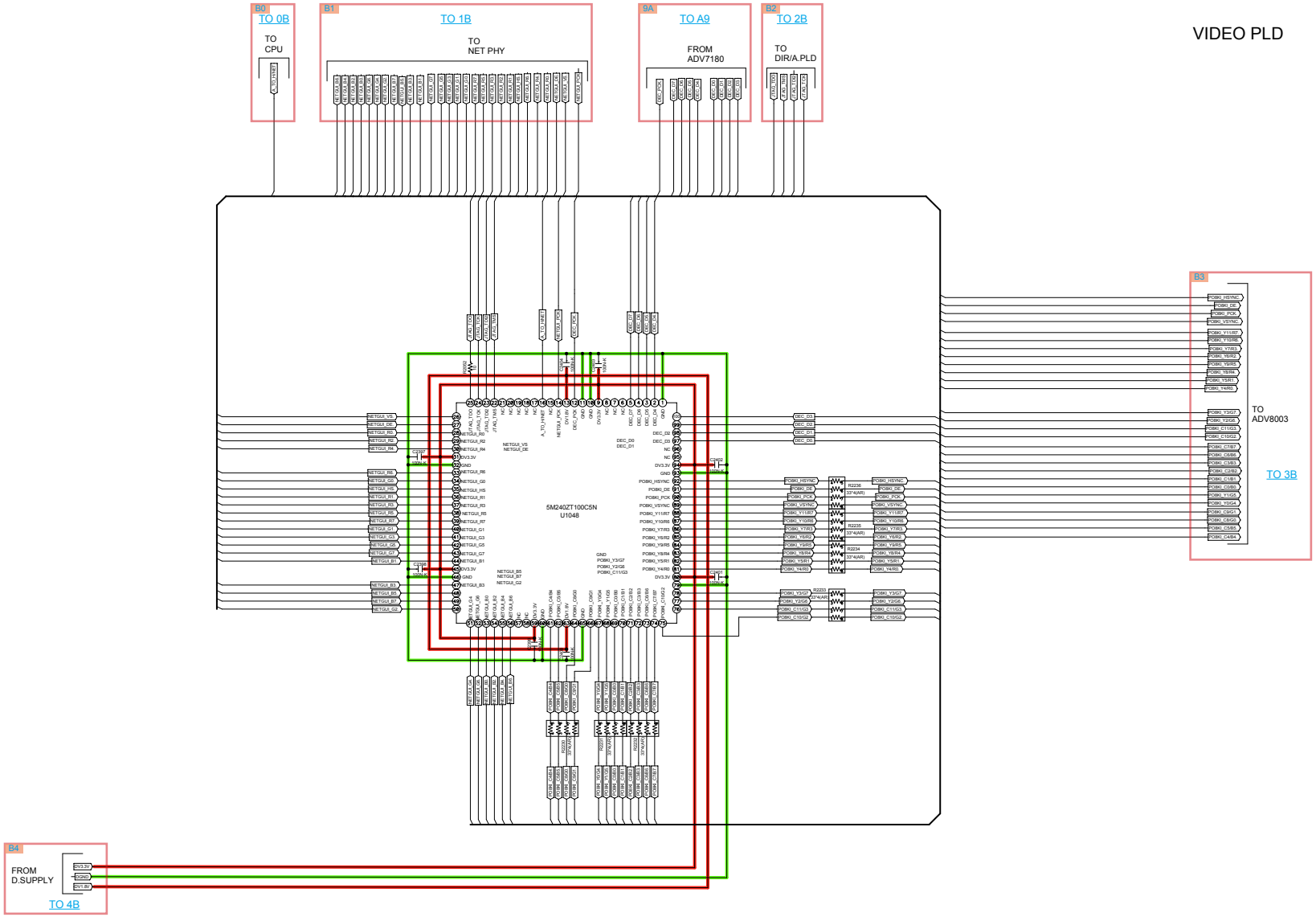

GND LINE | POWER+ LINE | POWER- LINE | ANALOG AUDIO | DIGITAL AUDIO | TMDS SIGNAL | VIDEO SIGNAL | COMPONENT (Y)

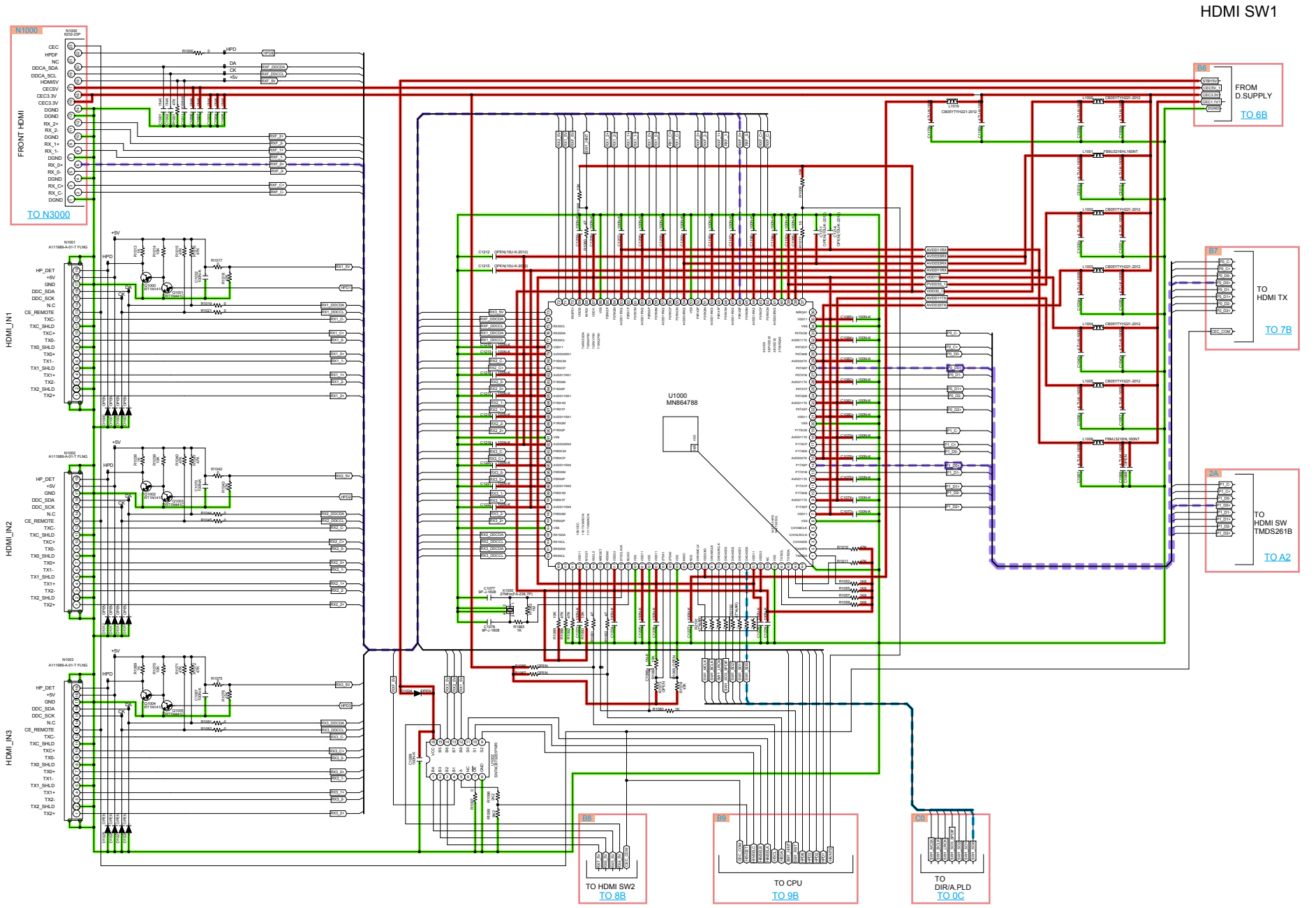

GND LINE | POWER+ LINE | POWER- LINE | ANALOG AUDIO | DIGITAL AUDIO | TMDS SIGNAL | VIDEO SIGNAL | COMPONENT (Y)

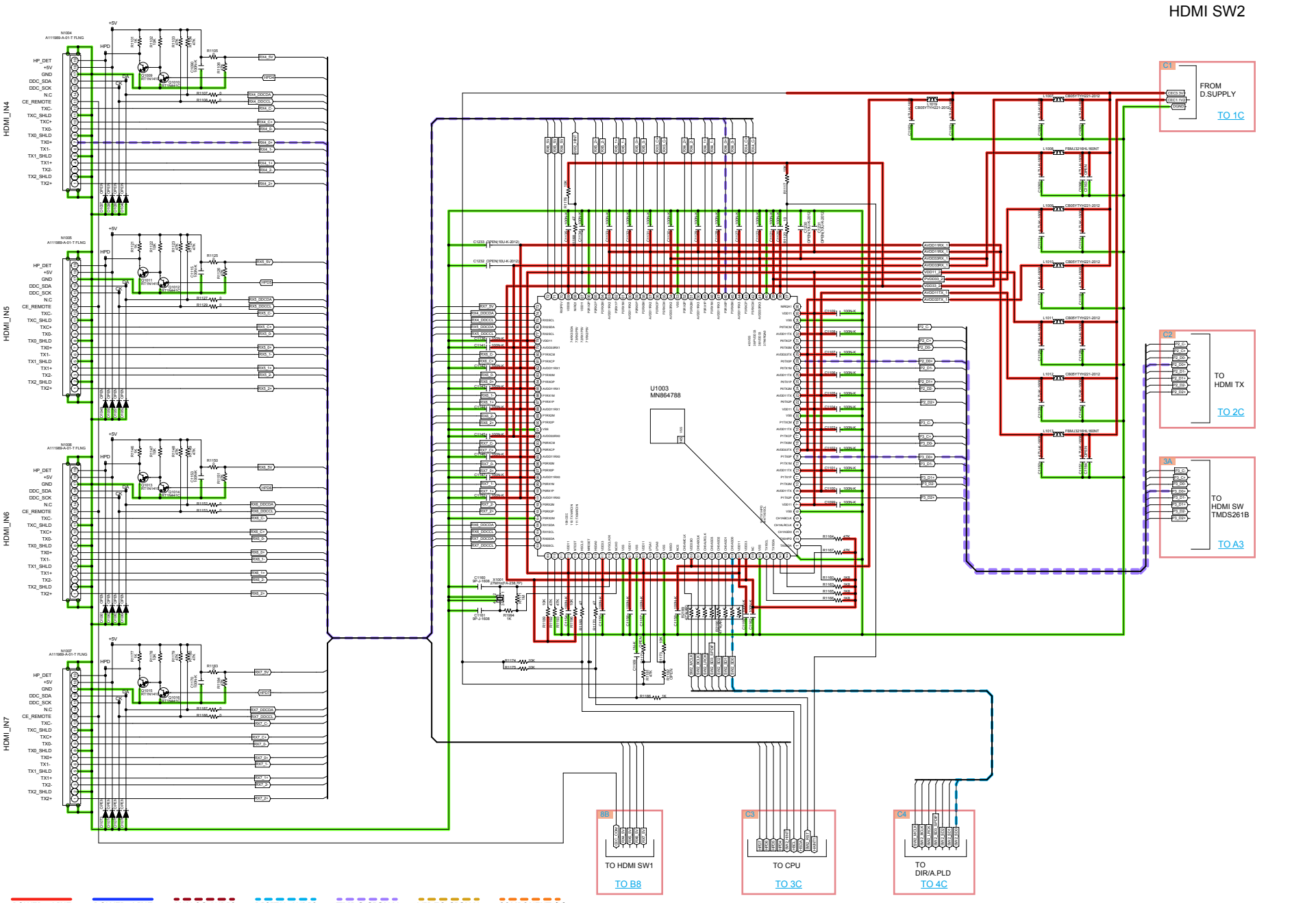
HDMI SW2
HDMI_IN4
HDMI_IN5
HDMI_IN6
HDMI_IN7
U1003
MN864788
C1
FROM
D.SUPPLY
TO 1C
C2
TO
HDMI TX
TO 2C
3A
TO
HDMI SW
TMDS261B
TO A3
8B
TO HDMI SW1
TO B8
C3
TO CPU
TO 3C
C4
TO
DIR/A.PLD
TO 4C
GND LINE
POWER+ LINE
POWER- LINE
ANALOG AUDIO
DIGITAL AUDIO
TMDS SIGNAL
VIDEO SIGNAL
COMPONENT (Y)

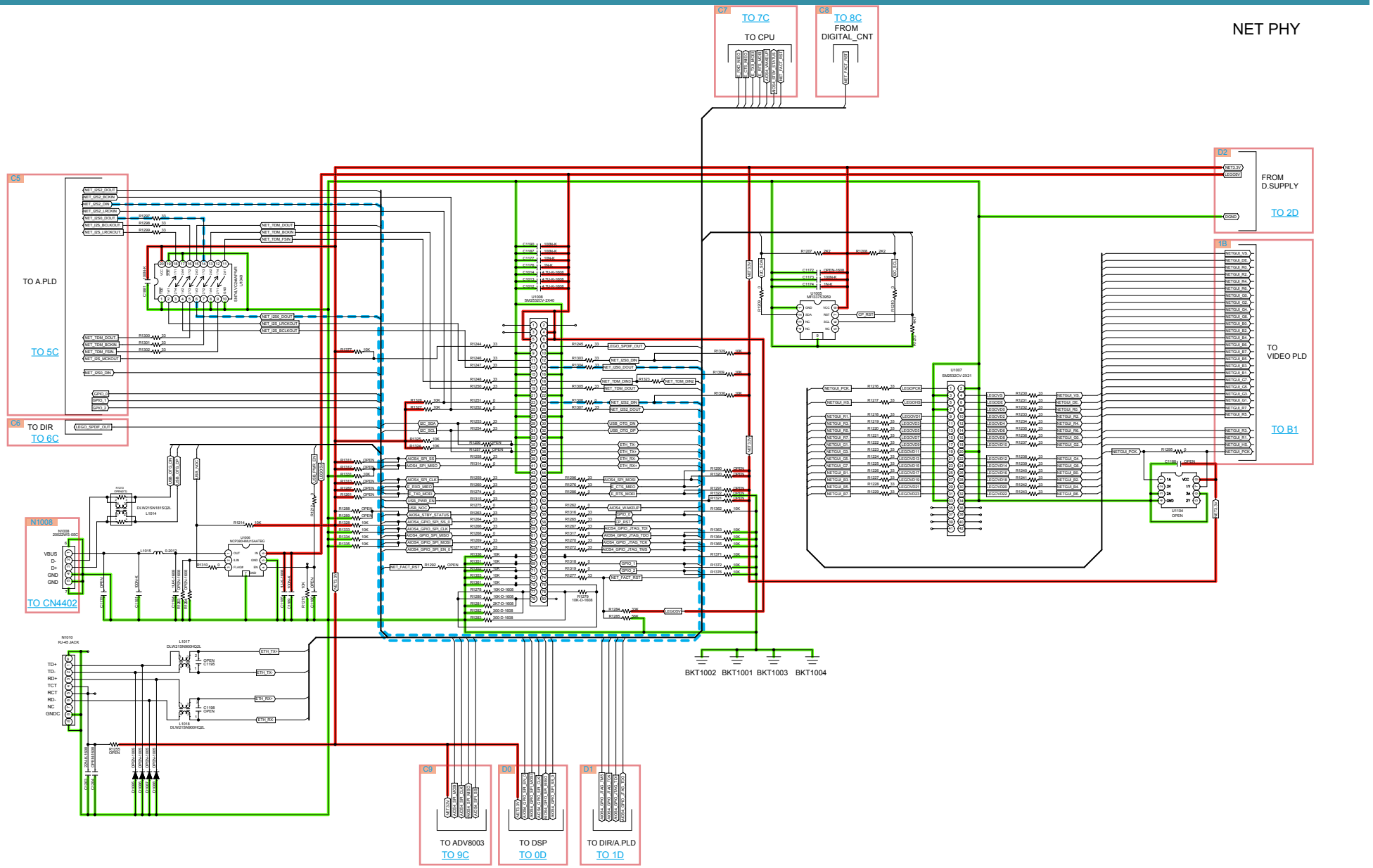

GND LINE POWER+ LINE POWER- LINE ANALOG AUDIO DIGITAL AUDIO TMDS SIGNAL VIDEO SIGNAL COMPONENT (Y)

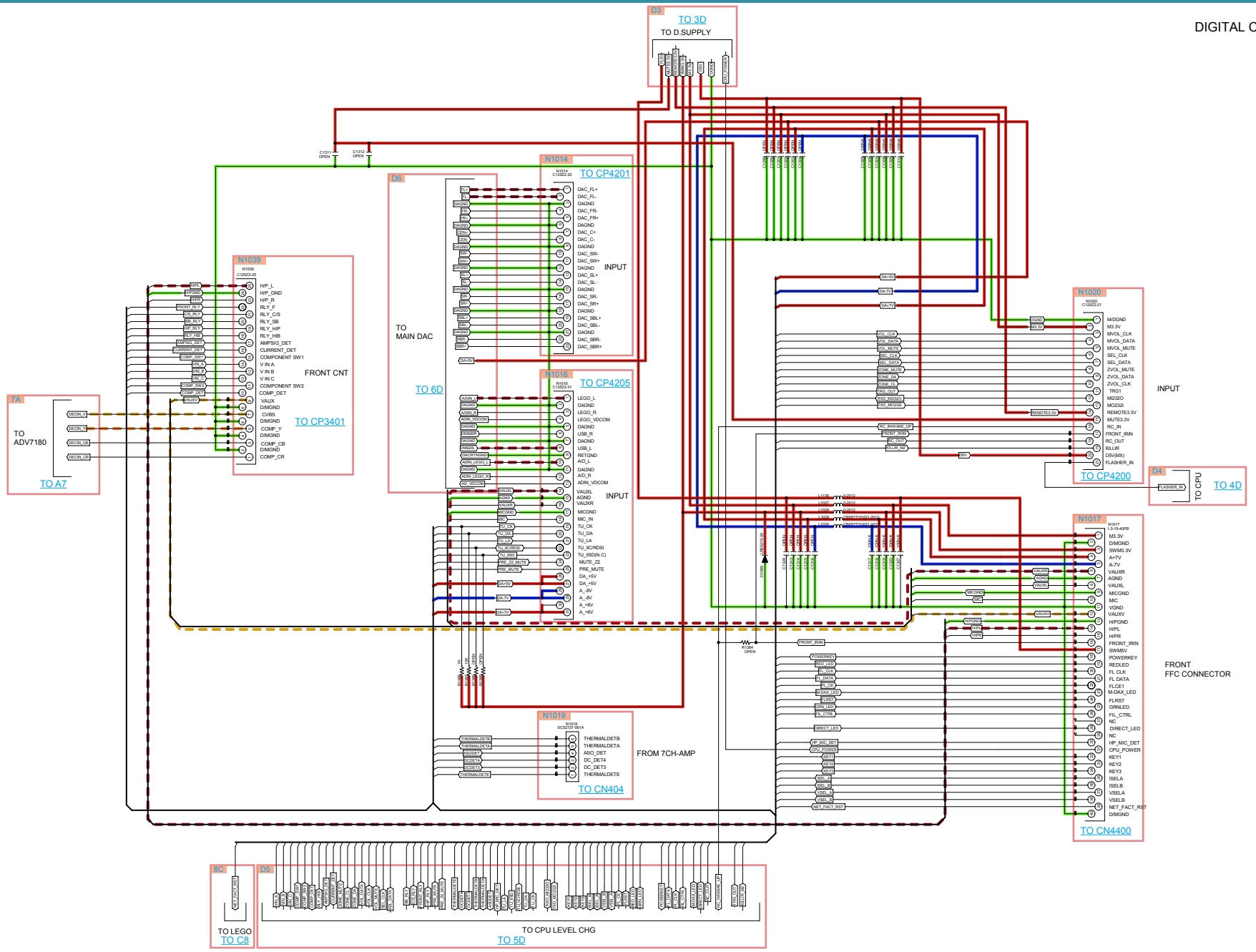
DIGITAL CNT
D3
TO 3D
TO D.SUPPLY
N1014
TO CP4201
D6
TO MAIN DAC
INPUT
TO 6D
N1016
TO CP4205
INPUT
N1039
FRONT CNT
TO CP3401
7A
TO ADV7180
TO A7
N1020
TO CP4200
INPUT
D4
TO CPU
TO 4D
N1017
FRONT FFC CONNECTOR
TO CN4400
N1019
FROM 7CH-AMP
TO CN404
8C
TO LEGO
TO C8
D5
TO CPU LEVEL CHG
TO 5D
GND LINE
POWER+ LINE
POWER- LINE
ANALOG AUDIO
DIGITAL AUDIO
TMDS SIGNAL
VIDEO SIGNAL
COMPONENT (Y)

CPU LEVEL CHG

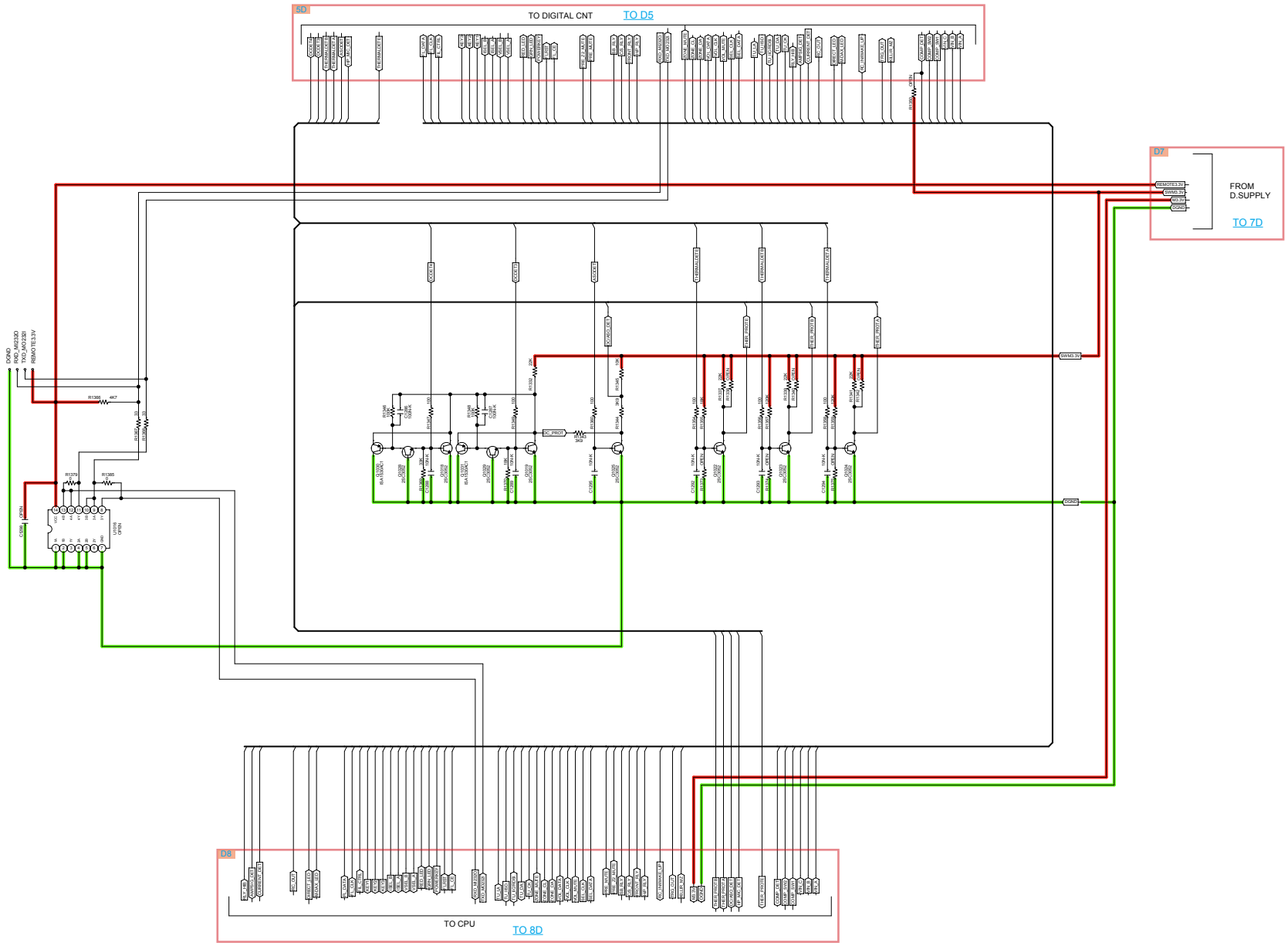

GND LINE POWER+ LINE POWER- LINE ANALOG AUDIO DIGITAL AUDIO TMDS SIGNAL VIDEO SIGNAL COMPONENT (Y)

SCH09_CPU

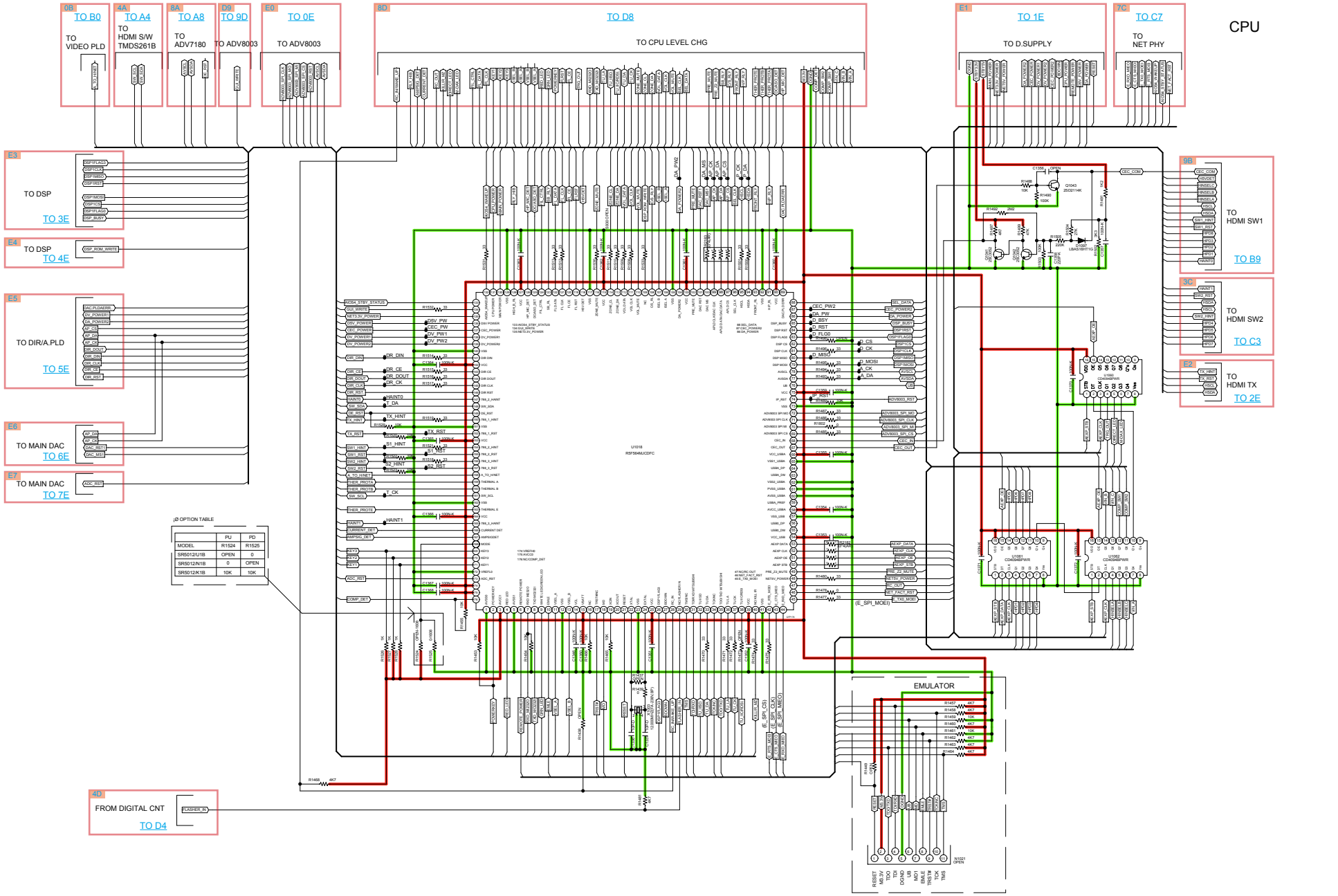
CPU
TO B0
TO VIDEO PLD
TO A4
TO HDMI S/W TMDS261B
TO A8
TO ADV7180
TO 9D
TO ADV8003
TO 0E
TO ADV8003
TO D8
TO CPU LEVEL CHG
TO 1E
TO D.SUPPLY
TO C7
TO NET PHY
TO DSP
TO 3E
TO DSP
TO 4E
TO DIR/A.PLD
TO 5E
TO MAIN DAC
TO 6E
TO MAIN DAC
TO 7E
TO HDMI SW1
TO B9
TO HDMI SW2
TO C3
TO HDMI TX
TO 2E
FROM DIGITAL CNT
TO D4
EMULATOR
(E_SPI_MOEI)
GND LINE
POWER+ LINE
POWER- LINE
ANALOG AUDIO
DIGITAL AUDIO
TMDS SIGNAL
VIDEO SIGNAL
COMPONENT (Y)

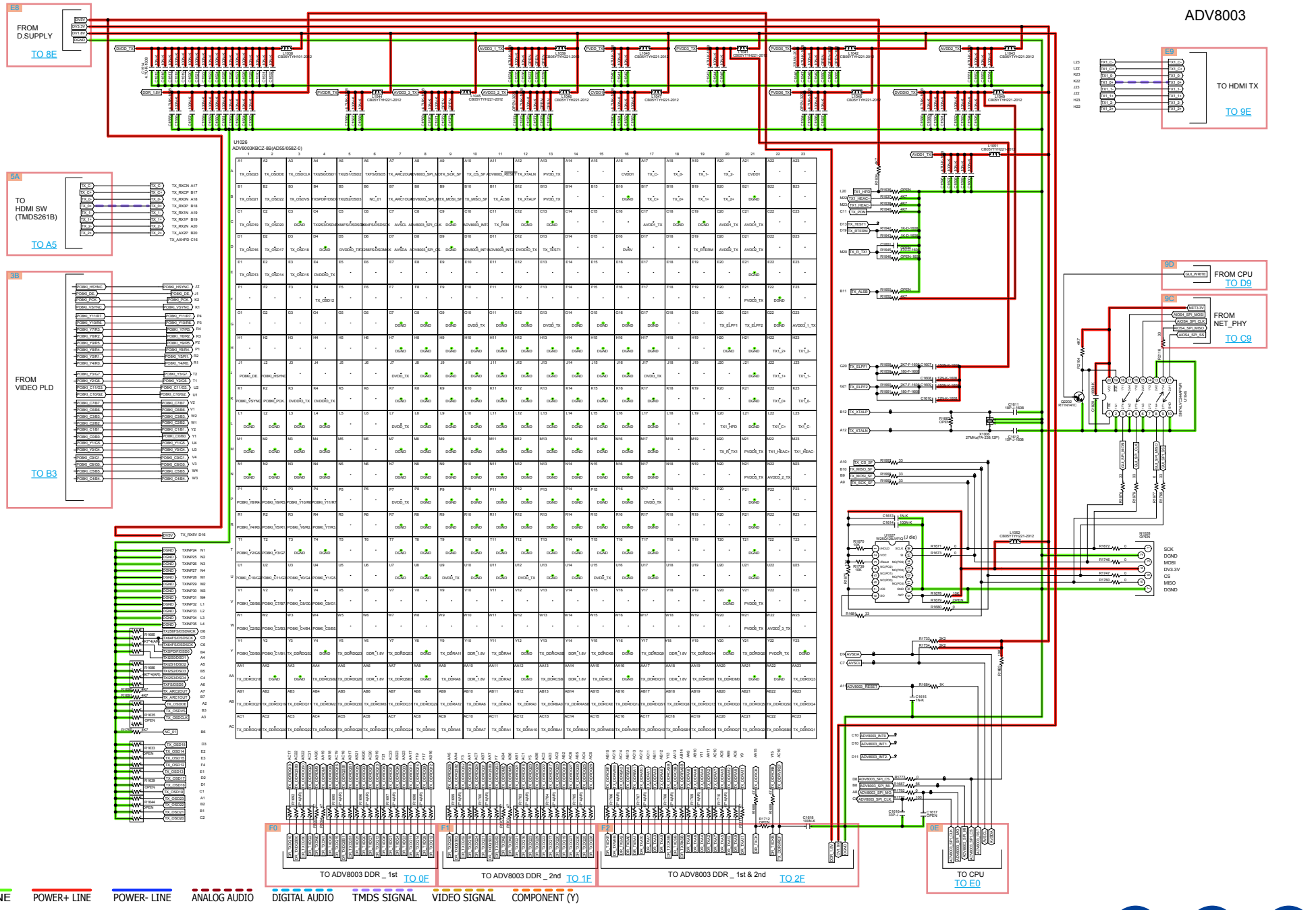
ADV8003
FROM D.SUPPLY
TO 8E
TO HDMI SW (TMDS261B)
TO A5
FROM VIDEO PLD
TO B3
TO HDMI TX
TO 9E
FROM CPU
TO D9
FROM NET_PHY
TO C9
TO ADV8003 DDR _ 1st
TO 0F
TO ADV8003 DDR _ 2nd
TO 1F
TO ADV8003 DDR _ 1st & 2nd
TO 2F
TO CPU
TO E0
GND LINE
POWER+ LINE
POWER- LINE
ANALOG AUDIO
DIGITAL AUDIO
TMDS SIGNAL
VIDEO SIGNAL
COMPONENT (Y)

ADV8003 DDR

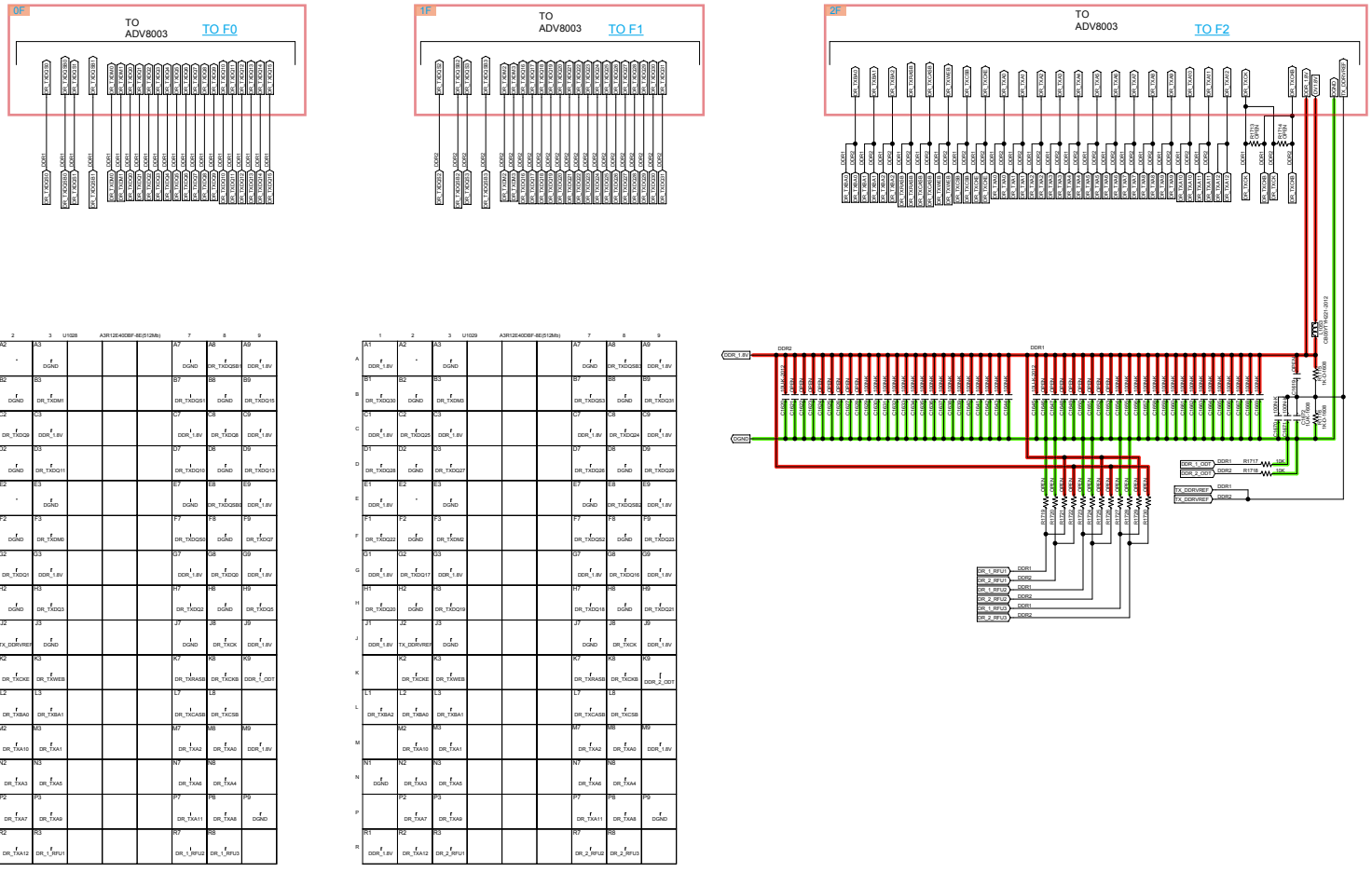

GND LINE POWER+ LINE POWER- LINE ANALOG AUDIO DIGITAL AUDIO TMDS SIGNAL VIDEO SIGNAL COMPONENT (Y)

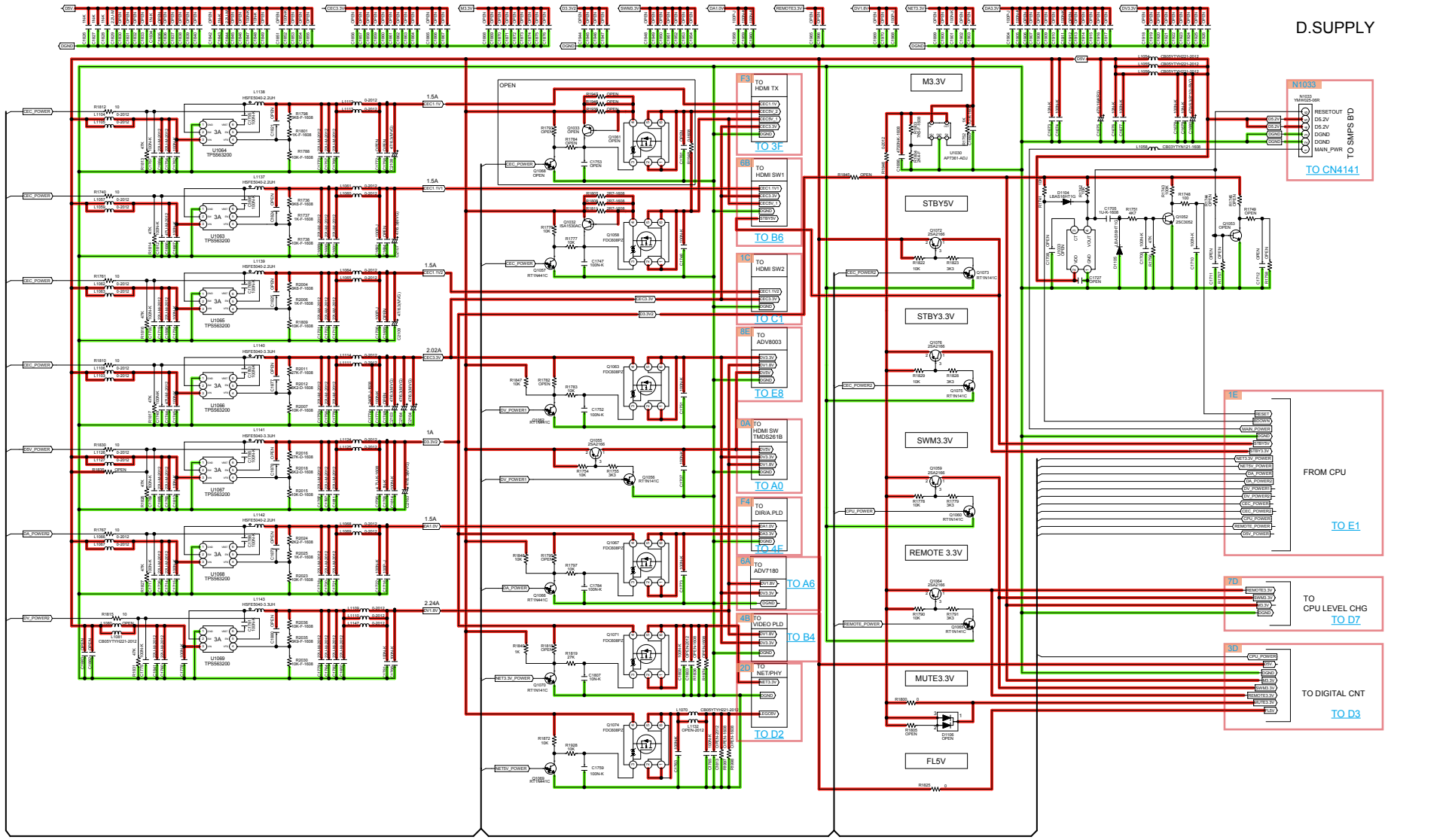

GND LINE POWER+ LINE POWER- LINE ANALOG AUDIO DIGITAL AUDIO TMDS SIGNAL VIDEO SIGNAL COMPONENT (Y)

HDMI TX

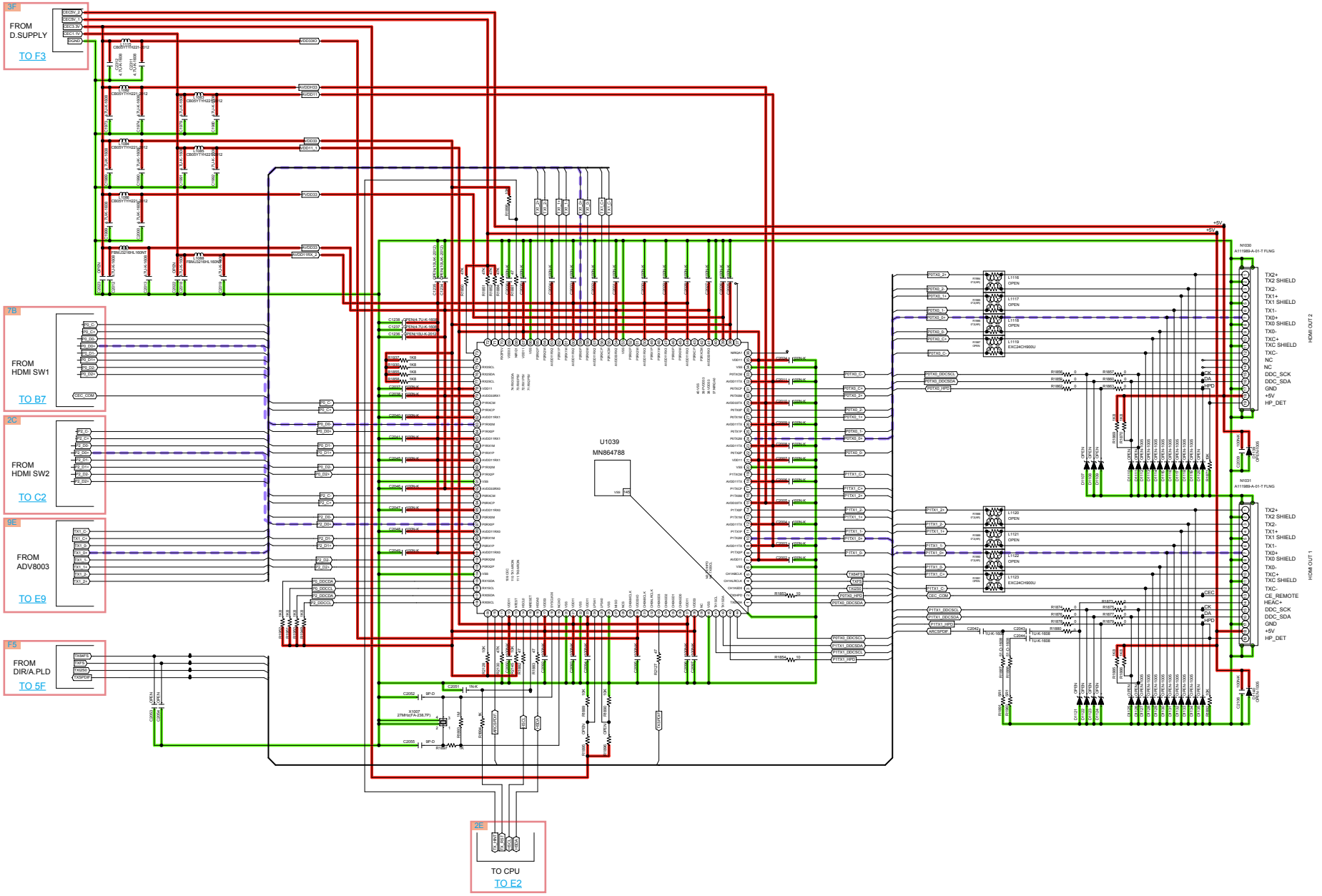

GND LINE | POWER+ LINE | POWER- LINE | ANALOG AUDIO | DIGITAL AUDIO | TMDS SIGNAL | VIDEO SIGNAL | COMPONENT (Y)

SCH14_DIR A.PLD

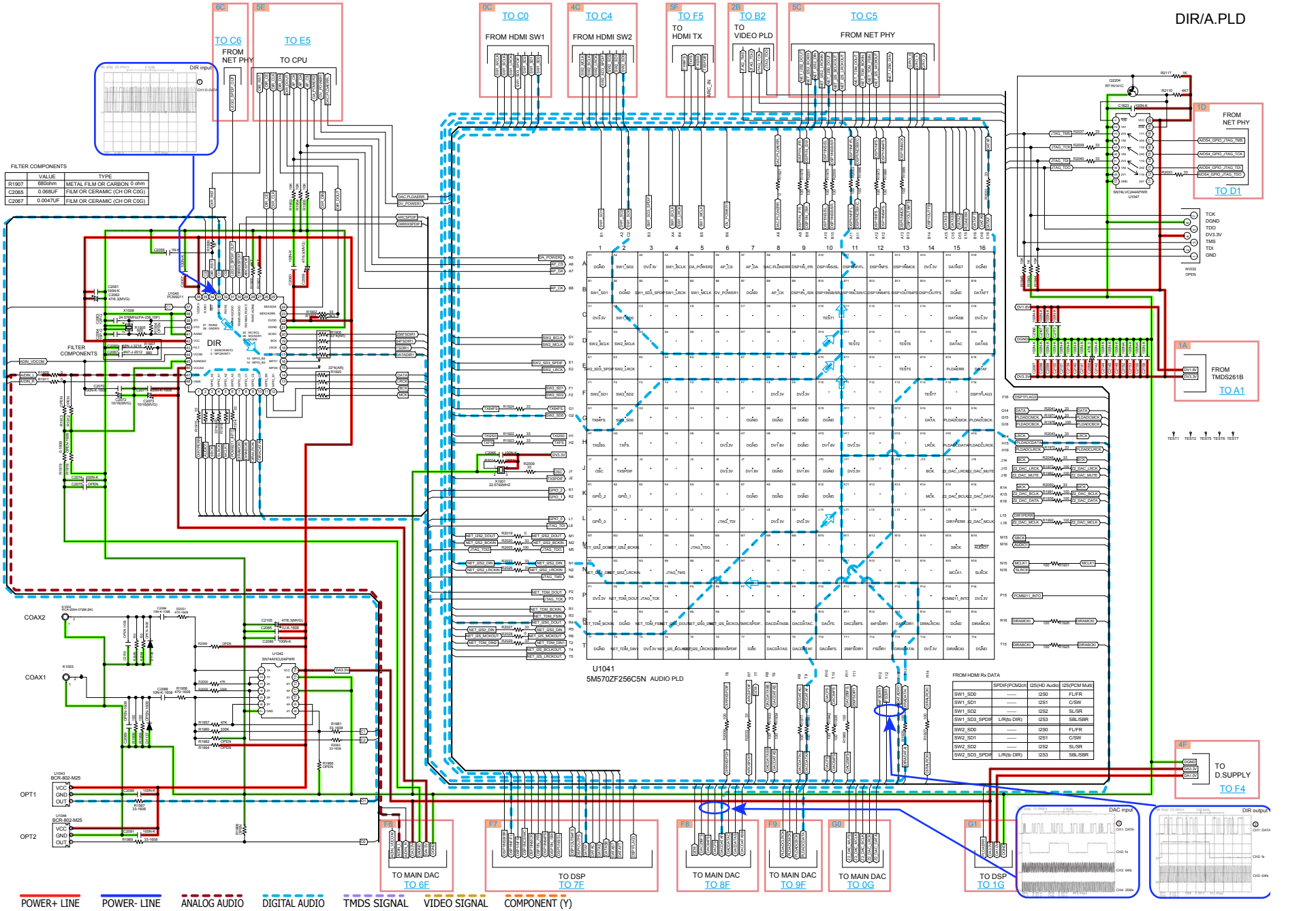

FILTER COMPONENTS	VALUE	TYPE
R1907	680ohm	METAL FILM OR CARBON 0 ohm
C2065	0.068UF	FILM OR CERAMIC (CH OR C0G)
C2067	0.0047UF	FILM OR CERAMIC (CH OR C0G)

FROM HDMI Rx DATA	SPDIF(PCM2ch	I2S(HD Audio	I2S(PCM Multi)
SW1_SD0	-------	I2S0	FL/FR
SW1_SD1	-------	I2S1	C/SW
SW1_SD2	-------	I2S2	SL/SR
SW1_SD3_SPDIF	L/R(to DIR)	I2S3	SBL/SBR
SW2_SD0	-------	I2S0	FL/FR
SW2_SD1	-------	I2S1	C/SW
SW2_SD2	-------	I2S2	SL/SR
SW2_SD3_SPDIF	L/R(to DIR)	I2S3	SBL/SBR

DSP

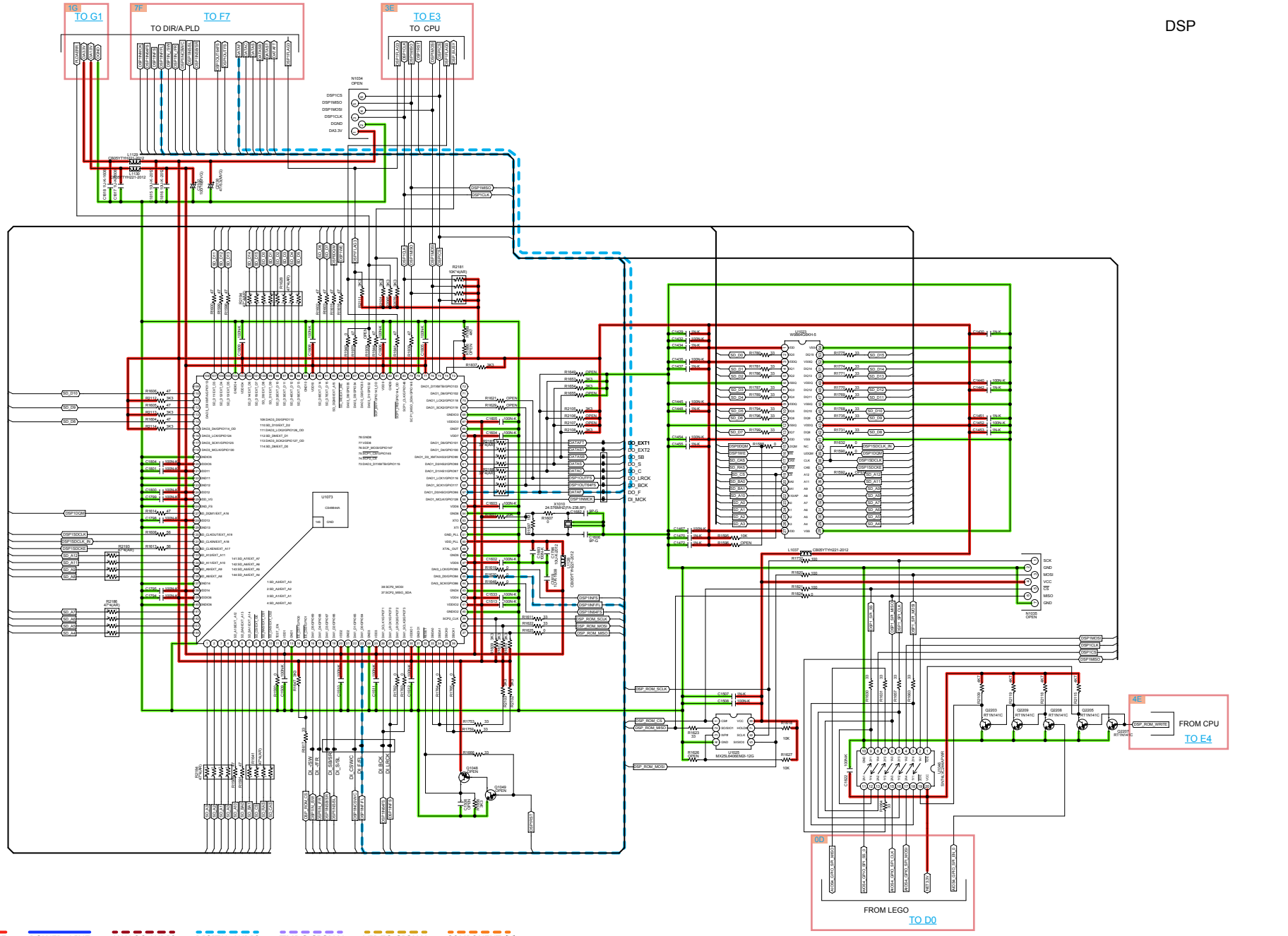

GND LINE POWER+ LINE POWER- LINE ANALOG AUDIO DIGITAL AUDIO TMDS SIGNAL VIDEO SIGNAL COMPONENT (Y)

SCH16_MAIN DAC

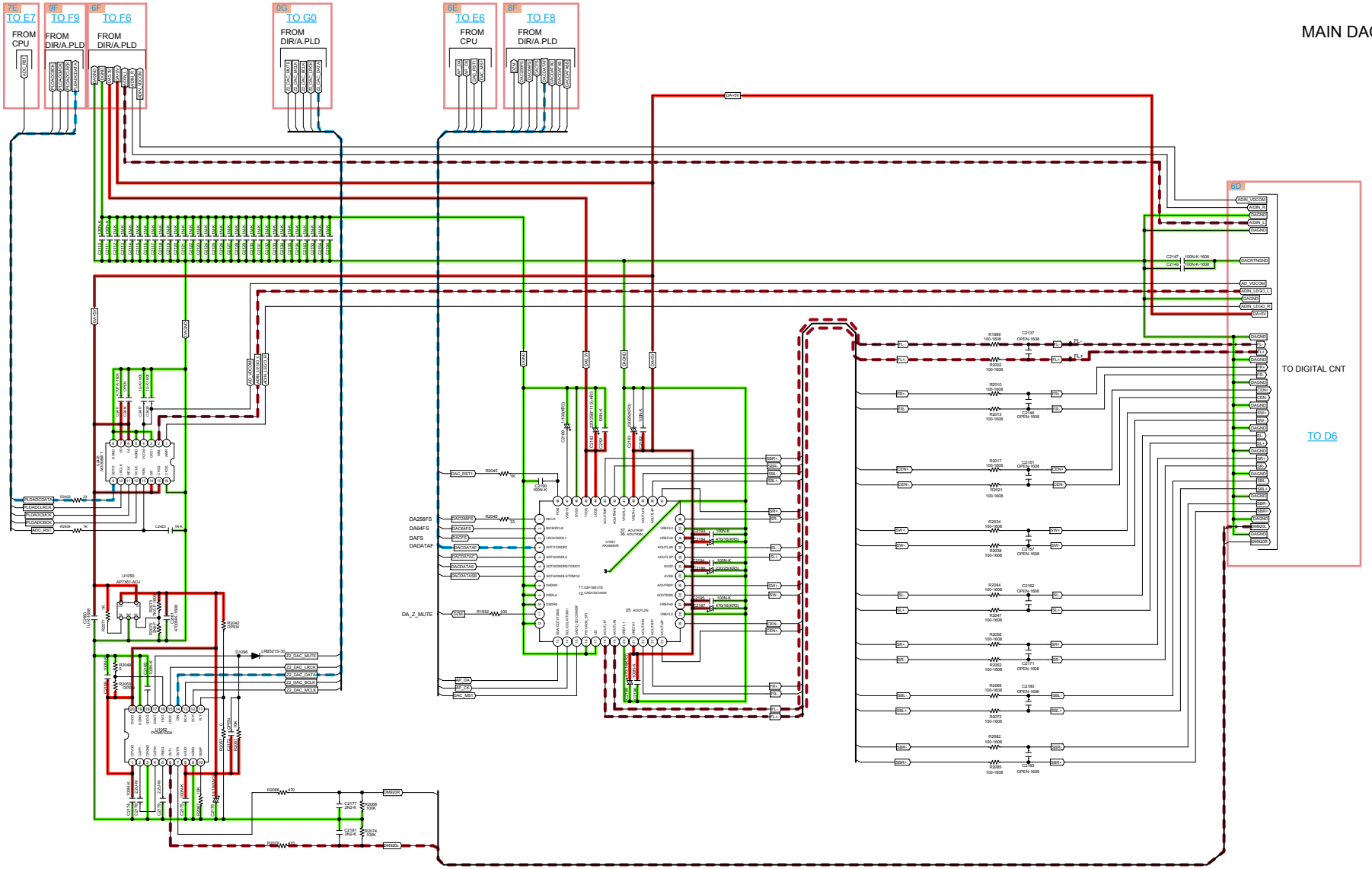

GND LINE POWER+ LINE POWER- LINE ANALOG AUDIO DIGITAL AUDIO TMDS SIGNAL VIDEO SIGNAL COMPONENT (Y)

SCH17_INPUT1

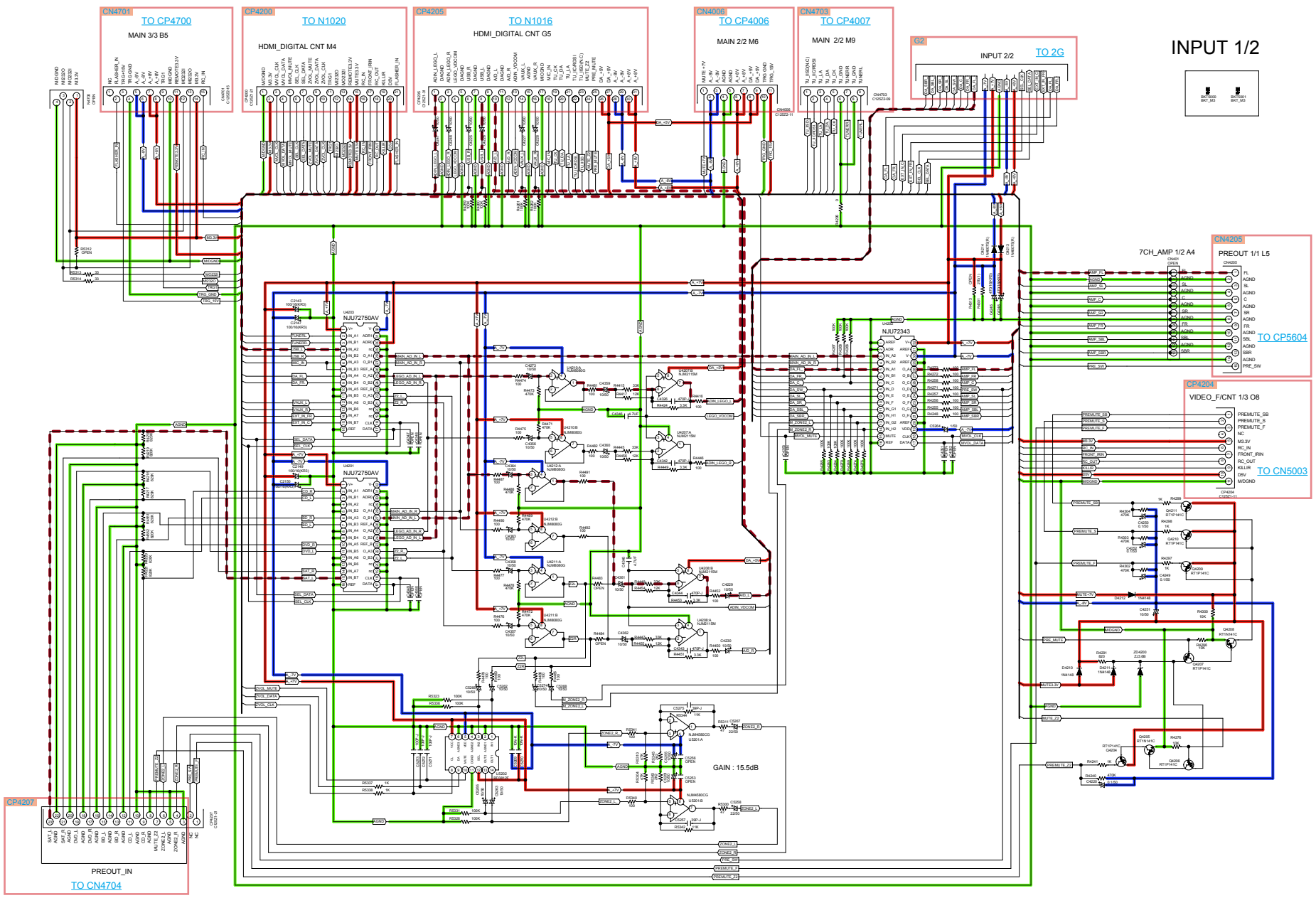

GND LINE POWER+ LINE POWER- LINE ANALOG AUDIO DIGITAL AUDIO TMDS SIGNAL VIDEO SIGNAL COMPONENT (Y)

INPUT 2/2

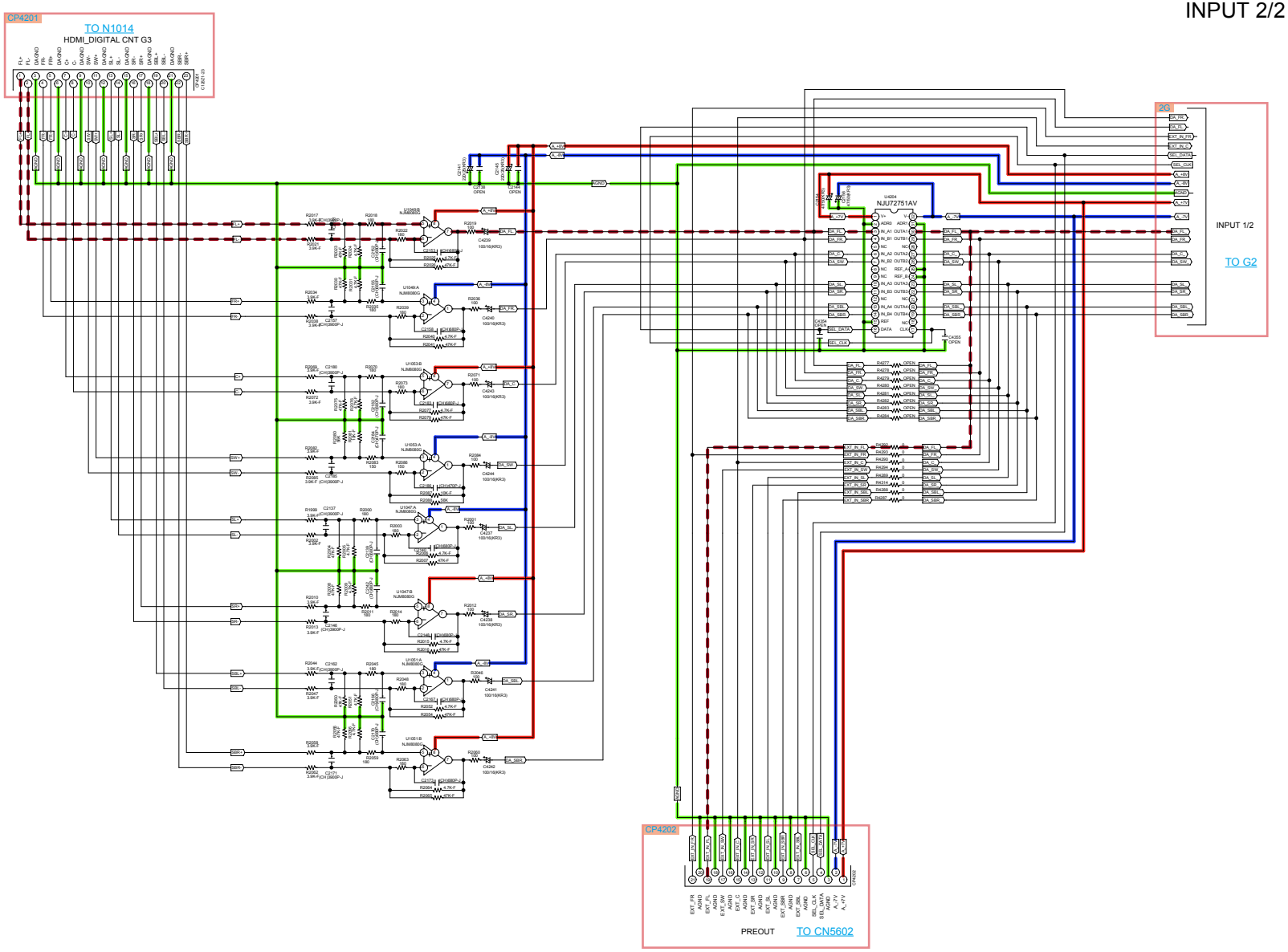

GND LINE | POWER+ LINE | POWER- LINE | ANALOG AUDIO | DIGITAL AUDIO | TMDS SIGNAL | VIDEO SIGNAL | COMPONENT (Y)

VIDEO PART

VIDEO_F/CNT 1/3

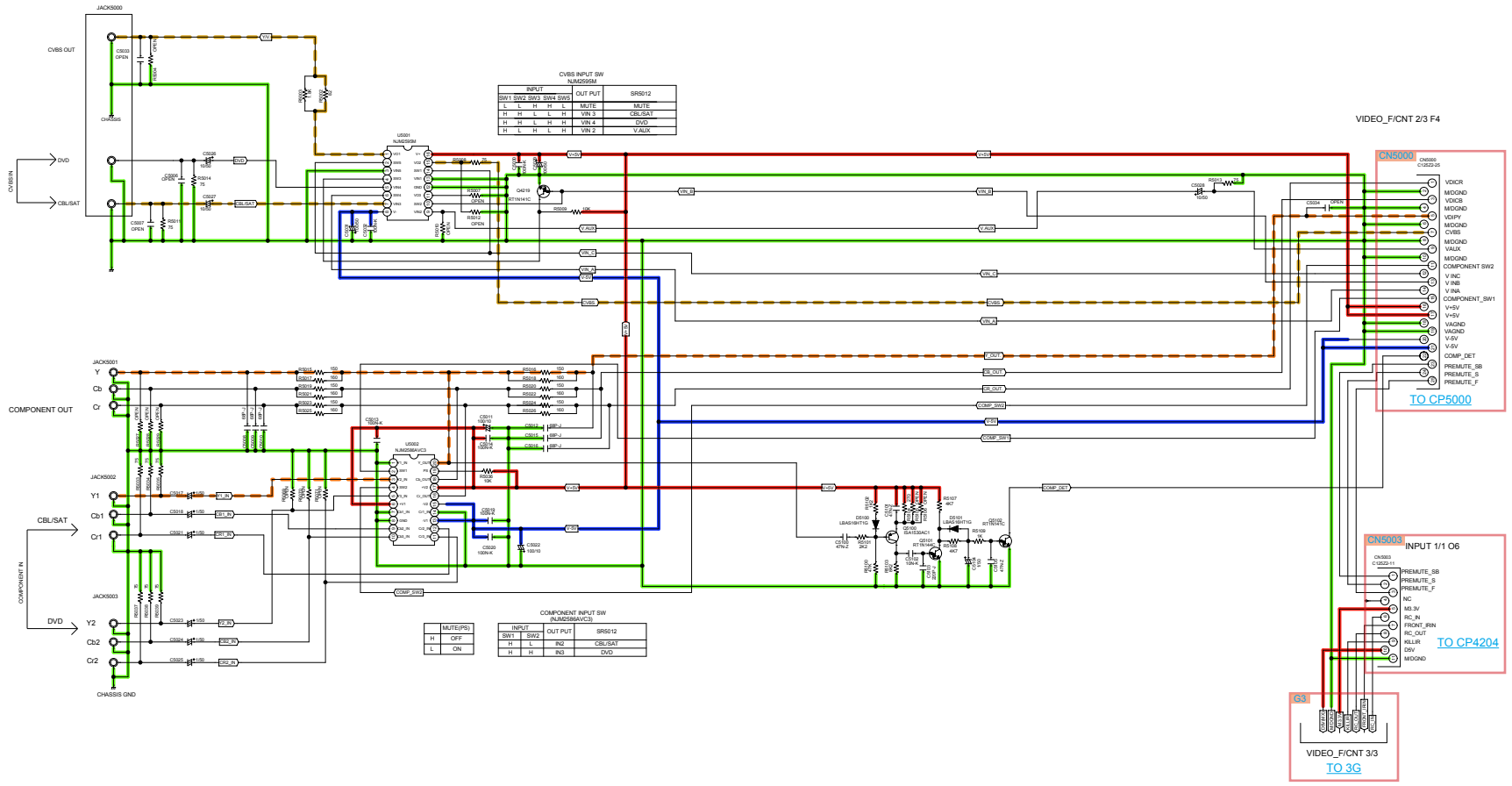

GND LINE POWER+ LINE POWER- LINE ANALOG AUDIO DIGITAL AUDIO TMDS SIGNAL VIDEO SIGNAL COMPONENT (Y)

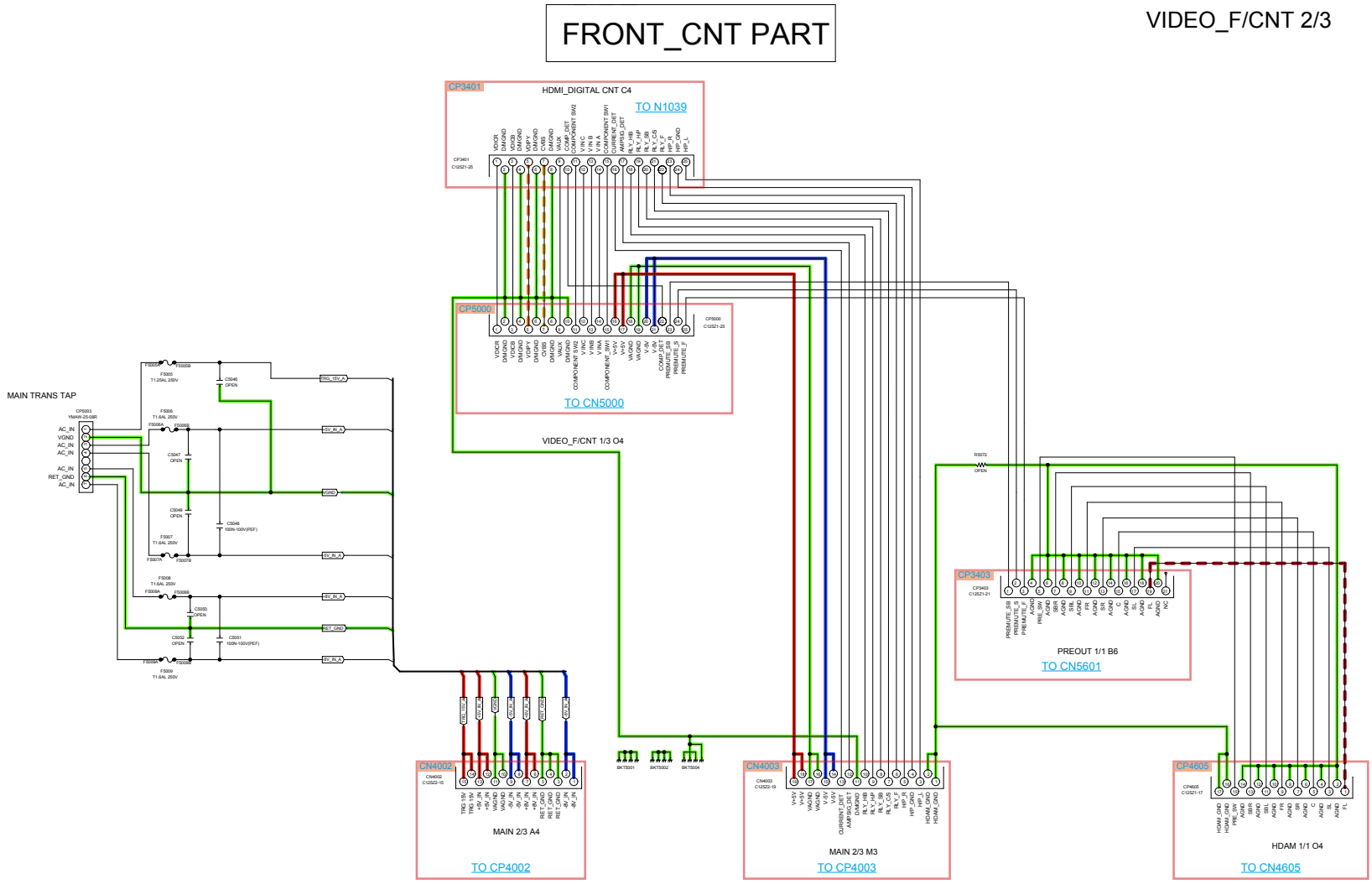

GND LINE | POWER+ LINE | POWER- LINE | ANALOG AUDIO | DIGITAL AUDIO | TMDS SIGNAL | VIDEO SIGNAL | COMPONENT (Y)

VIDEO_F/CNT 3/3

RC-5 PART

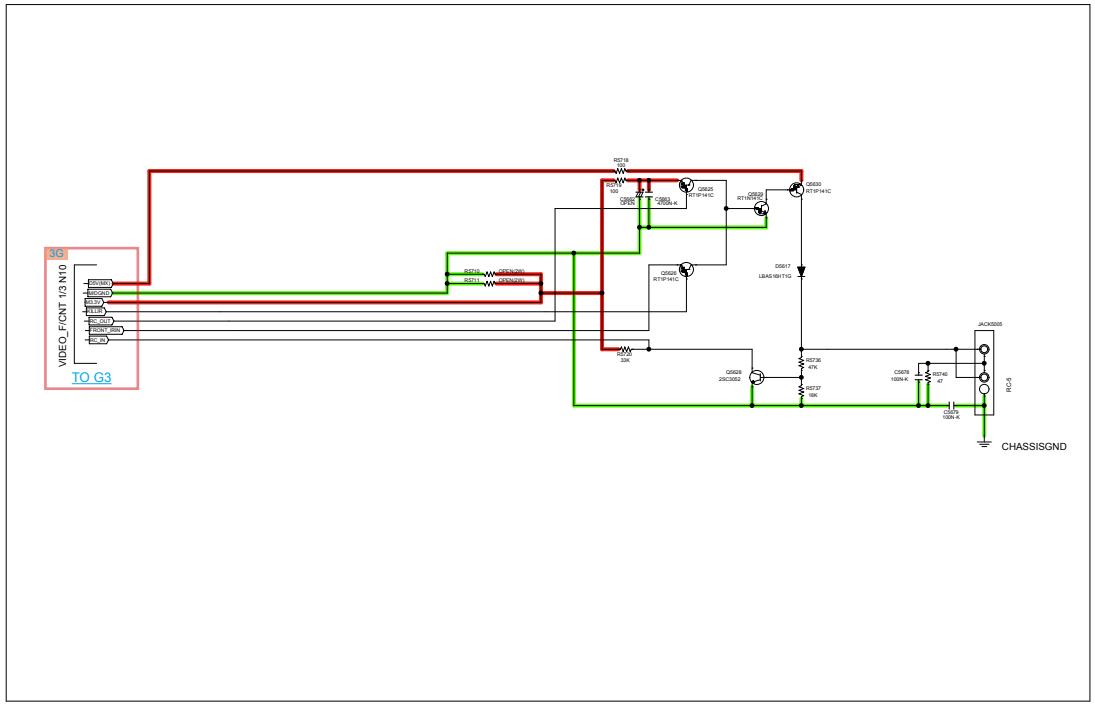

GND LINE POWER+ LINE POWER- LINE ANALOG AUDIO DIGITAL AUDIO TMDS SIGNAL VIDEO SIGNAL COMPONENT (Y)

AMP B'D 1/2

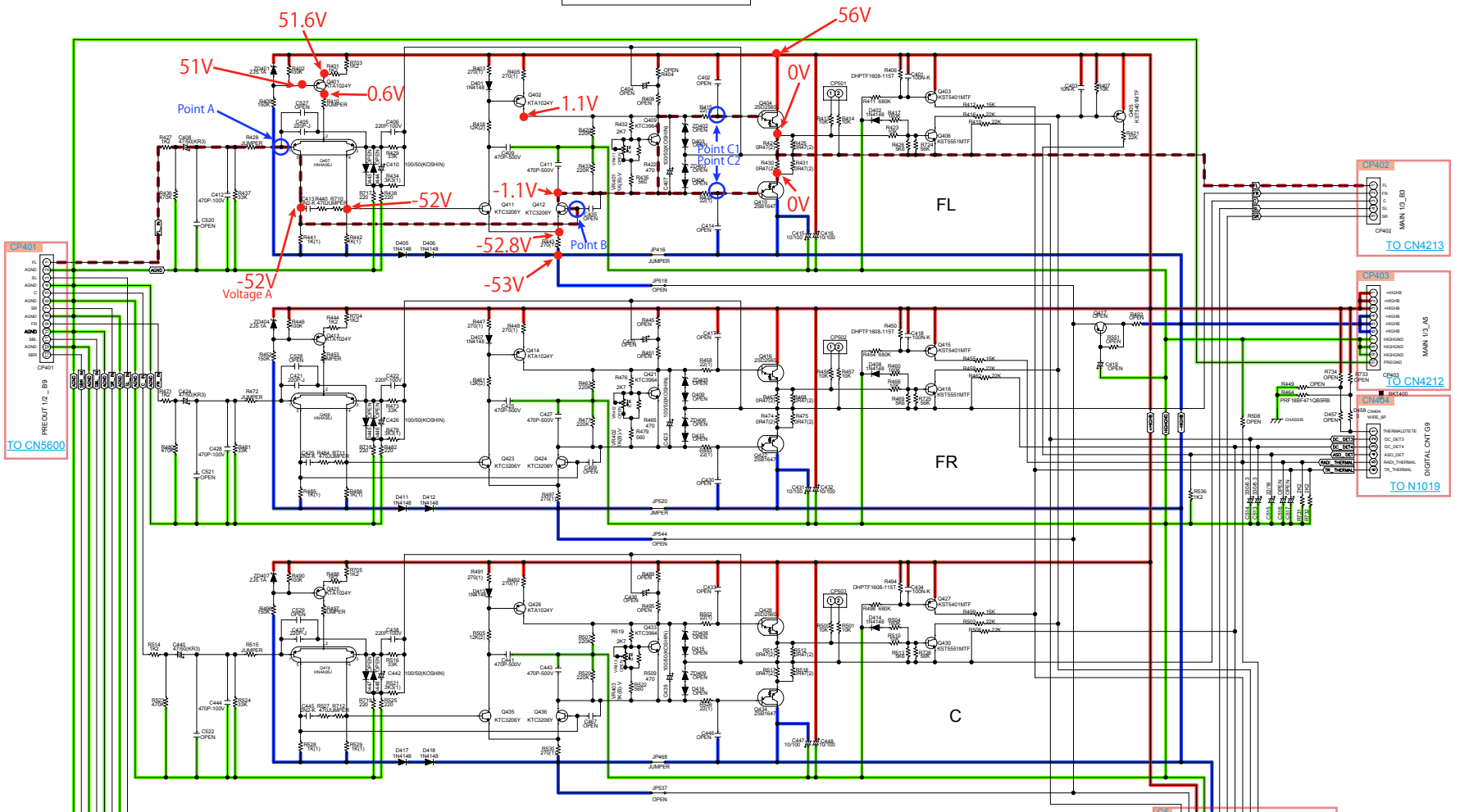

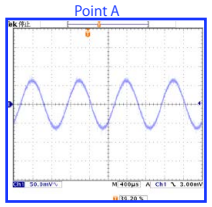

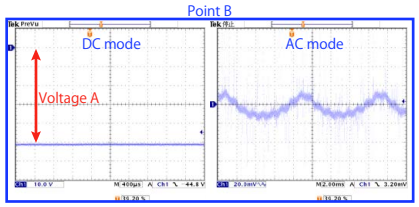

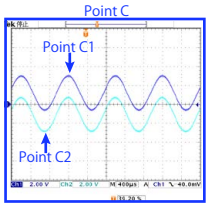

Measurement condition
- Voltage measurement
  No signal
- Waveform measurement
  INPUT: 200mVrms / 1KHz (ANALOG)
  Surround mode: MCh Stereo
  VOL: 70
  Speaker load: 8ohms

GND LINE POWER+ LINE POWER- LINE ANALOG AUDIO DIGITAL AUDIO TMDS SIGNAL VIDEO SIGNAL COMPONENT (Y)

SCH23_AMP2

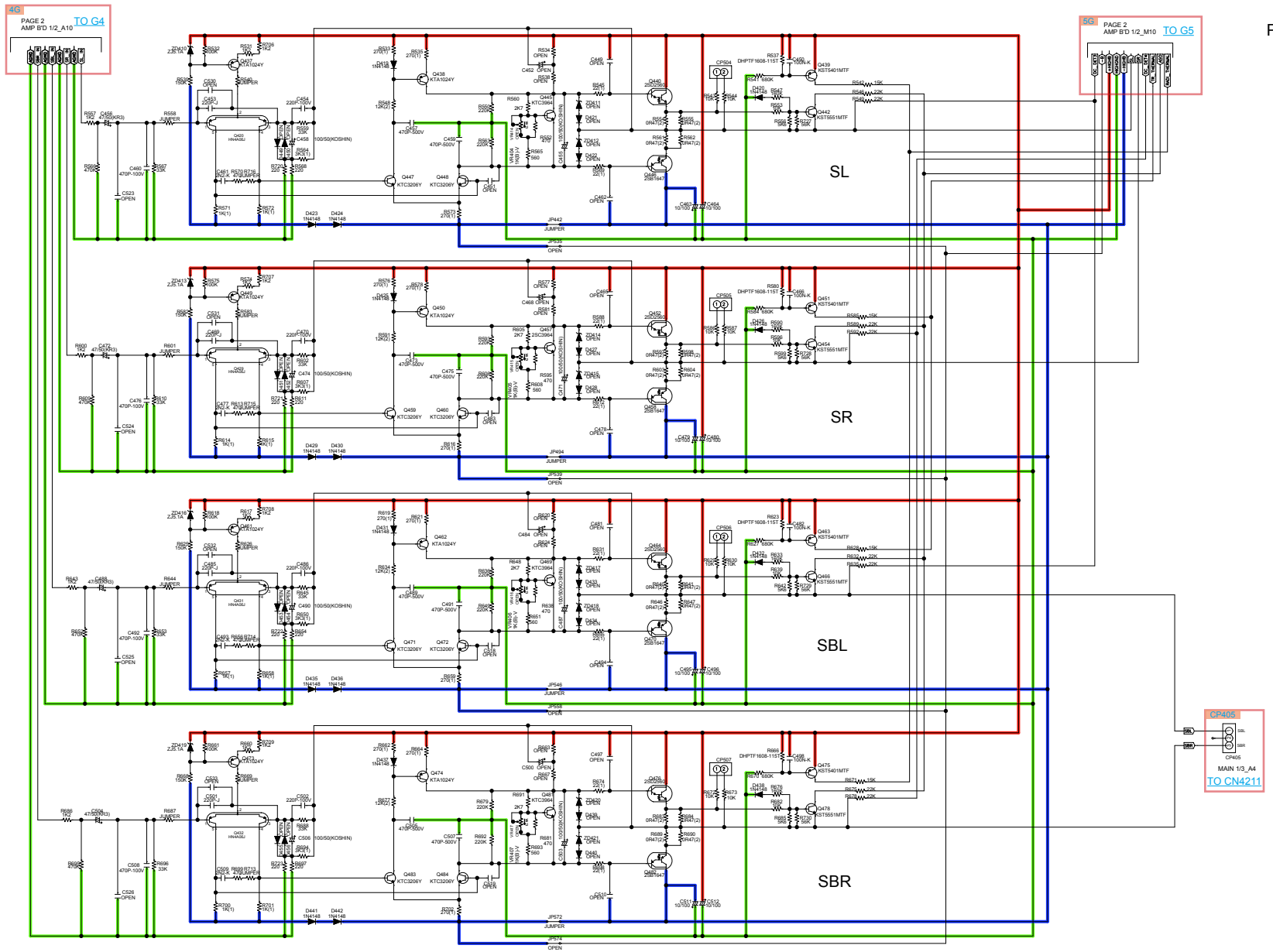

PAGE 2

GND LINE POWER+ LINE POWER- LINE ANALOG AUDIO DIGITAL AUDIO TMDS SIGNAL VIDEO SIGNAL COMPONENT (Y)

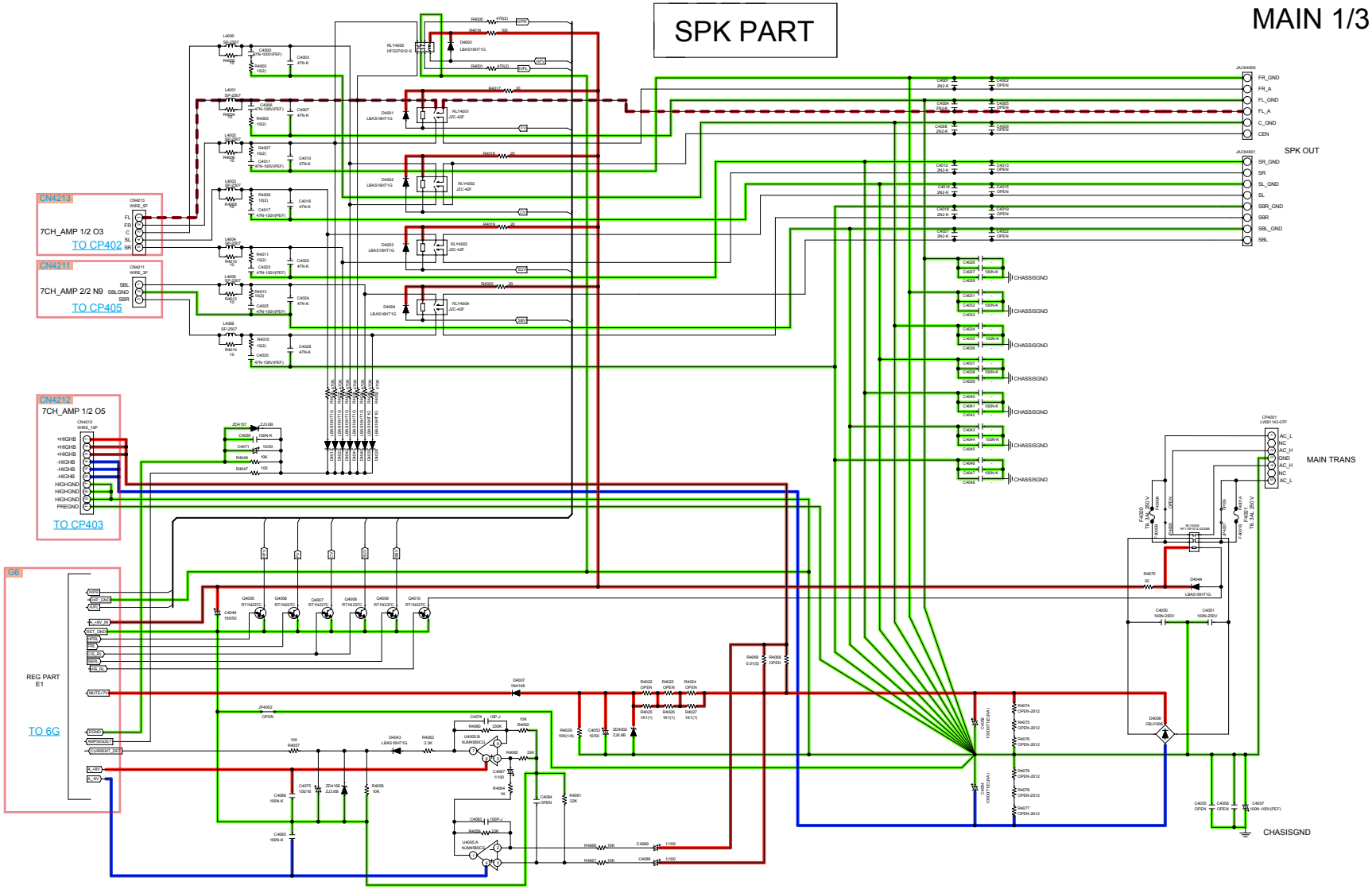

GND LINE POWER+ LINE POWER- LINE ANALOG AUDIO DIGITAL AUDIO TMDS SIGNAL VIDEO SIGNAL COMPONENT (Y)

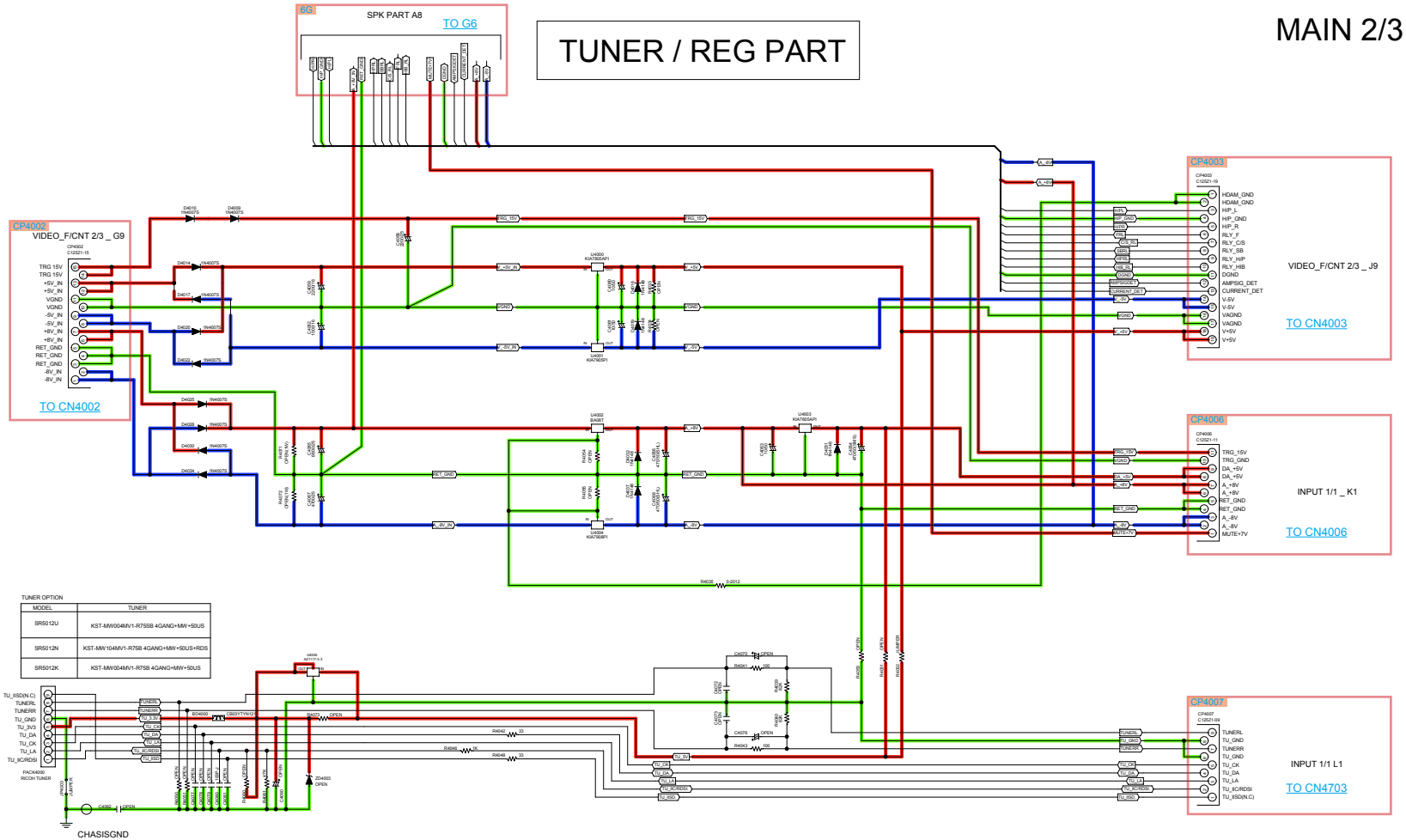

GND LINE POWER+ LINE POWER- LINE ANALOG AUDIO DIGITAL AUDIO TMDS SIGNAL VIDEO SIGNAL COMPONENT (Y)

MAIN 3/3

RS_CNT PART

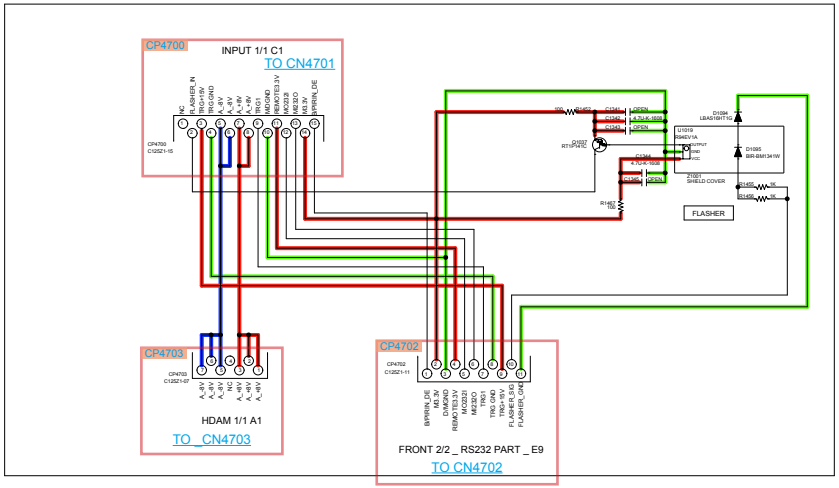

AUDIO IN PART

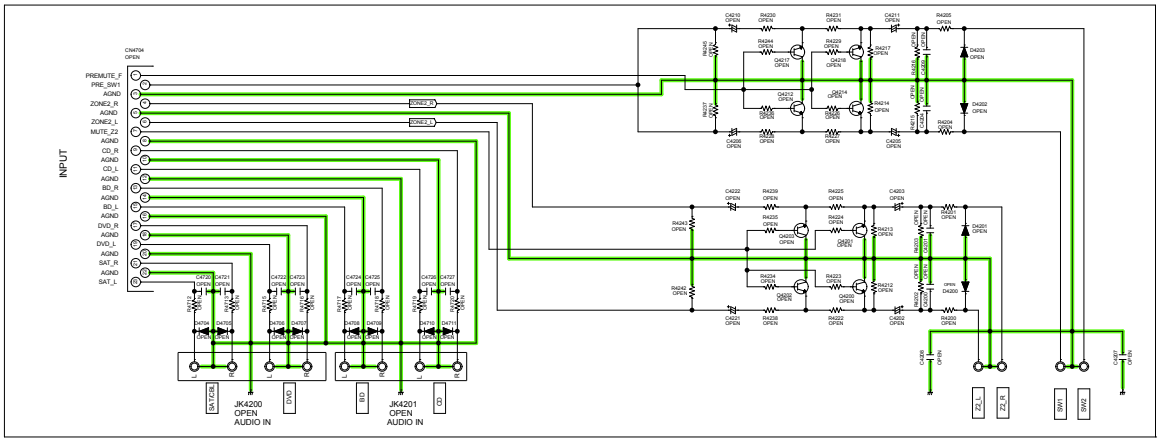

GND LINE POWER+ LINE POWER- LINE ANALOG AUDIO DIGITAL AUDIO TMDS SIGNAL VIDEO SIGNAL COMPONENT (Y)

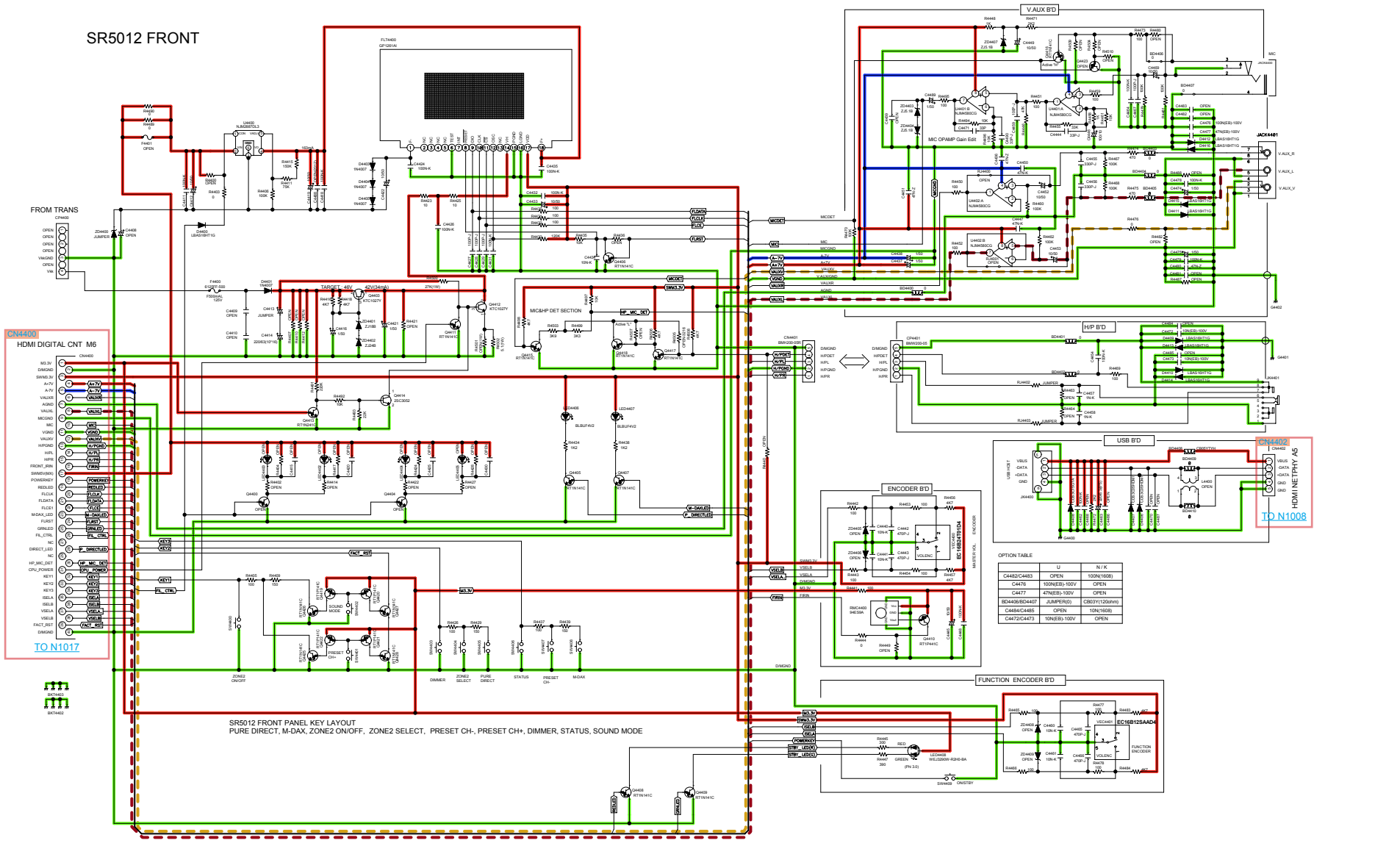

	U	N / K
C4482/C4483	OPEN	100N(1608)
C4476	100N(EB)-100V	OPEN
C4477	47N(EB)-100V	OPEN
BD4408/BD4407	JUMPER(0)	CB03Y(120ohm)
C4484/C4485	OPEN	10N(1608)
C4472/C4473	10N(EB)-100V	OPEN

GND LINE | POWER+ LINE | POWER- LINE | ANALOG AUDIO | DIGITAL AUDIO | TMDS SIGNAL | VIDEO SIGNAL | COMPONENT (Y)

RS232 PART

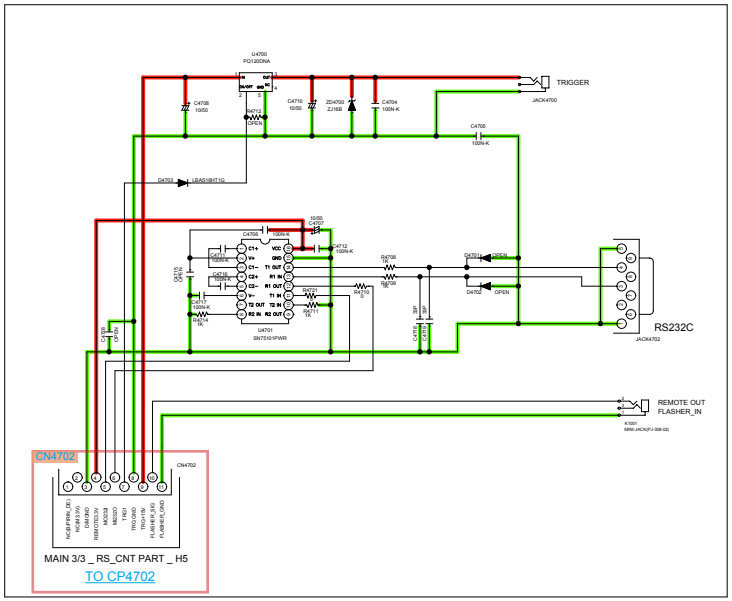

GND LINE POWER+ LINE POWER- LINE ANALOG AUDIO DIGITAL AUDIO TMDS SIGNAL VIDEO SIGNAL COMPONENT (Y)

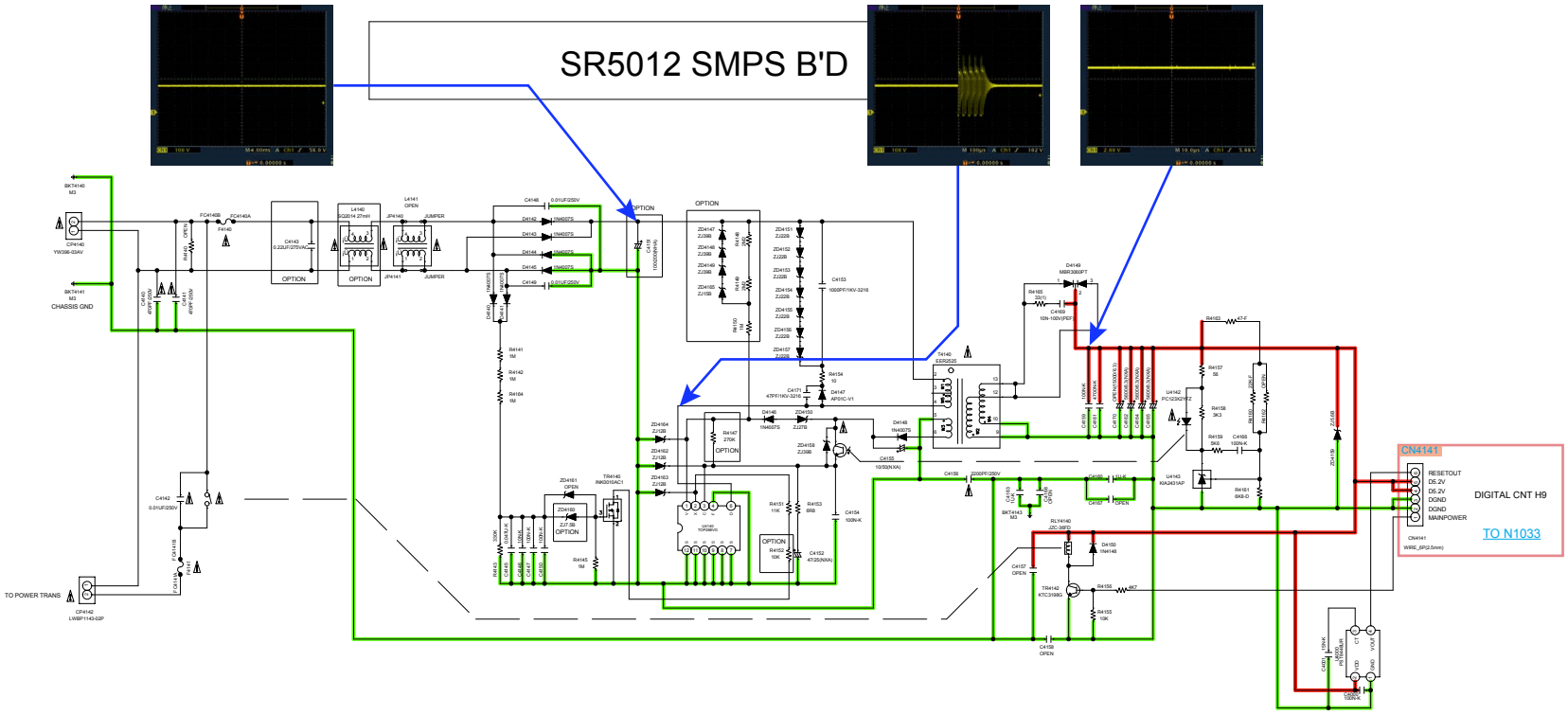

※ FUSE OPTION

	U1B		N1SG, N1B, K1B	
	F4140	F4141	F4140	F4141
SR5012	T2AL	T6.3AL	T1.6AL	T3.15AL

※ OPTION TABLE

	ZD4160	ZD4147	ZD4148	ZD4149	R4148	R4149	R4150	R4147	L4140	C4151	R4152	C4143
U1B	ZJ7.5B	ZJ39B	ZJ39B	ZJ39B	2M2 (5)	2M2 (5)	1M (5)	270K	SQ2014 27mH	100/200	10K	0.22UF/275VAC
N1B,N1SG,K1B	ZJ15B	OPEN	OPEN	OPEN	OPEN	OPEN	OPEN	56K	SQ2014 50mH	100/400	20K	0.1UF/275VAC

※ PCB QUALITY OPTION

U1B,K1B	KB-3151C
N1B,N1SG	CCP-3400(ST)

※SR5012 OPTION

	ZD4165
U1B	ZJ15B
N1B,N1SG,K1B	OPEN

⚠ INDICATES SAFETY CRITICAL COMPONENTS.
TO REDUCE THE RISK OF ELECTIC SHOCK, LEAKAGE CURRENT OR RESISTANCE MEASUREMENTS SHALL BE CARRIED OUT (EXPOSED PARTS ARE ACCEPTABLY INSULATED FROM THE SUPPLY CIRCUIT) BEFORE THE APPLIANCE RETURNED TO THE CUSTOMER.

GND LINE | POWER+ LINE | POWER- LINE | ANALOG AUDIO | DIGITAL AUDIO | TMDS SIGNAL | VIDEO SIGNAL | COMPONENT (Y)

CURRENT_FB PART

HDAM 1/1

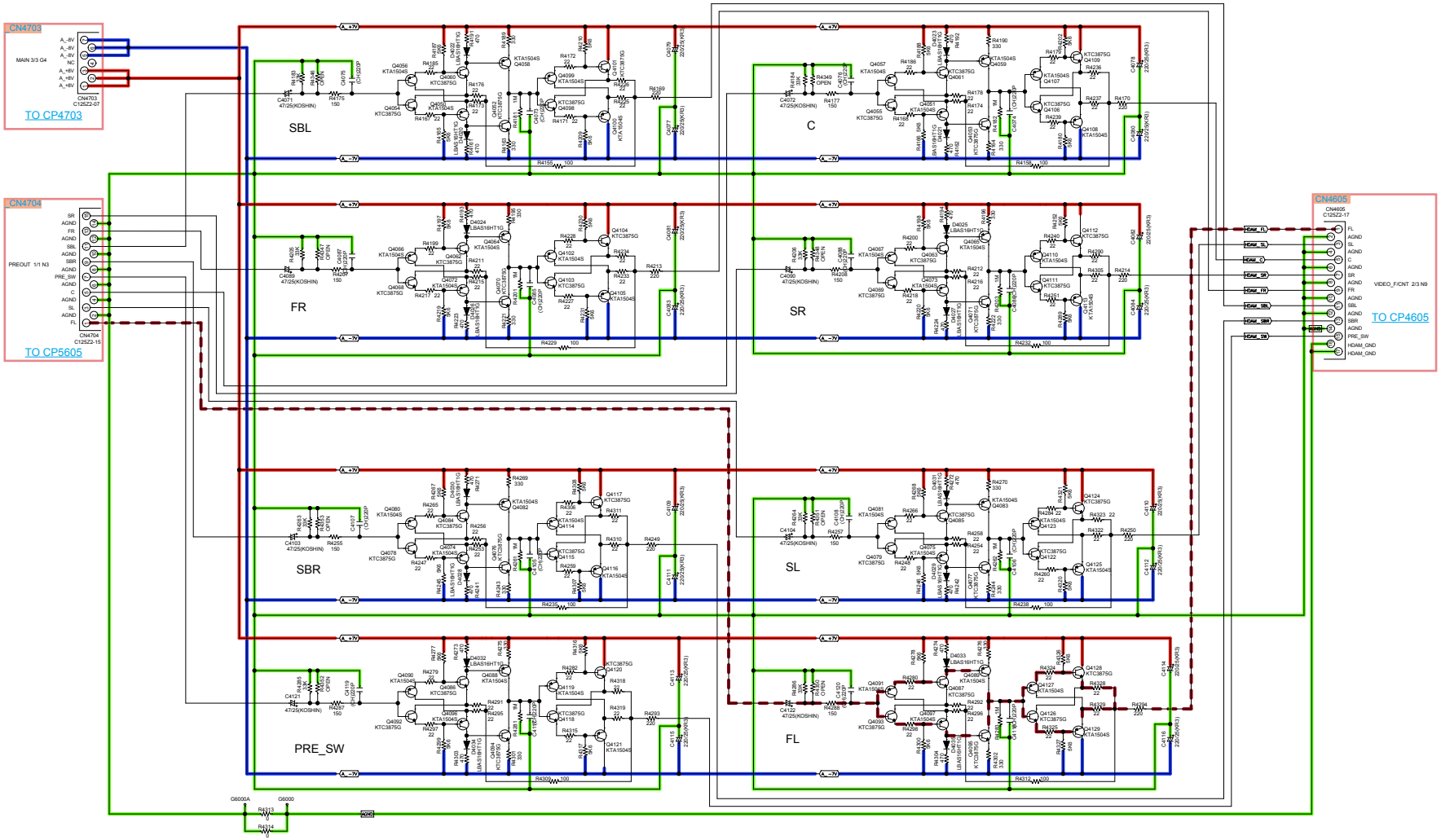

GND LINE POWER+ LINE POWER- LINE ANALOG AUDIO DIGITAL AUDIO TMDS SIGNAL VIDEO SIGNAL COMPONENT (Y)

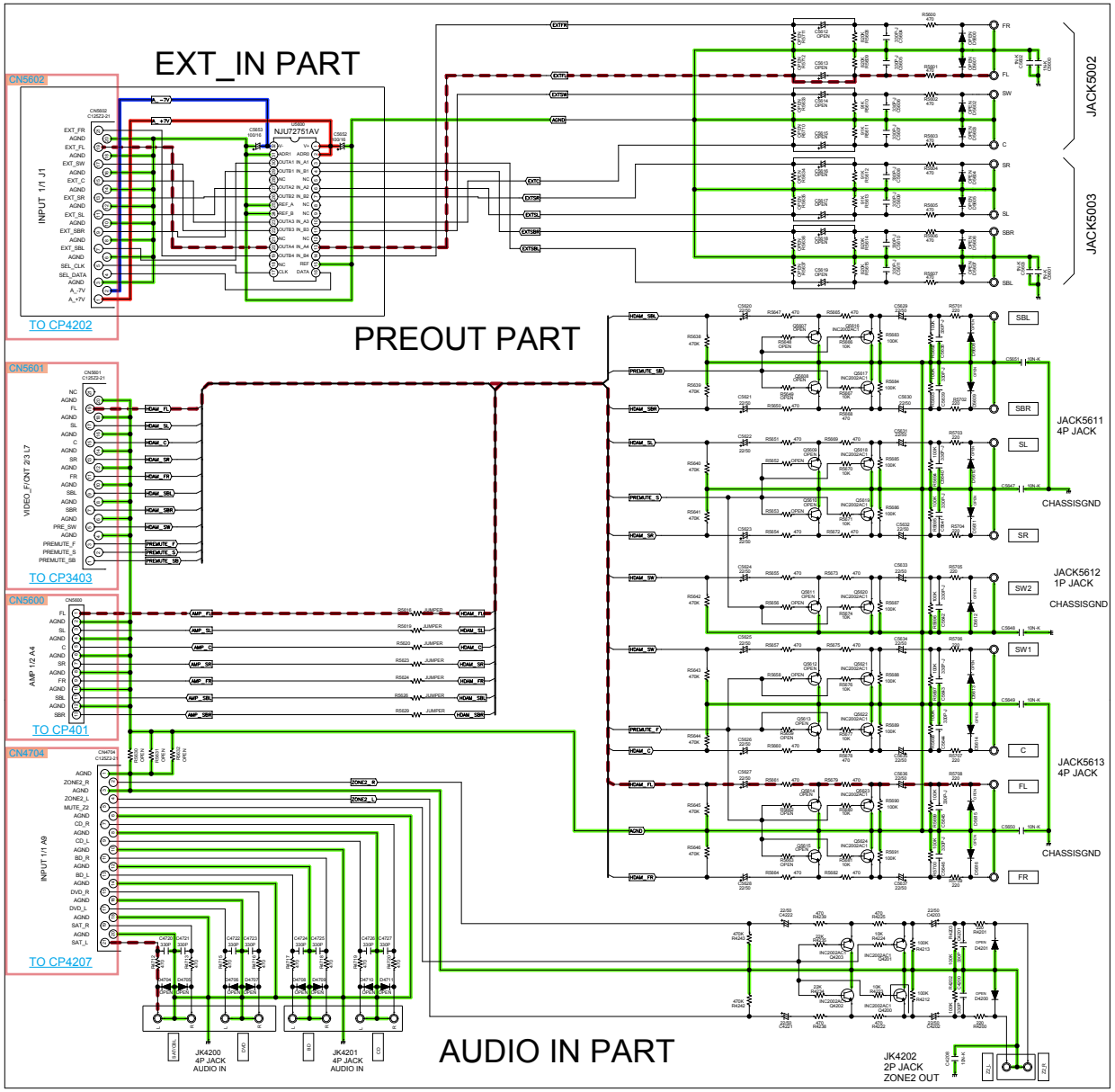

SR5012 PREOUT 1/1

HDAM_CNT PART

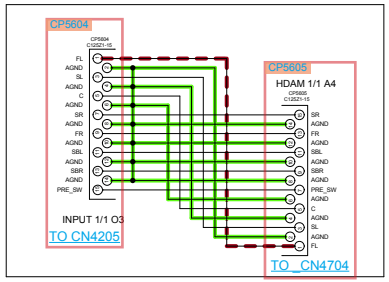

GND LINE POWER+ LINE POWER- LINE ANALOG AUDIO DIGITAL AUDIO TMDS SIGNAL VIDEO SIGNAL COMPONENT (Y)

F.HDMI

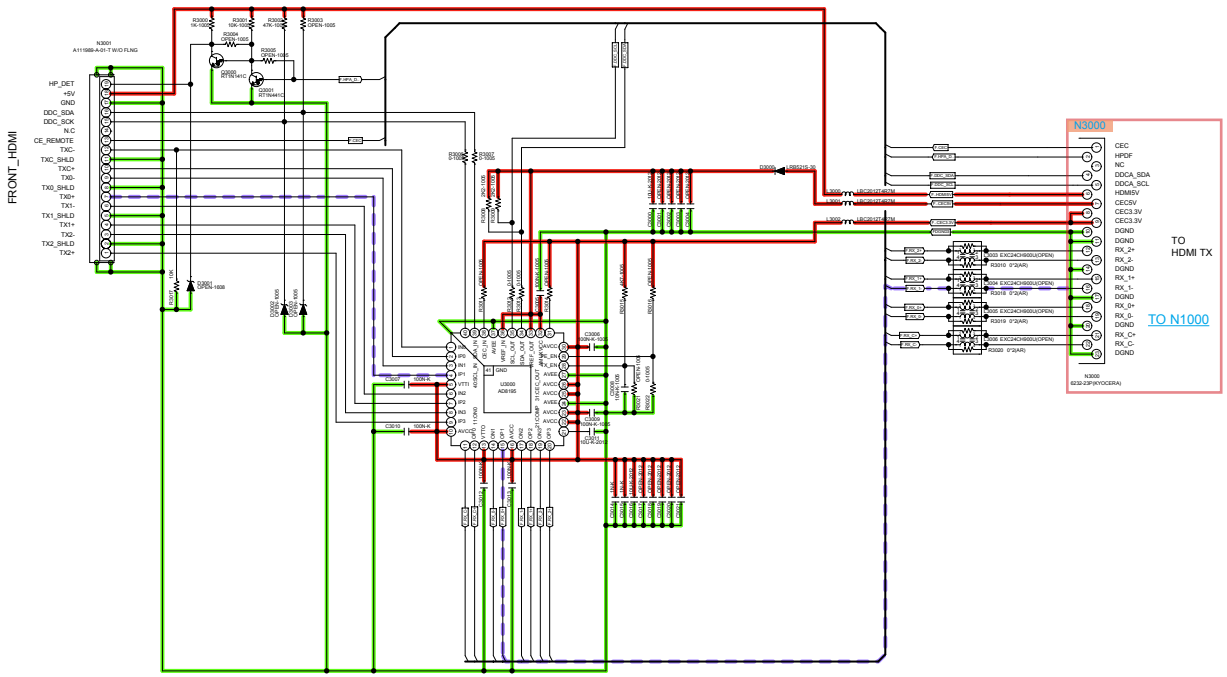

GND LINE POWER+ LINE POWER- LINE ANALOG AUDIO DIGITAL AUDIO TMDS SIGNAL VIDEO SIGNAL COMPONENT (Y)

DIGITAL, F HDMI

Lead-free Solder
When soldering, use the Lead-free Solder (Sn-Ag-Cu).

DIGITAL (A SIDE)

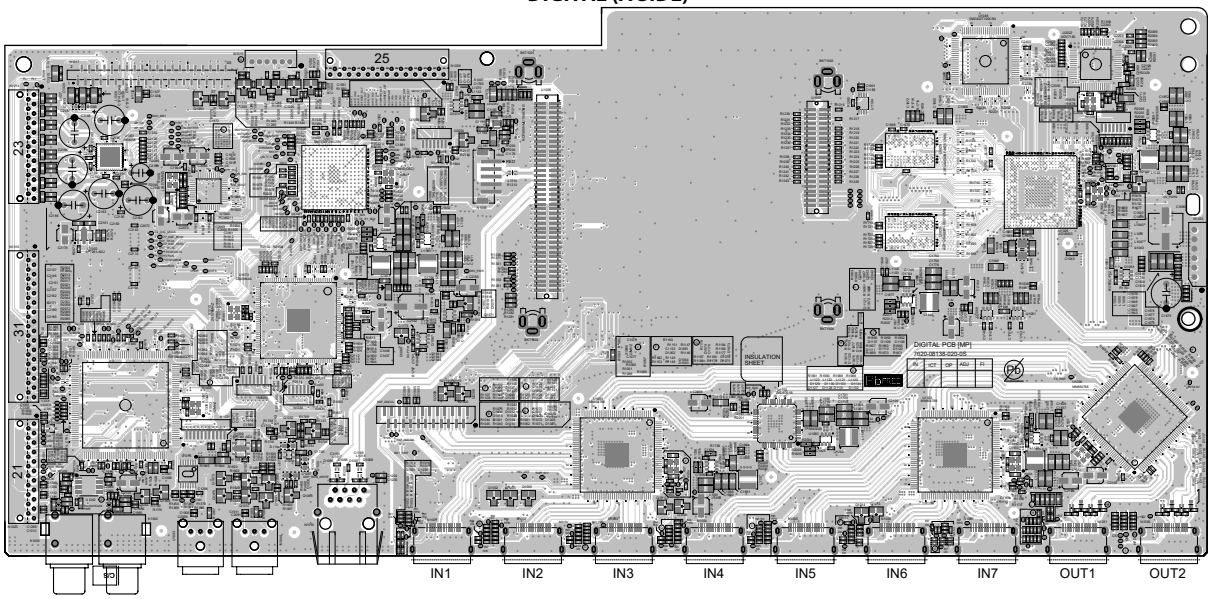

F HDMI (A SIDE)

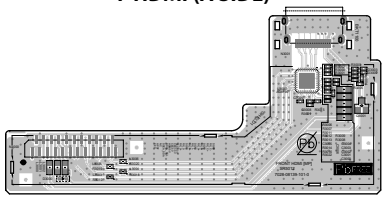

F HDMI (B SIDE)

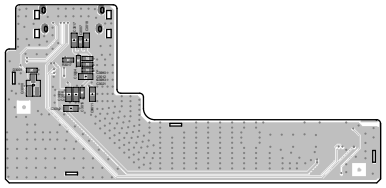

DIGITAL (B SIDE)

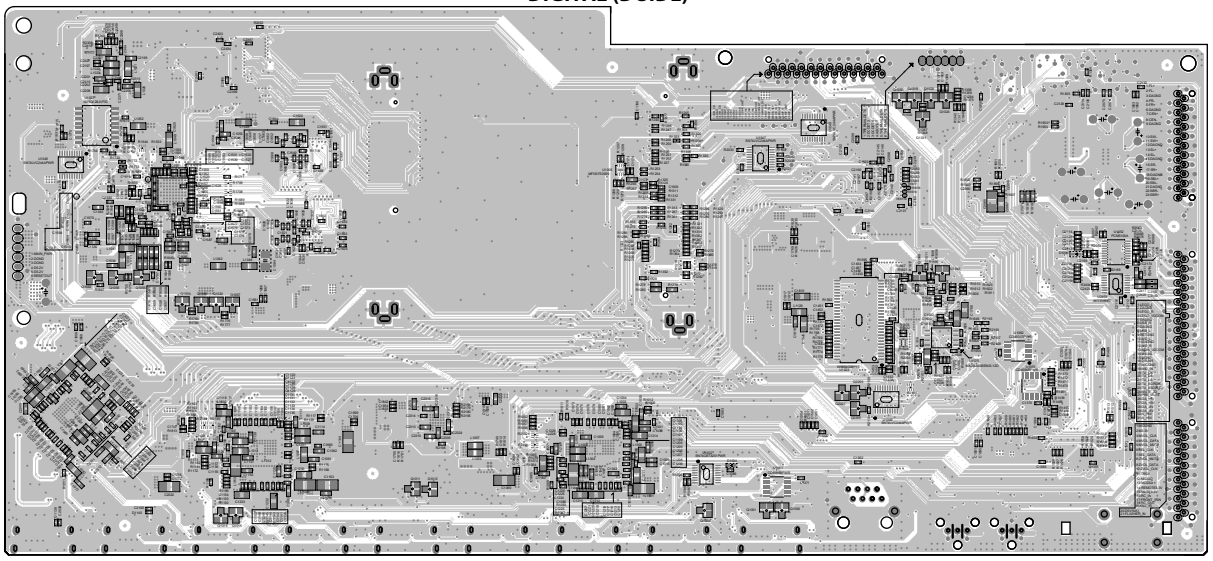

INPUT (A SIDE)

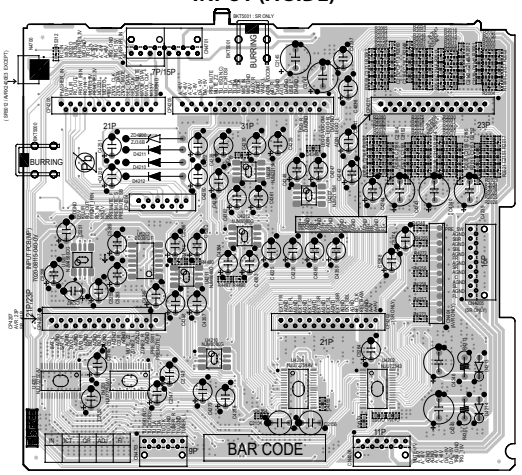

INPUT (B SIDE)

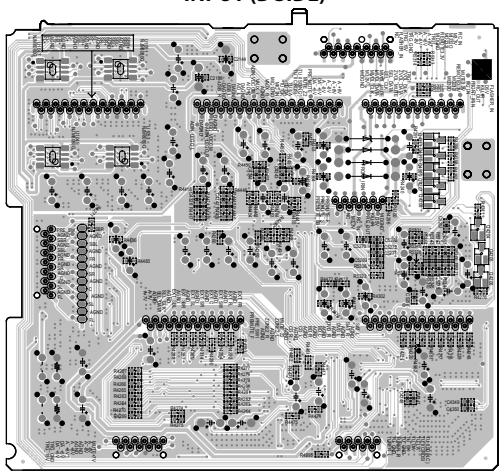

FRONT CNT (A SIDE)

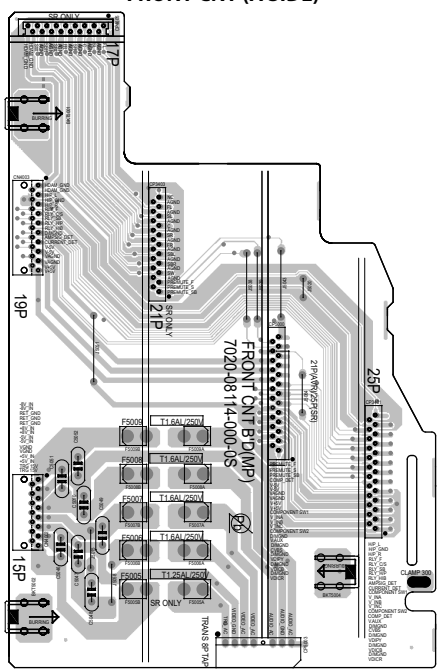

FRONT CNT (B SIDE)

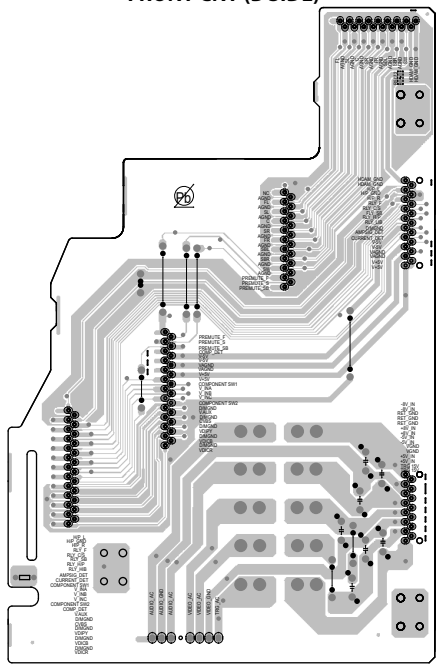

VIDEO (A SIDE)

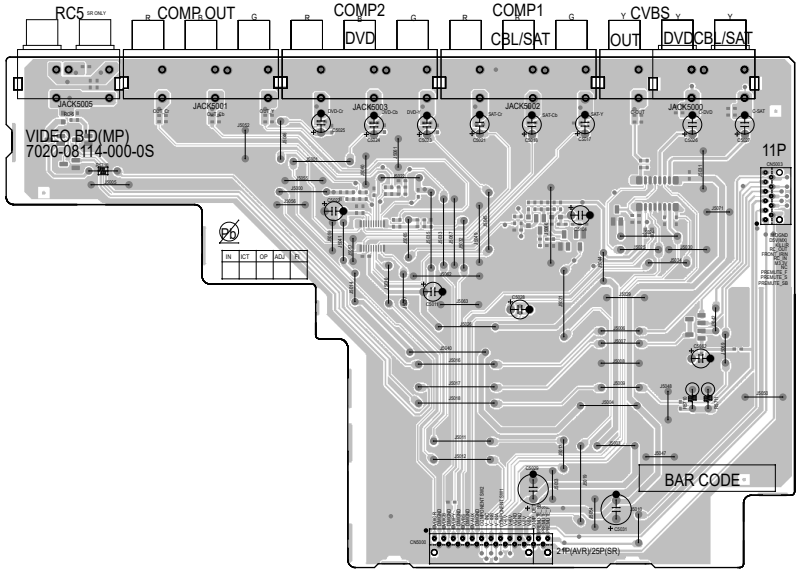

VIDEO (B SIDE)

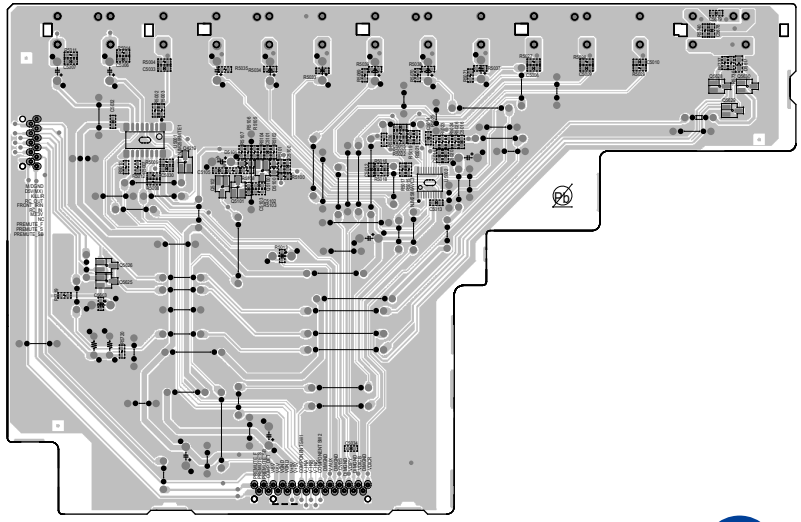

AMP (A SIDE)

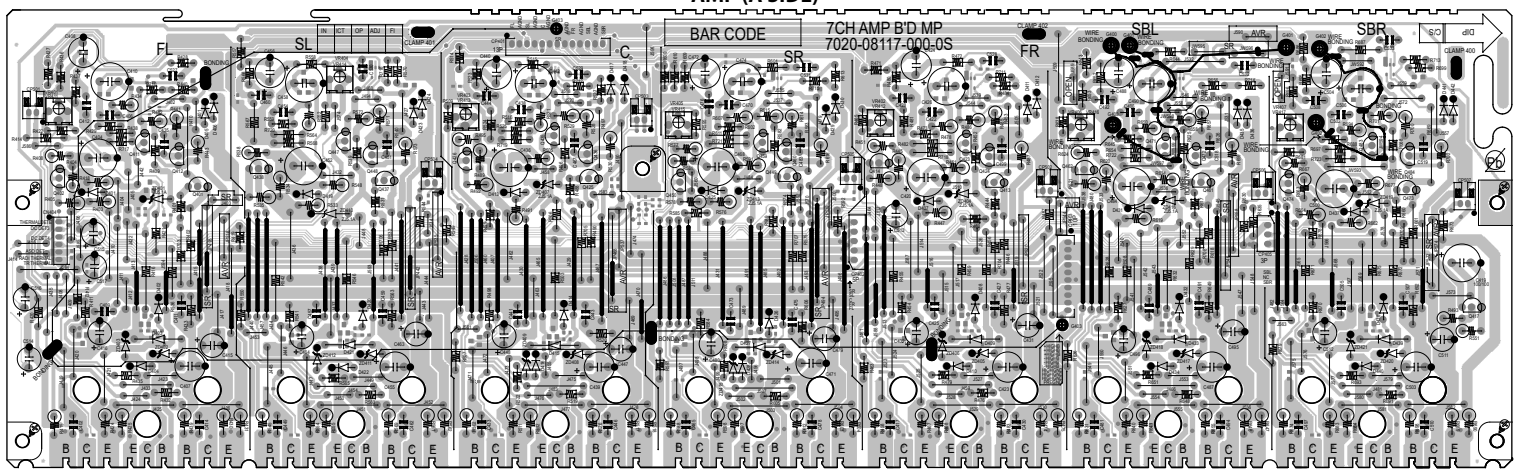

AMP (B SIDE)

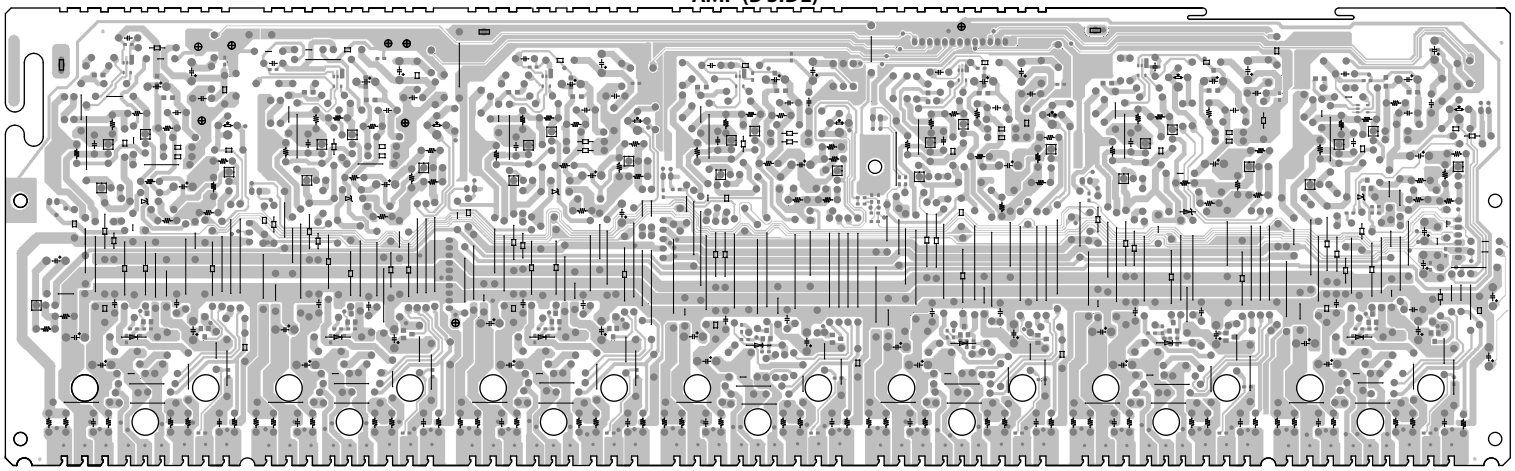

MAIN, AUDIO IN, RS CNT, GUIDE L, HS TOP GUIDE,

MAIN (A SIDE)

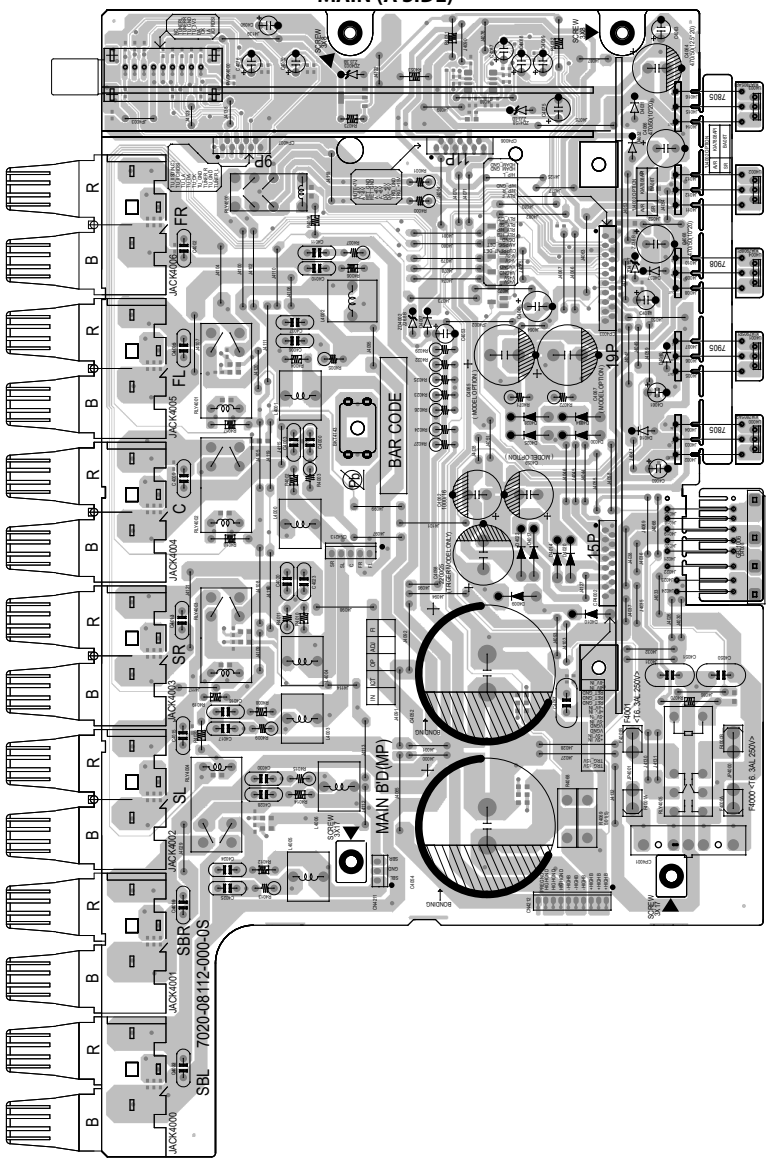

MAIN (B SIDE)

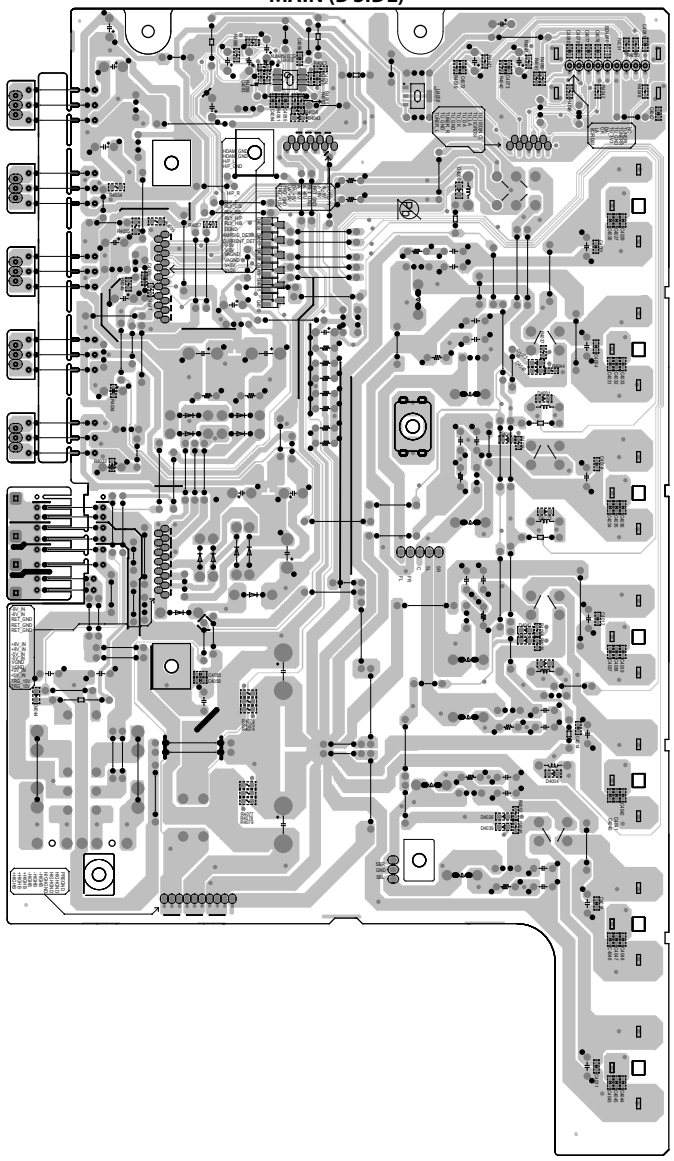

AUDIO IN (A SIDE)

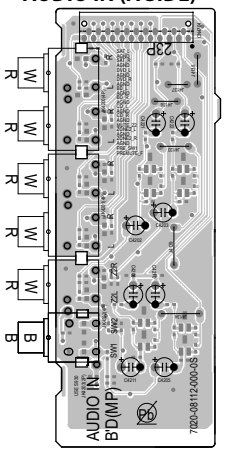

AUDIO IN (B SIDE)

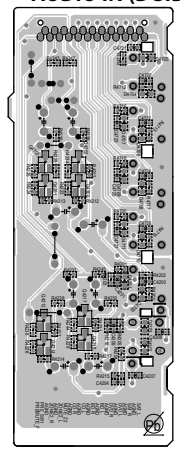

RS CNT (A SIDE)

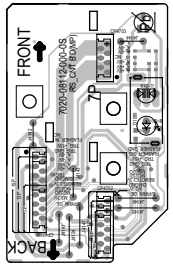

RS CNT (B SIDE)

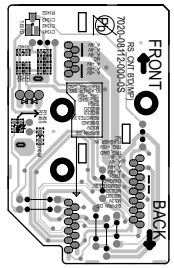

GUIDE L (A SIDE)

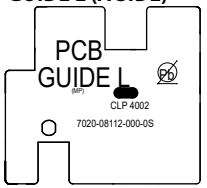

HS TOP GUIDE (A SIDE)

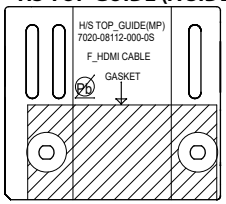

FRONT (A SIDE)

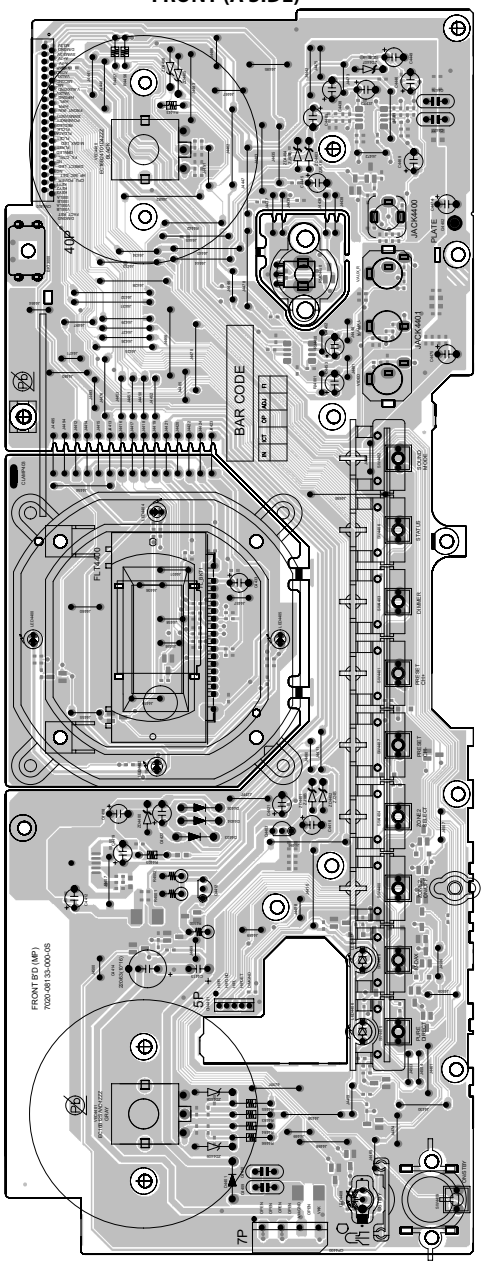

FRONT (B SIDE)

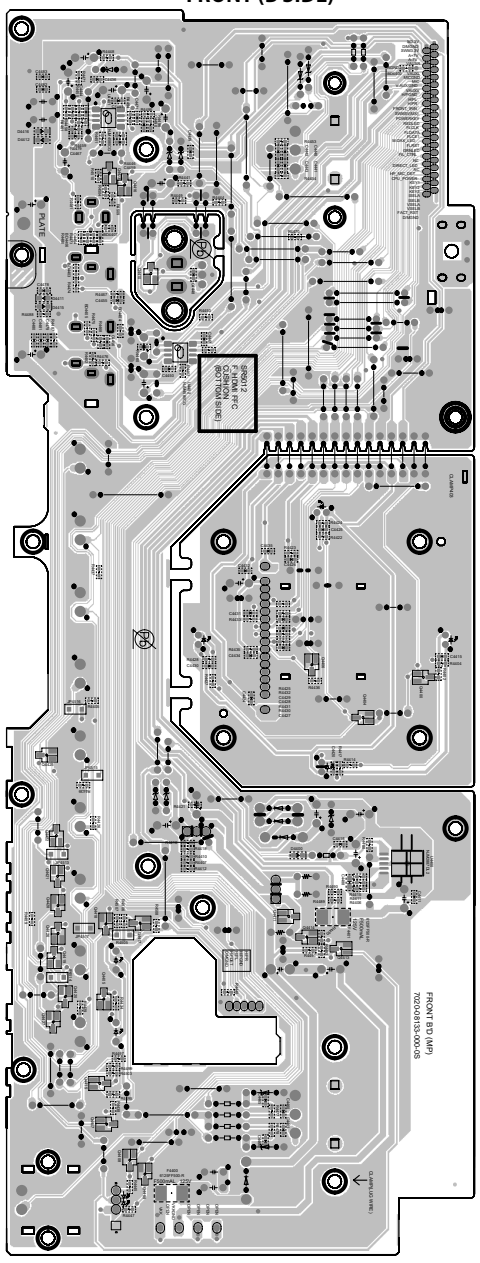

USB (A SIDE)

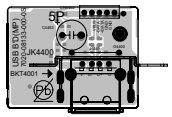

USB (B SIDE)

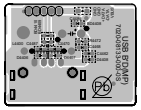

RS232C (A SIDE)

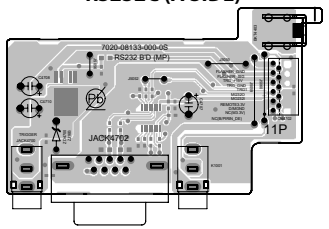

RS232C (B SIDE)

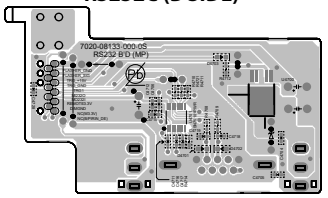

HP (A SIDE)

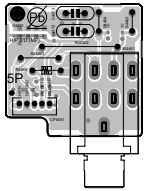

HP (B SIDE)

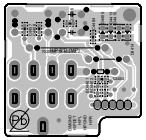

TOP GUIDE (A SIDE)

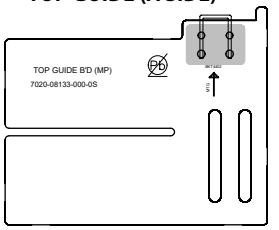

PREOU, HDAM CNT, SMPS, HDAM

PREOUT (A SIDE)

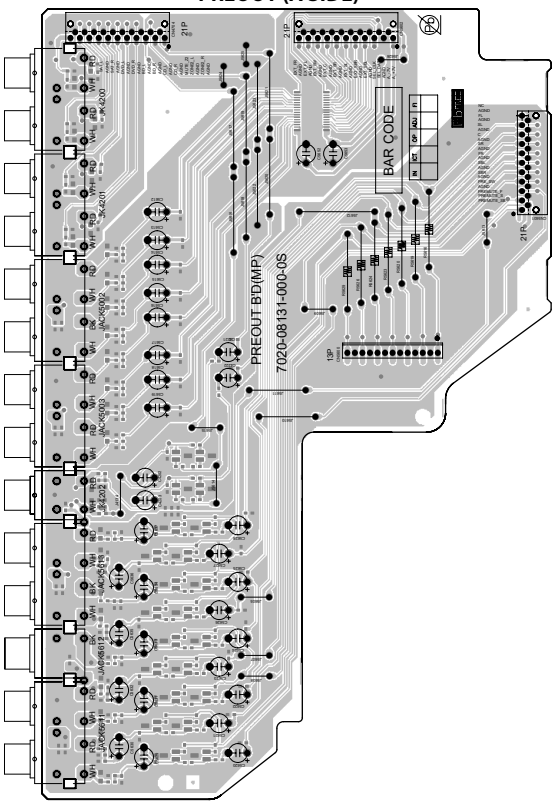

PREOUT (B SIDE)

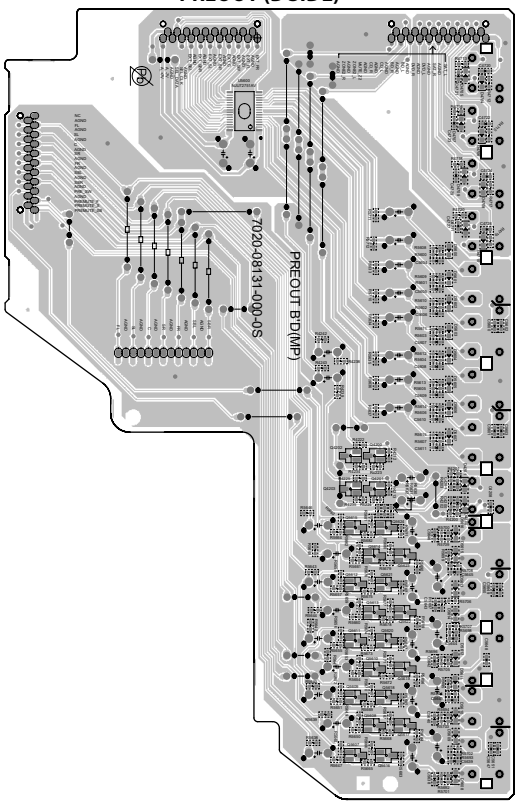

SMPS (A SIDE)

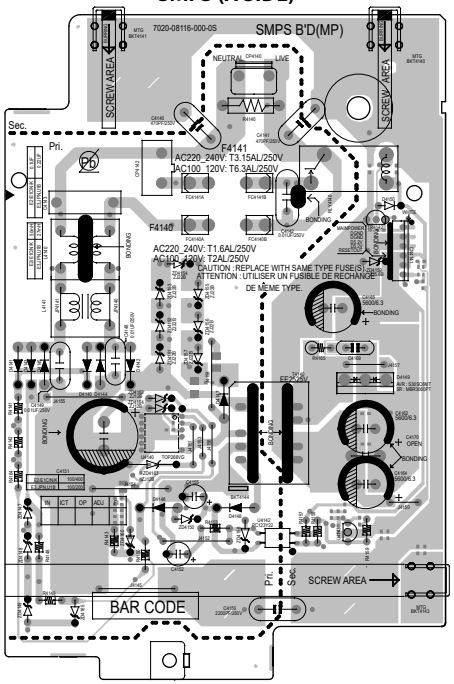

SMPS (B SIDE)

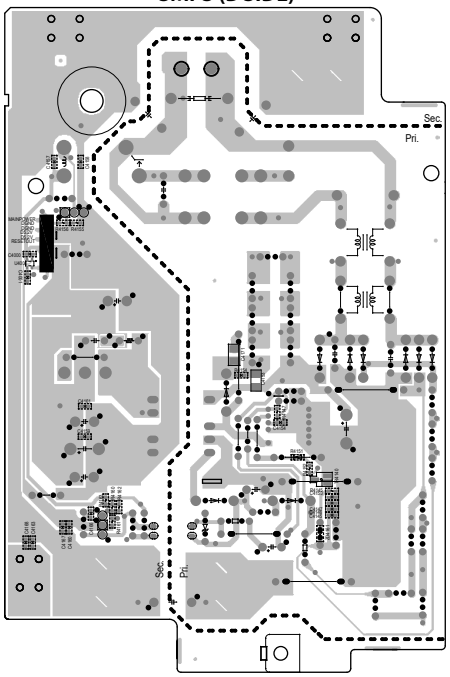

HDAM (A SIDE)

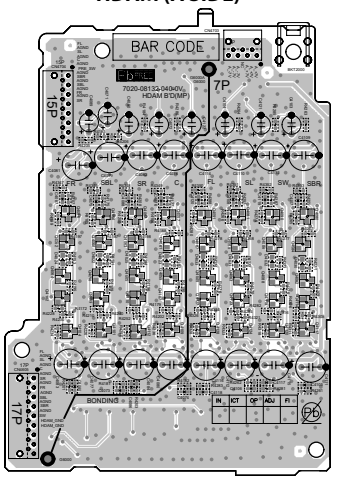

HDAM (B SIDE)

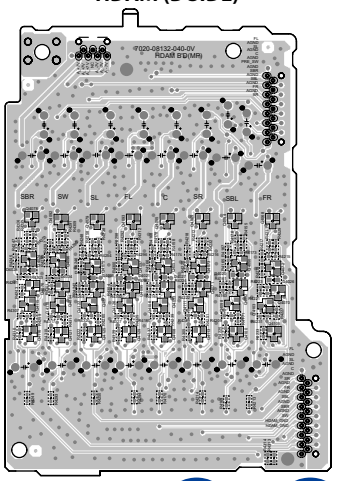

HDAM CNT (A SIDE)

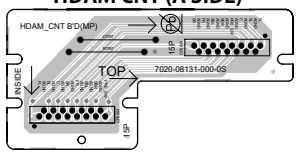

HDAM CNT (B SIDE)

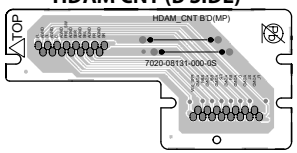

SR5012
LEVEL DIAGRAM
FRONT ch

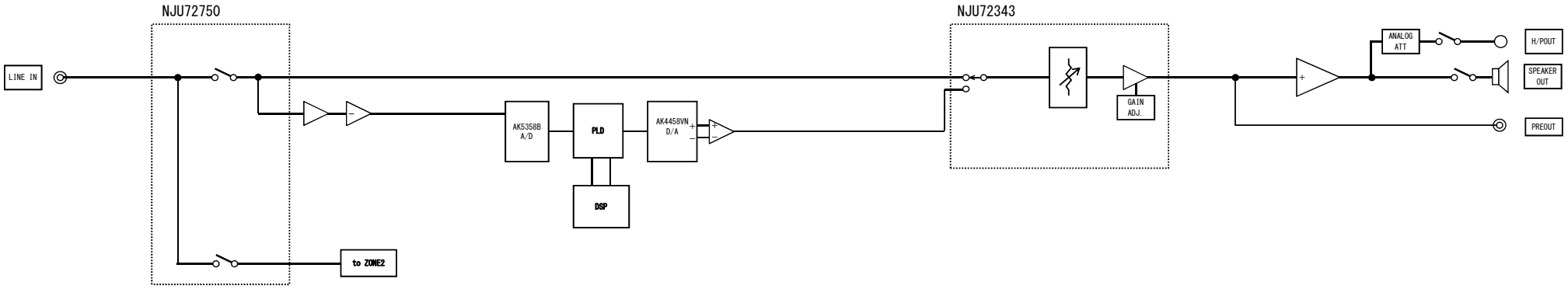

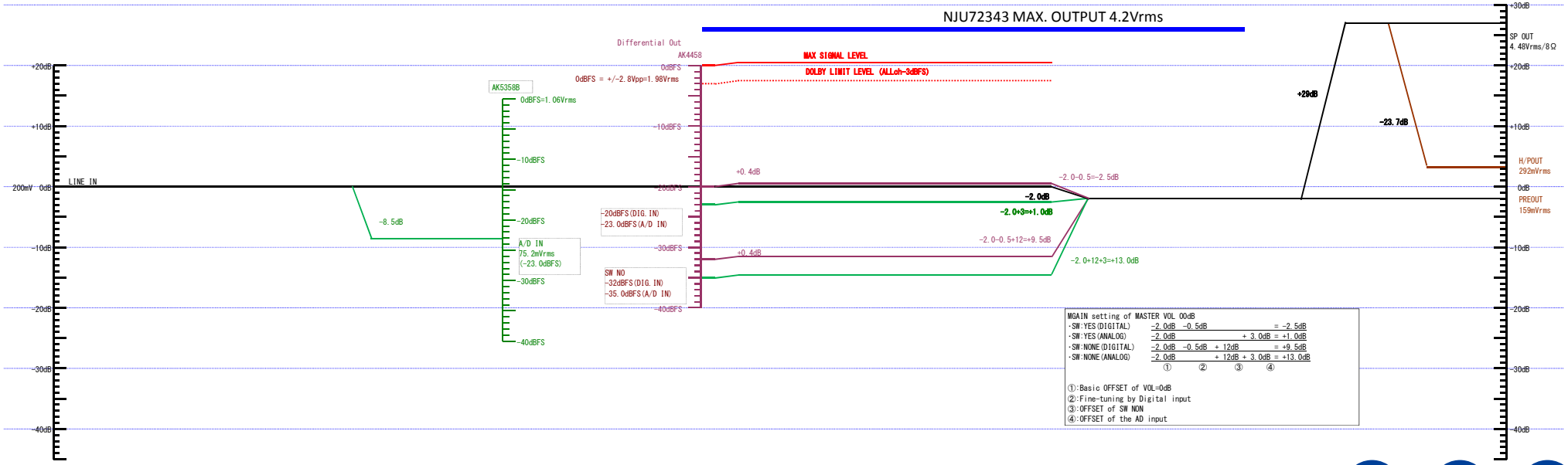

SR5012
LEVEL DIAGRAM
CENTER ch
SURROUND ch
SURR.BCK ch

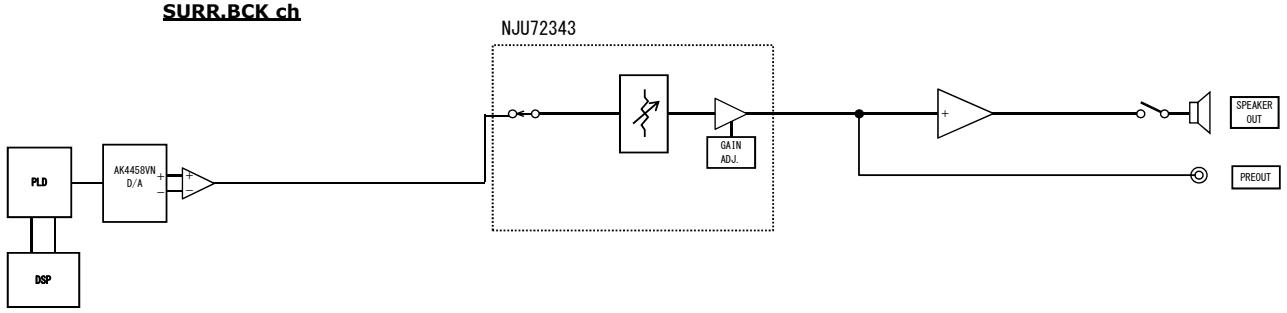

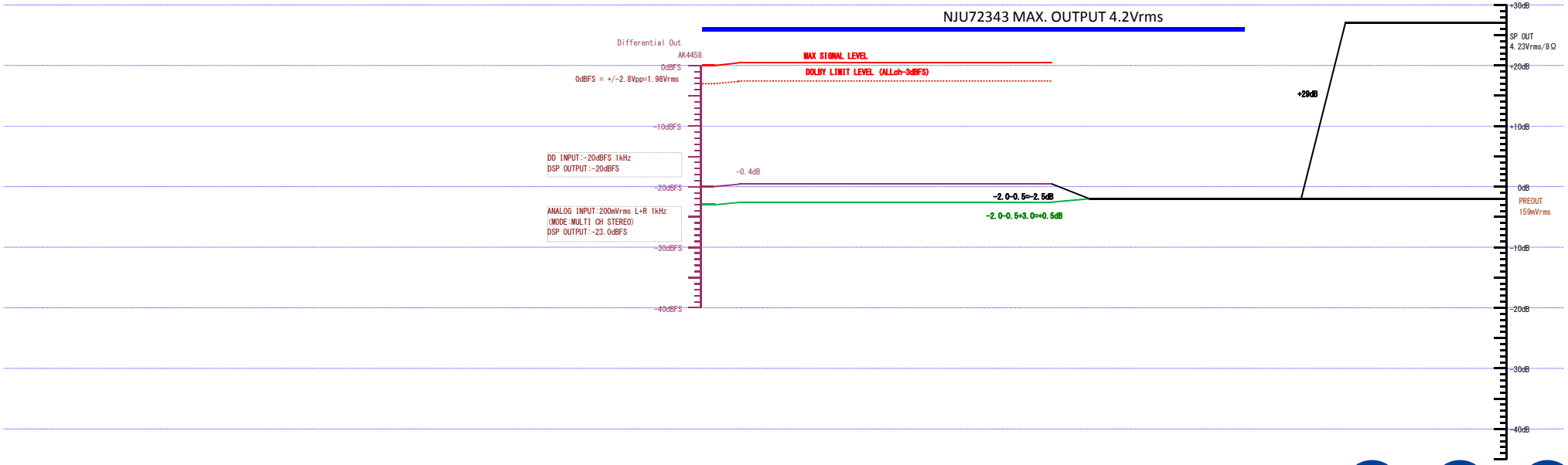

SR5012
LEVEL DIAGRAM
SUBWOOFER ch

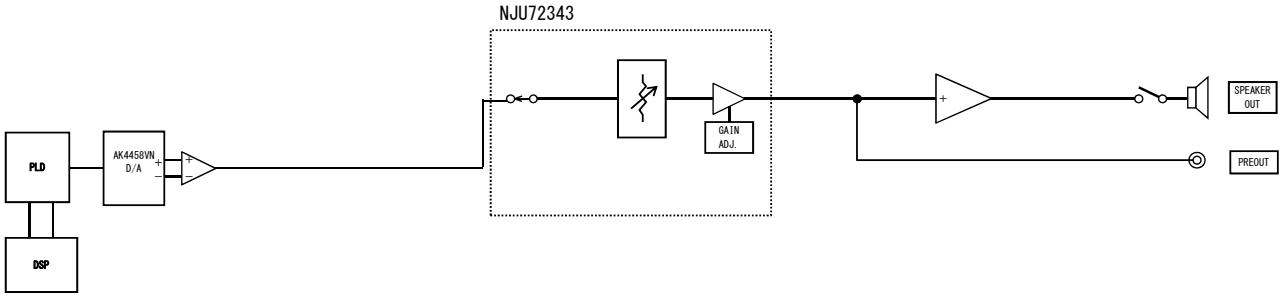

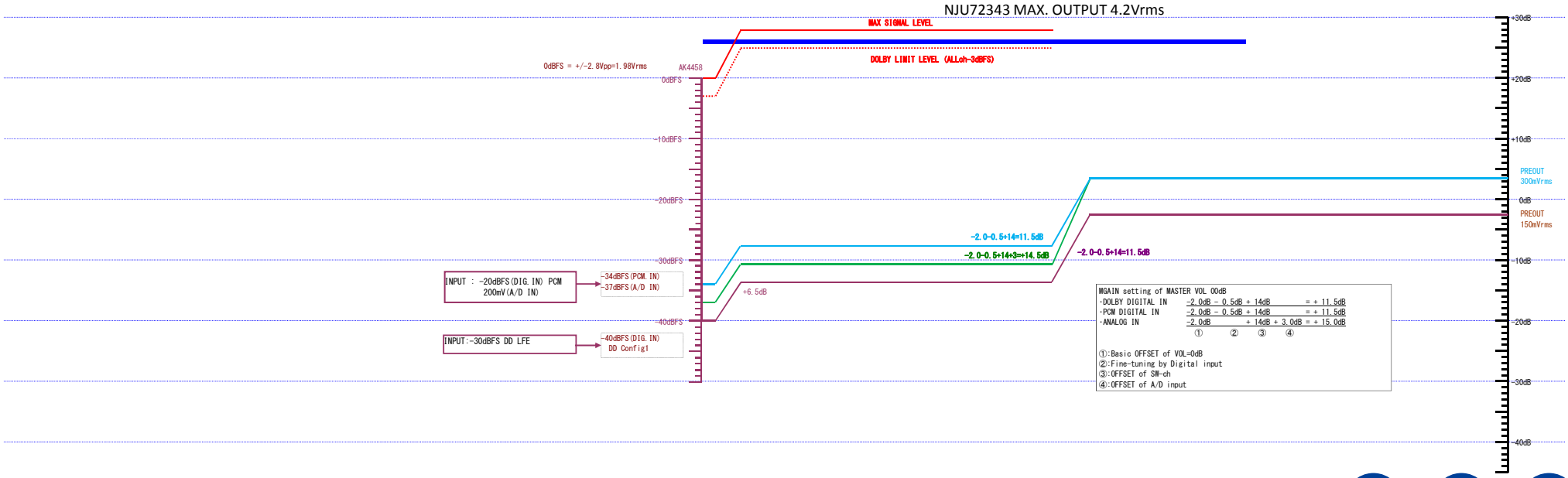

SR5012
LEVEL DIAGRAM
ZONE2

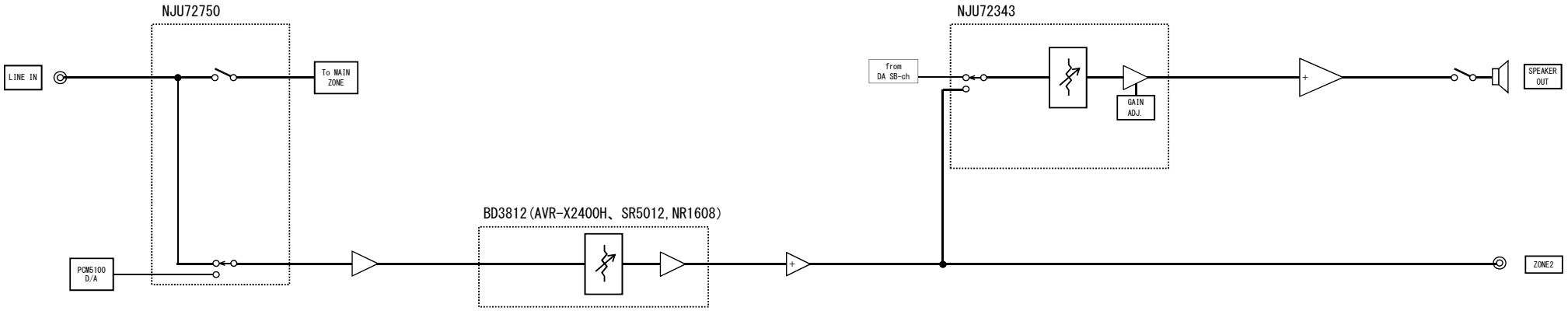

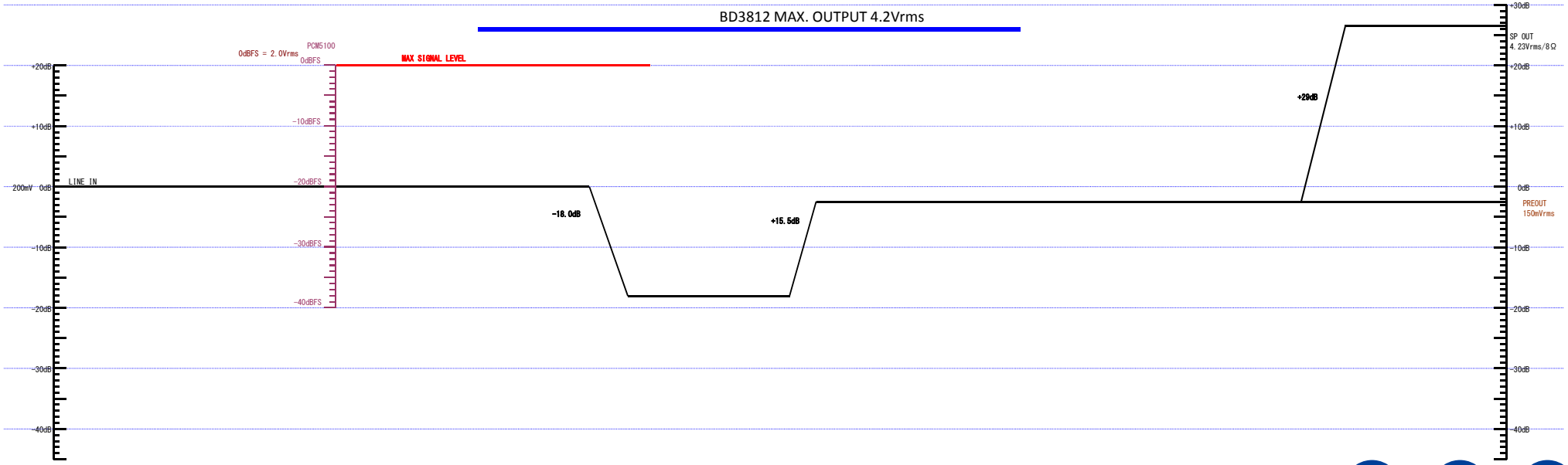

SR5012
LEVEL DIAGRAM
ZONE2(LEGO)

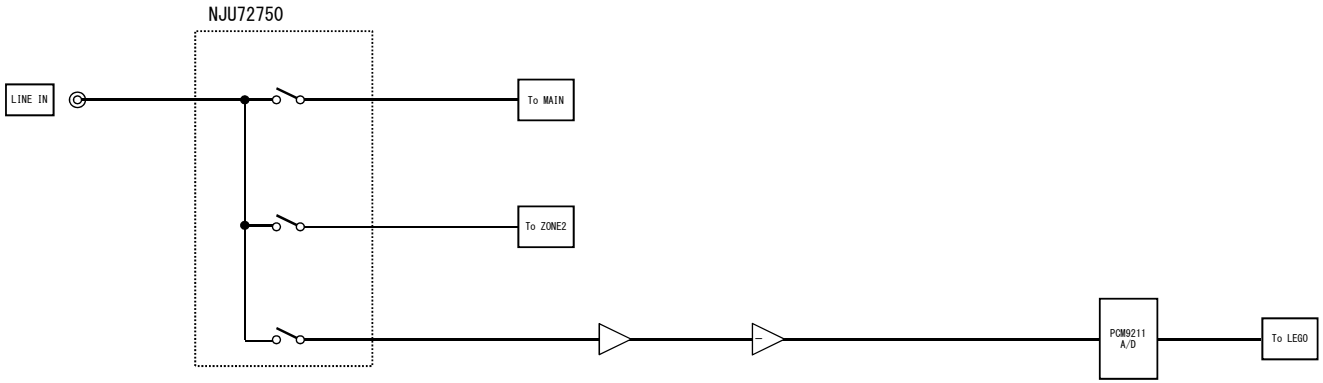

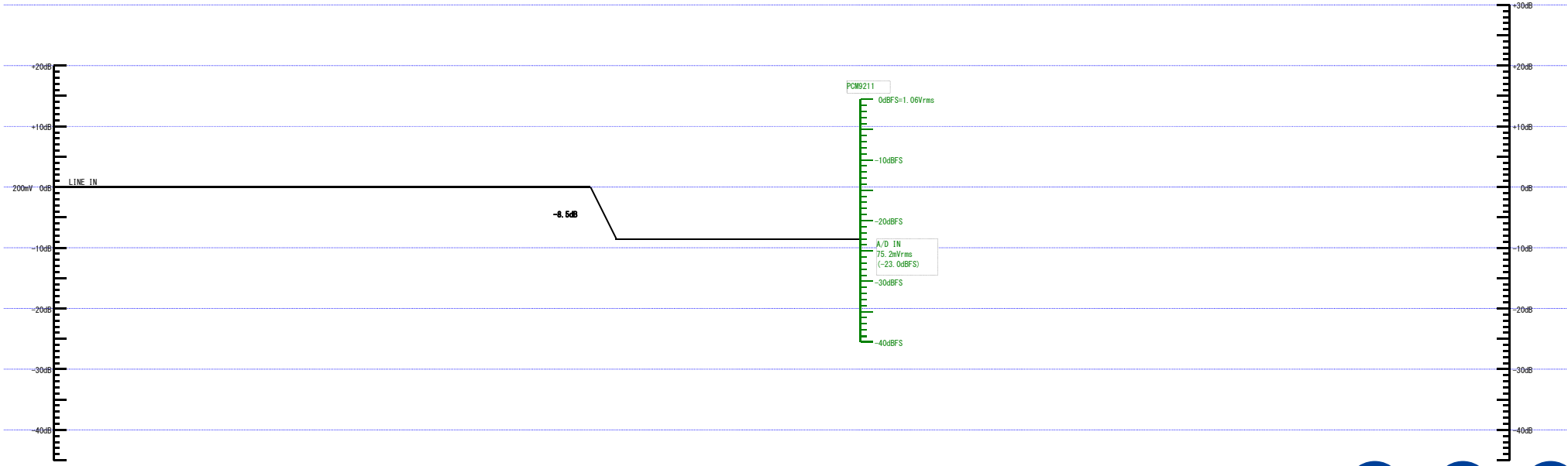

ANALOG AUDIO DIAGRAM

SR5012 ANALOG AUDIO DIAGRAM

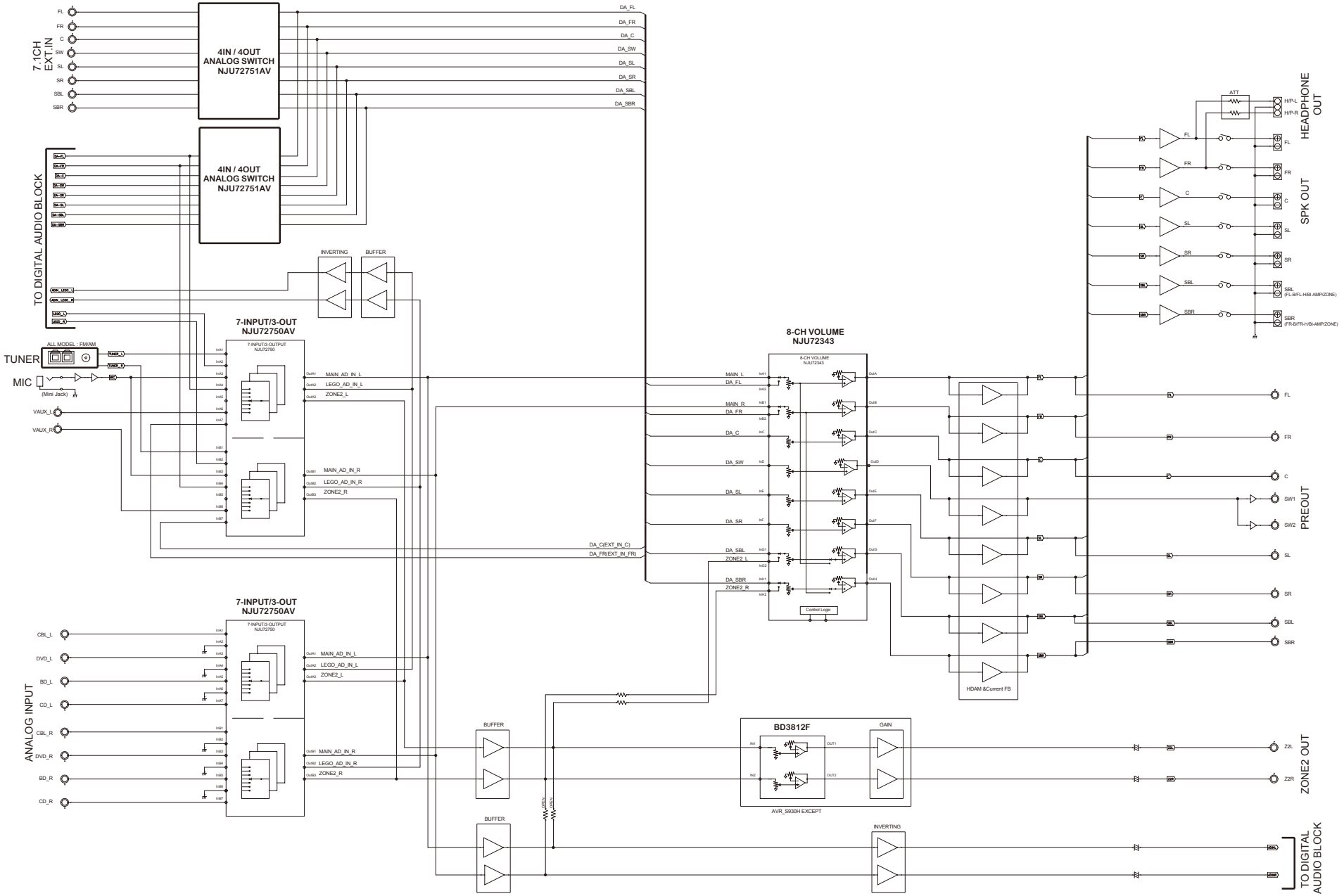

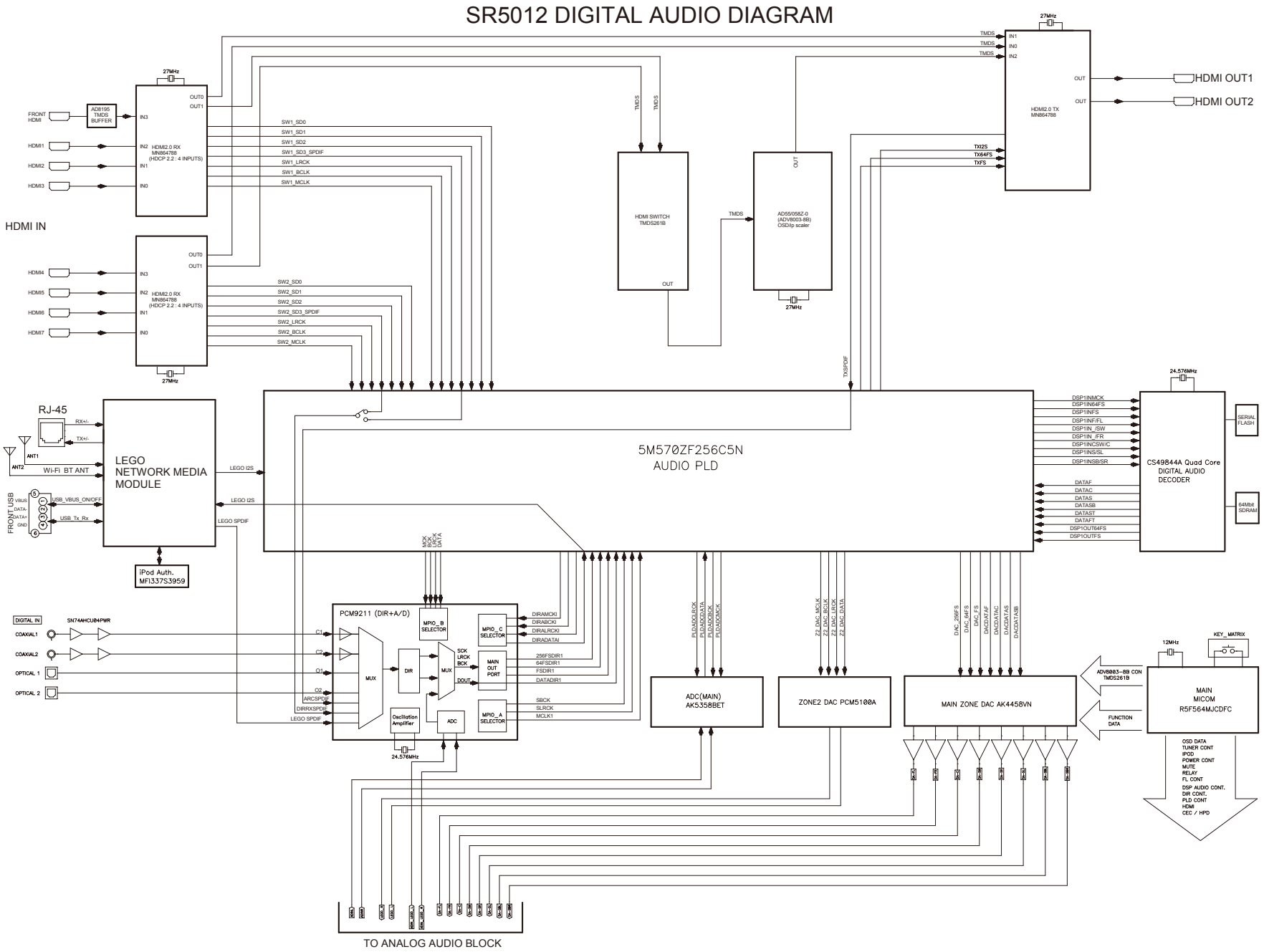
SR5012 DIGITAL AUDIO DIAGRAM
HDMI IN
HDMI OUT1
HDMI OUT2
HDMI SWITCH TMDS261B
AD55058Z-0 (ADV8003-8B) OSD/ip scaler
HDMI2.0 TX MN864788
HDMI2.0 RX MN864788 (HDCP 2.2 : 4 INPUTS)
AD8195 TMDS BUFFER
5M570ZF256C5N AUDIO PLD
CS49844A Quad Core DIGITAL AUDIO DECODER
SERIAL FLASH
64Mbit SDRAM
LEGO NETWORK MEDIA MODULE
RJ-45
Wi-Fi BT ANT
FRONT USB
iPod Auth. MFI337S3959
PCM9211 (DIR+A/D)
ADC(MAIN) AK5358BET
ZONE2 DAC PCM5100A
MAIN ZONE DAC AK4458VN
MAIN MICOM R5F564MJCDFC
TO ANALOG AUDIO BLOCK

SR5012 VIDEO DIAGRAM

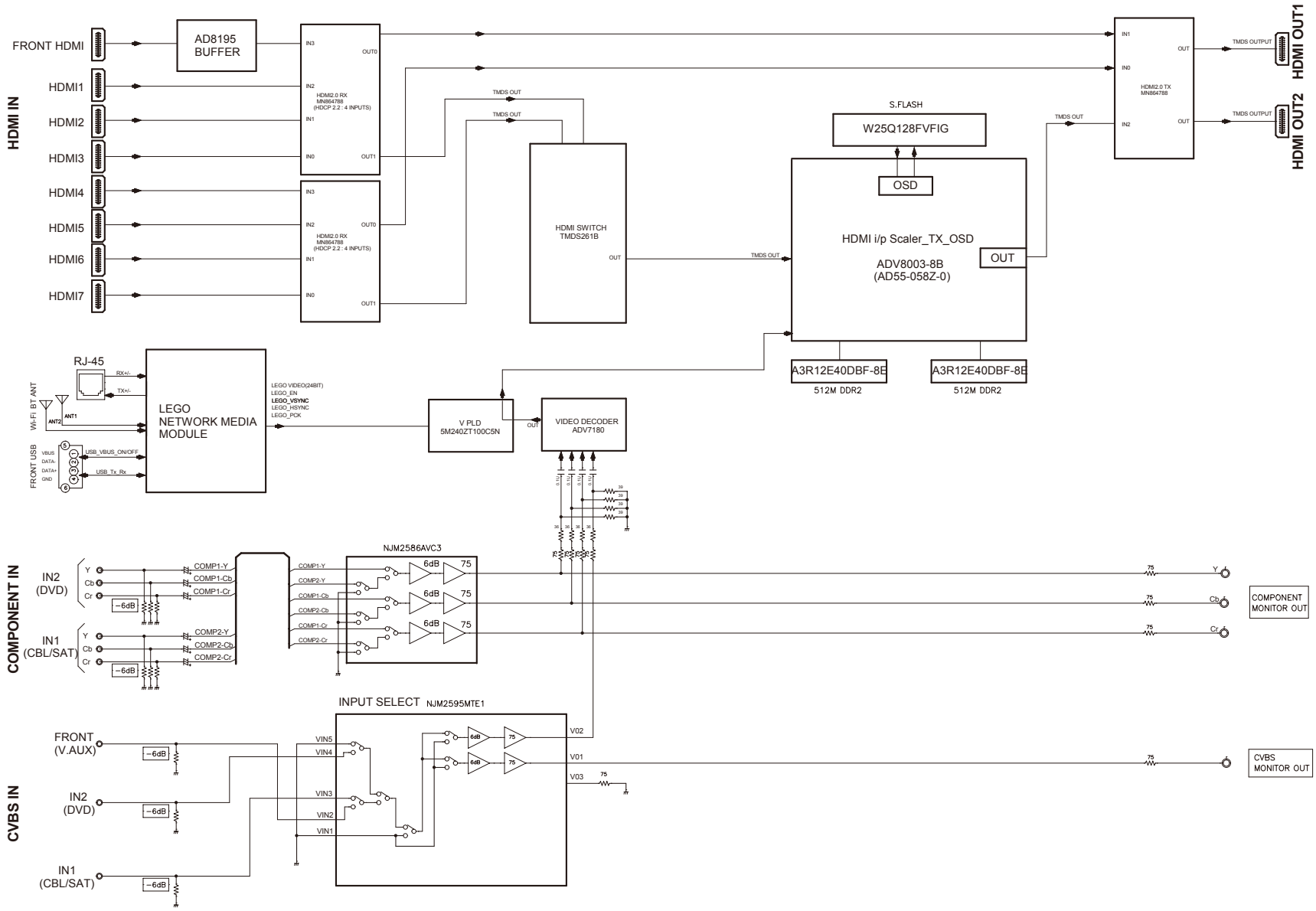

SR5012 VCC DIAGRAM

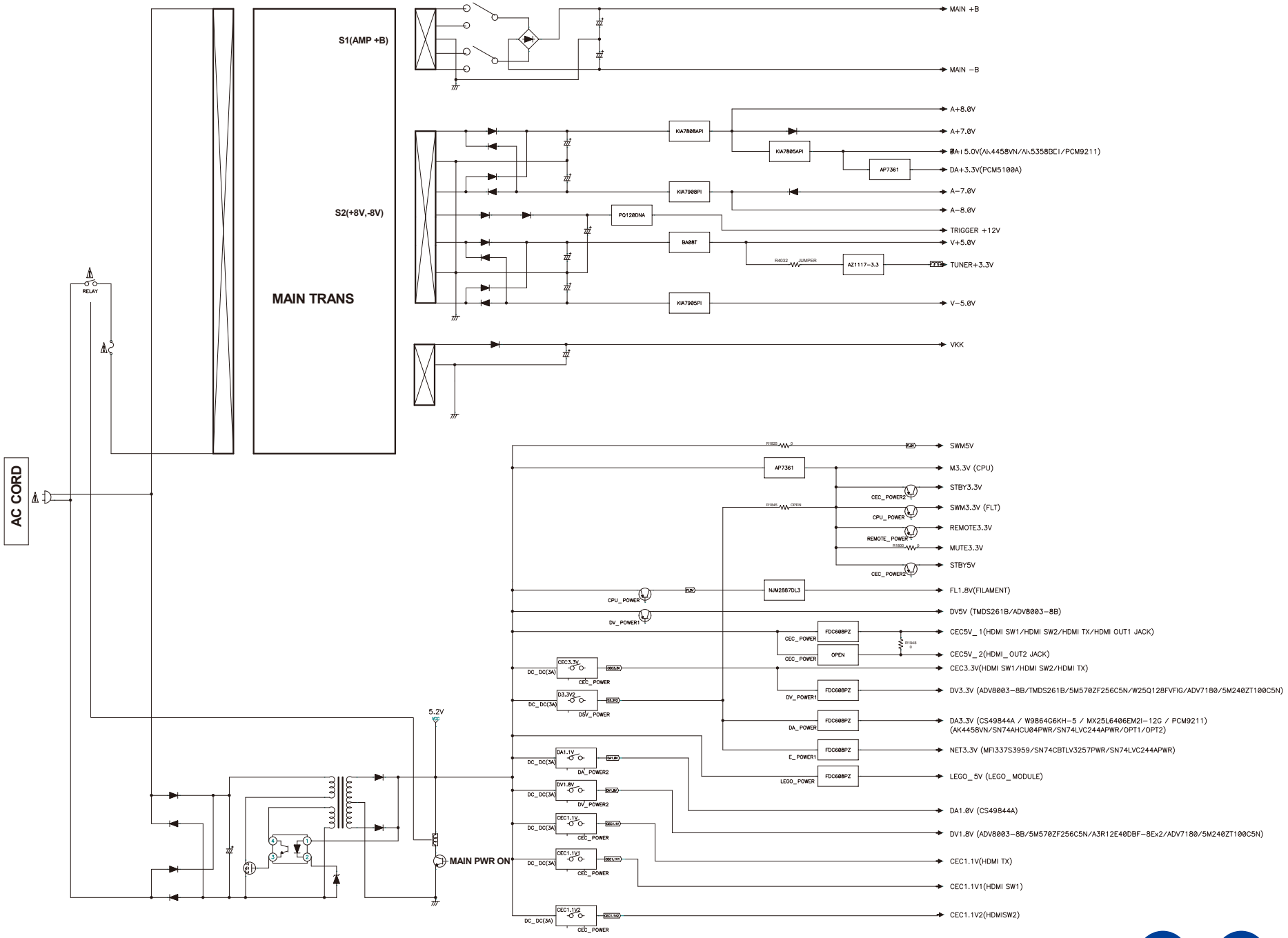

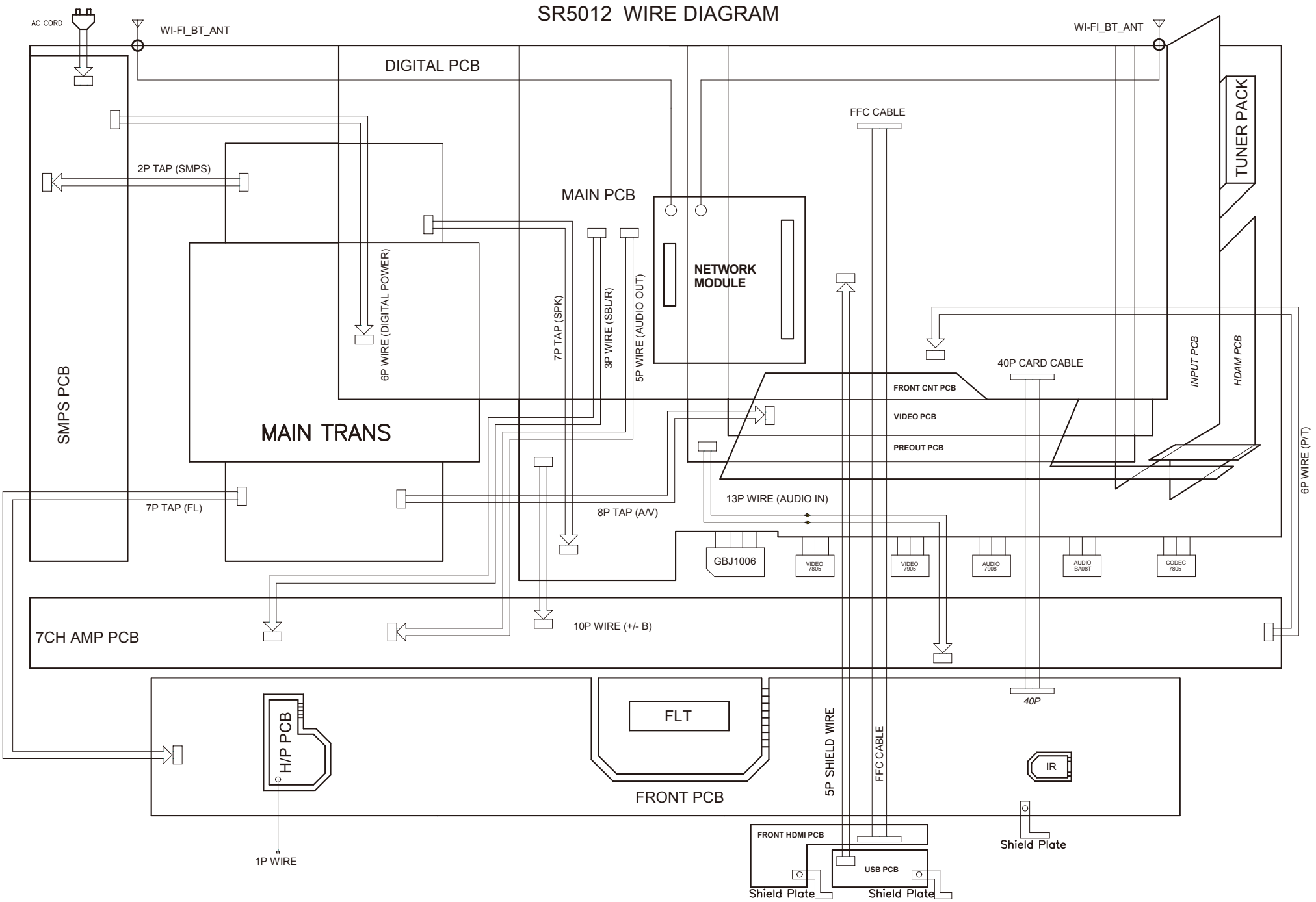
SR5012 WIRE DIAGRAM
AC CORD
WI-FI_BT_ANT
WI-FI_BT_ANT
DIGITAL PCB
FFC CABLE
TUNER PACK
2P TAP (SMPS)
MAIN PCB
NETWORK MODULE
6P WIRE (DIGITAL POWER)
7P TAP (SPK)
3P WIRE (SBL/R)
5P WIRE (AUDIO OUT)
SMPS PCB
MAIN TRANS
40P CARD CABLE
FRONT CNT PCB
VIDEO PCB
PREOUT PCB
INPUT PCB
HDAM PCB
6P WIRE (P/T)
7P TAP (FL)
8P TAP (A/V)
13P WIRE (AUDIO IN)
GBJ1006
VIDEO 7805
VIDEO 7905
AUDIO 7908
AUDIO BA08T
CODEC 7805
7CH AMP PCB
10P WIRE (+/- B)
40P
H/P PCB
FLT
5P SHIELD WIRE
FFC CABLE
IR
FRONT PCB
1P WIRE
FRONT HDMI PCB
USB PCB
Shield Plate
Shield Plate
Shield Plate

SEMICONDUCTORS

Only major semiconductors are shown, general semiconductors etc. are omitted to list.
The semiconductor which described a detailed drawing in a schematic diagram are omitted to list.

1. IC's

R5F564MJCDFC (DIGITAL : U1018)

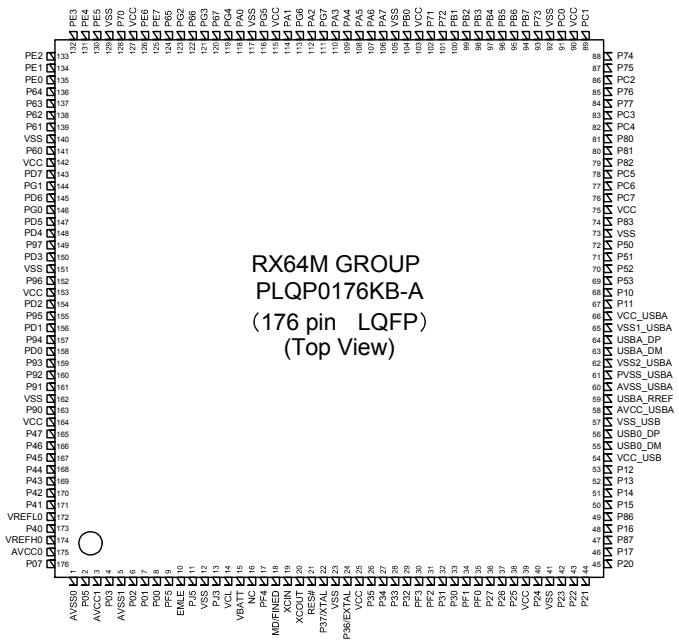

Terminal Functions

Pin	Pin Name	Symbol	I/O	Pu/Pd	STBY	STOP	CEC STBY	Function
1	AVSS0	AVSS0	-		-	-	-	Ground pin
2	P05/IRQ13	POWER_KEY	I	M3VPu	I	I	I	Detect Power switch (Release from Wait Mode,Set to interrupt)
3	AVCC1	AVCC1	-		-	-	-	Power supply pin
4	P03/IRQ11	RED_LED	O		L/H	L	H	POWER/STANDBY LED control pin
5	AVSS1	AVSS1	-		-	-	-	Ground pin
6	P02/SCK6/IRQ10/ AN120	REMOTE_ POWER	O		L	L	L	232C power supply (REMOTE 3.3V) control pin
7	P01/RXD6/IRQ9/ AN119	RXD_MI232O	I	Pd	I	I	I	External data input port (for AMX/FW update via 232C) :Connector is FFC
8	P00/TXD6/IRQ8/ AN118	TXD_MO232I	O		L	L	L	External data output port (for AMX/FW update via 232C) :Connector is FFC
9	PF5/IRQ4	WHITE_LED (X2400(NA)) / GREEN_LED (X2400(EU/ CH/JP)/S930/ SR5012/ NR1608)	O		L	L	L	POWER LED control pin
10	EMLE	EMLE	I	Pd	-	-	-	E20 Emulator control pin (On chip Emulator is used,this pin should be High. Not used,it should be Low)
11	PJ5	VSEL_A	I	SW3VPu	I	I	I	Master Volume (Rotary encoder) signal input pin
12	VSS	VSS	-		-	-	-	Ground pin
13	PJ3	VSEL_B	I	SW3VPu	I	I	I	Master volume (Rotary encoder) signal input pin
14	VCL	VCL	I		-	-	-	Smoothing capacitor connection pin
15	VBATT	VBATT	-		-	-	-	Power supply pin
16	NC	NC	I	Pd	-	-	-	NC(Pull down)
17	TRST#/PF4	TRST#/ NC(NORMRAL)	I/I	Pd	I/I	I/I	I/I	E20 Emulator control pin/When normal operating mode,set to input.
18	MD/FINED	MD	I	M3VPu	I	I	I	Pins for setting the operating mode(select the Boot Mode or User Boot Mode,Single Chip Mode)
19	XCIN	XCIN	I	Pd	-	-	-	NC(Pull down)
20	XCOUT	XCOUT	I		-	-	-	NC(open)
21	RES#	RESET	I	M3VPu	-	-	-	Reset signal input pin
22	XTAL/P37	XTAL	I		-	-	-	Pins for a crystal resonator (Xin=12MHz × 10)
23	VSS	VSS	-		-	-	-	Ground pin
24	EXTAL/P36	EXTAL	-		-	-	-	Pins for a crystal resonator (Xin=12MHz × 10)
25	VCC	VCC	-		-	-	-	Power supply pin
26	UPSEL/P35(IN)/NMI	DSP_FLAG3	I	DA3VPu	I	I	I	DSP(CS49844A) interrupt signal input pin
27	P34/SCK6/SCK0/ IRQ4	BDOWN	I	M3VPu	I	I	I	Detect power down
28	P33/TIOCD0/RXD6/ RXD0/IRQ3-DS	RC_IN	I	Pd(S930/ X2400) M3Vpu (SR5012/ NR1608NR)	I	I	I	Remote input
29	P32/TIOCC0/TXD6/ TXD0/IRQ2-DS	NC(S930/ X2400/ NR1608(EU/ JP) / FLASHER_IN (NR1608(NA)/ SR5012)	O/I	-/Pd	L/I	L/I	L/I	Flasher (Remote) input pin (When standby mode,set to inturrupt)
30	TMS/PF3	TMS/ NC(NORMRAL)	I/I	M3VPu	-/I	-/I	I	E20 Emulator control pin/When normal operating mode,set to input.
31	TDI/PF2/RXD1	TDI/RXD_MIT-SUBISHI	I/O/I	M3VPu	-/-/I	-/-/I	I	E20 Emulator control pin/Mitsubishi writter control pin/ When normal operating mode,set to input.
32	P31/IRQ1-DS	TU_IISD	I		L	L	L	TUNER control
33	P30/RXD1	TU_DA	I_O	SW3VPu	L	L	L	TUNER control
34	TCK/FINEC/PF1/ SCK1	TCK/ NC(NORMRAL)	I/I/I	M3VPu	-/-/I	-/-/I	I	E20 Emulator control pin//When normal operating mode,set to input.
35	TD0/TXD1/PF0	TDO/TXD_ MITSUBISHI	O/O/I	M3VPu	-/-/I	-/-/I	I	E20 Emulator control pin/Mitsubishi writter control pin/ When normal operating mode,set to input.
36	P27/SCK1	TU_LA	O		L	L	L	TUNER control
37	P26/TXD1	TU_CK	O	SW3VPu	L	L	L	TUNER control
38	P25/RXD3	TU_IIC/RDSI	O		L	L	L	TUNER control
39	VCC	VCC	-		-	-	-	Power supply pin
40	P24/SCK3	NC(S930/ X2400)/ KILL_ IR(SR5012/ NR1608)	O		L	L	L	Front IR disable control pin
41	VSS	VSS	-		-	-	-	Ground pin
42	P23/TXD3	E_RTS_MOEI	O	Pd (BCM58305 Internal Pd)	L	L	L	Ethernet(LEGO) control pin
43	P22/SCK0	E_CTS_MIEO	I	Pd (onboad + BCM58305 Internal Pd)	I	I	I	Ethernet(LEGO) control pin
44	P21/RXD0/IRQ9	E_RXD_MIEO	I	Pd (onboad + BCM58305 Internal Pd)	I	L	I	Ethernet(LEGO) control pin

Pin	Pin Name	Symbol	I/O	Pu/Pd	STBY	STOP	CEC STBY	Function
45	P20/TXD0/IRQ8	E_TXD_MOEI	O	Pd (BCM58305 Internal Pd)	L	L	L	Ethernet(LEGO) control pin
46	P17/SCK1/TXD3/ IRQ7	NET_FACT_ RST	O(ODR)	Pu (BCM58305 Internal Pu)	Z	Z	Z	Ethernet(LEGO) control pin
47	P87/TXD10/TIOCA2	NC (S930/ X2400) / RC_ OUT (SR5012/ NR1608)	O		L/H	L/L	L/H	Remote code (RC-5) output pin
48	P16/TXD1/RXD3/ IRQ6	NET5V_POW-ER	O		L	L	L	Ethernet power supply (Net5V) control pin/
49	P86/RXD10	PRE_Z2_ MUTE(X2400/ SR5012/ NR1608) / NC (S930)	O		L	L	L	MUTE for ZONE2 preout control pin
50	P15/RXD1/SCK3/ IRQ5	AEXP_STB	O		L	L	L	Expander (MC14094) control pin
51	P14/IRQ4	AEXP_OE	O		L	L	L	Expander (MC14094) control pin
52	P13/TXD2/IRQ3	AEXP_CLK	O		L	L	L	Expander (MC14094) control pin
53	P12/RXD2/IRQ2	AEXP_DATA	O		L	L	L	Expander (MC14094) control pin
54	VCC_USB	VCC_USB	-		-	-	-	Power supply pin
55	USB0_DM	USB0_DM	-		-	-	-	NC(open)
56	USB0_DP	USB0_DP	-		-	-	-	NC(open)
57	VSS_USB	VSS_USB	-		-	-	-	Ground pin
58	AVCC_USBA	AVCC_USBA	-		-	-	-	Power supply pin
59	USBA_PREF	USBA_PREF	-		-	-	-	NC(open)
60	AVSS_USBA	AVSS_USBA	-		-	-	-	Ground pin
61	PVSS_USBA	PVSS_USBA	-		-	-	-	Ground pin
62	VSS2_USBA	VSS2_USBA	-		-	-	-	Ground pin
63	USBA_DM	USBA_DM	-		-	-	-	NC(open)
64	USBA_DP	USBA_DP	-		-	-	-	NC(open)
65	VSS1_USBA	VSS1_USBA	-		-	-	-	Ground pin
66	VCC_USBA	VCC_USBA	-		-	-	-	Power supply pin
67	P11/SCK2/IRQ1	CEC_OUT	O		L	L	-	CEC-D control pin
68	P10/IRQ0	CEC_IN	I	STB3VPu	I	I	I	CEC-D control pin
69	P53	ADV8003_ SPI_CS	O	DV3VPu	L	L	L	GUI control pin(ADV8003)
70	P52/RXD2	ADV8003_ SPI_MI	I		L	L	L	GUI control pin(ADV8003)
71	P51/SCK2	ADV8003_ SPI_CLK	O		L	L	L	GUI control pin(ADV8003)
72	P50/TXD2	ADV8003_ SPI_MO	O		L	L	L	GUI control pin(ADV8003)
73	VSS	VSS	-		-	-	-	Ground pin
74	P83/SCK10	IP_RST	O	Pd	I	I	L	Scaler w/ GUI (ADV8003) Reset control pin
75	VCC	VCC	-		-	-	-	Power supply pin
76	UB/PC7/TXD8/ IRQ14	UB	I	Pd	-	-	-	Pins for setting the boot mode(select the Boot Mode or User Boot Mode)
77	PC6/RXD8/IRQ13	AVSDA	I_O	DV3VPu	O/L	O/L	L	VIDEO I2C control pin for ADV8003/ ADV7180(except X2400/S930)
78	PC5/SCK8	AVSCL	I_O	DV3VPu	O/L	O/L	L	VIDEO I2C control pin for ADV8003/ ADV7180(except X2400/S930)
79	P82/TXD10	DSP_MOSI	O	DA3VPu	L	L	L	DSP(CS49844A) control pin
80	P81/RXD10	DSP_MISO	I	DA3VPu	L	L	L	DSP(CS49844A) control pin
81	P80/SCK10	DSP_CLK	O	DA3VPu	L	L	L	DSP(CS49844A) control pin
82	PC4/SCK5	DSP_CS	O	DA3VPu	L	L	L	DSP(CS49844A) control pin
83	PC3/TXD5	DSP_FLAG0	I	DA3VPu	L	L	L	DSP(CS49844A) interrupt signal input pin
84	P77/TXD11	DSP_RST	O	Pd	L	L	L	DSP(CS49844A) reset control pin
85	P76/RXD11	DSP_BUSY	I	DA3VPu	L	L	L	DSP BUSY signal input
86	PC2/RXD5	DA_POWER	O		L	L	L	Digital audio power supply (DA3.3V,DA1.2V) control pin

Pin	Pin Name	Symbol	I/O	Pu/Pd	STBY	STOP	CEC STBY	Function
87	P75/SCK11	CEC_POWER2	O		L	L	L	CEC standby power control (for CEC Standby Mode 3)
88	P74	SEL_DATA	O		L	L	L	Audio selector control pin for NJU72750/ 72751(SR5012)
89	PC1/SCK5/IRQ12	DAC_PLD_ERR	I		L	L	L	Detect PLD error (from Audio PLD)
90	VCC	VCC	-		-	-	-	Power supply pin
91	PC0/IRQ14	H/P_RL	O	-	L	L	L	Headphone relay control pin
92	VSS	VSS	-		-	-	-	Ground pin
93	P73	FRONT_RL	O	-	L	L	L	Speaker relay control pin
94	PB7/TXD9	HSDA	I/O	CEC3VPu	L	L	L	HDMI I2C control pin for MN864788
95	PB6/RXD9	HSCL	I/O	CEC3VPu	L	L	L	HDMI I2C control pin for MN864788
96	PB5/SCK9	SEL_CLK	O		L	L	L	Audio selector control pin for NJU72750/ 72751(SR5012)
97	PB4	APLD_CS	O		L	L	L	Audio PLD (5M570ZF256C5N) control pin
98	PB3/SCK4/SCK6	APLD_DATA/ DAC_DATA	O		L	L	L	Audio PLD (5M570ZF256C5N) control pin/DAC (AK4458VN) control pin
99	PB2	APLD_CLK/ DAC_CLK	O		L	L	L	Audio PLD (5M570ZF256C5N) control pin/DAC (AK4458VN) control pin
100	PB1/TXD4/TXD6/ IRQ4-DS	DAC_MS	O		L	L	L	DAC (AK4458VN) control pin
101	P72	DAC_RST	O		L	L	L	DAC (AK4458VN) control pin
102	P71	PRE_MUTE	O	-	L	L	L	MUTE for preout control pin
103	VCC	VCC	-		-	-	-	Power supply pin
104	PB0/RXD4/RXD6/ IRQ12	DA_POWER2	O		L	L	L	Digital audio power supply (DA1.0V) control pin
105	VSS	VSS	-		-	-	-	Ground pin
106	PA7	ISEL_A	I	SW3VPu	I	I	I	Input selector (Rotary encoder) signal input pin
107	PA6	ISEL_B	I	SW3VPu	I	I	I	Input selector (Rotary encoder) signal input pin
108	PA5	C/S_RL	O		L	L	L	Speaker relay control pin
109	PA4/TXD5/SSDA5/ IRQ5-DS	DSP_ROM_ WRITE	O		L	L	L	DSP ROM writing control(When writing,set to High)
110	PA3/RXD5/SSCL5	MVOL_MUTE	O		L	L	L	Volume control pin (NJU72343)
111	TRDATA3/PG7	MVOL_CLK	O		L	L	L	Volume control pin (NJU72343)
112	PA2/RXD5	MVOL_DATA	O		L	L	L	Volume control pin (NJU72343)
113	TRDATA2/PG6	ZVOL_DATA (X2400/ NR1608/ SR5012) / NC (S930)	O		L	L	L	ZONE2 volume control pin (BD3812F)
114	PA1/SCK5/IRQ11	ZVOL_CLK (X2400/ NR1608/ SR5012) / NC (S930)	O		L	L	L	ZONE2 volume control pin (BD3812F)
115	VCC	VCC	-		-	-	-	Power supply pin
116	TRCLK/PG5	ZVOL_MUTE (X2400/ NR1608 / SR5012) / NC (S930)	O		L	L	L	ZONE2 volume control pin (BD3812F)
117	VSS	VSS	-		-	-	-	Ground pin
118	PA0	H5V_DET	I	-	I	I	I	HDMI IN 5V detect signal pin
119	TRSYNC/PG4	FL_RST	O		L	L	L	FL display control pin
120	P67/IRQ15	FL_CE	O		L	L	L	FL display control pin
121	TRDATA1/PG3	FL_CLK	O		L	L	L	FL display control pin
122	P66	FL_DATA	O		L	L	L	FL display control pin
123	TRDATA0/PG2	SB_RL	O		L	L	L	Speaker relay control pin
124	P65	CPU_ POWER_2 (S930/X2400/ NR1608) / FIL_ CTRL (SR5012)	O		L	L	L	CPU power supply control pin(same as 131pin) / Filament Power control pin (for Portal FLD)
125	PE7/IRQ7/AN105	ASO/DC_DET	I	SW3VPu	I	L	I	Protection detect signal input pin (for ASO and DC) (A/ D converter)

Pin	Pin Name	Symbol	I/O	Pu/Pd	STBY	STOP	CEC STBY	Function
126	PE6/IRQ6/AN104	MIC_DET/H/P_DET	I	SW3VPu	I	L	I	Headphone insert detect pin/Microphone insert detect pin (A/D converter)
127	VCC	VCC	-		-	-	-	Power supply pin
128	P70	HIGH_B_RL	O		L	L	L	HIGH-B relay control pin
129	VSS	VSS	-		-	-	-	Ground pin
130	PE5/IRQ5/AN103	MAIN_POWER	O		L	L	L	Power supply control pin
131	PE4/AN102	CPU_POWER	O		L	L	L	CPU power supply control pin
132	PE3/AN101	AIOS4_WAKE-UP	O		L	L	L	same as NET5V_POWER,NET3.3V_POWER (This port use to control for LEGO standby mode in the future(Low：Deep Standby, High：normal))
133	PE2/RXD12/IRQ7-DS/AN100	AIOS4_STBY_STATUS	I	Pd	I	I	I	Not used (This port use to detect for LEGO standby status in the future (Low：normal, High：Deep Standby))
134	PE1/TXD12	GUI_WRITE	O		L	L	L	GUI flash rom writing control
135	PE0/SCK12	NET3.3V_POWER	O		L	L	L	Ethernet power supply control(Net3.3V)
136	P64	D5V_POWER	O		L	L	H	Digital 5V power supply control pin(3.3V and 1.8V generate from 5V)
137	P63	CEC_POWER	O		L	L	-	CEC standby power supply control(CEC5V,CEC3.3V,CEC1.8V)
138	P62	DV_POWER1	O		L	L	L	Digital video power supply (DV5V,DV3.3V) control pin
139	P61	DV_POWER2	O		L	L	L	Digital video power supply (DV1.8V) control pin
140	VSS	VSS	-		-	-	-	Ground pin
141	P60	DIR_DIN	O		L	L	L	DIR (PCM9211) control pin
142	VCC	VCC	-		-	-	-	Power supply pin
143	PD7/IRQ7/AN107	DIR_CE	O		L	L	L	DIR (PCM9211) control pin
144	PG1	DIR_DOUT	I	DA3.3Pu	I	I	I	DIR (PCM9211) control pin
145	PD6/IRQ6/AN106	DIR_CLK	O		L	L	L	DIR (PCM9211) control pin
146	PG0	DIR_RST	O		L	L	L	DIR (PCM9211) control pin
147	PD5/IRQ5/AN113	788_2_HAINT	I	CEC3VPu	Z		-	HDMI Rx (MN864788) audio interrupt signal det
148	PD4/IRQ4/AN112	SW_SDA	I_O	DV3VPu	O/L	O/L	L	HDMI TMDS switch I2C ccontrol pin for TMDS261B
149	P97	DE_RST (NR1608/SR5012) / NC (X2400/S930)	O	Pd	Z		L	Video decoder (ADV7180) reset control pin
150	PD3/IRQ3/AN111	788_1_HINT	I	CEC3VPu	Z		-	HDMI Tx (MN864788) interrupt signal input pin
151	VSS	VSS	-		-	-	-	Ground pin
152	P96	788_1_RST	O	Pd	Z		-	HDMI Tx (MN864788) reset control pin
153	VCC	VCC	-		-	-	-	Power supply pin
154	PD2/IRQ2/AN110	788_2_HINT	I	CEC3VPu	Z		-	HDMI Rx (MN864788) interrupt signal input pin
155	P95	788_2_RST	O	Pd	Z		-	HDMI Rx (MN864788) reset control pin
156	PD1/IRQ1/AN109	788_3_HINT	I	CEC3VPu	Z		-	HDMI Rx (MN864788) interrupt signal input pin
157	P94	788_3_RST	O	Pd	Z		-	HDMI Rx (MN864788) reset control pin
158	PD0/IRQ0/AN108	A_TO_H/NET (SR5012/NR1608)/ NC (S930/X2400)	O		L	L	L	Video PLD control pin (Net GUI:High,A to H:Low)
159	P93/AN117	THERMAL_A	I	SW3VPu	I	L	I	Protection detect signal input pin (for power TR)
160	P92/RXD7/AN116	THERMAL_B	I	SW3VPu	I	L	I	Protection detect signal input pin (for power TR)
161	P91/AN115	SW_SCL	I_O	DV3VPu	O/L	O/L	L	HDMI TMDS switch I2C control pin for TMDS261B
162	VSS	VSS	-		-	-	-	Ground pin
163	P90/TXD7/AN114	THERMAL_E	I	SW3VPu	I	L	I	Protection detect signal input pin (for Heat sink)
164	VCC	VCC	-		-	-	-	Power supply pin
165	P47/IRQ15-DS/AN007	788_3_HAINT	I	CEC3VPu	Z		-	HDMI Rx (MN864788) audio interrupt signal det
166	P46/IRQ14-DS/AN006	CURRENT_DET	I/O	Pd	I/L	L/L	I/L	Current level monitor pin (A/D converter)
167	P45/IRQ13-DS/AN005	AMPSIGDET	I	Pd	I	L	I	Signal level monitor pin (AD converter)
168	P44/IRQ12-DS/AN004	MODE	I		I	I	I	Region setting pin
169	P43/IRQ11-DS/AN003	KEY3	I	M3VPu	I	I	I	Key control signalinput pin (When standby mode,set to inturrupt)
170	P42/IRQ10-DS/AN002	KEY2	I	M3VPu	I	I	I	Key control signalinput pin (When standby mode,set to inturrupt)
171	P41/IRQ9-DS/AN001	KEY1	I	M3VPu	I	I	I	Key control signalinput pin (When standby mode,set to inturrupt)
172	VREFL0	VREFL0	-		-	-	-	Ground pin
173	P40	ADC_RST	O		I	L	I	A/D convertor(AK5358) reset control pin
174	VREFH0	VREFH0	-		-	-	-	Power supply pin
175	AVCC0	AVCC0	-		-	-	-	Power supply pin
176	P07/IRQ15	COMP_DET (SR5012/NR1608)/ NC (S930/X2400)	I	SW3VPu	I	I	I	Component video signal detect pin

AD8195ACPZ (F_HDMI : U3000)

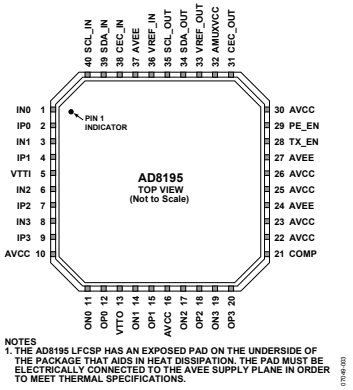

NOTES
1. THE AD8195 LFCSP HAS AN EXPOSED PAD ON THE UNDERSIDE OF THE PACKAGE THAT AIDS IN HEAT DISSIPATION. THE PAD MUST BE ELECTRICALLY CONNECTED TO THE AVEE SUPPLY PLANE IN ORDER TO MEET THERMAL SPECIFICATIONS.

Terminl Function

Pin No.	Mnemonic	Type[1]	Description
1	IN0	HS I	High Speed Input Complement.
2	IP0	HS I	High Speed Input.
3	IN1	HS I	High Speed Input Complement.
4	IP1	HS I	High Speed Input.
5	VTTI	Power	Input Termination Supply. Nominally connected to AVCC.
6	IN2	HS I	High Speed Input Complement.
7	IP2	HS I	High Speed Input.
8	IN3	HS I	High Speed Input Complement.
9	IP3	HS I	High Speed Input.
10, 16, 22, 23, 25, 26, 30	AVCC	Power	Positive Analog Supply. 3.3 V nominal.
11	ON0	HS O	High Speed Output Complement.
12	OP0	HS O	High Speed Output.
13	VTTO	Power	Output Termination Supply. Nominally connected to AVCC.
14	ON1	HS O	High Speed Output Complement.
15	OP1	HS O	High Speed Output.
17	ON2	HS O	High Speed Output Complement.
18	OP2	HS O	High Speed Output.
19	ON3	HS O	High Speed Output Complement.
20	OP3	HS O	High Speed Output.
21	COMP	Control	Power-On Compensation Pin. Bypass to ground through a 10 µF capacitor.
24, 27, 37, Exposed Pad	AVEE	Power	Negative Analog Supply. 0 V nominal.
28	TX_EN	Control	High Speed Output Enable Parallel Interface.
29	PE_EN	Control	High Speed Preemphasis Enable Parallel Interface.
31	CEC_OUT	LS I/O	CEC Output Side.
32	AMUXVCC	Power	Positive Auxiliary Buffer Supply. 5 V nominal.

Block diagram

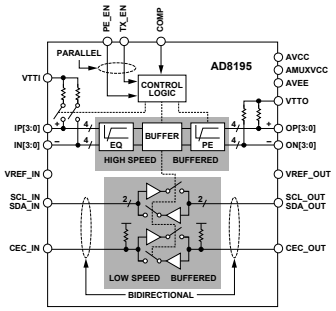

PCM9211 (DIGITAL : U1040)

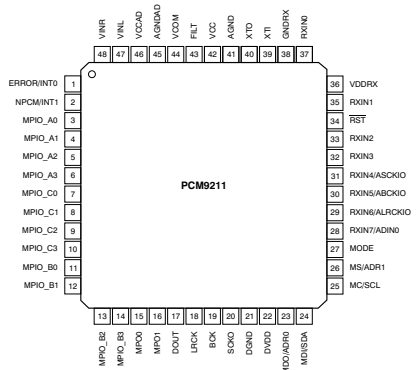

PIN Functions

PIN				DESCRIPTION
NO.	NAME	I/O	5-V TOLERANT	
1	ERROR/INT0	O	No	DIR Error detection output / Interrupt0 output
2	NPCM/INT1	O	No	DIR Non-PCM detection output / Interrupt1 output
3	MPIO_A0	I/O	Yes	Multipurpose I/O, Group A(1)
4	MPIO_A1	I/O	Yes	Multipurpose I/O, Group A(1)
5	MPIO_A2	I/O	Yes	Multipurpose I/O, Group A(1)
6	MPIO_A3	I/O	Yes	Multipurpose I/O, Group A(1)
7	MPIO_C0	I/O	Yes	Multipurpose I/O, Group C(1)
8	MPIO_C1	I/O	Yes	Multipurpose I/O, Group C(1)
9	MPIO_C2	I/O	Yes	Multipurpose I/O, Group C(1)
10	MPIO_C3	I/O	Yes	Multipurpose I/O, Group C(1)
11	MPIO_B0	I/O	Yes	Multipurpose I/O, Group B(1)
12	MPIO_B1	I/O	Yes	Multipurpose I/O, Group B(1)
13	MPIO_B2	I/O	Yes	Multipurpose I/O, Group B(1)
14	MPIO_B3	I/O	Yes	Multipurpose I/O, Group B(1)
15	MPO0	O	No	Multipurpose output 0
16	MPO1	O	No	Multipurpose output 1
17	DOUT	O	No	Main output port, serial digital audio data output
18	LRCK	O	No	Main output port, LR clock output
19	BCK	O	No	Main output port, Bit clock output
20	SCKO	O	No	Main output port, System clock output
21	DGND	–	–	Ground, for digital
22	DVDD	–	–	Power supply, 3.3 V (typ.), for digital
23	MDO/ADR0	I/O	Yes	Software control I/F, SPI data output / I2C slave address setting0(2)
24	MDI/SDA	I/O	Yes	Software control I/F, SPI data input / I2C data input/output(2) (3)
25	MC/SCL	I	Yes	Software control I/F, SPI clock input / I2C clock input(2)

PIN				DESCRIPTION
NO.	NAME	I/O	5-V TOLERANT	
26	MS/ADR1	I	Yes	Software control I/F, SPI chip select / I2C slave address setting1(2)
27	MODE	I	No	Control mode setting, (see the Serial Control Mode section, Control Mode Pin Setting)
28	RXIN7/ADIN0	I	Yes	Biphase signal, input 7 / AUXIN0, serial audio data input(2)
29	RXIN6/ALRCKI0	I	Yes	Biphase signal, input 6 / AUXIN0, LR clock input(2)
30	RXIN5/ABCKI0	I	Yes	Biphase signal, input 5 / AUXIN0, bit clock input(2)
31	RXIN4/ASCKI0	I	Yes	Biphase signal, input 4 / AUXIN0, system clock input(2)
32	RXIN3	I	Yes	Biphase signal, input 3(2)
33	RXIN2	I	Yes	Biphase signal, input 2(2)
34	RST	I	Yes	Reset Input, active low(2) (4)
35	RXIN1	I	Yes	Biphase signal, input 1, built-in coaxial amplifier
36	VDDRX	–	–	Power supply, 3.3 V (typ.), for RXIN0 and RXIN1.
37	RXIN0	I	Yes	Biphase signal, input 0, built-in coaxial amplifier
38	GNDRX	-	-	Ground, for RXIN
39	XTI	I	No	Oscillation circuit input for crystal resonator or external XTI clock source input(5)
40	XTO	O	No	Oscillation circuit output for crystal resonator
41	AGND	–	–	Ground, for PLL analog
42	VCC	–	–	Power supply, 3.3 V (typ.), for PLL analog
43	FILT	O	No	External PLL loop filter connection terminal; must connect recommended filter
44	VCOM	O	No	ADC common voltage output; must connect external decoupling capacitor
45	AGNDAD	–	–	Ground, for ADC analog
46	VCCAD	–	–	Power supply, 5.0 V (typ.), for ADC analog
47	VINL	I	No	ADC analog voltage input, left channel
48	VINR	I	No	ADC analog voltage input, right channel

(1) Schmitt trigger input
(2) Schmitt trigger input
(3) Open-drain configuration in I2C mode
(4) Onboard pull-down resistor (50 k Ω , typical)
(5) CMOS Schmitt trigger input

BLOCK DIAGRAM

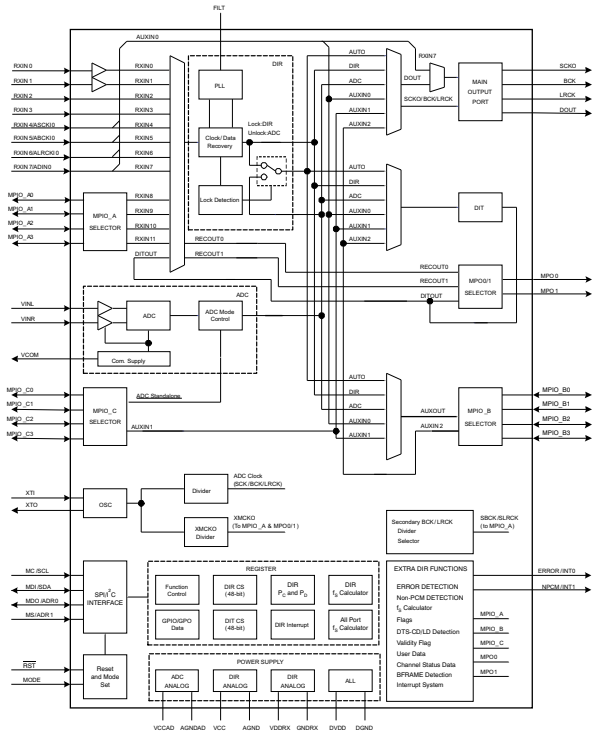

CS49844A (DIGITAL : U1073)

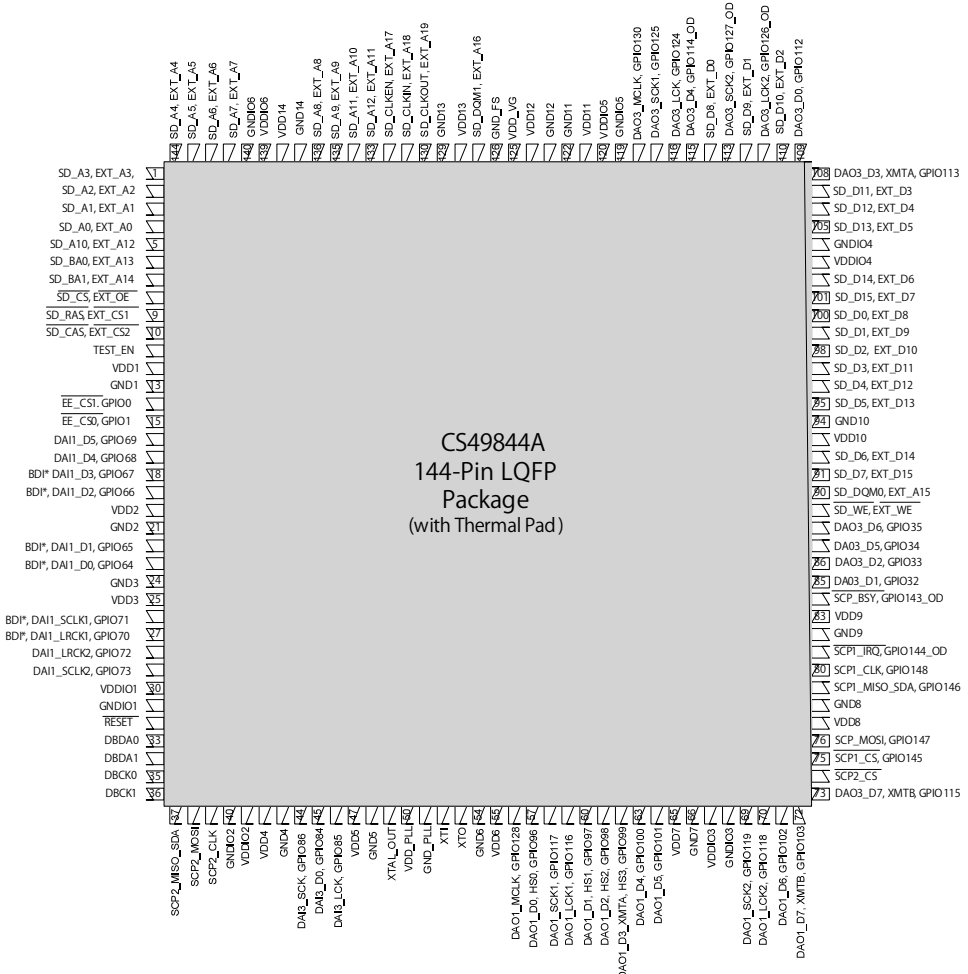

W9864G6KH-5 (DIGITAL : U1023)

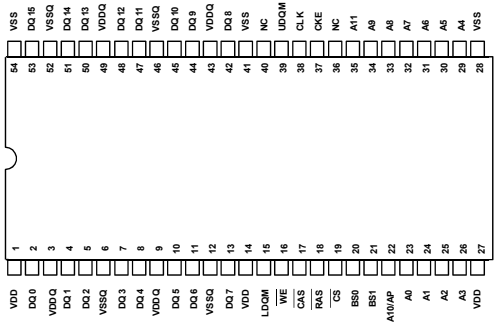

Pin description

PIN NUMBER	PIN NAME	FUNCTION	DESCRIPTION
23 ~ 26, 22, 29 ~35	A0–A11	Address	Multiplexed pins for row and column address. Row address: A0–A11. Column address: A0–A7. A10 is sampled during a precharge command to determine if all banks are to be precharged or bank selected by BS0, BS1.
20, 21	BS0, BS1	Bank Select	Select bank to activate during row address latch time, or bank to read/write during address latch time.
2, 4, 5, 7, 8, 10, 11, 13, 42, 44, 45, 47, 48, 50, 51, 53	DQ0–DQ15	Data Input/ Output	Multiplexed pins for data output and input.
19	$\overline{CS}$	Chip Select	Disable or enable the command decoder. When command decoder is disabled, new command is ignored and previous operation continues.
18	$\overline{RAS}$	Row Address Strobe	Command input. When sampled at the rising edge of the clock $\overline{RAS}$, $\overline{CAS}$ and $\overline{WE}$ define the operation to be executed.
17	$\overline{CAS}$	Column Address Strobe	Referred to $\overline{RAS}$
16	$\overline{WE}$	Write Enable	Referred to $\overline{RAS}$
39, 15	UDQM LDQM	Input/output mask	The output buffer is placed at Hi-Z (with latency of 2) when DQM is sampled high in read cycle. In write cycle, sampling DQM high will block the write operation with zero latency.
38	CLK	Clock Inputs	System clock used to sample inputs on the rising edge of clock.
37	CKE	Clock Enable	CKE controls the clock activation and deactivation. When CKE is low, Power Down mode, Suspend mode, or Self Refresh mode is entered.
1, 14, 27	V_{DD}	Power	Power for input buffers and logic circuit inside DRAM.
28, 41, 54	V_{SS}	Ground	Ground for input buffers and logic circuit inside DRAM.
3, 9, 43, 49	V_{DDQ}	Power for I/O buffer	Separated power from V_{DD}, to improve DQ noise immunity.
6, 12, 46, 52	V_{SSQ}	Ground for I/O buffer	Separated ground from V_{SS}, to improve DQ noise immunity.
36, 40	NC	No Connection	No connection.

Block diagram

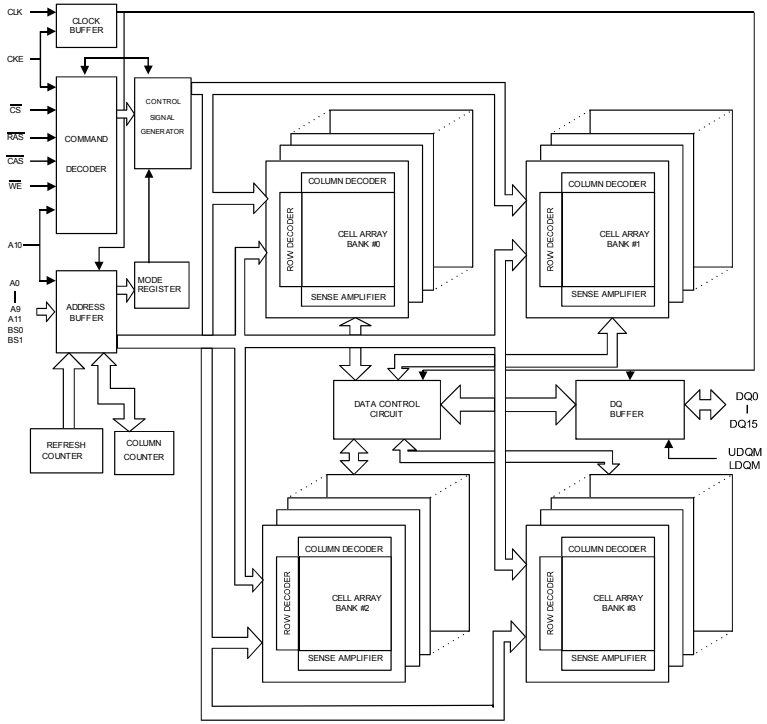

AK4458VN (DIGITAL : U1051)

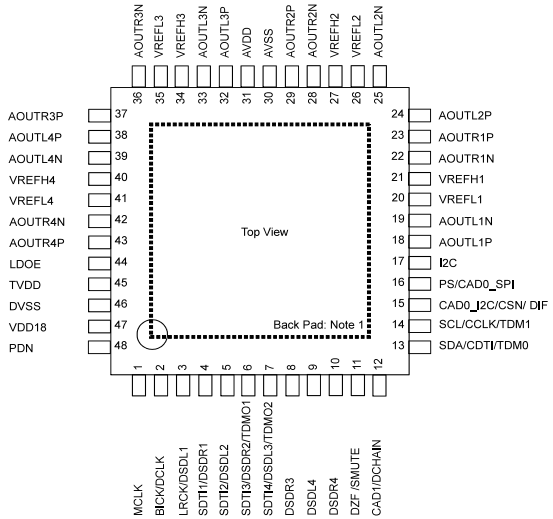

Pin Function

No.	Pin Name	I/O	Function	PD State
1	MCLK	I	External Master Clock Input Pin	Hi-Z
2	BICK	I	Audio Serial Data Clock Pin in PCM mode	Hi-z
	DCLK	I	DSD Clock Pin in DSD mode	
3	LRCK	I	Input Channel Clock Pin in PCM mode	Hi-Z
	DSDL1	I	Audio Serial Data Input in DSD mode	
4	SDTI1	I	Audio Serial Data Input in PCM mode	Hi-Z
	DSDR1	I	Audio Serial Data Input in DSD mode	
5	SDTI2	I	Audio Serial Data Input in PCM mode	Hi-Z
	DSDL2	I	Audio Serial Data Input in DSD mode	
6	SDTI3	I	Audio Serial Data Input in PCM mode	100k Ω Pull down
	DSDR2	I	Audio Serial Data Input in DSD mode	
	TDMO1	O	Audio Serial Data Output in Daisy Chain mode	
7	SDTI4	I	Audio Serial Data Input in PCM mode	100k Ω Pull down
	DSDL3	I	Audio Serial Data Input in DSD mode	
	TDMO2	O	Audio Serial Data Output in Daisy Chain mode	
8	DSDR3	I	Audio Serial Data Input in DSD mode	Hi-Z
9	DSDL4	I	Audio Serial Data Input in DSD mode	Hi-Z
10	DSDR4	I	Audio Serial Data Input in DSD mode	Hi-Z
11	DZF	O	Zero Input Detect in I2C Bus or 3-wire serial control mode	100k Ω Pull down
	SMUTE	I	Soft Mute Pin in Parallel control mode. When this pin is changed to "H", soft mute cycle is initiated. When it is returning to "L", the output mute is released.	
12	CAD1	I	Chip Address 0 Pin in I C Bus or 3-wire serial control mode	Hi-Z
	DCHAIN	I	Daisy Chain Mode select pin in Parallel control mode.	
13	SDA	I/O	Control Data Pin in I2C Bus serial control mode	Hi-Z
	CDTI	I	Control Data Input Pin in 3-wire serial control mode	
	TDM0	I	TDM Mode select pin in Parallel control mode.	
14	SCL	I	Control Data Clock Pin in I2C Bus serial control mode	Hi-Z
	CCLK	I	Control Data Clock Pin in 3-wire serial control mode	
	TDM1	I	TDM Mode select pin in Parallel control mode.	

No.	Pin Name	I/O	Function	PD State
15	CAD0_I2C	I	Chip Address 0 Pin in I2C Bus serial control mode	Hi-Z
	CSN	I	Chip Select Pin in 3-wire serial control mode	
	DIF	I	Audio Data Format Select in Parallel control mode. "L": 32-bit MSB, "H": 32-bit I2S	
16	PS	I	(I2C pin = "H") Control Mode Select Pin "L": I2C Bus serial control mode, "H": Parallel control mode.	Hi-Z
	CAD0_SPI	I	(I2C pin = "L") Chip Address 0 Pin in 3-wire serial control mode	
17	I2C	I	Control Mode Select Pin "L": 3-wire serial control mode "H": I2C Bus serial control mode or Parallel control mode.	Hi-Z
18	AOUTL1P	O	Lch Positive Analog Output 1 Pin	Hi-Z
19	AOUTL1N	O	Lch Negative Analog Output 1 Pin	Hi-Z
20	VREFL1	I	Negative Voltage Reference Input Pin, AVSS	Hi-Z
21	VREFH1	I	Positive Voltage Reference Input Pin, AVDD	Hi-Z
22	AOUTR1N	O	Rch Negative Analog Output 1 Pin	Hi-Z
23	AOUTR1P	O	Rch Positive Analog Output 1 Pin	Hi-Z
24	AOUTL2P	O	Lch Positive Analog Output 2 Pin	Hi-Z
25	AOUTL2N	O	Lch Negative Analog Output 2 Pin	Hi-Z
26	VREFL2	I	Negative Voltage Reference Input Pin, AVSS	Hi-Z
27	VREFH2	I	Positive Voltage Reference Input Pin, AVDD	Hi-Z
28	AOUTR2N	O	Rch Negative Analog Output 2 Pin	Hi-Z
29	AOUTR2P	O	Rch Positive Analog Output 2 Pin	Hi-Z
30	AVSS	-	Analog Ground Pin	—
31	AVDD	-	Analog Power Supply Pin, 3.0V-5.5V	—
32	AOUTL3P	O	Lch Positive Analog Output 3 Pin	Hi-Z
33	AOUTL3N	O	Lch Negative Analog Output 3 Pin	Hi-Z
34	VREFH3	I	Positive Voltage Reference Input Pin, AVDD	Hi-Z
35	VREFL3	I	Negative Voltage Reference Input Pin, AVSS	Hi-Z
36	AOUTR3N	O	Rch Negative Analog Output 3 Pin	Hi-Z
37	AOUTR3P	O	Rch Positive Analog Output 3Pin	Hi-Z
38	AOUTL4P	O	Lch Positive Analog Output 4 Pin	Hi-Z
39	AOUTL4N	O	Lch Negative Analog Output 4 Pin	Hi-Z
40	VREFH4	I	Positive Voltage Reference Input Pin, AVDD	Hi-Z
41	VREFL4	I	Negative Voltage Reference Input Pin, AVSS	Hi-Z
42	AOUTR4N	O	Rch Negative Analog Output 4 Pin	Hi-Z
43	AOUTR4P	O	Rch Positive Analog Output 4 Pin	Hi-Z
44	LDOE	I	Internal LDO Enable Pin. "L": Disable, "H": Enable	Hi-Z
45	TVDD	-	Digital Power Supply Pin, 3.0V-3.6V	—
46	DVSS	-	Digital Ground Pin	—
47	VDD18	O	LDO Output Pin (LDOE pin = "H") This pin should be connected to DVSS with 1.0µF.	(Note 4)
		I	1.8V Power Input Pin (LDOE pin = "L")	
48	PDN	I	Power-Down & Reset Pin When this pin is "L", the AK4458 is powered-down and the control registers are reset to default state.	Hi-Z

Note 2. All input pins except internal pull-up/down pins should not be left floating.
Note 3. PCM mode and DSD mode are controlled by registers. Daisy Chain mode is controlled by both registers and pins.
Note 4. This pin outputs DVSS when the LDOE pin = "H" and Hi-z when the LDOE pin = "L".

FUNCTIONAL BLOCK DIAGRAM

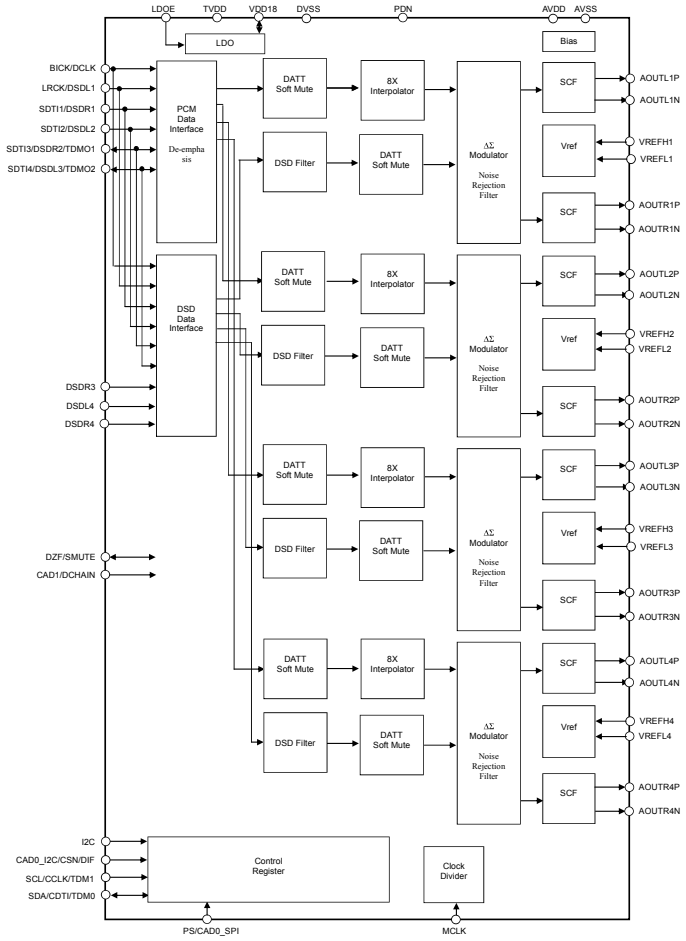

PCM5100 (DIGITAL : U1052)

PCM510X (top view)

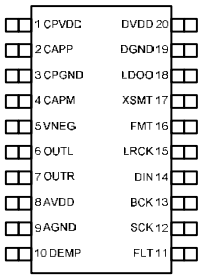

Table 2. TERMINAL FUNCTIONS, PCM510x

TERMINAL NAME	TERMINAL NO.	I/O	DESCRIPTION
CPVDD	1	-	Charge pump power supply, 3.3V
CAPP	2	O	Charge pump flying capacitor terminal for positive rail
CPGND	3	-	Charge pump ground
CAPM	4	O	Charge pump flying capacitor terminal for negative rail
VNEG	5	O	Negative charge pump rail terminal for decoupling, -3.3V
OUTL	6	O	Analog output from DAC left channel
OUTR	7	O	Analog output from DAC right channel
AVDD	8	-	Analog power supply, 3.3V
AGND	9	-	Analog ground
DEMP	10	I	De-emphasis control for 44.1kHz sampling rate(1): Off (Low) / On (High)
FLT	11	I	Filter select : Normal latency (Low) / Low latency (High)
SCK	12	I	System clock input
BCK	13	I	Audio data bit clock input
DIN	14	I	Audio data input
LRCK	15	I	Audio data word clock input
FMT	16	I	Audio format selection : I^2S (Low) / Left justified (High)
XSMT	17	I	Soft mute control : Soft mute (Low) / soft un-mute (High)
LDOO	18	-	Internal logic supply rail terminal for decoupling
DGND	19	-	Digital ground
DVDD	20	-	Digital power supply, 3.3V

Block Diagram

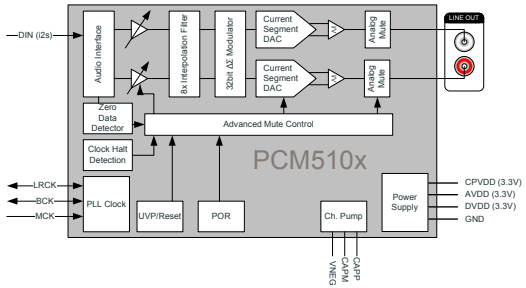

Figure 1. PCM510x Functional Block Diagram

NJU72343 (INPUT : U4202)

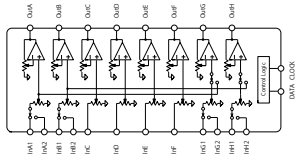

Pin Function

No.	Symbol	Function
1	AREF	Analog reference potential terminal
2	ADR	Address selection terminal
3	InA2	Ach input2
4	InB2	Bch input2
5	InA1	Ach input1
6	InB1	Bch input1
7	InC	Cch input
8	InD	Dch input
9	InE	Ech input
10	InF	Fch input
11	InG1	Gch input1
12	InH1	Hch input1
13	InG2	Cch input2
14	InH2	Dch input2
15	MUTE	External mute control terminal
16	REF	Digital reference potential terminal

No.	Symbol	Function
17	DATA	IC control data input
18	CLOCK	IC control clock input
19	VDDOUT	Digital power supply output terminal
20	AREF	Analog reference potential terminal
21	OutH	Hch output
22	OutG	Gch output
23	OutF	Fch output
24	OutE	Ech output
25	OutD	Dch output
26	OutC	Cch output
27	OutB	Bch output
28	OutA	Ach output
29	AREF	Analog reference potential terminal
30	V-	negative power supply terminal
31	AREF	Analog reference potential terminal
32	V+	positive power supply terminal

NJU72750A (INPUT : U4201,U4203)

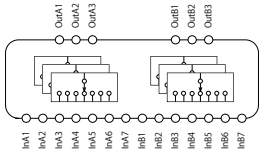

Pin Function

No.	Symbol	Function
1	V+	positive power supply terminal
2	InA1	Ach input1
3	InB1	Bch input1
4	InA2	Ach input2
5	InB2	Bch input2
6	InA3	Ach input3
7	InB3	Bch input3
8	InA4	Ach input4
9	InB4	Bch input4
10	InA5	Ach input5
11	InB5	Bch input5
12	InA6	Ach input6
13	InB6	Bch input6
14	InA7	Ach input7
15	InB7	Bch input7
16	REF	Reference potential terminal for BIAS

No.	Symbol	Function
17	DATA	IC control data input
18	CLOCK	IC control clock input
19	NC	-
20	NC	-
21	OutB3	Bch output3
22	OutA3	Ach output3
23	REF_B	Bch reference potential terminal
24	OutB2	Bch output2
25	OutA2	Ach output2
26	REF_A	Ach reference potential terminal
27	OutB1	Bch output1
28	OutA1	Ach output1
29	NC	-
30	ADR0	Address selection pin 0
31	ADR1	Address selection pin 1
32	V-	negative power supply terminal

NJU72751A (INPUT : U4204, PREOUT : U5600)

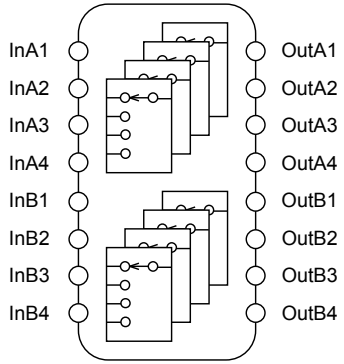

No.	Symbol	Function
1	V+	positive power supply terminal
2	ADR0	Address selection pin 0
3	InA1	Ach input 1
4	InB1	Bch input 1
5	NC	-
6	InA2	Ach input 2
7	InB2	Bch input 2
8	NC	-
9	NC	-
10	InA3	Ach input 3
11	InB3	Bch input 3
12	NC	-
13	InA4	Ach input 4
14	InB4	Bch input 4
15	REF	Reference potential terminal for BIAS
16	DATA	IC control data input

	Symbol	Function
17	CLOCK	IC control clock input
18	NC	-
19	OutB4	Bch output 4
20	OutA4	Ach output 4
21	NC	-
22	OutB3	Bch output 3
23	OutA3	Ach output 3
24	REF_B	Bch reference potential terminal
25	REF_A	Ach reference potential terminal
26	OutB2	Bch output 2
27	OutA2	Ach output 2
28	NC	-
29	OutB1	Bch output 1
30	OutA1	Ach output 1
31	ADR1	Address selection pin 1
32	V-	negative power supply terminal

NJM2595MTE1 (VIDEO : U5001)

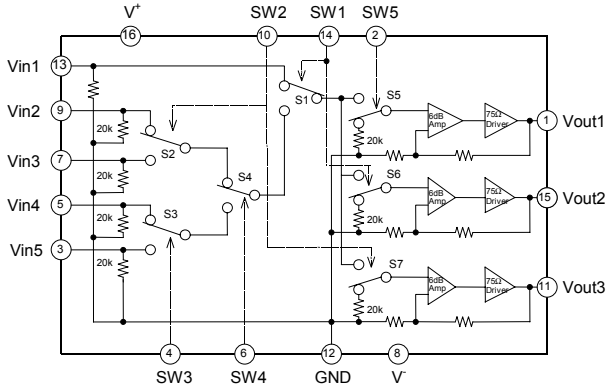

NJM2586AVC3(VIDEO : U5002)

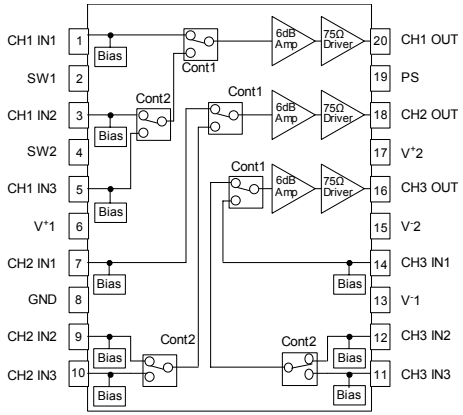

SSOP20-C3

2. FL DISPLAY

FLD (018BT021GINK) (FRONT : FLT4400)

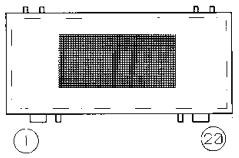

PIN CONNECTION

PIN NO.	1	2	3	4	5	6	7	8	9	10	11	12	13	14	15	16	17	18	19	20
CONNECTION	F-	NP	NC	NC	NC	NC	TEST	INT	RESET	DIO	CLK	CS	OSC	NC	VH	PGND	LGND	VDD	NP	F+

NOTE

1) F-, F+ ----Filament
2) NP ------No pin
3) DL ------Datum Line
4) VDD ------Logic Voltage Supply pin
5) LGND ----Logic GND pin
6) PGND ----Power GND pin
7) VH ------High Voltage Supply pin
8) $\overline{OSC}$ ----Pin for self-oscillation
9) $\overline{CS}$ ------Chip Select Input pin
10) CLK ----Shift Register Clock
11) DA ----Serial Data Input
12) $\overline{RESET}$ --Reset Input
13) INT ------Int pin
14) TSA, B --Test pin
15) Solder composition is Sn-3Ag-0.5Cu.
16) NC ------No connection
(NC pin shold be electrically open on the PC boaed)

PATTERN DETAIL

T1		T2			T3			-	-	-	T15			T16			T17
1-1	2-1	3-1	4-1	5-1	6-1	7-1	8-1	-	-	-	42-1	43-1	44-1	45-1	46-1	47-1	48-1
1-2	2-2	3-2	4-2	5-2	6-2	7-2	8-2	-	-	-	42-2	43-2	44-2	45-2	46-2	47-2	48-2
1-3	2-3	3-3	4-3	5-3	6-3	7-3	8-3	-	-	-	42-3	43-3	44-3	45-3	46-3	47-3	48-3
1-4	2-4	3-4	4-4	5-4	6-4	7-4	8-4	-	-	-	42-4	43-4	44-4	45-4	46-4	47-4	48-4
1-5	2-5	3-5	4-5	5-5	6-5	7-5	8-5	-	-	-	42-5	43-5	44-5	45-5	46-5	47-5	48-5
1-6	2-6	3-6	4-6	5-6	6-6	7-6	8-6	-	-	-	42-6	43-6	44-6	45-6	46-6	47-6	48-6
1-7	2-7	3-7	4-7	5-7	6-7	7-7	8-7	-	-	-	42-7	43-7	44-7	45-7	46-7	47-7	48-7
1-8	2-8	3-8	4-8	5-8	6-8	7-8	8-8	-	-	-	42-8	43-8	44-8	45-8	46-8	47-8	48-8
1-9	2-9	3-9	4-9	5-9	6-9	7-9	8-9	-	-	-	42-9	43-9	44-9	45-9	46-9	47-9	48-9
1-10	2-10	3-10	4-10	5-10	6-10	7-10	8-10	-	-	-	42-10	43-10	44-10	45-10	46-10	47-10	48-10
1-11	2-11	3-11	4-11	5-11	6-11	7-11	8-11	-	-	-	42-11	43-11	44-11	45-11	46-11	47-11	48-11
1-12	2-12	3-12	4-12	5-12	6-12	7-12	8-12	-	-	-	42-12	43-12	44-12	45-12	46-12	47-12	48-12
1-13	2-13	3-13	4-13	5-13	6-13	7-13	8-13	-	-	-	42-13	43-13	44-13	45-13	46-13	47-13	48-13
1-14	2-14	3-14	4-14	5-14	6-14	7-14	8-14	-	-	-	42-14	43-14	44-14	45-14	46-14	47-14	48-14
1-15	2-15	3-15	4-15	5-15	6-15	7-15	8-15	-	-	-	42-15	43-15	44-15	45-15	46-15	47-15	48-15
1-16	2-16	3-16	4-16	5-16	6-16	7-16	8-16	-	-	-	42-16	43-16	44-16	45-16	46-16	47-16	48-16
1-17	2-17	3-17	4-17	5-17	6-17	7-17	8-17	-	-	-	42-17	43-17	44-17	45-17	46-17	47-17	48-17
1-18	2-18	3-18	4-18	5-18	6-18	7-18	8-18	-	-	-	42-18	43-18	44-18	45-18	46-18	47-18	48-18
1-19	2-19	3-19	4-19	5-19	6-19	7-19	8-19	-	-	-	42-19	43-19	44-19	45-19	46-19	47-19	48-19
1-20	2-20	3-20	4-20	5-20	6-20	7-20	8-20	-	-	-	42-20	43-20	44-20	45-20	46-20	47-20	48-20
1-21	2-21	3-21	4-21	5-21	6-21	7-21	8-21	-	-	-	42-21	43-21	44-21	45-21	46-21	47-21	48-21
1-22	2-22	3-22	4-22	5-22	6-22	7-22	8-22	-	-	-	42-22	43-22	44-22	45-22	46-22	47-22	48-22
1-23	2-23	3-23	4-23	5-23	6-23	7-23	8-23	-	-	-	42-23	43-23	44-23	45-23	46-23	47-23	48-23
T1		T2			T3			-	-	-	T15			T16			T17

ANODE CONNECTION

	1G	2G	3G	4G	5G	6G	7G	8G	9G	10G	11G	12G	13G	14G	15G	16G	17G(AD3)	18G(AD4)
D0	1-1	1-1	1-1	1-1	1-1	1-1	1-1	1-1	1-1	1-1	1-1	1-1	1-1	1-1	1-1	1-1	S9	-
D1	2-1	2-1	2-1	2-1	2-1	2-1	2-1	2-1	2-1	2-1	2-1	2-1	2-1	2-1	2-1	2-1	3d	-
D2	3-1	3-1	3-1	3-1	3-1	3-1	3-1	3-1	3-1	3-1	3-1	3-1	3-1	3-1	3-1	3-1	2d	-
D3	4-1	4-1	4-1	4-1	4-1	4-1	4-1	4-1	4-1	4-1	4-1	4-1	4-1	4-1	4-1	4-1	3e	-
D4	5-1	5-1	5-1	5-1	5-1	5-1	5-1	5-1	5-1	5-1	5-1	5-1	5-1	5-1	5-1	5-1	2e	-
D5	1-2	1-2	1-2	1-2	1-2	1-2	1-2	1-2	1-2	1-2	1-2	1-2	1-2	1-2	1-2	1-2	3c	-
D6	2-2	2-2	2-2	2-2	2-2	2-2	2-2	2-2	2-2	2-2	2-2	2-2	2-2	2-2	2-2	2-2	2c	-
D7	3-2	3-2	3-2	3-2	3-2	3-2	3-2	3-2	3-2	3-2	3-2	3-2	3-2	3-2	3-2	3-2	3g	-
D8	4-2	4-2	4-2	4-2	4-2	4-2	4-2	4-2	4-2	4-2	4-2	4-2	4-2	4-2	4-2	4-2	2g	-
D9	5-2	5-2	5-2	5-2	5-2	5-2	5-2	5-2	5-2	5-2	5-2	5-2	5-2	5-2	5-2	5-2	3f	-
D10	1-3	1-3	1-3	1-3	1-3	1-3	1-3	1-3	1-3	1-3	1-3	1-3	1-3	1-3	1-3	1-3	2f	-
D11	2-3	2-3	2-3	2-3	2-3	2-3	2-3	2-3	2-3	2-3	2-3	2-3	2-3	2-3	2-3	2-3	3b	-
D12	3-3	3-3	3-3	3-3	3-3	3-3	3-3	3-3	3-3	3-3	3-3	3-3	3-3	3-3	3-3	3-3	2b	-
D13	4-3	4-3	4-3	4-3	4-3	4-3	4-3	4-3	4-3	4-3	4-3	4-3	4-3	4-3	4-3	4-3	3a	-
D14	5-3	5-3	5-3	5-3	5-3	5-3	5-3	5-3	5-3	5-3	5-3	5-3	5-3	5-3	5-3	5-3	2a	-
D15	1-4	1-4	1-4	1-4	1-4	1-4	1-4	1-4	1-4	1-4	1-4	1-4	1-4	1-4	1-4	1-4	Dp	-
D16	2-4	2-4	2-4	2-4	2-4	2-4	2-4	2-4	2-4	2-4	2-4	2-4	2-4	2-4	2-4	2-4	dB	-
D17	3-4	3-4	3-4	3-4	3-4	3-4	3-4	3-4	3-4	3-4	3-4	3-4	3-4	3-4	3-4	3-4	1d	-
D18	4-4	4-4	4-4	4-4	4-4	4-4	4-4	4-4	4-4	4-4	4-4	4-4	4-4	4-4	4-4	4-4	1e	-
D19	5-4	5-4	5-4	5-4	5-4	5-4	5-4	5-4	5-4	5-4	5-4	5-4	5-4	5-4	5-4	5-4	1c	-
D20	1-5	1-5	1-5	1-5	1-5	1-5	1-5	1-5	1-5	1-5	1-5	1-5	1-5	1-5	1-5	1-5	1g	-
D21	2-5	2-5	2-5	2-5	2-5	2-5	2-5	2-5	2-5	2-5	2-5	2-5	2-5	2-5	2-5	2-5	1f	-
D22	3-5	3-5	3-5	3-5	3-5	3-5	3-5	3-5	3-5	3-5	3-5	3-5	3-5	3-5	3-5	3-5	1b	-
D23	4-5	4-5	4-5	4-5	4-5	4-5	4-5	4-5	4-5	4-5	4-5	4-5	4-5	4-5	4-5	4-5	1a	AUTO
D24	5-5	5-5	5-5	5-5	5-5	5-5	5-5	5-5	5-5	5-5	5-5	5-5	5-5	5-5	5-5	5-5	S1	HDMI
D25	1-6	1-6	1-6	1-6	1-6	1-6	1-6	1-6	1-6	1-6	1-6	1-6	1-6	1-6	1-6	1-6	S2	DIGITAL
D26	2-6	2-6	2-6	2-6	2-6	2-6	2-6	2-6	2-6	2-6	2-6	2-6	2-6	2-6	2-6	2-6	S3	ANALOG
D27	3-6	3-6	3-6	3-6	3-6	3-6	3-6	3-6	3-6	3-6	3-6	3-6	3-6	3-6	3-6	3-6	S4	S.BACK
D28	4-6	4-6	4-6	4-6	4-6	4-6	4-6	4-6	4-6	4-6	4-6	4-6	4-6	4-6	4-6	4-6	S5	DD
D29	5-6	5-6	5-6	5-6	5-6	5-6	5-6	5-6	5-6	5-6	5-6	5-6	5-6	5-6	5-6	5-6	S6	dts
D30	1-7	1-7	1-7	1-7	1-7	1-7	1-7	1-7	1-7	1-7	1-7	1-7	1-7	1-7	1-7	1-7	S7	AUDYSSEY
D31	2-7	2-7	2-7	2-7	2-7	2-7	2-7	2-7	2-7	2-7	2-7	2-7	2-7	2-7	2-7	2-7	S8	TUNED
D32	3-7	3-7	3-7	3-7	3-7	3-7	3-7	3-7	3-7	3-7	3-7	3-7	3-7	3-7	3-7	3-7	MUTE	STEREO
D33	4-7	4-7	4-7	4-7	4-7	4-7	4-7	4-7	4-7	4-7	4-7	4-7	4-7	4-7	4-7	4-7	PCM	RDS
D34	5-7	5-7	5-7	5-7	5-7	5-7	5-7	5-7	5-7	5-7	5-7	5-7	5-7	5-7	5-7	5-7	Z2	SLEEP
AD1	-	-	-	-	-	-	-	-	-	-	-	-	-	-	-	-	DIG.	-
AD2	-	-	-	-	-	-	-	-	-	-	-	-	-	-	-	-	ANA.	-

3. Remote Code Table

Marantz Remote Command Chart

Last update: May 15, 2017
V02

x
This pink color's cell = New assigned code

Item: AV Pre/Processor, AV Receiver, Stereo Receiver

*... Note is placed at end of this chart.
Function description is located right end.

Zone		Command Name	Remote Code: RC-5/ RC-5 Ex. Format System	Command	Extension	For search	For AMX Extension Command(*7)	AV Receiver SR6012	AV Receiver SR5012	Slim Line AV Receiver NR1608	Slim Line AV Receiver NR1508
Main Zone	Power Control	POWER ON/OFF	16	12	—	16 12	RCRC516012	X	X	X	X
		POWER ON	16	12	01	16 12 01	RCRC51601201	X	X	X	X
		POWER OFF	16	12	02	16 12 02	RCRC51601202	X	X	X	X
		SYSTEM POWER OFF	16	12	13	16 12 13	RCRC51601213	X	X	X	X
	Volume Control	VOL +	16	16	—	16 16	RCRC516016	X	X	X	X
		VOL -	16	17	—	16 17	RCRC516017	X	X	X	X
		Direct VOLUME	16	111	00-63	16 111 [00-63]	RCRC516111	X	X	X	X
		Audio MUTE ON	16	13	00	16 13 00	RCRC51601300	X	X	X	X
		Audio MUTE OFF	16	13	01	16 13 01	RCRC51601301	X	X	X	X
		Audio MUTE (Toggle)	16	13	—	16 13	RCRC516013	X	X	X	X
	Speaker Output	SPEAKER Sel.	16	29	—	16 29	RCRC516029	X	X	X	X
		SPEAKER-A ON/OFF	16	35	—	16 35	RCRC516035	X	X	X	X
		SPEAKER-B ON/OFF	16	39	—	16 39	RCRC516039	X	X	X	X
	Menu Control	OSD Menu On	16	82	—	16 82	RCRC516082	X	X	X	X
		MENU	16	82	60	16 82 60	RCRC51608260	X	X	X	X
		OPTION	16	82	11	16 82 11	RCRC51608211	X	X	X	X
		EXIT MENU	16	83	—	16 83	RCRC516083	X	X	X	X
		ENTER (OK)	16	87	—	16 87	RCRC516087	X	X	X	X
		Return	16	87	04	16 87 04	RCRC51608704	X	X	X	X
		CURSOR Up	16	80	—	16 80	RCRC516080	X	X	X	X
		CURSOR Down	16	81	—	16 81	RCRC516081	X	X	X	X
		CURSOR Left	16	85	—	16 85	RCRC516085	X	X	X	X
		CURSOR Right	16	86	—	16 86	RCRC516086	X	X	X	X
		Search	16	92	01	16 92 01	RCRC51609201	X	X	X	X
		Insert	16	77	01	16 77 01	RCRC51607701	X	X	X	X
		Delete	16	78	01	16 78 01	RCRC51607801	X	X	X	X
	Display / Video	Dimmer(Display)	16	15	00	16 15 00	RCRC51601500	X	X	X	X
		Info.	16	15	08	16 15 08	RCRC51601508	X	X	X	X
		OSD Info.	16	15	—	16 15	RCRC516015	X	X	X	X
		Status	16	15	07	16 15 07	RCRC51601507	X	X	X	X
		Video Select	16	15	00	16 15 00	RCRC51601500	X	X	X	X
		VIDEO OFF (V.OFF)	16	13	02	16 13 02	RCRC51601302	—	—	—	—
	Input Source	INPUT NEXT	16	00	13	16 00 13	RCRC51600013	X	X	X	X
		INPUT BACK	16	00	14	16 00 14	RCRC51600014	X	X	X	X
		TUNER (TUNER FM)	17	63	—	17 63	RCRC517063	X	X	X	X
		Blu-ray(BD)(Code1)	07	63	00	07 63 00	RCRC507063 00	X	X	X	X
		Blu-ray(BD)(Code2)	28	63	00	28 63 00	RCRC528063 00	X	X	X	X
		Blu-ray/DVD	16	02	04	16 02 04	RCRC51600204				X
		CD	29	63	—	29 63	RCRC529063	X	X	X	X
		TV AUDIO	00	63	—	00 63	RCRC500063	X	X	X	X
		DVD	16	00	10	16 00 10	RCRC51600010	X	X	X	—
		MEDIA PLAYER	05	63	—	05 63	RCRC505063	X	X	X	X
		CBL/SAT	06	63	—	06 63	RCRC506063	X	X	X	X
		AUX1(AUX)	16	00	06	16 00 06	RCRC51600006	X	X	X	X
		AUX2	16	00	07	16 00 07	RCRC51600007	X	X	X	—
		AUX3(Additional Source)	16	00	08	16 00 08	RCRC51600008	—	—	—	—
		AUX4(Additional Source)	16	02	00	16 02 00	RCRC51600200	—	—	—	—
		AUX5(Additional Source)	16	02	01	16 02 01	RCRC51600201	—	—	—	—
		AUX6(Additional Source)	16	02	02	16 02 02	RCRC51600202	—	—	—	—
		AUX7(Additional Source)	16	02	03	16 02 03	RCRC51600203	—	—	—	—
		Bluetooth	16	02	16	16 02 16	RCRC51600216	X	X	X	X
		GAME	16	00	62	16 00 62	RCRC51600062	X	X	X	X
			16	00	08	16 00 08	RCRC51600008	—	—	—	—
		PHONO	21	63	—	21 63	RCRC521063	X	—	—	—
		USB	24	63	01	24 63 01	RCRC52406301	—	—	—	—
			24	63	11	24 63 11	RCRC52406311	X (USB)	X (USB)	X (USB)	X (USB)
		HEOS Music(NETWORK)	24	63	10	24 63 10	RCRC52406310	X (HEOS Music)	X (HEOS Music)	X (HEOS Music)	X (HEOS Music)
		Internet Radio Select	27	63	20	27 63 20	RCRC52706320	X	X	X	X
		SIRIUSXM (*1)	27	63	29	27 63 29	RCRC52706329	—	—	—	—
		Media Server Select	27	63	24	27 63 24	RCRC52706324	—	—	—	—
		Pandora Select (*4)	27	63	26	27 63 26	RCRC52706326	—	—	—	—
		HEOS MUSIC	27	63	10	27 63 10	RCRC52706310	X (HEOS Music)	X (HEOS Music)	X (HEOS Music)	X (HEOS Music)
		HEOS MUSIC	27	63	11	27 63 11	RCRC52706311	X (HEOS Music)	X (HEOS Music)	X (HEOS Music)	X (HEOS Music)
		M-XPort	29	63	01	29 63 01	RCRC52906301	—	—	—	—
		7.1 (6.1)CH. Input ON	16	01	12	16 01 12	RCRC51600112	X	X	—	—
	Smart Select	Smart Select1	16	02	21	16 02 21	RCRC51600221	X	X	X	X
		Smart Select2	16	02	22	16 02 22	RCRC51600222	X	X	X	X
		Smart Select3	16	02	23	16 02 23	RCRC51600223	X	X	X	X
		Smart Select4	16	02	24	16 02 24	RCRC51600224	X	X	X	X
		Smart Select5	16	02	25	16 02 25	RCRC51600225	X	X	X	X
	I/O Setting	Input Mode Select	16	01	01	16 01 01	RCRC51600101	X	X	X	X
		INPUT MODE:AUTO	16	01	15	16 01 15	RCRC51600115	X	X	X	X
		INPUT MODE:HDMI	16	01	16	16 01 16	RCRC51600116	X	X	X	X
		INPUT MODE:DIGITAL	16	01	17	16 01 17	RCRC51600117	X	X	X	X
		INPUT MODE:ANALOG	16	01	18	16 01 18	RCRC51600118	X	X	X	X
		Bilingual (Audio Channel)	16	01	14	16 01 14	RCRC51600114	—	—	X	—
		LIP SYNC.(Audio Delay)	16	10	01	16 10 01	RCRC51601001	X	X	X	X
		Resolution(Analog)	16	15	10	16 15 10	RCRC51601510	X	X	X	—
		Resolution(HDMI)	16	15	11	16 15 11	RCRC51601511	X	X	X	—
		Vertical Stretch ON	16	15	12	16 15 12	RCRC51601512	—	—	—	—
		Vertical Stretch OFF	16	15	13	16 15 13	RCRC51601513	—	—	—	—
		HDMI Audio Output Select (Toggle)	16	84	00	16 84 00	RCRC51608400	X	X	X	X
		HDMI Audio Output: Enable (Decode by AVR)	16	84	01	16 84 01	RCRC51608401	X	X	X	X
		HDMI Audio Output: Through (Decode by TV)	16	84	02	16 84 02	RCRC51608402	X	X	X	X
		COMPONENT-2 for MAIN	16	84	31	16 84 31	RCRC51608431	—	—	—	—
		COMPONENT-2 for MULTI-A	16	84	32	16 84 32	RCRC51608432	—	—	—	—
		Video Mode (Toggle)	16	84	50	16 84 50	RCRC51608450	X	X	X	—
		Video Mode: Auto	16	84	51	16 84 51	RCRC51608451	X	X	X	—
		Video Mode: Movie	16	84	52	16 84 52	RCRC51608452	X	X	X	—
		Video Mode: Game	16	84	53	16 84 53	RCRC51608453	X	X	X	—
		HDMI Output Select (Toggle)	16	120	00	16 120 00	RCRC51612000	X	X	—	—
		HDMI Out-1	16	120	01	16 120 01	RCRC51612001	X	X	—	—
		HDMI Out-2	16	120	02	16 120 02	RCRC51612002	X	X	—	—
		HDMI Out-Auto(Dual)	16	120	03	16 120 03	RCRC51612003	X	X	—	—
	CEC	HDMI Control (CEC) ON	16	84	08	16 84 08	RCRC51608408	X	X	X	X
		HDMI Control (CEC) OFF	16	84	09	16 84 09	RCRC51608409	X	X	X	X
	Surround Mode	SURROUND MODE (Toggle/NEXT)	16	37	—	16 37	RCRC516037	X	X	X	X
		SURROUND MODE (Back)	16	64	15	16 64 15	RCRC51606415	X	X	X	X
		MOVIE SURROUND	16	37	29	16 37 29	RCRC51603729	X	X	X	X
		MUSIC SURROUND	16	37	53	16 37 53	RCRC51603753	X	X	X	X
		GAME SURROUND	16	64	18	16 64 18	RCRC51606418	X	X	X	X
		AUTO	16	37	45	16 37 45	RCRC51603745	X	X	X	X
		STEREO	16	37	30	16 37 30	RCRC51603730	X	X	X	X
		MONO	16	37	37	16 37 37	RCRC51603737	—	—	—	—
		MULTI-CH Stereo	16	37	57	16 37 57	RCRC51603757	X	X	X	X
	THX	THX	16	64	13	16 64 13	RCRC51606413	—	—	—	—
		THX CINEMA	16	37	36	16 37 36	RCRC51603736	—	—	—	—
		THX SURROUND EX	16	37	58	16 37 58	RCRC51603758	—	—	—	—
		THX ULTRA 2	16	64	07	16 64 07	RCRC51606407	—	—	—	—
		THX SELECT 2				16 64 07	RCRC51606407	—	—	—	—
		THX 5.1 MUSIC	16	64	04	16 64 04	RCRC51606404	—	—	—	—
		THX GAMES	16	64	14	16 64 14	RCRC51606414	—	—	—	—
		NEURAL	16	64	16	16 64 16	RCRC51606416	—	—	—	—
	Dolby	DOLBY	16	37	41	16 37 41	RCRC51603741	—	—	—	—
		PRO LOGIC	16	37	00	16 37 00	RCRC51603700	—	—	—	—
		PL IIx(z) Movie / PL II Movie	16	64	00	16 64 00	RCRC51606400	—	—	—	X
		PL IIx(z) Music / PL II Music	16	64	01	16 64 01	RCRC51606401	—	—	—	X
		PL IIx Game	16	64	12	16 64 12	RCRC51606412	—	—	—	—
		PL IIz	16	64	17	16 64 17	RCRC51606417	—	—	—	—
		DOLBY HEADPHONE	16	37	60	16 37 60	RCRC51603760	—	—	—	—
		EX/ES	16	37	61	16 37 61	RCRC51603761	—	—	—	—
		Dolby Atmos ON/OFF	16	64	25	16 64 25	RCRC51606425	X	X	X	—
	dts	DTS Mode	16	64	08	16 64 08	RCRC51606408	—	—	—	—
		DTS	16	37	46	16 37 46	RCRC51603746	X	X	X	X
		DTS ES	16	64	03	16 64 03	RCRC51606403	—	—	—	—
		DTS Neo6 Cinema	16	64	05	16 64 05	RCRC51606405	—	—	—	X
		DTS Neo6 Music	16	64	06	16 64 06	RCRC51606406	—	—	—	X
		DTS NEO:X ON/OFF	16	64	22	16 64 22	RCRC51606422	—	—	—	—
		VIRTUAL	16	37	51	16 37 51	RCRC51603751	X	X	X	X
		Decoder Mode	16	01	20	16 01 20	RCRC51600120	—	—	—	—
		DSP MODE	16	37	63	16 37 63	RCRC51603763	—	—	—	—
		SOURCE(Pure) DIRECT (Toggle)	16	34	—	16 34	RCRC51603401	X	X	X	X
		PURE DIRECT (Toggle)	16	34	01	16 34 01	RCRC51603401	—	—	—	—
		Direct Mode	16	34	02	16 34 02	RCRC51603402	X	X	X	X
		Pure Direct	16	34	03	16 34 03	RCRC51603403	X	X	X	X
		All Zone Stereo ON/OFF	16	100	00	16 100 00	RCRC51610000	X	X	X	—
		All Zone Stereo ON	16	100	01	16 100 01	RCRC51610001	X	X	X	—
		All Zone Stereo OFF	16	100	02	16 100 02	RCRC51610002	X	X	X	—
	Sound Effect	Cinema EQ (HT-EQ)(Toggle)	16	64	11	16 64 11	RCRC51606411	X(Cinema EQ)	X(Cinema EQ)	X(Cinema EQ)	X(Cinema EQ)
		Loudness Management ON/OFF(Toggle)	16	64	19	16 64 19	RCRC51606419	X	X	X	X
		M-DAX	16	22	04	16 22 04	RCRC51602204	X	X	X	X
		M-DAX OFF	16	22	06	16 22 06	RCRC51602206	X	X	X	X
		M-DAX HIGH	16	22	07	16 22 07	RCRC51602207	X	X	X	X
		M-DAX LOW	16	22	08	16 22 08	RCRC51602208	X	X	X	X
		M-DAX MID	16	22	09	16 22 09	RCRC51602209	X	X	X	X
		Bass Sync UP	16	22	12	16 22 12	RCRC51602212	—	—	—	—
		Bass Sync DOWN	16	22	22	16 22 22	RCRC51602222	—	—	—	—
	Tone / Balance / Trim	TONE CONTROL ON/OFF (Toggle)	16	22	01	16 22 01	RCRC51602201	X	X	X	X
		TONE CONTROL OFF	16	22	10	16 22 10	RCRC51602210	X	X	X	X
		TONE CONTROL ON	16	22	11	16 22 11	RCRC51602211	X	X	X	X
		BASS +	16	25	—	16 25	RCRC516025	X	X	X	X
		BASS -	16	25	00	16 25 00	RCRC51602500	X	X	X	X
		TREBLE +	16	24		16 24	RCRC516024	X	X	X	X
		TREBLE -	16	26	—	16 26	RCRC516026	X	X	X	X
		TEST TONE	16	37	21	16 37 21	RCRC51603721	X	X	X	X
		Volume Reset	16	37	31	16 37 31	RCRC51603731	—	—	—	—
		CH. SELECT	16	37	33	16 37 33	RCRC51603733	X	X	X	X
		CH. LEVEL +	16	37	34	16 37 34	RCRC51603734	—	—	—	—
		CH. LEVEL -	16	37	35	16 37 35	RCRC51603735	—	—	—	—
		BALANCE RIGHT	16	26	—	16 26	RCRC516026	—	—	—	—
		BALANCE LEFT	16	27	—	16 27	RCRC516027	—	—	—	—
		Front L (A-TRIM) + (Up)	16	26	01	16 26 01	RCRC51602601	X	X	X	X
		Front L (A-TRIM) - (Down)	16	26	02	16 26 02	RCRC51602602	X	X	X	X
		Front R (B-TRIM) + (Up)	16	26	03	16 26 03	RCRC51602603	X	X	X	X
		Front R (B-TRIM) - (Down)	16	26	04	16 26 04	RCRC51602604	X	X	X	X
		Surround L + (Up)	16	26	05	16 26 05	RCRC51602605	X	X	X	X
		Surround L - (Down)	16	26	06	16 26 06	RCRC51602606	X	X	X	X
		Surround R + (Up)	16	26	07	16 26 07	RCRC51602607	X	X	X	X
		Surround R - (Down)	16	26	08	16 26 08	RCRC51602608	X	X	X	X
		Surround Back L + (Up)	16	26	09	16 26 09	RCRC51602609	X	X	X	—
		Surround Back L - (Down)	16	26	10	16 26 10	RCRC51602610	X	X	X	—
		Surround Back R + (Up)	16	26	11	16 26 11	RCRC51602611	X	X	X	—

	Surround Back R - (Down)	16	26	12	16 26 12	RCRC51602612	X	X	X	—
	Front Wide L + (Up)	16	26	13	17 26 13	RCRC51702613	—	—	—	—
	Front Wide L - (Down)	16	26	14	18 26 14	RCRC51802614	—	—	—	—
	Front Wide R + (Up)	16	26	15	19 26 15	RCRC51902615	—	—	—	—
	Front Wide R - (Down)	16	26	16	20 26 16	RCRC52002616	—	—	—	—
	Front Height L + (Up)	16	26	17	16 26 17	RCRC51602617	X	X	X	—
	Front Height L - (Down)	16	26	18	16 26 18	RCRC51602618	X	X	X	—
	Front Height R + (Up)	16	26	19	16 26 19	RCRC51602619	X	X	X	—
	Front Height R - (Down)	16	26	20	16 26 20	RCRC51602620	X	X	X	—
	Center + (Up)	16	37	11	16 37 11	RCRC51603711	X	X	X	X
	Center - (Down)	16	37	12	16 37 12	RCRC51603712	X	X	X	X
	Subwoofer + (Up)	16	37	49	16 37 49	RCRC51603749	X	X	X	X
	Subwoofer - (Down)	16	37	50	16 37 50	RCRC51603750	X	X	X	X
	Subwoofer 2 + (Up)	16	64	23	16 64 23	RCRC51606423	X	—	—	—
	Subwoofer 2 - (Down)	16	64	24	16 64 24	RCRC51606424	X	—	—	—
	Top Front L + (Up)	16	26	21	16 26 21	RCRC51602621	X	X	X	—
	Top Front L - (Down)	16	26	22	16 26 22	RCRC51602622	X	X	X	—
	Top Front R + (Up)	16	26	23	16 26 23	RCRC51602623	X	X	X	—
	Top Front R - (Down)	16	26	24	16 26 24	RCRC51602624	X	X	X	—
	Top Middle L + (Up)	16	26	25	16 26 25	RCRC51602625	X	X	X	—
	Top Middle L - (Down)	16	26	26	16 26 26	RCRC51602626	X	X	X	—
	Top Middle R + (Up)	16	26	27	16 26 27	RCRC51602627	X	X	X	—
	Top Middle R - (Down)	16	26	28	16 26 28	RCRC51602628	X	X	X	—
	Top Rear L + (Up)	16	26	29	16 26 29	RCRC51602629	X	—	—	—
	Top Rear L - (Down)	16	26	30	16 26 30	RCRC51602630	X	—	—	—
	Top Rear R + (Up)	16	26	31	16 26 31	RCRC51602631	X	—	—	—
	Top Rear R - (Down)	16	26	32	16 26 32	RCRC51602632	X	—	—	—
	Rear Height L + (Up)	16	26	33	16 26 33	RCRC51602633	X	—	—	—
	Rear Height L - (Down)	16	26	34	16 26 34	RCRC51602634	X	—	—	—
	Rear Height R + (Up)	16	26	35	16 26 35	RCRC51602635	X	—	—	—
	Rear Height R - (Down)	16	26	36	16 26 36	RCRC51602636	X	—	—	—
	Front Dolby L + (Up)	16	26	37	16 26 37	RCRC51602637	X	X	X	—
	Front Dolby L - (Down)	16	26	38	16 26 38	RCRC51602638	X	X	X	—
	Front Dolby R + (Up)	16	26	39	16 26 39	RCRC51602639	X	X	X	—
	Front Dolby R - (Down)	16	26	40	16 26 40	RCRC51602640	X	X	X	—
	Surround Dolby L + (Up)	16	26	41	16 26 41	RCRC51602641	X	X	X	—
	Surround Dolby L - (Down)	16	26	42	16 26 42	RCRC51602642	X	X	X	—
	Surround Dolby R + (Up)	16	26	43	16 26 43	RCRC51602643	X	X	X	—
	Surround Dolby R - (Down)	16	26	44	16 26 44	RCRC51602644	X	X	X	—
	Back Dolby L + (Up)	16	26	45	16 26 45	RCRC51602645	X	—	—	—
	Back Dolby L - (Down)	16	26	46	16 26 46	RCRC51602646	X	—	—	—
	Back Dolby R + (Up)	16	26	47	16 26 47	RCRC51602647	X	—	—	—
	Back Dolby R - (Down)	16	26	48	16 26 48	RCRC51602648	X	—	—	—
	Surround Height L + (Up)	16	26	49	16 26 49	RCRC51602649	—	—	—	—
	Surround Height R - (Down)	16	26	50	16 26 50	RCRC51602650	—	—	—	—
	Surround Height L + (Up)	16	26	51	17 26 51	RCRC51702651	—	—	—	—
	Surround Height R - (Down)	16	26	52	17 26 52	RCRC51702652	—	—	—	—
	Top Surround + (Up)	16	26	53	17 26 53	RCRC51702653	—	—	—	—
	Top Surround - (Down)	16	26	54	17 26 54	RCRC51702654	—	—	—	—
Audyssey	Audyssey MultEQ: OFF	16	28	00	16 28 00	RCRC51602800	—	—	—	—
	Audyssey MultEQ MODE (Toggle)	16	28	02	16 28 02	RCRC51602802	X	X	X	X
	Audyssey Dynamic EQ/VOL	16	28	40	16 28 40	RCRC51602840	X	X	X	X
	Audyssey Dynamic EQ Mode	16	28	20	16 28 20	RCRC51602820	X	X	X	X
	Audyssey Dynamic EQ Mode Off	16	28	21	16 28 21	RCRC51602821	X	X	X	X
	Audyssey Dynamic EQ Mode On	16	28	22	16 28 22	RCRC51602822	X	X	X	X
	Audyssey Dynamic Volume Mode	16	28	30	16 28 30	RCRC51602830	X	X	X	X
	Audyssey Dynamic Volume Mode Off	16	28	31	16 28 31	RCRC51602831	X	X	X	X
	Audyssey Dynamic Volume Mode L	16	28	32	16 28 32	RCRC51602832	X	X	X	X
	Audyssey Dynamic Volume Mode M	16	28	33	16 28 33	RCRC51602833	X	X	X	X
	Audyssey Dynamic Volume Mode H	16	28	34	16 28 34	RCRC51602834	X	X	X	X
	Audyssey Dynamic EQ Offset Off	16	28	51	16 28 51	RCRC51602851	X	X	X	X
	Audyssey Dynamic EQ Offset -5dB	16	28	52	16 28 52	RCRC51602852	X	X	X	X
	Audyssey Dynamic EQ Offset -10dB	16	28	53	16 28 53	RCRC51602853	X	X	X	X
	Audyssey Dynamic EQ Offset -15dB	16	28	54	16 28 54	RCRC51602854	X	X	X	X
	Audyssey LFC ON/OFF	16	64	40	16 64 40	RCRC51606440	X	—	—	—
	Audyssey LFC ON	16	64	41	16 64 41	RCRC51606441	X	—	—	—
	Audyssey LFC OFF	16	64	42	16 64 42	RCRC51606442	X	—	—	—
	Audyssey DSX ON/OFF	16	64	50	16 64 50	RCRC51606450	—	—	—	—
	Audyssey DSX OFF	16	64	51	16 64 51	RCRC51606451	—	—	—	—
	Audyssey DSX ON(Height)	16	64	52	16 64 52	RCRC51606452	—	—	—	—
	Audyssey DSX ON(Wide)	16	64	53	16 64 53	RCRC51606453	—	—	—	—
	Audyssey DSX ON(Wide/Height)	16	64	54	16 64 54	RCRC51606454	—	—	—	—
Graphic EQ	Graphic EQ ON/OFF	16	28	10	16 28 10	RCRC51602810	X	X	X	X
	Graphic EQ ON	16	28	12	16 28 12	RCRC51602812	X	X	X	X
	Graphic EQ OFF	16	28	11	16 28 11	RCRC51602811	X	X	X	X
ECO	ECO Mode	16	58	10	16 58 10	RCRC51605810	X	X	X	X
	ECO Mode ON	16	58	12	16 58 12	RCRC51605812	X	X	X	X
	ECO Mode OFF	16	58	11	16 58 11	RCRC51605811	X	X	X	X
	ECO Mode AUTO	16	58	13	16 58 13	RCRC51605813	X	X	X	X
Sleep	SLEEP	16	38	—	16 38	RCRC51603800	X	X	X	X
	SLEEP OFF	16	38	00	16 38 00	RCRC51603800	X	X	X	X
Trigger	DC Trgger-1 ON	16	125	01	16 125 01	RCRC51612501	X	X	X	—
	DC Trgger-1 OFF	16	125	02	16 125 02	RCRC51612502	X	X	X	—
	DC-Trgger-2 ON	16	125	03	16 125 03	RCRC51612503	—	—	—	—
	DC-Trgger-2 OFF	16	125	04	16 125 04	RCRC51612504	—	—	—	—
	DC Trgger-3 ON	16	125	05	16 125 05	RCRC51612505	—	—	—	—
	DC Trgger-3 OFF	16	125	06	16 125 06	RCRC51612506	—	—	—	—
	DC-Trgger-4 ON	16	125	07	16 125 07	RCRC51612507	—	—	—	—
	DC-Trgger-4 OFF	16	125	08	16 125 08	RCRC51612508	—	—	—	—
Tuner	BAND	17	47	01	17 47 01	RCRC51704701	X	X	X	X

	FM	17	45	—	17 45	RCRC517045	X	X	X	X
	AM	17	46	—	17 46	RCRC517046	X	X	X	X
	T-MODE	17	37	—	17 37	RCRC517037	X	X	X	X
	MEMO (MEMORY)	17	41	—	17 41	RCRC517041	X	X	X	X
	MEMORY	24	41	50	24 41 50	RCRC52404150	X	X	X	X
	FREQ.(tuning) Up +	17	30	—	17 30	RCRC517030	X	X	X	X
	FREQ.(tuning) Down -	17	31	—	17 31	RCRC517031	X	X	X	X
	PRESET Up +	17	32	—	17 32	RCRC517032	X	X	X	X
	PRESET Down -	17	33	—	17 33	RCRC517033	X	X	X	X
	0 (PRESET 0)	17	00	—	17 00	RCRC517000	X	X	X	X
	1 (PRESET 1)	17	01	—	17 01	RCRC517001	X	X	X	X
	2 (PRESET 2)	17	02	—	17 02	RCRC517002	X	X	X	X
	3 (PRESET 3)	17	03	—	17 03	RCRC517003	X	X	X	X
	4 (PRESET 4)	17	04	—	17 04	RCRC517004	X	X	X	X
	5 (PRESET 5)	17	05	—	17 05	RCRC517005	X	X	X	X
	6 (PRESET 6)	17	06	—	17 06	RCRC517006	X	X	X	X
	7 (PRESET 7)	17	07	—	17 07	RCRC517007	X	X	X	X
	8 (PRESET 8)	17	08	—	17 08	RCRC517008	X	X	X	X
	9 (PRESET 9)	17	09	—	17 09	RCRC517009	X	X	X	X
	Cursor Up	17	80	01	17 80 01	RCRC51708001	X	X	X	X
	Cursor Down	17	81	01	17 81 01	RCRC51708101	X	X	X	X
	Cursor Left	17	85	01	17 85 01	RCRC51708501	X	X	X	X
	Cursor Right	17	86	01	17 86 01	RCRC51708601	X	X	X	X
	Cursor Enter	17	87	01	17 87 01	RCRC51708701	X	X	X	X
	RETURN	17	83	01	17 83 01	RCRC51708301	X	X	X	X
	RTY (For Europe Model) (*5)	17	120	—	17 120	RCRC51712120	X (*6)	X (*6)	X (*6)	X (*6)
	RT (For Europe Model) (*5)	17	120	40	17 120 40	RCRC51712040	X (*6)	X (*6)	X (*6)	X (*6)
	RDS/SEARCH	17	120	60	17 120 60	RCRC51712060	X	X	X	X
USB	Cursor Up	24	80	01	24 80 01	RCRC52408001	X	X	X	X
	Cursor Down	24	81	01	24 81 01	RCRC52408101	X	X	X	X
	Cursor Left	24	85	01	24 85 01	RCRC52408501	X	X	X	X
	Cursor Right	24	86	01	24 86 01	RCRC52408601	X	X	X	X
	Enter	24	87	01	24 87 01	RCRC52408701	X	X	X	X
	Return	24	87	21	24 87 21	RCRC52408721	X	X	X	X
	Page Previous	24	32	20	24 32 20	RCRC52403220	X	X	X	X
	Page Next	24	33	20	24 33 20	RCRC52403320	X	X	X	X
	Play/Pause	24	53	00	24 53 00	RCRC52405300	X	X	X	X
	Play	24	53	01	24 53 01	RCRC52405301	X	X	X	X
	Pause	24	48	01	24 48 01	RCRC52404801	X	X	X	X
	Stop	24	54	01	24 54 01	RCRC52405401	X	X	X	X
	Next	24	32	01	24 32 01	RCRC52403201	X	X	X	X
	Previous	24	33	01	24 33 01	RCRC52403301	X	X	X	X
	REW (Toggle)	24	50	01	24 50 01	RCRC52405001	—	—	—	—
	FF (Toggle)	24	52	01	24 52 01	RCRC52405201	—	—	—	—
	Random(Toggle)	24	28	01	24 28 01	RCRC52402801	—	—	—	—
	Random Off	24	28	02	24 28 02	RCRC52402802	—	—	—	—
	Random On(Songs)	24	28	03	24 28 03	RCRC52402803	—	—	—	—
	Repeat(Toggle)	24	29	01	24 29 01	RCRC52402901	—	—	—	—
	Repeat Off	24	29	02	24 29 02	RCRC52402902	—	—	—	—
	Repeat One	24	29	03	24 29 03	RCRC52402903	—	—	—	—
	Repeat All	24	29	04	24 29 04	RCRC52402904	—	—	—	—
Network	Network(DMP): Random (toggle)	27	28	01	27 28 01	RCRC52702801	—	—	—	—
	Network(DMP): Random Off	27	28	02	27 28 02	RCRC52702802	—	—	—	—
	Network(DMP): Random On	27	28	03	27 28 03	RCRC52702803	—	—	—	—
	Network(DMP): Repeat (toggle)	27	29	01	27 29 01	RCRC52702901	—	—	—	—
	Network(DMP): Repeat Off	27	29	02	27 29 02	RCRC52702902	—	—	—	—
	Network(DMP): Repeat One	27	29	03	27 29 03	RCRC52702903	—	—	—	—
	Network(DMP): Repeat All	27	29	04	27 29 04	RCRC52702904	—	—	—	—
	Network(DMP)/USB: Next	27	32	01	27 32 01	RCRC52703201	X	X	X	X
	Network(DMP)/USB: Previous	27	33	01	27 33 01	RCRC52703301	X	X	X	X
	Network(DMP)/USB: Pause	27	48	01	27 48 01	RCRC52704801	X	X	X	X
	Network(DMP)/USB: REW	27	50	01	27 50 01	RCRC52705001	—	—	—	—
	Network(DMP)/USB: FF	27	52	01	27 52 01	RCRC52705201	—	—	—	—
	Network(DMP): Play(/Pause)	27	53	01	27 53 01	RCRC52705301	X	X	X	X
	Internet Radio - Recent Played Station	27	53	50	27 53 50	RCRC52705350	X	X	X	X
	Network(DMP): Stop	27	54	01	27 54 01	RCRC52705401	X	X	X	X
	MEMORY	27	41	50	27 41 50	RCRC52704150	—	—	—	—
	Network(DMP): Cursor Up	27	80	01	27 80 01	RCRC52708001	X	X	X	X
	Network(DMP): Cursor Down	27	81	01	27 81 01	RCRC52708101	X	X	X	X
	Network(DMP): Cursor Left	27	85	01	27 85 01	RCRC52708501	X	X	X	X
	Network(DMP): Cursor Right	27	86	01	27 86 01	RCRC52708601	X	X	X	X
	Network(DMP): Enter	27	87	01	27 87 01	RCRC52708701	X	X	X	X
	Network(DMP): Page Next	27	80	04	27 80 04	RCRC52708004	X	X	X	X
	Network(DMP): Page Previous	27	81	04	27 81 04	RCRC52708104	X	X	X	X
	Network(DMP): Return	27	87	21	27 87 21	RCRC52708721	X	X	X	X
	Network(DMP):HOME	27	82	02	27 82 02	RCRC52708202	—	—	—	—
2nd Zone (Multi Zone A) Power Control	POWER ON/OFF	16	29	00	16 29 00	RCRC51602900	X	X	X	—
	POWER ON	16	29	03	16 29 03	RCRC51602903	X	X	X	—
	POWER OFF	16	29	04	16 29 04	RCRC51602904	X	X	X	—
Volume Control	VOL. +	16	29	01	16 29 01	RCRC51602901	X	X	X	—
	VOL. -	16	29	02	16 29 02	RCRC51602902	X	X	X	—
	Direct VOLUME	16	112	00-63	16 112 [00-63]	RCRC51611200-63	X	X	X	—
	MUTE	16	29	08	16 29 08	RCRC51602908	X	X	X	—
Input Source	INPUT NEXT	16	30	03	16 30 03	RCRC51603003	X	X	X	—
	INPUT BACK	16	30	04	16 30 04	RCRC51603004	X	X	X	—
	Source call	16	30	10	16 30 10	RCRC51603010	X	X	X	—
	CD	16	29	11	16 29 11	RCRC51602911	X	X	X	—
	TV AUDIO(TV)	16	29	15	16 29 15	RCRC51602915	X	X	X	—
	DVD	16	29	16	16 29 16	RCRC51602916	X	X	X	—
	MEDIAPLAYER	16	29	17	16 29 17	RCRC51602917	X	X	X	—

	CBL/SAT	16	29	19	16 29 19	RCRC51602919	X	X	X	—
	AUX1(AUX)	16	29	20	16 29 20	RCRC51602920	X	X	X	—
	AUX2	16	29	21	16 29 21	RCRC51602921	X	X	X	—
	AUX3(Additional Source)	16	29	24	16 29 24	RCRC51602924	—	—	—	—
	AUX4(Additional Source)	16	29	25	16 29 25	RCRC51602925	—	—	—	—
	AUX5(Additional Source)	16	29	26	16 29 26	RCRC51602926	—	—	—	—
	AUX6(Additional Source)	16	29	27	16 29 27	RCRC51602927	—	—	—	—
	AUX7(Additional Source)	16	29	28	16 29 28	RCRC51602928	—	—	—	—
	TUNER (TUNER 1.FM)	16	29	30	16 29 30	RCRC51602930	X	X	X	—
	HEOS Music(NETWORK)	16	29	23	16 29 23	RCRC51602923	X (HEOS Music)	X (HEOS Music)	X (HEOS Music)	—
	USB	16	30	11	16 30 11	RCRC51603011	X (iPod/USB)	X (iPod/USB)	X (USB)	—
	Blu-ray(BD)	16	30	12	16 30 12	RCRC51603012	X	X	X	—
	M-XPort	16	30	13	16 30 13	RCRC51603013	—	—	—	—
	Game	16	30	14	16 30 14	RCRC51603014	X	X	X	—
	PHONO	16	30	15	16 30 15	RCRC51603015	X	—	—	—
	Bluetooth	16	30	16	16 30 16	RCRC51603016	X	X	X	—
	Internet Radio	27	92	20	27 92 20	RCRC52709220	X	X	X	—
	SIRIUSXM (*4)	27	92	29	27 92 29	RCRC52709229	—	—	—	—
	Media Server	27	92	24	27 92 24	RCRC52709224	—	—	—	—
	Pandora (*4)	27	92	26	27 92 26	RCRC52709226	—	—	—	—
Smart Select	Smart Select1	16	30	21	16 30 21	RCRC51603021	X	X	X	—
	Smart Select2	16	30	22	16 30 22	RCRC51603022	X	X	X	—
	Smart Select3	16	30	23	16 30 23	RCRC51603023	X	X	X	—
	Smart Select4	16	30	24	16 30 24	RCRC51603024	X	X	X	—
	Smart Select5	16	30	25	16 30 25	RCRC51603025	X	X	X	—
Control	Cursor Up	16	31	10	16 31 10	RCRC51603110	X	X	X	—
	Cursor Down	16	31	11	16 31 11	RCRC51603111	X	X	X	—
	Cursor Left	16	31	12	16 31 12	RCRC51603112	X	X	X	—
	Cursor Right	16	31	13	16 31 13	RCRC51603113	X	X	X	—
	Enter	16	31	14	16 31 14	RCRC51603114	X	X	X	—
	Return	16	31	15	16 31 15	RCRC51603115	X	X	X	—
	Memory	16	31	16	16 30 14	RCRC51603014	X	X	X	—
Sleep	SLEEP (Toggle)	16	29	10	16 29 10	RCRC51602910	X	X	X	—
	SLEEP OFF	16	38	10	16 38 10	RCRC51603810	X	X	X	—
Tuner	[Tuner-1] 0	17	29	00	17 29 00	RCRC51702900	X	X	X	—
	[Tuner-1] 1	17	29	01	17 29 01	RCRC51702901	X	X	X	—
	[Tuner-1] 2	17	29	02	17 29 02	RCRC51702902	X	X	X	—
	[Tuner-1] 3	17	29	03	17 29 03	RCRC51702903	X	X	X	—
	[Tuner-1] 4	17	29	04	17 29 04	RCRC51702904	X	X	X	—
	[Tuner-1] 5	17	29	05	17 29 05	RCRC51702905	X	X	X	—
	[Tuner-1] 6	17	29	06	17 29 06	RCRC51702906	X	X	X	—
	[Tuner-1] 7	17	29	07	17 29 07	RCRC51702907	X	X	X	—
	[Tuner-1] 8	17	29	08	17 29 08	RCRC51702908	X	X	X	—
	[Tuner-1] 9	17	29	09	17 29 09	RCRC51702909	X	X	X	—
	[Tuner-1] FM	17	29	10	17 29 10	RCRC51702910	X	X	X	—
	[Tuner-1] AM	17	29	11	17 29 11	RCRC51702911	X	X	X	—
	[Tuner-1] PRESET Up +	17	29	13	17 29 13	RCRC51702913	X	X	X	—
	[Tuner-1] PRESET Down -	17	29	14	17 29 14	RCRC51702914	X	X	X	—
	[Tuner-1] FREQ.(tuning) Up +	17	29	15	17 29 15	RCRC51702915	X	X	X	—
	[Tuner-1] FREQ.(tuning) Down -	17	29	16	17 29 16	RCRC51702916	X	X	X	—
	[Tuner-1] T-MODE	17	29	17	17 29 17	RCRC51702917	X	X	X	—
	BAND (FM/AM)	17	29	61	17 29 61	RCRC51702961	X	X	X	—
	RDS/SEARCH	17	29	62	17 29 62	RCRC51702962	X	X	X	—
USB	Next	24	32	02	24 32 02	RCRC52403202	X	X	X	—
	Previous	24	33	02	24 33 02	RCRC52403302	X	X	X	—
	Random (Toggle)	24	41	01	24 41 01	RCRC52404101	—	—	—	—
	Random On	24	41	02	24 41 02	RCRC52404102	—	—	—	—
	Random Off	24	41	03	24 41 03	RCRC52404103	—	—	—	—
	Repeat(toggle)	24	42	01	24 42 01	RCRC52404201	—	—	—	—
	Repeat Off	24	42	02	24 42 02	RCRC52404202	—	—	—	—
	Repeat One	24	42	03	24 42 03	RCRC52404203	—	—	—	—
	Repeat All	24	42	04	24 42 04	RCRC52404204	—	—	—	—
	Pause	24	48	02	24 48 02	RCRC52404802	X	X	X	—
	REW (Toggle)	24	50	02	24 50 02	RCRC52405002	—	—	—	—
	FF (Toggle)	24	52	02	24 52 02	RCRC52405202	—	—	—	—
	Play	24	53	02	24 53 02	RCRC52405302	X	X	X	—
	Play/Pause	24	53	10	24 53 10	RCRC52405310	X	X	X	—
	iPod Play	24	53	32	24 53 32	RCRC52405332	—	—	—	—
		27	53	32	27 53 32	RCRC52705332	—	—	—	—
	USB Direct Play	24	53	61	24 53 61	RCRC52405361	—	—	—	—
	Stop	24	54	02	24 54 02	RCRC52405402	X	X	X	—
Network	Network(DMP): Next	27	32	02	27 32 02	RCRC52703202	X	X	X	—
	Network(DMP): Previous	27	33	02	27 33 02	RCRC52703302	X	X	X	—
	JPEG Skip + (Next)	27	32	11	27 32 11	RCRC52703211	—	—	—	—
	JPEG Skip - (Previous)	27	33	11	27 33 11	RCRC52703311	—	—	—	—
	Network(DMP): Random (toggle)	27	41	01	27 41 01	RCRC52704101	—	—	—	—
	Network(DMP): Random Off	27	41	02	27 41 02	RCRC52704102	—	—	—	—
	Network(DMP): Random On	27	41	03	27 41 03	RCRC52704103	—	—	—	—
	Memory	27	41	52	27 41 52	RCRC52704152	—	—	—	—
	Network(DMP): Repeat (toggle)	27	42	01	27 42 01	RCRC52704201	—	—	—	—
	Network(DMP): Repeat Off	27	42	02	27 42 02	RCRC52704202	—	—	—	—
	Network(DMP): Repeat 1	27	42	03	27 42 03	RCRC52704203	—	—	—	—
	Network(DMP): Repeat All	27	42	04	27 42 04	RCRC52704204	—	—	—	—
	Network(DMP)/USB: REW	27	50	02	27 50 02	RCRC52705002	—	—	—	—
	Network(DMP)/USB: FF	27	52	02	27 52 02	RCRC52705202	—	—	—	—
	Network(DMP): Play/(Pause)	27	53	02	27 53 02	RCRC52705302	X	X	X	—
	Internet Radio - Recent Played Station	27	53	51	27 53 51	RCRC52705351	X	X	X	—
	Favorite Direct Play	27	53	62	27 53 62	RCRC52705362	—	—	—	—
	Network(DMP): Stop	27	54	02	27 54 02	RCRC52705402	X	X	X	—
	Network(DMP): Pause	27	48	02	27 48 02	RCRC52704802	X	X	X	—
	Network(DMP): Cursor Up	27	80	02	27 80 02	RCRC52708002	X	X	X	—
	Network(DMP): Cursor Down	27	81	02	27 81 02	RCRC52708102	X	X	X	—
	Network(DMP): Cursor Left	27	85	02	27 85 02	RCRC52708502	X	X	X	—
	Network(DMP): Cursor Right	27	86	02	27 86 02	RCRC52708602	X	X	X	—
	Network(DMP): Enter	27	87	02	27 87 02	RCRC52708702	X	X	X	—
	Network(DMP): Page Previous	27	29	13	27 29 13	RCRC52702913	X	X	X	—
	Network(DMP): Page Next	27	29	14	28 29 14	RCRC52802914	X	X	X	—
	Network(DMP): Back(Return)	27	83	02	27 83 02	RCRC52708302	X (Return)	X (Return)	X (Return)	—
	Network(DMP):HOME	27	84	02	27 84 02	RCRC52708402	—	—	—	—
3rd Zone (Multi Zone B)	POWER ON/OFF (Toggle)	16	93	00	16 93 00	RCRC51609300	—	—	—	—
Power Control	POWER ON	16	93	03	16 93 03	RCRC51609303	—	—	—	—
	POWER OFF	16	93	04	16 93 04	RCRC51609304	—	—	—	—
Volume Control	VOL. +	16	93	01	16 93 01	RCRC51609301	—	—	—	—
	VOL. -	16	93	02	16 93 02	RCRC51609302	—	—	—	—
	Direct VOLUME	16	113	00-63	16 113 [00-63]	RCRC516113[00-63]	—	—	—	—
	MUTE (Toggle)	16	93	08	16 93 08	RCRC51609308	—	—	—	—
Input Source	INPUT NEXT	16	92	03	16 92 03	RCRC51609203	—	—	—	—
	INPUT BACK	16	92	04	16 92 04	RCRC51609204	—	—	—	—
	Source Call	16	92	10	16 92 10	RCRC51609210	—	—	—	—
	USB	16	92	11	16 92 11	RCRC51609211	—	—	—	—
	Blu-ray(BD)	16	92	12	16 92 12	RCRC51609212	—	—	—	—
	M-XPort	16	92	13	16 92 13	RCRC51609213	—	—	—	—
	Game	16	92	14	16 92 14	RCRC51609214	—	—	—	—
	PHONO	16	92	15	16 92 15	RCRC51609215	—	—	—	—
	Bluetooth	16	92	16	16 92 16	RCRC51609216	—	—	—	—
	CD	16	93	11	16 93 11	RCRC51609311	—	—	—	—
	TV AUDIO(TV)	16	93	15	16 93 15	RCRC51609315	—	—	—	—
	DVD	16	93	16	16 93 16	RCRC51609316	—	—	—	—
	MEDIAPLAYER(VCR1)	16	93	17	16 93 17	RCRC51609317	—	—	—	—
	VCR2	16	93	18	16 93 18	RCRC51609318	—	—	—	—
	CBL/SAT(SAT)	16	93	19	16 93 19	RCRC51609319	—	—	—	—
	AUX1(AUX)	16	93	20	16 93 20	RCRC51609320	—	—	—	—
	AUX2	16	93	21	16 93 21	RCRC51609321	—	—	—	—
	AUX3(Additional Source)	16	93	24	16 93 24	RCRC51609324	—	—	—	—
	AUX4(Additional Source)	16	93	25	17 93 25	RCRC51709325	—	—	—	—
	AUX5(Additional Source)	16	93	26	18 93 26	RCRC51809326	—	—	—	—
	AUX6(Additional Source)	16	93	27	19 93 27	RCRC51909327	—	—	—	—
	AUX7(Additional Source)	16	93	28	20 93 28	RCRC52009328	—	—	—	—
	HEOS Music(NETWORK)	16	93	23	16 29 23	RCRC51602923	—	—	—	—
	TUNER(TUNER 1.FM)	16	93	30	16 93 30	RCRC51609330	—	—	—	—
	TUNER-2	16	93	31	16 93 31	RCRC51609331	—	—	—	—
	Internet Radio	27	95	20	27 95 20	RCRC52709520	—	—	—	—
	SIRIUSXM (*4)	27	95	29	27 95 29	RCRC52709529	—	—	—	—
	Media Server	27	95	24	27 95 24	RCRC52709524	—	—	—	—
	Pandora (*4)	27	95	26	27 95 26	RCRC52709526	—	—	—	—
Smart Select	Smart Select1	16	92	21	16 92 21	RCRC51609221	—	—	—	—
	Smart Select2	16	92	22	16 92 22	RCRC51609222	—	—	—	—
	Smart Select3	16	92	23	16 92 23	RCRC51609223	—	—	—	—
	Smart Select4	16	92	24	16 92 24	RCRC51609224	—	—	—	—
	Smart Select5	16	92	25	16 92 25	RCRC51609225	—	—	—	—
Control	Cursor Up	16	91	10	16 91 10	RCRC51609110	—	—	—	—
	Cursor Down	16	91	11	16 91 11	RCRC51609111	—	—	—	—
	Cursor Left	16	91	12	16 91 12	RCRC51609112	—	—	—	—
	Cursor Right	16	91	13	16 91 13	RCRC51609113	—	—	—	—
	Enter	16	91	14	16 92 14	RCRC51609214	—	—	—	—
	Return	16	91	15	16 91 15	RCRC51609115	—	—	—	—
	Memory	16	91	16	16 91 16	RCRC51609116	—	—	—	—
Sleep	SLEEP (Toggle)	16	93	10	16 93 10	RCRC51609310	—	—	—	—
	SLEEP OFF	16	38	20	16 38 20	RCRC51603820	—	—	—	—
Tuner	[Tuner-1] 0	17	93	00	17 93 00	RCRC51709300	—	—	—	—
	[Tuner-1] 1	17	93	01	17 93 01	RCRC51709301	—	—	—	—
	[Tuner-1] 2	17	93	02	17 93 02	RCRC51709302	—	—	—	—
	[Tuner-1] 3	17	93	03	17 93 03	RCRC51709303	—	—	—	—
	[Tuner-1] 4	17	93	04	17 93 04	RCRC51709304	—	—	—	—
	[Tuner-1] 5	17	93	05	17 93 05	RCRC51709305	—	—	—	—
	[Tuner-1] 6	17	93	06	17 93 06	RCRC51709306	—	—	—	—
	[Tuner-1] 7	17	93	07	17 93 07	RCRC51709307	—	—	—	—
	[Tuner-1] 8	17	93	08	17 93 08	RCRC51709308	—	—	—	—
	[Tuner-1] 9	17	93	09	17 93 09	RCRC51709309	—	—	—	—
	[Tuner-1] FM	17	93	10	17 93 10	RCRC51709310	—	—	—	—
	[Tuner-1] AM	17	93	11	17 93 11	RCRC51709311	—	—	—	—
	[Tuner-1] PRESET Up +	17	93	13	17 93 13	RCRC51709313	—	—	—	—
	[Tuner-1] PRESET Down -	17	93	14	17 93 14	RCRC51709314	—	—	—	—
	[Tuner-1] FREQ.(tuning) Up +	17	93	15	17 93 15	RCRC51709315	—	—	—	—
	[Tuner-1] FREQ.(tuning) Down -	17	93	16	17 93 16	RCRC51709316	—	—	—	—
	[Tuner-1] T-MODE	17	93	17	17 93 17	RCRC51709317	—	—	—	—
	BAND (FM/AM)	17	93	61	17 93 61	RCRC51709361	—	—	—	—
	RDS/SEARCH	17	93	62	17 93 62	RCRC51709362	—	—	—	—
USB	Zone 3: USB: Next	24	32	03	24 32 03	RCRC52403203	—	—	—	—
	Zone 3: USB: Previous	24	33	03	24 33 03	RCRC52403303	—	—	—	—
	Zone 3: USB: Random Mode	24	44	01	24 44 01	RCRC52404401	—	—	—	—
	Zone 3: USB: Random Off	24	44	02	24 44 02	RCRC52404402	—	—	—	—
	Zone 3: USB: Random On	24	44	03	24 44 03	RCRC52404403	—	—	—	—
	Zone 3: USB: Repeat Mode	24	45	01	24 45 01	RCRC52404501	—	—	—	—
	Zone 3: USB: Repeat Off	24	45	02	24 45 02	RCRC52404502	—	—	—	—
	Zone 3: USB: Repeat One	24	45	03	24 45 03	RCRC52404503	—	—	—	—
	Zone 3: USB: Repeat All	24	45	04	24 45 04	RCRC52404504	—	—	—	—
	Zone 3: USB: Pause	24	48	03	24 48 03	RCRC52404803	—	—	—	—
	Zone 3: USB: REW	24	50	03	24 50 03	RCRC52405003	—	—	—	—
	Zone 3: USB: FF	24	52	03	24 52 03	RCRC52405203	—	—	—	—
	Zone 3: USB: Play/Pause	24	53	03	24 53 03	RCRC52405303	—	—	—	—

		Zone 3: iPod Play	24	53	33	24 53 33	RCRC52405333	—	—	—	—
		Zone 3: USB: Stop	24	54	03	24 54 03	RCRC52405403	—	—	—	—
		Zone 3: USB Direct Play	24	53	62	24 53 62	RCRC52405362	—	—	—	—
	Network	Network(DMP): Next Track(file)	27	32	03	27 32 03	RCRC52703203	—	—	—	—
		Network(DMP): Previous Track(file)	27	33	03	27 33 03	RCRC52703303	—	—	—	—
		Network: Jpeg Skip +	27	32	12	27 32 12	RCRC52703212	—	—	—	—
		Network: Jpeg Skip -	27	33	12	27 33 12	RCRC52703312	—	—	—	—
		Network(DMP): Repeat (toggle)	27	45	01	27 45 01	RCRC52704501	—	—	—	—
		Network(DMP): Repeat Off	27	45	02	27 45 02	RCRC52704502	—	—	—	—
		Network(DMP): Repeat 1	27	45	03	27 45 03	RCRC52704503	—	—	—	—
		Network(DMP): Repeat All	27	45	04	27 45 04	RCRC52704504	—	—	—	—
		Network(DMP): Pause	27	48	03	27 48 03	RCRC52704803	—	—	—	—
		Network(DMP): REW	27	50	03	27 50 03	RCRC52705003	—	—	—	—
		Network(DMP): FF	27	52	03	27 52 03	RCRC52705203	—	—	—	—
		Network(DMP): Play/Pause	27	53	03	27 53 03	RCRC52705303	—	—	—	—
		iPod Direct Play	27	53	33	27 53 33	RCRC52705333	—	—	—	—
		Internet Radio Recent Played Station	27	53	52	27 53 52	RCRC52705352	—	—	—	—
		Network: Favorite Direct Play	27	53	63	27 53 63	RCRC52705363	—	—	—	—
		Network(DMP): Stop	27	54	03	27 54 03	RCRC52705403	—	—	—	—
		Network(DMP): Cursor Up	27	80	03	27 80 03	RCRC52708003	—	—	—	—
		Network(DMP): Cursor Down	27	81	03	27 81 03	RCRC52708103	—	—	—	—
		Network(DMP): Cursor Left	27	85	03	27 85 03	RCRC52708503	—	—	—	—
		Network(DMP): Cursor Right	27	86	03	27 86 03	RCRC52708603	—	—	—	—
		Network(DMP): Enter	27	87	03	27 87 03	RCRC52708703	—	—	—	—
		Network(DMP): Back(Return)	27	83	03	27 83 03	RCRC52708303	—	—	—	—
		Network(DMP):HOME	27	88	02	27 88 02	RCRC52708802	—	—	—	—
		Page Previous	27	93	13	27 93 13	RCRC52709313	—	—	—	—
		Page Next	27	93	14	27 93 14	RCRC52709314	—	—	—	—

Notes: Specifications subject to change without prior notice.

X	The command is available for the model.
---	The command is NOT available for the model.

*** 1** Main room commands work as Multi room commands when the Multi room RC-IN input was used.
These commands are recognized as for Main room(zone) commands when they are received via Front IR receiver or Rear Remote Control In.
These commands are recognized as for Multi room(zone) commands when they are received via Rear Multi room Remote In.

***2** Need an input assign to the input in Menu in advance the use

***4** /U1x version (for North America) model only

***5** /N1x version (for Europe) model only

***6** /U1x (for North America), /N1x version (for Europe) model only

***7** The RC code can be sent using RS-232C/IP Serial protocol commands

MECHANICAL

DISASSEMBLY

Flowchart
1. WiFi ANT
2. FRONT PANEL ASSY
3. RADIATOR ASSY
4. DIGITAL PCB
5. VIDEO PCB
6. PREOUT PCB
7. MAIN PCB
8. SMPS PCB
9. TRANS

EXPLODED VIEW

PACKING VIEW

DISASSEMBLY

Flowchart

- Remove each part following the flow below.
- Reassemble the removed parts in the reverse order.
- Read "SAFETY PRECAUTIONS" before reassembling the removed parts.
- If wire bundles are removed or moved during adjustment or part replacement, reshape the wires after completing the work. Failure to shape the wires correctly may cause problems such as noise.
- See "EXPLODED VIEW"

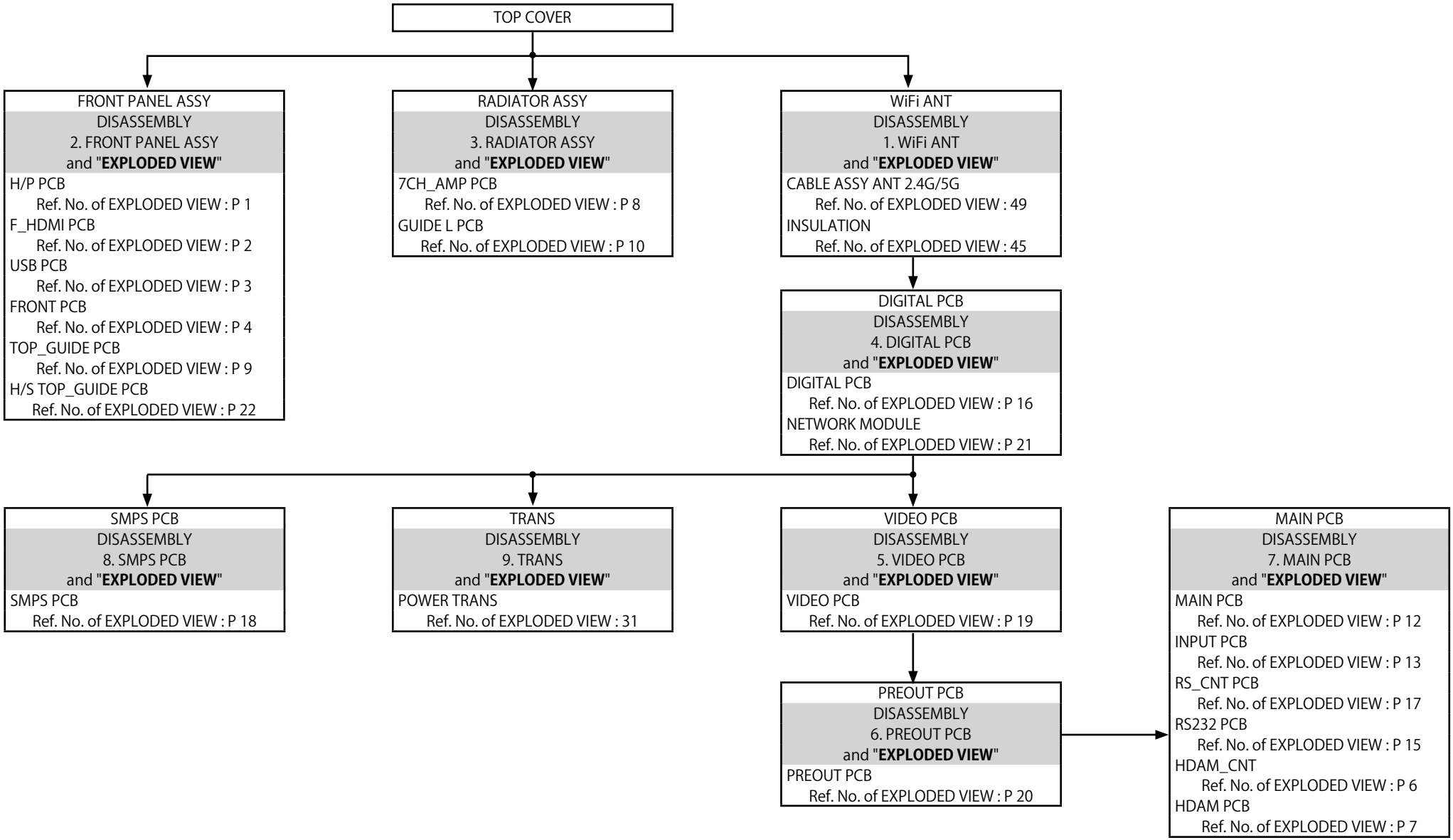

Explanatory Photos for DISASSEMBLY

- For the shooting direction of each photos used in this manual, see the photo below.
- **A, B, C and D** in the photo below indicate the shooting directions of photos.
- The photographs with no shooting direction indicated were taken from the top of the unit.
- Photos of SR5012 U are used in this manual.

The viewpoint of each photograph

(Shooting direction : X) [View from the top]

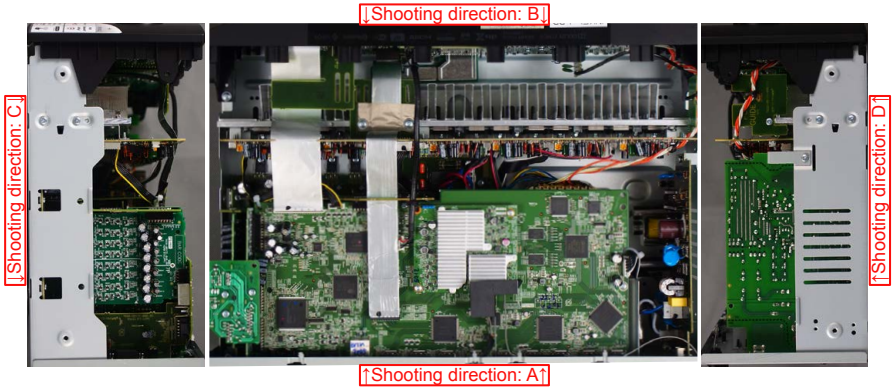

1. WiFi ANT

Proceeding : TOP COVER → WiFi ANT

(1) Remove the INSULATION SHEET. Cut the wire clamps.

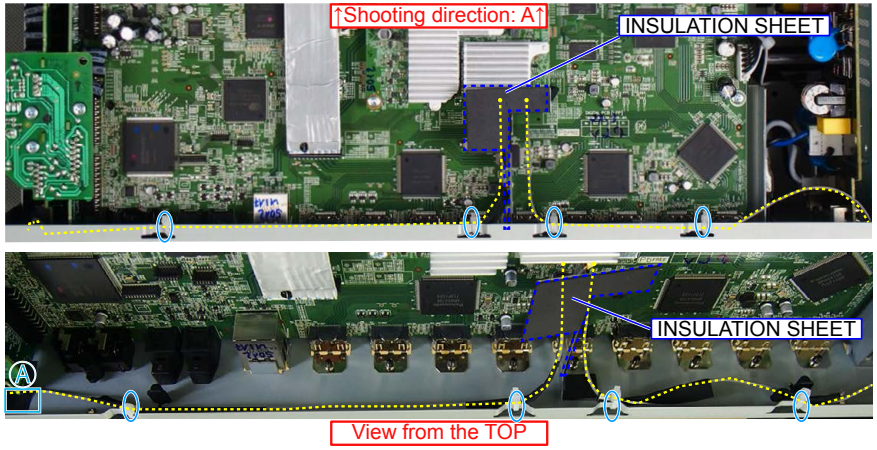

NOTE : ・If the INSULATION SHEET has been removed, replace with a new sheet.
・When attaching the INSULATION SHEET, align with the Silk-Print and up to side of the NETWORK MODULE PCB.
・Fix with tape in position A.

2. FRONT PANEL ASSY

Proceeding : TOP COVER → FRONT PANEL ASSY

(1) Remove the screws.

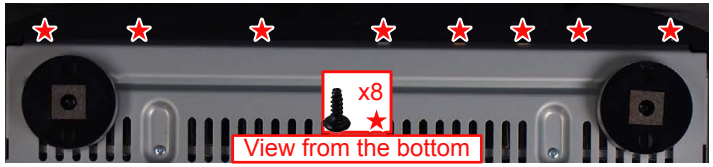

(2) Remove the screws. Remove the CORD HOLDER and connectors. Remove the FFC.

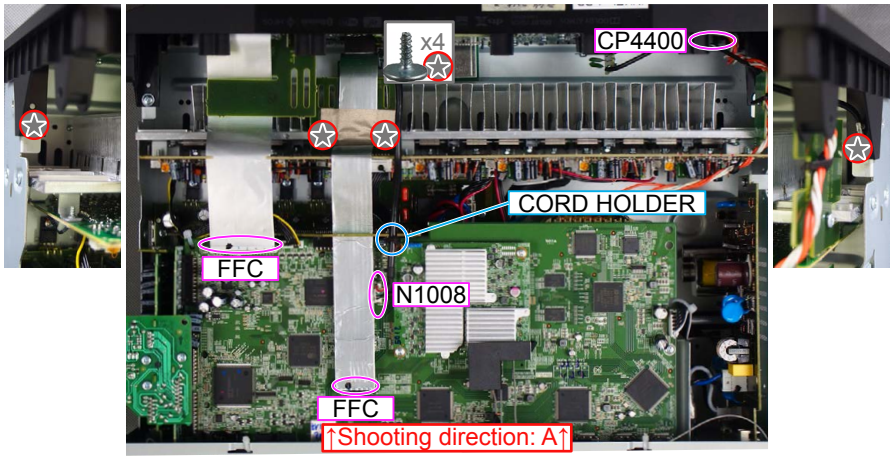

3. RADIATOR ASSY

Proceeding : TOP COVER → RADIATOR ASSY

(1) Remove the screws.

(2) Remove the screws. Cut the wire clamp, then remove the CORD HOLDER and connector. Remove the FFC.

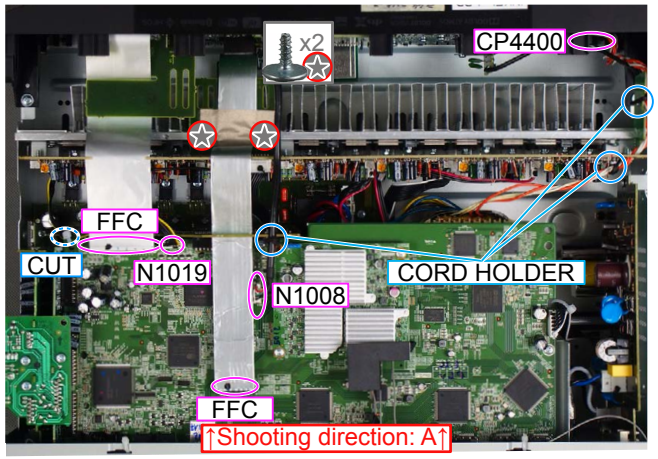

(3) Remove the connector.

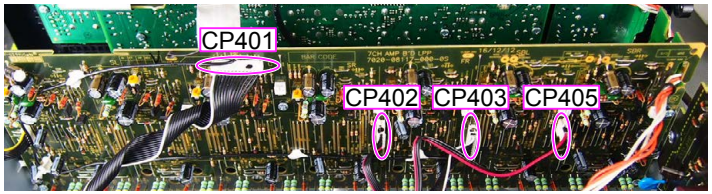

4. DIGITAL PCB

Proceeding : TOP COVER → WiFi ANT → DIGITAL PCB

(1) Remove the screws.

(2) Cut the wire clamps, then remove the CORD HOLDERs and connectors. Remove the FFC.

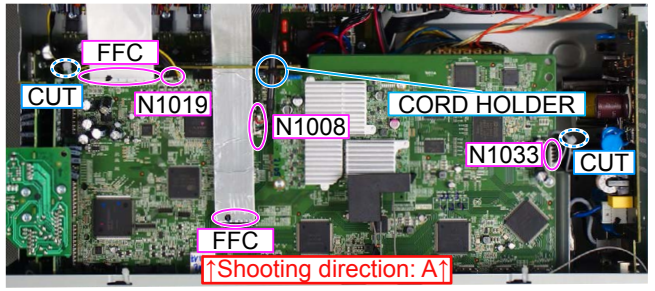

(3) Remove the connector.

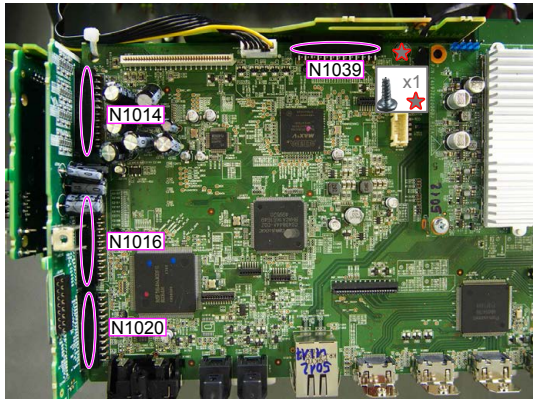

5. VIDEO PCB

Proceeding : TOP COVER → WiFi ANT → DIGITAL PCB → **VIDEO PCB**

(1) Remove the connector.

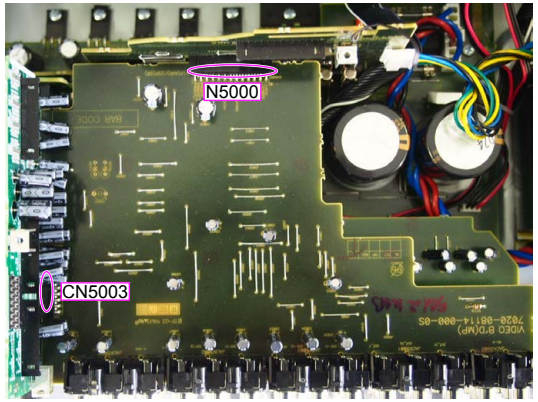

6. PREOUT PCB

Proceeding : TOP COVER → WiFi ANT → DIGITAL PCB → VIDEO PCB → **PREOUT PCB**

(1) Remove the connector.

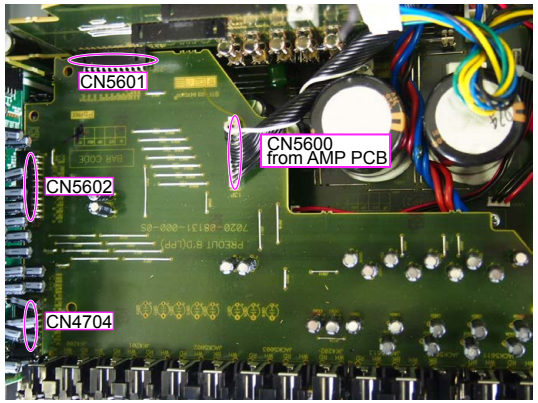

7. MAIN PCB

Proceeding : TOP COVER → WiFi ANT → DIGITAL PCB → VIDEO PCB → PREOUT PCB → **MAIN PCB**

(1) Remove the screws.

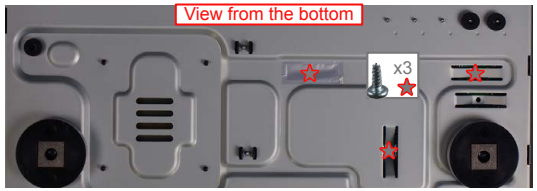

(2) Remove the screws. Remove the connector.

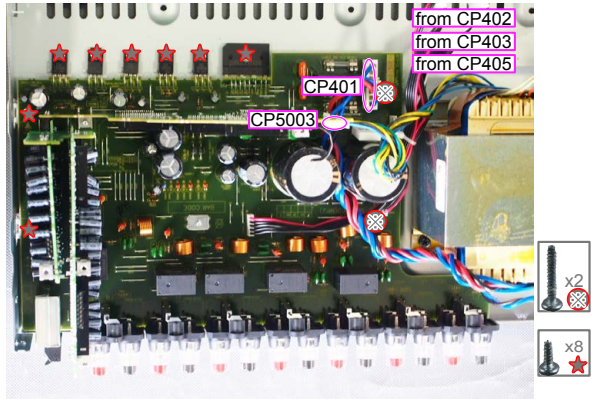

8. SMPS PCB

Proceeding : TOP COVER → **SMPS PCB**

See "EXPLODED VIEW" for instructions on removing the SMPS PCB.

9. TRANS

Proceeding : TOP COVER → COVER → DIGITAL PCB → **TRANS**

See "EXPLODED VIEW" for instructions on removing the transformer (TRANS).

EXPLODED VIEW

Parts List : http://dmedia.dmglobal.com/Document/DocumentDetails/23187

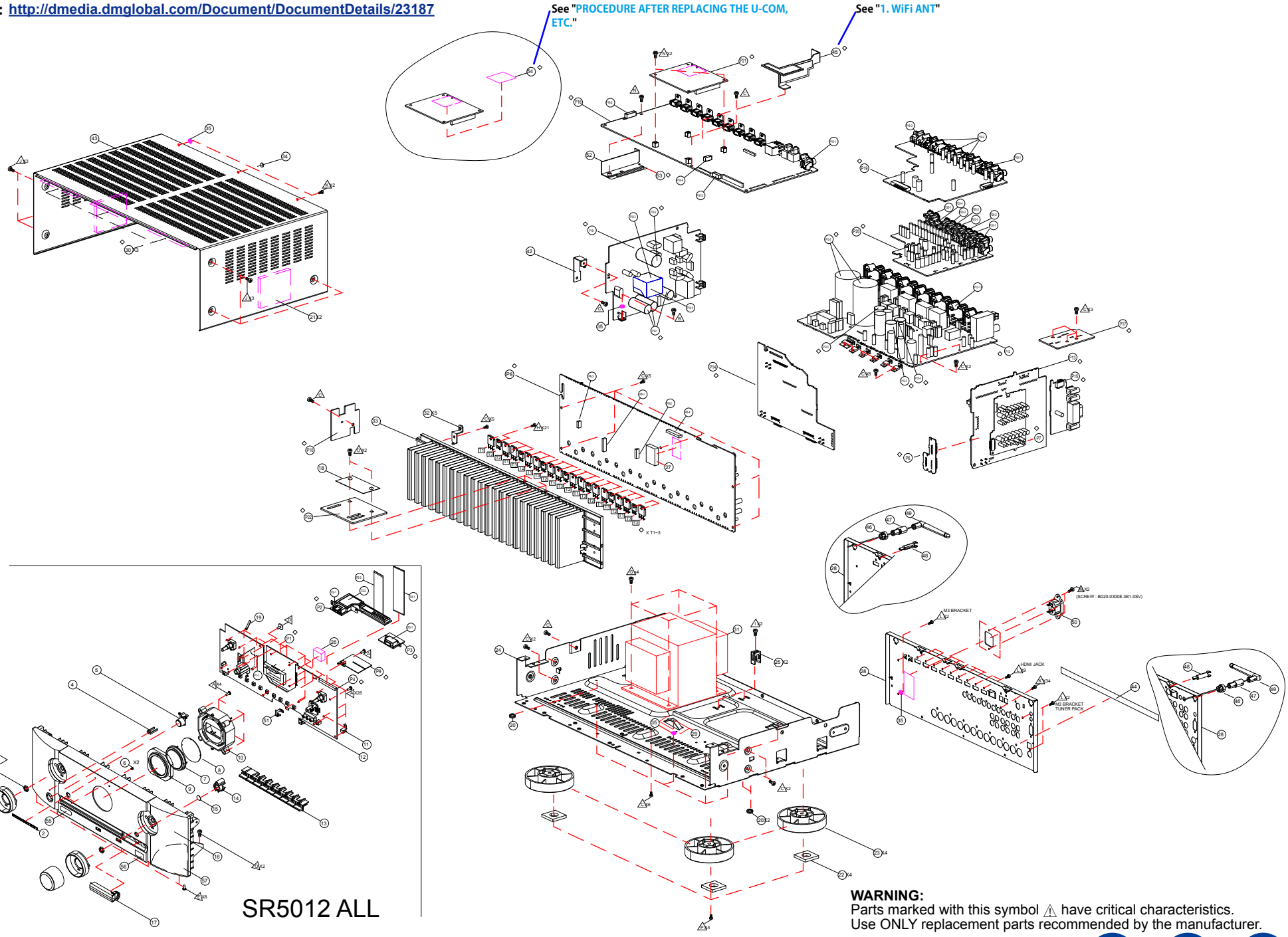

WARNING:
Parts marked with this symbol ⚠ have critical characteristics.
Use ONLY replacement parts recommended by the manufacturer.

PACKING VIEW

Parts List : http://dmedia.dmglobal.com/Document/DocumentDetails/23187

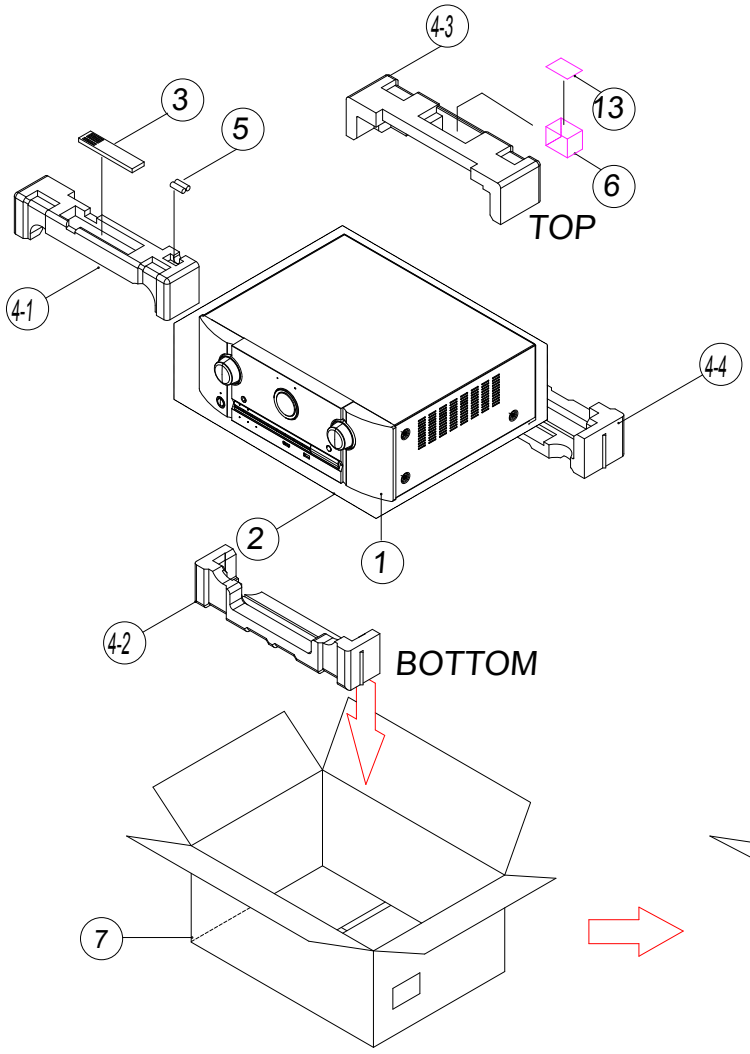

MANUAL POLYBAG ASSY		*MIC STAND ASSY
POLYBAG CODE : 6337-04006-201-0S	POLYBAG CODE : 6337-21071-900-0V	12
ZIPPERBAG(A4size) Notes on RADIO (ALL) Cautions on Using Batteries (N Only) SAFETY INST. (ALL) WARRANTY USA & CANADA (U only) SPK WIRE LABEL (ALL) FM Antenna Antenna Isolator K only AM Antenna CARD PASS (K only)	ZIPPERBAG(A5size) SPOTIFY insertion sheet QUICK START GUIDE (ALL) *Getting started	SETUP MIC STAND SIZE : 350mm x 210mm This part together with document and zipper bag are supplide. MIC STAND ASSEMBLY INSTRUCTION

*PACKING PROCESS

* POLY BAG PACKING STYLE	SPEAKER TERMINAL BUSHING	* BOX BOTTOM TAPING
TAPE (CLEAR) SET 14 CORD AC BKE3/BKE2/K/SPE1C OLNY UK PLUG FOR USE(at store)	15	10

REPAIR INFORMATION

TROUBLE SHOOTING

1. POWER
2. Analog video
3. HDMI/DVI
4. AUDIO
5. Network / Bluetooth / USB
6. SMPS

AUDIO CHECK PATH

HDMI "Rx/Tx" Failure Detection

1. Prior checking
2. Preparations for checking HDMI Switcher reception/transmission register
3. Starting detecting the point of failure
4. Device implementation location

CLOCK FLOW & WAVE FORM IN DIGITAL BLOCK

SPECIAL MODE

Special mode setting button
1. Version Display Mode
2. PANEL / REMOTE LOCK Selection Mode
3-1. Selecting the Mode for Service-related
3-2. Protection History Display Mode
3-3. 232C Standby Clear Mode
3-4. Operation Info Mode
3-5. TUNER STEP mode (U / N only)
4. Protection Pass Mode
5. Network Initialization Mode
7. Clearing the Operation Info
8. Log Capture feature

DIAGNOSTIC MODE

Service Path Check Mode
DIAGNOSTIC PATH DIAGRAM

JIG FOR SERVICING

ADJUSTMENT

1. POWER

1.1. The unit does not power on

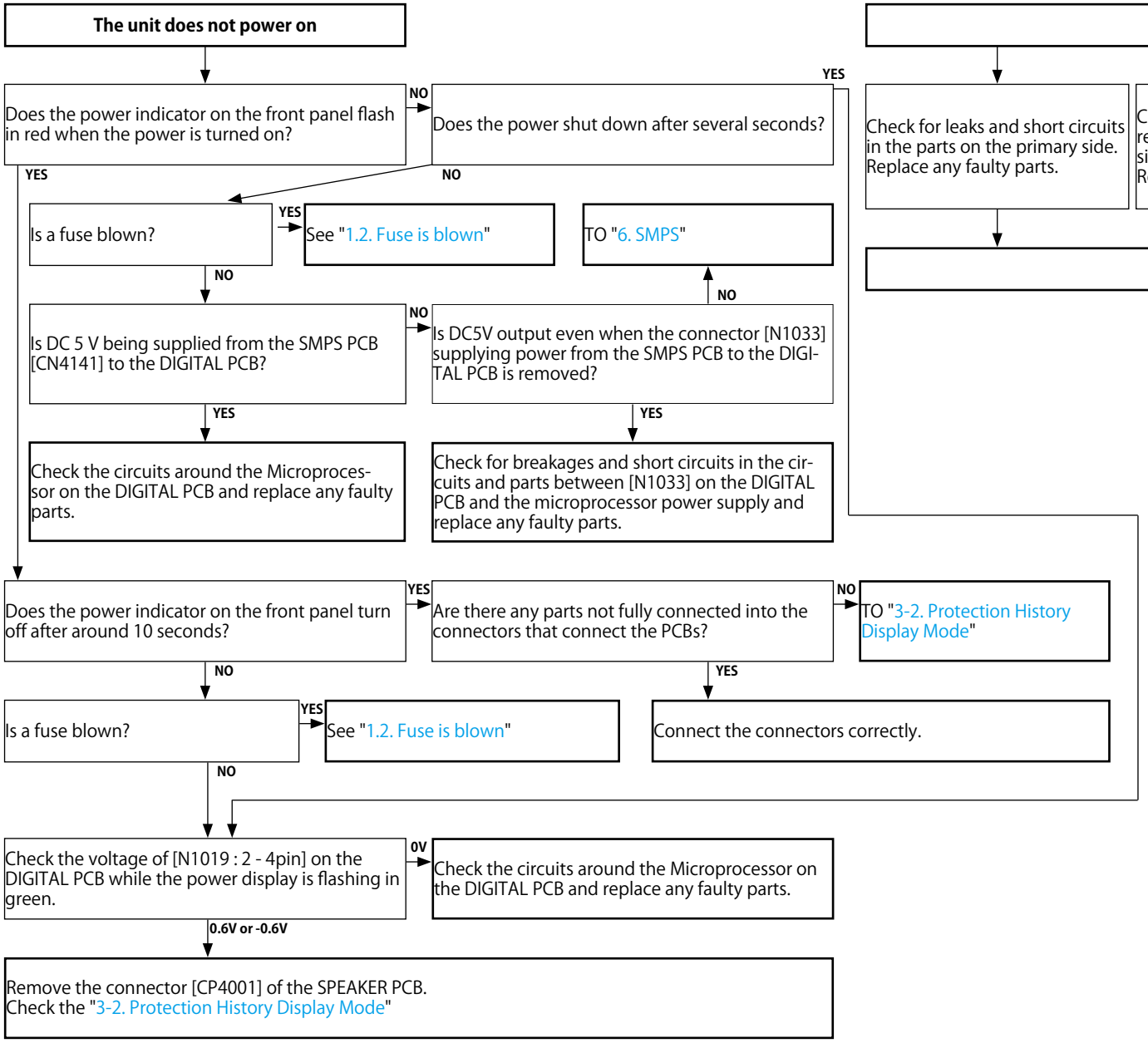

1.2. Fuse is blown

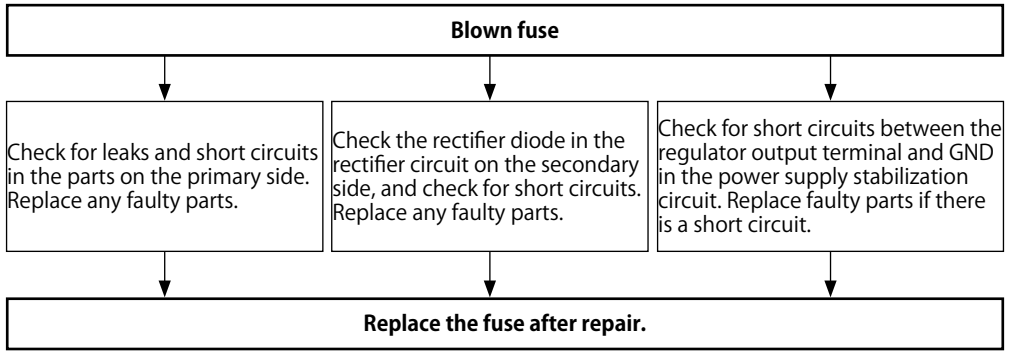

2. Analog video

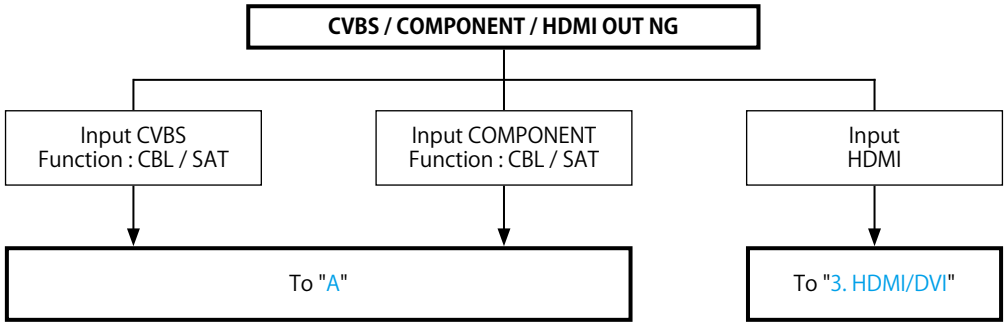

DIGITAL test point

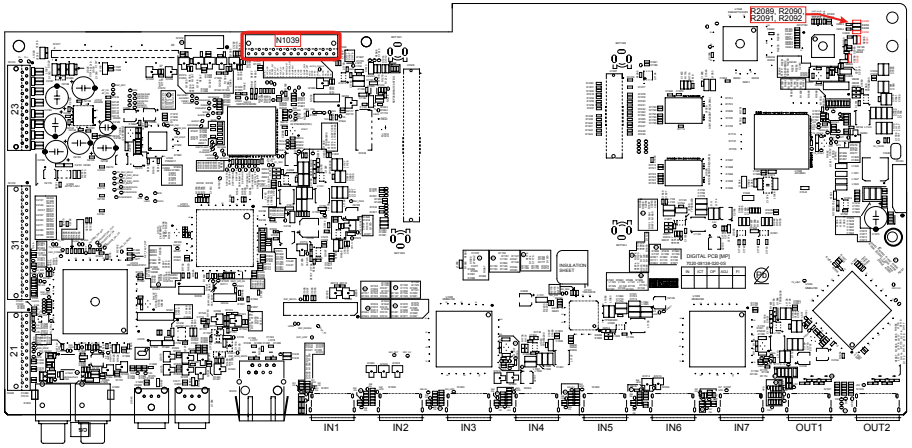

VIDEO test point

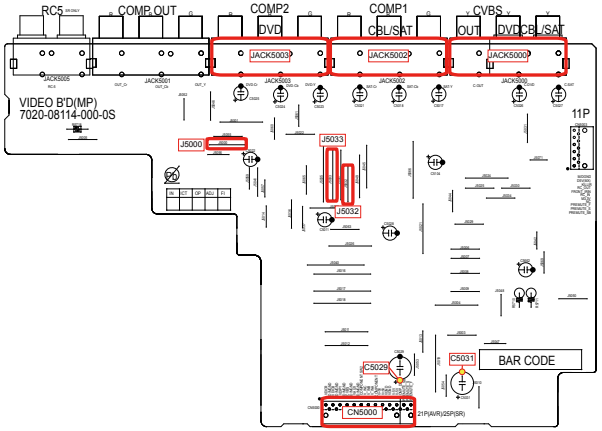

A

Input
CVBS / COMPONENT

①

Check the input signal to the VIDEO DECODER.
Can a signal be confirmed at the following points?
DIGITAL PCB
V : [R2092]
COMPONENT-Y : [R2089]
COMPONENT-Cb : [R2091]
COMPONENT-Cr : [R2090]

NO → Check the connection between the boards.

YES

Output COMPONENT NG : Check C-4
Output HDMI NG : See "3. HDMI/DVI"

Input CVBS : Check B
Input COPONENT : Check C

B

Input
CVBS

① Check the settings of each IC.
Are the following voltages set?
DIGITAL PCB
[N1039 : 12pin] : Hi (3.3 V)
[N1039 : 13pin] : Hi (3.3 V)
[N1039 : 14pin] : Lo (0 V)

NO → DIGITAL PCB faulty.

YES ↓

② Extend the DIGITAL PCB using the jig.

③ Is the power voltage being output correctly?
V+5V : [C5029 : + side]
V-5V : [C5031 : - side]

NO → Check the connection between the FRONT CONNECTOR PCB and the VIDEO PCB.

NO → The regulator part of REG PCB is faulty.

YES ↓

④ Is a signal being output from the video amplifier?
CVBS : [JACK5000 : C-OUT]

NO →
- Check the [IC5001] power voltage and check the soldering of the surrounding circuits.
- The pattern between [IC5001 and JACK5000] is faulty.

YES ↓

- Check the connection between the FRONT CONNECTOR PCB and the VIDEO PCB.
- Check the soldering of [CP3401 and CP5000] on the FRONT CONNECTOR PCB.
- Check the soldering of [CN5000] on the VIDEO PCB.
- Check the soldering of [JACK5000] on the VIDEO PCB.

※ These instructions refer to the VIDEO PCB unless otherwise specified.

C

Input
COMPONENT

① Check the settings of each IC.
Are the following voltages set?
DIGITAL PCB
[N1039 : 11pin] : Lo (0 V)
[N1039 : 15pin] : Hi (3.3 V)

NO → DIGITAL PCB faulty.

YES ↓

② Extend the DIGITAL PCB using the jig.

③ Is the power voltage being output correctly?
V+5V : [C5029 : + side]
V-5V : [C5031 : - side]

NO → Check the connection between the FRONT CONNECTOR PCB and the VIDEO PCB.

NO → The regulator part of REG PCB is faulty.

YES ↓

④ Is a signal being output from the video amplifier?
COMP-Y : [J5032]
COMP-CB : [J5033]
COMP-CR : [J5000]

NO →
- Check the [IC5002] power voltage and check the soldering of the surrounding circuits.
- The pattern between [IC5002, JACK5002 and JACK5003] and is faulty.

YES ↓

- Check the connection between the FRONT CONNECTOR PCB and the VIDEO PCB.
- Check the soldering of [CP3401 and CP5000] on the FRONT CONNECTOR PCB.
- Check the soldering of [CN5000] on the VIDEO PCB.
- Check the soldering of [JACK5001] on the VIDEO PCB.

※ These instructions refer to the VIDEO PCB unless otherwise specified.

3.1. No picture or sound is output (HDMI to HDMI)

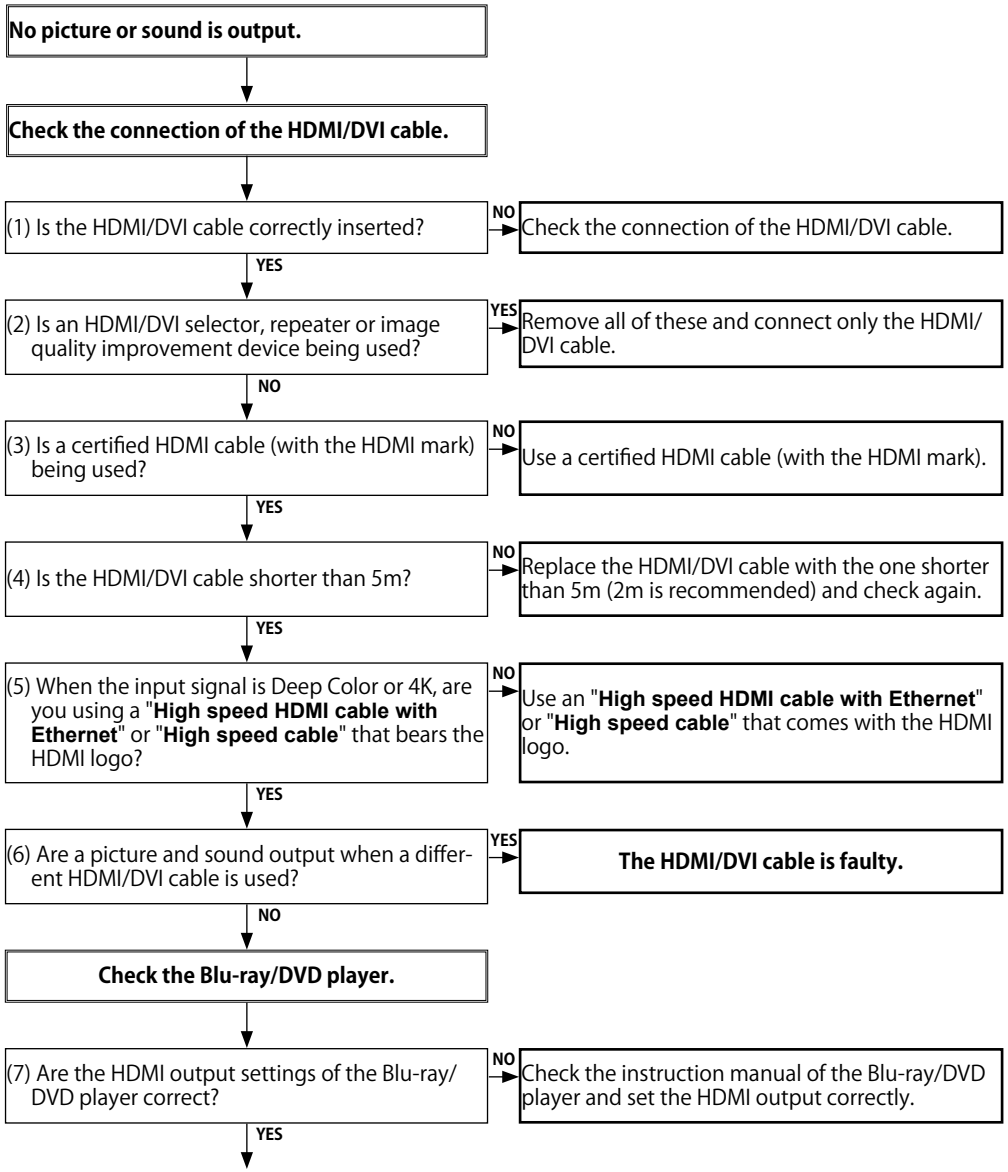

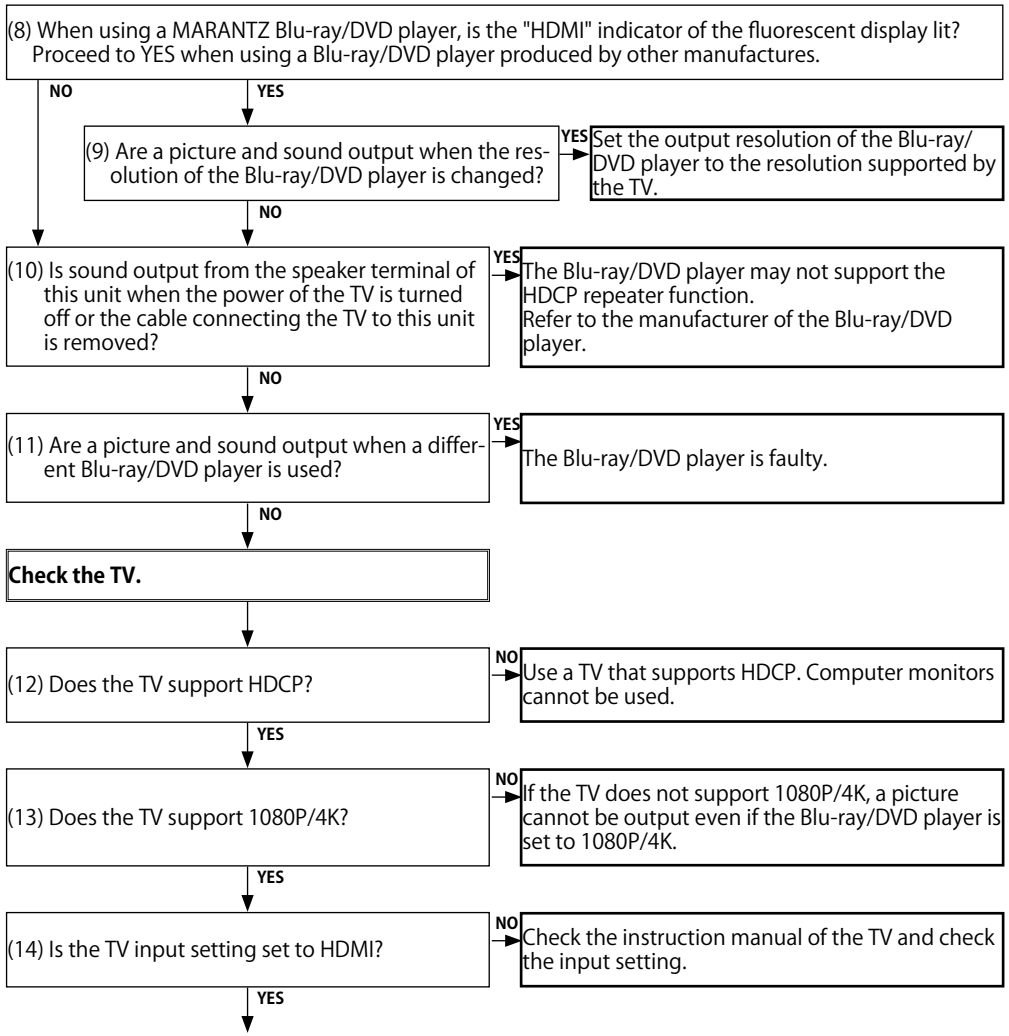

Go to next page.

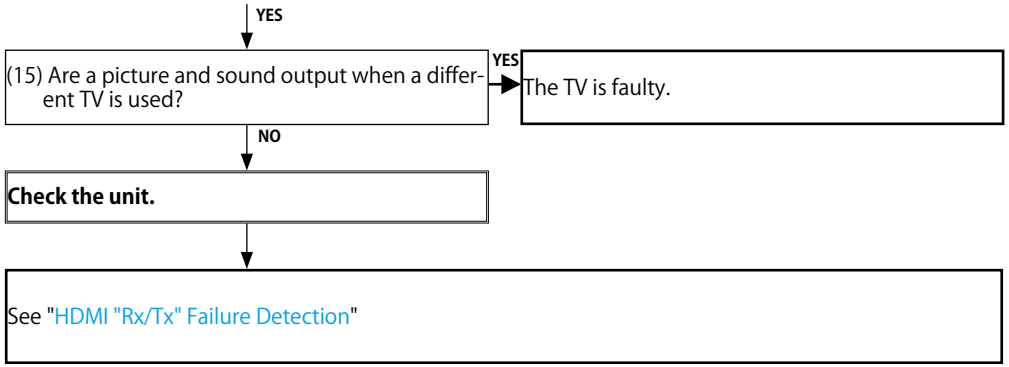
YES
(15) Are a picture and sound output when a different TV is used?
YES
The TV is faulty.
NO
Check the unit.
See "HDMI "Rx/Tx" Failure Detection"

4.1. AUDIO CHECK

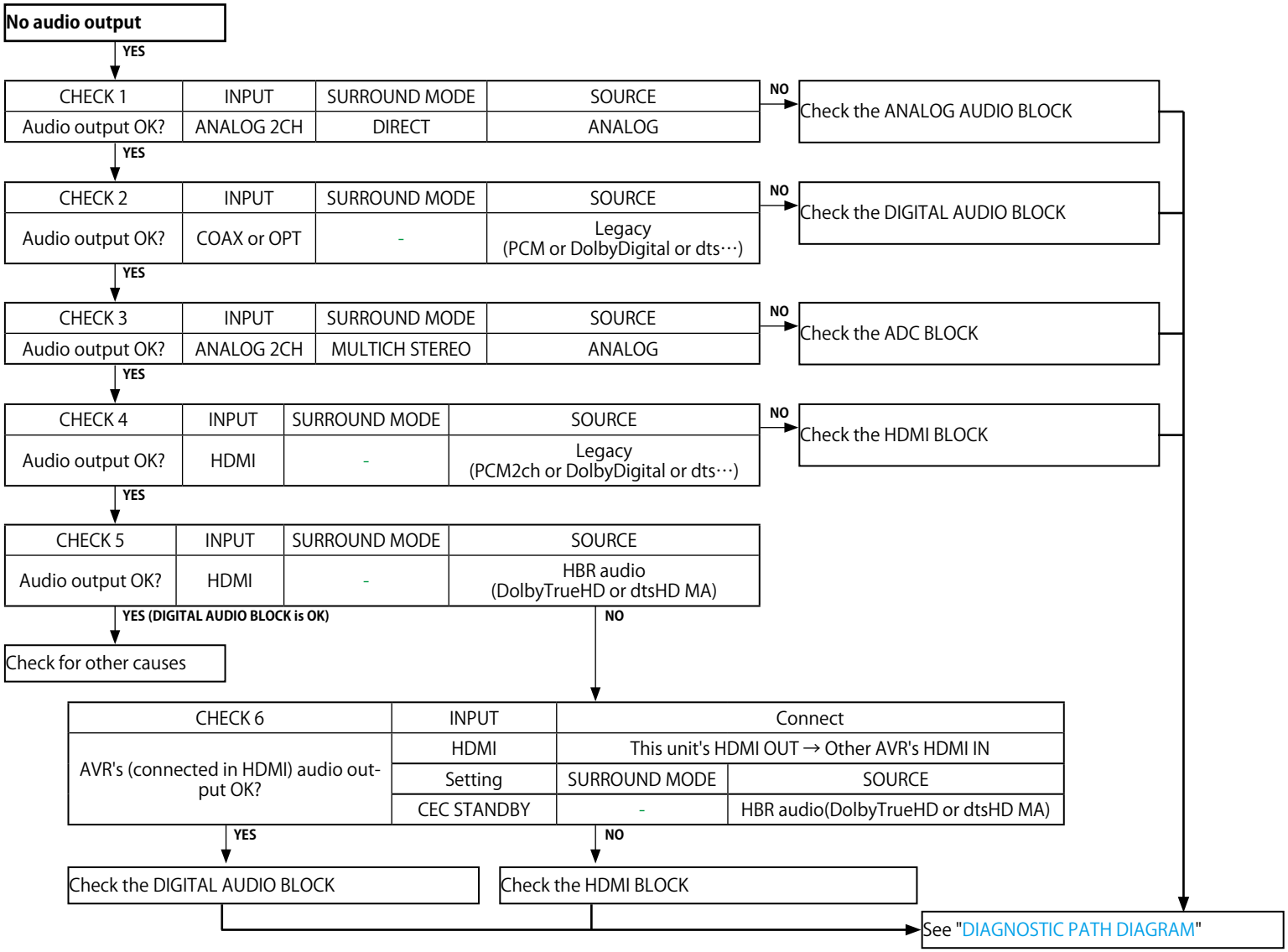

4.2. Power AMP (AMP PCB)

When using the protection pass mode, do not connect speakers to the speaker terminals.

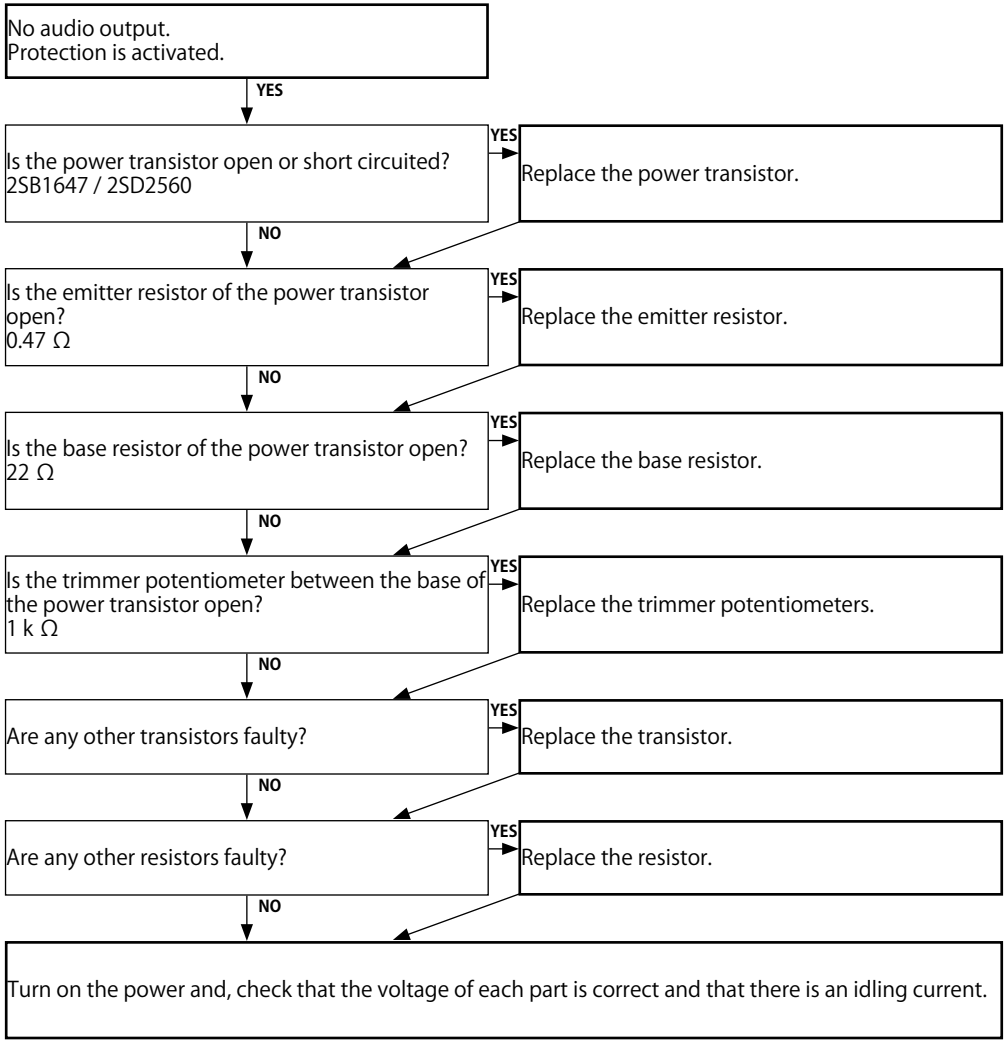

4.3. Analog audio

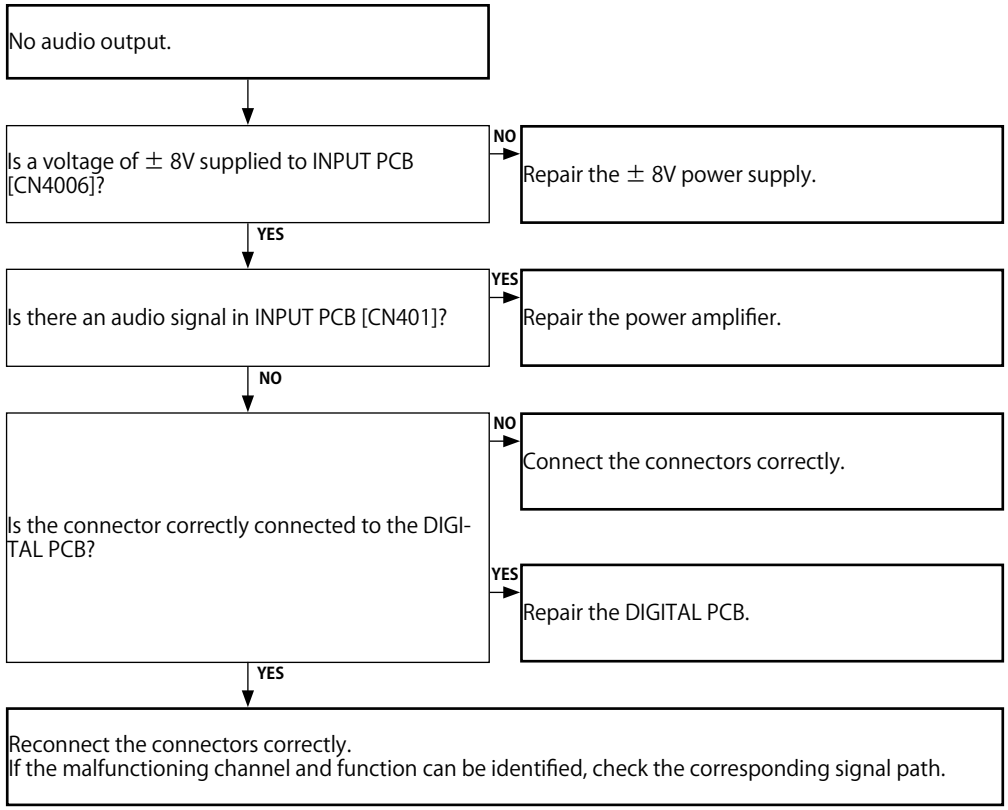

5.1. Cannot connect to the network

Check the connection environment

Is the LAN cable correctly inserted?
- NO → Insert the LAN cable correctly and then turn on the power again.
- YES ↓

Check the setting

Are the network settings of this unit correct?
- NO → Set the IP address, etc. correctly. When the static IP address is used, check that no other devices have the same IP address and that the subnet mask settings are correct.
- YES ↓

Are peripheral devices such as the router and hub connected to this unit correctly?
- NO → Connect the peripheral devices correctly.
- YES ↓

Are the router settings correct?
- NO → Check the instruction manual of the router and configure the settings correctly. Check that there are no connection restrictions by MAC addresses, etc.
- YES ↓

Checking the unit

Can the voltage (5V) be confirmed between [N1033 : 2-5pin]?
- NO → The circuit between the AC inlet and [N1033] is faulty. Check the SMPS PCB.
- YES ↓

Can the output voltage (5V) to [Q1074 : FET-SW] be confirmed?
- NO → Is NET5V POWER [U1018 : 48pin uCOM] "**Hi**" ?
  - NO → The circuit of NET5V POWER between [U1018-Q1074 : FET-SW] are faulty.
  - YES → The circuit around [Q1074 : FET-SW] is faulty.
- YES ↓

Can the output voltage (3.3V) to [U1067 : DC-DC Conv.] be confirmed?
- NO → Is D5V_POWER [U1018 :136 pin uCOM] "**Hi**" ?
  - NO → The circuit of D5V_POWER between [U1018-U1067] are faulty.
  - YES → The circuit around [U1067 : DC-DC.Conv.] is faulty.
- YES ↓

Can the output voltage (3.3 V) to [Q1071 : FET-SW] be confirmed?
- NO → Is NET3.3V POWER [U1018 : 135 pin uCOM] "**Hi**" ?
  - NO → The circuit of NET3.3V POWER between [U1018-Q1071] are faulty.
  - YES → The circuit around [Q1071 : FET-SW] is faulty.
- YES ↓

Go to next page.

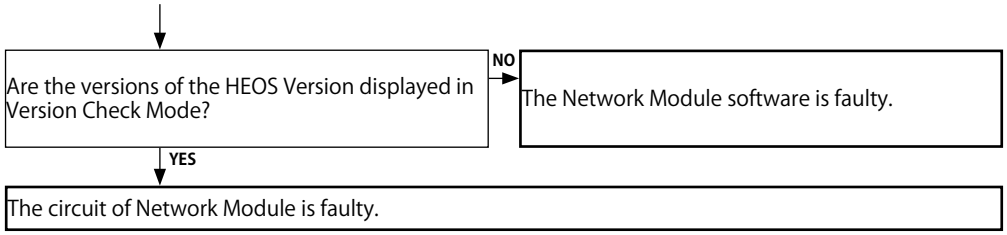

5.2. Cannot establish a Bluetooth connection

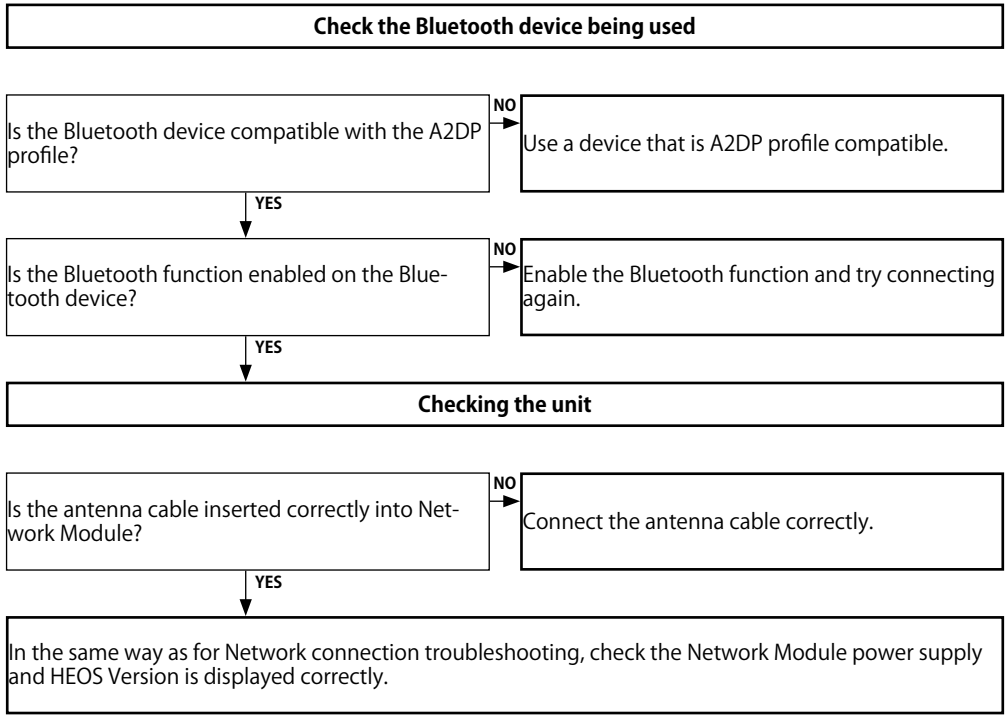

5.3. Cannot recognize the connected USB device

Check the USB device being used

Is a USB hub being used?
- YES → Do not use a USB hub.
- NO ↓

Is the USB device supported by this unit?
- NO → This unit supports devices in the FAT16- and FAT32-formatted mass storage class, MTP-compatible devices and iPod devices (except for some models).
- YES ↓

Checking the unit

Are [N1008] of the DIGITAL PCB and [CN4402] of the FRONT PCB correctly connected?
- NO → Connect the connectors correctly.
- YES ↓

Can a voltage (5V) be confirmed between [JK4400 : 1 - 4pin] (USB Connector) on FRONT PCB?
- NO → The circuit around [U1006] of the DIGITAL PCB is faulty.
- YES ↓

The USB signal circuit between Network Module and [JK4400] of the FRONT PCB are faulty.

5.4. No picture or sound is output

Checking the unit (If no picture is output)

Are digital video signals(LEGOPCK, LEGOVS, LEGOHS, LEGODE, LEGOVD0-LEGOVD23) output from Network Module to [U1048 : VPLD]?
- NO → The circuit around Network Module, [U1048 : VPLD] is faulty.
- YES ↓

• Check the VIDEO circuit.

Checking the unit:(If no sound is output)

Are the I2S signal output to [U1008 : 7, 11, 13, 14pin] of the DIGITAL PCB ?
- NO → Network Module is faulty.
- YES ↓

Are audio signal output to Test point DSP1INF/FL on DIGITAL PCB.
- NO → The circuit around [U1041 : A.PLD] is faulty.
- YES ↓

Check the [U1073 : DSP] AUDIO circuit and the circuits thereafter.

DIGITAL test point

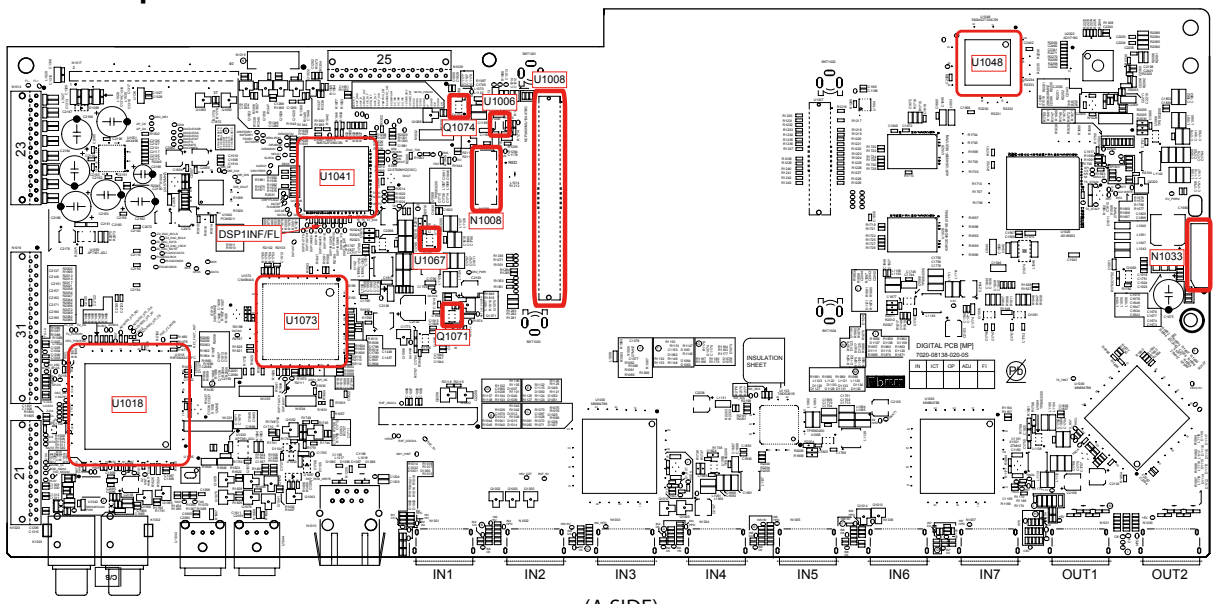

(A SIDE)

USB test point

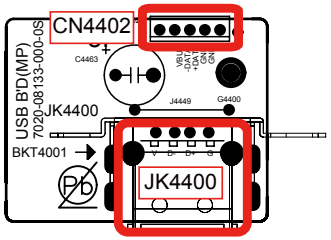

(A SIDE)

6. SMPS

DC 5V is not output.

- Is [U4140 : TOP268VG] damaged? — YES → Replace the [U4140 : TOP268VG and D4142 / D4143 / D4144 / D4145].
- NO
- Is the fuse [F4140] functioning properly? — YES → Is [D4142 / D4143 / D4144 / D4145 / IC4140] damaged? — YES → Replace the damaged part.
- NO
- Are there any short circuits caused by the soldering on the PCB? — YES → Repair the short circuited area on the PCB.
- NO
- Are any parts damaged? — YES → Check the damaged parts. — YES → Replace the damaged part.

Operation waveform for each part

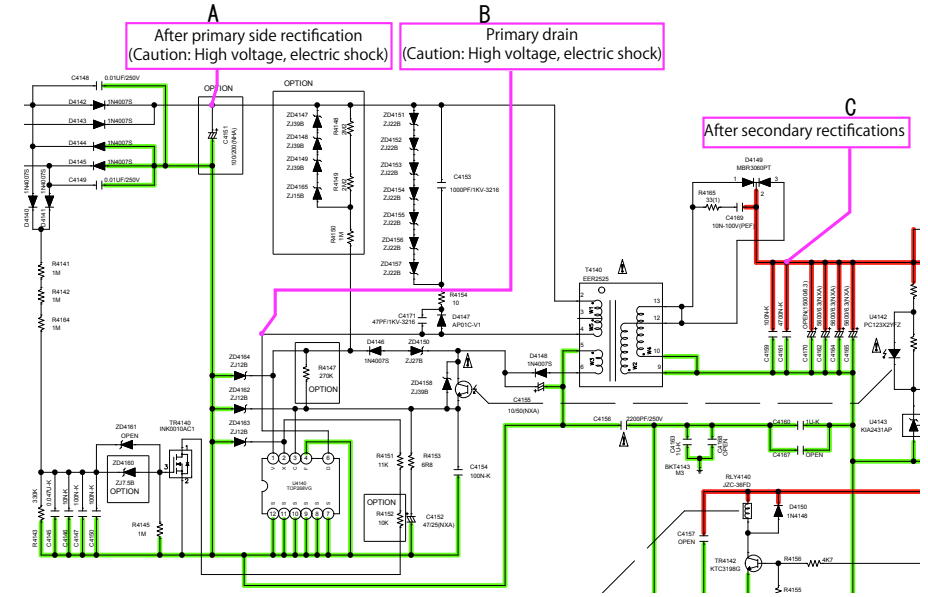

SMPS unit (Unloaded)

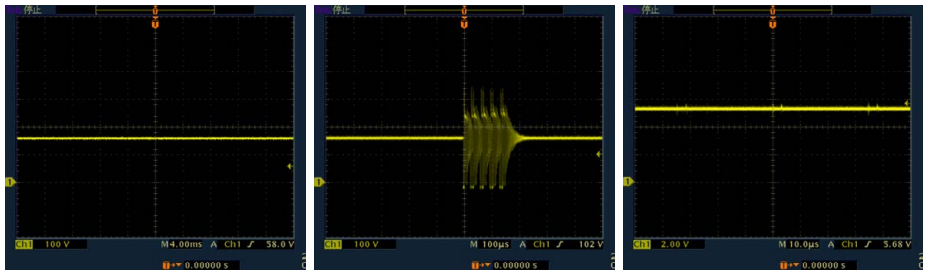

Set

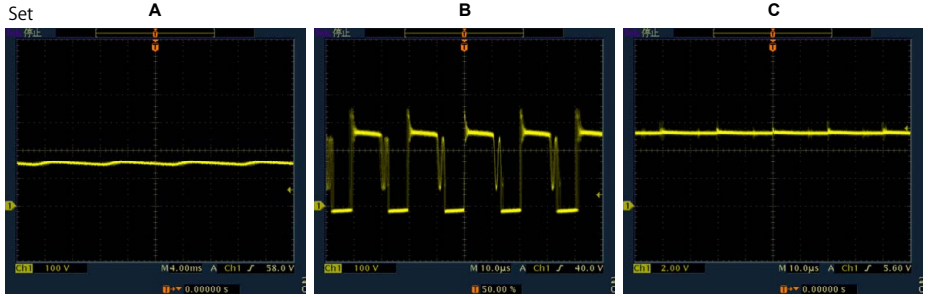

AUDIO CHECK PATH

➡: Digital Signal
⇨: Analog Signal

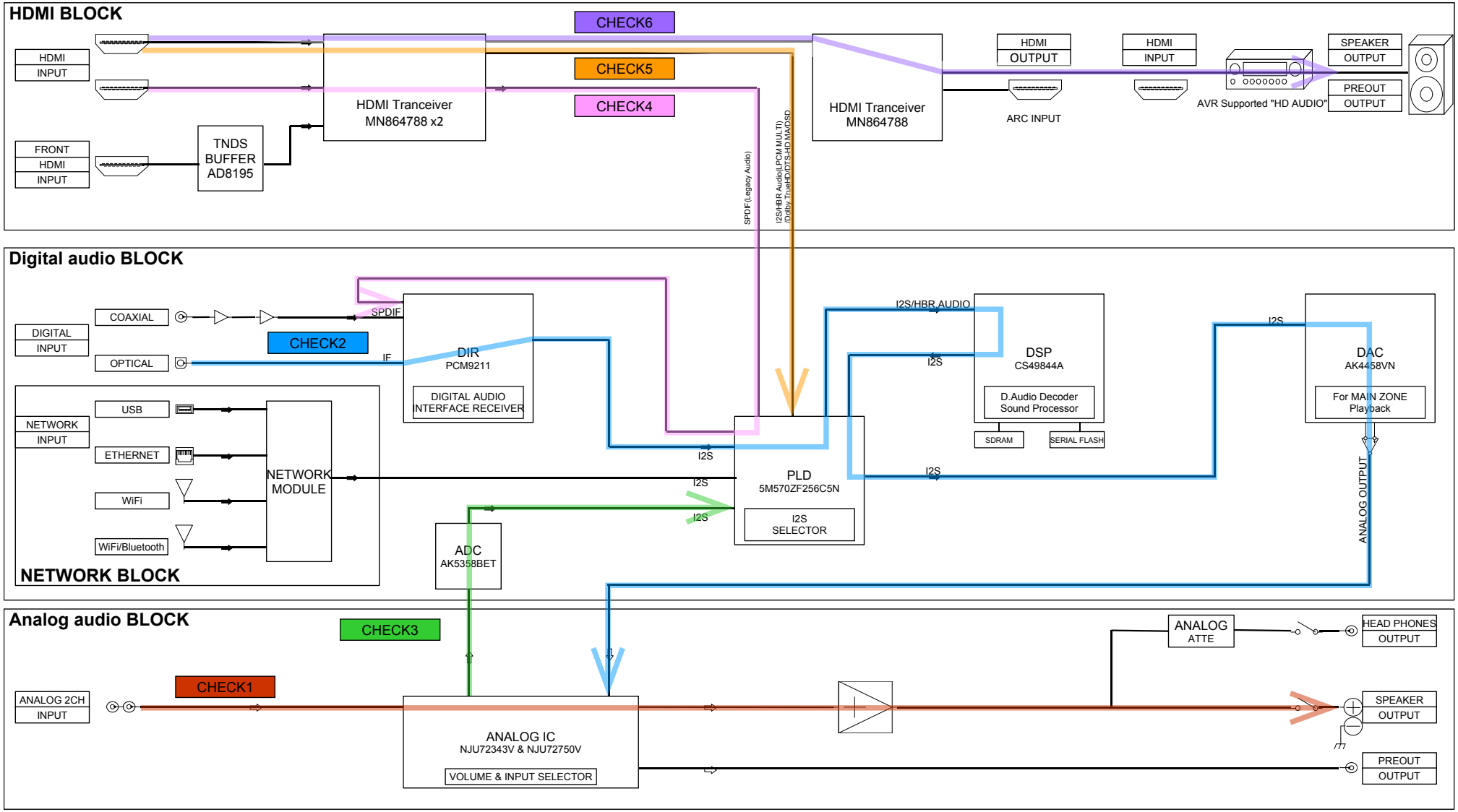

HDMI "Rx/Tx" Failure Detection

1. Prior checking

Check item(0). : Checking the HDMI connector
Checking the condition of the HDMI pin (rear/front).

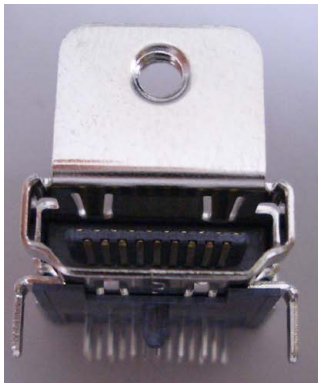

OK

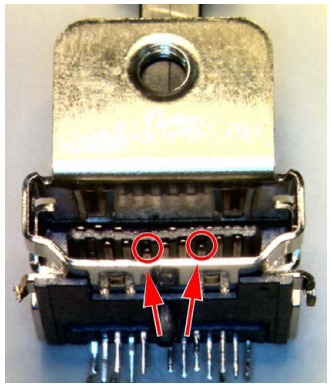

NG

Check for deformed pins.

There are deformed pins.

Replace the HDMI connector.

None of the pins are deformed.

Check by following the flow chart for "3. Starting detecting the point of failure".
NOTE :
After checking troubleshooting "3. HDMI/DVI", check "3. Starting detecting the point of failure".

2. Preparations for checking HDMI Switcher reception/transmission register

2-1. Necessary devices

1) Check the product settings.
2-a) Player with an HDMI terminal
2-b) TV with an HDMI terminal (* NOTE : Do not use a computer monitor.)
3) Windows PC
4) Serial communication software "**Termite.exe**"
(Download the software from http://www.compuphase.com/software_termite.htm and install it.)
5) HDMI cable
6) RS-232C Straight cable
7) oscilloscope

2-2. Device Connection Method

Connect the TV and the AVR to the player using an HDMI cable and connect the AVR to the PC through an RS-232C cable as shown in Figure 1.

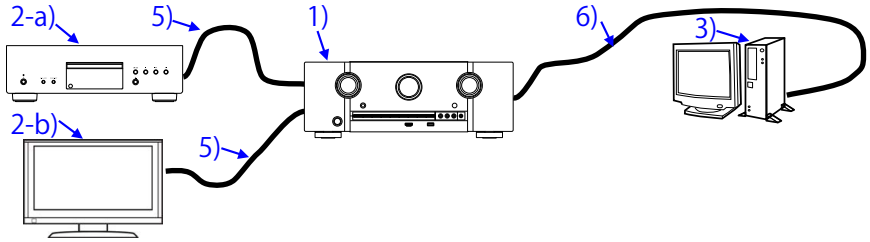

Figure 1 Device Connection Method

2-3. Device configuration method

PC settings : Execute the serial communication program, Termite.exe.

After executing Termite.exe, click [Settings].

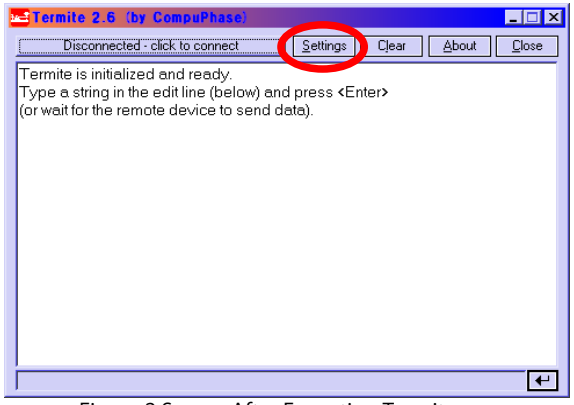

Figure 2 Screen After Executing Termite.exe

The serial port setup screen will be displayed.
Configure the settings as shown in Figure 3 and click the "**OK**" button.

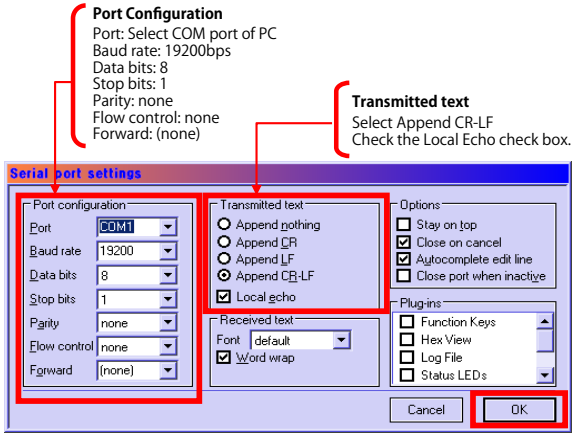

Figure 3 Serial Port Setup Screen

Click the [click to connect] button to start communication.
After a connection is established successfully, the display of the button name will change as shown in Figure 4.

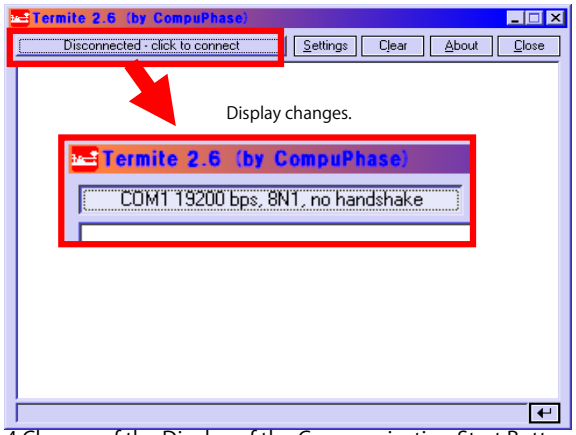

Figure 4 Change of the Display of the Communication Start Button Name

TV settings : Switch to the HDMI input in the AVR connection.
Player settings : Turn the unit power on and configure it to play disks.
AVR settings : While the power is On, hold down buttons "**DIMMER**" and "**STATUS**" for at least 3 seconds.
(Press and hold until the two Indicator Lights at the bottom right of the FLD blink.)
※ When the power is turned on after initialization, "**Setup Assistant**" will be displayed.
After exiting "**Setup Assistant**" execute the above.

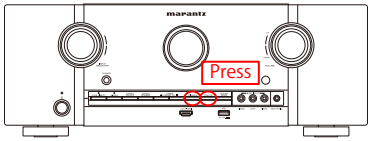

Figure 6. AVR settings

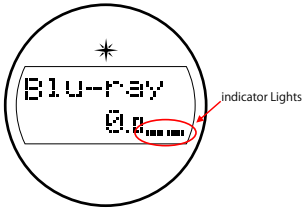

Figure 6 FLD Display When Set

When the settings are correct, the following message will be displayed in the window of Termite.
[00]Start Sub CPU Log Mode
****
(**** is a version of Sub CPU.)

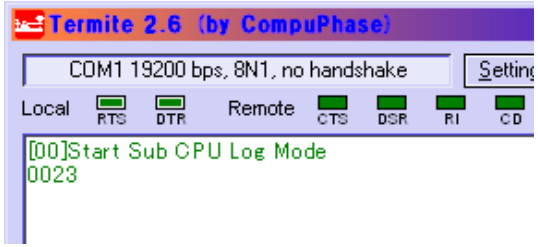

Figure 7 Display of Termite When AVR is Set

The setup is now complete.

Method for sending commands
Enter the command in the transmission command entry section, click the [Send] button and send the command.

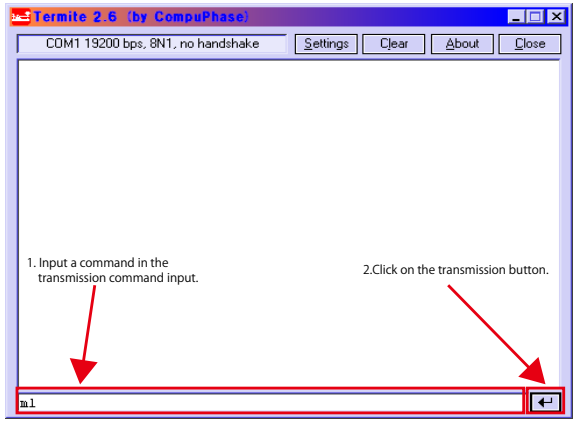

Figure 8 Method for Sending Termite Commands

3. Starting detecting the point of failure

Check item(1).
Check the power supply status and communication status with the CPU of each device.
Start in HDMI Diagnostics mode and follow the procedures below.

(1) Start in HDMI Diagnostics mode

While the power is on, hold down buttons "**DIMMER**" and "**SOUND MODE**" for at least 3 seconds.

L1	HDMI
L2	DIAG

↓ "**HDMI DIAGNOSTICS**" is displayed.

When the mode has switched, start Hardware Check.

L1	Hardware
L2	Check...

↓

(2-1) Display when an Error Code is displayed.

L1	ErrH1-XX
L2	Contact support

L2 : Content of the display is scrolled.
Check the Error Code table items.

Error Code table

Error Code	Check item No.	Description	
H1-01	Check item (6)	Communication Error with HDMI Tx	[U1039 : MN864788]
H1-02	Check item (11)	Communication Error with HDMI SW1	[U1000 : MN864788]
H1-03	Check item (16)	Communication Error with HDMI SW2	[U1003 : MN864788]
H1-04	Check item (29)	Communication Error with TMDS SW	[U1103 : TMDS261B]
H1-05	Check item (30)	Communication Error with VIDEO DECODER	[U2022 : ADV7180]
H1-06	Check item (21)	Communication Error with GUI IC	[U1026 : ADV8003]
H1-08	Check item (30)	Communication Error with DSP	[U1073 : CS49844A]
H1-12	Check item (35)	Communication Error with DIR	[U1040 : PCM9211]
H1-14	Check item (26)	DDR check Error	[U1028, U1029 : A3R12E40DBF-8E]
H1-15	Check item (27)	Communication Error with GUI ROM	[U1027 : W25Q128JVFIQ]

(2-2) Display when an Error is not detected.

L1	1 Auto
L2	Test

Cancel the mode, and proceed to check item (2).

Canceling the selected mode
Press the power button to exit off the power.

Check item(2). : Check operation of the HDMI input terminal.

When the HDMI input terminal of this device is connected to the player correctly, is sound heard from the speaker?
※ When checking, turn the AV amplifier on and off after checking the connection terminal with the player. (To set the same conditions during verification of operation)

↓

Check that sound is heard from the input terminal of the HDMI 1-7.
Use any of Dolby TrueHD/DTSHD MA/PCM 8ch for the playback audio format.

NO → Is the "**DIG**" indicator illuminated on the FLD?
When the "DIG" indicator is illuminated, the digital audio block is faulty.
If the "**DIG**" indicator is not illuminated, go to check item (41).
(HDMI RX IC [MN864788] failure detection procedure)

↓ YES

Check that sound is heard from the input terminal of the FRONT AUX.

NO → Go to check item (48)
(Front HDMI Buffer IC [AD8195] failure detection procedure)

↓ YES

Check item(3). :
(1) Turn Video Conversion "**OFF**" on the setup menu.
(Setup Menu - Video - Output Settings - Video Conversion)
(2) Does a video signal come from HDMI OUT1 to TV correctly?

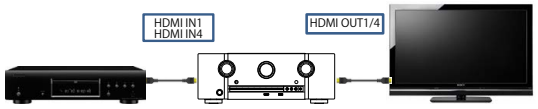

When the player is connected in order to the HDMI input terminals (HDMI 1, 4), in each case is the player video played back on the TV connected to the HDMI output terminal (HDMI OUT1, 2)?

NO → Go to check item (56)
HDMI transmission IC [MN864788] failure detection procedure

↓ YES

Check item(4). : Check operation of the HDMI output terminal.

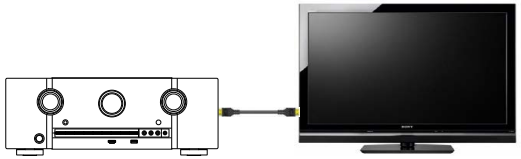

When the "**SETUP**" button on a remote control is pressed, is "**MENU**" displayed on TV which is connected to the HDMI output terminal on the AVR?

NO → Go to check item (73)
(GUI IC[ADV8003] failure detection procedure 2

↓ YES

Check item(5). :
(4)-1 Turn Video Conversion "**ON**" on the setup menu.
(Setup Menu - Video - Output Settings - Video Conversion)
(4)-2 Does a video signal come from HDMI OUT1 to TV correctly?

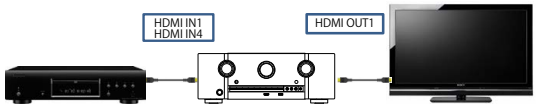

When the player is connected to the HDMI input terminals in order, are the images on the player displayed on the TV in both cases?

NO → Go to check item (75)
(HDMI SW IC [TMDS261B] failure detection procedure)

↓ YES

There is no problem with Rx, Tx, and GUI of HDMI as well as IC of SW.

3-1. Error Code H1-01 failure detection procedure

Checking device. [U1039 : MN864788]

↓

Check the power supply voltage. (HDMI Tx)

↓

Check item(6). Check the power supply voltage. :
Does the power supply voltage of the HDMI Tx [U1039] indicate the correct voltage (1.1V, 3.3V)?
The test points are as follows.

HDMI Tx

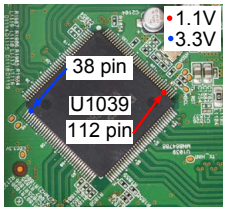

YES ↓

NO ↓

Check item(7). Check the power supply voltage. :
Check the power components [U1064/U1066] and the pattern on the substrate.
If there is no problem, remove the HDMI Tx [U1001] from the substrate and measure the voltage at the test point of check item (6).
Is the voltage correct (1.1V or 3.3V)?

YES ↓

Replace with a new device.

↓

NO ↓

The power supply circuit is faulty.
Replace the PCB.

↓

Recheck from check item (1).
If it does not work, replace the PCB.

Checking the reset waveform. (HDMI Tx)

↓

Check item(8). Checking the reset waveform :
Check the waveform.
Is the "RESET" waveform of the TP near the HDMI Tx [U1039] correct (like the one shown in the diagram) when the power is turned on?

HDMI Tx

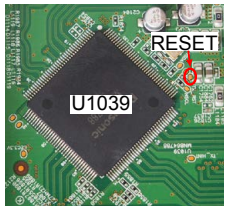

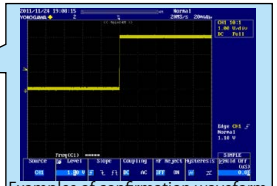

Examples of confirmation waveform
Voltage scale : 1.0V/div
Time scale : 20ms/div

NO →

Check the reset circuit between CPU [U1018] and HDMI Tx [U1039].
If there is no problem, the HDMI Tx [U1039] is faulty.
Replace with a new device.
Recheck from check item (1).
If it does not work, replace the PCB.

YES ↓

Go to next page.

Check the I2C communication line. (HDMI Tx)

YES

Check item(9). Check the I2C communication line :
Check the CPU.
Is the "I2C" waveform of the TP near the HDMI Tx [U1039] correct (like the one shown in the diagram) when the power is turned on?

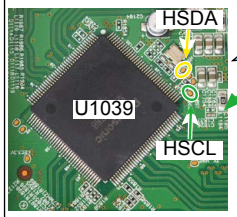

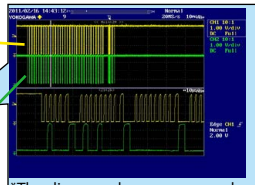

*The diagram shows an example.
(Signal patterns vary depending on the timing.)
Points for checking waveforms
- Crest value (3.3V normally)
- Signal change
- SCL frequency (400kHz normally)
Voltage scale : 1.0V/div
Time scale : 10us/div

NO

Check item(10). Check the I2C communication line :
Check HDMI Rx [U1000 or U1003], HDMI Tx [U1039] and CPU [U1018] patterns as well as soldering.
If there is no problem, go to the next step.

YES

HDMI Tx [U1039] is faulty.
Replace with a new device.

YES

Recheck from check item (1).
If it does not work, replace the PCB.

Check the HDMI Rx1.
Remove the damping resistor [R1061/R1062] of [U1000].
Is the "**I2C**" waveform correct?

NO

Check the HDMI Rx2.
Remove the damping resistor [R1169/R1170] of [U1003].
Is the "**I2C**" waveform correct?

NO

Check the HDMI Tx.
Remove the damping resistor [R1882/R1883] of [U1039].
Is the "**I2C**" waveform correct?

YES

HDMI Rx1 [U1000] is faulty.
Replace with a new device.

YES

HDMI Rx2 [U1003] is faulty.
Replace with a new device.

YES

HDMI Tx [U1039] is faulty.
Replace with a new device.

NO

The CPU [U1018] is faulty.
Replace with a new device.

Recheck from check item (1).
If it does not work, replace the PCB.

3-2. Error Code H1-02 failure detection procedure

Checking device. [U1000 : MN864788]

↓

Check the power supply voltage. (HDMI Rx)

↓

Check item(11). Check the power supply voltage. :
Does the power supply voltage of the HDMI Rx1 [U1000] indicate the correct voltage (1.1V, 3.3V)?
The test points are as follows.

HDMI Rx1

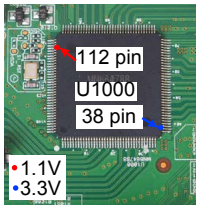

YES ↓

NO ↓

Check item(12). Check the power supply voltage. :
Check the power components [U1063/U1066] and the pattern on the substrate.
If there is no problem, remove the HDMI Rx [U1000] from the substrate and measure the voltage at the test point of check item (11).
Is the voltage correct (1.1V or 3.3V)?

YES ↓

Replace with a new device.

↓

Recheck from check item (1).
If it does not work, replace the PCB.

NO ↓

The power supply circuit is faulty.
Replace the PCB.

↓

Recheck from check item (1).
If it does not work, replace the PCB.

Checking the reset waveform. (HDMI Rx)

↓

Check item(13). Checking the reset waveform :
Check the waveform.
Is the "RESET" waveform of the TP near the HDMI Rx [U1000] correct (like the one shown in the diagram) when the power is turned on?

HDMI Rx1

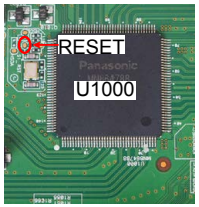

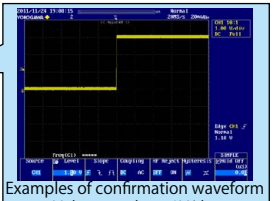

Examples of confirmation waveform
Voltage scale : 1.0V/div
Time scale : 20ms/div

NO →

Check the reset circuit between CPU [U1018] and HDMI Rx [U1000].
If there is no problem, the HDMI Rx [U1000] is faulty.
Replace with a new device.
Recheck from check item (1).
If it does not work, replace the PCB.

YES ↓

Go to next page.

Check the I2C communication line. (HDMI Rx)

YES

Check item(14). Check the I2C communication line :
Check the CPU.
Is the "I2C" waveform of the TP near the HDMI Rx [U1000] correct (like the one shown in the diagram) when the power is turned on?

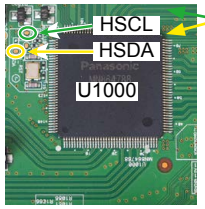

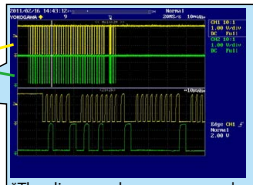

*The diagram shows an example.
(Signal patterns vary depending on the timing.)
Points for checking waveforms
- Crest value (3.3V normally)
- Signal change
- SCL frequency (400kHz normally)
Voltage scale : 1.0V/div
Time scale : 10us/div

NO

Check item(15). Check the I2C communication line :
Check HDMI Rx [U1000 or U1003], HDMI Tx [U1039] and CPU [U1018] patterns as well as soldering.
If there is no problem, go to the next step.

YES

HDMI Rx [U1000] is faulty.
Replace with a new device.

YES

Recheck from check item (1).
If it does not work, replace the PCB.

Check the HDMI Rx1.
Remove the damping resistor [R1061/R1062] of [U1000].
Is the "**I2C**" waveform correct?

YES

HDMI Rx1 [U1000] is faulty.
Replace with a new device.

NO

Recheck from check item (1).
If it does not work, replace the PCB.

3-3. Error Code H1-03 failure detection procedure

Checking device. [U1003 : MN864788]

↓

Check the power supply voltage. (HDMI Rx)

↓

Check item(16). Check the power supply voltage. :
Does the power supply voltage of the HDMI Rx2 [U1003] indicate the correct voltage (1.1V, 3.3V)?
The test points are as follows.

HDMI Rx2

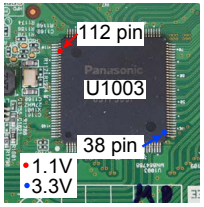

YES

NO

Check item(17). Check the power supply voltage. :
Check the power components [U1065] and the pattern on the sub-strate.
If there is no problem, remove the HDMI Rx [U1003] from the sub-strate and measure the voltage at the test point of check item (16).
Is the voltage correct (1.1V or 3.3V)?

YES

Replace with a new device.

NO

The power supply circuit is faulty.
Replace the PCB.

Recheck from check item (1).
If it does not work, replace the PCB.

Checking the reset waveform. (HDMI Rx)

↓

Check item(18). Checking the reset waveform :
Check the waveform.
Is the "RESET" waveform of the TP near the HDMI Rx [U1003] correct (like the one shown in the diagram) when the power is turned on?

HDMI Rx2

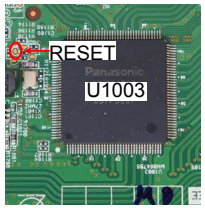

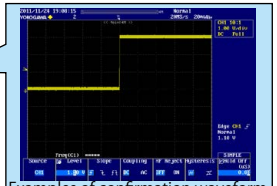

Examples of confirmation waveform
Voltage scale : 1.0V/div
Time scale : 20ms/div

NO

Check the reset circuit between CPU [U1018] and HDMI Rx [U1003].
If there is no problem, the HDMI Rx [U1003] is faulty.
Replace with a new device.
Recheck from check item (1).
If it does not work, replace the PCB.

YES

Go to next page.

YES

Check the I2C communication line. (HDMI Rx)

YES

Check item(19). Check the I2C communication line :
Check the CPU.
Is the "I2C" waveform of the TP near the HDMI Rx [U1000] correct (like the one shown in the diagram) when the power is turned on?

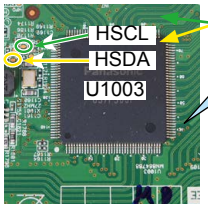

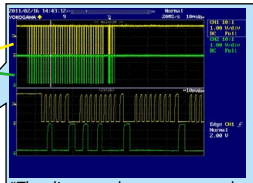

*The diagram shows an example.
(Signal patterns vary depending on the timing.)
Points for checking waveforms
- Crest value (3.3V normally)
- Signal change
- SCL frequency (400kHz normally)
Voltage scale : 1.0V/div
Time scale : 10us/div

NO

Check item(20). Check the I2C communication line :
Check HDMI Rx [U1003] patterns as well as soldering.
If there is no problem, go to the next step.

YES

HDMI Rx [U1003] is faulty.
Replace with a new device.

YES

Recheck from check item (1).
If it does not work, replace the PCB.

Check the HDMI Rx2.
Remove the damping resistor [R1169/R1170] of [U1003].
Is the "**I2C**" waveform correct?

YES

HDMI Rx2 [U1003] is faulty.
Replace with a new device.

NO

Recheck from check item (1).
If it does not work, replace the PCB.

3-4. Error Code H1-06 failure detection procedure

Checking device. [U1026 : ADV8003]

Check the power supply voltage.

Check item(21). Check the power supply voltage.
:
Does the power supply voltage of the GUI[U1026] indicate the appropriate voltage (1.8V, 3.3V)?
The test points are as follows.

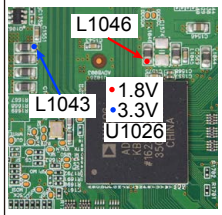

NO

Check item(22). Check the power supply voltage.
:
Check the power supply components [U1069, Q1063] on the substrate and peripheral pattern.
If there is no problem, remove the GUI [U1026] from the substrate and measure the voltage at the test point of check item (21).
Is the voltage correct (1.8V or 3.3V)?

YES

NO

The power supply circuit is faulty.
Replace the PCB.

YES

The GUI [U1026] is faulty.
Replace with a new device.

Recheck from check item (1).
If it does not work, replace the PCB.

Checking the reset waveform.

Check item(23). Checking the reset :
Check the CPU.
Is the waveform of the TP near the GUI [U1026] correct (like the one shown in the diagram) when the power is turned on?

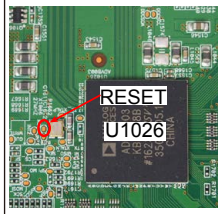

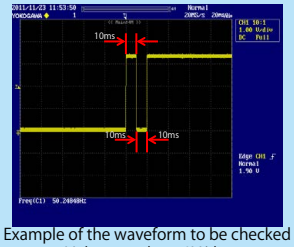

Example of the waveform to be checked
Voltage scale : 1.0V/div
Time scale : 20ms/div

YES

NO

Check the reset circuit between CPU [U1018] and GUI [U1026].
If there is no problem, the GUI [U1026] is faulty.
Replace with a new device.

Recheck from check item (1).
If it does not work, replace the PCB.

Go to next page.

Check the I2C communication line.

YES

Check item(24). Check the I2C communication line :
Check the CPU.
Is the "**I2C**" waveform of the TP near the CPU [U1018] correct (like the one shown in the diagram) when the power is turned on?

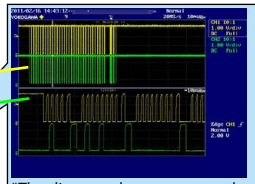

*The diagram shows an example.
(Signal patterns vary depending on the timing.)
Points for checking waveforms
- Crest value (3.3V normally)
- Signal change
- SCL frequency (400kHz normally)
Voltage scale : 1.0V/div
Time scale : 10us/div

YES

NO

Check item(25). Check the I2C communication line :
Check GUI [U1026], HDMI SW[U1103] and CPU[U1018] patterns as well as soldering.
If there is no problem, go to the next step.

Check the CPU.
Remove the damping resistor [R1493/R1494] of [U1018].
Is the "**I2C**" waveform correct?

NO

The CPU [U1018] is faulty.
Replace with a new device.

YES

The GUI [U1026] is faulty.
Replace with a new device.

The GUI [U1026] is faulty.
Replace with a new device.

Recheck from check item (1).
If it does not work, replace the PCB.

3-5. Error Code H1-14 failure detection procedure

Checking device. [U1028, U1029 : A3R12E40DBF-8E]

Check item(26).
Check soldering of IP SCALER [U1026], DDR2 [U1028/U1029] and its peripheral circuits.
Check soldering of the resistors [R1688/1689/1692/1695 to 1700/1703 to 1711] between IP SCALER and DDR2.
If there is no problem with soldering, [U1026/U1028/U1029] is defective. Replace their IC. Or replace the substrate.

3-6. Error Code H1-15 failure detection procedure

Checking device. [U1027 : W25Q128JVFIQ]

Check item(27).
Write to the GUI ROM.

Recheck from check item (1)
Does Error Code H1-15 continue?

NO

YES

Check item(28).
Replace [U1029] with a new device.

Recheck from check item (1)
Does Error Code H1-15 continue?

NO

YES

Go to check item (21)

Recheck from check item (2).

3-7. Error Code H1-04 failure detection procedure

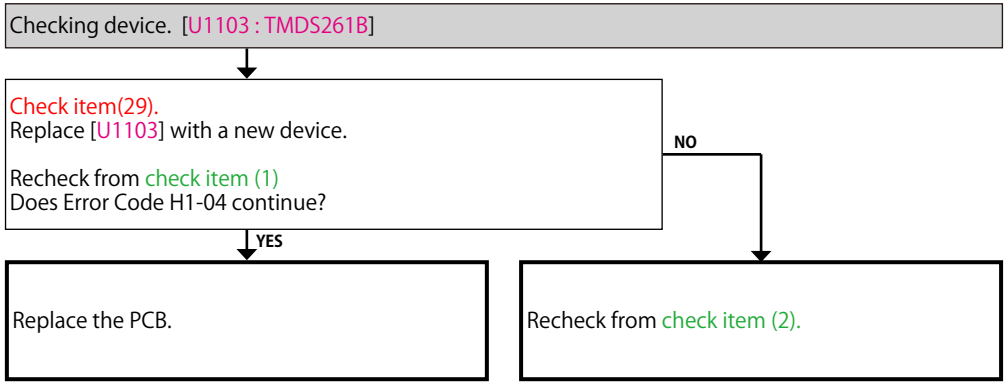

3-8. Error Code H1-05 failure detection procedure

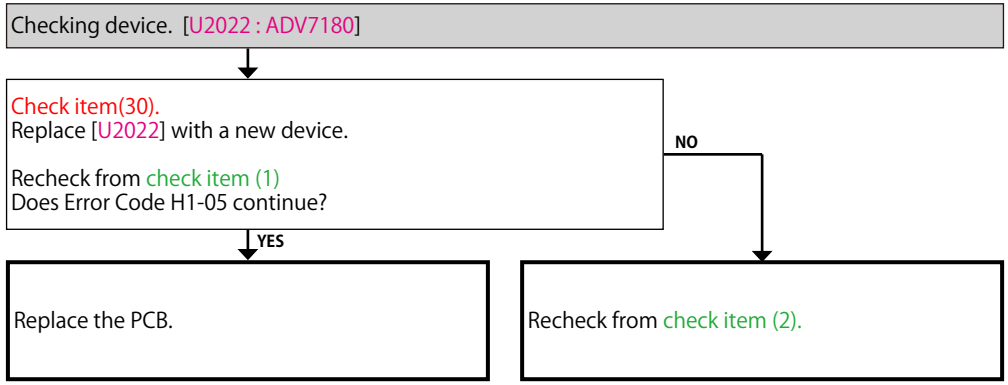

3-9. Error Code H1-08 failure detection procedure

Checking device. [U1073 : CS49844A]

Check the power supply voltage.

Check item(31). Check the power supply voltage.
:
Does the power supply voltage of the DSP [U1073] indicate the appropriate voltage (1.0V, 3.3V)?
The test points are as follows.

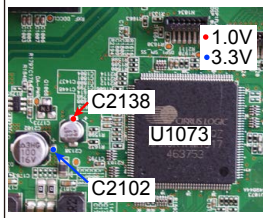

NO

Check item(32). Check the power supply voltage.
:
Check the power supply components [U1067, U1068, Q1067] on the substrate and peripheral pattern.
If there is no problem, remove the DSP [U1073] from the substrate and measure the voltage at the test point of check item (31).
Is the voltage correct (1.0 V or 3.3V)?

YES

YES

NO

The power supply circuit is faulty.
Replace the PCB.

DSP [U1073] is faulty.
Replace with a new device.

Recheck from check item (1).
If it does not work, replace the PCB.

Checking the reset waveform.

Check item(33). Checking the reset :
Check the CPU.
Is the waveform of the TP near the DSP [U1073] correct (like the one shown in the diagram) when the power is turned on?

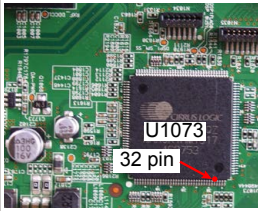

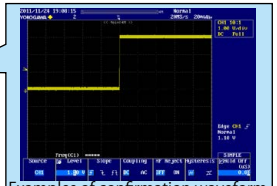

Examples of confirmation waveform
Voltage scale : 1.0V/div
Time scale : 20ms/div

YES

NO

Check the reset circuit between CPU [U1018] and DSP [U1073].
If there is no problem, the DSP [U1073] is faulty.
Replace with a new device.

Recheck from check item (1).
If it does not work, replace the PCB.

Go to next page.

Check the SPI communication line.

YES

Check item(34). Check the SPI communication line :
Check the CPU.
Is the "**SPI**" waveform of the TP near the DSP [U1073] correct (like the one shown in the diagram) when the power is turned on?

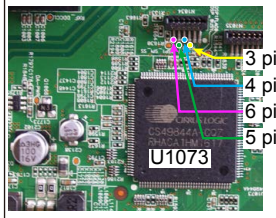

*The diagram shows an example.
(Signal patterns vary depending on the timing.)
Points for checking waveforms
- Crest value (3.3V normally)
- Signal change
- CLOCK frequency (about 6 MHz)
Voltage scale : 2.0V/div
Time scale : 2us/div

YES

NO

Check item(35). Check the SPI communication line :
Check DSP [U1073], CPU[U1018] patterns as well as soldering.
If there is no problem, go to the next step.

DSP [U1073] is faulty.
Replace with a new device.

Recheck from check item (1).
If it does not work, replace the PCB.

3-10. Error Code H1-12 failure detection procedure

Checking device. [U1040 : PCM9211]

Check the power supply voltage.

Check item(36). Check the power supply voltage.
:
Does the power supply voltage of the DIR [U1040] indicate the appropriate voltage (3.3V)?
The test points are as follows.

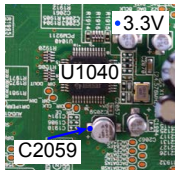

YES

NO

Check item(37). Check the power supply voltage.
:
Check the power supply components [U1067, Q1067] on the substrate and peripheral pattern.
If there is no problem, remove the DIR [U1040] from the substrate and measure the voltage at the test point of check item (36).
Is the power supply voltage correct (3.3V)?

YES

NO

The power supply circuit is faulty.
Replace the PCB.

DIR [U1040] is faulty.
Replace with a new device.

Recheck from check item (1).
If it does not work, replace the PCB.

Checking the reset waveform.

Check item(38). Checking the reset :
Check the CPU.
Is the waveform of the TP near the DIR [U1040] correct (like the one shown in the diagram) when the power is turned on?

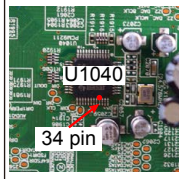

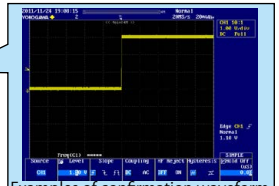

Examples of confirmation waveform
Voltage scale : 1.0V/div
Time scale : 20ms/div

YES

NO

Check the reset circuit between CPU [U1018] and DIR [U1040].
If there is no problem, the DIR [U1040] is faulty.
Replace with a new device.

Recheck from check item (1).
If it does not work, replace the PCB.

Go to next page.

Check the communication line.

YES

Check item(39). Check the communication line :
Check the CPU.
Is the waveform of the TP near the DIR [U1040] correct (like the one shown in the diagram) when the power is turned on?

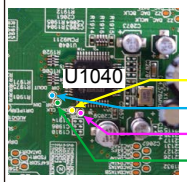

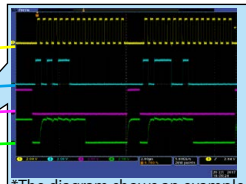

*The diagram shows an example.
(Signal patterns vary depending on the timing.)
Points for checking waveforms
- Crest value (3.3V normally)
- Signal change
- CLOCK frequency (about 2MHz)
Voltage scale : 2.0V/div
Time scale : 2us/div

YES

NO

Check item(40). Check the communication line :
Check DIR [U1040], CPU [U1018] patterns as well as soldering.
If there is no problem, go to the next step.

DIR [U1040] is faulty.
Replace with a new device.

Recheck from check item (1).
If it does not work, replace the PCB.

3-11. HDMI Rx [MN864788] failure detection procedure

Checking operation between the HDMI (Rx) device and the player

※ In order to check, connect the player to the HDMI terminal and configure the player as AVR source.
Check the sound output while turning on the player.

↓

Checking the +5V/DDC status register (HDMI Rx)

↓

Check item(41). Checking the 5V status register :
Send the following command from Termite.exe.

HDMI Rx1 (When checking HDMI inputs 1, 2, and 3)
Send the command "i 002E 00FF 0001".
HDMI Rx2 (When checking HDMI inputs 4, 5, 6, and 7)
Send the command "i 0056 00FF 0001".

Move to the branch destination according to the value returned.

Example

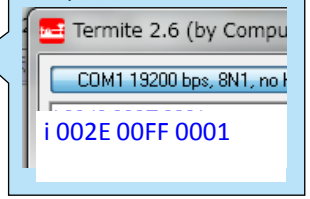

HDMI In 1 ～ 7 "00"
(Detection of 5V is not OK.) → Go to check item (43)

HDMI In1 "44 or 40" HDMI In2 "22 or 20" HDMI In3 "11 or 10"
HDMI In4 "88 or 80" HDMI In5 "44 or 40" HDMI In6 "22 or 20"
HDMI In7 "11 or 10"
(Detection of 5V is OK)

Check item(42). Checking the +5V/DDC status register :
Send the following command from Termite.exe.

HDMI Rx1 (When checking HDMI inputs 1, 2, and 3)
Case of HDMI IN1
Send the command "i 002B 0084 0001".
Case of HDMI IN2
Send the command "i 002B 0054 0001".
Case of HDMI IN3
Send the command "i 002B 0024 0001".

HDMI Rx2 (When checking HDMI inputs 4, 5, 6, and 7)
Case of HDMI IN4
Send the command "i 0053 00B4 0001".
Case of HDMI IN5
Send the command "i 0053 0084 0001".
Case of HDMI IN6
Send the command "i 0053 0054 0001".
Case of HDMI IN7
Send the command "i 0053 0024 0001".

Move to the branch destination according to the value returned.

Example

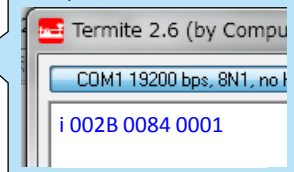

"00 or 04"
(Detection of DDC is not OK.) → Go to check item (44)

"22"
(Detection of DDC is OK) → Go to check item (45)

When the results of check item (41) are "00"
(Detection of 5V is not OK)

↓

Check the +5V voltage. (HDMI Rx)

↓

Check item(42). Check the +5V voltage.
Does "**+5V**" at the following test point indicate 5 V?

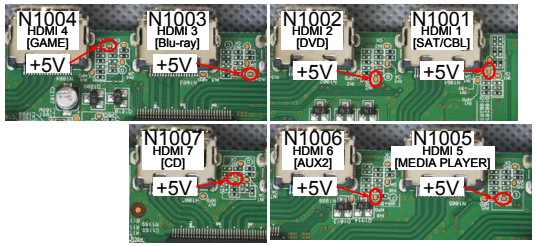

↓ YES

HDMI Rx [U1000 or U1003] is faulty.
Replace with a new device.

↓

Recheck from check item (2).
If it does not work, replace the PCB.

↓ NO

Check for a short circuit in the 5 V line and the 5 V Switch IC [U1002].
If there is no problem, the HDMI Rx [U1000 or U1003] or the 5 V Switch IC [U1002] is faulty
Replace with a new device.

↓

Recheck from check item (2).
If it does not work, replace the PCB.

When the results of check item (42) are "00 or 04"
(Detection of DDC is not OK.)

↓

Check the DDC line. (HDMI Rx)

↓

Check item(43). Check the DDC line :
Are waveforms of "**DDCSCK**" and "**DDCSDA**" observed at the test point near the HDMI input terminal?

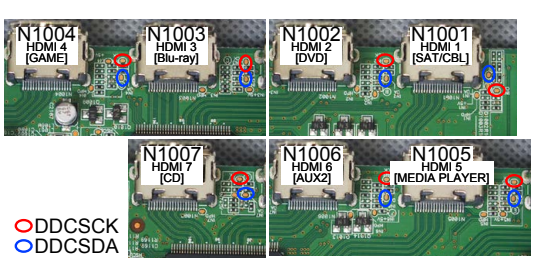

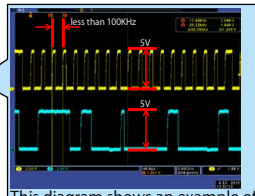

This diagram shows an example of the DDC communication waveform.
-The high level voltage is 5V.
-The frequency of the DDC CLK is 100 KHz or less.
Check at each test point.
Voltage scale : 2.0V/div
Time scale : 40us/div

↓ YES

HDMI Rx [U1000 or U1003] is faulty.
Replace with a new device.

↓

Recheck from check item (2).
If it does not work, replace the PCB.

↓ NO

Check for a short circuit in the DDC line.
If there is no problem, the HDMI Rx1 [U1000] or HDMI Rx2 [U1003] is faulty.
Replace with a new device.

↓

Recheck from check item (2).
If it does not work, replace the PCB.

When the results of check item (42) are "22"
(Detection of DDC is OK.)

↓

Checking the TMDS status register

↓

Check item(45). Checking register of the TMDS CLK detection status register :
Send the following command from Termite.exe.

HDMI Rx1 (When checking HDMI inputs 1, 2, and 3)
Send the command "i 002E 00FF 0001".
Rx2 (When checking HDMI inputs 4, 5, 6, and 7)
Send the command "i 0056 00FF 0001".

When the following value is returned, go to YES.
HDMI In1 "44" HDMI In2 "22" HDMI In3 "11" HDMI In4 "88" HDMI In5 "44" HDMI In6 "22"HDMI In7 "11"

When the following value is returned, go to NO.
HDMI In1 "40" HDMI In2 "20" HDMI In3 "10" HDMI In4 "80" HDMI In5 "40" HDMI In6 "20" HDMI In7 "10"

Example

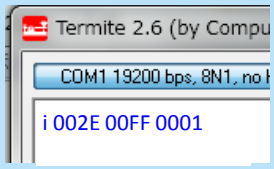

NO →

↓ YES

Check item(46). Checking the audio signal output :
Check the audio signal waveform at the following test point.
Is the waveform like the sample?

HDMI Rx1 [U1000]
(When checking HDMI inputs 1, 2, and 3)

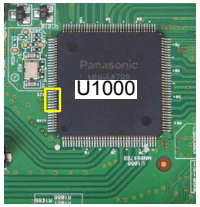

HDMI Rx2 [U1003]
(When checking HDMI inputs 4, 5, 6, and 7)

129/131/132/133/134/135/136 pin

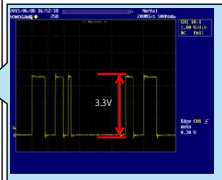

The diagram shows an example of the waveform of pin 129. (I2S0 Data)
Waveform check points
- Crest value (3.3V normally)
- Signal change
Check the waveform of each pin.
Voltage scale : 1.0V/div
Time scale : 500ns/div

↓ YES

The digital audio block is faulty.
Check the digital audio device.
Check "**AUDIO**" in troubleshooting.
If it does not work, replace the PCB.

↓ NO

HDMI Rx [U1000 or U1003] is faulty.
Replace with a new device.

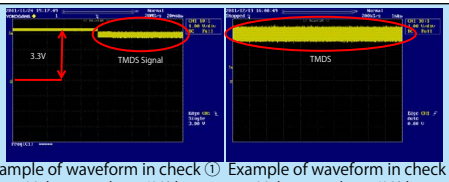

Example of waveform in check ①
Voltage scale : 1.0V/div
Time scale : 20ms/div

Example of waveform in check ②
Voltage scale : 1.0V/div
Time scale : 1s/div

Check item(47). Checking the TMDS input waveform. :
Check the TMDS waveform at the following test point.
Is the waveform like the sample?

HDMI Rx1 [U1000]
(When checking HDMI inputs 1, 2, and 3)

HDMI Rx2 [U1003]
(When checking HDMI inputs 4, 5, 6, and 7)

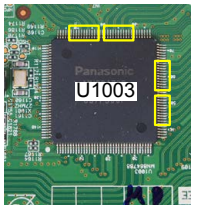

HDMI In3/7
93/94/96/97/99/100/102/103 pin

HDMI In2/6
80/81/83/84/86/87/89/90 pin

HDMI In1/5
55/56/58/59/61/62/64/65 pin

HDMI In4
42/43/45/46/48/49/51/52 pin

↓ YES

HDMI Rx [U1000 or U1003] is faulty.
Replace with a new device.

↓ NO

Check for a short circuit in the pattern of the TMDS line of the HDMI Rx [U1000 or U1003] from the HDMI input terminal.
If there is no problem, the HDMI Rx [U1000 or U1003] is faulty. Replace with a new device.

↓

Recheck from check item (2).
If it does not work, replace the PCB.

3-12. Front HDMI Buffer IC [AD8195] failure detection procedure

Checking operation between the HDMI (Front HDMI Buffer) and the player

※ In order to check, connect the player to the HDMI terminal and configure the player as AVR source.
Check the sound output while turning on the player.

↓

Check the power supply voltage. (HDMI Rx)

↓

Check item(48). Check the power supply voltage. :
Does the power supply voltage of the Front HDMI FFC base [N1000] indicate the correct voltage (5V)?
The test points are as follows.

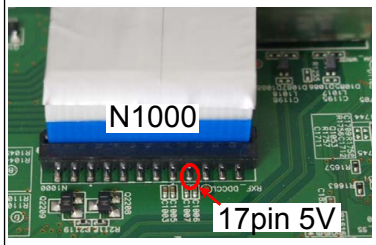

YES ↓ NO

Check item(49). Check the power supply voltage. :
Check the FET SW [Q1058] and peripheral pattern.
If there is no problem, remove the Front HDMI FFC from the substrate and measure the voltage at the test point of check item (48).
Is the power supply voltage correct (5 V)?

YES ↓

Front HDMI Buffer [U3000] is faulty.
Replace with a new device.

↓

Recheck from check item (2).
If it does not work, replace the PCB.

NO ↓

Replace the FET SW [Q1058] and recheck from check item (48).
If it does not work, replace the PCB.

↓

Checking the +5V/DDC status register (Front HDMI Buffer)

↓

Check item(50). Checking the 5V status of the register :
Send the following command from Termite.exe.

Send the command "i 002E 00FF 0001".

Move to the branch destination according to the value returned.

Example

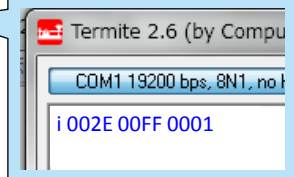

"00"
(Detection of 5V is not OK.) → Go to check item (52)

"88 or 80"
(Detection of 5V is OK)

Check item(51). Checking the status of the register :
Send the following command from Termite.exe.

Send the command "i 002B 00B4 0001".

Move to the branch destination according to the value returned.

Example

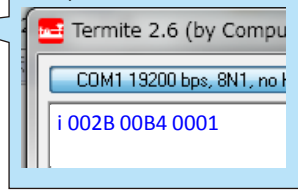

"00 or 04"
(Detection of DDC is not OK.) → Go to check item (52)

"22"
(Detection of DDC is OK) → Go to check item (54)

When the results of check item (50) are "00"
(Detection of 5V is not OK.)

↓

Check the +5V voltage. (Front HDMI Buffer)

↓

Check item(52). Check the +5V voltage :
Does "+5 V" at the following test point indicate 5 V?
The test points are as follows.

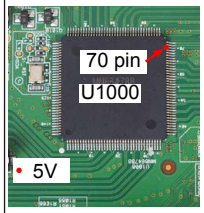

NO → Check for a short circuit in the 5 V line, the Front HDMI FFC, and the 5 V Switch [U1002].
If there is no problem, the HDMI Rx1 [U1000] or the 5 V Switch [U1002] is faulty.
Replace with a new device.

↓ YES

HDMI Rx1 [U1000] is faulty.
Replace with a new device.

↓

Recheck from check item (2).
If it does not work, replace the PCB.

When the results of check item (51) are "00 or 04"
(If the DDC are not OK)

↓

Check the DDC line. (Front HDMI Buffer)

↓

Check item(53). Check the DDC line :
Does "**DDCCL / DDCDA**" signal of the Rx1 [U1000] indicate 5 V?
The test points are as follows.

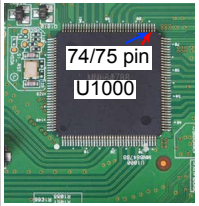

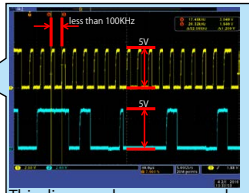

This diagram shows an example of the DDC communication waveform.
-The high level voltage is 5V.
-The frequency of the DDC CLK is 100 KHz or less.
Check at each test point.
Voltage scale : 2.0V/div
Time scale : 40us/div

NO → Check for a short circuit in the DDC line and check the Front HDMI FFC.
If there is no problem, the Front HDMI Buffer [U3000] is faulty.
Replace with a new device.

↓ YES

HDMI Rx1 [U1000] is faulty.
Replace with a new device.

↓

Recheck from check item (2).
If it does not work, replace the PCB.

When the results of check item (51) are "22"
(Detection of DDC is OK)

↓

Checking the TMDS status register

↓

Check item(54). Check the TMDS CLK detection status of the register. :
Send the following command from Termite.exe.

Send the command "i 002E 00FF 0001".

When the following value is returned, go to YES.
"88"

When the following value is returned, go to NO.
"80"

Example

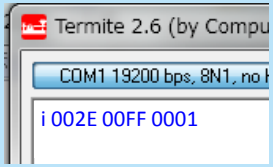

NO →

YES ↓

Check item(55). Checking the TMDS input waveform. :
Check the TMDS waveform at the following test point.
Is the waveform like the sample?

HDMI Rx1 [U1000]

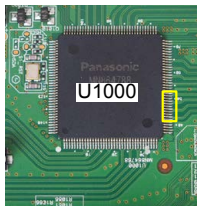

42/43/45/46/48/49/51/52 pin

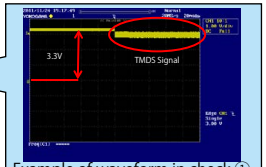

Example of waveform in check ①
Voltage scale : 1.0V/div
Time scale : 20ms/div

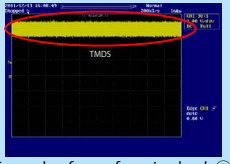

Example of waveform in check ②
Voltage scale : 1.0V/div
Time scale : 1s/div

YES ↓

HDMI Rx1 [U1000] is faulty.
Replace with a new device.

NO ↓

HDMI Rx1 [U1000] is faulty.
Replace with a new device.

Check for a short circuit in the TMDS line and the Front HDMI FFC.
If there is no problem, the Front HDMI Buffer [U3000] is faulty.
Replace with a new device.

↓

Recheck from check item (2).
If it does not work, replace the PCB.

3-13. HDMI transmission IC [MN864788] failure detection procedure

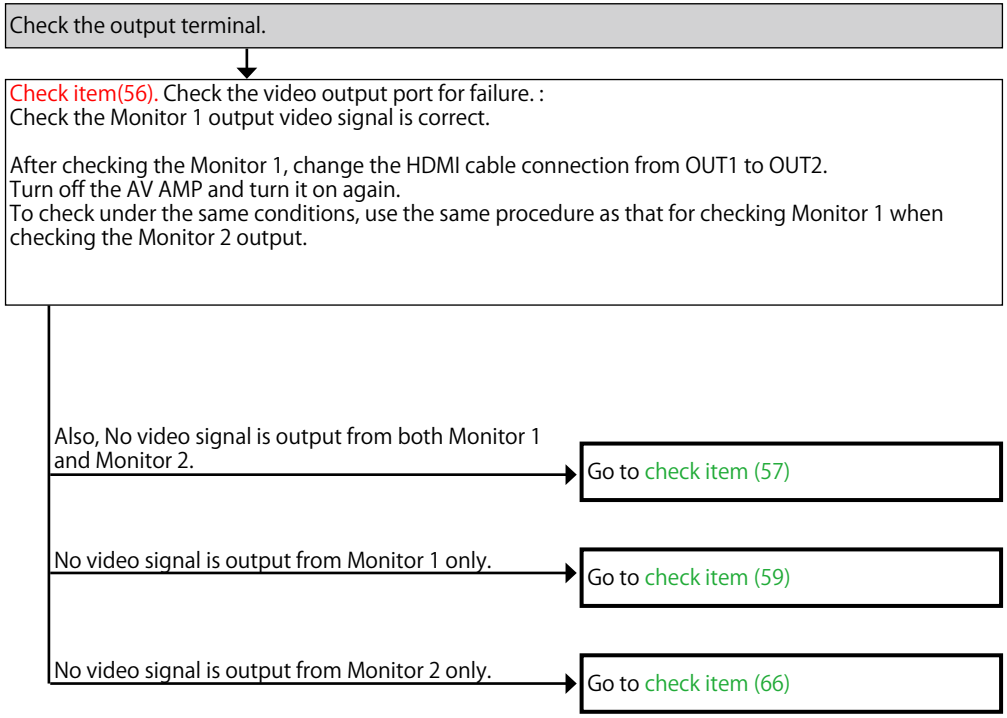

When the results of check item (56) are "No video signal is output from both Monitor 1 and Monitor 2".

Checking operation between the HDMI (Rx) device and the HDMI device (Tx).
Checking operation between the HDMI (Tx) device and TV.

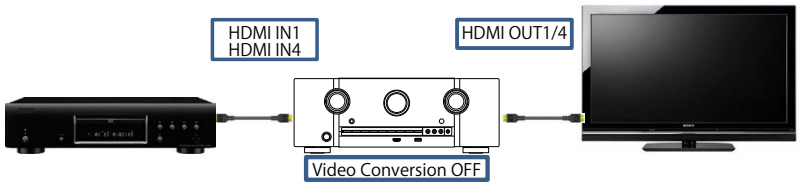

Checking the TMDS status register (HDMI Rx -> HDMI Tx)

Check item(57). Check the TMDS CLK detection status of the register.
Send the following command from Termite.exe.

Send the command "i 0006 00FF 0001".
When checking the signal path from HDMI1 to HDMI OUT1
"72" : Go to YES.
"74" : Go to NO.

When checking the signal path from HDMI4 IN to HDMI OUT1
"71" : Go to YES.
"74" : Go to NO.

Example

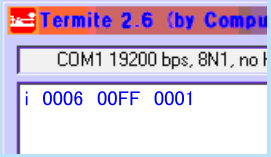

YES → The first operation : Checking between Monitor 1 and the TV.
Go to check item (59)
Next operation : Checking between Monitor 2 and the TV.
Go to check item (66)

NO

Check item(58). Checking the TMDS input. :
TMDS waveform at the following points.

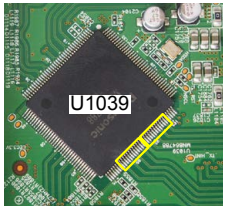

Between HDMI Rx1 and HDMI Tx
80/81/83/84/86/87/89/90 pin

Between HDMI Rx2 and HDMI Tx
93/94/96/97/99/100/102/103 pin

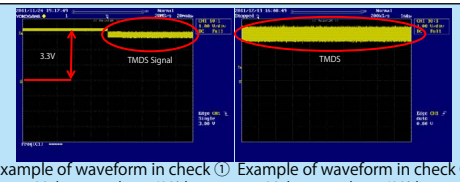

Example of waveform in check ①
Voltage scale : 1.0V/div
Time scale : 20ms/div

Example of waveform in check ②
Voltage scale : 1.0V/div
Time scale : 1s/div

NO → HDMI Tx [U1039] is faulty.
Replace with a new device.

YES → Recheck from check item (3).
If it does not work, replace the PCB.

NO → If it is NO between HDMI Rx1 and HDMI Tx.
HDMI Rx1 [U1000] is faulty.
Replace with a new device.

If it is NO between HDMI Rx2 and HDMI Tx.
HDMI Rx2 [U1003] is faulty.
Replace with a new device.

Checking between Monitor1 and the TV.
Connect Monitor1 to the TV and check the following items with the TV turned on.

Checking the HPD/RXSENSE status register. (HDMI Tx -> Monitor)

Check item(59). Check the HPD and RXSENSE register value of the HDMI Tx device. :
Send the following command from Termite.exe.

Send the command "i 0000 0040 0001".

Move to the branch destination according to the value returned.

Example

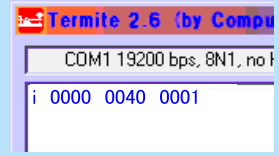

"30"
(Detection of HPD is OK / Detection of RXSENSE is OK) → Go to check item (60)

"10"
(Detection of HPD is OK / Detection of RXSENSE is not OK) → Go to check item (63)

"20"
(Detection of HPD is not OK / Detection of RXSENSE is OK) → Go to check item (64)

"00"
(Detection of HPD is not OK / Detection of RXSENSE is not OK) → Go to check item (65).

When the results of check item (59) are "30"
(Detection of HPD is OK / Detection of RXSENSE is OK)

Checking the EDID register. (Monitor1)

Check item(60). Check the Monitor EDID :
① Unplug the AC cord. Plug the AC cord into a power outlet.
② Send the transmission command "m_1" from Termite.exe.
Are the first eight bytes of the returned value "00FFFFFFFFFFFF00"?

Example

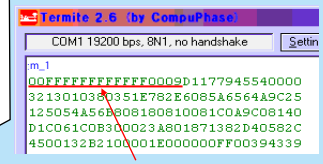

The first eight bytes are normally "00FFFFFFFFFFFF00".
*If the AVR and the TV are not connected via HDMI, the correct register value cannot be verified.

YES

Check item(61). Checking the TMDS :
Check the TMDS waveform at the following test point.

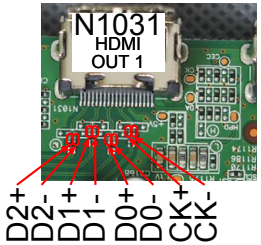

YES

Check for a short circuit in the TMDS line.
If there is no problem, the HDMI Tx [U1039] is faulty.
Replace with a new device.

HDMI Tx [U1039] is faulty.
Replace with a new device.

NO

Check item(62). Check the communication :
Are waveforms of "**DDCCLK and DDCSDA**" observed at the test point near the HDMI output terminal [N1031]?

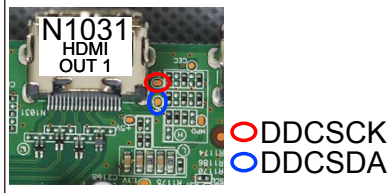

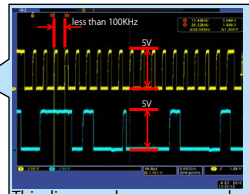

This diagram shows an example of the DDC communication waveform.
-The high level voltage is 5V.
-The frequency of the DDC CLK is 100 KHz or less.
Check at each test point.
Voltage scale : 2.0V/div
Time scale : 40us/div

YES

Check for a short circuit in the DDC line.
If there is no problem, the HDMI Tx [U1039] is faulty.
Replace with a new device.

HDMI Tx [U1039] is faulty.
Replace with a new device.

Recheck from check item (3).
If it does not work, replace the PCB.

When the results of check item (59) are "10"
(Detection of HPD is OK / Detection of RXSENSE is not OK)

Check the RXSENSE. (Monitor1)

Check item(63). Checking the RXSENSE. :
Does the test point of RXSENSE close to the HDMI output terminal [N1031] indicate the (3.3V)?

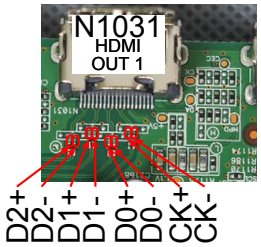

YES

NO

Check for a short circuit in the TMDS line.
If there is no problem, the HDMI Tx [U1039] is faulty.
Replace with a new device.

HDMI Tx [U1039] is faulty.
Replace with a new device.

Recheck from check item (3).
If it does not work, replace the PCB.

When the results of check item (59) are "20"
(Detection of HPD is not OK / Detection of RXSENSE is OK)

Check the HPD. (Monitor1)

Check item(64). Checking the HPD :
Does the voltage of HPD test point close to the HDMI output terminal [N1031] indicate Hi (3-5 V)?

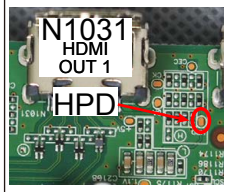

YES

NO

Check for a short circuit in the HPD line.
If there is no problem, the HDMI Tx [U1039] is faulty.
Replace with a new device.

HDMI Tx [U1039] is faulty.
Replace with a new device.

Recheck from check item (3).
If it does not work, replace the PCB.

When the results of check item (59) are "00"
(Detection of HPD is not OK / Detection of RXSENSE is not OK)

↓

Check the RXSENSE/HPD. (Monitor1)

↓

Check item(65). Checking the HPD and RXSENSE. :
Does the test point of RXSENSE close to the HDMI output terminal [N1031] indicate the (3.3V)?
Does the voltage of HPD test point close to the HDMI output terminal [N1031] indicate Hi (3-5 V)?

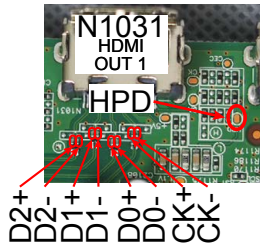

YES ↓ NO

NO: Check for a short circuit in the TMDS/ HPD line.
If there is no problem, the HDMI Tx [U1039] is faulty.
Replace with a new device.

YES: HDMI Tx [U1039] is faulty.
Replace with a new device.

↓

Recheck from check item (3).
If it does not work, replace the PCB.

Checking between Monitor 2 and the TV.
Connect Monitor2 to the TV and check the following items with the TV turned on.

↓

Checking the HPD/RXSENSE status register. (Monitor2)

↓

Check item(66). Check the HPD and RXSENSE register value of the HDMI TX device. :
Send the following command from Termite.exe.

Send the command "i 0000 0040 0001".

Move to the branch destination according to the value returned.

Example

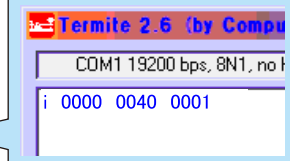

"03"
(Detection of HPD is OK / Detection of RXSENSE is OK)
→ Go to check item (67)

"01"
(Detection of HPD is OK / Detection of RXSENSE is not OK)
→ Go to check item (70)

"02"
(Detection of HPD is not OK / Detection of RXSENSE is OK)
→ Go to check item (71)

"00"
(Detection of HPD is not OK / Detection of RXSENSE is not OK)
→ Go to check item (72)

When the results of check item (66) are "03"
(Detection of HPD is OK / Detection of RXSENSE is OK)

Checking the EDID register. (Monitor2)

Check item(67). Check the Monitor EDID :
① Unplug the AC cord. Plug the AC cord into a power outlet.
② Send the transmission command "m_2" from Termite.exe.
Are the first eight bytes of the returned value "00FFFFFFFFFFFF00"?

Example

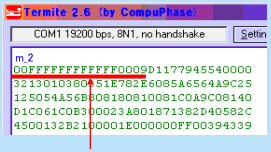

The first eight bytes are normally "00FFFFFFFFFFFF00".
*If the AVR and the TV are not connected via HDMI, the correct register value cannot be verified.

YES

NO

Check item(68). Checking the TMDS :
Check the TMDS waveform at the following test point.

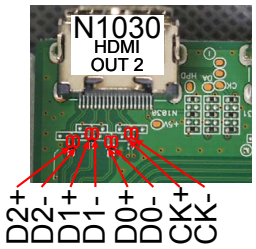

Check item(69). Check communication with the monitor :
Are waveforms of "**DDCCLK**" and "**DDCSDA**" observed at the test point near the HDMI output terminal [N1030]?

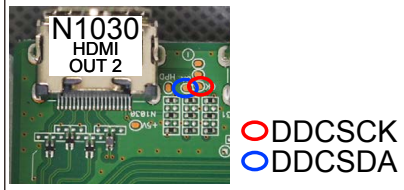

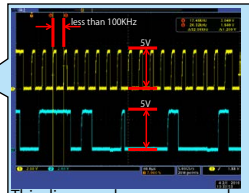

This diagram shows an example of the DDC communication waveform.
-The high level voltage is 5V.
-The frequency of the DDC CLK is 100 KHz or less.
Check at each test point.
Voltage scale : 2.0V/div
Time scale : 40us/div

YES

NO

Check for a short circuit in the TMDS line.
If there is no problem, the HDMI Tx [U1039] is faulty.
Replace with a new device.

HDMI Tx [U1039] is faulty.
Replace with a new device.

YES

NO

HDMI Tx [U1039] is faulty.
Replace with a new device.

HDMI Tx [U1039] is faulty.
Replace with a new device.

Recheck from check item (3).
If it does not work, replace the PCB.

When the results of check item (66) are "01"
(Detection of HPD is OK / Detection of RXSENSE is not OK)

Check the RXSENSE. (Monitor2)

Check item(70). Checking the RXSENSE. :
Does the test point of RXSENSE close to the HDMI output terminal [N1030] indicate the 3.3 V?

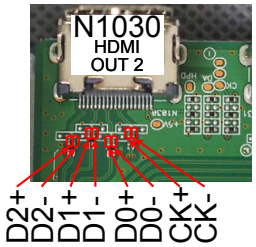

YES

NO

Check for a short circuit in the TMDS line.
If there is no problem, the HDMI Tx [U1039] is faulty.
Replace with a new device.

HDMI Tx [U1039] is faulty.
Replace with a new device.

Recheck from check item (3).
If it does not work, replace the PCB.

When the results of check item (66) are "02"
(Detection of HPD is not OK / Detection of RXSENSE is OK)

Check the HPD. (Monitor2)

Check item(71). Checking the HPD :
Does the voltage of HPD test point close to the HDMI output terminal [N1030] indicate Hi (3-5 V)?

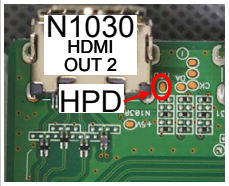

YES

NO

Check for a short circuit in the HPD line.
If there is no problem, the HDMI Tx [U1039] is faulty.
Replace with a new device.

HDMI Tx [U1039] is faulty.
Replace with a new device.

Recheck from check item (3).
If it does not work, replace the PCB.

When the results of check item (66) are "00"
(Detection of HPD is not OK / Detection of RXSENSE is not OK)

↓

Checking the HPD/RXSENSE status register. (Monitor2)

↓

Check item(72). Checking the HPD and RXSENSE. :
Does the test point of RXSENSE close to the HDMI output terminal [N1030] indicate the (3.3V)?
Does the voltage of HPD test point close to the HDMI output terminal [N1030] indicate "Hi" (3-5 V)?

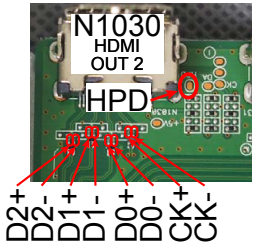

YES ↓ NO

Check for a short circuit in the TMDS/ HPD line.
If there is no problem, the HDMI Tx [U1039] is faulty.
Replace with a new device.

HDMI Tx [U1039] is faulty.
Replace with a new device.

↓

Recheck from check item (3).
If it does not work, replace the PCB.

3-14. GUI IC [ADV8003] failure detection procedure

Checking the TMDS status register (GUI -> HDMI Tx)

Check item(73). Check the TMDS CLK detection status of the register.
Send the following command from Termite.exe.

Send the command "i 0006 00FF 0001".

When the following value is returned, go to YES.
"74"
When the following value is returned, go to NO.
"70"

Example

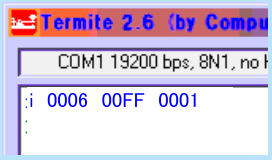

NO

YES

HDMI Tx [U1039] is faulty.
Replace with a new device.

Recheck from check item (4).
If it does not work, replace the PCB.

Check item (74). Checking the TMDS input. :
TMDS waveform at the following points.

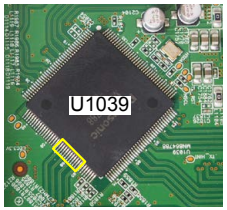

55/56/58/59/61/62/64/65 pin

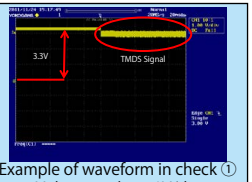

Example of waveform in check ①
Voltage scale : 1.0V/div
Time scale : 20ms/div

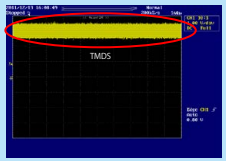

Example of waveform in check ②
Voltage scale : 1.0V/div
Time scale : 1s/div

YES

NO

HDMI Tx [U1039] is faulty.
Replace with a new device.

The GUI [U1026] is faulty.
Replace with a new device.

Recheck from check item (4).
If it does not work, replace the PCB.

3-15. HDMI SW IC [TMDS261B] failure detection procedure

Checking the TMDS status register (HDMI SW -> GUI)

Check item(75). Check the TMDS CLK detection status of the register.
Send the following command from Termite.exe.

Send the command "i 00E2 0004 0001".

When the following value is returned, go to YES.
"02"

When the following value is returned, go to NO.
"other"

Example

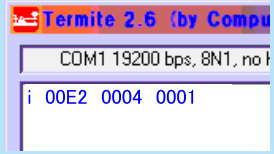

YES

The GUI [U1026] is faulty.
Replace with a new device.

Recheck from check item (5).
If it does not work, replace the PCB.

NO

Check item (76). Checking the TMDS input. :
Check the TMDS waveform at the following test point.
Is the waveform like the sample?

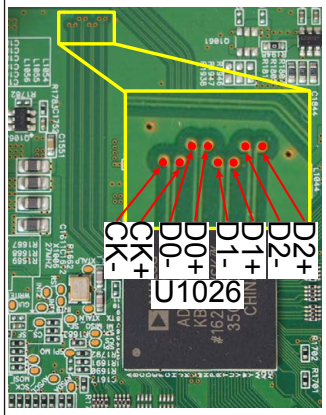

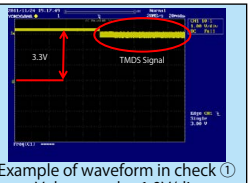

Example of waveform in check ①
Voltage scale : 1.0V/div
Time scale : 20ms/div

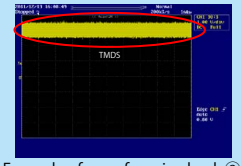

Example of waveform in check ②
Voltage scale : 1.0V/div
Time scale : 1s/div

YES

The GUI [U1026] is faulty.
Replace with a new device.

NO

HDMI SW(U1103) is faulty.
Replace with a new device.

Recheck from check item (5).
If it does not work, replace the PCB.

4. Device implementation location

DIGITAL (A SIDE)

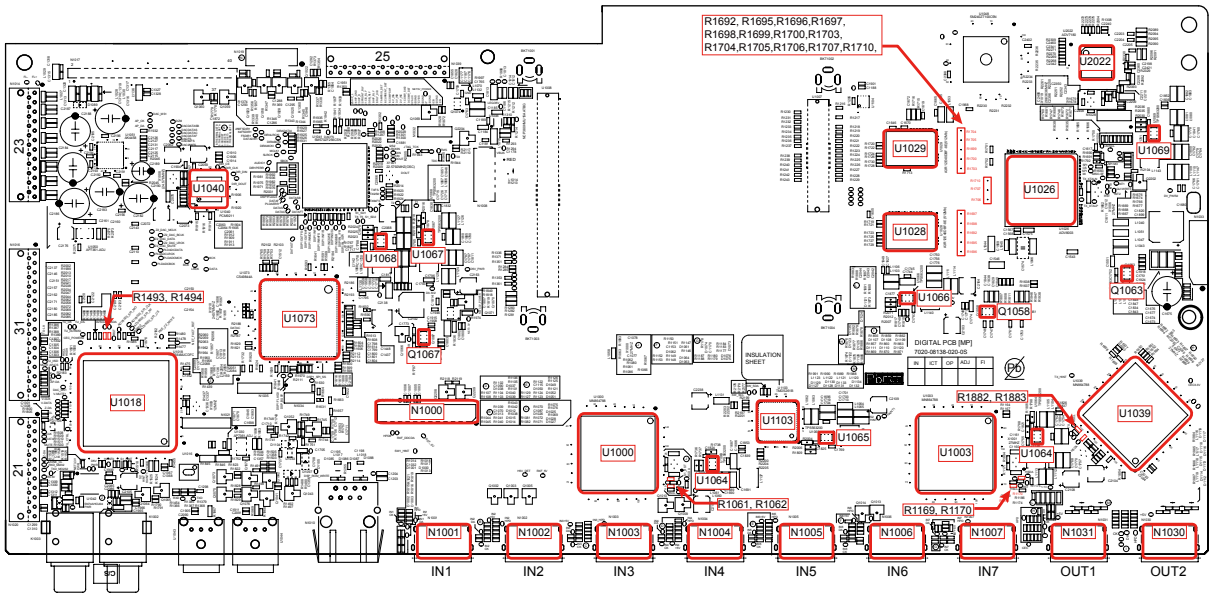

F-HDMI (A SIDE)

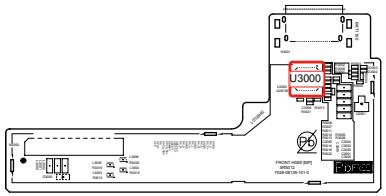

DIGITAL (B SIDE)

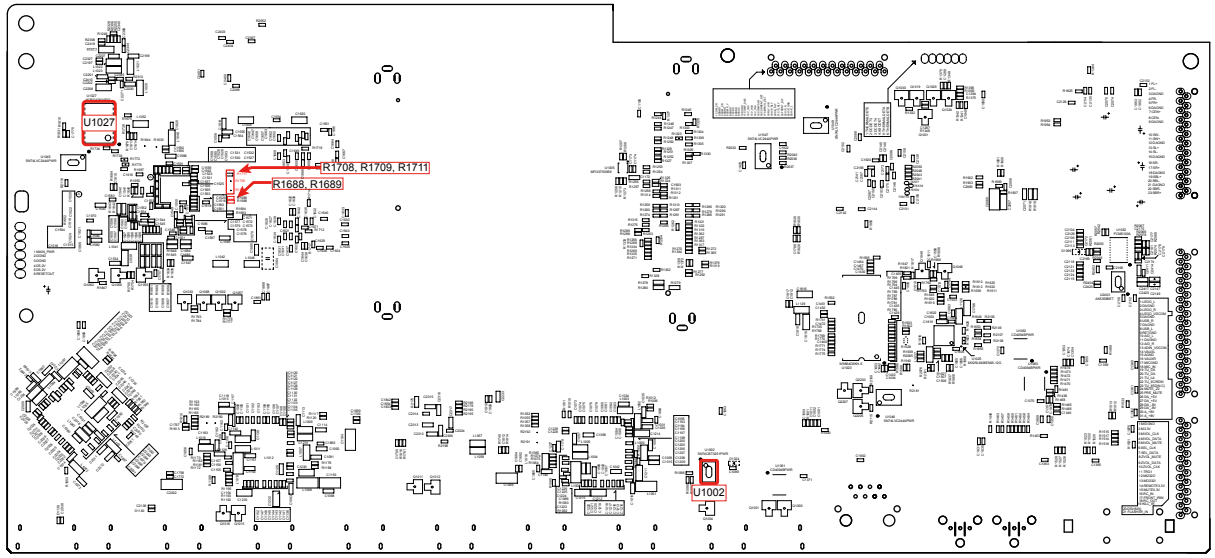

CLOCK FLOW & WAVE FORM IN DIGITAL BLOCK

WAVE FORM

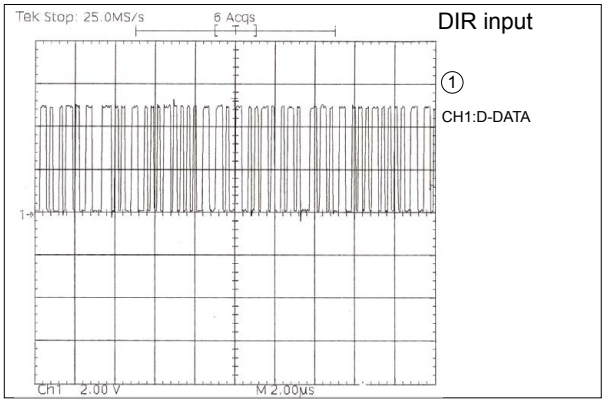

DIR input

①

CH1:D-DATA

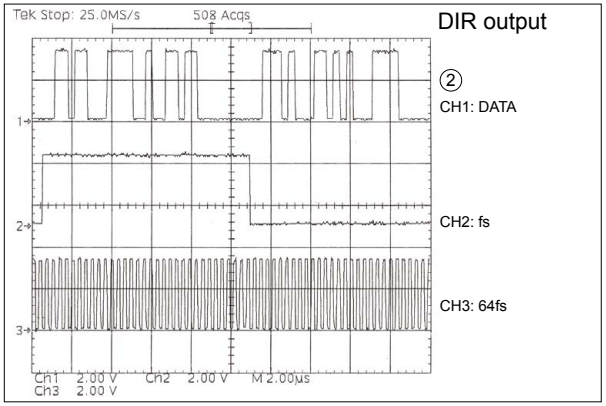

DIR output

②

CH1: DATA

CH2: fs

CH3: 64fs

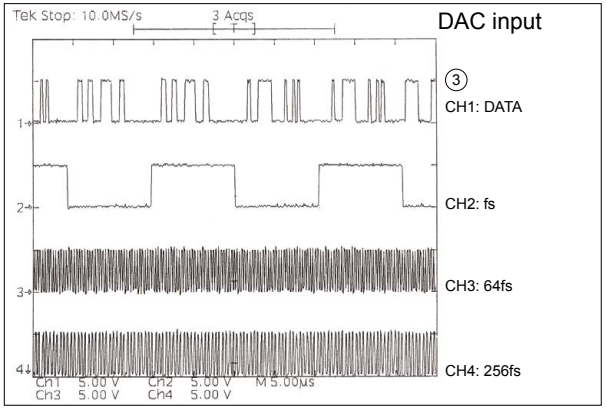

DAC input

③

CH1: DATA

CH2: fs

CH3: 64fs

CH4: 256fs

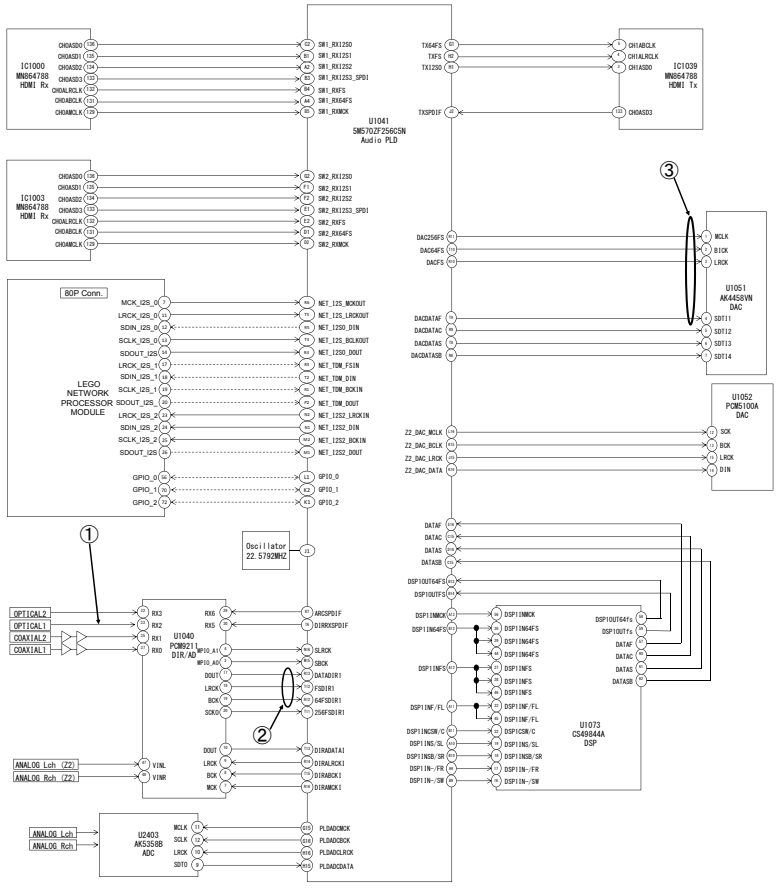

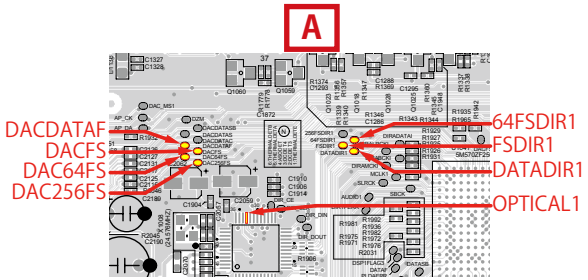

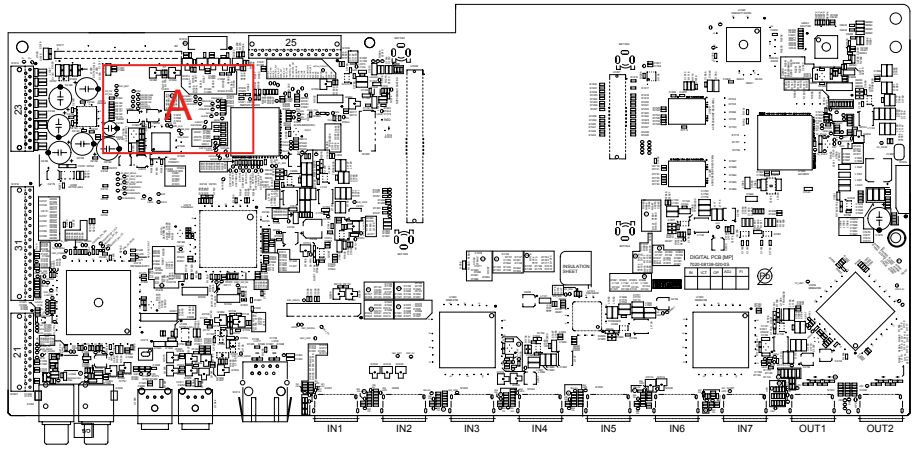

SPECIAL MODE

Special mode setting button

※ No. 1 - 4, 6 - 8 : While holding down buttons "**A**", "**B**" and "**C**" simultaneously, press the power button to turn on the power.
※ No. 5, 9, 10 : While the power is on, hold down buttons "**A**", "**B**", and "**C**" for at least 3 seconds .

No.	Mode	Button A	Button B	Button C	Descriptions
1	Version Display (u-COM / DSP Error Display)	DIMMER	STATUS	-	Displays the version of firmware such as the main firmware or DSP. Errors that have occurred are displayed. (See 1. Version Display Mode)
2	PANEL / REMOTE LOCK Selection Mode	M-DAX	DIMMER	-	Start this unit in the PANEL/REMOTE LOCK selection mode so that PANEL LOCK and Remote Lock can be switched between On and Off. (See 2. PANEL / REMOTE LOCK Selection Mode) ·PANEL LOCK Mode (with Volume) Disables reception from all keys and encoders on the front panel except the power button (including the volume). ·PANEL LOCK Mode (without Volume) Disables reception from all keys and encoders on the front panel except the power button and volume encoder. ·PANEL LOCK mode is turned off
3	Selecting the Mode for Service-related	ZONE2 SOURCE	STATUS	-	This is a display for turning on each service-related mode. Service-related modes : No. 3-1 - No. 3-5
3-1	Check the Video/Audio path Mode	↑	↑	-	This is a special mode for service confirmation used during repair work to simplify the confirmation work for the Audio channel / video channel. (See Service Path Check Mode)
3-2	Protection history display mode	↑	↑	-	Displays the protection occurrence history. (See 3-2. Protection History Display Mode)
3-3	232C Standby Clear Mode	↑	↑	-	Switches from 232C standby mode to normal standby mode. (See 3-3. 232C Standby Clear Mode)
3-4	Operation Info Mode	↑	↑	-	Displays the accumulated operating time of the unit, the number of times the power was switched on, and the number of occurrences of each protection. (See 3-4. Operation Info Mode)
3-5	TUNER STEP Mode (U and N model only)	↑	↑	-	Enables reception STEP of the ANALOG TUNER to be changed. (See 3-5. TUNER STEP mode (U / N only))
4	Protection Pass Mode	DIMMER	STATUS	SOUND MODE	Enables the power to be turned on when protection detection is disabled. (See 4. Protection Pass Mode)
5	Network Initialization Mode	TUNER PRESET CH -	DIMMER	-	Network module backup data is initialized. (See 5. Network Initialization Mode)
6	User Initialization Mode	M-DAX	ZONE2 SOURCE	-	Initialize the backup data for the MCU and network module. (Settings for the Installer Setup are not initialized.)
7	Factory Initialization Mode	TUNER PRESET CH -	TUNER PRESET CH +	-	Initialize the backup data only for MCU. (Settings for the Installer Setup are initialized) (Network function settings are not initialized.) (See Initializing This Unit)
8	Clearing the Operation Info	TUNER PRESET CH +	DIMMER	-	Clear the accumulated operating time of the unit, the number of times the power was switched on, and the number of occurrences of each protection. (See 7. Clearing the Operation Info)
9	HDMI Diagnostics Mode	DIMMER	SOUND MODE	-	This mode is used to identify and solve the cause when there is a connectivity issue with this unit and an HDMI device. For details on the operating methods and diagnosis procedures, see the HDMI Diagnostics and Troubleshooting guide issued on SDI.
10	Log Capture feature	TUNER PRESET CH +	STATUS	-	Acquires the Network Module log. The log is deleted when the Network Module is deleted. (See 8. Log Capture feature)

NOTE : If the two Indicator Lights at the bottom right of the FLD display "0.0__", this means that the unit has entered the special developer's mode. In this case, the RS-232C communication is not available. To release this special mode, press and hold the "**DIMMER**" and "**STATUS**" buttons for 3 seconds or more while the power is ON. The RS-232C communication is available when the two Indicator Lights at the bottom right of the FLD go out.

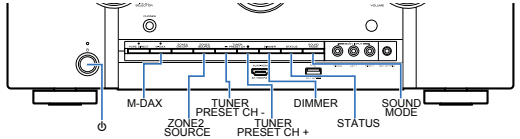

1. Version Display Mode

1.1. Actions

Version information is displayed when the device is started in this mode.

1.2. Starting up

While holding down buttons "**DIMMER**" and "**STATUS**" simultaneously, press the power button to turn on the power.
then press the "**STATUS**" button to display the information in section 1.3 on the display.
※ The version list is also displayed on GUI while the version is displayed on the display.

1.3. Display Order

Error information(See "1.4. Error display") → ① Model destination information, Serial Number → ② Firmware Package → ③ Main μ -com, Main 1st Boot Loader → ④ DSP → ⑤ Audio PLD → ⑥ Video PLD → ⑦ GUI SFLASH → ⑧ HEOS Version → ⑨ HEOS Build → ⑩ HEOS Module → ⑪ HEOS Configuration → ⑫ HEOS Locale → ⑬ Ether Mac Address → ⑭ WiFi Mac Address → ⑮ BT Mac Address → ⑯ Audyssey App Interface Version

①Model destination information, Serial Number：

L1	SR5012 ＼
L2	SN*******
L3	*********

＼ : Region (U, N, K, F)

②Firmware Package :

L1	PACKAGE
L2	
L3	****

③Main μ-com, Main 1st Boot Loader :

L1	M:*****
L2	*********
L3	BL-**.**

④DSP ROM :

L1	DSP
L2	
L3	**.**

⑤Audio PLD :

L1	A.PLD
L2	
L3	**.**

⑥Video PLD :

L1	V.PLD
L2	
L3	**.**

⑦GUI SFLASH :

L1	GUI
L2	@@$＼****
L3	

@ : Model code, $: Brand code (De=1, Mz=2),
＼ : Region code (U=1, N=2, K=5, F=4, ALL=0),
* : version

⑧HEOS Version :

L1	HEOS Ver
L2	*.***
L3	.***

⑨HEOS Build :

L1	Build
L2	
L3	*****

⑩HEOS Module :

L1	Module
L2	
L3	***

⑪HEOS Config :

L1	Config
L2	Producti
L3	on

⑫HEOS Locale :

L1	Locale
L2	
L3	*****

⑬Ether MAC Address :

L1	EtherMAC
L2	******
L3	-******

⑭Wi-Fi MAC Address :

L1	Wi-FiMAC
L2	******
L3	-******

⑮Bluetooth MAC Address :

L1	BT MAC
L2	******
L3	-******

⑯Audyssey App Interface Ver :

L1	Audy IF
L2	
L3	**.**

1.4. Error display

See the table below for descriptions of the displayed errors and countermeasures for these.
If multiple errors occur, only one item is displayed.
The priority order is ②, ③, ④, ⑤, ⑥, ①.

Condition	States	Display	TROUBLE SHOOTING
① Firm Check NG	The model name, brand name and region information written in the firmware are compared to the region settings in the PCB. This error is displayed if the information does not match. " ▲ " is displayed as the first character if the firmware is not correct (see the illustrations on the right).	L1 FIRM L2 ERROR L3	•Check the resistor for setting the region(R1524 / 1525 DIGITAL PCB). •Write the firmware for the correct region.
		L1 M:******▲ L2 ******** L3 BL-**.**	
		L1 DSP ▲ L2 ******** L3	
		L1 A.PLD ▲ L2 L3 **.**	
		L1 V.PLD ▲ L2 L3 **.**	
		L1 GUI ▲ L2 L3 **.**	
② IP SCALER NG	An error occurs in Loop back Test of the DDR memory which is performed during the initial setting of i/p Scaler(ADV8003).	L1 IP L2 SCALER L3 ERR 01	•Check the circuits around the IP SCALER (U1026, DIGITAL PCB) and DDR2 (U1028/1029). If there appear to be no problems, U1026 or U1028/1029 is faulty.
	During the initial setting of i/p Scaler (ADV8003) , there is not the reply of the Loop back Test result of the DDR memory .	L3 ERR 02	
③ GUI Serial Flash NG	If the Main CPU version is not supported by the GUI Serial Flash (ADV8003), " ▼ " is displayed as the first character of the GUI firmware version.	L1 GUI VER. L2 ERROR L3	•Check the firmware version.

Condition	States	Display	TROUBLE SHOOTING
④ DIR NG	This error is displayed if there is no response from the DIR.	L1 DIR L2 ERROR L3 01	•Check the DIR (U1040, DIGITAL PCB) and surrounding circuits.
⑤ DSP NG	The DSP FLAG0 port does not enter "**Hi**" status while booting a DSP code even after resetting DSP.	L1 DSP L2 ERROR L3 01	•Check the DSP (U1073, DIGITAL PCB) and surrounding circuits.
	The DSP FLAG0 port does not enter "**Hi**" status before issuing a DSP command.	L3 02	
	Setting WRITE to "**Lo**" does not set ACK to "**Hi**" during DSP data reading.	L3 03	
	Setting REQ to "**Lo**" does not set ACK to "**Lo**" during DSP data reading.	L3 04	
	Setting WRITE to "**Hi**" does not set ACK to "**Hi**" during DSP data writing.	L3 05	
	Setting REQ to "**Lo**" does not set ACK to "**Lo**" during DSP data writing.	L3 06	
⑥ EEPROM NG	An error occurred in a checksum of the EEPROM(*** is a block address number).	L1 BACKUP L2 ERROR L3 ***	

1.5. Version Display in the Setup Menu

Follow the steps below to display the firmware information.

(1) Press the "**SETUP**" button on the remote control.
(2) Select "**General** - **Information** - **Firmware**".

The version information is displayed as a 16-digit number as shown in the screenshot below.

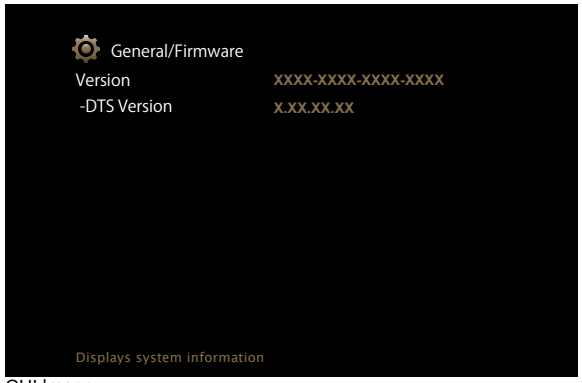

GUI Image

This 16-digit number comprises a part of the version number of each device and module.
Numerics and version numbers correspond as shown below.

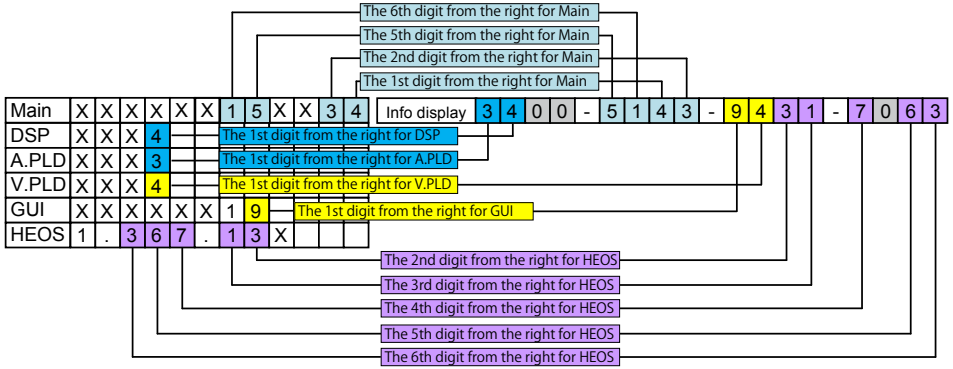

※ The firmware version numbers and this 16-digit version information are written in the Service Information.
※ Replace as follows for the 5th to 7th digits of HEOS version.

X.XXX.X → X.XXX.00X
X.XXX.XX → X.XXX.0XX
X.XXX.XXX → X.XXX.XXX

2. PANEL / REMOTE LOCK Selection Mode

2.1. Actions

Switch the PANEL LOCK and REMOTE LOCK modes between on and off.

2.2. Starting up

While holding down buttons "**M-DAX**" and "**DIMMER**" simultaneously, press the power button to turn on the power.
Select the desired mode using the "**TUNER PRESET CH+/-**" button, then press the "**STATUS**" button to confirm.

2.3. Displaying and Selecting Each Mode

The information shown on the display switches each time the "**TUNER PRESET CH+**" button is pressed.
Press the "**STATUS**" button to set the currently displayed mode and restart the device.
The setting with "*" is selected for each mode.

①

L1	P/V LOCK
L2	*On
L3	

The buttons on the unit and the master volume knob does not function.

↓

②

L1	FP LOCK
L2	On
L3	

The buttons on the unit does not function.

↓

③

L1	FP LOCK
L2	*Off
L3	

The PANEL LOCK mode is turned off.

↓

④

L1	RC LOCK
L2	On
L3	

The device cannot be operated by the remote control.

↓

⑤

L1	RC LOCK
L2	*Off
L3	

The REMOTE LOCK mode is turned off.

3-1. Selecting the Mode for Service-related

3-1.1. Actions

Select diagnostic mode (service path check mode), protection history display mode, 232C standby clear mode, Operation Info mode, TUNER STEP mode or Remote ID Setup Mode.

3-1.2. Starting up

While holding down buttons "**ZONE2 SOURCE**" and "**STATUS**" simultaneously, press the power button to turn on the power.
Select the desired mode using the "**TUNER PRESET CH+/-**" button, then press the "**STATUS**" button to confirm.

3-1.3. Displaying and Selecting Each Mode

The information shown on the display switches each time the "**TUNER PRESET CH+**" button is pressed.
Press the "**STATUS**" button to set the currently displayed mode and restart the device.

①

L1	1SERVICE
L2	CHECK
L3	

Service Path Check Mode : See "DIAGNOSTIC MODE"
The Video and Audio paths can be checked.
This function is convenient for confirming problem paths in the product and checking the paths after repairing.

↓

②

L1	2PROTECT
L2	
L3	

The protection history can be checked.

↓

③

L1	3RS232C
L2	RESET
L3	

Switches from 232C standby mode to normal standby mode.

↓

④

L1	4OP INFO
L2	
L3	

Operation Info for the unit can be checked.

↓

⑤ U and N model only

L1	5TUNER
L2	FREQ
L3	

Enables reception STEP of the ANALOG TUNER to be changed.

3-1.4. Canceling the selected mode

Press the power button to turn off the power.

3-2. Protection History Display Mode

3-2.1. Actions

This mode enables the unit to record and display the event when the THERMAL, ASO or DC protection is activated.
If protections have been activated multiple times, the latest protection operation is recorded.

3-2.2. Starting up

While holding down buttons "**ZONE2 SOURCE**" and "**STATUS**" simultaneously, press the power button to turn on the power.
Select the "**2. PROTECTION**" using the "**TUNER PRESET CH+/-**" button, then press the "**STATUS**" button then to confirm.

3-2.3. Protection information and displays

· Press the "**STATUS**" button in Protection History Display Mode.
· The protection history can be checked.

(a) If no protections has occurred.

L1	PROTECT
L2	HISTORY
L3	:NO

(b) ASO (if the last protection is ASO)

L3	:ASO

Cause A short circuit occurred between the speaker terminals, or speakers with an impedance outside the rating were connected.
Note : Short circuits in speaker terminals or speakers can be identified.
If the power is turned on in the abnormal state, protection is activated after around 6 seconds and the power is turned off.

(c) DC (if the last protection is DC)

L3	:DC

Cause : DC output of the power amplifier is abnormal.
If the power is turned on in the abnormal state, protection is activated after around 6 seconds and the power is turned off.

(d) THERMAL (if the last protection is THERMAL(A) or THERMAL(B) or THERMAL(E))

L3	:THM A
L3	:THM B
L3	:THM E

Cause : Abnormal heat sink temperature.
If the power is turned on under abnormal conditions, the protection function works immediately and the power is turned off.

(e) Case of CURRENT (when the last protection incident is CURRENT protection)

L3	:CURRENT

Cause : An over current flowed in power amp.
If the power is turned on in the abnormal state, protection is activated after around 90 seconds and the power is turned off.

Caution : These protections may also be activated due to other factors such as disconnection of connectors or operations around the microcomputer.
After viewing the above protection history, press the "**STATUS**" button to return to the normal display.

3-2.4. Clearing the Protection History

There are two ways to clear the protection history.

(a) Activate Protection History Display Mode. Press the "**STATUS**" button to display the protection history. Press and hold the "**DIMMER**" button for 3 seconds.

L1	PROTECT
L2	HISTORY
L3	:DC

Press and hold the "**DIMMER**" button for 3 seconds.

↓

L3	CLEAR

The above message is displayed and the protection history is cleared.

↓

L3	:NO

(b) Initialize this unit. (See "Initializing This Unit")

※ Use the method in **3-2.4. (a)** if you do not want to erase your settings from this unit.

Warning Displays by POWER LED

If the power is turned Off while a protection is being detected, the POWER LED flashes in red to warn you depending on the protection status as follows.

(a) ASO/DC protection: Flashes at 0.5-second intervals (0.25 seconds lit, 0.25 seconds unlit)
(b) THERMAL (A/B/E) protection: Flashes at 2-second intervals (1 seconds lit, 1 seconds unlit)
(c) CURRENT protection: Flashes at 4-second intervals (2 seconds lit, 2 seconds unlit)

3-3. 232C Standby Clear Mode

3-3.1. Actions

Switches from 232C standby mode to normal standby mode.

3-3.2. Starting up

While holding down buttons "**ZONE2 SOURCE**" and "**STATUS**" simultaneously, press the power button to turn on the power.
Select the "**3.RS232C RESET**" using the "**TUNER PRESET CH+/-**" button, then press the "**STATUS**" button then to confirm.

L1	3.RS232C
L2	RESET
L3	

3-4. Operation Info Mode

3-4.1. Actions

This mode enables the unit to display the accumulated operating time, power On count and each protection count.

3-4.2. Starting up

While holding down buttons "**ZONE2 SOURCE**" and "**STATUS**" simultaneously, press the power button to turn on the power.
Select the "**4. OP INFO**" using the "**TUNER PRESET CH+/-**" button, then press the "**STATUS**" button then to confirm.

3-4.3. Operations

Press the "**STATUS**" button after starting up this device in Operation Info mode.
The following information is displayed in the following order.

(a) Accumulated operating time

L1	Operate
L2	Time:
L3	_____H

↑ Time display
"**STATUS**"

(b) Power On count

L1	Power On
L2	Time:
L3	_____

↑ Count display
"**STATUS**"

(c) DC / ASO Protection count

L1	Protect
L2	DC:____
L3	ASO:___

"**STATUS**"

(d) Thermal Protection (A/B/E) count

L1	Protect
L2	TH A:___
L3	TH B:___
L2	TH E:___

"**STATUS**"

(e) Current Protection count

L1	Protect
L2	Current:
L3	___

"**STATUS**"

(Returns to normal display)

3-5. TUNER STEP mode (U / N only)

3-5.1. Actions

This is a special mode for enabling reception STEP of the ANALOG TUNER to be changed.

3-5.2. Starting up

While holding down buttons "**ZONE2 SOURCE**" and "**STATUS**" simultaneously, press the power button to turn on the power.
Select the "**5. TUNER FRQ SET**" using the "**TUNER PRESET CH+/-**" button, then press the "**STATUS**" button then to confirm.

3-5.3. Displays

Start up this unit in TUNER STEP mode, select the desired option using the "**TUNER PRESET CH+/-**" button, then enter using the "**STATUS**" button.
The following information is displayed in the following order.

(a) AM9 kHz / FM50 kHz is selected

L1	TunerFRQ
L2	AM9/
L3	FM50

"**TUNER PRESET CH+**" ↓↑ "**TUNER PRESET CH-**"

(b) AM10 kHz / FM200 kHz is selected

L1	TunerFRQ
L2	AM10/
L3	FM200

↓ "**STATUS**"

(c) Press the power button to turn off the power.
(d) Press the power button to turn on the power.

4. Protection Pass Mode

4.1. Actions

• This mode allows the power to be turned on without activating protections.
• This mode functions in the same way as normal power-on, except that protections are not activated.
• When using the protection pass mode, do not connect speakers to the speaker terminals.

4.2. Operations

2. While holding down buttons "**DIMMER**", "**STATUS**" and "**SOUND MODE**" simultaneously, press the power button to turn on the power.

The device returns to the normal display message after the following is displayed.

L1	Protect
L2	Pass
L3	

This is displayed for 5 seconds before returning to the normal display.

5. Network Initialization Mode

5.1. Actions

The following items are initialized.
(1) Network setup
(2) Friendly Name
(3) Auto Update setting
(4) Allow Update setting
(5) Time Zone setting
(6) Queue list
(7) Internet Radio recently played station
(8) Quick Select playback station
(9) AirPlay Password
(10) Bluetooth Pairing History
(11) Crestron Connected Setup

5.2. Operations

When the power is on and the input source is HEOS Music, press and hold the "**TUNER PRESET CH -**" and "**DIMMER**" buttons for more than 3 seconds.

Initializing Display

L1	Network
L2	Reset...

Complete Display

L1	Complete

This is displayed for 5 seconds before returning to the normal display.

7. Clearing the Operation Info

7.1. Actions

• Displays the accumulated operating time of the unit, the number of times the power was switched on, and the number of occurrences of each protection.

7.2. Operations

Remove all input/output terminals and the AC plug.
Connect the AC plug again and place the product in standby mode.
While holding down buttons "**TUNER PRESET CH +**" and "**DIMMER**" simultaneously, press the power button to turn on the power.

L1	PRODUCT
L2	MODE

When "**PRODUCT MODE**" appears on the display, release the button and press the "**power**" button and "**ZONE2 ON/OFF**" to place the product in standby mode.

8. Log Capture feature

8.1. Actions

- Acquires the Network Module log.
- The log is deleted when the Network Module is deleted.
  If an error occurs, it is acquired without turning off the power of this unit.
- The log can be copied to a writable USB flash drive.
  It can also be sent to a server if this unit is connected to the Internet.
- The log is stored in the root folder of the USB flash drive with the name "**logs-<friendlyname>-<number>.tar.gz**".
  <**friendlyname**> indicates the friendly name and <**number**> indicates the sequence number.
  Previous logs on the USB flash drive are not overwritten. The log is encrypted.

8.2. Starting up

While the power is on, hold down buttons "**TUNER PRESET CH +**" and "**STATUS**" for at least 3 seconds.

8.3.1. If the USB flash drive is connected after starting the unit

(a) The log is written to the USB flash drive and "**Storing Logs...**" is displayed.
The log is also sent to the server.

L1	Storing
L2	Logs...

(b) When a log package is saved to a USB flash drive, "**USB SUCCESS**" appears in the display for 5 seconds, regardless of whether the upload was successful.

L1	USB
L2	SUCCESS

(c) When saving of the log package fails, "**USB FAILED**" appears in the display for 5 seconds, regardless of whether the upload was successful.

L1	USB
L2	FAILED

8.3.2. When the USB flash drive is not connected after startup, and this machine is connected to the Internet.

(a) The log is sent to the server and the display shows "**Storing Logs...**" for 5 seconds.

L1	Storing
L2	Logs...

(b) When the log package is uploaded, the ticket numbers "**XXXXX**" and "**Push ENTER**" are displayed until RC or the "**Enter**" or "**Back**" button of this machine is pressed.

L1	No:xxxxx
L2	PushENTER

(c) If the log package upload fails, it will be displayed for 5 seconds on the "**FAILED**" display.

L1	FAILED
L2	

Service Path Check Mode

1.1. Actions

This function is convenient for confirming problem paths in the product and checking the paths after repairing.
The Video and Audio paths can be checked.
The backup data is not rewritten.

1.2. Starting up

While holding down buttons "**ZONE2 SOURCE**" and "**STATUS**" simultaneously, press the power button to turn on the power.
Select the "**1. SERVICE CHECK**" using the "**TUNER PRESET CH+**" button, then press the "**STATUS**" button then to confirm.
The "____" segment in L3 is lit in this mode.

L1	⁜⁜⁜⁜⁜⁜⁜⁜
L2	⁜⁜ . ⁜
L3	....

1.3. Canceling diagnostic mode

Press the power button to turn off the power.

1.4. Selecting items to check

Press the ① button to switch between video items and audio items.
Press the ② or ③ button to select the previous or next item.

	The unit			Remote control unit		
Actions	①	②	③	①	②	③
	Audio ⇔ Video	PREVIOUS	NEXT	Audio ⇔ Video	PREVIOUS	NEXT
Button	DIMMER	TUNER PRESET CH-	TUNER PRESET CH+	SLEEP	CURSOR ◄	CURSOR ►

1.5. Audio system confirmation items

See the block diagram fig.XXth.

Paths to be confirmed			Display	Settings	What to confirm
1	Analog	fig.01	A01ANLG ***.*dB	Input Source : CBL/SAT Input Mode : Analog (fixed) Sound mode : DIRECT Amp assign : Surround Back MAIN ZONE : On ZONE2 : Off	• Analog input ⇒ Speaker output (Front L/R) (※ The input source can be switched to any source except CBL/SAT.)
2	DIGITAL (MAIN)	fig.02a fig.02b	A2DIG. ***.*dB	Input Source : CBL/SAT Input Mode : DIGITAL (fixed) Sound mode : MULTI CH STEREO Amp assign : Surround Back Speaker Config ALL Speaker = Small / SW = Yes(2ch) MAIN ZONE : On ZONE2 : Off	• Digital input ⇒ Speaker output (Front L/R, Center, Surround L/R, Surround Back L/R) • Digital input ⇒ Pre OUT output (Subwoofer) (※ The input source can be switched to any source except CBL/SAT.)

Paths to be confirmed			Display	Settings	What to confirm
3	DIGITAL (ZONE2)	fig.03a fig.03b	A03Z2DIG ***.*dB	Input Source : HEOS Music Input Mode : Auto Sound mode : STEREO Amp assign : ZONE2 MAIN ZONE : On ZONE2 : On	• Digital(PCM) input ⇒ Speaker output (Surround Back (ZONE2) L/R) • Digital(PCM) input ⇒ Pre OUT output (ZONE2 L/R)
4	HDMI	fig.04a fig.04b	A05HDMI ***.*dB	Input Source : CBL/SAT Input Mode : HDMI (fixed) Sound mode : STEREO Amp assign : Surround Back MAIN ZONE : On ZONE2 : Off	• HDMI input ⇒ Speaker output (Front L/R) (※ The input source can be switched to any source except CBL/SAT.)
5	Analog AD (MAIN ZONE)	fig.05a fig.05b	A06AD ***.*dB	Input Source : CBL/SAT Input Mode : Analog (fixed) Sound mode : MULTI CH STEREO Vol 60(-20dB) Amp assign : Surround Back Speaker Config ALL Speaker = Small/SW = Yes(2ch) MAIN ZONE : On ZONE2 : Off	• Analog input ⇒ Speaker output (Front L/R, Center, Surround L/R, Surround Back L/R) • Analog input ⇒ Pre OUT output SW(20Hz) (※ The input source can be switched to any source except CBL/SAT.) (※ Volume 60 is the value when Absolute settings are used. The value is -20 when Relative settings are used)
6	Analog Amp Assign (Amp Assign : ZONE2)	fig.06	A07Z2ASS ***.*dB	Input Source : CBL/SAT Input Mode : Auto Sound mode : STEREO Z2 Source : Source Vol 60(-20dB) Amp assign : ZONE2 MAIN ZONE : On ZONE2 : On	• Analog input ⇒ Speaker output (Surround Back (ZONE2) L/R) • Analog input ⇒ Pre OUT output (ZONE2 L/R) (※ The input source can be switched to any source except CBL/SAT.) (※ Volume 60 is the value when Absolute settings are used. The value is -20 when Relative settings are used)

1.6. Confirmation items for the video system

See the block diagram fig.XXth.

Paths to be confirmed			Display	Settings	What to confirm
1	Analog Video pass	fig.07	V01VIDEO ***.*dB	Input Source : CBL/SAT MAIN ZONE : On ZONE2 : On	• CVBS input ⇒ CVBS output • Component input ⇒ Component output (※ The input source can be switched to any source except CBL/SAT.)
2	Video Convert (Analog or HDMI ⇒ HDMI)	fig.08	V02CONV ***.*dB	Input Source : CBL/SAT Video Conversion (IP Scaler) : ON, All sources IP Scaler : "Analog & HDMI", All sources Resolution : "Auto", All sources MAIN ZONE : On ZONE2 : Off	• CVBS input ⇒ IP Scaler ⇒ HDMI output. • Component input ⇒ IP Scaler ⇒ HDMI output. • HDMI input ⇒ IP Scaler ⇒ HDMI output. • ETHERNET input ⇒ IP Scaler ⇒ HDMI output. (※ The input source can be switched to any source except CBL/SAT.)
3	HDMI pass (MAIN ZONE)	fig.09	V03HDMI ***.*dB	Input Source : CBL/SAT Video Conversion (IP Scaler) : OFF, All sources MAIN ZONE : On ZONE2 : Off	• HDMI input (MAIN function) ⇒ HDMI output (MAIN) (※ The input source can be switched to any source except CBL/SAT.)

Paths to be confirmed			Display	Settings	What to confirm
4	HDMI CEC (Control Monitor : HDMI Monitor1)	fig.10	V04CEC ***.*dB	Input Source : CBL/SAT HDMI Control : On MAIN ZONE : On ZONE2 : Off	• When the power supply of a TV is put in the standby mode, make sure that the power supply of this unit is also put in the standby mode. (※ The input source can be switched to any source except CBL/SAT.) • The ARC path can also be checked (check this using the TV input source).
5	HDMI Audio (Audio : AVR)	fig.11a fig.11b	V05H-AVR ***.*dB	Input Source : CBL/SAT HDMI Control : Off HDMI Audio : AVR (if checking the audio output from AVR)	• HDMI input (PCM , DolbyDigital , DTS) ⇒ Speaker output. • HDMI input(HD audio) ⇒ Speaker output. (※ The input source can be switched to any source except CBL/SAT.)
6	HDMI Audio (Audio : TV)	fig.12	V06H-TV ***.*dB	HDMI Audio : TV (if checking the audio output from TV)	• HDMI input (PCM , DolbyDigital , DTS) ⇒ HDMI output (audio output from connected TV) (※ The input source can be switched to any source except CBL/SAT.)
7	GUI	fig.13	V07MENU ***.*dB	Input Source : CBL/SAT IP Scaler : On, All sources Resolution : "AUTO", All sources Setup Menu : On MAIN ZONE : On ZONE2 : Off	• GUI display ⇒ HDMI output. (※ The input source can be switched to any source except CBL/SAT.)

fig.01

SR5012 ANALOG AUDIO DIAGRAM

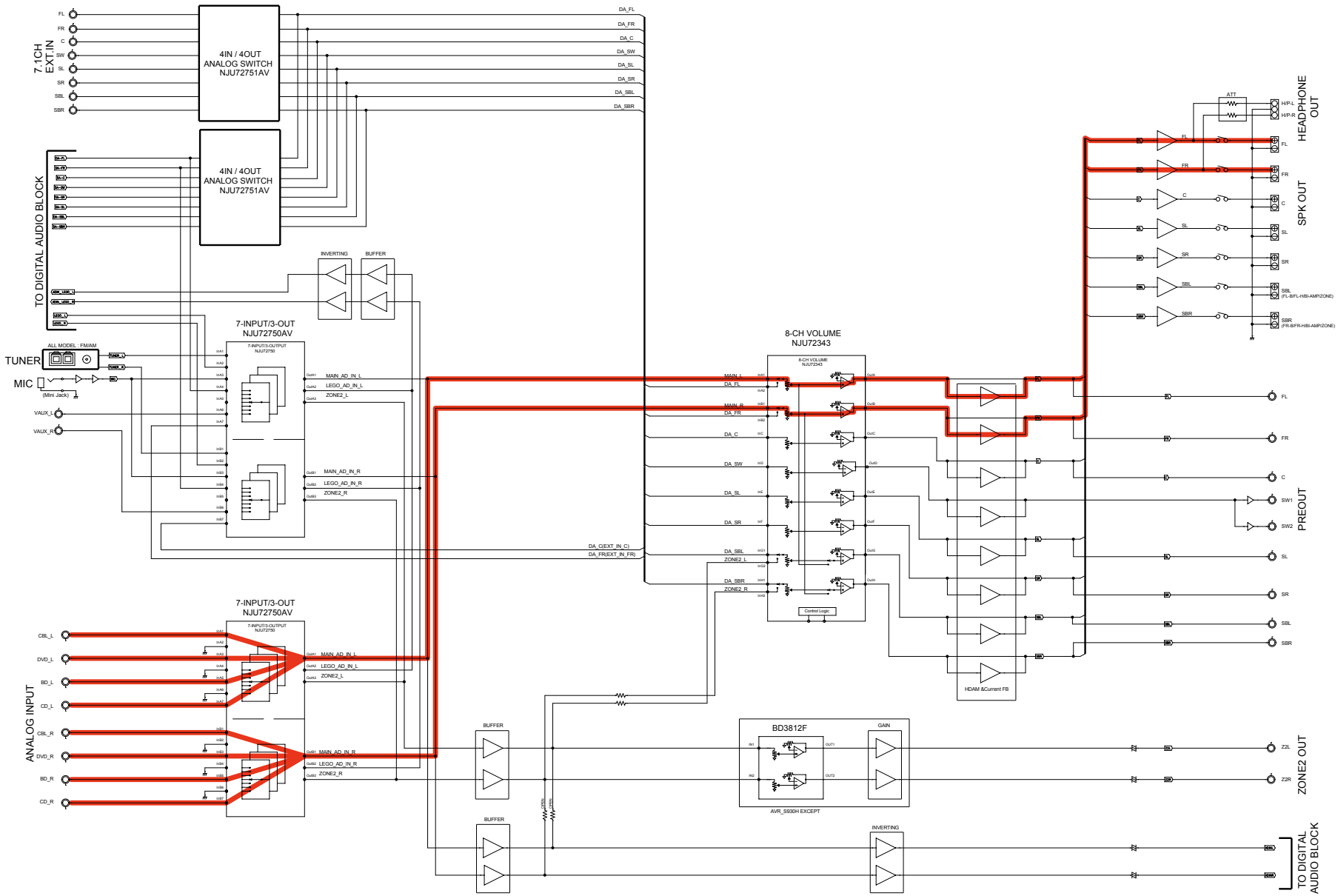

fig.02a

SR5012 DIGITAL AUDIO DIAGRAM

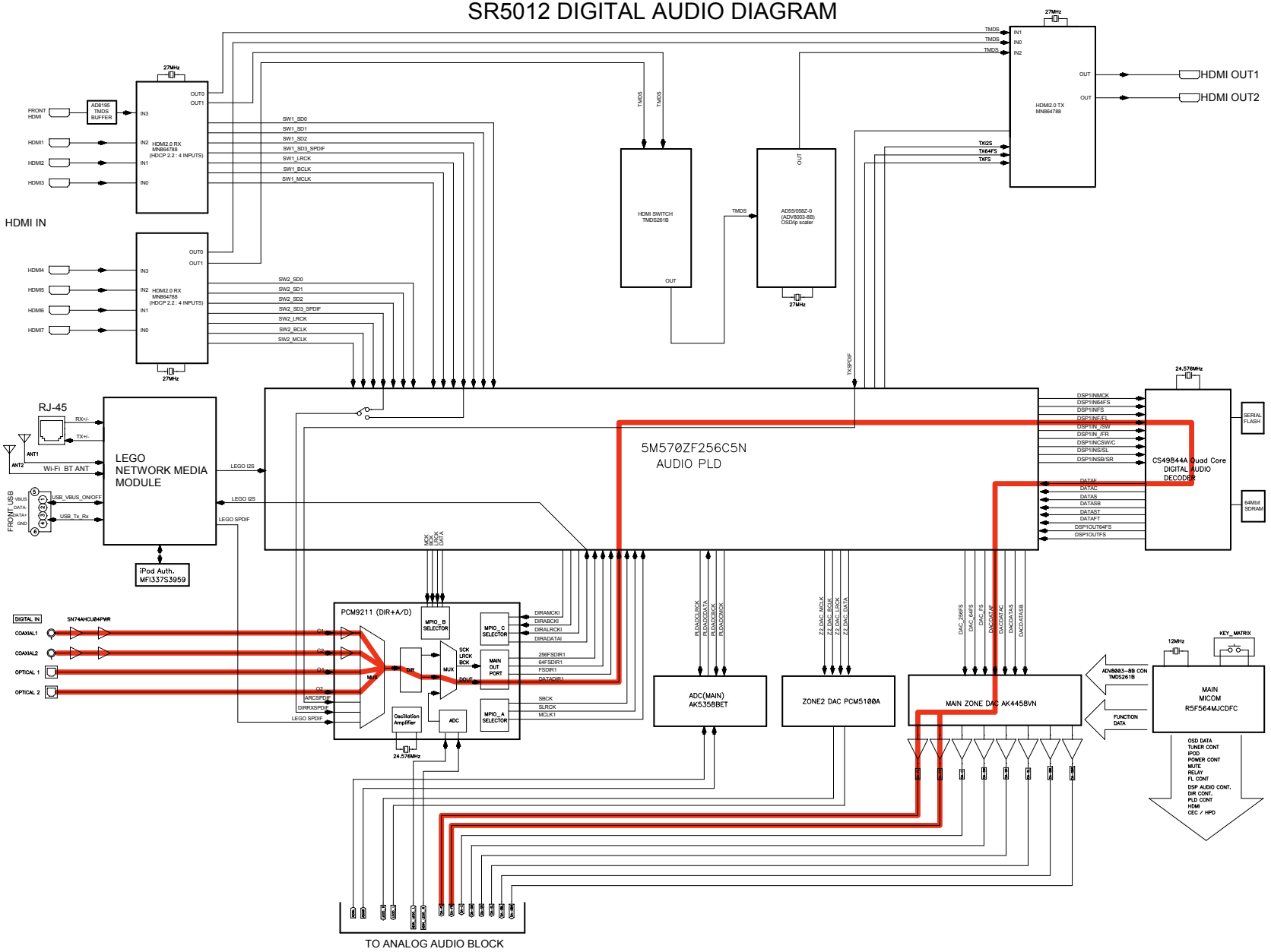

fig.02b

SR5012 ANALOG AUDIO DIAGRAM

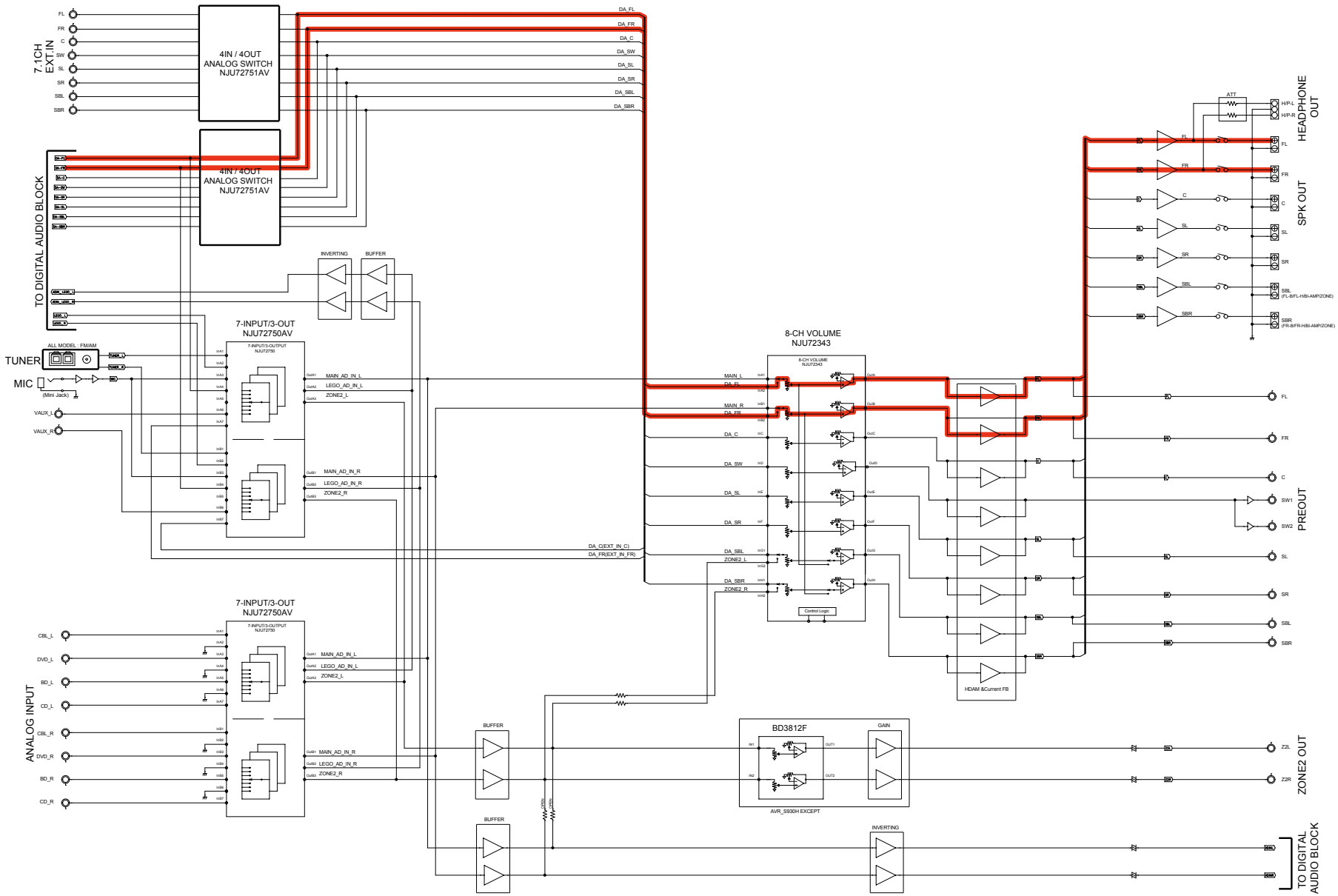

fig.03a

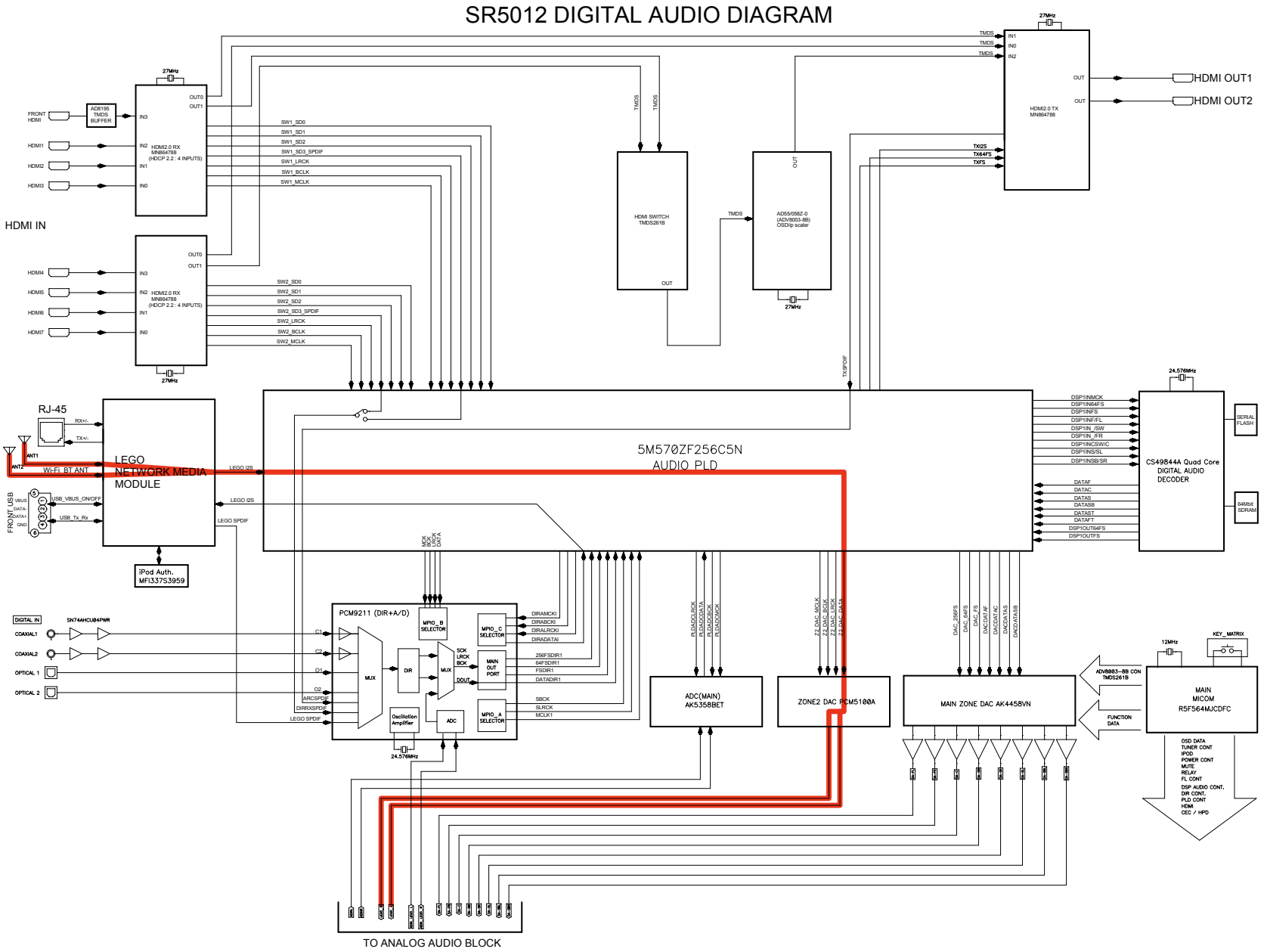
SR5012 DIGITAL AUDIO DIAGRAM
HDMI IN
HDMI OUT1
HDMI OUT2
HDMI SWITCH TMDS261B
ADS5056Z-0 (ADV8003-8B) OSD/ip scaler
HDMI2.0 RX MN864788 (HDCP 2.2 : 4 INPUTS)
HDMI2.0 TX MN864788
AD8195 TMDS BUFFER
RJ-45
LEGO NETWORK MEDIA MODULE
Wi-Fi, BT ANT
iPod Auth. MFi337S3959
5M570ZF256C5N
AUDIO PLD
CS49844A Quad Core DIGITAL AUDIO DECODER
PCM9211 (DIR+A/D)
ADC(MAIN) AK5358BET
ZONE2 DAC PCM5100A
MAIN ZONE DAC AK4458VN
MAIN MICOM R5F564MJCDFC
TO ANALOG AUDIO BLOCK

fig.03b

SR5012 ANALOG AUDIO DIAGRAM

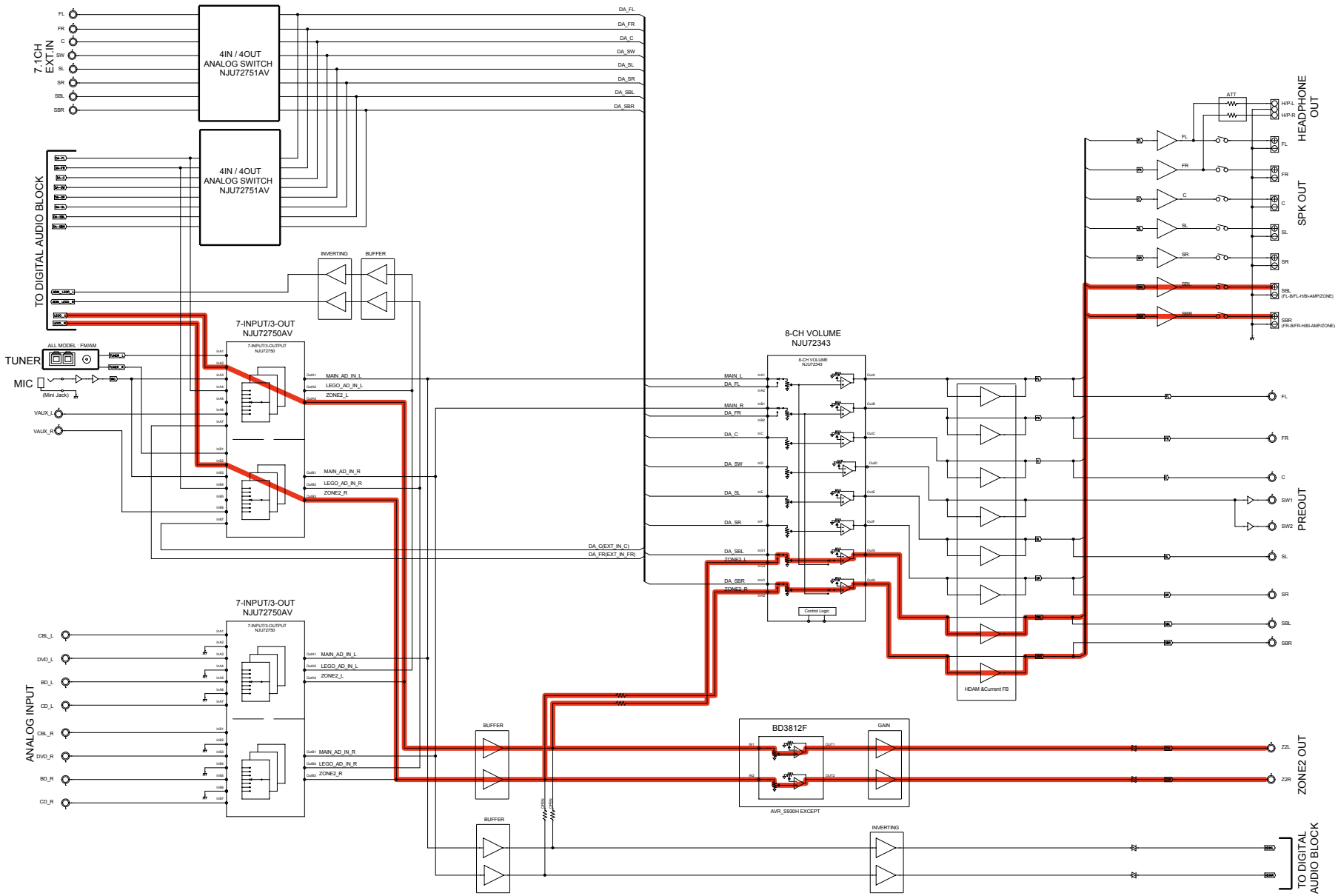

fig.04a

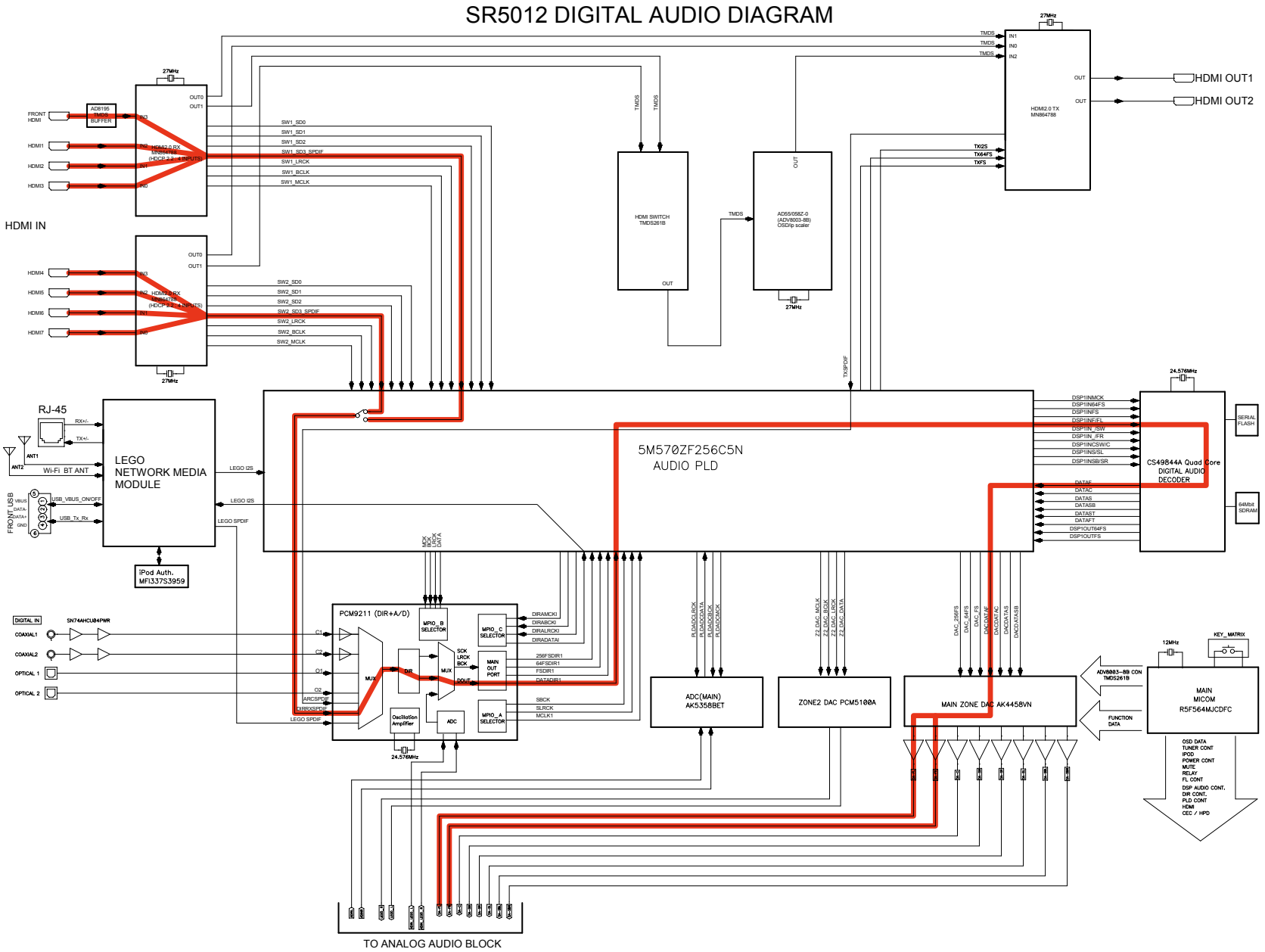

Caution in servicing
Electrical
Mechanical
Repair Information
Updating

fig.04b

SR5012 ANALOG AUDIO DIAGRAM

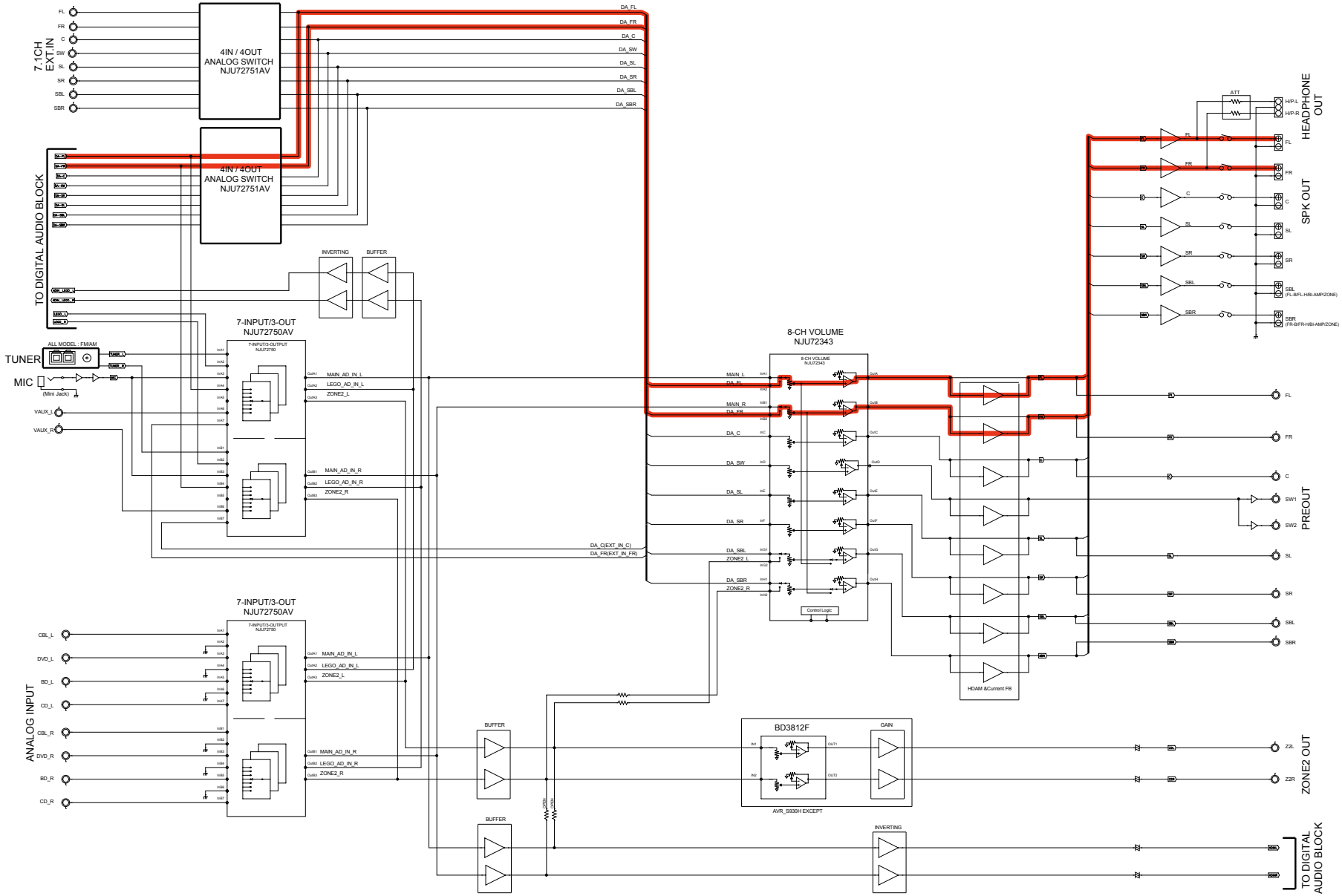

fig.05a

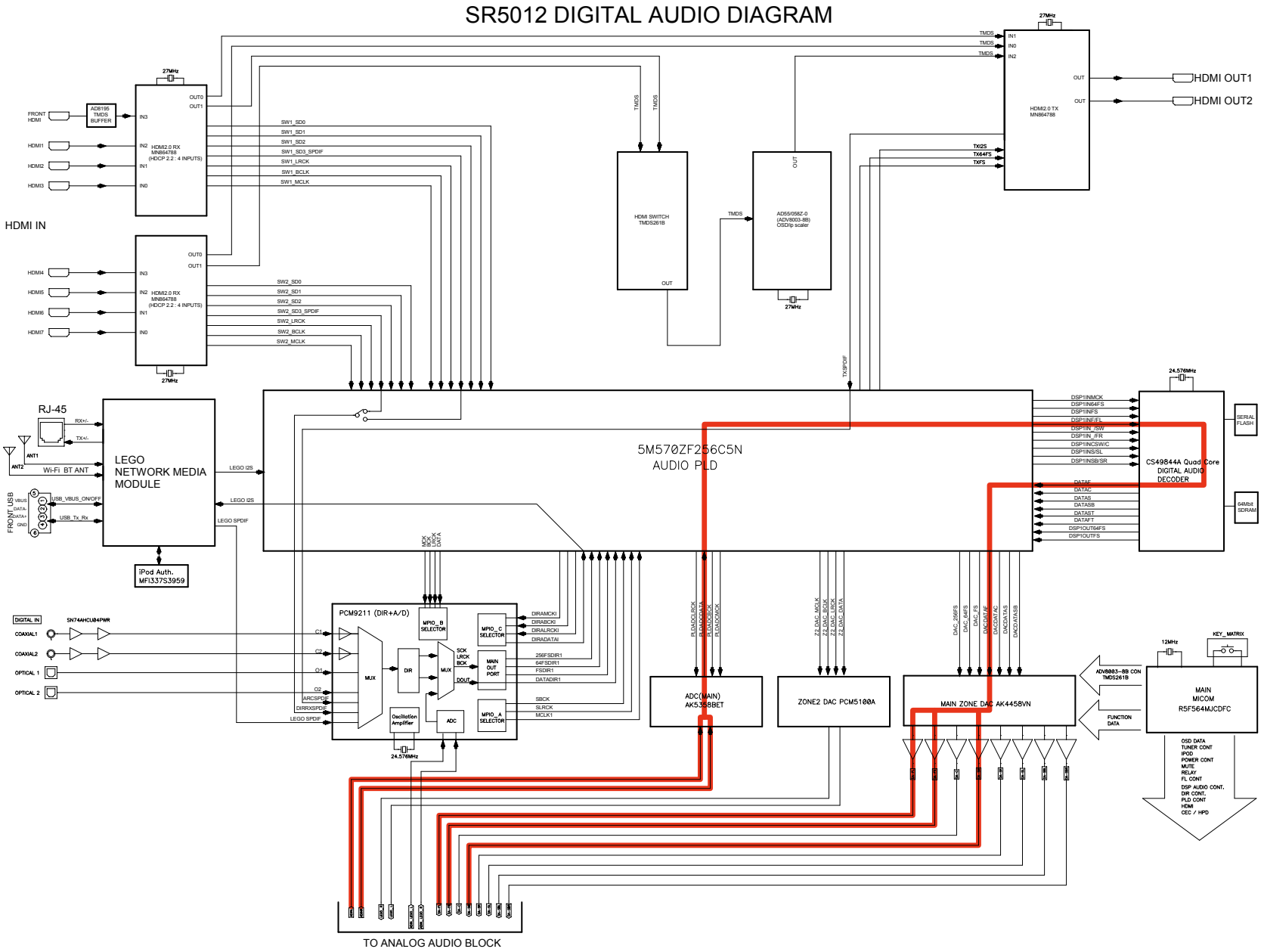
SR5012 DIGITAL AUDIO DIAGRAM
HDMI IN
HDMI OUT1
HDMI OUT2
HDMI SWITCH TMDS261B
HDMI2.0 RX MN864788 (HDCP 2.2 : 4 INPUTS)
HDMI2.0 TX MN864788
AD8195 TMDS BUFFER
AD55/056Z-0 (ADV8003-8B) OSD/ip scaler
5M570ZF256C5N AUDIO PLD
LEGO NETWORK MEDIA MODULE
RJ-45
Wi-Fi BT ANT
iPod Auth. MFi337S3959
CS49844A Quad Core DIGITAL AUDIO DECODER
PCM9211 (DIR+A/D)
ADC(MAIN) AK5388BET
ZONE2 DAC PCM5100A
MAIN ZONE DAC AK4458VN
MAIN MICOM R5F564MJCDFC
TO ANALOG AUDIO BLOCK

fig.05b

SR5012 ANALOG AUDIO DIAGRAM

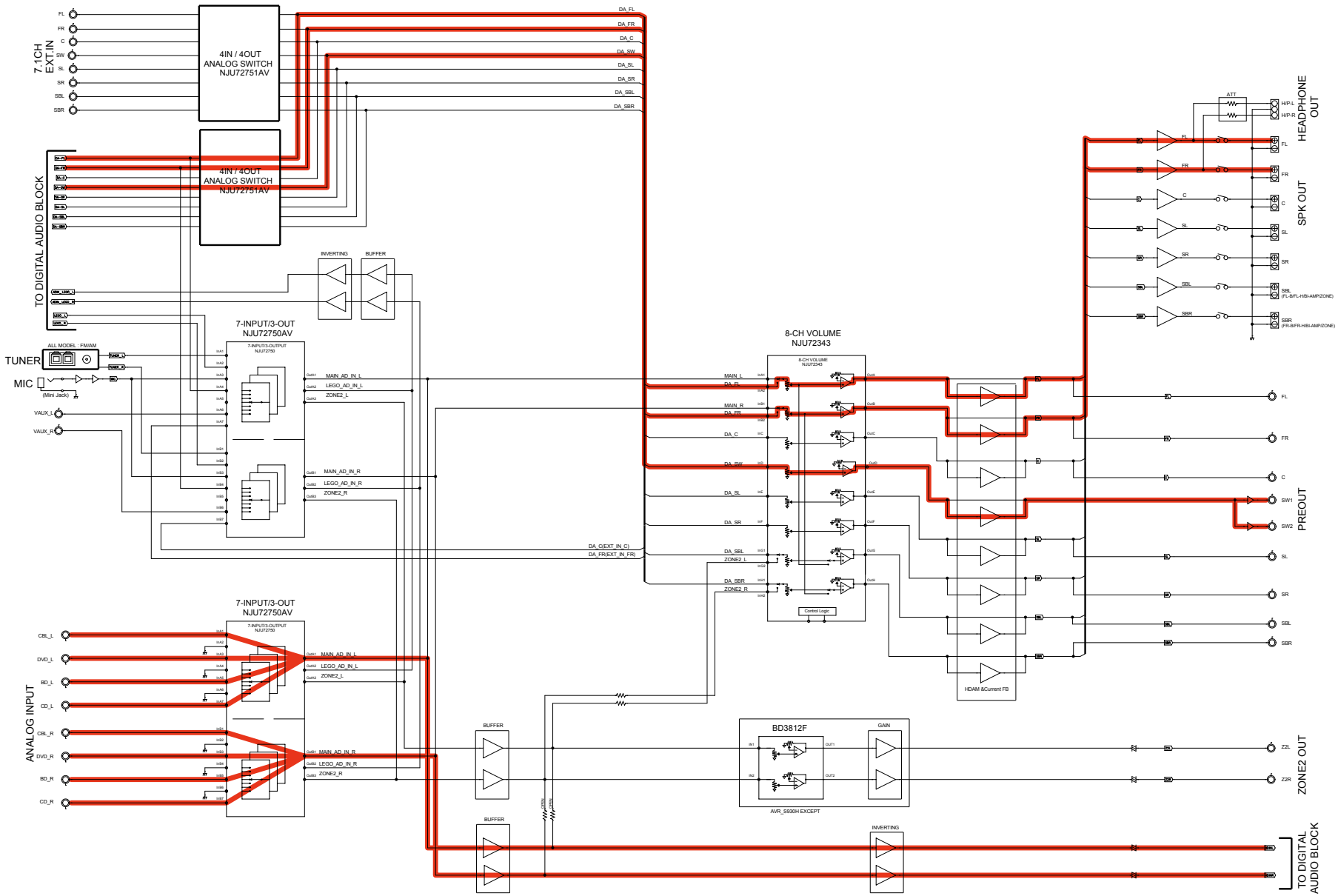

fig.06

SR5012 ANALOG AUDIO DIAGRAM

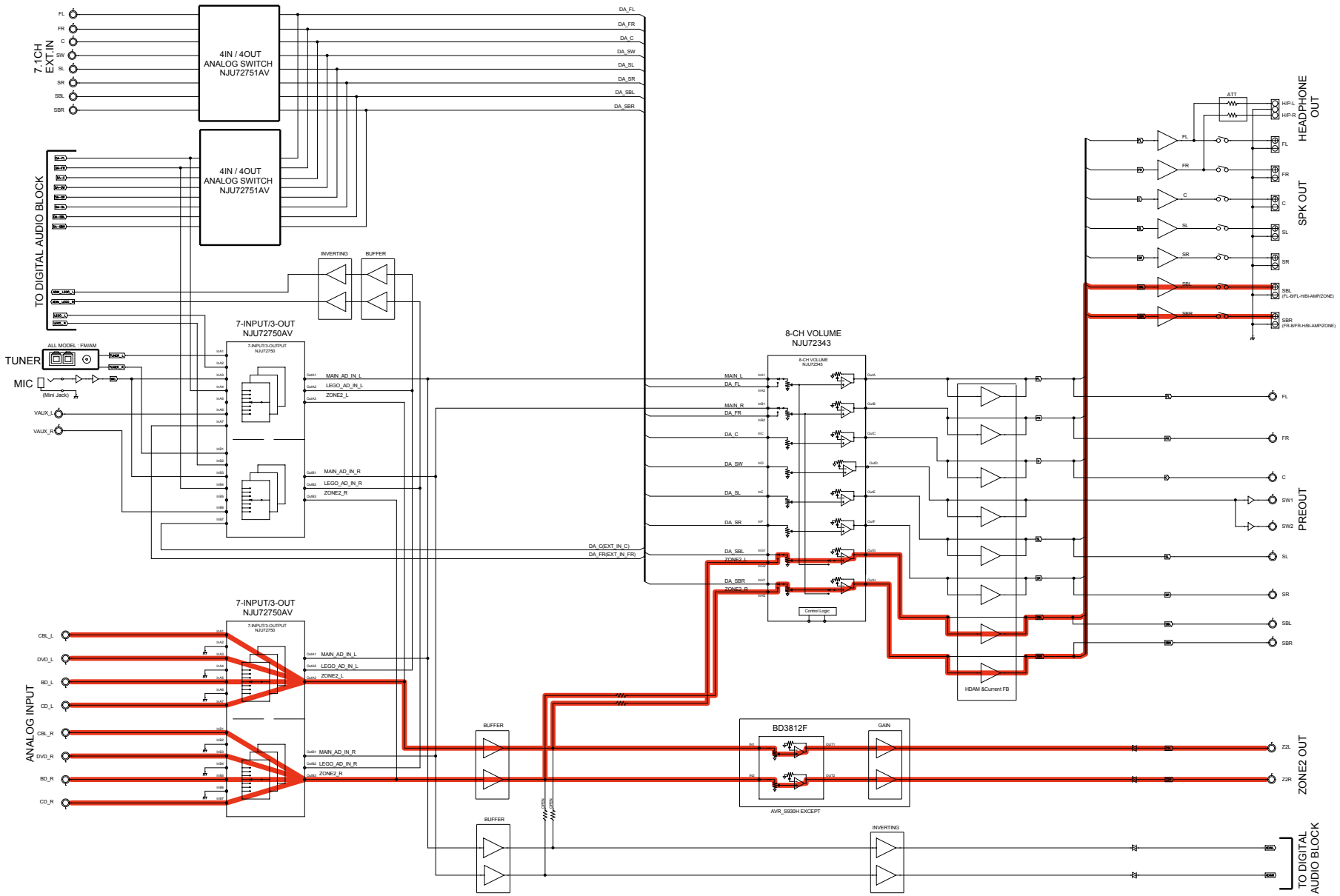

fig.07

SR5012 VIDEO DIAGRAM

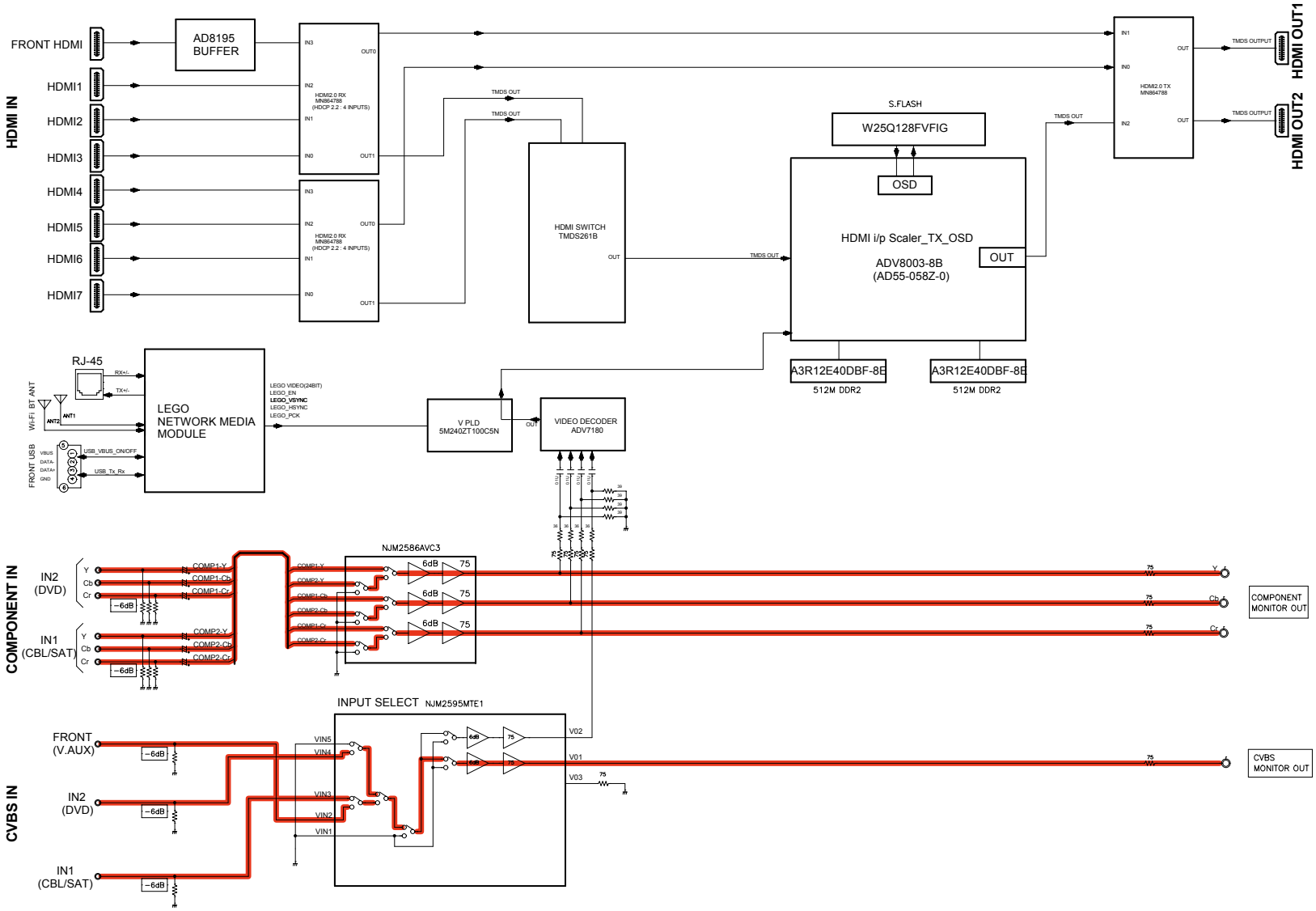

fig.08

SR5012 VIDEO DIAGRAM

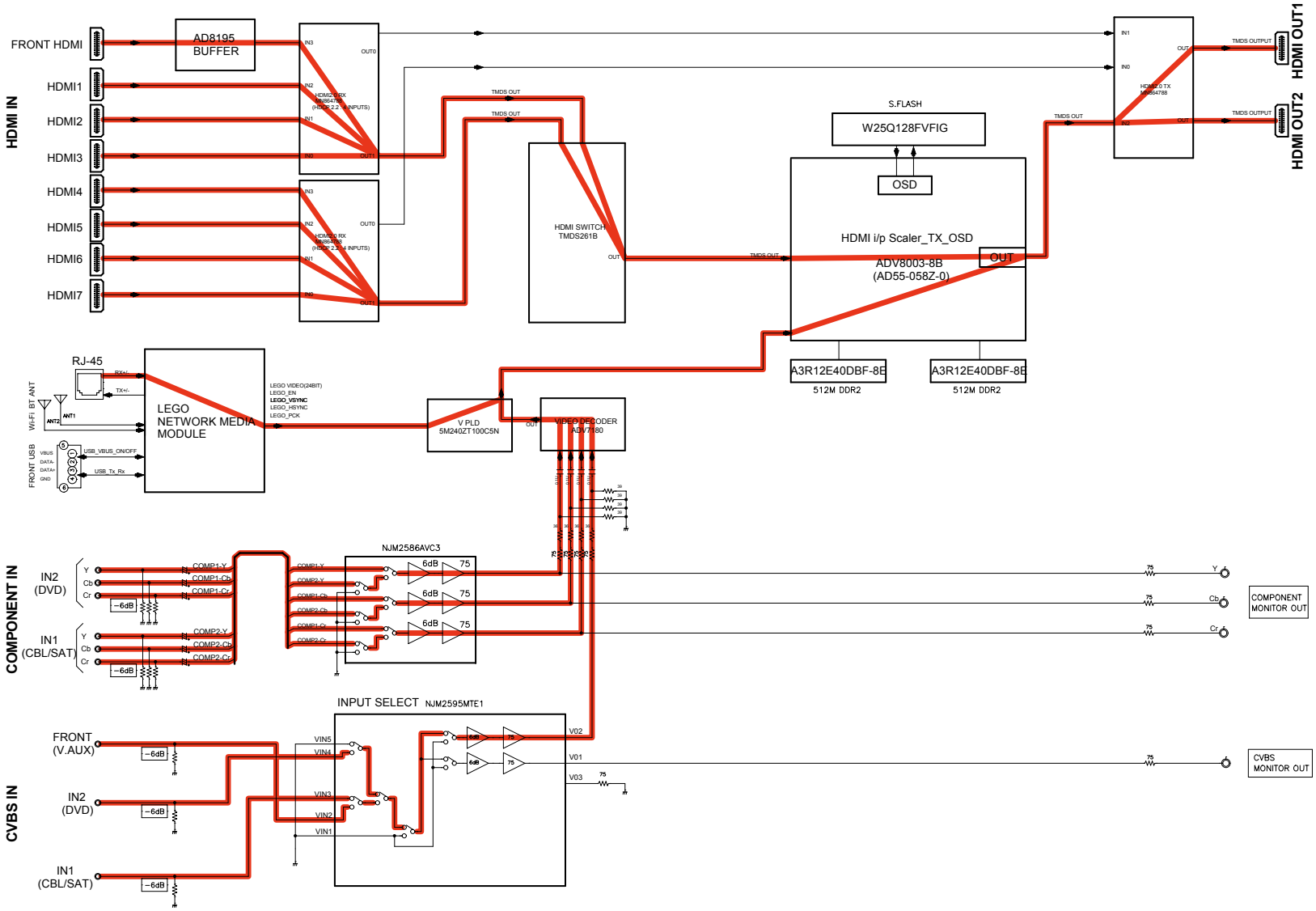

fig.09

SR5012 VIDEO DIAGRAM

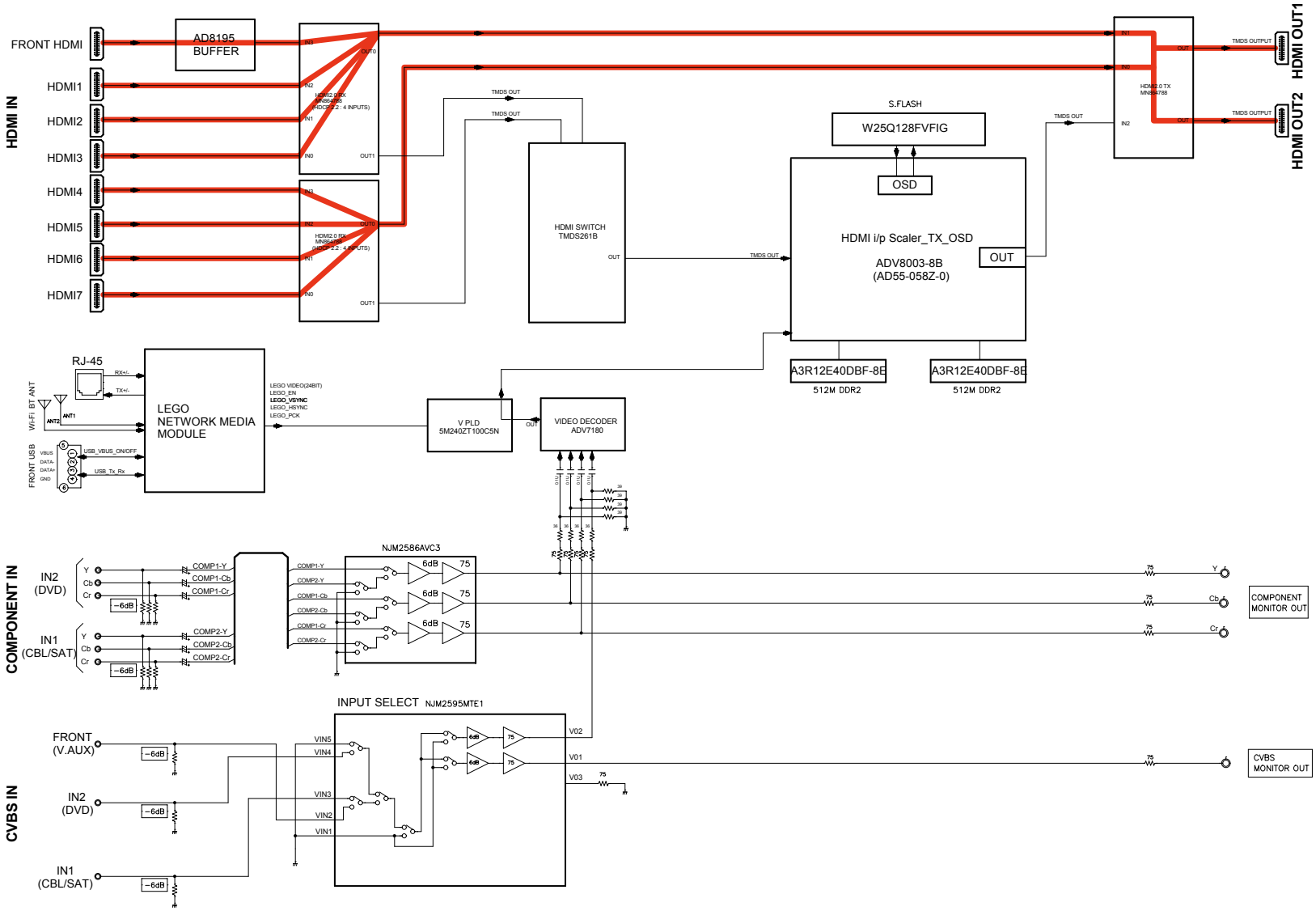

fig.10

SR5012 VIDEO DIAGRAM

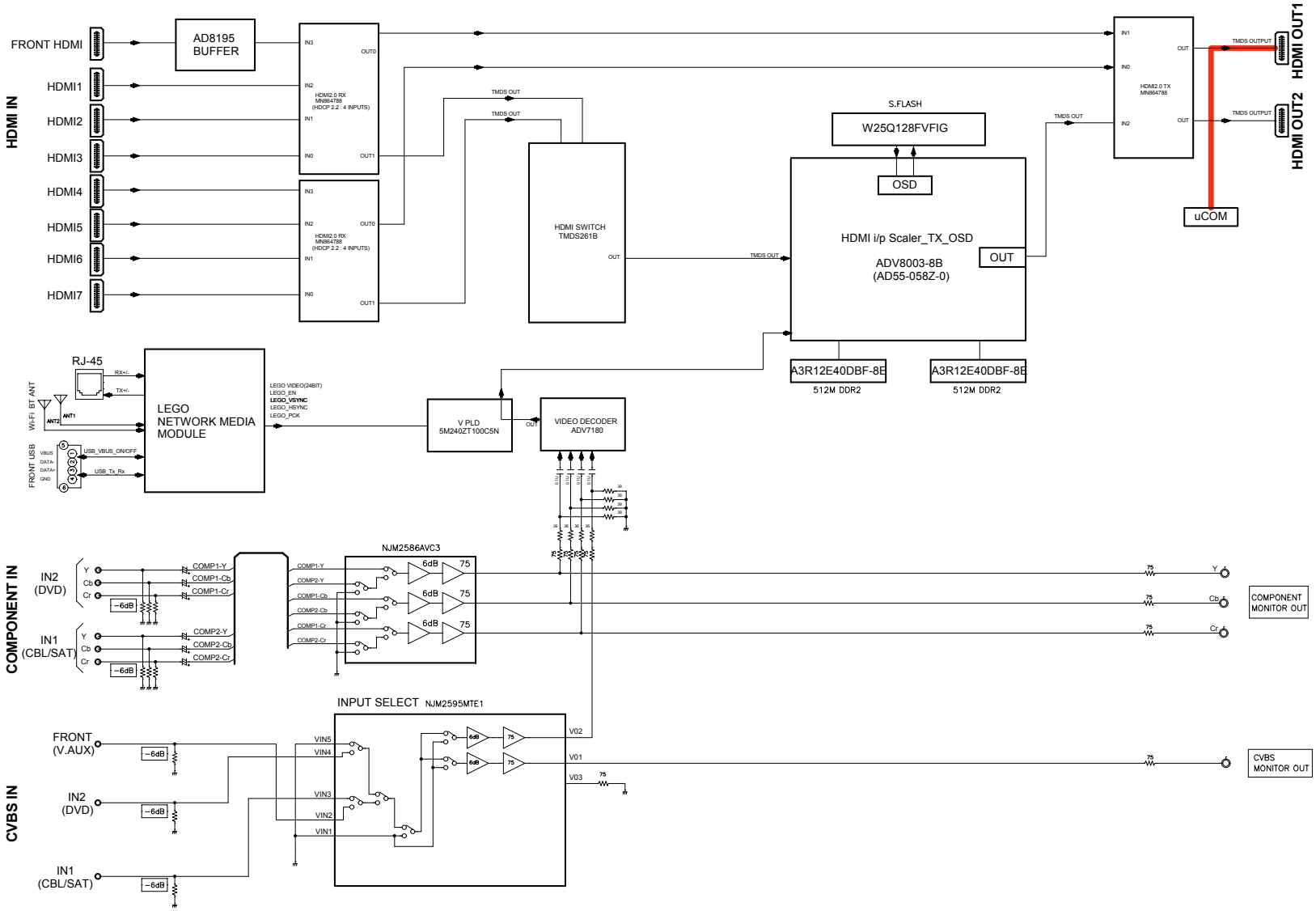

fig.11a

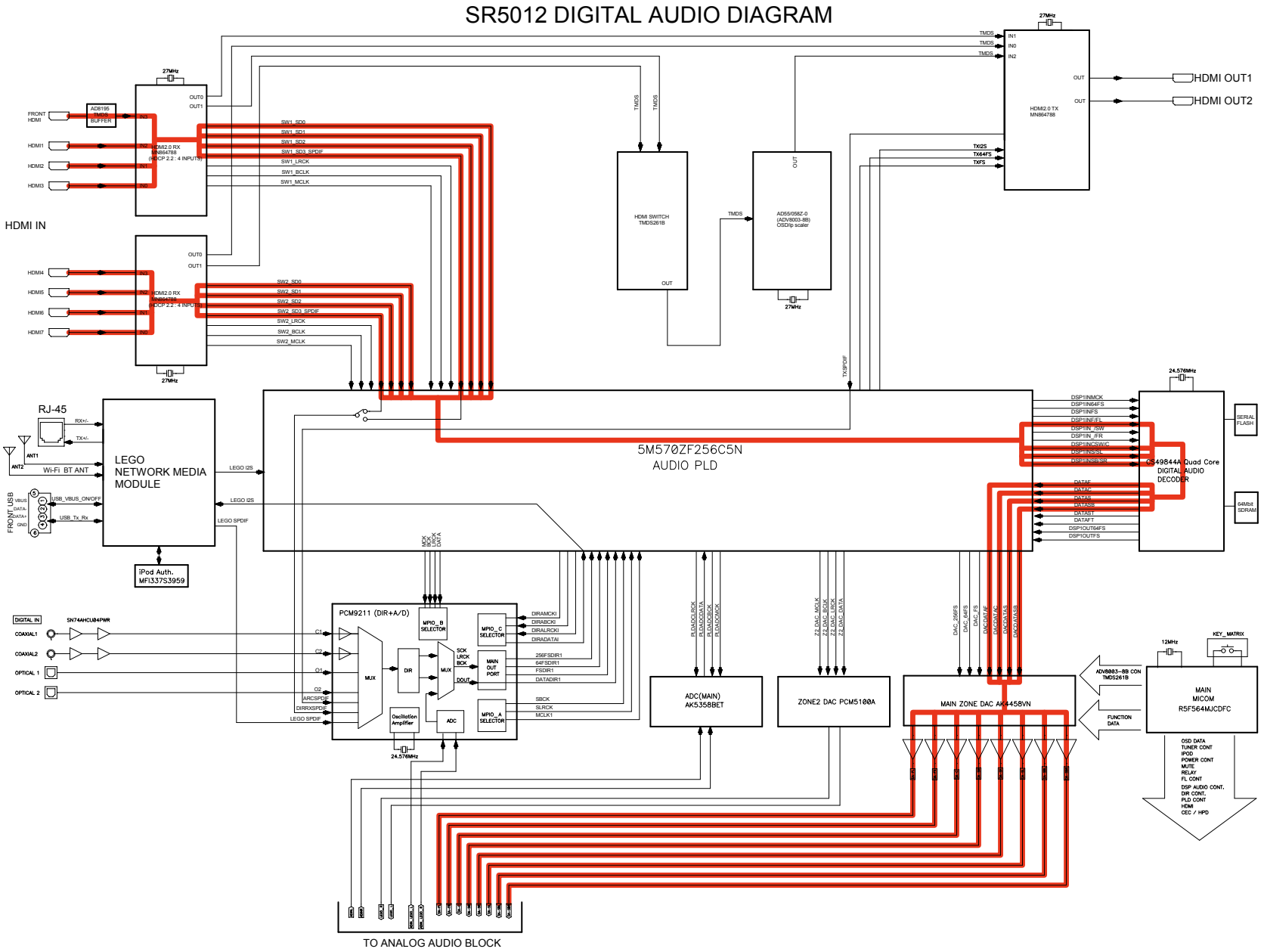
SR5012 DIGITAL AUDIO DIAGRAM
HDMI IN
HDMI OUT1
HDMI OUT2
HDMI SWITCH TMDS261B
ADI55/056Z-0 (ADV8003-8B) OSD/ip scaler
HDMI2.0 RX MN864788 (HDCP 2.2 : 4 INPUTS)
HDMI2.0 TX MN864788
RJ-45
LEGO NETWORK MEDIA MODULE
Wi-Fi BT ANT
iPod Auth. MFi337S3959
5M570ZF256C5N
AUDIO PLD
CS49844A Quad Core DIGITAL AUDIO DECODER
PCM9211 (DIR+A/D)
ADC(MAIN) AK5358BET
ZONE2 DAC PCM5100A
MAIN ZONE DAC AK4458VN
MAIN MICOM R5F564MJCDFC
TO ANALOG AUDIO BLOCK

fig.11b

SR5012 ANALOG AUDIO DIAGRAM

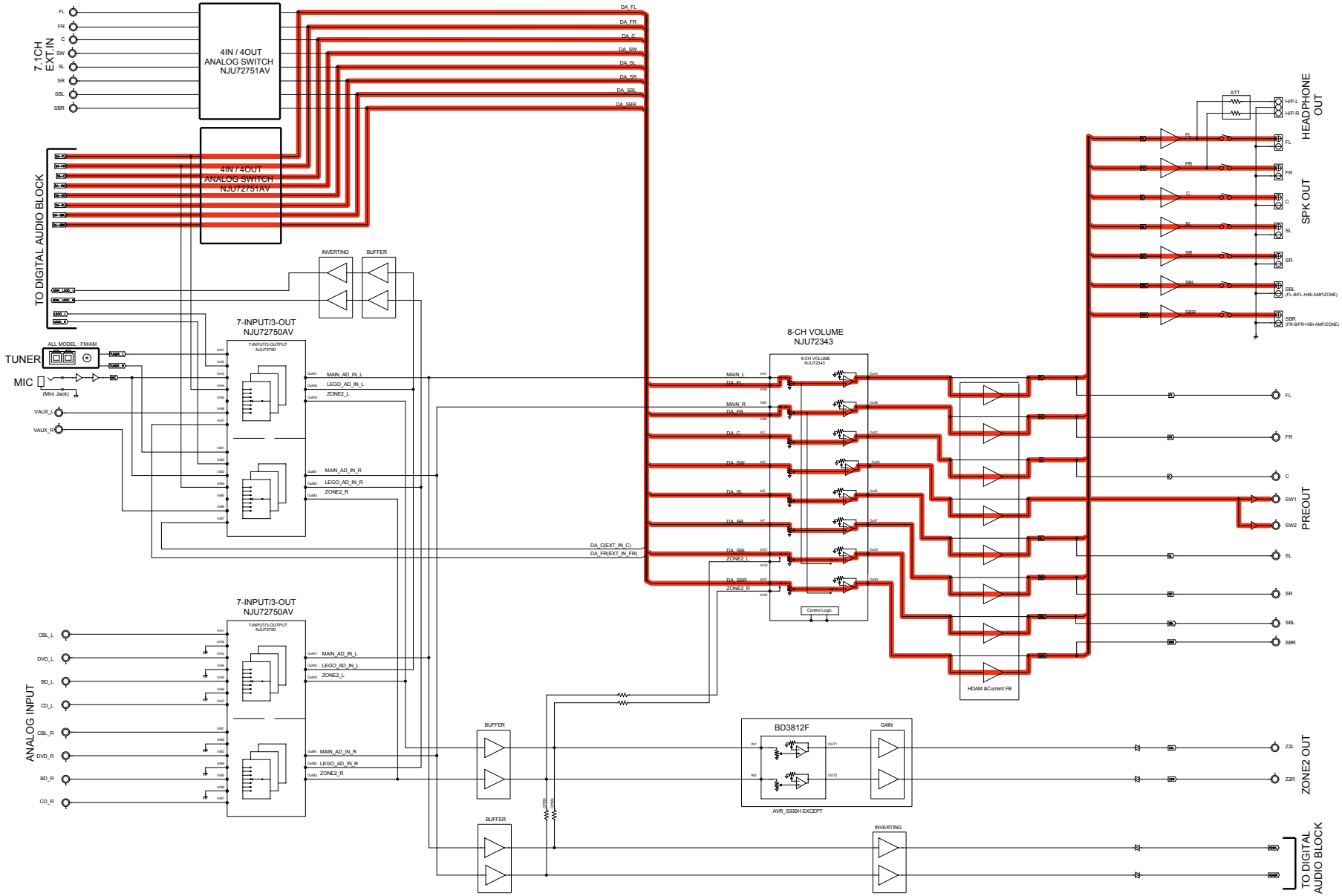

fig.12

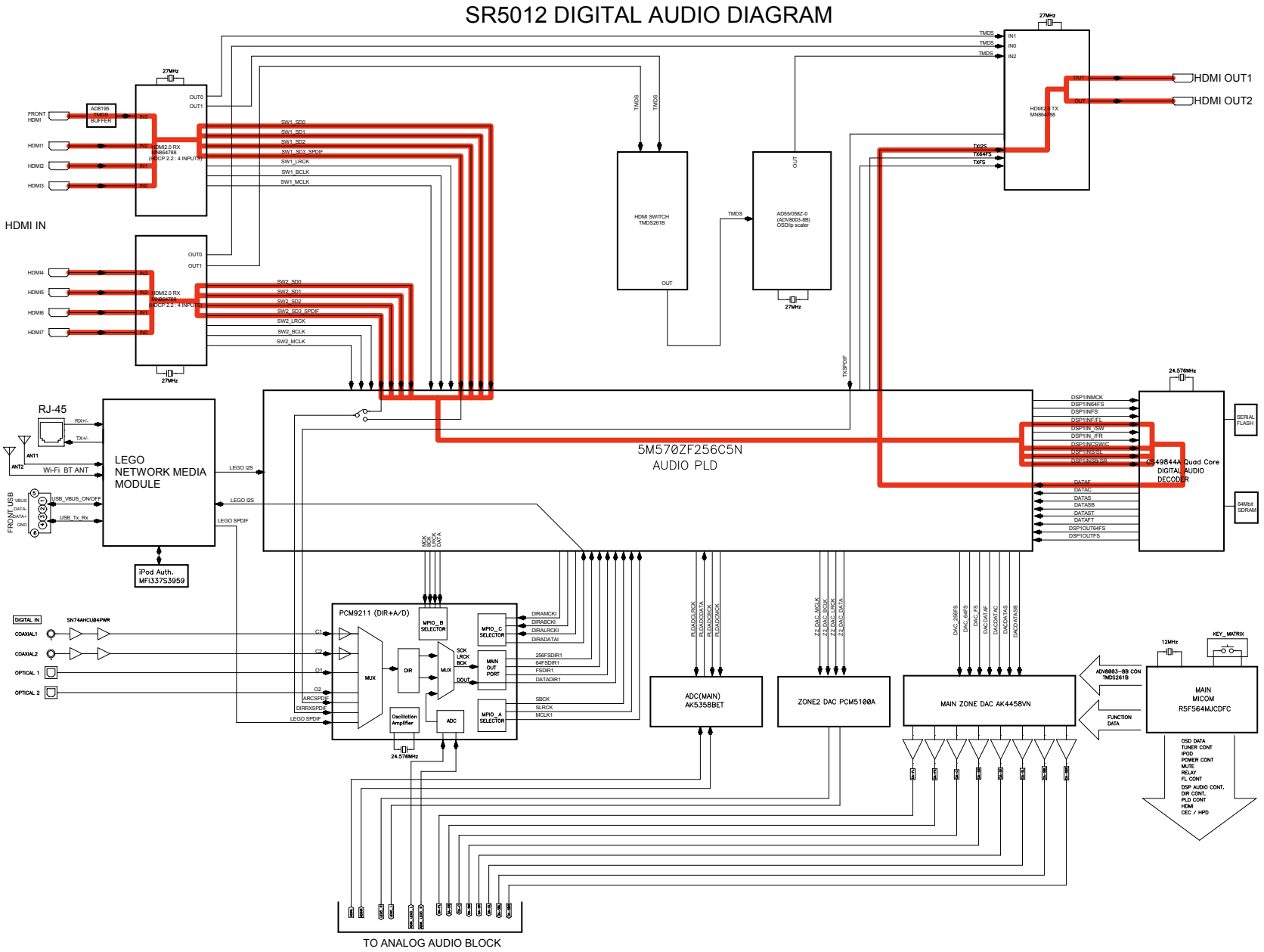
SR5012 DIGITAL AUDIO DIAGRAM
HDMI IN
HDMI OUT1
HDMI OUT2
HDMI SWITCH TMDS261B
ADI55/056Z-0 (ADV8003-8B) OSD/ip scaler
HDMI2.0 RX MN864788 (HDCP 2.2 : 4 INPUTS)
HDMI2.0 TX MN864788
5M570ZF256C5N AUDIO PLD
CS49844A Quad Core DIGITAL AUDIO DECODER
LEGO NETWORK MEDIA MODULE
RJ-45
Wi-Fi BT ANT
iPod Auth. MFi337S3959
PCM9211 (DIR+A/D)
ADC(MAIN) AK5358BET
ZONE2 DAC PCM5100A
MAIN ZONE DAC AK4458VN
MAIN MICOM R5F564MJCDFC
SERIAL FLASH
64Mbit SDRAM
TO ANALOG AUDIO BLOCK

fig.13

SR5012 VIDEO DIAGRAM

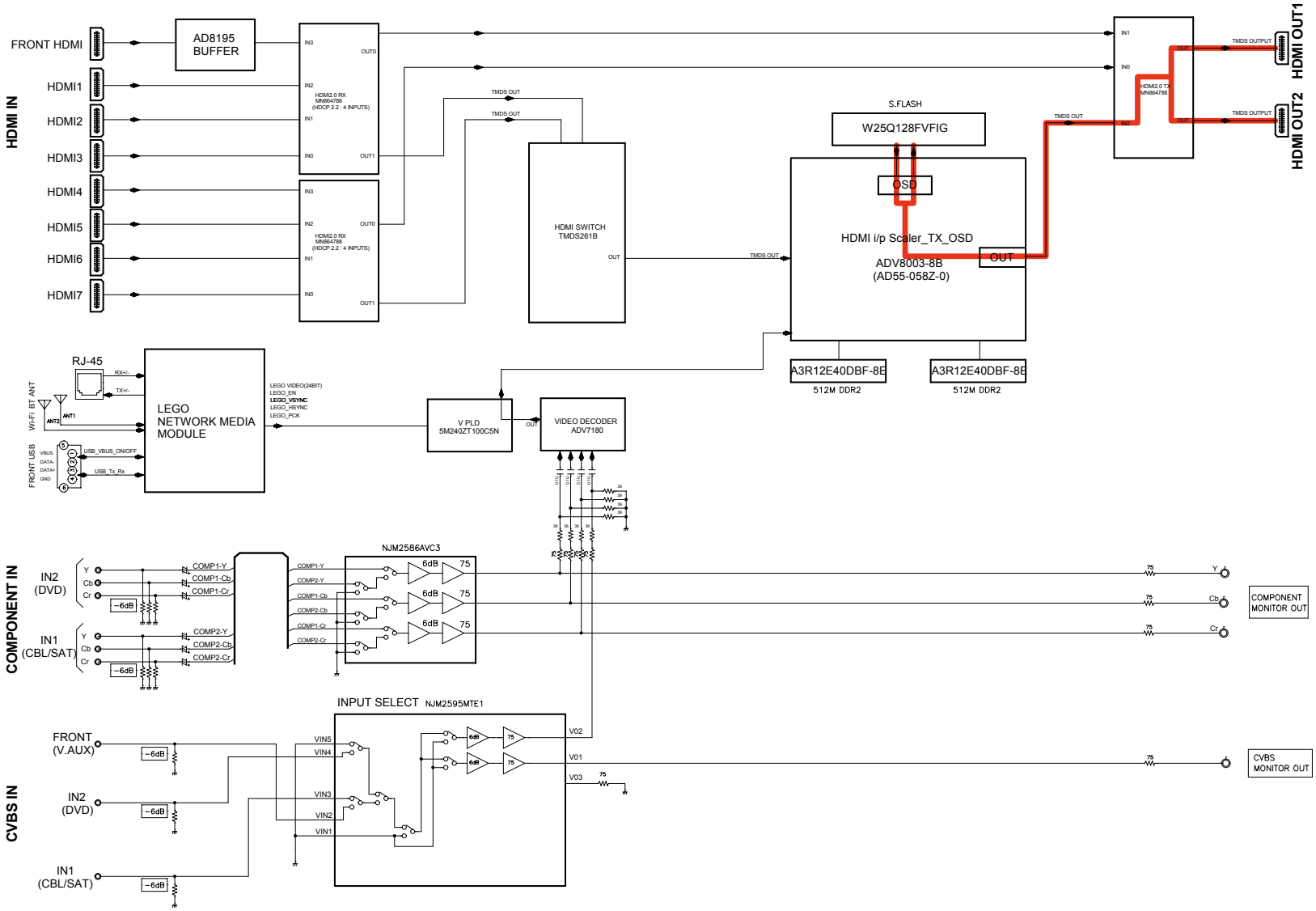

JIG FOR SERVICING

Use the following jigs (extension cable kit) when repairing the PCBs.
Order with your dealer for the jigs your dealer if necessary.

CAUTION : Incorrect connections may cause malfunction.

Connection of Jig for DIGITAL PCB
---Items to Be Prepared---

8U-110084S : EXTENSION UNIT KIT	:	1Set
Insulation sheet (Not supplied)	:	3 sheet
Ground lead (Not supplied)	:	2 pc

-Proceeding-

(1) Remove the screws.

(2) Remove the connector PCB.

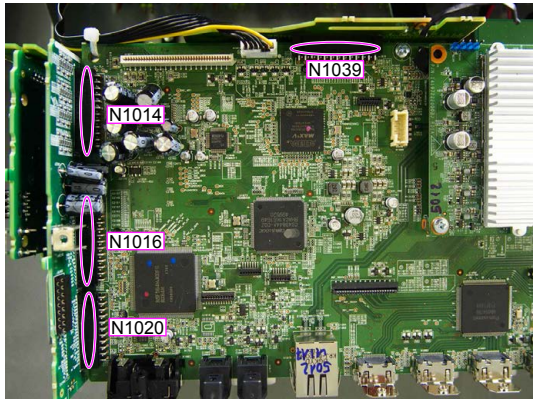

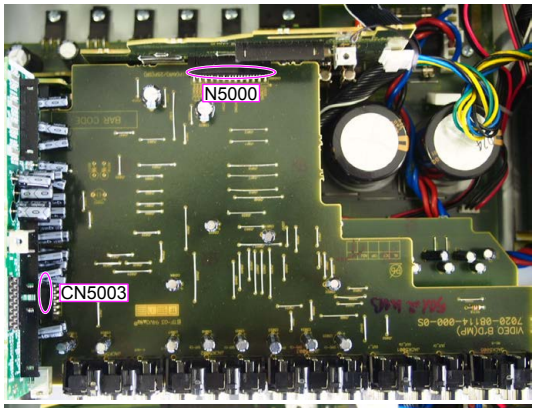

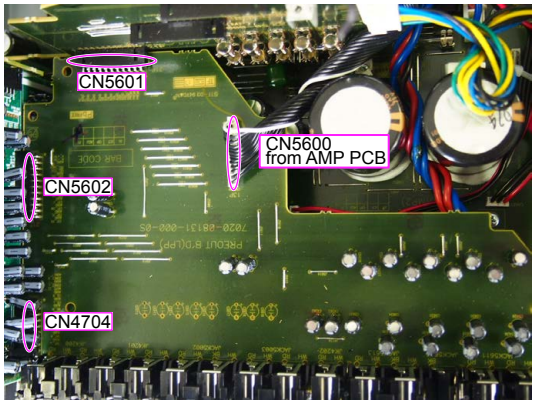

(3) Remove the DIGITAL PCB from the chassis and turn it over.
Place an insulation sheet larger than the PCB underneath the DIGITAL PCB.
※ Connect the earth of the PCB to the chassis using an earth wire, etc.

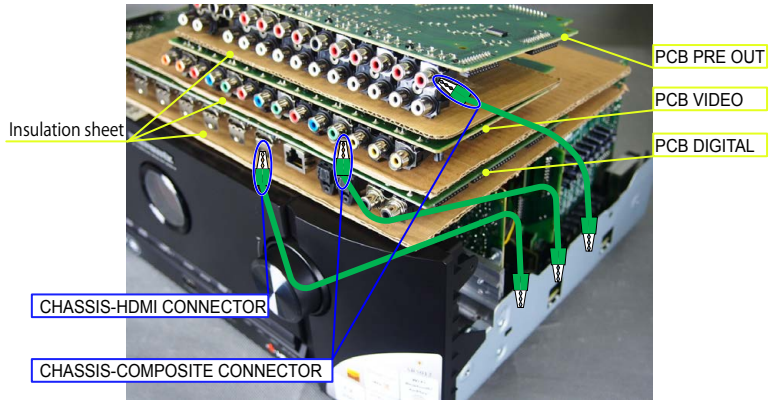

(4) Connect the expansion cables.

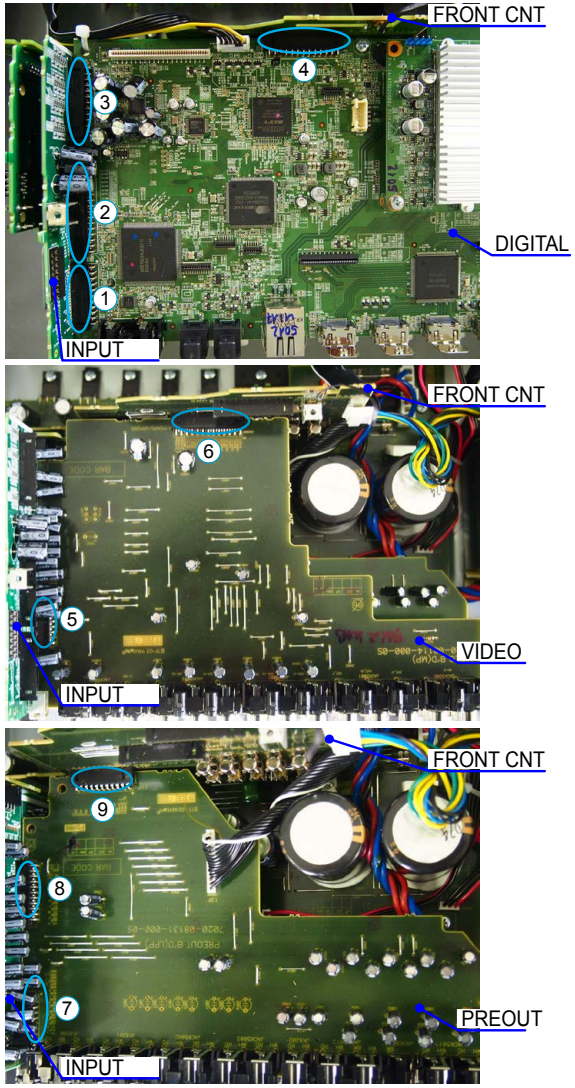

Board-to-Board Connections

No.	Pin	Ref. No.	PCB		Ref. No.	PCB
①	21pin	CP4200	INPUT	⟷	N1020	DIGITAL
②	31pin	CP4205	INPUT	⟷	N1016	DIGITAL
③	23pin	CP4201	INPUT	⟷	N1014	DIGITAL
④	25pin	CP3403	FRONT CNT	⟷	N1039	DIGITAL
⑤	11pin	CP4204	INPUT	⟷	CN5003	VIDEO
⑥	25pin	CP5000	FRONT CNT	⟷	CN5000	VIDEO
⑦	21pin	CP4207	INPUT	⟷	CN4704	PREOUT
⑧	21pin	CP4202	INPUT	⟷	CN5602	PREOUT
⑨	21pin	CP3401	FRONT CNT	⟷	CN5601	PREOUT

Adjusting Idling Current

1. Preparation

(1) Prepare a DC voltmeter.
(2) Place the unit under normal usage conditions, away from highly ventilated areas such as next to an air conditioning machine or electric fan.
The set requires an ambient temperature of 15℃ to 30℃ and standard humidity.
(3) Settings of This Unit
• POWER (Power source switch) STANDBY
• SPEAKER (Speaker terminal) No load
(Do not connect equipment such as speakers or dummy resistors.)

2. Adjustment Procedure

(1) Remove the top cover and turn **VR401**((ALL Channel) of the AMP PCB counterclockwise(ᘯ) as far as possible.
(2) Connect the DC Voltmeter to the test points.

FRONT-Lch	: CP501	: VR401
FRONT-Rch	: CP502	: VR402
CENTER ch	: CP503	: VR403
SURROUND-Lch	: CP504	: VR404
SURROUND-Rch	: CP505	: VR405
SURROUND-BACK Lch	: CP506	: VR406
SURROUND-BACK Rch	: CP507	: VR407

(3) Connect the power cord to an outlet. Next, press the power button to turn on the power.
(4) Set this unit as follows.
MASTER VOLUME : "---" (ᘯ min.) : turn counterclockwise to the lowest position.
SPEAKER (Speaker terminal) : No load
(Do not connect equipment such as speakers or dummy resistors.)
MODE : MCH STEREO
FUNCTION : DVD
(5) Turn **VR401** clockwise (ᘮ) and adjust the voltage of the test point to "**8.0mV ± 0.5mV DC**" within 2 minutes.
(6) Check whether the voltage is within the range "**8.0mV ± 2mV DC**" 10 minutes after adjustment.
(7) Adjust the variable resistance of each channel using the same method.

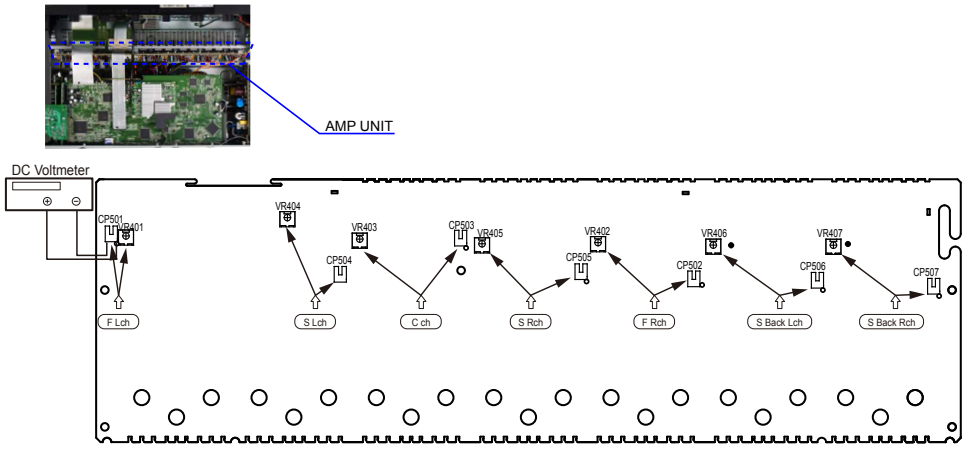

UPDATING

PROCEDURE AFTER REPLACING THE PCB.

PROCEDURE AFTER REPLACING THE U-COM, ETC.

FIRMWARE UPDATE PROCEDURE

1. Items necessary for update
2. Update preparation with a USB flash drive
3. Update method when the DIGITAL PCB or network module is replaced (Using a USB flash drive)
4. Update Method for Service Region Settings
5. Normal Firmware Update Method from USB Flash Drive
6. Normal Firmware Update Method from OTA
7. About the error codes

PROCEDURE AFTER REPLACING THE PCB.

The procedure after replacing the printed circuit boards is as follows.
(1) Change the resistor for setting the region.

Model Area	DIGITAL PCB	
	R1524	R1525
North America (U)	OPEN	0
Europe (N)	0	OPEN
China (K)	10k	10k

See the PCB below.

(2) Be sure to replace the software with the latest version.

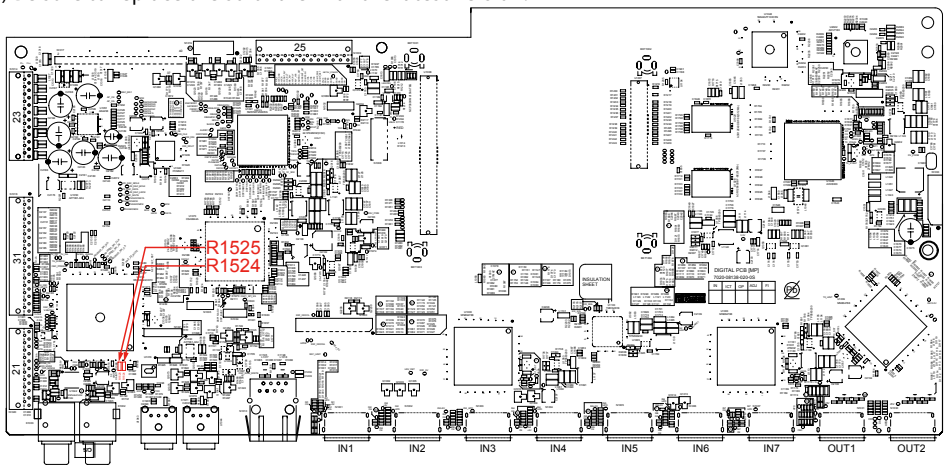

PROCEDURE AFTER REPLACING THE U-COM, ETC.

The procedure after replacing the u-COM (microprocessor), flash ROM, etc. is as follows.
Implement the update method when the DIGITAL PCB or network module is replaced.

PCB Name	Ref. No.	Description	Procedure after Re-placement	Remark
DIGITAL	U1018	R5F564MJCDFC	B	SOFTWARE : Main
DIGITAL	U1025	MX25L6406EM2I-12G 64M	B	SOFTWARE : DSP ROM
DIGITAL	U1027	W25Q128JVFIQ	B	SOFTWARE : GUI ROM
DIGITAL	U1048	5M240ZT100C5N	C	SOFTWARE : VIDEO PLD
DIGITAL	U1041	5M570ZF256C5N	C	SOFTWARE : AUDIO PLD
MODULE	P21	NETWORK MODULE	D, E	SOFTWARE : Network

Procedure after Replacement

A : The software has been written. The software is not written at the time of replacement.

B : The software has been written. The software may need to be rewritten by version updates. Check the version.

C : The software has not been written. The software needs to be written after replacement.
See "FIRMWARE UPDATE PROCEDURE" for information on writing the software.

D : The software has been written. Be sure to replace the software with the latest version.
See "3. Update method when the DIGITAL PCB or network module is replaced (Using a USB flash drive)" for information on writing the software.

E : An Electromagnetic wave absorption sheet [HS05-R050] needs to be attached to the back of NETWORK MODULE.
If the Electromagnetic wave absorption sheet [HS05-R050] has been removed, replace with a new sheet.
Service product numbers are set, for details see the parts list [REF No.54].
Refer to the figure below for details of the attachment position.

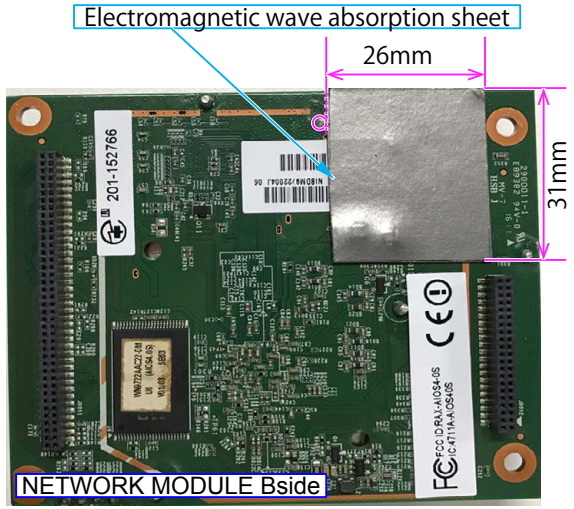

FIRMWARE UPDATE PROCEDURE

1. Items necessary for update

Items necessary for update are as follows.

Update Type	Needed Part for Update	Requirement	Offered / not Offered		
			Standard Service Equipment Not offered by D&M	Purchase from D&M Article code	Download from SDI
Via USB	USB flash drive (USB 2.0 : Min 1GB) • We recommend a USB memory device that has an LED installed.	Formatting FAT16 or FAT 32	X	-	"Table 1" or "Table 2"
Via OTA	Internet Connection by Broadband Circuit	-	X	-	-
	Modem	-	X	-	-
	Router	-	X	-	-
	Ethernet cable (CAT-5 or greater is recommended)	-	X	-	-

Table 1

Update download file when the DIGITAL PCB or network module is replaced

Model Name	Model Area	Download from SDI
SR5012	ALL	avr_40.prod.update.factory.xxxx.zip

Table 2

Update download file when the firmware is updated (Two files, "HW component" and "LEGO component")

Model Name	Model Area	Download from SDI		
		For HW component		For LEGO component
SR5012U	North America (U)	Product ID : 100100570100	DPMS_SR5012ALL_LEGO_xxxx.zip	heos_40.prod_x.xxx.xx.zip
SR5012N	Europe (N)	Product ID : 100100570200		
SR5012K	China (K)	Product ID : 100100570500		

2. Update preparation with a USB flash drive

You can update the firmware by downloading the latest version with USB flash drive.

2.1. Connecting to the USB flash drive

(1) Preparation

・Windows PC

・USB flash drive format : Prepare a USB flash drive formatted in FAT16 or FAT32.
※We recommend a USB flash drive that has an LED installed.

NOTE :

- Use a memory that supports USB2.0.
- Do not run the USB flash drive through a hub.
- Do not connect a computer to the USB port of this unit using a USB cable.
- Do not use an extension cable when connecting the USB flash drive.
- Save the update file on a blank USB flash drive for use.
- If a USB flash drive cannot be updated, replace it with a different USB flash drive and perform the update again.

2.2. Unzipping the Downloaded File

Unzip the downloaded file on your computer.

XXXXXXXXXXX	xxxxxxxxxx_xxxxxxxx.zip

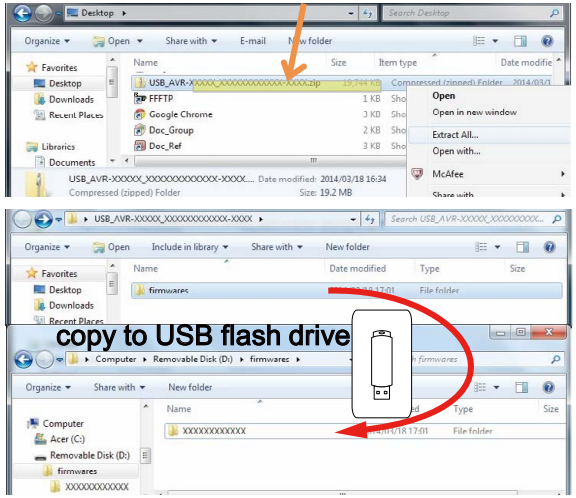

There are folders or files after unzipping.
Copy these folders or files onto the USB flash drive.
The folders or files must be placed in the root directory of the USB flash drive.

3. Update method when the DIGITAL PCB or network module is replaced (Using a USB flash drive)

3.1. File structure on USB flash drive

DIGITAL PCB or network module is replaced onto the USB flash drive in the following structure.

After unzipping the files, store them in the root of the same USB flash drive.

Model Area	Download from SDI
ALL	avr_40.prod.update.factory.xxxx.zip

USB flash drive root
+ avr_40.prod.update.factory
  + xxxxxxzz.ota-download
  + heos_40.prod.update.factory

xxxxxx : Model name
zz : Region

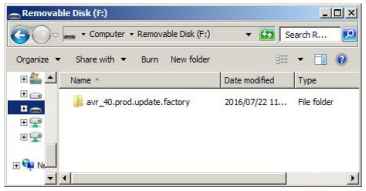

3.2. Start the update.

NOTE :
- Remove the LAN cable from this unit when updating.
  (Do not connect to a wired or wireless network.)
- The GUI menu setting details and image quality adjustment setting details are initialized when Firmware Factory Restore is performed. Therefore, take a note of the setting details beforehand and reconfigure the settings after update.

(1) Press the power button to turn on the power.
(2) Wait for this unit to start up.
(3) Set the input source to HEOS Music.
Check that the display is as shown below.

表示 (Main Display)

L1	HEOS		
L2	▶TuneIn Internet Radio	or	No Network Connection

L2 : Content of the display is scrolled.

(4) Insert the USB flash drive into the USB port.

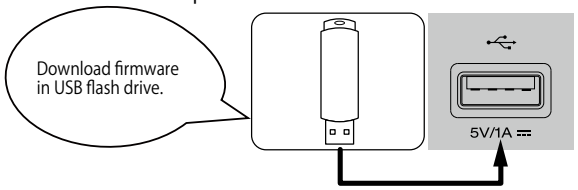

(5) USB Update starts automatically.
The Standby LED lights red.

Display during USB update (Main Display)

L1	Wait
L2	▶▶▶▶▶

↓

L1	Updating
L2	▶▶▶ xx%
L3	xxmin

↓

L1	Update
L2	Complete

It takes a maximum of approximately 25 minutes for update to complete.

(6) The unit restarts when update is complete.
※When update is complete, the folder name on the USB flash drive changes to "**avr_40.prod.update.factory.done**". To use the files again, delete the "**.done**" part.

(7) Execute Firmware Factory Restore.
While holding down buttons "**M-DAX**" and "**TUNER PRESET CH+**" simultaneously, press the power button to turn on the power.

Display during Firmware Factory Restore(Main Display)

L1	Restore
L2	FW...

↓

L1	Restore
L2	▶▶▶ xx%
L3	xxmin

↓

L1	Complete

It takes approximately 15 minutes for Firmware Factory Restore to complete.

(8) Execute Service Region Settings.
See "4. Update Method for Service Region Settings"

(9) Check that the version is the specified version. See "1. Version Display Mode"

(10) If necessary, use OTA or the USB flash drive to update the firmware to the newest version.
※We recommend using the firmware update method using OTA.
See "5. Normal Firmware Update Method from USB Flash Drive" or "6. Normal Firmware Update Method from OTA"

---Cautions on Firmware Update---

- Do not remove the USB flash drive until updating is completed.
- Do not turn off the power until updating is completed.
- It takes a maximum of approximately 25 minutes for update to complete.

Once an update is started, normal operations cannot be performed until it is completed.

4. Update Method for Service Region Settings

Copy the Service Region Settings from the USB flash drive to this unit.

4.1. Creating a Service Region Settings file

(1) Click [Start button] - [Accessories] - [notepad] on the PC to launch the notepad.

(2) Enter "**TEXT**".

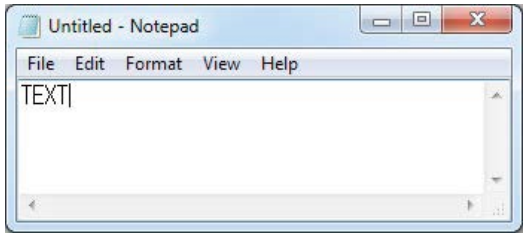

(3) Click "**File**", and then click "**Save As...**".

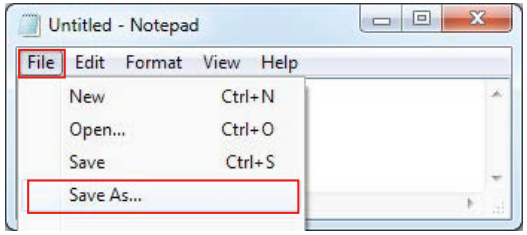

(4) Enter the file name and click the Save button.
NOTE : Enter the file name in double quotation marks. (The file extension is not required.)

Service Region	File name
North America	"denon-config-locale-set-1"
Europe	"denon-config-locale-set-2"
Japan	"denon-config-locale-set-3"
Australia	"denon-config-locale-set-4"
Korea	"denon-config-locale-set-5"
China	"denon-config-locale-set-6"
Israel	"denon-config-locale-set-7"

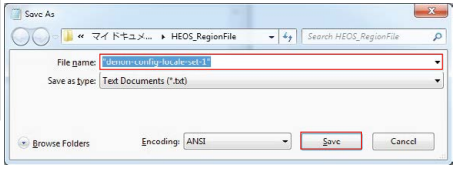

(5) Copy the files created on the USB flash drive.

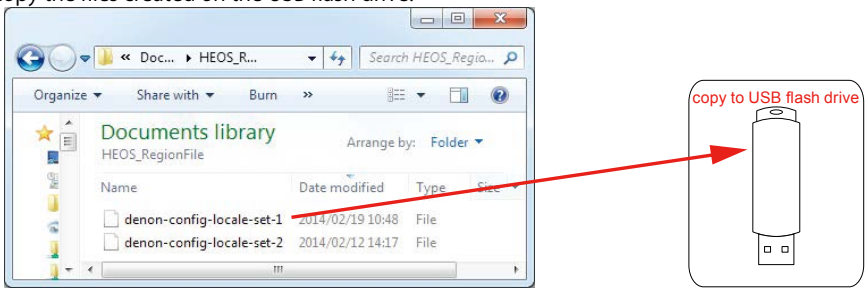

4.2. Starting Service Region Settings

NOTE :
- Remove the LAN cable from this unit when updating.
  (Do not connect to a wired or wireless network.
- We recommend a USB memory device that has an LED installed.

(1) Press the power button to turn on the power.
(2) Wait for this unit to start up.
(3) Set the input source to HEOS Music.
Check that the display is as shown below.

表示 (Main Display)

L1	HEOS	or	
L2	▶TuneIn Internet Radio		No Network Connection

L2 : Content of the display is scrolled.

(4) Insert the USB flash drive into the USB port.

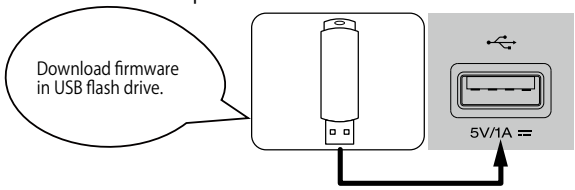

(5) Wait for at least 10 seconds before removing the USB flash drive.
(If the USB flash drive has an LED, this LED will be flashing. Remove the USB flash drive when the LED stops flashing.)

5. Normal Firmware Update Method from USB Flash Drive

5.1. File structure on USB flash drive

Copy the normal update files onto the USB flash drive in the following structure.

After unzipping the HW component USB update files for the target model and LEGO USB update files, store them in the root of the same USB flash drive.

Model Area	Download from SDI	
	For HW component	For LEGO component
North America (U)	DPMS_SR5012ALL_LEGO_xxxx.zip Product ID : 100100570100	heos_40.prod_x.xxx.xx.zip
Europe (N)	DPMS_SR5012ALL_LEGO_xxxx.zip Product ID : 100100570200	
China (K)	DPMS_SR5012ALL_LEGO_xxxx.zip Product ID : 100100570500	

USB flash drive root
+ SR5012xx_xxxx.update.auto
+ heos_40.prod.update.x-xxx-xx

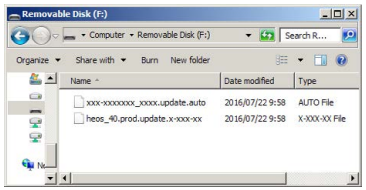

5.2. Start normal update

NOTE :
- Remove the LAN cable from this unit when updating.
  (Do not connect to a wired or wireless network.)

(1) Press the power button to turn on the power.
(2) Wait for this unit to start up.
(3) Set the input source to HEOS Music.
Check that the display is as shown below.

Display(Main Display)

L1	HEOS
L2	▶TuneIn Internet Radio

or

No Network Connection

L2 : Content of the display is scrolled.

(4) Insert the USB flash drive into the USB port.

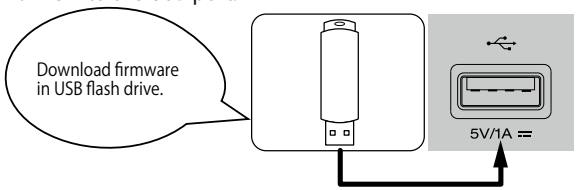

(5) USB Update starts automatically.
The Standby LED lights red.

Display during USB update (Main Display)

L1	Wait
L2	▶▶▶▶▶

↓

L1	Updating
L2	▶▶▶ xx%
L3	xxmin

↓

L1	Update
L2	Complete

It takes a maximum of approximately 25 minutes for update to complete.

(6) The unit restarts when update is complete.

(7) After updating the firmware, check the version.
See "1. Version Display Mode"

---Cautions on Firmware Update---

- Do not remove the USB flash drive until updating is completed.
- Do not turn off the power until updating is completed.
- It takes a maximum of approximately 25 minutes for update to complete.

Once an update is started, normal operations cannot be performed until it is completed.
The GUI menu settings and image adjustment settings of this unit may be initialized.
Note down the settings before updating, and set them again after updating.

6. Normal Firmware Update Method from OTA

Download the latest firmware from our website and update the firmware.

6.1. Network Connection

(1) System Requirements

- Internet Connection by Broadband Circuit
- Modem
- Router
- Ethernet cable (CAT-5 or greater is recommended)

(2) Setting

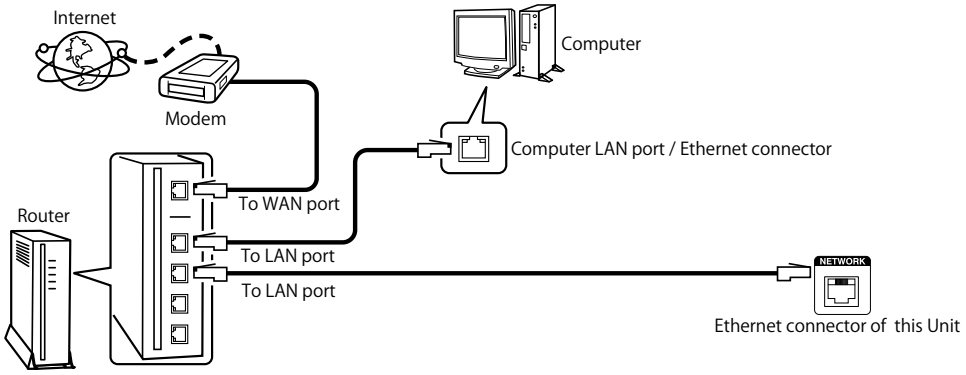

6.2. Check and update the firmware

Check if there is a firmware update available. It is also possible to check approximately how long the update will take.

(1) Press the "**SETUP**" button on the remote control to display the GUI menu.

(2) Press the cursor button to select "**General**" → "**Firmware**" → "**Update**" → "Check for Update".

(3) Check update

- If the firmware version is anything other than the latest version, select "**Update Now**" to update the firmware.
- "**No update required. Latest version installed.** "is displayed when the firmware version is up to date.

(4) OTA Update starts automatically.
The Standby LED lights red.

Display during OTA update (Main Display)

L1	Wait
L2	▶▶▶▶▶

↓

L1	Updating
L2	▶▶▶ xx%
L3	xxmin

↓

L1	Update
L2	Complete

It takes a maximum of approximately 25 minutes for update to complete.

(5) The unit restarts when update is complete.

(6) After updating the firmware, check the version.
See "1. Version Display Mode"

---Cautions on Firmware Update---

- For the update procedure, a proper broadband Internet connection environment and settings are required.
- Do not turn off the power until updating is completed.
- It takes a maximum of approximately 25 minutes for update to complete.

Once an update is started, normal operations cannot be performed until it is completed.
The GUI menu settings and image adjustment settings of this unit may be initialized.
Note down the settings before updating, and set them again after updating.

7. About the error codes

See the table below for details on error codes and solutions when updating the firmware.
Error codes are displayed in 4 digits, YYXX(YY : DeviceID, XX : ErrorCode).

Display(Main Display)

L1	Updating
L2	▶▶▶ **%
L3	**min

↓

L1	Error
L2	YYXX
L3	Please check you

Update ErrorYYXX (YY : DeviceID, XX : ErrorCode)

L3 : Content of the display is scrolled.

Remedies

Error Code (YYXX) (DeviceID/ErrorCode)	Remedies
000A	"Connection failed. Please check your network, then try again."
0009	"Update failed. Please check your network, then try again."
0009	"Upgrade failed. Please check your network, then try again."
YY00 YY01 YY02 YY03 YY04 YY07	"Please check your network, unplug and reconnect the power cord, and try again."
YY00 YY01 YY02 YY03 YY04 YY07	"Please unplug and reconnect the power cord, and try again."
0005	"Incompatible update file found on the USB device. Please check the file."
0006	"Update file is corrupted. Please check the file."
000B	"Please contact customer service in your area." ※ Check the power supply and communication lines of each device.

Device ID table

Device ID (YY)	Device Name
00	General
01	Main CPU
0B	Main FBL (No used)
11	DSP1 or DSP
12	DSP2 ※ Except : NR1508/NR1608/SR5012
13	DSP3 ※ Except : NR1508/NR1608/SR5012
19	DSP4 ※ Except : NR1508/NR1608/SR5012
15	Audio PLD
22	Video PLD ※ Except : NR1508
2A	GUI
33	LEGO

Error Code table

Type code (XX)	Description
00	Logical error
01	Error during erasing
02	Error during writing
03	Error during verifying
04	No access for the component
05	Package mismatched. Product ID, package version un-matched of the package manifest
06	Unpack dis-available of component package file
07	Time out
08	Latest firmware has already installed.
09	Error during download
0A	Error connection
0B	Hardware Error

---Checking the Firmware Version After the Update---

After updating the firmware, check the version.
See "1. Version Display Mode"

www.marantz.com

You can find your nearest authorized distributor or dealer on our website.

marantz® is a registered trademark.

Copyright © 2017 D&M Holdings Inc. All Rights Reserved.