Exploded View

Model CGS12CD(I)

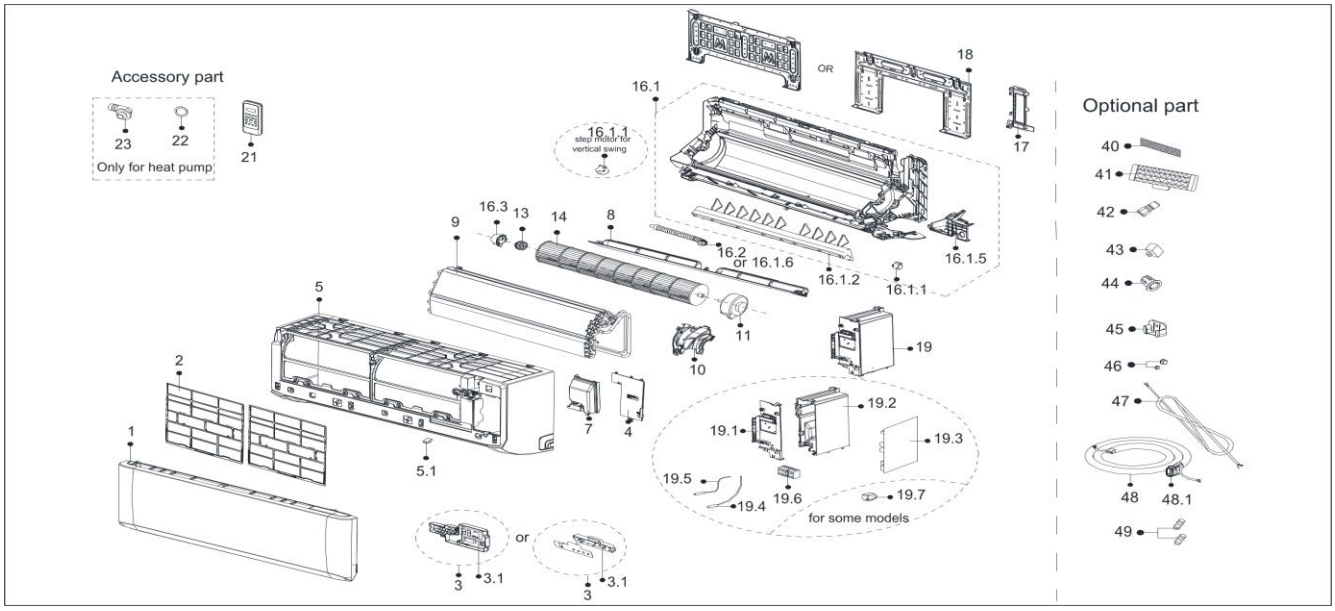

EX_ID	Spare Parts Code	Part Name(EN)	Qty.	Price	Remarks
1	12122000A86741	Panel assembly	1		
2	12100204000522	Filter filter subassembly	2		
4	12122000024739	Cover of electrical equipment	1		
5	12122000025543	Panel frame assembly	1		
5.1	12122000013139	Screw Cap	1		
7	12122000025064	Cover board for wiring	1		
8	12122000025544	Horizontal louver assembly	1		
9	15822000A19263	Evaporator assembly	1		
10	12122000029503	Fan motor cover	1		
11	11002015000150	Brushless DC Motor	1		
13	12622000000131	Bearing components	1		
14	12100102000576	Cross flow fan	1		
16	12122000027924	Chassis assembly	1		
16.1	12122000027923	Chassis assembly1	1		
16.1.1	11002010000143	Stepper motor	1		
16.1.2	12122000024736	vortex tongue bar	1		
16.1.5	12122000024735	Anti mouse baffle	1		
16.1.6	12100501000032	Drain hose1	1		
16.1.7	12122000000344	Insulated axis	1		
16.3	12122000000350	Bearing holder	1		
16.5	12122000027923	Chassis assembly2	1		
17	12122000012943	pipe clamp board	1		
18	12222000000018	Installation plate	1		
19	17222000A63696	Electronic control box subassembly (Mid-and low-end)	1		
19.1	12122000025621	Cover of electronic control box（BMC）	1		
19.2	12122000024733	Electronic control box	1		
19.3	17122000051854	Main control board subassembly	1		
19.4	11201007003424	Room Temperature Sensor	1		
19.5	11201007003447	Pipe Temperature Sensor	1		
19.6	17400401000576	Wire joint	1		
21	17317000A63487	Remote controller	1		
22	12600701000039	seal ring	1		
23	12100509000061	Drain hose	1		
40	12100204000685	Air freshening filter	1		
45	12122000029201	Bracket of remote Controller	1		
47	17401203A01550	Indoor and Outdoor Junction Cable	1		